US010220717B2

(12) **United States Patent**
Ricci

(10) **Patent No.: US 10,220,717 B2**
(45) **Date of Patent: Mar. 5, 2019**

(54) **ELECTRIC VEHICLE EMERGENCY CHARGING SYSTEM AND METHOD OF USE**

(71) Applicant: **NIO USA, Inc.**, San Jose, CA (US)

(72) Inventor: **Christopher P. Ricci**, Saratoga, CA (US)

(73) Assignee: **NIO USA, Inc.**, San Jose, CA (US)

(*) Notice: Subject to any disclaimer, the term of this patent is extended or adjusted under 35 U.S.C. 154(b) by 321 days.

(21) Appl. No.: **15/010,701**

(22) Filed: **Jan. 29, 2016**

(65) **Prior Publication Data**

US 2017/0136903 A1 May 18, 2017

Related U.S. Application Data

(60) Provisional application No. 62/266,452, filed on Dec. 11, 2015, provisional application No. 62/259,536,

(Continued)

(51) **Int. Cl.**

B60L 11/18	(2006.01)
B64C 39/02	(2006.01)
B64D 39/00	(2006.01)

(52) **U.S. Cl.**

CPC ***B60L 11/1827*** (2013.01); ***B60L 11/182*** (2013.01); ***B60L 11/1816*** (2013.01);

(Continued)

(58) **Field of Classification Search**

CPC B60L 11/1827; B60L 11/1844; B60L 11/1861

(Continued)

(56) **References Cited**

U.S. PATENT DOCUMENTS

3,914,562	A	10/1975	Bolger
3,955,657	A	5/1976	Bossi

(Continued)

FOREIGN PATENT DOCUMENTS

CN	102025184	4/2011
CN	203301194	11/2013

(Continued)

OTHER PUBLICATIONS

Non-Final Rejection, dated Jan. 12, 2018 for U.S. Appl. No. 15/010,921.*

(Continued)

Primary Examiner — Robert Grant
Assistant Examiner — John Trischler
(74) *Attorney, Agent, or Firm* — Sheridan Ross P.C.

(57) **ABSTRACT**

Techniques for electric vehicle systems, and in particular to an electric vehicle emergency charging system and method of use. In one embodiment, a system for charging a moving electric vehicle is disclosed, the system comprising: an electrical storage unit disposed on the electric vehicle; a charging panel in electrical communication with the electrical storage unit; a vehicle controller that determines if the electrical storage unit requires charging and configured to determine if an emergency external power source is available to charge the electrical storage unit; wherein the charging panel receives the charge from the emergency external power source and charges the electrical storage unit.

20 Claims, 17 Drawing Sheets

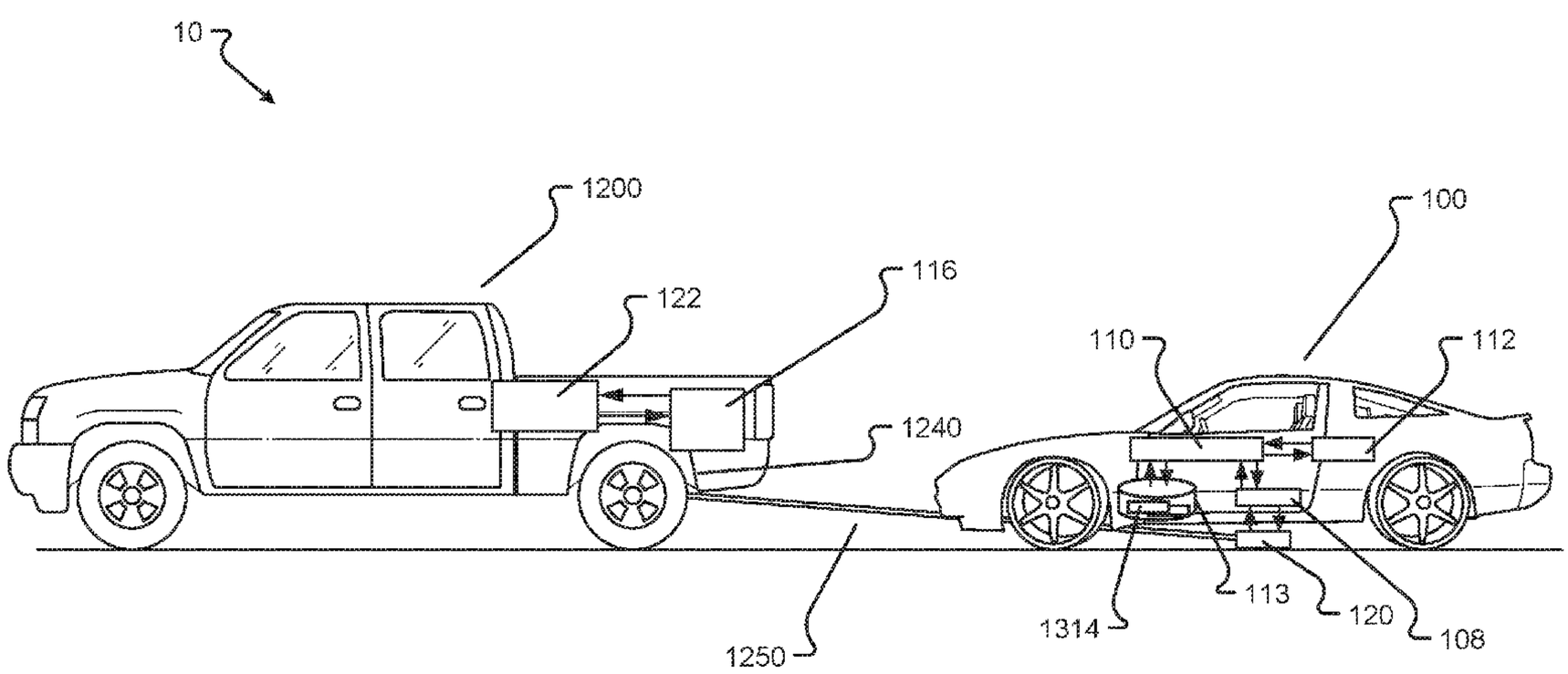

Related U.S. Application Data

filed on Nov. 24, 2015, provisional application No. 62/255,214, filed on Nov. 13, 2015.

(52) **U.S. Cl.**
CPC ***B60L 11/1838*** (2013.01); ***B60L 11/1844*** (2013.01); ***B60L 11/1861*** (2013.01); ***B64C 39/024*** (2013.01); ***B64D 39/00*** (2013.01); *B60L 2230/10* (2013.01); *B64C 2201/12* (2013.01); *Y02E 60/721* (2013.01); *Y02T 10/7005* (2013.01); *Y02T 10/705* (2013.01); *Y02T 10/7044* (2013.01); *Y02T 10/7088* (2013.01); *Y02T 90/121* (2013.01); *Y02T 90/122* (2013.01); *Y02T 90/125* (2013.01); *Y02T 90/128* (2013.01); *Y02T 90/14* (2013.01); *Y02T 90/16* (2013.01); *Y02T 90/163* (2013.01); *Y04S 10/126* (2013.01)

(58) **Field of Classification Search**
USPC 320/109
See application file for complete search history.

(56) **References Cited**

U.S. PATENT DOCUMENTS

RE29,994 E * 5/1979 Bossi ..... B60L 11/18 191/1 R
4,331,225 A * 5/1982 Bolger B60L 5/005 191/10
4,650,018 A * 3/1987 Silverman, Sr. B62D 59/04 180/14.7
5,283,513 A * 2/1994 Fujita B60L 11/1816 307/10.1
5,431,264 A 7/1995 Tseng et al.
5,461,298 A * 10/1995 Lara B60L 3/0046 320/109
5,563,491 A 10/1996 Tseng
5,654,621 A * 8/1997 Seelig B60L 11/182 320/108
5,696,367 A * 12/1997 Keith B60L 1/08 235/380
5,821,728 A 10/1998 Schwind
5,821,731 A * 10/1998 Kuki B60L 11/1805 320/108
5,847,537 A * 12/1998 Parmley, Sr. B60L 8/003 320/109
6,014,597 A * 1/2000 Kochanneck B60K 1/04 320/109
6,291,901 B1 9/2001 Cefo
6,421,600 B1 7/2002 Ross
6,786,051 B2 * 9/2004 Kristich F01D 15/10 60/796
6,877,581 B2 * 4/2005 Badr B60P 3/00 180/311
6,879,889 B2 4/2005 Ross
7,602,143 B2 * 10/2009 Capizzo B60K 15/063 104/34
7,619,319 B1 * 11/2009 Hunter ..... B60L 11/1816 290/4 R
7,714,536 B1 5/2010 Silberg et al.
7,729,803 B2 6/2010 Lim et al.
7,880,337 B2 * 2/2011 Farkas B60L 11/005 307/104
8,030,888 B2 * 10/2011 Pandya B60L 5/005 320/109
8,164,301 B2 * 4/2012 Uchida B60K 6/445 320/109
8,169,186 B1 * 5/2012 Haddad B60L 11/1835 180/14.3
8,324,858 B2 * 12/2012 Hill B60L 5/42 104/34
8,386,103 B2 * 2/2013 Tran H02J 7/0027 105/396
8,536,831 B2 * 9/2013 Kanno B60L 11/182 320/109
8,544,622 B2 10/2013 Vollenwyder et al.
8,552,685 B2 * 10/2013 Kanno B60L 5/005 320/109
8,575,895 B2 * 11/2013 Garrastacho H02J 7/027 320/125
8,725,330 B2 * 5/2014 Failing B60L 3/00 701/22
D706,212 S 6/2014 Zwierstra et al.
8,760,115 B2 * 6/2014 Kinser B60L 1/003 180/65.29
8,768,533 B2 * 7/2014 Ichikawa H04L 25/028 180/65.29
8,796,990 B2 8/2014 Paparo et al.
8,827,058 B2 * 9/2014 Vollenwyder B60L 5/005 191/10
8,841,785 B2 9/2014 Theuss et al.
8,841,881 B2 * 9/2014 Failing B60L 3/00 320/109
8,853,999 B2 * 10/2014 Haddad B60L 11/1827 320/104
8,860,362 B2 * 10/2014 Kamen B60L 8/003 320/104
8,862,404 B2 * 10/2014 Proietty G01C 21/3438 320/109
8,890,472 B2 * 11/2014 Mashinsky B60L 11/182 320/109
8,944,226 B2 * 2/2015 Zengerle B60L 5/005 191/5
8,963,481 B2 * 2/2015 Prosser H02J 7/0054 320/103
8,970,060 B2 * 3/2015 Ichikawa B60L 11/123 307/10.1
8,997,955 B2 * 4/2015 Czainski B60L 5/005 191/10
9,007,020 B2 * 4/2015 Prosser H02J 7/0054 320/104
9,018,904 B2 4/2015 Seyerle et al.
9,027,723 B2 * 5/2015 Niizuma H02J 5/005 191/10
9,058,578 B2 * 6/2015 Jones G06Q 10/0631
9,067,497 B2 * 6/2015 Ichikawa B60L 11/1824
D736,716 S 8/2015 Hough et al.
9,114,719 B1 * 8/2015 Failing B60L 3/00
9,120,506 B2 9/2015 Isakiewitsch et al.
9,123,035 B2 * 9/2015 Penilla G06Q 20/18
9,124,124 B2 9/2015 Van Wiemeersch et al.
9,129,272 B2 * 9/2015 Penilla G06Q 20/18
9,132,739 B2 * 9/2015 Niizuma B60L 11/182
9,142,967 B2 * 9/2015 Tomlinson H02J 3/383
9,145,110 B2 * 9/2015 Van Wiemeersch B60R 25/1004
9,177,305 B2 * 11/2015 Penilla G06Q 20/18
9,177,306 B2 * 11/2015 Penilla G06Q 20/18
9,193,277 B1 * 11/2015 Penilla G06Q 20/18
9,209,324 B2 * 12/2015 Markku H01L 31/02243
9,260,029 B2 * 2/2016 Niizuma H02J 5/005
9,266,438 B2 * 2/2016 Power B60L 11/1809
9,272,631 B2 * 3/2016 Bendicks B60L 11/182
9,321,357 B2 * 4/2016 Caldeira B60L 11/1801
9,335,179 B2 * 5/2016 Penilla G06Q 20/18
9,348,381 B2 * 5/2016 Khoo B60L 11/1825
9,393,877 B2 * 7/2016 Gunter B60L 11/1816
9,393,878 B1 * 7/2016 Failing B60L 3/00
9,407,105 B2 * 8/2016 Hyde H02J 7/0054
9,457,666 B2 * 10/2016 Caldeira B60L 3/0046
9,493,085 B2 * 11/2016 Van Wiemeersch B60R 25/1004
9,550,428 B1 1/2017 Ertel
9,552,920 B2 * 1/2017 Bhat B60L 11/182
9,564,759 B2 * 2/2017 Niizuma H02J 17/00
9,566,868 B2 * 2/2017 Jammer B60L 11/1816
9,592,742 B1 * 3/2017 Sosinov B60L 11/1827
9,597,973 B2 * 3/2017 Penilla G06F 3/04842
9,630,516 B2 * 4/2017 Enomoto B60L 11/182
9,643,505 B2 * 5/2017 Ichikawa B60L 5/005

(56) **References Cited**

U.S. PATENT DOCUMENTS

9,643,507 B2 * 5/2017 Scarlatti B60L 11/1827
9,656,770 B2 * 5/2017 Ikegami B65B 1/06
9,669,719 B1 * 6/2017 Gerber B60L 11/1818
9,738,168 B2 * 8/2017 Penilla B60L 11/1822
9,747,792 B2 * 8/2017 Boys H02J 7/025
9,766,671 B2 * 9/2017 Dorn B60L 11/1838
9,778,653 B1 * 10/2017 McClintock G05D 1/00
9,806,539 B2 * 10/2017 Kubota B60L 11/18
9,809,122 B2 * 11/2017 McGrath B60L 11/1818
9,837,570 B2 * 12/2017 Retti B60L 5/005
9,854,709 B2 * 12/2017 Niizuma H01F 27/16
9,873,347 B2 * 1/2018 Brown B60L 11/182
9,889,756 B2 * 2/2018 Amari B60L 11/182
9,908,426 B2 * 3/2018 Fukushima H02J 50/40
9,925,882 B2 * 3/2018 Penilla B60L 11/1822
9,925,887 B2 * 3/2018 McGrath B60L 11/185
10,011,181 B2 * 7/2018 Dudar B60L 11/182
2009/0045773 A1 * 2/2009 Pandya B60L 5/005 320/108
2009/0256361 A1 * 10/2009 Theuss ..... B60C 19/00 290/1 R
2010/0039067 A1 * 2/2010 Hill B60L 5/42 320/109
2010/0156349 A1 * 6/2010 Littrell B60L 11/1838 320/109
2010/0161518 A1 * 6/2010 Littrell G06Q 50/06 705/412
2010/0231163 A1 * 9/2010 Mashinsky B60L 11/182 320/108
2010/0235006 A1 * 9/2010 Brown B60L 11/182 700/286
2011/0025267 A1 * 2/2011 Kamen B60L 8/003 320/109
2011/0114400 A1 * 5/2011 Kanno B60L 11/182 180/65.21
2011/0204845 A1 8/2011 Paparo et al.
2011/0231029 A1 * 9/2011 Ichikawa B60L 11/123 700/298
2011/0253495 A1 * 10/2011 Vollenwyder B60L 5/005 191/10
2011/0254504 A1 * 10/2011 Haddad B60L 11/1827 320/109
2011/0291615 A1 * 12/2011 Pandya B60L 5/005 320/108
2011/0298422 A1 * 12/2011 Failing B60L 3/00 320/109
2011/0301795 A1 * 12/2011 Failing B60L 3/00 701/22
2011/0302078 A1 * 12/2011 Failing B60L 3/00 705/39
2012/0005031 A1 * 1/2012 Jammer B60L 11/1816 705/16
2012/0005125 A1 * 1/2012 Jammer B60L 11/1848 705/412
2012/0043931 A1 * 2/2012 Terao H02J 7/025 320/108
2012/0055751 A1 3/2012 Vollenwyder et al.
2012/0186927 A1 7/2012 Suh et al.
2012/0203410 A1 8/2012 Wechlin et al.
2012/0217112 A1 8/2012 Zengerle
2012/0233062 A1 9/2012 Cornish
2012/0249063 A1 10/2012 Holmes et al.
2012/0271758 A1 * 10/2012 Jammer B60L 11/1816 705/39
2013/0033224 A1 2/2013 Raedy
2013/0033228 A1 2/2013 Raedy
2013/0038268 A1 2/2013 Markku
2013/0038276 A1 2/2013 Raedy
2013/0038279 A1 * 2/2013 Seyerle B60R 16/033 320/108
2013/0076902 A1 3/2013 Gao et al.
2013/0105264 A1 5/2013 Ruth et al.
2013/0124005 A1 * 5/2013 Ichikawa H04L 25/028 701/1
2013/0154553 A1 * 6/2013 Steele B60L 11/182 320/108
2013/0175973 A1 * 7/2013 Jones B60L 11/1809 320/105
2013/0211988 A1 8/2013 Dorn et al.
2013/0248311 A1 9/2013 Czainski et al.
2013/0249470 A1 * 9/2013 Martin B60L 11/182 320/107
2013/0249682 A1 9/2013 Van Wiemeersch et al.
2013/0257144 A1 * 10/2013 Caldeira B60L 11/1801 307/9.1
2013/0257145 A1 * 10/2013 Caldeira B60L 3/0046 307/9.1
2013/0328387 A1 * 12/2013 Venkateswaran B60L 11/005 307/9.1
2014/0012448 A1 1/2014 Tripathi et al.
2014/0042752 A1 2/2014 McDermott
2014/0062392 A1 * 3/2014 Lofy H05K 7/20845 320/108
2014/0067660 A1 3/2014 Cornish
2014/0070767 A1 * 3/2014 Morris B60L 5/42 320/109
2014/0088804 A1 * 3/2014 Hyde H02J 7/0054 701/22
2014/0089064 A1 * 3/2014 Hyde G06Q 30/0611 705/14.4
2014/0103865 A1 * 4/2014 Van Wiemeersch H02J 17/00 320/108
2014/0145423 A1 * 5/2014 Isakiewitsch et al. B62D 21/11 280/781
2014/0217975 A1 * 8/2014 Hayashi B60M 7/003 320/109
2014/0232331 A1 * 8/2014 Stamenic B60L 11/182 320/108
2014/0239891 A1 * 8/2014 Martin B60L 11/182 320/108
2014/0257614 A1 * 9/2014 Niizuma B60L 11/182 701/22
2014/0278104 A1 * 9/2014 Proietty G01C 21/3438 701/537
2014/0333256 A1 * 11/2014 Widmer B60L 11/182 320/108
2015/0002094 A1 * 1/2015 Haddad B60L 11/1827 320/109
2015/0028807 A1 * 1/2015 Mashinsky B60L 11/182 320/108
2015/0035484 A1 * 2/2015 Mashinsky B60L 11/182 320/108
2015/0042211 A1 2/2015 Pan
2015/0088352 A1 * 3/2015 Gunter B60L 11/1816 701/22
2015/0097530 A1 4/2015 Scarlatti et al.
2015/0137801 A1 5/2015 Raedy et al.
2015/0306963 A1 * 10/2015 Van Wiemeersch B60R 25/1004 320/108
2015/0314695 A1 * 11/2015 McGrath B60L 5/36 320/109
2015/0321570 A1 * 11/2015 Cun B60L 11/1803 705/34
2015/0333540 A1 * 11/2015 Niizuma H02J 17/00 114/312
2015/0336677 A1 11/2015 Smaoui et al.
2016/0009255 A1 * 1/2016 Droste B60L 11/1877 180/68.5
2016/0052404 A1 * 2/2016 Enomoto B60L 11/182 320/108
2016/0144735 A1 * 5/2016 Haddad B60L 11/1827 320/109
2016/0272074 A1 * 9/2016 McGrath B60M 7/003
2016/0290832 A1 * 10/2016 Raedy B60L 11/1833
2017/0072808 A1 * 3/2017 Caldeira B60L 3/0046
2017/0136887 A1 * 5/2017 Ricci B60L 11/182

(56) **References Cited**

U.S. PATENT DOCUMENTS

2017/0136892	A1	5/2017	Ricci	
2017/0136897	A1	5/2017	Ricci	
2017/0141368	A1*	5/2017	Ricci	G01C 21/3673
2017/0142872	A1*	5/2017	Ricci	H05K 9/0088
2018/0037136	A1*	2/2018	Nelson	B60L 5/005
2018/0086212	A1*	3/2018	Dudar	B60L 11/182
2018/0201152	A1*	7/2018	Newman	B60L 11/1874

FOREIGN PATENT DOCUMENTS

EP	2711876	3/2014
JP	2010-166675	7/2010
KR	2017-0045908	4/2017
WO	WO 2010/000495	1/2010
WO	WO 2011/045883	4/2011
WO	WO 2011/106506	9/2011

OTHER PUBLICATIONS

Official Action for U.S. Appl. No. 15/010,921, dated Jan, 12, 2018, 32 pages.
Official Action for U.S. Appl. No. 15/044,940, dated Jan. 19, 2018 30 pages.
Official Action for U.S. Appl. No. 15/145,416, dated Oct. 19, 2017 12 pages.
Official Action for U.S. Appl. No. 15/143,0836, dated Oct. 23, 2017 16 pages.
U.S. Appl. No. 14/954,436, filed Nov. 30, 2015, Ricci.
U.S. Appl. No. 14/054,484, filed Nov. 30, 2015, Ricci.
U.S. Appl. No. 14/979,158, filed Dec. 22, 2015, Ricci.
U.S. Appl. No. 14/981,368, filed Dec. 28, 2015, Ricci.
U.S. Appl. No. 15/010,921, filed Jan. 29, 2016, Ricci.
U.S. Appl. No. 15/044,940, filed Feb. 16, 2016, Ricci.
U.S. Appl. No. 15/048,307, filed Feb. 19, 2016, Ricci.
U.S. Appl. No. 15/143,083, filed Apr. 29, 2016, Ricci.
U.S. Appl. No. 15/145,416, filed May 3, 2016, Ricci.
"Inductive charging," Wikipedia, 2015, retrieved from https://en.wikipedia.org/Inductive_charging, 6 pages.
"Meet the Plugless L2," Pluglesspower.com, 2014, retrieved from https://web.archive.org/web/20150920163501/https://www.pluglesspower.com/, 5 pages.
"Someday Your EV Charger May Be the Roadway Itself," MIT Technology Review, 2013, retrieved from http://www.technologyreview.com/news/521761/someday-your-ev-charger-may-be-the-roadway-itself/, 2 pages.
"Wireless Charging for Electric Vehicles," brochure, QUALCOMM HALO, 2011, 6 pages.
"Wireless Charging," PowerbyProxi, 2015, retrieved from http://powerbyproxi.com/wireless-charging/, 5 pages.
Brachmann, Wireless induction charging is coming to electric vehicles, IPWatchdog, 2015, retrieved from http://www.ipwatchdog.com/2015/06/18/wireless-induction-charging-is-coming-to-electric-vehicles/id=58756/, 6 pages.
Crawford, "UK motorway to charge electric cars on the move," E&T, 2014, retrieved from http://eandt.theiet.org/news/2014/apr/onroad-charging.cfm, 4 papes.
Gitlin, "Cutting the cord: Ars goes hands-on with Qualcomm Halo wireless car charging," Ars Technica, 2015, retrieved from http://arstechnica.com/cars/2015/04/cutting-the-cord-ars-goes-hands-on-with-qualcomm-halo-wireless-car-charging/, 5 pages.
Gordon-Bloomfield, "Infiniti Delays LE Electric Sedan Production Plans," PluginCars.com, 2013, retrieved from http://www.plugincars.com/print/127405, 2 pages.
Greimel, "Nissan's next Evs: More mainstream, better battery," Automotive News, 2014, retrieved from http://www.autonews.com/article/20140507/OEM05/140509845?template=printart, 2 pages.
Harris, "Your questions answered: inductive charging for road vehicles," the Engineer, 2013, retrieved from http://www.theengineer.co.uk/automotive/in-depth/your-questions-answered-inductive-charging-for-road-vehicles, 8 pages.
Ivanco et al., "Wireless Charging Panel," EV Roadmap 7, 2014, 15 pages.
Li et al., "Energy Management and Control of Electric Vehicle Charging Stations," Electric Power Components and Systems, 2014, vol. 42(3-4), pp. 339-347.
Marks, "Wireless Charging for Electric vehicles hits the road," New Scientist, 2014, Issue 2953, retrieved from https://www.newscientist.com/article/mg22129534-900-wireless-charging-for-electric-vehicles-hits-the-road/, 2 pages.
Morris, "What's up with wireless EV charging," Charged Evs, 2013, retrieved from https://chargedevs.com/features/whats-wireless-ev-charging/, 9 pages.
Rim, "Wireless Power Transfer Systems for Roadway-powered Electric Vehicles," IEEE, 2014, retrieved from http://tec.ieee.org/2014/09/02/wireless-power-transfer-systems-roadway-powered-electric-vehicles/, 6 pages.
Stewart, "2014 Infiniti EV to Debut Wireless Inductive Charging System," Popular Mechanics, 2011, retrieved from http://www.popularmechanics.com/cars/hybrid-eleotric/a7331/2014-infiniti-ev-to-debut-wireless-inductive-charging-system/, 4 pages.
Szondy, "BMW developing wireless inductive charging system for electric vehicles," gizmag,com, 2014, retrieved from http://newatlas.com/bmw-induction-charging/32863/, 4 pages.
Taylor, "Unplugged: Audi Readying Wireless Induction Charging for Q7 e-tron," Car and Driver, 2015, retrieved from http://blog.caranddriver.com/unplugged-audi-readying-wireless-induction-charging-for-q7-e-tron/2 pages.
Final Action for U.S. Appl. No. 15/010,921, dated Jun. 1, 2018, 17 pages.
Final Action for U.S. Appl. No. 15/044,940, dated May 31, 2018 18 pages.
Final Action for U.S. Appl. No. 15/145,416, dated Mar. 19, 2018 14 pages.
Final Action for U.S. Appl. No. 15/143,0836, dated May 10, 2018 18 pages.
Official Action for U.S. Appl. No. 14/954,436, dated Sep. 22, 2017, 26 pages.
Final Action for U.S. Appl. No. 14/954,436, dated May 11, 2018, 7 pages.
Notice of Allowance for U.S. Appl. No. 14/954,436, dated Sep. 10, 2018, 7 pages.
Official Action for U.S. Appl. No. 14/954,484, dated Sep. 20, 2017, 15 pages.
Final Action for U.S. Appl. No. 14/954,484, dated Feb. 23, 2018, 7 pages.
Notice of Allowance for U.S. Appl. No. 14/954,484, dated Jun. 22, 2018, 5 pages.

* cited by examiner

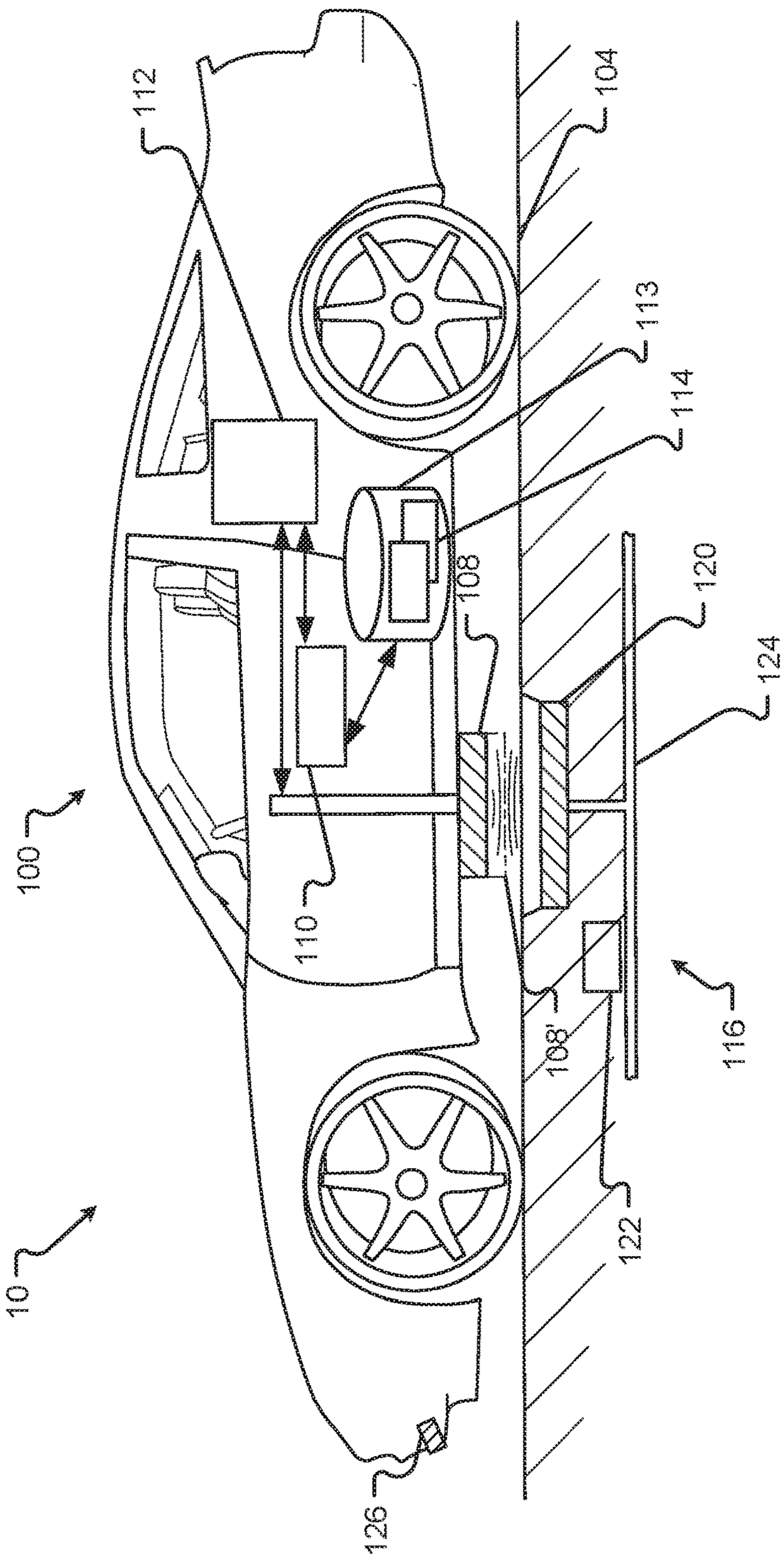

Fig. 1A

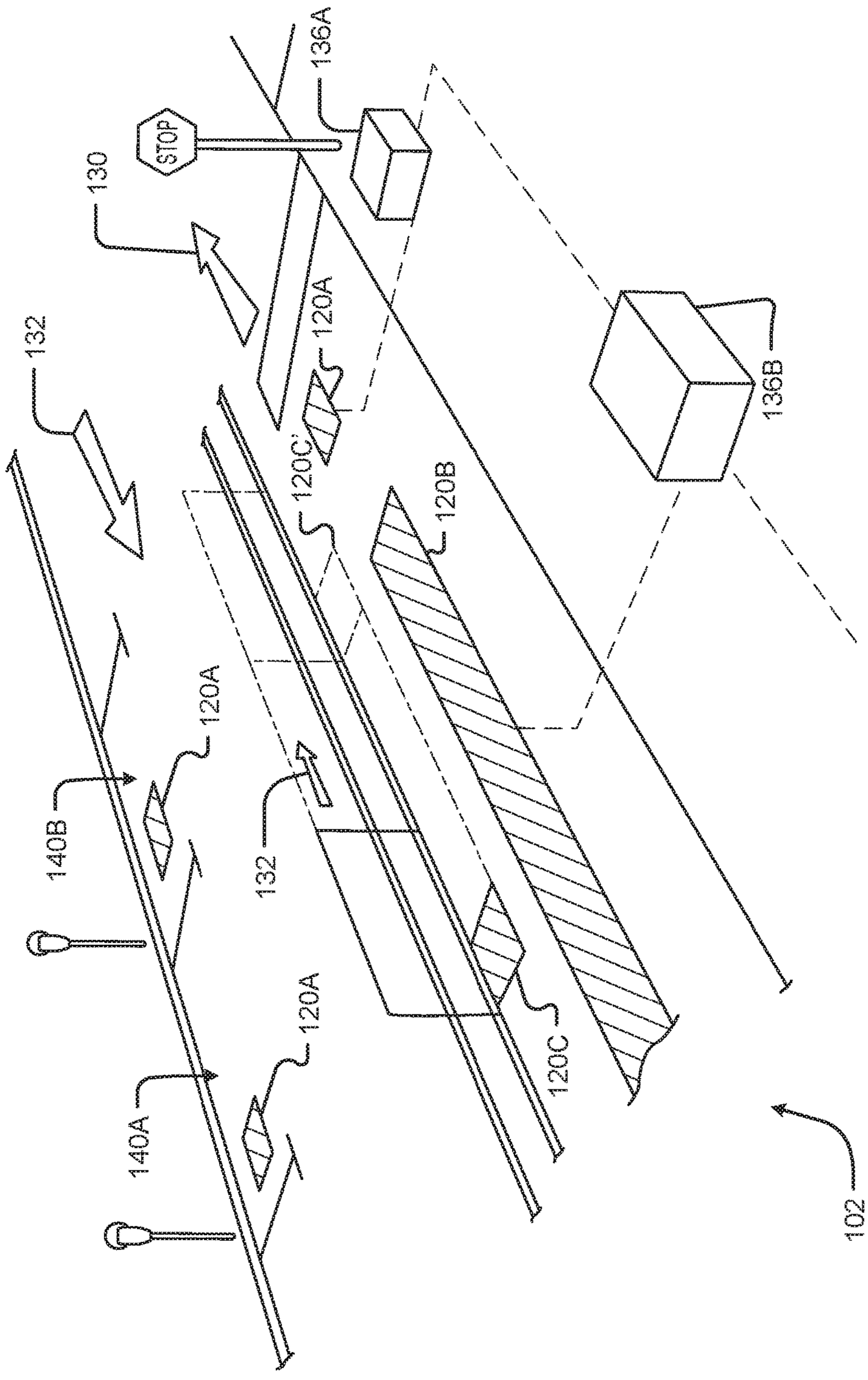
STOP
136A
130
132
120A
120C'
120B
136B
120A
140B
132
120A
120C
140A
102

Fig. 1B

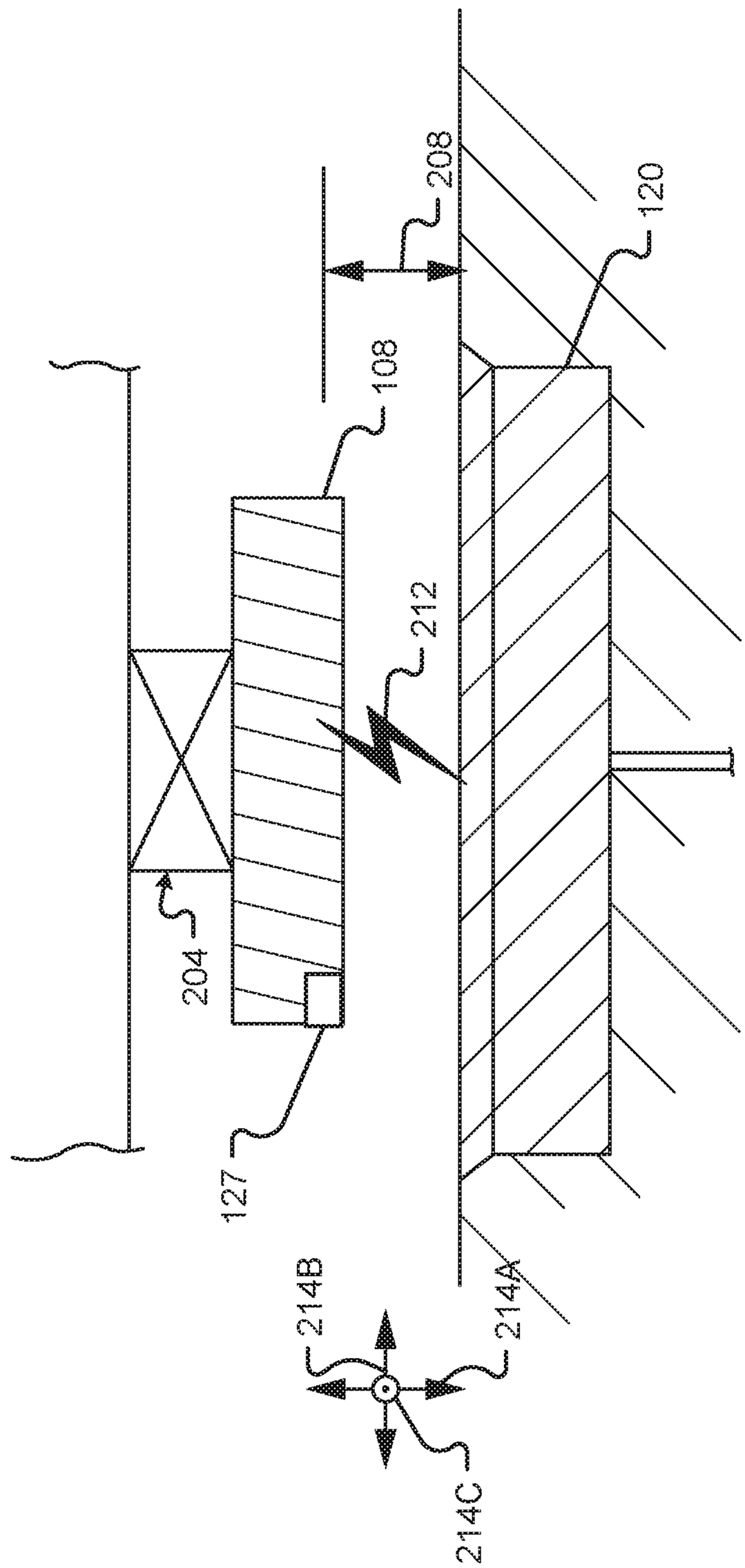

Fig. 2A

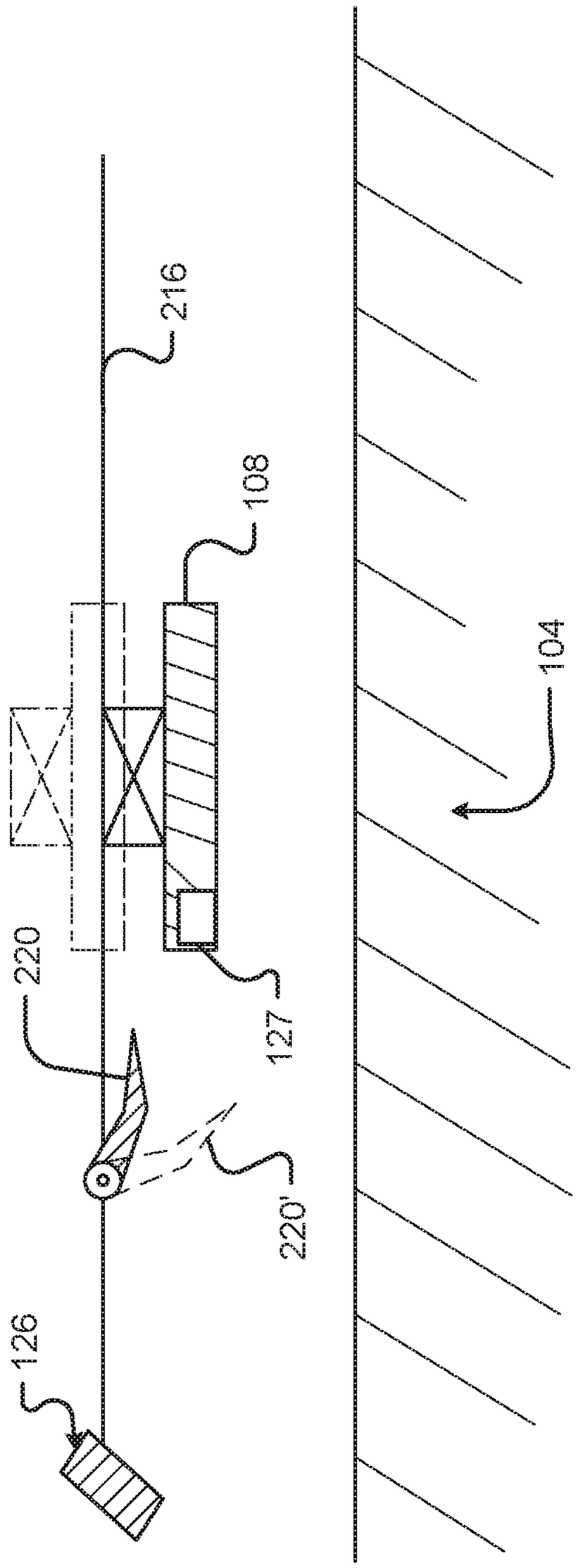

Fig. 2B

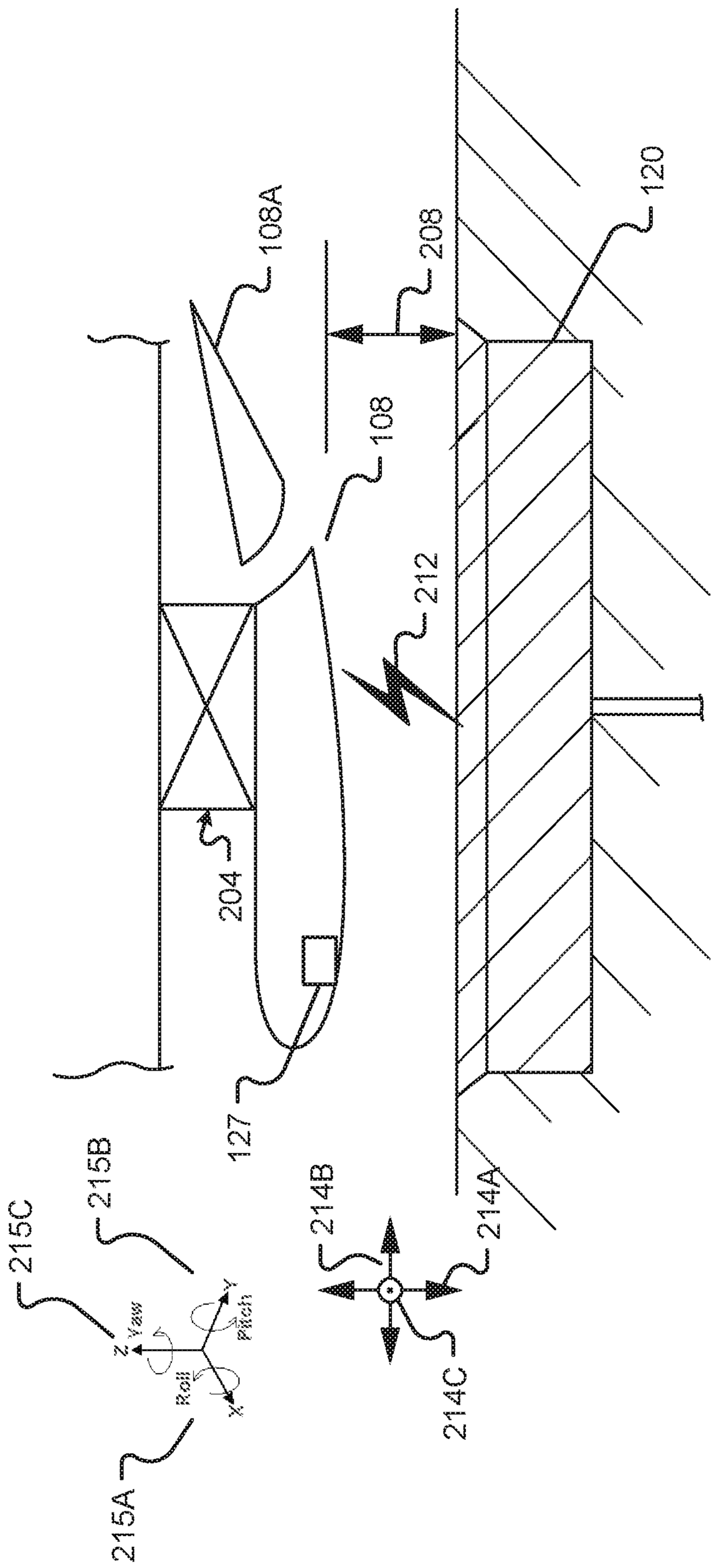
108A
208
120
108
212
204
127
215C
215B
214B
214A
Z
Yaw
Y
Pitch
Roll
X
214C
215A

Fig. 2C

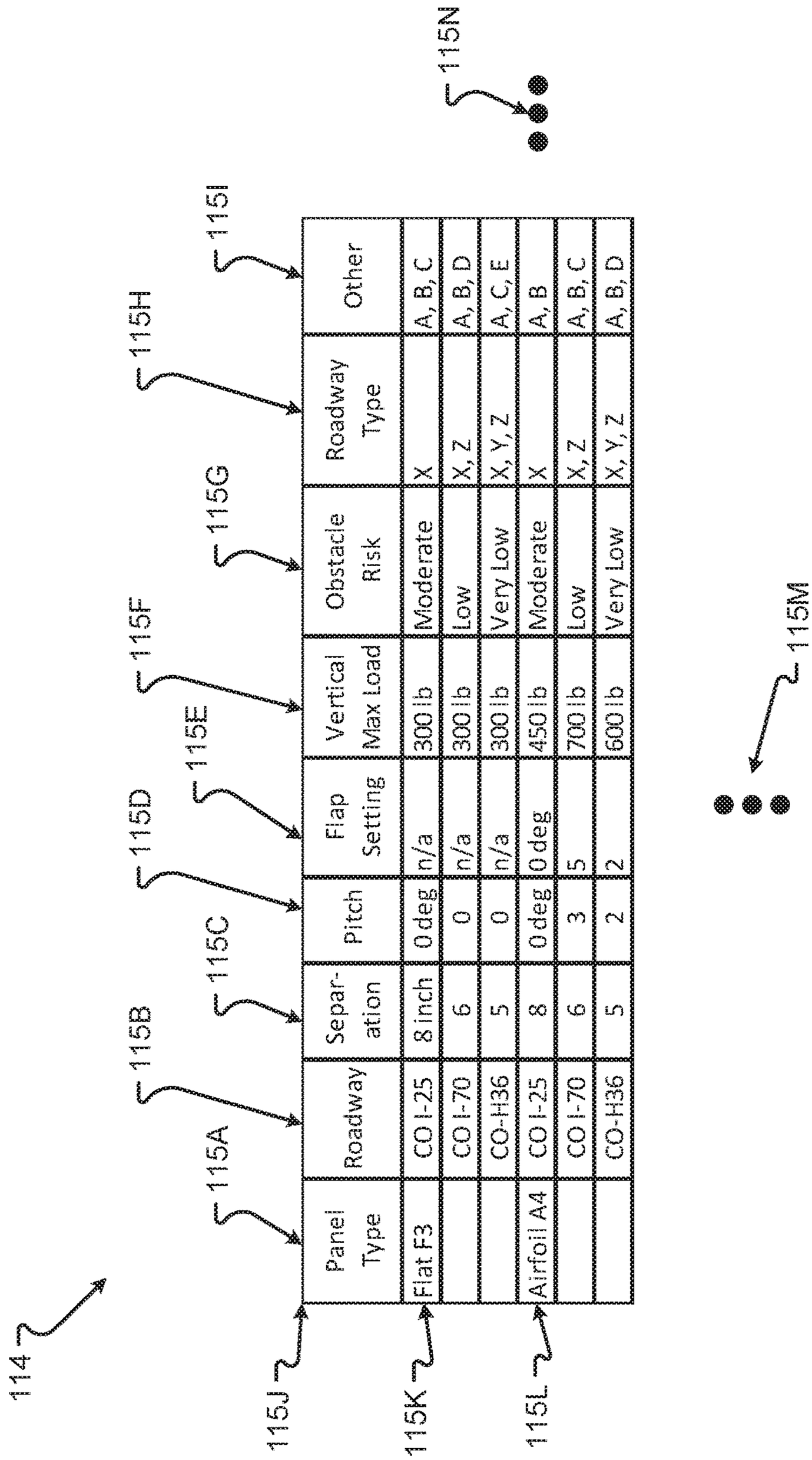
114
115A
115B
115C
115D
115E
115F
115G
115H
115I
115J
115K
115L
115M
115N
Panel Type
Roadway
Separ-ation
Pitch
Flap Setting
Vertical Max Load
Obstacle Risk
Roadway Type
Other
Flat F3
CO I-25
8 inch
0 deg
n/a
300 lb
Moderate
X
A, B, C
CO I-70
6
0
n/a
300 lb
Low
X, Z
A, B, D
CO-H36
5
0
n/a
300 lb
Very Low
X, Y, Z
A, C, E
Airfoil A4
CO I-25
8
0 deg
0 deg
450 lb
Moderate
X
A, B
CO I-70
6
3
5
700 lb
Low
X, Z
A, B, C
CO-H36
5
2
2
600 lb
Very Low
X, Y, Z
A, B, D

Fig. 3

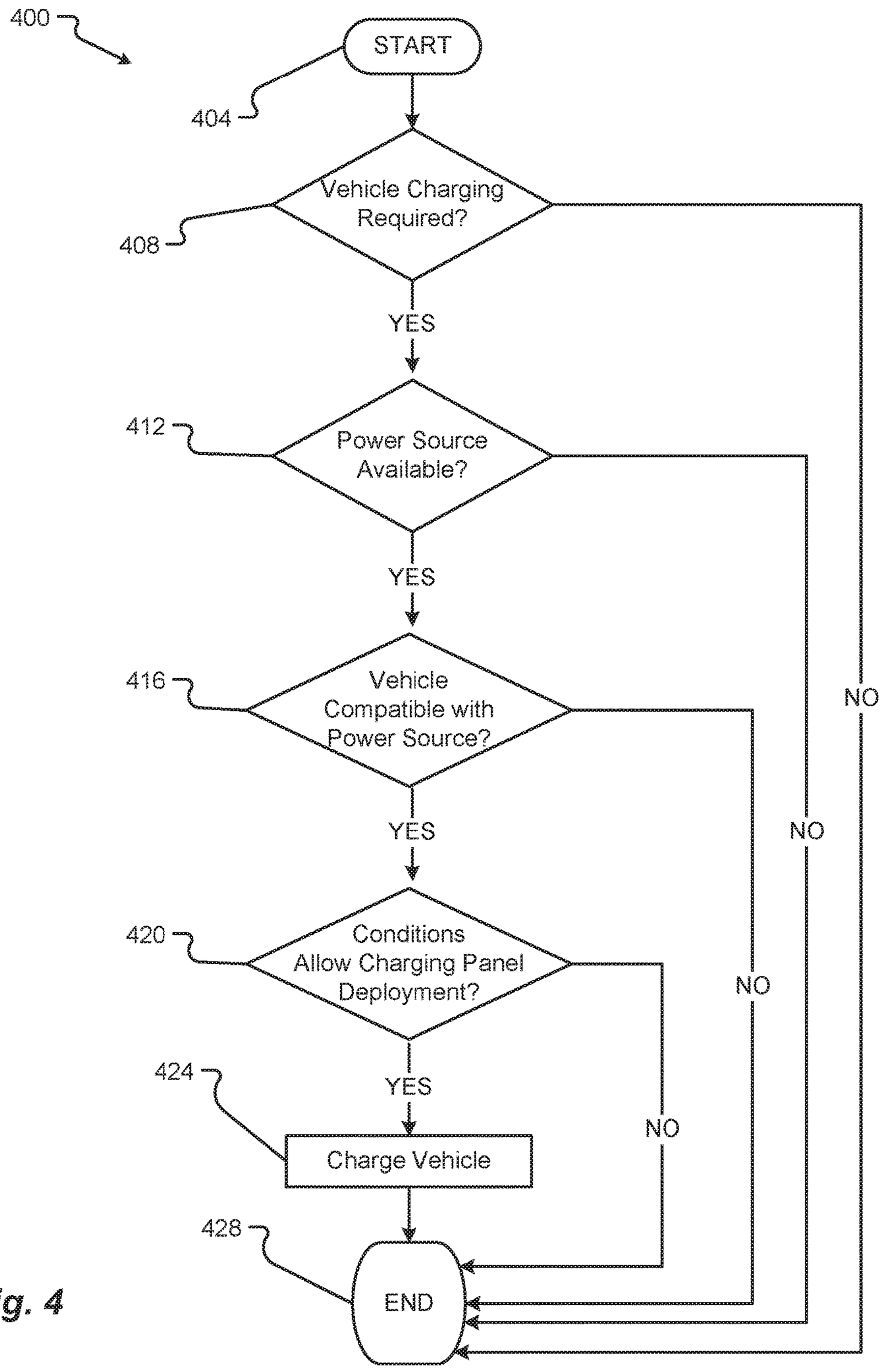
400
START
404
Vehicle Charging Required?
408
YES
NO
412
Power Source Available?
YES
NO
416
Vehicle Compatible with Power Source?
YES
NO
420
Conditions Allow Charging Panel Deployment?
YES
NO
424
Charge Vehicle
428
END

Fig. 4

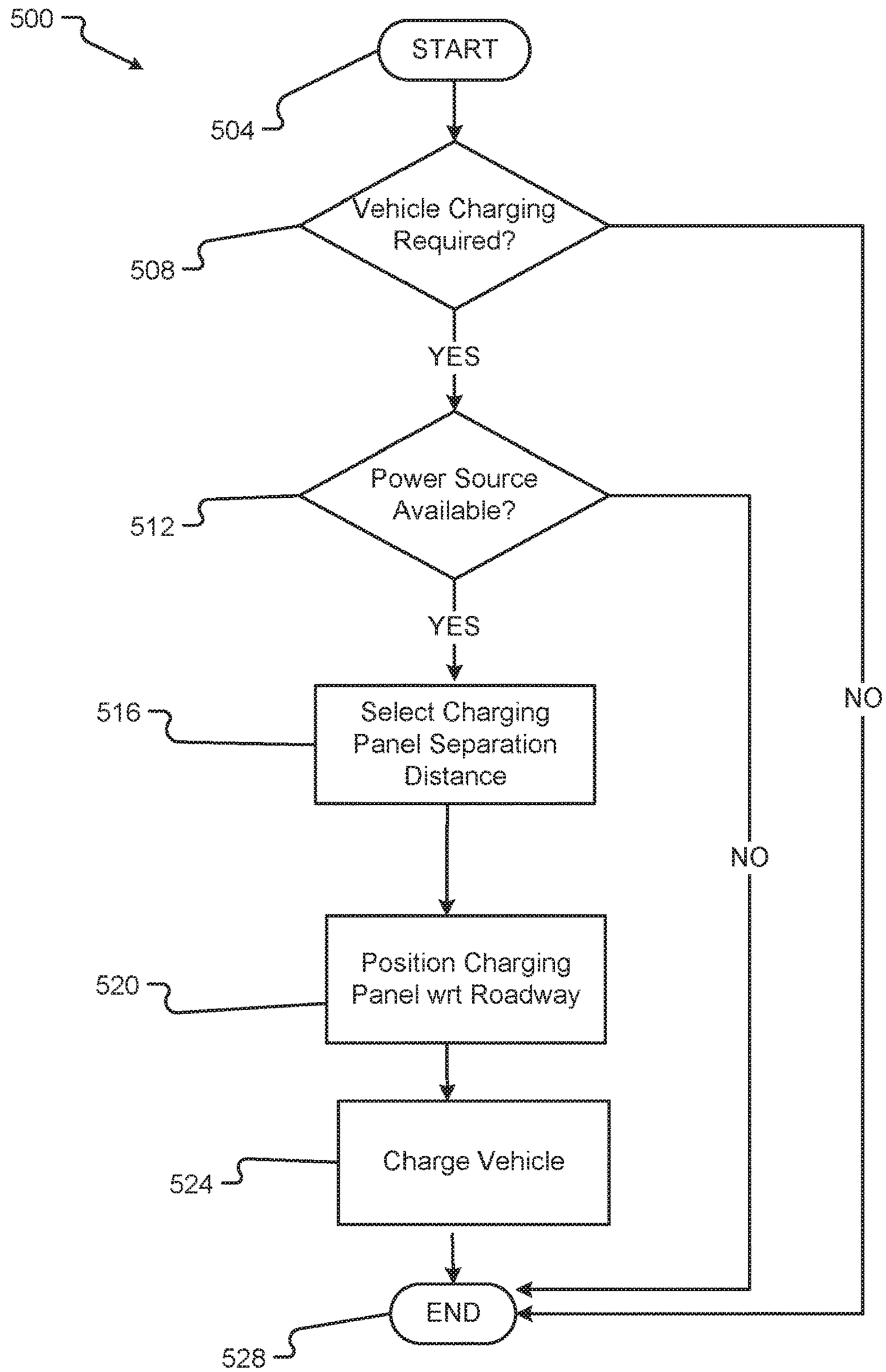
500
START
504
Vehicle Charging Required?
508
YES
NO
Power Source Available?
512
YES
NO
516
Select Charging Panel Separation Distance
520
Position Charging Panel wrt Roadway
524
Charge Vehicle
END
528

Fig. 5

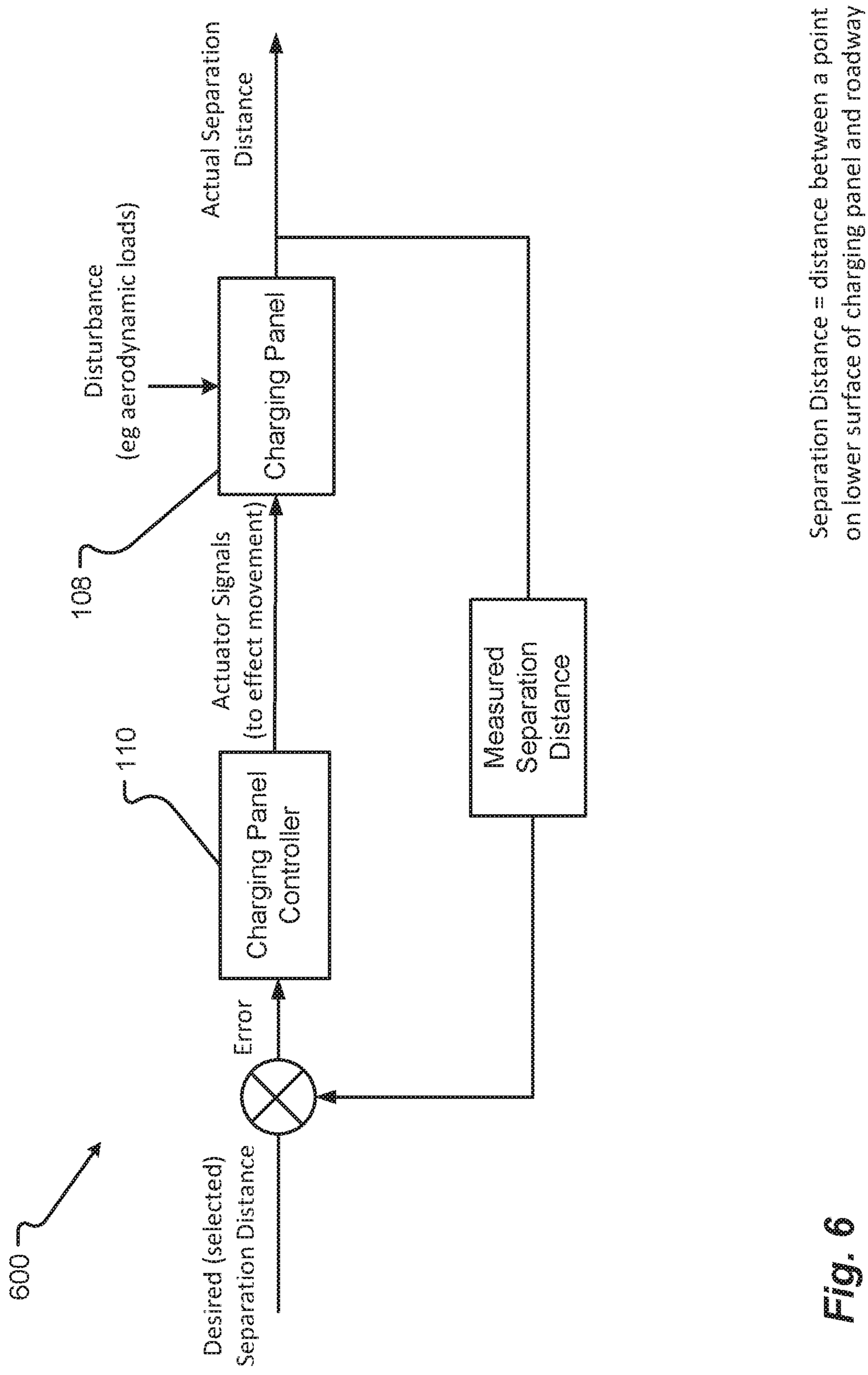
600
Desired (selected) Separation Distance
Error
110
Charging Panel Controller
Actuator Signals (to effect movement)
108
Charging Panel
Disturbance (eg aerodynamic loads)
Actual Separation Distance
Measured Separation Distance
Separation Distance = distance between a point on lower surface of charging panel and roadway

Fig. 6

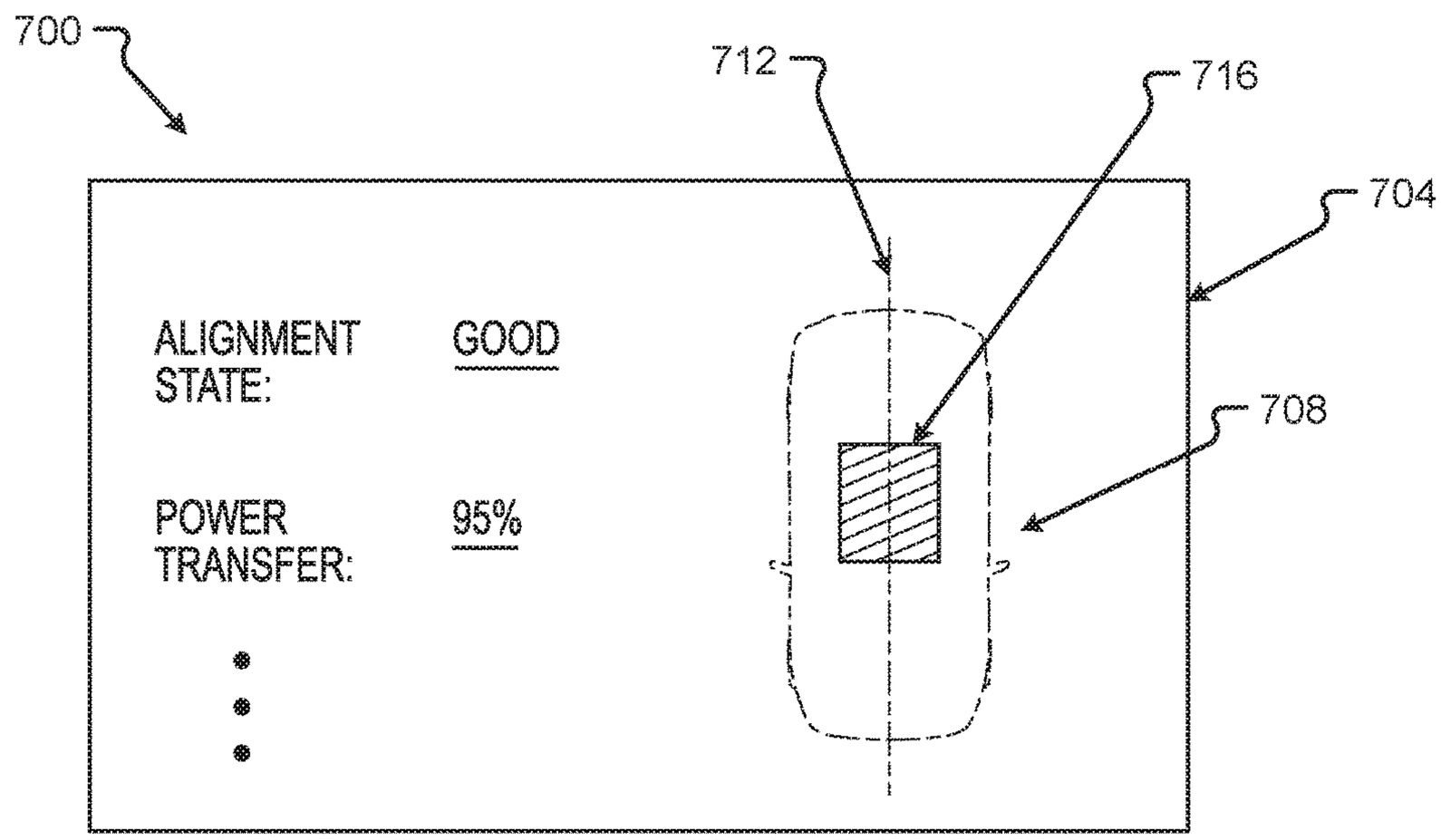
700
712
716
704
708
ALIGNMENT STATE:
GOOD
POWER TRANSFER:
95%

Fig. 7A

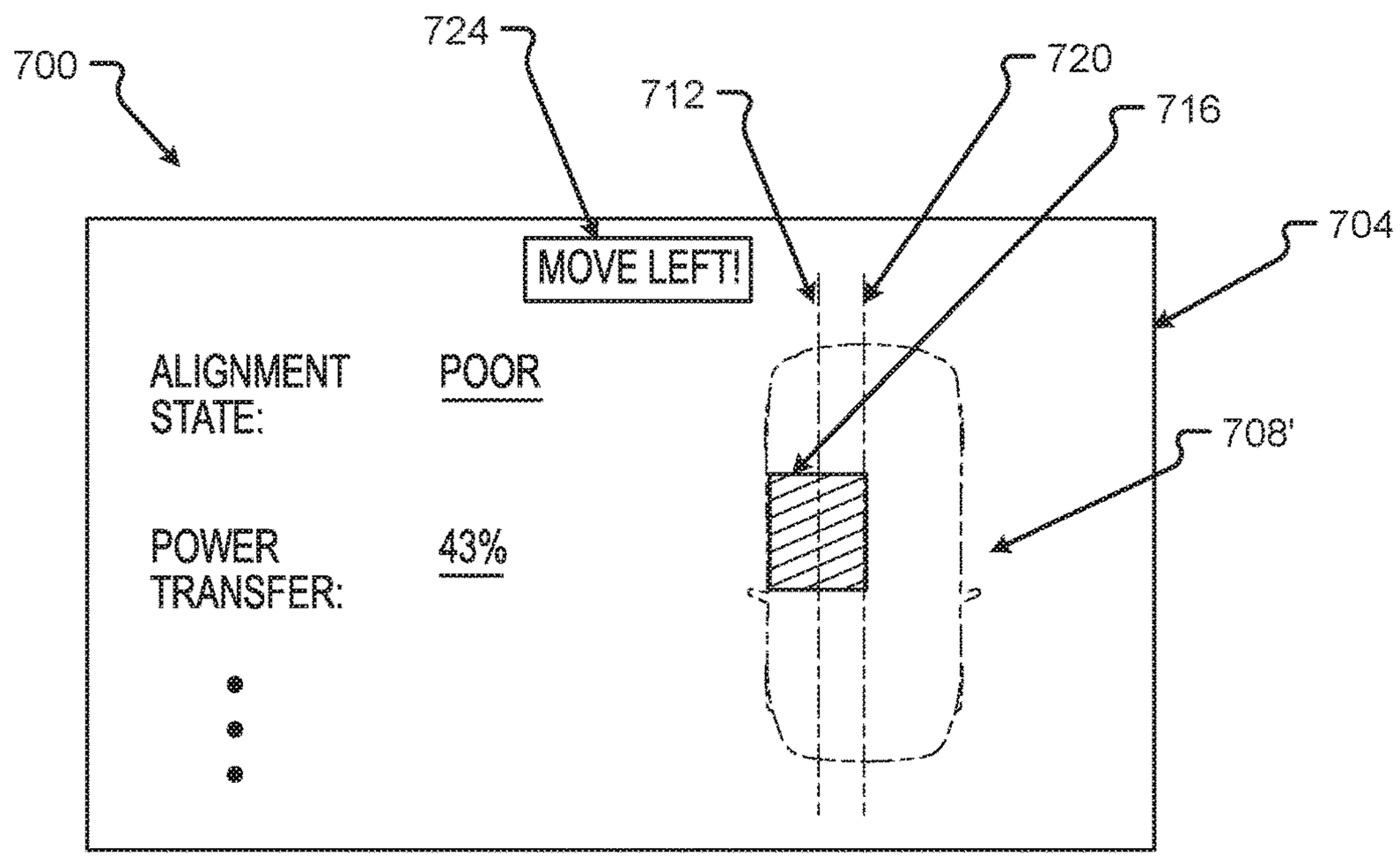
700
724
712
720
716
704
MOVE LEFT!
ALIGNMENT STATE:
POOR
708'
POWER TRANSFER:
43%

Fig. 7B

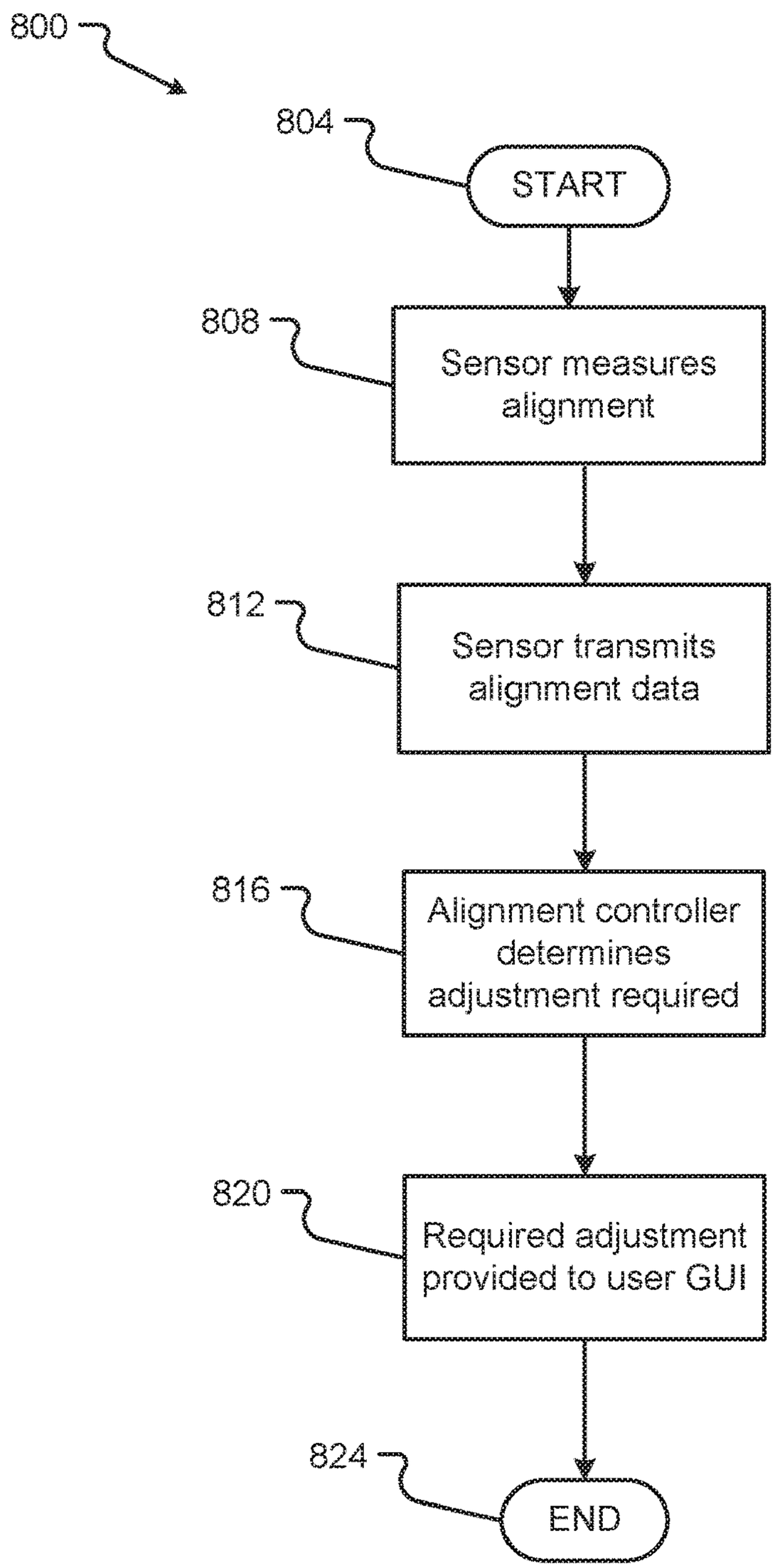
800
804
START
808
Sensor measures alignment
812
Sensor transmits alignment data
816
Alignment controller determines adjustment required
820
Required adjustment provided to user GUI
824
END

Fig. 8

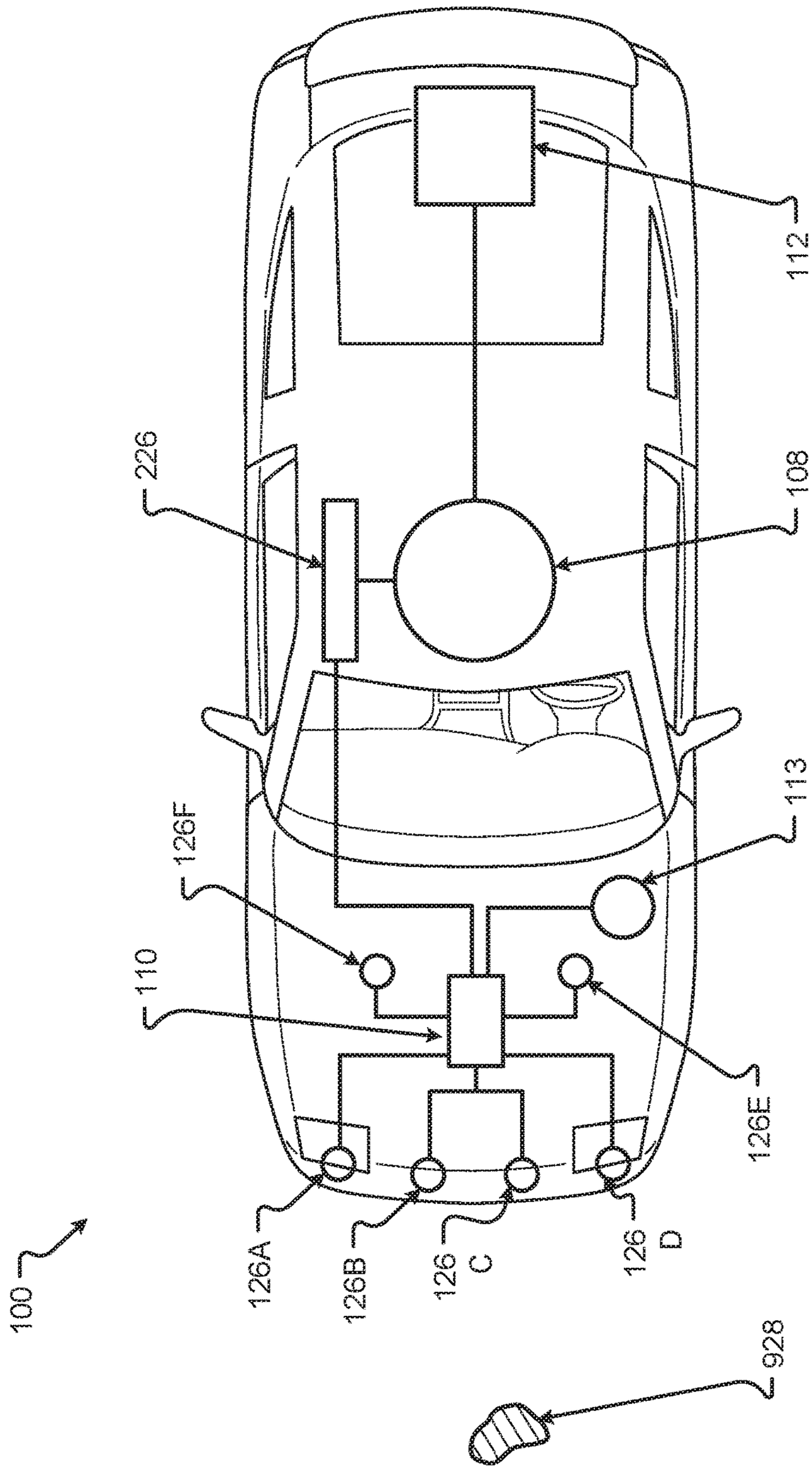

Fig. 9

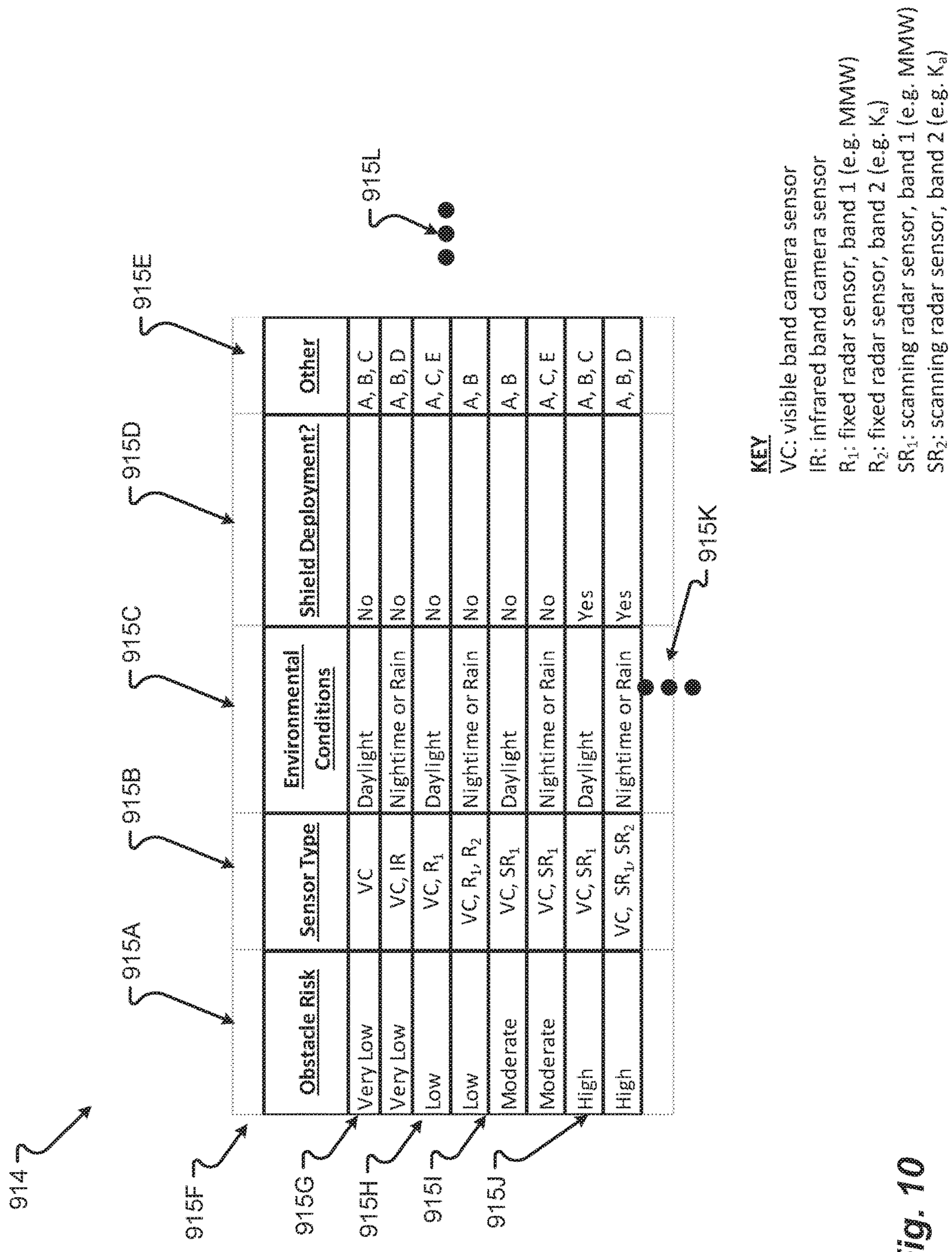
914
915A
915B
915C
915D
915E
915F
915G
915H
915I
915J
915K
915L
Obstacle Risk
Sensor Type
Environmental Conditions
Shield Deployment?
Other
Very Low | VC | Daylight | No | A, B, C
Very Low | VC, IR | Nightime or Rain | No | A, B, D
Low | VC, R_1 | Daylight | No | A, C, E
Low | VC, R_1, R_2 | Nightime or Rain | No | A, B
Moderate | VC, SR_1 | Daylight | No | A, B
Moderate | VC, SR_1 | Nightime or Rain | No | A, C, E
High | VC, SR_1 | Daylight | Yes | A, B, C
High | VC, SR_1, SR_2 | Nightime or Rain | Yes | A, B, D
KEY
VC: visible band camera sensor
IR: infrared band camera sensor
R_1: fixed radar sensor, band 1 (e.g. MMW)
R_2: fixed radar sensor, band 2 (e.g. K_a)
SR_1: scanning radar sensor, band 1 (e.g. MMW)
SR_2: scanning radar sensor, band 2 (e.g. K_a)

Fig. 10

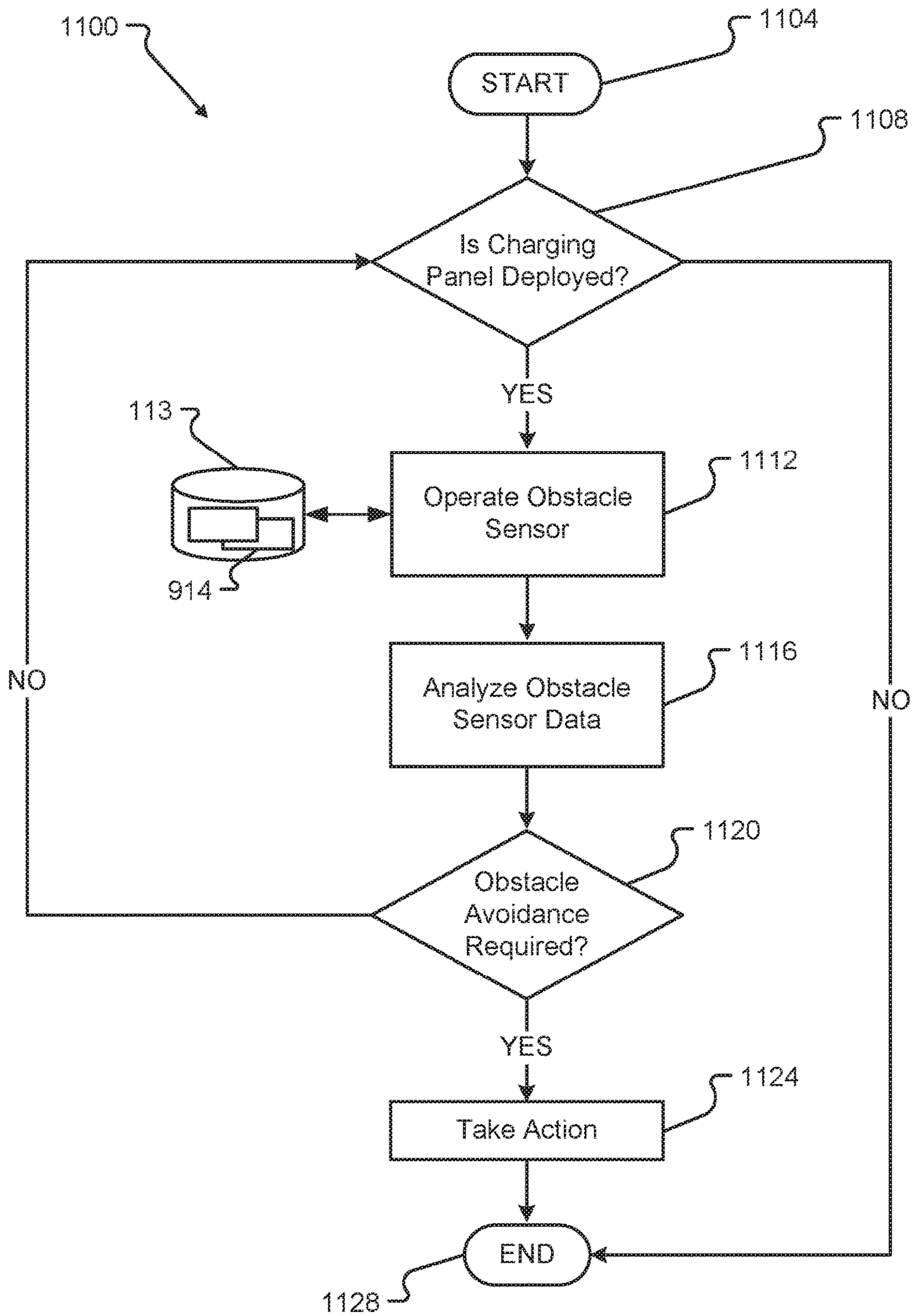
1100
1104
START
1108
Is Charging Panel Deployed?
YES
113
1112
Operate Obstacle Sensor
914
1116
Analyze Obstacle Sensor Data
NO
NO
1120
Obstacle Avoidance Required?
YES
1124
Take Action
END
1128

Fig. 11

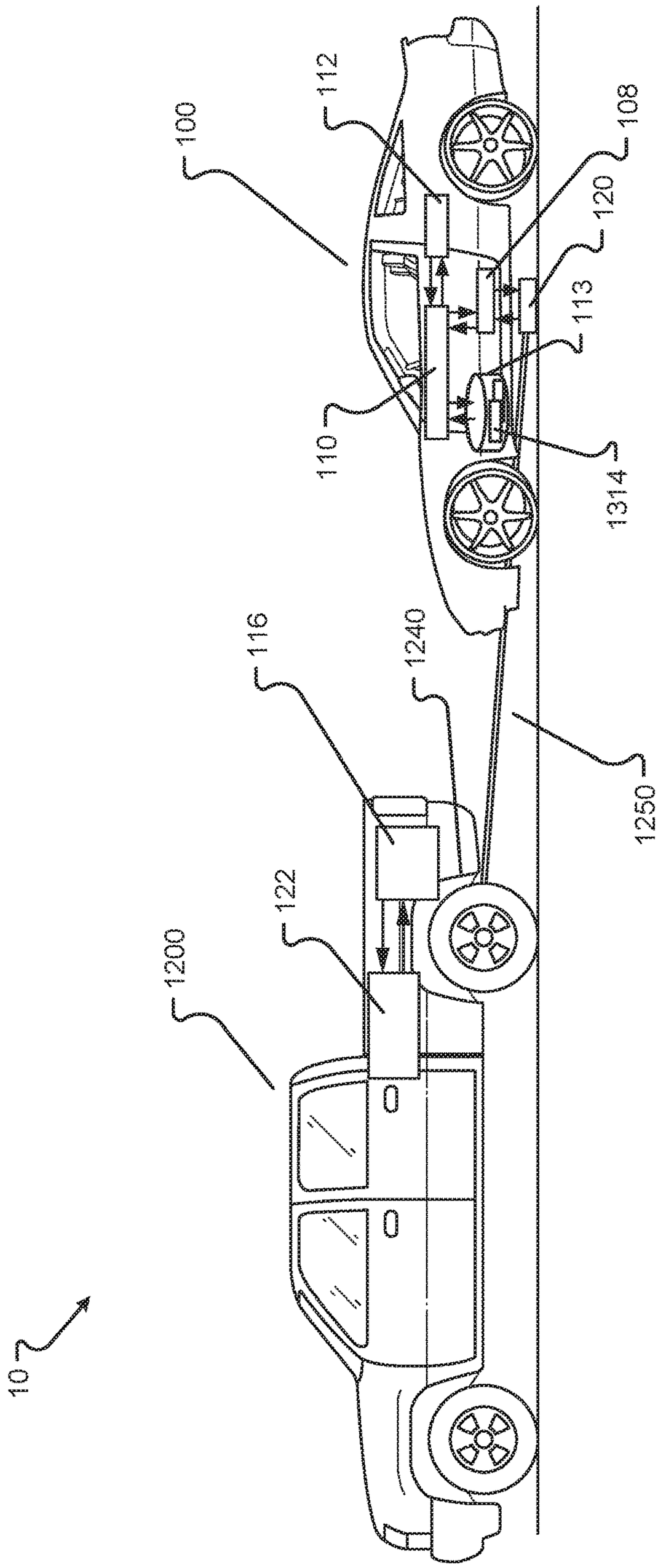

Fig. 12

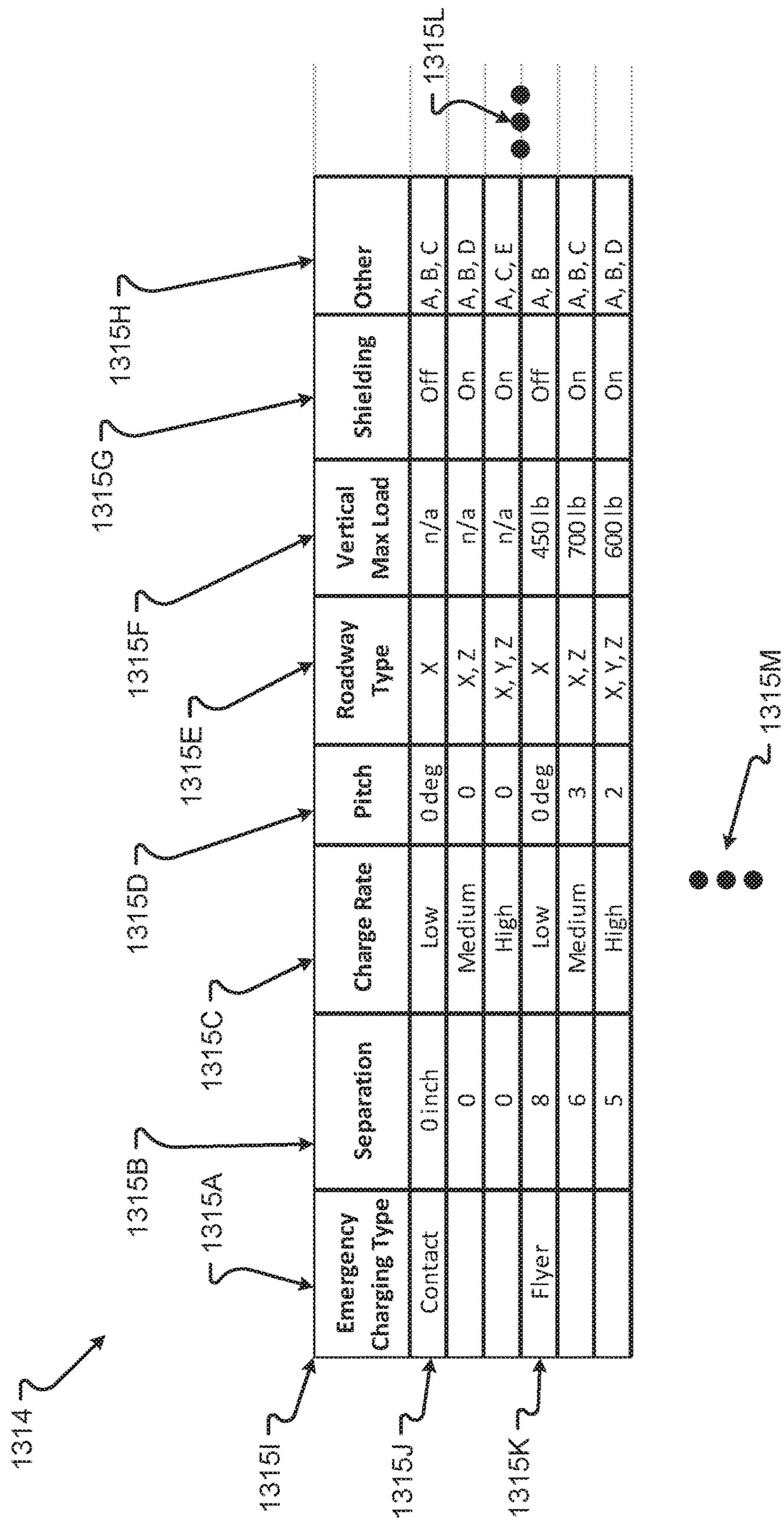
1314
1315A
1315B
1315C
1315D
1315E
1315F
1315G
1315H
1315I
1315J
1315K
1315L
1315M
Emergency Charging Type
Separation
Charge Rate
Pitch
Roadway Type
Vertical Max Load
Shielding
Other
Contact
0 inch
Low
0 deg
X
n/a
Off
A, B, C
0
Medium
0
X, Z
n/a
On
A, B, D
0
High
0
X, Y, Z
n/a
On
A, C, E
Flyer
8
Low
0 deg
X
450 lb
Off
A, B
6
Medium
3
X, Z
700 lb
On
A, B, C
5
High
2
X, Y, Z
600 lb
On
A, B, D

Fig. 13

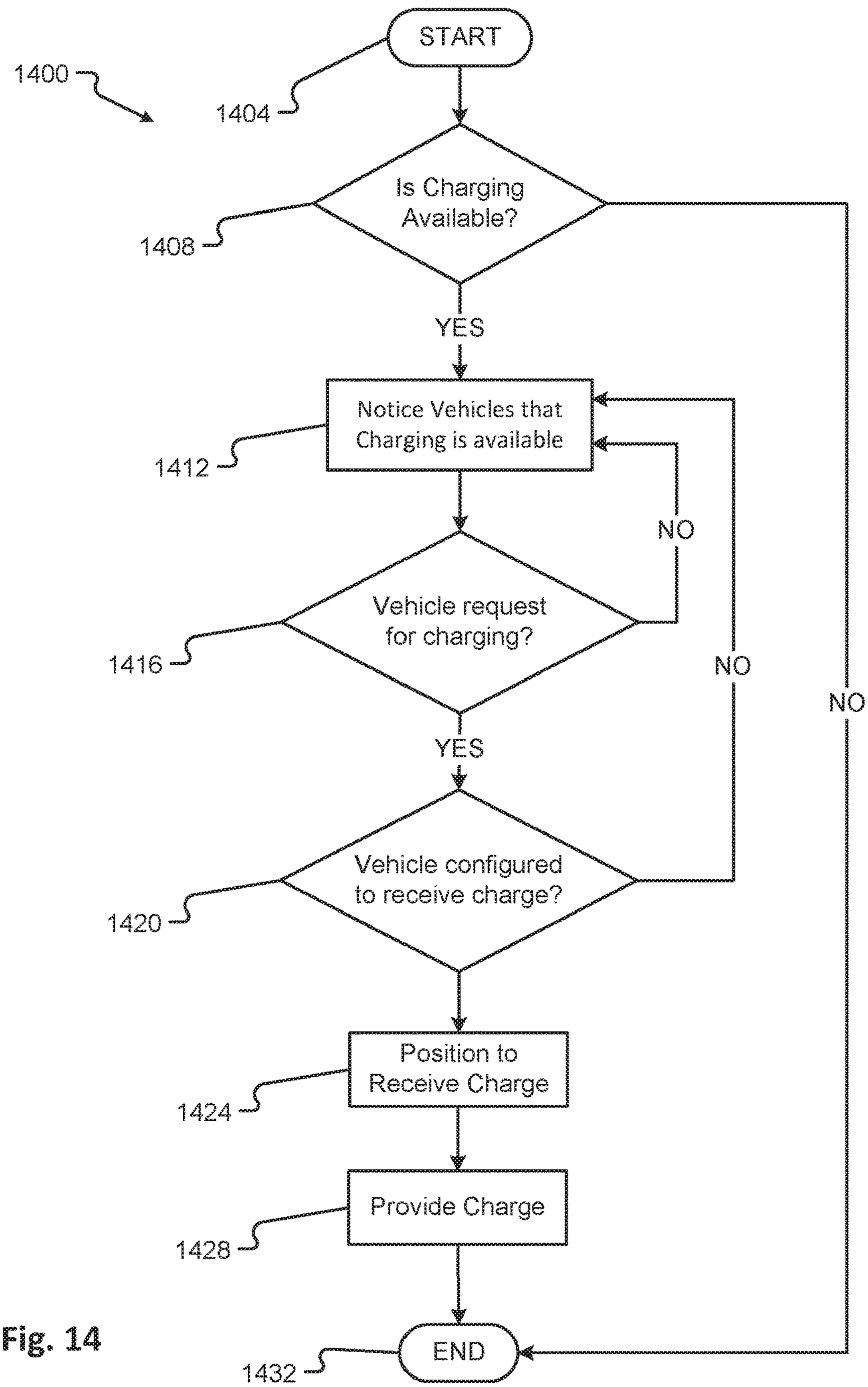
1400
START
1404
Is Charging Available?
1408
YES
Notice Vehicles that Charging is available
1412
NO
Vehicle request for charging?
1416
NO
NO
YES
Vehicle configured to receive charge?
1420
Position to Receive Charge
1424
Provide Charge
1428
END
1432

Fig. 14

ELECTRIC VEHICLE EMERGENCY CHARGING SYSTEM AND METHOD OF USE

CROSS REFERENCE TO RELATED APPLICATIONS

The present application claims the benefits of and priority, under 35 U.S.C. § 119(e), to U.S. Provisional Patent Application Ser. Nos. 62/255,214, filed on Nov. 13, 2015, entitled "Electric Vehicle Systems and Operation;" 62/259,536, filed Nov. 24, 2015, entitled "Charging Transmission Line Under Roadway for Moving Electric Vehicle;" and 62/266,452, filed Dec. 11, 2015, entitled "Charging Transmission Line Under Roadway for Moving Electric Vehicle."

This application is also related to U.S. patent application Ser. No. 14/954,436, filed on Nov. 30, 2015, entitled "Electric Vehicle Roadway Charging System and Method of Use;" Ser. No. 14/954,484, filed on Nov. 30, 2015, entitled "Electric Vehicle Charging Device Positioning and Method of Use;" Ser. No. 14/979,158, filed on Dec. 22, 2015, entitled "Electric Vehicle Charging Device Alignment and Method of Use;" Ser. No. 14/979,158, filed on Dec. 22, 2015, entitled "Electric Vehicle Charging Device Alignment and Method of Use;" and Ser. No. 14/981,368, filed on Dec. 28, 2015, entitled "Electric Vehicle Charging Device Obstacle Avoidance and Warning System and Method of Use;" the entire disclosures of which are hereby incorporated herein by reference, in its entirety, for all that it teaches and for all purposes.

FIELD OF THE INVENTION

The disclosure relates generally to electric vehicle systems, and in particular to electric vehicle charging systems and associated methods of use.

BACKGROUND OF THE INVENTION

In recent years, transportation methods have changed substantially. This change is due in part to a concern over the limited availability of natural resources, a proliferation in personal technology, and a societal shift to adopt more environmentally friendly transportation solutions. These considerations have encouraged the development of a number of new flexible-fuel vehicles, hybrid-electric vehicles, and electric vehicles.

While these vehicles appear to be new they are generally implemented as a number of traditional subsystems that are merely tied to an alternative power source. In fact, the design and construction of the vehicles is limited to standard frame sizes, shapes, materials, and transportation concepts. Among other things, these limitations fail to take advantage of the benefits of new technology, power sources, and support infrastructure.

Existing devices and methods to charge electric vehicles are typically limited to fixed locations and of are of limited utility. Therefore, there is a need for an adaptable charging system that may operate remotely or while the charging vehicle is moving. This disclosure solves those needs.

By way of providing additional background, context, and to further satisfy the written description requirements of 35 U.S.C. § 112, the following references are hereby incorporated by reference in their entireties for all purposes and all that is disclosed: U.S. Pat. No. 5,311,973, issued May 17, 1994; U.S. Pat. No. 5,821,728 issued Oct. 13, 1998; U.S. Pat. No. 6,421,600, issued Jul. 16, 2002; U.S. Pat. No. 6,879,889 issued Apr. 12, 2005; and U.S. Pat. No. 8,544,622 issued Oct. 1, 2013; and U.S. Pat. Publ. Nos. 2012/0055751 published Mar. 8, 2012; 2012/0203410 published Aug. 9, 2012; 2012/0217112, published Aug. 30, 2012; 2013/0248311; and 2015/0137801 published May 21, 2015; and PCT Application No. WO2010/000495 published Jan. 7, 2010.

SUMMARY OF THE INVENTION

The disclosure provides a system and method of use to provide electric vehicle charging. Specifically, systems and methods to provide charging through induction are presented.

In one embodiment, a system for charging a moving electric vehicle is disclosed, the system comprising: an electrical storage unit disposed on the electric vehicle; a charging panel in electrical communication with the electrical storage unit; a vehicle controller that determines if the electrical storage unit requires charging and configured to determine if an emergency external power source is available to charge the electrical storage unit; wherein the charging panel receives the charge from the emergency external power source and charges the electrical storage unit.

In another embodiment, a method for charging a moving electric vehicle is disclosed, the method comprising: determining, by a microprocessor, a charge value of an electrical storage unit disposed on the electric vehicle; determining, by the microprocessor, if the charge value is below a selectable threshold value wherein charging of the electrical storage unit is required; identifying, by the microprocessor, if an emergency external power source is available for charging of the electrical storage unit; and positioning, by the microprocessor, a charging panel of the electric vehicle, the charging panel positioned to receive charging from a charging plate interconnected to the emergency external power source; wherein the charging plate receives charging from the emergency external power source and charges the electrical storage unit.

In other embodiments, the method, system and/or device may comprise: wherein the charging panel is configured to operate in a plurality of states comprising a retracted state and a deployed state; an actuator interconnected to the charging panel and to the electric vehicle, wherein the actuator is configured to move the charging panel to receive the charge; at least one range sensor configured to measure a first measured distance between a first point on the charging panel and a second point on a charging plate interconnected to the emergency external power source; wherein the first point of the charging panel is positioned at a selectable desired separation distance from the second point on the charging plate, wherein the selectable desired separation distance is selected from a vehicle database; wherein the positioning of the first point of the charging panel to the selectable desired separation distance is performed automatically by actuation of the actuator; wherein the vehicle controller receives the first measured distance and automatically actuates the actuator to adjust the position of the charging panel to the desired separation distance; wherein the emergency external power source is disposed on a moving roadway vehicle; wherein the charging plate is configured to extend from the roadway vehicle to a position below the electric vehicle, wherein charging is provided from the emergency external power source to the charging panel of the electric vehicle; wherein a charging level of the charging is selectable from a vehicle database; wherein the charging plate is in physical contact with the charging panel;

and wherein the actuator is configured to move the charging panel in both a vertical and a lateral direction.

In other embodiments, the method may further comprise: measuring, by a sensor, an alignment measurement between the charging panel and the charging plate; transmitting, by the microprocessor, the alignment measurement to an alignment controller; receiving, by the alignment controller, the alignment measurement; determining, by the microprocessor, a required alignment adjustment; and adjusting, by the microprocessor, the position of the charging panel by the required alignment adjustment.

BRIEF DESCRIPTION OF THE DRAWINGS

For a more complete understanding of the present disclosure and its advantages, reference is now made to the following description taken in conjunction with the accompanying drawings, in which like reference numerals represent like parts:

FIG. **1**A shows a vehicle in a charging environment in accordance with embodiments of the present disclosure;

FIG. **1**B shows charging areas associated with an environment in accordance with embodiments of the present disclosure;

FIG. **2**A shows a detail view of a vehicle charging panel in a charge receiving position adjacent to a power source in accordance with embodiments of the present disclosure;

FIG. **2**B shows a detail view of a vehicle charging panel in protected positions in accordance with embodiments of the present disclosure;

FIG. **2**C shows a detail view of a vehicle charging panel in a charge receiving position adjacent to a power source in accordance with embodiments of the present disclosure;

FIG. **3** is a diagram of an embodiment of a data structure for storing information about a charging panel configuration for given roadway types;

FIG. **4** is a flow or process diagram of a method of charging an electric vehicle;

FIG. **5** is a flow or process diagram of a method of positioning a charging panel of an electrical vehicle to receive a charge;

FIG. **6** is a block diagram of a charging panel control system;

FIG. **7**A shows a first state of a graphical user interface used in aligning a charging panel of an electrical vehicle to receive a charge;

FIG. **7**B shows a second state of the graphical user interface of FIG. **7**A;

FIG. **8** is a flow or process diagram of a method of aligning a charging panel of an electrical vehicle to receive a charge;

FIG. **9** shows a vehicle in a roadway obstacle environment in accordance with embodiments of the present disclosure;

FIG. **10** is a diagram of an embodiment of a data structure for storing information about sensor configurations for given obstacle risk profile;

FIG. **11** is a flow or process diagram of a method of obstacle warning and avoidance;

FIG. **12** shows a vehicle in an emergency charging environment in accordance with embodiments of the present disclosure;

FIG. **13** is a diagram of an embodiment of a data structure for storing information about a charging panel configuration for given emergency charging environments; and

FIG. **14** is a flow or process diagram of a method of emergency charging from a roadway vehicle.

It should be understood that the drawings are not necessarily to scale. In certain instances, details that are not necessary for an understanding of the invention or that render other details difficult to perceive may have been omitted. It should be understood, of course, that the invention is not necessarily limited to the particular embodiments illustrated herein.

To assist in the understanding of the present invention the following list of components and associated numbering found in the drawings is provided herein:

#	Component
10	System
100	Vehicle
102	Travel Environment
104	Roadway (Street or Other Travel Path)
108	Charging Panel (retracted)
108'	Charging Panel (deployed)
108A	Charging Panel Airfoil Flap (extended)
110	Charging Panel Controller
112	Energy Storage Unit
113	Vehicle Database
114	Data Structures
115A-N	Data Structure Fields
116	(Charging) Power Source
120	Charging Area/Plate
120A-C	Various Charging Areas within Travel Environment
122	Charge Provider Controller
124	Transmission Line
126	Vehicle Sensors
127	Separation Distance Sensor
132	Direction or Path
140A	Parking Space
140B	Traffic Controlled Space
204	Armature
208	Separation Distance
212	Position for Receiving a Charge
214	Direction
214A	First Direction (axis)
214B	Second Direction (axis)
214C	Third Direction (axis)
215A-C	Roll, Pitch, Yaw Direction (axis)
220	Shield position one
220'	Shield position two
226	Protective device
700	Graphical user interface
704	Display device
708	Feedback adjustment image one
708'	Feedback adjustment image two
712	(Charging) Power Source centerline icon
716	(Charging) Power Source icon
720	Charging Panel centerline icon
724	Alignment instruction
914	Sensor Data Structure
915A-N	Sensor Data Structure Fields
928	Obstacle
1200	Emergency Charging Vehicle
1240	Charging Cable
1250	Connector
1314	Emergency Charging Data Structure
1315A-M	Emergency Charging Data Structure Fields

DETAILED DESCRIPTION OF THE INVENTION

In the following detailed description, numerous specific details are set forth in order to provide a thorough understanding of the disclosed techniques. However, it will be understood by those skilled in the art that the present embodiments may be practiced without these specific details. In other instances, well-known methods, procedures, components and circuits have not been described in detail so as not to obscure the present disclosure.

Although embodiments are not limited in this regard, discussions utilizing terms such as, for example, "processing," "computing," "calculating," "determining," "establishing", "analyzing", "checking", or the like, may refer to operation(s) and/or process(es) of a computer, a computing platform, a computing system, a communication system or subsystem, or other electronic computing device, that manipulate and/or transform data represented as physical (e.g., electronic) quantities within the computer's registers and/or memories into other data similarly represented as physical quantities within the computer's registers and/or memories or other information storage medium that may store instructions to perform operations and/or processes.

Although embodiments are not limited in this regard, the terms "plurality" and "a plurality" as used herein may include, for example, "multiple" or "two or more". The terms "plurality" or "a plurality" may be used throughout the specification to describe two or more components, devices, elements, units, parameters, circuits, or the like.

The term "armature" means a moveable portion of an electromagnetic system or device.

The term "inductive charging" means the use of an EM field to transfer energy between two objects.

The term "display" refers to a portion of a screen used to display the output of a computer to a user.

The term "displayed image" or "displayed object" refers to an image produced on the display. A typical displayed image is a window or desktop or portion thereof, such as an icon. The displayed image may occupy all or a portion of the display.

The terms "communication device," "smartphone," and "mobile device," and variations thereof, as used herein, are used interchangeably and include any type of device capable of communicating with one or more of another device and/or across a communications network, via a communications protocol, and the like. Exemplary communication devices may include but are not limited to smartphones, handheld computers, laptops, netbooks, notebook computers, subnotebooks, tablet computers, scanners, portable gaming devices, phones, pagers, GPS modules, portable music players, and other Internet-enabled and/or network-connected devices.

The term "automatic" and variations thereof, as used herein, refers to any process or operation done without material human input when the process or operation is performed. However, a process or operation can be automatic, even though performance of the process or operation uses material or immaterial human input, if the input is received before performance of the process or operation. Human input is deemed to be material if such input influences how the process or operation will be performed. Human input that consents to the performance of the process or operation is not deemed to be "material".

The term "screen," "touch screen," or "touchscreen" refers to a physical structure that enables the user to interact with the computer by touching areas on the screen and provides information to a user through a display. The touch screen may sense user contact in a number of different ways, such as by a change in an electrical parameter (e.g., resistance or capacitance), acoustic wave variations, infrared radiation proximity detection, light variation detection, and the like. In a resistive touch screen, for example, normally separated conductive and resistive metallic layers in the screen pass an electrical current. When a user touches the screen, the two layers make contact in the contacted location, whereby a change in electrical field is noted and the coordinates of the contacted location calculated. In a capacitive touch screen, a capacitive layer stores electrical charge, which is discharged to the user upon contact with the touch screen, causing a decrease in the charge of the capacitive layer. The decrease is measured, and the contacted location coordinates determined. In a surface acoustic wave touch screen, an acoustic wave is transmitted through the screen, and the acoustic wave is disturbed by user contact. A receiving transducer detects the user contact instance and determines the contacted location coordinates. The touch screen may or may not include a proximity sensor to sense a nearness of object, such as a user digit, to the screen.

Before undertaking the description of embodiments below, it may be advantageous to set forth definitions of certain words and phrases used throughout this document: the terms "include" and "comprise," as well as derivatives thereof, mean inclusion without limitation; the term "or," is inclusive, meaning and/or; the phrases "associated with" and "associated therewith," as well as derivatives thereof, may mean to include, be included within, interconnect with, interconnected with, contain, be contained within, connect to or with, couple to or with, be communicable with, cooperate with, interleave, juxtapose, be proximate to, be bound to or with, have, or the like; and the term "controller" means any device, system or part thereof that controls at least one operation, such a device may be implemented in hardware, circuitry, firmware or software, or combination of at least two of the same. It should be noted that the functionality associated with any particular controller may be centralized or distributed, whether locally or remotely. Definitions for certain words and phrases are provided throughout this document and those of ordinary skill in the art should understand that in many, if not most instances, such definitions apply to prior, as well as future uses of such defined words and phrases.

For purposes of explanation, numerous details are set forth in order to provide a thorough understanding of the present techniques. It should be appreciated however that the present disclosure may be practiced in a variety of ways beyond the specific details set forth herein. Furthermore, while the exemplary embodiments illustrated herein show various components of the system collocated, it is to be appreciated that the various components of the system can be located at distant portions of a distributed network, such as a communications network, node, and/or the Internet, or within a dedicated secured, unsecured, and/or encrypted system and/or within a network operation or management device that is located inside or outside the network. As an example, a wireless device can also be used to refer to any device, system or module that manages and/or configures or communicates with any one or more aspects of the network or communications environment and/or transceiver(s) and/or stations and/or access point(s) described herein.

Thus, it should be appreciated that the components of the system can be combined into one or more devices, or split between devices.

Furthermore, it should be appreciated that the various links, including the communications channel(s) connecting the elements can be wired or wireless links or any combination thereof, or any other known or later developed element(s) capable of supplying and/or communicating data to and from the connected elements. The term module as used herein can refer to any known or later developed hardware, circuit, circuitry, software, firmware, or combination thereof, that is capable of performing the functionality associated with that element. The terms determine, calculate, and compute and variations thereof, as used herein

are used interchangeable and include any type of methodology, process, technique, mathematical operational or protocol.

With attention to FIGS. **1-14**, embodiments of the electric vehicle charging system **100** and method of use are depicted.

In one embodiment, methods and systems are described that determine whether a charging panel associated with an electric vehicle should be deployed to charge an energy storage unit of the vehicle. In some embodiments, an in-roadway (such as a parking space) charging area is employed. The automobile may require, e.g., a charge, in a proper location for charging, sufficient time to receive a charge, etc. Conditions are analyzed by the vehicle and/or the charging system, wherein a charge may be authorized. In some embodiments, a charging panel or circuit may be distally disposed on an armature that may hover over a charging circuit in a roadway. The armature may move in three dimensions and/or in three axes to maintain an optimal distance from the charging circuit but still keep the panel from impacting the roadway or other road hazards. A suite of sensors may monitor the roadway ahead to allow the armature to adjust to sensed hazards.

Referring to FIG. **1**A, a vehicle **100** is shown in a charging environment in accordance with embodiments of the present disclosure. The system **10** comprises a vehicle **100**, an electrical storage unit **112**, an external power source **116** able to provide a charge to the vehicle **100**, a charging panel **108** mounted on the vehicle **100** and in electrical communication with the electrical storage unit **112**, and a vehicle charging panel controller **112**. The charging panel controller **112** may determine if the electrical storage unit requires charging and if conditions allow for deployment of a charging panel. The vehicle charging panel **108** may operate in at least a retracted state and a deployed state (**108** and **108'** as shown is FIG. **1**A), and is movable by way of an armature **204**.

The charging panel controller **112** may receive signals from vehicle sensors **126** to determine, for example, if a hazard is present in the path of the vehicle **100** such that deployment of the vehicle charging panel **108** is inadvisable. The charging panel controller **112** may also query a vehicle database **113** comprising data structures **114** to establish other required conditions for deployment. For example, the database may provide that a particular roadway does not provide a charging service or the charging service is inactive, wherein the charging panel **108** would not be deployed.

The power source **116** may include at least one electrical transmission line **124** and at least one power transmitter or charging area **120**. During a charge, the charging panel **108** may serve to transfer energy from the power source **116** to at least one energy storage unit **112** (e.g., battery, capacitor, power cell, etc.) of the electric vehicle **100**.

In some embodiments, the power source **116** may be associated with a particular charging area of a travel environment **102**. Referring to FIG. **1**B, various charging areas **120**A-C are shown in a vehicle travel environment **102** in accordance with embodiments of the present disclosure. The charging areas **120**A, **120**B may be positioned a static area such as a designated spot, pad, parking space **140**A, **140**B, traffic controlled space (e.g., an area adjacent to a stop sign, traffic light, gate, etc.), portion of a building, portion of a structure, etc., and/or combinations thereof. Some static charging areas may require that the electric vehicle **100** is stationary before a charge, or electrical energy transfer, is initiated. In some cases, the charging panel **108** may make a physical connection with the power source **116**. As can be appreciated, the charging panel **108** may include a plug or other protruding feature and the power source **116** may include a receptacle or other receiving feature, and/or vice versa.

Another example of a static charging area may include a portion of a roadway **104**, street, or other travel path that is configured to provide electrical charging energy to a charging panel **108** of a vehicle **100**. The charging area may be in the roadway **104**, on the roadway **104**, or otherwise adjacent to the roadway **104**, and/or combinations thereof. This static charging area **120**B may allow a charge to be transferred even while the electrical vehicle **100** is moving. For example, the static charging area **120**B may include a charging transmitter (e.g., conductor, etc.) that provides a transfer of energy when in a suitable range of a receiving unit (e.g., an inductor pick up, etc.). In this example, the receiving unit may be a part of the charging panel **108** associated with the electrical vehicle **100**.

The charging area may be a moving charging area **120**C. Moving charging areas **120**C may include charging areas associated with one or more portions of a vehicle, a robotic charging device, a tracked charging device, a rail charging device, etc., and/or combinations thereof. In a moving charging area **120**C, the electrical vehicle **100** may be configured to receive a charge, via the charging panel **108**, while the vehicle **100** is moving and/or while the vehicle **100** is stationary. In some embodiments, the electrical vehicle **100** may synchronize to move at the same speed, acceleration, and/or path as the moving charging area **120**C. In one embodiment, the moving charging area **120**C may synchronize to move at the same speed, acceleration, and/or path as the electrical vehicle **100**. In any event, the synchronization may be based on an exchange of information communicated across a communications channel between the electric vehicle **100** and the charging area **120**C. Additionally or alternatively, the synchronization may be based on information associated with a movement of the electric vehicle **100** and/or the moving charging area **120**C. In some embodiments, the moving charging area **120**C may be configured to move along a direction or path **132** from an origin position to a destination position **120**C'.

In some embodiments, a transformer **136**A, **136**B may be included to convert a power setting associated with a main power supply to a power supply used by the charging areas **120**A-C. For example, the transformer **136**A, **136**B may increase or decrease a voltage associated with power supplied via one or more power transmission lines.

As can be appreciated, when the electrical vehicle **100** determines that a charge is required, a deployment or charging panel controller **110** controller (e.g., a hardware device comprising a processor configured to control an actuation of the charging panel **108**, etc.) may determine whether to deploy the charging panel **108** of the electric vehicle **100**. Factors, or conditions, contributing to this determination may include, but is in no way limited to, charge level of the vehicle **100**, location of the vehicle **100**, location of a charging area **120**, a capability of the charging area **120** (e.g., energy transfer rating, compatibility with the charging panel **108** and/or vehicle **100**, static charging capability, moving charging capability, etc.), obstacles between the charging panel **108** and the charging area **120**, anticipated travel path of the vehicle **100**, time required to charge, travel time, stopping time, etc., and/or combinations thereof. Among other things, these factors may be analyzed to determine whether the electric vehicle **100** is capable of receiving a charge (e.g., enough time to receive a charge, etc.). Once these conditions are analyzed by at least one of the deployment controller, another controller of the vehicle,

the charging system and/or combinations thereof, a charge may be authorized. The authorization of a charge may include receiving a charge initiation key (e.g., from an authentication server, one or more components associated with the charging area, etc.). In any event, the authorization of the charge causes the charging panel **108** of the vehicle **100** to deploy.

In some embodiments, mechanism, devices, and systems are described that selectively position the charging panel into position for receiving a charge **212** (e.g., the charge-receiving position). FIG. **2**A shows a detail view of a vehicle charging panel **108** in a charge receiving position adjacent to a power source **120** in accordance with embodiments of the present disclosure. As provided herein, the charging panel **108** of a vehicle **100** may need to be deployed or moved into a position for receiving a charge **212**. This position may be based on specific power transfer requirements, on a specific distance of the charging panel **108** relative to the charging area **120**, safety requirements, and/or a designated distance of operation for effecting an electrical energy transfer, or charge **212**, operation. While the charging panel **108** may be actuated from a retracted or concealed position into a deployed, or charge-receiving, position as described above, the charging panel **108** may need to be moved, at any time, in response to a detected condition. One example of the detected condition may be an obstacle, obstruction, object, natural condition, chemical, etc., and/or combination thereof that can potentially damage or otherwise contact the charging panel **108**. By way of example, a charging panel **108** may be disposed on an exposed side of a vehicle **100** (e.g., the underside of the vehicle **100**, etc.). When the charging panel **108** is actuated into a deployed position, the charging panel **108** may be vulnerable to damage from variations in a roadway or some other condition. Continuing this example, as a moving vehicle is receiving a charge, via a deployed charging panel **108**, an object on the road **104** may contact and/or damage the charging panel **108**. The embodiments described herein may account for variations in terrain, objects, and/or other conditions and selectively move the charging panel **108** from a deployed position to a concealed or at least partially concealed position. In some embodiments, and as shown in FIG. **2**B, a shield **220** may be inserted or positioned between the object/hazard and the charging panel **108** to, among other things, prevent damage to the charging panel **108**.

In one embodiment, the charging panel **108** and/or circuit may be distally disposed on an armature that is configured to hover over a charging circuit **116** in a roadway **104**. Typically this distance **208** may be predetermined or preset for energy transfer requirements and/or safety (e.g. via query by controller **110** to database **113**), however embodiments disclosed herein should not be so limited. In any event, the armature **204** may move in one or more dimensions and/or axes to maintain an optimal or preset distance **208** from the charging circuit **120** while preventing the charging panel **108** from impacting the roadway **104**, environmental, and/or other hazards. In one embodiment, one or more sensors **126** may monitor the roadway **104** around a vehicle **100** (e.g., an area or volume of space ahead of or in proximity to a vehicle **100**, etc.) at least at a detection distance from the armature **204**. This sensor monitoring can allow the armature **204** to timely adjust position in response to at least one condition and/or hazard detected by the one or more sensors **126**. Height or separation distance between a point on the charging panel **108** and the roadway surface **104** and/or charging panel **120** is provided by one or more separation sensors **127**.

Rather than retract, or at least partially retract, the charging panel **108**, a minor positional adjustment may be all that is required to avoid contact with an object or to avoid a hazard. In this embodiment, a movement controller (as contained in controller **110**—see e.g. FIG. **6**) may determine to move the charging panel **108** and/or armature **204** along a direction **214** parallel to the surface of the roadway. For instance, as a vehicle **100** is travelling along a path in a first direction **214**B, a hazard may be detected in the path via the one or more sensors **126** described herein. Continuing this example, the sensor information may be used by a controller of the vehicle **100** to move the charging panel in a direction different **214**A, **214**C from the first direction **214**B. The direction different **214**A, **214**C from the first direction **214**B may be orthogonal to the first direction **214**B. Additionally or alternatively, the direction different **214**C (shown going into and coming out of the page in FIG. **2**A) from the first direction may be along a plane that is parallel to the surface of, or hypothetical plane established by, the roadway **104**. In any event, the minor positional adjustment to the charging panel **108** may be enough to avoid a collision, impact, and/or other contact with the hazard.

The charging panel **108** may be attached to at least one suspension component of the vehicle **100**. In one embodiment, the charging panel **108** may be moved via a mechanical connection and based on a movement of at least one suspension element of the vehicle **100**. In some embodiments, the movement may be driven by a mechanical and/or electrical component, actuator, linkage, solenoid, or other mechanism/device. In any event, the movement may be effected in response to detecting a mechanical movement of the suspension, the vehicle **100**, and/or the roadway **104** relative to the charging panel **108**, etc.

In some cases, a movement of the charging panel **108** may not be feasible or even possible. For instance, when a moving obstacle is detected as approaching the vehicle **100** at speed or an object comes dislodged from a portion of the vehicle **100**, the charging panel **108** may not be capable of moving quick enough (e.g., from an exposed position to a completely, or at least partially, concealed position, etc.) to prevent impact. In any event, a shield **220** or protective panel may be actuated, deployed, inserted, or otherwise positioned into a position **220'** between the obstacle/object and the charging panel **108**. When in this position, the shield **220** may serve to absorb, deflect, or otherwise minimize the effect of an impact or shock. Positioning of the shield **220** may include a spring-loaded actuation, mechanical actuation, electrical actuation, gas actuation, fluid actuation, an explosive deployment (e.g., similar to an airbag or safety restraint system initiation and deployment, sodium azide, potassium nitrate, etc.), etc., and/or combinations thereof. The shield **220** positioning may be performed in a fraction of the time it takes the charging panel **108** to deploy and/or retract.

In one embodiment, one or more sensors **126** may be used to detect an obstacle, object, or other hazard. The one or more sensors **126** may include, but are in no way limited to, image sensors, radio frequency sensors, laser radar or ladar sensors, infrared sensors, mechanical sensors (e.g., strain gauges, pressure sensors, brush sensors, leaf spring sensors, cantilevered motion sensors, etc.), electrical energy sensors, etc., and/or combinations thereof. In some embodiments, an array of sensors **126** may be used to detect an object and determine, or extrapolate, a position of the object at a particular time. For instance, a rock may have been set into motion via making contact with a moving vehicle **100** travelling along a roadway **104**. Continuing this example,

the rock may be bouncing toward the side **216** of the electrical vehicle **100** having the deployed, or at least partially deployed, charging panel **108**. The array of sensors **126** in this example may determine a trajectory of the rock. Using sensor provided information a controller of the vehicle may initiate a command to one or more of the movable armature **204**, shield **220**, charging panel deployment mechanism, retracting device, and/or other device to protect the charging panel from damage. As provided above, the protection of the charging panel **108** may include moving the charging panel **108** to an at least partially concealed position and/or moving a shield **220** into a position **220'** that at least partially conceals the charging panel **108**. The shield may be a brush, such as a wired cylindrical brush, to clear or receive debris such as roadway debris.

FIG. **2**C shows a detail view of a vehicle charging panel **108** in a charge receiving position adjacent to a power source wherein the charging panel is an airfoil shape. In this embodiment, the charging panel **108** may comprise an airfoil flap **108**A. The airfoil shape in some situations may provided improved control and/or positioning and/or structural stability to the charging panel **108** with respect to maintaining charging distance to charging panel **120** (as embedded in a roadway or flush with a roadway surface). More specifically, when the vehicle **100** is moving at sufficient speed, aerodynamic forces or loads will be generated and imposed on any structures fitted between the bottom of the vehicle and the roadway. Furthermore, such nominal aerodynamic loads may be exasperated due to the relatively small distance between the lowered or deployed charging panel and the roadway causing the aerodynamic flow to be in ground effect (causing ever higher aerodynamic loads). As such, an airfoil shape will enable improved control on the aerodynamic loading on the charging panel and likely improved positioning stability. The movement or positioning of the charging panel **108**, comprising 3-d translation (**214**A-C) and 3-d rotation (roll, pitch, yaw) may be controlled via controller **110** as enabled by one or more separation sensors **127**. A loading sensor may further be configured to obtain loading at one or points on the charging panel. FIG. **6** details the operation of such a feedback control system for positioning of the charging panel **108**. Note that sensor **127** would be disposed on armature **204** and/or charging panel **108** in a manner so as not to disturb the airfoil shape. Also, the flap **108**A affords additional control. Furthermore, the manner in which charging panel **108** in mounted in FIG. **2**C would nominal produce a downward lifting force on the panel **108** given the airfoils chamber relative to the roadway. The airfoil shape may also be mounted so as to produce an upward listing force. In other embodiments, alternative aerodynamic shapes are positioned upstream and/or downstream of the charging panel to improve airflow (e.g. straighten incoming airflow) or for other reasons as know to those skilled in the art.

FIG. **3** is a diagram of an embodiment of a data structure **114** for storing information about a charging panel configuration for given roadway types. The data structures are stored in vehicle database **113** and accessible by vehicle controller **110**. The data contained in data structure **114** enables, among other things, for the vehicle controller **110** to initially position and to control the position of a deployed charging panel **108**. Exemplar data may comprise panel type **115**A meaning type of charging panel configured to vehicle comprising a flat panel (e.g. of FIGS. **2**A-B and an airfoil e.g. of FIG. **2**C); roadway type **115**B e.g. an interstate (Colorado Interstate 25) or state highway e.g. Colorado Highway 36; a nominal recommended separation distance **115**C between a set datum e.g. the lower surface of the panel and the roadway, e.g. 8 inches; a pitch angle **115**D for the panel, a flap setting **115**E (as appropriate), maximum vertical load **115**F allowed to the charging panel; obstacle risk level **115**G (this may allow tuning or adjustment of the sensitivity of obstacle sensor **126**, e.g. signal/noise ratio of a radar sensor, or trip thresholds as to a forward obstacle detection); roadway power type **115**H; and other **115**I which may comprises if roadway is currently operational, costs of charging, etc. Further data fields **115**N, **115**M are possible.

With reference to FIGS. **1-3**, FIG. **4** provides a flow chart illustrating an exemplary method of use of charging an electric vehicle **100** by way of the system **10**. Generally, the method **400** starts at step **404** and ends at step **428**.

After starting at step **404**, at step **408** the method **400** queries as to whether charging is required by the electric vehicle **100**. If charging is required, the method proceeds to step **412**. If charging is not required, the method **400** proceeds to step **428** and the method **400** ends. At step **412**, a query is made as to if a power source is available. That is, is the energy source (such as provided in a various charging area **120**A-C) able to provide a charging service to electric vehicle **100**. The query may be facilitated and/or determined by way of controller **110** and database **113**. If NO (that is, no charging available), the method proceeds to step **428** and ends. If the result of the query of step **412** is YES, the method proceeds to step **416**.

At step **416** a query is made as to whether the vehicle **100** and/or charge panel **108** is configured to receive the charging from power source. Such a query may be facilitated by communications between vehicle "smart" control systems (e.g. controller **110**) of one or both of vehicle **100** and charging area **120**A-C. The query may be facilitated and/or determined by way of controller **110** and database **113**. Note that incompatibilities may include min/max energy transfer thresholds (e.g. voltages). If NO (i.e. the vehicle is incompatible with the power source) the method proceeds to step **428** and ends. If the result of the query of step **516** is YES, the method proceeds to step **420**.

At step **420**, a query is made to determine if conditions allow charging panel to be deployed. Here, database **113** may be queried to determine if power is available from a particular roadway. Additionally or alternatively, one or more sensors **126** may determine that an obstacle presents undue risk of damage to the charging panel so as to determine that conditions do not allow charging panel deployment. If the answer to query of step **420** is YES, the charging panel is deployed and the method continues to step **424**. If NO the method proceeds to step **428** and ends. At step **424** the deployed charge panel **108** receives a charge and the method proceeds to step **528** wherein the method ends.

With reference to FIGS. **1-4**, FIG. **5** provides a flow chart illustrating an exemplary method of positioning a charging panel **108** of an electrical vehicle **100** to receive a charge by way of the system **10**. Generally, the method **500** starts at step **504** and ends at step **528**.

After starting at step **504**, at step **508** the method queries as to whether charging is required by the electric vehicle **100**. If charging is required, the method proceeds to step **512**. If charging is not required, the method **500** proceeds to step **528** and the method **500** ends. At step **512**, a query is made as to if a power source is available. That is, is the energy source (such as provided in a various charging area **120**A-C) able to provide a charging service to electric vehicle **100**? The query may be facilitated and/or determined by way of controller **110** and database **113**. If NO (that is no charging available), the method proceeds to step **528** and

ends. If the result of the query of step **512** is YES, the method proceeds to step **516**.

At step **516**, the controller **110** queries the database **113** to determine the nominal conditions for deployment of the charging panel **108**. For example (with regards to FIG. **3**), if the charging panel is of type "Airfoil A4" and vehicle **100** is traveling on CO I-25, the charging panel is set to separation distance 8 inches and with pitch and flap at 0 degrees. The method then proceeds to step **520** wherein the charging panel **108** is positioned to the nominal set deployment conditions established in step **520**. (In one embodiment, prior to step **520**, a query is made, akin to step **420** of method **400**, to determine if conditions allow for deployment of the charging panel.) At step **524** the deployed charge panel **108** receives a charge and the method proceeds to step **528** wherein the method ends.

FIG. **6** is a block diagram of a charging panel control system **600**. Generally, the control system **600** is a feedback control system to control the separation distance between the charging panel **108** and the roadway (or more generally, the charging source). Selected separation distance is input (as determined by way of query to database **113** or manually entered by user) and compared with a measured separation distance (as from a separation distance sensor **127**) to compute an error signal. The error signal is received by the controller **110** to determine control inputs to actuator of armature **204** which moves the charging panel **108**. The error signal will typically be non-zero due to disturbances to the charging panel, such as aerodynamic loads generated while the vehicle is in motion. The controller **110** may employ any known types of feedback control known to those skilled in the art, comprising stochastic control, proportional, interal and/or derivative control, non-linear control and deterministic control. In other embodiments, a plurality of sensor **127** inputs are provided and/or a plurality of separation distances and/or loading measures are controlled. For example, a pair of positional sensors may be positioned at ends of the leading edge of an airfoil type charging panel whereby pitch and/or roll are controlled as well as distance from the roadway. Furthermore, a loading sensor may be positioned on the armature to measure the loading imparted to the armature shaft, so as to provide an ability to, for example, determine if a threshold value for do-not-exceed loading (as stored in database **113**) has been exceeded.

In one embodiment, the charging area **120**A-C and/or power source **116** provides notice to the vehicle **100**, controller **110**, and/or vehicle user that charging service is available and/or terms and conditions thereof. The notice may comprise targeted communications e.g. by texting to vehicles within a selectable distance. The content of the notice may comprise: the availability of charging, and terms and conditions of charging (cost, payment types, amount available, duration of charging time, etc). The notice may comprise a physical mounted advertisement that charging is available, not unlike a taxi "off duty" or "on duty" light mounted on a taxi rooftop.

In one embodiment, the charging panel **108** is maneuvered manually, e.g. by a vehicle user, a vehicle passenger, or an attendant at a stationary charging environment.

In one embodiment, the charging panel **108**, through use of the feedback controller **110** described in one embodiment as FIG. **6**, maintains a "terrain following" i.e. "TF" mode wherein the planar lower surface of the charging panel **108** maintains a constant height above (or "altitude") above the roadway surface. In the case of a truly flat or planar roadway, such a TF mode would only require vertical movement of the charging panel **108** in one variable (the separation distance **208**), the one variable being a vertical distance. If the roadway is not truly planar (relative to the charging panel **108**), perhaps due to a roadway crown or perhaps due to a slight roll in the vehicle posture due to non-uniformly inflated tires, then the controller **108** may maintain more than one variable. That is, perhaps a slight roll angle in addition to vertical height above the roadway. More specifically, a vehicle traveling in the USA in the right hand lane typically encounters a roadway crown that rises to the left toward the roadway centerline, thereby requiring a slight roll right configuration of the charging panel **108**. As such, the controller would be maintaining both a roll position and a vertical height position. Such a multivariable feedback controller may be similar to that shown in FIG. **6** or, in some embodiments, of any design known to those skilled in the art. Note that roadway crown may, in one embodiment, be a data record maintained in database **113**. Furthermore, vehicle sensors **126** may comprise one or more sensors able to measure roadway crown and/or other features of a non-planar roadway and/or a non-parallel relationship between the lower surface of the charging panel and the roadway (e.g. vertical distance sensors at each corner of the vehicle measuring distance from vehicle to the roadway).

FIGS. **7**A-B show representative states of a graphical user interface (GUI) used in aligning a charging panel of an electrical vehicle to receive a charge. More specifically, FIGS. **7**A-B depict graphical user interfaces **700** displaying feedback adjustment image one **708** and feedback adjustment image two **708'** in accordance with embodiments of the present disclosure. In some embodiments, methods and systems are described that provide an electric vehicle **100** with the ability to properly align the charging panel **108** of the vehicle **100** over a charging circuit or power source **116**. This system may continually and dynamically determine a position or location of the charging panel **108** relative to at least one of the charging circuit components aka power source **116**. The dynamic position or location may be provided to a driver of the vehicle via at least one graphical user interface (GUI) **700** of a display device **704** to allow the driver to make any adjustments to the position of the vehicle **100** and/or the charging panel **108**. For instance, the GUI **700** may show a vehicle image aka feedback adjustment image **708** relative to an alignment line, or centerline aka power source centerline icon **412**, of an image representing a charging element aka power source icon **416**. As the position of the charging panel **108**, or vehicle **100**, changes relative to the charging circuit components **116** the graphical output (e.g., showing the relative position of the components in the charging system, etc.) provided to the at least one GUI **700** changes (e.g., a changed representative image **708'**, of the vehicle **100** may move relative to the centerline **712** and/or image representing the charging element aka power source icon **716**, or vice versa, etc.) to reflect the changed position. This continual updating of the GUI **700** and the relative charging components position can provide a driver of the vehicle **100** with a feedback loop by which the driver can adjust a position of the charging panel **108** and/or the vehicle **100** to obtain an optimal charging alignment between the charging panel **108** and the at least one charging circuit component **116**. In some embodiments, a feedback recommendation aka alignment instruction **724** may be displayed to a portion of the GUI **700**. For example, the feedback recommendation **724** may provide the driver with alignment instructions and/or advice for adjusting a position of the vehicle **100** relative to the charging circuit **116**.

In some embodiments, alignment instructions may comprise more than a horizontal separation distance adjust-

ments, e.g. both a horizontal and a vertical alignment or position instructions, or a horizontal alignment instruction and an angular position. The angular alignment adjustment may comprise a yaw alignment command, which may be particularly important if the vehicle is moving and the power sources are multiple sequential power sources embedded in a roadway.

The at least one charging circuit component **116** may be in communication with the vehicle, and/or a mobile device associated with a user of the vehicle **100** (e.g., the driver, etc.). In some embodiments, and as described above, where the electrical vehicle **100** can receive a charge while moving (e.g., in a moving charge area scenario, a static charging area disposed along a length of a travel path **104**, etc., and/or combinations thereof) the relative position of the charging panel **108**/vehicle **100** to the at least one charging circuit component **116** can be presented (e.g., via the GUI **400**, etc.) to allow driving changes to be made and for the vehicle **100**/charging panel **108** to be properly aligned. The orientation of the vehicle **100** and/or the charging panel **108** may be based on sensor input from one or more vehicle sensors and/or from one or more sensors exterior to the vehicle **100**. In some embodiments, the alignment may be a function of an onboard application on the vehicle **100** or on a device (e.g., a mobile device of a vehicle driver, vehicle owner, etc.).

In some embodiments, the alignment feedback provided to the vehicle **100**, the GUI **700**, a driver of the vehicle **100**, and/or other control component associated with the vehicle **100** may be used by a vehicle control system to automatically adjust the position of the vehicle **100** and/or the charging panel **108** relative to the at least one charging circuit **116**. As provided herein, the position of the charging panel **108** may be required to be within an optimal charge range of the at least one charging circuit component **116**. This optimal charge range may include a vertical distance between the charging panel **108** and the at least one charging circuit component **116** and/or a horizontal distance between a portion of the charging panel **108** and a portion of the at least one charging circuit **116**. In some cases, the optimal charging range may include a distance **208** between a specific portion of the charging panel **108** and a specific portion of the at least one charging circuit **116**. In any event, the optimal charging range may be defined as the position of the charging panel **108** relative to the at least one charging circuit component **116** that is capable of effecting an efficient transfer of energy. The optimal charging range, and similar charging parameters (e.g. separation distance between charging panel and roadway surface) may be stored in a database in or on the vehicle (e.g. vehicle database **113**) or remotely, e.g. in the cloud. The efficient transfer of energy may include a percentage, an allowable loss amount, and/or other value defining the electrical energy transfer from the at least one charging circuit component **116** to the charging panel **108**. As can be appreciated, this information may be displayed to the GUI **700**.

With reference to FIGS. **1-7**, FIG. **8** provides a flow chart illustrating an exemplary method of aligning a charging panel **108** of an electrical vehicle **100** to receive a charge by way of the system **10**. Generally, the method **800** starts at step **804** and ends at step **824**. After starting at step **804**, at step **808** a sensor measures the alignment of the vehicle-mounted charging panel **108** with respect to the charging power source **116**. The alignment sensor may be mounted on the vehicle **100** and/or on the ground, to include in proximity to the power source **116**. The alignment sensor measures a distance between a centerline of the power source **116** and the centerline of the charging panel **108**, for example a linear separation distance.

At step **812**, the sensor transmits the sensor measurement data so as to be received by an alignment controller. The transmittal may be through any means known to those skilled in the art, such as by wireless communication. The sensor may transmit in an analog and/or digital manner. The sensor may be a plurality of sensors, and may broadcast at selected frequencies and/or power levels.

At step **816**, the alignment controller receives the sensor measurement data and determines if any alignment required. For example, the sensor may provide that the linear separation distance is 0.5 meter, thereby determining that an alignment adjustment of 0.5 in a particular direction is required for optimal energy transfer between the charging panel **108** and the power source **116**. The alignment controller may also determine additional data, such as the power efficiency between the charging panel **108** and the power source **116** (e.g. in FIG. **7**B the power transfer efficiency is provided as 43%.) The alignment controller may provide text description as to directionality (e.g. move left or right) as provided by alignment instruction **724**. The alignment controller may provide alignment data (e.g., comprising linear separation distance, power transfer level, directionality for improved alignment, etc) by way of a graphical user interface **700** and/or may automatically adjust the position of the vehicle and/or charging panel **108** for improved alignment. The alignment controller may provide signals to the actuator so as to minimize or eliminate the alignment error or alignment required, or to effect the movement of the charging panel via the actuator and/or armature. The alignment controller may provide signals to adjust the charging plate in more any of three translation positions and/or angular positions (as shown, e.g. in FIG. **2**C.) The alignment controller may also perform signal processing to blend multiple measurements from one or more sensors. Furthermore, the alignment controller may also provide feedback control with respect to the linear separation, as described above with respect to FIG. **6**. The method ends at step **824**.

FIGS. **9-11** describe aspects of an electric vehicle charging device obstacle avoidance system and method of use. Generally, FIG. **9** shows a vehicle in a roadway obstacle environment, FIG. **10** provides a diagram of an embodiment of a data structure for storing information about sensor configurations for a given obstacle risk profile, and FIG. **11** provides a flow or process diagram of a method of obstacle warning and avoidance.

In some embodiments, methods and systems are described that employ one or more sensors, (e.g., a sensor array, etc.) to warn of road hazards or obstacles **928**. FIG. **9** shows a block diagram of a vehicle **100** and obstacle detection system in accordance with embodiments of the present disclosure. Similar, if not identical to the sensors **126** described above, the one or more sensors **126**A-F may be road-focused radar, moving sensors, and/or other stationary or mounted sensors. In one embodiment, the sensors **126**A-F may include one or more physically active sensors, including brush sensors, physical contact sensors, etc. These more physically active sensors may detect the obstacle and may even alter a condition associated with the obstacle **928**. For instance, at least one physical component of the more active sensors may physically move obstacles **928**, mitigate the effect of an impact of an obstacle **928**, and/or even come into physical contact with those obstacles **928**. In some cases, the physical contact with the obstacle **928** may produce the warning.

One example of a more active, or physical contact, sensor may include a wedge component, plow-shaped component, and/or deflecting member having a strain gauge attached thereto. In any event, the more active sensor may include a mechanical portion coupled thereto that is designed to contact an object **928**. The contact with the object **928** may be measured as a stress, strain, electrical signal (e.g., potential difference, capacitance change, impedance, etc.), mechanical contact switch actuation, etc., and/or combinations thereof. In any event, upon detecting the contact, the sensor may provide a signal to a controller **110**. The controller **110** may interpret the signal and determine to send a retraction command signal to one or more protective devices **226** configured to move and/or protect the charging panel **108**. It is anticipated that the charging panel **108** may be made adjusted or moved (e.g., retracted, concealed, deployed, etc.), by the controller **110**, in response to receiving and interpreting the detection signal within fractions of a second. In one example, the time between detecting the obstacle **928**, or contact, and the controller **110** initiating a movement command configured to retract the charging panel **108** may be less than 300 milliseconds. In yet another example, the time between detecting the hazard **928**, or contact, and the controller **110** initiating a movement command configured to retract the charging panel **108** may be less than 100 milliseconds.

FIG. **10** is a diagram of an embodiment of a data structure **914** for storing information about sensor configurations for given obstacle risk profiles. The data structures are stored in vehicle database **113** and accessible by vehicle controller **110**. The data contained in data structure **914** enables, among other things, for the vehicle controller **110** to configure, operate, initially position and/or to control the one or more sensors **126**, such as the sensors **126**A-F depicted in FIG. **9**. Exemplar data may comprise obstacle risk **915**A, sensor type **915**B, environmental conditions **915**C, shield deployment **915**D, and other **915**E which may comprise further operational parameters of a given sensor. Further data fields **915**K, **915**L are possible.

Obstacle risk **915**A may provide a measure of the relative risk or likelihood of obstacles or hazards that may present themselves to a deployed charging panel **108**. For example, a roadway undergoing maintenance is more likely to present hazards (e.g. fallen barricade in the roadway, foreign objects such as bolts or other construction hardware in the road, etc) than one not undergoing such maintenance. Sensor type **915**B may comprise any sensor types known to those skilled in the art to provide obstacle warning, comprising ladars, radars, and cameras of various bands such as IR and visible. Such sensors may comprise scanning sensors and fixed direction sensors, and may be controlled automatically, semi-automatically, or manually by an occupant of the vehicle. Additional characteristics of any particular sensor type may be provided in the Other **915**E data field, providing characteristics comprising signal/noise ratios which influence valid "hits" or indicators of the presence of an object, sensitivity levels (i.e. "trip thresholds") for such obstacle detection hits, sensor power or energy or emission levels, scanning and/or dwell times or durations, frequency bandwidths, pulse characteristics (if a pulsed sensor) such as wavelength shapes (e.g. square pulse, etc), and shape of sensor emission (e.g., fan shape or pencil-beam shape). Environmental conditions **915**C may comprise visibility data (e.g. daylight, nighttime), humidity data (e.g. rain or fog). Shield deployment **915**D may comprise on/off or yes/no deployment of a protective shield surrounding the charging panel (such a protective shield may produce unwanted aerodynamic drag and therefore not typically be deployed). Further parameters may comprise speed of vehicle (e.g. a higher speed may correlate to a higher obstacle risk level). Data structure **914** may be accessible automatically by controller **110** and/or by a vehicle user. Data structure **914** may comprise elements and characteristics of data structure **114**.

With reference to FIGS. **1-10**, FIG. **11** provides a flow chart illustrating an exemplary method of obstacle warning and avoidance. Generally, the method **1100** starts at step **1104** and ends at step **1128**.

After starting at step **1104**, at step **1108** the method **1100** queries as to whether the charging panel is deployed. (In one embodiment, the step **420** of method **400** are followed so as to determine if conditions allow the charging panel to be deployed.) In one embodiment, any deployment other than fully retracted/stowed results in a response of Yes. If the charging panel is deployed, the response to the query is a Yes and the method **1100** proceeds to step **1112**. If the response to the query is a No, the method **1100** proceeds to step **1128** and the method **1100** ends.

At step **1112**, the one or more obstacle sensors are operated. In one embodiment, the one or more sensors are simply turned on or activated. In other embodiments, such as depicted in FIG. **11**, the method at step **1112** interacts with database **113** and associated sensor data structures **914** to configure the one or more sensors. Such interaction may occur automatically between controller **110** and database **113**, or may be replaced or supplemented with vehicle occupant input. For example, a vehicle occupant, such as the driver, may input (through, for example, a dashboard graphical user interface or a mobile device such as a smartphone) his/her assessment of the obstacle risk and her requirement to activate a specific sensor in a specific manner. That is, the driver may request that MMW radar one and IR camera three be activated. The operation of the one or more sensors may involve occasional or recurring calibration operations (e.g. to provide ground truthing data so as to limit false positives and/or to truth a sensor against sensor data simply providing measurements to the roadway ahead). With the one or more sensors operating, the method **1100** proceeds to step **1116**.

At step **1116**, the received obstacle sensor data is analyzed. The analysis may occur by the controller **110**, and may comprise any signal processing technique known to those skilled in the art, to include the types of control and/or signal processing algorithms described above in relation to FIG. **6**. The received sensor data may require sensor fusion techniques, in particular in configurations where multiple measurements are provided of a particular location ahead or near the vehicle, either by a single sensor or a plurality of sensors or similar and/or different type. The method **1100** then proceeds to step **1120**.

At step **1120**, the method **1100** queries as to whether the analysis of step **1116** determined that a hazard or obstacle in the pathway of the vehicle **100** requires action. If the response to the query of step **1120** is No, the method **1100** returns to step **1108**. If an action is required (that is, the response to the query is Yes and obstacle avoidance is required), the recommended action to effect is determined. The recommended action may be a function of the warning systems and/or damage prevention capabilities of the system **10**. For example, if the obstacle is determined to be just within a selectable vehicle pathway perimeter, the action may be a visual and/or audio warning to the GUI and/or mobile device of a vehicle occupant. However, if the obstacle is determined to be a more severe threat (e.g. of

large size and/or in a more central location relative to the vehicle pathway), the action may comprise immediately retracting the charging panel and/or issuing a visual and/or audio warning to take evasive action (e.g. bear left.) In some embodiments, the system automatically maneuvers the vehicle to attempt to avoid the obstacle. In some embodiments, the vehicle deploys one or more physically active elements, such as a protective cage surrounding the charging panel and/or one or more protective devices **226**. The method **1100** then proceeds to step **1124**.

At step **1124**, the recommended action, as determined at step **1124**, is executed. The method **1100** then proceeds to step **1128**.

FIG. **12** shows a vehicle in an emergency charging environment in accordance with embodiments of the present disclosure. Generally, in this embodiment of the invention, a specially-designed "tow truck" or other emergency assistance vehicle provides a charge to the electric vehicle. That is, the emergency vehicle comprises a charging panel or plate that deploys or extends so as to position below the electric (targeted) vehicle, wherein an emergency (or routine) charge is provided. The emergency vehicle can include a battery pack and a charging circuit to deliver a partial or complete charge to the vehicle. This vehicle may be the equivalent of AAA bringing a gallon of gas to a stranded motorist.

With reference to FIG. **12**, an exemplar embodiment of a vehicle emergency charging system **100** comprising an emergency charging vehicle **1200** and charge receiver vehicle **100** is disclosed. The emergency charging vehicle **1200** is a road vehicle, such as a pick-up truck, as shown in FIG. **12**. The emergency charging vehicle **1200** is configured to provide a charge to a charge receiver vehicle **100**,such as an automobile, as shown in FIG. **12**. The emergency charging vehicle **1200** comprises an energy source i.e. a charging power source **116** and a charge provider controller **122** in communication with the charging power source **116**. The emergency charging vehicle **1200** provides a towed and/or articulated charger plate **120**, as connected to the emergency charging vehicle **1200** by connector **1250**. The connector **1250** may comprise a chain, rope, rigid or semi-rigid tow bar or any means to position charger plate **120** near the charging panel **108** of vehicle **100**. Charge or power output of charging power source **116** is provided or transmitted to charger plate **120** by way of charging cable or wire **1240**. In one embodiment, the charging cable **1240** is non-structural, that is, it provides little or no structural support to the connection between emergency charging vehicle **1200** and charging panel **108**. Charging panel **108** (of vehicle **100**) receives power from charger plate **120**. Charger plate **120** and charging panel **108** may be in direct physical contact or not in direct physical contact, but must be at or below a threshold separation distance to enable charging, such as by induction. Charger plate **120** may comprise wheels or rollers so as to roll along roadway surface. Charger plate **120** may also not contact the ground surface and instead be suspended above the ground; such a configuration may be termed a "flying" configuration. In the flying configuration, charger plate may form an aerodynamic surface to, for example, facilitate stability and control of the positioning of the charging plate **120**. Energy transfer or charging from the charger plate **120** to the charge receiver panel **108** is through inductive charging (i.e. use of an EM field to transfer energy between two objects). The charging panel **108** provides received power to energy storage unit **112** directly or by way of charging panel controller **110**. In one embodiment, the receipt and/or control of the energy provided via the charging panel **108** is provided by charging panel controller **110**.

Charging panel controller **110** may be located anywhere on charge receiver vehicle **100**, to include, for example, the roof, side panel, trunk, hood, front or rear bumper and wheel hub of charge receiver **100** vehicle. In some embodiments, charging panel **108** may be deployable, i.e. may extend or deploy only when charging is needed. For example, charging panel **108** may typically stow flush with the lower plane of vehicle **100** and extend when required for charging. Similarly, charger plate **120** may, in one embodiment, not be connected to the lower rear of the emergency charging vehicle **1200** (as depicted in FIG. **12**) by way of connector **1250** and may instead be mounted on the emergency charging vehicle **1200**, to include, for example, the roof, side panel, trunk, hood, front or rear bumper and wheel hub of emergency charging vehicle **1200**. Connector **1250** may be configured to maneuver connector plate **120** to any position on emergency charging vehicle **1200** so as to enable charging. Control of the charging and/or positioning of the charging plate may be manual, automatic or semi-automatic; said control may be performed through a GUI engaged by driver or occupant of receiving vehicle and/or driver or occupant of charging vehicle.

FIG. **13** is a diagram of an embodiment of a data structure for storing information about an emergency charging panel configuration for given emergency charging environments. The emergency charging data structures **1314** are stored in vehicle database **113** and accessible by vehicle controller **110**. The data contained in data structure **1314** enables, among other things, for the vehicle controller **110** to initially position and to control the position of a deployed charging panel **108** for given emergency charging type and/or conditions.

Exemplar data may comprise emergency charging type **1315**A, meaning a "contact" or a "flyer" type of charging plate **120**, as provided by emergency charging vehicle **1200**. A contact charging type is a charging plate **120** that makes physical contact with the charging panel **108** of the electric vehicle **100**. A flyer charging type is a charging plate **120** that does not make (intentional) physical contact with the charging panel **120** of the vehicle **100**, but instead is suspended or flies above the roadway surface and below the charging panel **108**. Note that one or both of charging plate **120** and charging panel **108** may be configured in various geometrical shapes, to include a flat panel and an airfoil (see, e.g. flat panel shape of FIGS. **2**A-B and airfoil shape of FIG. **2**C). A nominal recommended separation distance is provided as **1315**B between a set datum e.g. the lower surface of the panel and the roadway, e.g. 8 inches. Charge rate **1315**C may be set to numerical values or a qualitative value (e.g. low, medium, high which may correspond to a charging transmission level). A pitch angle **1315**D for the charging panel **108** may be established, and roadway type **1315**E (shown with characteristics comprising X, Y and Z representing roadway characteristics e.g. X may indicate a highway, Y may indicate a roadway with some active construction, and Z may indicate a roadway with significant crown). A maximum vertical load **1315**F represents a maximum allowed to the charging panel **108**. An on/off toggle of shielding is data item **1315**G, which references deployment (i.e. "on") or non-deployment (i.e. "off" on stowed) of an EM shield cage at least partially surrounding charging panel **108**. The Other data type of **1315**H may comprise other data items involved in electrical charging such as voltage levels, current values, etc as known to those skilled in the art, and operational data such as costs of charging for a given

emergency charging type or charging provider. Further data fields **1315**L and **1315**M are possible.

FIG. **14** provides an exemplar method of use **1400** of the emergency charging from a roadway vehicle system **100**. The method starts at step **1404** and ends at step **1432**.

After starting at step **1404**, at step **1408** the method queries as to whether charging is available by emergency charging vehicle **1200**. That is, a query is made as to whether the energy source (i.e. charging power source **116**) is able to provide a charging service to a charging panel **108** of vehicle **100**. If NO, the method proceeds to step **1432** and ends. (Alternatively, the vehicle **100** may return to a home base station or similar and recharge its energy source i.e. recharge energy storage unit **112**.) If the result of the query of step **1408** is YES, the method proceeds to step **1412** wherein notice is provided (by one or more emergency charging vehicles **1200**) that charging is available. The notice may comprise targeted communications e.g. by texting to vehicles **100** within a selectable distance. The content of the notice may comprise: the availability of charging, and terms and conditions of charging (cost, payment types, amount available, duration of charging time, etc). The notice may comprise a physical mounted advertisement (e.g. a lighted sign on emergency charging vehicle **1200**) that charging is available, not unlike a taxi "off duty" or "on duty" light mounted on emergency charging vehicle **1200** rooftop.

At step **1416** a query is made as to whether vehicle **100** has requested or requires or seeks a charge. Note that charging panel controller **110** may monitor a state or status of charging (e.g. battery is charged at 32%, or battery charging level drops below a selectable threshold value e.g. below 10%) of the energy storage unit **112** of vehicle **100** to determine if charging is recommended or required. A user, such as a driver or passenger, may also request that the vehicle be charged. If NO, the method proceeds back to step **1412**. If YES, the method proceeds to step **1420**.

At step **1420**, a query is made as to whether the charge receiver **100** vehicle is configured to receive the charging from emergency charging vehicle **1200**. Such a query may be facilitated by communications between vehicle "smart" control systems aboard one or both of emergency charging vehicle **1200** and charge receiver vehicle **100**, comprising communications between charge provider controller **122** and charging panel controller **110**. Note that incompatibilities may include min/max energy transfer thresholds (e.g. voltages). If the query answer is a NO, the method proceeds to step **1412**. If YES, the method proceeds to step **1424** wherein the charge receiver vehicle **100** is charged by emergency charging vehicle **1200** and the method proceeds to step **1424** wherein the charging panel **108** is positioned with respect to the charging plate **120** so as to receive (or transmit) a charge. The positioning of the charging plate **108** may comprise selection of initial or nominal positioning via data contained in vehicle database **113** through emergency charging data structure **1314** and emergency charging data structure fields **1315**A-M. The method **1400** then continues to step **1428** wherein a charge is provided by power source **116** via charging plate **120** to charging panel **108** so as to power or charge energy source **112** or vehicle **100**. (Note that in one embodiment, the vehicle **100** may alternatively or additionally provide a charge to the emergency vehicle **1200** via electrical energy transfer from charging panel **108** to charging plate **120**.) When charging is complete the method **1400** ends at step **1432**.

In some embodiments, the user of vehicle **100** and/or the control system of vehicle accesses vehicle database, or more broadly an external database via wireless communication for available charging sources. From the one or more available charging sources, the user and/or control system of vehicle may negotiate terms and conditions of the charging, comprising pricing, speed, rate and/or duration for the charging, physical interconnection requirements (e.g. a physical connection between vehicle charging panel **108** and charging source charging plate **120** may be required or a set separation distance may be required between the charging panel **108** and the charging source charging plate **120**), electrical interconnection requirements (e.g. current or voltage requirements), and environmental setting for the charging (e.g. an established lat/long location for the charging, or a set corridor on a highway, may be required).

In the detailed description, numerous specific details are set forth in order to provide a thorough understanding of the disclosed techniques. However, it will be understood by those skilled in the art that the present techniques may be practiced without these specific details. In other instances, well-known methods, procedures, components and circuits have not been described in detail so as not to obscure the present disclosure.

Although embodiments are not limited in this regard, discussions utilizing terms such as, for example, "processing," "computing," "calculating," "determining," "establishing", "analysing", "checking", or the like, may refer to operation(s) and/or process(es) of a computer, a computing platform, a computing system, a communication system or subsystem, or other electronic computing device, that manipulate and/or transform data represented as physical (e.g., electronic) quantities within the computer's registers and/or memories into other data similarly represented as physical quantities within the computer's registers and/or memories or other information storage medium that may store instructions to perform operations and/or processes.

Although embodiments are not limited in this regard, the terms "plurality" and "a plurality" as used herein may include, for example, "multiple" or "two or more". The terms "plurality" or "a plurality" may be used throughout the specification to describe two or more components, devices, elements, units, parameters, circuits, or the like. For example, "a plurality of stations" may include two or more stations.

It may be advantageous to set forth definitions of certain words and phrases used throughout this document: the terms "include" and "comprise," as well as derivatives thereof, mean inclusion without limitation; the term "or," is inclusive, meaning and/or; the phrases "associated with" and "associated therewith," as well as derivatives thereof, may mean to include, be included within, interconnect with, interconnected with, contain, be contained within, connect to or with, couple to or with, be communicable with, cooperate with, interleave, juxtapose, be proximate to, be bound to or with, have, have a property of, or the like; and the term "controller" means any device, system or part thereof that controls at least one operation, such a device may be implemented in hardware, circuitry, firmware or software, or some combination of at least two of the same. It should be noted that the functionality associated with any particular controller may be centralized or distributed, whether locally or remotely. Definitions for certain words and phrases are provided throughout this document and those of ordinary skill in the art should understand that in many, if not most instances, such definitions apply to prior, as well as future uses of such defined words and phrases.

The exemplary embodiments will be described in relation to communications systems, as well as protocols, techniques, means and methods for performing communications,

such as in a wireless network, or in general in any communications network operating using any communications protocol(s). Examples of such are home or access networks, wireless home networks, wireless corporate networks, and the like. It should be appreciated however that in general, the systems, methods and techniques disclosed herein will work equally well for other types of communications environments, networks and/or protocols.

For purposes of explanation, numerous details are set forth in order to provide a thorough understanding of the present techniques. It should be appreciated however that the present disclosure may be practiced in a variety of ways beyond the specific details set forth herein.

Furthermore, it should be appreciated that the various links (which may not be shown connecting the elements), including the communications channel(s) connecting the elements, can be wired or wireless links or any combination thereof, or any other known or later developed element(s) capable of supplying and/or communicating data to and from the connected elements. The term module as used herein can refer to any known or later developed hardware, circuit, circuitry, software, firmware, or combination thereof, that is capable of performing the functionality associated with that element. The terms determine, calculate, and compute and variations thereof, as used herein are used interchangeable and include any type of methodology, process, technique, mathematical operational or protocol.

Moreover, while some of the exemplary embodiments described herein are directed toward a transmitter portion of a transceiver performing certain functions, or a receiver portion of a transceiver performing certain functions, this disclosure is intended to include corresponding and complementary transmitter-side or receiver-side functionality, respectively, in both the same transceiver and/or another transceiver(s), and vice versa.

While the above-described flowcharts have been discussed in relation to a particular sequence of events, it should be appreciated that changes to this sequence can occur without materially effecting the operation of the embodiment(s). Additionally, the exact sequence of events need not occur as set forth in the exemplary embodiments. Additionally, the exemplary techniques illustrated herein are not limited to the specifically illustrated embodiments but can also be utilized with the other exemplary embodiments and each described feature is individually and separately claimable.

Additionally, the systems, methods and protocols can be implemented to improve one or more of a special purpose computer, a programmed microprocessor or microcontroller and peripheral integrated circuit element(s), an ASIC or other integrated circuit, a digital signal processor, a hardwired electronic or logic circuit such as discrete element circuit, a programmable logic device such as PLD, PLA, FPGA, PAL, a modem, a transmitter/receiver, any comparable means, or the like. In general, any device capable of implementing a state machine that is in turn capable of implementing the methodology illustrated herein can benefit from the various communication methods, protocols and techniques according to the disclosure provided herein.

Examples of the processors as described herein may include, but are not limited to, at least one of Qualcomm® Snapdragon® 800 and 801, Qualcomm® Snapdragon® 610 and 615 with 4G LTE Integration and 64-bit computing, Apple® A7 processor with 64-bit architecture, Apple® M7 motion coprocessors, Samsung® Exynos® series, the Intel® Core™ family of processors, the Intel® Xeon® family of processors, the Intel® Atom™ family of processors, the Intel Itanium® family of processors, Intel® Core® i5-4670K and i7-4770K 22 nm Haswell, Intel® Core® i5-3570K 22 nm Ivy Bridge, the AMD® FX™ family of processors, AMD® FX-4300, FX-6300, and FX-8350 32 nm Vishera, AMD® Kaveri processors, Texas Instruments® Jacinto C6000™ automotive infotainment processors, Texas Instruments® OMAP™ automotive-grade mobile processors, ARM® Cortex™-M processors, ARM® Cortex-A and ARM926EJ-S™ processors, Broadcom® AirForce BCM4704/BCM4703 wireless networking processors, the AR7100 Wireless Network Processing Unit, other industry-equivalent processors, and may perform computational functions using any known or future-developed standard, instruction set, libraries, and/or architecture.

Furthermore, the disclosed methods may be readily implemented in software using object or object-oriented software development environments that provide portable source code that can be used on a variety of computer or workstation platforms. Alternatively, the disclosed system may be implemented partially or fully in hardware using standard logic circuits or VLSI design. Whether software or hardware is used to implement the systems in accordance with the embodiments is dependent on the speed and/or efficiency requirements of the system, the particular function, and the particular software or hardware systems or microprocessor or microcomputer systems being utilized. The communication systems, methods and protocols illustrated herein can be readily implemented in hardware and/or software using any known or later developed systems or structures, devices and/or software by those of ordinary skill in the applicable art from the functional description provided herein and with a general basic knowledge of the computer and telecommunications arts.

Moreover, the disclosed methods may be readily implemented in software and/or firmware that can be stored on a storage medium to improve the performance of: a programmed general-purpose computer with the cooperation of a controller and memory, a special purpose computer, a microprocessor, or the like. In these instances, the systems and methods can be implemented as program embedded on personal computer such as an applet, JAVA.RTM or CGI script, as a resource residing on a server or computer workstation, as a routine embedded in a dedicated communication system or system component, or the like. The system can also be implemented by physically incorporating the system and/or method into a software and/or hardware system, such as the hardware and software systems of a communications transceiver.

Various embodiments may also or alternatively be implemented fully or partially in software and/or firmware. This software and/or firmware may take the form of instructions contained in or on a non-transitory computer-readable storage medium. Those instructions may then be read and executed by one or more processors to enable performance of the operations described herein. The instructions may be in any suitable form, such as but not limited to source code, compiled code, interpreted code, executable code, static code, dynamic code, and the like. Such a computer-readable medium may include any tangible non-transitory medium for storing information in a form readable by one or more computers, such as but not limited to read only memory (ROM); random access memory (RAM); magnetic disk storage media; optical storage media; a flash memory, etc.

It is therefore apparent that there has at least been provided systems and methods for laser and optical charging and communications. While the embodiments have been described in conjunction with a number of embodiments, it

is evident that many alternatives, modifications and variations would be or are apparent to those of ordinary skill in the applicable arts. Accordingly, this disclosure is intended to embrace all such alternatives, modifications, equivalents and variations that are within the spirit and scope of this disclosure.

What is claimed is:

1. A system for charging an electric vehicle moving along a roadway, the system comprising:

an electrical storage unit disposed on the electric vehicle;

a charging panel in electrical communication with the electrical storage unit;

a vehicle controller that determines if the electrical storage unit requires charging and determines if an emergency external power source is available to charge the electrical storage unit, wherein the emergency external power source is a vehicle including a towed charging plate; and

a vehicle database including emergency charging data that positions and controls the charging panel relative to the towed charging plate of the emergency external power source;

wherein the vehicle controller retrieves a separation distance from the vehicle database, the separation distance defining a distance between the charging panel and the roadway, and wherein the towed charging plate is configured to position within the separation distance at a threshold distance from the charging plate and inductively charge the electrical storage unit without contacting the charging panel; and

wherein the charging panel receives a charge from the towed charging plate of the emergency external power source disposed at the threshold distance from the charging plate and inductively charges the electrical storage unit.

2. The system of claim **1**, wherein the charging panel is configured to operate in a plurality of states comprising a retracted state and a deployed state.

3. The system of claim **2**, further comprising an actuator interconnected to the charging panel and to the electric vehicle, wherein the actuator is configured to move the charging panel to receive the charge.

4. The system of claim **3**, further comprising at least one range sensor configured to measure a first measured distance between a first point on the charging panel and a second point on the towed charging plate interconnected to the emergency external power source.

5. The system of claim **4**, wherein the first point of the charging panel is positioned at a selectable desired separation distance from the second point on the towed charging plate, wherein the selectable desired separation distance is selected from a vehicle database.

6. The system of claim **5**, wherein the positioning of the first point of the charging panel to the selectable desired separation distance is performed automatically by actuation of the actuator.

7. The system of claim **6**, wherein the vehicle controller receives the first measured distance and automatically actuates the actuator to adjust the position of the charging panel to the desired separation distance.

8. The system of claim **1**, wherein the towed charging plate of the emergency external power source is suspended in a position above the roadway and below the charging panel of the electric vehicle, and wherein the towed charging plate includes an aerodynamic surface that stabilizes the position of the towed charging plate in the suspended position.

9. The system of claim **8**, wherein the charging plate is configured to extend from the emergency external power source to a position below the electric vehicle, and wherein a speed and movement of the electric vehicle is synchronized with a speed and movement of the emergency external power source while moving along the roadway.

10. The system of claim **9**, wherein a charging level of the charging is selectable from a vehicle database.

11. The system of claim **9**, wherein the towed charging plate includes wheels configured to roll along the roadway while separated from the charging panel.

12. The system of claim **3**, wherein the actuator is configured to move the charging panel in both a vertical and a lateral direction.

13. A method for charging an electric vehicle moving along a roadway, the method comprising:

determining, by a microprocessor, a charge value of an electrical storage unit disposed on the electric vehicle;

determining, by the microprocessor, if the charge value is below a selectable threshold value wherein charging of the electrical storage unit is required;

identifying, by the microprocessor, if an emergency external power source is available for charging of the electrical storage unit, wherein the emergency external power source is a vehicle including a towed charging plate;

retrieving, by the microprocessor, a separation distance from a vehicle database, the separation distance defining a distance between a charging panel of the electric vehicle and the roadway, and wherein the towed charging plate is configured to position within the separation distance at a threshold distance from the charging plate and inductively charge the electrical storage unit without contacting the charging panel; and

positioning, by the microprocessor, the charging panel of the electric vehicle a threshold distance from the towed charging plate, the charging panel positioned to receive inductive charging from the towed charging plate interconnected to the emergency external power source;

wherein the charging plate receives charging from the towed charging plate of the emergency external power source and inductively charges the electrical storage unit.

14. The method of claim **13**, further comprising:

measuring, by a sensor, an alignment measurement between the charging panel and the towed charging plate;

transmitting, by the microprocessor, the alignment measurement to an alignment controller;

receiving, by the alignment controller, the alignment measurement;

determining, by the microprocessor, a required alignment adjustment; and

adjusting, by the microprocessor, the position of the charging panel by the required alignment adjustment.

15. The method of claim **13**, wherein the charging panel is configured to operate in a plurality of states comprising a retracted state and a deployed state.

16. The method of claim **15**, further comprising an actuator interconnected to the charging panel and to the electric vehicle, wherein the actuator is configured to move the charging panel to receive the charge.

17. The method of claim **13**, wherein towed charging plate of the emergency external power source is suspended in a position above the roadway and below the charging panel of the electric vehicle, and wherein the towed charging plate

includes an aerodynamic surface that stabilizes the position of the towed charging plate in the suspended position.

18. The method of claim **17**, wherein the charging plate is configured to extend from the emergency external power source to a position below the electric vehicle, and wherein a speed and movement of the electric vehicle is synchronized with a speed and movement of the emergency external power source while moving along the roadway.

19. The method of claim **18**, wherein the towed charging plate includes wheels configured to roll along the roadway while separated from the charging panel.

20. The method of claim **16**, wherein the actuator is configured to move the charging panel in both a vertical and a lateral direction.

* * * * *