US007514917B2

(12) **United States Patent**
Cech et al.

(10) **Patent No.: US 7,514,917 B2**
(45) **Date of Patent: Apr. 7, 2009**

(54) **MAGNETIC CRASH SENSOR**

(75) Inventors: **Leonard S. Cech**, Brighton, MI (US); **W. Todd Watson**, Belleville, MI (US); **Scott E. Bauer**, Holly, MI (US); **James D. Baal**, Novi, MI (US); **Timothy J. Bomya**, Westland, MI (US); **William Merrick**, Ann Arbor, MI (US); **Richard W. Smith**, Dearborn, MI (US)

(73) Assignee: **Automotive Systems Laboratory, Inc.**, Farmington Hills, MI (US)

(*) Notice: Subject to any disclaimer, the term of this patent is extended or adjusted under 35 U.S.C. 154(b) by 33 days.

(21) Appl. No.: **11/530,492**

(22) Filed: **Sep. 11, 2006**

(65) **Prior Publication Data**

US 2009/0001976 A1 Jan. 1, 2009

Related U.S. Application Data

(60) Continuation-in-part of application No. 10/946,174, filed on Sep. 20, 2004, now Pat. No. 7,209,844, application No. 11/530,492, filed on Sep. 11, 2006, which is a division of application No. 10/946,174, filed on Sep. 20, 2004, now Pat. No. 7,209,844, application No. 11/530,492, filed on Sep. 11, 2006, which is a continuation-in-part of application No. 10/905,219, filed on Dec. 21, 2004, now Pat. No. 7,212,895, which is a continuation-in-part of application No. 11/460,982, filed on Jul. 29, 2006, now Pat. No. 7,388,370.

(60) Provisional application No. 60/504,581, filed on Sep. 19, 2003, provisional application No. 60/481,821, filed on Dec. 21, 2003, provisional application No. 60/595,718, filed on Jul. 29, 2005, provisional application No. 60/766,633, filed on Feb. 2, 2006.

(51) **Int. Cl.**

G01N 27/82	(2006.01)
G01R 33/12	(2006.01)
B60R 22/00	(2006.01)
B60R 21/01	(2006.01)

(52) **U.S. Cl.** **324/228**; 324/239; 701/45; 73/862.69

(58) **Field of Classification Search** 324/209, 324/228, 233, 239, 240, 207.16, 207.17, 324/326–329; 701/45–48, 1, 36; 280/735; 180/232; 73/862.69

See application file for complete search history.

(56) **References Cited**

U.S. PATENT DOCUMENTS

2,552,722 A 5/1951 King

(Continued)

FOREIGN PATENT DOCUMENTS

DE	43 00 653	A1	1/1992
EP	0 453 824	A1	10/1991
EP	0 453 824	B1	9/1994
JP	56-157802	A	5/1981

OTHER PUBLICATIONS

Widlar, R.J., "Monolithic Op Amp—The Unversal Linear Component," National Semiconductor Corporation, Application Note 4, Apr. 1968, 10 pp.

(Continued)

Primary Examiner—Kenneth J Whittington
(74) *Attorney, Agent, or Firm*—Raggio & Dinnin, P.C.

(57) **ABSTRACT**

A time-varying signal is applied to at least one coil in magnetic communication with at least a portion of a vehicle susceptible to deformation responsive to a crash. A sense resistor in series with the at least one coil provides for detecting a current therethrough responsive to a voltage thereacross. The current is responsive to a magnetic condition affecting the magnetic field generated by the at least one coil, responsive to the reluctance of a magnetic circuit with which the at least one coil is in magnetic communication, and responsive to associated eddy currents in proximal conductive elements, responsive to the magnetic field generated by the at least one coil.

4 Claims, 30 Drawing Sheets

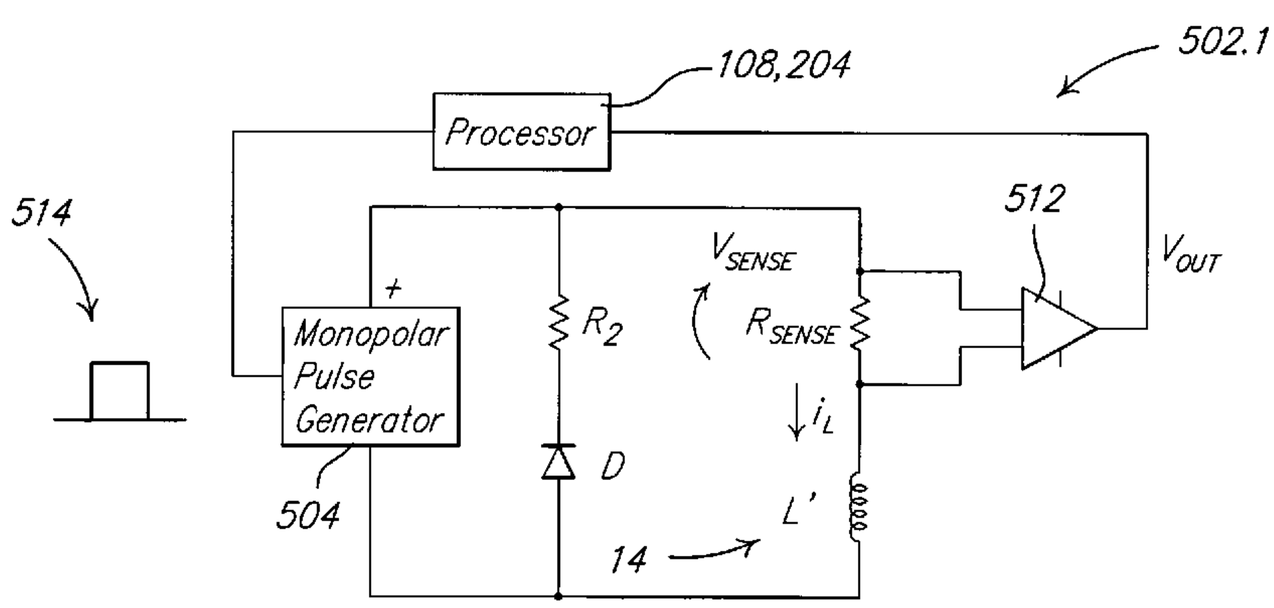

U.S. PATENT DOCUMENTS

2,867,118	A	1/1959	Cavanagh
3,848,243	A	11/1974	Schirmer
3,870,948	A	3/1975	Holt et al.
3,945,459	A	3/1976	Oishi et al.
4,087,782	A	5/1978	Oishi et al.
4,206,451	A	6/1980	Kurschner
4,630,229	A	12/1986	D'Hondt
4,651,093	A	3/1987	Detriche' et al.
4,706,073	A	11/1987	Vila Masot
4,754,644	A	7/1988	Valentini
4,802,368	A	2/1989	Nordvall
4,823,621	A	4/1989	Sobel
4,855,677	A	8/1989	Clark, Jr. et al.
4,866,418	A	9/1989	Dobler et al.
4,893,077	A	1/1990	Auchterlonie
4,952,855	A	8/1990	Meins et al.
5,068,608	A	11/1991	Clark, Jr.
5,097,253	A	3/1992	Eschbach et al.
5,134,371	A	7/1992	Watanabe
5,182,513	A	1/1993	Young et al.
5,281,780	A	1/1994	Haland
5,399,968	A	3/1995	Sheppard et al.
5,437,197	A	8/1995	Uras et al.
5,445,412	A	8/1995	Gillis et al.
5,525,907	A	6/1996	Frazier
5,559,431	A	9/1996	Sellen
5,580,084	A	12/1996	Gioutsos
5,583,435	A	12/1996	Takemoto et al.
5,610,583	A	3/1997	Drebika et al.
5,629,619	A	5/1997	Mednikov
5,683,103	A	11/1997	Blackburn et al.
5,707,076	A	1/1998	Takahashi
5,739,757	A	4/1998	Gioutsos
5,747,696	A	5/1998	Kwun et al.
5,767,766	A	6/1998	Kwun
5,793,206	A	8/1998	Goldfine et al.
5,838,233	A	11/1998	Hawes et al.
5,895,439	A	4/1999	Fisher et al.
5,966,011	A	10/1999	Goldfine et al.
RE36,427	E	12/1999	Gioutsos
6,005,392	A	12/1999	Patzwaldt
6,018,980	A	2/2000	Kimura et al.
6,039,345	A	3/2000	Cech et al.
6,175,232	B1	1/2001	de Coulon et al.
6,246,230	B1	6/2001	Mednikov
6,252,393	B1	6/2001	Hedengren
6,288,536	B1	9/2001	Mandl et al.
6,288,537	B1	9/2001	Viertl et al.
6,317,048	B1	11/2001	Bomya et al.
6,329,910	B1	12/2001	Farrington
6,351,120	B2	2/2002	Goldfine
6,366,200	B1	4/2002	Aoki
6,396,262	B2	5/2002	Light et al.
6,407,660	B1	6/2002	Bomya
6,433,688	B1	8/2002	Bomya
6,462,535	B1	10/2002	Schwabe
6,462,536	B1	10/2002	Mednikov et al.
6,476,605	B1	11/2002	de Coulon
6,479,990	B2	11/2002	Mednikov et al.
6,552,662	B1	4/2003	Bomya et al.
6,583,616	B1	6/2003	Bomya
6,586,926	B1	7/2003	Bomya
6,587,048	B1	7/2003	Bomya
6,631,776	B1	10/2003	Bomya
6,777,927	B1	8/2004	Bomya
6,812,697	B2	11/2004	McKnight et al.
7,113,874	B2	9/2006	Watson et al.
7,190,161	B2 *	3/2007	Bomya 324/228
2002/0003421	A1	1/2002	Kawata et al.
2002/0126004	A1	9/2002	Gioutsos et al.
2004/0061617	A1	4/2004	Gioutsos et al.
2004/0075429	A1	4/2004	Hiroshima
2005/0007108	A1	1/2005	Dogaru
2005/0093540	A1 *	5/2005	Merrick et al. 324/239
2005/0096815	A1	5/2005	Takafuji et al.
2005/0099278	A1 *	5/2005	Kawaura et al. 340/435
2005/0127908	A1	6/2005	Schlicker et al.
2005/0143944	A1	6/2005	Cech et al.
2005/0154530	A1	7/2005	Hosokawa et al.
2007/0024277	A1	2/2007	Cech et al.

OTHER PUBLICATIONS

National Semiconductor, "An Applications Guide for Op Amps," National Semiconductor Corporation, Applicatino Note Feb. 20, 1969, 12 pp.

Carter, B., "A Single-Supply Op-Amp Circuit Collection," Texas Instruments, Application Report SLOA058, Nov. 2000, 27 pp.

Maxim, "Demystifying Sigma-Delta ADCs," Dallas Semiconductor, Maxim, Application Note APP 1870, Jan. 31, 2003.

Kitchen et al., "A Designer's Guide to Instrumentation Amplifiers, 2nd Edition," Analog Devices Inc., 2004.

Wikipedia, the free encyclopedia, "Gyrator", downloaded from http://en.wikipedia.org/wiki/Gyrator on Apr. 18, 2006, 2 pp.

Kwun, H., "Magnetostrictive Sensors Technology", reprinted from Technology Today, Mar. 1995, pp. 3-7, which includes "Back in Style: Magnetostrictive Sensors" reprinted from Sep. 1991.

Uras, M. H., "Signal Detection Methods for Magnetostrictive Sensors", 970604, reprinted from Sensors and Actuators 1997, SP-1220, Society of Automotive Engineers, Feb. 24, 1997, pp. 23-33.

Buckley, J. M., "An Introduction to Eddy Current Testing theory and technology,", technical paper eddyc.pdf available from the internet at http://joe.buckley.net/papers, downloaded on Sep. 8, 2003.

NDT Resource Center, Internet web pages at http://www.ndt-ed.org/EducationResources/CommunityCollege/EddyCurrents/cc_ec_index.htm, NDT Resource Center, downloaded on Oct. 13, 2005.

* cited by examiner

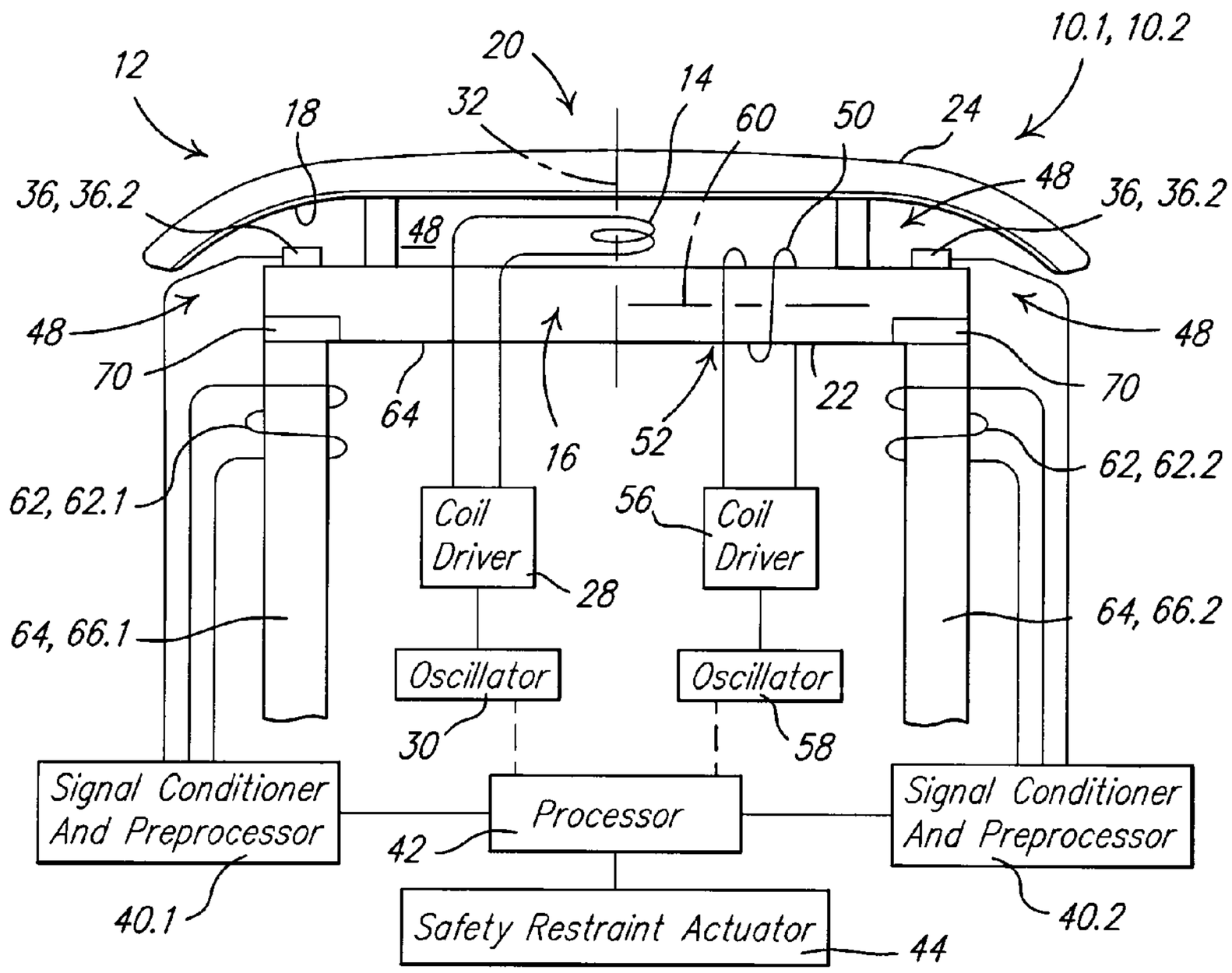
12
20
10.1, 10.2
18
32
14
60
50
24
36, 36.2
48
36, 36.2
48
48
48
70
70
64
22
16
52
62, 62.1
62, 62.2
56
Coil Driver
Coil Driver
28
64, 66.1
64, 66.2
Oscillator
Oscillator
30
58
Signal Conditioner And Preprocessor
Processor
Signal Conditioner And Preprocessor
42
40.1
40.2
Safety Restraint Actuator
44

FIG. 1.

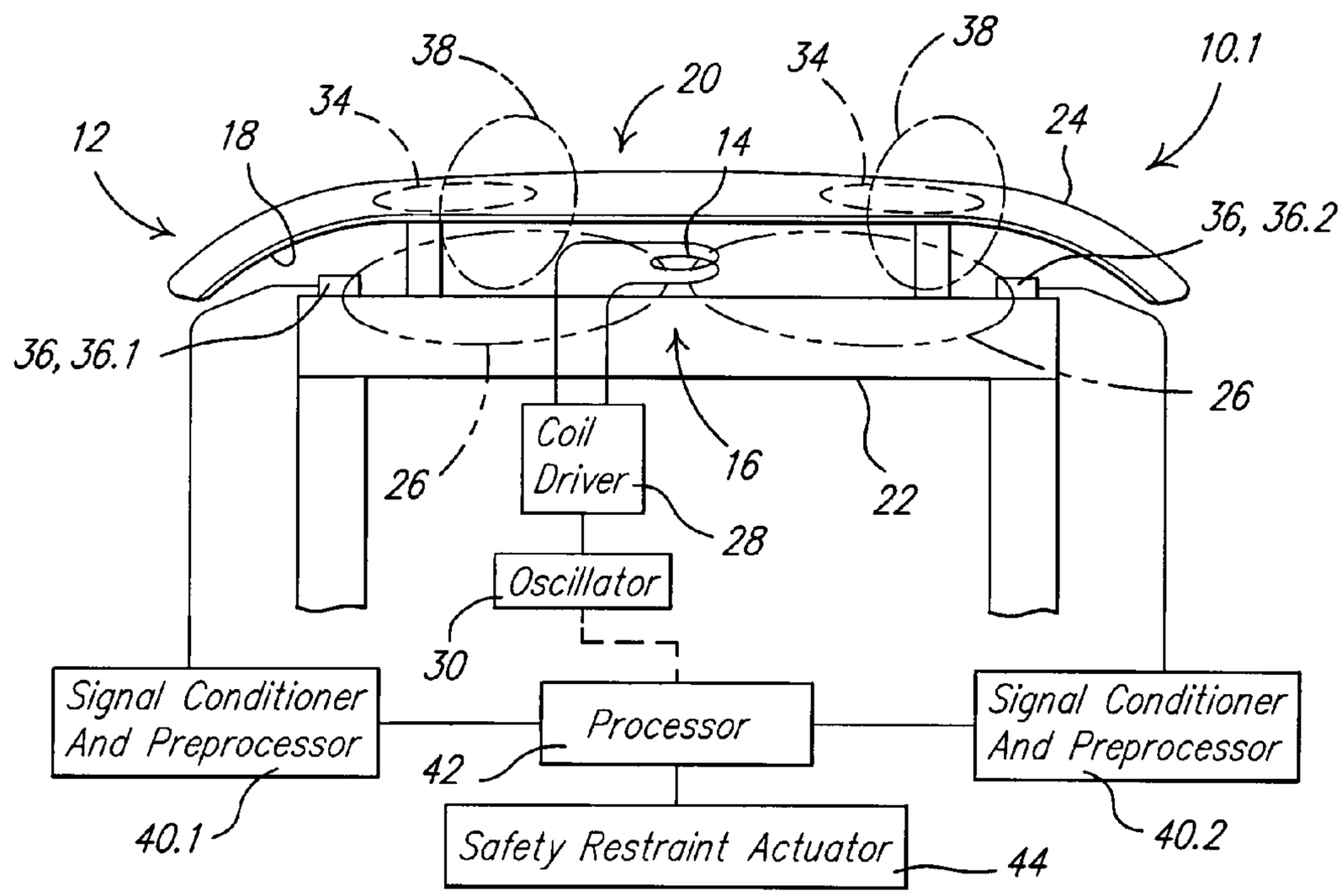
38
34
20
34
38
10.1
12
18
14
24
36, 36.2
36, 36.1
26
26
Coil Driver
16
22
28
Oscillator
30
Signal Conditioner And Preprocessor
Processor
Signal Conditioner And Preprocessor
42
40.1
40.2
Safety Restraint Actuator
44

FIG. 2.

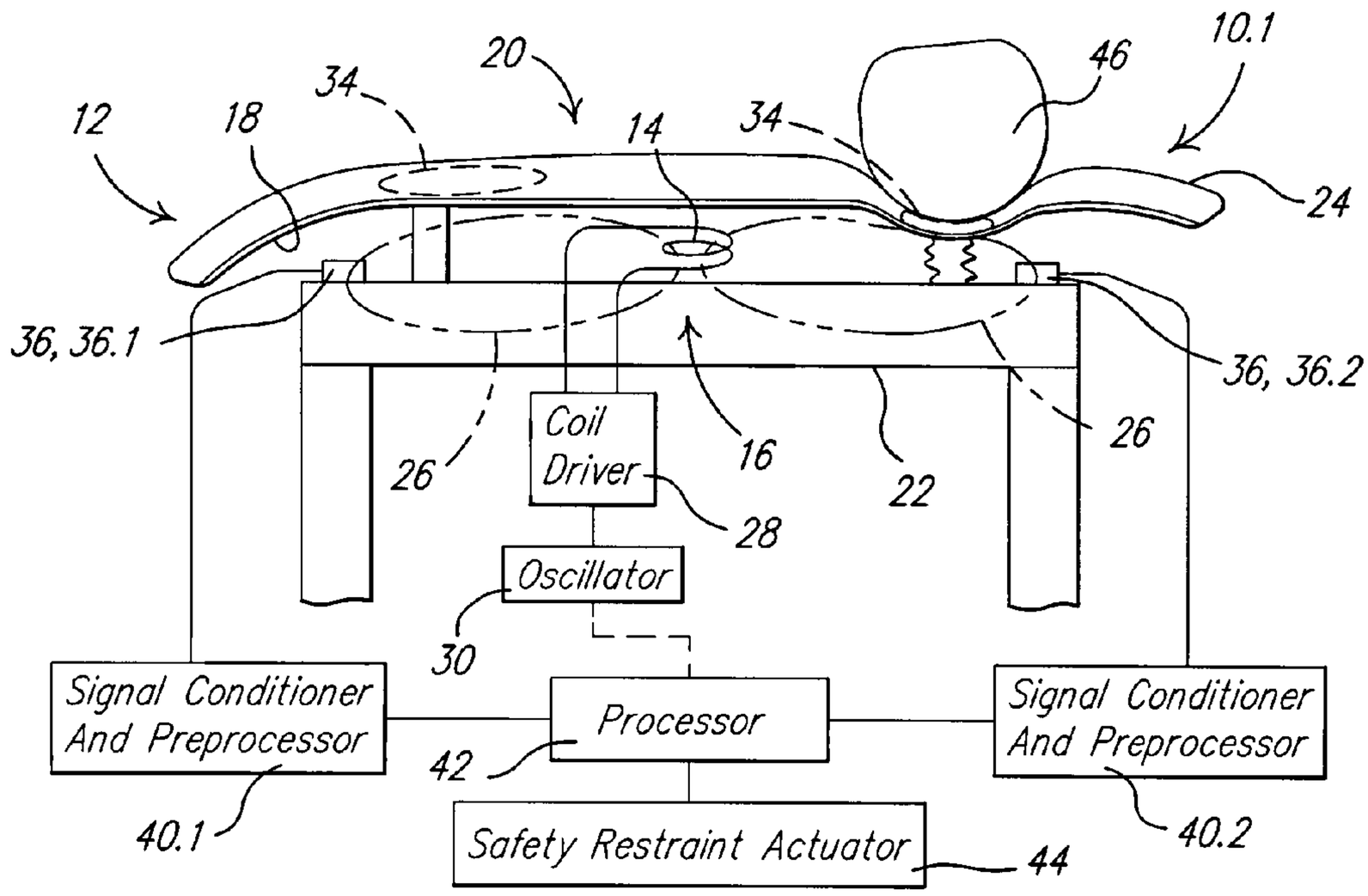
10.1
20
12
18
34
14
34
46
24
36, 36.1
36, 36.2
26
26
Coil Driver
16
22
28
Oscillator
30
Signal Conditioner And Preprocessor
Processor
Signal Conditioner And Preprocessor
42
40.1
40.2
Safety Restraint Actuator
44

FIG. 3.

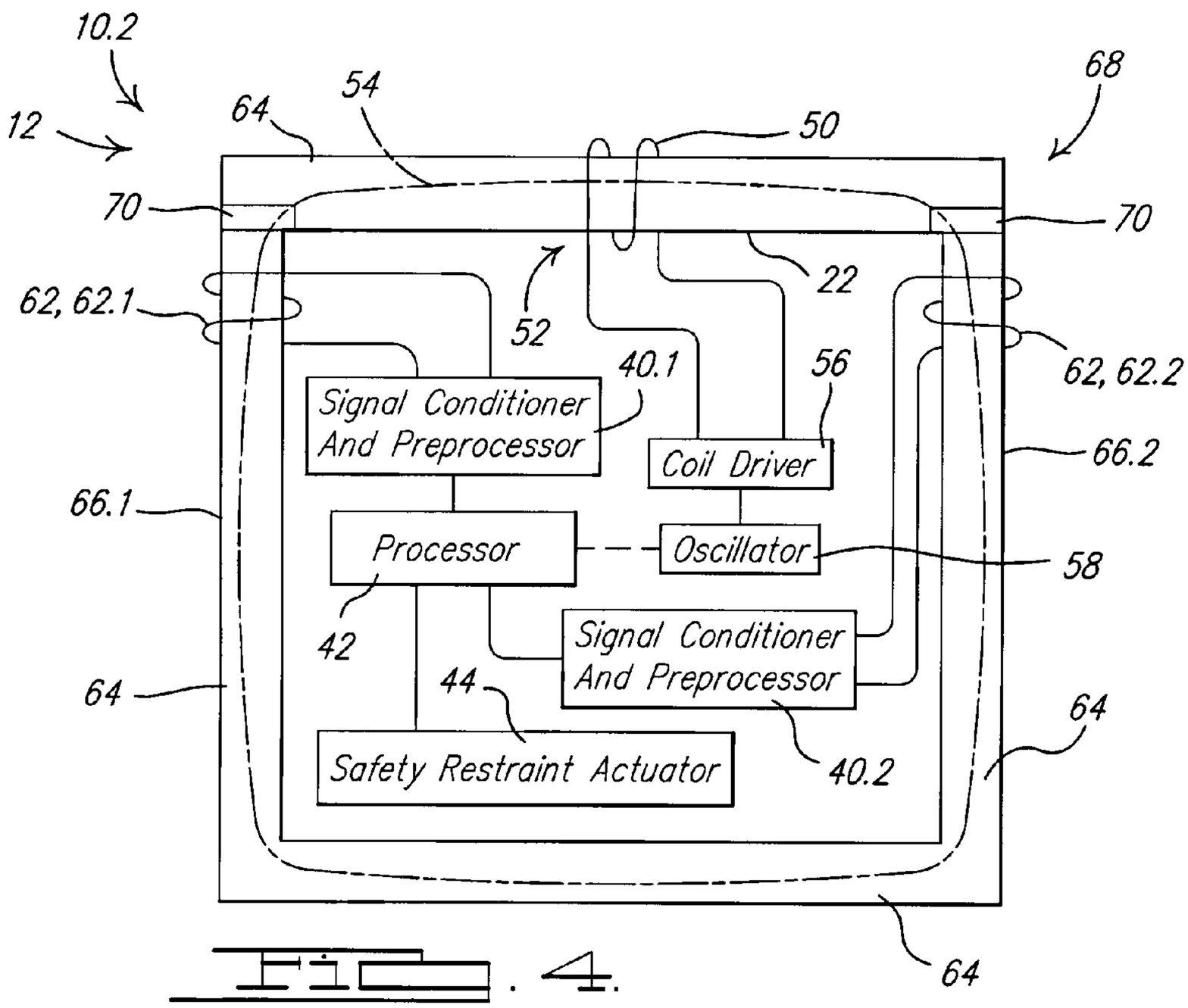
10.2
12
64
54
50
68
70
70
22
62, 62.1
52
62, 62.2
40.1
56
Signal Conditioner And Preprocessor
Coil Driver
66.2
66.1
Processor
Oscillator
58
42
Signal Conditioner And Preprocessor
64
44
64
Safety Restraint Actuator
40.2
64

FIG. 4.

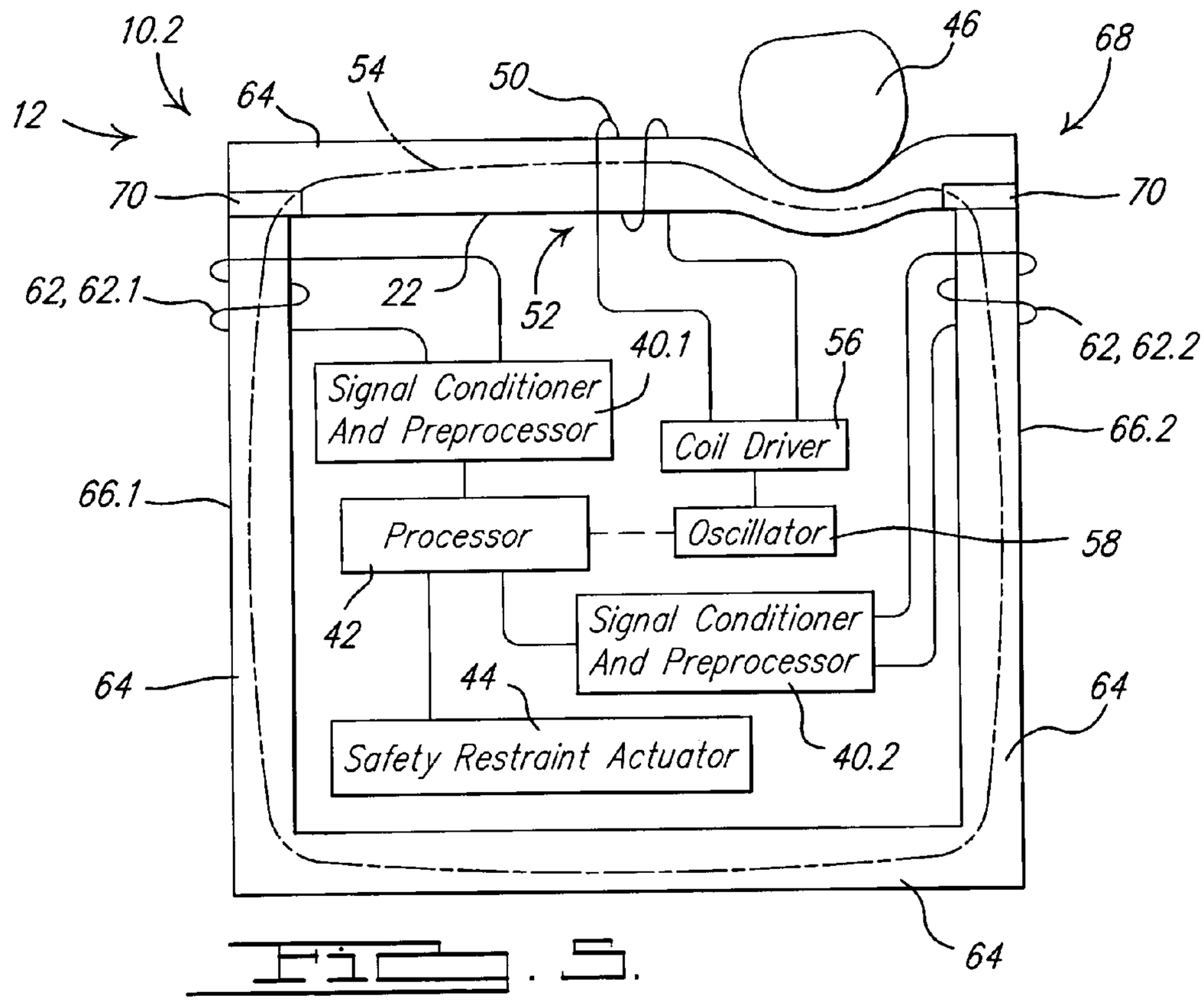
10.2
12
64
54
50
46
68
70
70
62, 62.1
22
52
40.1
56
62, 62.2
Signal Conditioner And Preprocessor
Coil Driver
66.2
66.1
Processor
Oscillator
58
42
Signal Conditioner And Preprocessor
64
44
64
Safety Restraint Actuator
40.2
64

FIG. 5.

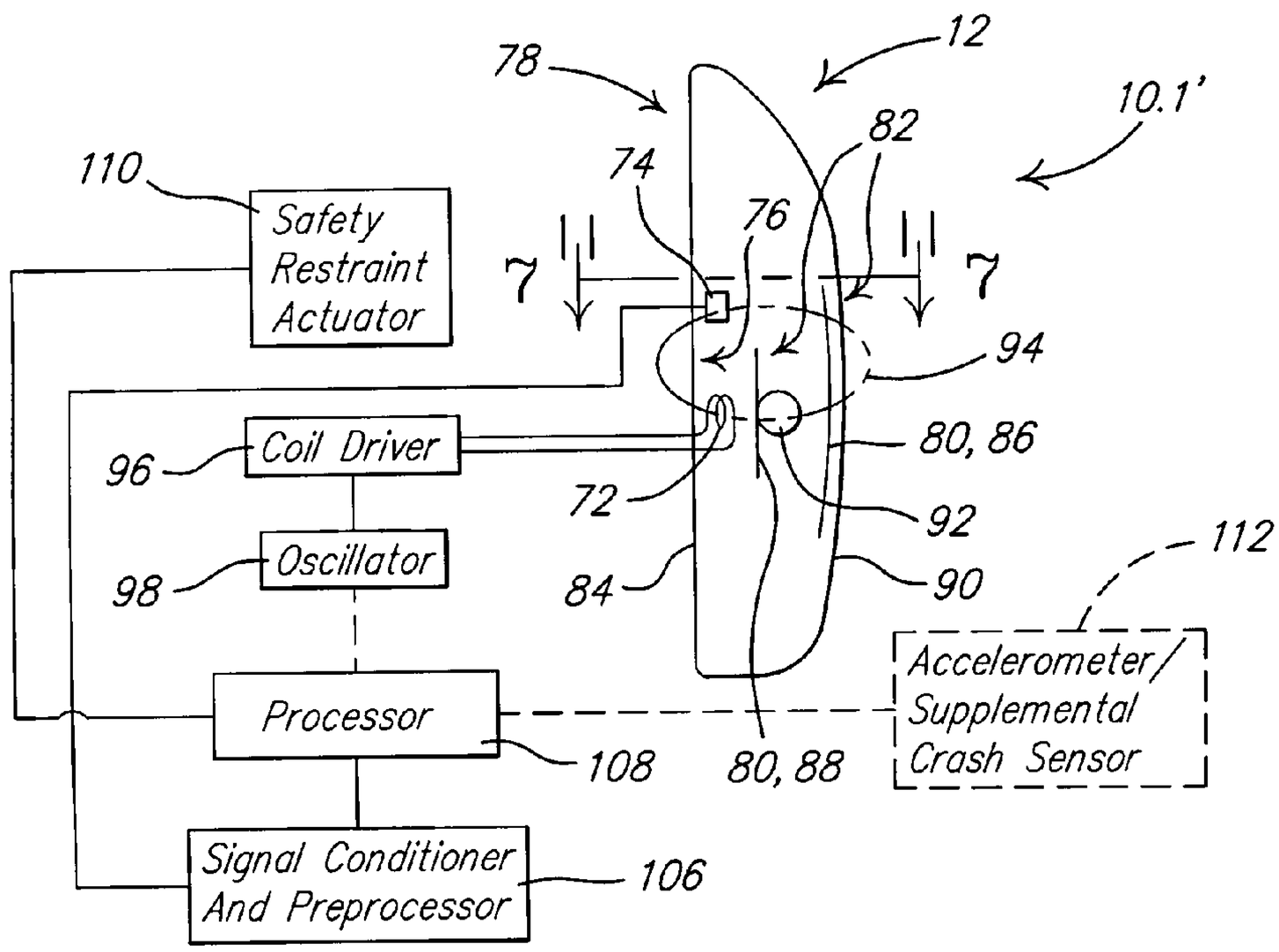
78
12
10.1'
82
110
74
76
Safety Restraint Actuator
7
7
94
80, 86
96
Coil Driver
72
92
112
98
Oscillator
84
90
Accelerometer/ Supplemental Crash Sensor
Processor
108
80, 88
Signal Conditioner And Preprocessor
106

FIG. 6.

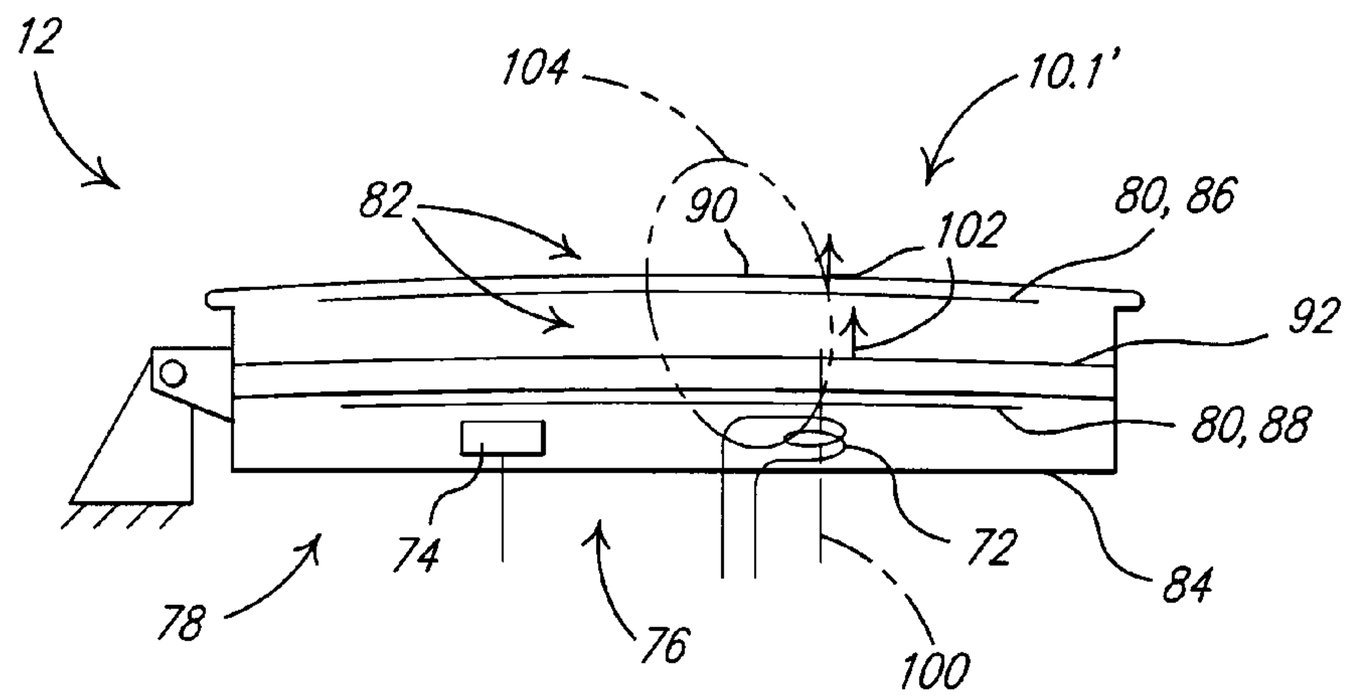
12
104
10.1'
82
90
102
80, 86
92
80, 88
74
72
84
78
76
100

FIG. 7.

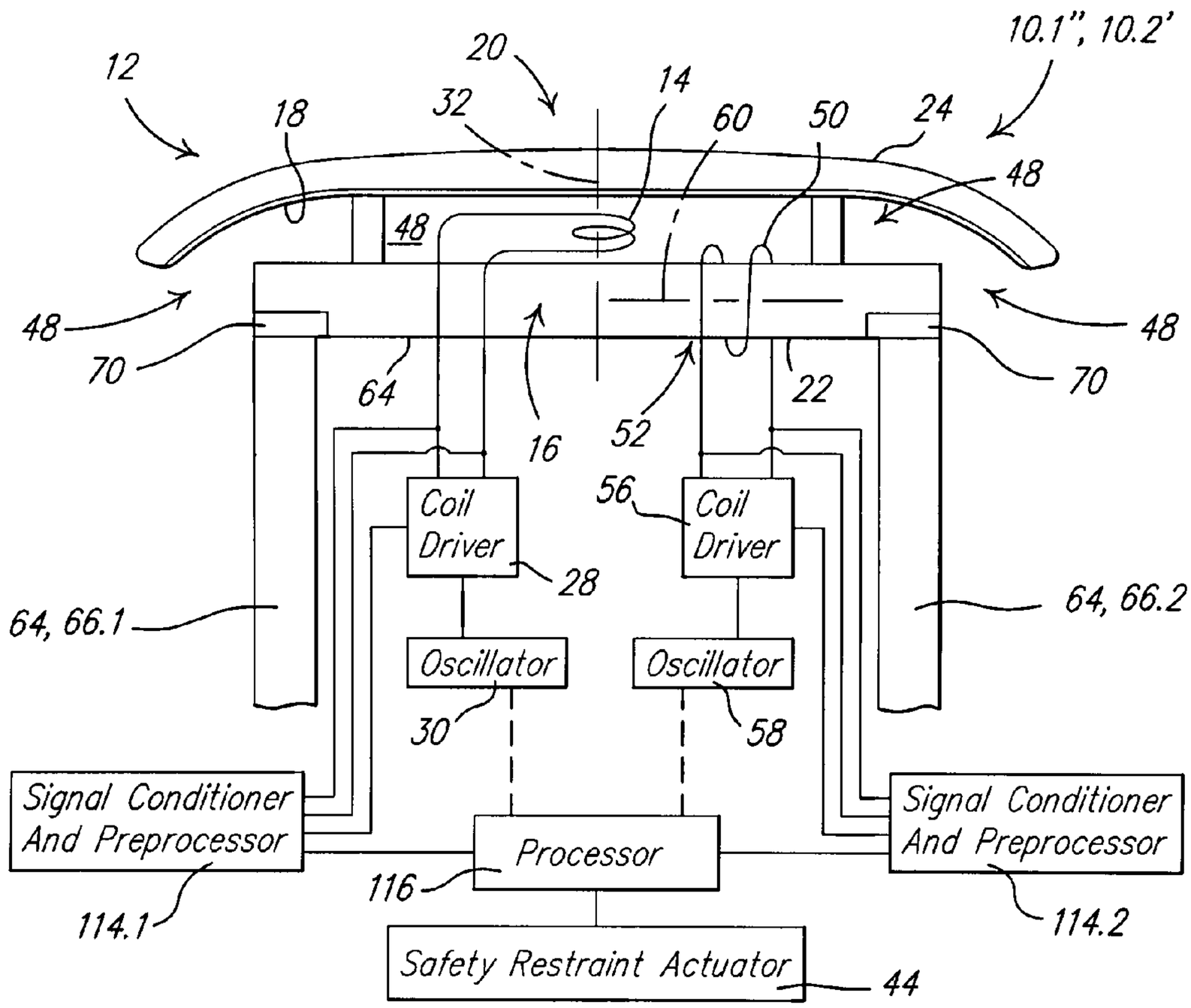
10.1", 10.2'
12
20
14
18
32
60
50
24
48
48
48
48
70
70
64
22
16
52
56
Coil Driver
Coil Driver
28
64, 66.1
64, 66.2
Oscillator
Oscillator
30
58
Signal Conditioner And Preprocessor
Processor
Signal Conditioner And Preprocessor
116
114.1
114.2
Safety Restraint Actuator
44

FIG. 8.

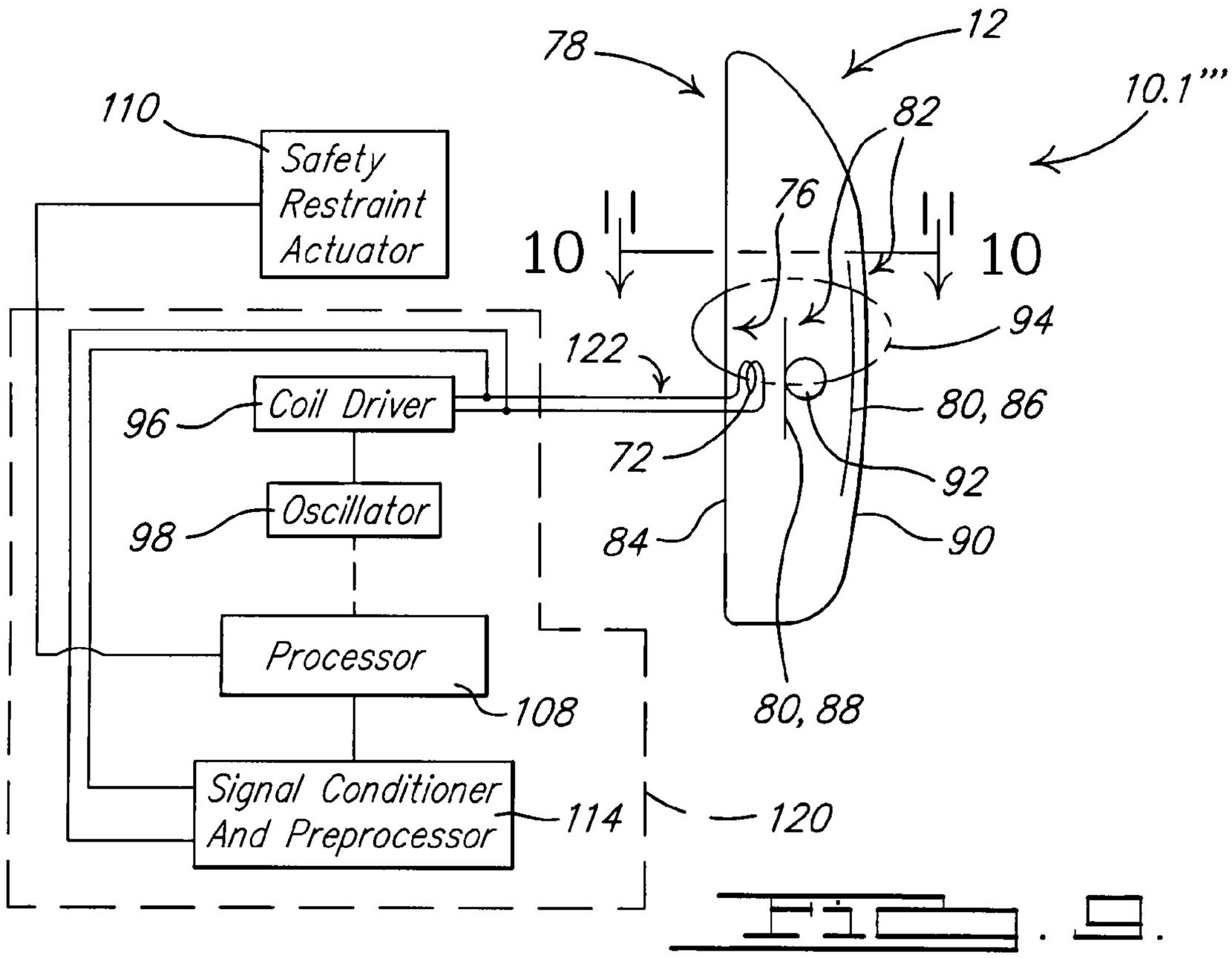
78
12
10.1''''
110
Safety Restraint Actuator
82
76
10
10
94
122
96
Coil Driver
80, 86
72
92
98
Oscillator
84
90
Processor
108
80, 88
Signal Conditioner And Preprocessor
114
120

FIG. 9.

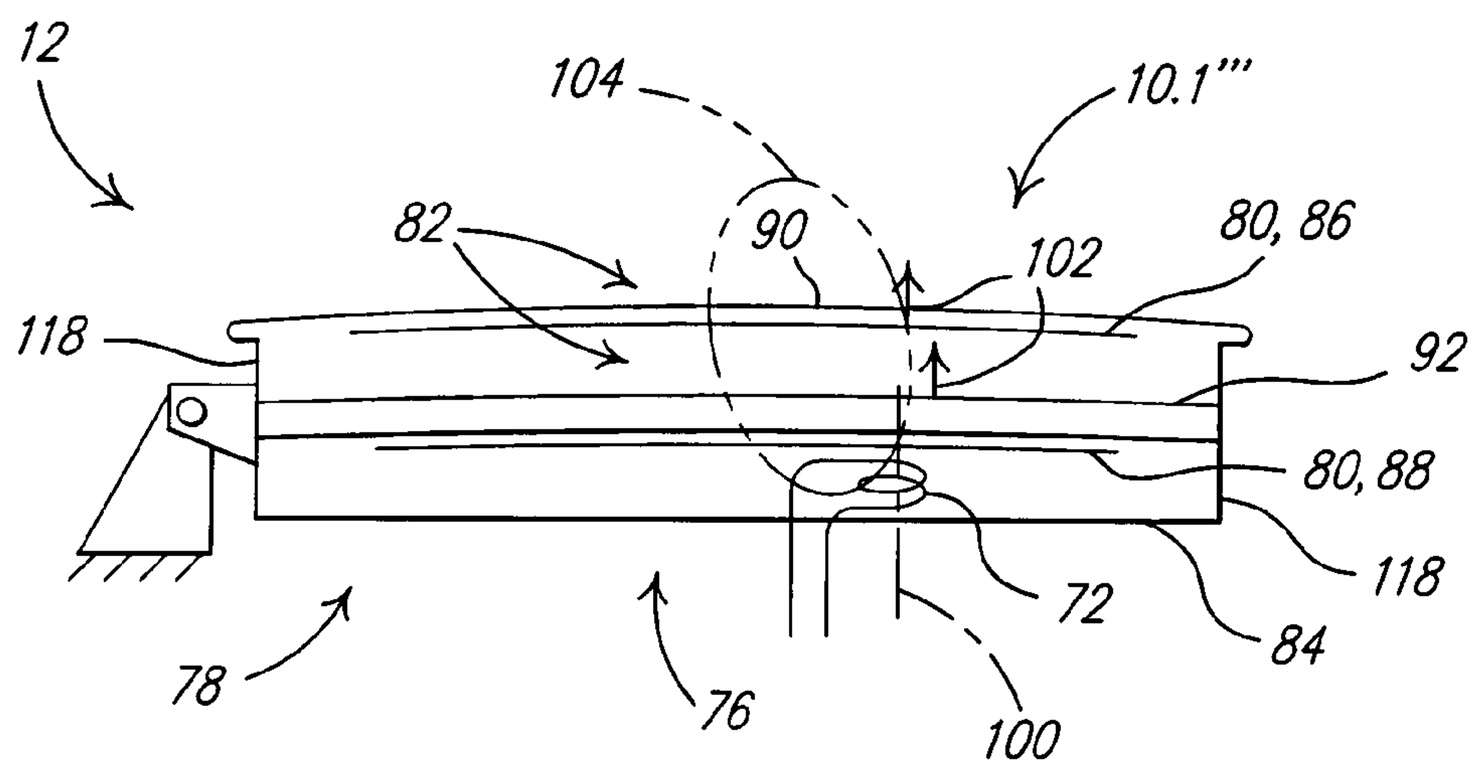
12
104
10.1''''
82
90
102
80, 86
118
92
80, 88
118
72
84
78
76
100

FIG. 10.

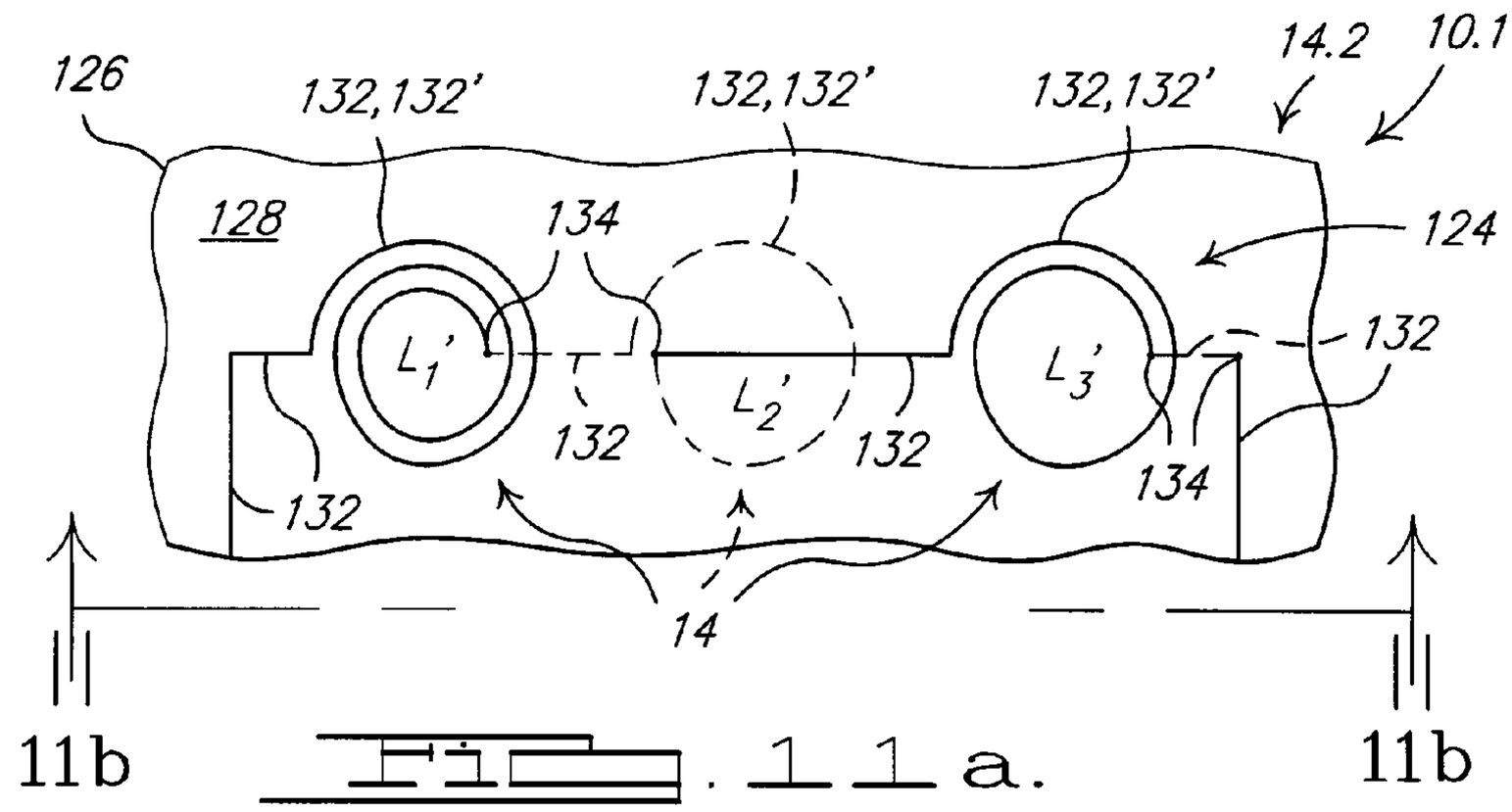

FIG. 11a.

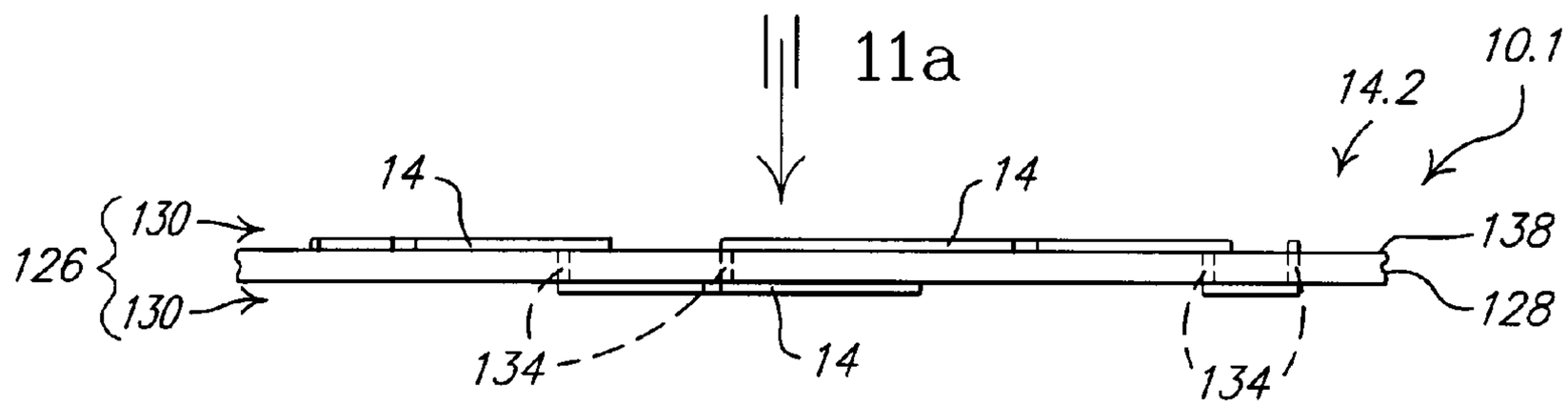

FIG. 11b.

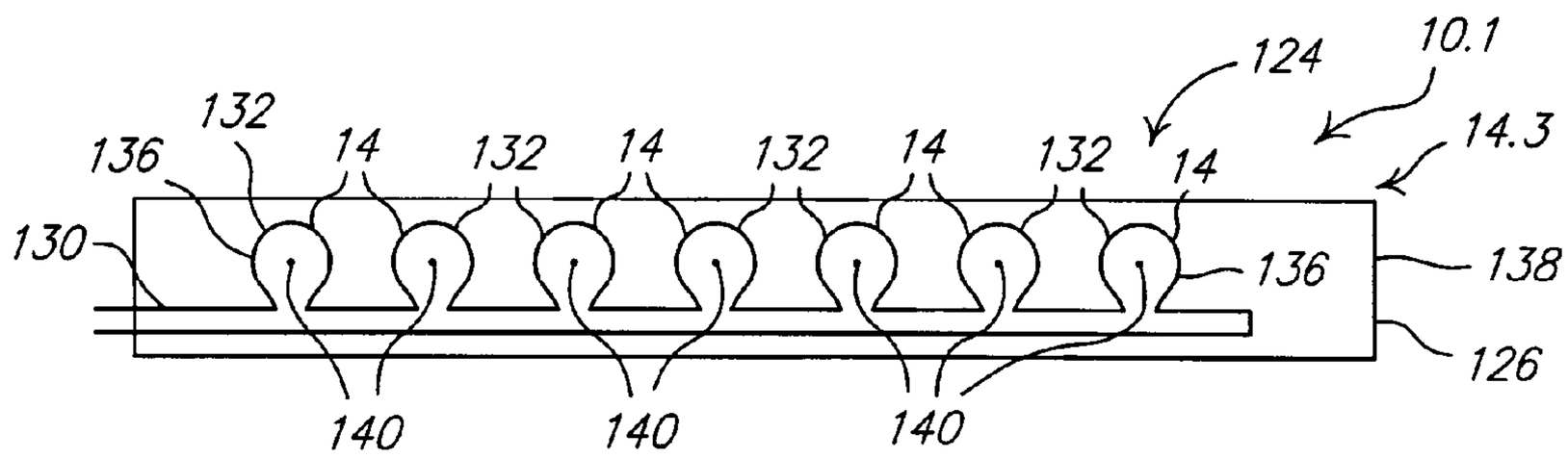

FIG. 12.

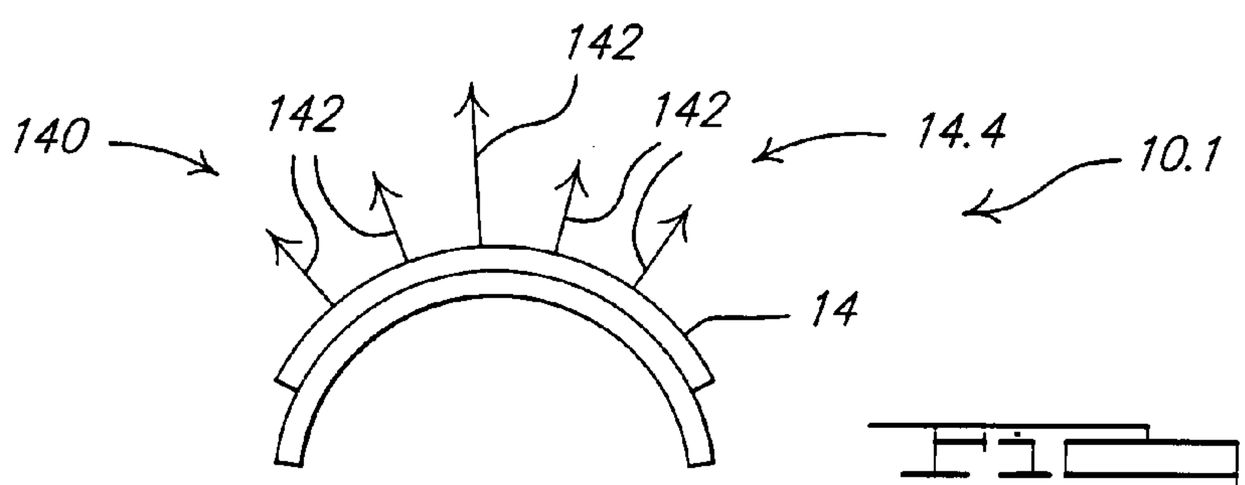

FIG. 13.

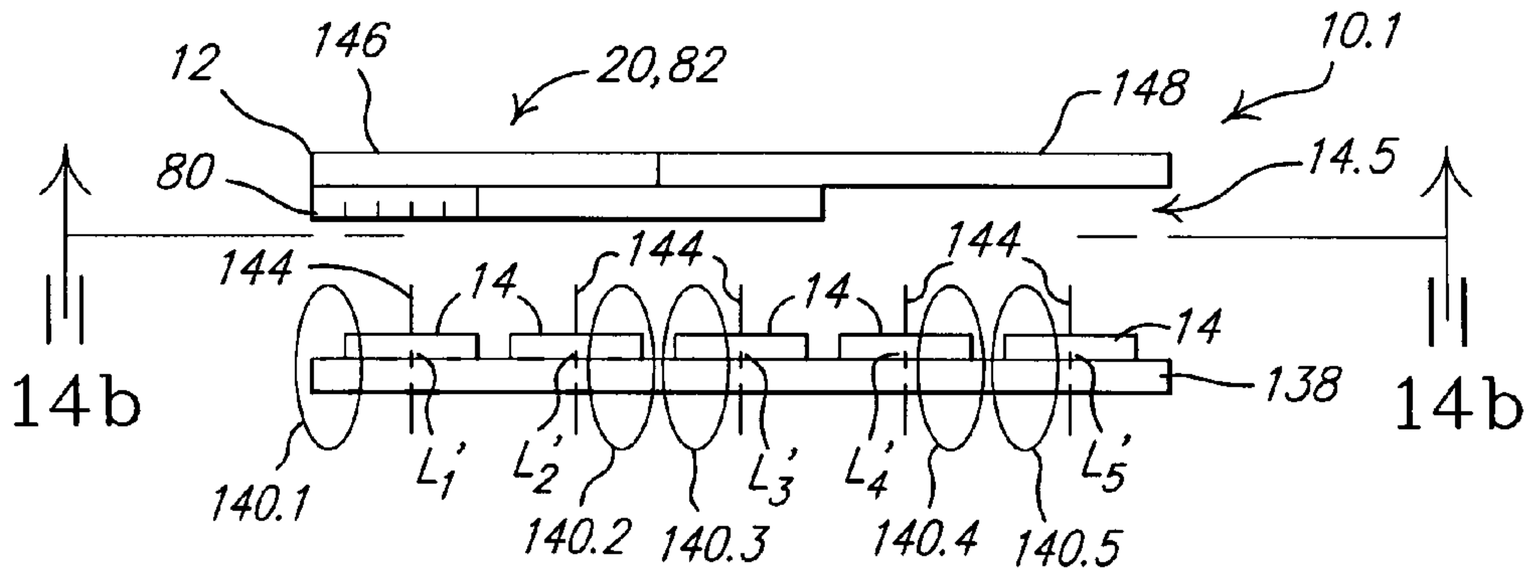

Fig. 14a.

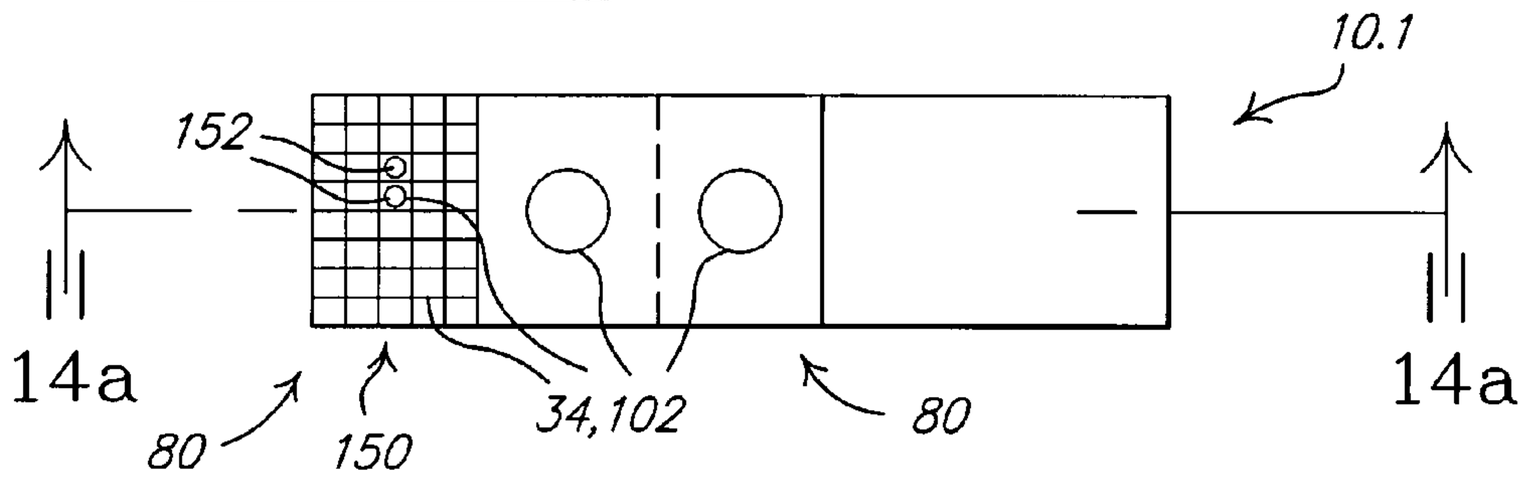

Fig. 14b.

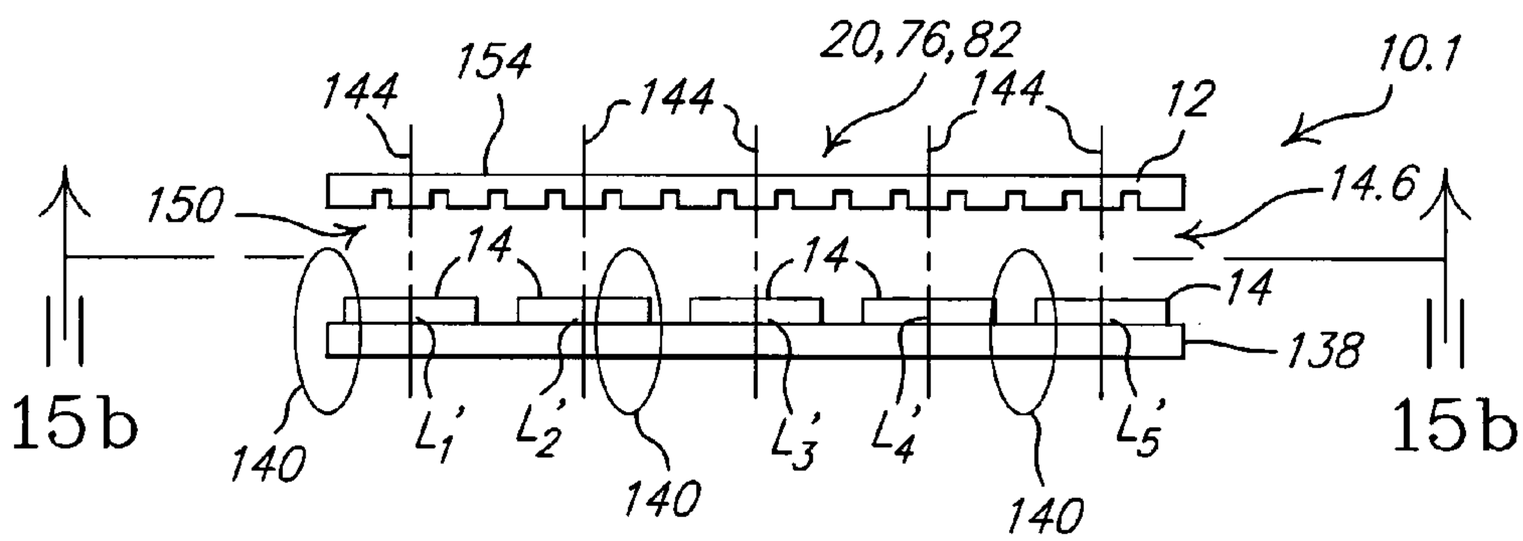

Fig. 15a.

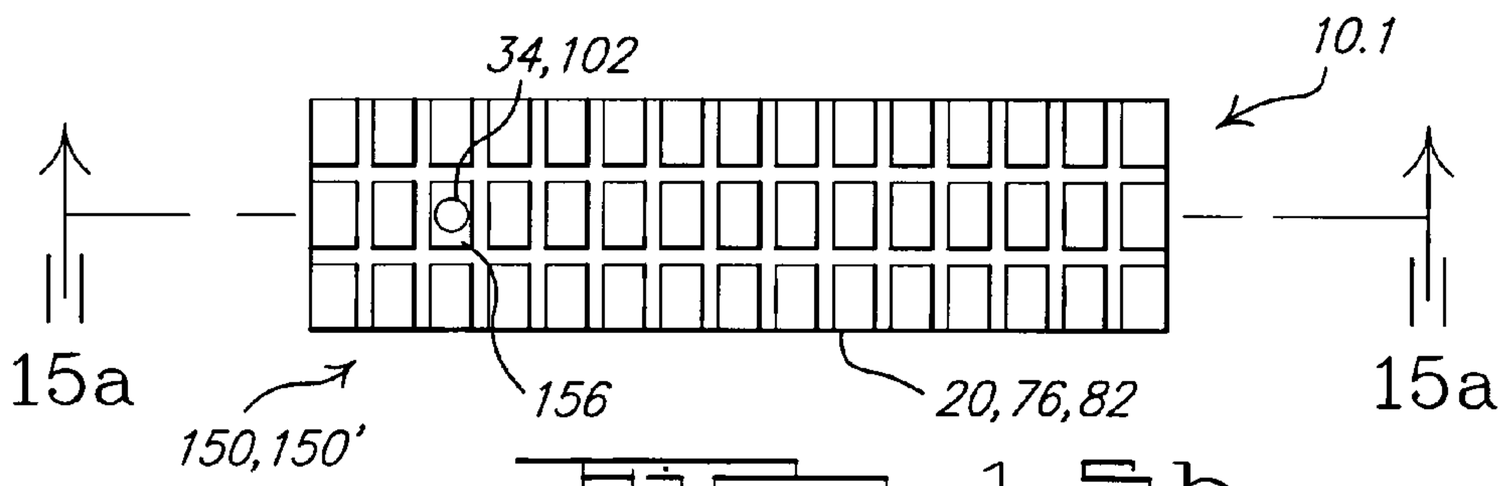

Fig. 15b.

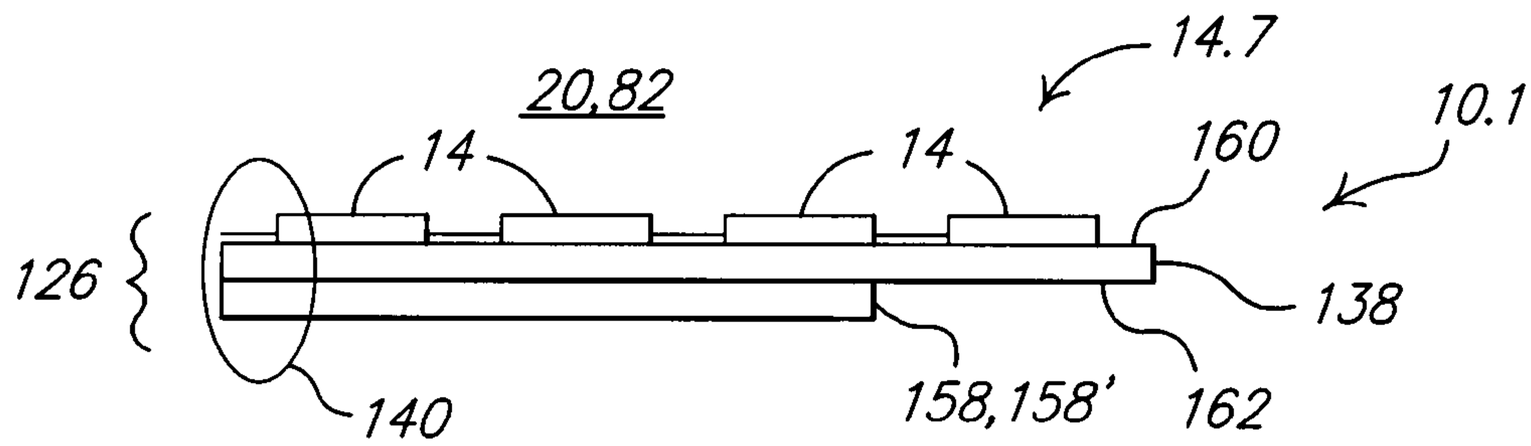

FIG. 16.

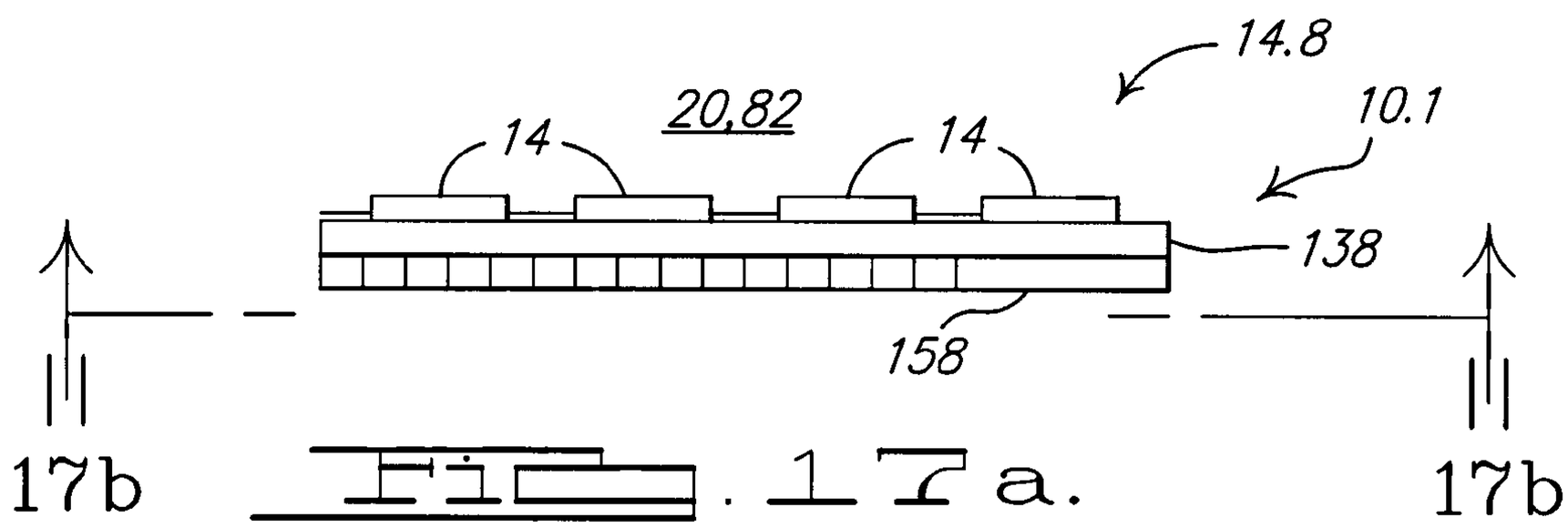

FIG. 17a.

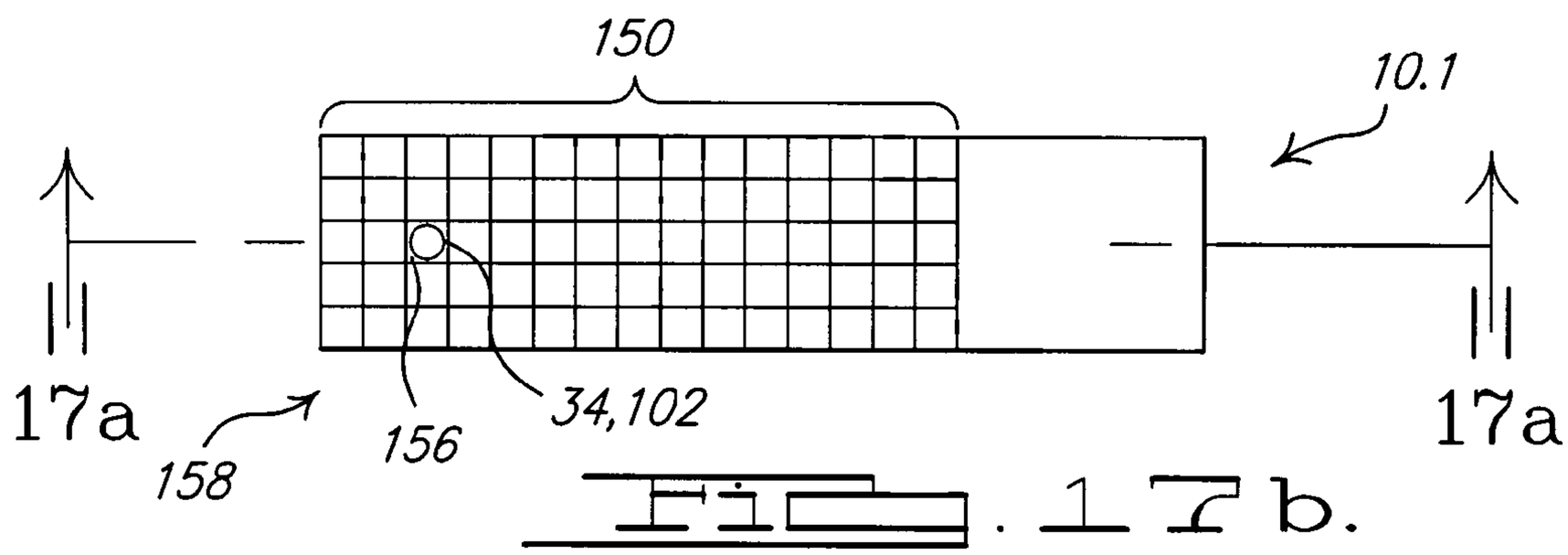

FIG. 17b.

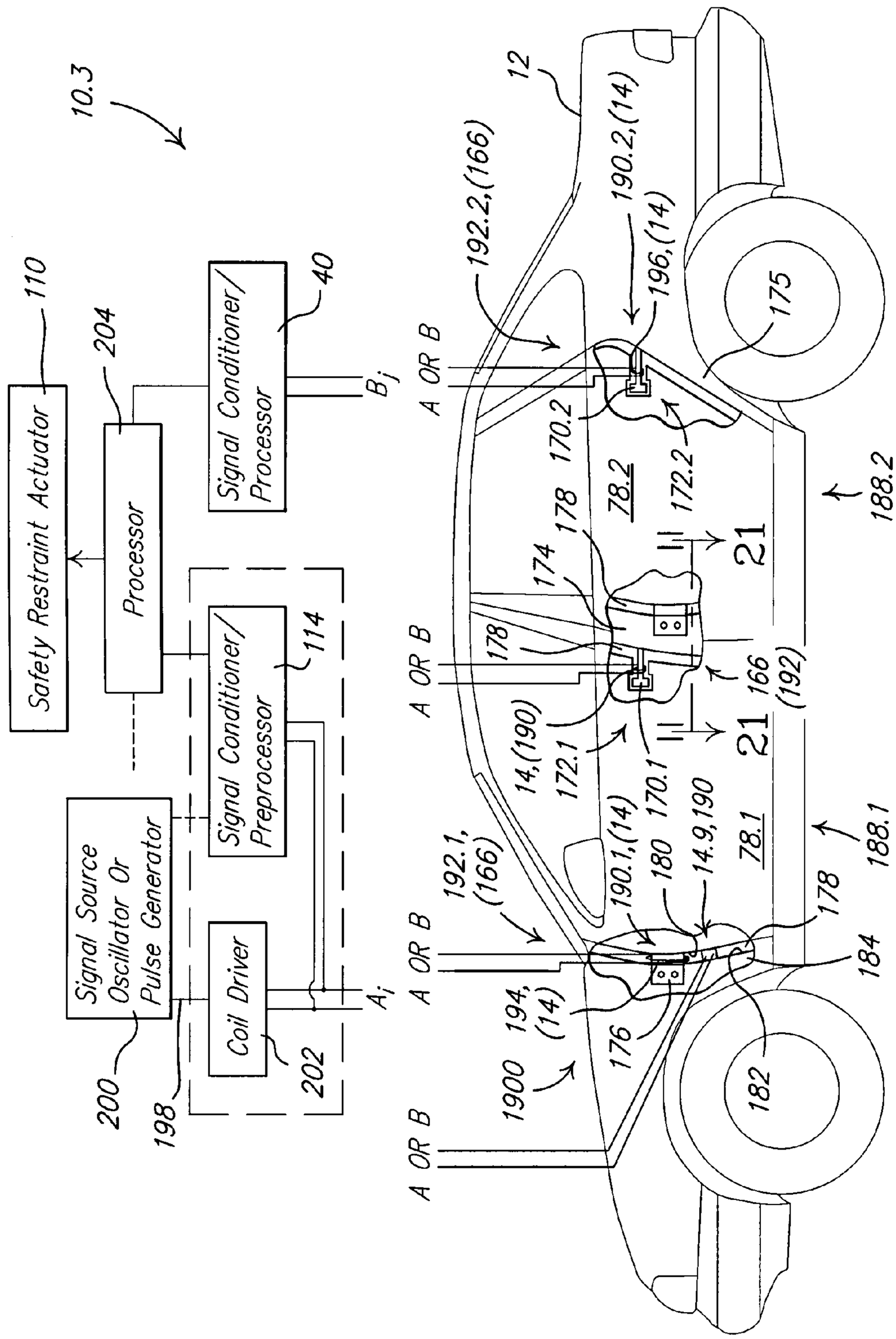
10.3
110
Safety Restraint Actuator
204
Processor
40
Signal Conditioner/ Processor
B_j
114
Signal Conditioner/ Preprocessor
Signal Source Oscillator Or Pulse Generator
200
198
Coil Driver
202
A_i
12
192.2,(166)
190.2,(14)
196,(14)
175
A OR B
170.2
172.2
78.2
178
174
21
166 (192)
14,(190)
172.1
170.1
188.2
188.1
192.1, (166)
190.1,(14)
180
14.9,190
78.1
184
194, (14)
176
1900
182

FIG. 1

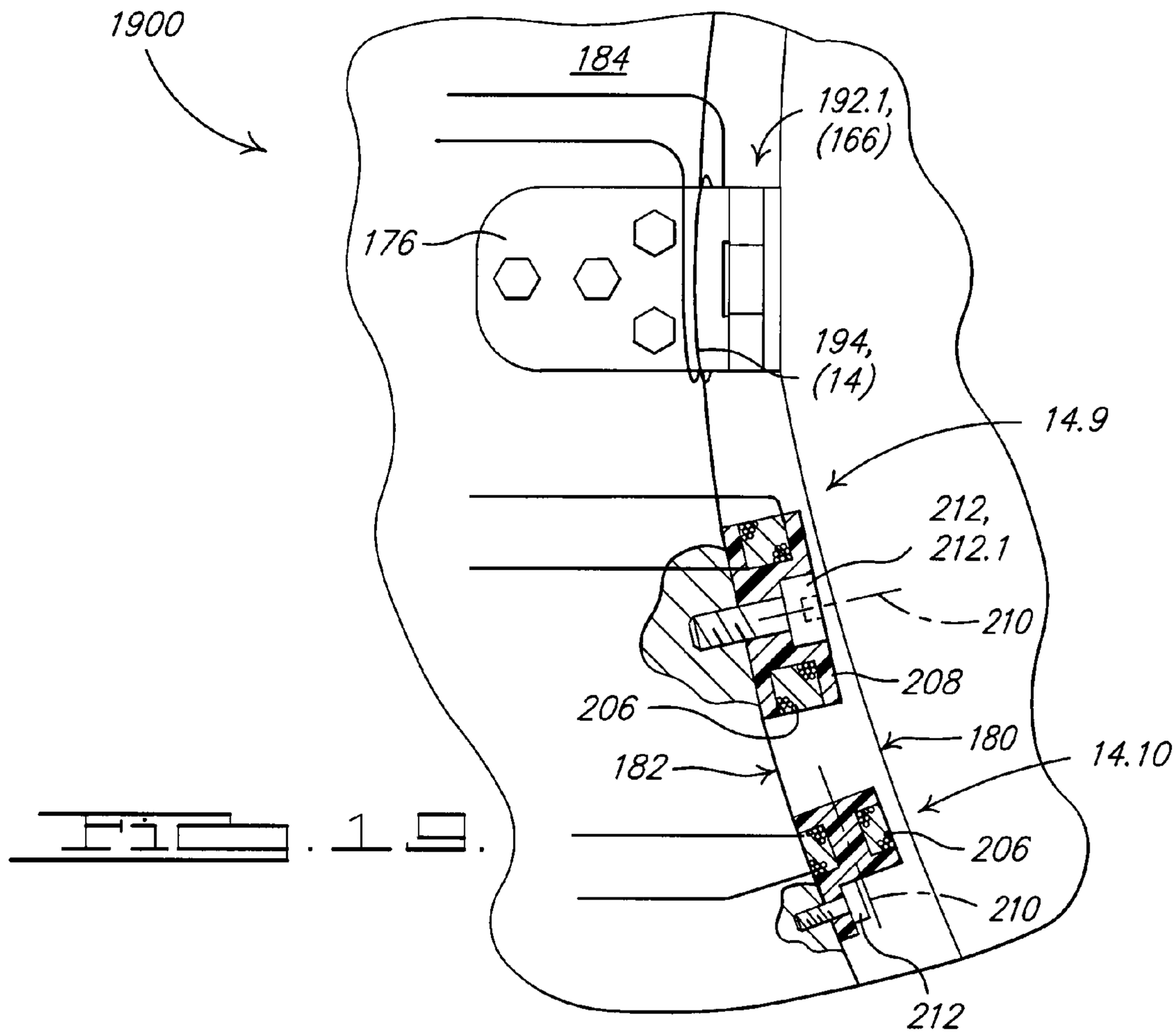
1900
184
192.1,
(166)
176
194,
(14)
14.9
212,
212.1
210
208
206
180
182
14.10
206
210
212

Fig. 19.

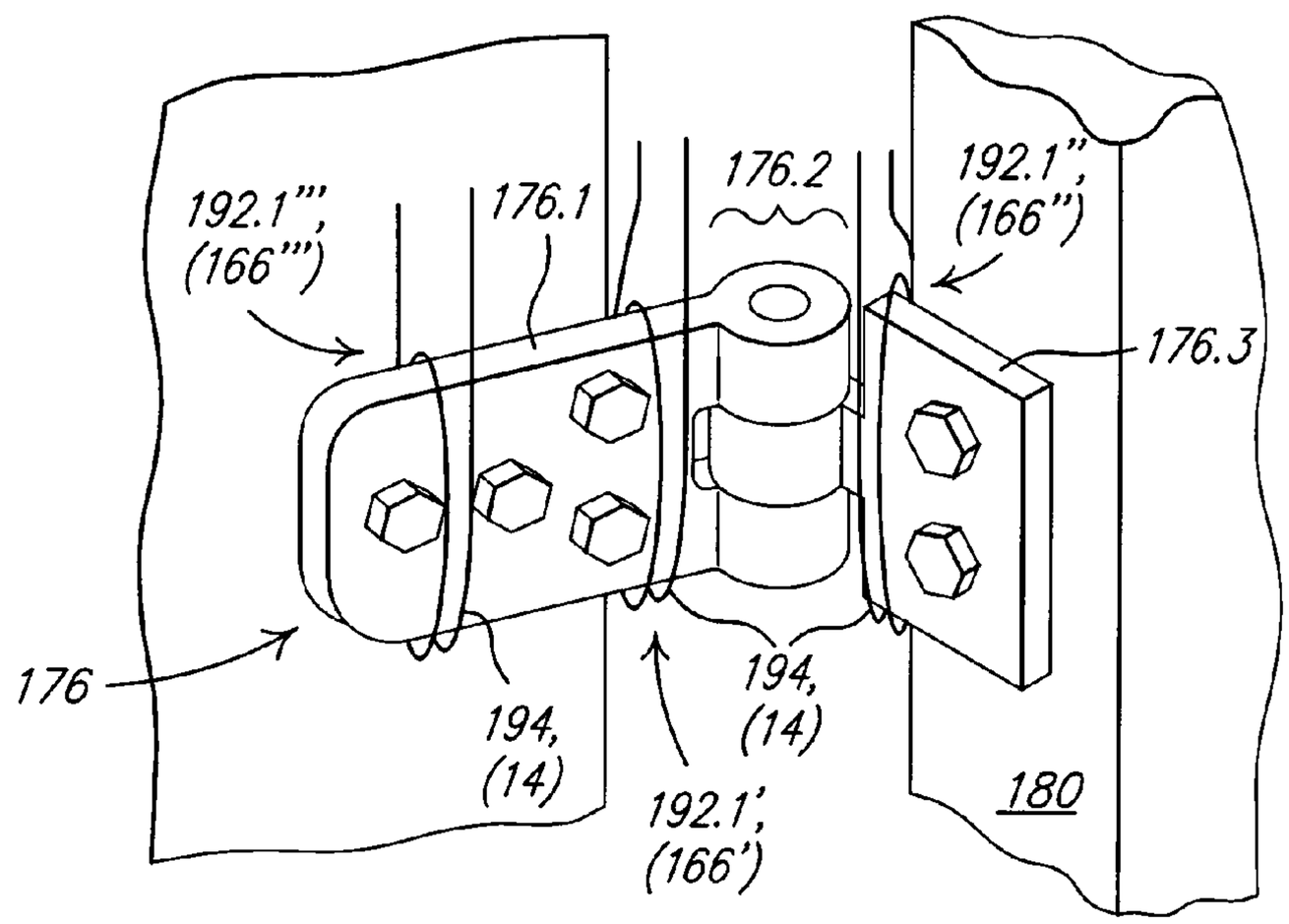
192.1'''',
(166'''')
176.1
176.2
192.1'',
(166'')
176.3
176
194,
(14)
194,
(14)
192.1',
(166')
180

Fig. 20.

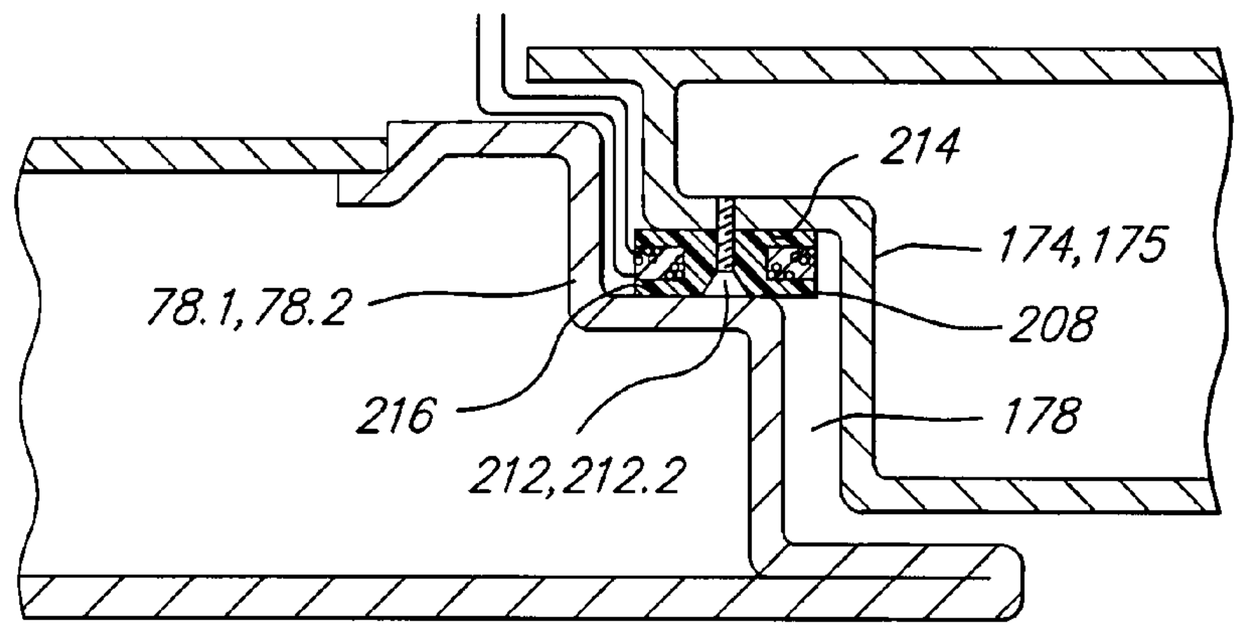

FIG. 21.

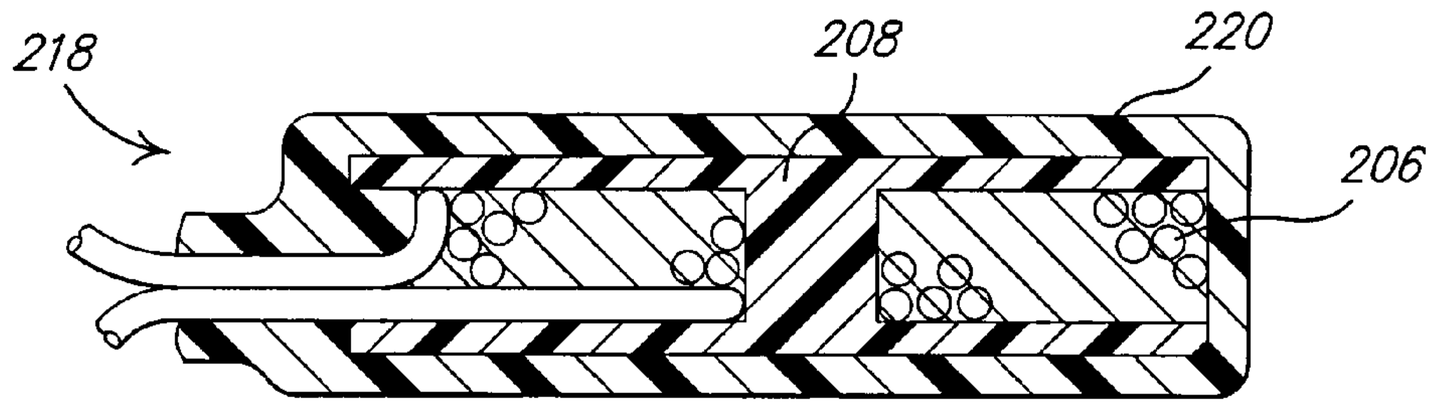

FIG. 22.

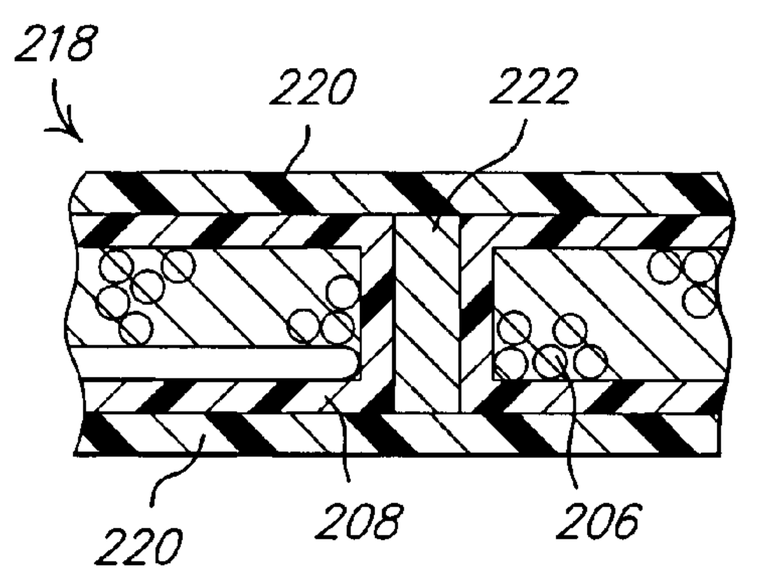

FIG. 23.

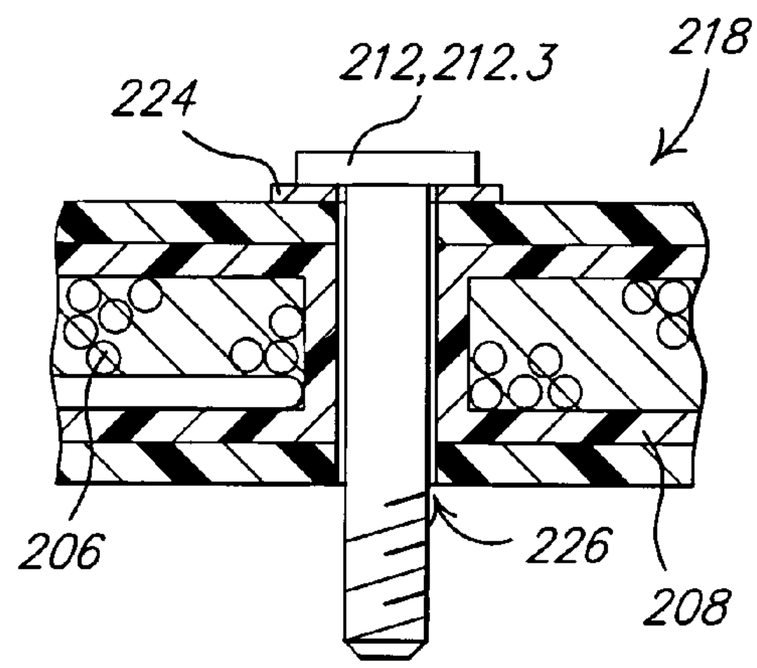

FIG. 24.

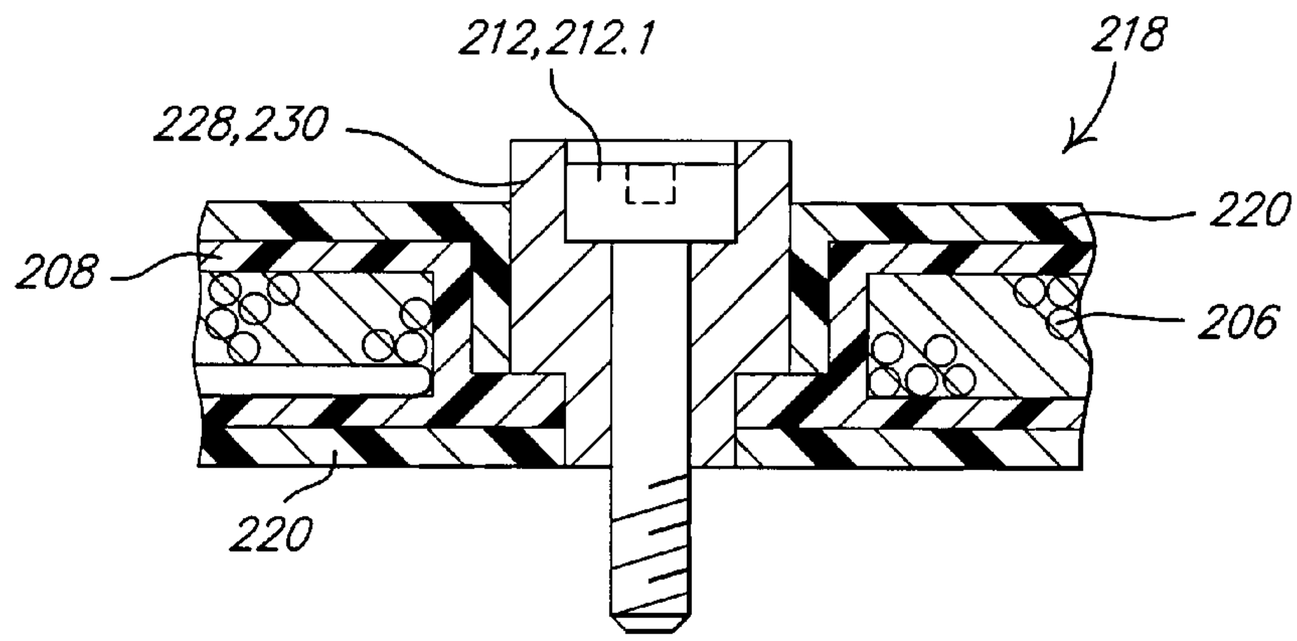

FIG. 25.

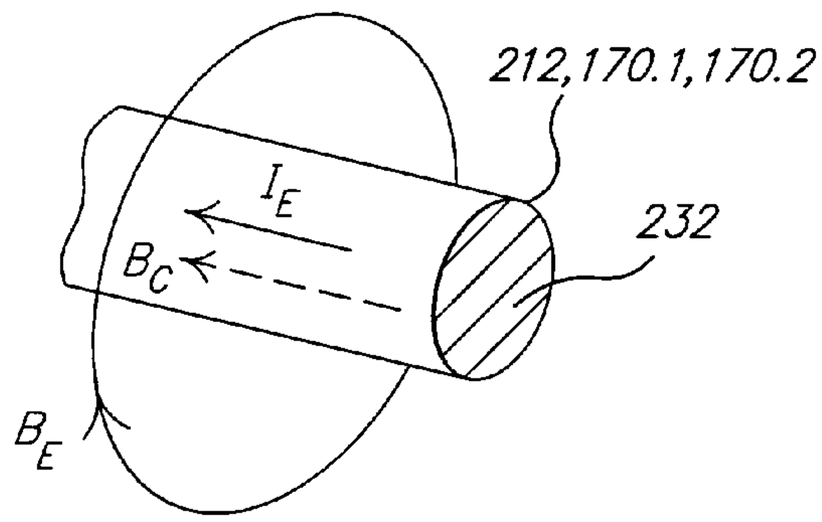

FIG. 26a.

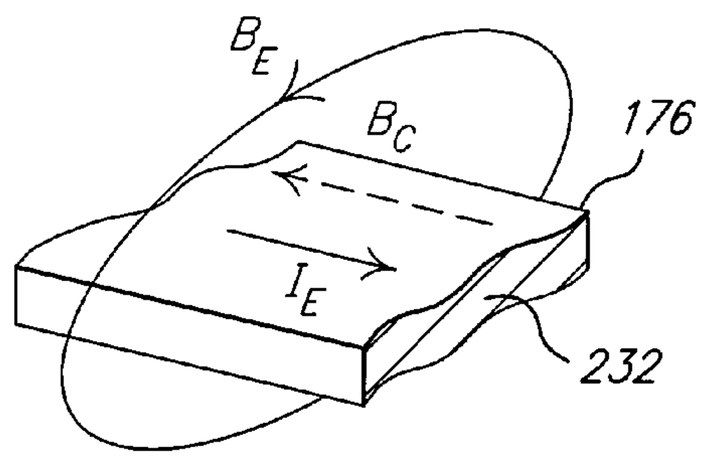

FIG. 26b.

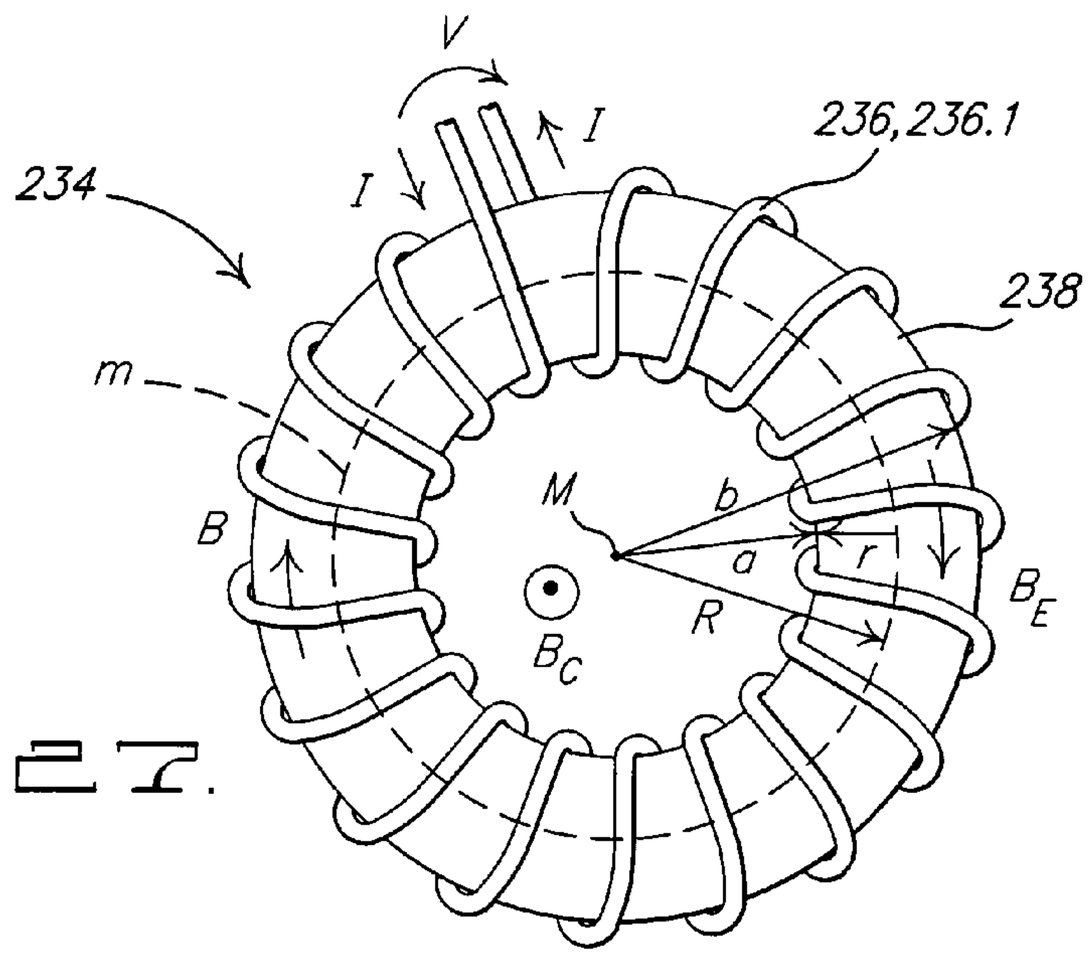

FIG. 27.

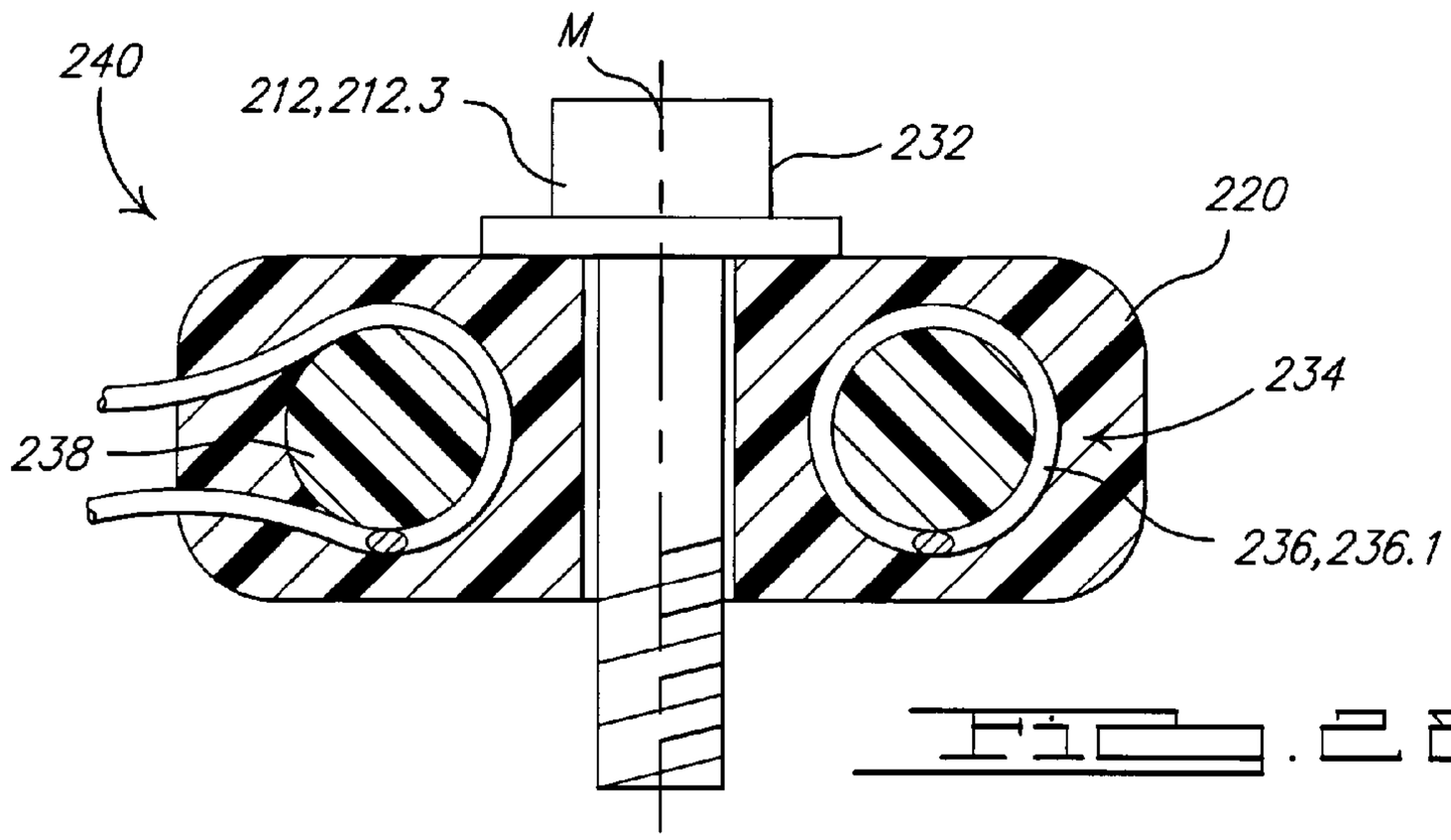

FIG. 28.

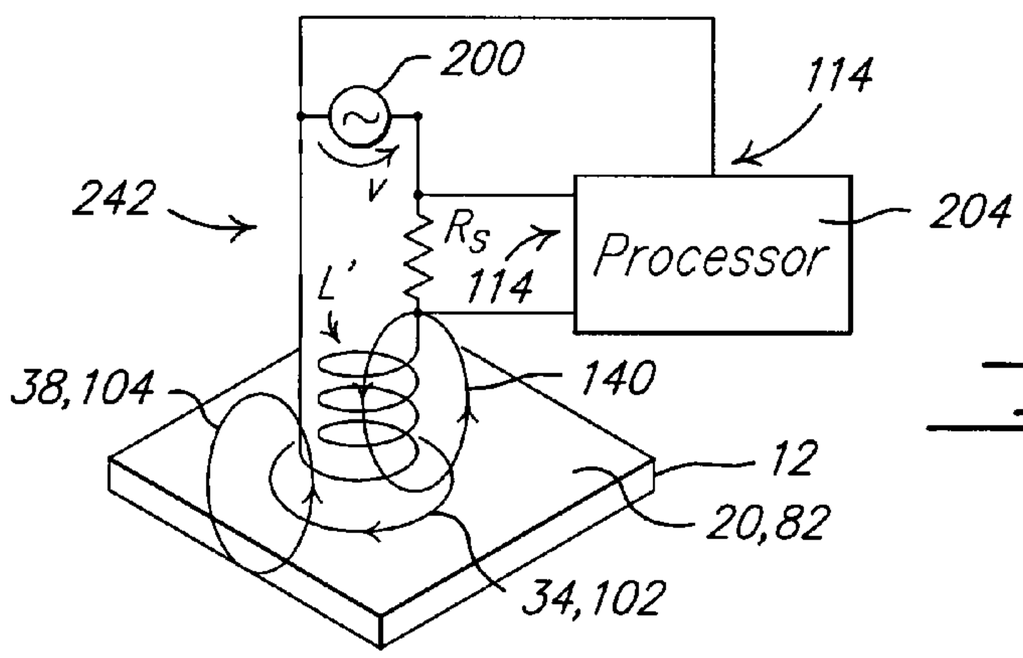

FIG. 29.

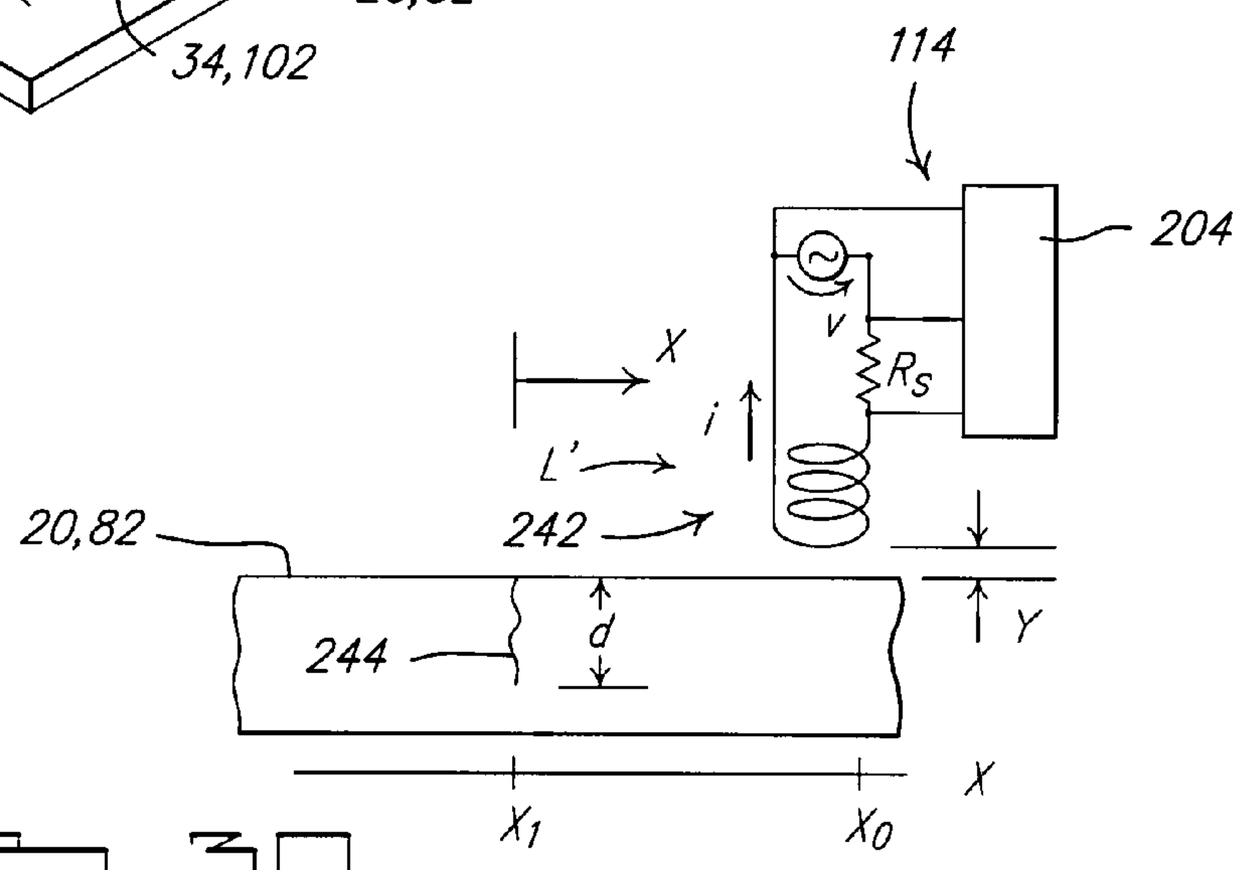

FIG. 30.

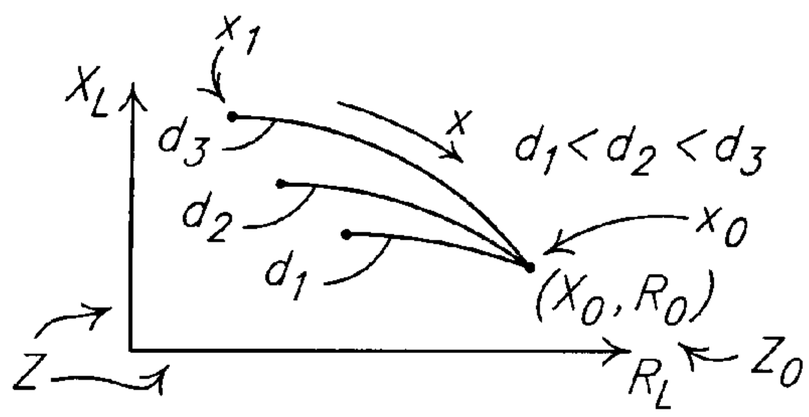

FIG. 31.

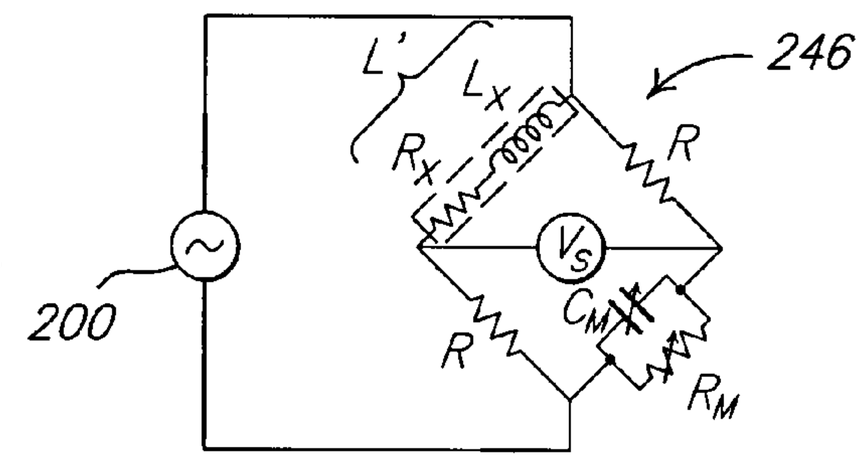

FIG. 32.

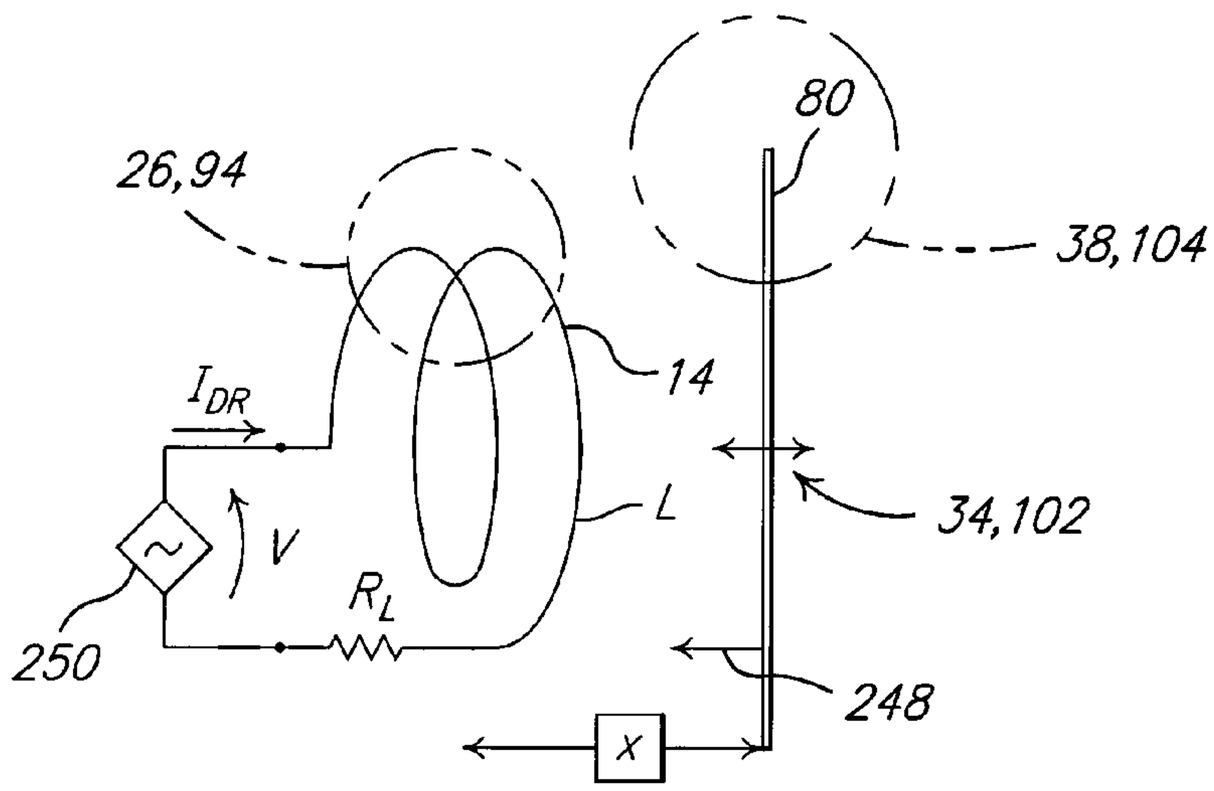

FIG. 33.

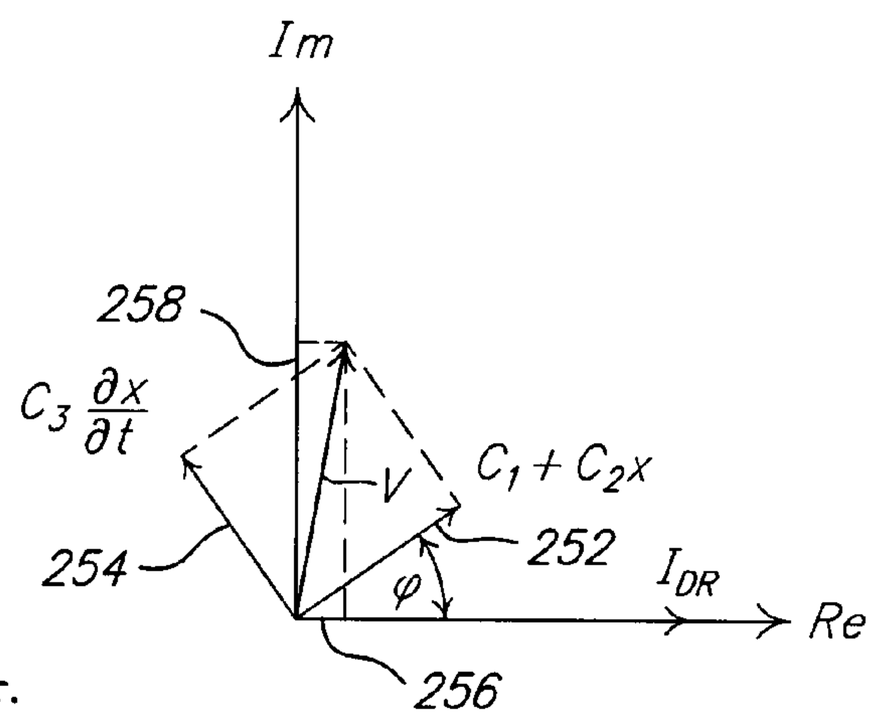

FIG. 34.

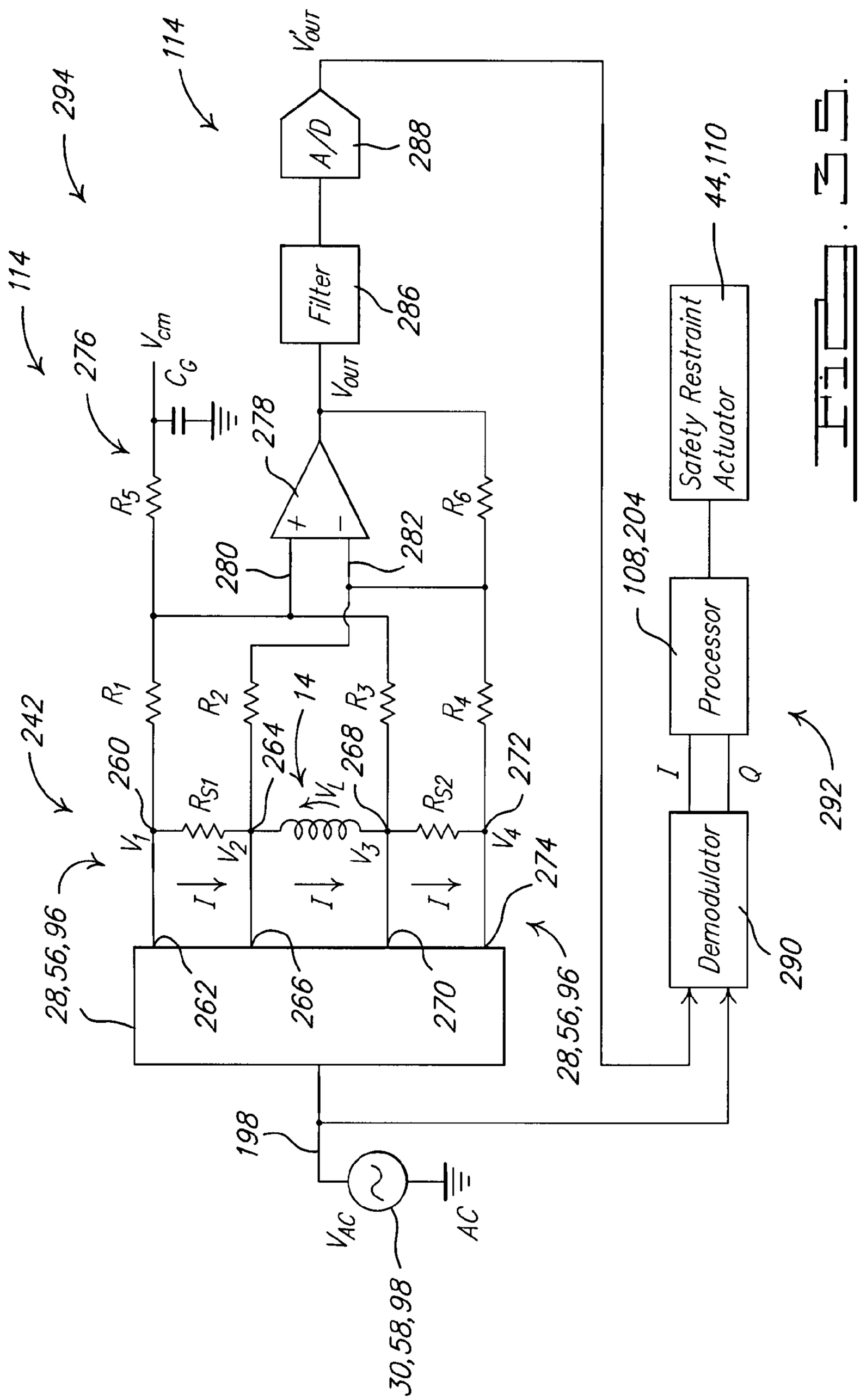
114
294
114
276
242
28,56,96
198
30,58,98
V_{AC}
AC
R_5
R_1
R_2
R_3
R_4
R_6
R_{S1}
R_{S2}
C_G
V_{cm}
V_{OUT}
V_{OUT}'
V_1
V_2
V_3
V_4
V_L
I
260
262
264
266
268
270
272
274
278
280
282
14
A/D
288
Filter
286
Demodulator
290
Processor
108,204
Safety Restraint Actuator
44,110
I
Q
292

FIG. 5

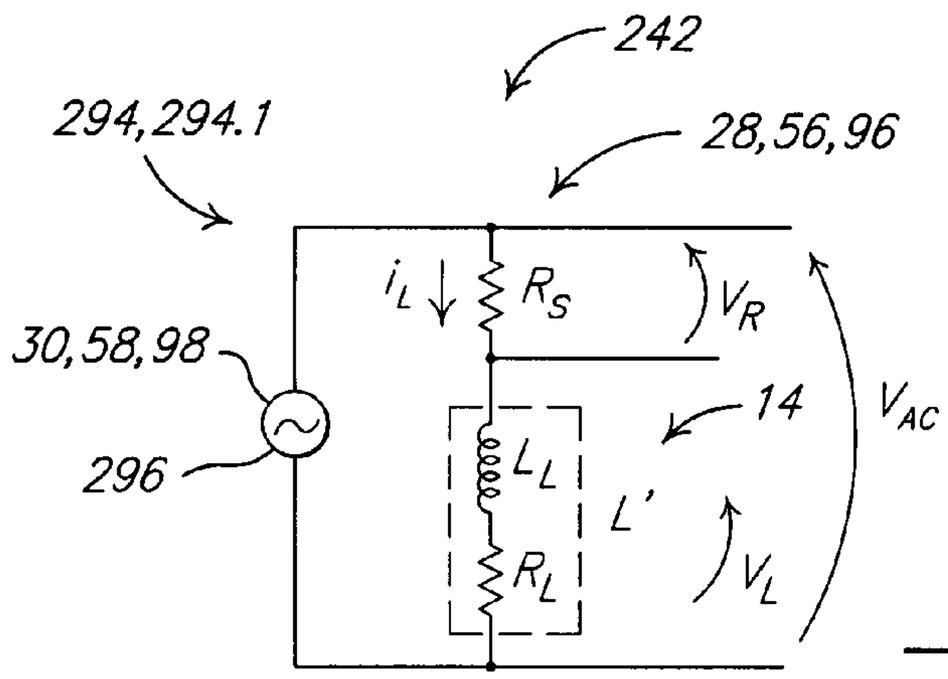

FIG. 36.

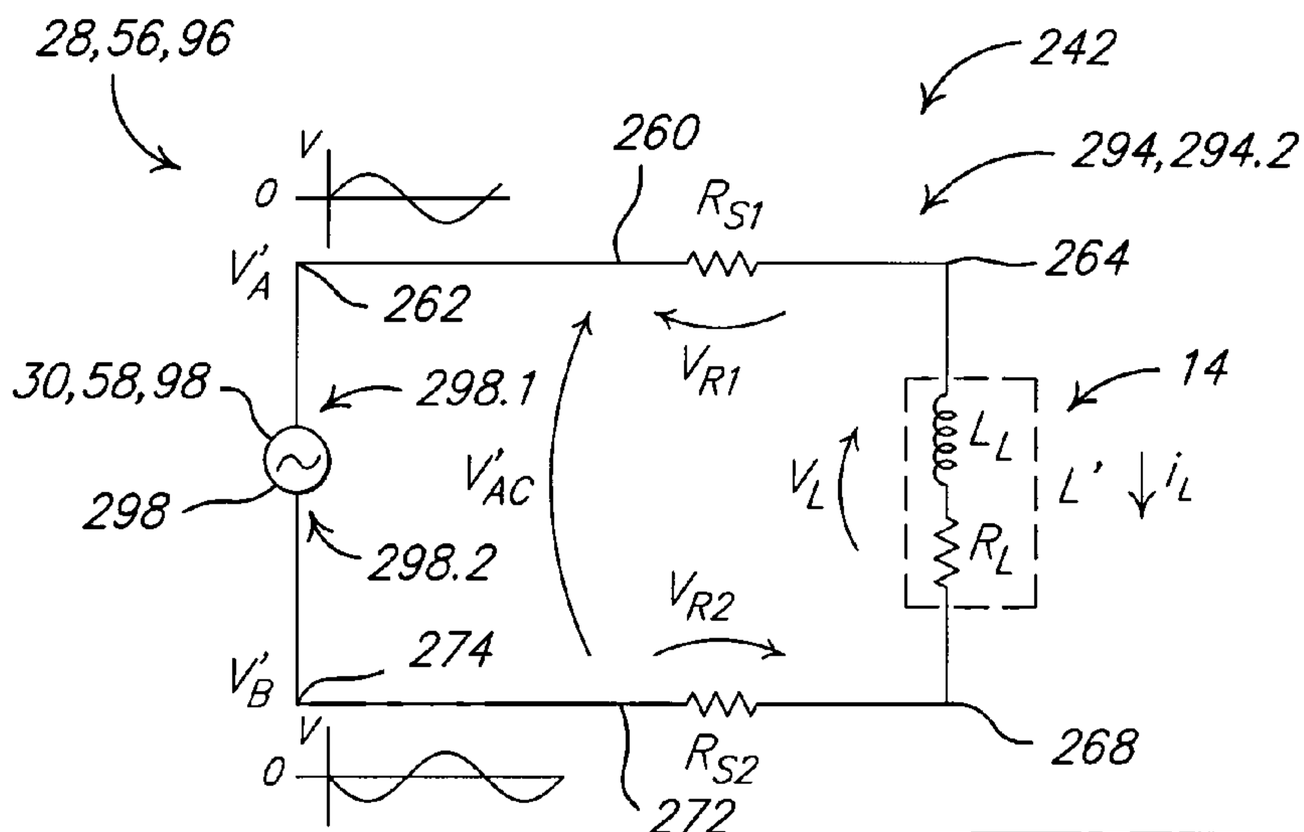

FIG. 37.

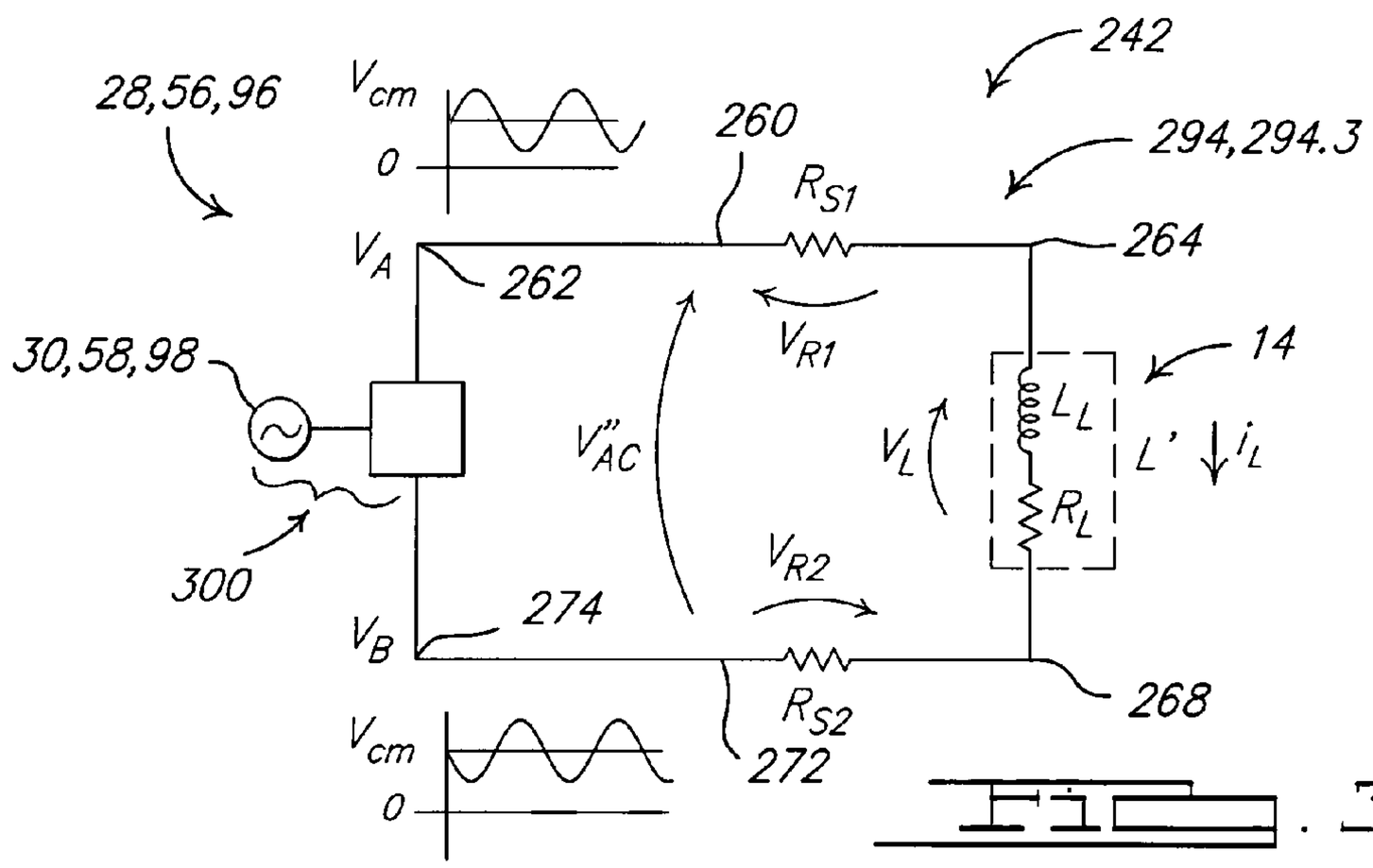

FIG. 38.

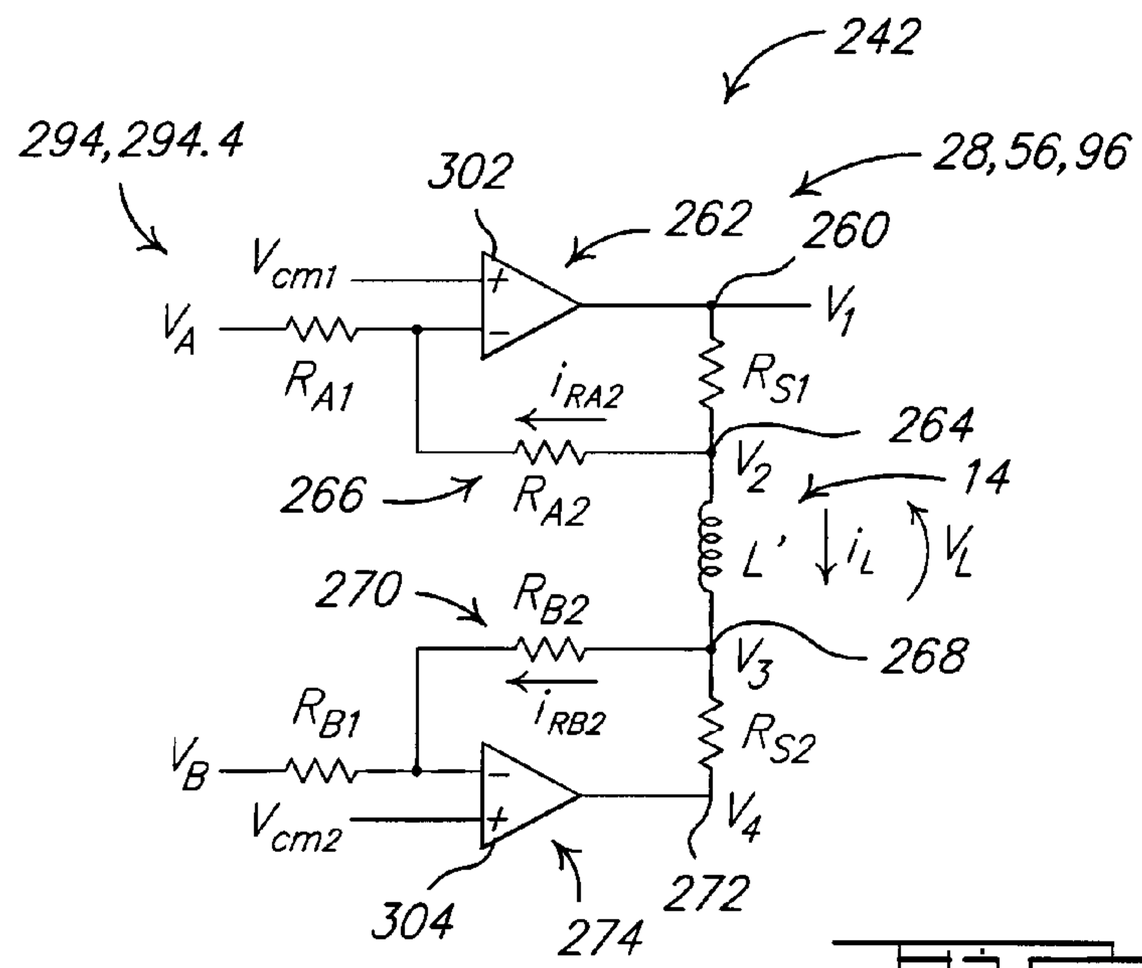
242
294,294.4
302
28,56,96
262
260
V_{cm1}
V_A
R_{A1}
V_1
R_{S1}
i_{RA2}
264
V_2
14
266
R_{A2}
L'
i_L
V_L
270
R_{B2}
V_3
268
i_{RB2}
R_{B1}
R_{S2}
V_B
V_{cm2}
V_4
304
274
272

FIG. 39.

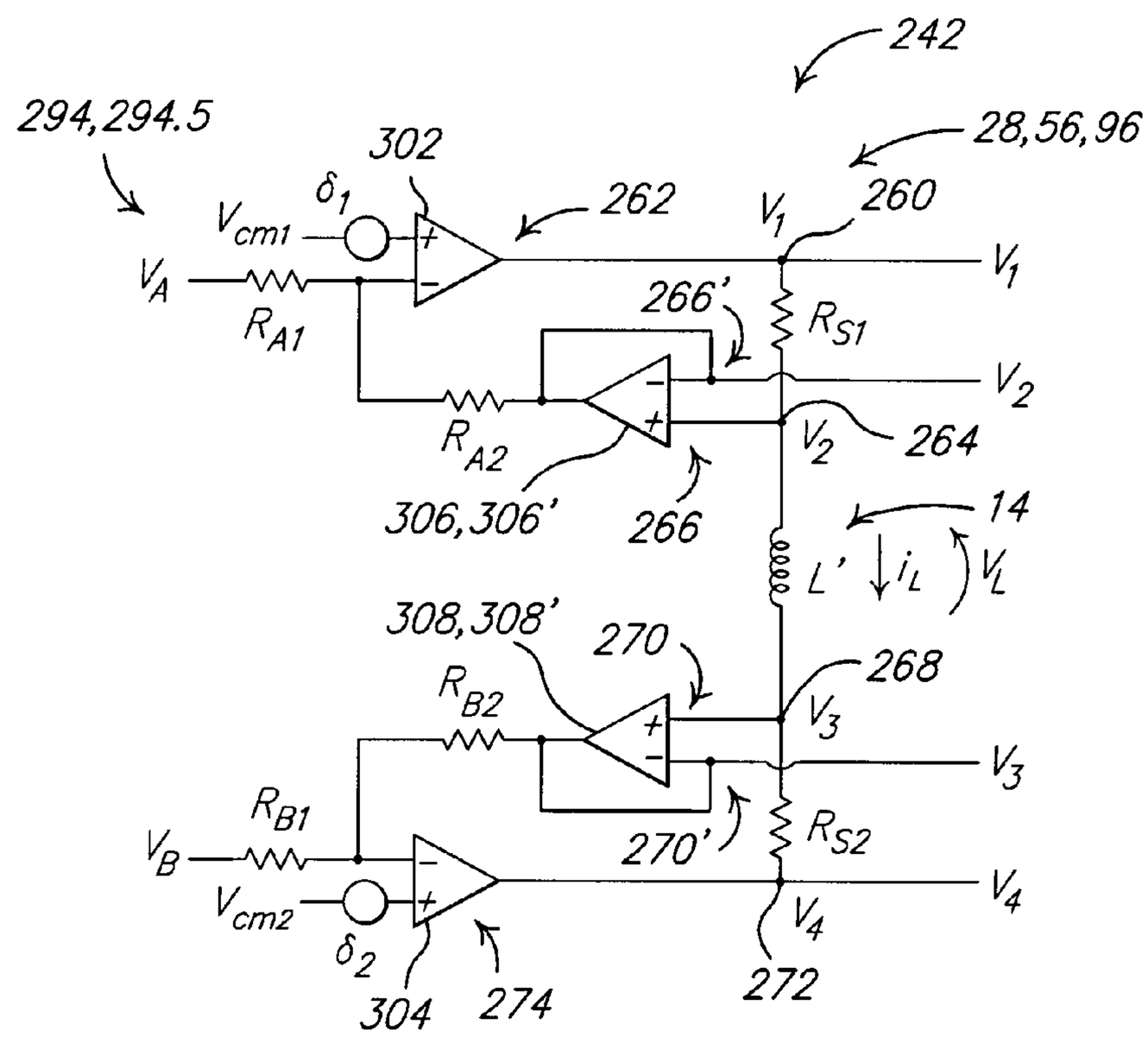
242
294,294.5
302
28,56,96
δ_1
262
V_1
260
V_{cm1}
V_A
R_{A1}
V_1
266'
R_{S1}
V_2
R_{A2}
V_2
264
306,306'
266
14
L'
i_L
V_L
308,308'
270
268
R_{B2}
V_3
V_3
R_{B1}
270'
R_{S2}
V_B
V_{cm2}
V_4
V_4
δ_2
304
274
272

FIG. 40.

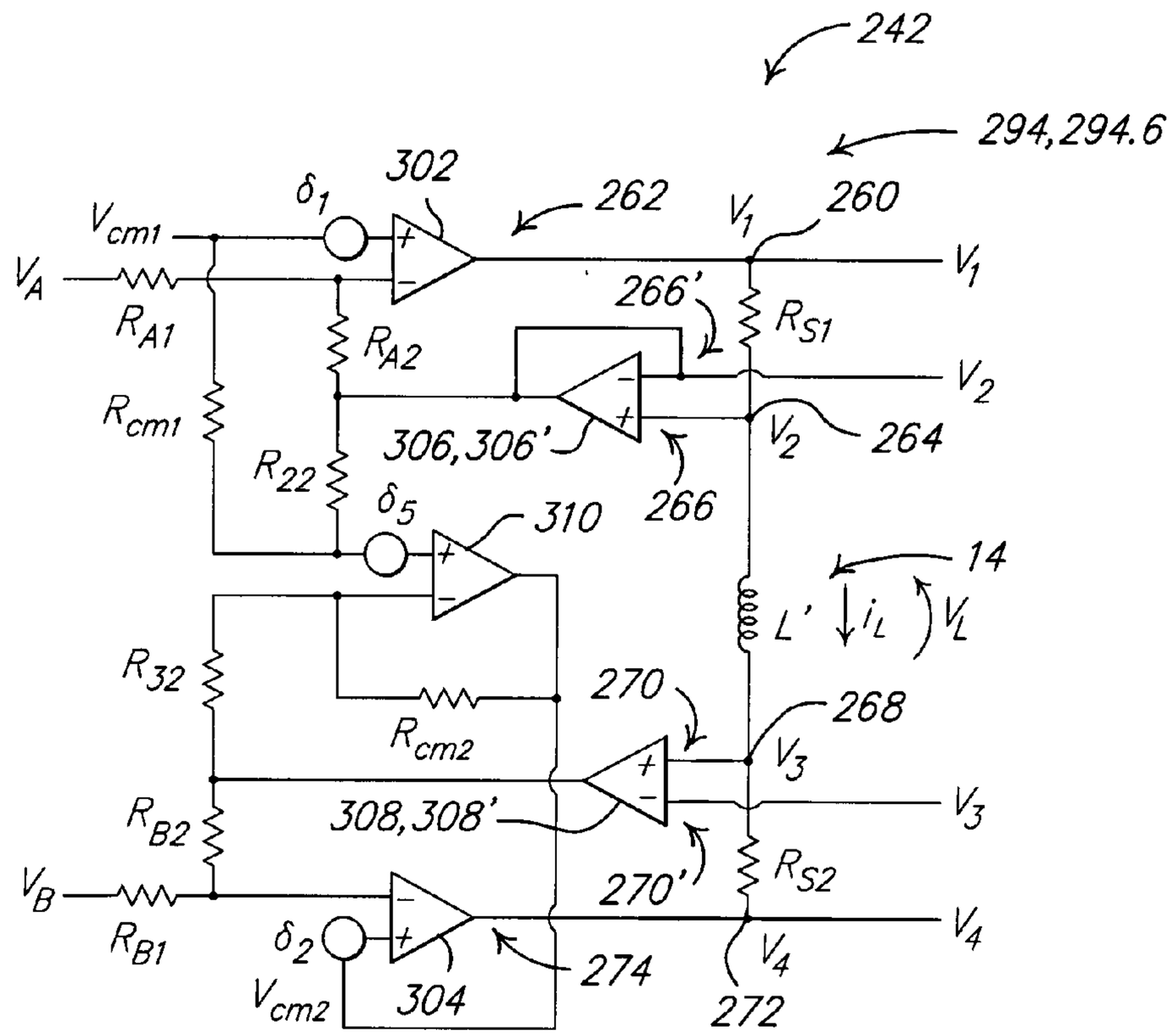
242
294,294.6
302
262
260
V_{cm1}
δ_1
V_1
V_A
R_{A1}
R_{A2}
266'
R_{S1}
V_2
R_{cm1}
306,306'
264
R_{22}
δ_5
310
266
14
L'
i_L
V_L
R_{32}
270
268
R_{cm2}
V_3
R_{B2}
308,308'
R_{S2}
V_B
270'
V_4
R_{B1}
δ_2
274
V_{cm2}
304
272

FIG. 41.

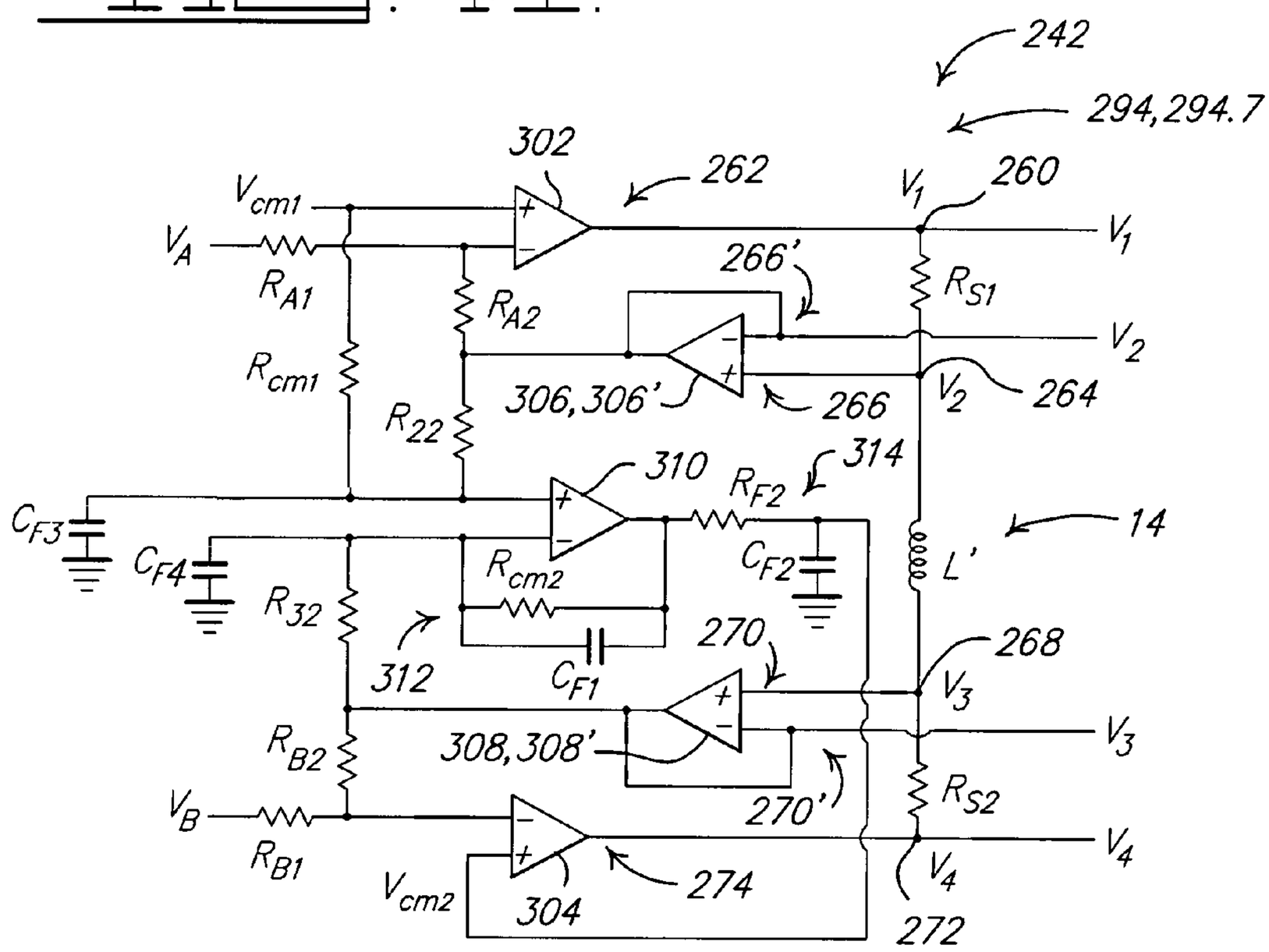
242
294,294.7
302
262
260
V_{cm1}
V_1
V_A
R_{A1}
266'
R_{S1}
R_{A2}
V_2
R_{cm1}
306,306'
266
264
R_{22}
310
314
R_{F2}
C_{F3}
14
C_{F4}
R_{cm2}
C_{F2}
L'
R_{32}
270
268
312
C_{F1}
V_3
R_{B2}
308,308'
R_{S2}
V_B
270'
V_4
R_{B1}
V_{cm2}
304
274
272

FIG. 42.

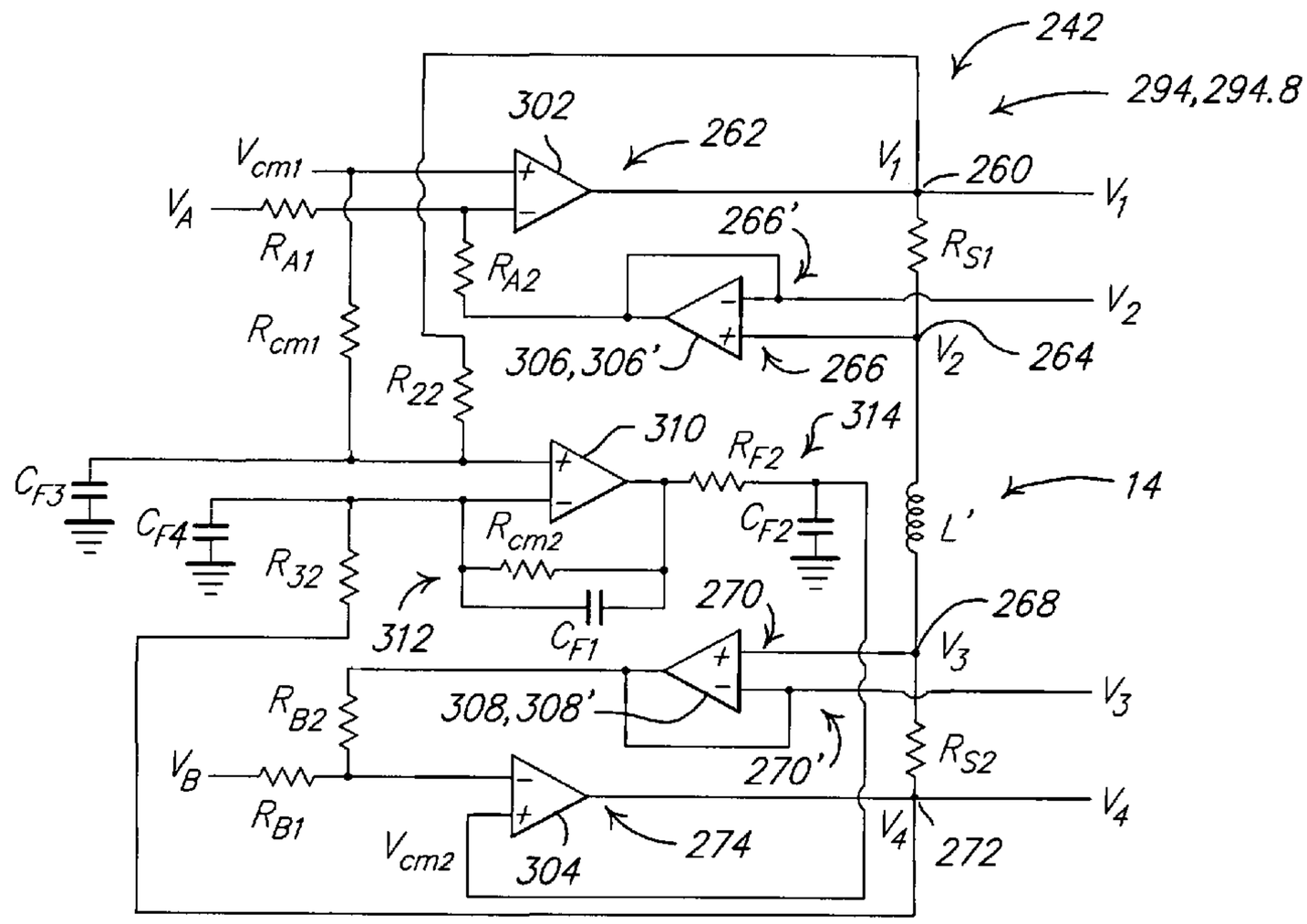
242
294,294.8
302
262
V_{cm1}
V_A
R_{A1}
V_1
260
V_1
266'
R_{S1}
R_{A2}
V_2
R_{cm1}
306,306'
266
V_2
264
R_{22}
310
314
R_{F2}
C_{F3}
C_{F4}
R_{cm2}
C_{F2}
14
L'
R_{32}
312
C_{F1}
270
268
V_3
R_{B2}
308,308'
V_3
V_B
270'
R_{S2}
R_{B1}
V_4
V_{cm2}
304
274
V_4
272

FIG. 43.

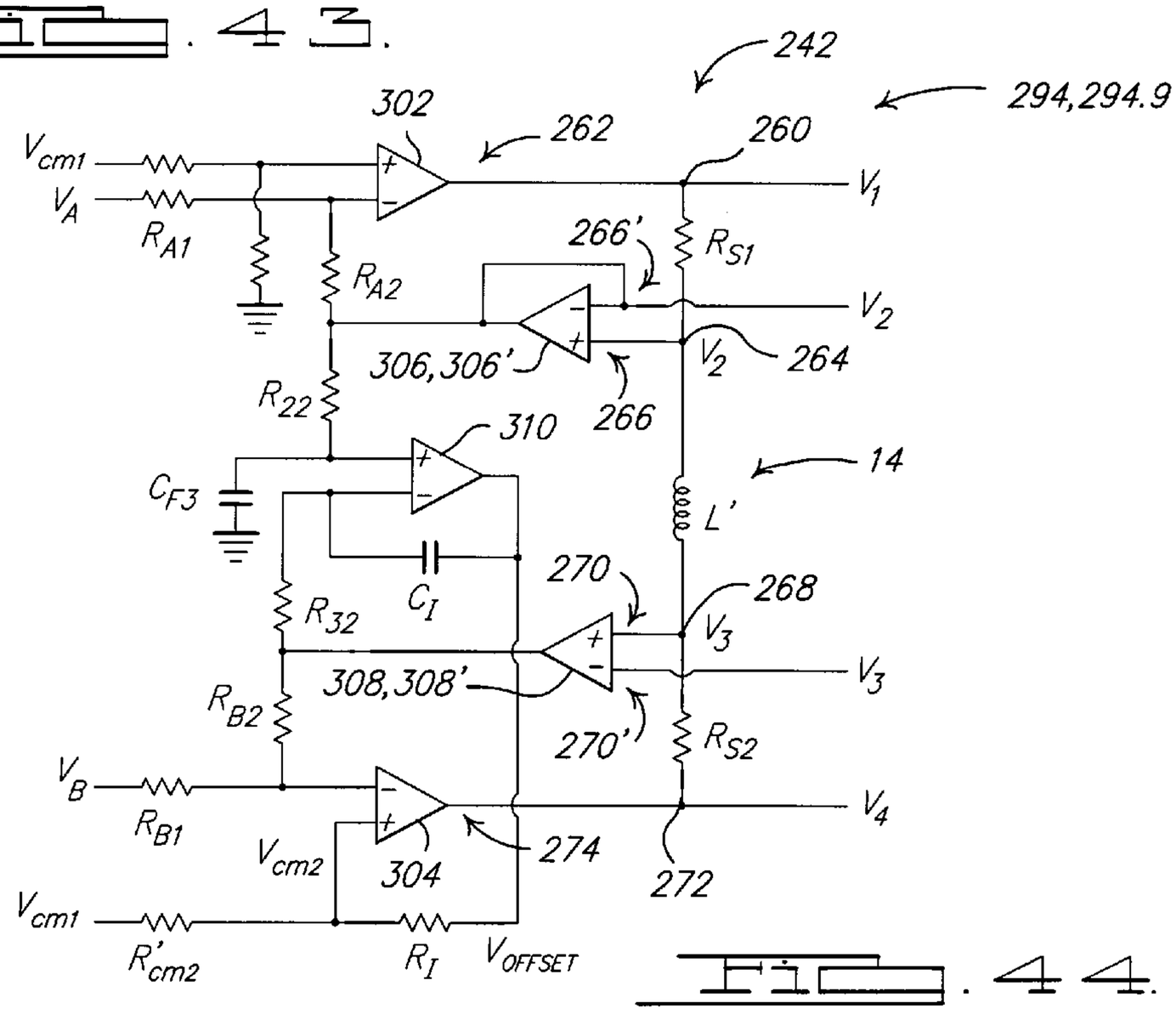
242
294,294.9
302
262
260
V_{cm1}
V_A
V_1
R_{A1}
266'
R_{S1}
R_{A2}
V_2
306,306'
V_2
264
266
R_{22}
310
14
C_{F3}
L'
270
268
R_{32}
C_I
V_3
308,308'
V_3
R_{B2}
270'
R_{S2}
V_B
V_4
R_{B1}
V_{cm2}
304
274
272
V_{cm1}
R'_{cm2}
R_I
V_{OFFSET}

FIG. 44.

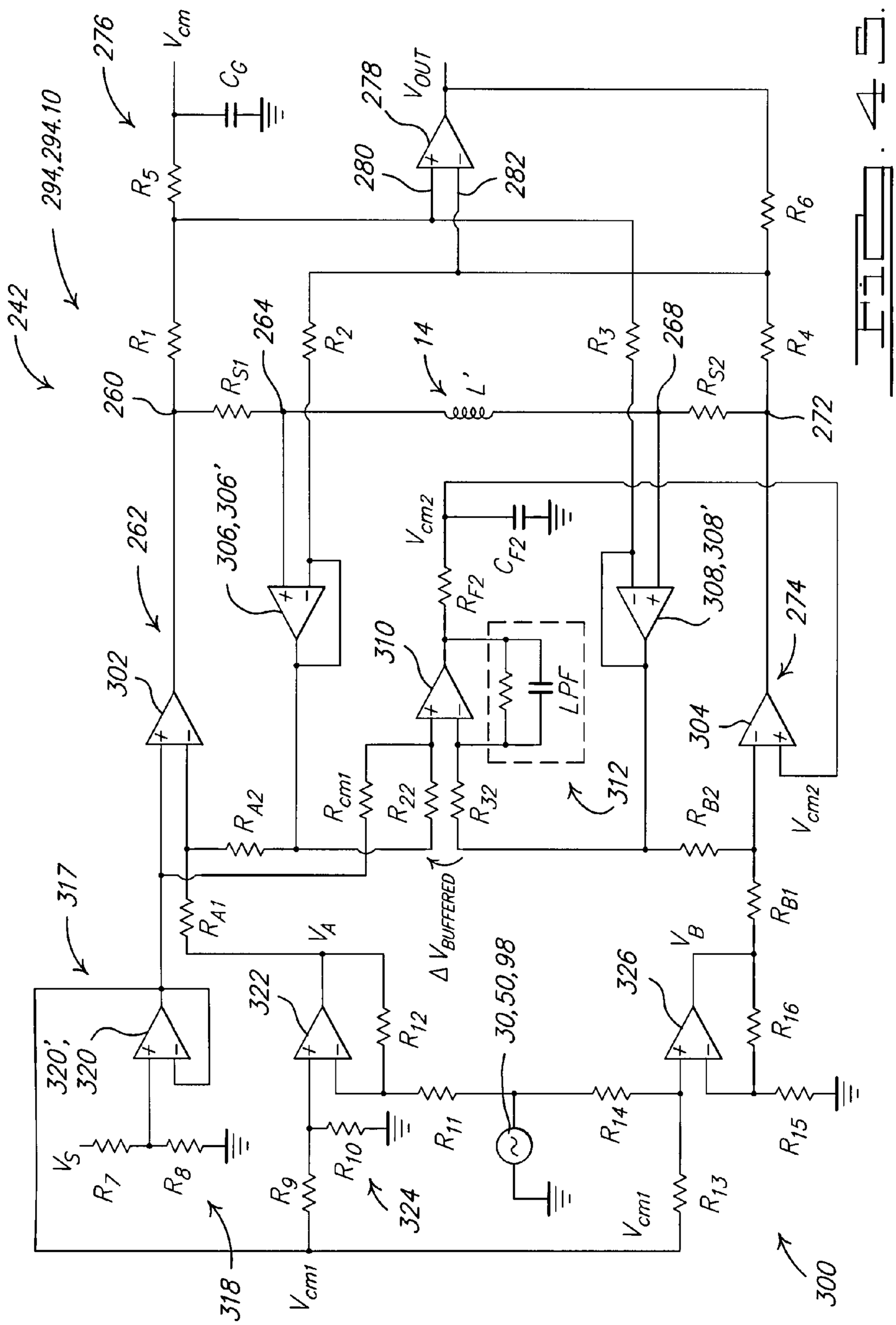
276
V_{cm}
C_G
278
V_{OUT}
280
282
294,294.10
242
R_5
R_6
R_1
R_{S1}
264
R_2
14
L'
R_3
268
R_4
R_{S2}
260
272
262
306,306'
V_{cm2}
C_{F2}
R_{F2}
308,308'
274
302
310
LPF
304
312
R_{A2}
R_{cm1}
R_{22}
R_{32}
R_{B2}
V_{cm2}
317
R_{A1}
V_A
$\Delta V_{BUFFERED}$
V_B
R_{B1}
322
R_{12}
30,50,98
326
R_{16}
320',
320
V_S
R_7
R_8
R_9
R_{10}
R_{11}
R_{14}
R_{13}
R_{15}
324
V_{cm1}
318
300

FIG. 4

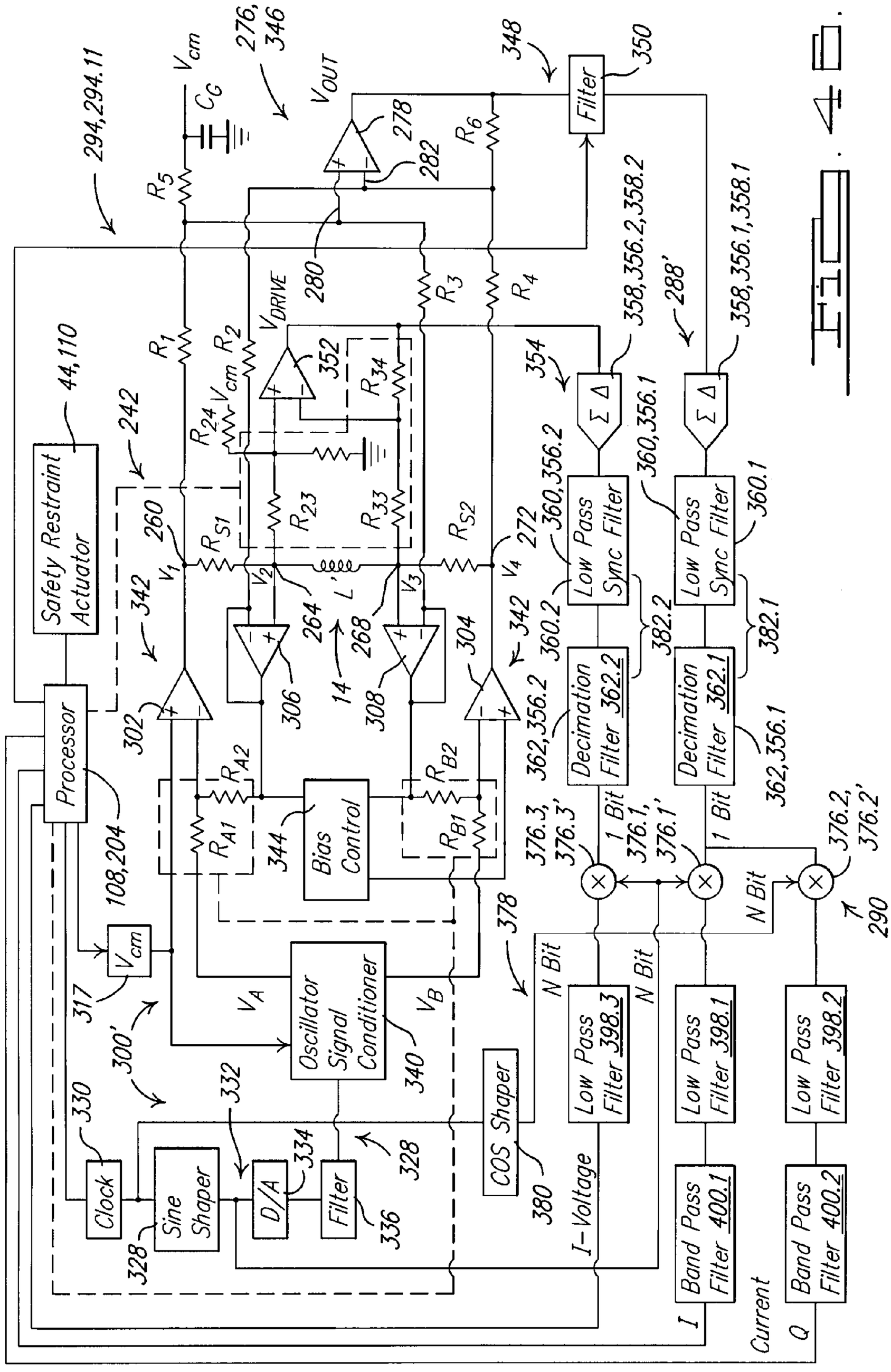
Safety Restraint Actuator
44,110
Processor
108,204
294,294.11
242
342
260
V_1
R_1
R_{S1}
R_5
V_{cm}
C_G
276, 346
V_{OUT}
278
282
280
R_6
348
Filter
350
V_{DRIVE}
R_2
R_{24}
V_{cm}
352
R_{34}
R_3
R_4
R_{23}
R_{33}
R_{S2}
V_2
264
L'
268
V_3
V_4
272
302
306
14
308
304
R_{A2}
R_{A1}
344
Bias Control
R_{B2}
R_{B1}
378
V_{cm}
317
300'
V_A
Oscillator Signal Conditioner
V_B
340
330
332
Clock
Sine Shaper
328
D/A
334
Filter
336
328
COS Shaper
380
354
Σ Δ
358,356.2,358.2
288'
358,356.1,358.1
Low Pass Sync Filter
360,356.2
360.2
360,356.1
360.1
382.2
382.1
Decimation Filter 362.2
362,356.2
Decimation Filter 362.1
362,356.1
1 Bit
376.3, 376.3'
376.1, 376.1'
376.2, 376.2'
N Bit
290
Low Pass Filter 398.3
Low Pass Filter 398.1
Low Pass Filter 398.2
I-Voltage
Band Pass Filter 400.1
Band Pass Filter 400.2
I
Current
Q

Fig. 4

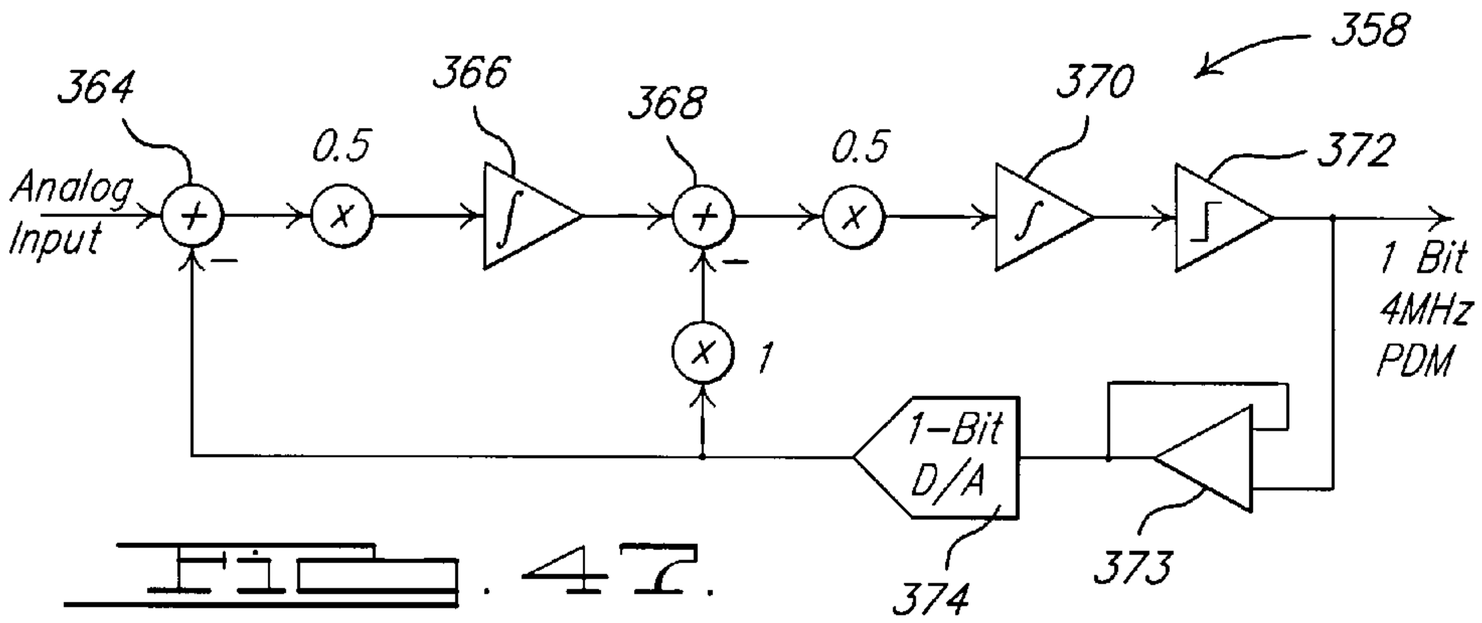

FIG. 47.

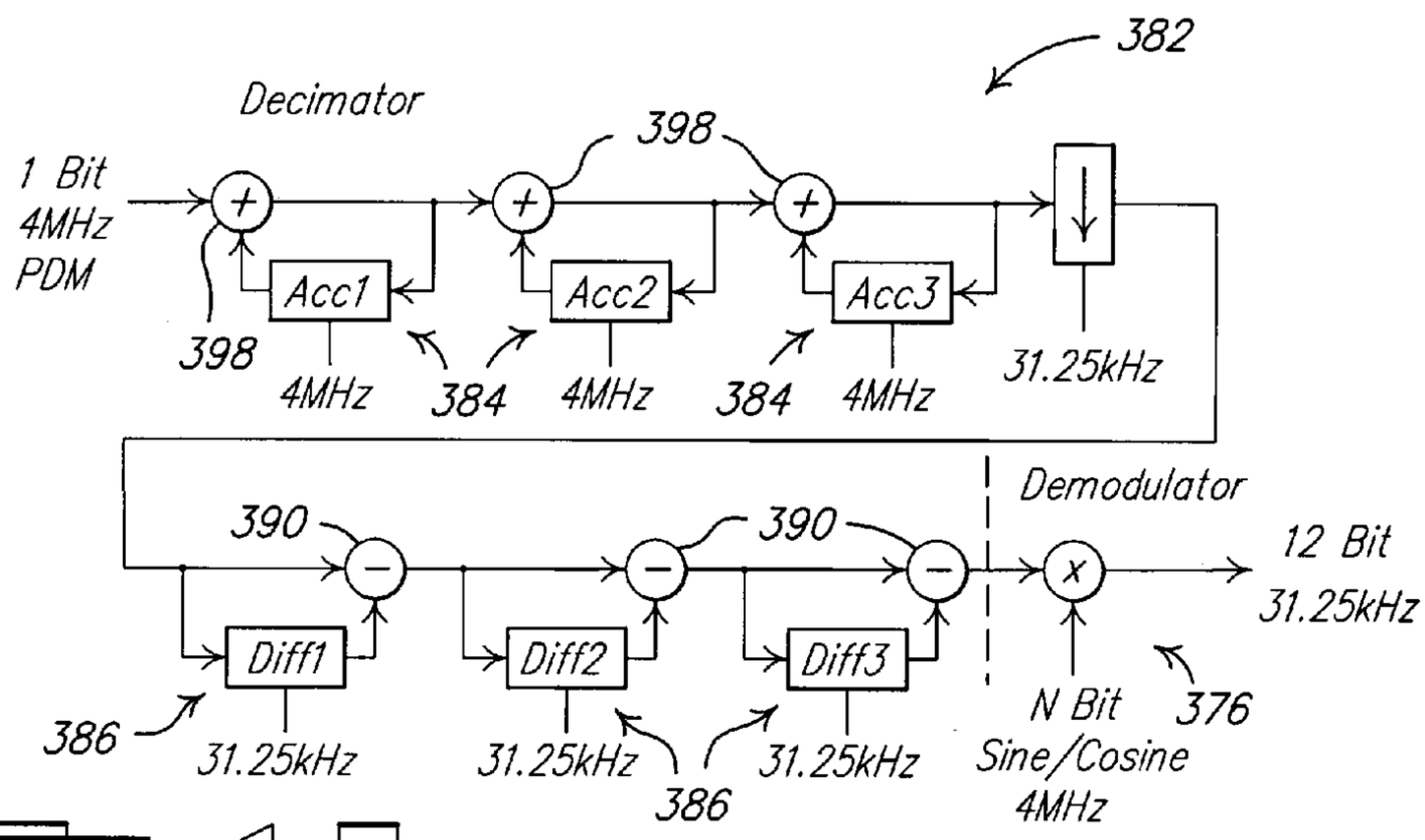

FIG. 48.

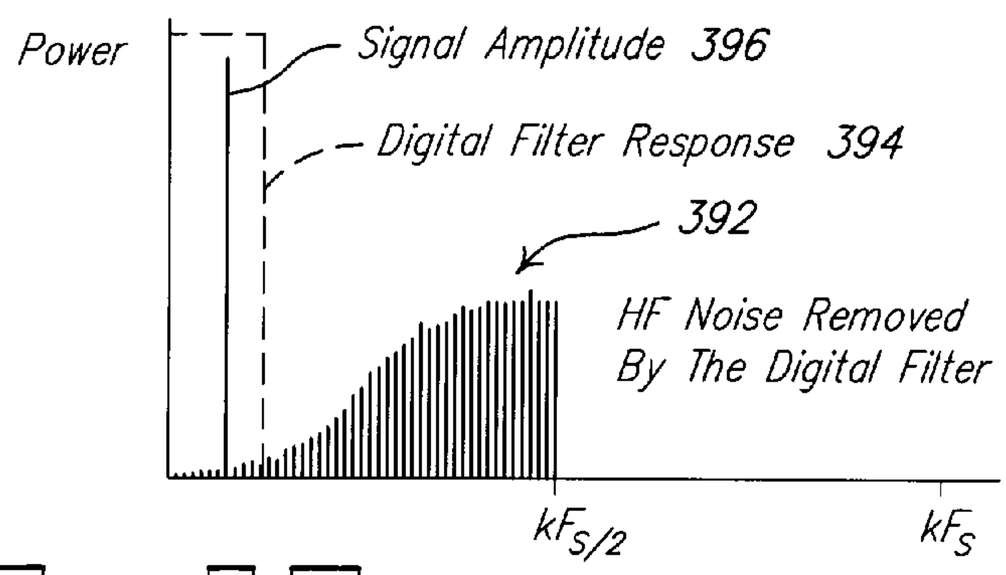

FIG. 50.

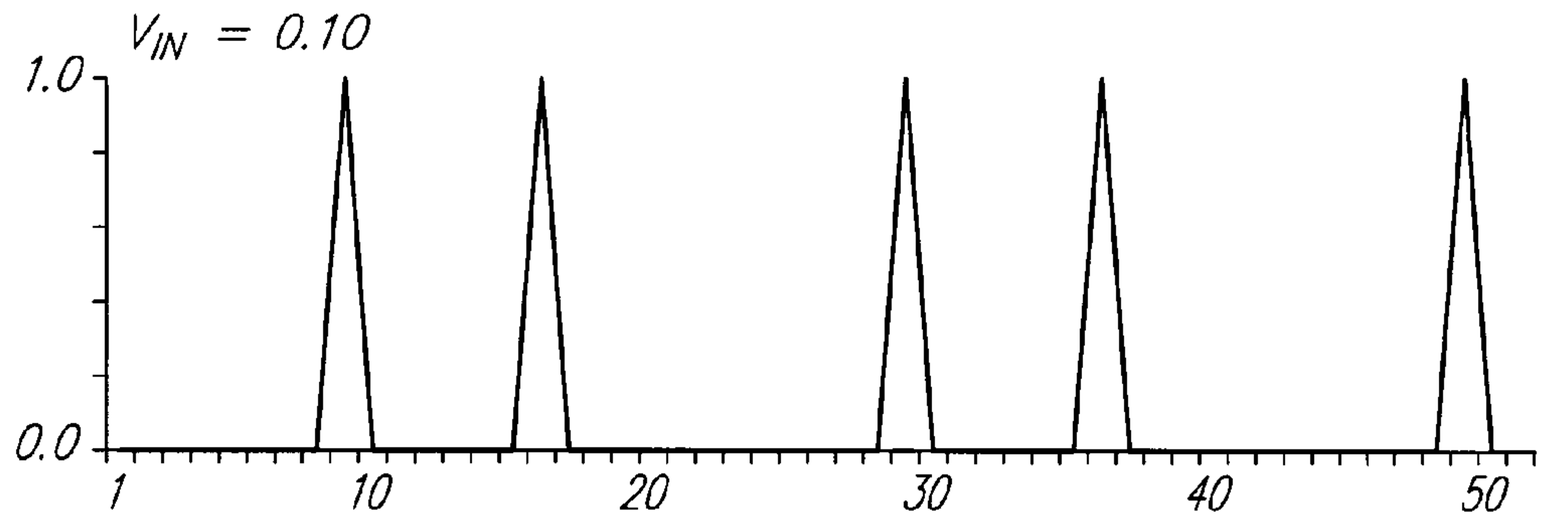

FIG. 48a.

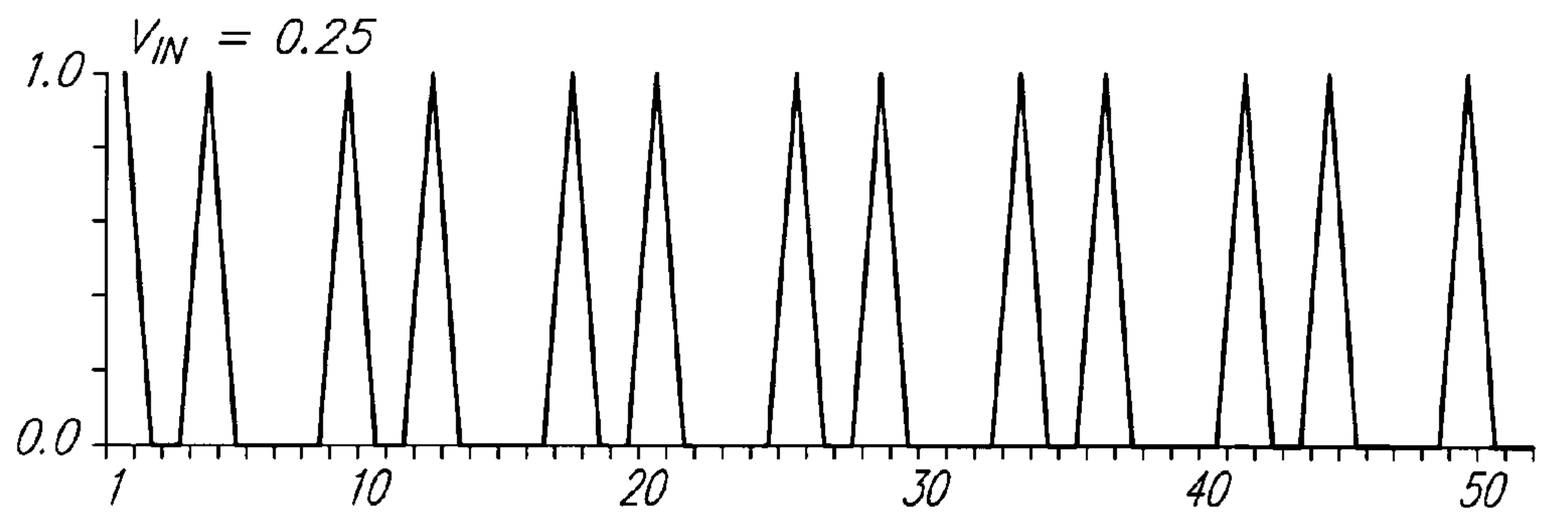

FIG. 48b.

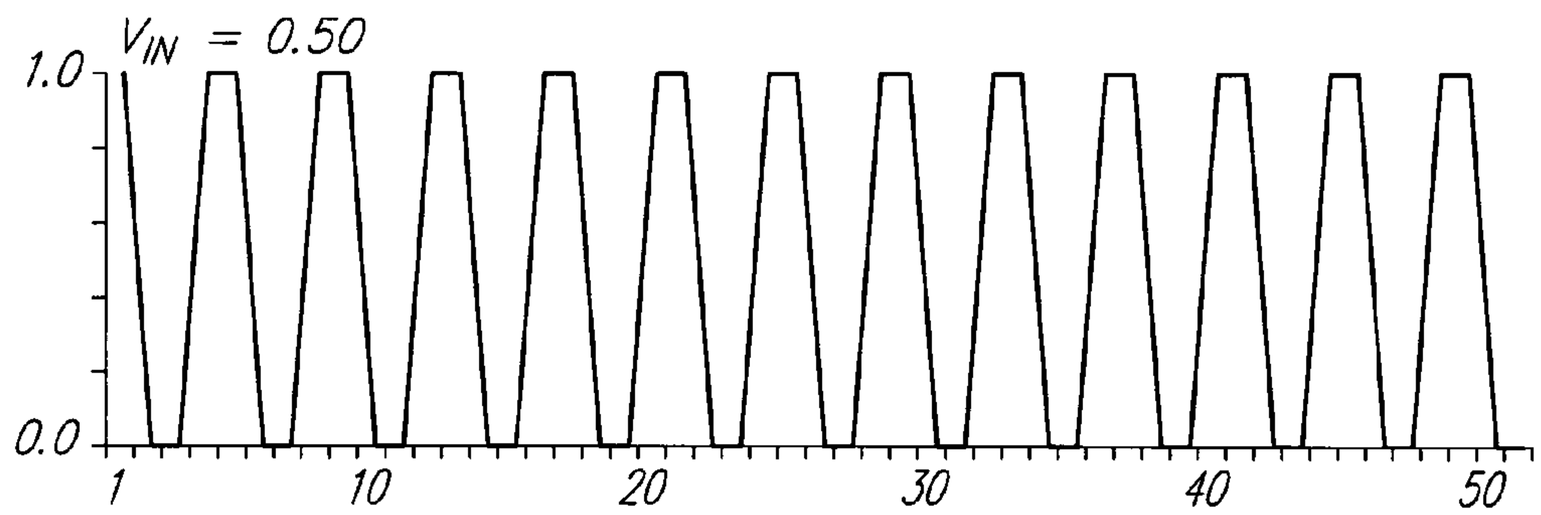

FIG. 48c.

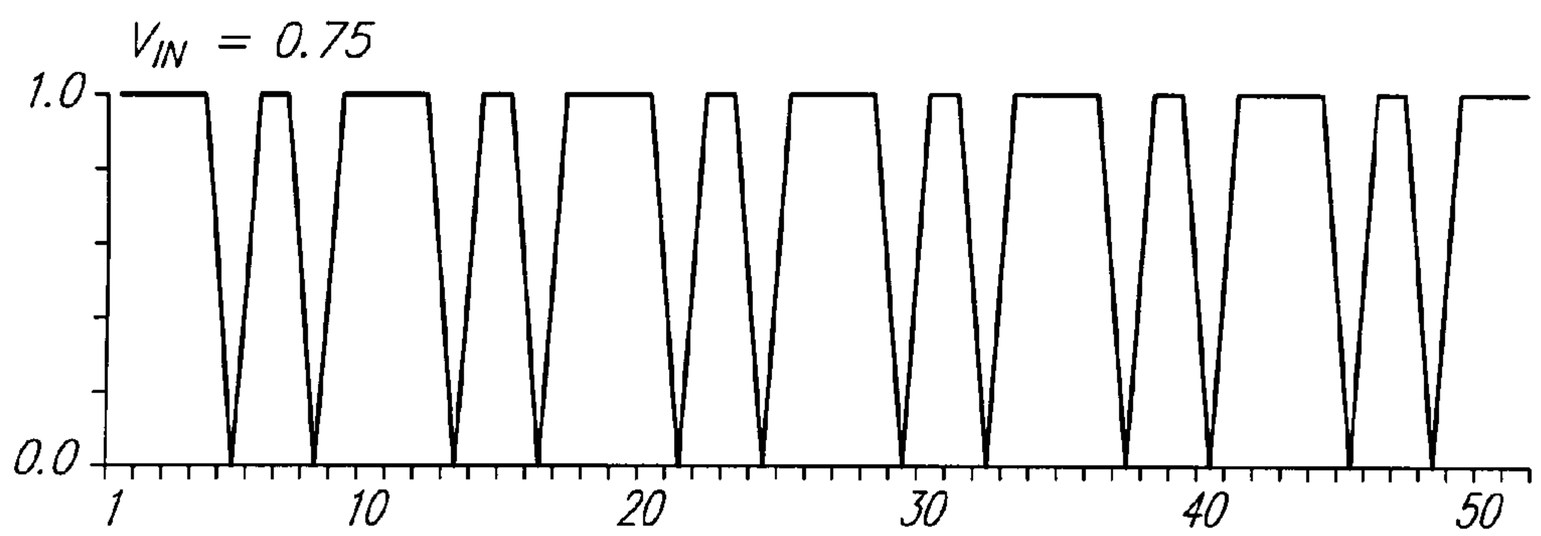

FIG. 48d.

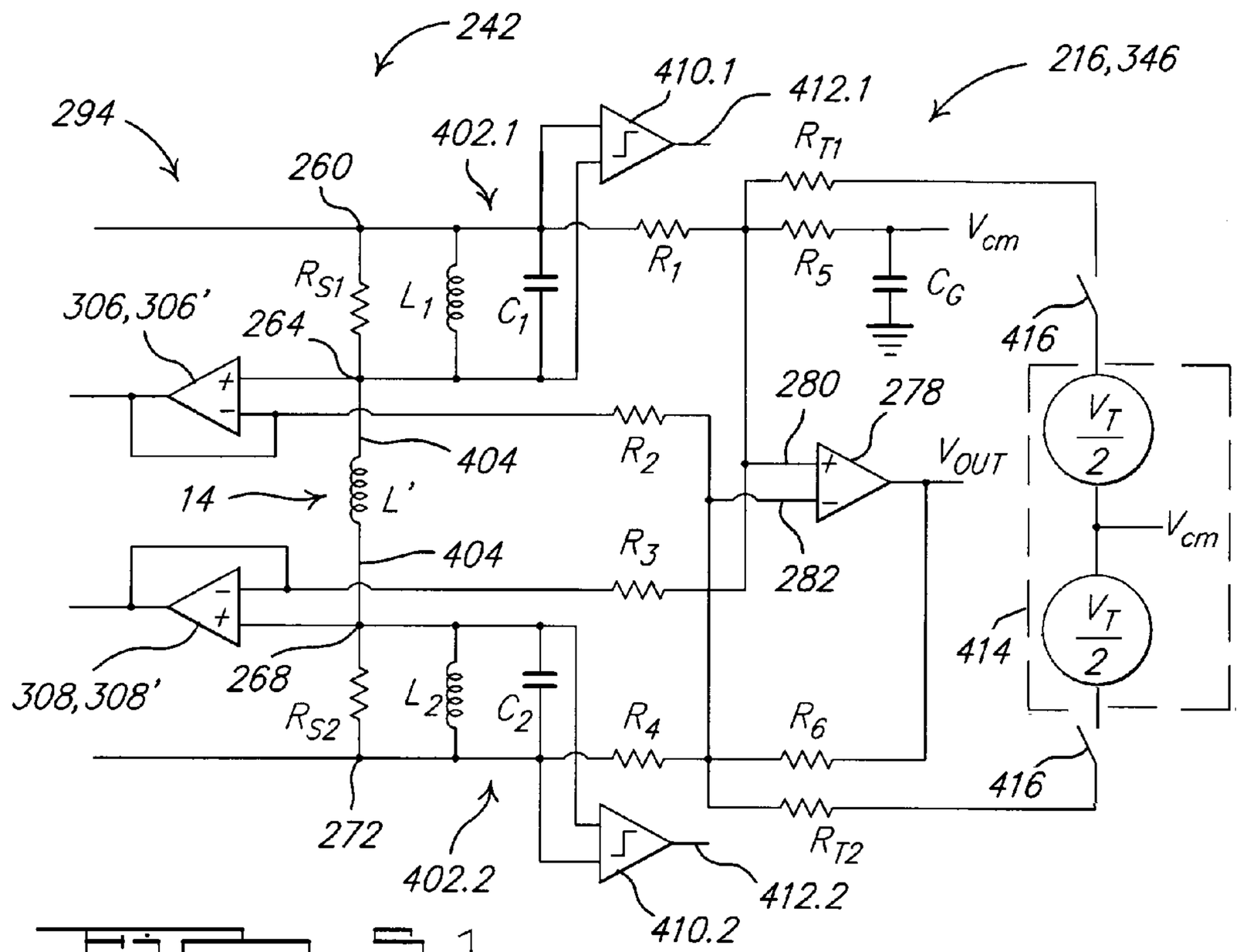

FIG. 51.

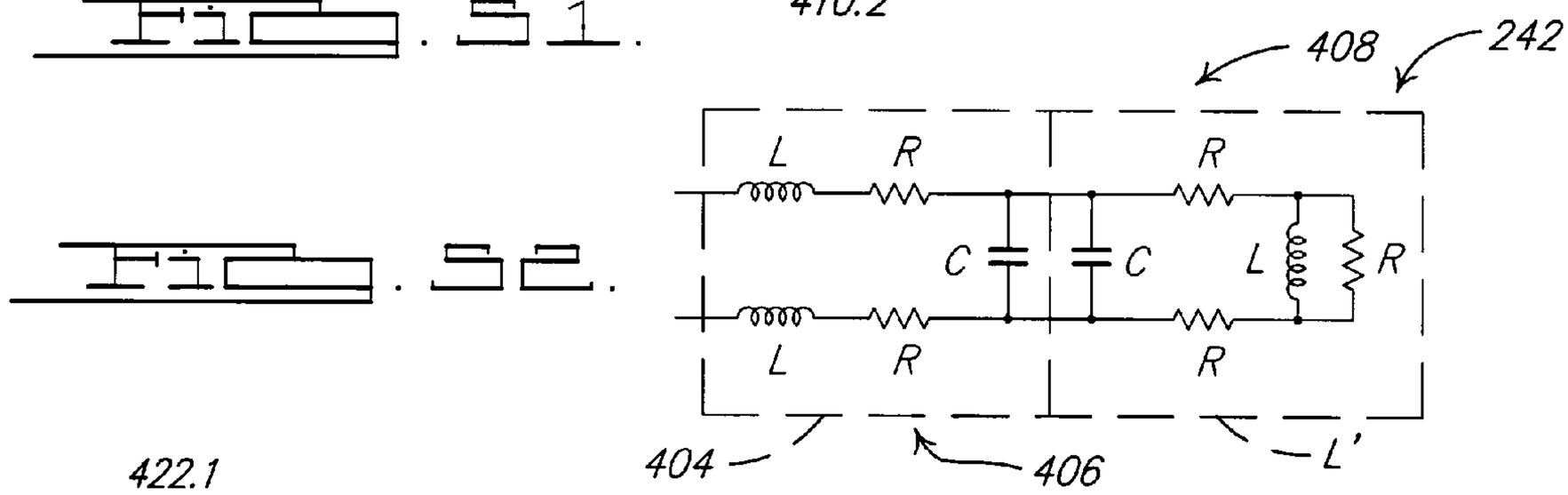

FIG. 52.

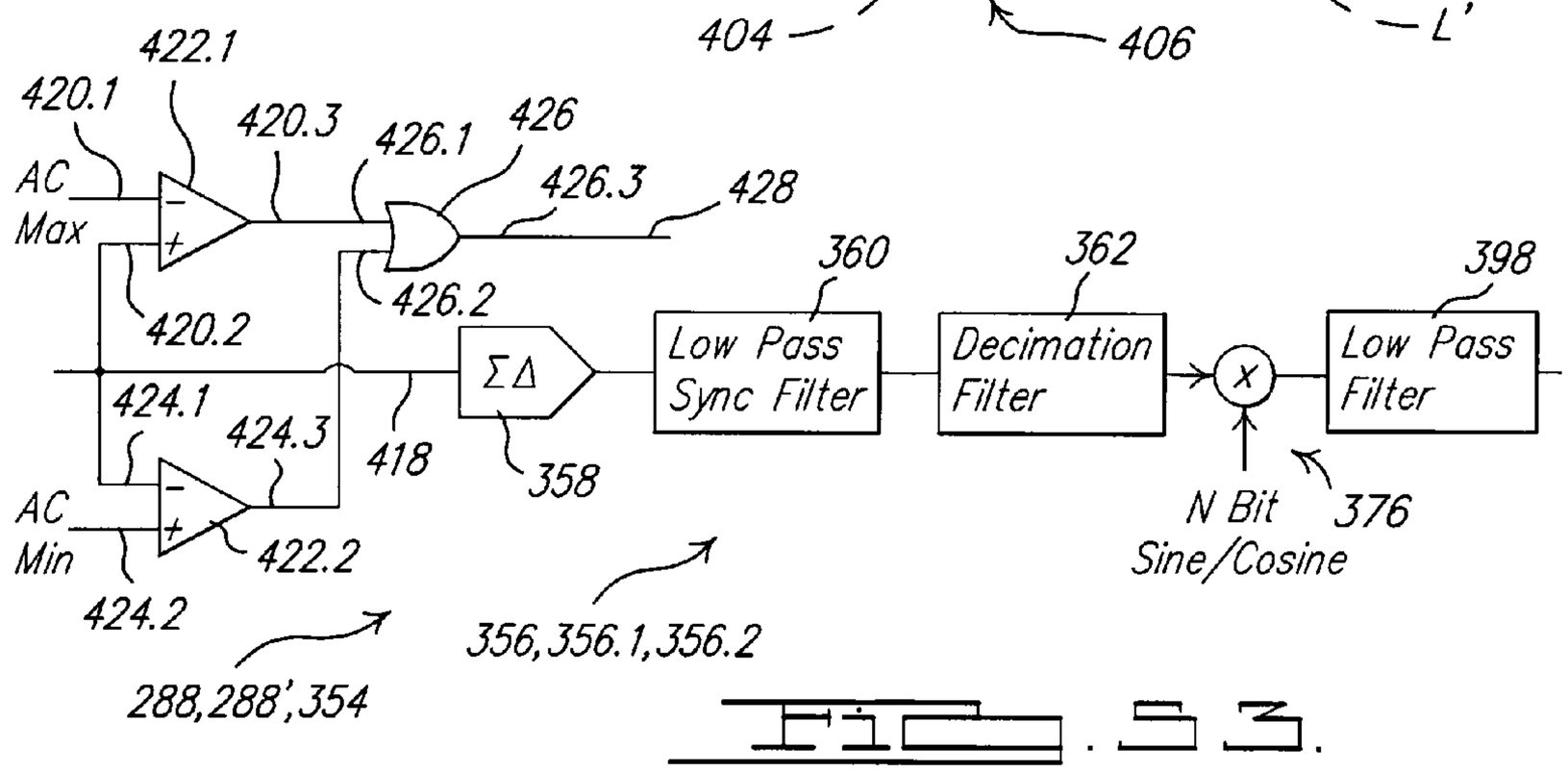

FIG. 53.

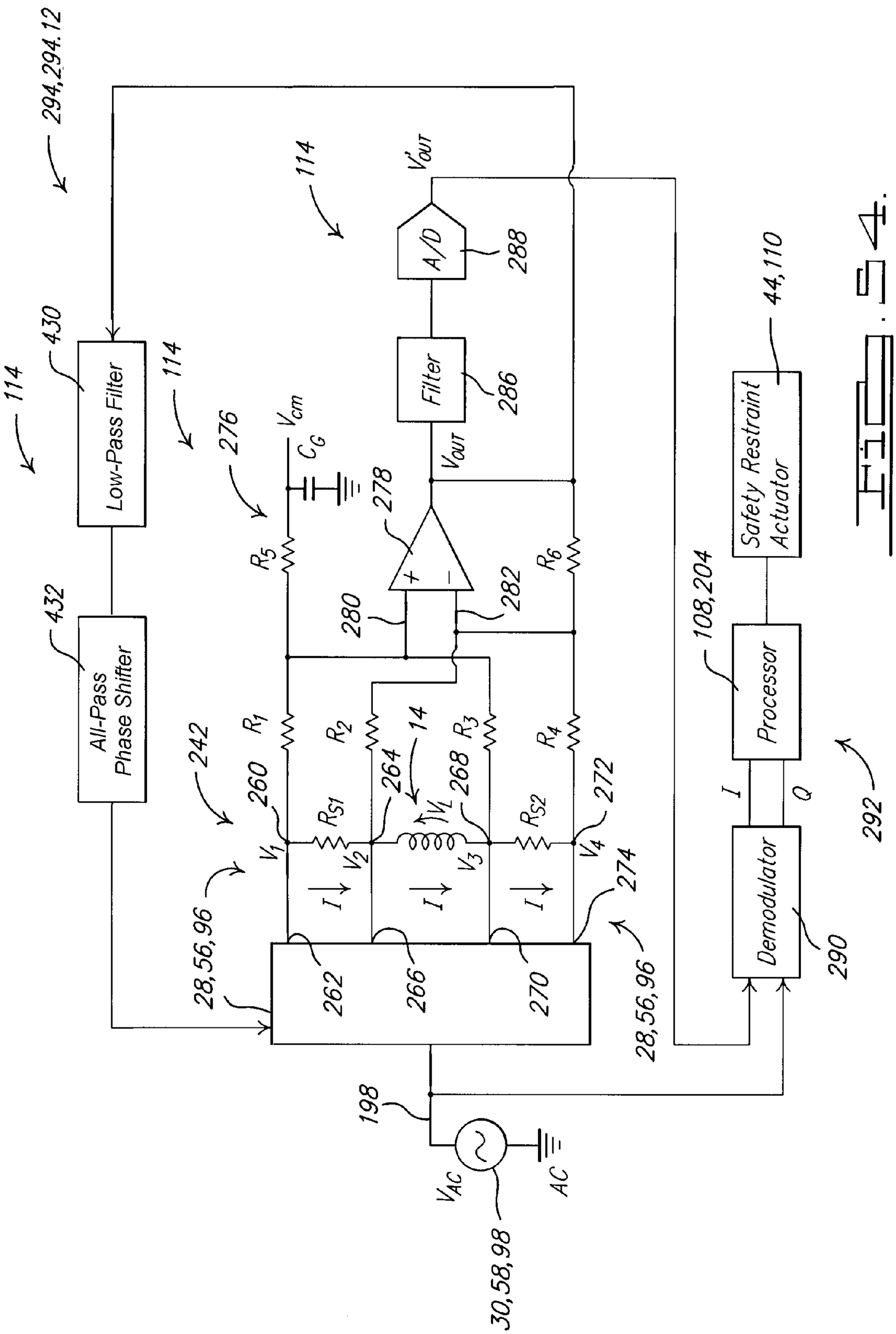
294,294.12
114
430
Low-Pass Filter
114
432
All-Pass Phase Shifter
114
276
V_{cm}
C_G
278
R_5
R_6
280
282
V_{OUT}
Filter
286
V'_{OUT}
A/D
288
242
R_1
R_2
R_3
R_4
260
264
14
268
272
R_{S1}
R_{S2}
V_L
V_1
V_2
V_3
V_4
I
274
28,56,96
262
266
270
198
V_{AC}
AC
30,58,98
108,204
Processor
Safety Restraint Actuator
44,110
I
Q
Demodulator
290
292

FIG. 54.

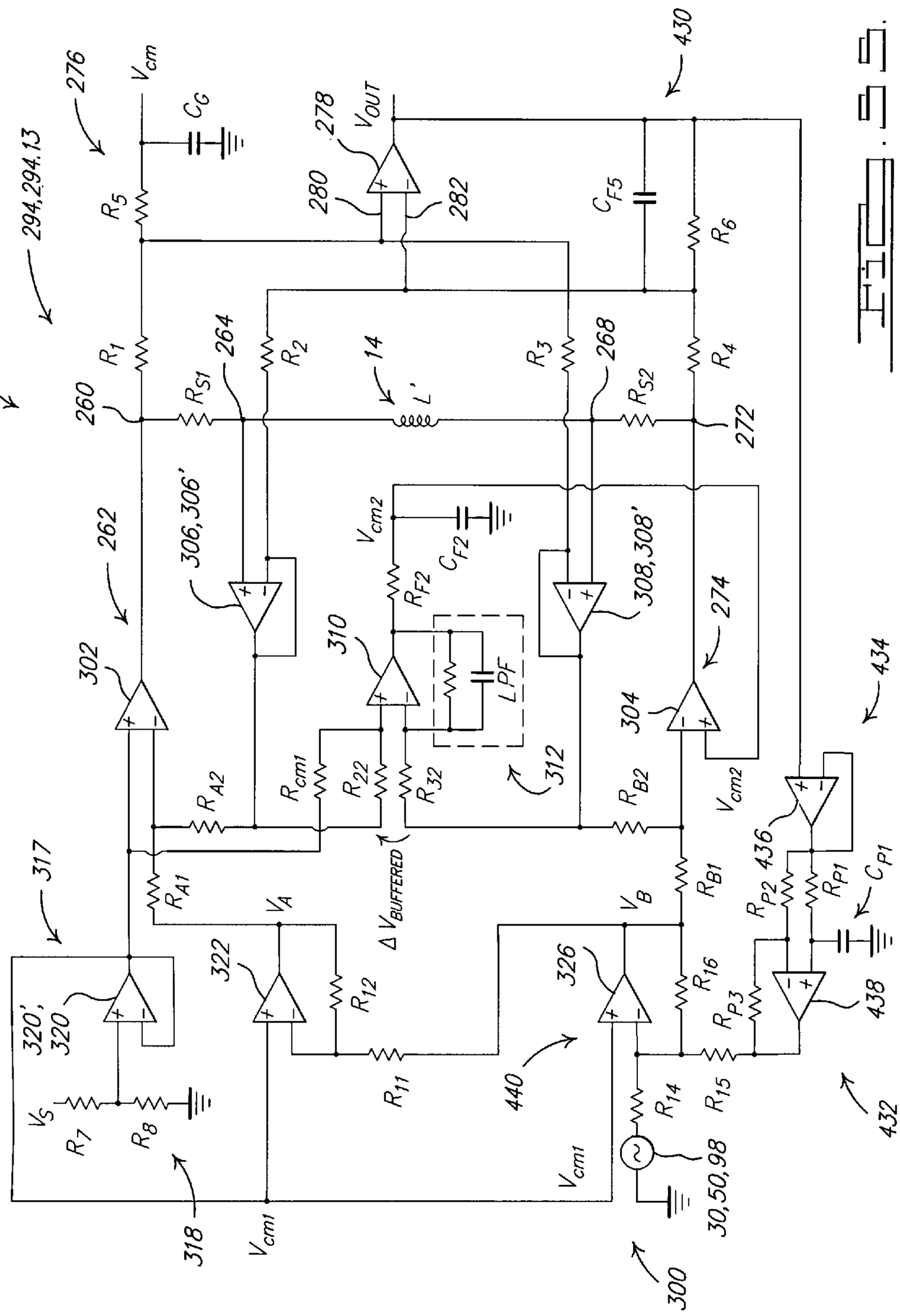
242
294,294,13
276
V_{cm}
C_G
R_5
278
V_{OUT}
280
282
430
C_{F5}
R_6
R_1
260
R_{S1}
264
R_2
14
L'
R_3
268
R_{S2}
R_4
272
262
306,306'
V_{cm2}
C_{F2}
R_{F2}
308,308'
274
302
310
LPF
304
434
R_{A2}
R_{cm1}
R_{22}
R_{32}
312
R_{B2}
V_{cm2}
436
317
R_{A1}
V_A
$\Delta V_{BUFFERED}$
V_B
R_{B1}
R_{P2}
R_{P1}
C_{P1}
322
R_{12}
326
R_{16}
R_{P3}
438
320',
320
R_{11}
440
R_{14}
R_{15}
432
V_S
R_7
R_8
V_{cm1}
30,50,98
318
V_{cm1}
300

Fig. 5.

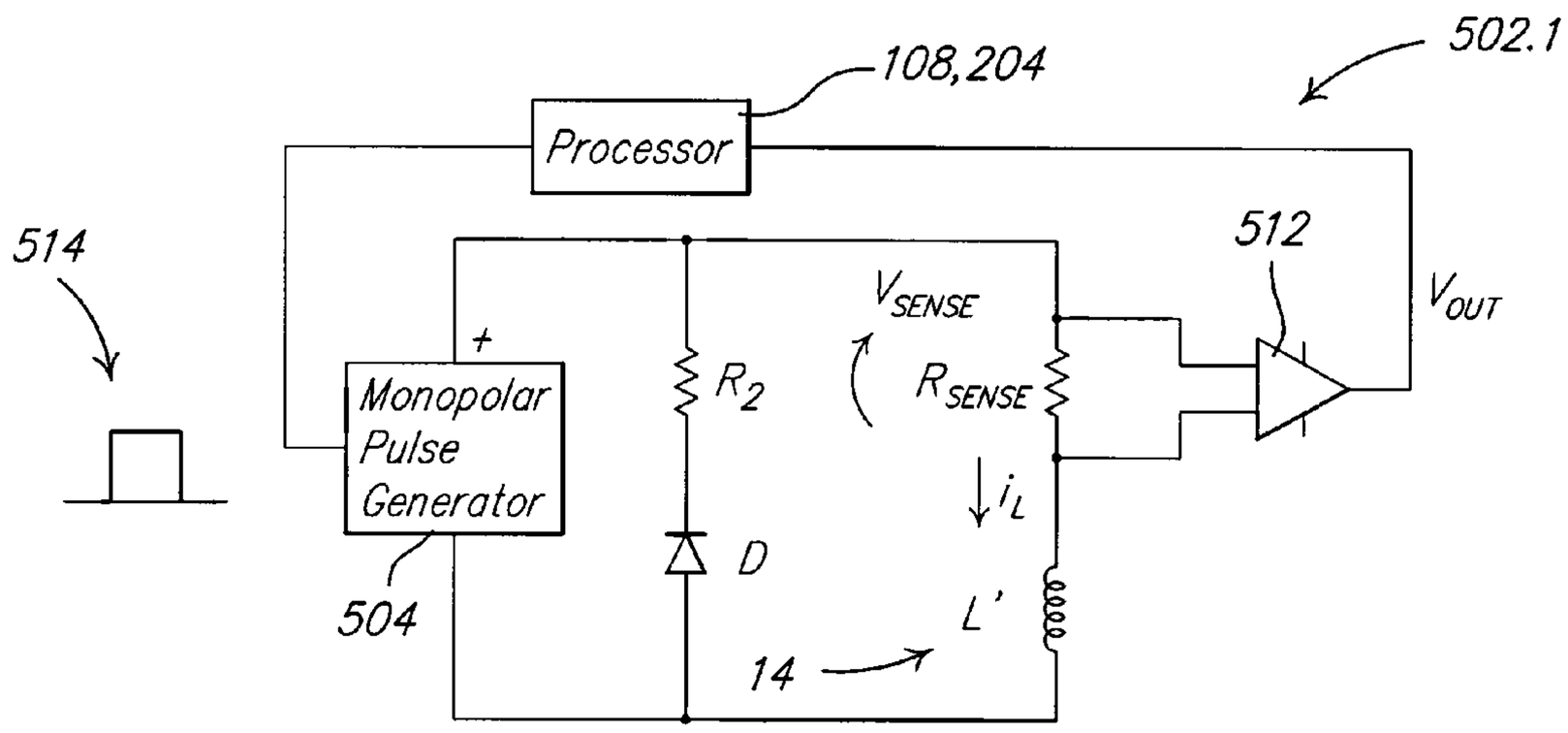

FIG. 56a.

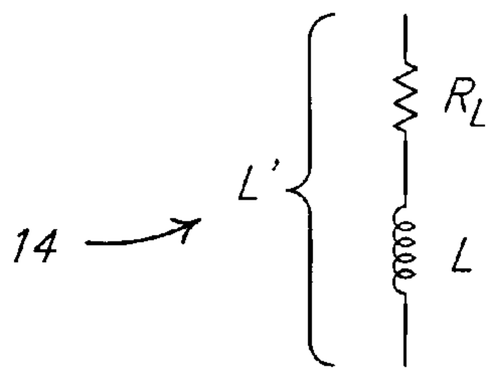

FIG. 56b.

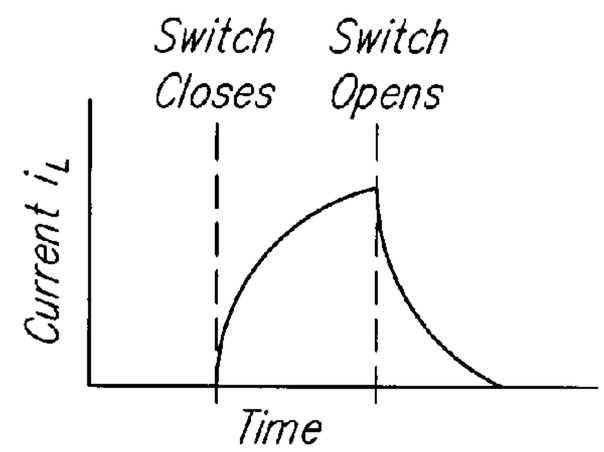

FIG. 56c.

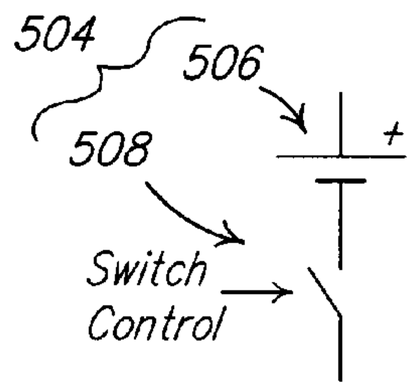

FIG. 57a.

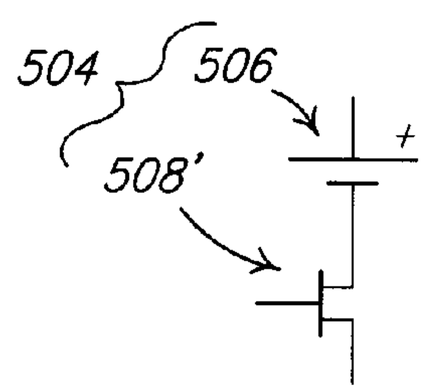

FIG. 57b.

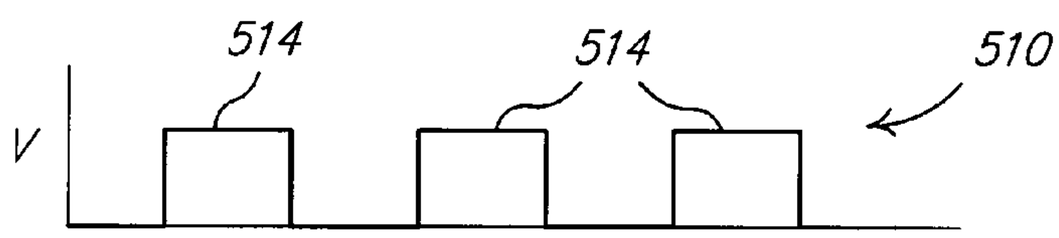

FIG. 57c.

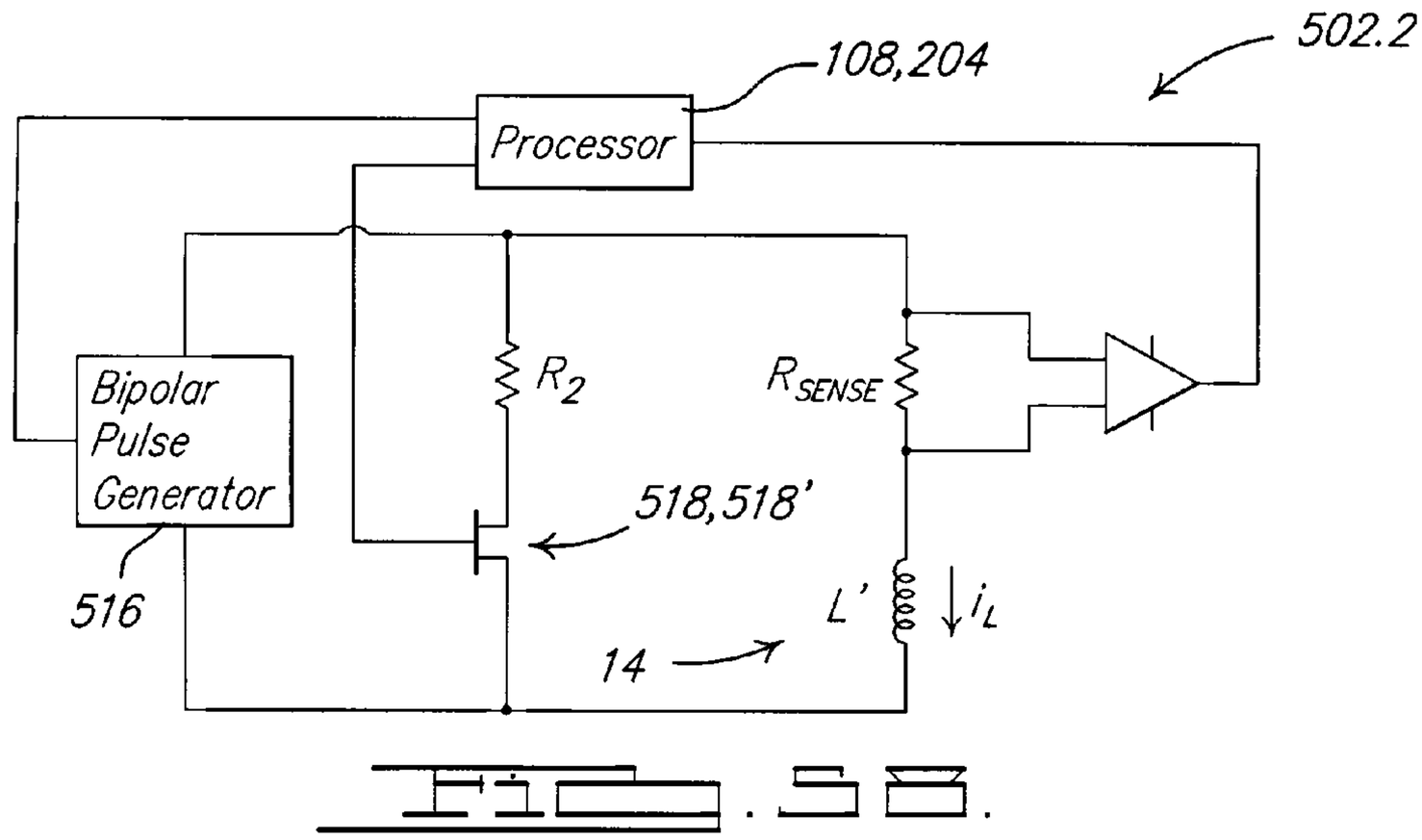

FIG. 5B.

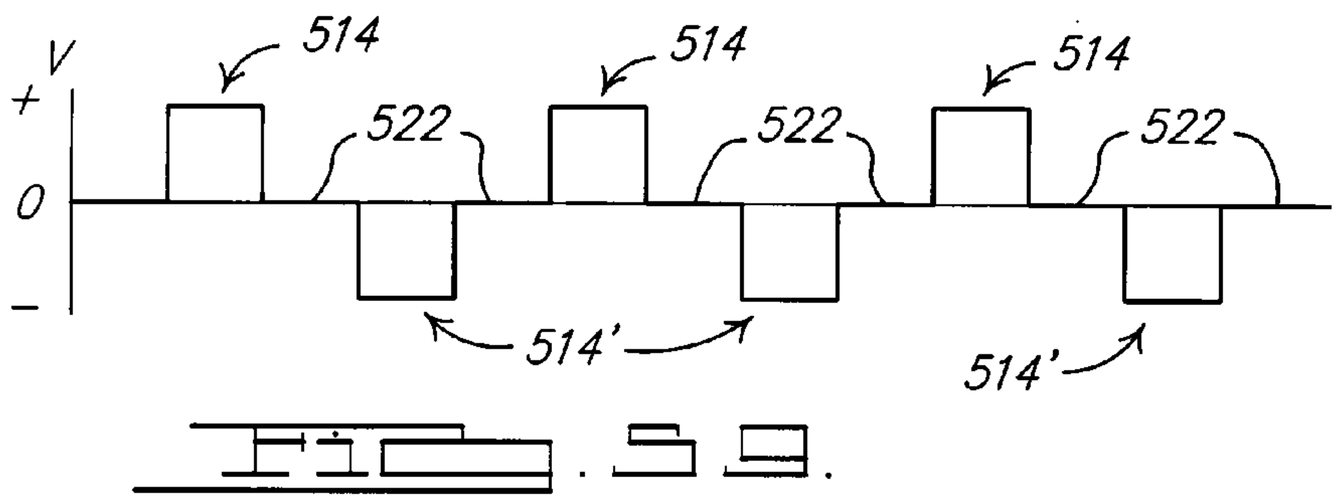

FIG. 5C.

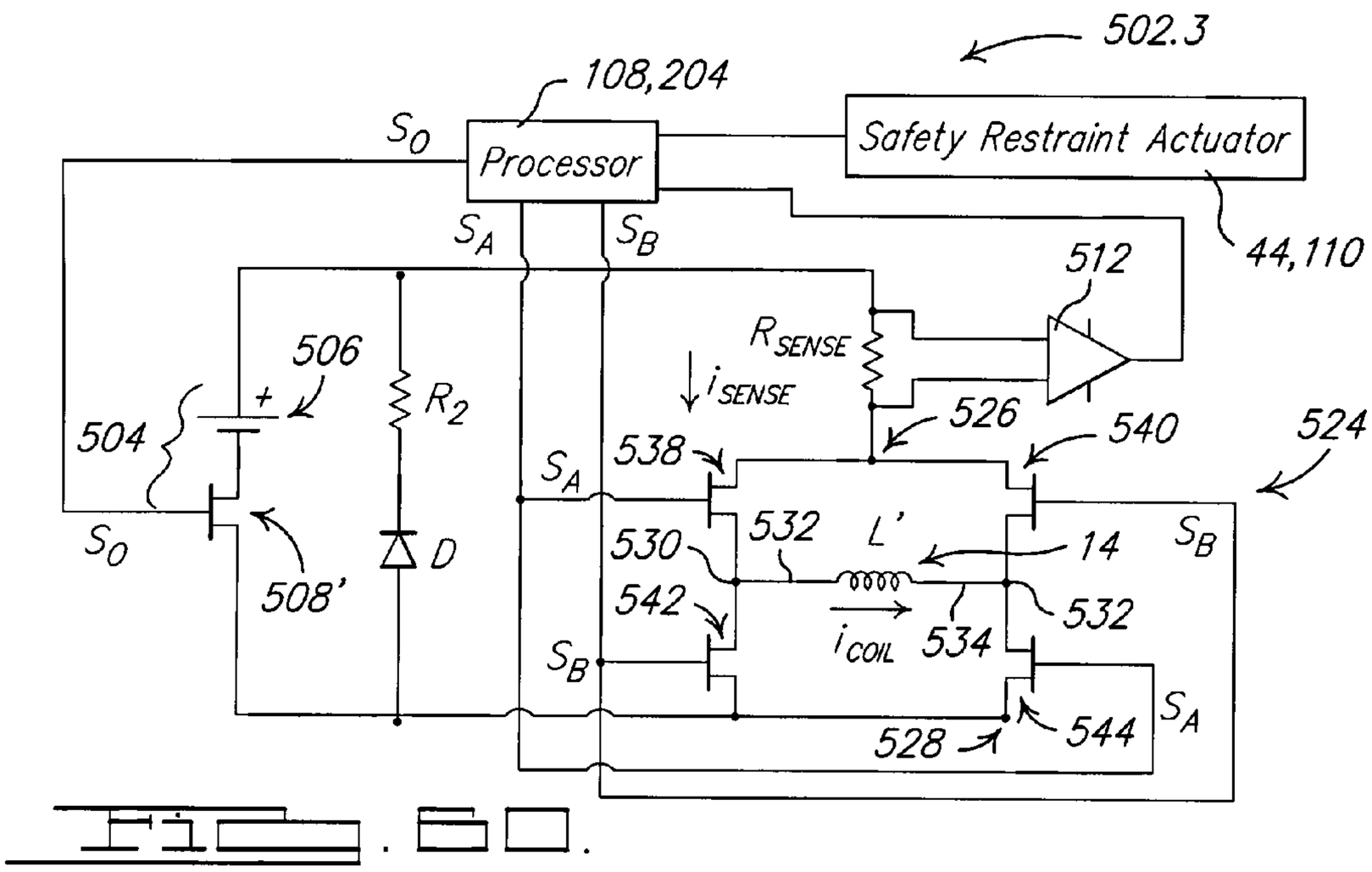

FIG. 6D.

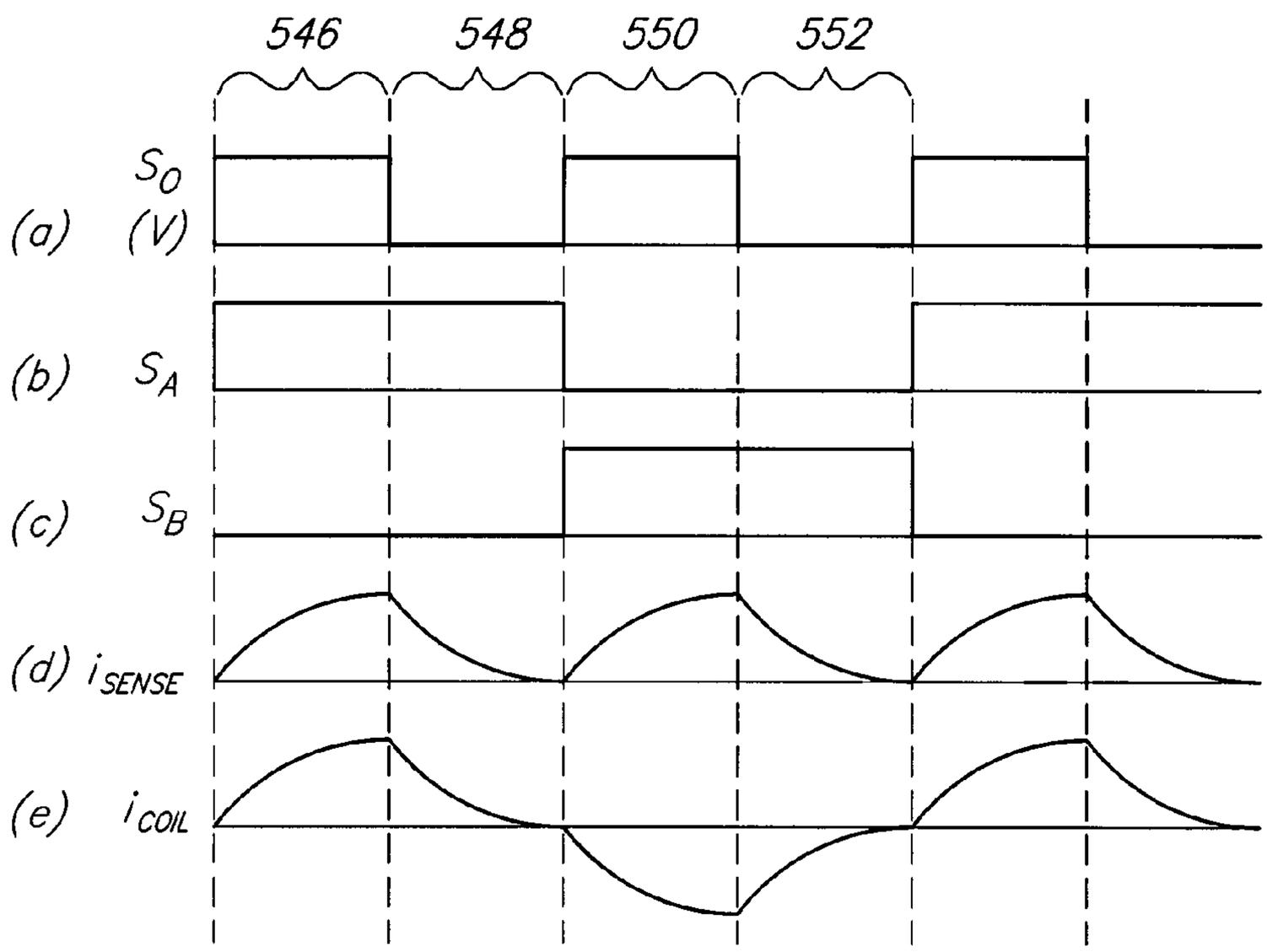

FIG. 61.

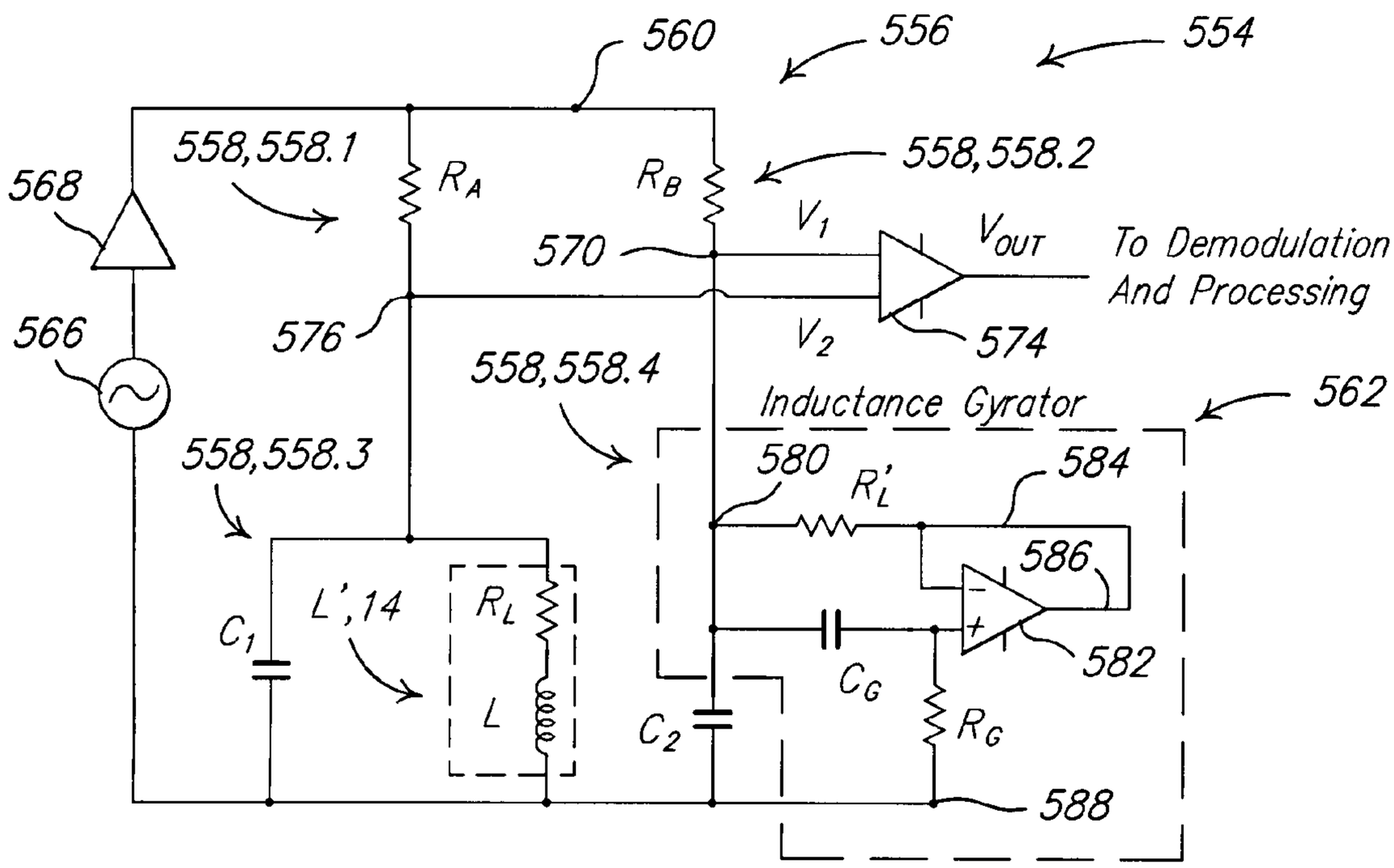

FIG. 62a.

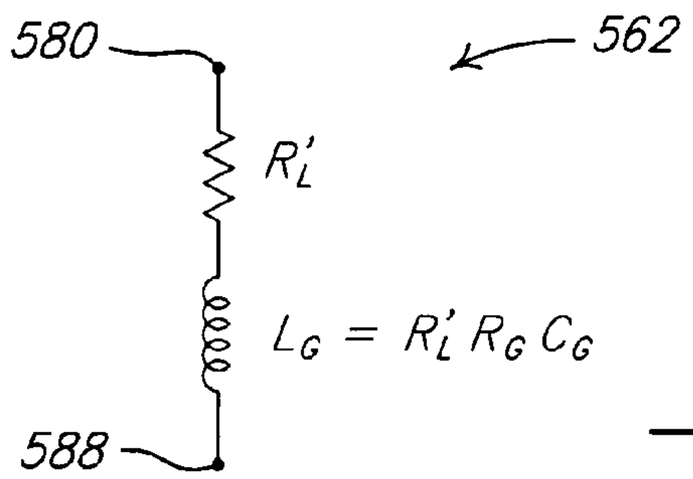

FIG. 62b.

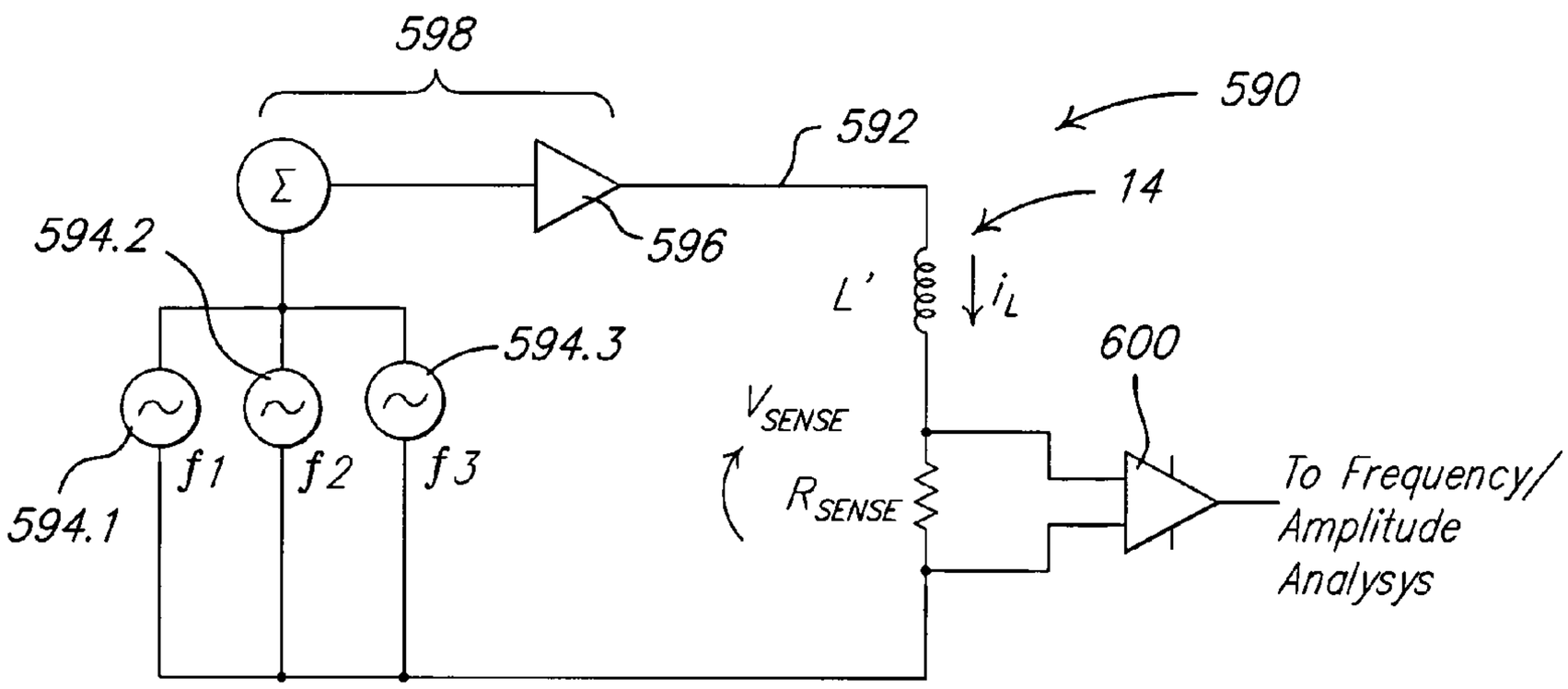

FIG. 63a.

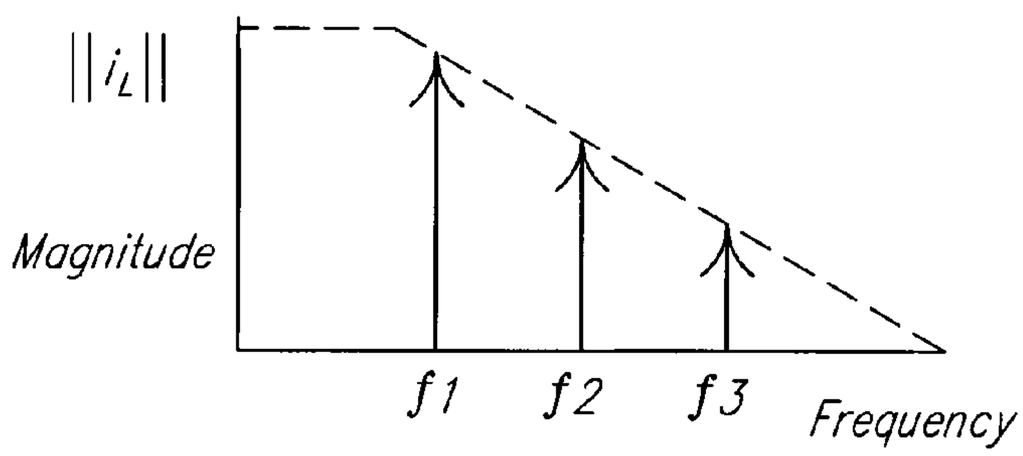

FIG. 63b.

MAGNETIC CRASH SENSOR

CROSS-REFERENCE TO RELATED APPLICATIONS

The instant application is a continuation-in-part and a divisional of U.S. application Ser. No. 10/946,174 filed on Sep. 20, 2004, which claims the benefit of prior U.S. Provisional Application Ser. No. 60/504,581 filed on Sep. 19, 2003. The instant application is also a continuation-in-part of U.S. application Ser. No. 10/905,219 filed on Dec. 21, 2004, which claims the benefit of prior U.S. Provisional Application Ser. No. 60/481,821 filed on Dec. 21, 2003. The instant application is also a continuation-in-part of U.S. application Ser. No. 11/460,982 filed on Jul. 29, 2006, which claims the benefit of prior U.S. Provisional Application Ser. No. 60/595,718 filed on Jul. 29, 2005. The instant application claims the benefit of prior U.S. Provisional Application Ser. No. 60/766,633 filed on Feb. 2, 2006. Each of the above-identified applications is incorporated by reference in is entirety.

BRIEF DESCRIPTION OF THE DRAWINGS

In the accompanying drawings:

FIG. **1** illustrates a schematic block diagram of a magnetic crash sensor in a vehicle;

FIG. **2** illustrates a first embodiment of a first aspect of the magnetic crash sensor with the vehicle in an unperturbed state;

FIG. **3** illustrates the first embodiment of the first aspect of the magnetic crash sensor with the vehicle in a perturbed state responsive to a crash;

FIG. **4** illustrates a second aspect of a magnetic crash sensor with the vehicle in an unperturbed state;

FIG. **5** illustrates the second aspect of the magnetic crash sensor with the vehicle in a perturbed state responsive to a crash;

FIG. **6** illustrates a second embodiment of the first aspect of a magnetic crash sensor in a door of the vehicle, showing an end view cross-section of the door;

FIG. **7** illustrates the second embodiment of the first aspect of the magnetic crash sensor in the door of the vehicle, showing a top view cross-section of the door;

FIG. **8** illustrates a third embodiment of the first aspect of a magnetic crash sensor and a second embodiment of the second aspect of a magnetic crash sensor;

FIG. **9** illustrates a fourth embodiment of the first aspect of a magnetic crash sensor in the door of a vehicle, showing an end view cross-section of the door;

FIG. **10** illustrates the fourth embodiment of the first aspect of the magnetic crash sensor in the door of the vehicle, showing a top view cross-section of the door;

FIGS. **11***a* and **11***b* illustrate a second embodiment of a coil in accordance with the first aspect of the magnetic sensor;

FIG. **12** illustrates a third embodiment of a coil in accordance with the first aspect of the magnetic sensor;

FIG. **13** illustrates an end view of a fourth embodiment of a coil in accordance with the first aspect of the magnetic sensor;

FIGS. **14***a* and **14***b* illustrate a fifth embodiment of a coil in accordance with the first aspect of the magnetic sensor;

FIGS. **15***a* and **15***b* illustrate a sixth embodiment of a coil in accordance with the first aspect of the magnetic sensor;

FIG. **16** illustrates a side view of a seventh embodiment of a coil in accordance with the first aspect of the magnetic sensor;

FIGS. **17***a* and **17***b* an eighth embodiment of a coil in accordance with the first aspect of the magnetic sensor;

FIG. **18** illustrates a schematic block diagram of a third aspect of a magnetic crash sensing system in a vehicle;

FIG. **19** illustrates a detailed view of several coils from the third aspect illustrated in FIG. **18**, and illustrates several coil embodiments;

FIG. **20** illustrates various locations for a coil around a door hinge;

FIG. **21** illustrates a coil mounted so as to provide for sensing a door opening condition;

FIG. **22** illustrates an encapsulated coil assembly;

FIG. **23** illustrates a portion of a coil assembly incorporating a magnetically permeable core;

FIG. **24** illustrates a portion of a coil assembly adapted for mounting with a fastener;

FIG. **25** illustrates a portion of a coil assembly adapted for mounting with a fastener, further comprising a magnetically permeable core;

FIGS. **26***a* and **26***b* illustrate eddy currents, associated magnetic fields and axial magnetic fields in various ferromagnetic elements;

FIG. **27** illustrates a toroidal helical coil;

FIG. **28** illustrates a toroidal helical coil assembly;

FIG. **29** illustrates the operation of an eddy current sensor;

FIG. **30** illustrates the operation of an eddy current sensor to detect a crack in an object;

FIG. **31** illustrates a complex impedance detected using the eddy current sensor illustrated in FIG. **30** responsive to cracks of various depths;

FIG. **32** illustrates a Maxwell-Wien bridge for measuring complex impedance;

FIG. **33** illustrates a coil of a magnetic crash sensor in proximity to a conductive element;

FIG. **34** illustrates various components of a signal from the coil illustrated in FIG. **33**;

FIG. **35** illustrates a schematic block diagram of a first aspect of a signal conditioning circuit associated with a magnetic sensor;

FIG. **36** illustrates a first embodiment of a signal conditioning circuit that provides for generating one or more measures responsive to a self-impedance of a coil;

FIG. **37** illustrates a second embodiment of a signal conditioning circuit that provides for generating one or more measures responsive to a self-impedance of a coil;

FIG. **38** illustrates a third embodiment of a signal conditioning circuit that provides for generating one or more measures responsive to a self-impedance of a coil;

FIG. **39** illustrates a fourth embodiment of a signal conditioning circuit that provides for generating one or more measures responsive to a self-impedance of a coil;

FIG. **40** illustrates a fifth embodiment of a signal conditioning circuit that provides for generating one or more measures responsive to a self-impedance of a coil;

FIG. **41** illustrates a sixth embodiment of a signal conditioning circuit that provides for generating one or more measures responsive to a self-impedance of a coil;

FIG. **42** illustrates a seventh embodiment of a signal conditioning circuit that provides for generating one or more measures responsive to a self-impedance of a coil;

FIG. **43** illustrates an eighth embodiment of a signal conditioning circuit that provides for generating one or more measures responsive to a self-impedance of a coil;

FIG. **44** illustrates a ninth embodiment of a signal conditioning circuit that provides for generating one or more measures responsive to a self-impedance of a coil;

FIG. **45** illustrates a tenth embodiment of a signal conditioning circuit that provides for generating one or more measures responsive to a self-impedance of a coil;

FIG. **46** illustrates an eleventh embodiment of a signal conditioning circuit that provides for generating one or more measures responsive to a self-impedance of a coil;

FIG. **47** illustrates a block diagram of a sigma-delta converter incorporated in the eleventh embodiment of a signal conditioning circuit illustrated in FIG. **46**;

FIGS. **48***a-d* illustrate various outputs of the sigma-delta converter illustrated in FIG. **47** for various corresponding DC input voltages;

FIG. **49** illustrates a block diagram of a decimator comprising a low-pass sync filter a decimation filter associated with the sigma-delta converter, and a mixer, incorporated in the eleventh embodiment of a signal conditioning circuit illustrated in FIG. **46**;

FIG. **50** illustrates the operation of a sigma-delta analog-to-digital converter in accordance with in the eleventh embodiment of a signal conditioning circuit illustrated in FIG. **46**;

FIG. **51** illustrates embodiments of various features that can be incorporated in a signal conditioning circuit;

FIG. **52** illustrates an equivalent circuit model of a cable connected to a coil;

FIG. **53** illustrates various embodiments of various features that can be associated with an analog-to-digital converter;

FIG. **54** illustrates a twelfth embodiment of a signal conditioning circuit that provides for generating one or more measures responsive to a self-impedance of a coil;

FIG. **55** illustrates a thirteenth embodiment of a signal conditioning circuit that provides for generating one or more measures responsive to a self-impedance of a coil;

FIG. **56***a* illustrates a first embodiment of a second aspect of a signal conditioning circuit that provides for generating one or more measures responsive to a self-impedance of a coil;

FIG. **56***b* illustrates a model of a the coil illustrated in FIG. **56***a;*

FIG. **56***c* illustrates an operation of the second aspect of a signal conditioning circuit illustrated in FIG. **56***a;*

FIGS. **57***a-c* illustrates a various embodiments of a monopolar pulse generator in accordance with the second aspect of a signal conditioning circuit illustrated in FIG. **56***a;*

FIG. **58** illustrates a second embodiment of the second aspect of a signal conditioning circuit that provides for generating one or more measures responsive to a self-impedance of a coil;

FIG. **59** illustrates a pulse train in accordance with the second embodiment of the second aspect of the signal conditioning circuit illustrated in FIG. **58**;

FIG. **60** illustrates a third embodiment of the second aspect of a signal conditioning circuit that provides for generating one or more measures responsive to a self-impedance of a coil;

FIGS. **61***a-e* illustrates various waveforms associated with the third embodiment of the second aspect of the signal conditioning circuit illustrated in FIG. **60**;

FIG. **62***a* illustrates a third aspect of a signal conditioning circuit that provides for generating one or more measures responsive to a self-impedance of a coil;

FIG. **62***b* illustrates an equivalent circuit of a gyrator incorporated in the third aspect of the signal conditioning circuit illustrated in FIG. **62***a;*

FIG. **63***a* illustrates a fourth aspect of a signal conditioning circuit that provides for generating one or more measures responsive to a self-impedance of a coil; and

FIG. **63***b* illustrates a frequency dependency of the current through the coil illustrated in FIG. **63***a*.

DESCRIPTION OF EMBODIMENT(S)

Referring to FIGS. **1** and **2**, a first embodiment of a first aspect of a magnetic crash sensor **10.1** is incorporated in a vehicle **12** and comprises at least one first coil **14** operatively associated with a first portion **16** of the vehicle **12**, and a conductive element **18** either operatively associated with, or at least a part of, a proximate second portion **20** of the vehicle **12**. For example, the first embodiment of the first aspect of a magnetic crash sensor **10.1** is adapted to sense a frontal crash, wherein the first portion **16** of the vehicle **12** is illustrated as comprising a front cross beam **22**—the at least one first coil **14** being located proximate to a central portion thereof, e.g. mounted thereto,—and the second portion **20** of the vehicle **12** is illustrated as comprising the front bumper **24**. The at least one first coil **14** is electrically conductive and is adapted for generating a first magnetic field **26** responsive to a current applied by a first coil driver **28**, e.g. responsive to a first oscillatory signal generated by a first oscillator **30**. The magnetic axis **32** of the at least one first coil **14** is oriented towards the second portion **20** of the vehicle **12**—e.g. substantially along the longitudinal axis of the vehicle **12** for the embodiment illustrated in FIG. **1**—so that the first magnetic field **26** interacts with the conductive element **18** operatively associated therewith, thereby causing eddy currents **34** to be generated therein in accordance with Lenz's Law. The conductive element **18** comprises, for example, a thin metal sheet, film or coating, comprising either a paramagnetic or diamagnetic material that is relatively highly conductive, e.g. aluminum or copper, and which, for example, could be an integral part of the second portion **20** of the vehicle **12**. For example, the conductive element **18** could be spray coated onto the rear surface of the front bumper **24**. The frequency of the first oscillator **30** is adapted so that the corresponding oscillating first magnetic field **26** generated by the at least one first coil **14** both provides for generating the associated eddy currents **34** in the conductive element **18**, and is magnetically conducted through the ferromagnetic elements of the vehicle **12**, e.g. the front cross beam **22**.

The magnetic crash sensor **10.1** further comprises at least one magnetic sensor **36** that is located separate from the at least one first coil **14**, and which is adapted to be responsive to the first magnetic field **26** generated by the at least one first coil **14** and to be responsive to a second magnetic field **38** generated by the eddy currents **34** in the conductive element **18** responsive to the first magnetic field **26**. For example, the sensitive axis of the at least one magnetic sensor **36** is oriented in substantially the same direction as the magnetic axis **32** of the at least one first coil **14**. For example, as illustrated in FIG. **1**, the at least one magnetic sensor **36** comprises first **36.1** and second **36.2** magnetic sensors located proximate to the front side of respective distal portions of the front cross beam **22**, so as to be responsive to first **26** and second **38** magnetic fields. The magnetic sensor **36** generates a signal responsive to a magnetic field, and can be embodied in a variety of ways, for example, including, but not limited to, a coil, a Hall-effect sensor, or a giant magnetoresistive (GMR) sensor. The first **36.1** and second **36.2** magnetic sensors are operatively coupled to respective first **40.1** and second **40.2** signal conditioner/preprocessor circuits, which, for example, provide for preamplification, filtering, synchronous demodulation,

and analog to digital conversion of the associated signals from the first **36.1** and second **36.2** magnetic sensors, e.g. as described in U.S. Pat. No. 6,777,927, which is incorporated herein by reference. The first **40.1** and second **40.2** signal conditioner/preprocessor circuits are each operatively coupled to a processor **42** which processes the signals therefrom, thereby providing for discriminating a crash, and controlling an associated safety restraint actuator **44**—e.g. a frontal air bag inflator or a seat belt pretensioner—operatively coupled thereto.

Referring to FIG. **3**, responsive to a crash with an impacting object **46** of sufficient energy to deform the conductive element **18**, changes to the shape or position of the conductive element **18** relative to the at least one first coil **14** and to the magnetic sensor **36** cause a change in the magnetic field received by the first **36.1** and second **36.2** magnetic sensors, which change is detected thereby, and a resulting signal is preprocessed by the signal conditioner/preprocessor circuits **40.1**, **40.2**. The signal therefrom is processed by a crash sensing algorithm in the processor **42**—e.g. by comparison with a threshold or with a reference signal or waveform—and if a crash is detected thereby, e.g. a crash of sufficient severity, then the processor **42** provides for either activating the safety restraint actuator **44** responsive thereto, or provides for activation thereof responsive to a second confirmatory signal from a second crash sensor.

The first aspect of the magnetic crash sensor **10.1** provides for monitoring the shape and position of a front member of a vehicle, such as the bumper, so as to provide early warning for significant energy impacts. The magnetic crash sensor **10.1** could also provide a signal from which impacts with pedestrians can be identified and potentially differentiated from those with other low mass or unfixed objects. For example, a signal responsive to either the first **36.1** or second **36.2** magnetic sensors could be used to actuate pedestrian protection devices; to actuate resetable vehicle passenger restraint devices (e.g. mechanical seatbelt pretensioners); or to alert a frontal crash detection algorithm that a crash is beginning, wherein, for example, the frontal crash detection algorithm might adapt one or more thresholds responsive thereto. The dynamic magnitude of the signal from the magnetic sensor **36** provides a measure of crash severity.

The first aspect of the magnetic crash sensor **10.1** is useful for sensing impacts to elements of the vehicle **12** that are either non-structural or which are readily deformed responsive to a crash. Changes in elements of which the conductive element **18** is either operatively associated or at least a part of cause an associated influence of the associated magnetic field. This influence occurs at the speed of light. Furthermore, direct structural contact between the impacted element—i.e. the conductive element **18**—and the associated sensing system—i.e. the at least one first coil **14** and magnetic sensor **36**—is not required as would be the case for a crash sensing system dependent upon either an accelerometer or a magnetostrictive sensor, because the first aspect of the magnetic crash sensor **10.1** is responsive to changes in the geometry of the region covered by the magnetic fields associated therewith, which includes the space between the conductive element **18** and the associated at least one first coil **14** and magnetic sensor **36**. The responsiveness of the first aspect of the magnetic crash sensor **10.1** is improved if these elements are located so that a nonmagnetic material gap in the associated magnetic circuit is either increased or decreased responsive to a crash, thereby affecting the overall reluctance of the associated magnetic circuit, and as a result, affecting the resulting signal sensed by the magnetic sensor **36**.

The first aspect of the magnetic crash sensor **10.1** is well suited for detecting impacts to non-ferrous elements of the vehicle **12**. For example, for elements that are poor conductors, the conductive element **18** operatively associated therewith provides for detecting deformations thereof. As another example, for elements that are good conductors, e.g. aluminum bumpers or body panels, those elements inherently comprise the conductive element **18** of the magnetic crash sensor **10.1**.

A conductive element **18** could also be added to a ferrous element, e.g. a steel bumper, in accordance with the first aspect of the magnetic crash sensor **10.1**, although in order for the effect of the second magnetic field **38** to dominate an effect of a magnetic field within the ferrous element, the associated conductive element **18** on the inside of the ferrous element (steel bumper) would need to be thick enough or conductive enough to prevent the original transmitted first magnetic field **26** from penetrating though to the steel on the other side of the conductive element **18**, whereby eddy currents **34** in the conductive element **18** would completely cancel the magnetic field at some depth of penetration into the conductive element **18**. For example, for a superconducting conductive element **18**, there would be no penetration of the first magnetic field **26** into the conductive element **18**. Although the depth of penetration of the first magnetic field **26** increases as the conductivity of the conductive element **18** decreases, an aluminum or copper conductive element **18** would not need to be very thick (e.g. 2.5 mm or less) in order to substantially achieve this effect. The depth of penetration of magnetic fields into conductive elements is known from the art using eddy currents for non-destructive testing, for example, as described in the technical paper eddyc.pdf available from the internet at http://joe.buckley.net/papers, which technical paper is incorporated herein by reference. Generally, if the thickness of the conductive element **18** exceeds about three (3) standard depths of penetration at the magnetic field frequency, then substantially no magnetic field will transmit therethrough.

Alternatively, in the case of ferromagnetic element, e.g. a steel bumper, a magnetic crash sensor could be constructed as described hereinabove, except without a separate conductive element **18**, i.e. separate from the ferromagnetic element which is itself conductive. Accordingly, the first magnetic field **26** would be conducted through this ferromagnetic element second portion **20** of the vehicle **12**, which is part of a magnetic circuit further comprising the at least one first coil **14**, the first portion **16** of the vehicle **12**, and the associated air gaps **48** between the first **16** and second **20** portions of the vehicle **12**. In accordance with this aspect, the magnetic sensor **36** would be responsive to changes in the reluctance of the magnetic circuit caused by deformation or translation of the ferromagnetic first portion **16** of the vehicle **12**, and by resulting changes in the associated air gaps **48**.

Referring to FIGS. **1** and **4**, a second aspect of a magnetic crash sensor **10.2** incorporated in a vehicle **12** comprises at least one second coil **50** operatively associated with a third portion **52** of the vehicle **12**, wherein the third portion **52** can be either proximate to the above described first portion **16**, or at another location. For example, the second aspect of a magnetic crash sensor **10.2** is also illustrated as being adapted to sense a frontal crash, wherein the third portion **52** of the vehicle **12** is illustrated as comprising the front cross beam **22**, the second coil **50** being located proximate to a central portion thereof, e.g. located around the front cross beam **22**. The second coil **50** is electrically conductive and is adapted for generating a third magnetic field **54** responsive to a current applied by a second coil driver **56**, e.g. responsive to a second

oscillatory signal generated by an second oscillator **58**. For example, the second oscillator **58** could be either the same as or distinct from the first oscillator **30**, and in the latter case, could operate at a different frequency or could generate either the same type or a different type of waveform as the first oscillator **30**, e.g. square wave as opposed to sinusoidal. In one embodiment, the at least one second coil **50** is the same as the above-described at least one first coil **14**. In another embodiment, the magnetic axis **60** of a separate at least one second coil **50** is oriented substantially along a ferromagnetic element of the third portion **52** of the vehicle **12**, as illustrated in FIG. **1** so that the third magnetic field **54** is induced within the ferromagnetic element of the third portion **52** of the vehicle **12**. In yet another embodiment, the at least one second coil **50** is placed rearward relative to the at least one first coil **14**. The frequency of the second oscillator **58** is adapted so that the corresponding oscillating third magnetic field **54** generated by the at least one second coil **50** is magnetically conducted through the structural elements of the vehicle **12**, e.g. the forward portion of steel frame of the vehicle **12**.

The magnetic crash sensor **10.2** further comprises at least one magnetic sensor **62** that is located separate from the at least one second coil **50**, and which is adapted to be responsive to the third magnetic field **54** generated by the at least one second coil **50** and conducted through the frame **64** of the vehicle **12** For example, as illustrated in FIG. **1**, the at least one magnetic sensor **62** comprises third **62.1** and fourth **62.2** magnetic sensors located around the respective forward portions of the left **66.1** and right **66.2** frame rails. In another embodiment, the magnetic sensor **62** of the second aspect of the magnetic crash sensor **10.2** is the same as the magnetic sensor **36** of the first aspect of the magnetic crash sensor **10.1**. The magnetic sensor **62** generates a signal responsive to a magnetic field, and can be embodied in a variety of ways, for example, including, but not limited to, a coil, a Hall-effect sensor, or a giant magnetoresistive (GMR) sensor. For example, a coil of the magnetic sensor **62** could be wound around portions of the frame **64**, or the magnetic sensor **62** (i.e. coil, Hall-effect sensor, GMR sensor or other type of magnetic sensor) could be located within an opening of, or on, the frame **64** of the vehicle **12**. The third **62.1** and fourth **62.2** magnetic sensors are operatively coupled to respective first **40.1** and second **40.2** signal conditioner/preprocessor circuits, which, for example, provide for preamplification, filtering, synchronous demodulation, and analog to digital conversion of the associated signals from the third **62.1** and fourth **62.2** magnetic sensors, e.g. as described in U.S. Pat. No. 6,777,927, which is incorporated herein by reference.

The third magnetic field **54** is conducted through a magnetic circuit **68** comprising the above described elements of the frame **64** of the vehicle **12**, and which may further comprise elements of the body or powertrain, or other associated structural elements, particularly elements comprising ferromagnetic materials. The responsiveness of the second aspect of the magnetic crash sensor **10.2** can be enhanced if the associated magnetic circuit **68** comprises one or more gaps **70** comprising non-magnetic material, the separation thereof which is responsive to a crash to be sensed by the magnetic crash sensor **10.2**, thereby modulating the associated reluctance of the magnetic circuit **68** responsive to the crash. For example, the one or more gaps **70** could comprise a structural nonferrous material, such as aluminum or structural plastic of the frame **64** of the vehicle **12**, which is adapted to be either compressed or stretched responsive to the crash, causing the associated reluctance of the magnetic circuit **68** to either decrease or increase respectively.

The second aspect of the magnetic crash sensor **10.2** provides for monitoring damage to the structure of the vehicle **12** responsive to crashes involving a substantial amount of associated inelastic deformation. Referring to FIG. **5**, responsive to a crash with an impacting object **46** of sufficient energy to deform the frame **64** of the vehicle **12**, associated changes in the reluctance of the associated magnetic circuit **68** responsive to an associated change in the geometry of the associated elements cause an associated change in the magnetic field sensed by the third **62.1** and fourth **62.2** magnetic sensors, which change is detected thereby, and a resulting signal is preprocessed by the signal conditioner/preprocessor circuits **40.1**, **40.2**. The signal therefrom is processed by a crash sensing algorithm in the processor **42**—e.g. by comparison with a threshold or with a reference signal or waveform—and if a crash is detected thereby, e.g. a crash of sufficient severity, then the processor **42** provides for either activating the safety restraint actuator **44** responsive thereto. The detection process of the second aspect of the magnetic crash sensor **10.2** can be made responsive to a detection of a crash in accordance with the first aspect of the magnetic crash sensor **10.1**.

Generally, during major crash events where deployment of the safety restraint actuator **44** is desired, significant associated damage and associated metal bending generally occurs to vehicle structures rearward of the front bumper region. After the impacting object **46** has been detected by the first embodiment of the first aspect of the magnetic crash sensor **10.1** as described hereinabove, the vehicle crush zone and crush pattern will generally either be limited to primarily the bumper region or will extend further into the vehicle, impacting one or more major vehicle structural members. If the object intrusion is limited primarily to the bumper or hood region, then a crash would likely be detected only by the first aspect of the magnetic crash sensor **10.1**. However, if the impacting object **46** intrudes on a major structural member, then a significant signal change is detected by the third **62.1** and fourth **62.2** magnetic sensors of the second embodiment of the magnetic crash sensor **10.2** responsive to a deformation of the frame **64** of the vehicle **12**. The signature of the signal(s) from either of the third **62.1** and fourth **62.2** magnetic sensors, i.e. the associated magnitude and rate of change thereof, can be correlated with impact severity and can be used to actuate one or more safety restraint actuators **44** appropriate for the particular crash. Accordingly, in combination, the first **10.1** and second **10.2** aspects of the magnetic crash sensor provide for faster and better crash discrimination, so as to provide for either actuating or suppressing actuation of the associated safety restraint actuators **44**. Furthermore, the affects of a crash on the magnetic circuits of either the first **10.1** or second **10.2** aspects of the magnetic crash sensor are propagated to the respective magnetic sensors **26**, **62** at the speed of light, and accordingly is not limited by the speed with which shock waves propagate through the associated structural elements, as would be the case for either accelerometer or magnetostrictive sensing technologies. Furthermore, in combination, the first **10.1** and second **10.2** aspects of the magnetic crash sensor provide for detecting and differentiating various types of frontal impacts, including but not limited to, impacts with pedestrians, other vehicles, fixed objects or other objects, so as to further provide for deploying safety measures that are appropriate to the particular situation, and responsive to the predicted type of impacting object and the detected severity of the impact. Furthermore, the first **10.1** and second **10.2** aspects of the magnetic crash sensor, provide for relatively fast detection of collisions, differentiation between events requiring the actuation of a safety restraint actuator **44** from those for which the actuation

thereof should be suppressed, and determination of the location, extent and energy of the collision from the information of the collision that can be detected using the signals from the associated magnetic sensors **26**, **62** responsive to the associated magnetic fields **26**, **38**, **54** of the magnetic crash sensors **10.1**, **10.2**.

Referring to FIGS. **6** and **7**, in accordance with a second embodiment of the first aspect of a magnetic crash sensor **10.1'** adapted to sense a side impact crash, at least one coil **72** and an associated at least one magnetic sensor **74** are operatively associated with a first portion **76** of a door **78** of a vehicle **12**, and are adapted to cooperate with at least one conductive element **80** that is operatively associated with, or at least a part of, a proximate second portion **82** of the door **78**. For example, in the embodiment illustrated in FIGS. **6** and **7**, the first portion **76** of the door **78** comprises an inner panel **84**, and the at least one conductive element **80** comprises first **86** and second **88** conductive elements at the outer skin **90** and the door beam **92** of the door **78** respectively, the outer skin **90** and the door beam **92** constituting respective second portions **82** of the door **78**. Alternatively, either the outer skin **90** or the door beam **92**, if conductive, could serve as the associated conductive element **80** without requiring separate first **86** or second **88** conductive elements that are distinct from the outer skin **90** or the door beam **92** respectively.

The at least one coil **72** is electrically conductive and is adapted for generating a first magnetic field **94** responsive to a current applied by a coil driver **96**, e.g. responsive to a first oscillatory signal generated by an oscillator **98**. The magnetic axis **100** of the at least one coil **72** is oriented towards the second portion **82** of the door **78**—e.g. towards the outer skin **90** of the door **78**, e.g. substantially along the lateral axis of the vehicle for the embodiment illustrated in FIGS. **6** and **7**—so that the first magnetic field **94** interacts with the conductive elements **86**, **88** operatively associated therewith, thereby causing eddy currents **102** to be generated therein in accordance Lenz's Law. The conductive elements **86**, **88** each comprise, for example, a thin metal sheet, film or coating, comprising either a paramagnetic or diamagnetic material that is relatively highly conductive, e.g. aluminum or copper, and which, for example, could be an integral part of the second portion **82** of the door **78**. For example, the conductive elements **86**, **88** could be in the form of relatively thin plates, a film, or a coating that is mounted on, applied to, or integrated with existing or supplemental structures associated with the door beam **92** and the inside surface of the outer skin **90** of the door **78** respectively. The frequency of the oscillator **98** is adapted so that the corresponding oscillating magnetic field generated by the at least one coil **72** both provides for generating the associated eddy currents **102** in the conductive elements **86**, **88**, and is magnetically conducted through the ferromagnetic elements of the door **78** and proximate structure of the vehicle **12**.

The at least one magnetic sensor **74** is located separate from the at least one coil **72**, and is adapted to be responsive to the first magnetic field **94** generated by the at least one coil **72** and to be responsive to a second magnetic field **104** generated by the eddy currents **102** in the conductive elements **86**, **88** responsive to the first magnetic field **94**. For example, the sensitive axis of the at least one magnetic sensor **74** is oriented in substantially the same direction as the magnetic axis **100** of the at least one coil **72**. The magnetic sensor **74** generates a signal responsive to a magnetic field, and can be embodied in a variety of ways, for example, including, but not limited to, a coil, a Hall-effect sensor, or a giant magnetoresistive (GMR) sensor. The number of magnetic sensors **74** and the spacing and positioning thereof on the inner panel **84** of the door **78** is dependent upon the vehicle **12**, the type of performance required, and associated cost constraints. Generally, more magnetic sensors **74** would possibly provide higher resolution and faster detection speed, but at increased system cost. Increasing either the vertical or fore/aft spacing between two or more magnetic sensors **74** reduces associated coupling with the first magnetic field **94**, increases coupling with the second magnetic field **104**, and provides for a more general or average indication of electrically conductive element movement during a crash, potentially slowing the ultimate detection response, but increasing immunity to false positive crash detections, i.e. immunity to non-crash events. With only one coil **72** and one magnetic sensor **74**, it may be beneficial to provide a separation thereof of about ¼ to ⅓ the length of a major diagonal though the cavity within the door **78**.

The at least one magnetic sensor **74** is operatively coupled to a respective signal conditioner/preprocessor circuit **106**, which, for example, provide for preamplification, filtering, synchronous demodulation, and analog to digital conversion of the associated signals from the at least one magnetic sensor **74**, e.g. as described in U.S. Pat. No. 6,777,927, which is incorporated herein by reference. The signal conditioner/preprocessor circuit **106** is operatively coupled to a processor **108** which processes the signal therefrom, thereby providing for discriminating a crash, and controlling an associated safety restraint actuator **110**—e.g. a side air bag inflator—operatively coupled thereto.

In operation, the magnetic crash sensor **10.1'** provides a measure of the relative motion of either the outer skin **90** or the door beam **92** relative to the inner panel **84** of the door **78**, for example, as caused by a crushing or bending of the door **78** responsive to a side-impact of the vehicle **12**. During non-crash conditions, an oscillating magnetic field resulting from the combination of the first **94** and second **104** magnetic fields would be sensed by the at least one magnetic sensor **74**. If an object impacted the outer skin **90** of the door **78** causing a physical deflection thereof, then this oscillating magnetic field would be perturbed at least in part by changes in the second magnetic field **104** caused by movement or deformation of the associated first conductive element **86** and the associated changes in the associated eddy currents **102** therein. If the impact is of sufficient severity, then the door beam **92** and the associated second conductive element **88** would also be moved or deformed thereby, causing additional and more substantial changes in the associated eddy currents **102** in the second conductive element **88** and the corresponding second magnetic field **104**. Generally, the door beam **92** and associated second conductive element **88** would not be perturbed during impacts that are not of sufficient severity to warrant deployment of the associated safety restraint actuator **110**, notwithstanding that there may be substantial associated deformation of the outer skin **90** of the door **78**. Accordingly, in a magnetic crash sensor **10.1'** incorporating only a single conductive element **80**, a preferred location thereof would be that of the second conductive element **88** described hereinabove.

In accordance with another embodiment, an accelerometer **112**, or another crash sensor, could be used in combination with the above-described magnetic crash sensor **10.1'** in order to improve reliability by providing a separate confirmation of the occurrence of an associated crash, which may be useful in crashes for which there is not a significant deflection of either the outer skin **90** of the door **78**, or of the door beam **92**, relatively early in the crash event—for example, as a result of a pole impact centered on the B-pillar or a broad barrier type impact that spans across and beyond the door **78**—for which the magnetic crash sensor **10.1'**, if used alone, might other-

wise experience a delay in detecting the crash event. For example, a supplemental accelerometer **112** might be located at the base of the B-pillar of the vehicle **12**. As another example, an additional supplemental accelerometer **112** might be located proximate to the safety restraint actuator **110**. In a system for which the magnetic crash sensor **10.1'** is supplemented with a separate crash sensor, e.g. an accelerometer **112**, the safety restraint actuator **110** would be deployed either if the magnetic crash sensor **10.1'** detected a significant and relatively rapid change in the magnetic field in combination with the acceleration exceeding a relatively low threshold, or if the accelerometer **112** detected a significant and relatively rapid change in acceleration in combination with the magnetic crash sensor **10.1'** detecting at least a relatively less significant and relatively less rapid change in the magnetic field.

It should be understood, that the performance of a coil used for either generating or sensing a magnetic field can be enhanced by the incorporation of an associated magnetic core of relatively high magnetic permeability. Furthermore, it should be understood that the signal applied to either the at least one first coil **14**, second coil **50** or of coil **72** could be a direct current signal so as to create a steady magnetic field. Alternatively, those coils could be replaced with corresponding permanent magnets, whereby the associated magnetic crash sensors **10.1**, **10.1'** or **10.2** would then be responsive to transients in the magnetic fields responsive to an associated crash. Furthermore, it should be understood that the particular oscillatory waveform of the first oscillator **30**, second oscillator **58** or oscillator **98** is not limiting, and could be, for example, a sine wave, a square wave, a sawtooth wave, or some other waveform; of a single frequency, or of plural frequencies that are either stepped or continuously varied.

Referring to FIG. **8**, a third embodiment of a first aspect of a magnetic crash sensor **10.1"** is incorporated in a vehicle **12** and comprises at least one first coil **14** operatively associated with a first portion **16** of the vehicle **12**, and a conductive element **18** either operatively associated with, or at least a part of, a proximate second portion **20** of the vehicle **12**. For example, the third embodiment of a first aspect of a magnetic crash sensor **10.1"** is adapted to sense a frontal crash, wherein the first portion **16** of the vehicle **12** is illustrated as comprising a front cross beam **22**—the at least one first coil **14** being located proximate to a central portion thereof, e.g. mounted thereto,—and the second portion **20** of the vehicle **12** is illustrated as comprising the front bumper **24**. The at least one first coil **14** is electrically conductive and is adapted for generating a first magnetic field **26** responsive to a current applied by a first coil driver **28**, e.g. responsive to a first oscillatory signal generated by a first oscillator **30**. The magnetic axis **32** of the at least one first coil **14** is oriented towards the second portion **20** of the vehicle **12**—e.g. substantially along the longitudinal axis of the vehicle **12** for the embodiment illustrated in FIG. **8**—so that the first magnetic field **26** interacts with the conductive element **18** operatively associated therewith, thereby causing eddy currents **34** to be generated therein in accordance with Lenz's Law. The conductive element **18** comprises, for example, a thin metal sheet, film or coating, comprising either a paramagnetic or diamagnetic material that is relatively highly conductive, e.g. aluminum or copper, and which, for example, could be an integral part of the second portion **20** of the vehicle **12**. For example, the conductive element **18** could be spray coated onto the rear surface of the front bumper **24**. The frequency of the first oscillator **30** is adapted so that the corresponding oscillating first magnetic field **26** generated by the at least one first coil **14** provides for generating the associated eddy currents **34** in the conductive element **18**.

The at least one first coil **14** is operatively coupled to a signal conditioner/preprocessor circuit **114.1** which, for example, provides for preamplification, filtering, synchronous demodulation and analog to digital conversion of the associated signal from the at least one first coil **14**. The signal conditioner/preprocessor circuit **114.1** is operatively coupled to a processor **116** which processes the signals therefrom, thereby providing for discriminating a crash, and controlling an associated safety restraint actuator **44**—e.g. a frontal air bag inflator or a seat belt pretensioner—operatively coupled thereto. More particularly, the processor **116** provides for determining a measure responsive to the self-impedance of the at least one first coil **14** responsive to an analysis of the complex magnitude of the signal from the at least one first coil **14**, for example, in relation to the signal applied thereto by the associated oscillator **30**.

Responsive to a crash with an impacting object **46** (e.g. as illustrated in FIG. **3**) of sufficient energy to deform the conductive element **18**, changes to the shape or position of the conductive element **18** relative to the at least one first coil **14** affects the magnetic field affecting the at least one first coil **14**. A resulting signal is preprocessed by the signal conditioner/preprocessor circuit **114.1**, which provides for measuring the signal across the at least one first coil **14** and provides for measuring the signal applied thereto by the associated coil driver **28**. The signal conditioner/preprocessor circuit **114.1**—alone, or in combination with the processor **116**, provides for decomposing the signal from the at least one first coil **14** into real and imaginary components, for example, using the signal applied by the associated coil driver **28** as a phase reference.

The decomposition of a signal into corresponding real and imaginary components is well known in the art, and may be accomplished using analog circuitry, digital circuitry or by software or a combination thereof. For example, U.S. Pat. Nos. 4,630,229, 6,005,392 and 6,288,536—all of which is incorporated by reference herein in their entirety—each disclose various systems and methods for calculating in real-time the real and imaginary components of a signal which can be used for processing the signal from the at least one first coil **14**. A Maxwell-Wien bridge, e.g. incorporated in the signal conditioner/preprocessor circuit **114.1**, may also be used to determine the real and imaginary components of a signal, or a phase-locked loop may be used to determine the relative phase of a signal with respect to a corresponding signal source, which then provides for determining the associated real and imaginary components. Various techniques known from the field eddy current inspection can also be used for processing the signal from the at least one first coil **14**, for example, as disclosed in the Internet web pages at http://www.ndt-ed.org/EducationResources/CommunityCollege/EddyCurrents/cc_ed_index.htm, which are incorporated herein by reference. The magnetic sensor **10** can employ various signal processing methods to improve performance, for example, multiple frequency, frequency hopping, spread spectrum, amplitude demodulation, phase demodulation, frequency demodulation, etc.

A signal responsive to the self-impedance of the at least one first coil **14**—e.g. responsive to the real and imaginary components of the signal from the one first coil **14**—is processed by a crash sensing algorithm in the processor **116**—e.g. by comparison with a threshold or with a reference signal or waveform—and if a crash is detected thereby, e.g. a crash of sufficient severity, then the processor **42** provides for either

activating the safety restraint actuator **44** responsive thereto, or provides for activation thereof responsive to a second confirmatory signal from a second crash sensor.

Referring to FIG. **8**, and further to the teachings of U.S. Pat. No. 6,587,048, which is incorporated herein by reference, a second embodiment of a second aspect of a magnetic crash sensor **10.2'** incorporated in a vehicle **12** comprises at least one second coil **50** operatively associated with a third portion **52** of the vehicle **12**, wherein the third portion **52** can be either proximate to the above described first portion **16**, or at another location. For example, the second aspect of a magnetic crash sensor **10.2** is also illustrated as being adapted to sense a frontal crash, wherein the third portion **52** of the vehicle **12** is illustrated as comprising the front cross beam **22**, the second coil **50** being located proximate to a central portion thereof, e.g. located around the front cross beam **22**. The second coil **50** is electrically conductive and is adapted for generating a third magnetic field **54** responsive to a current applied by a second coil driver **56**, e.g. responsive to a second oscillatory signal generated by an second oscillator **58**. For example, the second oscillator **58** could be either the same as or distinct from the first oscillator **30**, and in the latter case, could operate at a different frequency or could generate either the same type or a different type of waveform as the first oscillator **30**, e.g. square wave as opposed to sinusoidal. In one embodiment, the at least one second coil **50** is the same as the above-described at least one first coil **14**. In another embodiment, the magnetic axis **60** of a separate at least one second coil **50** is oriented substantially along a ferromagnetic element of the third portion **52** of the vehicle **12**, as illustrated in FIG. **8** so that the third magnetic field **54** is induced within the ferromagnetic element of the third portion **52** of the vehicle **12**. In yet another embodiment, the at least one second coil **50** is placed rearward relative to the at least one first coil **14**. The frequency of the second oscillator **58** is adapted so that the corresponding oscillating third magnetic field **54** generated by the at least one second coil **50** is magnetically conducted through the structural elements of the vehicle **12**, e.g. the forward portion of steel frame of the vehicle **12**.

The at least one second coil **50** is operatively coupled to a signal conditioner/preprocessor circuit **114.2** which, for example, provides for preamplification, filtering, synchronous demodulation and analog to digital conversion of the associated signal from the at least one second coil **50**. The signal conditioner/preprocessor circuit **114.2** is operatively coupled to a processor **116** which processes the signals therefrom, thereby providing for discriminating a crash, and controlling an associated safety restraint actuator **44**—e.g. a frontal air bag inflator or a seat belt pretensioner—operatively coupled thereto. More particularly, the processor **116** provides for determining a measure responsive to the self-impedance of the at least one second coil **50** responsive to an analysis of the complex magnitude of the signal from the at least one second coil **50**, for example, in relation to the signal applied thereto by the associated oscillator **58**.

The third magnetic field **54** is conducted through a magnetic circuit **68** comprising the above described elements of the frame **64** of the vehicle **12**, and which may further comprise elements of the body or powertrain, or other associated structural elements, particularly elements comprising ferromagnetic materials. The responsiveness of the second aspect of the magnetic crash sensor **10.2'** can be enhanced if the associated magnetic circuit **68** comprises one or more gaps **70** comprising non-magnetic material, the separation thereof which is responsive to a crash to be sensed by the magnetic crash sensor **10.2'**, thereby modulating the associated reluctance of the magnetic circuit **68** responsive to the crash. For example, the one or more gaps **70** could comprise a structural nonferrous material, such as aluminum or structural plastic of the frame **64** of the vehicle **12**, which is adapted to be either compressed or stretched responsive to the crash, causing the associated reluctance of the magnetic circuit **68** to either decrease or increase respectively.

The signal conditioner/preprocessor circuit **114.2** provides for measuring the signal across the at least one second coil **50** and provides for measuring the signal applied thereto by the associated coil driver **56**. The signal conditioner/preprocessor circuit **114.2**—alone, or in combination with the processor **116**, provides for decomposing the signal from the at least one second coil **50** into real and imaginary components, for example, using the signal applied by the associated oscillator **58** as a phase reference. A signal responsive to the self-impedance of the at least one second coil **50**—e.g. responsive to the real and imaginary components of the signal from the one second coil **50**—is processed by a crash sensing algorithm in the processor **116**—e.g. by comparison with a threshold or with a reference signal or waveform—and if a crash is detected thereby, e.g. a crash of sufficient severity, then the processor **42** provides for either activating the safety restraint actuator **44** responsive thereto, or provides for activation thereof responsive to a second confirmatory signal from a second crash sensor.

It should be understood that the third embodiment of a first aspect of a magnetic crash sensor **10.1"** and the second embodiment of a second aspect of a magnetic crash sensor **10.2'** may be used either in combination—as illustrated in FIG. **8**, or either of the embodiments may be used alone.

Referring to FIGS. **9** and **10**, in accordance with a fourth embodiment of the first aspect of a magnetic crash sensor **10.1'''** adapted to sense a side impact crash, at least one coil **72** is operatively associated with a first portion **76** of a door **78** of a vehicle **12**, and is adapted to cooperate with at least one conductive element **80** that is operatively associated with, or at least a part of, a proximate second portion **82** of the door **78**. For example, in the embodiment illustrated in FIGS. **9** and **10**, the first portion **76** of the door **78** comprises the inner panel **84**, and the at least one conductive element **80** comprises first **86** and second **88** conductive elements at the outer skin **90** and the door beam **92** of the door **78** respectively, the outer skin **90** and the door beam **92** constituting respective second portions **82** of the door **78**. Alternatively, either the outer skin **90** or the door beam **92**, if conductive, could serve as the associated conductive element **80** without requiring separate first **86** or second **88** conductive elements that are distinct from the outer skin **90** or the door beam **92** respectively.

The at least one coil **72** is electrically conductive and is adapted for generating a first magnetic field **94** responsive to a current applied by a coil driver **96**, e.g. responsive to a first oscillatory signal generated by an oscillator **98**. The magnetic axis **100** of the at least one coil **72** is oriented towards the second portion **82** of the door **78**—e.g. towards the outer skin **90** of the door **78**, e.g. substantially along the lateral axis of the vehicle for the embodiment illustrated in FIGS. **9** and **10**—so that the first magnetic field **94** interacts with the conductive elements **86**, **88** operatively associated therewith, thereby causing eddy currents **102** to be generated therein in accordance Lenz's Law. For example, the at least one coil **72** may comprise a coil of wire of one or more turns, or at least a substantial portion of a turn, wherein the shape of the coil **72** is not limiting, and may for example be circular, elliptical, rectangular, polygonal, or any production intent shape. For example, the coil **72** may be wound on a bobbin, and, for example, sealed or encapsulated, for example, with a plastic or elastomeric compound adapted to provide for environmen-

tal protection and structural integrity. The resulting coil assembly may further include a connector integrally assembled, e.g. molded, therewith. Alternatively, the at least one coil **72** may be formed by wire bonding, wherein the associated plastic coating is applied during the associated coil winding process.

In one embodiment, the size and shape of the coil **72** are adapted so that the induced first magnetic field **94** covers the widest portion of the door **78**. In another embodiment, depending on door **78** structural response, this coverage area can be reduced or shaped to best respond to an intruding metal responsive to a crash. For example, an CAE (Computer Aided Engineering) analysis involving both crash structural dynamics and/or electromagnetic CAE can be utilized to determine or optimized the size, shape, thickness—i.e. geometry—of the coil **72** that both satisfies associated packaging requirements within the door **78** and provides sufficient crash detection capability.

For example, in one embodiment, an assembly comprising the at least one coil **72** is positioned within the door **78** of the vehicle **12** so that the magnetic axis **100** of the at least one coil **72** is substantially perpendicular to the outer skin **90** of the door **78**, wherein the outer skin **90** is used as an associated sensing surface. Alternatively, the mounting angle relative to the outer skin **90** may be optimized to account for the shape of the associated metal surface and the relative proximity an influence of an associated door beam **92** or other structural elements relative to the outer skin **90**. The position of the coil **72** may be chosen so that the coil **72** is responsive to structures, structural elements or body elements that typically intrude relative to an occupant responsive to a crash, so as to provide for optimizing responsiveness to a measure of crash intrusion for ON crashes, while also providing for sufficient immunity to OFF crashes, for both regulatory and real world crash modes. For example, the coil **72** within the door **78** could be adapted to be responsive to the outer skin **90**, a conductive element **80**, **86** operatively associated therewith, a door beam **92**, a conductive element **80**, **88** operatively associated therewith, or an edge wall **118** of the door **78**, either individually or in combination.

The position, size, thickness of the chosen sensor coil **72** are selected to fit within the mechanical constraints of and within the door **78** associated with electrical or mechanical functions such as window movement, door **78** locks, etc. For example, in accordance with one embodiment, the coil **72** is affixed to an inner portion of the door **78**, for example, through rigid and reliable attachment to an inner panel **84** of the door **78***b*, so as to reduce or minimize vibration of the coil **72** relative to the associated conductive element **80** being sensed (e.g. a metallic outer skin **90** of the door **78**). For example, in accordance with another embodiment, the sensing coil **72** could molded into an inner panel **84** of the door **78** during the manufacturing of the door **78**, and/or the inner panel **84** could be adapted to provide for a snap insert for the sensing coil **72** therein.

For a coil **72** mounted within the door **78**, the coil **72**, the position/location thereof may be chosen such that any conductive and/or ferromagnetic structural or body elements proximate to the inside side of the coil **72** are relatively rigidly fixed so as reduce electromagnetic influences of these elements on the coil **72**, thereby emphasizing an influence of a crash intrusion from the exterior side of the door **78**. Accordingly, it is beneficial for the coil **72** to be relatively rigidly mounted to within the vehicle **12** so that the amount of relative motion between the coil **72** and any nearby conductive materials is limited when actual metal deformation/intrusion does not occur, for example, as a result of vibration, particularly for conductive materials within about one coil radius of the coil **72**.

The coil **72** would be mounted so as to be responsive to the surface being sensed or monitored. For example, in one embodiment, the coil **72** is mounted a distance within about one coil **72** radius (e.g. for a circular coil **72**) away from the outer skin **90** or target conductive element **80**, **86**, **88** to be monitored. The coil **72** does not require any particular shape, and regardless of the shape, the associated effective sensing distance can be measured experimentally. The particular distance of the coil **72** from the element or surface being sensed will depend upon the particular application. Generally, a range of mounting distances is possible. For example, the coil **72** could be placed relatively close to the element or surface being sensed provide that the coil **72** is not damaged during OFF conditions. Alternatively, the coil **72** could be placed more than one radius away from the element or surface being sensed in order to reduce mechanical abuse susceptibility, provided that the structure of the door **78** provided for relatively greater movement of the outer skin **90** during non-crash, abuse events. Testing has shown that using a bridge circuit in the signal conditioner/preprocessor circuit **114** to improve sensitivity, changes to signal from coil **72** responsive to the element or surface being sensed can be detected even when the distance from the coil **72** to the element or surface being sensed is greater than one radius, however electromagnetic interference may limit the extent to which this extended range may be utilized in some situations.

Generally the coil **72** comprises an element or device that operates in accordance with Maxwell's and Faraday's Laws to generate a first magnetic field **94** responsive to the curl of an associated electric current therein, and similarly to respond to a time-varying first magnetic field **94** coupled therewith so as to generate a voltage or back-EMF thereacross responsive thereto, responsive to the reluctance of the magnetic circuit associated therewith.

The conductive elements **86**, **88** each comprise, for example, a thin metal sheet, film or coating, comprising either a paramagnetic or diamagnetic material that is relatively highly conductive, e.g. aluminum or copper, and which, for example, could be an integral part of the second portion **82** of the door **78**. For example, the conductive elements **86**, **88** could be in the form of relatively thin plates, a film, a tape (e.g. aluminum or copper), or a coating that is mounted on, applied to, or integrated with existing or supplemental structures associated with the door beam **92** and the inside surface of the outer skin **90** of the door **78** respectively.

The frequency of the oscillator **98** is adapted so that the corresponding oscillating magnetic field generated by the at least one coil **72** both provides for generating the associated eddy currents **102** in the conductive elements **86**, **88**, and is magnetically conducted through the ferromagnetic elements of the door **78** and proximate structure of the vehicle **12**.

The at least one coil **72** is responsive to both the first magnetic field **94** generated by the at least one coil **72** and a second magnetic field **104** generated by the eddy currents **102** in the conductive elements **86**, **88** responsive to the first magnetic field **94**. The self-impedance of the coil **72** is responsive to the characteristics of the associated magnetic circuit, e.g. the reluctance thereof and the affects of eddy currents in associated proximal conductive elements. Accordingly, the coil **72** acts as a combination of a passive inductive element, a transmitter and a receiver. The passive inductive element exhibits self-inductance and self resistance, wherein the self-inductance is responsive to the geometry (coil shape, number of conductors, conductor size and cross-sectional shape, and

number of turns) of the coil **72** and the permeability of the associated magnetic circuit to which the associated magnetic flux is coupled; and the self-resistance of the coil is responsive to the resistivity, length and cross-sectional area of the conductors constituting the coil **72**. Acting as a transmitter, the coil **72** generates and transmits a first magnetic field **94** to its surroundings, and acting as a receiver, the coil **72** generates a voltage responsive to a time varying second magnetic field **104** generated by eddy currents in associated conductive elements within the surroundings, wherein the eddy currents are generated responsive to the time varying first magnetic field **94** generated and transmitted by the coil **72** acting as a transmitter. The signal generated by the coil **72** responsive to the second magnetic field **104** received by the coil **72**, in combination with the inherent self-impedance of the coil **72**, causes a complex current within or voltage across the coil **72** responsive to an applied time varying voltage across or current through the coil **72**, and the ratio of the voltage across to the current through the coil **72** provides an effective self-impedance of the coil **72**, changes of which are responsive to changes in the associated magnetic circuit, for example, resulting from the intrusion or deformation of proximal magnetic-field-influencing—e.g. metal—elements.

The at least one coil **72** is operatively coupled to a signal conditioner/preprocessor circuit **114**, which, for example, provides for preamplification, filtering, synchronous demodulation, and analog to digital conversion of the associated signal(s) therefrom, e.g. as described in U.S. Pat. Nos. 6,587,048 and 6,777,927, which is incorporated herein by reference. The signal conditioner/preprocessor circuit **114** is operatively coupled to a processor **116** which processes the signal therefrom, thereby providing for discriminating a crash, and controlling an associated safety restraint actuator **110**—e.g. a side air bag inflator—operatively coupled thereto. More particularly, the signal conditioner/preprocessor circuit **114** provides for determining a measure responsive to the self-impedance of the at least one coil **72** responsive to an analysis of the complex magnitude of the signal from the at least one coil **72**, for example, in relation to the signal applied thereto by the associated oscillator **98**. For example, in one embodiment, the signal conditioner/preprocessor circuit **114**, coil driver **96**, oscillator **98** and processor **108** are incorporated in an electronic control unit **120** that is connected to the at least one coil **72** with standard safety product cabling **122**, which may include associated connectors.

In operation, the magnetic crash sensor **10.1'''** provides a measure of the relative motion of either the outer skin **90** or the door beam **92** relative to the inner panel **84** of the door **78**, for example, as caused by a crushing or bending of the door **78** responsive to a side-impact of the vehicle **12**. During non-crash conditions, an oscillating magnetic field resulting from the combination of the first **94** and second **104** magnetic fields would be sensed by the at least one coil **72**. If an object impacted the outer skin **90** of the door **78** causing a physical deflection thereof, then this oscillating magnetic field would be perturbed at least in part by changes in the second magnetic field **104** caused by movement or deformation of the associated first conductive element **86** and the associated changes in the associated eddy currents **102** therein. If the impact is of sufficient severity, then the door beam **92** and the associated second conductive element **88** would also be moved or deformed thereby, causing additional and more substantial changes in the associated eddy currents **102** in the second conductive element **88** and the corresponding second magnetic field **104**. Generally, the door beam **92** and associated second conductive element **88** would not be perturbed during impacts that are not of sufficient severity to warrant deployment of the associated safety restraint actuator **110**, notwithstanding that there may be substantial associated deformation of the outer skin **90** of the door **78**. Accordingly, in one embodiment, a magnetic crash sensor **10.1'''** might incorporate the second conductive element **88**, and not the first conductive element **86**.

Responsive to a crash with an impacting object of sufficient energy to deform the at least one conductive element **80**, changes to the shape or position of the at least one conductive element **80** relative to the at least one coil **72** affect the magnetic field affecting the at least one coil **72**. A resulting signal is preprocessed by the signal conditioner/preprocessor circuit **114**, which provides for measuring the signal across the at least one coil **72** and provides for measuring the signal applied thereto by the associated coil driver **96**. The signal conditioner/preprocessor circuit **114**—alone, or in combination with another processor **116**—provides for decomposing the signal from the at least one coil **72** into real and imaginary components, for example, using the signal applied by the associated coil driver **96** as a phase reference.

Whereas FIGS. **9** and **10** illustrate a magnetic crash sensor **10.1'''** mounted within a door **78** adapted to detect the deformation thereof responsive to an associated a side impact crash, it should be understood that the magnetic crash sensor **10.1'''** may be adapted to detect the intrusion, deformation, deflection or displacement of any conductive element **80**, e.g. surface, in the vehicle **12** relative to a corresponding relatively fixed at least one coil **72**, for example, for detection of crashes involving other panels or either of the bumpers of the vehicle **12**.

Referring to FIGS. **11***a* and **11***b*, a second embodiment of a coil **14.2** in accordance with the first aspect of the magnetic sensor **10.1** comprises a distributed coil **124** comprising a plurality of coil elements **14** formed with a printed circuit board **126** comprising a dielectric substrate **128** with a plurality of conductive layers **130** on opposing surfaces thereof, wherein each conductive layer **130** is adapted with associated planar conductive patterns **132**, e.g. planar spiral conductive patterns **132'**, for example, defining the associated coil elements L_1', L_2', L_3' as illustrated. For example, the planar conductive patterns **132** on an associated dielectric substrate may be formed by subtractive technology, for example, chemical or ion etching, or stamping; or additive techniques, for example, deposition, bonding or lamination. Adjacent coil elements L_1', L_2', L_3' are located on opposite sides of the dielectric substrate **128**, i.e. in different conductive layers **130**, and are interconnected with on another in series by associated conductive vias **134** extending through the dielectric substrate **128**. The coil elements **14** may be formed in multiple conductive layers **130**, for example, wherein multiple associated dielectric substrates **128** if there were more than two conductive layers **130**. Furthermore, the dielectric substrate **128** can be either rigid or flexible, the latter providing for a set of coil elements **14** adapted to conform to various surface geometries. Notwithstanding the different associated coil elements L_1', L_2', L_3' illustrated in FIG. **11***a* each have the same coil pitch sense, i.e. the same spiral winding sense so that each associated coil element L_1', L_2', L_3' has the same polarity, it should be understood that the distributed coil **124** could be adapted with different coil elements L_1', L_2', L_3' having different associated coil pitch senses.

Referring to FIG. **12**, a third embodiment of a coil **14.3** in accordance with the first aspect of the magnetic sensor **10.1** comprises a distributed coil **124** comprises a plurality of coil elements **14** formed with a printed circuit board **126** comprising a dielectric substrate **128** with a conductive layer **130** on a surface thereof, wherein the conductive layer **130** is adapted

with associated planar conductive patterns **132** defining an associated plurality of plurality of coil elements **14**, each of which comprises substantially one turn with non-overlapping conductors **136**, the plurality of which are connected in series.

Alternatively, the distributed coil **124** may comprise a plurality of coil elements **14**, each comprising a winding of a conductor **136**, e.g. magnet wire, wound so as to form either a planar or non-planar coil, and bonded to the surface of a substrate **138**, wherein the associated coil elements **14** may be either separated from, or overlapping, one another, and the associated windings of a particular coil element **14** may be either overlapping or non-overlapping. The different coil elements **14** may be formed from a single contiguous conductor, or a plurality of conductive elements joined or operative together. The associated distributed coil **124** may comprise multiple layers either spanning across different sides of the substrate **138** or on a same side of the substrate **138**. If the conductor **136** so formed were insulated, e.g. as would be magnet wire, then the substrate **138** could comprise substantially any material that would provide for the associated generation of the associated magnetic field **140** by the plurality of coil elements **14**. Furthermore, the substrate **138** could comprise either a rigid material, e.g. a thermoset plastic material, e.g. a glass-epoxy composite material or a phenolic material; or a flexible material, e.g. a plastic or composite membrane.

The distributed coil **124** in accordance with any of the above-described embodiments may be encapsulated so as to provide for improved reliability and reduced susceptibility to environmental affects. Furthermore, the distributed coil **124** may be combined with some or all of the associated circuitry, e.g. the oscillator **98** and associated signal conditioner/preprocessor circuit **114**, or components thereof, in an associated magnetic sensor module, some or all of which may be encapsulated so as to provide for improved reliability and reduced susceptibility to environmental affects. Alternatively, the distributed coil **124** and associated signal conditioner/preprocessor circuit **114** may be packaged separately.

Referring to FIG. **13**, in a fourth embodiment of a coil **14.4** in accordance with the first aspect of the magnetic sensor **10.1**, the substrate **138** is shaped, e.g. curved, so that different coil elements **14** are aligned in different directions **142**, so as to provide for different magnetic field components **140** being oriented in different directions as necessary to provide for sensing a particular second portion **20**, **82** of a vehicle **12**.

Referring to FIGS. **14***a*, **14***b*, **15***a* and **15***b* one or more different second portions **20**, **82** of the vehicle **12** being sensed may be adapted to cooperate at least one of the plurality of coil elements **14**. For example, referring to FIGS. **14***a*, **14***b*, in accordance with a fifth embodiment of a coil **14.5** in accordance with the first aspect of the magnetic sensor **10.1**, a conductive element **80** is operatively associated with, or a part of, at least a second portion **20**, **82** of the vehicle **12** being sensed so as to cooperate at least one of the plurality of coil elements **14**, for example coil elements L_1', L_2', L_3', so as to either provide for or control associated eddy currents **34**, **102** in the conductive element **80** responsive to the associated magnetic field components **140.1**, **140.2** and **140.3** generated by the associated coil elements L_1', L_2', L_3' proximate thereto. The magnetic axes **144** of the coil elements L_1', L_2', L_3' are oriented so that the associated magnetic field components **140.1**, **140.2** and **140.3** interact with the conductive element **80** so as to generate associated eddy currents **34**, **102** therein in accordance with Lenz's Law. The conductive element **80** comprises, for example, a thin metal sheet, film or coating, comprising, for example, either a paramagnetic or diamagnetic material that is relatively highly conductive, e.g. aluminum or copper, and which, for example, could be an integral part of the associated second portion **20**, **82** of the vehicle **12**. For example, the conductive element **80** could be spray coated onto the surface of the associated second portion **20**, **82** of the vehicle **12**. The frequency of the associated at least one time-varying signal applied to the associated coil elements L_1', L_2', L_3' may be adapted so that the corresponding oscillating magnetic field components **140.1**, **140.2** and **140.3** generated by the coil elements L_1', L_2', L_3' provide for generating the associated eddy currents **34**, **102** in the conductive element **80**. For example, the conductive element **80** could be added to a non-metallic portion **146** of the vehicle **12** so as to provide for magnetic visibility thereof by the associated at least one of the plurality of coil elements **14**.

A conductive element **80** could also be added to a ferrous element **148**, although in order for the affect of the magnetic field component(s) **140** to dominate an affect of a magnetic field within the ferrous element **148**, the associated conductive element **80** would need to be thick enough or conductive enough to prevent the original transmitted magnetic field component(s) **140** from penetrating though to the ferrous element **148** on the other side of the conductive element **80**, whereby eddy currents **34**, **102** in the conductive element **80** would completely cancel the magnetic field at some depth of penetration into the conductive element **80**. For example, for a superconducting conductive element **80**, there would be no penetration of the magnetic field component(s) **140** into the conductive element **80**. Although the depth of penetration of the first magnetic field **26**, **94** increases as the conductivity of the conductive element **80** decreases, an aluminum or copper conductive element **80** would not need to be very thick (e.g. 2.5 mm or less) in order to substantially achieve this affect. The depth of penetration of magnetic fields into conductive elements **80** is known from the art using eddy currents for non-destructive testing, for example, as described in the technical paper eddyc.pdf available from the internet at http://joe.buckley.net/papers, which technical paper is incorporated herein by reference. Generally, if the thickness of the conductive element **80** exceeds about three (3) standard depths of penetration at the magnetic field frequency, then substantially no magnetic field will transmit therethrough. Responsive to a crash with an impacting object of sufficient energy to deform or translate the conductive element **80**, changes to the shape or position thereof relative to at least one of the coil elements L_1', L_2', L_3' affects at least one of the associated magnetic field components **140.1**, **140.2** and **140.3**, which affect is detected by an associated signal conditioner/preprocessor circuit **114** operatively coupled to the coil elements L_1', L_2', L_3' as described hereinabove.

The conductive element **80** may comprise a pattern **150** adapted to control associated eddy currents **34**, **102** therein. For example, the conductive element **80** may be adapted by either etching, forming (e.g. which a sheet metal forming tool), coating (e.g. with an E-coat process), or machining the pattern **150** in or on a surface thereof so as to control, e.g. limit, the associated eddy currents **34**, **102**. The format, depth, and distribution of the pattern **150** can be optimized to provide optimal sensing resolution for a given operating frequency. The conductive element **80** could be designed so that the movement or deformation thereof is highly visible to at least one of the plurality of coil elements **14** so as to increase the confidence of a timely associated crash or proximity detection. Each portion of the pattern **150** extends through at least a portion of the conductive element **80** so as to provide for blocking or impeding eddy currents **34**, **102** thereacross, so that the associated eddy currents **34**, **102** become primarily confined to the contiguous conductive portions **152** therebe-

tween or thereunder. For example, the pattern **150** may adapted to a frequency of the at least one time-varying signal.

Referring to FIGS. **15***a* and **15***b*, in accordance with a sixth embodiment of a coil **14.6** in accordance with the first aspect of the magnetic sensor **10.1**, a conductive portion **154** of at least one of the portions **20**, **76**, **82** of the vehicle **12**—for example, an inner surface of a body of the vehicle **12**—adapted to cooperate with the plurality of coil elements **14** comprises a pattern **150** adapted to control associated eddy currents **34**, **102** therein. The magnetic axes **144** of the coil elements L' are oriented so that the associated magnetic field components **140** interact with the conductive portion **154** so as to generate associated eddy currents **34**, **102** therein in accordance with Lenz's Law. The conductive portion **154** may be adapted, for example, by either etching, forming (e.g. which a sheet metal forming tool), coating (e.g. with an E-coat process), or machining a pattern **150** in or on a surface thereof so as to control, e.g. limit, the associated eddy currents **34**, **102** therein. The format, depth, and distribution of the pattern **150** can be optimized to provide optimal sensing resolution for a given operating frequency. For example, a deterministic pattern **150'**, such as the grid-etched pattern illustrated in FIG. **15***b* may provide for distinguishing the associated portions **20**, **76**, **82** of the vehicle **12** responsive to displacement or deformation thereof. Each portion of the pattern **150** extends through at least a portion of the conductive portion **154** so as to provide for blocking or impeding eddy currents **34**, **102** thereacross, so that the associated eddy currents **34**, **102** become primarily confined to the contiguous conductive portions **156** therebetween or thereunder. For example, the pattern **150** may adapted to a frequency of the at least one time-varying signal.

A conductive element **158** is adapted to cooperate with at least one of the plurality of coil elements **14** so as to provide for shaping, controlling or limiting at least one the associated magnetic field components **140**. For example, referring to FIG. **16**, in accordance with a seventh embodiment of a coil **14.7** in accordance with the first aspect of the magnetic sensor **10.1**, at least one coil **14** is operatively coupled to a first side **160** of a substrate **138**, and the conductive element **158** comprises a conductive layer **158'**, e.g. a conductive film or plate spanning a portion of the opposite, second side **162** of the substrate **138**, for example, as could be embodied with a printed circuit board **126**. The conductive element **158** is relatively fixed with respect to the at least one coil **14** and provides for effectively shielding the at least one coil **14** proximate thereto from interference from proximate metal objects on the second side **162** of the substrate **138**, so as to effectively provide for a non-sensing side **164** of the at least one coil **14** so shielded. The shielding action of the conductive element **158** results from eddy currents **34**, **102** that are induced therein by the associated magnetic field components **140** of the associated at least one coil **14**. The conductive layer **158'** could also be used to provide for shielding the at least one coil **14** from being responsive to localized deformations or intrusions of portions **20**, **76**, **82** of the vehicle **12** proximate thereto, for an at least one coil **14** adapted, either individually or in cooperation with another coil or magnetic sensing element, so as to provide for detecting changes to an associated magnetic circuit **68** over a relatively broad associated sensing area, without interference from localized deformations or intrusions, for example, in cooperation with the second aspect of the magnetic crash sensor **10.2** described hereinabove, or with embodiments disclosed in U.S. Pat. Nos. 6,777,927, 6,587,048, 6,586,926, 6,583,616, 6,631,776, 6,433,688, 6,407,660, each of which is incorporated herein by reference.

As another example, referring to FIGS. **17***a* and **17***b*, in accordance with an eighth embodiment of a coil **14.8** in accordance with the first aspect of the magnetic sensor **10.1**, at least a portion of the conductive element **158** may be adapted to control or mitigate against eddy currents **34**, **102** therein. For example, the conductive element **158** may be adapted, for example, by either etching, forming (e.g. with a sheet metal forming tool), or machining a pattern **150** in or on a surface thereof so as to control, e.g. limit, the associated eddy currents **34**, **102** therein. The format, depth, and distribution of the pattern **150** can be optimized to provide optimal sensing resolution for a given operating frequency. Each portion of the pattern **150** extends through at least a portion of the conductive element **158** so as to provide for blocking or impeding eddy currents **34**, **102** thereacross, so that the associated eddy currents **34**, **102** become primarily confined to the contiguous conductive portions **156** therebetween or thereunder. For example, the pattern **150** may adapted to a frequency of the at least one time-varying signal. Furthermore, the depth of the pattern **150** may adapted so that a plurality of contiguous conductive portions **156** are electrically isolated from one another.

Referring to FIG. **18**, in accordance with a third aspect of a magnetic sensor **10.3** incorporated in a vehicle **12**, at least one first coil **14** is located at a corresponding first location **166** of a body **168** of the vehicle **12**. For example, the first coil **14** could be located around the striker **170.1** of the door latch assembly **172.1** of the front door **78.1**, operatively coupled to the B-pillar **174** of the vehicle **12**, or around a striker **170.2** of the door latch assembly **172.2** of the rear door **78.2** operatively coupled to the C-pillar **175** of the vehicle **12**, or around a hinge **176** of a door **78**, e.g. the front door **78.1**. The at least one first coil **14** may also be located within a gap **178** between a fixed body structure and a door **78**, e.g. the front door **78.1**. Although FIG. **18** illustrates this first coil **14** located between the front edge **180** of the front door **78.1** and an adjacent edge **182** of the A-pillar **184**, this first coil **14** could be located elsewhere in the gap **178** between either the front **78.1** or rear **78.2** door and the fixed body structure of the vehicle **12**.

The at least one first coil **14** is operatively coupled to a corresponding coil driver **28**, **56**, **96**, which is in turn operatively coupled to an oscillator **30**, **58**, **98**, wherein an oscillatory signal from the oscillator **30**, **58**, **98** is applied by the coil driver **28**, **56**, **96** so as to cause an associated current in the first coil **14**, responsive to which the first coil **14** generates a magnetic field **26**, **140** comprising magnetic flux **186** in associated first **188.1** and second **188.2** magnetic circuits. The oscillator **30**, **58**, **98** generates a oscillating signal, for example, having either a sinusoidal, square wave, triangular or other waveform shape, of a single frequency, or a plurality of frequencies that are either stepped, continuously swept or simultaneous. The frequency is adapted so that the resulting magnetic field **26**, **140** is conducted through the first **188.1** and second **188.2** magnetic circuits. For example, the oscillation frequency would typically be less than about 50 KHz for a steel structure, e.g. 10 to 20 KHz in one embodiment. The magnetic field **26**, **140** is responsive to the reluctance $\mathcal{R}$ of the associated first **188.1** and second **188.2** magnetic circuits, which is affected by a crash involving the elements thereof and/or the gaps **178** therein. The magnetic flux **186** propagates within the associated magnetically permeable material of the first **188.1** and second **188.2** magnetic circuits. The doors **78.1**, **78.2** are isolated from the remainder of the vehicle **12**, e.g. the frame, by the gaps **178** therebetween, except where the hinges **176** and door latch assemblies **172.1**, **172.2** provide relatively lower reluctance paths therebetween.

The at least one first coil **14** can each be used alone in a single-port mode to both generate the magnetic flux **186** and to detect a signal responsive thereto, and may also be used in cooperation with one or more magnetic sensors **190** in a multi-port mode. For example, one or more first coils **14** at corresponding first locations **166** can be used in cooperation with a plurality of magnetic sensors **190.1**, **190.2** at a corresponding plurality of second locations **192.1**, **192.2** of the vehicle **12**. For example, for a first coil **14** located around the striker **170.1** of the door latch assembly **172.1** of the front door **78.1**, in one embodiment, the magnetic sensors **190.1**, **190.2** comprise a second coil **194** around a hinge **176** of the front door **78.1**, and a third coil **196** around a striker **170.2** of the door latch assembly **172.2** of the rear door **78.2** and the striker **170.2** of the door latch assembly **172.2** of the rear door **78.2** is operatively coupled to the C-pillar **175** of the vehicle **12**. The second **194** and third **196** coils surround metallic elements of the associated first **188.1** and second **188.2** magnetic circuits, and the magnetic flux **186** propagating within the associated magnetically permeable material of the first **188.1** and second **188.2** magnetic circuits also flows through the second **194** and third **196** coils surrounding the associated magnetically permeable material. The second **194** and third **196** coils generate voltage signals responsive to the oscillating magnetic flux **186**, or component thereof, directed along the axis of the second **194** and third **196** coils respectively, in accordance with Faraday's law of magnetic induction.

In operation in accordance with a single-port mode, a time varying signal **198** is generated by a signal source **200**, for example, and oscillator or a pulse generator, and applied to the at least one first coil **14** by an associated coil driver **202**. For example, an oscillatory signal source **200** would function similar to that described hereinabove for any of oscillators **30**, **58** and **98**, and the coil driver **202** would function similar to that described hereinabove for any of coil drivers **28**, **56** and **96**, depending upon the particular application. The two leads of the at least one first coil **14** define a port A_i, which is also connected to an associated signal conditioner/preprocessor circuit **114** which processes a signal associated with the at least one first coil **14**, the signal being responsive to the time varying signal **198** applied thereto, and responsive to the self-impedance of the associated at least one first coil **14**. As disclosed more fully hereinbelow, the coil driver **202** can be incorporated into the circuitry of the associated signal conditioner/preprocessor circuit **114**. The at least one first coil **14** generates a magnetic field **26**, **140** in and throughout the associated magnetic circuit **188.1**, **188.2**, responsive to the time varying signal **198** applied thereto. For example, for an at least one first coil **14** located within a gap **178** between a fixed body structure and a proximal surface of another element of the body provides for detecting a relative movement between the fixed body structure and the proximal surface, responsive to a crash, for example, responsive to an intrusion of the proximal surface relative to the fixed body structure.

In a two-port mode, one or more associated magnetic sensors **190**, **190.1**, **190.2** at respective second locations **192.1**, **192.2** are operatively coupled at a port B_j to a corresponding one or more signal conditioner/preprocessor circuits **40**, which provide for generating a signal responsive to the magnetic field **26**, **140** at the corresponding one or more second locations **192.1**, **192.2**.

The signal conditioner/preprocessor circuit(s) **114**, **40** are operatively coupled to an associated processor **204**, and provide for conditioning the associated signal(s) from the at least one first coil **14** and one or more associated magnetic sensors **190**, **190.1**, **190.2**. The signal conditioner/preprocessor circuit(s) **114**, **40** demodulate the signal(s) from the associated at least one first coil **14** or one or more associated magnetic sensors **190**, **190.1**, **190.2** with an associated demodulator, and converts from analog to digital form with an associated analog-to-digital converter which is sampled and input to the processor **204**. The signal conditioner/preprocessor circuit(s) **114**, **40** may also provide for amplification. Changes to the magnetic field **26**, **140** at a particular location in the first **188.1** and second **188.2** magnetic circuits propagate therewithin at the speed of light and are seen therethroughout. Accordingly, the magnetic field **26**, **140** sensed by the at least one first coil **14**, and possibly by one or more associated magnetic sensors **190.1**, **190.2**, contains information about the nature of the remainder of the magnetic circuit, including the front **78.1** and rear **78.2** doors and the adjacent A-pillar **184**, B-pillar **174** and C-pillar **175**, any of which could be involved in, or affected by, a crash, responsive to which the processor **204** provides for detecting the crash and controlling a safety restraint actuator **44** responsive thereto. In FIG. **18**, the ports of the various first coils **14** and magnetic sensors **190** illustrated therein are labeled as "A or B" to indicate that that particular first coil **14** or magnetic sensor **190** could be connected to either of ports port A_i or B_j of the associated signal processing circuitry, depending upon the particular sensing configuration, provided that at least one first coil **14** is connected to a corresponding at least one port A_i. For example, the system could be configured to operate with only one or more first coils **14** in a single-port mode, for example, as disclosed herein, or in accordance with U.S. Pat. Nos. 6,587,048, 6,583,616 or 6,433,688, each of which is incorporated herein by reference. Alternatively, the system could be configured to also operate with one or more associated magnetic sensors **190.1**, **190.2** in a multi-port mode, for example, in accordance with U.S. Pat. Nos. 6,777,927, 6,586,926, 6,631,776 or 6,433,688, each of which is incorporated herein by reference.

Referring to FIG. **19**, the fragmentary view **1900** of the A-pillar **184** and front door **78.1** from FIG. **18** is illustrated in greater detail, illustrating several possible embodiments of the at least one first coil **14** in greater detail, two of which comprise a gap coil **206** that is sufficiently small to be located within the gap **178** between the A-pillar **184** and the front door **78.1**. The gap coil **206** of the at least one first coil **14** is not necessarily constrained to surround existing magnetic permeable components of the first **188.1** or second **188.2** magnetic circuits, so as to provide for placement of the gap coil **206** in locations without being adversely constrained by the geometries or functions of proximate elements of the vehicle **12**. The gap coil **206** is wound around an associated spool **208** which is fastened to the fixed structure of the vehicle, e.g. the edge **182** of the A-pillar **184** facing the front edge **180** of the front door **78.1**. The gap coil **206** can be oriented to as to optimize the signal-to-noise ratio of the signal generated thereby responsive to a crash or other disturbance to be monitored.

For example, in a ninth embodiment of a coil **14.9**, the axis **210** of the gap coil **206** is substantially perpendicular to the edge **182** of the A-pillar **184** and to the front edge **180** of the front door **78.1** when the front door **78.1** is closed. The coil **14.9** is attached to the A-pillar **184** with a fastener **212** through the associated spool **208**, e.g. a socket head screw **212.1** through a counterbore in the spool **208**. The magnetic permeability of the fastener **212** can be adapted in accordance with the sensing or field generating requirements of the associated gap coil **206**. For example, the fastener **212** associated with the coil **14.9** is substantially aligned with the axis **210** of the gap coil **206**, so that a fastener **212** of a material with a relatively high permeability, e.g. carbon steel or electrical

steel, will tend to concentrate the magnetic flux **186** through the gap coil **206**, whereas a fastener **212** of a material with a relatively low permeability, e.g. stainless steel, aluminum or brass, will tend to emulate an air core so that the coil **14.9** has less of a tendency to perturb the associated first **188.1** or second **188.2** magnetic circuit. As another example, in a tenth embodiment of a coil **14.10**, the axis **210** of the gap coil **206** is substantially parallel to the edge **182** of the A-pillar **184** and to the front edge **180** of the front door **78.1**, so as to be substantially aligned with the length of the associated gap **178**. The coil **14.10** is shown attached to the A-pillar **184** with a fastener **212** through a flange that depends from the associated spool **208**.

FIG. **19** also illustrates an embodiment of the at least one first coil **14** around a hinge **176** of the front door **78.1**. Referring to FIG. **20**, the at least one first coil **14** can be located at various first **166'**, **166"**, **166"** or second **192.1'**, **192.1"**, **192.1'"** locations relative to the hinge **176**. For example, in one embodiment, the first **166'** or second **192.1'** location is on around a portion of the hinge plate **176.1** that attaches to the fixed vehicle structure, e.g. the A-pillar **184** or B-pillar **174**, at a location between the A-pillar **184** or B-pillar **174** and the hinge joint **176.2**. In another embodiment, the first **166"** or second **192.1"** location is on around a portion of the hinge plate **176.1** that attaches to the fixed vehicle structure, e.g. the A-pillar **184** or B-pillar **174**, at a location where the hinge plate **176.1** is bolted to the A-pillar **184** or B-pillar **174**. In yet another embodiment, the first **166'"** or second **192.1'"** location is on around a portion of the hinge plate **176.3** that attaches to the front **78.1** or rear **78.2** door, at a location between the front edge **180** of the front **78.1** or rear **78.2** door and the hinge joint **176.2**.

Referring to FIG. **21**, a gap coil **206** may be mounted on the B-pillar **174** or C-pillar **175** on an outward facing surface **214** in the gap **178** between the outward facing surface **214** and a corresponding proximate inward facing surface **216** of the front **78.1** or rear **78.2** door respectively. In the embodiment illustrated in FIG. **21**, the gap coil **206** is secured to the outward facing surface **214** with a flat head screw **212.2** through the spool **208** around which the coil is wound. The gap coil **206** illustrated in FIG. **21** is responsive to changes in reluctance of the associated first **188.1** or second **188.2** magnetic circuit responsive to the door opening state of the associated front **78.1** or rear **78.2** door and accordingly can be used to generate a signal indicative thereof, e.g. so as to provide for discriminating between a closed door, a partially latched door and an open door.

Referring to FIG. **22**, a gap coil assembly **218** comprises a gap coil **206** wound around a spool **208**, both of which are encapsulated in an encapsulant **220**, e.g. a silicone potting compound, so as mitigate against environmentally induced degradation. The gap coil **206** for example, is wound of wire, e.g. 20 to 50 gauge enamel coated conductive wire, e.g. copper or aluminum. The spool **208** is, for example, made of a relatively rigid material such as plastic or aluminum.

Referring to FIG. **23**, the gap coil assembly **218** can further comprise a core **222** of a material having relatively high magnetic permeability such as ferrite, mu-metal, or amorphous metal, e.g. METGLAS®.

The gap coil assemblies **218** illustrated in FIGS. **22** and **23** can be mounted, for example, by bonding or clamping. Referring to FIG. **24**, the gap coil assembly **218** is mounted with a fastener **212**, e.g. a cap screw **212.3** and washer **224**, through a central mounting hole **226** in the spool **208**. The material and dimensions of the fastener **212** would be selected according to the particular application. A material having relatively high magnetic permeability such as carbon steel or electrical steel could be used to concentrate the associated magnetic flux **186** through the gap coil **206**, whereas a material of relatively low magnetic permeability such as aluminum, brass or stainless steel could be used to emulate an air core, thereby having less influence on the inherent flow of magnetic flux **186** across the associated gap **178** within which the gap coil assembly **218** is located.

Referring to FIG. **25**, the gap coil assembly **218** is mounted with a fastener **212**, e.g. a socket head screw **212.1**, and further incorporates a magnetically permeable core **228** comprising a shouldered sleeve **230** that is recessed within the central mounting hole **226** in the spool **208**. For example, the magnetically permeable core **228** can comprise either carbon steel, electrical steel, mu-metal, ferrite, or amorphous metal, e.g. METGLAS®. The length of the shouldered sleeve **230** can be adjusted in relation to the associated gap **178** in which the gap coil assembly **218** is mounted depending upon the extent of associated magnetic focusing required.

Referring to FIGS. **26***a* and **26***b*, modeling and test results suggest that eddy currents I_E are produced on the surface of steel pins or fasteners **212**, strikers **170.1**, **170.2**, and hinges **176**, wherein the eddy currents I_E oscillate longitudinally along the associated steel core **232**, producing an associated circumferential magnetic field B_E surrounding the axes of the associated steel core **232**. Referring to FIGS. **27** and **28**, a toroidal helical coil **234** provides for generating a voltage signal V responsive to the associated oscillating circumferential magnetic field B_E in accordance with Faraday's Law, responsive to which an associated current signal I is generated when the toroidal helical coil **234** is connected to an associated circuit, e.g. a signal conditioner/preprocessor circuit **114**. The toroidal helical coil **234** comprises a conductive path **236**, e.g. a winding of conductive wire **236.1**, e.g. copper or aluminum wire, around a toroidal core **238**. Although the toroidal core **238** is illustrated in FIGS. **27** and **28** as having a circular shape (FIG. **27**) and a uniform circular cross section (FIG. **28**)—i.e doughnut shaped—, in general the, the toroidal core **238** can have any closed shape with any cross-sectional shape, either uniform or not. For example, the toroidal core **238** could have a rectangular cross-section, similar to that of a washer. The toroidal core **238** comprises a major axis M and a minor axis m, wherein the conductive path **236** makes at least one turn around the minor axis m, and at least one turn around the major axis M. For example, in the embodiment illustrated in FIG. **27**, the conductive path **236** makes a plurality of turns around the minor axis m, and a single turn around the major axis M. The at least one turn around the minor axis m provides for generating a component of the voltage signal V responsive to an oscillating circumferential magnetic field B_E, and the at least one turn around the major axis M provides for generating a component of the voltage signal V responsive to an oscillating axial magnetic field Bc, the latter of which is illustrated in FIGS. **26***a* and **26***b*. Accordingly, the toroidal helical coil **234** can be used to sense both axial Bc and circumferential B_E magnetic fields. The doughnut-shaped toroidal core **238** illustrated in FIGS. **27** and **28** comprises a major radius R, a minor radius r, and an associated outside b and inside a radii and a minor diameter **2***r*, and may be constructed of either a ferromagnetic or a non-ferromagnetic material, depending upon the application, i.e. whether or not it is necessary to concentrate circumferential magnetic flux within the toroidal core **238**. For example, referring to FIG. **28**, a toroidal helical coil assembly **240** comprises a toroidal helical coil **234** encapsulated in an encapsulant **220** about a central mounting hole **226** adapted to receive an associated fastener **212**, e.g. a cap screw **212.3**. The modeling and testing done with a toroidal helical coil **234**

suggests that the eddy currents I_E (and therefore the associated circumferential magnetic field B_E) are substantially enhanced when the steel core **232** associated with the toroidal helical coil **234** is electrically connected to the front **78.1** or rear **78.2** doors and/or the vehicle frame, whereby an electrical connection to both, e.g. via a hinge **176**, is beneficial. Tests have indicated that a stronger signal may be obtained when using a toroidal helical coil **234** instead of a circular wound gap coil **206** at a location otherwise suitable for a gap coil assembly **218**.

The signal from the signal conditioner/preprocessor circuit **114** responsive to the at least one coil **14** may be used to detect changes to the associated magnetic circuit **188** to which the at least one coil **14** is operatively associated. Generally, the changes to the associated magnetic circuit **188** comprise a combination of effects, including 1) changes to the reluctance $\mathcal{R}$ of the magnetic circuit **188** to which the at least one coil **14** is magnetically coupled, and 2) eddy currents **34**, **102** induced in a proximal conductive element **88** responsive to a first magnetic field **26**, **94** generated by the at least one coil **14**, which generate a first magnetic field **26**, **94** in opposition to the first magnetic field **26**, **94**, thereby affecting the self-induced voltage in the at least one coil **14**.

Referring to FIG. **29**, a particular coil element L' is driven by an oscillatory time-varying voltage signal v operatively coupled thereto through an associated sense resistor R_S. The oscillatory time-varying voltage signal v generates an associated oscillatory current i in the associated series circuit **242** which generates an associated magnetic field component **140** that interacts with an associated second portion **20**, **82** of the vehicle **12**. If the associated second portion **20**, **82** of the vehicle **12** is conductive, then the associated magnetic field component **140** interacting therewith will generate associated eddy currents **34**, **102** therein in accordance with Faraday's Law of induction. The direction of the associated eddy currents **34**, **102** is such that the resulting associated eddy-current-induced magnetic field component **38**, **104** opposes the associated magnetic field component **140** generated by the current i in the coil element L'. If the associated second portion **20**, **82** of the vehicle **12** is not perfectly conductive, then the eddy currents **34**, **102** will heat the associated conductive material resulting in an associated power loss, which affects the relative phase of the eddy-current-induced magnetic field component **38**, **104** relative to the phase of the oscillatory time-varying voltage signal v. Furthermore, a ferromagnetic associated second portion **20**, **82** of the vehicle **12** interacting with the associated magnetic field component **140** can affect the self-inductance L of the associated coil element L'.

Referring to FIGS. **30** and **31**, the impedance Z of the coil element L' is illustrated as a function of the transverse position x of the coil element L' relative to a crack **244** extending into in a conductive second portion **20**, **82** of the vehicle **12**, for various crack depths d, with the coil element L' at a constant distance y from the conductive second portion **20**, **82** of the vehicle **12**, wherein the distance y is the length of the gap between the coil element L' and the surface of the conductive second portion **20**, **82** of the vehicle **12**. In FIG. **31**, the inductive reactance X_L and resistance R_L components of impedance Z of the coil element L' are plotted in the complex plane as a function of transverse position x for families of crack depth d, wherein the resistance R_L of the coil element L' is responsive to a component of the current i that is in-phase with respect to the associated time-varying voltage signal v, and the inductive reactance X_L of the coil element L' is responsive to a component of the current i that is in quadrature-phase with respect to the associated time-varying voltage signal v. Relative to the nominal impedance $Z_0=(X_0, R_0)$ of the coil element L', corresponding to a negligible perturbation from the crack **244**, the effective inductive reactance X_L of the coil element L' increases, and the effective resistance R_L decreases, with increasing crack depth d and with increasing proximity to the crack **244** (i.e. decreasing transverse (x) distance with respect to the crack **244**). The eddy-current-induced magnetic field component **38**, **104** opposing the magnetic field component **140** responsive to the current i therein causes the nominal decrease in the effective impedance Z of the coil element L' relative to free-space conditions, and the crack **244** disrupts of the eddy currents **34**, **102** in the conductive second portion **20**, **82** of the vehicle **12** causing a resulting increase in effective impedance Z. Similarly, the effective impedance Z of the coil element L' is a function of the distance y from, and the magnetic and conductive properties of, the conductive second portion **20**, **82** of the vehicle **12**. The at least one coil **14** provides for substantially generating a corresponding at least one measure responsive to the impedance Z of each associated coil element L', which provides for detecting an associated change in the magnetic condition of the vehicle **12** over or within an associated sensing region associated with the at least one coil element **14**, which is responsive to changes in the gap distance y to the associated proximate second portion **20**, **82** of the vehicle **12**, and responsive to changes in the magnetic and conductive properties thereof and to changes in the reluctance $\mathcal{R}$ of the associated magnetic circuit **188**.

The signal conditioner/preprocessor circuit **114** provides for detecting the impedance Z of at least one of the plurality of coil elements **14**, or of a combination or combinations thereof. For example, referring to FIG. **32**, a Maxwell-Wien bridge **246** may be used to measure the inductive reactance X_L and resistance R_L components of impedance Z of a coil element L' or a combination of the coil elements L'. Alternatively, the signal conditioner/preprocessor circuit **114**, provides for measuring at least one signal across a coil element L' or a combination of the coil elements L' and provides for measuring the signal applied thereto by the associated coil driver **202**. The signal conditioner/preprocessor circuit **114**—alone, or in combination with the processor **204**, provides for decomposing the signal from the coil element L' or a combination of the coil elements L' into real and imaginary components, for example, using the signal applied by the associated coil driver **202** as a phase reference.

The coil element L', or a combination of the coil elements L', is/are magnetically coupled, either directly or indirectly, to at least a portion of the vehicle **12** susceptible to deformation responsive to a crash, wherein changes thereto (e.g. deformation thereof) responsive to a crash affects the reluctance $\mathcal{R}$ of the associated magnetic circuit **68**, **188**, and/or induces eddy currents **34**, **102** in an associated proximal conductive element **18**, either of which affects the current i in the coil element L', or a combination of the coil elements L', detection of which provides for detecting the resulting associated change in the magnetic condition of the vehicle **12** associated with the deformation of the associated portion of the vehicle **12** responsive to the crash.

Referring to FIG. **33**, a coil **14** of a magnetic crash sensor **10.1**, **10.1'**, **10.1"**, **10.1'"** or **10.3** is illustrated in proximity to a proximal conductive element **80** located a distance x from the coil **14** and subject to a crash-responsive movement **248** relative to the coil **14**. The coil **14** driven with a time-varying current source **250** generates a first magnetic field **26**, **94** which induces eddy currents **34**, **102** in the conductive element **80**, which in turn generate a second magnetic field **38**, **104**. A voltage signal V is generated across the coil **14** respon-

sive to the self-inductance L and intrinsic resistance R_L thereof, and responsive to induction from the second magnetic field **38**, **104**. Referring to FIG. **34**, the phasor value of the resulting complex voltage signal V can be decomposed into a first signal component **252** given by

$$C_1+C_2\cdot x \tag{1}$$

which includes a bias component C_1 and a displacement component $C_2\cdot x$ responsive to static displacement x of the conductive element **80** relative to the coil **14**; and a second signal component **254** given by:

$$C_3\cdot\frac{\partial x}{\partial t} \tag{2}$$

which is responsive to the velocity of the conductive element **80** relative to the coil **14**, wherein the phasor phase values of the first **252** and second **254** signal components are referenced with respect to the drive current signal I_{dr} applied by the time-varying current source **250** and are orthogonal with respect to one another in the complex plane. It is hypothesized that the velocity dependent second signal component **254** is related to the momentum transferred to the vehicle **12** by the object or other vehicle in collision therewith, and that the displacement component C2·x is related to the energy absorbed by the vehicle **12** during the crash, wherein relatively soft vehicles **12** would tend to absorb relatively more energy and would tend to produce relatively more low frequency signals, and relatively stiff vehicles **12** would tend to receive relatively more momentum and would tend to produce relatively more high frequency signals. Furthermore, the real component **256** of the complex voltage signal V is related to the resistive losses in the coil **14** or the eddy current losses in the conductive element **80**, whereas the imaginary component **258** is related to the self-inductance of the coil **14** which is responsive to the permeability of the magnetic elements inductively coupled therewith.

Referring to FIG. **35**, in accordance with a first aspect of a signal conditioning circuit **294**, the coil **14** is in series combination with a balanced pair of sense resistors R_{S1}, R_{S2} in a series circuit **242** is driven by a coil driver **28**, **56**, **96** fed with a time varying signal **198** from an oscillator **30**, **58**, **98**, wherein a first terminal of a first sense resistor R_{S1} is coupled at a first node **260** of the series circuit **242** to a first output terminal **262** of the coil driver **28**, **56**, **96**, a second terminal of the first sense resistor R_{S1} is coupled at a second node **264** of the series circuit **242** both to a first sense terminal **266** of the coil driver **28**, **56**, **96** and to a first terminal of the coil **14**, a second terminal of the coil **14** is coupled at a third node **268** of the series circuit **242** both to a second sense terminal **270** of the coil driver **28**, **56**, **96** and to a first terminal of a second sense resistor R_{S2}, and a second terminal of the second sense resistor R_{S2} is coupled at a fourth node **272** of the series circuit **242** to a second output terminal **274** of the coil driver **28**, **56**, **96**. For example, the time varying signal **198** is sinusoidal having a frequency between 10 KHz and 100 KHz, and is DC biased with a common mode voltage so a to provide for operation of the associated circuitry using a single-ended power supply. The AC signals of the outputs from the first **262** and second **274** output terminals of the coil driver **28**, **56**, **96** are of opposite phase with respect to one another, and the coil driver **28**, **56**, **96** is adapted so as to control these output signals so that the peak-to-peak AC voltage V_L across the coil **14** sensed across the first **266** and second **270** sense terminals of the coil driver **28**, **56**, **96** is twice the peak-to-peak AC voltage V_{AC} of the oscillator **30**, **58**, **98**. The coil driver **28**, **56**, **96** is further adapted to substantially null any DC current component through the coil **14** so as to prevent a magnetization of the vehicle **12** by the first magnetic field **26**, **94** generated by the coil **14**. The first **260**, second **264**, third **268** and fourth **272** nodes, having corresponding voltages V_1, V_2, V_3 and V_4 respectively, are coupled to input resistors R_1, R_2, R_3 and R_4 of a summing and difference amplifier **276** implemented with an operational amplifier **278**, a resistor R_5 from the non-inverting input **280** thereof to a DC common mode voltage signal V_{CM} and to a ground through a capacitor C_G, thereby providing for an AC ground, and a resistor R_6 between the inverting input **282** and the output **284** thereof, wherein input resistors R_1 and R_3 are coupled to the non-inverting input **280**, and input resistors R_2 and R_4 are coupled to the inverting input **282**.

The first **266** and second **270** sense terminals of the coil driver **28**, **56**, **96** are of relatively high impedance, so that the first R_{S1} and second R_{S2} sense resistors and the coil **14** each carry substantially the same current I from the coil driver **28**, **56**, **96**. The voltage V_{out} at the output **284** of summing and difference amplifier **276** is given as:

$$V_{out}=(V_1-V_4)-(V_2-V_3)=I\cdot(R_{S1}+R_{S2}) \tag{3}$$

which is equal to the total voltage drop across the sense resistors R_{S1}, R_{S2}, which provides a measure of the current through the coil **14**. Accordingly, given that the voltage V_L across the coil **14** is controlled to a value of twice the peak-to-peak AC voltage V_{AC} of the oscillator **30**, **58**, **98**, and is therefore known, the measure of current I through the coil **14**—responsive to V_{out}—can be used in combination with the known voltage V_L across the coil **14**, to determine the self-impedance Z of the coil **14**. Alternatively, the current I through the coil **14** can be demodulated into in-phase I and quadrature-phase Q components phase-relative to the sinusoidal time varying signal **198** of the oscillator **30**, **58**, **98** so as to provide substantially equivalent information, wherein the in-phase component I provides a measure of the effective resistance R of the coil **14**, and the quadrature-phase component Q provides a measure of the effective impedance Z of the coil **14**. In accordance with this latter approach, the output **284** of the summing and difference amplifier **276** is filtered by a low-pass filter **286**, converted from analog to digital form by an analog-to-digital converter **288**, and demodulated into the in-phase I and quadrature-phase Q components by a demodulator **290** which is phase-referenced to the time varying signal **198** of the oscillator **30**, **58**, **98**.

The in-phase I and/or quadrature-phase Q component, individually or in combination, is/are then processed by a crash sensing algorithm **292** in the processor **108**, **204** to provide for discriminating or detecting crash events that are sufficiently severe to warrant the deployment of the safety restraint actuator **44**. For example, in one set of embodiments, the in-phase component I, possibly in combination with the quadrature-phase Q component, is processed to provide for discriminating or detecting crash events that are sufficiently severe to warrant the deployment of the safety restraint actuator **44**. Alternatively, the in-phase component I, possibly in combination with the quadrature-phase Q component, may be used to provide a safing signal to prevent the actuation of a safety restraint actuator **44** absent a crash of sufficient severity to warrant a possible deployment thereof.

Referring to FIG. **36**, the self-impedance Z_L of a coil **14**, L', or the associated self-resistance R_L or self-inductance L_L thereof, may be determined using a first embodiment of a signal conditioning circuit **294.1** wherein a time-varying volt-

age V_{AC} is applied by an oscillator **296** across the series combination of a sense resistor R_S and the coil **14**, L'. The current i_L through the series combination, and therefore through the coil **14**, L', is given by the ratio of the complex or phasor voltage V_R across sense resistor R_S, divided by the value R_S of the sense resistor R_S, wherein the voltage V_R is measured as either a magnitude and a phase relative to the applied time varying voltage V_{AC}, or by demodulation into in-phase I and quadrature-phase Q components relative to the applied time varying voltage V_{AC}. The self-impedance Z_L of the coil **14**, L' is then given from Ohms Law as the ratio of the voltage V_L across the coil **14**, L', i.e. $V_L=V_{AC}-V_R$, divided by the current i_L through the coil **14**, L', or:

$$Z_L = \frac{R_S \cdot V_L}{V_R} = \frac{R_S \cdot (V_{AC} - V_R)}{V_R} \tag{4}$$

Referring to FIG. **37**, in accordance with a second embodiment of a signal conditioning circuit **294.2** that provides for generating one or more measures responsive to the self-impedance Z_L of a coil **14**, L', a balanced time varying voltage V_{AC}' is applied by an oscillator **298** across the series combination of the coil **14**, L' and two sense resistors R_{S1}, R_{S2} in a balanced architecture, wherein the sense resistors R_{S1}, R_{S2} are of substantially equal value, the coil **14**, L' is coupled between the sense resistors R_{S1}, R_{S2}, and the remaining terminals of the sense resistors R_{S1}, R_{S2} are coupled to first **298.1** and second **298.2** terminals of the oscillator **298** which provide for complementary output signals V_A' and V_B' respectively, each of which has a substantially zero-mean value and is of substantially opposite phase to the other. For example, in one embodiment, the output signal V_A' is given by $A\cdot\sin(\omega t)$ and the output signal V_B' is given by $-A\cdot\sin(\omega t)$, wherein A is the peak amplitude and ω is the associated radian frequency, so that the time varying voltage V_{AC}' is given by $V_{AC}'=V_A'-V_B'=2\cdot A\cdot\sin(\omega t)$. The balanced feed and architecture provides for reduced EMI (Electromagnetic Interference) susceptibility and emissions. The self-impedance Z_L of the coil **14**, L' is given from Equation (1) by substituting therein V_{AC}' for V_{AC}, and $(V_{R1}+V_{R2})$ for V_R, wherein V_{R1} and V_{R2} are the measured voltages across the respective sense resistors R_{S1}, R_{S2}.

Referring to FIG. **38**, a third embodiment of a signal conditioning circuit **294.3** that provides for generating one or more measures responsive to the self-impedance Z_L of a coil **14**, L' is similar to the second embodiment illustrated in FIG. **37**, with the exception of the incorporation of an oscillator **300** adapted to provide for single-ended complementary output signals V_A and V_B, so as to provide for operation with associated single-ended electronic devices, i.e. where all signals are between 0 and $+V_{max}$ volts. For example, each of the output signals V_A and V_B is biased by a DC common mode voltage signal V_{CM}, so that $V_A=V_{CM}-A\cdot\sin(\omega t)$ and $V_B=V_{CM}-A\cdot\sin(\omega t)$, wherein, in one embodiment for example, $V_{CM}=V_{max}/2$ and the peak amplitude A is less than or equal to V_{CM}. In one embodiment, the oscillator **300** comprises a digital clock generator and sine/cosine shaper that generates digital complementary signals which are converted to analog form with an digital-to-analog converter to generate the complementary output signals V_A and V_B.

Referring to FIG. **39**, in accordance with a fourth embodiment of a signal conditioning circuit **294.4** that provides for generating one or more measures responsive to the self-impedance Z_L of a coil **14**, L', the voltage V_L across the coil **14**, L' is controlled by using feedback control of the signals applied to the first **260** and fourth **272** nodes at the sense resistors R_{S1}, R_{S2} in series with the coil **14**, L' responsive to feedback signals from the second **264** and third **268** nodes across the coil **14**, L'. More particularly, the first complementary output signal V_A is fed through a first input resistor R_{A1} to the inverting input of a first operational amplifier **302**, which is also coupled through a first feedback resistor R_{A2} to the second node **264** where the first sense resistor R_{S1} is coupled to a first terminal of the coil **14**, L'. Furthermore, the second complementary output signal V_B is fed through a second input resistor R_{B1} to the inverting input of a second operational amplifier **304**, which is also coupled through a second feedback resistor R_{B2} to the third node **268** where the second sense resistor R_{S2} is coupled to the second terminal of the coil **14**, L'. The output **262** of the first operational amplifier **302** is coupled to the first node **260** at the first sense resistor R_{S1}, and the output **274** of the second operational amplifier **304** is coupled to the fourth node **272** at the second sense resistor R_{S2}. A first common mode voltage signal V_{CM1} is coupled to the non-inverting input of the first operational amplifier **302**, and a second common mode voltage signal V_{CM2} is coupled to the non-inverting input of the second operational amplifier **304**.

For ideal first **302** and second **304** operational amplifiers, and for:

$$\frac{R_{A2}}{R_{A1}} = \frac{R_{B2}}{R_{B1}} = \alpha \tag{5}$$

$$V_{CM1}=V_{CM2}=V_{CM} \tag{6}$$

$$V_A=V_{CM}-A\cdot\sin(\omega t), \text{ and} \tag{7}$$

$$V_B=V_{CM}+A\cdot\sin(\omega t) \tag{8}$$

the voltage V_L across the coil **14**, L' is given by:

$$V_L=V_2-V_3=\alpha\cdot(V_B-V_A)=2\cdot\alpha\cdot A\cdot\sin(\omega t) \tag{8}$$

Accordingly, the feedback control loop provides for controlling the value of the voltage V_L across the coil **14**, L', and, for example, setting this to a value higher than would be obtained, for example, with the third embodiment of the signal conditioning circuit **294.3** illustrated in FIG. **38**, so as to provide for higher signal levels and correspondingly higher associated signal-to-noise ratios. For example, with $\alpha=1$, the voltage V_L across the coil **14**, L' would be V_B-V_A, whereas in the third embodiment of the signal conditioning circuit **294.3** illustrated in FIG. **38**, this is the value of the voltage applied across the series combination of the sense resistors R_{S1}, R_{S2} and the coil **14**, L'. The first **302** and second **304** operational amplifiers control the voltage V_L across the coil **14**, L', the current i_L through the coil **14**, L' is responsive to the self-impedance Z_L of the coil **14**, L', i.e. $(i_L=V_L/Z_L)$, and the voltages at the first **260** and fourth **272** nodes are automatically set by the first **302** and second **304** operational amplifiers so as to provide the current necessary to control the voltage V_L across the coil **14**, L'. However, the currents through the first R_{S1}, and second R_{S2} sense resistors will not correspond exactly to the current i_L through the coil **14**, L' because of the currents i_{RA2} and i_{RB2} through the first R_{A2} and second R_{B2} feedback resistors, and the corresponding signal from Equation (3) used to measure the current i_L through the coil **14**, L' is given by:

$$V_{out} = (V_1 - V_4) - (V_2 - V_3) = (R_{S1} + R_{S2}) \cdot \left(i_L + \frac{1}{2} \cdot (i_{RA2} - i_{RB2})\right) \quad (9)$$

wherein:

$$i_{RA2} = \frac{V_2 - V_{CM}}{R_{A2}}, \text{ and} \quad (10)$$

$$i_{RB2} = \frac{V_3 - V_{CM}}{R_{B2}} \quad (11)$$

Referring to FIG. **40**, in accordance with a fifth embodiment of a signal conditioning circuit **294.5** that provides for generating one or more measures responsive to the self-impedance Z_L of a coil **14**, L', the affect of the currents i_{RA2} and i_{RB2} through the first R_{A2} and second R_{B2} feedback resistors can be mitigated by using third **306** and fourth **308** operational amplifiers configured as respective buffer amplifiers **306'**, **308'** so as to provide for substantially eliminating any loading by the first R_{A2} and second R_{B2} feedback resistors on the second **264** and third **268** nodes, respectively, so that the current through each of the sense resistors R_{S1}, R_{S2} is substantially the same as the current i_L through the coil **14**, L'. Accordingly, the signal from Equation (3) used to measure the current i_L through the coil **14**, L' is representative thereof and is given by:

$$V_{out}=(V_1-V_4)-(V_2-V_3)=(R_{S1}+R_{S2})\cdot i_L \quad (12)$$

The remaining portions of the signal conditioning circuit **294.5** function the same as for the fourth embodiment of the signal conditioning circuit **294.4** illustrated in FIG. **39**, except that the first **302** and second **304** operational amplifiers are illustrated as real operational amplifiers rather than ideal operational amplifiers, wherein respective DC bias voltage sources **61** and **62** are added to the non-inverting inputs thereof, respectively, to provide for simulating the affects of internal biases associated with real operational amplifiers. Accordingly, for the conditions of Equations (5), (7) and (8), the voltage V_L across the coil **14**, L' is given by:

$$V_L=V_2-V_3=\alpha\cdot(V_B-V_A)+(1+\alpha)\cdot((V_{CM1}-V_{CM2})+(\delta_1-\delta_2)) \quad (13)$$

Under the conditions of Equation (6), this reduces to:

$$V_L=V_2-V_3=\alpha\cdot(V_B-V_A)+(1+\alpha)\cdot(\delta_1-\delta_2) \quad (14)$$

Under the conditions of Equations (7) and (8), this reduces to:

$$V_L=V_2-V_3=2\cdot\alpha\cdot A\cdot\sin(\omega t)+(1+\alpha)\cdot(\delta_1-\delta_2) \quad (15)$$

The AC component of the voltage V_L across the coil **14**, L' has a value of:

$$V_L^{AC}=(V_2-V_3)^{AC}=2\cdot\alpha\cdot A\cdot\sin(\omega t), \quad (16)$$

which, for $\alpha=1$, is comparable to that of third embodiment of the signal conditioning circuit **294.3** illustrated in FIG. **38**.

Accordingly, the DC bias voltage sources δ_1 and δ_2 cause the voltage V_L across the coil **14**, L' to have a DC bias of:

$$(1+\alpha)\cdot(\delta_1-\delta_2), \quad (17)$$

which, for $\alpha=1$ and $\delta=\max(|\delta_1|, |\delta_2|)$, can have a value as great as 4δ—because the DC bias voltage sources δ_1 and δ_2 are uncorrelated—which causes a corresponding DC bias current in the coil **14**, L', which might adversely magnetize the vehicle **12**.

Referring to FIG. **41**, in accordance with a sixth embodiment of a signal conditioning circuit **294.6** that provides for generating one or more measures responsive to the self-impedance Z_L of a coil **14**, L', the fifth embodiment of the signal conditioning circuit **294.5** illustrated in FIG. **40** is modified with the inclusion of a fifth operational amplifier **310** adapted to provide for operating on the voltage V_L across the coil **14**, L', so as to provide for nulling DC biases therein. More particularly, the non-inverting input of the fifth operational amplifier **310** is coupled through a third input resistor R_{22} to the output of the third operational amplifier **306**, and is also coupled through a fourth input resistor R_{CM1} to the first common mode voltage signal V_{CM1}. The inverting input of the fifth operational amplifier **310** is coupled through a fifth input resistor R_{32} to the output of the fourth operational amplifier **308**, and is also coupled through a second feedback resistor R_{CM2} to the output of the fifth operational amplifier **310** and to the non-inverting input of the second operational amplifier **304** so as to provide the second common mode voltage signal V_{CM2} thereto.

Letting:

$$\frac{R_{CM2}}{R_{32}} = \frac{R_{CM1}}{R_{22}} = G, \quad (16)$$

the second common mode voltage signal V_{CM2} is then given by:

$$V_{CM2}=V_{CM1}m+G\cdot(V_2-V_3)+(1+G)\cdot\delta_5, \quad (17)$$

and the resulting voltage V_L across the coil **14**, L' is then given by:

$$V_L = V_2 - V_3 = \frac{\alpha\cdot(V_B - V_A) + (1+\alpha)\cdot(\delta_1 - \delta_2 - (1+G)\cdot\delta_5)}{1+(1+\alpha)\cdot G}, \quad (18)$$

wherein a prospective DC offset of the fifth operational amplifier **310** is represented by a DC bias voltage source δ_5 at the non-inverting input thereof.

For the first V_A and second V_B complementary output signals given by Equations (7) and (8) respectively, the resulting voltage V_L across the coil **14**, L' is given by:

$$V_L = \frac{2\cdot\alpha\cdot A\cdot\sin(\omega t) + (1+\alpha)\cdot(\delta_1 - \delta_2)}{1+(1+\alpha)\cdot G} - \frac{(1+\alpha)\cdot(1+G)}{1+(1+\alpha)\cdot G}\cdot\delta_5 \quad (19)$$

For $\alpha=1$, the resulting voltage V_L across the coil **14**, L' is given by:

$$V_L = \frac{2\cdot A\cdot\sin(\omega t) + 2\cdot(\delta_1 - \delta_2) - \delta_5}{1+2\cdot G} - \delta_5 \quad (20)$$

Accordingly, as the gain G is increased, the magnitude of the first component of Equation (20)—which includes the entire AC component and the DC components attributable to the DC bias voltage sources δ_1 and δ_2–decreases. For

example, for G=1, the voltage V_L across the coil **14**, L' is given by:

$$V_L = A\cdot\sin(\omega t)+(\delta_1-\delta_2)-1.5\cdot\delta_5, \text{ and} \quad (21)$$

and as the gain G approaches infinity, the voltage V_L across the coil **14**, L' approaches the value of the DC bias voltage source δ_5 associated with the fifth operational amplifier **310**:

$$V_L = -\delta_5 \quad (22)$$

Accordingly, with sufficient gain G, the sixth embodiment of the signal conditioning circuit **294.6** illustrated in FIG. **41** provides for reducing the affect of the DC bias voltage sources δ_1 and δ_2 on the voltage V_L across the coil **14**, L', but at the expense of also reducing that magnitude of the associated AC signal component.

Referring to FIG. **42**, in accordance with a seventh embodiment of a signal conditioning circuit **294.7** that provides for generating one or more measures responsive to the self-impedance Z_L of a coil **14**, L', the affect of the DC bias voltage sources δ_1 and δ_2 on the voltage V_L across the coil **14**, L' may be reduced without adversely affecting the associated AC signal component by modifying the fifth operational amplifier **310** to act as a low pass filter, for example, by adding a feedback capacitor C_{F1} between the output and the inverting input of the fifth operational amplifier **310**, across the second feedback resistor R_{CM2}, the combination of which forms an low-pass filter circuit **312**, which acts to reduce the gain G with increasing frequency. The cutoff frequency of the low-pass filter circuit **312** is set substantially lower than the operating frequency of the oscillator **300**. For example, in one embodiment, the cutoff frequency of the low-pass filter circuit **312** is set at least two decades below the operating frequency of the oscillator **300**. The seventh embodiment of a signal conditioning circuit **294.7** further comprises a low-pass filter **314** between the output of the fifth operational amplifier **310** and the non-inverting input of the second operational amplifier **304**, for example, comprising a series resistor R_{F2} and a parallel capacitor C_{F2}. As illustrated in FIG. **42**, filter capacitors C_{F3} and C_{F4} may be respectively added from the non-inverting and inverting inputs of the fifth operational amplifier **310**, each to ground, respectively, so as to increase the order of the associated low-pass filter circuit **312**.

The seventh embodiment of the signal conditioning circuit **294.7** illustrated in FIG. **42** is unable to compensate for the affect of prospective respective DC bias voltage sources δ_3 and/or δ_4, if any, of the third **306** and/or fourth **308** operational amplifiers, respectively, on the voltage V_L across the coil **14**, L'. Referring to FIG. **43**, in accordance with an eighth embodiment of a signal conditioning circuit **294.8** that provides for generating one or more measures responsive to the self-impedance Z_L of a coil **14**, L', this limitation, and a similar limitation in the sixth embodiment of the signal conditioning circuit **294.6** illustrated in FIG. **41**, may be remedied by coupling the non-inverting input of the fifth operational amplifier **310** through the third input resistor R_{22} to the first node **260** of the series circuit **242**, rather than to the output of the third operational amplifier **306**; and by coupling the inverting input of the fifth operational amplifier **310** through the fifth input resistor R_{32} to the fourth node **272** of the series circuit **242**, rather than to the output of the fourth operational amplifier **308**. Accordingly, the fifth operational amplifier **310** and associated circuitry of the eighth embodiment of a signal conditioning circuit **294.8** provides for nulling a DC bias of the voltage across the first **260** and fourth **72** nodes of the series circuit **242**, associated with a DC bias of the current i_L therethrough. In comparison, the seventh embodiment of the signal conditioning circuit **294.7** acts to null the DC bias voltage across the third **264** and fourth **268** nodes of the series circuit **242**. The eighth embodiment of a signal conditioning circuit **294.8** is effective because even though the voltages across the third **264** and fourth **268** nodes and the first **260** and fourth **72** nodes are generally different when the current i_L is non-zero, both of these voltages will equal to zero when the current i_L through the series circuit **242** is equal to zero.

Referring to FIG. **44**, in accordance with a ninth embodiment of a signal conditioning circuit **294.9** that provides for generating one or more measures responsive to the self-impedance Z_L of a coil **14**, L', as an alternative to the seventh embodiment of the signal conditioning circuit **294.7** illustrated in FIG. **42**, the fifth operational amplifier **310** is configured as an integrator **316**, wherein the non-inverting input of the fifth operational amplifier **310** is coupled through the third input resistor R_{22} to the output of the third operational amplifier **306**, and is also coupled to ground through a filter capacitor C_{F3}. The inverting input of the fifth operational amplifier **310** is coupled through the fifth input resistor R_{32} to the output of the fourth operational amplifier **308**, and is also coupled through an integrator capacitor C_I to the output of the fifth operational amplifier **310** and through an output resistor R_I to the non-inverting input of the second operational amplifier **304**, the latter of which is also coupled through a sixth input resistor R_{CM2}' to the first DC common mode voltage signal V_{CM1}. Accordingly, a DC bias in the voltage V_L across the coil **14**, L' is integrated by the integrator **316** so as to generate the second common mode voltage signal V_{CM2} at the non-inverting input of the second operational amplifier **304** so as to provide compensation therefore, so as to provide for reducing or eliminating the DC bias in the voltage V_L across the coil **14**, L'.

Referring to FIG. **45**, a tenth embodiment of a signal conditioning circuit **294.10** that provides for generating one or more measures responsive to the self-impedance Z_L of a coil **14**, L', is based upon the embodiment illustrated in FIG. **35** described hereinabove, wherein the coil driver **28**, **56**, **96** comprises a circuit based upon the seventh embodiment of a signal conditioning circuit **294.7** illustrated in FIG. **42**, together with an example of circuitry for generating the output signals V_A and V_B from the associated oscillator **300**. For example, the low-pass filter **312** can be as described in accordance with the seventh embodiment of a signal conditioning circuit **294.7**.

The tenth embodiment of the signal conditioning circuit **294.10** further illustrates an example of a circuit **317** for generating the first common mode voltage signal V_{CM1}. For example, the circuit **317** comprises a first voltage divider **318** of resistors R_7 and R_8 fed by a supply voltage source V_S. The output of the voltage divider **318** is buffered by an associated sixth operational amplifier **320** configured as an associated buffer amplifier **320'**. For example, for resistors R_7 and R_8 of equal value, the resulting first common mode voltage signal V_{CM1} would be half the value of the supply voltage source V_S.

The tenth embodiment of the signal conditioning circuit **294.10** further illustrates an example of an embodiment of the associated oscillator **300**, wherein the output signal V_A is generated by a seventh operational amplifier **322**, the non-inverting input of which is coupled to the output of a second voltage divider **324** comprising resistors R_9 and R_{10} fed by the first common mode voltage signal V_{CM1}, the inverting input of which is coupled by an input resistor R_{11} to an oscillator **30**, **58**, **98**, and by a feedback resistor R_{12} to the output of the seventh operational amplifier **322**. For resistors R_9 and R_{10} of equal value, and for resistors R_{11} and R_{12} of equal value, and

for the output of the oscillator **30**, **58**, **98** given by A·sin(ωt), then the output signal V_A is given by Equation (7).

Furthermore, the output signal V_B is generated by an eighth operational amplifier **326**, the non-inverting input of which is coupled to the first common mode voltage signal V_{CM1} through a first input resistor R_{13}, and to the oscillator **30**, **58**, **98** through a second input resistor R_{14}; and the non-inverting input of which is coupled by a an input resistor R_{15} to ground, and by a feedback resistor R_{16} to the output of the eighth operational amplifier **326**. For resistors R_{13} and R_{14} of equal value, and for resistors R_{15} and R_{16} of equal value, and for the output of the oscillator **30**, **58**, **98** given by A·sin(ωt), then the output signal V_B is given by Equation (8).

Referring to FIG. **46**, an eleventh embodiment of a signal conditioning circuit **294.11** that provides for generating one or more measures responsive to a self-impedance Z_L of a coil **14**, L', is substantially based upon the tenth embodiment of the signal conditioning circuit **294.10** illustrated in FIG. **45**, wherein like reference signs correspond to similar elements which function as described hereinabove, and FIG. **45** includes supplemental aspects as described hereinbelow. In accordance with a second embodiment of an oscillator **300'**, a sine shaper **328** driven by a clock **330** generates a digital time series **334** of a sine wave, for example, with 8-bit digital sample values, which is fed into a digital-to-analog converter **332** which generates a corresponding sampled analog sine wave waveform, which is in turn filtered by a low-pass filter **336** to remove artifacts of the associated quantization and sampling processes, such as associated harmonics and clocking noise associated with the digital-to-analog converter **332**. For example, in one embodiment, the sine shaper is programmable from 15.6 kilohertz to 44.9 kilohertz, and the resulting analog sine wave has a **0.8** volt peak-peak magnitude. The filtered sine wave signal **338** from the low-pass filter **336** is fed into an oscillator signal conditioner **340** adapted to generate the single-ended first V_A and second V_B complementary output signals, for example, as described hereinabove, for example, in accordance with the circuitry associated with the seventh **322** and eighth **324** operational amplifiers and associated circuitry described hereinabove in association with the tenth embodiment of the signal conditioning circuit **294.10** illustrated in FIG. **45**. The first **302** and second **304** operational amplifiers provide for a linear driver **342** that drives the coil **14**, L' with a sine wave responsive to the first V_A and second V_B complementary output signals, wherein the associated gain α thereof given by Equation (5) is programmable responsive to the processor **108**, **204** by adjustment of the associated input R_{A1}, R_{B1} and feedback R_{A2}, R_{B2} resistors associated with the first **302** and second **304** operational amplifiers. For example, each of the input R_{A1}, R_{B1} and feedback R_{A2}, R_{B2} resistors can be adjusted by switching a corresponding network of resistors interconnected with associated FET transistors, or using an FET transistor as a variable resistor. For example, in one embodiment, the processor **108**, **204** is adapted to adjust the current i_L through the coil **14**, L' so as to be within the range of 10-50 milliamperes RMS, by adjusting the gain α of the linear driver **342**, wherein in the eleventh embodiment of the signal conditioning circuit **294.11**, the corresponding voltage from the linear driver **342** is within the range of 0.8 to 64 volts peak-to-peak in 0.8 volt steps, responsive to a corresponding range of gain α of 1 to 80 volts/volt. The common mode voltage signal V_{CM} is generated by an associated circuit **317**, for example, as illustrated in FIG. **45**, which in one embodiment is adjustable responsive to the processor **108**, **204**, for example, so as to provide for a common mode voltage signal V_{CM} that is adjustable between 2.4 and 21 volts in 0.6 volt steps, so as to prevent saturation of the linear driver **342**.

As with the embodiments illustrated in FIGS. **39-45**, the voltage V_L across the coil **14**, L' is controlled by using the first **302** and second **304** operational amplifiers to provide for feedback control of the signals applied to the first **260** and fourth **272** nodes at the sense resistors R_{S1}, R_{S2} in series with the coil **14**, L' responsive to feedback signals from the second **264** and third **268** nodes across the coil **14**, L'. Furthermore, as with the embodiments illustrated in FIGS. **41-45**, a bias control circuit **344**, for example, in accordance with the circuitry associated with the fifth operational amplifier **310** thereof, provides for substantially nulling any DC current bias in the current i_L through the coil **14**, L'. Yet further, as with the embodiments illustrated in FIGS. **35** and **45**, the eleventh embodiment of the signal conditioning circuit **294.11** incorporates a sum-and-difference amplifier circuit **346** comprising an operational amplifier **278** and associated circuitry, which provides for generating an output voltage V_{out} responsive to the sum of the voltage drops across the sense resistor R_{S1}, R_{S2}, which provides a measure of the current i_L through the coil **14**, L', i.e. a current measure **348**. For example, in one embodiment, the sum-and-difference amplifier circuit **346** is nominally unity gain. The sense resistor R_{S1}, R_{S2} are adapted so as to provide for an output voltage V_{out} of about 0.8 volts peak-to-peak under nominal operating conditions.

The voltage V_{out} providing a measure of the current i_L through the coil **14**, L' is filtered with a band-pass filter **350** and then converted to digital form with an associated first analog-to-digital converter **288'**. For example, in one embodiment, the band-pass filter **350** is a second order two-input fully differential switched capacitor bandpass filter having a Butterworth approximation, and a programmable center frequency that, responsive to the processor **108**, **204**, is automatically set to the same frequency as that of the sine shaper **328** and associated clock **330**. In this embodiment, the bandpass filter **350** has a fixed 6 kiloHertz passband and is used to limit the susceptibility to out-of-band energy radiated from other sources.

A ninth operational amplifier **352** configured as a differential amplifier provides for measuring the actual voltage across the voltage V_L across the coil **14**, L', notwithstanding that this is otherwise controlled by the circuitry associated with the linear driver **342** and bias control circuit **344** as described hereinabove. More particularly, the second node **264** coupled to a first terminal of the coil **14**, L', at a voltage V_2, is coupled through a first input resistor R_{23} to the non-inverting input of the ninth operational amplifier **352**, which is also connected to the DC common mode voltage signal V_{CM} ground through a resistor R_{24}. Furthermore, the third node **268** coupled to the second terminal of the coil **14**, L', at a voltage V_3, is coupled through a second input resistor R_{33} to the inverting input of the ninth operational amplifier **352**, which is also connected to the output thereof a feedback resistor R_{34}. Accordingly, the output of the ninth operational amplifier **352**, designated as voltage V_{OUT}, is given as follows:

$$V_{Drive}=\gamma\cdot(V_2-V_3), \tag{23}$$

wherein the gain γ is given by:

$$\gamma = \frac{R_{24}}{R_{23}} = \frac{R_{34}}{R_{33}} \tag{24}$$

In various embodiments, for example, the gain γ may be programmable responsive to the processor **108**, **204**. For example, in one embodiment, the gain γ is programmable over a range of 1 to 80 volts/volt, so that the resulting voltage V_{Drive} from the ninth operational amplifier **352** is within the range of 0-1 volt peak-to-peak for input to an associated second analog-to-digital converter **354**.

Referring to FIGS. **46-47**, as an example of one embodiment, the first **288'** and second **354** analog-to-digital converters are each embodied with corresponding first **356.1** and second **356.2** sigma-delta analog-to-digital converters, each comprising the combination of a sigma-delta converter **358**, followed by a low-pass sync filter **360**, followed by a decimation filter **362**. Referring to FIGS. **47** and **49**, the sigma-delta converter **358** is a separately clocked circuit that provides for converting a given signal level into a corresponding single-bit Pulse Density Modulated (PDM) signal. For a time-varying input signal, the clocking rate of the sigma-delta converter **358** is substantially higher than the corresponding sampling rate of the associated time-varying input signal, so that the time-varying input signal is effectively over-sampled. For example, in one embodiment, for a time-varying input signal with a sampling rate between 10 and 50 kiloHertz, the clock rate of the sigma-delta converter **358** is set at 4 megaHertz. In accordance with the embodiment of a sigma-delta converter **358** illustrated in FIG. **47**, the current value of the output $Vout_n$ of the sigma-delta converter **358** is subtracted at a first summing junction **364** from the current value of the input signal Vin_n, and the result is scaled by a gain of ½ and integrated by a first integrator **366**. The current value of the output $Vout_n$ of the sigma-delta converter **358** is then subtracted at a second summing junction **368** from the most recent updated value of the output $VINT1_{n+1}$ of the first integrator **366**, and the result is scaled by a gain of ½ and integrated by a second integrator **370**. The most recent updated value of the output $VINT2_{n+1}$ of the second integrator **370** is then input to a comparator **372**, the output, which is the output $Vout_{n+1}$ of the sigma-delta converter **358**, has a value of zero if the most recent updated value of the output $VINT2_{+1}$ of the second integrator **370** is less than one, and otherwise has a value of one, and which is buffered by a buffer amplifier **373** and then converted to analog form with a one-bit digital-to-analog converter **374** and then fed back therefrom to the first **364** and second **368** summing junctions, wherein the comparator **372**, buffer amplifier **373** and one-bit digital-to-analog converter **374** can be combined together in practice. The above-described operation of the sigma-delta converter **358** is modeled by the following equations, which provide for converting a signal having a magnitude between zero and one volt:

$$VINT1_{n-1} = VINT1_n + \frac{1}{2}\cdot(Vin_n - Vout_n) \tag{25}$$

$$VINT2_{n-1} = VINT2_n + \frac{1}{2}\cdot(VINT1_{n+1} - Vout_n) \tag{26}$$

$$Vout_{n+1} = \begin{Bmatrix} 0 \text{ if } (VINT2_{n+1} < 1) \\ 1 \text{ if } (VINT2_{n+1} \geq 1) \end{Bmatrix} \tag{27}$$

Referring to FIGS. **48***a-d*, the output $Vout_n$ of a sigma-delta converter **358** in accordance with Equations (25)-(27) is plotted as a function of internal clock cycle n for four different corresponding DC input voltages of 0.10, 0.25, 0.50 and 0.75 volts, respectively. It should be understood that output $Vout_n$ of a sigma-delta converter **358** is binary, with a value of zero or one, and that the ramped portions of the plots of FIGS. **48***a-d* are artifacts of the plotting process. The average value of each of the one-bit (i.e. binary valued) time series illustrated in FIGS. **48***a-d* is equal to the value of the corresponding DC input voltage, wherein the pulse density modulation level of each time series is equal to the value of the corresponding DC input voltage.

In one embodiment, the sigma-delta converter **358** is implemented with a fully differential second-order switched-capacitor architecture, using a sampling rate of 4 megahertz, with a usable differential input range of 0-1 volt peak-to-peak. In one embodiment, the sigma-delta converter **358** is principally used at about one half of full scale in order to avoid distortion from the one-bit digital-to-analog converter **374** which can occur for input signals have a magnitude greater than about eighty percent of full scale. Above full scale, the one-bit digital-to-analog converter **374** would overload, causing a loss of signal integrity. Using only half of full scale to avoid distortion, the sigma-delta converter **358** would have an effective gain of 0.5, although this can be compensated for in the associated decimation filter **362** which, for example, in one embodiment, is adapted to utilize a twelve-bit span for a one volt peak-to-peak input signal.

Referring to FIGS. **46** and **49**, the output of a first sigma-delta converter **358.1** associated with the first sigma-delta analog-to-digital converter **356.1** is filtered with a first low-pass sync filter **360.1** and then decimated with a first decimation filter **362.1**, so as to generate the digital representation—in one embodiment, for example, a twelve-bit representation—of the voltage V_{out}. For example, in one embodiment the first low-pass sync filter **360.1** and the first decimation filter **362.1** are embodied in a first decimator **382.1** structured in accordance with the decimator **382** illustrated in FIG. **49**, which comprises a plurality of accumulators **384** followed by a plurality of differentiators **386** ganged together in series with a corresponding plurality of summing **388** and difference **390** junctions.

The number of bits needed in the accumulators **384** to avoid overflow errors is defined by:

$$w = K\cdot\log_2(N) + b \tag{28}$$

wherein K is the decimator order (e.g. 3), N is the decimation ratio (e.g. 128), and b is the number of bits entering the decimator (e.g. 1 or 8). For example, for K=3, N=128 and b=1, the accumulators **384** are 22 bits wide, whereas for b=8, the accumulators **384** would be 29 bits wide. Each of the accumulators **384** is defined by the following equation:

$$Vacc_{n+1} = Vacc_n + Vin_n \tag{29}$$

For example, for an input clock rate of 4 megahertz, the output of the last accumulator **384** illustrated in FIG. **49** would be sampled at 31.25 kilohertz. The output of the last accumulator **384** is then fed into the differentiators **386**, which have the same number of bits as defined by Equation (28). Each of the differentiators **386** are defined by the following equation:

$$Vdiff_{n+1} = Vin_{n+1} + Vin_n \tag{30}$$

For example, in one embodiment, the output of the last differentiators **386** of the first **382.1** and second **382.2** decimators is truncated to twelve bits. The mixing process associated with the first and second mixers inherently has a gain of ½ (as a result of an associated ½ cosine factor), and this is compensated in the decimator **382** so that the twelve-bit span of the digital output thereof corresponds to a one volt peak-

to-peak signal at the input to the sigma-delta converter **358**. The associated generic equation of the decimator **382** is given by:

$$f=[(1-z_{-N})/(1-z_{-1})]^K \tag{31}$$

Referring to FIG. **50**, the operation of a sigma-delta analog-to-digital converter **356** is illustrated by a power spectrum in the frequency domain, as described in the article "Demystifying Sigma-Delta ADCs", downloadable from the Internet at http:www.maxim-ic.com/appnotes.cfm/appnote$_{number/}$ 1870, and which is incorporated herein by reference in its entirety. The oversampling process of the sigma-delta converter **358** increases the signal-to-noise ratio (SNR), and the first **366** and second integrators **370** act as a highpass filter to the noise **392**, and act to reshape the noise **392** as illustrated in FIG. **50**. The low pass sync filter **360** in the time domain acts as a notch filter **394** in the frequency domain, which provides for removing a substantial portion of the noise **392** while preserving the signal **396**.

Referring again to FIG. **46**, the output from the first decimation filter **362.1** is operatively coupled to first **376.1** and second **376.2** demodulators which demodulate the signal therefrom into in-phase (I) and quadrature (Q) phase components of the voltage V_{out} representative of the current i_L through the coil **14**, L'. The first demodulator **376.1** uses the digital time series **332** from the sine shaper **328** to demodulate the in-phase (I) component of the voltage V_{out} down to a corresponding DC level, albeit the pulse density modulated (PDM) equivalent thereof, wherein, for example, in one embodiment, the digital time series **332** from the sine shaper **328** is fed into an associated first mixer **376.1'** of the first demodulator **376.1** as an N-bit stream at the same over-sampled clock rate (e.g. 4 megahertz) as the signal from the first sigma-delta converter **358.1**, so as to provide a measure representative of the in-phase (I) component of the current i_L through the coil **14**, L'. The second demodulator **376.2** uses a digital time series **378** from a cosine shaper **380** to demodulate the quadrature-phase (Q) component of the voltage V_{out} down to a corresponding DC level, albeit the pulse density modulated (PDM) equivalent thereof, wherein, for example, in one embodiment, the digital time series **378** from the cosine shaper **380** is fed into an associated second mixer **376.2'** of the second demodulator **376.2** as an N-bit stream at the same over-sampled clock rate (e.g. 4 megahertz) as the signal from the first sigma-delta converter **358.1** of the quadrature-phase (Q) component of the voltage V_{out}, so as to provide a measure representative of the quadrature-phase (Q) component of the current i_L through the coil **14**, L'. The cosine shaper **380** is driven in synchronism with the sine shaper **328** by a common signal from the clock **330**, responsive to the processor **108**, **204**. For example, in one embodiment, the N-bit streams from the sine **328** and cosine **380** shapers are eight-bit streams.

The outputs of the first **376.1** and second **376.2** demodulators are respectively filtered by respective first **398.1** and second **398.2** low-pass filters, and are then respectively filtered by respective first **400.1** and second **400.2** band-pass filters. For example, in one embodiment, the first **398.1** and second **398.2** low-pass filters are second order digital filters with a programmable type (e.g. Butterworth or Chebyshev) and programmable filter coefficients k and gain factors G, the same type and values for each filter **398.1**, **398.2**; and the first **400.1** and second **400.2** band-pass filters are fourth order digital filters with a programmable type (e.g. Butterworth or Chebyshev) and programmable coefficients, the same type and values for each filter **400.1**, **400.2**. The gain factors G in each filter are adapted to provide for unity gain through each of the filters **398.1**, **398.2**, **400.1**, **400.2**. For example, the filter coefficients k and gain factors G are stored in a twelve-bit register in fixed point two's complement number format.

For example, the first **398.1** and second **398.2** low-pass filters are given generally by the following transfer function:

$$H(z) = G\left[\frac{1+2z^{-1}+z^{-2}}{1-k_1z^{-1}+k_2z^{-2}}\right], \text{ and} \tag{32}$$

the first **400.1** and second **400.2** band-pass filters are given generally by the following transfer function:

$$H(z) = G_1G_2\left[\frac{(1-z^{-2})^2}{(1+k_1z^{-1}+k_2z^{-2})(1+k_3z^{-1}+k_4z^{-2})}\right] \tag{33}$$

In one embodiment, the outputs of the first **400.1** and second **400.2** band-pass filters are averaged using a four point averaging process, for example, using a running average implemented with a moving window, so as to provide resulting in-phase (I) and quadrature (Q) phase components of the voltage V_{out} representative of the current i_L through the coil **14**, **5701-00324** L' at an update rate of about 7.8 kilohertz. In the present embodiment, the low-pass filters **398.1**, **398.2** would not be used below 300 Hertz because of stability problems due to quantization errors in the associated gain factors G and filter coefficients k. The resulting in-phase I and quadrature-phase Q data can be used to calculate, with twelve-bit accuracy, the magnitude of the and phase of the current i_L through the coil **14**, L', as follows:

$$\text{Magnitude}=\sqrt{I^2+Q^2} \tag{34}$$

$$Phase = \arctan\left(\frac{Q}{I}\right) \tag{35}$$

wherein the phase is quadrant-corrected so that the resulting phase value is between −180° and +180°, with 0° on the positive I axis, 90° on the positive Q axis.

The output of a second sigma-delta converter **358.2** associated with the second sigma-delta analog-to-digital converter **356.2** is filtered with a second low-pass sync filter **360.2** and then decimated with a second decimation filter **362.2**, so as to generate the digital representation—in one embodiment, for example, a twelve-bit representation—of the voltage V_{Drive}, representative of the voltage V_L across the coil **14**, L'. For example, in one embodiment the second low-pass sync filter **360.2** and the second decimation filter **362.2** are embodied in a second decimator **382.2**, similar to the first decimator **382.1** described hereinabove, except that the output thereof is a ten-bit digital word. The output of the second decimator **382.2** is operatively coupled to a second demodulator **376.2** which demodulates an over-sampled signal (e.g. at 4 megahertz) from the second sigma-delta converter **358.2** into an in-phase component (I) of the voltage V_{Drive} across the coil **14**, L'. The second demodulator **376.2** uses the digital time series **332** from the sine shaper **328** to demodulate the in-phase (I) component of the voltage V_{Drive} down to a corresponding DC level, albeit the pulse density modulated (PDM) equivalent thereof, wherein, for example, in one embodiment, the digital time series **332** from the sine

shaper **328** is fed into an associated third mixer **376.3'** of the third demodulator **376.3** as an N-bit stream at the same over-sampled clock rate (e.g. 4 megahertz) as the signal from the second sigma-delta converter **358.2**. The demodulated output from the third mixer **376.3'** is then filtered by a third low-pass filter **398.3**, which is similar to the first **398.1** and second **398.2** low-pass filters described hereinabove.

The various signal conditioning circuits **294** in accordance with a first aspect illustrated in FIGS. **35-50** provide for determining the complex impedance of the coil **14**, L' by generating a measure responsive to the complex current i_L (i.e. in-phase (I) and quadrature-phase (Q) components thereof) therethrough responsive to a known or measured time-varying voltage V_L thereacross, particularly for an oscillatory, e.g. sinusoidal, voltage V_L thereacross.

Referring to FIG. **51**, there is illustrated a combination of various embodiments that provide for various associated additional features that can be incorporated,—either singly, in combination, or in various subcombinations,—in any of the signal conditioning circuits **294** described hereinabove.

In accordance with a first feature, first **402.1** and second **402.2** LC filters are respectively placed in parallel with the first R_{S1} and second R_{S2} sense resistors, respectively, wherein the first LC filter **402.1** comprises a first inductor L_1 in parallel with a first capacitor C_1, and the second LC filter **402.2** comprises a second inductor L_2 in parallel with a second capacitor C_2, wherein, for example, the resonant frequencies of the first **402.1** and second **402.2** LC filters would be substantially equal to the operating frequency of the associated oscillator **98**. Accordingly, at the normal operating frequency of the signal conditioning circuit **294**, the impedances of the first **402.1** and second **402.2** LC filters would be relatively high so as to not substantially perturb the operation of the associated signal conditioning circuit **294**, whereas at frequencies substantially different from the normal operating frequency of the signal conditioning circuit **294**, the impedances of the first **402.1** and second **402.2** LC filters would be relatively low so as to substantially attenuate any associated voltages across the first R_{S1} and second R_{S2} sense resistors, thereby substantially attenuating a resulting associated voltage V_{out} from the summing and difference amplifier **276** representative of the current current i_L through the coil **14**, L'. Accordingly, the first **402.1** and second **402.2** LC filters provide for substantially attenuating the affects of electromagnetic interference (EMI) on the output of the signal conditioning circuit **294** at frequencies that are substantially different from the normal operating frequency thereof.

Referring to FIG. **52**, the coil **14**, L' is typically connected to the signal conditioning circuit **294** with a cable **404**, an equivalent circuit model **406** of which is illustrated in combination with an equivalent circuit model **408** of the coil **14**, L', wherein the first **402.1** and second **402.2** LC filters can be adapted in cooperation with the cable **404** and coil **14**, L' so as to provide for substantially maximizing the associated signal-to-noise ratio of the signal conditioning circuit **294** when operated in the presence of EMI.

Alternatively, the signal conditioning circuit **294** can be operated at a plurality of different frequencies, i.e. by operating the associated oscillator **30**, **58**, **98** at a plurality of different frequencies, for example, which are either sequentially generated, fore example, stepped or chirped, or simultaneously generated and mixed, wherein for at least three different frequency components, the associated processor **108**, **204** can be adapted to provide for generating a corresponding associated spectrally dependent detected values, wherein an associated voting system can then be used to reject spectral component values that are substantially different from a majority of other spectral component values, for example, as a result of an electromagnetic interference (EMI) at the corresponding operating spectral frequency component (s) of the oscillator **30**, **58**, **98** of the spectral component that becomes rejected.

Referring again to FIG. **51**, in accordance with a second feature, at least one of first **410.1** and second **410.2** comparators with hysteresis respectively provided to monitor the voltages across the first R_{S1} and second R_{S2} sense resistors respectively, provides for determining whether or not the current path containing the coil **14**, L' is open, wherein the first **410.1** and second **410.2** comparators with hysteresis respectively provide respective first **412.1** and second **412.2** signals that respectively indicate if the voltage across the respective first R_{S1} and second R_{S2} sense resistor is less than a threshold.

In accordance with a third feature, the sum-and-difference amplifier circuit **346** is adapted to provide for injecting a self-test signal V_T from a balanced signal source **414** therein so as to test the operation thereof, wherein the balanced signal source **414**, controlled by associated switch elements **416**, e.g. electronic switches, e.g. controlled by software, is injected through respective first RT**1** and second RT**2** resistors to the to non-inverting **280** and inverting **282** inputs, respectively, of the associated operational amplifier **278** of the sum-and-difference amplifier circuit **346**, wherein, responsive to the injection of the predetermined self-test signal V_T through the associated switch element **416**, if the resulting change in the voltage V_{out} from the sum-and-difference amplifier circuit **346** differs from a predetermined amount by more than a threshold, then an error signal would be generated indicative of a malfunction of the associated sum-and-difference amplifier circuit **346**.

Referring to FIG. **53**, in accordance with yet another embodiment, the inputs of each analog-to-digital converter **288** are provided with circuitry that provides for detecting whether the associated analog input signal is within acceptable limits. For example, the input **418** of a representative analog-to-digital converter **288**, for example, a sigma-delta analog-to-digital converter **356**, is connected to the non-inverting input **420.2** of a first comparator **422.1** and to the inverting input **424.1** of a second comparator **422.2**. The inverting input **420.1** of the first comparator **422.1** is connected to a signal representative of a maximum threshold AC_{MAX}, and the non-inverting input **424.2** of the second comparator **422.2** is connected to a signal representative of a minimum threshold AC_{MIN}. The output **420.3** of the first comparator **422.1** is connected to a first input **426.1** of a two-input OR-gate **426**, and the output **424.3** of the second comparator **422.2** is connected to a second input **426.2** of the OR-gate **426**. The output **426.3** of the OR-gate **426** provides a signal **428** indicative of whether the input to the associated analog-to-digital converter **288** is either greater than the maximum threshold AC or less than the minimum threshold AC_{MIN}, either of which would result if an associated peak-to-peak value was greater than an associated threshold. More particularly, if the level of the input **418** of the analog-to-digital converter **288** is greater than or equal to the maximum threshold AC_{MAX}, then the output **420.3** of the first comparator **422.1** will be TRUE, causing the output **426.3** of the OR-gate **426** to be TRUE. If the level of the input **418** of the analog-to-digital converter **288** is less than or equal to the minimum threshold AC_{MIN}, then the output **424.3** of the second comparator **422.2** will be TRUE, causing the output **426.3** of the OR-gate **426** to be TRUE. Otherwise the output **426.3** of the OR-gate **426** will be FALSE. The maximum threshold AC_{MAX} is set so that a level of the input **418** less than this level can be properly converted to digital form by the

analog-to-digital converter **288**. For example, for a sigma-delta analog-to-digital converter **356** illustrated in FIGS. **47-50**, the maximum threshold AC_{MAX} would be set to a value less than or equal to one volt so as to provide for a digital output that is representative of the analog input. The minimum threshold AC_{MIN}, if used, provides for detecting signals at the input **418** of the analog-to-digital converter **288** having a value less than the maximum threshold AC minus the maximum acceptable peak-to-peak level of the AC signal at the input **418** of the analog-to-digital converter **288**. Accordingly, if the signal **428** at the output **426.3** of the OR-gate **426** is TRUE, then this would indicate that the resulting signal from the analog-to-digital converter **288** could be corrupted, for example, so as to alert the processor **108**, **204** to ignore this signal.

Referring to FIG. **54**, a twelfth embodiment of a signal conditioning circuit **294.12** that provides for generating one or more measures responsive to a self-impedance Z_L of a coil **14**, L', is substantially based upon the embodiment of the signal conditioning circuit **294** illustrated in FIG. **35**, wherein like reference signs correspond to similar elements which function as described hereinabove, and FIG. **54** includes supplemental aspects as described hereinbelow. In some circumstances, external out-of-band electromagnetic interference can cause relatively large magnitude AC signal levels, relative to the in-band signal level, which otherwise are absorbed by the associated signal conditioning circuit **294**. The twelfth embodiment of the signal conditioning circuit **294.12** is adapted with feedback so as to provide for controlling the respective voltages applied to the first **260** and fourth **272** nodes of the series circuit **242** so that they both relatively float with the out-of-band electromagnetic interference, thereby reducing the associated energy absorption requirements of the associated signal conditioning circuit **294**. More particularly, this is accomplished by feeding the output, i.e. voltage V_{out}, from the summing and difference amplifier **276** through a low-pass filter **430** and an all-pass phase shifter **432**, and then using the resulting signal to control the coil driver **28**, **56**, **96**. The cutoff frequency of the low-pass filter **430** is set substantially lower than the operating frequency of the oscillator **300**, and sufficiently greater than zero, so as to provide for substantially cancelling the affect of the DC bias voltage sources δ_1 and δ_2 on the voltage V_L across the coil **14**, L', without substantially affecting, i.e. attenuating, the AC component thereof from the oscillator **300**. The all-pass phase shifter **432** is adapted to exhibit a relatively flat gain response, and is adapted to provide sufficient phase margin so as to prevent the signal conditioning circuit **294.12** from oscillating as a result of the associated feedback connection.

Referring to FIG. **55**, a thirteenth embodiment of a signal conditioning circuit **294.13** that provides for generating one or more measures responsive to a self-impedance Z_L of a coil **14**, L', is substantially based upon the tenth and twelfth embodiments of the signal conditioning circuits **294.10**, **294.12** illustrated in FIGS. **45** and **54**, wherein, except as noted otherwise, like reference signs correspond to similar elements which function as described hereinabove, and FIG. **55** includes supplemental aspects as described hereinbelow. In the thirteenth embodiment of a signal conditioning circuit **294.13**, the summing and difference amplifier **276** is adapted to also function as the low-pass filter **430** by incorporating a feedback capacitor C_{F5} between the output of the associated operational amplifier **278** and the inverting input thereof. The output of the operational amplifier **278** is operatively coupled a buffer amplifier **434** comprising a tenth operational amplifier **436**, the output of which is then operatively coupled to the all-phase filter **432**. The all-phase filter **432** comprises an eleventh operational amplifier **438**, the non-inverting input of which is coupled through a capacitor C_{P1} to ground, and through a resistor R_{P1} to the output of the buffer amplifier **434**, the latter of which is also operatively coupled through a resistor R_{P2} to the inverting input of the eleventh operational amplifier **438**, which in turn is coupled through feedback resistor R_{P3} to the output of the eleventh operational amplifier **438**. Several connections associated with the seventh **322** and eighth **326** operational amplifiers, and the oscillator **30**, **58**, **98** of the tenth embodiment of a signal conditioning circuit **294.10** are modified so as to provide for the thirteenth embodiment of a signal conditioning circuit **294.13**. More particularly, the non-inverting inputs of the seventh **322** and eighth **326** operational amplifiers are each coupled directly to the first DC common mode voltage signal V_{CM1}, rather than through the associated resistors resistors R_9 and R_{13}. Furthermore, the output of the eighth operational amplifier **326** is coupled through the input resistor R_{11} to the non-inverting input of the seventh operational amplifier **322**, and the inverting input of the eighth operational amplifier **326** is operatively coupled through the second input resistor R_{14} to the oscillator **30**, **58**, **98**, and through the input resistor R_{15} to the output of the eleventh operational amplifier **438**, i.e. the output of the all-phase filter **432**. Accordingly, the eighth operational amplifier **326** is configured as a summing amplifier **440**, which provides for summing the output of the oscillator **30**, **58**, **98** with the output from the summing and difference amplifier **276** feed back through the low-pass filter **430** and the all-phase filter **432**. The output signal V_B of the summing amplifier **440** is operatively coupled to the second operational amplifier **304** so as to provide for driving the fourth node **272** of the series circuit **242**, and this output signal V_B is inverted by the seventh operational amplifier **322** so as to generate the complementary output signal V_A that is operatively coupled to the first operational amplifier **302** so as to provide for driving the first node **260** of the series circuit **242**. Accordingly, the thirteenth embodiment of the signal conditioning circuit **294.13** provides for adapting the output signals V_A and V_B responsive to the voltage V_{out}, which is responsive to the current i_L through the series circuit **242**, so as to substantially cancel DC and out-of-band signal components thereof for frequencies that are passed by the low-pass filter **430**. Although the low-pass filter **430** is presently implemented in the summing and difference amplifier **276**, it should be understood that this could also be implemented using the tenth operational amplifier **436** configured as a low-pass filter rather than as a buffer amplifier **434** as illustrated in FIG. **55**. Referring to FIGS. **56***a-c*, **57***a-c*, **58***a-b*, **59**, and **60***a-e*, a second aspect of a signal conditioning circuit **502** provides for generating a measure responsive to the complex impedance of the coil **14**, L' using a time constant method, wherein the time constant of an associate RL or RLC circuit incorporating the coil determines the time response thereof to a pulse applied thereto, and a measure responsive to the complex impedance of the coil **14**, L' responsive to one or more measures of this time response.

Referring to FIG. **56***a*, in accordance with a first embodiment of the second aspect of the signal conditioning circuit **502.1** that provides for generating one or more measures responsive to a self-impedance Z_L of a coil **14**, L', a monopolar pulse generator **504** under control of a processor **108**, **204** is operatively coupled across a series combination of a sense resistor R_{Sense} and the coil **14**, L', in parallel with a series combination of a second resistor R_2 and a diode D that is reverse biased relative to the polarity of the monopolar pulse generator **504**. Referring to FIGS. **57***a-c*, examples of various embodiments of the monopolar pulse generator **504** include a

battery **506** in series with a controlled switch **508**, e.g. a transistor or relay, as illustrated in FIG. **57***a*; a battery **506** in series with an FET transistor switch **508'**, as illustrated in FIG. **57***b*; and an oscillator circuit that provides for the generation of a monopolar pulse train **510** as illustrated in FIG. **57***c*. A differential amplifier **512** generates a signal V_{OUT} responsive to the voltage V_{sense} across the sense resistor R_{sense}, which is responsive to the current i_L through the coil **14**, L' in accordance with Ohm's law, i.e. $V_{sense}=R_{sense}*i_L$. Referring to FIG. **56***b*, the coil **14**, L' can be modeled as an inductor L in series with a resistor R_L, wherein the resistance R_L accounts for the combination of the inherent resistance of the coil **14**, L' and the effective resistance resulting from proximal eddy current effects. The monopolar pulse generator **504** generates a pulse **514**, e.g. upon closure of the controlled switch **508** or the FET transistor switch **508'**, and, referring to FIG. **56***c*, the subsequent rate of increase of the current i_L provides a measure of the inductance L and resistance R_L, which together provide the impedance Z of the coil **14**, L'. The time constant τ_{ON} of a pure RL circuit would be given by:

$$\tau_{ON} = \frac{R_{sense} + R_L}{L} \tag{36}$$

and the current i_L would be given as follows:

$$i_L(t) = \frac{V}{R_{sense} + R_L} \cdot \left(1 - e^{\frac{(R_{sense}+R_L)\cdot t}{L}}\right) \tag{37}$$

If the duration of the pulse **514** were sufficiently long, e.g. $t>>\tau$, the current i_L would approach a value of:

$$i_L^{\max} = \frac{V}{R_{sense} + R_L} \tag{38}$$

The pulse **514** is held on for a duration sufficient to provide for measuring the time constant τ_{ON}, for example, responsive to any of the following: 1) the current i_L at and associated time t as the current i_L is rising, e.g. at the end of a pulse **514** having a duration less than several time constants τ_{ON}; 2) the rate of change of current i_L as the current i_L is rising; 3) the time or times required after initiation of a pulse **514** for the current i_L to reach a predetermined value or to reach a set of predetermined values; or 4) an integral of the current i_L over at least a portion of the period when the pulse **514** is on.

For example, from Equation (37) may be rewritten as:

$$i_L(t) = i_L^{\max} \cdot \left(1 - e^{-\frac{t}{\tau}}\right) \tag{39}$$

where $\tau=\tau_{ON}$. The first derivative of the current i_L with respect to time is given by:

$$i_L'(t) = i_L^{\max} \cdot \frac{t}{\tau} \cdot e^{-\frac{t}{\tau}} \tag{40}$$

From Equations (39) and (40), the current i_L can be given as a function of the first derivative of the current i_L as:

$$i_L(t) = i_L^{\max} - \frac{\tau}{t} \cdot i_L'(t) \tag{41}$$

If the current i_L is measured as i_1 and i_2 at two corresponding different times t_1 and t_2, and if the first derivative of the current i_L is determined as i_1' and i_2' at these same times, then the time constant τ_{ON} is given by:

$$\tau_{ON} = \frac{i_2 - i_1}{\left(\frac{i_1'}{t_1} - \frac{i_2'}{t_2}\right)} = \frac{L}{R_{sense} + R_L} \tag{42}$$

From Equations (41) and (38), the effective resistance R_L of the coil **14**, L' is then given by:

$$R_L = \frac{V}{i_1 + \frac{\tau_{ON}}{t_1} \cdot i_1'} - R_{sense} = \frac{V}{i_2 + \frac{\tau_{ON}}{t_2} \cdot i_2'} - R_{sense} \tag{43}$$

and the inductance L of the coil **14**, L' is given by:

$$L=\tau_{ON}\cdot(R_{sense}+R_L) \tag{44}$$

After the pulse **514** is turned off, e.g. upon the opening of the controlled switch **508** or the FET transistor switch **508'**, the energy stored in the coil **14**, L' is dissipated relatively quickly through the parallel circuit path of the second resistor R_2 in series with the diode D, having a time constant τ_{OFF} given by:

$$\tau_{OFF} = \frac{R_{sense} + R_L + R_2}{L} \tag{45}$$

wherein the value of the second resistor R_2 is chosen to magnetically discharge the coil **14**, L' to zero current i_L before the next pulse **514**. A monopolar pulse train **510** as illustrated in FIG. **57***c* can be used to make a continuous plurality of measurements, which can be averaged—over a selectable number of pulses **514**, on a fixed or running basis—or used individually, depending upon the rate at which the resulting measure(s) is/are to be updated. Equation (37) and the associated measurement process can also be adapted to account for the affect of the inherent capacitance of the coil **14**, L', if non-negligible.

Referring to FIG. **58**, a second embodiment of the second aspect of a signal conditioning circuit **502.2** is similar to the first embodiment of signal conditioning circuit **502.1** described hereinabove except that the monopolar pulse generator **504** is replaced with a bipolar pulse generator **516**, and the diode D is replaced with a transistor switch **518**, e.g. an FET switch **518'**, wherein, the bipolar pulse generator **516** is adapted to generate a bipolar pulse train **520**, one embodiment of which, for example, is illustrated in FIG. **59**. The second aspect of a signal conditioning circuit **502.2** provides for periodically reversing the direction of current i_L through the coil **14**, L' so as to prevent a magnetization of associated ferromagnetic elements, e.g. of the vehicle **12**, in proximity thereto. The bipolar pulse train **520** comprises both positive **514** and negative **514'** polarity pulses, during which times the

transistor switch **518** would be switched off to provide for magnetically charging the coil **14**, L'; separated by dwell periods **522** of zero voltage, during which times the transistor switch **518** would be switched on to provide for magnetically discharging the coil **14**, L'.

Referring to FIG. **60**, a third embodiment of the second aspect of a signal conditioning circuit **502.3** is similar to the first embodiment of signal conditioning circuit **502.1** described hereinabove—incorporating the embodiment of the monopolar pulse generator **504** illustrated in FIG. **57***b*—except that the coil **14**, L' is driven through an H-switch **524** so as to provide for periodically reversing the direction of current i_L through the coil **14**, L' so as to prevent a magnetization of associated ferromagnetic elements, e.g. of the vehicle **12**, in proximity thereto, without requiring a bipolar pulse generator **516** and associated bipolar electronic elements. The H-switch **524** comprises respective first **526** and second **528** nodes, respectively connected to the sense resistor R_{sense} and monopolar pulse generator **504** respectively, as had been connected the coil **14**, L' in the first embodiment of the second aspect of a signal conditioning circuit **502.1**. The H-switch **524** also comprises respective third **530** and fourth **532** nodes respectively connected to the first **534** and second **536** terminals of the coil **14**, L'. A first transistor switch **538** (e.g. FET switch) under control of a first switch signal S_A from the processor **108**, **204** is operative to control a flow of current between the first **526** and third **530** nodes of the H-switch **524**. A second transistor switch **540** (e.g. FET switch) under control of a second switch signal S_B from the processor **108**, **204** is operative to control a flow of current between the first **526** and fourth **532** nodes of the H-switch **524**. A third transistor switch **542** (e.g. FET switch) under control of the second switch signal S_B from the processor **108**, **204** is operative to control a flow of current between the second **528** and third **530** nodes of the H-switch **524**. A fourth transistor switch **544** (e.g. FET switch) under control of the first switch signal S_A from the processor **108**, **204** is operative to control a flow of current between the second **528** and fourth **532** nodes of the H-switch **524**. The FET transistor switch **508'** of the monopolar pulse generator **504** under control of pulse switch signal S_0 controls the flow of current from the battery **506** to the coil **14**, L'.

Referring to FIGS. **61***a-e*, the signal conditioning circuit **502.3** is controlled as follows: In a first step **546**, the pulse switch signal S_0 and the first switch signal S_A are activated, which turns the FET transistor switch **508'** and the first **538** and fourth **544** transistor switches on, thereby providing for current i_L to flow through the coil **14**, L' in a first direction. Then, in a second step **548**, the pulse switch signal S_0 is deactivated without changing the first switch signal S_A, thereby providing for the coil **14**, L' to magnetically discharge through the second resistor R and diode D, with current i_L continuing to flow through the coil **14**, L' in the first direction until dissipated. Then, in a third step **550**, first switch signal S_A is deactivated which turns the first **538** and fourth **544** transistor switches off, after which the pulse switch signal S_0 and the second switch signal S_B are activated, which turns the FET transistor switch **508'** and the second **540** and third **542** transistor switches on, thereby providing for current i_L to flow through the coil **14**, L' in a second direction. Finally, in a fourth step **552**, the pulse switch signal S_0 is deactivated without changing the second switch signal S_B, thereby providing for the coil **14**, L' to magnetically discharge through the second resistor R and diode D, with current i_L continuing to flow through the coil **14**, L' in the second direction until dissipated. After the fourth step **552**, the above process repeats with the first step **546** as described hereinabove.

Referring to FIG. **62***a*, in accordance with a third aspect of a signal conditioning circuit **554** that provides for generating one or more measures responsive to a self-impedance Z_L of a coil **14**, L' from a measurement of a differential voltage V_{out} of a four-arm bridge circuit **556** incorporating the as one of the arms **558**. More particularly, for example, in one embodiment of the four-arm bridge circuit **556**, the first **558.1** and second **558.2** arms respectively comprise first R_B and second R_B bridge resistors, e.g. for example, of equal value, which are interconnected at a first node **560** of the four-arm bridge circuit **556**. The third arm **558.3** comprises the coil **14**, L' and the associated cabling, wherein the coil **14**, L' is modeled as an inductor L in series with a resistor R_L, and the associated cabling and inter-coil capacitance of the coil **14**, L' is modeled as a first capacitor C_1 in parallel with the coil **14**, L'. The fourth arm **358.4** comprises a gyrator **562** in parallel with a second capacitor C_2. The third **558.3** and fourth **358.4** arms are interconnected at a second node **564** of the four-arm bridge circuit **556**. An oscillator **566** and associated amplifier **568** are interconnected across the first **560** and second **564** nodes, and provide for generating an oscillatory signal, e.g. a sinusoidal signal, thereacross. The second **558.2** and fourth **558.4** arms of the four-arm bridge circuit **556** are interconnected at a third node **570** which is connected to a first input **572** of a differential amplifier **574**; and the first **558.1** and third **558.3** arms of the four-arm bridge circuit **556** are interconnected at a fourth node **576** which is connected to a second input **578** of the differential amplifier **574**. Accordingly, the two bridge resistors R_B provide for balancing the second **558.2** and fourth **558.4** arms of the four-arm bridge circuit **556**, and the combination of the gyrator **562** in parallel with the second capacitor C_2 in the fourth arm **558.4** provides for balancing the coil **14**, L' in the third arm **558.3**, thereby providing for balancing the four-arm bridge circuit **556** so as to null the associated differential voltage V_{out} thereof, which is given by the difference between the voltage V_1 at the third node **570** and the voltage V_2 at the fourth node **576**. The gyrator **562** is an active circuit two terminal circuit using resistive and capacitive elements, which provides for modeling an inductor of arbitrary inductance and series resistance. More particularly, a first gyrator resistor R_L' is connected from a first terminal **580** of the gyrator **562** to the inverting input of an operational amplifier **582**, which is also connected by a feedback loop **584** to the output **586** of the operational amplifier **582**. A gyrator capacitor C_G is connected from the first terminal **580** of the gyrator **562** to the non-inverting input of the operational amplifier **582**, which is also connected to a second gyrator resistor R_G, which is then connected to the second terminal **588** of the gyrator **562**. Referring to FIG. **62***b*, the equivalent circuit of the gyrator **562** illustrated in FIG. **62***a* comprises a resistor R_L' having a resistance R_L' equal to that of the first gyrator resistor R_L', in series with an inductor L_G having an inductance L_G given as follows:

$$L_G = R_L' \cdot R_G \cdot C_G \tag{46}$$

In one embodiment, for example, the resistance R_G of second gyrator resistor R_G is controlled to control the effective inductance L_G of the gyrator **562** so as to balance or nearly balance the four-arm bridge circuit **556**, i.e. so that the differential voltage V_{out} is nulled or nearly nulled. The second capacitor C_2 is provided to balance the first capacitor C_1, wherein, for example, in one embodiment, the value of the second capacitor C_2 is set equal to or slightly greater than the value of the first capacitor C_1, but would not be required if the associated capacitances of the cabling and coil **14**, L' were negligible. The resistance of the first gyrator resistor R_L' is provided to balance the combination of the inherent resis-

tance of the coil **14**, L', the resistance of the associated cabling, and the effective resistance of proximal eddy currents upon the coil **14**, L'. One or both of the first R_L' and second R_G gyrator resistors can be made controllable, e.g. digitally controllable, and the value of the gyrator capacitor C_G would be chosen so as to provide for a necessary range of control of the inductance L_G of the gyrator **562** to match that of the coil **14**, L', given the associated control ranges of the first R_L' and second R_G gyrator resistors. For example, the values of the first R_L' and second R_G gyrator resistors can be slowly updated by an associated processor **108**, **204** so as to maintain a desired level of balance of the four-arm bridge circuit **556** during normal, non-crash operating conditions. When the four-arm bridge circuit **556** is nulled, i.e. so as to null the differential voltage V_{out}, then the values of the resistance R_L and inductance L of the coil **14**, L' are given as follows:

$$R_L = R_L' \cdot \frac{R_A}{R_B}, \text{ and} \tag{47}$$

$$L = L_G \cdot \frac{R_A}{R_B} \tag{48}$$

In another embodiment, the inductance L_G of the gyrator **562** is adapted to be slightly lower than the inductance of the coil **14**, L' so that the differential voltage V_{out} is not completely nulled, so as to provide a continuous small signal during normal operation, which allows for real-time diagnostics of the coil **14**, L' and associated signals and circuitry. Under off-null conditions, the output of the differential amplifier **574** would generally be complex or phasor valued, which would be demodulated, for example into in-phase (I) and quadrature-phase (Q) components,—for example, using circuitry and processes described hereinabove for FIGS. **46-50**,—for subsequent processing and/or associated crash detection.

The third aspect of a signal conditioning circuit **554** can be adapted to provide relatively high accuracy measurements, with relatively high resolution, of the self-impedance Z_L of a coil **14**, L'.

In either mode of operation, i.e. nulled or off-null, and generally for any of the aspects of the signal conditioning circuits described herein, the associated signal detection process may be implemented by simply comparing the output of the signal conditioning circuit with an associated reference value or reference values, wherein the detection of a particular change in a magnetic condition affecting the coil **14** is then responsive to the change in the associated signal or signals relative to the associated value or reference values. Accordingly, whereas the in-phase (I) and quadrature (Q) phase components of the signal can be determined analytically and related to the associated impedance Z of the coil **14**, this is not necessarily necessary for purposes of detecting a change in an associated magnetic condition affecting the coil **14**, which instead can be related directly to changes in the associated signals from the signal conditioning circuit.

Referring to FIG. **63***a*, in accordance with a fourth aspect of a signal conditioning circuit **590** that provides for generating one or more measures responsive to a self-impedance Z_L of a coil **14**, L', a multi-frequency signal **592** is generated by summing and amplifying a plurality of signals from an associated plurality of oscillators **594.1**, **594.2**, **594.3** operating a corresponding plurality of different frequencies f_1, f_2, f_3 are applied to the coil **14**, L' in series with a sense resistor R_{sense}, wherein the operations of summing and amplifying may be performed by a operational amplifier **596** adapted as a summing amplifier **598**. The self-impedance Z_L of the coil **14**, L' at a frequency f is given by:

$$Z_L = R_L + 2\pi f \cdot L \tag{49}$$

wherein R_L and L are the effective resistance and the self-inductance of the coil **14**, L', respectively. Accordingly, for a frequency-dependent applied voltage signal v(f) from the summing amplifier **598**, the complex voltage V_{sense} across the sense resistor R_{sense} is given by:

$$V_{Sense} = \frac{v(f)}{\left(1 + \frac{R_L}{R_{Sense}}\right) \cdot \left(1 + \frac{f^2}{f_0^2}\right)} \cdot \left(1 - i \cdot \frac{f}{f_0}\right) \tag{50}$$

wherein the cut-off frequency f_0 of the associated low-pass filter comprising the coil **14**, L' in series with the sense resistor R_{sense} is given by:

$$f_0 = \frac{R_{Sense} + R_L}{2\pi \cdot L} \tag{51}$$

The frequency-dependent current i_L through the coil **14**, L' is then given by:

$$i_L = \frac{V_{Sense}}{R_{Sense}} = \frac{v(f)}{R_{Sense} \cdot \left(1 + \frac{R_L}{R_{Sense}}\right) \cdot \left(1 + \frac{f^2}{f_0^2}\right)} \cdot \left(1 - i \cdot \frac{f}{f_0}\right) \tag{52}$$

having a corresponding frequency dependent magnitude $\|i_L\|$ and phase ϕ respectively given by:

$$\|i_L\| = \frac{v(f)}{R_{Sense} \cdot \left(1 + \frac{R_L}{R_{Sense}}\right) \cdot \left(1 + \frac{f^2}{f_0^2}\right)^{\frac{1}{2}}}, \text{ and} \tag{53}$$

$$\phi = \tan^{-1}\left(-\frac{f}{f_0}\right) \tag{54}$$

The voltage V_L across the coil **14**, L' is given by:

$$V_L = v(f) \cdot V_{Sense} \tag{55}$$

which provides a phase reference and therefore has a phase of 0 degrees. The ratio of the voltage V_L across the coil **14**, L' to the current i_L through the coil **14**, L' provides a measure of the self-impedance Z_L of a coil **14**, L'. The voltage V_{sense} is sensed with a differential amplifier **600**, the output of which is operatively coupled to a processor **108**, **204** for subsequent analysis.

Referring to FIG. **63***b*, the magnitude $\|i_L\|$ and phase ϕ of the current i_L through the coil **14**, L' is dependent upon the frequency of the applied voltage signal v(f), and will be different for each of the different associated frequency components associated with the plurality of different frequencies f_1, f_2, f_3. Although a single frequency f can be used, plural frequencies f_1, f_2, f_3 provide additional information that provides some immunity to the affects of noise and electromagnetic interference on the associated measurements. For example, if the frequency-dependent ratio of the voltage V_{sense} across the

sense resistor R_{sense} to the applied voltage signal v(f) is inconsistent with that which would be expected from Equation (50) for one or more frequencies f_1, f_2, f_3, then the measurements at those frequencies may be corrupted. Three or more frequencies f_1, f_2, f_3 distributed over a frequency range can provide for determining if any of the associated measurements are affected by a particular noise source.

Although the signal conditioning circuits **294** described herein have been illustrated for generating a measure responsive to a self-impedance of a coil, in general, these signal conditioning circuits **294** may generally be used to measure the impedance of a two terminal circuit element, or a two terminal combination of circuit elements so as to provide for generating a measure responsive to the self-impedance of the two terminal circuit element or the two terminal a combination of circuit elements.

While specific embodiments have been described in detail, those with ordinary skill in the art will appreciate that various modifications and alternatives to those details could be developed in light of the overall teachings of the disclosure. Accordingly, the particular arrangements disclosed are meant to be illustrative only and not limiting as to the scope of the invention, which is to be given the full breadth of the appended claims and any and all equivalents thereof.

What is claimed is:

1. A magnetic crash sensor, comprising:

a. at least one coil in magnetic communication with at least a portion of a vehicle, wherein said portion of said vehicle is susceptible to deformation responsive to a crash;

b. a signal source operatively associated with said at least one coil, wherein said signal source provides for generating a first time-varying signal, said first time-varying signal comprises at least one pulse, and said first time-varying signal is operatively coupled to said at least one coil so as to cause said at least one coil to generate a magnetic field; and

c. at last one circuit, wherein said at least one circuit comprises at least one sense resistor in series with said at least one coil, said current through said at least one coil and through said at least one sense resistor is responsive to said first signal, said first signal comprises a time-varying voltage applied by said signal source, said current through said at least one coil and through said at least one sense resistor is also responsive to a magnetic condition of said at least one coil, said magnetic condition is responsive to said magnetic communication of said at least one coil with said portion of said vehicle, said at least one circuit generates a second signal responsive to a voltage across said at least one sense resistor, and said at least one circuit is adapted to charge said at least one coil through said at least one sense resistor with said pulse when said pulse is activated, and said at least one circuit is adapted to discharge said at least one coil through a second resistor after said at least one pulse is deactivated.

2. A magnetic crash sensor as recited in claim **1**, wherein said at least one pulse is mono-polar, and said at least one circuit comprises a diode in series with said second resistor, wherein said diode is reverse biased by said at least one pulse.

3. A magnetic crash sensor as recited in claim **1**, wherein said at least one pulse is bi-polar, and said at least one circuit comprises a switch in series with said second resistor, wherein said switch is turned off when said at least one pulse is activated, and said switch is turned off when said at least one pulse is deactivated.

4. A magnetic crash sensor as recited in claim **1**, wherein said at least one pulse is mono-polar, said at least one circuit comprises a diode in series with said second resistor, wherein said diode is reverse biased by said at least one pulse, and said at least one circuit comprises an H-switch, wherein said H-switch is adapted to control a direction of current through said at least one coil, and said H-switch is adapted to periodically reverse a flow of current through said at least one coil responsive to said at least one pulse.

* * * * *