US010289433B2

(12) **United States Patent**
Saddler et al.

(10) **Patent No.: US 10,289,433 B2**
(45) **Date of Patent: May 14, 2019**

(54) **DOMAIN SPECIFIC LANGUAGE FOR ENCODING ASSISTANT DIALOG**

(71) Applicant: **Apple Inc.**, Cupertino, CA (US)

(72) Inventors: **Harry J. Saddler**, Berkeley, CA (US); **Nicolas Zeitlin**, Berkeley, CA (US)

(73) Assignee: **Apple Inc.**, Cupertino, CA (US)

(*) Notice: Subject to any disclaimer, the term of this patent is extended or adjusted under 35 U.S.C. 154(b) by 1106 days.

(21) Appl. No.: **14/502,245**

(22) Filed: **Sep. 30, 2014**

(65) **Prior Publication Data**

US 2015/0348533 A1 Dec. 3, 2015

Related U.S. Application Data

(60) Provisional application No. 62/005,886, filed on May 30, 2014.

(51) **Int. Cl.**

G06F 3/00	(2006.01)
G06F 9/451	(2018.01)
G10L 13/027	(2013.01)

(52) **U.S. Cl.**

CPC ***G06F 9/453*** (2018.02); ***G10L 13/027*** (2013.01)

(58) **Field of Classification Search**

CPC G10L 15/1822; G10L 15/22; G10L 13/00; G10L 13/02; G10L 13/08; G10L 15/1815;

(Continued)

(56) **References Cited**

U.S. PATENT DOCUMENTS

1,559,320	A	10/1925	Hirsh
2,180,522	A	11/1939	Henne

(Continued)

FOREIGN PATENT DOCUMENTS

CH	681573	A5	4/1993
CN	1673939	A	9/2005

(Continued)

OTHER PUBLICATIONS

"Interactive Voice", available at <http://www.helloivee.com/company/>, retrieved on Feb. 10, 2014, 2 pages.

(Continued)

Primary Examiner — Di Xiao

(74) *Attorney, Agent, or Firm* — Dentons US LLP

(57) **ABSTRACT**

Systems and processes for generating output dialogs for virtual assistants are provided. An output dialog can be generated from multiple output segments that can each include a string of one or more characters or words. The contents of an output segment can be selected from multiple possible outputs based on a predetermined order, conditional logic, or a random selection. The output segments can be concatenated to form the output dialog. In one example, a dialog generation file that defines the possible outputs for each output segment, an ordering of the output segments within the output dialog, and format for the output dialog can be used to generate the output dialog. The dialog generation file can include any number of functional blocks, which can each output an output segment, that can be arranged hierarchically and in a particular order to generate a desired output dialog.

36 Claims, 7 Drawing Sheets

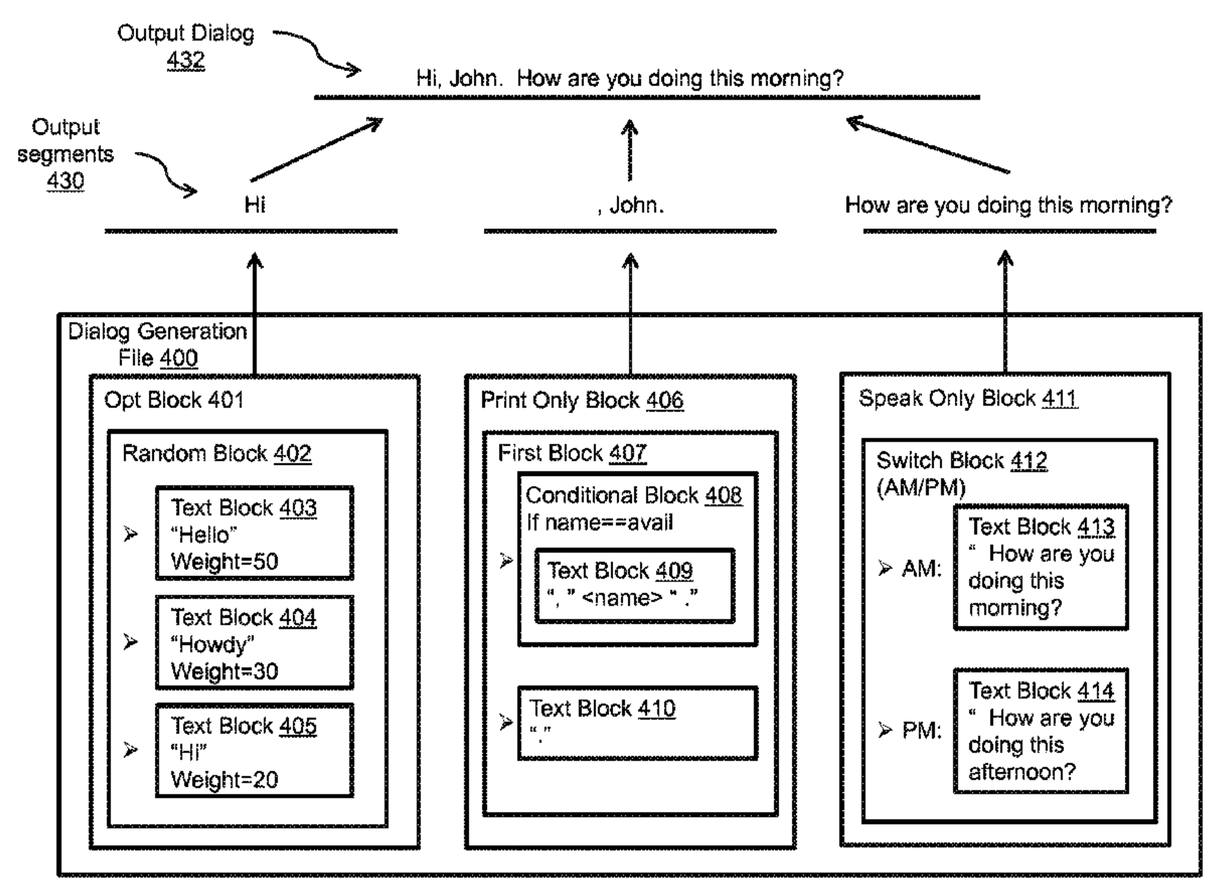

(58) **Field of Classification Search**
CPC G10L 15/183; G10L 15/26; G10L 15/265; G10L 21/06; G10L 2015/088
See application file for complete search history.

(56) **References Cited**

U.S. PATENT DOCUMENTS

3,704,345 A 11/1972 Coker et al.
3,710,321 A 1/1973 Rubenstein
3,828,132 A 8/1974 Flanagan et al.
3,979,557 A 9/1976 Schulman et al.
4,013,085 A 3/1977 Wright
4,081,631 A 3/1978 Feder
4,090,216 A 5/1978 Constable
4,107,784 A 8/1978 Van Bemmelen
4,108,211 A 8/1978 Tanaka
4,159,536 A 6/1979 Kehoe et al.
4,181,821 A 1/1980 Pirz et al.
4,204,089 A 5/1980 Key et al.
4,241,286 A 12/1980 Gordon
4,253,477 A 3/1981 Eichman
4,278,838 A 7/1981 Antonov
4,282,405 A 8/1981 Taguchi
4,310,721 A 1/1982 Manley et al.
4,332,464 A 6/1982 Bartulis et al.
4,348,553 A 9/1982 Baker et al.
4,384,169 A 5/1983 Mozer et al.
4,386,345 A 5/1983 Narveson et al.
4,433,377 A 2/1984 Eustis et al.
4,451,849 A 5/1984 Fuhrer
4,485,439 A 11/1984 Rothstein
4,495,644 A 1/1985 Parks et al.
4,513,379 A 4/1985 Wilson et al.
4,513,435 A 4/1985 Sakoe et al.
4,555,775 A 11/1985 Pike
4,577,343 A 3/1986 Oura
4,586,158 A 4/1986 Brandle
4,587,670 A 5/1986 Levinson et al.
4,589,022 A 5/1986 Prince et al.
4,611,346 A 9/1986 Bednar et al.
4,615,081 A 10/1986 Lindahl
4,618,984 A 10/1986 Das et al.
4,642,790 A 2/1987 Minshull et al.
4,653,021 A 3/1987 Takagi
4,654,875 A 3/1987 Srihari et al.
4,655,233 A 4/1987 Laughlin
4,658,425 A 4/1987 Julstrom
4,670,848 A 6/1987 Schramm
4,677,570 A 6/1987 Taki
4,680,429 A 7/1987 Murdock et al.
4,680,805 A 7/1987 Scott
4,688,195 A 8/1987 Thompson et al.
4,692,941 A 9/1987 Jacks et al.
4,698,625 A 10/1987 McCaskill et al.
4,709,390 A 11/1987 Atal et al.
4,713,775 A 12/1987 Scott et al.
4,718,094 A 1/1988 Bahl et al.
4,724,542 A 2/1988 Williford
4,726,065 A 2/1988 Froessl
4,727,354 A 2/1988 Lindsay
4,736,296 A 4/1988 Katayama et al.
4,750,122 A 6/1988 Kaji et al.
4,754,489 A 6/1988 Bokser
4,755,811 A 7/1988 Slavin et al.
4,776,016 A 10/1988 Hansen
4,783,804 A 11/1988 Juang et al.
4,783,807 A 11/1988 Marley
4,785,413 A 11/1988 Atsumi
4,790,028 A 12/1988 Ramage
4,797,930 A 1/1989 Goudie
4,802,223 A 1/1989 Lin et al.
4,803,729 A 2/1989 Baker
4,807,752 A 2/1989 Chodorow
4,811,243 A 3/1989 Racine
4,813,074 A 3/1989 Marcus
4,819,271 A 4/1989 Bahl et al.
4,827,518 A 5/1989 Feustel et al.
4,827,520 A 5/1989 Zeinstra
4,829,576 A 5/1989 Porter
4,829,583 A 5/1989 Monroe et al.
4,831,551 A 5/1989 Schalk et al.
4,833,712 A 5/1989 Bahl et al.
4,833,718 A 5/1989 Sprague
4,837,798 A 6/1989 Cohen et al.
4,837,831 A 6/1989 Gillick et al.
4,839,853 A 6/1989 Deerwester et al.
4,852,168 A 7/1989 Sprague
4,862,504 A 8/1989 Nomura
4,875,187 A 10/1989 Smith
4,878,230 A 10/1989 Murakami et al.
4,887,212 A 12/1989 Zamora et al.
4,896,359 A 1/1990 Yamamoto et al.
4,903,305 A 2/1990 Gillick et al.
4,905,163 A 2/1990 Garber et al.
4,908,867 A 3/1990 Silverman
4,914,586 A 4/1990 Swinehart et al.
4,914,590 A 4/1990 Loatman et al.
4,918,723 A 4/1990 Iggulden et al.
4,926,491 A 5/1990 Maeda et al.
4,928,307 A 5/1990 Lynn
4,935,954 A 6/1990 Thompson et al.
4,939,639 A 7/1990 Lee et al.
4,941,488 A 7/1990 Marxer et al.
4,944,013 A 7/1990 Gouvianakis et al.
4,945,504 A 7/1990 Nakama et al.
4,953,106 A 8/1990 Gansner et al.
4,955,047 A 9/1990 Morganstein et al.
4,965,763 A 10/1990 Zamora
4,972,462 A 11/1990 Shibata
4,974,191 A 11/1990 Amirghodsi et al.
4,975,975 A 12/1990 Filipski
4,977,598 A 12/1990 Doddington et al.
4,980,916 A 12/1990 Zinser
4,985,924 A 1/1991 Matsuura
4,992,972 A 2/1991 Brooks et al.
4,994,966 A 2/1991 Hutchins
4,994,983 A 2/1991 Landell et al.
5,003,577 A 3/1991 Ertz et al.
5,007,095 A 4/1991 Nara et al.
5,007,098 A 4/1991 Kumagai
5,010,574 A 4/1991 Wang
5,016,002 A 5/1991 Levanto
5,020,112 A 5/1991 Chou
5,021,971 A 6/1991 Lindsay
5,022,081 A 6/1991 Hirose et al.
5,027,110 A 6/1991 Chang et al.
5,027,406 A 6/1991 Roberts et al.
5,027,408 A 6/1991 Kroeker et al.
5,029,211 A 7/1991 Ozawa
5,031,217 A 7/1991 Nishimura
5,032,989 A 7/1991 Tornetta
5,033,087 A 7/1991 Bahl et al.
5,040,218 A 8/1991 Vitale et al.
5,046,099 A 9/1991 Nishimura
5,047,614 A 9/1991 Bianco
5,050,215 A 9/1991 Nishimura
5,053,758 A 10/1991 Cornett et al.
5,054,084 A 10/1991 Tanaka et al.
5,057,915 A 10/1991 Von Kohorn
5,067,158 A 11/1991 Arjmand
5,067,503 A 11/1991 Stile
5,072,452 A 12/1991 Brown et al.
5,075,896 A 12/1991 Wilcox et al.
5,079,723 A 1/1992 Herceg et al.
5,083,119 A 1/1992 Trevett et al.
5,083,268 A 1/1992 Hemphill et al.
5,086,792 A 2/1992 Chodorow
5,090,012 A 2/1992 Kajiyama et al.
5,091,790 A 2/1992 Silverberg
5,091,945 A 2/1992 Kleijn
5,103,498 A 4/1992 Lanier et al.
5,109,509 A 4/1992 Katayama et al.
5,111,423 A 5/1992 Kopec, Jr. et al.
5,119,079 A 6/1992 Hube et al.
5,122,951 A 6/1992 Kamiya

(56) **References Cited**

U.S. PATENT DOCUMENTS

5,123,103	A	6/1992	Ohtaki et al.
5,125,022	A	6/1992	Hunt et al.
5,125,030	A	6/1992	Nomura et al.
5,127,043	A	6/1992	Hunt et al.
5,127,053	A	6/1992	Koch
5,127,055	A	6/1992	Larkey
5,128,672	A	7/1992	Kaehler
5,133,011	A	7/1992	McKiel, Jr.
5,133,023	A	7/1992	Bokser
5,142,584	A	8/1992	Ozawa
5,148,541	A	9/1992	Lee et al.
5,153,913	A	10/1992	Kandefer et al.
5,157,610	A	10/1992	Asano et al.
5,161,102	A	11/1992	Griffin et al.
5,164,900	A	11/1992	Bernath
5,164,982	A	11/1992	Davis
5,165,007	A	11/1992	Bahl et al.
5,167,004	A	11/1992	Netsch et al.
5,175,536	A	12/1992	Aschliman et al.
5,175,803	A	12/1992	Yeh
5,175,814	A	12/1992	Anick et al.
5,179,627	A	1/1993	Sweet et al.
5,179,652	A	1/1993	Rozmanith et al.
5,194,950	A	3/1993	Murakami et al.
5,195,034	A	3/1993	Garneau et al.
5,195,167	A	3/1993	Bahl et al.
5,197,005	A	3/1993	Shwartz et al.
5,199,077	A	3/1993	Wilcox et al.
5,201,034	A	4/1993	Matsuura et al.
5,202,952	A	4/1993	Gillick et al.
5,208,862	A	5/1993	Ozawa
5,210,689	A	5/1993	Baker et al.
5,212,638	A	5/1993	Bernath
5,212,821	A	5/1993	Gorin et al.
5,216,747	A	6/1993	Hardwick et al.
5,218,700	A	6/1993	Beechick
5,220,629	A	6/1993	Kosaka et al.
5,220,639	A	6/1993	Lee
5,220,657	A	6/1993	Bly et al.
5,222,146	A	6/1993	Bahl et al.
5,230,036	A	7/1993	Akamine et al.
5,231,670	A	7/1993	Goldhor et al.
5,235,680	A	8/1993	Bijnagte
5,237,502	A	8/1993	White et al.
5,241,619	A	8/1993	Schwartz et al.
5,253,325	A	10/1993	Clark
5,257,387	A	10/1993	Richek et al.
5,260,697	A	11/1993	Barrett et al.
5,266,931	A	11/1993	Tanaka
5,266,949	A	11/1993	Rossi
5,267,345	A	11/1993	Brown et al.
5,268,990	A	12/1993	Cohen et al.
5,274,771	A	12/1993	Hamilton et al.
5,274,818	A	12/1993	Vasilevsky et al.
5,276,616	A	1/1994	Kuga et al.
5,276,794	A	1/1994	Lamb, Jr.
5,278,980	A	1/1994	Pedersen et al.
5,282,265	A	1/1994	Rohra Suda et al.
5,283,818	A	2/1994	Klausner et al.
5,287,448	A	2/1994	Nicol et al.
5,289,562	A	2/1994	Mizuta et al.
RE34,562	E	3/1994	Murakami et al.
5,291,286	A	3/1994	Murakami et al.
5,293,448	A	3/1994	Honda
5,293,452	A	3/1994	Picone et al.
5,296,642	A	3/1994	Konishi
5,297,170	A	3/1994	Eyuboglu et al.
5,297,194	A	3/1994	Hunt et al.
5,299,125	A	3/1994	Baker et al.
5,299,284	A	3/1994	Roy
5,301,109	A	4/1994	Landauer et al.
5,303,406	A	4/1994	Hansen et al.
5,305,205	A	4/1994	Weber et al.
5,305,768	A	4/1994	Gross et al.
5,309,359	A	5/1994	Katz et al.
5,315,689	A	5/1994	Kanazawa et al.
5,317,507	A	5/1994	Gallant
5,317,647	A	5/1994	Pagallo
5,325,297	A	6/1994	Bird et al.
5,325,298	A	6/1994	Gallant
5,325,462	A	6/1994	Farrett
5,326,270	A	7/1994	Ostby et al.
5,327,342	A	7/1994	Roy
5,327,498	A	7/1994	Hamon
5,329,608	A	7/1994	Bocchieri et al.
5,333,236	A	7/1994	Bahl et al.
5,333,266	A	7/1994	Boaz et al.
5,333,275	A	7/1994	Wheatley et al.
5,335,011	A	8/1994	Addeo et al.
5,335,276	A	8/1994	Thompson et al.
5,341,293	A	8/1994	Vertelney et al.
5,341,466	A	8/1994	Perlin et al.
5,345,536	A	9/1994	Hoshimi et al.
5,349,645	A	9/1994	Zhao
5,353,374	A	10/1994	Wilson et al.
5,353,376	A	10/1994	Oh et al.
5,353,377	A	10/1994	Kuroda et al.
5,353,408	A	10/1994	Kato et al.
5,353,432	A	10/1994	Richek et al.
5,357,431	A	10/1994	Nakada et al.
5,367,640	A	11/1994	Hamilton et al.
5,369,575	A	11/1994	Lamberti et al.
5,369,577	A	11/1994	Kadashevich et al.
5,371,853	A	12/1994	Kao et al.
5,373,566	A	12/1994	Murdock
5,377,103	A	12/1994	Lamberti et al.
5,377,301	A	12/1994	Rosenberg et al.
5,377,303	A	12/1994	Firman
5,384,671	A	1/1995	Fisher
5,384,892	A	1/1995	Strong
5,384,893	A	1/1995	Hutchins
5,386,494	A	1/1995	White
5,386,556	A	1/1995	Hedin et al.
5,390,236	A	2/1995	Klausner et al.
5,390,279	A	2/1995	Strong
5,390,281	A	2/1995	Luciw et al.
5,392,419	A	2/1995	Walton
5,396,625	A	3/1995	Parkes
5,400,434	A	3/1995	Pearson
5,404,295	A	4/1995	Katz et al.
5,406,305	A	4/1995	Shimomura et al.
5,408,060	A	4/1995	Muurinen
5,412,756	A	5/1995	Bauman et al.
5,412,804	A	5/1995	Krishna
5,412,806	A	5/1995	Du et al.
5,418,951	A	5/1995	Damashek
5,422,656	A	6/1995	Allard et al.
5,424,947	A	6/1995	Nagao et al.
5,425,108	A	6/1995	Hwang et al.
5,428,731	A	6/1995	Powers, III
5,434,777	A	7/1995	Luciw
5,442,598	A	8/1995	Haikawa et al.
5,442,780	A	8/1995	Takanashi et al.
5,444,823	A	8/1995	Nguyen
5,449,368	A	9/1995	Kuzmak
5,450,523	A	9/1995	Zhao
5,455,888	A	10/1995	Iyengar et al.
5,457,768	A	10/1995	Tsuboi et al.
5,459,488	A	10/1995	Geiser
5,463,696	A	10/1995	Beernink et al.
5,463,725	A	10/1995	Henckel et al.
5,465,401	A	11/1995	Thompson
5,469,529	A	11/1995	Bimbot et al.
5,471,611	A	11/1995	McGregor
5,473,728	A	12/1995	Luginbuhl et al.
5,475,587	A	12/1995	Anick et al.
5,475,796	A	12/1995	Iwata
5,477,447	A	12/1995	Luciw et al.
5,477,448	A	12/1995	Golding et al.
5,477,451	A	12/1995	Brown et al.
5,479,488	A	12/1995	Lennig et al.
5,481,739	A	1/1996	Staats
5,485,372	A	1/1996	Golding et al.
5,485,543	A	1/1996	Aso

(56) **References Cited**

U.S. PATENT DOCUMENTS

5,488,727 A 1/1996 Agrawal et al.
5,490,234 A 2/1996 Narayan
5,491,758 A 2/1996 Bellegarda et al.
5,491,772 A 2/1996 Hardwick et al.
5,493,677 A 2/1996 Balogh et al.
5,495,604 A 2/1996 Harding et al.
5,497,319 A 3/1996 Chong et al.
5,500,903 A 3/1996 Gulli
5,500,905 A 3/1996 Martin et al.
5,500,937 A 3/1996 Thompson-Rohrlich
5,502,774 A 3/1996 Bellegarda et al.
5,502,790 A 3/1996 Yi
5,502,791 A 3/1996 Nishimura et al.
5,515,475 A 5/1996 Gupta et al.
5,521,816 A 5/1996 Roche et al.
5,524,140 A 6/1996 Klausner et al.
5,533,182 A 7/1996 Bates et al.
5,535,121 A 7/1996 Roche et al.
5,536,902 A 7/1996 Serra et al.
5,537,317 A 7/1996 Schabes et al.
5,537,618 A 7/1996 Boulton et al.
5,537,647 A 7/1996 Hermansky et al.
5,543,588 A 8/1996 Bisset et al.
5,543,897 A 8/1996 Altrieth, III
5,544,264 A 8/1996 Bellegarda et al.
5,548,507 A 8/1996 Martino et al.
5,555,343 A 9/1996 Luther
5,555,344 A 9/1996 Zunkler
5,559,301 A 9/1996 Bryan, Jr. et al.
5,559,945 A 9/1996 Beaudet et al.
5,564,446 A 10/1996 Wiltshire
5,565,888 A 10/1996 Selker
5,568,536 A 10/1996 Tiller et al.
5,568,540 A 10/1996 Greco et al.
5,570,324 A 10/1996 Geil
5,572,576 A 11/1996 Klausner et al.
5,574,823 A 11/1996 Hassanein et al.
5,574,824 A 11/1996 Slyh et al.
5,577,135 A 11/1996 Grajski et al.
5,577,164 A 11/1996 Kaneko et al.
5,577,241 A 11/1996 Spencer
5,578,808 A 11/1996 Taylor
5,579,037 A 11/1996 Tahara et al.
5,579,436 A 11/1996 Chou et al.
5,581,484 A 12/1996 Prince
5,581,652 A 12/1996 Abe et al.
5,581,655 A 12/1996 Cohen et al.
5,583,993 A 12/1996 Foster et al.
5,584,024 A 12/1996 Shwartz
5,594,641 A 1/1997 Kaplan et al.
5,596,260 A 1/1997 Moravec et al.
5,596,676 A 1/1997 Swaminathan et al.
5,596,994 A 1/1997 Bro
5,608,624 A 3/1997 Luciw
5,608,698 A 3/1997 Yamanoi et al.
5,608,841 A 3/1997 Tsuboka
5,610,812 A 3/1997 Schabes et al.
5,613,036 A 3/1997 Strong
5,613,122 A 3/1997 Burnard et al.
5,615,378 A 3/1997 Nishino et al.
5,615,384 A 3/1997 Allard et al.
5,616,876 A 4/1997 Cluts
5,617,386 A 4/1997 Choi
5,617,507 A 4/1997 Lee et al.
5,617,539 A 4/1997 Ludwig et al.
5,619,583 A 4/1997 Page et al.
5,619,694 A 4/1997 Shimazu
5,621,859 A 4/1997 Schwartz et al.
5,621,903 A 4/1997 Luciw et al.
5,627,939 A 5/1997 Huang et al.
5,634,084 A 5/1997 Malsheen et al.
5,636,325 A 6/1997 Farrett
5,638,425 A 6/1997 Meador, III et al.
5,638,489 A 6/1997 Tsuboka
5,638,523 A 6/1997 Mullet et al.
5,640,487 A 6/1997 Lau et al.
5,642,464 A 6/1997 Yue et al.
5,642,466 A 6/1997 Narayan
5,642,519 A 6/1997 Martin
5,644,656 A 7/1997 Akra et al.
5,644,727 A 7/1997 Atkins
5,649,060 A 7/1997 Ellozy et al.
5,652,828 A 7/1997 Silverman
5,652,884 A 7/1997 Palevich
5,652,897 A 7/1997 Linebarger et al.
5,661,787 A 8/1997 Pocock
5,664,055 A 9/1997 Kroon
5,670,985 A 9/1997 Cappels, Sr. et al.
5,675,819 A 10/1997 Schuetze
5,682,475 A 10/1997 Johnson et al.
5,682,539 A 10/1997 Conrad et al.
5,684,513 A 11/1997 Decker
5,687,077 A 11/1997 Gough, Jr.
5,689,287 A 11/1997 Mackinlay et al.
5,689,618 A 11/1997 Gasper et al.
5,696,962 A 12/1997 Kupiec
5,699,082 A 12/1997 Marks et al.
5,701,400 A 12/1997 Amado
5,706,442 A 1/1998 Anderson et al.
5,708,659 A 1/1998 Rostoker et al.
5,708,822 A 1/1998 Wical
5,710,886 A 1/1998 Christensen et al.
5,710,922 A 1/1998 Alley et al.
5,712,949 A 1/1998 Kato et al.
5,712,957 A 1/1998 Waibel et al.
5,715,468 A 2/1998 Budzinski
5,717,877 A 2/1998 Orton et al.
5,721,827 A 2/1998 Logan et al.
5,721,949 A 2/1998 Smith et al.
5,724,406 A 3/1998 Juster
5,724,985 A 3/1998 Snell et al.
5,726,672 A 3/1998 Hernandez et al.
5,727,950 A 3/1998 Cook et al.
5,729,694 A 3/1998 Holzrichter et al.
5,732,216 A 3/1998 Logan et al.
5,732,390 A 3/1998 Katayanagi et al.
5,732,395 A 3/1998 Silverman
5,734,750 A 3/1998 Arai et al.
5,734,791 A 3/1998 Acero et al.
5,736,974 A 4/1998 Selker
5,737,487 A 4/1998 Bellegarda et al.
5,737,734 A 4/1998 Schultz
5,739,451 A 4/1998 Winksy et al.
5,740,143 A 4/1998 Suetomi
5,742,705 A 4/1998 Parthasarathy
5,742,736 A 4/1998 Haddock
5,745,116 A 4/1998 Pisutha-Arnond
5,745,873 A 4/1998 Braida et al.
5,748,512 A 5/1998 Vargas
5,748,974 A 5/1998 Johnson
5,749,071 A 5/1998 Silverman
5,749,081 A 5/1998 Whiteis
5,751,906 A 5/1998 Silverman
5,757,358 A 5/1998 Osga
5,757,979 A 5/1998 Hongo et al.
5,758,079 A 5/1998 Ludwig et al.
5,758,314 A 5/1998 McKenna
5,759,101 A 6/1998 Von Kohorn
5,761,640 A 6/1998 Kalyanswamy et al.
5,765,131 A 6/1998 Stentiford et al.
5,765,168 A 6/1998 Burrows
5,771,276 A 6/1998 Wolf
5,774,834 A 6/1998 Visser
5,774,855 A 6/1998 Foti et al.
5,774,859 A 6/1998 Houser et al.
5,777,614 A 7/1998 Ando et al.
5,778,405 A 7/1998 Ogawa
5,790,978 A 8/1998 Olive et al.
5,794,050 A 8/1998 Dahlgren et al.
5,794,182 A 8/1998 Manduchi et al.
5,794,207 A 8/1998 Walker et al.
5,794,237 A 8/1998 Gore, Jr.
5,797,008 A 8/1998 Burrows
5,799,268 A 8/1998 Boguraev

(56) **References Cited**

U.S. PATENT DOCUMENTS

5,799,269 A 8/1998 Schabes et al.
5,799,276 A 8/1998 Komissarchik et al.
5,801,692 A 9/1998 Muzio et al.
5,802,466 A 9/1998 Gallant et al.
5,802,526 A 9/1998 Fawcett et al.
5,812,697 A 9/1998 Sakai et al.
5,812,698 A 9/1998 Platt et al.
5,815,142 A 9/1998 Allard et al.
5,815,225 A 9/1998 Nelson
5,818,451 A 10/1998 Bertram et al.
5,818,924 A 10/1998 King et al.
5,822,288 A 10/1998 Shinada
5,822,730 A 10/1998 Roth et al.
5,822,743 A 10/1998 Gupta et al.
5,825,349 A 10/1998 Meier et al.
5,825,881 A 10/1998 Colvin, Sr.
5,826,261 A 10/1998 Spencer
5,828,768 A 10/1998 Eatwell et al.
5,828,999 A 10/1998 Bellegarda et al.
5,832,433 A 11/1998 Yashchin et al.
5,832,435 A 11/1998 Silverman
5,835,077 A 11/1998 Dao et al.
5,835,721 A 11/1998 Donahue et al.
5,835,732 A 11/1998 Kikinis et al.
5,835,893 A 11/1998 Ushioda
5,839,106 A 11/1998 Bellegarda
5,841,902 A 11/1998 Tu
5,842,165 A 11/1998 Raman et al.
5,845,255 A 12/1998 Mayaud
5,850,480 A 12/1998 Scanlon
5,850,629 A 12/1998 Holm et al.
5,854,893 A 12/1998 Ludwig et al.
5,857,184 A 1/1999 Lynch
5,860,063 A 1/1999 Gorin et al.
5,860,064 A 1/1999 Henton
5,860,075 A 1/1999 Hashizume et al.
5,862,223 A 1/1999 Walker et al.
5,864,806 A 1/1999 Mokbel et al.
5,864,815 A 1/1999 Rozak et al.
5,864,844 A 1/1999 James et al.
5,864,855 A 1/1999 Ruocco et al.
5,864,868 A 1/1999 Contois
5,867,799 A 2/1999 Lang et al.
5,870,710 A 2/1999 Ozawa et al.
5,873,056 A 2/1999 Liddy et al.
5,875,427 A 2/1999 Yamazaki
5,875,437 A 2/1999 Atkins
5,876,396 A 3/1999 Lo et al.
5,877,751 A 3/1999 Kanemitsu et al.
5,878,393 A 3/1999 Hata et al.
5,878,394 A 3/1999 Muhling
5,878,396 A 3/1999 Henton
5,880,731 A 3/1999 Liles et al.
5,884,039 A 3/1999 Ludwig et al.
5,884,323 A 3/1999 Hawkins et al.
5,890,117 A 3/1999 Silverman
5,890,122 A 3/1999 Van et al.
5,891,180 A 4/1999 Greeninger et al.
5,895,448 A 4/1999 Vysotsky et al.
5,895,464 A 4/1999 Bhandari et al.
5,895,466 A 4/1999 Goldberg et al.
5,896,321 A 4/1999 Miller et al.
5,896,500 A 4/1999 Ludwig et al.
5,899,972 A 5/1999 Miyazawa et al.
5,909,666 A 6/1999 Gould et al.
5,912,951 A 6/1999 Checchio et al.
5,912,952 A 6/1999 Brendzel
5,913,193 A 6/1999 Huang et al.
5,915,236 A 6/1999 Gould et al.
5,915,238 A 6/1999 Tjaden
5,915,249 A 6/1999 Spencer
5,917,487 A 6/1999 Ulrich
5,918,303 A 6/1999 Yamaura et al.
5,920,327 A 7/1999 Seidensticker, Jr.
5,920,836 A 7/1999 Gould et al.
5,920,837 A 7/1999 Gould et al.
5,923,757 A 7/1999 Hocker et al.
5,924,068 A 7/1999 Richard et al.
5,926,769 A 7/1999 Valimaa et al.
5,926,789 A 7/1999 Barbara et al.
5,930,408 A 7/1999 Seto
5,930,751 A 7/1999 Cohrs et al.
5,930,754 A 7/1999 Karaali et al.
5,930,769 A 7/1999 Rose
5,930,783 A 7/1999 Li et al.
5,933,477 A 8/1999 Wu
5,933,806 A 8/1999 Beyerlein et al.
5,933,822 A 8/1999 Braden-Harder et al.
5,936,926 A 8/1999 Yokouchi et al.
5,940,811 A 8/1999 Norris
5,940,841 A 8/1999 Schmuck et al.
5,941,944 A 8/1999 Messerly
5,943,043 A 8/1999 Furuhata et al.
5,943,049 A 8/1999 Matsubara et al.
5,943,052 A 8/1999 Allen et al.
5,943,443 A 8/1999 Itonori et al.
5,943,670 A 8/1999 Prager
5,948,040 A 9/1999 DeLorme et al.
5,949,961 A 9/1999 Sharman
5,950,123 A 9/1999 Schwelb et al.
5,952,992 A 9/1999 Helms
5,953,541 A 9/1999 King et al.
5,956,021 A 9/1999 Kubota et al.
5,956,699 A 9/1999 Wong et al.
5,960,394 A 9/1999 Gould et al.
5,960,422 A 9/1999 Prasad
5,963,924 A 10/1999 Williams et al.
5,966,126 A 10/1999 Szabo
5,970,474 A 10/1999 LeRoy et al.
5,973,676 A 10/1999 Kawakura
5,974,146 A 10/1999 Randle et al.
5,977,950 A 11/1999 Rhyne
5,982,352 A 11/1999 Pryor
5,982,891 A 11/1999 Ginter et al.
5,982,902 A 11/1999 Terano
5,983,179 A 11/1999 Gould et al.
5,987,132 A 11/1999 Rowney
5,987,140 A 11/1999 Rowney et al.
5,987,401 A 11/1999 Trudeau
5,987,404 A 11/1999 Della Pietra et al.
5,987,440 A 11/1999 O'Neil et al.
5,990,887 A 11/1999 Redpath et al.
5,991,441 A 11/1999 Jourjine
5,995,460 A 11/1999 Takagi et al.
5,995,590 A 11/1999 Brunet et al.
5,998,972 A 12/1999 Gong
5,999,169 A 12/1999 Lee
5,999,895 A 12/1999 Forest
5,999,908 A 12/1999 Abelow
5,999,927 A 12/1999 Tukey et al.
6,006,274 A 12/1999 Hawkins et al.
6,009,237 A 12/1999 Hirabayashi et al.
6,011,585 A 1/2000 Anderson
6,014,428 A 1/2000 Wolf
6,016,471 A 1/2000 Kuhn et al.
6,018,705 A 1/2000 Gaudet
6,018,711 A 1/2000 French-St. George et al.
6,020,881 A 2/2000 Naughton et al.
6,023,536 A 2/2000 Visser
6,023,676 A 2/2000 Erell
6,023,684 A 2/2000 Pearson
6,024,288 A 2/2000 Gottlich et al.
6,026,345 A 2/2000 Shah et al.
6,026,375 A 2/2000 Hall et al.
6,026,388 A 2/2000 Liddy et al.
6,026,393 A 2/2000 Gupta et al.
6,029,132 A 2/2000 Kuhn et al.
6,035,267 A 3/2000 Watanabe et al.
6,035,303 A 3/2000 Baer et al.
6,035,336 A 3/2000 Lu et al.
6,038,533 A 3/2000 Buchsbaum et al.
6,040,824 A 3/2000 Maekawa et al.
6,041,023 A 3/2000 Lakhansingh
6,047,255 A 4/2000 Williamson

(56) **References Cited**

U.S. PATENT DOCUMENTS

6,052,654 A 4/2000 Gaudet et al.
6,052,656 A 4/2000 Suda et al.
6,054,990 A 4/2000 Tran
6,055,514 A 4/2000 Wren
6,055,531 A 4/2000 Bennett et al.
6,064,767 A 5/2000 Muir et al.
6,064,959 A 5/2000 Young et al.
6,064,960 A 5/2000 Bellegarda et al.
6,064,963 A 5/2000 Gainsboro
6,067,519 A 5/2000 Lowry
6,069,648 A 5/2000 Suso et al.
6,070,138 A 5/2000 Iwata
6,070,139 A 5/2000 Miyazawa et al.
6,070,147 A 5/2000 Harms et al.
6,073,033 A 6/2000 Campo
6,073,036 A 6/2000 Heikkinen et al.
6,073,097 A 6/2000 Gould et al.
6,076,051 A 6/2000 Messerly et al.
6,076,060 A 6/2000 Lin et al.
6,076,088 A 6/2000 Paik et al.
6,078,914 A 6/2000 Redfern
6,081,750 A 6/2000 Hoffberg et al.
6,081,774 A 6/2000 de Hita et al.
6,081,780 A 6/2000 Lumelsky
6,088,671 A 7/2000 Gould et al.
6,088,731 A 7/2000 Kiraly et al.
6,092,043 A 7/2000 Squires et al.
6,094,649 A 7/2000 Bowen et al.
6,097,391 A 8/2000 Wilcox
6,101,468 A 8/2000 Gould et al.
6,101,470 A 8/2000 Eide et al.
6,105,865 A 8/2000 Hardesty
6,108,627 A 8/2000 Sabourin
6,111,562 A 8/2000 Downs et al.
6,116,907 A 9/2000 Baker et al.
6,119,101 A 9/2000 Peckover
6,121,960 A 9/2000 Carroll et al.
6,122,340 A 9/2000 Darley et al.
6,122,614 A 9/2000 Kahn et al.
6,122,616 A 9/2000 Henton
6,125,284 A 9/2000 Moore et al.
6,125,346 A 9/2000 Nishimura et al.
6,125,356 A 9/2000 Brockman et al.
6,129,582 A 10/2000 Wilhite et al.
6,138,098 A 10/2000 Shieber et al.
6,141,642 A 10/2000 Oh
6,141,644 A 10/2000 Kuhn et al.
6,144,377 A 11/2000 Oppermann et al.
6,144,938 A 11/2000 Surace et al.
6,144,939 A 11/2000 Pearson et al.
6,151,401 A 11/2000 Annaratone
6,154,551 A 11/2000 Frenkel
6,154,720 A 11/2000 Onishi et al.
6,157,935 A 12/2000 Tran et al.
6,161,084 A 12/2000 Messerly et al.
6,161,087 A 12/2000 Wightman et al.
6,161,944 A 12/2000 Leman
6,163,769 A 12/2000 Acero et al.
6,163,809 A 12/2000 Buckley
6,167,369 A 12/2000 Schulze
6,169,538 B1 1/2001 Nowlan et al.
6,172,948 B1 1/2001 Keller et al.
6,173,194 B1 1/2001 Vanttila
6,173,251 B1 1/2001 Ito et al.
6,173,261 B1 1/2001 Arai et al.
6,173,263 B1 1/2001 Conkie
6,173,279 B1 1/2001 Levin et al.
6,177,905 B1 1/2001 Welch
6,177,931 B1 1/2001 Alexander et al.
6,179,432 B1 1/2001 Zhang et al.
6,182,028 B1 1/2001 Karaali et al.
6,185,533 B1 2/2001 Holm et al.
6,188,999 B1 2/2001 Moody
6,191,939 B1 2/2001 Burnett
6,192,253 B1 2/2001 Charlier et al.
6,192,340 B1 2/2001 Abecassis
6,195,641 B1 2/2001 Loring et al.
6,205,456 B1 3/2001 Nakao
6,208,044 B1 3/2001 Viswanadham et al.
6,208,956 B1 3/2001 Motoyama
6,208,964 B1 3/2001 Sabourin
6,208,967 B1 3/2001 Pauws et al.
6,208,971 B1 3/2001 Bellegarda et al.
6,216,102 B1 4/2001 Martino et al.
6,216,131 B1 4/2001 Liu et al.
6,217,183 B1 4/2001 Shipman
6,222,347 B1 4/2001 Gong
6,226,403 B1 5/2001 Parthasarathy
6,226,533 B1 5/2001 Akahane
6,226,614 B1 5/2001 Mizuno et al.
6,230,322 B1 5/2001 Saib et al.
6,232,539 B1 5/2001 Looney et al.
6,232,966 B1 5/2001 Kurlander
6,233,545 B1 5/2001 Datig
6,233,559 B1 5/2001 Balakrishnan
6,233,578 B1 5/2001 Machihara et al.
6,237,025 B1 5/2001 Ludwig et al.
6,240,303 B1 5/2001 Katzur
6,243,681 B1 6/2001 Guji et al.
6,246,981 B1 6/2001 Papineni et al.
6,248,946 B1 6/2001 Dwek
6,249,606 B1 6/2001 Kiraly et al.
6,259,436 B1 7/2001 Moon et al.
6,259,826 B1 7/2001 Pollard et al.
6,260,011 B1 7/2001 Heckerman et al.
6,260,013 B1 7/2001 Sejnoha
6,260,016 B1 7/2001 Holm et al.
6,260,024 B1 7/2001 Shkedy
6,266,637 B1 7/2001 Donovan et al.
6,268,859 B1 7/2001 Andresen et al.
6,269,712 B1 8/2001 Zentmyer
6,271,835 B1 8/2001 Hoeksma
6,272,456 B1 8/2001 De Campos
6,272,464 B1 8/2001 Kiraz et al.
6,275,795 B1 8/2001 Tzirkel-Hancock
6,275,824 B1 8/2001 O'Flaherty et al.
6,278,970 B1 8/2001 Milner
6,282,507 B1 8/2001 Horiguchi et al.
6,285,785 B1 9/2001 Bellegarda et al.
6,285,786 B1 9/2001 Seni et al.
6,289,085 B1 9/2001 Miyashita et al.
6,289,124 B1 9/2001 Okamoto
6,289,301 B1 9/2001 Higginbotham et al.
6,289,353 B1 9/2001 Hazlehurst et al.
6,292,772 B1 9/2001 Kantrowitz
6,292,778 B1 9/2001 Sukkar
6,295,390 B1 9/2001 Kobayashi et al.
6,295,541 B1 9/2001 Bodnar et al.
6,297,818 B1 10/2001 Ulrich et al.
6,298,314 B1 10/2001 Blackadar et al.
6,298,321 B1 10/2001 Karlov et al.
6,304,844 B1 10/2001 Pan et al.
6,304,846 B1 10/2001 George et al.
6,307,548 B1 10/2001 Flinchem et al.
6,308,149 B1 10/2001 Gaussier et al.
6,311,157 B1 10/2001 Strong
6,311,189 B1 10/2001 deVries et al.
6,317,237 B1 11/2001 Nakao et al.
6,317,594 B1 11/2001 Gossman et al.
6,317,707 B1 11/2001 Bangalore et al.
6,317,831 B1 11/2001 King
6,321,092 B1 11/2001 Fitch et al.
6,324,512 B1 11/2001 Junqua et al.
6,330,538 B1 12/2001 Breen
6,332,175 B1 12/2001 Birrell et al.
6,334,103 B1 12/2001 Surace et al.
6,335,722 B1 1/2002 Tani et al.
6,336,365 B1 1/2002 Blackadar et al.
6,336,727 B1 1/2002 Kim
6,340,937 B1 1/2002 Stepita-Klauco
6,341,316 B1 1/2002 Kloba et al.
6,343,267 B1 1/2002 Kuhn et al.
6,345,250 B1 2/2002 Martin
6,351,522 B1 2/2002 Vitikainen

(56) **References Cited**

U.S. PATENT DOCUMENTS

6,351,762 B1 2/2002 Ludwig et al.
6,353,442 B1 3/2002 Masui
6,353,794 B1 3/2002 Davis et al.
6,356,854 B1 3/2002 Schubert et al.
6,356,864 B1 3/2002 Foltz et al.
6,356,905 B1 3/2002 Gershman et al.
6,357,147 B1 3/2002 Darley et al.
6,359,572 B1 3/2002 Vale
6,359,970 B1 3/2002 Burgess
6,360,227 B1 3/2002 Aggarwal et al.
6,360,237 B1 3/2002 Schulz et al.
6,366,883 B1 4/2002 Campbell et al.
6,366,884 B1 4/2002 Bellegarda et al.
6,374,217 B1 4/2002 Bellegarda
6,377,530 B1 4/2002 Burrows
6,377,925 B1 4/2002 Greene, Jr. et al.
6,377,928 B1 4/2002 Saxena et al.
6,385,586 B1 5/2002 Dietz
6,385,662 B1 5/2002 Moon et al.
6,389,114 B1 5/2002 Dowens et al.
6,397,183 B1 5/2002 Baba et al.
6,397,186 B1 5/2002 Bush et al.
6,401,065 B1 6/2002 Kanevsky et al.
6,405,169 B1 6/2002 Kondo et al.
6,408,272 B1 6/2002 White et al.
6,411,932 B1 6/2002 Molnar et al.
6,415,250 B1 7/2002 Van Den Akker
6,421,305 B1 7/2002 Gioscia et al.
6,421,672 B1 7/2002 McAllister et al.
6,421,707 B1 7/2002 Miller et al.
6,424,944 B1 7/2002 Hikawa
6,430,551 B1 8/2002 Thelen et al.
6,434,522 B1 8/2002 Tsuboka
6,434,524 B1 8/2002 Weber
6,434,604 B1 8/2002 Harada et al.
6,437,818 B1 8/2002 Ludwig et al.
6,438,523 B1 8/2002 Oberteuffer et al.
6,442,518 B1 8/2002 Van Thong et al.
6,442,523 B1 8/2002 Siegel
6,446,076 B1 9/2002 Burkey et al.
6,448,485 B1 9/2002 Barile
6,448,986 B1 9/2002 Smith
6,449,620 B1 9/2002 Draper et al.
6,453,281 B1 9/2002 Walters et al.
6,453,292 B2 9/2002 Ramaswamy et al.
6,453,315 B1 9/2002 Weissman et al.
6,456,616 B1 9/2002 Rantanen
6,456,972 B1 9/2002 Gladstein et al.
6,460,015 B1 10/2002 Hetherington et al.
6,460,029 B1 10/2002 Fries et al.
6,462,778 B1 10/2002 Abram et al.
6,463,128 B1 10/2002 Elwin
6,466,654 B1 10/2002 Cooper et al.
6,467,924 B2 10/2002 Shipman
6,469,712 B1 10/2002 Hilpert, Jr. et al.
6,469,722 B1 10/2002 Kinoe et al.
6,469,732 B1 10/2002 Chang et al.
6,470,347 B1 10/2002 Gillam
6,473,630 B1 10/2002 Baranowski et al.
6,477,488 B1 11/2002 Bellegarda
6,477,494 B2 11/2002 Hyde-Thomson et al.
6,487,533 B2 11/2002 Hyde-Thomson et al.
6,487,534 B1 11/2002 Thelen et al.
6,487,663 B1 11/2002 Jaisimha et al.
6,489,951 B1 12/2002 Wong et al.
6,490,560 B1 12/2002 Ramaswamy et al.
6,493,428 B1 12/2002 Hillier
6,493,652 B1 12/2002 Ohlenbusch et al.
6,493,667 B1 12/2002 De Souza et al.
6,499,013 B1 12/2002 Weber
6,499,014 B1 12/2002 Chihara
6,501,937 B1 12/2002 Ho et al.
6,502,194 B1 12/2002 Berman et al.
6,505,158 B1 1/2003 Conkie
6,505,175 B1 1/2003 Silverman et al.
6,505,183 B1 1/2003 Loofbourrow et al.
6,510,406 B1 1/2003 Marchisio
6,510,417 B1 1/2003 Woods et al.
6,513,008 B2 1/2003 Pearson et al.
6,513,063 B1 1/2003 Julia et al.
6,519,565 B1 2/2003 Clements et al.
6,519,566 B1 2/2003 Boyer et al.
6,523,026 B1 2/2003 Gillis
6,523,061 B1 2/2003 Halverson et al.
6,523,172 B1 2/2003 Martinez-Guerra et al.
6,526,351 B2 2/2003 Whitham
6,526,382 B1 2/2003 Yuschik
6,526,395 B1 2/2003 Morris
6,529,592 B1 3/2003 Khan
6,529,608 B2 3/2003 Gersabeck et al.
6,532,444 B1 3/2003 Weber
6,532,446 B1 3/2003 King
6,535,610 B1 3/2003 Stewart
6,535,852 B2 3/2003 Eide
6,535,983 B1 3/2003 McCormack et al.
6,536,139 B2 3/2003 Darley et al.
6,538,665 B2 3/2003 Crow et al.
6,542,171 B1 4/2003 Satou et al.
6,542,584 B1 4/2003 Sherwood et al.
6,546,262 B1 4/2003 Freadman
6,546,367 B2 4/2003 Otsuka
6,546,388 B1 4/2003 Edlund et al.
6,549,497 B2 4/2003 Miyamoto et al.
6,553,343 B1 4/2003 Kagoshima et al.
6,553,344 B2 4/2003 Bellegarda et al.
6,556,971 B1 4/2003 Rigsby et al.
6,556,983 B1 4/2003 Altschuler et al.
6,560,903 B1 5/2003 Darley
6,563,769 B1 5/2003 Van Der Meulen
6,564,186 B1 5/2003 Kiraly et al.
6,582,342 B2 6/2003 Kaufman
6,583,806 B2 6/2003 Ludwig et al.
6,584,464 B1 6/2003 Warthen
6,587,403 B1 7/2003 Keller et al.
6,587,404 B1 7/2003 Keller et al.
6,591,379 B1 7/2003 LeVine et al.
6,594,673 B1 7/2003 Smith et al.
6,594,688 B2 7/2003 Ludwig et al.
6,597,345 B2 7/2003 Hirshberg
6,598,021 B1 7/2003 Shambaugh et al.
6,598,022 B2 7/2003 Yuschik
6,598,039 B1 7/2003 Livowsky
6,598,054 B2 7/2003 Schuetze et al.
6,601,026 B2 7/2003 Appelt et al.
6,601,234 B1 7/2003 Bowman-Amuah
6,603,837 B1 8/2003 Kesanupalli et al.
6,604,059 B2 8/2003 Strubbe et al.
6,606,388 B1 8/2003 Townsend et al.
6,606,632 B1 8/2003 Saulpaugh et al.
6,611,789 B1 8/2003 Darley
6,615,172 B1 9/2003 Bennett et al.
6,615,175 B1 9/2003 Gazdzinski
6,615,176 B2 9/2003 Lewis et al.
6,615,220 B1 9/2003 Austin et al.
6,621,768 B1 9/2003 Keller et al.
6,621,892 B1 9/2003 Banister et al.
6,622,121 B1 9/2003 Crepy et al.
6,622,136 B2 9/2003 Russell
6,623,529 B1 9/2003 Lakritz
6,625,583 B1 9/2003 Silverman et al.
6,628,808 B1 9/2003 Bach et al.
6,631,186 B1 10/2003 Adams et al.
6,631,346 B1 10/2003 Karaorman et al.
6,633,846 B1 10/2003 Bennett et al.
6,633,932 B1 10/2003 Bork et al.
6,643,401 B1 11/2003 Kashioka et al.
6,647,260 B2 11/2003 Dusse et al.
6,650,735 B2 11/2003 Burton et al.
6,654,740 B2 11/2003 Tokuda et al.
6,658,389 B1 12/2003 Alpdemir
6,658,577 B2 12/2003 Huppi et al.
6,662,023 B1 12/2003 Helle
6,665,639 B2 12/2003 Mozer et al.
6,665,640 B1 12/2003 Bennett et al.

(56) **References Cited**

U.S. PATENT DOCUMENTS

6,665,641 B1 12/2003 Coorman et al.
6,671,672 B1 12/2003 Heck
6,671,683 B2 12/2003 Kanno
6,671,856 B1 12/2003 Gillam
6,675,169 B1 1/2004 Bennett et al.
6,675,233 B1 1/2004 Du et al.
6,680,675 B1 1/2004 Suzuki
6,684,187 B1 1/2004 Conkie
6,684,376 B1 1/2004 Kerzman et al.
6,690,387 B2 2/2004 Zimmerman et al.
6,690,800 B2 2/2004 Resnick
6,690,828 B2 2/2004 Meyers
6,691,064 B2 2/2004 Vroman
6,691,090 B1 2/2004 Laurila et al.
6,691,111 B2 2/2004 Lazaridis et al.
6,691,151 B1 2/2004 Cheyer et al.
6,694,295 B2 2/2004 Lindholm et al.
6,694,297 B2 2/2004 Sato
6,697,780 B1 2/2004 Beutnagel et al.
6,697,824 B1 2/2004 Bowman-Amuah
6,701,294 B1 3/2004 Ball et al.
6,701,305 B1 3/2004 Holt et al.
6,701,318 B2 3/2004 Fox et al.
6,704,015 B1 3/2004 Bovarnick et al.
6,704,698 B1 3/2004 Paulsen, Jr. et al.
6,704,710 B2 3/2004 Strong
6,708,153 B2 3/2004 Brittan et al.
6,711,585 B1 3/2004 Copperman et al.
6,714,221 B1 3/2004 Christie et al.
6,716,139 B1 4/2004 Hosseinzadeh-Dolkhani et al.
6,718,324 B2 4/2004 Edlund et al.
6,718,331 B2 4/2004 Davis et al.
6,720,980 B1 4/2004 Lui et al.
6,721,728 B2 4/2004 McGreevy
6,721,734 B1 4/2004 Subasic et al.
6,724,370 B2 4/2004 Dutta et al.
6,728,675 B1 4/2004 Maddalozzo, Jr. et al.
6,728,729 B1 4/2004 Jawa et al.
6,731,312 B2 5/2004 Robbin
6,732,142 B1 5/2004 Bates et al.
6,735,632 B1 5/2004 Kiraly et al.
6,738,738 B2 5/2004 Henton
6,741,264 B1 5/2004 Lesser
6,742,021 B1 5/2004 Halverson et al.
6,751,592 B1 6/2004 Shiga
6,751,595 B2 6/2004 Busayapongchai et al.
6,751,621 B1 6/2004 Calistri-Yeh et al.
6,754,504 B1 6/2004 Reed
6,757,362 B1 6/2004 Cooper et al.
6,757,365 B1 6/2004 Bogard
6,757,646 B2 6/2004 Marchisio
6,757,653 B2 6/2004 Buth et al.
6,757,718 B1 6/2004 Halverson et al.
6,760,412 B1 7/2004 Loucks
6,760,700 B2 7/2004 Lewis et al.
6,760,754 B1 7/2004 Isaacs et al.
6,762,741 B2 7/2004 Weindorf
6,763,089 B2 7/2004 Feigenbaum
6,766,294 B2 7/2004 MacGinite et al.
6,766,320 B1 7/2004 Wang et al.
6,766,324 B2 7/2004 Carlson et al.
6,768,979 B1 7/2004 Menendez-Pidal et al.
6,772,123 B2 8/2004 Cooklev et al.
6,772,195 B1 8/2004 Hatlelid et al.
6,775,358 B1 8/2004 Breitenbach et al.
6,778,951 B1 8/2004 Contractor
6,778,952 B2 8/2004 Bellegarda
6,778,962 B1 8/2004 Kasai et al.
6,778,970 B2 8/2004 Au
6,778,979 B2 8/2004 Grefenstette et al.
6,782,510 B1 8/2004 Gross et al.
6,784,901 B1 8/2004 Harvey et al.
6,789,094 B2 9/2004 Rudoff et al.
6,789,231 B1 9/2004 Reynar et al.
6,790,704 B2 9/2004 Doyle et al.
6,792,082 B1 9/2004 Levine
6,792,086 B1 9/2004 Saylor et al.
6,792,407 B2 9/2004 Kibre et al.
6,794,566 B2 9/2004 Pachet
6,795,059 B2 9/2004 Endo
6,799,226 B1 9/2004 Robbin et al.
6,801,604 B2 10/2004 Maes et al.
6,801,964 B1 10/2004 Mahdavi
6,803,905 B1 10/2004 Capps et al.
6,804,649 B2 10/2004 Miranda
6,804,677 B2 10/2004 Shadmon et al.
6,807,536 B2 10/2004 Achlioptas et al.
6,807,574 B1 10/2004 Partovi et al.
6,810,379 B1 10/2004 Vermeulen et al.
6,813,218 B1 11/2004 Antonelli et al.
6,813,491 B1 11/2004 McKinney
6,813,607 B1 11/2004 Faruquie et al.
6,816,578 B1 11/2004 Kredo et al.
6,820,055 B2 11/2004 Saindon et al.
6,829,018 B2 12/2004 Lin et al.
6,829,603 B1 12/2004 Chai et al.
6,832,194 B1 12/2004 Mozer et al.
6,832,381 B1 12/2004 Mathur et al.
6,836,760 B1 12/2004 Bellegarda et al.
6,839,464 B2 1/2005 Hawkins et al.
6,839,669 B1 1/2005 Gould et al.
6,839,670 B1 1/2005 Stammler et al.
6,839,742 B1 1/2005 Dyer et al.
6,842,767 B1 1/2005 Partovi et al.
6,847,966 B1 1/2005 Sommer et al.
6,847,979 B2 1/2005 Allemang et al.
6,850,775 B1 2/2005 Berg
6,850,887 B2 2/2005 Epstein et al.
6,851,115 B1 2/2005 Cheyer et al.
6,857,800 B2 2/2005 Zhang et al.
6,859,931 B1 2/2005 Cheyer et al.
6,862,568 B2 3/2005 Case
6,862,710 B1 3/2005 Marchisio
6,865,533 B2 3/2005 Addison et al.
6,868,045 B1 3/2005 Schroder
6,868,385 B1 3/2005 Gerson
6,870,529 B1 3/2005 Davis
6,871,346 B1 3/2005 Kumbalimutt et al.
6,873,986 B2 3/2005 McConnell et al.
6,876,947 B1 4/2005 Darley et al.
6,877,003 B2 4/2005 Ho et al.
6,879,957 B1 4/2005 Pechter et al.
6,882,335 B2 4/2005 Saarinen
6,882,747 B2 4/2005 Thawonmas et al.
6,882,955 B1 4/2005 Ohlenbusch et al.
6,882,971 B2 4/2005 Craner
6,885,734 B1 4/2005 Eberle et al.
6,889,361 B1 5/2005 Bates et al.
6,895,084 B1 5/2005 Saylor et al.
6,895,257 B2 5/2005 Boman et al.
6,895,380 B2 5/2005 Sepe, Jr.
6,895,558 B1 5/2005 Loveland
6,898,550 B1 5/2005 Blackadar et al.
6,901,364 B2 5/2005 Nguyen et al.
6,901,399 B1 5/2005 Corston et al.
6,904,405 B2 6/2005 Suominen
6,907,112 B1 6/2005 Guedalia et al.
6,910,004 B2 6/2005 Tarbouriech et al.
6,910,007 B2 6/2005 Stylianou et al.
6,910,186 B2 6/2005 Kim
6,911,971 B2 6/2005 Suzuki et al.
6,912,407 B1 6/2005 Clarke et al.
6,912,498 B2 6/2005 Stevens et al.
6,912,499 B1 6/2005 Sabourin et al.
6,915,138 B2 7/2005 Kraft
6,915,246 B2 7/2005 Gusler et al.
6,917,373 B2 7/2005 Vong et al.
6,918,677 B2 7/2005 Shipman
6,924,828 B1 8/2005 Hirsch
6,925,438 B2 8/2005 Mohamed et al.
6,928,149 B1 8/2005 Panjwani et al.
6,928,614 B1 8/2005 Everhart
6,931,255 B2 8/2005 Mekuria
6,931,384 B1 8/2005 Horvitz et al.

(56) **References Cited**

U.S. PATENT DOCUMENTS

6,932,708 B2 8/2005 Yamashita et al.
6,934,394 B1 8/2005 Anderson
6,934,684 B2 8/2005 Alpdemir et al.
6,934,756 B2 8/2005 Maes
6,934,812 B1 8/2005 Robbin et al.
6,937,975 B1 8/2005 Elworthy
6,937,986 B2 8/2005 Denenberg et al.
6,944,593 B2 9/2005 Kuzunuki et al.
6,948,094 B2 9/2005 Schultz et al.
6,950,087 B2 9/2005 Knox et al.
6,950,502 B1 9/2005 Jenkins
6,954,755 B2 10/2005 Reisman
6,954,899 B1 10/2005 Anderson
6,956,845 B2 10/2005 Baker et al.
6,957,076 B2 10/2005 Hunzinger
6,960,734 B1 11/2005 Park
6,961,699 B1 11/2005 Kahn et al.
6,963,841 B2 11/2005 Handal et al.
6,964,023 B2 11/2005 Maes et al.
6,965,376 B2 11/2005 Tani et al.
6,968,311 B2 11/2005 Knockeart et al.
6,970,820 B2 11/2005 Junqua et al.
6,970,881 B1 11/2005 Mohan et al.
6,970,915 B1 11/2005 Partovi et al.
6,970,935 B1 11/2005 Maes
6,976,090 B2 12/2005 Ben-Shaul et al.
6,978,127 B1 12/2005 Bulthuis et al.
6,978,239 B2 12/2005 Chu et al.
6,980,949 B2 12/2005 Ford
6,980,955 B2 12/2005 Okutani et al.
6,983,251 B1 1/2006 Umemoto et al.
6,985,858 B2 1/2006 Frey et al.
6,985,865 B1 1/2006 Packingham et al.
6,988,071 B1 1/2006 Gazdzinski
6,990,450 B2 1/2006 Case et al.
6,996,520 B2 2/2006 Levin
6,996,531 B2 2/2006 Korall et al.
6,996,575 B2 2/2006 Cox et al.
6,999,066 B2 2/2006 Litwiller
6,999,914 B1 2/2006 Boerner et al.
6,999,925 B2 2/2006 Fischer et al.
6,999,927 B2 2/2006 Mozer et al.
7,000,189 B2 2/2006 Dutta et al.
7,003,099 B1 2/2006 Zhang et al.
7,003,463 B1 2/2006 Maes et al.
7,007,239 B1 2/2006 Hawkins et al.
7,010,581 B2 3/2006 Brown et al.
7,013,289 B2 3/2006 Horn et al.
7,013,429 B2 3/2006 Fujimoto et al.
7,020,685 B1 3/2006 Chen et al.
7,024,363 B1 4/2006 Comerford et al.
7,024,364 B2 4/2006 Guerra et al.
7,024,366 B1 4/2006 Deyoe et al.
7,024,460 B2 4/2006 Koopmas et al.
7,027,568 B1 4/2006 Simpson et al.
7,027,974 B1 4/2006 Busch et al.
7,027,990 B2 4/2006 Sussman
7,028,252 B1 4/2006 Baru et al.
7,031,530 B2 4/2006 Driggs et al.
7,031,909 B2 4/2006 Mao et al.
7,035,794 B2 4/2006 Sirivara
7,035,801 B2 4/2006 Jimenez-Feltstrom
7,035,807 B1 4/2006 Brittain et al.
7,036,128 B1 4/2006 Julia et al.
7,038,659 B2 5/2006 Rajkowski
7,039,588 B2 5/2006 Okutani et al.
7,043,420 B2 5/2006 Ratnaparkhi
7,043,422 B2 5/2006 Gao et al.
7,046,230 B2 5/2006 Zadesky et al.
7,046,850 B2 5/2006 Braspenning et al.
7,047,193 B1 5/2006 Bellegarda
7,050,976 B1 5/2006 Packingham
7,050,977 B1 5/2006 Bennett
7,051,096 B1 5/2006 Krawiec et al.
7,054,419 B2 5/2006 Culliss
7,054,888 B2 5/2006 LaChapelle et al.
7,057,607 B2 6/2006 Mayoraz et al.
7,058,569 B2 6/2006 Coorman et al.
7,058,888 B1 6/2006 Gjerstad et al.
7,058,889 B2 6/2006 Trovato et al.
7,062,223 B2 6/2006 Gerber et al.
7,062,225 B2 6/2006 White
7,062,428 B2 6/2006 Hogenhout et al.
7,062,438 B2 6/2006 Kobayashi et al.
7,065,185 B1 6/2006 Koch
7,065,485 B1 6/2006 Chong-White et al.
7,069,213 B2 6/2006 Thompson
7,069,220 B2 6/2006 Coffman et al.
7,069,560 B1 6/2006 Cheyer et al.
7,072,686 B1 7/2006 Schrager
7,072,941 B2 7/2006 Griffin et al.
7,076,527 B2 7/2006 Bellegarda et al.
7,082,322 B2 7/2006 Harano
7,084,758 B1 8/2006 Cole
7,084,856 B2 8/2006 Huppi
7,085,723 B2 8/2006 Ross et al.
7,085,960 B2 8/2006 Bouat et al.
7,092,370 B2 8/2006 Jiang et al.
7,092,887 B2 8/2006 Mozer et al.
7,092,928 B1 8/2006 Elad et al.
7,092,950 B2 8/2006 Wong et al.
7,093,693 B1 8/2006 Gazdzinski
7,095,733 B1 8/2006 Yarlagadda et al.
7,096,183 B2 8/2006 Junqua
7,103,548 B2 9/2006 Squibbs et al.
7,107,204 B1 9/2006 Liu et al.
7,111,248 B2 9/2006 Mulvey et al.
7,113,803 B2 9/2006 Dehlin
7,113,943 B2 9/2006 Bradford et al.
7,115,035 B2 10/2006 Tanaka
7,117,231 B2 10/2006 Fischer et al.
7,123,696 B2 10/2006 Lowe
7,124,081 B1 10/2006 Bellegarda
7,124,082 B2 10/2006 Freedman
7,124,164 B1 10/2006 Chemtob
7,127,046 B1 10/2006 Smith et al.
7,127,396 B2 10/2006 Chu et al.
7,127,403 B1 10/2006 Saylor et al.
7,133,900 B1 11/2006 Szeto
7,136,710 B1 11/2006 Hoffberg et al.
7,136,818 B1 11/2006 Cosatto et al.
7,137,126 B1 11/2006 Coffman et al.
7,139,697 B2 11/2006 Häkkinen et al.
7,139,714 B2 11/2006 Bennett et al.
7,139,722 B2 11/2006 Perrella et al.
7,143,028 B2 11/2006 Hillis et al.
7,143,038 B2 11/2006 Katae
7,143,040 B2 11/2006 Durston et al.
7,146,319 B2 12/2006 Hunt
7,146,437 B2 12/2006 Robbin et al.
7,149,319 B2 12/2006 Roeck
7,149,695 B1 12/2006 Bellegarda
7,149,964 B1 12/2006 Cottrille et al.
7,152,070 B1 12/2006 Musick et al.
7,152,093 B2 12/2006 Ludwig et al.
7,154,526 B2 12/2006 Foote et al.
7,155,668 B2 12/2006 Holland et al.
7,158,647 B2 1/2007 Azima et al.
7,159,174 B2 1/2007 Johnson et al.
7,162,412 B2 1/2007 Yamada et al.
7,162,482 B1 1/2007 Dunning
7,165,073 B2 1/2007 Vandersluis
7,166,791 B2 1/2007 Robbin et al.
7,171,360 B2 1/2007 Huang et al.
7,174,295 B1 2/2007 Kivimaki
7,174,297 B2 2/2007 Guerra et al.
7,177,794 B2 2/2007 Mani et al.
7,177,798 B2 2/2007 Hsu et al.
7,177,817 B1 2/2007 Khosla et al.
7,181,386 B2 2/2007 Mohri et al.
7,181,388 B2 2/2007 Tian
7,185,276 B2 2/2007 Keswa
7,188,085 B2 3/2007 Pelletier
7,190,794 B2 3/2007 Hinde

(56) **References Cited**

U.S. PATENT DOCUMENTS

7,191,118	B2	3/2007	Bellegarda
7,191,131	B1	3/2007	Nagao
7,193,615	B2	3/2007	Kim et al.
7,194,186	B1	3/2007	Strub et al.
7,194,413	B2	3/2007	Mahoney et al.
7,194,471	B1	3/2007	Nagatsuka et al.
7,194,611	B2	3/2007	Bear et al.
7,194,699	B2	3/2007	Thomson et al.
7,197,120	B2	3/2007	Luehrig et al.
7,197,460	B1	3/2007	Gupta et al.
7,200,550	B2	4/2007	Menezes et al.
7,200,558	B2	4/2007	Kato et al.
7,200,559	B2	4/2007	Wang
7,203,646	B2	4/2007	Bennett
7,206,809	B2	4/2007	Ludwig et al.
7,216,008	B2	5/2007	Sakata
7,216,073	B2	5/2007	Lavi et al.
7,216,080	B2	5/2007	Tsiao et al.
7,218,920	B2	5/2007	Hyon
7,218,943	B2	5/2007	Klassen et al.
7,219,063	B2	5/2007	Schalk et al.
7,219,123	B1	5/2007	Fiechter et al.
7,225,125	B2	5/2007	Bennett et al.
7,228,278	B2	6/2007	Nguyen et al.
7,231,343	B1	6/2007	Treadgold et al.
7,233,790	B2	6/2007	Kjellberg et al.
7,233,904	B2	6/2007	Luisi
7,234,026	B2	6/2007	Robbin et al.
7,236,932	B1	6/2007	Grajski
7,240,002	B2	7/2007	Minamino et al.
7,243,305	B2	7/2007	Schabes et al.
7,246,151	B2	7/2007	Isaacs et al.
7,251,454	B2	7/2007	White
7,254,773	B2	8/2007	Bates et al.
7,260,529	B1	8/2007	Lengen
7,263,373	B2	8/2007	Mattisson
7,266,189	B1	9/2007	Day
7,266,495	B1	9/2007	Beaufays et al.
7,266,496	B2	9/2007	Wang et al.
7,266,499	B2	9/2007	Surace et al.
7,269,544	B2	9/2007	Simske
7,269,556	B2	9/2007	Kiss et al.
7,275,063	B2	9/2007	Horn
7,277,088	B2	10/2007	Robinson et al.
7,277,854	B2	10/2007	Bennett et al.
7,277,855	B1	10/2007	Acker et al.
7,280,958	B2	10/2007	Pavlov et al.
7,283,072	B1	10/2007	Plachta et al.
7,290,039	B1	10/2007	Lisitsa et al.
7,292,579	B2	11/2007	Morris
7,292,979	B2	11/2007	Karas et al.
7,299,033	B2	11/2007	Kjellberg et al.
7,302,392	B1	11/2007	Thenthiruperai et al.
7,302,686	B2	11/2007	Togawa
7,308,408	B1	12/2007	Stifelman et al.
7,310,329	B2	12/2007	Vieri et al.
7,310,600	B1	12/2007	Garner et al.
7,310,605	B2	12/2007	Janakiraman et al.
7,313,523	B1	12/2007	Bellegarda et al.
7,315,818	B2	1/2008	Stevens et al.
7,319,957	B2	1/2008	Robinson et al.
7,321,783	B2	1/2008	Kim
7,324,833	B2	1/2008	White et al.
7,324,947	B2	1/2008	Jordan et al.
7,328,155	B2	2/2008	Endo et al.
7,349,953	B2	3/2008	Lisitsa et al.
7,353,139	B1	4/2008	Burrell et al.
7,359,493	B1	4/2008	Wang et al.
7,359,671	B2	4/2008	Richenstein et al.
7,359,851	B2	4/2008	Tong et al.
7,362,738	B2	4/2008	Taube et al.
7,363,227	B2	4/2008	Mapes-Riordan et al.
7,365,260	B2	4/2008	Kawashima
7,366,461	B1	4/2008	Brown
7,373,612	B2	5/2008	Risch et al.
7,376,556	B2	5/2008	Bennett
7,376,632	B1	5/2008	Sadek et al.
7,376,645	B2	5/2008	Bernard
7,378,963	B1	5/2008	Begault et al.
7,379,874	B2	5/2008	Schmid et al.
7,380,203	B2	5/2008	Keely et al.
7,383,170	B2	6/2008	Mills et al.
7,386,449	B2	6/2008	Sun et al.
7,386,799	B1	6/2008	Clanton et al.
7,389,224	B1	6/2008	Elworthy
7,389,225	B1	6/2008	Jensen et al.
7,392,185	B2	6/2008	Bennett
7,394,947	B2	7/2008	Li et al.
7,398,209	B2	7/2008	Kennewick et al.
7,401,300	B2	7/2008	Nurmi
7,403,938	B2	7/2008	Harrison et al.
7,404,143	B2	7/2008	Freelander et al.
7,409,337	B1	8/2008	Potter et al.
7,409,347	B1	8/2008	Bellegarda
7,412,470	B2	8/2008	Masuno et al.
7,415,100	B2	8/2008	Cooper et al.
7,418,389	B2	8/2008	Chu et al.
7,418,392	B1	8/2008	Mozer et al.
7,426,467	B2	9/2008	Nashida et al.
7,426,468	B2	9/2008	Coifman et al.
7,427,024	B1	9/2008	Gazdzinski et al.
7,428,541	B2	9/2008	Houle
7,433,869	B2	10/2008	Gollapudi
7,433,921	B2	10/2008	Ludwig et al.
7,441,184	B2	10/2008	Frerebeau et al.
7,443,316	B2	10/2008	Lim
7,447,635	B1	11/2008	Konopka et al.
7,454,351	B2	11/2008	Jeschke et al.
7,460,652	B2	12/2008	Chang
7,467,087	B1	12/2008	Gillick et al.
7,467,164	B2	12/2008	Marsh
7,472,061	B1	12/2008	Alewine et al.
7,472,065	B2	12/2008	Aaron et al.
7,475,010	B2	1/2009	Chao
7,475,063	B2	1/2009	Datta et al.
7,477,238	B2	1/2009	Fux et al.
7,477,240	B2	1/2009	Yanagisawa
7,478,037	B2	1/2009	Strong
7,478,091	B2	1/2009	Mojsilovic et al.
7,478,129	B1	1/2009	Chemtob
7,483,832	B2	1/2009	Tischer
7,483,894	B2	1/2009	Cao
7,487,089	B2	2/2009	Mozer
7,487,093	B2	2/2009	Mutsuno et al.
7,490,034	B2	2/2009	Finnigan et al.
7,496,498	B2	2/2009	Chu et al.
7,496,512	B2	2/2009	Zhao et al.
7,499,923	B2	3/2009	Kawatani
7,502,738	B2	3/2009	Kennewick et al.
7,505,795	B1	3/2009	Lim et al.
7,508,324	B2	3/2009	Suraqui
7,508,373	B2	3/2009	Lin et al.
7,516,123	B2	4/2009	Betz et al.
7,519,327	B2	4/2009	White
7,522,927	B2	4/2009	Fitch et al.
7,523,036	B2	4/2009	Akabane et al.
7,523,108	B2	4/2009	Cao
7,526,466	B2	4/2009	Au
7,526,738	B2	4/2009	Ording et al.
7,528,713	B2	5/2009	Singh et al.
7,529,671	B2	5/2009	Rockenbeck et al.
7,529,676	B2	5/2009	Koyama
7,535,997	B1	5/2009	McQuaide, Jr. et al.
7,536,029	B2	5/2009	Choi et al.
7,536,565	B2	5/2009	Girish et al.
7,538,685	B1	5/2009	Cooper et al.
7,539,619	B1	5/2009	Seligman et al.
7,539,656	B2	5/2009	Fratkina et al.
7,541,940	B2	6/2009	Upton
7,542,967	B2	6/2009	Hurst-Hiller et al.
7,543,232	B2	6/2009	Easton, Jr. et al.
7,546,382	B2	6/2009	Healey et al.
7,546,529	B2	6/2009	Reynar et al.
7,548,895	B2	6/2009	Pulsipher

(56) **References Cited**

U.S. PATENT DOCUMENTS

7,552,045	B2	6/2009	Barliga et al.
7,552,055	B2	6/2009	Lecoeuche
7,555,431	B2	6/2009	Bennett
7,555,496	B1	6/2009	Lantrip et al.
7,558,381	B1	7/2009	Ali et al.
7,558,730	B2	7/2009	Davis et al.
7,559,026	B2	7/2009	Girish et al.
7,561,069	B2	7/2009	Horstemeyer
7,562,007	B2	7/2009	Hwang
7,565,104	B1	7/2009	Brown et al.
7,565,380	B1	7/2009	Venkatachary
7,571,106	B2	8/2009	Cao et al.
7,577,522	B2	8/2009	Rosenberg
7,580,551	B1	8/2009	Srihari et al.
7,580,576	B2	8/2009	Wang et al.
7,580,839	B2	8/2009	Tamura et al.
7,584,093	B2	9/2009	Potter et al.
7,593,868	B2	9/2009	Margiloff et al.
7,596,499	B2	9/2009	Anguera et al.
7,599,918	B2	10/2009	Shen et al.
7,603,381	B2	10/2009	Burke et al.
7,609,179	B2	10/2009	Diaz-Gutierrez et al.
7,613,264	B2	11/2009	Wells et al.
7,617,094	B2	11/2009	Aoki et al.
7,620,407	B1	11/2009	Donald et al.
7,620,549	B2	11/2009	Di Cristo et al.
7,624,007	B2	11/2009	Bennett
7,627,481	B1	12/2009	Kuo et al.
7,630,901	B2	12/2009	Omi
7,634,409	B2	12/2009	Kennewick et al.
7,634,413	B1	12/2009	Kuo et al.
7,636,657	B2	12/2009	Ju et al.
7,640,160	B2	12/2009	Di Cristo et al.
7,643,990	B1	1/2010	Bellegarda
7,647,225	B2	1/2010	Bennett et al.
7,649,454	B2	1/2010	Singh et al.
7,649,877	B2	1/2010	Vieri et al.
7,656,393	B2	2/2010	King et al.
7,657,424	B2	2/2010	Bennett
7,664,558	B2	2/2010	Lindahl et al.
7,664,638	B2	2/2010	Cooper et al.
7,669,134	B1	2/2010	Christie et al.
7,672,841	B2	3/2010	Bennett
7,672,952	B2	3/2010	Isaacson et al.
7,673,238	B2	3/2010	Girish et al.
7,673,340	B1	3/2010	Cohen et al.
7,676,026	B1	3/2010	Baxter, Jr.
7,676,365	B2	3/2010	Hwang et al.
7,676,463	B2	3/2010	Thompson et al.
7,679,534	B2	3/2010	Kay et al.
7,680,649	B2	3/2010	Park
7,681,126	B2	3/2010	Roose
7,683,886	B2	3/2010	Willey
7,684,985	B2	3/2010	Dominach et al.
7,684,990	B2	3/2010	Caskey et al.
7,684,991	B2	3/2010	Stohr et al.
7,689,408	B2	3/2010	Chen et al.
7,689,409	B2	3/2010	Heinecke
7,689,421	B2	3/2010	Li et al.
7,693,715	B2	4/2010	Hwang et al.
7,693,717	B2	4/2010	Kahn et al.
7,693,719	B2	4/2010	Chu et al.
7,693,720	B2	4/2010	Kennewick et al.
7,698,131	B2	4/2010	Bennett
7,702,500	B2	4/2010	Blaedow
7,702,508	B2	4/2010	Bennett
7,706,510	B2	4/2010	Ng
7,707,026	B2	4/2010	Liu
7,707,027	B2	4/2010	Balchandran et al.
7,707,032	B2	4/2010	Wang et al.
7,707,221	B1	4/2010	Dunning et al.
7,707,267	B2	4/2010	Lisitsa et al.
7,710,262	B2	5/2010	Ruha
7,711,129	B2	5/2010	Lindahl et al.
7,711,565	B1	5/2010	Gazdzinski
7,711,672	B2	5/2010	Au
7,712,053	B2	5/2010	Bradford et al.
7,716,056	B2	5/2010	Weng et al.
7,720,674	B2	5/2010	Kaiser et al.
7,720,683	B1	5/2010	Vermeulen et al.
7,721,301	B2	5/2010	Wong et al.
7,725,307	B2	5/2010	Bennett
7,725,318	B2	5/2010	Gavalda et al.
7,725,320	B2	5/2010	Bennett
7,725,321	B2	5/2010	Bennett
7,725,838	B2	5/2010	Williams
7,729,904	B2	6/2010	Bennett
7,729,916	B2	6/2010	Coffman et al.
7,734,461	B2	6/2010	Kwak et al.
7,743,188	B2	6/2010	Haitani et al.
7,747,616	B2	6/2010	Yamada et al.
7,752,152	B2	7/2010	Paek et al.
7,756,868	B2	7/2010	Lee
7,757,182	B2	7/2010	Elliott et al.
7,761,296	B1	7/2010	Bakis et al.
7,763,842	B2	7/2010	Hsu et al.
7,774,204	B2	8/2010	Mozer et al.
7,774,388	B1	8/2010	Runchey
7,778,432	B2	8/2010	Larsen
7,778,595	B2	8/2010	White et al.
7,778,632	B2	8/2010	Kurlander et al.
7,779,353	B2	8/2010	Grigoriu et al.
7,783,283	B2	8/2010	Kuusinen et al.
7,783,486	B2	8/2010	Rosser et al.
7,797,265	B2	9/2010	Brinker et al.
7,797,269	B2	9/2010	Rieman et al.
7,801,721	B2	9/2010	Rosart et al.
7,801,728	B2	9/2010	Ben-David et al.
7,801,729	B2	9/2010	Mozer
7,805,299	B2	9/2010	Coifman
7,809,565	B2	10/2010	Coifman
7,809,569	B2	10/2010	Attwater et al.
7,809,570	B2	10/2010	Kennewick et al.
7,809,610	B2	10/2010	Cao
7,809,744	B2	10/2010	Nevidomski et al.
7,818,165	B2	10/2010	Carlgren et al.
7,818,176	B2	10/2010	Freeman et al.
7,818,291	B2	10/2010	Ferguson et al.
7,822,608	B2	10/2010	Cross, Jr. et al.
7,823,123	B2	10/2010	Sabbouh
7,826,945	B2	11/2010	Zhang et al.
7,827,047	B2	11/2010	Anderson et al.
7,831,423	B2	11/2010	Schubert
7,831,426	B2	11/2010	Bennett
7,831,432	B2	11/2010	Bodin et al.
7,840,400	B2	11/2010	Lavi et al.
7,840,447	B2	11/2010	Kleinrock et al.
7,840,581	B2	11/2010	Ross et al.
7,848,924	B2	12/2010	Nurminen et al.
7,848,926	B2	12/2010	Goto et al.
7,853,444	B2	12/2010	Wang et al.
7,853,445	B2	12/2010	Bachenko et al.
7,853,574	B2	12/2010	Kraenzel et al.
7,853,577	B2	12/2010	Sundaresan et al.
7,853,664	B1	12/2010	Wang et al.
7,869,999	B2	1/2011	Amato et al.
7,870,118	B2	1/2011	Jiang et al.
7,873,519	B2	1/2011	Bennett
7,873,654	B2	1/2011	Bernard
7,877,705	B2	1/2011	Chambers et al.
7,880,730	B2	2/2011	Robinson et al.
7,881,936	B2	2/2011	Longe et al.
7,885,844	B1	2/2011	Cohen et al.
7,890,330	B2	2/2011	Ozkaragoz et al.
7,890,652	B2	2/2011	Bull et al.
7,899,666	B2	3/2011	Varone
7,908,287	B1	3/2011	Katragadda
7,912,699	B1	3/2011	Saraclar et al.
7,912,702	B2	3/2011	Bennett
7,917,367	B2	3/2011	Di Cristo et al.
7,917,497	B2	3/2011	Harrison et al.
7,920,678	B2	4/2011	Cooper et al.
7,920,682	B2	4/2011	Byrne et al.
7,920,857	B2	4/2011	Lau et al.

(56) **References Cited**

U.S. PATENT DOCUMENTS

7,925,525	B2	4/2011	Chin
7,925,610	B2	4/2011	Elbaz et al.
7,929,805	B2	4/2011	Wang et al.
7,930,168	B2	4/2011	Weng et al.
7,930,183	B2	4/2011	Odell et al.
7,930,197	B2	4/2011	Ozzie et al.
7,941,009	B2	5/2011	Li et al.
7,949,529	B2	5/2011	Weider et al.
7,949,534	B2	5/2011	Davis et al.
7,953,679	B2	5/2011	Chidlovskii et al.
7,962,179	B2	6/2011	Huang
7,974,844	B2	7/2011	Sumita
7,974,972	B2	7/2011	Cao
7,983,915	B2	7/2011	Knight et al.
7,983,917	B2	7/2011	Kennewick et al.
7,983,919	B2	7/2011	Conkie
7,983,997	B2	7/2011	Allen et al.
7,984,062	B2	7/2011	Dunning et al.
7,986,431	B2	7/2011	Emori et al.
7,987,151	B2	7/2011	Schott et al.
7,987,244	B1	7/2011	Lewis et al.
7,991,614	B2	8/2011	Washio et al.
7,996,228	B2	8/2011	Miller et al.
7,999,669	B2	8/2011	Singh et al.
8,000,453	B2	8/2011	Cooper et al.
8,005,664	B2	8/2011	Hanumanthappa
8,005,679	B2	8/2011	Jordan et al.
8,006,180	B2	8/2011	Tunning et al.
8,015,006	B2	9/2011	Kennewick et al.
8,015,011	B2	9/2011	Nagano et al.
8,015,144	B2	9/2011	Zheng et al.
8,019,271	B1	9/2011	Izdepski
8,024,195	B2	9/2011	Mozer et al.
8,027,836	B2	9/2011	Baker et al.
8,032,383	B1	10/2011	Bhardwaj et al.
8,036,901	B2	10/2011	Mozer
8,037,034	B2	10/2011	Plachta et al.
8,041,557	B2	10/2011	Liu
8,041,570	B2	10/2011	Mirkovic et al.
8,041,611	B2	10/2011	Kleinrock et al.
8,046,363	B2	10/2011	Cha et al.
8,050,500	B1	11/2011	Batty et al.
8,055,502	B2	11/2011	Clark et al.
8,055,708	B2	11/2011	Chitsaz et al.
8,065,143	B2	11/2011	Yanagihara
8,065,155	B1	11/2011	Gazdzinski
8,065,156	B2	11/2011	Gazdzinski
8,069,046	B2	11/2011	Kennewick et al.
8,069,422	B2	11/2011	Sheshagiri et al.
8,073,681	B2	12/2011	Baldwin et al.
8,078,473	B1	12/2011	Gazdzinski
8,082,153	B2	12/2011	Coffman et al.
8,082,498	B2	12/2011	Salamon et al.
8,090,571	B2	1/2012	Elshishiny et al.
8,095,364	B2	1/2012	Longe et al.
8,099,289	B2	1/2012	Mozer et al.
8,099,418	B2	1/2012	Inoue et al.
8,103,510	B2	1/2012	Sato
8,107,401	B2	1/2012	John et al.
8,112,275	B2	2/2012	Kennewick et al.
8,112,280	B2	2/2012	Lu
8,117,037	B2	2/2012	Gazdzinski
8,122,353	B2	2/2012	Bouta
8,131,557	B2	3/2012	Davis et al.
8,135,115	B1	3/2012	Hogg, Jr. et al.
8,138,912	B2	3/2012	Singh et al.
8,140,335	B2	3/2012	Kennewick et al.
8,140,567	B2	3/2012	Padovitz et al.
8,150,694	B2	4/2012	Kennewick et al.
8,150,700	B2	4/2012	Shin et al.
8,155,956	B2	4/2012	Cho et al.
8,156,005	B2	4/2012	Vieri
8,165,321	B2	4/2012	Paquier et al.
8,165,886	B1	4/2012	Gagnon et al.
8,166,019	B1	4/2012	Lee et al.
8,170,790	B2	5/2012	Lee et al.
8,179,370	B1	5/2012	Yamasani et al.
8,188,856	B2	5/2012	Singh et al.
8,190,359	B2	5/2012	Bourne
8,195,467	B2	6/2012	Mozer et al.
8,200,495	B2	6/2012	Braho et al.
8,204,238	B2	6/2012	Mozer
8,205,788	B1	6/2012	Gazdzinski et al.
8,219,115	B1	7/2012	Nelissen
8,219,406	B2	7/2012	Yu et al.
8,219,407	B1	7/2012	Roy et al.
8,219,608	B2	7/2012	alSafadi et al.
8,224,649	B2	7/2012	Chaudhari et al.
8,239,207	B2	8/2012	Seligman et al.
8,255,217	B2	8/2012	Stent et al.
8,275,621	B2	9/2012	Alewine et al.
8,285,546	B2	10/2012	Reich
8,285,551	B2	10/2012	Gazdzinski
8,285,553	B2	10/2012	Gazdzinski
8,290,777	B1	10/2012	Nguyen et al.
8,290,778	B2	10/2012	Gazdzinski
8,290,781	B2	10/2012	Gazdzinski
8,296,146	B2	10/2012	Gazdzinski
8,296,153	B2	10/2012	Gazdzinski
8,296,383	B2	10/2012	Lindahl
8,301,456	B2	10/2012	Gazdzinski
8,311,834	B1	11/2012	Gazdzinski
8,332,224	B2	12/2012	Di Cristo et al.
8,345,665	B2	1/2013	Vieri et al.
8,352,268	B2	1/2013	Naik et al.
8,352,272	B2	1/2013	Rogers et al.
8,355,919	B2	1/2013	Silverman et al.
8,359,234	B2	1/2013	Vieri
8,370,158	B2	2/2013	Gazdzinski
8,371,503	B2	2/2013	Gazdzinski
8,374,871	B2	2/2013	Ehsani et al.
8,380,504	B1	2/2013	Peden et al.
8,381,107	B2	2/2013	Rottler et al.
8,396,714	B2	3/2013	Rogers et al.
8,428,758	B2	4/2013	Naik et al.
8,447,612	B2	5/2013	Gazdzinski
8,498,857	B2	7/2013	Kopparapu et al.
8,521,513	B2	8/2013	Millett et al.
8,595,004	B2	11/2013	Koshinaka
8,620,659	B2	12/2013	Di Cristo et al.
8,645,137	B2	2/2014	Bellegarda et al.
8,660,849	B2	2/2014	Gruber et al.
8,660,970	B1	2/2014	Fiedorowicz
2001/0005859	A1	6/2001	Okuyama et al.
2001/0020259	A1	9/2001	Sekiguchi et al.
2001/0027396	A1	10/2001	Sato
2001/0029455	A1	10/2001	Chin et al.
2001/0030660	A1	10/2001	Zainoulline
2001/0032080	A1	10/2001	Fukada
2001/0041021	A1	11/2001	Boyle et al.
2001/0042107	A1	11/2001	Palm
2001/0044724	A1	11/2001	Hon et al.
2001/0047264	A1	11/2001	Roundtree
2001/0056342	A1	12/2001	Piehn et al.
2001/0056347	A1	12/2001	Chazan et al.
2002/0001395	A1	1/2002	Davis et al.
2002/0002039	A1	1/2002	Qureshey et al.
2002/0002413	A1	1/2002	Tokue
2002/0002461	A1	1/2002	Tetsumoto
2002/0004703	A1	1/2002	Gaspard, II
2002/0010581	A1	1/2002	Euler et al.
2002/0010584	A1	1/2002	Schultz et al.
2002/0010726	A1	1/2002	Rogson
2002/0010798	A1	1/2002	Ben-Shaul et al.
2002/0013784	A1	1/2002	Swanson
2002/0013852	A1	1/2002	Janik
2002/0015064	A1	2/2002	Robotham et al.
2002/0021278	A1	2/2002	Hinckley et al.
2002/0026315	A1	2/2002	Miranda
2002/0026456	A1	2/2002	Bradford
2002/0031254	A1	3/2002	Lantrip et al.
2002/0031262	A1	3/2002	Imagawa et al.
2002/0032564	A1	3/2002	Ehsani et al.
2002/0032751	A1	3/2002	Bharadwaj

(56) **References Cited**

U.S. PATENT DOCUMENTS

2002/0035467 A1 3/2002 Morimoto et al.
2002/0035469 A1 3/2002 Holzapfel
2002/0035474 A1 3/2002 Alpdemir
2002/0040359 A1 4/2002 Green et al.
2002/0042707 A1 4/2002 Zhao et al.
2002/0045438 A1 4/2002 Tagawa et al.
2002/0045961 A1 4/2002 Gibbs et al.
2002/0046025 A1 4/2002 Hain
2002/0046315 A1 4/2002 Miller et al.
2002/0052730 A1 5/2002 Nakao
2002/0052740 A1 5/2002 Charlesworth et al.
2002/0052747 A1 5/2002 Sarukkai
2002/0054094 A1 5/2002 Matsuda
2002/0055844 A1 5/2002 L'Esperance et al.
2002/0055934 A1 5/2002 Lipscomb et al.
2002/0059066 A1 5/2002 O'hagan
2002/0059068 A1 5/2002 Rose et al.
2002/0065659 A1 5/2002 Isono et al.
2002/0067308 A1 6/2002 Robertson
2002/0069063 A1 6/2002 Buchner et al.
2002/0069220 A1 6/2002 Tran
2002/0072816 A1 6/2002 Shdema et al.
2002/0072908 A1 6/2002 Case et al.
2002/0077082 A1 6/2002 Cruickshank
2002/0077817 A1 6/2002 Atal
2002/0078041 A1 6/2002 Wu
2002/0080163 A1 6/2002 Morey
2002/0085037 A1 7/2002 Leavitt et al.
2002/0087508 A1 7/2002 Hull et al.
2002/0091511 A1 7/2002 Hellwig et al.
2002/0095286 A1 7/2002 Ross et al.
2002/0099547 A1 7/2002 Chu et al.
2002/0099552 A1 7/2002 Rubin et al.
2002/0103641 A1 8/2002 Kuo et al.
2002/0103646 A1 8/2002 Kochanski et al.
2002/0107684 A1 8/2002 Gao
2002/0109709 A1 8/2002 Sagar
2002/0111810 A1 8/2002 Khan et al.
2002/0116082 A1 8/2002 Gudorf
2002/0116171 A1 8/2002 Russell
2002/0116185 A1 8/2002 Cooper et al.
2002/0116189 A1 8/2002 Yeh et al.
2002/0120697 A1 8/2002 Generous et al.
2002/0120925 A1 8/2002 Logan
2002/0122053 A1 9/2002 Dutta et al.
2002/0123894 A1 9/2002 Woodward
2002/0126097 A1 9/2002 Savolainen
2002/0128827 A1 9/2002 Bu et al.
2002/0128840 A1 9/2002 Hinde et al.
2002/0133347 A1 9/2002 Schoneburg et al.
2002/0133348 A1 9/2002 Pearson et al.
2002/0135565 A1 9/2002 Gordon et al.
2002/0138254 A1 9/2002 Isaka et al.
2002/0138265 A1 9/2002 Stevens et al.
2002/0138270 A1 9/2002 Bellegarda et al.
2002/0138616 A1 9/2002 Basson et al.
2002/0140679 A1 10/2002 Wen
2002/0143533 A1 10/2002 Lucas et al.
2002/0143542 A1 10/2002 Eide
2002/0143551 A1 10/2002 Sharma et al.
2002/0143826 A1 10/2002 Day et al.
2002/0151297 A1 10/2002 Remboski et al.
2002/0152045 A1 10/2002 Dowling et al.
2002/0152255 A1 10/2002 Smith et al.
2002/0154160 A1 10/2002 Hosokawa
2002/0161865 A1 10/2002 Nguyen
2002/0163544 A1 11/2002 Baker et al.
2002/0164000 A1 11/2002 Cohen et al.
2002/0165918 A1 11/2002 Bettis
2002/0169592 A1 11/2002 Aityan
2002/0169605 A1 11/2002 Damiba et al.
2002/0173273 A1 11/2002 Spurgat et al.
2002/0173889 A1 11/2002 Odinak et al.
2002/0173961 A1 11/2002 Guerra
2002/0173962 A1 11/2002 Tang et al.
2002/0173966 A1 11/2002 Henton
2002/0177993 A1 11/2002 Veditz et al.
2002/0184189 A1 12/2002 Hay et al.
2002/0189426 A1 12/2002 Hirade et al.
2002/0191029 A1 12/2002 Gillespie et al.
2002/0193996 A1 12/2002 Squibbs et al.
2002/0198714 A1 12/2002 Zhou
2002/0198715 A1 12/2002 Belrose
2003/0001881 A1 1/2003 Mannheimer et al.
2003/0002632 A1 1/2003 Bhogal et al.
2003/0013483 A1 1/2003 Ausems et al.
2003/0016770 A1 1/2003 Trans et al.
2003/0020760 A1 1/2003 Takatsu et al.
2003/0026402 A1 2/2003 Clapper
2003/0028380 A1 2/2003 Freeland et al.
2003/0033153 A1 2/2003 Olson et al.
2003/0033214 A1 2/2003 Mikkelsen et al.
2003/0037073 A1 2/2003 Tokuda et al.
2003/0037254 A1 2/2003 Fischer et al.
2003/0040908 A1 2/2003 Yang et al.
2003/0046401 A1 3/2003 Abbott et al.
2003/0046434 A1 3/2003 Flanagin et al.
2003/0050781 A1 3/2003 Tamura et al.
2003/0051136 A1 3/2003 Curtis et al.
2003/0061317 A1 3/2003 Brown et al.
2003/0074198 A1 4/2003 Sussman
2003/0074457 A1 4/2003 Kluth
2003/0076301 A1 4/2003 Tsuk et al.
2003/0078766 A1 4/2003 Appelt et al.
2003/0078780 A1 4/2003 Kochanski et al.
2003/0078969 A1 4/2003 Sprague et al.
2003/0079024 A1 4/2003 Hough et al.
2003/0079038 A1 4/2003 Robbin et al.
2003/0080991 A1 5/2003 Crow et al.
2003/0083878 A1 5/2003 Lee et al.
2003/0083884 A1 5/2003 Odinak et al.
2003/0088414 A1 5/2003 Huang et al.
2003/0090467 A1 5/2003 Hohl et al.
2003/0090474 A1 5/2003 Schaefer
2003/0095096 A1 5/2003 Robbin et al.
2003/0097210 A1 5/2003 Horst et al.
2003/0097379 A1 5/2003 Ireton
2003/0097408 A1 5/2003 Kageyama et al.
2003/0098892 A1 5/2003 Hiipakka
2003/0099335 A1 5/2003 Tanaka et al.
2003/0101045 A1 5/2003 Moffatt et al.
2003/0115060 A1 6/2003 Junqua et al.
2003/0115064 A1 6/2003 Gusler et al.
2003/0115186 A1 6/2003 Wilkinson et al.
2003/0115552 A1 6/2003 Jahnke et al.
2003/0117365 A1 6/2003 Shteyn
2003/0120494 A1 6/2003 Jost et al.
2003/0122787 A1 7/2003 Zimmerman et al.
2003/0125927 A1 7/2003 Seme
2003/0126559 A1 7/2003 Fuhrmann
2003/0128819 A1 7/2003 Lee et al.
2003/0133694 A1 7/2003 Yea
2003/0134678 A1 7/2003 Tanaka
2003/0135740 A1 7/2003 Talmor et al.
2003/0144846 A1 7/2003 Denenberge et al.
2003/0145285 A1 7/2003 Miyahira et al.
2003/0147512 A1 8/2003 Abburi
2003/0149557 A1 8/2003 Cox et al.
2003/0149567 A1 8/2003 Schmitz et al.
2003/0149978 A1 8/2003 Plotnick
2003/0152203 A1 8/2003 Berger et al.
2003/0154081 A1 8/2003 Chu et al.
2003/0157968 A1 8/2003 Boman et al.
2003/0158735 A1 8/2003 Yamada et al.
2003/0158737 A1 8/2003 Csicsatka
2003/0160702 A1 8/2003 Tanaka
2003/0163316 A1 8/2003 Addison et al.
2003/0164848 A1 9/2003 Dutta et al.
2003/0167318 A1 9/2003 Robbin et al.
2003/0167335 A1 9/2003 Alexander
2003/0171928 A1 9/2003 Falcon et al.
2003/0171936 A1 9/2003 Sall et al.
2003/0179222 A1 9/2003 Noma et al.
2003/0187655 A1 10/2003 Dunsmuir

(56) **References Cited**

U.S. PATENT DOCUMENTS

2003/0187844 A1 10/2003 Li et al.
2003/0187925 A1 10/2003 Inala et al.
2003/0190074 A1 10/2003 Loudon et al.
2003/0191645 A1 10/2003 Zhou
2003/0193481 A1 10/2003 Sokolsky
2003/0195741 A1 10/2003 Mani et al.
2003/0197736 A1 10/2003 Murphy
2003/0197744 A1 10/2003 Irvine
2003/0200858 A1 10/2003 Xie
2003/0204392 A1 10/2003 Finnigan et al.
2003/0204492 A1 10/2003 Wolf et al.
2003/0208756 A1 11/2003 Macrae et al.
2003/0210266 A1 11/2003 Cragun et al.
2003/0212961 A1 11/2003 Soin et al.
2003/0214519 A1 11/2003 Smith et al.
2003/0224760 A1 12/2003 Day
2003/0228863 A1 12/2003 Vander Veen et al.
2003/0228909 A1 12/2003 Tanaka et al.
2003/0229490 A1 12/2003 Etter
2003/0229616 A1 12/2003 Wong
2003/0233230 A1 12/2003 Ammicht et al.
2003/0233237 A1 12/2003 Garside et al.
2003/0233240 A1 12/2003 Kaatrasalo
2003/0234824 A1 12/2003 Litwiller
2003/0236663 A1 12/2003 Dimitrova et al.
2004/0001396 A1 1/2004 Keller et al.
2004/0006467 A1 1/2004 Anisimovich et al.
2004/0012556 A1 1/2004 Yong et al.
2004/0013252 A1 1/2004 Craner
2004/0021676 A1 2/2004 Chen et al.
2004/0022373 A1 2/2004 Suder et al.
2004/0023643 A1 2/2004 Vander Veen et al.
2004/0030556 A1 2/2004 Bennett
2004/0030996 A1 2/2004 Van Liempd et al.
2004/0036715 A1 2/2004 Warren
2004/0048627 A1 3/2004 Olvera-Hernandez
2004/0049391 A1 3/2004 Polanyi et al.
2004/0051729 A1 3/2004 Borden, IV
2004/0052338 A1 3/2004 Celi, Jr. et al.
2004/0054533 A1 3/2004 Bellegarda
2004/0054534 A1 3/2004 Junqua
2004/0054535 A1 3/2004 Mackie et al.
2004/0054541 A1 3/2004 Kryze et al.
2004/0054690 A1 3/2004 Hillerbrand et al.
2004/0055446 A1 3/2004 Robbin et al.
2004/0056899 A1 3/2004 Sinclair, II et al.
2004/0059577 A1 3/2004 Pickering
2004/0059790 A1 3/2004 Austin-Lane et al.
2004/0061717 A1 4/2004 Menon et al.
2004/0062367 A1 4/2004 Fellenstein et al.
2004/0064593 A1 4/2004 Sinclair et al.
2004/0069122 A1 4/2004 Wilson
2004/0070567 A1 4/2004 Longe et al.
2004/0070612 A1 4/2004 Sinclair et al.
2004/0073427 A1 4/2004 Moore
2004/0073428 A1 4/2004 Zlokarnik et al.
2004/0076086 A1 4/2004 Keller et al.
2004/0078382 A1 4/2004 Mercer et al.
2004/0085162 A1 5/2004 Agarwal et al.
2004/0086120 A1 5/2004 Akins, III et al.
2004/0093213 A1 5/2004 Conkie
2004/0093215 A1 5/2004 Gupta et al.
2004/0094018 A1 5/2004 Ueshima et al.
2004/0100479 A1 5/2004 Nakano et al.
2004/0106432 A1 6/2004 Kanamori et al.
2004/0107169 A1 6/2004 Lowe
2004/0111266 A1 6/2004 Coorman et al.
2004/0111332 A1 6/2004 Baar et al.
2004/0114731 A1 6/2004 Gillett et al.
2004/0122656 A1 6/2004 Abir
2004/0124583 A1 7/2004 Landis
2004/0125088 A1 7/2004 Zimmerman et al.
2004/0125922 A1 7/2004 Specht
2004/0127198 A1 7/2004 Roskind et al.
2004/0127241 A1 7/2004 Shostak
2004/0128137 A1 7/2004 Bush et al.
2004/0133817 A1 7/2004 Choi
2004/0135701 A1 7/2004 Yasuda et al.
2004/0135774 A1 7/2004 La Monica
2004/0136510 A1 7/2004 Vander Veen
2004/0138869 A1 7/2004 Heinecke
2004/0145607 A1 7/2004 Alderson
2004/0153306 A1 8/2004 Tanner et al.
2004/0160419 A1 8/2004 Padgitt
2004/0162741 A1 8/2004 Flaxer et al.
2004/0176958 A1 9/2004 Salmenkaita et al.
2004/0177319 A1 9/2004 Horn
2004/0178994 A1 9/2004 Kairls, Jr.
2004/0183833 A1 9/2004 Chua
2004/0186713 A1 9/2004 Gomas et al.
2004/0186714 A1 9/2004 Baker
2004/0186777 A1 9/2004 Margiloff et al.
2004/0193398 A1 9/2004 Chu et al.
2004/0193420 A1 9/2004 Kennewick et al.
2004/0193421 A1 9/2004 Blass
2004/0193426 A1 9/2004 Maddux et al.
2004/0196256 A1 10/2004 Wobbrock et al.
2004/0198436 A1 10/2004 Alden
2004/0199375 A1 10/2004 Ehsani et al.
2004/0199387 A1 10/2004 Wang et al.
2004/0199663 A1 10/2004 Horvitz et al.
2004/0203520 A1 10/2004 Schirtzinger et al.
2004/0205151 A1 10/2004 Sprigg et al.
2004/0205671 A1 10/2004 Sukehiro et al.
2004/0208302 A1 10/2004 Urban et al.
2004/0210634 A1 10/2004 Ferrer et al.
2004/0215731 A1 10/2004 Tzann-en Szeto
2004/0218451 A1 11/2004 Said et al.
2004/0220798 A1 11/2004 Chi et al.
2004/0223485 A1 11/2004 Arellano et al.
2004/0224638 A1 11/2004 Fadell et al.
2004/0225650 A1 11/2004 Cooper et al.
2004/0225746 A1 11/2004 Niell et al.
2004/0236778 A1 11/2004 Junqua et al.
2004/0242286 A1 12/2004 Benco et al.
2004/0243419 A1 12/2004 Wang
2004/0249629 A1 12/2004 Webster
2004/0249667 A1 12/2004 Oon
2004/0252119 A1 12/2004 Hunleth et al.
2004/0252604 A1 12/2004 Johnson et al.
2004/0252966 A1 12/2004 Holloway et al.
2004/0254791 A1 12/2004 Coifman et al.
2004/0254792 A1 12/2004 Busayapongchai et al.
2004/0257432 A1 12/2004 Girish et al.
2004/0259536 A1 12/2004 Keskar et al.
2004/0263636 A1 12/2004 Cutler et al.
2004/0267825 A1 12/2004 Novak et al.
2004/0268262 A1 12/2004 Gupta et al.
2005/0002507 A1 1/2005 Timmins et al.
2005/0015254 A1 1/2005 Beaman
2005/0015772 A1 1/2005 Saare et al.
2005/0022114 A1 1/2005 Shanahan et al.
2005/0024341 A1 2/2005 Gillespie et al.
2005/0024345 A1 2/2005 Eastty et al.
2005/0027385 A1 2/2005 Yueh
2005/0030175 A1 2/2005 Wolfe
2005/0031106 A1 2/2005 Henderson
2005/0033582 A1 2/2005 Gadd et al.
2005/0033771 A1 2/2005 Schmitter et al.
2005/0043946 A1 2/2005 Ueyama et al.
2005/0043949 A1 2/2005 Roth et al.
2005/0044569 A1 2/2005 Marcus
2005/0045373 A1 3/2005 Born
2005/0049880 A1 3/2005 Roth et al.
2005/0055403 A1 3/2005 Brittan
2005/0058438 A1 3/2005 Hayashi
2005/0060155 A1 3/2005 Chu et al.
2005/0071165 A1 3/2005 Hofstader et al.
2005/0071332 A1 3/2005 Ortega et al.
2005/0071437 A1 3/2005 Bear et al.
2005/0074113 A1 4/2005 Mathew et al.
2005/0080613 A1 4/2005 Colledge et al.
2005/0080625 A1 4/2005 Bennett et al.
2005/0080632 A1 4/2005 Endo et al.

(56) **References Cited**

U.S. PATENT DOCUMENTS

2005/0080780 A1 4/2005 Colledge et al.
2005/0086059 A1 4/2005 Bennett
2005/0086605 A1 4/2005 Ferrer et al.
2005/0091118 A1 4/2005 Fano
2005/0099398 A1 5/2005 Garside et al.
2005/0100214 A1 5/2005 Zhang et al.
2005/0102144 A1 5/2005 Rapoport
2005/0102614 A1 5/2005 Brackett et al.
2005/0102625 A1 5/2005 Lee et al.
2005/0108001 A1 5/2005 Aarskog
2005/0108074 A1 5/2005 Bloechl et al.
2005/0108338 A1 5/2005 Simske et al.
2005/0108344 A1 5/2005 Tafoya et al.
2005/0114124 A1 5/2005 Liu et al.
2005/0114140 A1 5/2005 Brackett et al.
2005/0119890 A1 6/2005 Hirose
2005/0119897 A1 6/2005 Bennett et al.
2005/0125216 A1 6/2005 Chitrapura et al.
2005/0125235 A1 6/2005 Lazay et al.
2005/0131951 A1 6/2005 Zhang et al.
2005/0132301 A1 6/2005 Ikeda
2005/0136949 A1 6/2005 Barnes, Jr.
2005/0138305 A1 6/2005 Zellner
2005/0140504 A1 6/2005 Marshall et al.
2005/0143972 A1 6/2005 Gopalakrishnan et al.
2005/0144003 A1 6/2005 Iso-Sipila
2005/0144070 A1 6/2005 Cheshire
2005/0144568 A1 6/2005 Gruen et al.
2005/0148356 A1 7/2005 Ferguson et al.
2005/0149214 A1 7/2005 Yoo et al.
2005/0149330 A1 7/2005 Katae
2005/0149332 A1 7/2005 Kuzunuki et al.
2005/0149510 A1 7/2005 Shafrir
2005/0152558 A1 7/2005 Van Tassel
2005/0152602 A1 7/2005 Chen et al.
2005/0154578 A1 7/2005 Tong et al.
2005/0162395 A1 7/2005 Unruh
2005/0165607 A1 7/2005 Di Fabbrizio et al.
2005/0166153 A1 7/2005 Eytchison et al.
2005/0177445 A1 8/2005 Church
2005/0181770 A1 8/2005 Helferich
2005/0182616 A1 8/2005 Kotipalli
2005/0182627 A1 8/2005 Tanaka et al.
2005/0182628 A1 8/2005 Choi
2005/0182629 A1 8/2005 Coorman et al.
2005/0182630 A1 8/2005 Miro et al.
2005/0187773 A1 8/2005 Filoche et al.
2005/0190970 A1 9/2005 Griffin
2005/0192801 A1 9/2005 Lewis et al.
2005/0195429 A1 9/2005 Archbold
2005/0196733 A1 9/2005 Budra et al.
2005/0201572 A1 9/2005 Lindahl et al.
2005/0203747 A1 9/2005 Lecoeuche
2005/0203991 A1 9/2005 Kawamura et al.
2005/0209848 A1 9/2005 Ishii
2005/0210394 A1 9/2005 Crandall et al.
2005/0216331 A1 9/2005 Ahrens et al.
2005/0222843 A1 10/2005 Kahn et al.
2005/0222973 A1 10/2005 Kaiser
2005/0228665 A1 10/2005 Kobayashi et al.
2005/0245243 A1 11/2005 Zuniga
2005/0246350 A1 11/2005 Canaran
2005/0246365 A1 11/2005 Lowles et al.
2005/0271216 A1 12/2005 Lashkari
2005/0273337 A1 12/2005 Erell et al.
2005/0273626 A1 12/2005 Pearson et al.
2005/0278297 A1 12/2005 Nelson
2005/0278643 A1 12/2005 Ukai et al.
2005/0278647 A1 12/2005 Leavitt et al.
2005/0283364 A1 12/2005 Longe et al.
2005/0283726 A1 12/2005 Lunati
2005/0288934 A1 12/2005 Omi
2005/0288936 A1 12/2005 Busayapongchai et al.
2005/0289463 A1 12/2005 Wu et al.
2006/0001652 A1 1/2006 Chiu et al.
2006/0004570 A1 1/2006 Ju et al.
2006/0004744 A1 1/2006 Nevidomski et al.
2006/0007174 A1 1/2006 Shen
2006/0009973 A1 1/2006 Nguyen et al.
2006/0013414 A1 1/2006 Shih
2006/0015819 A1 1/2006 Hawkins et al.
2006/0018446 A1 1/2006 Schmandt et al.
2006/0018492 A1 1/2006 Chiu et al.
2006/0025999 A1 2/2006 Feng et al.
2006/0026233 A1 2/2006 Tenembaum et al.
2006/0026521 A1 2/2006 Hotelling et al.
2006/0026535 A1 2/2006 Hotelling et al.
2006/0033724 A1 2/2006 Chaudhri et al.
2006/0035632 A1 2/2006 Sorvari et al.
2006/0041424 A1 2/2006 Todhunter et al.
2006/0041431 A1 2/2006 Maes
2006/0047632 A1 3/2006 Zhang
2006/0050865 A1 3/2006 Kortum et al.
2006/0053379 A1 3/2006 Henderson et al.
2006/0061488 A1 3/2006 Dunton
2006/0067535 A1 3/2006 Culbert et al.
2006/0067536 A1 3/2006 Culbert et al.
2006/0069567 A1 3/2006 Tischer et al.
2006/0072248 A1 4/2006 Watanabe et al.
2006/0072716 A1 4/2006 Pham
2006/0074660 A1 4/2006 Waters et al.
2006/0074674 A1 4/2006 Zhang et al.
2006/0074750 A1 4/2006 Clark et al.
2006/0074898 A1 4/2006 Gavalda et al.
2006/0077055 A1 4/2006 Basir
2006/0080098 A1 4/2006 Campbell
2006/0085187 A1 4/2006 Barquilla
2006/0085465 A1 4/2006 Nori et al.
2006/0095265 A1 5/2006 Chu et al.
2006/0095846 A1 5/2006 Nurmi
2006/0095848 A1 5/2006 Naik
2006/0100848 A1 5/2006 Cozzi et al.
2006/0100849 A1 5/2006 Chan
2006/0106592 A1 5/2006 Brockett et al.
2006/0106594 A1 5/2006 Brockett et al.
2006/0106595 A1 5/2006 Brockett et al.
2006/0111906 A1 5/2006 Cross et al.
2006/0111909 A1 5/2006 Maes et al.
2006/0116874 A1 6/2006 Samuelsson et al.
2006/0116877 A1 6/2006 Pickering et al.
2006/0117002 A1 6/2006 Swen
2006/0119582 A1 6/2006 Ng et al.
2006/0122834 A1 6/2006 Bennett
2006/0122836 A1 6/2006 Cross et al.
2006/0129929 A1 6/2006 Weber et al.
2006/0143007 A1 6/2006 Koh et al.
2006/0143576 A1 6/2006 Gupta et al.
2006/0148520 A1 7/2006 Baker et al.
2006/0152496 A1 7/2006 Knaven
2006/0153040 A1 7/2006 Girish et al.
2006/0156252 A1 7/2006 Sheshagiri et al.
2006/0161872 A1 7/2006 Rytivaara et al.
2006/0167676 A1 7/2006 Plumb
2006/0168150 A1 7/2006 Naik et al.
2006/0168507 A1 7/2006 Hansen
2006/0168539 A1 7/2006 Hawkins et al.
2006/0174207 A1 8/2006 Deshpande
2006/0184886 A1 8/2006 Chung et al.
2006/0187073 A1 8/2006 Lin et al.
2006/0190269 A1 8/2006 Tessel et al.
2006/0190577 A1 8/2006 Yamada
2006/0193518 A1 8/2006 Dong
2006/0195206 A1 8/2006 Moon et al.
2006/0195323 A1 8/2006 Monne et al.
2006/0197753 A1 9/2006 Hotelling
2006/0197755 A1 9/2006 Bawany
2006/0200253 A1 9/2006 Hoffberg et al.
2006/0200342 A1 9/2006 Corston-Oliver et al.
2006/0200347 A1 9/2006 Kim et al.
2006/0205432 A1 9/2006 Hawkins et al.
2006/0206454 A1 9/2006 Forstall et al.
2006/0212415 A1 9/2006 Backer et al.
2006/0217967 A1 9/2006 Goertzen et al.
2006/0221788 A1 10/2006 Lindahl et al.

(56) **References Cited**

U.S. PATENT DOCUMENTS

2006/0229870 A1 10/2006 Kobal
2006/0229876 A1 10/2006 Aaron et al.
2006/0234680 A1 10/2006 Doulton
2006/0235550 A1 10/2006 Csicsatka et al.
2006/0235700 A1 10/2006 Wong et al.
2006/0235841 A1 10/2006 Betz et al.
2006/0236262 A1 10/2006 Bathiche et al.
2006/0239419 A1 10/2006 Joseph et al.
2006/0239471 A1 10/2006 Mao et al.
2006/0240866 A1 10/2006 Eilts et al.
2006/0242190 A1 10/2006 Wnek
2006/0246955 A1 11/2006 Nirhamo et al.
2006/0247931 A1 11/2006 Caskey et al.
2006/0252457 A1 11/2006 Schrager
2006/0253210 A1 11/2006 Rosenberg
2006/0253787 A1 11/2006 Fogg
2006/0256934 A1 11/2006 Mazor
2006/0262876 A1 11/2006 LaDue
2006/0265208 A1 11/2006 Assadollahi
2006/0265503 A1 11/2006 Jones et al.
2006/0265648 A1 11/2006 Rainisto et al.
2006/0274051 A1 12/2006 Longe et al.
2006/0274905 A1 12/2006 Lindahl et al.
2006/0277058 A1 12/2006 J'maev et al.
2006/0282264 A1 12/2006 Denny et al.
2006/0282415 A1 12/2006 Shibata et al.
2006/0288024 A1 12/2006 Braica
2006/0293876 A1 12/2006 Kamatani et al.
2006/0293880 A1 12/2006 Elshishiny et al.
2006/0293886 A1 12/2006 Odell et al.
2007/0003026 A1 1/2007 Hodge et al.
2007/0004451 A1 1/2007 C. Anderson
2007/0005849 A1 1/2007 Oliver
2007/0006098 A1 1/2007 Krumm et al.
2007/0011154 A1 1/2007 Musgrove et al.
2007/0016563 A1 1/2007 Omoigui
2007/0016865 A1 1/2007 Johnson et al.
2007/0021956 A1 1/2007 Qu et al.
2007/0025704 A1 2/2007 Tsukazaki et al.
2007/0026852 A1 2/2007 Logan et al.
2007/0027732 A1 2/2007 Hudgens
2007/0028009 A1 2/2007 Robbin et al.
2007/0032247 A1 2/2007 Shaffer et al.
2007/0033003 A1 2/2007 Morris
2007/0038436 A1 2/2007 Cristoe et al.
2007/0038609 A1 2/2007 Wu
2007/0040813 A1 2/2007 Kushler et al.
2007/0041361 A1 2/2007 Iso-Sipila
2007/0043568 A1 2/2007 Dhanakshirur et al.
2007/0044038 A1 2/2007 Horentrup et al.
2007/0046641 A1 3/2007 Lim
2007/0047719 A1 3/2007 Dhawan et al.
2007/0050184 A1 3/2007 Drucker et al.
2007/0050191 A1 3/2007 Weider et al.
2007/0050393 A1 3/2007 Vogel et al.
2007/0050712 A1 3/2007 Hull et al.
2007/0052586 A1 3/2007 Horstemeyer
2007/0055493 A1 3/2007 Lee
2007/0055514 A1 3/2007 Beattie et al.
2007/0055525 A1 3/2007 Kennewick et al.
2007/0055529 A1 3/2007 Kanevsky et al.
2007/0058832 A1 3/2007 Hug et al.
2007/0061487 A1 3/2007 Moore et al.
2007/0061754 A1 3/2007 Ardhanari et al.
2007/0067173 A1 3/2007 Bellegarda
2007/0067272 A1 3/2007 Flynt et al.
2007/0073540 A1 3/2007 Hirakawa et al.
2007/0073541 A1 3/2007 Tian
2007/0080936 A1 4/2007 Tsuk et al.
2007/0083467 A1 4/2007 Lindahl et al.
2007/0083623 A1 4/2007 Nishimura et al.
2007/0088556 A1 4/2007 Andrew
2007/0089132 A1 4/2007 Qureshey et al.
2007/0089135 A1 4/2007 Qureshey et al.
2007/0093277 A1 4/2007 Cavacuiti et al.
2007/0094026 A1 4/2007 Ativanichayaphong et al.
2007/0098195 A1 5/2007 Holmes
2007/0100206 A1 5/2007 Lin et al.
2007/0100602 A1 5/2007 Kim
2007/0100635 A1 5/2007 Mahajan et al.
2007/0100790 A1 5/2007 Cheyer et al.
2007/0100883 A1 5/2007 Rose et al.
2007/0106512 A1 5/2007 Acero et al.
2007/0106513 A1 5/2007 Boillot et al.
2007/0106674 A1 5/2007 Agrawal et al.
2007/0116195 A1 5/2007 Thompson et al.
2007/0118377 A1 5/2007 Badino et al.
2007/0118378 A1 5/2007 Skuratovsky
2007/0121846 A1 5/2007 Altberg et al.
2007/0124149 A1 5/2007 Shen et al.
2007/0124676 A1 5/2007 Amundsen et al.
2007/0127888 A1 6/2007 Hayashi et al.
2007/0128777 A1 6/2007 Yin et al.
2007/0129059 A1 6/2007 Nadarajah et al.
2007/0130014 A1 6/2007 Altberg et al.
2007/0130128 A1 6/2007 Garg et al.
2007/0132738 A1 6/2007 Lowles et al.
2007/0135949 A1 6/2007 Snover et al.
2007/0136064 A1 6/2007 Carroll
2007/0136778 A1 6/2007 Birger et al.
2007/0152978 A1 7/2007 Kocienda et al.
2007/0155346 A1 7/2007 Mijatovic et al.
2007/0156410 A1 7/2007 Stohr et al.
2007/0157268 A1 7/2007 Girish et al.
2007/0162296 A1 7/2007 Altberg et al.
2007/0162414 A1 7/2007 Horowitz et al.
2007/0173233 A1 7/2007 Vander Veen et al.
2007/0173267 A1 7/2007 Klassen et al.
2007/0174188 A1 7/2007 Fish
2007/0174396 A1 7/2007 Kumar et al.
2007/0180383 A1 8/2007 Naik
2007/0182595 A1 8/2007 Ghasabian
2007/0185551 A1 8/2007 Meadows et al.
2007/0185754 A1 8/2007 Schmidt
2007/0185831 A1 8/2007 Churcher
2007/0185917 A1 8/2007 Prahlad et al.
2007/0188901 A1 8/2007 Heckerman et al.
2007/0192027 A1 8/2007 Lee et al.
2007/0192105 A1 8/2007 Neeracher et al.
2007/0192293 A1 8/2007 Swen
2007/0192403 A1 8/2007 Heine et al.
2007/0192744 A1 8/2007 Reponen
2007/0198269 A1 8/2007 Braho et al.
2007/0198273 A1 8/2007 Hennecke
2007/0198566 A1 8/2007 Sustik
2007/0207785 A1 9/2007 Chatterjee et al.
2007/0208569 A1 9/2007 Subramanian et al.
2007/0208579 A1 9/2007 Peterson
2007/0208726 A1 9/2007 Krishnaprasad et al.
2007/0211071 A1 9/2007 Slotznick et al.
2007/0213099 A1 9/2007 Bast
2007/0213857 A1 9/2007 Bodin et al.
2007/0219777 A1 9/2007 Chu et al.
2007/0219803 A1 9/2007 Chiu et al.
2007/0225980 A1 9/2007 Sumita
2007/0225984 A1 9/2007 Milstein et al.
2007/0226652 A1 9/2007 Kikuchi et al.
2007/0229323 A1 10/2007 Plachta et al.
2007/0233490 A1 10/2007 Yao
2007/0233725 A1 10/2007 Michmerhuizen et al.
2007/0238520 A1 10/2007 Kacmarcik
2007/0239429 A1 10/2007 Johnson et al.
2007/0244702 A1 10/2007 Kahn et al.
2007/0255435 A1 11/2007 Cohen et al.
2007/0255979 A1 11/2007 Deily et al.
2007/0260460 A1 11/2007 Hyatt
2007/0260595 A1 11/2007 Beatty et al.
2007/0260822 A1 11/2007 Adams
2007/0261080 A1 11/2007 Saetti
2007/0265831 A1 11/2007 Dinur et al.
2007/0271510 A1 11/2007 Grigoriu et al.
2007/0274468 A1 11/2007 Cai
2007/0276651 A1 11/2007 Bliss et al.
2007/0276714 A1 11/2007 Beringer

(56) **References Cited**

U.S. PATENT DOCUMENTS

2007/0276810 A1 11/2007 Rosen
2007/0282595 A1 12/2007 Tunning et al.
2007/0285958 A1 12/2007 Platchta et al.
2007/0286363 A1 12/2007 Burg et al.
2007/0288241 A1 12/2007 Cross et al.
2007/0288449 A1 12/2007 Datta et al.
2007/0291108 A1 12/2007 Huber et al.
2007/0294077 A1 12/2007 Narayanan et al.
2007/0294263 A1 12/2007 Punj et al.
2007/0299664 A1 12/2007 Peters et al.
2008/0010355 A1 1/2008 Vieri et al.
2008/0012950 A1 1/2008 Lee et al.
2008/0013751 A1 1/2008 Hiselius
2008/0015864 A1 1/2008 Ross et al.
2008/0016575 A1 1/2008 Vincent et al.
2008/0021708 A1 1/2008 Bennett et al.
2008/0022208 A1 1/2008 Morse
2008/0031475 A1 2/2008 Goldstein
2008/0034032 A1 2/2008 Healey et al.
2008/0034044 A1 2/2008 Bhakta et al.
2008/0040339 A1 2/2008 Zhou et al.
2008/0042970 A1 2/2008 Liang et al.
2008/0043936 A1 2/2008 Liebermann
2008/0043943 A1 2/2008 Sipher et al.
2008/0046239 A1 2/2008 Boo
2008/0046422 A1 2/2008 Lee et al.
2008/0046948 A1 2/2008 Verosub
2008/0048908 A1 2/2008 Sato
2008/0052063 A1 2/2008 Bennett et al.
2008/0052073 A1 2/2008 Goto et al.
2008/0052077 A1 2/2008 Bennett et al.
2008/0056459 A1 3/2008 Vallier et al.
2008/0056579 A1 3/2008 Guha
2008/0059190 A1 3/2008 Chu et al.
2008/0059200 A1 3/2008 Puli
2008/0059876 A1 3/2008 Hantler et al.
2008/0065382 A1 3/2008 Gerl et al.
2008/0071529 A1 3/2008 Silverman et al.
2008/0071544 A1 3/2008 Beaufays et al.
2008/0075296 A1 3/2008 Lindahl et al.
2008/0077384 A1 3/2008 Agapi et al.
2008/0077391 A1 3/2008 Chino et al.
2008/0077393 A1 3/2008 Gao et al.
2008/0077406 A1 3/2008 Ganong, III
2008/0077859 A1 3/2008 Schabes et al.
2008/0079566 A1 4/2008 Singh et al.
2008/0082332 A1 4/2008 Mallett et al.
2008/0082338 A1 4/2008 O'Neil et al.
2008/0082390 A1 4/2008 Hawkins et al.
2008/0082576 A1 4/2008 Bodin et al.
2008/0082651 A1 4/2008 Singh et al.
2008/0091406 A1 4/2008 Baldwin et al.
2008/0091426 A1 4/2008 Rempel et al.
2008/0091443 A1 4/2008 Strope et al.
2008/0096726 A1 4/2008 Riley et al.
2008/0097937 A1 4/2008 Hadjarian
2008/0098302 A1 4/2008 Roose
2008/0100579 A1 5/2008 Robinson et al.
2008/0109222 A1 5/2008 Liu
2008/0114480 A1 5/2008 Harb
2008/0114598 A1 5/2008 Prieto et al.
2008/0114841 A1 5/2008 Lambert
2008/0118143 A1 5/2008 Gordon et al.
2008/0120102 A1 5/2008 Rao
2008/0120112 A1 5/2008 Jordan et al.
2008/0120342 A1 5/2008 Reed et al.
2008/0122796 A1 5/2008 Jobs et al.
2008/0126100 A1 5/2008 Grost et al.
2008/0129520 A1 6/2008 Lee
2008/0130867 A1 6/2008 Bowen
2008/0131006 A1 6/2008 Oliver
2008/0133215 A1 6/2008 Sarukkai
2008/0133228 A1 6/2008 Rao
2008/0133241 A1 6/2008 Baker et al.
2008/0140413 A1 6/2008 Millman et al.
2008/0140416 A1 6/2008 Shostak
2008/0140652 A1 6/2008 Millman et al.
2008/0140657 A1 6/2008 Azvine et al.
2008/0141180 A1 6/2008 Reed et al.
2008/0146290 A1 6/2008 Sreeram et al.
2008/0147408 A1 6/2008 Da Palma et al.
2008/0147411 A1 6/2008 Dames et al.
2008/0154600 A1 6/2008 Tian et al.
2008/0154612 A1 6/2008 Evermann et al.
2008/0157867 A1 7/2008 Krah
2008/0163131 A1 7/2008 Hirai et al.
2008/0165144 A1 7/2008 Forstall et al.
2008/0165980 A1 7/2008 Pavlovic et al.
2008/0165994 A1 7/2008 Caren et al.
2008/0167013 A1 7/2008 Novick et al.
2008/0167858 A1 7/2008 Christie et al.
2008/0168366 A1 7/2008 Kocienda et al.
2008/0183473 A1 7/2008 Nagano et al.
2008/0189099 A1 8/2008 Friedman et al.
2008/0189106 A1 8/2008 Low et al.
2008/0189110 A1 8/2008 Freeman et al.
2008/0189114 A1 8/2008 Fail et al.
2008/0189606 A1 8/2008 Rybak
2008/0195601 A1 8/2008 Ntoulas et al.
2008/0195940 A1 8/2008 Gail et al.
2008/0201306 A1 8/2008 Cooper et al.
2008/0201375 A1 8/2008 Khedouri et al.
2008/0204379 A1 8/2008 Perez-Noguera
2008/0207176 A1 8/2008 Brackbill et al.
2008/0208585 A1 8/2008 Ativanichayaphong et al.
2008/0208587 A1 8/2008 Ben-David et al.
2008/0212796 A1 9/2008 Denda
2008/0221866 A1 9/2008 Katragadda et al.
2008/0221880 A1 9/2008 Cerra et al.
2008/0221889 A1 9/2008 Cerra et al.
2008/0221903 A1 9/2008 Kanevsky et al.
2008/0222118 A1 9/2008 Scian et al.
2008/0228463 A1 9/2008 Mori et al.
2008/0228485 A1 9/2008 Owen
2008/0228490 A1 9/2008 Fischer et al.
2008/0228496 A1 9/2008 Yu et al.
2008/0228928 A1 9/2008 Donelli et al.
2008/0229185 A1 9/2008 Lynch
2008/0235024 A1 9/2008 Goldberg et al.
2008/0240569 A1 10/2008 Tonouchi
2008/0242280 A1 10/2008 Shapiro et al.
2008/0244390 A1 10/2008 Fux et al.
2008/0247519 A1 10/2008 Abella et al.
2008/0248797 A1 10/2008 Freeman et al.
2008/0249770 A1 10/2008 Kim et al.
2008/0253577 A1 10/2008 Eppolito
2008/0255845 A1 10/2008 Bennett
2008/0256613 A1 10/2008 Grover
2008/0259022 A1 10/2008 Mansfield et al.
2008/0262838 A1 10/2008 Nurminen et al.
2008/0262846 A1 10/2008 Burns et al.
2008/0270118 A1 10/2008 Kuo et al.
2008/0270138 A1 10/2008 Knight et al.
2008/0270139 A1 10/2008 Shi et al.
2008/0270140 A1 10/2008 Hertz et al.
2008/0281510 A1 11/2008 Shahine
2008/0292112 A1 11/2008 Valenzuela et al.
2008/0294651 A1 11/2008 Masuyama et al.
2008/0298766 A1 12/2008 Wen et al.
2008/0300871 A1 12/2008 Gilbert
2008/0300878 A1 12/2008 Bennett
2008/0306727 A1 12/2008 Thurmair et al.
2008/0312909 A1 12/2008 Hermansen et al.
2008/0313335 A1 12/2008 Jung et al.
2008/0319753 A1 12/2008 Hancock
2008/0319763 A1 12/2008 Di Fabbrizio et al.
2009/0003115 A1 1/2009 Lindahl et al.
2009/0005012 A1 1/2009 Van Heugten
2009/0005891 A1 1/2009 Batson et al.
2009/0006097 A1 1/2009 Etezadi et al.
2009/0006099 A1 1/2009 Sharpe et al.
2009/0006100 A1 1/2009 Badger et al.
2009/0006343 A1 1/2009 Platt et al.
2009/0006488 A1 1/2009 Lindahl et al.

(56) **References Cited**

U.S. PATENT DOCUMENTS

2009/0006671 A1 1/2009 Batson et al.
2009/0007001 A1 1/2009 Morin et al.
2009/0011709 A1 1/2009 Akasaka et al.
2009/0012748 A1 1/2009 Beish et al.
2009/0012775 A1 1/2009 El Hady et al.
2009/0018828 A1 1/2009 Nakadai et al.
2009/0018835 A1 1/2009 Cooper et al.
2009/0018839 A1 1/2009 Cooper et al.
2009/0018840 A1 1/2009 Lutz et al.
2009/0022329 A1 1/2009 Mahowald
2009/0028435 A1 1/2009 Wu et al.
2009/0030800 A1 1/2009 Grois
2009/0030978 A1 1/2009 Johnson et al.
2009/0043583 A1 2/2009 Agapi et al.
2009/0048821 A1 2/2009 Yam et al.
2009/0048845 A1 2/2009 Burckart et al.
2009/0049067 A1 2/2009 Murray
2009/0055179 A1 2/2009 Cho et al.
2009/0055186 A1 2/2009 Lance et al.
2009/0058823 A1 3/2009 Kocienda
2009/0060472 A1 3/2009 Bull et al.
2009/0063974 A1 3/2009 Bull et al.
2009/0064031 A1 3/2009 Bull et al.
2009/0070097 A1 3/2009 Wu et al.
2009/0070102 A1 3/2009 Maegawa
2009/0070114 A1 3/2009 Staszak
2009/0074214 A1 3/2009 Bradford et al.
2009/0076792 A1 3/2009 Lawson-Tancred
2009/0076796 A1 3/2009 Daraselia
2009/0076819 A1 3/2009 Wouters et al.
2009/0076821 A1 3/2009 Brenner et al.
2009/0076825 A1 3/2009 Bradford et al.
2009/0077165 A1 3/2009 Rhodes et al.
2009/0083035 A1 3/2009 Huang et al.
2009/0083036 A1 3/2009 Zhao et al.
2009/0083037 A1 3/2009 Gleason et al.
2009/0083047 A1 3/2009 Lindahl et al.
2009/0092260 A1 4/2009 Powers
2009/0092261 A1 4/2009 Bard
2009/0092262 A1 4/2009 Costa et al.
2009/0094029 A1 4/2009 Koch et al.
2009/0094033 A1 4/2009 Mozer et al.
2009/0100049 A1 4/2009 Cao
2009/0100454 A1 4/2009 Weber
2009/0106026 A1 4/2009 Ferrieux
2009/0106376 A1 4/2009 Tom et al.
2009/0106397 A1 4/2009 O'Keefe
2009/0112572 A1 4/2009 Thorn
2009/0112677 A1 4/2009 Rhett
2009/0112892 A1 4/2009 Cardie et al.
2009/0123021 A1 5/2009 Jung et al.
2009/0123071 A1 5/2009 Iwasaki
2009/0125477 A1 5/2009 Lu et al.
2009/0137286 A1 5/2009 Luke et al.
2009/0138736 A1 5/2009 Chin
2009/0138828 A1 5/2009 Schultz et al.
2009/0144049 A1 6/2009 Haddad et al.
2009/0144609 A1 6/2009 Liang et al.
2009/0146848 A1 6/2009 Ghassabian
2009/0150147 A1 6/2009 Jacoby et al.
2009/0150156 A1 6/2009 Kennewick et al.
2009/0154669 A1 6/2009 Wood et al.
2009/0157382 A1 6/2009 Bar
2009/0157384 A1 6/2009 Toutanova et al.
2009/0157401 A1 6/2009 Bennett
2009/0158423 A1 6/2009 Orlassino et al.
2009/0164441 A1 6/2009 Cheyer
2009/0164655 A1 6/2009 Pettersson et al.
2009/0167508 A1 7/2009 Fadell et al.
2009/0167509 A1 7/2009 Fadell et al.
2009/0171664 A1 7/2009 Kennewick et al.
2009/0172542 A1 7/2009 Girish et al.
2009/0174667 A1 7/2009 Kocienda et al.
2009/0177461 A1 7/2009 Ehsani et al.
2009/0182445 A1 7/2009 Girish et al.
2009/0187577 A1 7/2009 Reznik et al.
2009/0191895 A1 7/2009 Singh et al.
2009/0192782 A1 7/2009 Drewes
2009/0198497 A1 8/2009 Kwon
2009/0204409 A1 8/2009 Mozer et al.
2009/0213134 A1 8/2009 Stephanick et al.
2009/0216704 A1 8/2009 Zheng et al.
2009/0222488 A1 9/2009 Boerries et al.
2009/0228273 A1 9/2009 Wang et al.
2009/0228281 A1 9/2009 Singleton et al.
2009/0234655 A1 9/2009 Kwon
2009/0239552 A1 9/2009 Churchill et al.
2009/0240485 A1 9/2009 Dalal et al.
2009/0241760 A1 10/2009 Georges
2009/0247237 A1 10/2009 Mittleman et al.
2009/0248182 A1 10/2009 Logan et al.
2009/0249198 A1 10/2009 Davis et al.
2009/0252350 A1 10/2009 Seguin
2009/0253457 A1 10/2009 Seguin
2009/0253463 A1 10/2009 Shin et al.
2009/0254339 A1 10/2009 Seguin
2009/0254345 A1 10/2009 Fleizach et al.
2009/0271109 A1 10/2009 Lee et al.
2009/0271175 A1 10/2009 Bodin et al.
2009/0271176 A1 10/2009 Bodin et al.
2009/0271178 A1 10/2009 Bodin et al.
2009/0274315 A1 11/2009 Carnes et al.
2009/0281789 A1 11/2009 Waibel et al.
2009/0287583 A1 11/2009 Holmes
2009/0290718 A1 11/2009 Kahn et al.
2009/0296552 A1 12/2009 Hicks et al.
2009/0299745 A1 12/2009 Kennewick et al.
2009/0299849 A1 12/2009 Cao et al.
2009/0300488 A1 12/2009 Salamon et al.
2009/0304198 A1 12/2009 Herre et al.
2009/0306967 A1 12/2009 Nicolov et al.
2009/0306980 A1 12/2009 Shin
2009/0306981 A1 12/2009 Cromack et al.
2009/0306985 A1 12/2009 Roberts et al.
2009/0306989 A1 12/2009 Kaji
2009/0307162 A1 12/2009 Bui et al.
2009/0307201 A1 12/2009 Dunning et al.
2009/0313026 A1 12/2009 Coffman et al.
2009/0313544 A1 12/2009 Wood et al.
2009/0313564 A1 12/2009 Rottler et al.
2009/0316943 A1 12/2009 Frigola Munoz et al.
2009/0318198 A1 12/2009 Carroll
2009/0319266 A1 12/2009 Brown et al.
2009/0326936 A1 12/2009 Nagashima
2009/0326938 A1 12/2009 Marila et al.
2009/0326949 A1 12/2009 Douthitt et al.
2009/0327977 A1 12/2009 Bachfischer et al.
2010/0004931 A1 1/2010 Ma et al.
2010/0005081 A1 1/2010 Bennett
2010/0023318 A1 1/2010 Lemoine
2010/0023320 A1 1/2010 Di Cristo et al.
2010/0030928 A1 2/2010 Conroy et al.
2010/0031143 A1 2/2010 Rao et al.
2010/0036655 A1 2/2010 Cecil et al.
2010/0036660 A1 2/2010 Bennett
2010/0042400 A1 2/2010 Block et al.
2010/0049514 A1 2/2010 Kennewick et al.
2010/0054512 A1 3/2010 Solum
2010/0057457 A1 3/2010 Ogata et al.
2010/0057643 A1 3/2010 Yang
2010/0060646 A1 3/2010 Unsal et al.
2010/0063804 A1 3/2010 Sato et al.
2010/0063825 A1 3/2010 Williams et al.
2010/0063961 A1 3/2010 Guiheneuf et al.
2010/0064113 A1 3/2010 Lindahl et al.
2010/0067723 A1 3/2010 Bergmann et al.
2010/0070899 A1 3/2010 Hunt et al.
2010/0076760 A1 3/2010 Kraenzel et al.
2010/0080398 A1 4/2010 Waldmann
2010/0080470 A1 4/2010 Deluca et al.
2010/0081456 A1 4/2010 Singh et al.
2010/0081487 A1 4/2010 Chen et al.
2010/0082327 A1 4/2010 Rogers et al.
2010/0082328 A1 4/2010 Rogers et al.

(56) **References Cited**

U.S. PATENT DOCUMENTS

2010/0082329 A1 4/2010 Silverman et al.
2010/0082346 A1 4/2010 Rogers et al.
2010/0082347 A1 4/2010 Rogers et al.
2010/0082348 A1 4/2010 Silverman et al.
2010/0082349 A1 4/2010 Bellegarda et al.
2010/0082970 A1 4/2010 Lindahl et al.
2010/0086152 A1 4/2010 Rank et al.
2010/0086153 A1 4/2010 Hagen et al.
2010/0086156 A1 4/2010 Rank et al.
2010/0088020 A1 4/2010 Sano et al.
2010/0088093 A1 4/2010 Lee et al.
2010/0088100 A1 4/2010 Lindahl
2010/0100212 A1 4/2010 Lindahl et al.
2010/0100384 A1 4/2010 Ju et al.
2010/0103776 A1 4/2010 Chan
2010/0106500 A1 4/2010 McKee et al.
2010/0125460 A1 5/2010 Mellott et al.
2010/0131273 A1 5/2010 Aley-Raz et al.
2010/0138215 A1 6/2010 Williams
2010/0138224 A1 6/2010 Bedingfield, Sr.
2010/0138416 A1 6/2010 Bellotti
2010/0142740 A1 6/2010 Roerup
2010/0145694 A1 6/2010 Ju et al.
2010/0145700 A1 6/2010 Kennewick et al.
2010/0146442 A1 6/2010 Nagasaka et al.
2010/0161313 A1 6/2010 Karttunen
2010/0161554 A1 6/2010 Datuashvili et al.
2010/0164897 A1 7/2010 Morin et al.
2010/0169075 A1 7/2010 Raffa et al.
2010/0169097 A1 7/2010 Nachman et al.
2010/0179991 A1 7/2010 Lorch et al.
2010/0185448 A1 7/2010 Meisel
2010/0204986 A1 8/2010 Kennewick et al.
2010/0211199 A1 8/2010 Naik et al.
2010/0217604 A1 8/2010 Baldwin et al.
2010/0222098 A1 9/2010 Garg
2010/0228540 A1 9/2010 Bennett
2010/0228691 A1 9/2010 Yang et al.
2010/0231474 A1 9/2010 Yamagajo et al.
2010/0235167 A1 9/2010 Bourdon
2010/0235341 A1 9/2010 Bennett
2010/0250542 A1 9/2010 Fujimaki
2010/0250599 A1 9/2010 Schmidt et al.
2010/0257160 A1 10/2010 Cao
2010/0257478 A1 10/2010 Longe et al.
2010/0262599 A1 10/2010 Nitz
2010/0268539 A1 10/2010 Xu et al.
2010/0274753 A1 10/2010 Liberty et al.
2010/0277579 A1 11/2010 Cho et al.
2010/0278320 A1 11/2010 Arsenault et al.
2010/0278453 A1 11/2010 King
2010/0280983 A1 11/2010 Cho et al.
2010/0281034 A1 11/2010 Petrou et al.
2010/0286985 A1 11/2010 Kennewick et al.
2010/0299133 A1 11/2010 Kopparapu et al.
2010/0299142 A1 11/2010 Freeman et al.
2010/0302056 A1 12/2010 Dutton et al.
2010/0305807 A1 12/2010 Basir et al.
2010/0305947 A1 12/2010 Schwarz et al.
2010/0312547 A1 12/2010 Van Os et al.
2010/0312566 A1 12/2010 Odinak et al.
2010/0318576 A1 12/2010 Kim
2010/0322438 A1 12/2010 Siotis
2010/0324905 A1 12/2010 Kurzweil et al.
2010/0325588 A1 12/2010 Reddy et al.
2010/0332224 A1 12/2010 Mäkelä et al.
2010/0332235 A1 12/2010 David
2010/0332280 A1 12/2010 Bradley et al.
2010/0332348 A1 12/2010 Cao
2010/0332976 A1 12/2010 Fux et al.
2011/0002487 A1 1/2011 Panther et al.
2011/0010178 A1 1/2011 Lee et al.
2011/0022292 A1 1/2011 Shen et al.
2011/0022952 A1 1/2011 Wu et al.
2011/0033064 A1 2/2011 Johnson et al.
2011/0038489 A1 2/2011 Visser et al.
2011/0047072 A1 2/2011 Ciurea
2011/0047161 A1 2/2011 Myaeng et al.
2011/0054901 A1 3/2011 Qin et al.
2011/0060584 A1 3/2011 Ferrucci et al.
2011/0060587 A1 3/2011 Phillips et al.
2011/0060807 A1 3/2011 Martin et al.
2011/0076994 A1 3/2011 Kim et al.
2011/0082688 A1 4/2011 Kim et al.
2011/0083079 A1 4/2011 Farrell et al.
2011/0087491 A1 4/2011 Wittenstein et al.
2011/0090078 A1 4/2011 Kim et al.
2011/0093261 A1 4/2011 Angott
2011/0099000 A1 4/2011 Rai et al.
2011/0103682 A1 5/2011 Chidlovskii et al.
2011/0106736 A1 5/2011 Aharonson et al.
2011/0112827 A1 5/2011 Kennewick et al.
2011/0112921 A1 5/2011 Kennewick et al.
2011/0119049 A1 5/2011 Ylonen
2011/0119051 A1 5/2011 Li et al.
2011/0125540 A1 5/2011 Jang et al.
2011/0130958 A1 6/2011 Stahl et al.
2011/0131036 A1 6/2011 DiCristo et al.
2011/0131038 A1 6/2011 Oyaizu et al.
2011/0131045 A1 6/2011 Cristo et al.
2011/0143811 A1 6/2011 Rodriguez
2011/0144973 A1 6/2011 Bocchieri et al.
2011/0144999 A1 6/2011 Jang et al.
2011/0161076 A1 6/2011 Davis et al.
2011/0161309 A1 6/2011 Lung et al.
2011/0175810 A1 7/2011 Markovic et al.
2011/0179002 A1 7/2011 Dumitru et al.
2011/0179372 A1 7/2011 Moore et al.
2011/0184721 A1 7/2011 Subramanian et al.
2011/0184730 A1 7/2011 LeBeau et al.
2011/0191271 A1 8/2011 Baker et al.
2011/0191344 A1 8/2011 Jin et al.
2011/0195758 A1 8/2011 Damale et al.
2011/0201387 A1 8/2011 Paek et al.
2011/0218855 A1 9/2011 Cao et al.
2011/0224972 A1 9/2011 Millett et al.
2011/0231182 A1 9/2011 Weider et al.
2011/0231188 A1 9/2011 Kennewick et al.
2011/0231474 A1 9/2011 Locker et al.
2011/0238408 A1 9/2011 Larcheveque et al.
2011/0260861 A1 10/2011 Singh et al.
2011/0264643 A1 10/2011 Cao
2011/0274303 A1 11/2011 Filson et al.
2011/0276598 A1 11/2011 Kozempel
2011/0279368 A1 11/2011 Klein et al.
2011/0288861 A1 11/2011 Kurzweil et al.
2011/0298585 A1 12/2011 Barry
2011/0306426 A1 12/2011 Novak et al.
2011/0314404 A1 12/2011 Kotler et al.
2012/0002820 A1 1/2012 Leichter
2012/0011138 A1 1/2012 Dunning et al.
2012/0016678 A1 1/2012 Gruber et al.
2012/0020490 A1 1/2012 Leichter
2012/0022787 A1 1/2012 LeBeau et al.
2012/0022857 A1 1/2012 Baldwin et al.
2012/0022860 A1 1/2012 Lloyd et al.
2012/0022868 A1 1/2012 LeBeau et al.
2012/0022869 A1 1/2012 Lloyd et al.
2012/0022870 A1 1/2012 Kristjansson et al.
2012/0022872 A1 1/2012 Gruber et al.
2012/0022874 A1 1/2012 Lloyd et al.
2012/0022876 A1 1/2012 LeBeau et al.
2012/0023088 A1 1/2012 Cheng et al.
2012/0034904 A1 2/2012 LeBeau et al.
2012/0035908 A1 2/2012 Lebeau et al.
2012/0035924 A1 2/2012 Jitkoff et al.
2012/0035931 A1 2/2012 LeBeau et al.
2012/0035932 A1 2/2012 Jitkoff et al.
2012/0042343 A1 2/2012 Laligand et al.
2012/0053815 A1 3/2012 Montanari et al.
2012/0078627 A1 3/2012 Wagner
2012/0082317 A1 4/2012 Pance et al.
2012/0084086 A1 4/2012 Gilbert et al.
2012/0108221 A1 5/2012 Thomas et al.

(56) **References Cited**

U.S. PATENT DOCUMENTS

2012/0136572	A1	5/2012	Norton	
2012/0137367	A1	5/2012	Dupont et al.	
2012/0149394	A1	6/2012	Singh et al.	
2012/0150580	A1	6/2012	Norton	
2012/0158293	A1	6/2012	Burnham	
2012/0158422	A1	6/2012	Burnham et al.	
2012/0173464	A1	7/2012	Tur et al.	
2012/0185237	A1	7/2012	Gajic et al.	
2012/0197998	A1	8/2012	Kessel et al.	
2012/0214517	A1	8/2012	Singh et al.	
2012/0221339	A1	8/2012	Wang et al.	
2012/0245719	A1	9/2012	Story, Jr. et al.	
2012/0245944	A1*	9/2012	Gruber	G06F 17/3087 704/270.1
2012/0265528	A1	10/2012	Gruber et al.	
2012/0271625	A1	10/2012	Bernard	
2012/0271635	A1	10/2012	Ljolje	
2012/0271676	A1	10/2012	Aravamudan et al.	
2012/0284027	A1	11/2012	Mallett et al.	
2012/0296649	A1	11/2012	Bansal et al.	
2012/0309363	A1	12/2012	Gruber et al.	
2012/0310642	A1	12/2012	Cao et al.	
2012/0310649	A1	12/2012	Cannistraro et al.	
2012/0311583	A1	12/2012	Gruber et al.	
2012/0311584	A1	12/2012	Gruber et al.	
2012/0311585	A1	12/2012	Gruber et al.	
2012/0330660	A1	12/2012	Jaiswal	
2012/0330661	A1	12/2012	Lindahl	
2013/0006638	A1	1/2013	Lindahl	
2013/0031162	A1*	1/2013	Willis	H04L 65/1069 709/203
2013/0110505	A1	5/2013	Gruber et al.	
2013/0110515	A1	5/2013	Guzzoni et al.	
2013/0110518	A1	5/2013	Gruber et al.	
2013/0110519	A1	5/2013	Cheyer et al.	
2013/0110520	A1	5/2013	Cheyer et al.	
2013/0110943	A1*	5/2013	Menon	G06Q 10/107 709/206
2013/0111348	A1	5/2013	Gruber et al.	
2013/0111487	A1	5/2013	Cheyer et al.	
2013/0115927	A1	5/2013	Gruber et al.	
2013/0117022	A1	5/2013	Chen et al.	
2013/0185074	A1	7/2013	Gruber et al.	
2013/0185081	A1	7/2013	Cheyer et al.	
2013/0225128	A1	8/2013	Gomar	
2013/0325443	A1	12/2013	Begeja et al.	
2014/0152577	A1	6/2014	Yuen et al.	
2014/0317030	A1*	10/2014	Shen	G06N 3/006 706/12

FOREIGN PATENT DOCUMENTS

CN	1864204	A	11/2006
DE	3837590	A1	5/1990
DE	4126902	A1	2/1992
DE	4334773	A1	4/1994
DE	4445023	A1	6/1996
DE	10-2004-029203	A1	12/2005
DE	19841541	B4	12/2007
EP	0030390	A1	6/1981
EP	0057514	A1	8/1982
EP	0138061	A1	4/1985
EP	0218859	A2	4/1987
EP	0262938	A1	4/1988
EP	0138061	B1	6/1988
EP	0283995	A2	9/1988
EP	0293259	A2	11/1988
EP	0299572	A2	1/1989
EP	0313975	A2	5/1989
EP	0314908	A2	5/1989
EP	0327408	A2	8/1989
EP	0389271	A2	9/1990
EP	0411675	A2	2/1991
EP	0441089	A2	8/1991
EP	0464712	A2	1/1992
EP	0476972	A2	3/1992
EP	0558312	A1	9/1993
EP	0559349	A1	9/1993
EP	0570660	A1	11/1993
EP	0575146	A2	12/1993
EP	0578604	A1	1/1994
EP	0586996	A2	3/1994
EP	0609030	A1	8/1994
EP	0651543	A2	5/1995
EP	0679005	A1	10/1995
EP	0795811	A1	9/1997
EP	0476972	B1	5/1998
EP	0845894	A2	6/1998
EP	0863453	A1	9/1998
EP	0863469	A2	9/1998
EP	0867860	A2	9/1998
EP	0869697	A2	10/1998
EP	0559349	B1	1/1999
EP	0889626	A1	1/1999
EP	0917077	A2	5/1999
EP	0691023	B1	9/1999
EP	0946032	A2	9/1999
EP	0981236	A1	2/2000
EP	0982732	A1	3/2000
EP	0984430	A2	3/2000
EP	1001588	A2	5/2000
EP	1014277	A1	6/2000
EP	1028425	A2	8/2000
EP	1028426	A2	8/2000
EP	1047251	A2	10/2000
EP	1076302	A1	2/2001
EP	1091615	A1	4/2001
EP	1229496	A2	8/2002
EP	1233600	A2	8/2002
EP	1245023	A1	10/2002
EP	1311102	A1	5/2003
EP	1315084	A1	5/2003
EP	1315086	A1	5/2003
EP	1347361	A1	9/2003
EP	1379061	A2	1/2004
EP	1432219	A1	6/2004
EP	1517228	A2	3/2005
EP	1536612	A1	6/2005
EP	1566948	A1	8/2005
EP	1693829	A1	8/2006
EP	1818786	A1	8/2007
EP	1892700	A1	2/2008
EP	1912205	A2	4/2008
EP	1939860	A1	7/2008
EP	0651543	B1	9/2008
EP	1909263	B1	1/2009
EP	1335620	B1	3/2009
EP	2094032	A1	8/2009
EP	2109295	A1	10/2009
EP	1720375	B1	7/2010
EP	2205010	A1	7/2010
EP	2400373	A1	12/2011
EP	2431842	A2	3/2012
GB	2293667	A	4/1996
GB	2310559	A	8/1997
GB	2342802	A	4/2000
GB	2384399	A	7/2003
GB	2402855	A	12/2004
GB	2445436	A	7/2008
IT	FI20010199	A1	4/2003
JP	57-41731	A	3/1982
JP	59-57336	A	4/1984
JP	2-86397	A	3/1990
JP	2-153415	A	6/1990
JP	3-113578	A	5/1991
JP	4-236624	A	8/1992
JP	5-79951	A	3/1993
JP	5-165459	A	7/1993
JP	5-293126	A	11/1993
JP	6-19965	A	1/1994
JP	6-69954	A	3/1994
JP	6-274586	A	9/1994
JP	6-332617	A	12/1994

(56) **References Cited**

FOREIGN PATENT DOCUMENTS

JP	7-199379	A	8/1995
JP	7-320051	A	12/1995
JP	7-320079	A	12/1995
JP	8-63330	A	3/1996
JP	8-185265	A	7/1996
JP	8-227341	A	9/1996
JP	9-18585	A	1/1997
JP	9-55792	A	2/1997
JP	9-259063	A	10/1997
JP	9-265457	A	10/1997
JP	10-105324	A	4/1998
JP	11-6743	A	1/1999
JP	11-45241	A	2/1999
JP	2000-99225	A	4/2000
JP	2000-134407	A	5/2000
JP	2000-339137	A	12/2000
JP	2001-56233	A	2/2001
JP	2001-125896	A	5/2001
JP	2001-148899	A	5/2001
JP	2002-14954	A	1/2002
JP	2002-024212	A	1/2002
JP	2002-82893	A	3/2002
JP	2003-44091	A	2/2003
JP	2003-84877	A	3/2003
JP	2003-517158	A	5/2003
JP	2003-233568	A	8/2003
JP	2004-48804	A	2/2004
JP	2004-505525	A	2/2004
JP	2004-152063	A	5/2004
JP	2005-86624	A	3/2005
JP	2005-92441	A	4/2005
JP	2005-181386	A	7/2005
JP	2005-221678	A	8/2005
JP	2005-311864	A	11/2005
JP	2006-146008	A	6/2006
JP	2007-4633	A	1/2007
JP	2008-26381	A	2/2008
JP	2008-97003	A	4/2008
JP	2008-236448	A	10/2008
JP	2008-271481	A	11/2008
JP	2009-036999	A	2/2009
JP	2009-98490	A	5/2009
JP	2009-294913	A	12/2009
JP	2010-535377	A	11/2010
KR	10-1999-0073234	A	10/1999
KR	10-2002-0069952	A	9/2002
KR	10-2003-0016993	A	3/2003
KR	10-2005-0083561	A	8/2005
KR	10-2006-0012730	A	2/2006
KR	10-2006-0073574	A	6/2006
KR	10-2007-0071675	A	7/2007
KR	10-0757496	B1	9/2007
KR	10-0776800	B1	11/2007
KR	10-0801227	B1	2/2008
KR	10-0810500	B1	3/2008
KR	10-2008-0049647	A	6/2008
KR	10-2008-0109322	A	12/2008
KR	10-2009-0001716	A	1/2009
KR	10-2009-0086805	A	8/2009
KR	10-0920267	B1	10/2009
KR	10-2010-0119519	A	11/2010
KR	10-1032792	B1	5/2011
KR	10-2011-0113414	A	10/2011
NL	1014847	C1	10/2001
WO	1993/020640	A1	10/1993
WO	1994/029788	A1	12/1994
WO	1995/002221	A1	1/1995
WO	1995/016950	A1	6/1995
WO	1995/017746	A1	6/1995
WO	1997/010586	A1	3/1997
WO	1997/026612	A1	7/1997
WO	1997/029614	A1	8/1997
WO	1997/038488	A1	10/1997
WO	1998/009270	A1	3/1998
WO	1998/033111	A1	7/1998
WO	1998/041956	A1	9/1998
WO	1999/001834	A1	1/1999
WO	1999/008238	A1	2/1999
WO	1999/016181	A1	4/1999
WO	1999/056227	A1	11/1999
WO	2000/019697	A1	4/2000
WO	2000/022820	A1	4/2000
WO	2000/029964	A1	5/2000
WO	2000/030070	A2	5/2000
WO	2000/038041	A1	6/2000
WO	2000/044173	A1	7/2000
WO	2000/060435	A2	10/2000
WO	2000/063766	A1	10/2000
WO	2000/068936	A1	11/2000
WO	2001/006489	A1	1/2001
WO	2001/030046	A2	4/2001
WO	2001/060435	A3	4/2001
WO	2001/033569	A1	5/2001
WO	2001/035391	A1	5/2001
WO	2001/046946	A1	6/2001
WO	2001/065413	A1	9/2001
WO	2001/067753	A1	9/2001
WO	2002/025610	A1	3/2002
WO	2002/031814	A1	4/2002
WO	2002/037469	A2	5/2002
WO	2002/073603	A1	9/2002
WO	2003/003152	A2	1/2003
WO	2003/003765	A1	1/2003
WO	2003/023786	A2	3/2003
WO	2003/041364	A2	5/2003
WO	2003/049494	A1	6/2003
WO	2003/056789	A1	7/2003
WO	2003/067202	A2	8/2003
WO	2003/084196	A1	10/2003
WO	2004/008801	A1	1/2004
WO	2004/025938	A1	3/2004
WO	2004/047415	A1	6/2004
WO	2004/055637	A2	7/2004
WO	2004/057486	A1	7/2004
WO	2004/061850	A1	7/2004
WO	2004/084413	A2	9/2004
WO	2005/003920	A2	1/2005
WO	2005/008505	A1	1/2005
WO	2005/008899	A1	1/2005
WO	2005/010725	A2	2/2005
WO	2005/027472	A2	3/2005
WO	2005/027485	A1	3/2005
WO	2005/031737	A1	4/2005
WO	2005/034085	A1	4/2005
WO	2005/041455	A1	5/2005
WO	2005/059895	A1	6/2005
WO	2006/020305	A2	2/2006
WO	2006/054724	A1	5/2006
WO	2006/056822	A1	6/2006
WO	2006/078246	A1	7/2006
WO	2006/101649	A2	9/2006
WO	2006/129967	A1	12/2006
WO	2006/133571	A1	12/2006
WO	2007/002753	A2	1/2007
WO	2007/080559	A2	7/2007
WO	2007/083894	A1	7/2007
WO	2008/071231	A1	6/2008
WO	2008/085742	A2	7/2008
WO	2008/109835	A2	9/2008
WO	2008/140236	A1	11/2008
WO	2008/153639	A1	12/2008
WO	2009/009240	A2	1/2009
WO	2009/017280	A1	2/2009
WO	2009/156438	A1	12/2009
WO	2010/075623	A1	7/2010
WO	2011/057346	A1	5/2011
WO	2011/088053	A2	7/2011
WO	2011/133543	A1	10/2011
WO	2011/150730	A1	12/2011

(56) **References Cited**

FOREIGN PATENT DOCUMENTS

WO	2011/163350	A1	12/2011
WO	2012/167168	A2	12/2012

OTHER PUBLICATIONS

"Meet Ivee, Your Wi-Fi Voice Activated Assistant", available at <http://www.helloivee.com/>, retrieved on Feb. 10, 2014, 8 pages.
"Speaker Recognition", Wikipedia, The Free Enclyclopedia, Nov. 2, 2010, 4 pages.
International Preliminary Report on Patentability received for PCT Patent Application No. PCT/US2012/029810, dated Oct. 3, 2013, 9 pages.
International Search Report and Written Opinion received for PCT Patent Application No. PCT/US2012/029810, dated Aug. 17, 2012, 11 pages.
Extended European Search Report and Search Opinion received for European Patent Application No. 12185276.8, dated Dec. 18, 2012, 4 pages.
Extended European Search Report received for European Patent Application No. 12186663.6, dated Jul. 16, 2013, 6 pages.
Apple Computer, "Knowledge Navigator", published by Apple Computer no later than 2008, as depicted in Exemplary Screenshots from video entitled 'Knowledge Navigator', 2008, 7 pages.
Applebaum et al., "Enhancing the Discrimination of Speaker Independent Hidden Markov Models with Corrective Training", International Conference on Acoustics, Speech, and Signal Processing, May 23, 1989, pp. 302-305.
Bellegarda, Jerome R. "Latent Semantic Mapping", IEEE Signal Processing Magazine, vol. 22, No. 5, Sep. 2005, pp. 70-80.
Bellegarda et al., "Tied Mixture Continuous Parameter Modeling for Speech Recognition", IEEE Transactions on Acoustics, Speech and Signal Processing, vol. 38, No. 12, Dec. 1990, pp. 2033-2045.
Chang et al., "Discriminative Training of Dynamic Programming based Speech Recognizers", IEEE Transactions on Speech and Audio Processing, vol. 1, No. 2, Apr. 1993, pp. 135-143.
Cheyer et al., "Demonstration Video of Multimodal Maps Using an Agent Architecture", published by SRI International no later than 1996, as depicted in Exemplary Screenshots from video entitled Demonstration Video of Multimodal Maps Using an Agent Architecture, 1996, 6 pages.
Cheyer et al., "Demonstration Video of Multimodal Maps Using an Open-Agent Architecture", published by SRI International no later than 1996, as depicted in Exemplary Screenshots from video entitled Demonstration Video of Multimodal Maps Using an Open-Agent Architecture, 6 pages.
Cheyer, A., "Demonstration Video of Vanguard Mobile Portal", published by SRI International no later than 2004, as depicted in 'Exemplary Screenshots from video entitled Demonstration Video of Vanguard Mobile Portal', 2004, 10 pages.
Choi et al., "Acoustic and Visual Signal based Context Awareness System for Mobile Application", IEEE Transactions on Consumer Electronics, vol. 57, No. 2, May 2011, pp. 738-746.
Kickstarter, "Ivee Sleek: Wi-Fi Voice-Activated Assistant", available at <https://www.kickstarter.com/projects/ivee/ivee-sleek-wi-fi-voice-activated-assistant>, retrieved on Feb. 10, 2014, 13 pages.
Navigli, Roberto, "Word Sense Disambiguation: A Survey", ACM Computing Surveys, vol. 41, No. 2, Feb. 2009, 70 pages.
International Search Report and Written Opinion received for PCT Patent Application No. PCT/US2014/015418, dated Aug. 26, 2014, 17 pages.
Guim, Mark, "How to Set a Person-Based Reminder with Cortana", available at <http://www.wpcentral.com/how-to-person-based-reminder-cortana>, Apr. 26, 2014, 15 pages.
Miller, Chance, "Google Keyboard Updated with New Personalized Suggestions Feature", available at <http://9to5google.com/2014/03/19/google-keyboard-updated-with-new-personalized-suggestions-feature/>, Mar. 19, 2014, 4 pages.
Roddy et al., "Interface Issues in Text Based Chat Rooms", SIGCHI Bulletin, vol. 30, No. 2, Apr. 1998, pp. 119-123.
Viegas et al., "Chat Circles", SIGCHI Conference on Human Factors in Computing Systems, May 15-20, 1999, pp. 9-16.
Markel et al., "Linear Prediction of Speech", Springer-Verlag, Berlin, Heidelberg, New York, 1976, 12 pages.
Martin et al., "Building and Using Practical Agent Applications", SRI International, PAAM Tutorial, 1998, 78 pages.
Martin et al., "Building Distributed Software Systems with the Open Agent Architecture", Proceedings of the Third International Conference on the Practical Application of Intelligent Agents and Multi-Agent Technology, Mar. 1998, pp. 355-376.
Martin et al., "Development Tools for the Open Agent Architecture", Proceedings of the International Conference on the Practical Application of Intelligent Agents and Multi-Agent Technology, Apr. 1996, pp. 1-17.
Martin et al., "Information Brokering in an Agent Architecture", Proceedings of the Second International Conference on the Practical Application of Intelligent Agents and Multi-Agent Technology, Apr. 1997, pp. 1-20.
Martin et al., "Transportability and Generality in a Natural-Language Interface System", Proceedings of the Eighth International Joint Conference on Artificial Intelligence, Technical Note 293, Aug. 1983, 21 pages.
Martin et al., "The Open Agent Architecture: A Framework for Building Distributed Software Systems", Applied Artificial Intelligence: An International Journal, vol. 13, No. 1-2, available at <http://adam.cheyer.com/papers/oaa.pdf> >, retrieved from internet on Jan.-Mar. 1999.
Matiasek et al., "Tamic-P: A System for NL Access to Social Insurance Database", 4th International Conference on Applications of Natural Language to Information Systems, Jun. 1999, 7 pages.
Mcguire et al., "SHADE: Technology for Knowledge-Based Collaborative Engineering", Journal of Concurrent Engineering Applications and Research (CERA), 1993, 18 pages.
Meng et al., "Wheels: A Conversational System in the Automobile Classified Domain", Proceedings of Fourth International Conference on Spoken Language, ICSLP 96, vol. 1, Oct. 1996, 4 pages.
Michos et al., "Towards an Adaptive Natural Language Interface to Command Languages", Natural Language Engineering, vol. 2, No. 3, 1996, pp. 191-209.
Milstead et al., "Metadata: Cataloging by Any Other Name", available at <http://www.iicm.tugraz.at/thesis/cguetl_diss/literatur/Kapitel06/References/Milstead_et_al._1999/metadata.html>, Jan. 1999, 18 pages.
Milward et al., "D2.2: Dynamic Multimodal Interface Reconfiguration, Talk and Look: Tools for Ambient Linguistic Knowledge", available at <http://www.ihmc.us/users/nblaylock!Pubs/Files/talk d2.2.pdf>, Aug. 8, 2006, 69 pages.
Minker et al., "Hidden Understanding Models for Machine Translation", Proceedings of ETRW on Interactive Dialogue in Multi-Modal Systems, Jun. 1999, pp. 1-4.
Mitra et al., "A Graph-Oriented Model for Articulation of Ontology Interdependencies", Advances in Database Technology, Lecture Notes in Computer Science, vol. 1777, 2000, pp. 1-15.
Modi et al., "CMRadar: A Personal Assistant Agent for Calendar Management", AAAI, Intelligent Systems Demonstrations, 2004, pp. 1020-1021.
Moore et al., "Combining Linguistic and Statistical Knowledge Sources in Natural-Language Processing for ATIS", SRI International, Artificial Intelligence Center, 1995, 4 pages.
Moore, Robert C., "Handling Complex Queries in a Distributed Data Base", SRI International, Technical Note 170, Oct. 8, 1979, 38 pages.
Moore, Robert C., "Practical Natural-Language Processing by Computer", SRI International, Technical Note 251, Oct. 1981, 34 pages.
Moore et al., "SRI's Experience with the ATIS Evaluation", Proceedings of the Workshop on Speech and Natural Language, Jun. 1990, pp. 147-148.
Moore et al., "The Information Warfare Advisor: An Architecture for Interacting with Intelligent Agents Across the Web", Proceedings of Americas Conference on Information Systems (AMCIS), Dec. 31, 1998, pp. 186-188.

(56) **References Cited**

OTHER PUBLICATIONS

Moore, Robert C., "The Role of Logic in Knowledge Representation and Commonsense Reasoning", SRI International, Technical Note 264, Jun. 1982, 19 pages.
Moore, Robert C., "Using Natural-Language Knowledge Sources in Speech Recognition", SRI International, Artificial Intelligence Center, Jan. 1999, pp. 1-24.
Moran et al., "Intelligent Agent-Based User Interfaces", Proceedings of International Workshop on Human Interface Technology, Oct. 1995, pp. 1-4.
Moran et al., "Multimodal User Interfaces in the Open Agent Architecture", International Conference on Intelligent User Interfaces (IUI97), 1997, 8 pages.
Moran, Douglas B., "Quantifier Scoping in the SRI Core Language Engine", Proceedings of the 26th Annual Meeting on Association for Computational Linguistics, 1988, pp. 33-40.
Morgan, B., "Business Objects (Business Objects for Windows) Business Objects Inc.", DBMS, vol. 5, No. 10, Sep. 1992, 3 pages.
Motro, Amihai, "Flex: A Tolerant and Cooperative User Interface to Databases", IEEE Transactions on Knowledge and Data Engineering, vol. 2, No. 2, Jun. 1990, pp. 231-246.
Mountford et al., "Talking and Listening to Computers", The Art of Human-Computer Interface Design, Apple Computer, Inc., Addison-Wesley Publishing Company, Inc., 1990, 17 pages.
Mozer, Michael C., "An Intelligent Environment must be Adaptive", IEEE Intelligent Systems, 1999, pp. 11-13.
Murty et al., "Combining Evidence from Residual Phase and MFCC Features for Speaker Recognition", IEEE Signal Processing Letters, vol. 13, No. 1, Jan. 2006, 4 pages.
Murveit et al., "Integrating Natural Language Constraints into HMM-Based Speech Recognition", International Conference on Acoustics, Speech and Signal Processing, Apr. 1990, 5 pages.
Murveit et al., "Speech Recognition in SRI's Resource Management and ATIS Systems", Proceedings of the Workshop on Speech and Natural Language, 1991, pp. 94-100.
Nakagawa et al., "Speaker Recognition by Combining MFCC and Phase Information", IEEE International Conference on Acoustics, Speech and Signal Processing (ICASSP), Mar. 2010, 4 pages.
Naone, Erica, "TR10: Intelligent Software Assistant", Technology Review, Mar.-Apr. 2009, 2 pages.
Neches et al., "Enabling Technology for Knowledge Sharing", Fall, 1991, pp. 37-56.
Niesler et al., "A Variable-Length Category-Based N-Gram Language Model", IEEE International Conference on Acoustics, Speech and Signal Processing (ICASSP'96), vol. 1, May 1996, 6 pages.
Noth et al., "Verbmobil: The Use of Prosody in the Linguistic Components of a Speech Understanding System", IEEE Transactions on Speech and Audio Processing, vol. 8, No. 5, Sep. 2000, pp. 519-532.
Odubiyi et al., "SAIRE-A Scalable Agent-Based Information Retrieval Engine", Proceedings of the First International Conference on Autonomous Agents, 1997, 12 pages.
Owei et al., "Natural Language Query Filtration in the Conceptual Query Language", IEEE, 1997, pp. 539-549.
Pannu et al., "A Learning Personal Agent for Text Filtering and Notification", Proceedings of the International Conference of Knowledge Based Systems, 1996, pp. 1-11.
Papadimitriou et al., "Latent Semantic Indexing: A Probabilistic Analysis", Available online at <http://citeseerx.ist.psu.edu/messaqes/downloadsexceeded.html>, Nov. 14, 1997, 21 pages.
Parson, T. W., "Voice and Speech Processing", Pitch and Formant Estimation, McGraw-Hill, Inc., ISBN: 0-07-0485541-0, 1987, 15 pages.
Parsons, T. W., "Voice and Speech Processing", Linguistics and Technical Fundamentals, Articulatory Phonetics and Phonemics, McGraw-Hill, Inc., ISBN: 0-07-0485541-0, 1987, 5 pages.
International Preliminary Report on Patentability received for PCT Patent Application No. PCT/US1993/012637, dated Apr. 10, 1995, 7 pages.
International Preliminary Report on Patentability received for PCT Patent Application No. PCT/US1993/012666, dated Mar. 1, 1995, 5 pages.
International Search Report received for PCT Patent Application No. PCT/US1993/012666, dated Nov. 9, 1994, 8 pages.
International Preliminary Report on Patentability received for PCT Patent Application No. PCT/US1994/011011, dated Feb. 28, 1996, 4 pages.
International Search Report received for PCT Patent Application No. PCT/US1994/011011, dated Feb. 8, 1995, 7 pages.
Written Opinion received for PCT Patent Application No. PCT/US1994/011011, dated Aug. 21, 1995, 4 pages.
International Preliminary Report on Patentability received for PCT Patent Application No. PCT/US1995/008369, dated Oct. 9, 1996, 4 pages.
International Search Report received for PCT Patent Application No. PCT/US1995/008369, dated Nov. 8, 1995, 6 pages.
International Search Report and Written Opinion received for PCT Patent Application No. PCT/US2010/037378, dated Aug. 25, 2010, 14 pages.
International Search Report and Written Opinion received for PCT Patent Application No. PCT/US2011/020861, dated Nov. 29, 2011, 12 pages.
International Search Report and Written Opinion received for PCT Patent Application No. PCT/US2012/040571, dated Nov. 16, 2012, 14 pages.
International Search Report and Written Opinion received for PCT Patent Application No. PCT/US2012/056382, dated Dec. 20, 2012, 11 pages.
Pereira, Fernando, "Logic for Natural Language Analysis", SRI International, Technical Note 275, Jan. 1983, 194 pages.
Perrault et al., "Natural-Language Interfaces", SRI International, Technical Note 393, Aug. 22, 1986, 48 pages.
Phoenix Solutions, Inc., "Declaration of Christopher Schmandt Regarding the MIT Galaxy System", West Interactive Corp., A Delaware Corporation, Document 40, Jul. 2, 2010, 162 pages.
Picone, J., "Continuous Speech Recognition using Hidden Markov Models", IEEE ASSP Magazine, vol. 7, No. 3, Jul. 1990, 16 pages.
Pulman et al., "Clare: A Combined Language and Reasoning Engine", Proceedings of JFIT Conference, available at <http://www.cam.sri.com/tr/crc042/paper.ps.Z>, 1993, 8 pages.
Rabiner et al., "Fundamental of Speech Recognition", AT&T, Published by Prentice-Hall, Inc., ISBN: 0-13-285826-6, 1993, 17 pages.
Rabiner et al., "Note on the Properties of a Vector Quantizer for LPC Coefficients", Bell System Technical Journal, vol. 62, No. 8, Oct. 1983, 9 pages.
Ratcliffe, M., "ClearAccess 2.0 Allows SQL Searches Off-Line (Structured Query Language) (ClearAccess Corp. Preparing New Version of Data-Access Application with Simplified User Interface, New Features) (Product Announcement)", MacWeek, vol. 6, No. 41, Nov. 16, 1992, 2 pages.
Ravishankar, Mosur K., "Efficient Algorithms for Speech Recognition", Doctoral Thesis Submitted to School of Computer Science, Computer Science Division, Carnegie Mellon University, Pittsburgh, May 15, 1996, 146 pages.
Rayner, M., "Abductive Equivalential Translation and its Application to Natural Language Database Interfacing", Dissertation Paper, SRI International, Sep. 1993, 162 pages.
Rayner et al., "Adapting the Core Language Engine to French and Spanish", Cornell University Library, available at <http:l/arxiv.org/abs/cmp-lg/9605015>, May 10, 1996, 9 pages.
Rayner et al., "Deriving Database Queries from Logical Forms by Abductive Definition Expansion", Proceedings of the Third Conference on Applied Natural Language Processing, ANLC, 1992, 8 pages.
Rayner, Manny, "Linguistic Domain Theories: Natural-Language Database Interfacing from First Principles", SRI International, Cambridge, 1993, 11 pages.
Rayner et al., "Spoken Language Translation with Mid-90's Technology: A Case Study", Eurospeech, ISCA, Available online at <http://citeseerx.ist.psu.edu/viewdoc/summary?doi=10.1.1.54.8608>, 1993, 4 pages.

(56) **References Cited**

OTHER PUBLICATIONS

Remde et al., "SuperBook: An Automatic Tool for Information Exploration-Hypertext?", In Proceedings of Hypertext, 87 Papers, Nov. 1987, 14 pages.
Reynolds, C. F., "On-Line Reviews: A New Application of the HICOM Conferencing System", IEEE Colloquium on Human Factors in Electronic Mail and Conferencing Systems, Feb. 3, 1989, 4 pages.
Rice et al., "Monthly Program: Nov. 14, 1995", The San Francisco Bay Area Chapter of ACM SIGCHI, available at <http://www.baychi.org/calendar/19951114>, Nov. 14, 1995, 2 pages.
Rice et al., "Using the Web Instead of a Window System", Proceedings of the SIGCHI Conference on Human Factors in Computing Systems, CHI'96, 1996, pp. 1-14.
Rigoll, G., "Speaker Adaptation for Large Vocabulary Speech Recognition Systems Using Speaker Markov Models", International Conference on Acoustics, Speech and Signal Processing (ICASSP'89), May 1989, 4 pages.
Riley, M D., "Tree-Based Modelling of Segmental Durations", Talking Machines Theories, Models and Designs, Elsevier Science Publishers B.V., North-Holland, ISBN: 08-444-89115.3, 1992, 15 pages.
Rivlin et al., "Maestro: Conductor of Multimedia Analysis Technologies", SRI International, 1999, 7 pages.
Rivoira et al., "Syntax and Semantics in a Word-Sequence Recognition System", IEEE International Conference on Acoustics, Speech and Signal Processing (ICASSP'79), Apr. 1979, 5 pages.
Roddy et al., "Communication and Collaboration in a Landscape of B2B eMarketplaces", VerticalNet Solutions, White Paper, Jun. 15, 2000, 23 pages.
Rosenfeld, R., "A Maximum Entropy Approach to Adaptive Statistical Language Modelling", Computer Speech and Language, vol. 10, No. 3, Jul. 1996, 25 pages.
Roszkiewicz, A., "Extending your Apple", Back Talk-Lip Service, A+ Magazine, The Independent Guide for Apple Computing, vol. 2, No. 2, Feb. 1984, 5 pages.
Rudnicky et al., "Creating Natural Dialogs in the Carnegie Mellon Communicator System", Proceedings of Eurospeech, vol. 4, 1999, pp. 1531-1534.
Russell et al., "Artificial Intelligence, A Modern Approach", Prentice Hall, Inc., 1995, 121 pages.
Sacerdoti et al., "A Ladder User's Guide (Revised)", SRI International Artificial Intelligence Center, Mar. 1980, 39 pages.
Sagalowicz, D., "AD-Ladder User's Guide", SRI International, Sep. 1980, 42 pages.
Sakoe et al., "Dynamic Programming Algorithm Optimization for Spoken Word Recognition", IEEE Transactions on Acoustics, Speech and Signal Processing, vol. ASSP-26, No. 1, Feb. 1978, 8 pages.
Salton et al., "On the Application of Syntactic Methodologies in Automatic Text Analysis", Information Processing and Management, vol. 26, No. 1, Great Britain, 1990, 22 pages.
Sameshima et al., "Authorization with Security Attributes and Privilege Delegation Access control beyond the ACL", Computer Communications, vol. 20, 1997, 9 pages.
San-Segundo et al., "Confidence Measures for Dialogue Management in the CU Communicator System", Proceedings of Acoustics, Speech and Signal Processing (ICASSP'00), Jun. 2000, 4 pages.
Sato, H., "A Data Model, Knowledge Base and Natural Language Processing for Sharing a Large Statistical Database", Statistical and Scientific Database Management, Lecture Notes in Computer Science, vol. 339, 1989, 20 pages.
Savoy, J., "Searching Information in Hypertext Systems Using Multiple Sources of Evidence", International Journal of Man-Machine Studies, vol. 38, No. 6, Jun. 1996, 15 pages.
Scagliola, C., "Language Models and Search Algorithms for Real-Time Speech Recognition", International Journal of Man-Machine Studies, vol. 22, No. 5, 1985, 25 pages.
Schmandt et al., "Augmenting a Window System with Speech Input", IEEE Computer Society, Computer, vol. 23, No. 8, Aug. 1990, 8 pages.
Schnelle, Dirk, "Context Aware Voice User Interfaces for Workflow Support", Dissertation paper, Aug. 27, 2007, 254 pages.
Schütze, H., "Dimensions of Meaning", Proceedings of Supercomputing'92 Conference, Nov. 1992, 10 pages.
Seneff et al., "A New Restaurant Guide Conversational System: Issues in Rapid Prototyping for Specialized Domains", Proceedings of Fourth International Conference on Spoken Language, vol. 2, 1996, 4 pages.
Sharoff et al., "Register-Domain Separation as a Methodology for Development of Natural Language Interfaces to Databases", Proceedings of Human-Computer Interaction (INTERACT'99), 1999, 7 pages.
Sheth et al., "Evolving Agents for Personalized Information Filtering", Proceedings of the Ninth Conference on Artificial Intelligence for Applications, Mar. 1993, 9 pages.
Sheth et al., "Relationships at the Heart of Semantic Web: Modeling, Discovering, and Exploiting Complex Semantic Relationships", Enhancing the Power of the Internet: Studies in Fuzziness and Soft Computing, Oct. 13, 2002, pp. 1-38.
Shikano et al., "Speaker Adaptation through Vector Quantization", IEEE International Conference on Acoustics, Speech and Signal Processing (ICASSP'86), vol. 11, Apr. 1986, 4 pages.
Apple Computer, Inc., "iTunes 2: Specification Sheet", 2001, 2 pages.
Apple Computer, Inc., "iTunes, Playlist Related Help Screens", iTunes v1.0, 2000-2001, 8 pages.
Apple Computer, Inc., "QuickTime Movie Playback Programming Guide", Aug. 11, 2005, pp. 1-58.
Apple Computer, Inc., "QuickTime Overview", Aug. 11, 2005, pp. 1-34.
Apple Computer, Inc., "Welcome to Tiger", available at <http://www.maths.dundee.ac.uk/software/Welcome_to_Mac_OS_X_v10.4_Tiger.pdf>, 2005, pp. 1-32.
"Corporate Ladder", BLOC Publishing Corporation, 1991, 1 page.
Arango et al., "Touring Machine: A Software Platform for Distributed Multimedia Applications", 1992 IFIP International Conference on Upper Layer Protocols, Architectures, and Applications, May 1992, pp. 1-11.
Arons, Barry M., "The Audio-Graphical Interface to a Personal Integrated Telecommunications System", Thesis Submitted to the Department of Architecture at the Massachusetts Institute of Technology, Jun. 1984, 88 pages.
Badino et al., "Language Independent Phoneme Mapping for Foreign TTS", 5th ISCA Speech Synthesis Workshop, Pittsburgh, PA, Jun. 14-16, 2004, 2 pages.
Baechtle et al., "Adjustable Audio Indicator", IBM Technical Disclosure Bulletin, Jul. 1, 1984, 2 pages.
Baeza-Yates, Ricardo, "Visualization of Large Answers in Text Databases", AVI '96 Proceedings of the Workshop on Advanced Visual Interfaces, 1996, pp. 101-107.
Bahl et al., "Recognition of a Continuously Read Natural Corpus", IEEE International Conference on Acoustics, Speech, and Signal Processing, vol. 3, Apr. 1978, pp. 422-424.
Bajarin, Tim, "With Low End Launched, Apple Turns to Portable Future", PC Week, vol. 7, Oct. 1990, p. 153 (1).
Barthel, B., "Information Access for Visually Impaired Persons: Do We Still Keep a "Document" in "Documentation"?", Professional Communication Conference, Sep. 1995, pp. 62-66.
Baudel et al., "2 Techniques for Improved HC Interaction: Toolglass & Magic Lenses: The See-Through Interface", Apple Inc., Video Clip, CHI'94 Video Program on a CD, 1994.
Beck et al., "Integrating Natural Language, Query Processing, and Semantic Data Models", COMCON Spring '90. IEEE Computer Society International Conference, 1990, Feb.26-Mar. 2, 1990, pp. 538-543.
Bederson et al., "PAD++: A Zooming Graphical Interface for Exploring Alternate Interface Physics", UIST' 94 Proceedings of the 7th Annual ACM symposium on User Interface Software and Technology, Nov. 1994, pp. 17-26.
Bederson et al., "The Craft of Information Visualization", Elsevier Science, Inc., 2003, 435 pages.
"Diagrammaker", Action Software, 1989.
"Diagram-Master", Ashton-Tate, 1989.

(56) **References Cited**

OTHER PUBLICATIONS

Benel et al., "Optimal Size and Spacing of Touchscreen Input Areas", Human-Computer Interaction—INTERACT, 1987, pp. 581-585.
Beringer et al., "Operator Behavioral Biases Using High-Resolution Touch Input Devices", Proceedings of the Human Factors and Ergonomics Society 33rd Annual Meeting, 1989, 3 pages.
Beringer, Dennis B., "Target Size, Location, Sampling Point and Instruction Set: More Effects on Touch Panel Operation", Proceedings of the Human Factors and Ergonomics Society 34th Annual Meeting, 1990, 5 pages.
Bernabei et al., "Graphical I/O Devices for Medical Users", 14th Annual International Conference of the IEEE on Engineering in Medicine and Biology Society, vol. 3, 1992, pp. 834-836.
Bernstein, Macrophone, "Speech Corpus", IEEE/ICASSP, Apr. 22, 1994, pp. 1-81 to 1-84.
Berry et al., "Symantec", New version of MORE.TM, Apr. 10, 1990, 1 page.
Best Buy, "When it Comes to Selecting a Projection TV, Toshiba Makes Everything Perfectly Clear", Previews of New Releases, available at <http://www.bestbuy.com/HomeAudioVideo/Specials/ToshibaTVFeatures.asp>, retrieved on Jan. 23, 2003, 5 pages.
Betts et al., "Goals and Objectives for User Interface Software", Computer Graphics, vol. 21, No. 2, Apr. 1987, pp. 73-78.
Biemann, Chris, "Unsupervised Part-of-Speech Tagging Employing Efficient Graph Clustering", Proceeding COLING ACL '06 Proceedings of the 21st International Conference on computational Linguistics and 44th Annual Meeting of the Association for Computational Linguistics: Student Research Workshop, 2006, pp. 7-12.
Bier et al., "Toolglass and Magic Lenses: The See-Through Interface", Computer Graphics (SIGGRAPH '93 Proceedings), vol. 27, 1993, pp. 73-80.
Birrell, Andrew, "Personal Jukebox (PJB)", available at <http://birrell.org/andrew/talks/pjb-overview.ppt>, Oct. 13, 2000, 6 pages.
Black et al., "Multilingual Text-to-Speech Synthesis", Acoustics, Speech and Signal Processing (ICASSP'04) Proceedings of the IEEE International Conference, vol. 3, May 17-21, 2004, 4 pages.
Bleher et al., "A Graphic Interactive Application Monitor", IBM Systems Journal, vol. 19, No. 3, Sep. 1980, pp. 382-402.
Bluetooth PC Headsets, "'Connecting' Your Bluetooth Headset with Your Computer", Enjoy Wireless VoIP Conversations, available at <http://www.bluetoothpcheadsets.com/connect.htm>, retrieved on Apr. 29, 2006, 4 pages.
Bocchieri et al., "Use of Geographical Meta-Data in ASR Language and Acoustic Models", IEEE International Conference on Acoustics Speech and Signal Processing, 2010, pp. 5118-5121.
Bociurkiw, Michael, "Product Guide: Vanessa Matz", available at <http://www.forbes.com/asap/2000/1127/vmartz_print.html>, retrieved on Jan. 23, 2003, 2 pages.
"Glossary of Adaptive Technologies: Word Prediction", available at <http://www.utoronto.ca/atrc/reference/techwordpred.html>, retrieved on Dec. 6, 2005, 5 pages.
Borenstein, Nathaniel S., "Cooperative Work in the Andrew Message System", Information Technology Center and Computer Science Department, Carnegie Mellon University; Thyberg, Chris A. Academic Computing, Carnegie Mellon University, 1988, pp. 306-323.
Boy, Guy A., "Intelligent Assistant Systems", Harcourt Brace Jovanovicy, 1991, 1 page.
"IAP Sports Lingo 0×09 Protocol V1.00", May 1, 2006, 17 pages.
Brown et al., "Browing Graphs Using a Fisheye View", Apple Inc., Video Clip, Systems Research Center, CHI '92 Continued Proceedings on a CD, 1992.
Brown et al., "Browsing Graphs Using a Fisheye View", CHI '93 Proceedings of the Interact '93 and CHI '93 Conference on Human Factors in Computing Systems, 1993, p. 516.
Burger, D., "Improved Access to Computers for the Visually Handicapped: New Prospects and Principles", IEEE Transactions on Rehabilitation Engineering, vol. 2, No. 3, Sep. 1994, pp. 111-118.
"IEEE 1394 (Redirected from Firewire", Wikipedia, The Free Encyclopedia, available at <http://www.wikipedia.org/wiki/Firewire>, retrieved on Jun. 8, 2003, 2 pages.
Butler, Travis, "Archos Jukebox 6000 Challenges Nomad Jukebox", available at <http:tidbits.com/article/6521>, Aug. 13, 2001, 5 pages.
Butler, Travis, "Portable MP3: The Nomad Jukebox", available at <http://tidbits.com/article/6261>, Jan. 8, 2001, 4 pages.
Buxton et al., "EuroPARC's Integrated Interactive Intermedia Facility (IIIF): Early Experiences", Proceedings of the IFIP WG 8.4 Conference on Multi-User Interfaces and Applications, 1990, pp. 11-34.
CALL Centre, "Word Prediction", The CALL Centre & Scottish Executive Education Dept., 1999, pp. 63-73.
Campbell et al., "An Expandable Error-Protected 4800 BPS CELP Coder (U.S. Federal Standard 4800 BPS Voice Coder)", (Proceedings of IEEE Int'l Acoustics, Speech, and Signal Processing Conference, May 1983), as reprinted in Vector Quantization (IEEE Press, 1990), 1990, pp. 328-330.
Card et al., "Readings in Information Visualization Using Vision to Think", Interactive Technologies, 1999, 712 pages.
IBM, "Integrated Audio-Graphics User Interface", IBM Technical Disclosure Bulletin, vol. 33, No. 11, Apr. 1991, 4 pages.
IBM, "Speech Recognition with Hidden Markov Models of Speech Waveforms", IBM Technical Disclosure Bulletin, vol. 34, No. 1, Jun. 1991, 10 pages.
Intraspect Software, "The Intraspect Knowledge Management Solution: Technical Overview", available at <http://tomgruber.org/writing/intraspect-whitepaper-1998.pdf>, 1998, 18 pages.
Iowegian International, "FIR Filter Properties, DSPGuru, Digital Signal Processing Central", available at <http://www.dspguru.com/dsp/faq/fir/properties> retrieved on Jul. 28, 2010, 6 pages.
Issar et al., "CMU's Robust Spoken Language Understanding System", Proceedings of Eurospeech, 1993, 4 pages.
Issar, Sunil, "Estimation of Language Models for New Spoken Language Applications", Proceedings of 4th International Conference on Spoken language Processing, Oct. 1996, 4 pages.
Jacobs et al., "Scisor: Extracting Information from On-Line News", Communications of the ACM, vol. 33, No. 11, Nov. 1990, 10 pages.
Janas, Jurgen M., "The Semantics-Based Natural Language Interface to Relational Databases", Chapter 6, Cooperative Interfaces to Information Systems, 1986, pp. 143-188.
Jelinek, F., "Self-Organized Language Modeling for Speech Recognition", Readings in Speech Recognition, Edited by Alex Waibel and Kai-Fu Lee, Morgan Kaufmann Publishers, Inc., ISBN: 1-55860-124-4, 1990, 63 pages.
Jennings et al., "A Personal News Service Based on a User Model Neural Network", IEICE Transactions on Information and Systems, vol. E75-D, No. 2, Mar. 1992, 12 pages.
Ji et al., "A Method for Chinese Syllables Recognition Based upon Sub-syllable Hidden Markov Model", 1994 International Symposium on Speech, Image Processing and Neural Networks, Hong Kong, Apr. 1994, 4 pages.
Johnson, Julia Ann., "A Data Management Strategy for Transportable Natural Language Interfaces", Doctoral Thesis Submitted to the Department of Computer Science, University of British Columbia, Canada, Jun. 1989, 285 pages.
Jones, J., "Speech Recognition for Cyclone", Apple Computer, Inc., E.R.S. Revision 2.9, Sep. 10, 1992, 93 pages.
Julia et al., "http://www.speech.sri.com/demos/atis.html", Proceedings of AAAI, Spring Symposium, 1997, 5 pages.
Julia et al., "Un Editeur Interactif De Tableaux Dessines a Main Levee (An Interactive Editor for Hand-Sketched Tables)", Traitement du Signal, vol. 12, No. 6, 1995, pp. 619-626.
Kahn et al., "CoABS Grid Scalability Experiments", Autonomous Agents and Multi-Agent Systems, vol. 7, 2003, pp. 171-178.
Kamel et al., "A Graph Based Knowledge Retrieval System", IEEE International Conference on Systems, Man and Cybernetics, 1990, pp. 269-275.
Karp, P. D., "A Generic Knowledge-Base Access Protocol", Available online at <http://lecture.cs.buu.ac.th/-f50353/Document/gfp.pdf>, May 12, 1994, 66 pages.

(56) **References Cited**

OTHER PUBLICATIONS

Katz, Boris, "A Three-Step Procedure for Language Generation", Massachusetts Institute of Technology, A.I. Memo No. 599, Dec. 1980, pp. 1-40.
Katz, Boris, "Annotating the World Wide Web Using Natural Language", Proceedings of the 5th RIAO Conference on Computer Assisted Information Searching on the Internet, 1997, 7 pages.
Katz, S. M., "Estimation of Probabilities from Sparse Data for the Language Model Component of a Speech Recognizer", IEEE Transactions on Acoustics, Speech and Signal Processing, vol. ASSP-35, No. 3, Mar. 1987, 3 pages.
Katz et al., "Exploiting Lexical Regularities in Designing Natural Language Systems", Proceedings of the 12th International Conference on Computational Linguistics, 1988, pp. 1-22.
Katz et al., "REXTOR: A System for Generating Relations from Natural Language", Proceedings of the ACL Workshop on Natural Language Processing and Information Retrieval (NLP&IR), Oct. 2000, 11 pages.
Katz, Boris, "Using English for Indexing and Retrieving", Proceedings of the 1st RIAO Conference on User-Oriented Content-Based Text and Image Handling, 1988, pp. 314-332.
Kitano, H., "PhiDM-Dialog, An Experimental Speech-to-Speech Dialog Translation System", Computer, vol. 24, No. 6, Jun. 1991, 13 pages.
Klabbers et al., "Reducing Audible Spectral Discontinuities", IEEE Transactions on Speech and Audio Processing, vol. 9, No. 1, Jan. 2001, 13 pages.
Klatt et al., "Linguistic Uses of Segmental Duration in English: Acoustic and Perpetual Evidence", Journal of the Acoustical Society of America, vol. 59, No. 5, May 1976, 16 pages.
Knownav, "Knowledge Navigator", YouTube Video available at <http://www.youtube.com/watch?v=QRH8eimU_20>, Apr. 29, 2008, 1 page.
Kominek et al., "Impact of Durational Outlier Removal from Unit Selection Catalogs", 5th ISCA Speech Synthesis Workshop, Jun. 14-16, 2004, 6 pages.
Konolige, Kurt, "A Framework for a Portable Natural-Language Interface to Large Data Bases", SRI International, Technical Note 197, Oct. 12, 1979, 54 pages.
Kubala et al., "Speaker Adaptation from a Speaker-Independent Training Corpus", International Conference on Acoustics, Speech and Signal Processing (ICASSP'90), Apr. 1990, 4 pages.
Kubala et al., "The Hub and Spoke Paradigm for CSR Evaluation", Proceedings of the Spoken Language Technology Workshop, Mar. 1994, 9 pages.
Laird et al., "SOAR: An Architecture for General Intelligence", Artificial Intelligence, vol. 33, 1987, pp. 1-64.
Langley et al., "A Design for the ICARUS Architechture", SIGART Bulletin, vol. 2, No. 4, 1991, pp. 104-109.
Larks, "Intelligent Software Agents", available at <http://www.cs.cmu.edu/~softagents/larks.html> retrieved on Mar. 15, 2013, 2 pages.
Lee et al., "A Real-Time Mandarin Dictation Machine for Chinese Language with Unlimited Texts and Very Large Vocabulary", International Conference on Acoustics, Speech and Signal Processing, vol. 1, Apr. 1990, 5 pages.
Lee et al., "Golden Mandarin (II)—An Improved Single-Chip Real-Time Mandarin Dictation Machine for Chinese Language with Very Large Vocabulary", IEEE International Conference of Acoustics, Speech and Signal Processing, vol. 2, 1993, 4 pages.
Lee et al., "Golden Mandarin (II)—An Intelligent Mandarin Dictation Machine for Chinese Character Input with Adaptation/Learning Functions", International Symposium on Speech, Image Processing and Neural Networks, Hong Kong, Apr. 1994, 5 pages.
Lee, K. F., "Large-Vocabulary Speaker-Independent Continuous Speech Recognition: The SPHINX System", Partial Fulfillment of the Requirements for the Degree of Doctorof Philosophy, Computer Science Department, Carnegie Mellon University, Apr. 1988, 195 pages.
Lee et al., "System Description of Golden Mandarin (I) Voice Input for Unlimited Chinese Characters", International Conference on Computer Processing of Chinese & Oriental Languages, vol. 5, No. 3 & 4, Nov. 1991, 16 pages.
Lemon et al., "Multithreaded Context for Robust Conversational Interfaces: Context-Sensitive Speech Recognition and Interpretation of Corrective Fragments", ACM Transactions on Computer-Human Interaction, vol. 11, No. 3, Sep. 2004, pp. 241-267.
Leong et al., "CASIS: A Context-Aware Speech Interface System", Proceedings of the 10th International Conference on Intelligent User Interfaces, Jan. 2005, pp. 231-238.
Lieberman et al., "Out of Context: Computer Systems that Adapt to, and Learn from, Context", IBM Systems Journal, vol. 39, No. 3 & 4, 2000, pp. 617-632.
Lin et al., "A Distributed Architecture for Cooperative Spoken Dialogue Agents with Coherent Dialogue State and History", Available on line at <http://citeseerx.ist.psu.edu/viewdoc/summary?doi=10.1.1.42.272>, 1999, 4 pages.
Lin et al., "A New Framework for Recognition of Mandarin Syllables with Tones Using Sub-syllabic Unites", IEEE International Conference on Acoustics, Speech and Signal Processing (ICASSP-93), Apr. 1993, 4 pages.
Linde et al., "An Algorithm for Vector Quantizer Design", IEEE Transactions on Communications, vol. 28, No. 1, Jan. 1980, 12 pages.
Liu et al., "Efficient Joint Compensation of Speech for the Effects of Additive Noise and Linear Filtering", IEEE International Conference of Acoustics, Speech and Signal Processing, ICASSP-92, Mar. 1992, 4 pages.
Logan et al., "Mel Frequency Cepstral Co-efficients for Music Modeling", International Symposium on Music Information Retrieval, 2000, 2 pages.
Lowerre, B. T., "The-Harpy Speech Recognition System", Doctoral Dissertation, Department of Computer Science, Carnegie Mellon University, Apr. 1976, 20 pages.
Maghbouleh, Arman, "An Empirical Comparison of Automatic Decision Tree and Linear Regression Models for Vowel Durations", Revised Version of a Paper Presented at the Computational Phonology in Speech Technology Workshop, 1996 Annual Meeting of the Association for Computational Linguistics in Santa Cruz, California, 7 pages.
Gruber, Tom, "2021: Mass Collaboration and the Really New Economy", TNTY Futures, vol. 1, No. 6, Available online at <http://tomgruber.org/writing/tnty2001.htm>, Aug. 2001, 5 pages.
Gruber, Tom, "Collaborating Around Shared Content on the WWW, W3C Workshop on WWW and Collaboration", available at <http://www.w3.org/Collaboration/Workshop/Proceedings/P9.html>, Sep. 1995, 1 page.
Gruber, Tom, "Collective Knowledge Systems: Where the Social Web Meets the Semantic Web", Web Semantics: Science, Services and Agents on the World Wide Web, 2007, pp. 1-19.
Gruber, Tom, "Despite Our Best Efforts, Ontologies are not the Problem", AAAI Spring Symposium, Available online at <http://tomgruber.org/writing/aaai-ss08.htm>, Mar. 2008, pp. 1-40.
Gruber, Tom, "Enterprise Collaboration Management with Intraspect", Intraspect Technical White Paper, Jul. 2001, pp. 1-24.
Gruber, Tom, "Every Ontology is a Treaty-A Social Agreement-Among People with Some Common Motive in Sharing", Official Quarterly Bulletin of AIS Special Interest Group on Semantic Web and Information Systems, vol. 1, No. 3, 2004, pp. 1-5.
Gruber, Tom, "Helping Organizations Collaborate, Communicate, and Learn", Presentation to NASA Ames Research, Available online at <http://tomgruber.org/writing/organizational-intelligence-talk.htm>, Mar.-Oct. 2003, 30 pages.
Gruber, Tom, "Intelligence at the Interface: Semantic Technology and the Consumer Internet Experience", Presentation at Semantic Technologies Conference, Available online at <http://tomgruber.org/writing/semtech08.htm>, May 20, 2008, pp. 1-40.
Gruber, Tom, "It Is What It Does: The Pragmatics of Ontology for Knowledge Sharing", Proceedings of the International CIDOC CRM Symposium, Available online at <http://tomgruber.org/writing/cidoc-ontology.htm>, Mar. 26, 2003, 21 pages.

(56) **References Cited**

OTHER PUBLICATIONS

Gruber, Tom, "Ontologies, Web 2.0 and Beyond", Ontology Summit, Available online at <http://tomgruber.org/writing/ontolog-social-web-keynote.htm>, Apr. 2007, 17 pages.
Gruber, Tom, "Ontology of Folksonomy: A Mash-Up of Apples and Oranges", Int'l Journal on Semantic Web & Information Systems, vol. 3, No. 2, 2007, 7 pages.
Gruber, Tom, "Siri, A Virtual Personal Assistant-Bringing Intelligence to the Interface", Semantic Technologies Conference, Jun. 16, 2009, 21 pages.
Gruber, Tom, "TagOntology", Presentation to Tag Camp, Oct. 29, 2005, 20 pages.
Gruber, Tom, "Where the Social Web Meets the Semantic Web", Presentation at the 5th International Semantic Web Conference, Nov. 2006, 38 pages.
Guida et al., "NLI: A Robust Interface for Natural Language Person-Machine Communication", International Journal of Man-Machine Studies, vol. 17, 1982, 17 pages.
Guzzoni et al., "A Unified Platform for Building Intelligent Web Interaction Assistants", Proceedings of the 2006 IEEE/WIC/ACM International Conference on Web Intelligence and Intelligent Agent Technology, Computer Society, 2006, 4 pages.
Guzzoni et al., "Active, A Platform for Building Intelligent Operating Rooms", Surgetica 2007 Computer-Aided Medical Interventions: Tools and Applications, 2007, pp. 191-198.
Guzzoni et al., "Active, A platform for Building Intelligent Software", Computational Intelligence, available at <http://www.informatik.uni-trier.del-ley/pers/hd/g/Guzzoni:Didier>, 2006, 5 pages.
Guzzoni et al., "Active, A Tool for Building Intelligent User Interfaces", ASC 2007, Palma de Mallorca, Aug. 2007, 6 pages.
Guzzoni, D., "Active: A Unified Platform for Building Intelligent Assistant Applications", Oct. 25, 2007, 262 pages.
Guzzoni et al., "Many Robots Make Short Work", AAAI Robot Contest, SRI International, 1996, 9 pages.
Guzzoni et al., "Modeling Human-Agent Interaction with Active Ontologies", AAAI Spring Symposium, Interaction Challenges for Intelligent Assistants, Stanford University, Palo Alto, California, 2007, 8 pages.
Haas et al., "An Approach to Acquiring and Applying Knowledge", SRI international, Nov. 1980, 22 pages.
Hadidi et al., "Student's Acceptance of Web-Based Course Offerings: An Empirical Assessment", Proceedings of the Americas Conference on Information Systems(AMCIS), 1998, 4 pages.
Hardwar, Devindra, "Driving App Waze Builds its own Siri for Hands-Free Voice Control", Available online at <http://venturebeat.com/2012/02/09/driving-app-waze-builds-its-own-siri-for-hands-free-voice-control/>, retrieved on Feb. 9, 2012, 4 pages.
Harris, F. J., "On the Use of Windows for Harmonic Analysis with the Discrete Fourier Transform", In Proceedings of the IEEE, vol. 66, No. 1, Jan. 1978, 34 pages.
Hawkins et al., "Hierarchical Temporal Memory: Concepts, Theory and Terminology", Numenta, Inc., Mar. 27, 2007, 20 pages.
He et al., "Personal Security Agent: KQML-Based PKI", The Robotics Institute, Carnegie-Mellon University, Paper, 1997, 14 pages.
Helm et al., "Building Visual Language Parsers", Proceedings of CHI'91, Proceedings of the SIGCHI Conference on Human Factors in Computing Systems, 1991, 8 pages.
Hendrix et al., "Developing a Natural Language Interface to Complex Data", ACM Transactions on Database Systems, vol. 3, No. 2, Jun. 1978, pp. 105-147.
Hendrix, Gary G., "Human Engineering for Applied Natural Language Processing", SRI International, Technical Note 139, Feb. 1977, 27 pages.
Hendrix, Gary G., "Klaus: A System for Managing Information and Computational Resources", SRI International, Technical Note 230, Oct. 1980, 34 pages.
Hendrix, Gary G., "Lifer: A Natural Language Interface Facility", SRI Stanford Research Institute, Technical Note 135, Dec. 1976, 9 pages.
Hendrix, Gary G., "Natural-Language Interface", American Journal of Computational Linguistics, vol. 8, No. 2, Apr.-Jun. 1982, pp. 56-61.
Hendrix, Gary G., "The Lifer Manual: A Guide to Building Practical Natural Language Interfaces", SRI International, Technical Note 138, Feb. 1977, 76 pages.
Hendrix et al., "Transportable Natural-Language Interfaces to Databases", SRI International, Technical Note 228, Apr. 30, 1981, 18 pages.
Hermansky, H., "Perceptual Linear Predictive (PLP) Analysis of Speech", Journal of the Acoustical Society of America, vol. 87, No. 4, Apr. 1990, 15 pages.
Hermansky, H., "Recognition of Speech in Additive and Convolutional Noise Based on Rasta Spectral Processing", Proceedings of IEEE International Conference on Acoustics, Speech and Signal Processing (ICASSP'93), Apr. 1993, 4 pages.
Hirschman et al., "Multi-Site Data Collection and Evaluation in Spoken Language Understanding", Proceedings of the Workshop on Human Language Technology, 1993, pp. 19-24.
Hobbs et al., "Fastus: A System for Extracting Information from Natural-Language Text", SRI International, Technical Note 519, Nov. 19, 1992, 26 pages.
Hobbs et al., "Fastus: Extracting Information from Natural-Language Texts", SRI International, 1992, pp. 1-22.
Hobbs, Jerry R., "Sublanguage and Knowledge", SRI International, Technical Note 329, Jun. 1984, 30 pages.
Hodjat et al., "Iterative Statistical Language Model Generation for use with an Agent-Oriented Natural Language Interface", Proceedings of HCI International, vol. 4, 2003, pp. 1422-1426.
Hoehfeld et al., "Learning with Limited Numerical Precision Using the Cascade-Correlation Algorithm", IEEE Transactions on Neural Networks, vol. 3, No. 4, Jul. 1992, 18 pages.
Holmes, J. N., "Speech Synthesis and Recognition-Stochastic Models for Word Recognition", Published by Chapman & Hall, London, ISBN 0 412 534304, 1998, 7 pages.
Hon et al., "CMU Robust Vocabulary-Independent Speech Recognition System", IEEE International Conference on Acoustics, Speech and Signal Processing (ICASSP-91), Apr. 1991, 4 pages.
Horvitz et al., "Handsfree Decision Support: Toward a Non-invasive Human-Computer Interface", Proceedings of the Symposium on Computer Applications in Medical Care, IEEE Computer Society Press, 1995, p. 955.
Horvitz et al., "In Pursuit of Effective Handsfree Decision Support: Coupling Bayesian Inference, Speech Understanding, and User Models", 1995, 8 pages.
Huang et al., "The SPHINX-II Speech Recognition System: An Overview", Computer, Speech and Language, vol. 7, No. 2, 1993, 14 pages.
IBM, "Speech Editor", IBM Technical Disclosure Bulletin, vol. 29, No. 10, Mar. 10, 1987, 3 pages.
Jabra, "Bluetooth Introduction", 2004, 15 pages.
Jabra Corporation, "FreeSpeak: BT200 User Manual", 2002, 42 pages.
Jaybird, "Everything Wrong with AIM: Because We've All Thought About It", available at <http://www.psychonoble.com/archives/articles/82.html>, May 24, 2006, 3 pages.
Jeffay et al., "Kernel Support for Live Digital Audio and Video", In Proc. of the Second Intl. Workshop on Network and Operating System Support for Digital Audio and Video, vol. 614, Nov. 1991, pp. 10-21.
Jelinek et al., "Interpolated Estimation of Markov Source Parameters from Sparse Data", In Proceedings of the Workshop on Pattern Recognition in Practice,, May 1980, pp. 381-397.
Johnson, Jeff A., "A Comparison of User Interfaces for Panning on a Touch-Controlled Display", CHI '95 Proceedings, 1995, 8 pages.
Kaeppner et al., "Architecture of HeiPhone: A Testbed for Audio/Video Teleconferencing", IBM European Networking Center, 1993.
Kamba et al., "Using Small Screen Space More Efficiently", CHI '96 Proceedings of the SIGCHI Conference on Human Factors in Computing Systems, Apr. 13-18, 1996, pp. 383-390.

(56) **References Cited**

OTHER PUBLICATIONS

Kang et al., "Quality Improvement of LPC-Processed Noisy Speech by Using Spectral Subtraction", IEEE Transactions on Acoustics, Speech and Signal Processing, vol. 37, No. 6, Jun. 1989, pp. 939-942.
Keahey et al., "Non-Linear Image Magnification", Apr. 24, 1996, 11 pages.
Keahey et al., "Nonlinear Magnification Fields", Proceedings of the 1997 IEEE Symposium on Information Visualization, 1997, 12 pages.
Keahey et al., "Techniques for Non-Linear Magnification Transformations", IEEE Proceedings of Symposium on Information Visualization, Oct. 1996, pp. 38-45.
Keahey et al., "Viewing Text With Non-Linear Magnification: An Experimental Study", Department of Computer Science, Indiana University, Apr. 24, 1996, pp. 1-9.
Kennedy, P. J., "Digital Data Storage Using Video Disc", IBM Technical Disclosure Bulletin, vol. 24, No. 2, Jul. 1981, p. 1171.
Kerr, "An Incremental String Search in C: This Data Matching Algorithm Narrows the Search Space with each Keystroke", Computer Language, vol. 6, No. 12, Dec. 1989, pp. 35-39.
Abut et al., "Vector Quantization of Speech and Speech-Like Waveforms", (IEEE Transactions on Acoustics, Speech, and Signal Processing, Jun. 1982), as reprinted in Vector Quantization (IEEE Press, 1990), 1990, pp. 258-270.
Kim, E.A. S., "The Structure and Processing of Fundamental Frequency Contours", University of Cambridge, Doctoral Thesis, Apr. 1987, 378 pages.
Kirstein et al., "Piloting of Multimedia Integrated Communications for European Researchers", Proc. INET '93, 1993, pp. 1-12.
Kjelldahl et al., "Multimedia—Principles, Systems, and Applications", Proceedings of the 1991 Eurographics Workshop on Multimedia Systems, Applications, and Interaction, Apr. 1991.
Kline et al., "Improving GUI Accessibility for People with Low Vision", CHI '95 Proceedings of the SIGCHI Conference on Human Factors in Computing Systems, May 7-11, 1995, pp. 114-121.
Kline et al., "UnWindows 1.0: X Windows Tools for Low Vision Users", ACM SIGCAPH Computers and the Physically Handicapped, No. 49, Mar. 1994, pp. 1-5.
Knight et al., "Heuristic Search", Production Systems, Artificial Intelligence, 2nd ed., McGraw-Hill, Inc., 1983-1991.
Kroon et al., "Quantization Procedures for the Excitation in CELP Coders", (Proceedings of IEEE International Acoustics, Speech, and Signal Processing Conference, Apr. 1987), as reprinted in Vector Quantization (IEEE Press, 1990), 1990, pp. 320-323.
Kuo et al., "A Radical-Partitioned coded Block Adaptive Neural Network Structure for Large-Volume Chinese Characters Recognition", International Joint Conference on Neural Networks, vol. 3, Jun. 1992, pp. 597-601.
Kuo et al., "A Radical-Partitioned Neural Network System Using a Modified Sigmoid Function and a Weight-Dotted Radical Selector for Large-Volume Chinese Character Recognition VLSI", IEEE Int. Symp. Circuits and Systems, Jun. 1994, pp. 3862-3865.
Kurlander et al., "Comic Chat", [Online], 1996 [Retrieved on: Feb. 4, 2013], SIGGRAPH '96 Proceedings of the 23rd annual conference on Computer graphics and interactive techniques, [Retrieved from: http://delivery.acm.org/10.1145/240000/237260/p225-kurlander.pdf], 1996, pp. 225-236.
Laface et al., "A Fast Segmental Viterbi Algorithm for Large Vocabulary Recognition", International Conference on Acoustics, Speech, and Signal Processing, vol. 1, May 1995, pp. 560-563.
Lafferty et al., "Conditional Random Fields: Probabilistic Models for Segmenting and Labeling Sequence Data", Proceedings of the 18th International Conference on Machine Learning, 2001, 9 pages.
Adium, "AboutAdium—Adium X—Trac", available at <http://web.archive.org/web/20070819113247/http://trac.adiumx.com/wiki/AboutAdium>, retrieved on Nov. 25, 2011, 2 pages.
Lamping et al., "Laying Out and Visualizing Large Trees Using a Hyperbolic Space", Proceedings of the ACM Symposium on User Interface Software and Technology, Nov. 1994, pp. 13-14.
Lamping et al., "Visualizing Large Trees Using the Hyperbolic Browser", Apple Inc., Video Clip, MIT Media Library, on a CD, 1995.
Lantz et al., "Towards a Universal Directory Service", Departments of Computer Science and Electrical Engineering, Stanford University, 1985, pp. 250-260.
Lantz, Keith, "An Experiment in Integrated Multimedia Conferencing", 1986, pp. 267-275.
Lauwers et al., "Collaboration Awareness in Support of Collaboration Transparency: Requirements for the Next Generation of Shared Window Systems", CHI'90 Proceedings, 1990, pp. 303-311.
Lauwers et al., "Replicated Architectures for Shared Window Systems: A Critique", COCS '90 Proceedings of the ACM SIGOIS and IEEE CS TC-OA conference on Office information systems, ACM SIGOIS Bulletin, 1990, pp. 249-260.
Lazzaro, Joseph J., "Adapting Desktop Computers to Meet the Needs of Disabled Workers is Easier Than You Might Think", Computers for the Disabled, BYTE Magazine, Jun. 1993, 4 pages.
Leahy et al., "Effect of Touch Screen Target Location on User Accuracy", Proceedings of the Human Factors Society 34th Annual Meeting, 1990, 5 pages.
Lee, Kai-Fu, "Automatic Speech Recognition", 1989, 14 pages (Table of Contents).
Leung et al., "A Review and Taxonomy of Distortion-Oriented Presentation Techniques", ACM Transactions on Computer-Human Interaction (TOCHI), vol. 1, No. 2, Jun. 1994, pp. 126-160.
Levinson et al., "Speech synthesis in telecommunications", IEEE Communications Magazine, vol. 31, No. 11, Nov. 1993, pp. 46-53.
Lewis, "Speech synthesis in a computer aided learning environment", UK IT, Mar. 19-22, 1990, pp. 294-298.
Lewis, Peter, "Two New Ways to Buy Your Bits", CNN Money, available at <http://money.cnn.com/2003/12/30/commentary/ontechnology/download/>,, Dec. 31, 2003, 4 pages.
Lieberman, Henry, "A Multi-Scale, Multi-Layer, Translucent Virtual Space", Proceedings of IEEE Conference on Information Visualization, Aug. 1997, pp. 124-131.
Lieberman, Henry, "Powers of Ten Thousand: Navigating in Large Information Spaces", Proceedings of the ACM Symposium on User Interface Software and Technology, Nov. 1994, pp. 1-2.
Lyon, R., "A Computational Model of Binaural Localization and Separation", Proceedings of IEEE International Conference on Acoustics, Speech and Signal Processing, Apr. 1983, pp. 1148-1151.
Ahlberg et al., "The Alphaslider: A Compact and Rapid Selector", CHI '94 Proceedings of the SIGCHI Conference on Human Factors in Computing Systems, Apr. 1994, pp. 365-371.
Lyons, Richard F., "CCD Correlators for Auditory Models", Proceedings of the Twenty-Fifth Asilomar Conference on Signals, Systems and Computers, Nov. 4-6, 1991, pp. 785-789.
Mackenzie et al., "Alphanumeric Entry on Pen-Based Computers", International Journal of Human-Computer Studies, vol. 41, 1994, pp. 775-792.
Mackinlay et al., "The Perspective Wall: Detail and Context Smoothly Integrated", ACM, 1991, pp. 173-179.
Ahlberg et al., "Visual Information Seeking: Tight Coupling of Dynamic Query Filters with Starfield Displays", Proceedings of the SIGCHI Conference on Human Factors in Computing Systems, Apr. 24-28, 1994, pp. 313-317.
Mactech, "KeyStrokes 3.5 for Mac OS X Boosts Word Prediction", available at <http://www.mactech.com/news/?p=1007129>, retrieved on Jan. 7, 2008, 3 pages.
Mahedero et al., "Natural Language Processing of Lyrics", In Proceedings of the 13th Annual ACM International Conference on Multimedia, ACM, Nov. 6-11, 2005, 4 pages.
Marcus et al., "Building a Large Annotated Corpus of English: The Penn Treebank", Computational Linguistics, vol. 19, No. 2, 1993, pp. 313-330.
Markel et al., "Linear Production of Speech", Reviews, 1976, pp. xii, 288.
Masui, Toshiyuki, "POBox: An Efficient Text Input Method for Handheld and Ubiquitous Computers", Proceedings of the 1st International Symposium on Handheld and Ubiquitous Computing, 1999, 12 pages.

(56) **References Cited**

OTHER PUBLICATIONS

Matsui et al., "Speaker Adaptation of Tied-Mixture-Based Phoneme Models for Text-Prompted Speaker Recognition", 1994 IEEE International Conference on Acoustics, Speech and Signal Processing, Apr. 19-22, 1994, 1-125-1-128.
Matsuzawa, A, "Low-Voltage and Low-Power Circuit Design for Mixed Analog/Digital Systems in Portable Equipment", IEEE Journal of Solid-State Circuits, vol. 29, No. 4, 1994, pp. 470-480.
Mellinger, David K., "Feature-Map Methods for Extracting Sound Frequency Modulation", IEEE Computer Society Press, 1991, pp. 795-799.
Menico, Costas, "Faster String Searches", Dr. Dobb's Journal, vol. 14, No. 7, Jul. 1989, pp. 74-77.
Menta, Richard, "1200 Song MP3 Portable is a Milestone Player", available at <http://www.mp3newswire.net/stories/personaljuke.html>, Jan. 11, 2000, 4 pages.
Meyer, Mike, "A Shell for Modern Personal Computers", University of California, Aug. 1987, pp. 13-19.
Meyrowitz et al., "Bruwin: An Adaptable Design Strategy for Window Manager/Virtual Terminal Systems", Department of Computer Science, Brown University, 1981, pp. 180-189.
Miastkowski, Stan, "paperWorks Makes Paper Intelligent", Byte Magazine, Jun. 1992.
Microsoft, "Turn on and Use Magnifier", available at <http://www.microsoft.com/windowsxp/using/accessibility/magnifierturnon.mspx>, retrieved on Jun. 6, 2009.
Microsoft Corporation, Microsoft Office Word 2003 (SP2), Microsoft Corporation, SP3 as of 2005, pp. MSWord 2003 Figures 1-5, 1983-2003.
Microsoft Corporation, "Microsoft MS-DOS Operating System User's Guide", Microsoft Corporation, 1982, pp. 4-1 to 4-16, 5-1 to 5-19.
Microsoft Press, "Microsoft Windows User's Guide for the Windows Graphical Environment", version 3.0, 1985-1990, pp. 33-41 & 70-74.
Microsoft Windows XP, "Magnifier Utility", Oct. 25, 2001, 2 pages.
Microsoft Word 2000 Microsoft Corporation, pp. MSWord Figures 1-5, 1999.
Microsoft/Ford, "Basic Sync Commands", www.SyncMyRide.com, Sep. 14, 2007, 1 page.
Milner, N. P., "A Review of Human Performance and Preferences with Different Input Devices to Computer Systems", Proceedings of the Fourth Conference of the British Computer Society on People and Computers, Sep. 5-9, 1988, pp. 341-352.
Miniman, Jared, "Applian Software's Replay Radio and Player v1.02", pocketnow.com—Review, available at <http://www.pocketnow.com/reviews/replay/replay.htm>, Jul. 31, 2001, 16 pages.
Moberg et al., "Cross-Lingual Phoneme Mapping for Multilingual Synthesis Systems", Proceedings of the 8th International Conference on Spoken Language Processing, Jeju Island, Korea, Interspeech 2004, Oct. 4-8, 2004, 4 pages.
Moberg, M., "Contributions to Multilingual Low-Footprint TTS System for Hand-Held Devices", Doctoral Thesis, Tampere University of Technology, Aug. 17, 2007, 82 pages.
Mobile Tech News, "T9 Text Input Software Updated", available at <http://www.mobiletechnews.com/info/2004/11/23/122155.html>, Nov. 23, 2004, 4 pages.
Mok et al., "Media Searching on Mobile Devices", IEEE EIT 2007 Proceedings, 2007, pp. 126-129.
Morland, D. V., "Human Factors Guidelines for Terminal Interface Design", Communications ofthe ACM vol. 26, No. 7, Jul. 1983, pp. 484-494.
Morris et al., "Andrew: A Distributed Personal Computing Environment", Communications of the ACM, (Mar. 1986); vol. 29 No. 3,, Mar. 1986, pp. 184-201.
Muller et al., "CSCW'92 Demonstrations", 1992, pp. 11-14.
Musicmatch, "Musicmatch and Xing Technology Introduce Musicmatch Jukebox", Press Releases, available at <http://www.musicmatch.com/info/company/press/releases/?year= 1998&release=2>, May 18, 1998, 2 pages.
Muthesamy et al., "Speaker-Independent Vowel Recognition: Spectograms versus Cochleagrams", IEEE, Apr. 1990.
My Cool Aids, "What's New", available at <http://www.mycoolaids.com/>, 2012, 1 page.
Myers, Brad A., "Shortcutter for Palm", available at <http://www.cs.cmu.edu/-pebbles/v5/shortcutter/palm/index.html>, retrieved on Jun. 18, 2014, 10 pages.
Nadoli et al., "Intelligent Agents in the Simulation of Manufacturing Systems", Proceedings of the SCS Multiconference on AL and Simulation, 1989, 1 page.
Nakagawa et al., "Unknown Word Guessing and Part-of-Speech Tagging Using Support Vector Machines", Proceedings of the 6th NLPRS, 2001, pp. 325-331.
Ahlstrom et al., "Overcoming Touchscreen User Fatigue by Workplace Design", CHI '92 Posters and Short Talks of the 1992 SIGCHI Conference on Human Factors in Computing Systems, 1992, pp. 101-102.
NCIP, "NCIP Library: Word Prediction Collection", available at <http://www2.edc.org/ncip/library/wp/toc.htm>, 1998, 4 pages.
NCIP, "What is Word Prediction?", available at <http://www2.edc.org/NCIP/library/wp/what_is.htm>, 1998, 2 pages.
NCIP Staff, "Magnification Technology", available at <http://www2.edc.org/ncip/library/vi/magnifi.htm>, 1994, 6 pages.
Newton, Harry, "Newton's Telecom Dictionary", Mar. 1998, pp. 62, 155, 610-611, 771.
Nguyen et al., "Generic Manager for Spoken Dialogue Systems", In DiaBruck: 7th Workshop on the Semantics and Pragmatics of Dialogue, Proceedings, 2003, 2 pages.
Nilsson, B. A., "Microsoft Publisher is an Honorable Start for DTP Beginners", Computer Shopper, Feb. 1, 1992, 2 pages.
Noik, Emanuel G., "Layout-Independent Fisheye Views of Nested Graphs", IEEE Proceedings of Symposium on Visual Languages, 1993, 6 pages.
Nonhoff-Arps et al., "StraBenmusik: Portable MP3-Spieler mit USB Anschluss", CT Magazin Fuer Computer Technik, Verlag Heinz Heise GMBH, Hannover DE, No. 25, 2000, pp. 166-175.
Northern Telecom, "Meridian Mail PC User Guide", 1988, 17 Pages.
Notenboom, Leo A., "Can I Retrieve Old MSN Messenger Conversations?", available at <http://ask-leo.com/can_i_retrieve_old_msn_messenger_conversations.html>, Mar. 11, 2004, 23 pages.
O'Connor, Rory J., "Apple Banking on Newton's Brain", San Jose Mercury News, Apr. 22, 1991.
Ohsawa et al., "A computational Model of an Intelligent Agent Who Talks with a Person", Research Reports on Information Sciences, Series C, No. 92, Apr. 1989, pp. 1-18.
Ohtomo et al., "Two-Stage Recognition Method of Hand-Written Chinese Characters Using an Integrated Neural Network Model", Denshi Joohoo Tsuushin Gakkai Ronbunshi, D-II, vol. J74, Feb. 1991, pp. 158-165.
Okazaki et al., "Multi-Fisheye Transformation Method for Large-Scale Network Maps", IEEE Japan, vol. 44, No. 6, 1995, pp. 495-500.
Pearl, Amy, "System Support for Integrated Desktop Video Conferencing", Sunmicrosystems Laboratories, Dec. 1992, pp. 1-15.
Penn et al., "Ale for Speech: A Translation Prototype", Bell Laboratories, 1999, 4 pages.
Phillipps, Ben, "Touchscreens are Changing the Face of Computers—Today's Users Have Five Types of Touchscreens to Choose from, Each with its Own Unique Characteristics", Electronic Products, Nov. 1994, pp. 63-70.
Phillips, Dick, "The Multi-Media Workstation", SIGGRAPH '89 Panel Proceedings, 1989, pp. 93-109.
Pickering, J. A., "Touch-Sensitive Screens: The Technologies and Their Application", International Journal of Man-Machine Studies, vol. 25, No. 3, Sep. 1986, pp. 249-269.
Pingali et al., "Audio-Visual Tracking for Natural Interactivity", ACM Multimedia, Oct. 1999, pp. 373-382.
Plaisant et al., "Touchscreen Interfaces for Alphanumeric Data Entry", Proceedings of the Human Factors and Ergonomics Society 36th Annual Meeting, 1992, pp. 293-297.
Plaisant et al., "Touchscreen Toggle Design", CHI'92, May 3-7, 1992, pp. 667-668.

(56) **References Cited**

OTHER PUBLICATIONS

Poly-Optical Products, Inc., "Poly-Optical Fiber Optic Membrane Switch Backlighting", available at <http://www.poly-optical.com/membrane_switches.html>, retrieved on Dec. 19, 2002, 3 pages.
Poor, Alfred, "Microsoft Publisher", PC Magazine, vol. 10, No. 20, Nov. 26, 1991, 1 page.
Potter et al., "An Experimental Evaluation of Three Touch Screen Strategies within a Hypertext Database", International Journal of Human-Computer Interaction, vol. 1, No. 1, 1989, pp. 41-52.
Potter et al., "Improving the Accuracy of Touch Screens: An Experimental Evaluation of Three Strategies", CHI '88 ACM, 1988, pp. 27-32.
Public Safety Technologies, "Tracer 2000 Computer", available at <http://www.pst911.com/tracer.html>, retrieved on Dec. 19, 2002, 3 pages.
Apple Computer, Inc., "Apple Announces iTunes 2", Press Release, Oct. 23, 2001, 2 pages.
Rabiner et al., "Digital Processing of Speech Signals", Prentice Hall, 1978, pp. 274-277.
Rampe et al., "SmartForm Designer and SmartForm Assistant", News release, Claris Corp., Jan. 9, 1989, 1 page.
Rao et al., "Exploring Large Tables with the Table Lens", Apple Inc., Video Clip, Xerox Corp., on a CD, 1994.
Rao et al., "Exploring Large Tables with the Table Lens", CHI'95 Mosaic of Creativity, ACM, May 7-11, 1995, pp. 403-404.
Rao et al., "The Table Lens: Merging Graphical and Symbolic Representations in an Interactive Focus+Context Visualization for Tabular Information", Proceedings of the ACM SIGCHI Conference on Human Factors in Computing Systems, Apr. 1994, pp. 1-7.
Raper, Larry K. ,"The C-MU PC Server Project", (CMU-ITC-86-051), Dec. 1986, pp. 1-30.
Ratcliffe et al., "Intelligent Agents Take U.S. Bows", MacWeek, vol. 6, No. 9, Mar. 2, 1992, 1 page.
Reddy, D. R., "Speech Recognition by Machine: A Review", Proceedings of the IEEE, Apr. 1976, pp. 501-531.
Reininger et al., "Speech and Speaker Independent Codebook Design in VQ Coding Schemes", (Proceedings of the IEEE International Acoustics, Speech and Signal Processing Conference, Mar. 1985), as reprinted in Vector Quantization (IEEE Press, 1990), 1990, pp. 271-273.
Ren et al., "Efficient Strategies for Selecting Small Targets on Pen-Based Systems: An Evaluation Experiment for Selection Strategies and Strategy Classifications", Proceedings of the IFIP TC2/TC13 WG2.7/WG13.4 Seventh Working Conference on Engineering for Human-Computer Interaction, vol. 150, 1998, pp. 19-37.
Ren et al., "Improving Selection Performance on Pen-Based Systems: A Study of Pen-Based Interaction for Selection Tasks", ACM Transactions on Computer-Human Interaction, vol. 7, No. 3, Sep. 2000, pp. 384-416.
Ren et al., "The Best among Six Strategies for Selecting a Minute Target and the Determination of the Minute Maximum Size of the Targets on a Pen-Based Computer", Human-Computer Interaction INTERACT, 1997, pp. 85-92.
Apple Computer, Inc., "Apple Introduces iTunes—World's Best and Easiest to Use Jukebox Software", Macworld Expo, Jan. 9, 2001, 2 pages.
Riecken, R D., "Adaptive Direct Manipulation", IEEE Xplore, 1991, pp. 1115-1120.
Rioport, "Rio 500: Getting Started Guide", available at <http://ec1.images-amazon.com/media/i3d/01/A/man-migrate/MANUAL000023453.pdf>, 1999, 2 pages.
Robbin et al., "MP3 Player and Encoder for Macintosh!", SoundJam MP Plus, Version 2.0, 2000, 76 pages.
Robertson et al., "Information Visualization Using 3D Interactive Animation", Communications of the ACM, vol. 36, No. 4, Apr. 1993, pp. 57-71.
Robertson et al., "The Document Lens", UIST '93, Nov. 3-5, 1993, pp. 101-108.
Root, Robert, "Design of a Multi-Media Vehicle for Social Browsing", Bell Communications Research, 1988, pp. 25-38.
Roseberry, Catherine, "How to Pair a Bluetooth Headset & Cell Phone", available at <http://mobileoffice.about.com/od/usingyourphone/ht/blueheadset_p.htm>, retrieved on Apr. 29, 2006, 2 pages.
Rosenberg et al., "An Overview of the Andrew Message System", Information Technology Center Carnegie-Mellon University, Jul. 1987, pp. 99-108.
Rosner et al., "In Touch: A Graphical User Interface Development Tool", IEEE Colloquium on Software Tools for Interface Design, Nov. 8, 1990, pp. 12/1-12/7.
Rossfrank, "Konstenlose Sprachmitteilungins Festnetz", XP002234425, Dec. 10, 2000, pp. 1-4.
Roucos et al., "A Segment Vocoder at 150 B/S", (Proceedings of the IEEE International Acoustics, Speech and Signal Processing Conference, Apr. 1983), as reprinted in Vector Quantization (IEEE Press, 1990), 1990, pp. 246-249.
Roucos et al., "High Quality Time-Scale Modification for Speech", Proceedings of the 1985 IEEE Conference on Acoustics, Speech and Signal Processing, 1985, pp. 493-496.
Sabin et al., "Product Code Vector Quantizers for Waveform and Voice Coding", (IEEE Transactions on Acoustics, Speech and Signal Processing, Jun. 1984), as reprinted in Vector Quantization (IEEE Press, 1990), 1990, pp. 274-288.
Apple Computer, Inc., "Apple's iPod Available in Stores Tomorrow", Press Release, Nov. 9, 2001, 1 page.
Santen, Jan P., "Assignment of Segmental Duration in Text-to-Speech Synthesis", Computer Speech and Language, vol. 8, No. 2, Apr. 1994, pp. 95-128.
Sarawagi, Sunita, "CRF Package Page", available at <http://crf.sourceforge.net/>, retrieved on Apr. 6, 2011, 2 pages.
Sarkar et al., "Graphical Fisheye Views", Communications of the ACM, vol. 37, No. 12, Dec. 1994, pp. 73-83.
Sarkar et al., "Graphical Fisheye Views of Graphs", Systems Research Center, Digital Equipment Corporation,, Mar. 17, 1992, 31 pages.
Sarkar et al., "Graphical Fisheye Views of Graphs", CHI '92 Proceedings of the SIGCHI Conference on Human Factors in Computing Systems, May 3-7, 1992, pp. 83-91.
Sarkar et al., "Stretching the Rubber Sheet: A Metaphor for Viewing Large Layouts on Small Screens", UIST'93, ACM, Nov. 3-5, 1993, pp. 81-91.
Sastry, Ravindra W., "A Need for Speed: A New Speedometer for Runners", submitted to the Department of Electrical Engineering and Computer Science at the Massachusetts Institute of Technology, 1999, pp. 1-42.
Schafer et al., "Digital Representations of Speech Signals", Proceedings of the IEEE, vol. 63, No. 4, Apr. 1975, pp. 662-677.
Schaffer et al., "Navigating Hierarchically Clustered Networks through Fisheye and Full-Zoom Methods", ACM Transactions on Computer-Human Interaction, vol. 3, No. 2, Jun. 1996, pp. 162-188.
Decker et al., "Designing Behaviors for Information Agents", The Robotics Institute, Carnegie-Mellon University, Paper, Jul. 1996, 15 pages.
Decker et al., "Matchmaking and Brokering", The Robotics Institute, Carnegie-Mellon University, Paper, May 1996, 19 pages.
Deerwester et al., "Indexing by Latent Semantic Analysis", Journal of the American Society for Information Science, vol. 41, No. 6, Sep. 1990, 19 pages.
Deller, Jr. et al., "Discrete-Time Processing of Speech Signals", Prentice Hall, ISBN: 0-02-328301-7, 1987, 14 pages.
Digital Equipment Corporation, "Open VMS Software Overview", Software Manual, Dec. 1995, 159 pages.
Domingue et al., "Web Service Modeling Ontology (WSMO)—An Ontology for Semantic Web Services", Position Paper at the W3C Workshop on Frameworks for Semantics in Web Services, Innsbruck, Austria, Jun. 2005, 6 pages.
Donovan, R. E., "A New Distance Measure for Costing Spectral Discontinuities in Concatenative Speech Synthesisers", available at <http://citeseerx.ist.osu.edu/viewdoc/summarv?doi=1 0.1.1.21.6398>, 2001, 4 pages.
Dowding et al., "Gemini: A Natural Language System for Spoken-Language Understanding", Proceedings of the Thirty-First Annual Meeting of the Association for Computational Linguistics, 1993, 8 pages.

(56) **References Cited**

OTHER PUBLICATIONS

Dowding et al., "Interleaving Syntax and Semantics in an Efficient Bottom-Up Parser", Proceedings of the 32nd Annual Meeting of the Association for Computational Linguistics, 1994, 7 pages.
Elio et al., "On Abstract Task Models and Conversation Policies", Proc. Workshop on Specifying and Implementing Conversation Policies, Autonomous Agents'99 Conference, 1999, pp. 1-10.
Epstein et al., "Natural Language Access to a Melanoma Data Base", SRI International, Sep. 1978, 7 pages.
Ericsson et al., "Software Illustrating a Unified Approach to Multimodality and Multilinguality in the In-Home Domain", Talk and Look: Tools for Ambient Linguistic Knowledge, Dec. 2006, 127 pages.
Evi, "Meet Evi: The One Mobile Application that Provides Solutions for your Everyday Problems", Feb. 2012, 3 pages.
Exhibit 1, "Natural Language Interface Using Constrained Intermediate Dictionary of Results", List of Publications Manually Reviewed for the Search of U.S. Pat. No. 7,177,798, Mar. 22, 2013, 1 page.
Feigenbaum et al., "Computer-Assisted Semantic Annotation of Scientific Life Works", Oct. 15, 2007, 22 pages.
Ferguson et al., "TRIPS: An Integrated Intelligent Problem-Solving Assistant", Proceedings of the Fifteenth National Conference on Artificial Intelligence (AAAI-98) and Tenth Conference on Innovative Applications of Artificial Intelligence (IAAI-98), 1998, 7 pages.
Fikes et al., "A Network-Based Knowledge Representation and its Natural Deduction System", SRI International, Jul. 1977, 43 pages.
Frisse, M. E., "Searching for Information in a Hypertext Medical Handbook", Communications of the ACM, vol. 31, No. 7, Jul. 1988, 8 pages.
Gamback et al., "The Swedish Core Language Engine", NOTEX Conference, 1992, 17 pages.
Gannes, Liz, "Alfred App Gives Personalized Restaurant Recommendations", AllThingsD, Jul. 18, 2011, pp. 1-3.
Gautier et al., "Generating Explanations of Device Behavior Using Compositional Modeling and Causal Ordering", CiteSeerx, 1993, pp. 89-97.
Gervasio et al., "Active Preference Learning for Personalized Calendar Scheduling Assistance", CiteSeerx, Proceedings of IUI'05, Jan. 2005, pp. 90-97.
Glass, Alyssa, "Explaining Preference Learning", CiteSeerx, 2006, pp. 1-5.
Glass et al., "Multilingual Language Generation Across Multiple Domains", International Conference on Spoken Language Processing, Japan, Sep. 1994, 5 pages.
Glass et al., "Multilingual Spoken-Language Understanding in the Mit Voyager System", Available online at <http://groups.csail.mit.edu/sls/publications/1995/speechcomm95-voyager.pdf>, Aug. 1995, 29 pages.
Goddeau et al., "A Form-Based Dialogue Manager for Spoken Language Applications", Available online at <http://phasedance.com/pdflicslp96.pdf>, Oct. 1996, 4 pages.
Goddeau et al., "Galaxy: A Human-Language Interface to On-Line Travel Information", International Conference on Spoken Language Processing, Yokohama, 1994, pp. 707-710.
Goldberg et al., "Using Collaborative Filtering to Weave an Information Tapestry", Communications of the ACM, vol. 35, No. 12, Dec. 1992, 10 pages.
Gong et al., "Guidelines for Handheld Mobile Device Interface Design", Proceedings of DSI 2004 Annual Meeting, 2004, pp. 3751-3756.
Gorin et al., "On Adaptive Acquisition of Language", International Conference on Acoustics, Speech and Signal Processing (ICASSP'90), vol. 1, Apr. 1990, 5 pages.
Gotoh et al., "Document Space Models Using Latent Semantic Analysis", In Proceedings of Eurospeech, 1997, 4 pages.
Gray, R. M., "Vector Quantization", IEEE ASSP Magazine, Apr. 1984, 26 pages.
Green, C., "The Application of Theorem Proving to Question-Answering Systems", SRI Stanford Research Institute, Artificial Intelligence Group, Jun. 1969, 169 pages.
Gregg et al., "DSS Access on the WWW: An Intelligent Agent Prototype", Proceedings of the Americas Conference on Information Systems, Association for Information Systems, 1998, 3 pages.
Grishman et al., "Computational Linguistics: An Introduction", Cambridge University Press, 1986, 172 pages.
Grosz et al., "Dialogic: A Core Natural-Language Processing System", SRI International, Nov. 1982, 17 pages.
Grosz et al., "Research on Natural-Language Processing at SRI", SRI International, Nov. 1981, 21 pages.
Grosz, B., "Team: A Transportable Natural-Language Interface System", Proceedings of the First Conference on Applied Natural Language Processing, 1983, 7 pages.
Grosz et al., "TEAM: An Experiment in the Design of Transportable Natural-Language Interfaces", Artificial Intelligence, vol. 32, 1987, 71 pages.
Gruber, Tom, "(Avoiding) the Travesty of the Commons", Presentation at NPUC, New Paradigms for User Computing, IBM Almaden Research Center, Jul. 24, 2006, 52 pages.
Gruber, Thomas R., "A Translation Approach to Portable Ontology Specifications", Knowledge Systems Laboratory, Technical Report KSL 92-71, Sep. 1992, Revised Apr. 1993, pp. 1-27.
Gruber et al., "An Ontology for Engineering Mathematics", Fourth International Conference on Principles of Knowledge Representation and Reasoning, Available online at <http://www-ksl.stanford.edu/knowledge-sharing/papers/engmath.html>, 1994, pp. 1-22.
Gruber, Thomas R., "Automated Knowledge Acquisition for Strategic Knowledge", Machine Learning, vol. 4, 1989, pp. 293-336.
Gruber, Tom, "Big Think Small Screen: How Semantic Computing in the Cloud will Revolutionize the Consumer Experience on the Phone", Keynote Presentation at Web 3.0 Conference, Jan. 2010, 41 pages.
Gruber et al., "Generative Design Rationale: Beyond the Record and Replay Paradigm", Knowledge Systems Laboratory, Technical Report KSL 92-59, Dec. 1991, Updated Feb. 1993, 24 pages.
Gruber, Thomas R., "Interactive Acquisition of Justifications: Learning "Why" by Being Told "What"", Knowledge Systems Laboratory, Technical Report KSL 91-17, Original Oct. 1990, Revised Feb. 1991, 24 pages.
Gruber et al., "Machine-Generated Explanations of Engineering Models: A Compositional Modeling Approach", Proceedings of International Joint Conference on Artificial Intelligence, 1993, 7 pages.
Gruber et al., "NIKE: A National Infrastructure for Knowledge Exchange", A Whitepaper Advocating and ATP Initiative on Technologies for Lifelong Learning, Oct. 1994, pp. 1-10.
Gruber et al., "Toward a Knowledge Medium for Collaborative Product Development", Proceedings of the Second International Conference on Artificial Intelligence in Design, Jun. 1992, pp. 1-19.
Gruber, Thomas R., "Toward Principles for the Design of Ontologies used for Knowledge Sharing?", International Journal of Human-Computer Studies, vol. 43, No. 5-6, Nov. 1995, pp. 907-928.
Scheifler, R. W., "The X Window System", MIT Laboratory for Computer Science and Gettys, Jim Digital Equipment Corporation and MIT Project Athena; ACM Transactions on Graphics, vol. 5, No. 2, Apr. 1986, pp. 79-109.
Schluter et al., "Using Phase Spectrum Information for Improved Speech Recognition Performance", IEEE International Conference on Acoustics, Speech, and Signal Processing, 2001, pp. 133-136.
Schmandt et al., "A Conversational Telephone Messaging System", IEEE Transactions on Consumer Electronics, vol. CE-30, Aug. 1984, pp. xxi-xxiv.
Schmandt et al., "Phone Slave: A Graphical Telecommunications Interface", Society for Information Display, International Symposium Digest of Technical Papers, Jun. 1984, 4 pages.
Schmandt et al., "Phone Slave: A Graphical Telecommunications Interface", Proceedings of the SID, vol. 26, No. 1, 1985, pp. 79-82.
Schmid, H., "Part-of-speech tagging with neural networks", COLING '94 Proceedings of the 15th conference on Computational linguistics—vol. 1, 1994, pp. 172-176.

(56) **References Cited**

OTHER PUBLICATIONS

Schooler et al., "A Packet-switched Multimedia Conferencing System", by Eve Schooler, et al; ACM SIGOIS Bulletin, vol. I, No. 1, Jan. 1989, pp. 12-22.
Schooler et al., "An Architecture for Multimedia Connection Management", Proceedings IEEE 4th Comsoc International Workshop on Multimedia Communications, Apr. 1992, pp. 271-274.
Schooler et al., "Multimedia Conferencing: Has it Come of Age?", Proceedings 24th Hawaii International Conference on System Sciences, vol. 3, Jan. 1991, pp. 707-716.
Schooler et al., "The Connection Control Protocol: Architecture Overview", USC/Information Sciences Institute, Jan. 28, 1992, pp. 1-6.
Schooler, Eve, "A Distributed Architecture for Multimedia Conference Control", ISI Research Report, Nov. 1991, pp. 1-18.
Schooler, Eve M., "Case Study: Multimedia Conference Control in a Packet-Switched Teleconferencing System", Journal of Internetworking: Research and Experience, vol. 4, No. 2, Jun. 1993, pp. 99-120.
Schooler, Eve M., "The Impact of Scaling on a Multimedia Connection Architecture", Multimedia Systems, vol. 1, No. 1, 1993, pp. 2-9.
Schütze, H., "Distributional part-of-speech tagging", EACL '95 Proceedings of the seventh conference on European chapter of the Association for Computational Linguistics, 1995, pp. 141-148.
Schütze, Hinrich, "Part-of-speech induction from scratch", ACL '93 Proceedings of the 31st annual meeting on Association for Computational Linguistics, 1993, pp. 251-258.
Schwartz et al., "Context-Dependent Modeling for Acoustic-Phonetic Recognition of Continuous Speech", IEEE International Conference on Acoustics, Speech, and Signal Processing, vol. 10, Apr. 1985, pp. 1205-1208.
Schwartz et al., "Improved Hidden Markov Modeling of Phonemes for Continuous Speech Recognition", IEEE International Conference on Acoustics, Speech, and Signal Processing, vol. 9, 1984, pp. 21-24.
Schwartz et al., "The N-Best Algorithm: An Efficient and Exact Procedure for Finding the N Most Likely Sentence Hypotheses", IEEE, 1990, pp. 81-84.
Scott et al., "Designing Touch Screen Numeric Keypads: Effects of Finger Size, Key Size, and Key Spacing", Proceedings of the Human Factors and Ergonomics Society 41st Annual Meeting, Oct. 1997, pp. 360-364.
Seagrave, Jim, "A Faster Way to Search Text", EXE, vol. 5, No. 3, Aug. 1990, pp. 50-52.
Sears et al., "High Precision Touchscreens: Design Strategies and Comparisons with a Mouse", International Journal of Man-Machine Studies, vol. 34, No. 4, Apr. 1991, pp. 593-613.
Sears et al., "Investigating Touchscreen Typing: The Effect of Keyboard Size on Typing Speed", Behavior & Information Technology, vol. 12, No. 1, 1993, pp. 17-22.
Sears et al., "Touchscreen Keyboards", Apple Inc., Video Clip, Human-Computer Interaction Laboratory, on a CD, Apr. 1991.
Seide et al., "Improving Speech Understanding by Incorporating Database Constraints and Dialogue History", Proceedings of Fourth International Conference on Philadelphia,, 1996, pp. 1017-1020.
Shiraki et al., "LPC Speech Coding Based on Variable-Length Segment Quantization", (IEEE Transactions on Acoustics, Speech and Signal Processing, Sep. 1988), as reprinted in Vector Quantization (IEEE Press, 1990), 1990, pp. 250-257.
Shneiderman, Ben, "Designing the User Interface: Strategies for Effective Human-Computer Interaction", Second Edition, 1992, 599 pages.
Shneiderman, Ben, "Designing the User Interface: Strategies for Effective Human-Computer Interaction", Third Edition, 1998, 669 pages.
Shneiderman, Ben, "Direct Manipulation for Comprehensible, Predictable and Controllable User Interfaces", Proceedings of the 2nd International Conference on Intelligent User Interfaces, 1997, pp. 33-39.
Shneiderman, Ben, "Sparks of Innovation in Human-Computer Interaction", 1993, (Table of Contents, Title Page, Ch. 4, Ch. 6 and List of References).
Shneiderman, Ben, "The Eyes Have It: A Task by Data Type Taxonomy for Information Visualizations", IEEE Proceedings of Symposium on Visual Languages, 1996, pp. 336-343.
Shneiderman, Ben, "Touch Screens Now Offer Compelling Uses", IEEE Software, Mar. 1991, pp. 93-94.
Shoham et al., "Efficient Bit and Allocation for an Arbitrary Set of Quantizers", (IEEE Transactions on Acoustics, Speech, and Signal Processing, Sep. 1988) as reprinted in Vector Quantization (IEEE Press, 1990), 1990, pp. 289-296.
Simkovitz, Daniel, "LP-DOS Magnifies the PC Screen", IEEE, 1992, pp. 203-204.
Singh et al., "Automatic Generation of Phone Sets and Lexical Transcriptions", Acoustics, Speech and Signal Processing (ICASSP'00), 2000, 1 page.
Sinitsyn, Alexander, "A Synchronization Framework for Personal Mobile Servers", Proceedings of the Second IEEE Annual Conference on Pervasive Computing and Communications Workshops, Piscataway, 2004, pp. 1, 3 and 5.
Slaney et al., "On the Importance of Time—A Temporal Representation of Sound", Visual Representation of Speech Signals, 1993, pp. 95-116.
Smeaton, Alan F., "Natural Language Processing and Information Retrieval", Information Processing and Management, vol. 26, No. 1, 1990, pp. 19-20.
Smith et al., "Guidelines for Designing User Interface Software", User Lab, Inc., Aug. 1986, pp. 1-384.
Smith et al., "Relating Distortion to Performance in Distortion Oriented Displays", Proceedings of Sixth Australian Conference on Computer-Human Interaction, Nov. 1996, pp. 6-11.
Sony Eiicsson Corporate, "Sony Ericsson to introduce Auto pairing. TM. to Improve Bluetooth.TM. Connectivity Between Headsets and Phones", Press Release, available at <http://www.sonyericsson.com/spg.jsp?cc=global&lc=en&ver=4001&template=pc3_1_ 1&z . . . >, Sep. 28, 2005, 2 pages.
Soong et al., "A High Quality Subband Speech Coder with Backward Adaptive Predictor and Optimal Time-Frequency Bit Assignment", (Proceedings of the IEEE International Acoustics, Speech, and Signal Processing Conference, Apr. 1986), as reprinted in Vector Quantization (IEEE Press, 1990), 1990, pp. 316-319.
Spiller, Karen, "Low-Decibel Earbuds Keep Noise at a Reasonable Level", available at <http://www.nashuatelegraph.com/apps/pbcs.dll/article?Date=20060813&Cate . . . >, Aug. 13, 2006, 3 pages.
Apple Computer, Inc., "Inside Macintosh", vol. VI, 1985.
Srinivas et al., "Monet: A Multi-Media System for Conferencing and Application Sharing in Distributed Systems", CERC Technical Report Series Research Note, Feb. 1992.
Stealth Computer Corporation, "Peripherals for Industrial Keyboards & Pointing Devices", available at <http://www.stealthcomputer.com/peripherals_oeem.htm>, retrieved on Dec. 19, 2002, 6 pages.
Steinberg, Gene, "Sonicblue Rio Car (10 GB, Reviewed: 6 GB)", available at <http://electronics.cnet.com/electronics/0-6342420-1304-4098389.html>, Dec. 12, 2000, 2 pages.
Stent et al., "Geo-Centric Language Models for Local Business Voice Search", AT&T Labs—Research, 2009, pp. 389-396.
Stone et al., "The Movable Filter as a User Interface Tool", CHI '94 Human Factors in Computing Systems, 1994, pp. 306-312.
Su et al., "A Review of ZoomText Xtra Screen Magnification Program for Windows 95", Journal of Visual Impairment & Blindness, Feb. 1998, pp. 116-119.
Su, Joseph C., "A Review of Telesensory's Vista PCI Screen Magnification System", Journal of Visual Impairment & Blindness, Oct. 1998, pp. 705, 707-710.
Sullivan, Danny, "How Google Instant's Autocomplete Suggestions Work", available at <http://searchengineland.com/how-google-instant-autocomplete-suggestions-work-62592>, Apr. 6, 2011, 12 pages.
Summerfield et al., "ASIC Implementation of the Lyon Cochlea Model", Proceedings of the 1992 International Conference on Acoustics, Speech and Signal Processing, IEEE, vol. V, 1992, pp. 673-676.

(56) **References Cited**

OTHER PUBLICATIONS

T3 Magazine, "Creative MuVo TX 256MB", available at <http://www.t3.co.uk/reviews/entertainment/mp3_player/creative_muvo_tx_256mb>, Aug. 17, 2004, 1 page.
TAOS, "TAOS, Inc. Announces Industry's First Ambient Light Sensor to Convert Light Intensity to Digital Signals", News Release, available at <http://www.taosinc.com/presssrelease_090902.htm>, Sep. 16, 2002, 3 pages.
Apple Computer, Inc., "iTunes 2, Playlist Related Help Screens", iTunes v2.0, 2000-2001, 8 pages.
Tello, Ernest R., "Natural-Language Systems", Mastering AI Tools and Techniques, Howard W. Sams & Company, 1988.
TG3 Electronics, Inc., "BL82 Series Backlit Keyboards", available at <http://www.tg3electronics.com/products/backlit/backlit.htm>, retrieved on Dec. 19, 2002, 2 pages.
The HP 150, "Hardware: Compact, Powerful, and Innovative", vol. 8, No. 10, Oct. 1983, pp. 36-50.
Tidwell, Jenifer, "Animated Transition", Designing Interfaces, Patterns for effective Interaction Design, Nov. 2005, First Edition, 4 pages.
Touch, Joseph, "Zoned Analog Personal Teleconferencing", USC / Information Sciences Institute, 1993, pp. 1-19.
Toutanova et al., "Feature-Rich Part-of-Speech Tagging with a Cyclic Dependency Network", Computer Science Dept., Stanford University, Stanford CA 94305-9040, 2003, 8 pages.
Trigg et al., "Hypertext Habitats: Experiences of Writers in NoteCards", Hypertext '87 Papers; Intelligent Systems Laboratory, Xerox Palo Alto Research Center, 1987, pp. 89-108.
Trowbridge, David, "Using Andrew for Development of Educational Applications", Center for Design of Educational Computing, Carnegie-Mellon University (CMU-ITC-85-065), Jun. 2, 1985, pp. 1-6.
Tsao et al., "Matrix Quantizer Design for LPC Speech Using the Generalized Lloyd Algorithm", (IEEE Transactions on Acoustics, Speech and Signal Processing, Jun. 1985), as reprinted in Vector Quantization (IEEE Press, 1990), 1990, pp. 237-245.
Turletti, Thierry, "The INRIA Videoconferencing System (IVS)", Oct. 1994, pp. 1-7.
Uslan et al., "A Review of Henter-Joyce's MAGic for Windows NT", Journal of Visual Impairment and Blindness, Dec. 1999, pp. 666-668.
Uslan et al., "A Review of Supernova Screen Magnification Program for Windows", Journal of Visual Impairment & Blindness, Feb. 1999, pp. 108-110.
Uslan et al., "A Review of Two Screen Magnification Programs for Windows 95: Magnum 95 and LP-Windows", Journal of Visual Impairment & Blindness, Sep.-Oct. 1997, pp. 9-13.
Veiga, Alex, "AT&T Wireless Launching Music Service", available at <http://bizyahoo.com/ap/041005/at_t_mobile_music_5.html?printer=1>, Oct. 5, 2004, 2 pages.
Vogel et al., "Shift: A Technique for Operating Pen-Based Interfaces Using Touch", CHI '07 Proceedings, Mobile Interaction Techniques I, Apr. 28-May 3, 2007, pp. 657-666.
W3C Working Draft, "Speech Synthesis Markup Language Specification for the Speech Interface Framework", available at <http://www.w3org./TR/speech-synthesis>, retrieved on Dec. 14, 2000, 42 pages.
Wadlow, M. G., "The Role of Human Interface Guidelines in the Design of Multimedia Applications", Carnegie Mellon University (To be Published in Current Psychology: Research and Reviews, Summer 1990 (CMU-ITC-91-101), 1990, pp. 1-22.
Walker et al., "The Locus Distributed Operating System 1", University of California Los Angeles, 1983, pp. 49-70.
Wang et al., "An Initial Study on Large Vocabulary Continuous Mandarin Speech Recognition with Limited Training Data Based on Sub-Syllabic Models", International Computer Symposium, vol. 2, 1994, pp. 1140-1145.
Wang et al., "Tone Recognition of Continuous Mandarin Speech Based on Hidden Markov Model", International Journal of Pattern Recognition and Artificial Intelligence, vol. 8, 1994, pp. 233-245.
Ware et al., "The DragMag Image Magnifier", CHI '95 Mosaic of Creativity, May 7-11, 1995, pp. 407-408.
Ware et al., "The DragMag Image Magnifier Prototype I", Apple Inc., Video Clip, Marlon, on a CD, Applicant is not Certain about the Date for the Video Clip., 1995.
Watabe et al., "Distributed Multiparty Desktop Conferencing System: MERMAID", CSCW 90 Proceedings, Oct. 1990, pp. 27-38.
White, George M., "Speech Recognition, Neural Nets, and Brains", Jan. 1992, pp. 1-48.
Wikipedia, "Acoustic Model", available at <http://en.wikipedia.org/wiki/AcousticModel>, retrieved on Sep. 14, 2011, 2 pages.
Wikipedia, "Language Model", available at <http://en.wikipedia.org/wiki/Language_model>, retrieved on Sep. 14, 2011, 3 pages.
Wikipedia, "Speech Recognition", available at <http://en.wikipedia.org/wiki/Speech_recognition>, retrieved on Sep. 14, 2011, 10 pages.
Wilensky et al., "Talking to UNIX in English: An Overview of UC", Communications of the ACM, vol. 27, No. 6, Jun. 1984, pp. 574-593.
Wilson, Mark, "New iPod Shuffle Moves Buttons to Headphones, Adds Text to Speech", available at <http://gizmodo.com/5167946/new-ipod-shuffle-moves-buttons-to-headphones-adds-text-to-speech>, Mar. 11, 2009, 13 pages.
Wirelessinfo, "SMS/MMS Ease of Use (8.0)", available at <http://www.wirelessinfo.com/content/palm-Treo-750-Cell-Phone-Review/Messaging.htm>, Mar. 2007, 3 pages.
Wong et al., "An 800 Bit/s Vector Quantization LPC Vocoder", (IEEE Transactions on Acoustics, Speech and Signal Processing, Oct. 1982), as reprinted in Vector Quantization (IEEE Press, 1990), 1990, pp. 222-232.
Wong et al., "Very Low Data Rate Speech Compression with LPC Vector and Matrix Quantization", (Proceedings of the IEEE Int'l Acoustics, Speech and Signal Processing Conference, Apr. 1983), as reprinted in Vector Quantization (IEEE Press, 1990), 1990, pp. 233-236.
Wu et al., "Automatic Generation of Synthesis Units and Prosodic Information for Chinese Concatenative Synthesis", Speech Communication, vol. 35, No. 3-4, Oct. 2001, pp. 219-237.
Yang et al., "Auditory Representations of Acoustic Signals", IEEE Transactions of Information Theory, vol. 38, No. 2, Mar. 1992, pp. 824-839.
Yang et al., "Hidden Markov Model for Mandarin Lexical Tone Recognition", IEEE Transactions on Acoustics, Speech and Signal Processing, vol. 36, No. 7, Jul. 1988, pp. 988-992.
Yiourgalis et al., "Text-to-Speech system for Greek", ICASSP 91, vol. 1, May 14-17, 1991., pp. 525-528.
Zainab, "Google Input Tools Shows Onscreen Keyboard in Multiple Languages [Chrome]", available at <http://www.addictivetips.com/internet-tips/google-input-tools-shows-multiple-language-onscreen-keyboards-chrome/>, Jan. 3, 2012, 3 pages.
Zelig, "A Review of the Palm Treo 750v", available at <http://www.mtekk.com.au/Articles/tabid/54/articleType/ArticleView/articleId/769/A-Review-of-the-Palm-Treo-750v.aspx>, Feb. 5, 2007, 3 pages.
Zhang et al., "Research of Text Classification Model Based on Latent Semantic Analysis and Improved HS-SVM", Intelligent Systems and Applications (ISA), 2010 2nd International Workshop, May 22-23, 2010, 5 pages.
Ziegler, K, "A Distributed Information System Study", IBM Systems Journal, vol. 18, No. 3, 1979, pp. 374-401.
Zipnick et al., "U.S. Appl. No. 10/859,661, filed Jun. 2, 2004".
"2004 Chrysler Pacifica: U-Connect Hands-Free Communication System", The Best and Brightest of 2004, Brief Article, Automotive Industries, Sep. 2003, 1 page.
"2007 Lexus GS 450h 4dr Sedan (3.5L 6cyl Gas/Electric Hybrid CVT)", available at <http://review.cnet.com/4505-10865_16-31833144.html>, retrieved on Aug. 3, 2006, 10 pages.
"All Music Website", available at <http://www.allmusic.com/>, retrieved on Mar. 19, 2007, 2 pages.
"BluePhoneElite: About", available at <http://www.reelintelligence.com/BluePhoneElite>, retrieved on Sep. 25, 2006, 2 pages.
"Top 10 Best Practices for Voice User Interface Design" available at <http://www.developer.com/voice/article.php/1567051/Top-10-Best-Practices-for-Voice-UserInterface-Design.htm>, Nov. 1, 2002, 4 pages.

(56) **References Cited**

OTHER PUBLICATIONS

Combined Search Report and Examination Report under Sections 17 and 18(3) received for GB Patent Application No. 1009318.5, dated Oct. 8, 2010, 5 pages.
Combined Search Report and Examination Report under Sections 17 and 18(3) received for GB Patent Application No. 1217449.6, dated Jan. 17, 2013, 6 pages.
Aikawa et al., "Speech Recognition Using Time-Warping Neural Networks", Proceedings of the 1991, IEEE Workshop on Neural Networks for Signal Processing, 1991, 10 pages.
Bellegarda et al., "Performance of the IBM Large Vocabulary Continuous Speech Recognition System on the ARPA Wall Street Journal Task", Signal Processing VII: Theories and Applications, European Association for Signal Processing, 1994, 4 pages.
Bellegarda et al., "The Metamorphic Algorithm: A Speaker Mapping Approach to Data Augmentation", IEEE Transactions on Speech and Audio Processing, vol. 2, No. 3, Jul. 1994, 8 pages.
Belvin et al., "Development of the HRL Route Navigation Dialogue System", Proceedings of the First International Conference on Human Language Technology Research, Paper, 2001, 5 pages.
Berry et al., "PTIME: Personalized Assistance for Calendaring", ACM Transactions on Intelligent Systems and Technology, vol. 2, No. 4, Article 40, Jul. 2011, pp. 1-22.
Berry et al., "Task Management under Change and Uncertainty Constraint Solving Experience with the CALO Project", Proceedings of CP'05 Workshop on Constraint Solving under Change, 2005, 5 pages.
Black et al., "Automatically Clustering Similar Units for Unit Selection in Speech Synthesis", Proceedings of Eurospeech, vol. 2, 1997, 4 pages.
Blair et al., "An Evaluation of Retrieval Effectiveness for a Full-Text Document-Retrieval System", Communications of the ACM, vol. 28, No. 3, Mar. 1985, 11 pages.
Bobrow et al., "Knowledge Representation for Syntactic/Semantic Processing", From: AAA-80 Proceedings, Copyright 1980, AAAI, 1980, 8 pages.
Bouchou et al., "Using Transducers in Natural Language Database Query", Proceedings of 4th International Conference on Applications of Natural Language to Information Systems, Austria, Jun. 1999, 17 pages.
Bratt et al., "The SRI Telephone-Based ATIS System", Proceedings of ARPA Workshop on Spoken Language Technology, 1995, 3 pages.
Briner, L. L., "Identifying Keywords in Text Data Processing", In Zelkowitz, Marvin V., ED, Directions and Challenges, 15th Annual Technical Symposium, Gaithersbury, Maryland, Jun. 17, 1976, 7 pages.
Bulyko et al., "Error-Correction Detection and Response Generation in a Spoken Dialogue System", Speech Communication, vol. 45, 2005, pp. 271-288.
Bulyko et al., "Joint Prosody Prediction and Unit Selection for Concatenative Speech Synthesis", Electrical Engineering Department, University of Washington, Seattle, 2001, 4 pages.
Burke et al., "Question Answering from Frequently Asked Question Files", AI Magazine, vol. 18, No. 2, 1997, 10 pages.
Burns et al., "Development of a Web-Based Intelligent Agent for the Fashion Selection and Purchasing Process via Electronic Commerce", Proceedings of the Americas Conference on Information System (AMCIS), Dec. 31, 1998, 4 pages.
Bussey, et al., "Service Architecture, Prototype Description and Network Implications of a Personalized Information Grazing Service", INFOCOM'90, Ninth Annual Joint Conference of the IEEE Computer and Communication Societies, Available online at <http://slrohall.com/oublications/>, Jun. 1990, 8 pages.
Bussler et al., "Web Service Execution Environment (WSMX)", retrieved from Internet on Sep. 17, 2012, available at <http://www.w3.org/Submission/WSMX>, Jun. 3, 2005, 29 pages.
Butcher, Mike, "EVI Arrives in Town to go Toe-to-Toe with Siri", TechCrunch, Jan. 23, 2012, 2 pages.
Buzo et al., "Speech Coding Based Upon Vector Quantization", IEEE Transactions on Acoustics, Speech and Signal Processing, vol. Assp-28, No. 5, Oct. 1980, 13 pages.
Caminero-Gil et al., "Data-Driven Discourse Modeling for Semantic Interpretation", Proceedings of the IEEE International Conference on Acoustics, Speech and Signal Processing, May 1996, 6 pages.
Car Working Group, "Hands-Free Profile 1.5 HFP1.5_SPEC", Bluetooth Doc, available at <www.bluetooth.org>, Nov. 25, 2005, 93 pages.
Carter, D., "Lexical Acquisition in the Core Language Engine", Proceedings of the Fourth Conference of the European Chapter of the Association for Computational Linguistics, 1989, 8 pages.
Carter et al., "The Speech-Language Interface in the Spoken Language Translator", SRI International, Nov. 23, 1994, 9 pages.
Cawley, Gavin C. "The Application of Neural Networks to Phonetic Modelling", PhD. Thesis, University of Essex, Mar. 1996, 13 pages.
Chai et al., "Comparative Evaluation of a Natural Language Dialog Based System and a Menu Driven System for Information Access: A Case Study", Proceedings of the International Conference on Multimedia Information Retrieval (RIAO), Paris, Apr. 2000, 11 pages.
Chang et al., "A Segment-Based Speech Recognition System for Isolated Mandarin Syllables", Proceedings TEN CON '93, IEEE Region 10 Conference on Computer, Communication, Control and Power Engineering, vol. 3, Oct. 1993, 6 pages.
Chen, Yi, "Multimedia Siri Finds and Plays Whatever You Ask for", PSFK Report, Feb. 9, 2012, 9 pages.
Cheyer, Adam, "A Perspective on AI & Agent Technologies for SCM", VerticalNet Presentation, 2001, 22 pages.
Cheyer, Adam, "About Adam Cheyer", available at <http://www.adam.cheyer.com/about.html>, retrieved on Sep. 17, 2012, 2 pages.
Cheyer et al., "Multimodal Maps: An Agent-Based Approach", International Conference on Co-operative Multimodal Communication, 1995, 15 pages.
Cheyer et al., "Spoken Language and Multimodal Applications for Electronic Realties", Virtual Reality, vol. 3, 1999, pp. 1-15.
Cheyer et al., "The Open Agent Architecture", Autonomous Agents and Multi-Agent Systems, vol. 4, Mar. 1, 2001, 6 pages.
Cheyer et al., "The Open Agent Architecture: Building Communities of Distributed Software Agents", Artificial Intelligence Center, SRI International, Power Point Presentation, Available online at <http://www.ai.sri.com/-oaa/>, retrieved on Feb. 21, 1998, 25 pages.
Codd, E. F., "Databases: Improving Usability and Responsiveness—How About Recently", Copyright 1978, Academic Press, Inc., 1978, 28 pages.
Cohen et al., "An Open Agent Architecture", available at <http://citeseerx.ist.psu.edu/viewdoc/summary?doi=10.1.1.30.480>, 1994, 8 pages.
Cohen et al., "Voice User Interface Design,", Excerpts from Chapter 1 and Chapter 10, 2004, 36 pages.
Coles et al., "Chemistry Question-Answering", SRI International, Jun. 1969, 15 pages.
Coles et al., "Techniques for Information Retrieval Using an Inferential Question-Answering System with Natural-Language Input", SRI International, Nov. 1972, 198 Pages.
Coles et al., "The Application of Theorem Proving to Information Retrieval", SRI International, Jan. 1971, 21 pages.
Conklin, Jeff, "Hypertext: An Introduction and Survey", Computer Magazine, Sep. 1987, 25 pages.
Connolly et al., "Fast Algorithms for Complex Matrix Multiplication Using Surrogates", IEEE Transactions on Acoustics, Speech and Signal Processing, vol. 37, No. 6, Jun. 1989, 13 pages.
Constantinides et al., "A Schema Based Approach to Dialog Control", Proceedings of the International Conference on Spoken Language Processing, 1998, 4 pages.
Cox et al., "Speech and Language Processing for Next-Millennium Communications Services", Proceedings of the IEEE, vol. 88, No. 8, Aug. 2000, 24 pages.
Craig et al., "Deacon: Direct English Access and Control", AFIPS Conference Proceedings, vol. 19, San Francisco, Nov. 1966, 18 pages.

(56) **References Cited**

OTHER PUBLICATIONS

Cutkosky et al., "PACT: An Experiment in Integrating Concurrent Engineering Systems", Journal & Magazines, Computer, vol. 26, No. 1, Jan. 1993, 14 pages.
Dar et al., "DTL's DataSpot: Database Exploration Using Plain Language", Proceedings of the 24th VLDB Conference, New York, 1998, 5 pages.
Davis et al., "A Personal Handheld Multi-Modal Shopping Assistant", International Conference on Networking and Services, IEEE, 2006, 9 pages.
SRI, "SRI Speech: Products: Software Development Kits: EduSpeak", available at <http://web.archive.org/web/20090828084033/http://www.speechatsri.com/products/eduspeak>shtml, retrieved on Jun. 20, 2013, 2 pages.
"Mel Scale", Wikipedia the Free Encyclopedia, Last modified on Oct. 13, 2009 and retrieved on Jul. 28, 2010, available at <http://en.wikipedia.org/wiki/Mel_scale>, 2 pages.
"Minimum Phase", Wikipedia the free Encyclopedia, Last modified on Jan. 12, 2010 and retrieved on Jul. 28, 2010, available at <http://en.wikipedia.org/wiki/Minimum_phase>, 8 pages.
Acero et al., "Environmental Robustness in Automatic Speech Recognition", International Conference on Acoustics, Speech and Signal Processing (ICASSP'90), Apr. 1990, 4 pages.
Acero et al., "Robust Speech Recognition by Normalization of the Acoustic Space", International Conference on Acoustics, Speech and Signal Processing, 1991, 4 pages.
Agnas et al., "Spoken Language Translator: First-Year Report", SICS (ISSN 0283-3638), SRI and Telia Research AB, Jan. 1994, 161 pages.
Ahlbom et al., Modeling Spectral Speech Transitions Using Temporal Decomposition Techniques, IEEE International Conference of Acoustics, Speech and Signal Processing (ICASSP'87), vol. 12, Apr. 1987, 4 pages.
Alfred App, "Alfred", available at <http://www.alfredapp.com/>, retrieved on Feb. 8, 2012, 5 pages.
Allen, J., "Natural Language Understanding", 2nd Edition, The Benjamin/Cummings Publishing Company, Inc., 1995, 671 pages.
Alshawi et al., "CLARE: A Contextual Reasoning and Co-operative Response Framework for the Core Language Engine", SRI International, Cambridge Computer Science Research Centre, Cambridge, Dec. 1992, 273 pages.
Alshawi et al., "Declarative Derivation of Database Queries from Meaning Representations", Proceedings of the BANKAI Workshop on Intelligent Information Access, Oct. 1991, 12 pages.
Alshawi et al., "Logical Forms in the Core Language Engine", Proceedings of the 27th Annual Meeting of the Association for Computational Linguistics, 1989, pp. 25-32.
Alshawi et al., "Overview of the Core Language Engine", Proceedings of Future Generation Computing Systems, Tokyo, 13 pages.
Alshawi, H., "Translation and Monotonic Interpretation/Generation", SRI International, Cambridge Computer Science Research Centre, Cambridge, available at <http://www.cam.sri.com/tr/crc024/paper.ps.Z1992>, Jul. 1992, 18 pages.
Ambite et al., "Design and Implementation of the CALO Query Manager", American Association for Artificial Intelligence, 2006, 8 pages.
Ambite et al., "Integration of Heterogeneous Knowledge Sources in the CALO Query Manager", The 4th International Conference on Ontologies, Databases and Applications of Semantics (ODBASE), 2005, 18 pages.
Anastasakos et al., "Duration Modeling in Large Vocabulary Speech Recognition", International Conference on Acoustics, Speech and Signal Processing (ICASSP'95), May 1995, pp. 628-631.
Anderson et al., "Syntax-Directed Recognition of Hand-Printed Two-Dimensional Mathematics", Proceedings of Symposium on Interactive Systems for Experimental Applied Mathematics: Proceedings of the Association for Computing Machinery Inc. Symposium, 1967, 12 pages.
Ansari et al., "Pitch Modification of Speech using a Low-Sensitivity Inverse Filter Approach", IEEE Signal Processing Letters, vol. 5, No. 3, Mar. 1998, pp. 60-62.
Anthony et al., "Supervised Adaption for Signature Verification System", IBM Technical Disclosure, Jun. 1, 1978, 3 pages.
Appelt et al., "Fastus: A Finite-State Processor for Information Extraction from Real-world Text", Proceedings of IJCAI, 1993, 8 pages.
Appelt et al., "SRI International Fastus System MUC-6 Test Results and Analysis", SRI International, Menlo Park, California, 1995, 12 pages.
Apple Computer, "Guide Maker User's Guide", Apple Computer, Inc., Apr. 27, 1994, 8 pages.
Apple Computer, "Introduction to Apple Guide", Apple Computer, Inc., Apr. 28, 1994, 20 pages.
Archbold et al., "A Team User's Guide", SRI International, Dec. 21, 1981, 70 pages.
Asanovic et al., "Experimental Determination of Precision Requirements for Back-Propagation Training of Artificial Neural Networks", Proceedings of the 2nd International Conference of Microelectronics for Neural Networks, 1991, www.ICSI.Berkelev.EDU, 1991, 7 pages.
Atal et al., "Efficient Coding of LPC Parameters by Temporal Decomposition", IEEE International Conference on Acoustics, Speech and Signal Processing (ICASSP'83), Apr. 1983, 4 pages.
Bahl et al., "A Maximum Likelihood Approach to Continuous Speech Recognition", IEEE Transaction on Pattern Analysis and Machine Intelligence, vol. PAMI-5, No. 2, Mar. 1983, 13 pages.
Bahl et al., "A Tree-Based Statistical Language Model for Natural Language Speech Recognition", IEEE Transactions on Acoustics, Speech and Signal Processing, vol. 37, No. 7, Jul. 1989, 8 pages.
Bahl et al., "Acoustic Markov Models Used in the Tangora Speech Recognition System", Proceeding of International Conference on Acoustics, Speech and Signal Processing (ICASSP'88), vol. 1, Apr. 1988, 4 pages.
Bahl et al., "Large Vocabulary Natural Language Continuous Speech Recognition", Proceedings of 1989 International Conference on Acoustics, Speech and Signal Processing, vol. 1, May 1989, 6 pages.
Bahl et al., "Multonic Markov Word Models for Large Vocabulary Continuous Speech Recognition", IEEE Transactions on Speech and Audio Processing, vol. 1, No. 3, Jul. 1993, 11 pages.
Bahl et al., "Speech Recognition with Continuous-Parameter Hidden Markov Models", Proceeding of International Conference on Acoustics, Speech and Signal Processing (ICASSP'88), vol. 1, Apr. 1988, 8 pages.
Banbrook, M., "Nonlinear Analysis of Speech from a Synthesis Perspective", A Thesis Submitted for the Degree of Doctor of Philosophy, The University of Edinburgh, Oct. 15, 1996, 35 pages.
Bear et al., "A System for Labeling Self-Repairs in Speech", SRI International, Feb. 22, 1993, 9 pages.
Bear et al., "Detection and Correction of Repairs in Human-Computer Dialog", SRI International, May 1992, 11 pages.
Bear et al., "Integrating Multiple Knowledge Sources for Detection and Correction of Repairs in Human-Computer Dialog", Proceedings of the 30th Annual Meeting on Association for Computational Linguistics (ACL), 1992, 8 pages.
Bear et al., "Using Information Extraction to Improve Document Retrieval", SRI International, Menlo Park, California, 1998, 11 pages.
Belaid et al., "A Syntactic Approach for Handwritten Mathematical Formula Recognition", IEEE Transactions on Pattern Analysis and Machine Intelligence, vol. PAMI-6, No. 1, Jan. 1984, 7 pages.
Bellegarda et al., "A Latent Semantic Analysis Framework for Large-Span Language Modeling", 5th European Conference on Speech, Communication and Technology (EUROSPEECH'97), Sep. 1997, 4 pages.
Bellegarda et al., "A Multispan Language Modeling Framework for Large Vocabulary Speech Recognition", IEEE Transactions on Speech and Audio Processing, vol. 6, No. 5, Sep. 1998, 12 pages.

(56) **References Cited**

OTHER PUBLICATIONS

Bellegarda et al., "A Novel Word Clustering Algorithm Based on Latent Semantic Analysis", Proceedings of the IEEE International Conference on Acoustics, Speech and Signal Processing (ICASSP'96), vol. 1, 1996, 4 pages.
Bellegarda et al., "Experiments Using Data Augmentation for Speaker Adaptation", International Conference on Acoustics, Speech and Signal Processing (ICASSP'95), May 1995, 4 pages.
Bellegarda, Jerome R., "Exploiting Latent Semantic Information in Statistical Language Modeling", Proceedings of the IEEE, vol. 88, No. 8, Aug. 2000, 18 pages.
Bellegarda, Jerome R., "Interaction-Driven Speech Input-A Data-Driven Approach to the Capture of both Local and Global Language Constraints", available at <http://old.sig.chi.ora/bulletin/1998.2/bellegarda.html>, 1992, 7 pages.
Bellegarda, Jerome R., "Large Vocabulary Speech Recognition with Multispan Statistical Language Models", IEEE Transactions on Speech and Audio Processing, vol. 8, No. 1, Jan. 2000, 9 pages.
Bellegarda et al., "On-Line Handwriting Recognition using Statistical Mixtures", Advances in Handwriting and Drawings: A Multidisciplinary Approach, Europia, 6th International IGS Conference on Handwriting and Drawing, Paris, France, Jul. 1993, 11 pages.
Appelt et al., "SRI: Description of the JV-FASTUS System used for MUC-5", SRI International, Artificial Intelligence Center, 1993, 19 pages.
Bellegarda, Jerome R., "Exploiting both Local and Global Constraints for Multi-Span Statistical Language Modeling", Proceeding of the 1998 IEEE International Conference on Acoustics, Speech and Signal Processing (1CASSP'98), vol. 2, May 1998, 5 pages.
Shimazu et al., "CAPIT: Natural Language Interface Design Tool with Keyword Analyzer and Case-Based Parser", NEG Research & Development, vol. 33, No. 4, Oct. 1992, 11 pages.
Shinkle, L., "Team User's Guide", SRI International, Artificial Intelligence Center, Nov. 1984, 78 pages.
Shklar et al., "InfoHarness: Use of Automatically Generated Metadata for Search and Retrieval of Heterogeneous Information", Proceedings of CAiSE'95, Finland, 1995, 14 pages.
Sigurdsson et al., "Mel Frequency Cepstral Co-efficients: An Evaluation of Robustness of MP3 Encoded Music", Proceedings of the 7th International Conference on Music Information Retrieval, 2006, 4 pages.
Silverman et al., "Using a Sigmoid Transformation for Improved Modeling of Phoneme Duration", Proceedings of the IEEE International Conference on Acoustics, Speech and Signal Processing, Mar. 1999, 5 pages.
Simonite, Tom, "One Easy Way to Make Siri Smarter", Technology Review, Oct. 18, 2011, 2 pages.
Singh, N., "Unifying Heterogeneous Information Models", Communications of the ACM, 1998, 13 pages.
SRI International, "The Open Agent Architecture TM 1.0 Distribution", Open Agent Architecture (OAA), 1999, 2 pages.
Starr et al., "Knowledge-Intensive Query Processing", Proceedings of the 5th KRDB Workshop, Seattle, May 31, 1998, 6 pages.
Stent et al., "The CommandTalk Spoken Dialogue System", SRI International, 1999, pp. 183-190.
Stern et al., "Multiple Approaches to Robust Speech Recognition", Proceedings of Speech and Natural Language Workshop, 1992, 6 pages.
Stickel, Mark E., "A Nonclausal Connection-Graph Resolution Theorem-Proving Program", Proceedings of AAAI'82, 1982, 5 pages.
Sugumaran, V., "A Distributed Intelligent Agent-Based Spatial Decision Support System", Proceedings of the Americas Conference on Information systems (AMCIS), Dec. 31, 1998, 4 pages.
Sycara et al., "Coordination of Multiple Intelligent Software Agents", International Journal of Cooperative Information Systems (IJCIS), vol. 5, No. 2 & 3, 1996, 31 pages.
Sycara et al., "Distributed Intelligent Agents", IEEE Expert, vol. 11, No. 6, Dec. 1996, 32 pages.
Sycara et al., "Dynamic Service Matchmaking among Agents in Open Information Environments", SIGMOD Record, 1999, 7 pages.
Sycara et al., "The RETSINA MAS Infrastructure", Autonomous Agents and Multi-Agent Systems, vol. 7, 2003, 20 pages.
Tenenbaum et al., "Data Structure Using Pascal", Prentice-Hall, Inc., 1981, 34 pages.
Textndrive, "Text'nDrive App Demo-Listen and Reply to your Messages by Voice while Driving!", YouTube Video available at <http://www.youtube.com/watch?v=WaGfzoHsAMw>, Apr. 27, 2010, 1 page.
Tofel, Kevin C., "SpeakTolt: A Personal Assistant for Older iPhones, iPads", Apple News, Tips and Reviews, Feb. 9, 2012, 7 pages.
Tsai et al., "Attributed Grammar—A Tool for Combining Syntactic and Statistical Approaches to Pattern Recognition", IEEE Transactions on Systems, Man and Cybernetics, vol. SMC-10, No. 12, Dec. 1980, 13 pages.
Tucker, Joshua, "Too Lazy to Grab Your TV Remote? Use Siri Instead", Engadget, Nov. 30, 2011, 8 pages.
Tur et al., "The CALO Meeting Assistant System", IEEE Transactions on Audio, Speech and Language Processing, vol. 18, No. 6, Aug. 2010, pp. 1601-1611.
Tur et al., "The CALO Meeting Speech Recognition and Understanding System", Proc. IEEE Spoken Language Technology Workshop, 2008, 4 pages.
Tyson et al., "Domain-Independent Task Specification in the TACITUS Natural Language System", SRI International, Artificial Intelligence Center, May 1990, 16 pages.
Udell, J., "Computer Telephony", BYTE, vol. 19, No. 7, Jul. 1994, 9 pages.
Van Santen, J. P.H., "Contextual Effects on Vowel Duration", Journal Speech Communication, vol. 11, No. 6, Dec. 1992, pp. 513-546.
Vepa et al., "New Objective Distance Measures for Spectral Discontinuities in Concatenative Speech Synthesis", Proceedings of the IEEE 2002 Workshop on Speech Synthesis, 2002, 4 pages.
Verschelde, Jan, "MATLAB Lecture 8. Special Matrices in MATLAB", UIC, Dept. of Math, Stat. & CS, MCS 320, Introduction to Symbolic Computation, 2007, 4 pages.
Vingron, Martin, "Near-Optimal Sequence Alignment", Current Opinion in Structural Biology, vol. 6, No. 3, 1996, pp. 346-352.
Vlingo, "Vlingo Launches Voice Enablement Application on Apple App Store", Press Release, Dec. 3, 2008, 2 pages.
Vlingo Incar, "Distracted Driving Solution with Vlingo InCar", YouTube Video, Available online at <http://www.youtube.com/watch?v=Vqs8XfXxgz4>, Oct. 2010, 2 pages.
Voiceassist, "Send Text, Listen to and Send E-Mail by Voice", YouTube Video, Available online at <http://www.youtube.com/watch?v=0tEU61nHHA4>, Jul. 30, 2009, 1 page.
Voiceonthego, "Voice on the Go (BlackBerry)", YouTube Video, available online at <http://www.youtube.com/watch?v=pJqpWgQS98w>, Jul. 27, 2009, 1 page.
Wahlster et al., "Smartkom: Multimodal Communication with a Life-Like Character", Eurospeech-Scandinavia, 7th European Conference on Speech Communication and Technology, 2001, 5 pages.
Waldinger et al., "Deductive Question Answering from Multiple Resources", New Directions in Question Answering, Published by AAAI, Menlo Park, 2003, 22 pages.
Walker et al., "Natural Language Access to Medical Text", SRI International, Artificial Intelligence Center, Mar. 1981, 23 pages.
Waltz, D., "An English Language Question Answering System for a Large Relational Database", ACM, vol. 21, No. 7, 1978, 14 pages.
Ward et al., "A Class Based Language Model for Speech Recognition", IEEE, 1996, 3 pages.
Ward et al., "Recent Improvements in the CMU Spoken Language Understanding System", ARPA Human Language Technology Workshop, 1994, 4 pages.
Ward, Wayne, "The CMU Air Travel Information Service: Understanding Spontaneous Speech", Proceedings of the Workshop on Speech and Natural Language, HLT '90, 1990, pp. 127-129.
Warren et al., "An Efficient Easily Adaptable System for Interpreting Natural Language Queries", American Journal of Computational Linguistics, vol. 8, No. 3-4 , 1982, 11 pages.

(56) **References Cited**

OTHER PUBLICATIONS

Weizenbaum, J., "ELIZA—A Computer Program for the Study of Natural Language Communication Between Man and Machine", Communications of the ACM, vol. 9, No. 1, Jan. 1966, 10 pages.
Werner et al., "Prosodic Aspects of Speech, Universite de Lausanne", Fundamentals of Speech Synthesis and Speech Recognition: Basic Concepts, State of the Art and Future Challenges, 1994, 18 pages.
Winiwarter et al., "Adaptive Natural Language Interfaces to FAQ Knowledge Bases", Proceedings of 4th International Conference on Applications of Natural Language to Information Systems, Austria, Jun. 1999, 22 pages.
Wolff, M., "Post Structuralism and the ARTFUL Database: Some Theoretical Considerations", Information Technology and Libraries, vol. 13, No. 1, Mar. 1994, 10 pages.
Wu, M., "Digital Speech Processing and Coding", Multimedia Signal Processing, Lecture-2 Course Presentation, University of Maryland, College Park, 2003, 8 pages.
Wu et al., "KDA: A Knowledge-Based Database Assistant", Proceeding of the Fifth International Conference on Engineering (IEEE Cat.No. 89CH2695-5), 1989, 8 pages.
Wu, M., "Speech Recognition, Synthesis, and H.C.I.", Multimedia Signal Processing, Lecture-3 Course Presentation, University of Maryland, College Park, 2003, 11 pages.
Wyle, M. F., "A Wide Area Network Information Filter", Proceedings of First International Conference on Artificial Intelligence on Wall Street, Oct. 1991, 6 pages.
"BluePhoneElite: Features", available at <http://www.reelintelligence.com/BluePhoneElite/features.shtml,>, retrieved on Sep. 25, 2006, 2 pages.
"Digital Audio in the New Era", Electronic Design and Application, No. 6, Jun. 30, 2003, 3 pages.
"Mobile Speech Solutions, Mobile Accessibility", SVOX AG Product Information Sheet, available at <http://www.svox.com/site/bra840604/con782768/mob965831936.aSQ?osLang=1>, Sep. 27, 2012, 1 page.
"N200 Hands-Free Bluetooth Car Kit", available at <www.wirelessground.com>, retrieved on Mar. 19, 2007, 3 pages.
"PhatNoise", Voice Index on Tap, Kenwood Music Keg, available at <http://www. phatnoise.com/kenwood/kenwoodssamail.html>, retrieved on Jul. 13, 2006, 1 page.
"What is Fuzzy Logic?", available at <http://www.cs.cmu.edu>, retrieved on Apr. 15, 1993, 5 pages.
"Windows XP: A Big Surprise!—Experiencing Amazement from Windows XP", New Computer, No. 2, Feb. 28, 2002, 8 pages.
Aikawa et al., "Generation for Multilingual MT", available at <http://mtarchive.info/MTS-2001-Aikawa.pdf>, retrieved on Sep. 18, 2001, 6 pages.
Anhui USTC IFL Ytek Co. Ltd., "Flytek Research Center Information Datasheet", available at <http://www.iflttek.com/english/Research.html>, retrieved on Oct. 15, 2004, 3 pages.
Borden IV, G.R., "An Aural User Interface for Ubiquitous Computing", Proceedings of the 6th International Symposium on Wearable Computers, IEEE, 2002, 2 pages.
Brain, Marshall, "How MP3 Files Work", available at <http://www.howstuffworks.com>, retrieved on Mar. 19, 2007, 4 pages.
Busemann et al., "Natural Language Diaglogue Service for Appointment Scheduling Agents", Technical Report RR-97-02, Deutsches Forschungszentrum fur Kunstliche Intelligenz GmbH, 1997, 8 pages.
Dusan et al., "Multimodal Interaction on PDA's Integrating Speech and Pen Inputs", Eurospeech Geneva, 2003, 4 pages.
Lamel et al., "Generation and synthesis of Broadcast Messages", Proceedings of ESCA-NATO Workshop: Applications of Speech Technology, Sep. 1, 1993, 4 pages.
Lyons et al., "Augmenting Conversations Using Dual-Purpose Speech", Proceedings of the 17th Annual ACM Symposium on User interface Software and Technology, 2004, 10 pages.
Macsimum News, "Apple Files Patent for an Audio Interface for the iPod", available at <http://www.macsimumnews.com/index.php/archive/apple_files_patent_for_an_audio_interface_for_the_ipod>, retrieved on Jul. 13, 2006, 8 pages.
International Search Report and Written Opinion received for PCT Patent Application No. PCT/US2004/016519, dated Nov. 3, 2005, 6 pages.
Invitation to Pay Additional Fees and Partial International Search Report received for PCT Patent Application No. PCT/US2004/016519, dated Aug. 4, 2005, 6 pages.
International Search Report received for PCT Patent Application No. PCT/US2011/037014, dated Oct. 4, 2011, 6 pages.
Invitation to Pay Additional Search Fees received for PCT Application No. PCT/US2011/037014, dated Aug. 2, 2011, 6 pages.
International Search Report and Written Opinion received for PCT Patent Application No. PCT/US2012/043098, dated Nov. 14, 2012, 9 pages.
International Search Report and Written Opinion received for PCT Patent Application No. PCT/US2013/040971, dated Nov. 12, 2013, 11 pages.
Quazza et al., "Actor: A Multilingual Unit-Selection Speech Synthesis System", Proceedings of 4th ISCA Tutorial and Research Workshop on Speech Synthesis, Jan. 1, 2001, 6 pages.
Ricker, Thomas, "Apple Patents Audio User Interface", Engadget, available at <http://www.engadget.com/2006/05/04/apple-patents-audio-user-interface/>, May 4, 2006, 6 pages.
Santaholma, Marianne E., "Grammar Sharing Techniques for Rule-based Multilingual NLP Systems", Proceedings of the 16th Nordic Conference of Computational Linguistics, NODALIDA 2007, May 25, 2007, 8 pages.
Taylor et al., "Speech Synthesis by Phonological Structure Matching", International Speech Communication Association, vol. 2, Section 3, 1999, 4 pages.
Xu et al., "Speech-Based Interactive Games for Language Learning: Reading, Translation, and Question-Answering", Computational Linguistics and Chinese Language Processing, vol. 14, No. 2, Jun. 2009, pp. 133-160.
Yunker, John, "Beyond Borders: Web Globalization Strategies", New Riders, Aug. 22, 2002, 11 pages.
Yang et al., "Smart Sight: A Tourist Assistant System", Proceedings of Third International Symposium on Wearable Computers, 1999, 6 pages.
Yankelovich et al., "Intermedia: The Concept and the Construction of a Seamless Information Environment", Computer Magazine, IEEE, Jan. 1988, 16 pages.
Yoon et al., "Letter-to-Sound Rules for Korean", Department of Linguistics, The Ohio State University, 2002, 4 pages.
Zeng et al., "Cooperative Intelligent Software Agents", The Robotics Institute, Carnegie-Mellon University, Mar. 1995, 13 pages.
Zhao, Y., "An Acoustic-Phonetic-Based Speaker Adaptation Technique for Improving Speaker-Independent Continuous Speech Recognition", IEEE Transactions on Speech and Audio Processing, vol. 2, No. 3, Jul. 1994, pp. 380-394.
Zhao et al., "Intelligent Agents for Flexible Workflow Systems", Proceedings of the Americas Conference on Information Systems (AMCIS), Oct. 1998, 4 pages.
Zovato et al., "Towards Emotional Speech Synthesis: A Rule based Approach", Proceedings of 5th ISCA Speech Synthesis Workshop—Pittsburgh, 2004, pp. 219-220.
Zue, Victor, "Conversational Interfaces: Advances and Challenges", Spoken Language System Group, Sep. 1997, 10 pages.
Zue et al., "From Interface to Content: Translingual Access and Delivery of On-Line Information", Eurospeech, 1997, 4 pages.
Zue et al., "Jupiter: A Telephone-Based Conversational Interface for Weather Information", IEEE Transactions on Speech and Audio Processing, Jan. 2000, 13 pages.
Zue et al., "Pegasus: A Spoken Dialogue Interface for On-Line Air Travel Planning", Speech Communication, vol. 15, 1994, 10 pages.
Zue et al., "The Voyager Speech Understanding System: Preliminary Development and Evaluation", Proceedings of IEEE, International Conference on Acoustics, Speech and Signal Processing, 1990, 4 pages.
Zue, Victor W., "Toward Systems that Understand Spoken Language", ARPA Strategic Computing Institute, Feb. 1994, 9 pages.
International Search Report received for PCT Patent Application No. PCT/GB2009/051684, dated Mar. 12, 2010, 4 pages.

(56) **References Cited**

OTHER PUBLICATIONS

International Preliminary Report on Patentability received for PCT Patent Application No. PCT/GB2009/051684, dated Jun. 23, 2011, 10 pages.
Cucerzan et al., "Bootstrapping a Multilingual Part-of-Speech Tagger in One Person-Day", In Proceedings of the 6th Conference on Natural Language Learning, vol. 20, 2002, pp. 1-7.
Schone et al., "Knowledge-Free Induction of Morphology Using Latent Semantic Analysis", Proceedings of the 2nd Workshop on Learning Language in Logic and the 4th Conference on Computational Natural Language Learning, vol. 7, 2000, pp. 67-72.
Carpendale et al., "3-Dimensional Pliable Surfaces: For the Effective Presentation of Visual Information", UIST '95 Proceedings of the 8th Annual ACM Symposium on User Interface and Software Technology, Nov. 14-17, 1995, pp. 217-226.
Carpendale et al., "Extending Distortion Viewing from 2D to 3D", IEEE Computer Graphics and Applications, Jul./Aug. 1997, pp. 42-51.
Carpendale et al., "Making Distortions Comprehensible", IEEE Proceedings of Symposium on Visual Languages, 1997, 10 pages.
Casner et al., "N-Way Conferencing with Packet Video", The Third International Workshop on Packet Video, Mar. 22-23, 1990, pp. 1-6.
Chakarova et al., "Digital Still Cameras—Downloading Images to a Computer", Multimedia Reporting and Convergence, available at <http://journalism.berkeley.edu/multimedia/tutorials/stillcams/downloading.html>, retrieved on May 9, 2005, 2 pages.
Chartier, David, "Using Multi-Network Meebo Chat Service on Your iPhone", available at <http://www.tuaw.com/2007/07/04/using-multi-network-meebo-chat-service-on-your-iphone/>, Jul. 4, 2007, 5 pages.
Extended European Search Report (includes European Search Report and European Search Opinion) received for European Patent Application No. 06256215.2, dated Feb. 20, 2007, 6 pages.
Extended European Search Report (includes Supplementary European Search Report and Search Opinion) received for European Patent Application No. 07863218.9, dated Dec. 9, 2010, 7 pages.
Extended European Search Report (includes European Search Report and European Search Opinion) received for European Patent Application No. 12186113.2, dated Apr. 28, 2014, 14 pages.
Extended European Search Report (includes European Search Report and European Search Opinion) received for European Patent Application No. 13155688.8, dated Aug. 22, 2013, 11 pages.
ABCOM PTY. Ltd. "12.1" 925 Candela Mobile PC", LCDHardware.com, available at <http://www.lcdhardware.com/pane1/12_1_panel/default.asp.>, retrieved on Dec. 19, 2002, 2 pages.
Cisco Systems, Inc., "Cisco Unity Unified Messaging User Guide", Release 4.0(5), Apr. 14, 2005, 152 pages.
Cisco Systems, Inc., "Installation Guide for Cisco Unity Unified Messaging with Microsoft Exchange 2003/2000 (With Failover Configured)", Release 4.0(5), Apr. 14, 2005, 152 pages.
Cisco Systems, Inc., "Operations Manager Tutorial, Cisco's IPC Management Solution", 2006, 256 pages.
Coleman, David W., "Meridian Mail Voice Mail System Integrates Voice Processing and Personal Computing", Speech Technology, vol. 4, No. 2, Mar./Apr. 1988, pp. 84-87.
Compaq, "Personal Jukebox", available at <http://research.compaq.com/SRC/pjb/>, 2001, 3 pages.
Compaq Inspiration Technology, "Personal Jukebox (PJB)—Systems Research Center and PAAD", Oct. 13, 2000, 25 pages.
Conkie et al., "Preselection of Candidate Units in a Unit Selection-Based Text-to-Speech Synthesis System", ISCA, 2000, 4 pages.
Conklin, Jeffrey, "A Survey of Hypertext", MCC Software Technology Program, Dec. 1987, 40 pages.
Copperi et al., "CELP Coding for High Quality Speech at 8 kbits/s", Proceedings of IEEE International Acoustics, Speech and Signal Processing Conference, Apr. 1986), as reprinted in Vector Quantization (IEEE Press), 1990, pp. 324-327.
Corr, Paul, "Macintosh Utilities for Special Needs Users", available at <http://homepage.mac.com/corrp/macsupt/columns/specneeds.html>, Feb. 1994 (content updated Sep. 19, 1999), 4 pages.
Creative, "Creative NOMAD MuVo", available at <http://web.archive.org/web/20041024075901/www.creative.com/products/product.asp?category=213&subcategory=216&product=4983>, retrieved on Jun. 7, 2006, 1 page.
Creative, "Creative NOMAD MuVo TX", available at <http://web.archive.org/web/20041024175952/www.creative.com/products/pfriendly.asp?product=9672>, retrieved on Jun. 6, 2006, 1 page.
Creative, "Digital MP3 Player", available at <http://web.archive.org/web/20041024074823/www.creative. com/products/product.asp?category=213&subcategory=216&product=4983, 2004, 1 page.
Creative Technology Ltd., "Creative NOMAD®: Digital Audio Player: User Guide (On-Line Version)", available at <http://ec1.images-amazon.com/media/i3d/01/A/man-migrate/MANUAL000010757.pdf>, Jun. 1999, 40 pages.
Creative Technology Ltd., "Creative NOMAD® II: Getting Started—User Guide (On Line Version)", available at <http://ec1.images-amazon.com/media/i3d/01/A/man-migrate/MANUAL000026434.pdf>, Apr. 2000, 46 pages.
Creative Technology Ltd., "Nomad Jukebox", User Guide, Version 1.0, Aug. 2000, 52 pages.
Croft et al., "Task Support in an Office System", Proceedings of the Second ACM-SIGOA Conference on Office Information Systems, 1984, pp. 22-24.
Crowley et al., "MMConf: An Infrastructure for Building Shared Multimedia Applications", CSCW 90 Proceedings, Oct. 1990, pp. 329-342.
Cuperman et al., "Vector Predictive Coding of Speech at 16 kbit s/s", (IEEE Transactions on Communications, Jul. 1985), as reprinted in Vector Quantization (IEEE Press, 1990), 1990, pp. 300-311.
ABF Software, "Lens- Magnifying Glass 1.5", available at <http://download.com/3000-2437-10262078.html?tag=1st-0-1>, retrieved on Feb. 11, 2004, 1 page.
Davis et al., "Stone Soup Translation", Department of Linguistics, Ohio State University, 2001, 11 pages.
De Herrera, Chris, "Microsoft ActiveSync 3.1", Version 1.02, available at <http://www.cewindows.net/wce/activesync3.1.htm>, Oct. 13, 2000, 8 pages.
Degani et al., "'Soft' Controls for Hard Displays: Still a Challenge", Proceedings of the 36th Annual Meeting of the Human Factors Society, 1992, pp. 52-56.
Del Strother, Jonathan, "Coverflow", available at <http://www.steelskies.com/coverflow>, retrieved on Jun. 15, 2006, 14 pages.
Diamond Multimedia Systems, Inc., "Rio PMP300: User's Guide", available at <http://ec1.images-amazon.com/media/i3d/01/A/man-migrate/MANUAL000022854.pdf>, 1998, 28 pages.
Dickinson et al., "Palmtips: Tiny Containers for All Your Data", PC Magazine, vol. 9, Mar. 1990, p. 218(3).
Digital Equipment Corporation, "OpenVMS RTL DECtalk (DTK$) Manual", May 1993, 56 pages.
Donahue et al., "Whiteboards: A Graphical Database Tool", ACM Transactions on Office Information Systems, vol. 4, No. 1, Jan. 1986, pp. 24-41.
Dourish et al., "Portholes: Supporting Awareness in a Distributed Work Group", CHI 1992;, May 1992, pp. 541-547.
Abut et al., "Low-Rate Speech Encoding Using Vector Quantization and Subband Coding", (Proceedings of the IEEE International Acoustics, Speech and Signal Processing Conference, Apr. 1986), as reprinted in Vector Quantization IEEE Press, 1990, pp. 312-315.
dyslexic.com, "AlphaSmart 3000 with CoWriter SmartApplet: Don Johnston Special Needs", available at <http://www.dyslexic.com/procuts.php?catid- 2&pid=465&PHPSESSID=2511b800000f7da>, retrieved on Dec. 6, 2005, 13 pages.
Edwards, John R., "Q&A: Integrated Software with Macros and an Intelligent Assistant", Byte Magazine, vol. 11, No. 1, Jan. 1986, pp. 120-122.
Egido, Carmen, "Video Conferencing as a Technology to Support Group Work: A Review of its Failures", Bell Communications Research, 1988, pp. 13-24.
Elliot, Chip, "High-Quality Multimedia Conferencing Through a Long-Haul Packet Network", BBN Systems and Technologies, 1993, pp. 91-98.
Elliott et al., "Annotation Suggestion and Search for Personal Multimedia Objects on the Web", CIVR, Jul. 7-9, 2008, pp. 75-84.

(56) **References Cited**

OTHER PUBLICATIONS

Elofson et al., "Delegation Technologies: Environmental Scanning with Intelligent Agents", Jour. of Management Info. Systems, Summer 1991, vol. 8, No. 1, 1991, pp. 37-62.
Eluminx, "Illuminated Keyboard", available at <http://www.elumix.com/>, retrieved on Dec. 19, 2002, 1 page.
Engst, Adam C., "SoundJam Keeps on Jammin'", available at <http://db.tidbits.com/getbits.acgi?tbart=05988>, Jun. 19, 2000, 3 pages.
Ericsson Inc., "Cellular Phone with Integrated MP3 Player", Research Disclosure Journal No. 41815, Feb. 1999, 2 pages.
Eslambolchilar et al., "Making Sense of Fisheye Views", Second Dynamics and Interaction Workshop at University of Glasgow, Aug. 2005, 6 pages.
Eslambolchilar et al., "Multimodal Feedback for Tilt Controlled Speed Dependent Automatic Zooming", UIST'04, Oct. 24-27, 2004, 2 pages.
Fanty et al., "A Comparison of DFT, PLP and Cochleagram for Alphabet Recognition", IEEE, Nov. 1991.
Findlater et al., "Beyond QWERTY: Augmenting Touch-Screen Keyboards with Multi-Touch Gestures for Non-Alphanumeric Input", CHI '12, Austin, Texas, USA, May 5-10, 2012, 4 pages.
Fisher et al., "Virtual Environment Display System", Interactive 3D Graphics, Oct. 23-24, 1986, pp. 77-87.
Forsdick, Harry, "Explorations into Real-Time Multimedia Conferencing", Proceedings of the Ifip Tc 6 International Symposium on Computer Message Systems, 1986, 331 pages.
Furnas et al., "Space-Scale Diagrams: Understanding Multiscale Interfaces", CHI '95 Proceedings of the SIGCHI Conference on Human Factors in Computing Systems, 1995, pp. 234-241.
Furnas, George W., "Effective View Navigation", Proceedings of the ACM SIGCHI Conference on Human Factors in Computing Systems, Mar. 1997, pp. 367-374.
Furnas, George W., "Generalized Fisheye Views", CHI '86 Proceedings of the SIGCHi Conference on Human Factors in Computing Systems, vol. 17, No. 4, Apr. 1986, pp. 16-23.
Furnas, George W., "The Fisheye Calendar System", Bellcore Technical Memorandum, Nov. 19, 1991.
Gardner, Jr., P. C., "A System for the Automated Office Environment", IBM Systems Journal, vol. 20, No. 3, 1981, pp. 321-345.
Garretson, R., "IBM Adds 'Drawing Assistant' Design Tool to Graphic Series", PC Week, vol. 2, No. 32, Aug. 13, 1985, 1 page.
Gaver et al., "One Is Not Enough: Multiple Views in a Media Space", INTERCHI, Apr. 24-29, 1993, pp. 335-341.
Gaver et al., "Realizing a Video Environment: EuroPARC's RAVE System", Rank Xerox Cambridge EuroPARC, 1992, pp. 27-35.
Giachin et al., "Word Juncture Modeling Using Inter-Word Context-Dependent Phone-Like Units", Cselt Technical Reports, vol. 20, No. 1, Mar. 1992, pp. 43-47.
Gillespie, Kelly, "Adventures in Integration", Data Based Advisor, vol. 9, No. 9, Sep. 1991, pp. 90-92.
Gillespie, Kelly, "Internationalize Your Applications with Unicode", Data Based Advisor, vol. 10, No. 10, Oct. 1992, pp. 136-137.
Gilloire et al., "Innovative Speech Processing for Mobile Terminals: An Annotated Bibliography", Signal Processing, vol. 80, No. 7, Jul. 2000, pp. 1149-1166.
Glinert-Stevens, Susan, "Microsoft Publisher: Desktop Wizardry", PC Sources, vol. 3, No. 2, Feb. 1992, 1 page.
Gmail, "About Group Chat", available at <http://mail.google.com/support/bin/answer.py?answer=81090>, Nov. 26, 2007, 2 pages.
Goldberg, Cheryl, "IBM Drawing Assistant: Graphics for the EGA", PC Magazine, vol. 4, No. 26, Dec. 24, 1985, 1 page.
Good et al., "Building a User-Derived Interface", Communications of the ACM; (Oct. 1984) vol. 27, No. 10, Oct. 1984, pp. 1032-1043.
Gray et al., "Rate Distortion Speech Coding with a Minimum Discrimination Information Distortion Measure", (IEEE Transactions on Information Theory, Nov. 1981), as reprinted in Vector Quantization (IEEE Press), 1990, pp. 208-221.
Greenberg, Saul, "A Fisheye Text Editor for Relaxed-Wysiwis Groupware", CHI '96 Companion, Vancouver, Canada, Apr. 13-18, 1996, 2 pages.
Griffin et al., "Signal Estimation From Modified Short-Time Fourier Transform", IEEE Transactions on Acoustics, Speech and Signal Processing, vol. ASSP-32, No. 2, Apr. 1984, pp. 236-243.
Gruhn et al., "A Research Perspective on Computer-Assisted Office Work", IBM Systems Journal, vol. 18, No. 3, 1979, pp. 432-456.
Hain et al., "The Papageno TTS System", Siemens AG, Corporate Technology, Munich, Germany TC-STAR Workshop, 2006, 6 pages.
Halbert, D. C., "Programming by Example", Dept. Electrical Engineering and Comp. Sciences, University of California, Berkley, Nov. 1984, pp. 1-76.
Hall, William S., "Adapt Your Program for Worldwide Use with Windows.TM. Internationalization Support", Microsoft Systems Journal, vol. 6, No. 6, Nov./Dec. 1991, pp. 29-58.
Haoui et al., "Embedded Coding of Speech: A Vector Quantization Approach", (Proceedings of the IEEE International Acoustics, Speech and Signal Processing Conference, Mar. 1985), as reprinted in Vector Quantization (IEEE Press, 1990), 1990, pp. 297-299.
Hartson et al., "Advances in Human-Computer Interaction", Chapters 1, 5, and 6, vol. 3, 1992, 121 pages.
Heger et al., "KNOWBOT: An Adaptive Data Base Interface", Nuclear Science and Engineering, V. 107, No. 2, Feb. 1991, pp. 142-157.
Hendrix et al., "The Intelligent Assistant: Technical Considerations Involved in Designing q&a's Natural-Language Interface", Byte Magazine, Issue 14, Dec. 1987, 1 page.
Heyer et al., "Exploring Expression Data: Identification and Analysis of Coexpressed Genes", Genome Research, vol. 9, 1999, pp. 1106-1115.
Hill, R. D., "Some Important Features and Issues in User Interface Management System", Dynamic Graphics Project, University of Toronto, CSRI, vol. 21, No. 2, Apr. 1987, pp. 116-120.
Hinckley et al., "A Survey of Design Issues in Spatial Input", UIST '94 Proceedings of the 7th Annual ACM Symposium on User Interface Software and Technology, 1994, pp. 213-222.
Hiroshi, "TeamWork Station: Towards a Seamless Shared Workspace", NTT Human Interface Laboratories, CSCW 90 Proceedings, Oct. 1990, pp. 13-26.
Holmes, "Speech System and Research", 1955, pp. 129-135, 152-153.
Hon et al., "Towards Large Vocabulary Mandarin Chinese Speech Recognition", Conference on Acoustics, Speech, and Signal Processing, ICASSP-94, IEEE International, vol. 1, Apr. 1994, pp. 545-548.
Hopper, Andy, "Pandora—An Experimental System for Multimedia Applications", Olivetti Research Laboratory, Apr. 1990, pp. 19-34.
Howard, John H., "(Abstract) An Overview of the Andrew File System", Information Technology Center, Carnegie Mellon University; (CMU-ITC-88-062) To Appear in a future issue of the ACM Transactions on Computer Systems, 1988, pp. 1-6.
Huang et al., "Real-Time Software-Based Video Coder for Multimedia Communication Systems", Department of Computer Science and Information Engineering, 1993, 10 pages.
Hukin, R. W., "Testing an Auditory Model by Resynthesis", European Conference on Speech Communication and Technology, Sep. 26-29, 1989, pp. 243-246.
Hunt, "Unit Selection in a Concatenative Speech Synthesis System Using a Large Speech Database", Copyright 1996 IEEE. "To appear in Proc. ICASSP-96, May 7-10, Atlanta, GA" ATR Interpreting Telecommunications Research Labs, Kyoto Japan, 1996, pp. 373-376.
IBM, "Why Buy: ThinkPad", available at <http://www.pc.ibm.com/us/thinkpad/easeofuse.html>, retrieved on Dec. 19, 2002, 2 pages.
IBM Corporation, "Simon Says Here's How", Users Manual, 1994, 3 pages.
IChat AV, "Video Conferencing for the Rest of Us", Apple—Mac OS X—iChat AV, available at <http://www.apple.com/macosx/features/ichat/>, retrieved on Apr. 13, 2006, 3 pages.
IPhone Hacks, "Native iPhone MMS Application Released", available at <http://www.iphonehacks.com/2007/12/iphone-mms-app.html>, retrieved on Dec. 25, 2007, 5 pages.

(56) **References Cited**

OTHER PUBLICATIONS

Iphonechat, "iChat for iPhone in JavaScript", available at <http://www.publictivity.com/iPhoneChat/>, retrieved on Dec. 25, 2007, 2 pages.
Jabra, "Bluetooth Headset: User Manual", 2005, 17 pages.
Omologo et al., "Microphone Array Based Speech Recognition with Different Talker-Array Positions", IEEE International Conference on Acoustics, Speech, and Signal Processing, vol. 1, Apr. 21-24, 1997, pp. 227-230.
Oregon Scientific, "512MB Waterproof MP3 Player with FM Radio & Built-in Pedometer", available at <http://www2.oregonscientific.com/shop/product.asp?cid=4&scid=11&pid=581>, retrieved on Jul. 31, 2006, 2 pages.
Oregon Scientific, "Waterproof Music Player with FM Radio and Pedometer (MP121)—User Manual", 2005, 24 pages.
Padilla, Alfredo, "Palm Treo 750 Cell Phone Review—Messaging", available at <http://www.wirelessinfo.com/content/palm-Treo-750-Cell-Phone-Review/Messaging.htm>, Mar. 17, 2007, 6 pages.
Palay et al., "The Andrew Toolkit: An Overview", Information Technology Center, Carnegie-Mellon University, 1988, pp. 1-15.
Palm, Inc., "User Guide : Your Palm® Treo.TM. 755p Smartphone", 2005-2007, 304 pages.
Panasonic, "Toughbook 28: Powerful, Rugged and Wireless", Panasonic: Toughbook Models, available at <http://www.panasonic.com/computer/notebook/html/01a_s8.htm>, retrieved on Dec. 19, 2002, 3 pages.
Parks et al., "Classification of Whale and Ice Sounds with a cochlear Model", IEEE, Mar. 1992.
Patterson et al., "Rendezvous: An Architecture for Synchronous Multi-User Applications", CSCW '90 Proceedings, 1990, pp. 317-328.
International Search Report received for PCT Patent Application No. PCT/US2002/033330, dated Feb. 4, 2003, 6 pages.
Ahmed et al., "Intelligent Natural Language Query Processor", TENCON '89, Fourth IEEE Region 10 International Conference, Nov. 22-24, 1989, pp. 47-49.
Ahuja et al., "A Comparison of Application Sharing Mechanisms in Real-Time Desktop Conferencing Systems", AT&T Bell Laboratories, 1990, pp. 238-248.
International Search Report and Written Opinion received for PCT Patent Application No. PCT/US2005/038819, dated Apr. 5, 2006, 12 pages.
International Search Report received for PCT Patent Application No. PCT/US2005/046797, dated Nov. 24, 2006, 6 pages.
Invitation to Pay Additional Fees and Partial Search Report received for PCT Application No. PCT/US2005/046797, dated Jul. 3, 2006, 6 pages.
Written Opinion received for PCT Patent Application No. PCT/US2005/046797, dated Nov. 24, 2006, 9 pages.
International Search Report and Written Opinion received for PCT Patent Application No. PCT/US2006/048669, dated Jul. 2, 2007, 12 pages.
International Search Report and Written Opinion received for PCT Patent Application No. PCT/US2006/048670, dated May 21, 2007, 11 pages.
Invitation to Pay Addition Fees and Partial International Search Report received for PCT Patent Application No. PCT/US2006/048738, dated Jul. 10, 2007, 4 pages.
International Search Report and Written Opinion received for PCT Patent Application No. PCT/US2006/048753, dated Jun. 19, 2007, 15 pages.
International Search Report and Written Opinion received for PCT Patent Application No. PCT/US2007/026243, dated Mar. 31, 2008, 10 pages.
International Search Report and Written Opinion received for PCT Patent Application No. PCT/US2007/077424, dated Jun. 19, 2008, 13 pages.
Invitation to Pay Additional Fees received for PCT Application No. PCT/US2007/077424, dated Apr. 29, 2008, 6 pages.
International Search Report and Written Opinion received for PCT Patent Application No. PCT/US2007/077443, dated Feb. 21, 2008, 8 pages.
International Search Report and Written Opinion received for PCT Patent Application No. PCT/US2007/088872, dated May 8, 2008, 8 pages.
International Search Report and Written Opinion received for PCT Patent Application No. PCT/US2007/088873, dated May 8, 2008, 7 pages.
International Search Report and Written Opinion received for PCT Patent Application No. PCT/US2008/000032, dated Jun. 12, 2008, 7 pages.
International Search Report and Written Opinion received for PCT Patent Application No. PCT/US2008/000042, dated May 21, 2008, 7 pages.
International Search Report and Written Opinion received for PCT Patent Application No. PCT/US2008/000043, dated Oct. 10, 2008, 12 pages.
Invitation to Pay Additional Fees received for PCT Patent Application No. PCT/US2008/000043, dated Jun. 27, 2008, 4 pages.
International Search Report and Written Opinion received for PCT Patent Application No. PCT/US2008/000045, dated Jun. 12, 2008, 7 pages.
International Search Report and Written Opinion received for PCT Patent Application No. PCT/US2008/000047, dated Sep. 11, 2008, 12 pages.
Invitation to Pay Additional Fees received for PCT Patent Application No. PCT/US2008/000047, dated Jul. 4, 2008, 4 pages.
International Search Report and Written Opinion received for PCT Patent Application No. PCT/US2008/000059, dated Sep. 19, 2008, 18 pages.
International Search Report and Written Opinion received for PCT Patent Application No. PCT/US2008/000061, dated Jul. 1, 2008, 13 pages.
International Search Report and Written Opinion received for PCT Patent Application No. PCT/US2008/050083, dated Jul. 4, 2008, 9 pages.
International Search Report and Written Opinion received for PCT Patent Application No. PCT/US2011/020350, dated Jun. 30, 2011, 17 pages.
Invitation to Pay Additional Fees and Partial International Search Report received for PCT Patent Application No. PCT/US2011/020350, dated Apr. 14, 2011, 5 pages.
International Preliminary Report on Patentability received for PCT Patent Application No. PCT/US2011/020861, dated Aug. 2, 2012, 11 pages.
Aikawa, K. "Time-Warping Neural Network for Phoneme Recognition", IEEE International Joint Conference on Neural Networks, vol. 3, Nov. 18-21, 1991, pp. 2122-2127.
Allen et al., "Automated Natural Spoken Dialog", Computer, vol. 35, No. 4, Apr. 2002, pp. 51-56.
Alleva et al., "Applying SPHINX-II to DARPA Wall Street Journal CSR Task", Proceedings of Speech and Natural Language Workshop, Feb. 1992, pp. 393-398.
Amrel Corporation, "Rocky Matrix BackLit Keyboard", available at <http://www.amrel.com/asi_matrixkeyboard.html>, retrieved on Dec. 19, 2002, 1 page.
International Search Report and Written Opinion received for PCT Patent Application No. PCT/US2012/034028, dated Jun. 11, 2012, 9 pages.
International Search Report and Written Opinion received for PCT Patent Application No. PCT/US2012/040931, dated Feb. 1, 2013, 4 pages. (International Search Report only).
Apple, "VoiceOver", available at <http://www.apple.com/accessibility/voiceover/>, Feb. 2009, 5 pages.
Apple Computer, Inc., "Apple—iPod—Technical Specifications, iPod 20GB and 60GB Mac + PC", available at <http://www.apple.com/ipod/color/specs.html>, 2005, 3 pages.
International Search Report and Written Opinion received for PCT Patent Application No. PCT/US2013/041225, dated on Aug. 23, 2013, 3 pages. (International Search Report only).
Invitation to Pay Additional Fees received for PCT Patent Application No. PCT/US2013/047659, dated Feb. 27, 2014, 7 pages.

(56) **References Cited**

OTHER PUBLICATIONS

Invitation to Pay Additional Fees received for PCT Application No. PCT/US2013/052558, dated Nov. 7, 2013, 6 pages.

* cited by examiner

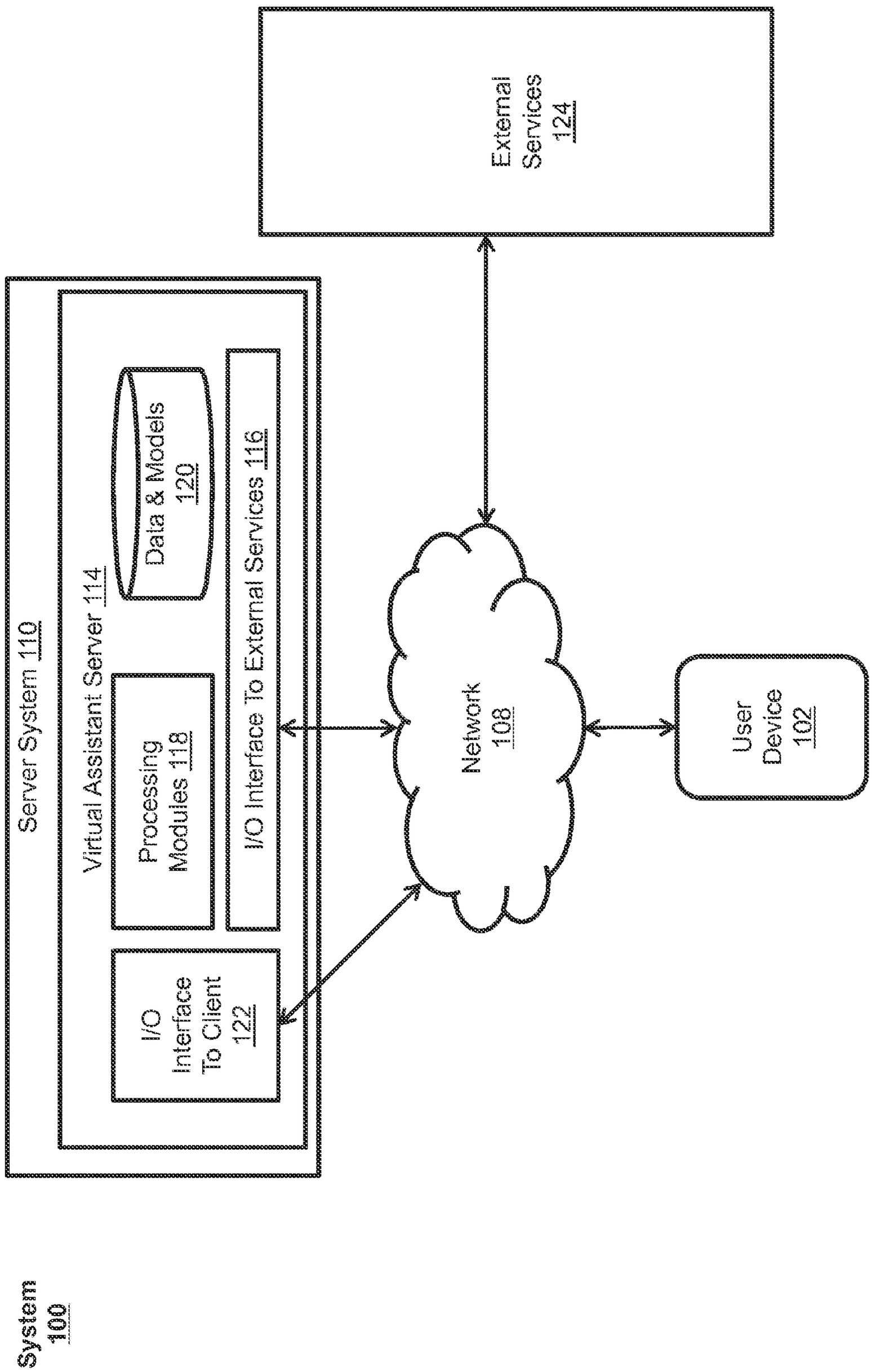
External Services 124
Server System 110
Virtual Assistant Server 114
Data & Models 120
Processing Modules 118
I/O Interface To External Services 116
I/O Interface To Client 122
Network 108
User Device 102
System 100

FIG. 1

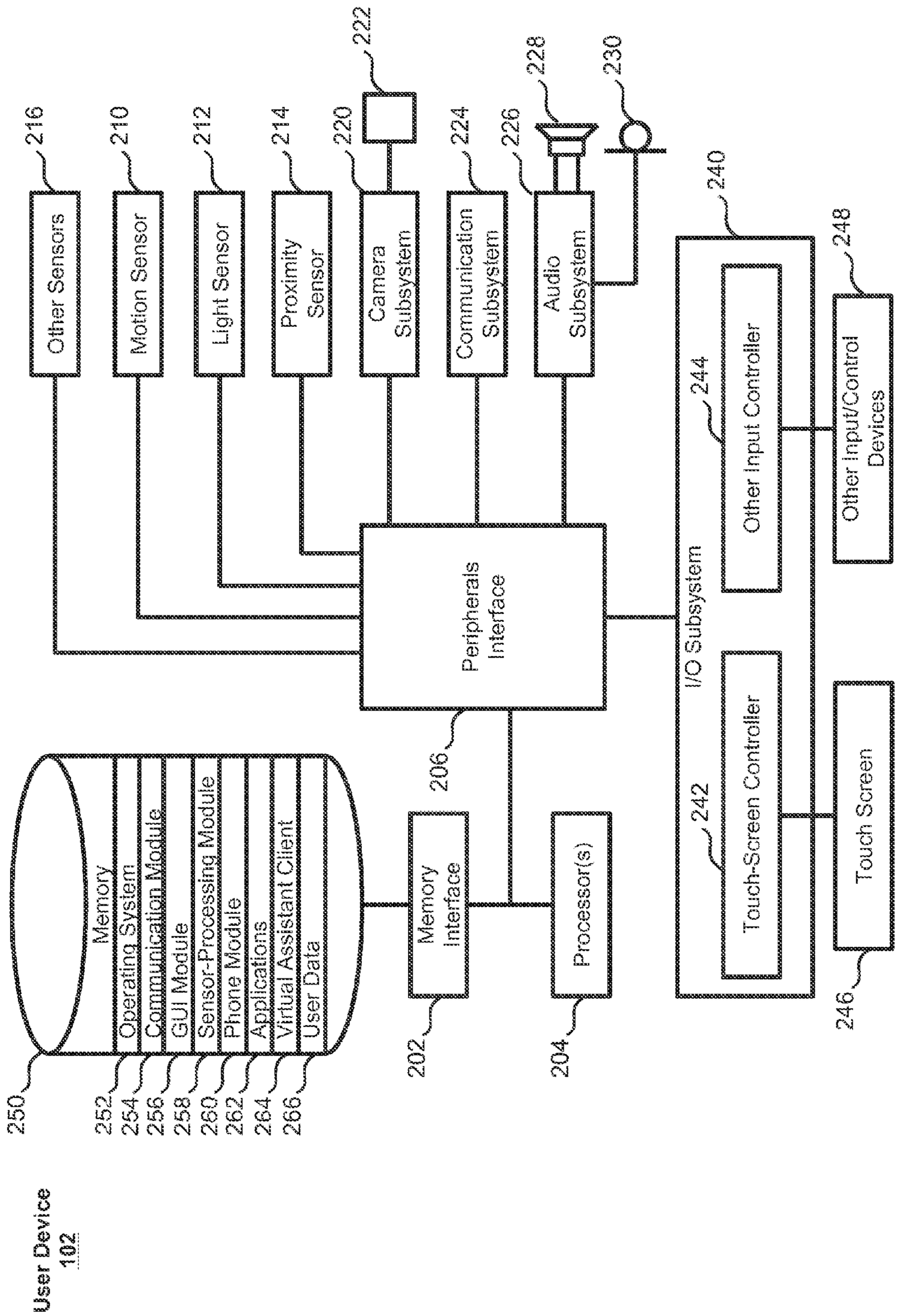
Other Sensors
216
Motion Sensor
210
Light Sensor
212
Proximity Sensor
214
Camera Subsystem
220
222
Communication Subsystem
224
Audio Subsystem
226
228
230
Peripherals Interface
206
I/O Subsystem
240
Other Input Controller
244
Touch-Screen Controller
242
Other Input/Control Devices
248
Touch Screen
246
Memory
250
Operating System
252
Communication Module
254
GUI Module
256
Sensor-Processing Module
258
Phone Module
260
Applications
262
Virtual Assistant Client
264
User Data
266
Memory Interface
202
Processor(s)
204
User Device
102

FIG. 2

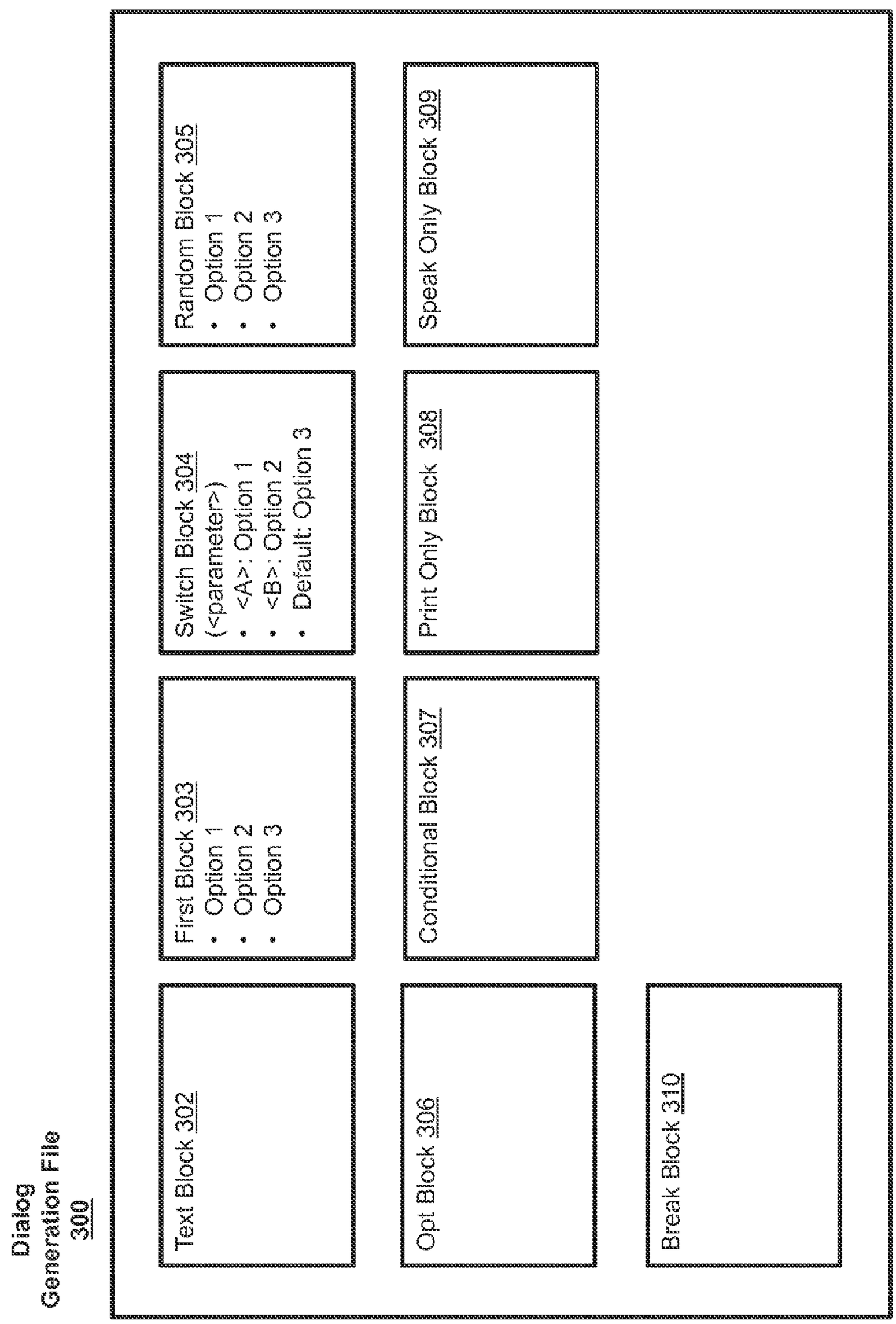
Dialog Generation File 300
Text Block 302
First Block 303
• Option 1
• Option 2
• Option 3
Switch Block 304
(<parameter>)
• <A>: Option 1
• <B>: Option 2
• Default: Option 3
Random Block 305
• Option 1
• Option 2
• Option 3
Opt Block 306
Conditional Block 307
Print Only Block 308
Speak Only Block 309
Break Block 310

FIG. 3

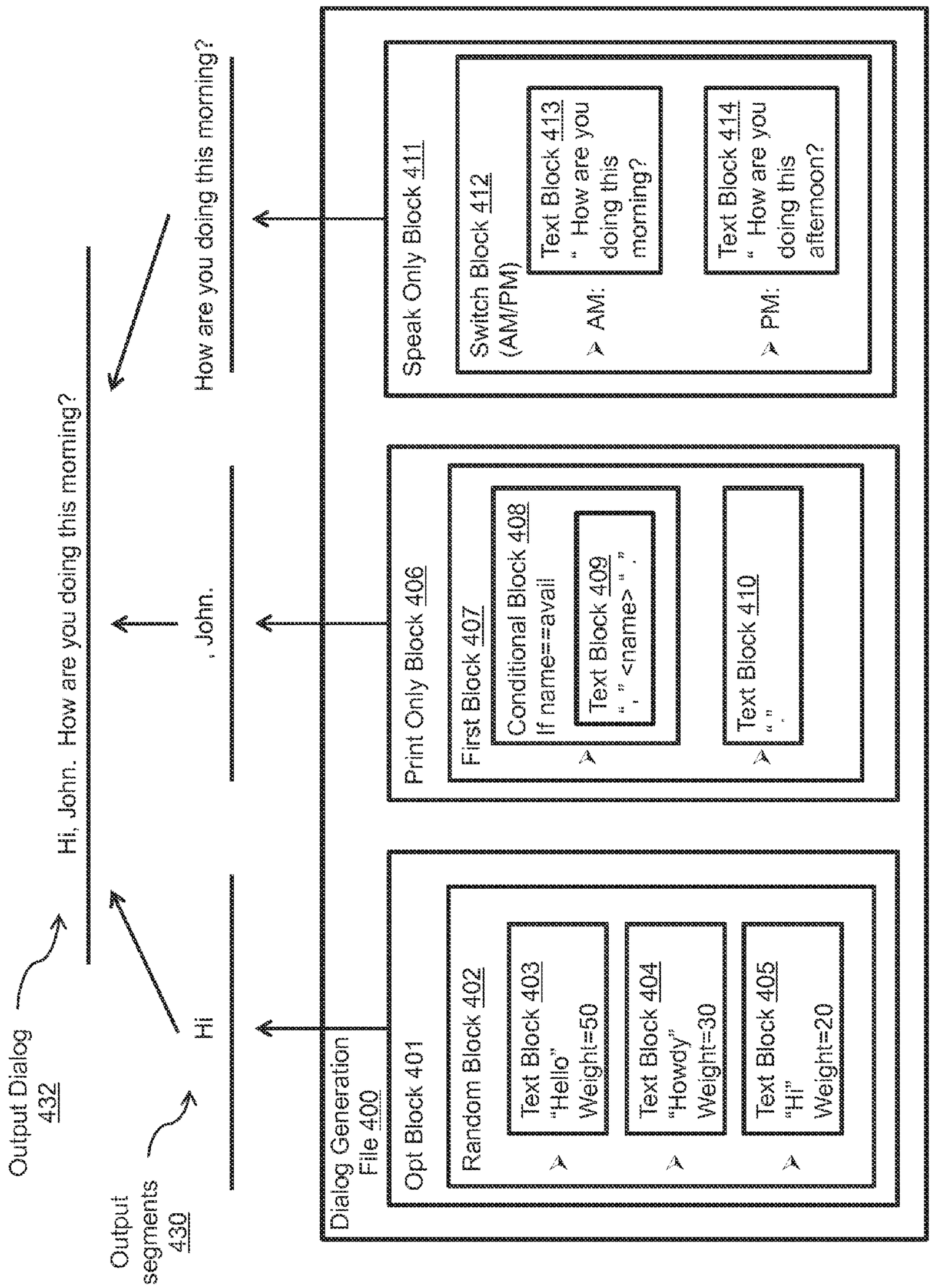
Output Dialog 432
Hi, John. How are you doing this morning?
Output segments 430
Hi
, John.
How are you doing this morning?
Dialog Generation File 400
Opt Block 401
Random Block 402
Text Block 403 "Hello" Weight=50
Text Block 404 "Howdy" Weight=30
Text Block 405 "Hi" Weight=20
Print Only Block 406
First Block 407
Conditional Block 408 If name==avail
Text Block 409 " , " <name> " ! "
Text Block 410 " ? "
Speak Only Block 411
Switch Block 412 (AM/PM)
AM:
Text Block 413 " How are you doing this morning? "
PM:
Text Block 414 " How are you doing this afternoon? "

FIG. 4

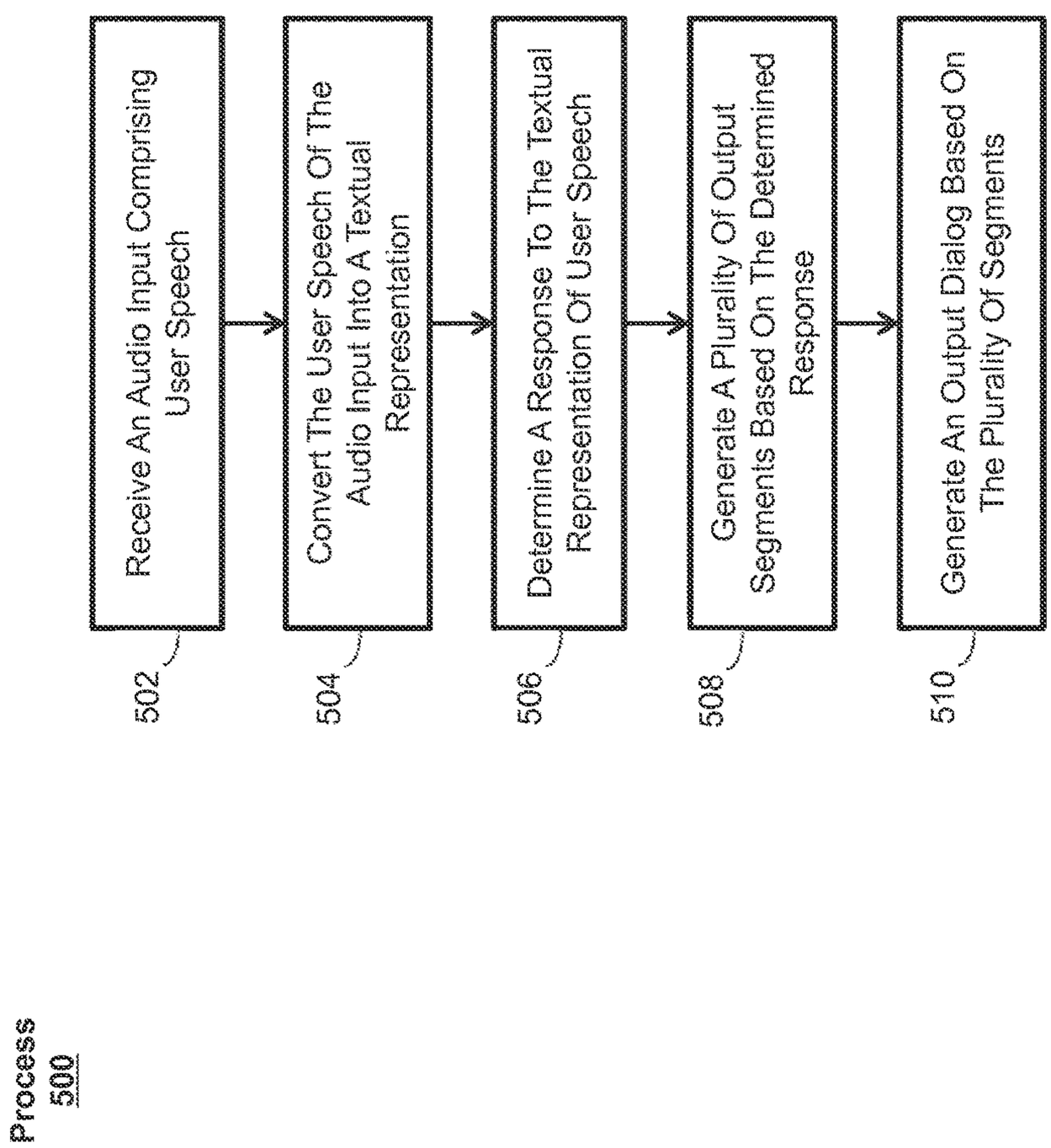
Process
500
Receive An Audio Input Comprising User Speech
502
Convert The User Speech Of The Audio Input Into A Textual Representation
504
Determine A Response To The Textual Representation Of User Speech
506
Generate A Plurality Of Output Segments Based On The Determined Response
508
Generate An Output Dialog Based On The Plurality Of Segments
510

FIG. 5

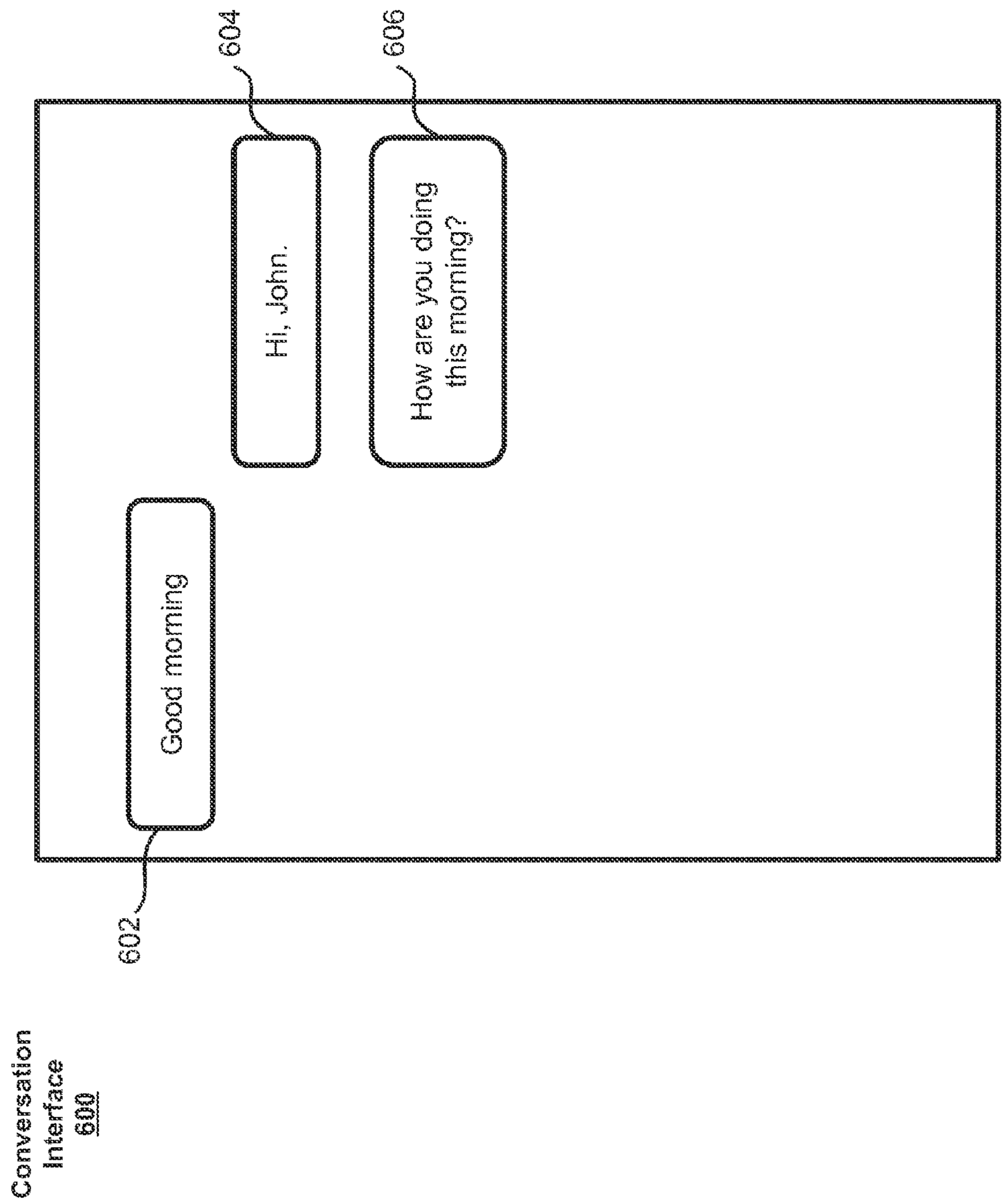
Conversation Interface 600
602
Good morning
604
Hi, John.
606
How are you doing this morning?

FIG. 6

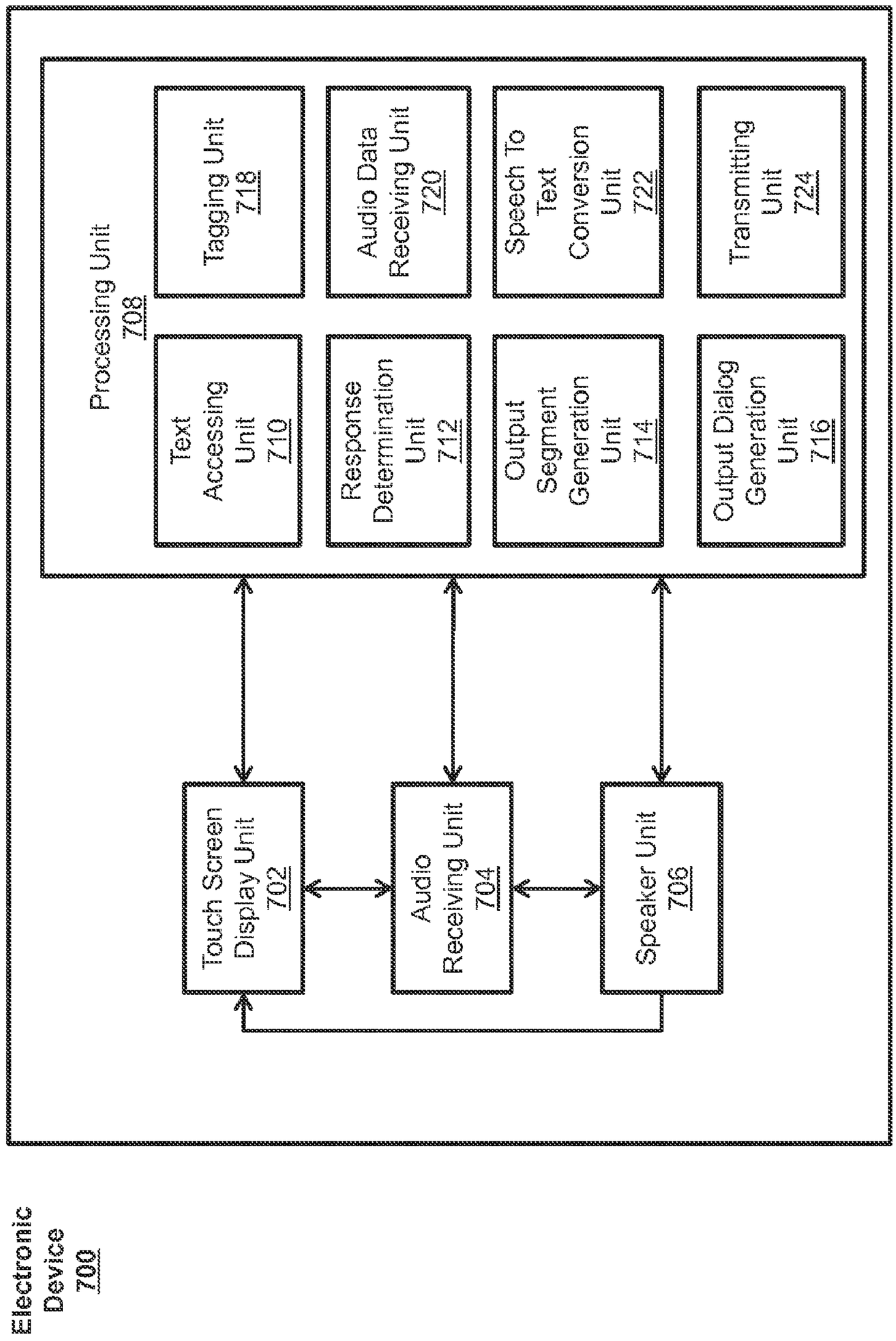
Electronic Device 700
Processing Unit 708
Text Accessing Unit 710
Tagging Unit 718
Response Determination Unit 712
Audio Data Receiving Unit 720
Output Segment Generation Unit 714
Speech To Text Conversion Unit 722
Output Dialog Generation Unit 716
Transmitting Unit 724
Touch Screen Display Unit 702
Audio Receiving Unit 704
Speaker Unit 706

FIG. 7

DOMAIN SPECIFIC LANGUAGE FOR ENCODING ASSISTANT DIALOG

CROSS-REFERENCE TO RELATED APPLICATION

This application claims priority from U.S. Provisional Ser. No. 62/005,886, filed on May 30, 2014, entitled DOMAIN SPECIFIC LANGUAGE FOR ENCODING ASSISTANT DIALOG, which is hereby incorporated by reference in its entirety for all purposes.

FIELD

This relates generally to virtual assistants and, more specifically, to generating output dialogs for virtual assistants.

BACKGROUND

Intelligent automated assistants (or virtual assistants) provide an intuitive interface between users and electronic devices. These assistants can allow users to interact with devices or systems using natural language in spoken and/or text forms. For example, a user can access the services of an electronic device by providing a spoken user input in natural language form to a virtual assistant associated with the electronic device. The virtual assistant can perform natural language processing on the spoken user input to infer the user's intent and operationalize the user's intent into tasks. The tasks can then be performed by executing one or more functions of the electronic device, and a relevant output can be returned to the user in natural language form.

To generate the output in natural language form, conventional virtual assistants require that a developer specify the content and format of every possible natural language output (e.g., in full-sentence form), as well as the specific conditions that must be met for each output to be returned to the user. For example, a virtual assistant can be programmed to output the string "Your search returned <results.number> results" in response to a search query yielding multiple results, can be programmed to output the string "Your search returned one result" in response to a search query yielding one result, and can be programmed to output the string "Your search returned no results" in response to a search query yielding no results.

While conventional virtual assistants programmed in this way can produce relevant outputs in natural language form, the process of specifying the content and format of every possible natural language output can be time-consuming and can produce repetitive results.

SUMMARY

Systems and processes for operating a virtual assistant are disclosed. One example process can include accessing a textual representation of user speech, determining a response to the textual representation of user speech, generating a plurality of output segments based on the determined response to the textual representation of user speech, wherein each of the plurality of output segments comprises one or more words, and generating an output dialog based on the plurality of output segments and an order associated with the plurality of output segments.

BRIEF DESCRIPTION OF THE DRAWINGS

FIG. **1** illustrates an exemplary environment in which a virtual assistant can operate according to various examples.

FIG. **2** illustrates an exemplary user device according to various examples.

FIG. **3** illustrates a visual representation of an example dialog generation file that can be used to generate an output dialog of a virtual assistant according to various examples.

FIG. **4** illustrates a visual representation of an example output generation file and the output dialog that can be generated using the output generation file.

FIG. **5** illustrates an exemplary process for generating an output dialog for a virtual assistant according to various examples.

FIG. **6** illustrates an example conversation interface that can be displayed on a user device according to various examples.

FIG. **7** illustrates a functional block diagram of an electronic device configured to generate an output dialog for a virtual assistant according to various examples.

DETAILED DESCRIPTION

In the following description of examples, reference is made to the accompanying drawings in which it is shown by way of illustration specific examples that can be practiced. It is to be understood that other examples can be used and structural changes can be made without departing from the scope of the various examples.

For descriptive purposes, throughout this disclosure, software, software modules, software blocks, software objects, and the like may be described as performing various functions. One of ordinary skill in the art, however, will recognize that software may not actively perform any function and instead may include instructions that are executable on a computer processor. As such, although software may be described herein as performing a function, it should be appreciated that a computer processor or other computing device may typically perform those functions attributed herein to software modules, blocks, or objects by executing computer instructions provided by the software modules, blocks, or objects.

This relates to systems and processes for generating output dialogs for virtual assistants. An output dialog can be generated from multiple output segments that can each include a string of one or more characters or words. The contents of an output segment can be selected from multiple possible outputs based on a predetermined order, conditional logic, or a random selection. The output segments can then be concatenated to form the output dialog. In some examples, a dialog generation file that defines the possible outputs for each output segment, an ordering of the output segments within the output dialog, and format for the output dialog to be displayed or otherwise presented to a user can be used to generate the output dialog. The dialog generation file can include any number of functional blocks, which can each output an output segment, that can be arranged hierarchically and in a particular order to generate a desired output dialog.

System Overview

FIG. **1** illustrates exemplary system **100** for implementing a virtual assistant according to various examples. The terms "virtual assistant," "digital assistant," "intelligent automated assistant," or "automatic digital assistant" can refer to any information processing system that interprets natural language input in spoken and/or textual form to infer user intent, and performs actions based on the inferred user intent. For example, to act on an inferred user intent, the system can perform one or more of the following: identifying a task flow with steps and parameters designed to

accomplish the inferred user intent; inputting specific requirements from the inferred user intent into the task flow; executing the task flow by invoking programs, methods, services, APIs, or the like; and generating output responses to the user in an audible (e.g., speech) and/or visual form.

A virtual assistant can be capable of accepting a user request at least partially in the form of a natural language command, request, statement, narrative, and/or inquiry. Typically, the user request seeks either an informational answer or performance of a task by the virtual assistant. A satisfactory response to the user request can include provision of the requested informational answer, performance of the requested task, or a combination of the two. For example, a user can ask the virtual assistant a question, such as "Where am I right now?" Based on the user's current location, the virtual assistant can answer, "You are in Central Park." The user can also request the performance of a task, for example, "Please remind me to call Mom at 4 p.m. today." In response, the virtual assistant can acknowledge the request and then create an appropriate reminder item in the user's electronic schedule. During the performance of a requested task, the virtual assistant can sometimes interact with the user in a continuous dialogue involving multiple exchanges of information over an extended period of time. There are numerous other ways of interacting with a virtual assistant to request information or performance of various tasks. In addition to providing verbal responses and taking programmed actions, the virtual assistant can also provide responses in other visual or audio forms (e.g., as text, alerts, music, videos, animations, etc.).

An example of a virtual assistant is described in Applicants' U.S. Utility application Ser. No. 12/987,982 for "Intelligent Automated Assistant," filed Jan. 10, 2011, the entire disclosure of which is incorporated herein by reference.

As shown in FIG. **1**, in some examples, a virtual assistant can be implemented according to a client-server model. The virtual assistant can include a client-side portion executed on a user device **102**, and a server-side portion executed on a server system **110**. User device **102** can include any electronic device, such as a mobile phone, tablet computer, portable media player, desktop computer, laptop computer, PDA, television, television set-top box, wearable electronic device, or the like, and can communicate with server system **110** through one or more networks **108**, which can include the Internet, an intranet, or any other wired or wireless public or private network. The client-side portion executed on user device **102** can provide client-side functionalities, such as user-facing input and output processing and communications with server system **110**. Server system **110** can provide server-side functionalities for any number of clients residing on a respective user device **102**.

Server system **110** can include one or more virtual assistant servers **114** that can include a client-facing I/O interface **122**, one or more processing modules **118**, data and model storage **120**, and an I/O interface to external services **116**. The client-facing I/O interface **122** can facilitate the client-facing input and output processing for virtual assistant server **114**. The one or more processing modules **118** can utilize data and model storage **120** to determine the user's intent based on natural language input, and perform task execution based on inferred user intent. In some examples, virtual assistant server **114** can communicate with external services **124**, such as telephony services, calendar services, information services, messaging services, navigation services, and the like, through network(s) **108** for task completion or information acquisition. The I/O interface to external services **116** can facilitate such communications.

Server system **110** can be implemented on one or more standalone data processing devices or a distributed network of computers. In some examples, server system **110** can employ various virtual devices and/or services of third-party service providers (e.g., third-party cloud service providers) to provide the underlying computing resources and/or infrastructure resources of server system **110**.

Although the functionality of the virtual assistant is shown in FIG. **1** as including both a client-side portion and a server-side portion, in some examples, the functions of the assistant can be implemented as a standalone application installed on a user device. In addition, the division of functionalities between the client and server portions of the virtual assistant can vary in different examples. For instance, in some examples, the client executed on user device **102** can be a thin-client that provides only user-facing input and output processing functions, and delegates all other functionalities of the virtual assistant to a backend server.

User Device

FIG. **2** is a block diagram of a user device **102** according to various examples. As shown, user device **102** can include a memory interface **202**, one or more processors **204**, and a peripherals interface **206**. The various components in user device **102** can be coupled together by one or more communication buses or signal lines. User device **102** can further include various sensors, subsystems, and peripheral devices that are coupled to the peripherals interface **206**. The sensors, subsystems, and peripheral devices gather information and/or facilitate various functionalities of user device **102**.

For example, user device **102** can include a motion sensor **210**, a light sensor **212**, and a proximity sensor **214** coupled to peripherals interface **206** to facilitate orientation, light, and proximity sensing functions. One or more other sensors **216**, such as a positioning system (e.g., a GPS receiver), a temperature sensor, a biometric sensor, a gyroscope, a compass, an accelerometer, and the like, are also connected to peripherals interface **206**, to facilitate related functionalities.

In some examples, a camera subsystem **220** and an optical sensor **222** can be utilized to facilitate camera functions, such as taking photographs and recording video clips. Communication functions can be facilitated through one or more wired and/or wireless communication subsystems **224**, which can include various communication ports, radio frequency receivers and transmitters, and/or optical (e.g., infrared) receivers and transmitters. An audio subsystem **226** can be coupled to speakers **228** and a microphone **230** to facilitate voice-enabled functions, such as voice recognition, voice replication, digital recording, and telephony functions.

In some examples, user device **102** can further include an I/O subsystem **240** coupled to peripherals interface **206**. I/O subsystem **240** can include a touch screen controller **242** and/or other input controller(s) **244**. Touch-screen controller **242** can be coupled to a touch screen **246**. Touch screen **246** and the touch screen controller **242** can, for example, detect contact and movement or break thereof using any of a plurality of touch sensitivity technologies, such as capacitive, resistive, infrared, and surface acoustic wave technologies, proximity sensor arrays, and the like. Other input controller(s) **244** can be coupled to other input/control devices **248**, such as one or more buttons, rocker switches, a thumb-wheel, an infrared port, a USB port, and/or a pointer device such as a stylus.

In some examples, user device **102** can further include a memory interface **202** coupled to memory **250**. Memory **250**

can include any electronic, magnetic, optical, electromagnetic, infrared, or semiconductor system, apparatus, or device, a portable computer diskette (magnetic), a random access memory (RAM) (magnetic), a read-only memory (ROM) (magnetic), an erasable programmable read-only memory (EPROM) (magnetic), a portable optical disc such as CD, CD-R, CD-RW, DVD, DVD-R, or DVD-RW, or flash memory such as compact flash cards, secured digital cards, USB memory devices, memory sticks, and the like. In some examples, a non-transitory computer-readable storage medium of memory **250** can be used to store instructions (e.g., for performing some or all of process **500**, described below) for use by or in connection with an instruction execution system, apparatus, or device, such as a computer-based system, processor-containing system, or other system that can fetch the instructions from the instruction execution system, apparatus, or device, and execute the instructions. In other examples, the instructions (e.g., for performing process **500**, described below) can be stored on a non-transitory computer-readable storage medium of server system **110**, or can be divided between the non-transitory computer-readable storage medium of memory **250** and the non-transitory computer-readable storage medium of server system **110**. In the context of this document, a "non-transitory computer readable storage medium" can be any medium that can contain or store the program for use by or in connection with the instruction execution system, apparatus, or device.

In some examples, the memory **250** can store an operating system **252**, a communication module **254**, a graphical user interface module **256**, a sensor processing module **258**, a phone module **260**, and applications **262**. Operating system **252** can include instructions for handling basic system services and for performing hardware-dependent tasks. Communication module **254** can facilitate communicating with one or more additional devices, one or more computers, and/or one or more servers. Graphical user interface module **256** can facilitate graphic user interface processing. Sensor processing module **258** can facilitate sensor-related processing and functions. Phone module **260** can facilitate phone-related processes and functions. Application module **262** can facilitate various functionalities of user applications, such as electronic messaging, web browsing, media processing, navigation, imaging, and/or other processes and functions.

As described herein, memory **250** can also store client-side virtual assistant instructions (e.g., in a virtual assistant client module **264**) and various user data **266** (e.g., user-specific vocabulary data, preference data, and/or other data, such as the user's electronic address book, to-do lists, shopping lists, etc.) to provide the client-side functionalities of the virtual assistant.

In various examples, virtual assistant client module **264** can be capable of accepting voice input (e.g., speech input), text input, touch input, and/or gestural input through various user interfaces (e.g., I/O subsystem **240**, audio subsystem **226**, or the like) of user device **102**. Virtual assistant client module **264** can also be capable of providing output in audio (e.g., speech output), visual, and/or tactile forms. For example, output can be provided as voice, sound, alerts, text messages, menus, graphics, videos, animations, vibrations, and/or combinations of two or more of the above. During operation, virtual assistant client module **264** can communicate with the virtual assistant server using communication subsystem **224**.

In some examples, virtual assistant client module **264** can utilize the various sensors, subsystems, and peripheral devices to gather additional information from the surrounding environment of user device **102** to establish a context associated with a user, the current user interaction, and/or the current user input. In some examples, virtual assistant client module **264** can provide the contextual information or a subset thereof with the user input to the virtual assistant server to help infer the user's intent. The virtual assistant can also use the contextual information to determine how to prepare and deliver outputs to the user.

In some examples, the contextual information that accompanies the user input can include sensor information, such as lighting, ambient noise, ambient temperature, images or videos of the surrounding environment, distance to another object, and the like. The contextual information can further include information associated with the physical state of user device **102** (e.g., device orientation, device location, device temperature, power level, speed, acceleration, motion patterns, cellular signal strength, etc.) or the software state of user device **102** (e.g., running processes, installed programs, past and present network activities, background services, error logs, resources usage, etc.). Any of these types of contextual information can be provided to the virtual assistant server **114** as contextual information associated with a user input.

In some examples, virtual assistant client module **264** can selectively provide information (e.g., user data **266**) stored on user device **102** in response to requests from the virtual assistant server **114**. Virtual assistant client module **264** can also elicit additional input from the user via a natural language dialogue or other user interfaces upon request by virtual assistant server **114**. Virtual assistant client module **264** can pass the additional input to virtual assistant server **114** to help virtual assistant server **114** in intent inference and/or fulfillment of the user's intent expressed in the user request.

In various examples, memory **250** can include additional instructions or fewer instructions. Furthermore, various functions of user device **102** can be implemented in hardware and/or in firmware, including in one or more signal processing and/or application-specific integrated circuits.

Output Dialog Encoding

As mentioned above, system **100** can be used to implement a virtual assistant capable of interpreting natural language input in spoken and/or textual form to infer user intent, and performing actions based on the inferred user intent. In some examples, the performed actions can include generating and outputting an output dialog in text and/or audio form. For example, in response to the query "What is the temperature in New York?", a virtual assistant implemented on a user device can display the text "The temperature in New York is 72° F." In order for the virtual assistant to produce this output dialog in natural language form, instructions that define the contents and format of the dialog can be provided to the virtual assistant. FIG. **3** shows a visual representation of a dialog generation file **300** that can be used to provide a virtual assistant with such information.

Generally, dialog generation file **300** can be used to generate an output dialog (e.g., "Good morning, John.") by defining multiple output segments that represent a portion of the output dialog (e.g., a first output segment "Good morning," and a second output segment "John."). Dialog generation file **300** can further define the possible outputs that can be used in each output segment (e.g., "Good morning," "Good afternoon," or "Good evening," for the first output segment), how to select one of the possible output segments, and how to format the output segments to generate the output dialog. As discussed in greater detail below, dialog generation file **300** can define these parameters for generating the output dialog using various types of functional

blocks **302-310** arranged hierarchically and/or in a particular order to generate a desired output dialog.

As shown in FIG. **3**, dialog generation file **300** can include multiple types of functional blocks **302-310** that can output or return an output segment of text. An output segment of text can include a string of one or more characters or words and can be ordered amongst the other output segments of text based on an ordering of the functional blocks within dialog generation file **300**. In some examples, the output dialog can be generated by concatenating the output segments of text based on the order of the output segments. For example, if dialog generation file **300** includes random block **305** outputting the output segment of text "Hi," followed by text block **302** outputting the output segment of text "how are you doing?", the output dialog generated from dialog generation file **300** can include the text "Hi, how are you doing?".

Dialog generation file **300** can include any number of and type of functional blocks. In some examples, the functional blocks can be arranged in a hierarchy such that one functional block (e.g., the child functional block) is included within another functional block (e.g., the parent functional block). In these examples, the output segment of text output by the child functional block can be returned as an input to the parent functional block and used by the parent functional block in a manner that depends on a type of the parent functional block (e.g., a type corresponding to blocks **302-310**, described below). In some examples, a functional block can include any number of other functional blocks. Additionally, the hierarchy formed by the nested functional blocks can include any number of levels. For example, a first functional block can be included within a second functional block, which can be included within a third functional block, and so on.

One type of functional block that can be included in dialog generation file **300** is text block **302**. Text block **302** can be configured to include desired text represented as a predetermined string of characters or words, such as "Good morning," and/or a variable representing a number or a string of characters or words, such as <name> having a value of "John." The formatting of the predetermined string of characters or words with a variable (e.g., "Good morning,"<name>) can be referred to as a "template." When executed, text block **302** can be configured to output the included text as an output segment of text. For example, a text block **302** that includes the text "Okay, here are your search results:" can output that text as an output segment of text when executed.

Dialog generation file **300** can further include first block **303**, which can be configured to include an ordered list of one or more options (e.g., Option 1, Option 2, and Option 3). Each option can include one or more of the functional blocks shown in FIG. **3**. When executed, first block **303** can select the first option (Option 1) from the ordered list and can call the functional block associated with that option. First block **303** can then output the text received from the called functional block (e.g., the output segment produced by the called functional block) as an output segment of text. If the selection of the first option is successful (e.g., successfully calls another functional block), the operation of first block **303** can end. However, if the selection of the first option fails, first block **303** can then attempt to select the next option from the ordered list (Option 2). This process can repeat for all options in the ordered list until an option is successfully selected. In the event that no option is successfully selected, first block **303** can return an error. While first block **303** is shown having three options, it should be appreciated that first block **303** can include any number of options.

To illustrate the operation of first block **303**, Option 1 of first block **303** can include a text block **302** that includes the text "Hello," Option 2 of first block **303** can include a text block **302** that includes the text "Hi," and Option 3 of first block **303** can include switch block **304** (described below). Upon execution, first block **303** can first attempt to call the first text block **302** and output the text "Hello" returned by the first text block **302** as an output segment of text. If successful, the operation of block **303** can end. However, if unable to output the text "Hello" as an output segment of text for any reason, first block **303** can then attempt to call the second text block **302** and output the text "Hi" returned by the second text block **302** as an output segment of text. If successful, the operation of block **303** can end. However, if unable to output the text "Hi" as an output segment of text for any reason, first block **303** can then attempt to call switch block **304**. If switch block **304** is successfully executed and returns a text output, first block **303** can output the text returned from switch block **304** as an output segment of text and the operation of block **303** can end. However, if unable to successfully call switch block **304** for any reason, first block **303** can return an error because it reached the end of its ordered list without successfully selecting one of the three options.

Dialog generation file **300** can further include switch block **304**, which can be configured to include an input parameter (e.g., <parameter>) and a list of one or more choices (e.g., Option 1, Option 2, and Option 3) that are associated with potential values of the input parameter (e.g., <A> and <B>) or a default condition (e.g., Default). Each option can include one of the functional blocks shown in FIG. **3**. When executed, switch block **304** can select one of the options based on the value of the input parameter matching an associated value of one of the options and can call the functional block associated with that option. Switch block **304** can then output the text received from the called functional block (e.g., the output segment produced by the called functional block) as an output segment of text. For example, switch block **304** can select Option 1 if the value of <parameter> is equal to the value of <A>, can select Option 2 if the value of <parameter> is equal to the value of <B>, and can select Option 3 if the value of <parameter> is not equal to the values of <A> or <B>. While switch block **304** is shown as having three options, it should be appreciated that switch block **304** can include any number of options.

In some examples, <parameter> can include any desired variable representing information that is to be presented to the user (e.g., search query results, etc.) or contextual information, such as sensor information, information associated with the physical state of a user device, information associated with a software state of the user device, or the like. For example, the contextual information can include a type of user device used to operate the virtual assistant, an operational state of the user device, a current time, a location of the user device, an orientation of the user device, or an orientation of a user with respect to the user device.

To illustrate the operation of switch block **304**, <parameter> of switch block **304** can represent a number of results generated from a search query, <A> can represent the value 0, Option 1 of switch block **304** can include a text block **302** that includes the text "Your search produced no results,"<B> can represent the value 1, Option 2 of switch block **304** can include a text block **302** that includes the text "Your search

produced 1 result," and Option 3 of switch block **304** can include a text block **302** that includes the text "Your search produced multiple results." In this example, switch block **304** can call the first text block **302** and output the text "Your search produced no results" returned by the first text block **302** as an output segment of text if the number of results generated from the search query is 0 (<parameter>==0), can call the second text block **302** and output the text "Your search produced 1 result" returned by the second text block **302** as an output segment of text if the number of results generated from the search query is 1 (<parameter>==1), and can call the third text block **302** and output the text "Your search produced no results" returned by the third text block **302** as an output segment of text if the number of results generated from the search query is not equal to 0 or 1 (<parameter>!=0 && <parameter>!=1).

Dialog generation file **300** can further include random block **305**, which can be configured to include a list of one or more options (e.g., Option 1, Option 2, and Option 3). Each option can include one of the functional blocks shown in FIG. **3**. When executed, random block **305** can randomly select one of the options from its list and can call the functional block associated with that option. Random block **305** can then output text received from the called functional block (e.g., the output segment produced by the called functional block) as an output segment of text. If the selection of the randomly selected block is successful (e.g., successfully calls another functional block), the operation of random block **305** can end. However, if the selection of the randomly selected block fails, random block **305** can randomly select another option from the list that was not previously selected. This process can repeat until an option is successfully selected. In the event that no option is successfully selected and there are no options remaining in the list that were not previously selected, random block **305** can return an error. While random block **305** is shown having three options, it should be appreciated that random block **305** can include any number of options.

In some examples, the options of random block **305** can be assigned a weighting factor that can be used by random block **305** to increase or decrease the probability that a particular option is selected. In the absence of assigned weighting factors, the probability of selecting each option can be the same (e.g., equal weighting factors for all options).

To illustrate the operation of random block **305**, Option 1 of random block **305** can include a text block **302** that includes the text "Hello," Option 2 of random block **305** can include a text block **302** that includes the text "Hi," and Option 3 of random block **305** can include switch block **304**. Upon execution, random block **305** can randomly select one of the options (e.g., Option 2) and attempt to call the second text block **302** and output the text "Hi" returned by the second text block **302** as an output segment of text. If successful, the operation of random block **305** can end. However, if unable to output the text "Hi" as an output segment of text for any reason, random block **305** can then randomly select another option from the list that was not previously selected (e.g., select from Option 1 and Option 3). If the random selection results in a selection of Option 1, random block **305** can attempt to call the first text block **302** and output the text "Hello" returned by the first text block **302** as an output segment of text. If successful, the operation of random block **305** can end. However, if unable to output the text "Hello" as an output segment of text for any reason, random block **305** can then randomly select another option from the list that was not previously selected (e.g., select from Option 3). Since Option 3 is the only remaining option that was not previously selected, random block **305** can select Option 3 and attempt to call switch block **304**. If switch block **304** is successfully executed and returns a text output, random block **305** can output the text returned from switch block **304** as an output segment of text and the operation of random block **305** can end. However, if unable to successfully call switch block **304** for any reason, random block **305** can return an error because no options were successfully selected and no options remain in the list that were not previously selected.

Dialog generation file **300** can further include opt block **306**, which is an optional block that can be used to ignore any failures returned by one of its included functional blocks, such as first block **303** and random block **305**. Opt block **306** can include one or more of the functional blocks shown in FIG. **3**. When executed, opt block **306** can call the functional blocks contained therein and can output text received from the called functional blocks as an output segment of text. If a functional block included within opt block **306** returns an error (e.g., first block **303** or random block **305** runs out of options), opt block **306** can ignore that error to prevent the error from stopping the generation of the output dialog.

To illustrate the operation of opt block **306**, opt block **306** can include first block **303**, which can include Option 1 having a text block **302** that includes the text "Hello," Option 2 having a text block **302** that includes the text "Hi," and Option 3 having a text block **302** that includes the text "Greetings." Upon execution, opt block **306** can call first block **303**, which can first attempt to call the first text block **302** and output the text "Hello" returned by the first text block **302** as an output segment of text. If successful, first block **303** can return the text "Hello" to opt block **306**, which can then output the text "Hello" as an output segment of text. However, if unable to output the text "Hello" as an output segment of text for any reason, first block **303** can then attempt to call the second text block **302** and output the text "Hi" returned by the second text block **302** as an output segment of text. If successful, first block **303** can return the text "Hi" to opt block **306**, which can then output the text "Hi" as an output segment of text. However, if unable to output the text "Hi" as an output segment of text for any reason, first block **303** can then attempt to call the third text block **302** and output the text "Greetings" returned by the third text block **302** as an output segment of text. If successful, first block **303** can return the text "Greetings" to opt block **306**, which can then output the text "Greetings" as an output segment of text. However, if unable to output the text "Greetings" as an output segment of text for any reason, first block **303** can return an error to opt block **306** because it reached the end of its ordered list without successfully selecting one of the three options. Opt block **306** can ignore the error and the operation of opt block **306** can end without outputting or returning an output segment of text.

Dialog generation file **300** can further include conditional block **307**, which is a functional block that can include one or more of the functional blocks shown in FIG. **3** and can be executed only when a conditional statement associated with conditional block **307** is satisfied. For example, conditional block **307** can be associated with the conditional if-statement (if A==B). In this example, conditional block **307** can only be executed if A is equal to B. If A is not equal to B, conditional block **307** (and any functional blocks included within conditional block **307**) may not be executed. When executed, conditional block **307** can call the functional

blocks contained therein and can output text received from the called functional blocks as an output segment of text.

In some examples, the conditional statement associated with conditional block **307** can be based on information that is to be presented to the user (e.g., search query results, etc.) or contextual information, such as sensor information, information associated with the physical state of a user device, information associated with a software state of the user device, or the like. For example, the contextual information can include a type of user device used to operate the virtual assistant, an operational state of the user device, a current time, a location of the user device, an orientation of the user device, or an orientation of a user with respect to the user device.

To illustrate the operation of conditional block **307**, conditional block **307** can be associated with the if-statement (if name==available) and can include a text block **302** that includes the text <name>. In this example, if the user's name is available, then conditional block **307** can be executed and can call text block **302** and output the value of <name> returned by text block **302** as an output segment of text. Alternatively, if the user's name is not available, then conditional block **307** may not be executed and no output segment of text may be generated by conditional block **307**.

Typically, any output segment of text generated by text block **302**, first block **303**, switch block **304**, random block **305**, opt block **306**, and conditional block **307** can be identified as being both a spoken output and a printed output (e.g., the text can be presented to the user in both audio and visual format by a user device). To cause the string of words or characters in an output segment to be only printed (e.g., only displayed to the user), dialog generation file **300** can include print only block **308**. Print only block **308** can include one or more of the functional blocks shown in FIG. **3**. When executed, print only block **308** can call the functional blocks contained therein and can output text returned from the called functional blocks as an output segment of text. However, unlike the other functional blocks of FIG. **3**, print only block **308** can identify its output segment of text as being text that should only be printed (e.g., displayed) when presented to the user.

To illustrate the operation of print only block **308**, print only block **308** can include a text block **302** that includes the text "Good afternoon." In this example, print only block **308** can call text block **302** and output the text "Good afternoon" returned by text block **302** as an output segment of text that is identified as being only a printed output.

Similarly, to cause the string of words or characters in an output segment to be only spoken (e.g., only audibly read to the user), dialog generation file **300** can include speak only block **309**. Speak only block **309** can include one or more of the functional blocks shown in FIG. **3**. When executed, speak only block **309** can call the functional blocks contained therein and can output text returned from the called functional blocks as an output segment of text. However, unlike the other functional blocks of FIG. **3**, speak only block **309** can identify its output segment of text as being text that should only be spoken (e.g., audibly presented) when presented to the user.

To illustrate the operation of speak only block **309**, speak only block **300** can include a text block **302** that includes the text "Good afternoon." In this example, speak only block **309** can call text block **302** and output the text "Good afternoon" returned by text block **302** as an output segment of text that is identified as being only a spoken output.

Dialog generation file **300** can further include break block **310**, which represents a break function that indicates a separation in the formatting of the output dialog. For example, if the output dialog is intended to be displayed within a speech bubble, the break function of break block **310** can indicate that a new speech bubble should be created for the output segments of text following the break.

Since a dialog generation file **300** can be used to generate an output dialog for conveying a particular type of information or message to a user, multiple different dialog generation files **300** can be created to generate output dialogs that are appropriate for a variety of situations. Additionally, since dialog generation file **300** can be language-specific, a different dialog generation file **300** can be created for each language in which an output dialog is to be created.

While dialog generation file **300** is shown and described above as having functional blocks performing various functions, it should be appreciated that dialog generation file **300** can be implemented using any desired programming language. In some examples, a markup-based language, such as XML, can be used.

FIG. **4** illustrates a visual representation of an example dialog generation file **400** that can be used to generate output dialog **432** using the functional blocks **302-310** shown in FIG. **3**. As shown in FIG. **4**, dialog generation file **400** includes hierarchically structured functional blocks **401-414**. The functional blocks are arranged in order from left to right, and functional blocks contained within other functional blocks represent functional blocks that are child functional blocks to the enclosing parent functional blocks. Additionally, functional blocks **401-414** having names matching those of the functional blocks shown in FIG. **3** can represent instances of those functional blocks.

When a call is made to dialog generation file **400** to create output dialog **432**, the first block in the highest level of the hierarchy (opt block **401**) can be executed. When executed, opt block **401** can call random block **402** contained therein. Random block **402** can then randomly select one of text block **403**, **404**, and **405** based on their associated weighting factors (e.g., weighting factors **50**, **30**, and **20**). For example, text block **403** can have a 50% chance of being selected, text block **404** can have a 30% chance of being selected, and text block **405** can have a 20% chance of being selected. Once random block **402** randomly selects one of the text blocks, a call can be made to the selected text block. For example, if text block **405** is selected, text block **405** can be called. In response, text block **405** can return the text "Hi" to random block **402**. Random block **402** can then return the text "Hi" to opt block **401**. Opt block **401** can then output the text "Hi" as an output segment of text. Since opt block **401** is a functional block at the highest level of the functional block hierarchy, the output segment of text generated by opt block **401** can represent an output segment **430** of dialog generation file **400**.

In some examples, the weighted random function performed by random block **402** can consider weights (some of which can be defaults) of all blocks within the random block to determine the random selection. For example, if random block **402** includes three elements having weights 2, 5, and 42, then the elements can have a probability of being selected of 2/49, 5/49, and 42/49, respectively.

Upon completion of opt block **401**, execution can proceed to the next functional block in the highest level of the hierarchy (print only block **406**). When executed, print only block **406** can call first block **407** contained therein. First block **407** can then select and call the functional block associated with its first option (conditional block **408**). If successful, first block **407** can return the text received from

conditional block **408** to print only block **406**. However, if the selection of conditional block **408** fails (e.g., if the variable <user> is not available), the first block **407** can attempt to call text block **410** and output the text received from text block **410** to print only block **407**. For example, if the variable <name> (representing the value "John") is available, conditional block **408** can call text block **409**. Text block **409** can return the text ", John." to conditional block **408**, which can then return the text ", John." to print only block **406**. Print only block **406** can then output the text ", John." as an output segment of text that is identified as being a print only output. Since print only block **406** is a functional block at the highest level of the functional block hierarchy, the output segment of text generated by print only block **406** can represent an output segment **430** of dialog generation file **400**.

Upon completion of print block **406**, execution can proceed to the next functional block in the highest level of the hierarchy (speak only block **411**). When executed, speak only block **411** can call switch block **412** contained therein. Switch block **412** can then select and call the functional block associated with one of its two options based on the value of the variable <AM/PM>. Switch block **412** can then return the text received from the called functional block to speak only block **411**. For example, if the variable <AM/PM> represents the value "AM," switch block **412** can call text block **413**. Text block **413** can return the text "How are you doing this morning" to switch block **412**, which can then return the text "How are you doing this morning" to speak only block **411**. Speak only block **411** can then output the text "How are you doing this morning" as an output segment of text that is identified as being a speak only output. Since speak only block **411** is a functional block at the highest level of the functional block hierarchy, the output segment of text generated by speak only block **411** can represent an output segment **430** of dialog generation file **400**.

Upon completion of all of the functional blocks at the highest level of the hierarchy, an output dialog **432** can be generated based on the output segments **430** of the dialog generation file **400**. The output segments **430** can have an associated ordering based on the order of the functional blocks (that generated them) within dialog generation file **400**. For example, the output segment containing "Hi" output by opt block **401** can be first, the output segment containing ", John." output by print only block **406** can be second, and the output segment containing "How are you doing this morning?" output by speak only block **411** can be third. Output dialog **432** can be generated by concatenating output segments **430** in order from the first output segment to the last. Thus, output dialog **432** can include "Hi, John. How are you doing this morning?". When presented to the user, the words "Hi, John" can be displayed to the user. The words "Hi. How are you doing this morning?" can be spoken to the user.

As illustrated by the example shown in FIG. **4**, the output segments **430** used to create output dialog **432** can be created independent of each other. For example, the generation of one output segment may not depend on the generation of another segment. In other examples, one output segment **430** can be generated using a conditional statement that depends on the generation of another output segment **430**.

Output Dialog Generation

FIG. **5** illustrates an exemplary process **500** that can be performed to generate an output dialog. In some examples, process **500** can be performed using a system similar or identical to system **100**, shown in FIG. **1**.

At block **502**, an audio input including user speech can be received at a user device. In some examples, a user device (e.g., user device **102**) can receive audio input that includes a user's speech via a microphone (e.g., microphone **230**). The microphone can convert the audio input into an analog or digital representation, and provide the audio data to one or more processors (e.g., processor(s) **204**). In some examples, the user device can transmit data representing the audio input to one or more servers, such as server system **110**.

At block **504**, the user speech of the audio input can be converted into a textual representation of the user speech. The user speech can be converted using any known speech-to-text conversion process. In some examples, the user speech can be converted into the textual representation locally on the user device **102**. In other examples where the user device transmits data representing the audio input to one or more servers for processing, the one or more servers can receive the data representing the audio input and can instead perform the speech-to-text conversion process.

At block **506**, the textual representation of user speech generated at block **504** can be received or accessed, and a response to the textual representation can be determined. The response can include information that is to be provided to the user in response to the textual representation of user speech. For example, a response to a search query can include information relating to the search query results (e.g., number of results, the actual results, etc.). The response can further include an identification of a dialog generation file that is to be used to format the output dialog to convey some or all of the information of the response to the user.

In some examples, determining the response to the textual representation can include determining a user intent based on the textual representation of user speech. As discussed in greater detail in Applicants' U.S. Utility application Ser. No. 12/987,982 for "Intelligent Automated Assistant," filed Jan. 10, 2011, determining user intent can include analyzing, by processing modules **118**, the textual representation of user speech to identify a set of syntactic or semantic parse results. The syntactic parse results can include parse results that associate data in the user input with structures that represent syntactic parts of speech, clauses, and phrases including multiword names, sentence structure, and/or other grammatical graph structures. The semantic parse results can include parse results that associate data in the user input with structures that represent concepts, relationships, properties, entities, quantities, propositions, and/or other representations of meaning and user intent. Determining user intent can further include disambiguating among alternative syntactic or semantic parse results based on the contextual representation of user speech, other user input, and/or contextual information.

Determining the response to the textual representation of user speech can further include identifying a task flow based on the determined user intent and executing the identified task flow. The task flow can include a set of steps and associated parameters to accomplish the determined user intent. In some examples, the task flow can include the step of selecting an appropriate dialog generation file for outputting the results of the task flow to the user. The dialog generation file can be selected based on the type of information that is to be provided to the user, the user's native language, other contextual information, and the like. The steps of the task flow can be executed by invoking programs, methods, services, APIs, or the like.

At block **508**, a plurality of output segments can be generated based on the response determined at block **506**.

The output segments can include a string of one or more characters or words that can be used to generate the output dialog presented to the user. In some examples, one or more of the output segments can be generated by selecting one output from multiple possible outputs. Each output can include a string of one or more characters or words and/or a variable. For example, a first possible output for an output segment can include "Hello," a second possible output for the output segment can include "Hi," and a third possible output for the output segment can include "Hi,"<user>, where <user> is a variable representing the user's name. Thus, generating the output segment can include selecting one of the three possible outputs and using the selected output as the output segment.

In some examples, the dialog generation file selected at block **506** can be used to generate the plurality of output segments. The type, content, and ordering of the functional blocks within the dialog generation file can define the possible outputs for each output segment, an ordering of the output segments within the output dialog, and format for the output dialog to be displayed or otherwise presented to a user and it can be used to generate the output dialog. As discussed above with respect to FIGS. **3-4**, the functional blocks at the highest level of the hierarchy in the dialog generation file (and their child functional blocks) can be executed based on their respective ordering in the file to generate the plurality of output segments.

In some examples, an output segment can be generated based on a random block of the dialog generation file to randomly select an output from multiple outputs as discussed above with respect to FIGS. **3-4**. The multiple outputs can be uniformly or non-uniformly weighted using weighting factors associated with the outputs. In other examples, an output segment can also be generated based on a first block of the dialog generation file to select an output from multiple outputs based on a predetermined order of the multiple outputs as discussed above with respect to FIGS. **3-4**. In yet other examples, an output segment can be generated based on a switch block of the dialog generation file to select an output from multiple outputs based on a value of an input parameter as discussed above with respect to FIGS. **3-4**.

In some examples, some or all of the possible outputs for an output segment can be associated with a conditional statement of a conditional block and the output can be selected from the plurality of possible outputs based on whether or not the condition is satisfied as discussed above with respect to FIGS. **3-4**. The conditional statement can depend on the information to be provided to the user determined at block **506** and/or contextual information, such as sensor information, information associated with the physical state of a user device, information associated with a software state of the user device, or the like. For example, the contextual information can include a type of user device used to operate the virtual assistant, an operational state of the user device, a current time, a location of the user device, an orientation of the user device, or an orientation of a user with respect to the user device.

In some examples, the functional blocks of the dialog generation file can further define a format for outputting the plurality of output segments to an output dialog. For example, an output segment generated from a print only block can be tagged as being an output segment that should only be displayed to a user. An output segment generated from a speak only block can be tagged as being an output segment that should only be audibly spoken to a user. Additionally, a break block can indicate that an audio and/or visual break should be included between the output segment generated from the previous functional block and the output segment generated from the subsequent output block.

In some examples, the output segments can be created independent of each other. For example, the generation of one output segment may not depend on the generation of another segment. In other examples, one output segment can be generated using a conditional statement that depends on the generation of another output segment, or a condition can be placed on a functional block included within a random block.

At block **510**, an output dialog can be generated based on the plurality of segments. In some examples, generating the output dialog can include concatenating the plurality of output segments based on an order of the output segments. For example, if a first output segment includes "Hi," a second output segment includes ","<user>, and a third output segment includes ". How are you doing today?", generating the output dialog based on these three output segments can include concatenating them based on their order (e.g., first, second, and third) to produce the output dialog "Hi, John. How are you doing today?".

In some examples, as mentioned above, the output segments can be identified as being only a spoken output, only a printed output, or both a spoken and printed output. In these examples, generating the output dialog can include generating a spoken output dialog by concatenating the output segments identified as being only a spoken output, generating a printed output dialog by concatenating the output segments identified as being only a printed output, and generating a spoken and printed output dialog by concatenating the output segments identified as being both a printed and spoken output. Alternatively, a single output dialog can be generated and the words corresponding to the spoken only outputs can be tagged or otherwise identified as being only spoken, the words corresponding to the printed only outputs can be tagged or otherwise identified as being only printed, and the words corresponding to the printed and spoken outputs can be tagged or otherwise identified as being both spoken and printed.

In some examples, as mentioned above, process **500** can include tagging one or more words of the textual user input using synonyms or can include mapping a word, or a synonym for that word, to a single semantic value, and from that value to a grammatically appropriate synonym for textual output. In these examples, generating the output dialog at block **510** can include replacing an occurrence of a tagged word with the synonym or alternate word of the tag. For example, if the textual representation of user speech received at block **502** included "Forward the message to John", the word "message" may have been tagged with the word "email." If the plurality of output segments generated at block **508** included a first output segment "Your message has been forwarded to" and a second output segment "John", block **510** can include concatenating the first and second segments to form the output dialog, "Your message has been forwarded to John." Block **510** can further include replacing the word "message" with the word "email" based on the tag to form the output dialog, "Your email has been forwarded to John." Alternatively, the word "message" can be replaced with the word "email" in the output segment prior to concatenating the segments.

In some examples, process **500** can further include transmitting the output dialog generated at block **510** to a user device. The user device can receive the output dialog and present it to the user. In some examples, the output dialog can be displayed to the user on a display of the user device

and/or presented to the user in audio form. For example, as mentioned above, the output segments can be identified as being only a spoken output, only a printed output, or both a spoken and printed output. In some examples, the output dialog can be identified as being a spoken output dialog, a printed output dialog, and a spoken and printed output dialog. The spoken output dialog can be presented to the user in audio form, but not displayed. The printed output dialog can be displayed to the user, but not presented to the user in audio form. The spoken and printed output dialog can be presented to the user in audio form and displayed to the user. In other examples, a single output dialog having words tagged or otherwise identified as being only spoken, only printed, or both spoken and printed can be received. In these examples, the words tagged or otherwise identified as being only spoken can be presented to the user in audio form, but not displayed. The words tagged or identified as being only printed can be displayed to the user, but not presented in audio form. The words tagged or identified as being both spoken and printed can be presented to the user in audio form and displayed to the user.

In some examples, as mentioned above, the output dialog can include formatting information that details how the output dialog should be presented to the user. For example, an output dialog can include breaks that represent separations in the output dialog that should be displayed or otherwise conveyed to the user. For example, a break in an output dialog can indicate that a new speech bubble or other visual indication of a break in the output dialog should be created for the text following the break. FIG. **6** illustrates an exemplary conversation interface **600** between a user and a virtual assistant. As shown, a textual representation of a user's spoken input is represented by speech bubble **602**. The virtual assistant's output dialog response is represented by speech bubbles **604** and **606**. In this example, the output dialog provided to the user device can include "Hi, John."<break>"How are you doing this morning?". The <break> in the output dialog can be generated from a break block to indicate to the user device that a new speech bubble **606** should be created to display the text following the <break>. The conversation shown in conversation interface **600** can be generated from dialog generation file **400** if a break block is inserted between print only block **406** and speak only block **411**.

Using process **500**, an output dialog can be generated by forming and combining multiple output segments. Each output segment can be configured to be populated with one of multiple strings of characters or words to provide an output that can be dynamically generated based on the information being provided to the user and/or contextual information. Generating output dialogs in this way also obviates the need to program a virtual assistant with every candidate sentence that is to be output by the virtual assistant.

It should be appreciated that the blocks of process **500** can be performed on user device **102**, server system **110**, or a combination of user device **102** and server system **110**. For instance, in some examples, all blocks of process **500** can be performed on user device **102**. In other examples, all blocks of process **500** can be performed at server system **110**. In yet other examples, some blocks of process **500** can be performed at user device **102**, while other blocks of process **500** can be performed at server system **110**.

Electronic Device

In accordance with some examples, FIG. **7** shows a functional block diagram of an electronic device **700** configured in accordance with the principles of the various described examples. The functional blocks of the device can be implemented by hardware, software, or a combination of hardware and software to carry out the principles of the various described examples. It is understood by persons of skill in the art that the functional blocks described in FIG. **7** can be combined or separated into sub-blocks to implement the principles of the various described examples. Therefore, the description herein optionally supports any possible combination or separation or further definition of the functional blocks described herein.

As shown in FIG. **7**, electronic device **700** can include a touch screen display unit **702** configured to display a user interface and to receive touch input, and a sound receiving unit **704** configured to receive sound input. In some examples, electronic device **700** can include a speaker unit **706** configured to generate sound. Electronic device **700** can further include a processing unit **708** coupled to touch screen display unit **702** and sound receiving unit **704** (and, optionally, coupled to speaker unit **706**). In some examples, processing unit **708** can include a text accessing unit **710**, a response determination unit **712**, an output segment generation unit **714**, an output dialog generation unit **716**, a tagging unit **718**, an audio data receiving unit **720**, a speech to text conversion unit **722**, and a transmitting unit **724**.

Processing unit **708** can be configured to access a textual representation of user speech (e.g., using text accessing unit **710**). Processing unit **708** can be further configured to determine (e.g., using response determination unit **712**) a response to the textual representation of user speech. Processing unit **708** can be further configured to generate (e.g., output segment generation unit **714**) a plurality of output segments based on the determined response to the textual representation of user speech, wherein each of the plurality of output segments comprises one or more words. Processing unit **708** can be further configured to generate (e.g., output dialog generation unit **716**) an output dialog based on the plurality of output segments and an order associated with the plurality of output segments.

In some examples, processing unit **708** can be configured to determine the response to the textual representation of user speech by determining (e.g., using response determination unit **712**) a user intent based on the textual representation of user speech; identifying a task flow based on the determined user intent; and executing the identified task flow to determine the response to the textual representation of user speech.

In some examples, processing unit **708** can be configured to generate the plurality of output segments (e.g., using output segment generation unit **714**) based on the determined response to the textual representation of user speech by selecting an output from a plurality of possible outputs for an output segment of the plurality of output segments, the selected output comprising the one or more words of the output segment.

In some examples, processing unit **708** can be configured to select (e.g., using output segment generation unit **714**) the output randomly from the plurality of possible outputs.

In some examples, each of the plurality of possible outputs can be associated with a weighting factor, and wherein processing unit **708** can be configured to select (e.g., using output segment generation unit **714**) the output randomly from the plurality of possible outputs based on the weighting factors.

In some examples, processing unit **708** can be configured to select (e.g., using output segment generation unit **714**) the output from the plurality of possible outputs based on a predetermined order of the plurality of possible outputs.

In some examples, the plurality of possible outputs are associated with one or more conditions, and wherein processing unit **708** can be configured to select (e.g., using output segment generation unit **714**) the output from the plurality of possible outputs further based on whether or not the one or more conditions are satisfied.

In some examples, the response to the textual representation of user speech can include information to be provided in response to the textual representation of user speech, and wherein the one or more conditions depend on the information to be provided in response to the textual representation of user speech. The one or more conditions can depend on contextual information. In some examples, the contextual information can include a type of user device used to operate the virtual assistant, an operational state of the user device, a current time, a location of the user device, an orientation of the user device, or an orientation of a user with respect to the user device.

In some examples, the response to the textual representation of user speech can include an identification of a dialog generation file, and wherein the dialog generation file defines: the order of the plurality of output segments; and possible outputs for each of the plurality of output segments.

In some examples, each of the possible outputs can be defined using a template, and wherein each template comprises one or more of a string of words and a variable word.

In some examples, the dialog generation file can further define a format for displaying the output dialog.

In some examples, each output segment of the plurality of output segments can be identified as being a spoken output segment or a printed output segment, and wherein processing unit **708** can be configured to generate the output dialog (e.g., using output dialog generation unit **716**) by generating a spoken output dialog based on output segments identified as being a spoken output segment; and generating a printed output dialog based on output segments identified as being printed output segments.

In some examples, processing unit **708** can be configured to generate (e.g., using output segment generation unit **714**) each output segment of the plurality of output independent of the other output segments.

In some examples, processing unit **708** can be configured to generate (e.g., using output dialog generation unit **716**) the output dialog based on the plurality of output segments by concatenating the plurality of output segments.

In some examples, processing unit **708** can be configured to tag (e.g., using tagging unit **718**), after accessing the textual representation of user speech and before determining the response to the textual representation of user speech, a word of the user speech with a dialog tag.

In some examples, the dialog tag can include a synonym of the tagged word.

In some examples, processing unit **708** can be configured to generate (e.g., using output dialog generation unit **716**) the output dialog based on the plurality of output segments by replacing an occurrence of the tagged word in one or more of the plurality of output segments with the synonym of the tagged word.

In some examples, processing unit **708** can be configured to receive (e.g., using audio data receiving unit **720**), before accessing the textual representation of user speech, data corresponding to an audio input comprising user speech from a user device; perform (e.g., using speech to text conversion unit **722**), before accessing the textual representation of user speech, speech to text conversion on the data corresponding to the audio input to generate the textual representation of user speech; and transmit (e.g., using transmitting unit **724**), after generating the output dialog, the output dialog to the user device.

As described above, one aspect of the present technology is the gathering and use of data available from various sources to improve the delivery to users of invitational content or any other content that may be of interest to them. The present disclosure contemplates that in some instances, this gathered data can include personal information data that uniquely identifies or can be used to contact or locate a specific person. Such personal information data can include demographic data, location-based data, telephone numbers, email addresses, home addresses, or any other identifying information.

The present disclosure recognizes that the use of such personal information data, in the present technology, can be used to the benefit of users. For example, the personal information data can be used to deliver targeted content that is of greater interest to the user. Accordingly, use of such personal information data enables calculated control of the delivered content. Further, other uses for personal information data that benefit the user are also contemplated by the present disclosure.

The present disclosure further contemplates that the entities responsible for the collection, analysis, disclosure, transfer, storage, or other use of such personal information data will comply with well-established privacy policies and/or privacy practices. In particular, such entities should implement and consistently use privacy policies and practices that are generally recognized as meeting or exceeding industry or governmental requirements for maintaining personal information data private and secure. For example, personal information from users should be collected for legitimate and reasonable uses of the entity and not shared or sold outside of those legitimate uses. Further, such collection should occur only after receiving the informed consent of the users. Additionally, such entities would take any needed steps for safeguarding and securing access to such personal information data and ensuring that others with access to the personal information data adhere to their privacy policies and procedures. Further, such entities can subject themselves to evaluation by third parties to certify their adherence to widely accepted privacy policies and practices.

Despite the foregoing, the present disclosure also contemplates examples in which users selectively block the use of, or access to, personal information data. That is, the present disclosure contemplates that hardware and/or software elements can be provided to prevent or block access to such personal information data. For example, in the case of advertisement delivery services, the present technology can be configured to allow users to select to "opt in" or "opt out" of participation in the collection of personal information data during registration for services. In another example, users can select not to provide location information for targeted content delivery services. In yet another example, users can select to not provide precise location information, but permit the transfer of location zone information.

Therefore, although the present disclosure broadly covers use of personal information data to implement one or more various disclosed examples, the present disclosure also contemplates that the various examples can also be implemented without the need for accessing such personal information data. That is, the various examples of the present technology are not rendered inoperable due to the lack of all or a portion of such personal information data. For example, content can be selected and delivered to users by inferring preferences based on non-personal information data or a bare minimum amount of personal information, such as the

content being requested by the device associated with a user, other non-personal information available to the content delivery services, or publicly available information.

Although examples have been fully described with reference to the accompanying drawings, it is to be noted that various changes and modifications will become apparent to those skilled in the art. Such changes and modifications are to be understood as being included within the scope of the various examples as defined by the appended claims.

What is claimed is:

1. A method for operating a virtual assistant, performed at an electronic device having one or more processors and a memory storing one or more programs for execution by the one or more processors, the method comprising:

receiving a user speech;

accessing a textual representation of the user speech;

determining an intent corresponding to the textual representation of the user speech;

generating an output dialog responsive to the user speech, comprising:

selecting, in accordance with the determined intent, a dialog template from a plurality of dialog templates, wherein the dialog template includes a plurality of sets of functional blocks, wherein a first set of functional blocks of the plurality of sets of functional blocks defines one or more conditions;

generating a plurality of output segments from the plurality of sets of functional blocks, including:

determining whether the one or more conditions are satisfied; and

in accordance with a determination that the one or more conditions are satisfied, generating, with the first set of functional blocks, a first string for a first output segment of the plurality of output segments; and

concatenating the plurality of output segments according to an order defined by the dialog template; and

outputting the output dialog comprising the concatenated plurality of output segments.

2. The method of claim **1**, wherein generating an output dialog responsive to the user speech further comprises:

identifying a task flow based on the determined user intent; and

executing the identified task flow to generate the output dialog.

3. The method of claim **1**, wherein generating the plurality of output segments from the plurality of sets of functional blocks further comprises:

selecting an output from a plurality of possible outputs for a second set of functional blocks of the plurality of sets of functional blocks, wherein an output segment of the plurality of output segments includes one or more words of the selected output.

4. The method of claim **3**, wherein the output is selected randomly from the plurality of possible outputs.

5. The method of claim **4**, wherein each of the plurality of possible outputs is associated with a weighting factor, and wherein the output is selected randomly from the plurality of possible outputs based on the weighting factors.

6. The method of claim **3**, wherein the output is selected from the plurality of possible outputs based on a predetermined order of the plurality of possible outputs.

7. The method of claim **1**, wherein generating the output dialog responsive to the user speech further comprises obtaining information in accordance with the determined intent, wherein the one or more conditions is based on the obtained information.

8. The method of claim **1**, wherein the one or more conditions depend on contextual information.

9. The method of claim **8**, wherein the contextual information comprises a type of user device used to operate the virtual assistant, an operational state of the user device, a current time, a location of the user device, an orientation of the user device, or an orientation of a user with respect to the user device.

10. The method of claim **1**, wherein each functional block of the plurality of sets of functional blocks includes a plurality of possible outputs, and wherein the plurality of possible outputs each include one or more of a string of words and a variable word.

11. The method of claim **1**, wherein the dialog template further defines a format for displaying the output dialog.

12. The method of claim **1**, wherein each output segment of the plurality of output segments is identified as being a spoken output segment or a printed output segment, and wherein outputting the output dialog comprises:

outputting a spoken output dialog based on output segments identified as being a spoken output segment; and

outputting a printed output dialog based on output segments identified as being printed output segments.

13. The method of claim **1**, wherein each output segment of the plurality of output segments is generated independent of the other output segments.

14. The method of claim **1**, wherein the method further comprises tagging, after accessing the textual representation of the user speech and before generating the output dialog responsive to the user speech, a word of the user speech with a dialog tag.

15. The method of claim **14**, wherein the dialog tag comprises a synonym of the tagged word.

16. The method of claim **15**, wherein generating the output dialog responsive to the user speech further comprises replacing an occurrence of the tagged word in one or more of the plurality of output segments with the synonym of the tagged word.

17. The method of claim **1**, further comprising:

performing, speech to text conversion on the received user speech to generate the textual representation of the user speech.

18. The method of claim **1**, further comprising:

in accordance with a determination that the one or more conditions are not satisfied, generating, with the first set of functional blocks, a second string for the first output segment of the plurality of output segments.

19. The method of claim **1**, further comprising:

in accordance with a determination that the one or more conditions are not satisfied, forgo generating, with the first set of functional blocks, the first string for the first output segment of the plurality of output segments.

20. The method of claim **1**, wherein a third set of functional blocks in the plurality of sets of functional blocks includes a set of candidate output segments, and wherein generating the plurality of output segments from the plurality of sets of functional blocks further comprises:

executing a first function defined in a first functional block of the third set of functional blocks to select a candidate output segment from the set of candidate output segments; and

generating one of the plurality of output segments by applying, to the selected candidate output segment, a second function defined in a second functional block of the third set of functional blocks, wherein the first functional block is a child block of the second functional block.

21. A non-transitory computer-readable storage medium comprising computer-executable instructions for:

receiving a user speech;

accessing a textual representation of the user speech;

determining an intent corresponding to the textual representation of the user speech;

generating an output dialog responsive to the user speech, comprising:

selecting, in accordance with the determined intent, a dialog template from a plurality of dialog templates, wherein the dialog template includes a plurality of sets of functional blocks, wherein a first set of functional blocks of the plurality of sets of functional blocks defines one or more conditions;

generating a plurality of output segments from the plurality of sets of functional blocks, including:

determining whether the one or more conditions are satisfied; and

in accordance with a determination that the one or more conditions are satisfied, generating, with the first set of functional blocks, a first string for a first output segment of the plurality of output segments;

concatenating the plurality of output segments according to an order defined by the dialog template; and

outputting the output dialog comprising the concatenated plurality of output segments.

22. The non-transitory computer-readable storage medium of claim 21, further comprising computer executable instructions for:

identifying a task flow based on the determined user intent; and

executing the identified task flow.

23. The non-transitory computer-readable storage medium of claim 21, wherein generating the plurality of output segments from the plurality of sets of functional blocks further comprises:

selecting an output from a plurality of possible outputs for a second set of functional blocks of the plurality of sets of functional blocks.

24. The non-transitory computer-readable storage medium of claim 21, wherein the output is selected randomly from the plurality of possible outputs.

25. The non-transitory computer-readable storage medium of claim 21, further comprising computer executable instructions for:

in accordance with a determination that the one or more conditions are not satisfied, generating, with the first set of functional blocks, a second string for the first output segment of the plurality of output segments.

26. The non-transitory computer-readable storage medium of claim 21, further comprising computer executable instructions for:

in accordance with a determination that the one or more conditions are not satisfied, forgo generating, with the first set of functional blocks, the first string for the first output segment of the plurality of output segments.

27. The non-transitory computer-readable storage medium of claim 21, wherein a third set of functional blocks in the plurality of sets of functional blocks includes a set of candidate output segments, and wherein generating the plurality of output segments from the plurality of sets of functional blocks further comprises:

executing a first function defined in a first functional block of the third set of functional blocks to select a candidate output segment from the set of candidate output segments; and

generating one of the plurality of output segments by applying, to the selected candidate output segment, a second function defined in a second functional block of the third set of functional blocks, wherein the first functional block is a child block of the second functional block.

28. A system comprising:

one or more processors;

memory;

one or more programs, wherein the one or more programs are stored in the memory and configured to be executed by the one or more processors, the one or more programs including instructions for:

receiving a user speech;

accessing a textual representation of the user speech;

determining an intent corresponding to the textual representation of the user speech;

generating an output dialog responsive to the user speech, comprising:

selecting, in accordance with the determined intent, a dialog template from a plurality of dialog templates, wherein the dialog template includes a plurality of sets of functional blocks, wherein a first set of functional blocks of the plurality of sets of functional blocks defines one or more conditions;

generating a plurality of output segments from the plurality of sets of functional blocks, including:

determining whether the one or more conditions are satisfied; and

in accordance with a determination that the one or more conditions are satisfied, generating, with the first set of functional blocks, a first string for a first output segment of the plurality of output segments

concatenating the plurality of output segments according to an order defined by the dialog template; and

outputting the output dialog comprising the concatenated plurality of output segments.

29. The system of claim 28, wherein the one or more programs further include instructions for:

identifying a task flow based on the determined user intent; and

executing the identified task flow.

30. The system of claim 28, wherein generating the plurality of output segments from the plurality of sets of functional blocks further comprises:

selecting an output from a plurality of possible outputs for a second set of functional blocks of the plurality of sets of functional blocks.

31. The system of claim 30, wherein the output is selected randomly from the plurality of possible outputs.

32. The system of claim 31, wherein each of the plurality of possible outputs is associated with a weighting factor, and wherein the output is selected randomly from the plurality of possible outputs based on the weighting factors.

33. The system of claim 30, wherein the output is selected from the plurality of possible outputs based on a predetermined order of the plurality of possible outputs.

34. The system of claim 28, wherein the one or more programs further include instructions for:

in accordance with a determination that the one or more conditions are not satisfied, generating, with the first set of functional blocks, a second string for the first output segment of the plurality of output segments.

35. The system of claim **28**, wherein the one or more programs further include instructions for:

in accordance with a determination that the one or more conditions are not satisfied, forgo generating, with the first set of functional blocks, the first string for the first output segment of the plurality of output segments.

36. The system of claim **28**, wherein a third set of functional blocks in the plurality of sets of functional blocks includes a set of candidate output segments, and wherein generating the plurality of output segments from the plurality of sets of functional blocks further comprises:

executing a first function defined in a first functional block of the third set of functional blocks to select a candidate output segment from the set of candidate output segments; and

generating one of the plurality of output segments by applying, to the selected candidate output segment, a second function defined in a second functional block of the third set of functional blocks, wherein the first functional block is a child block of the second functional block.

* * * * *