US010307091B2

(12) United States Patent
Stafford

(10) Patent No.: US 10,307,091 B2
(45) Date of Patent: *Jun. 4, 2019

(54) **METHOD AND APPARATUS FOR PROVIDING ANALYTE SENSOR INSERTION**

(71) Applicant: **Abbott Diabetes Care Inc.**, Alameda, CA (US)

(72) Inventor: **Gary Ashley Stafford**, Hayward, CA (US)

(73) Assignee: **Abbott Diabetes Care Inc.**, Alameda, CA (US)

(*) Notice: Subject to any disclaimer, the term of this patent is extended or adjusted under 35 U.S.C. 154(b) by 0 days.

This patent is subject to a terminal disclaimer.

(21) Appl. No.: **15/789,946**

(22) Filed: **Oct. 20, 2017**

(65) **Prior Publication Data**

US 2018/0035926 A1 Feb. 8, 2018

Related U.S. Application Data

(63) Continuation of application No. 15/141,819, filed on Apr. 28, 2016, now Pat. No. 9,795,331, which is a (Continued)

(51) **Int. Cl.**
A61B 5/00 (2006.01)
A61B 5/1473 (2006.01)
(Continued)

(52) **U.S. Cl.**
CPC ***A61B 5/1473*** (2013.01); ***A61B 5/0015*** (2013.01); ***A61B 5/1451*** (2013.01); ***A61B 5/14503*** (2013.01); ***A61B 5/14532*** (2013.01); ***A61B 5/14546*** (2013.01); *A61B 5/0002* (2013.01); *A61B 5/14865* (2013.01)

(58) **Field of Classification Search**
CPC A61B 5/14532; A61B 5/1451; A61B 5/14865; A61B 5/14503
See application file for complete search history.

(56) **References Cited**

U.S. PATENT DOCUMENTS

3,123,790 A 3/1964 Tyler
3,211,001 A 10/1965 Petit
(Continued)

FOREIGN PATENT DOCUMENTS

EP 0098592 1/1984
EP 0127958 12/1984
(Continued)

OTHER PUBLICATIONS

U.S. Appl. No. 15/473,560, Office Action dated Dec. 12, 2017.
(Continued)

Primary Examiner — Christian Jang
(74) *Attorney, Agent, or Firm* — Jackson & Co., LLP

(57) **ABSTRACT**

Devices and methods for positioning a portion of a sensor at a first predetermined location, displacing the portion of the sensor from the first predetermined location to a second predetermined location, and detecting one or signals associated with an analyte level of a patient at the second predetermined location are disclosed. Also provided are systems and kits for use in analyte monitoring.

20 Claims, 19 Drawing Sheets

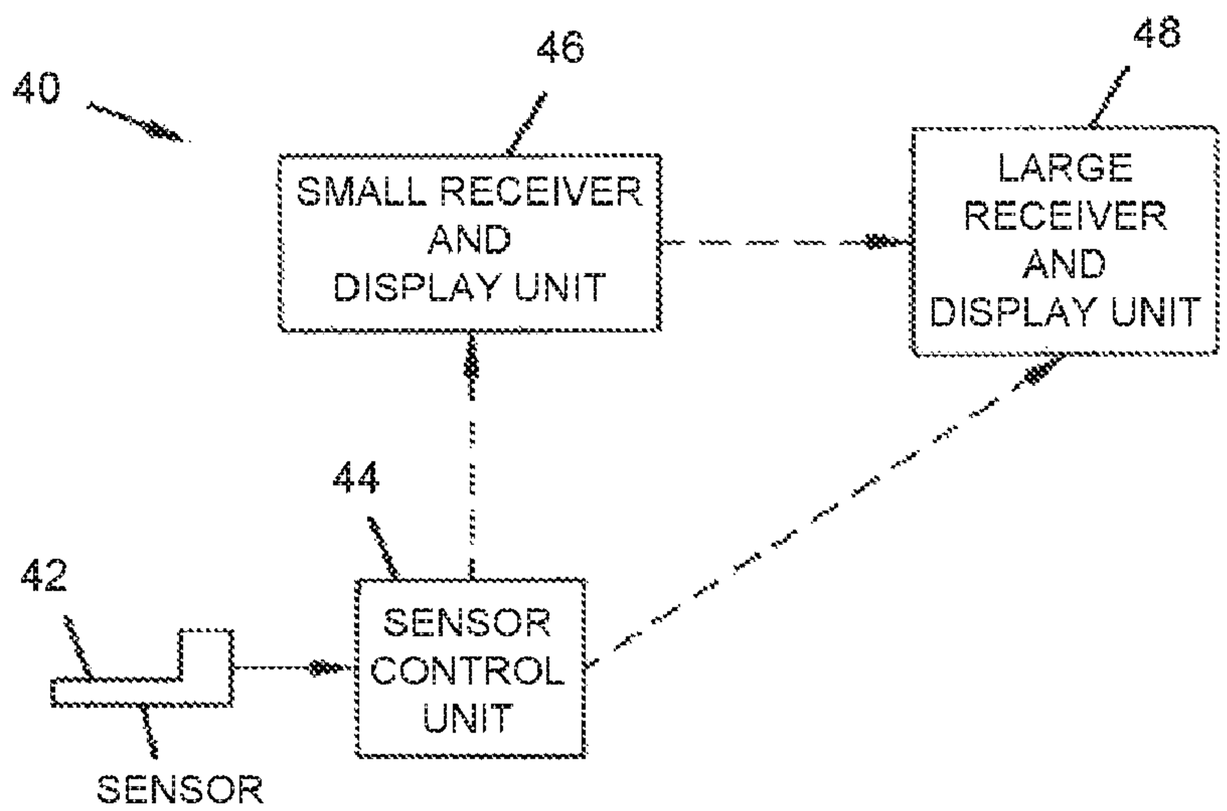

Related U.S. Application Data

continuation of application No. 14/500,705, filed on Sep. 29, 2014, now Pat. No. 9,332,933, which is a continuation of application No. 12/571,349, filed on Sep. 30, 2009, now Pat. No. 8,852,101, which is a continuation of application No. 11/535,983, filed on Sep. 28, 2006, now Pat. No. 7,697,967.

(60) Provisional application No. 60/754,870, filed on Dec. 28, 2005.

(51) **Int. Cl.**
A61B 5/145 (2006.01)
A61B 5/1486 (2006.01)

(56) **References Cited**

U.S. PATENT DOCUMENTS

3,260,656 A 7/1966 Ross, Jr.
3,581,062 A 5/1971 Aston
3,653,841 A 4/1972 Klein
3,719,564 A 3/1973 Lilly, Jr. et al.
3,776,832 A 12/1973 Oswin et al.
3,837,339 A 9/1974 Aisenberg et al.
3,926,760 A 12/1975 Allen et al.
3,949,388 A 4/1976 Fuller
3,960,497 A 6/1976 Acord et al.
3,972,320 A 8/1976 Kalman
3,979,274 A 9/1976 Newman
4,008,717 A 2/1977 Kowarski
4,016,866 A 4/1977 Lawton
4,033,330 A 7/1977 Willis et al.
4,036,749 A 7/1977 Anderson
4,055,175 A 10/1977 Clemens et al.
4,059,406 A 11/1977 Fleet
4,076,596 A 2/1978 Connery et al.
4,098,574 A 7/1978 Dappen
4,100,048 A 7/1978 Pompei et al.
4,120,292 A 10/1978 LeBlanc, Jr. et al.
4,129,128 A 12/1978 McFarlane
4,151,845 A 5/1979 Clemens
4,168,205 A 9/1979 Danniger et al.
4,172,770 A 10/1979 Semersky et al.
4,178,916 A 12/1979 McNamara
4,206,755 A 6/1980 Klein
4,224,125 A 9/1980 Nakamura et al.
4,240,438 A 12/1980 Updike et al.
4,245,634 A 1/1981 Albisser et al.
4,247,297 A 1/1981 Berti et al.
4,294,258 A 10/1981 Bernard
4,327,725 A 5/1982 Cortese et al.
4,340,458 A 7/1982 Lerner et al.
4,344,438 A 8/1982 Schultz
4,349,728 A 9/1982 Phillips et al.
4,352,960 A 10/1982 Dormer et al.
4,356,074 A 10/1982 Johnson
4,365,637 A 12/1982 Johnson
4,366,033 A 12/1982 Richter et al.
4,373,527 A 2/1983 Fischell
4,375,399 A 3/1983 Havas et al.
4,384,586 A 5/1983 Christiansen
4,390,621 A 6/1983 Bauer
4,401,122 A 8/1983 Clark, Jr.
4,404,066 A 9/1983 Johnson
4,418,148 A 11/1983 Oberhardt
4,425,920 A 1/1984 Bourland et al.
4,427,770 A 1/1984 Chen et al.
4,431,004 A 2/1984 Bessman et al.
4,436,094 A 3/1984 Cerami
4,440,175 A 4/1984 Wilkins
4,441,968 A 4/1984 Emmer et al.
4,450,842 A 5/1984 Zick et al.
4,458,686 A 7/1984 Clark, Jr.
4,461,691 A 7/1984 Frank
4,464,170 A 8/1984 Clemens et al.
4,469,110 A 9/1984 Slama
4,477,314 A 10/1984 Richter et al.
4,478,976 A 10/1984 Goertz et al.
4,484,987 A 11/1984 Gough
4,494,950 A 1/1985 Fischell
4,509,531 A 4/1985 Ward
4,522,690 A 6/1985 Venkatsetty
4,524,114 A 6/1985 Samuels et al.
4,526,661 A 7/1985 Steckhan et al.
4,527,240 A 7/1985 Kvitash
4,534,356 A 8/1985 Papadakis
4,538,616 A 9/1985 Rogoff
4,543,955 A 10/1985 Schroeppel
4,545,382 A 10/1985 Higgins et al.
4,552,840 A 11/1985 Riffer
4,560,534 A 12/1985 Kung et al.
4,571,292 A 2/1986 Liu et al.
4,573,994 A 3/1986 Fischell et al.
4,581,336 A 4/1986 Malloy et al.
4,595,011 A 6/1986 Phillips
4,619,754 A 10/1986 Niki et al.
4,619,793 A 10/1986 Lee
4,627,445 A 12/1986 Garcia et al.
4,627,842 A 12/1986 Katz
4,627,908 A 12/1986 Miller
4,633,878 A 1/1987 Bombardien
4,637,403 A 1/1987 Garcia et al.
4,650,547 A 3/1987 Gough
4,654,197 A 3/1987 Lilja et al.
4,655,880 A 4/1987 Liu
4,655,885 A 4/1987 Hill et al.
4,671,288 A 6/1987 Gough
4,679,562 A 7/1987 Luksha
4,680,268 A 7/1987 Clark, Jr.
4,682,602 A 7/1987 Prohaska
4,684,537 A 8/1987 Graetzel et al.
4,685,463 A 8/1987 Williams
4,685,466 A 8/1987 Rau
4,698,057 A 10/1987 Joishy
4,703,756 A 11/1987 Gough et al.
4,711,245 A 12/1987 Higgins et al.
4,711,247 A 12/1987 Fishman
4,717,673 A 1/1988 Wrighton et al.
4,721,601 A 1/1988 Wrighton et al.
4,721,677 A 1/1988 Clark, Jr.
4,726,378 A 2/1988 Kaplan
4,726,716 A 2/1988 McGuire
4,729,672 A 3/1988 Takagi
4,731,726 A 3/1988 Allen, III
4,749,985 A 6/1988 Corsberg
4,755,173 A 7/1988 Konopka
4,757,022 A 7/1988 Shults et al.
4,758,323 A 7/1988 Davis et al.
4,759,371 A 7/1988 Franetzki
4,759,828 A 7/1988 Young et al.
4,764,416 A 8/1988 Ueyama et al.
4,776,944 A 10/1988 Janata et al.
4,777,953 A 10/1988 Ash et al.
4,779,618 A 10/1988 Mund et al.
4,781,683 A 11/1988 Wozniak et al.
4,781,798 A 11/1988 Gough
4,784,736 A 11/1988 Lonsdale et al.
4,795,707 A 1/1989 Niiyama et al.
4,796,634 A 1/1989 Huntsman et al.
4,805,624 A 2/1989 Yao et al.
4,813,424 A 3/1989 Wilkins
4,815,469 A 3/1989 Cohen et al.
4,820,399 A 4/1989 Senda et al.
4,822,337 A 4/1989 Newhouse et al.
4,830,959 A 5/1989 McNeil et al.
4,832,797 A 5/1989 Vadgama et al.
RE32,947 E 6/1989 Dormer et al.
4,840,893 A 6/1989 Hill et al.
4,847,785 A 7/1989 Stephens
4,848,351 A 7/1989 Finch
4,854,322 A 8/1989 Ash et al.
4,865,038 A 9/1989 Rich et al.
4,871,351 A 10/1989 Feingold
4,871,440 A 10/1989 Nagata et al.

(56) **References Cited**

U.S. PATENT DOCUMENTS

4,874,500 A 10/1989 Madou et al.
4,890,620 A 1/1990 Gough
4,894,137 A 1/1990 Takizawa et al.
4,895,147 A 1/1990 Bodicky et al.
4,897,162 A 1/1990 Lewandowski et al.
4,897,173 A 1/1990 Nankai et al.
4,909,908 A 3/1990 Ross et al.
4,911,794 A 3/1990 Parce et al.
4,917,800 A 4/1990 Lonsdale et al.
4,919,141 A 4/1990 Zier et al.
4,919,767 A 4/1990 Vadgama et al.
4,921,199 A 5/1990 Villaveces
4,923,586 A 5/1990 Katayama et al.
4,925,268 A 5/1990 Iyer et al.
4,927,516 A 5/1990 Yamaguchi et al.
4,934,369 A 6/1990 Maxwell
4,935,105 A 6/1990 Churchouse
4,935,345 A 6/1990 Guibeau et al.
4,938,860 A 7/1990 Wogoman
4,944,299 A 7/1990 Silvian
4,950,378 A 8/1990 Nagara
4,953,552 A 9/1990 DeMarzo
4,954,129 A 9/1990 Giuliani et al.
4,969,468 A 11/1990 Byers et al.
4,970,145 A 11/1990 Bennetto et al.
4,974,929 A 12/1990 Curry
4,986,271 A 1/1991 Wilkins
4,988,341 A 1/1991 Columbus et al.
4,994,167 A 2/1991 Shults et al.
4,995,402 A 2/1991 Smith et al.
5,000,180 A 3/1991 Kuypers et al.
5,002,054 A 3/1991 Ash et al.
5,013,161 A 5/1991 Zaragoza et al.
5,019,974 A 5/1991 Beckers
5,035,860 A 7/1991 Kleingeld et al.
5,036,860 A 8/1991 Leigh et al.
5,047,044 A 9/1991 Smith et al.
5,050,612 A 9/1991 Matsumura
5,051,688 A 9/1991 Murase et al.
5,055,171 A 10/1991 Peck
5,058,592 A 10/1991 Whisler
5,070,535 A 12/1991 Hochmair et al.
5,082,550 A 1/1992 Rishpon et al.
5,082,786 A 1/1992 Nakamoto
5,089,112 A 2/1992 Skotheim et al.
5,095,904 A 3/1992 Seligman et al.
5,101,814 A 4/1992 Palti
5,106,365 A 4/1992 Hernandez
5,108,564 A 4/1992 Szuminsky et al.
5,108,889 A 4/1992 Smith et al.
5,109,850 A 5/1992 Blanco et al.
5,120,420 A 6/1992 Nankai et al.
5,122,925 A 6/1992 Inpyn
5,126,034 A 6/1992 Carter et al.
5,133,856 A 7/1992 Yamaguchi et al.
5,135,003 A 8/1992 Souma
5,135,004 A 8/1992 Adams et al.
5,140,985 A 8/1992 Schroeder et al.
5,141,868 A 8/1992 Shanks et al.
5,161,532 A 11/1992 Joseph
5,165,407 A 11/1992 Wilson et al.
5,174,291 A 12/1992 Schoonen et al.
5,190,041 A 3/1993 Palti
5,192,416 A 3/1993 Wang et al.
5,198,367 A 3/1993 Aizawa et al.
5,202,261 A 4/1993 Musho et al.
5,204,264 A 4/1993 Kaminer et al.
5,205,920 A 4/1993 Oyama et al.
5,208,154 A 5/1993 Weaver et al.
5,209,229 A 5/1993 Gilli
5,217,595 A 6/1993 Smith et al.
5,229,282 A 7/1993 Yoshioka et al.
5,231,988 A 8/1993 Wernicke et al.
5,234,835 A 8/1993 Nestor et al.
5,238,729 A 8/1993 Debe
5,243,696 A 9/1993 Carr et al.
5,246,867 A 9/1993 Lakowicz et al.
5,250,439 A 10/1993 Musho et al.
5,251,126 A 10/1993 Kahn et al.
5,262,035 A 11/1993 Gregg et al.
5,262,305 A 11/1993 Heller et al.
5,264,103 A 11/1993 Yoshioka et al.
5,264,104 A 11/1993 Gregg et al.
5,264,105 A 11/1993 Gregg et al.
5,264,106 A 11/1993 McAleer et al.
5,271,815 A 12/1993 Wong
5,279,294 A 1/1994 Anderson et al.
5,284,156 A 2/1994 Schramm et al.
5,285,792 A 2/1994 Sjoquist et al.
5,286,362 A 2/1994 Hoenes et al.
5,286,364 A 2/1994 Yacynych et al.
5,288,636 A 2/1994 Pollmann et al.
5,293,546 A 3/1994 Tadros et al.
5,293,877 A 3/1994 O'Hara et al.
5,299,571 A 4/1994 Mastrototaro
5,320,098 A 6/1994 Davidson
5,320,715 A 6/1994 Berg
5,320,725 A 6/1994 Gregg et al.
5,322,063 A 6/1994 Allen et al.
5,337,747 A 8/1994 Neftei
5,340,722 A 8/1994 Wolfbeis et al.
5,342,789 A 8/1994 Chick et al.
5,352,348 A 10/1994 Young et al.
5,356,786 A 10/1994 Heller et al.
5,360,404 A 11/1994 Novacek et al.
5,368,028 A 11/1994 Palti
5,372,133 A 12/1994 Hogen Esch
5,372,427 A 12/1994 Padovani et al.
5,376,251 A 12/1994 Kaneko et al.
5,378,628 A 1/1995 Gratzel et al.
5,379,238 A 1/1995 Stark
5,384,547 A 1/1995 Lynk et al.
5,387,327 A 2/1995 Khan
5,390,670 A 2/1995 Centa et al.
5,390,671 A 2/1995 Lord et al.
5,391,250 A 2/1995 Cheney, II et al.
5,395,504 A 3/1995 Saurer et al.
5,400,782 A 3/1995 Beaubiah
5,408,999 A 4/1995 Singh et al.
5,410,326 A 4/1995 Goldstein
5,411,647 A 5/1995 Johnson et al.
5,425,361 A 6/1995 Fenzlein et al.
5,431,160 A 7/1995 Wilkins
5,431,921 A 7/1995 Thombre
5,437,999 A 8/1995 Diebold et al.
5,438,983 A 8/1995 Falcone
5,462,645 A 10/1995 Albery et al.
5,469,846 A 11/1995 Khan
5,472,317 A 12/1995 Field et al.
5,489,414 A 2/1996 Schreiber et al.
5,491,474 A 2/1996 Suni et al.
5,494,562 A 2/1996 Maley et al.
5,496,453 A 3/1996 Uenoyama et al.
5,497,772 A 3/1996 Schulman et al.
5,507,288 A 4/1996 Bocker et al.
5,509,410 A 4/1996 Hill et al.
5,514,718 A 5/1996 Lewis et al.
5,531,878 A 7/1996 Vadgama et al.
5,533,977 A 7/1996 Matcalf et al.
5,543,326 A 8/1996 Heller et al.
5,545,191 A 8/1996 Mann et al.
5,551,427 A 9/1996 Altman
5,555,190 A 9/1996 Derby et al.
5,560,357 A 10/1996 Faupei et al.
5,562,713 A 10/1996 Silvian
5,564,434 A 10/1996 Halperin et al.
5,565,085 A 10/1996 Ikeda et al.
5,567,302 A 10/1996 Song et al.
5,568,806 A 10/1996 Cheney, II et al.
5,569,186 A 10/1996 Lord et al.
5,575,563 A 11/1996 Chiu et al.
5,582,184 A 12/1996 Erickson et al.
5,582,697 A 12/1996 Ikeda et al.
5,582,698 A 12/1996 Flaherty et al.

(56) **References Cited**

U.S. PATENT DOCUMENTS

5,584,813 A 12/1996 Livingston et al.
5,586,553 A 12/1996 Halili et al.
5,589,326 A 12/1996 Deng et al.
5,593,852 A 1/1997 Heller et al.
5,596,150 A 1/1997 Arndt et al.
5,601,435 A 2/1997 Quy
5,609,575 A 3/1997 Larson et al.
5,613,978 A 3/1997 Harding
5,617,851 A 4/1997 Lipkovker
5,628,310 A 5/1997 Rao et al.
5,628,324 A 5/1997 Sarbach
5,628,890 A 5/1997 Carter et al.
5,632,557 A 5/1997 Simons
5,651,869 A 7/1997 Yoshioka et al.
5,653,239 A 8/1997 Pompei et al.
5,660,163 A 8/1997 Schulman et al.
5,665,071 A 9/1997 Wyrick
5,665,222 A 9/1997 Heller et al.
5,670,031 A 9/1997 Hintsche et al.
5,680,858 A 10/1997 Hansen et al.
5,682,233 A 10/1997 Brinda
5,695,623 A 12/1997 Michel et al.
5,708,247 A 1/1998 McAleer et al.
5,711,001 A 1/1998 Bussan et al.
5,711,297 A 1/1998 Iliff et al.
5,711,861 A 1/1998 Ward et al.
5,711,862 A 1/1998 Sakoda et al.
5,726,646 A 3/1998 Bane et al.
5,733,044 A 3/1998 Rose et al.
5,735,285 A 4/1998 Albert et al.
5,741,211 A 4/1998 Renirie et al.
5,743,262 A 4/1998 Lepper, Jr. et al.
5,746,217 A 5/1998 Erickson et al.
5,746,697 A 5/1998 Swedlow et al.
5,748,103 A 5/1998 Flach et al.
5,749,656 A 5/1998 Boehm et al.
5,766,131 A 6/1998 Kondo et al.
5,771,001 A 6/1998 Cobb
5,772,586 A 6/1998 Heinonen et al.
5,779,665 A 7/1998 Mastrototaro et al.
5,791,344 A 8/1998 Schulman et al.
5,800,420 A 9/1998 Gross et al.
5,807,375 A 9/1998 Gross et al.
5,814,020 A 9/1998 Gross
5,820,551 A 10/1998 Hill et al.
5,820,570 A 10/1998 Erickson et al.
5,820,622 A 10/1998 Gross et al.
5,822,715 A 10/1998 Worthington et al.
5,827,184 A 10/1998 Netherly et al.
5,833,603 A 11/1998 Kovacs et al.
5,840,020 A 11/1998 Heinonen et al.
5,842,983 A 12/1998 Abel et al.
5,851,197 A 12/1998 Marano et al.
5,858,001 A 1/1999 Tsals et al.
5,865,804 A 2/1999 Bachynsky
5,885,211 A 3/1999 Eppstein et al.
5,899,855 A 5/1999 Brown
5,914,026 A 6/1999 Blubaugh, Jr. et al.
5,918,603 A 7/1999 Brown
5,919,141 A 7/1999 Money et al.
5,924,979 A 7/1999 Sedlow et al.
5,925,021 A 7/1999 Castellano et al.
5,931,814 A 8/1999 Alex et al.
5,931,868 A 8/1999 Gross et al.
5,938,679 A 8/1999 Freeman et al.
5,942,979 A 8/1999 Luppino
5,948,006 A 9/1999 Mann
5,951,492 A 9/1999 Douglas et al.
5,951,521 A 9/1999 Mastrototaro et al.
5,951,582 A 9/1999 Thorne et al.
5,954,643 A 9/1999 Van Antwerp
5,954,685 A 9/1999 Tierny
5,957,854 A 9/1999 Besson et al.
5,961,451 A 10/1999 Reber et al.
5,964,993 A 10/1999 Blubaugh, Jr. et al.
5,965,380 A 10/1999 Heller et al.
5,971,922 A 10/1999 Arita et al.
5,972,199 A 10/1999 Heller et al.
5,987,353 A 11/1999 Khatchatrian et al.
5,993,411 A 11/1999 Choi
5,995,860 A 11/1999 Sun et al.
5,997,501 A 12/1999 Gross et al.
6,001,067 A 12/1999 Shults et al.
6,004,278 A 12/1999 Botich et al.
6,017,335 A 1/2000 Burnham
6,022,368 A 2/2000 Gavronsky et al.
6,024,699 A 2/2000 Surwit et al.
6,026,321 A 2/2000 Miyata et al.
6,027,459 A 2/2000 Shain et al.
6,028,413 A 2/2000 Brockmann
6,048,352 A 4/2000 Douglas et al.
6,049,727 A 4/2000 Crothall
6,052,565 A 4/2000 Ishikura et al.
6,056,718 A 5/2000 Funderburk et al.
6,059,946 A 5/2000 Yukawa et al.
6,066,243 A 5/2000 Anderson et al.
6,068,399 A 5/2000 Tseng
6,071,391 A 6/2000 Gotoh et al.
6,083,710 A 7/2000 Heller et al.
6,088,605 A 7/2000 Griffith et al.
6,088,608 A 7/2000 Schulman et al.
6,091,975 A 7/2000 Daddona et al.
6,091,976 A 7/2000 Pfeiffer et al.
6,093,172 A 7/2000 Funderburk et al.
6,096,364 A 8/2000 Bok et al.
6,099,484 A 8/2000 Douglas et al.
6,103,033 A 8/2000 Say et al.
6,117,290 A 9/2000 Say et al.
6,119,028 A 9/2000 Schulman et al.
6,120,676 A 9/2000 Heller et al.
6,121,009 A 9/2000 Heller et al.
6,121,611 A 9/2000 Lindsay et al.
6,122,351 A 9/2000 Schlueter, Jr. et al.
6,132,449 A 10/2000 Lum et al.
6,134,461 A 10/2000 Say et al.
6,143,164 A 11/2000 Heller et al.
6,144,837 A 11/2000 Quy
6,157,850 A 12/2000 Diab et al.
6,159,147 A 12/2000 Lichter et al.
6,161,095 A 12/2000 Brown
6,162,611 A 12/2000 Heller et al.
6,168,606 B1 1/2001 Levin et al.
6,175,752 B1 1/2001 Say et al.
6,186,982 B1 2/2001 Gross et al.
6,200,265 B1 3/2001 Walsh et al.
6,212,416 B1 4/2001 Ward et al.
6,219,574 B1 4/2001 Cormier et al.
6,223,283 B1 4/2001 Chaiken et al.
6,248,067 B1 6/2001 Causey, III et al.
6,254,536 B1 7/2001 DeVito
6,254,586 B1 7/2001 Mann et al.
6,270,455 B1 8/2001 Brown
6,275,717 B1 8/2001 Gross et al.
6,283,761 B1 9/2001 Joao
6,283,982 B1 9/2001 Levaughn et al.
6,284,478 B1 9/2001 Heller et al.
6,293,925 B1 9/2001 Safabash et al.
6,295,506 B1 9/2001 Heinonen et al.
6,299,757 B1 10/2001 Feldman et al.
6,302,866 B1 10/2001 Marggi
6,306,104 B1 10/2001 Cunningham et al.
6,309,884 B1 10/2001 Cooper et al.
6,314,317 B1 11/2001 Willis
6,329,161 B1 12/2001 Heller et al.
6,331,244 B1 12/2001 Lewis et al.
6,338,790 B1 1/2002 Feldman et al.
6,348,640 B1 2/2002 Navot et al.
6,359,270 B1 3/2002 Bridson
6,359,444 B1 3/2002 Grimes
6,360,888 B1 3/2002 McIvor et al.
6,364,890 B1 4/2002 Lum et al.
6,366,794 B1 4/2002 Moussy et al.
6,368,141 B1 4/2002 Van Antwerp et al.
6,368,274 B1 4/2002 Van Antwerp et al.

(56) **References Cited**

U.S. PATENT DOCUMENTS

6,377,828 B1 4/2002 Chaiken et al.
6,377,894 B1 4/2002 Deweese et al.
6,379,301 B1 4/2002 Worthington et al.
6,387,048 B1 5/2002 Schulman et al.
6,409,740 B1 6/2002 Kuhr et al.
6,413,393 B1 7/2002 Van Antwerp et al.
6,418,332 B1 7/2002 Mastrototaro et al.
6,424,847 B1 7/2002 Mastrototaro et al.
6,427,088 B1 7/2002 Bowman, IV et al.
6,433,743 B1 8/2002 Massy et al.
6,435,017 B1 8/2002 Nowicki, Jr. et al.
6,437,679 B1 8/2002 Rogues
6,440,068 B1 8/2002 Brown et al.
6,445,374 B2 9/2002 Albert et al.
6,461,496 B1 10/2002 Feldman et al.
6,471,689 B1 10/2002 Joseph et al.
6,478,736 B1 11/2002 Mault
6,482,176 B1 11/2002 Wich
6,484,045 B1 11/2002 Holker et al.
6,484,046 B1 11/2002 Say et al.
6,503,381 B1 1/2003 Gotoh et al.
6,514,460 B1 2/2003 Fendrock
6,514,718 B2 2/2003 Heller et al.
6,520,326 B2 2/2003 McIvor et al.
6,522,927 B1 2/2003 Bishay et al.
6,537,242 B1 3/2003 Palmer
6,540,891 B1 4/2003 Stewart et al.
6,546,268 B1 4/2003 Ishikawa et al.
6,551,494 B1 4/2003 Heller et al.
6,551,496 B1 4/2003 Moles et al.
6,554,798 B1 4/2003 Mann et al.
6,558,320 B1 5/2003 Causey, III et al.
6,558,321 B1 5/2003 Burd et al.
6,560,471 B1 5/2003 Heller et al.
6,561,978 B1 5/2003 Conn et al.
6,562,001 B2 5/2003 Lebel et al.
6,564,105 B2 5/2003 Starkweather et al.
6,565,509 B1 5/2003 Say et al.
6,571,128 B2 5/2003 Lebel et al.
6,572,566 B2 6/2003 Effenhauser
6,574,490 B2 6/2003 Abbink et al.
6,575,895 B1 6/2003 Blair
6,576,101 B1 6/2003 Heller et al.
6,577,899 B2 6/2003 Lebel et al.
6,579,690 B1 6/2003 Bonnecaze et al.
6,585,644 B2 7/2003 Lebel et al.
6,589,229 B1 7/2003 Connelly et al.
6,591,125 B1 7/2003 Buse et al.
6,592,745 B1 7/2003 Feldman et al.
6,595,919 B2 7/2003 Berner et al.
6,600,997 B2 7/2003 Deweese et al.
6,605,200 B1 8/2003 Mao et al.
6,605,201 B1 8/2003 Mao et al.
6,607,509 B2 8/2003 Bobroff et al.
6,610,012 B2 8/2003 Mault
6,616,819 B1 9/2003 Liamos et al.
6,618,934 B1 9/2003 Feldman et al.
6,631,281 B1 10/2003 Kastle
6,633,772 B2 10/2003 Ford et al.
6,635,014 B2 10/2003 Starkweather et al.
6,641,533 B2 11/2003 Causey, III et al.
6,648,821 B2 11/2003 Lebel et al.
6,650,471 B2 11/2003 Doi
6,654,625 B1 11/2003 Say et al.
6,659,948 B2 12/2003 Lebel et al.
6,666,849 B1 12/2003 Marshall et al.
6,668,196 B1 12/2003 Villegas et al.
6,676,290 B1 1/2004 Lu
6,687,546 B2 2/2004 Lebel et al.
6,689,056 B1 2/2004 Kilcoyne et al.
6,694,191 B2 2/2004 Starkweather et al.
6,695,860 B1 2/2004 Ward et al.
6,702,857 B2 3/2004 Brauker et al.
6,721,582 B2 4/2004 Trepagnier et al.
6,730,025 B1 5/2004 Platt
6,730,200 B1 5/2004 Stewart et al.
6,733,446 B2 5/2004 Lebel et al.
6,736,957 B1 5/2004 Forrow et al.
6,740,075 B2 5/2004 Lebel et al.
6,741,877 B1 5/2004 Shults et al.
6,746,582 B2 6/2004 Heller et al.
6,749,740 B2 6/2004 Liamos et al.
6,758,810 B2 7/2004 Lebel et al.
6,764,581 B1 7/2004 Forrow et al.
6,770,030 B1 8/2004 Schaupp et al.
6,773,671 B1 8/2004 Lewis et al.
6,790,178 B1 9/2004 Mault et al.
6,809,653 B1 10/2004 Mann et al.
6,810,290 B2 10/2004 Lebel et al.
6,811,533 B2 11/2004 Lebel et al.
6,811,534 B2 11/2004 Bowman, IV et al.
6,813,519 B2 11/2004 Lebel et al.
6,830,551 B1 12/2004 Uchigaki et al.
6,837,858 B2 1/2005 Cunningham et al.
6,837,885 B2 1/2005 Koblish et al.
6,837,988 B2 1/2005 Leong et al.
6,849,052 B2 2/2005 Ughigaki et al.
6,850,790 B2 2/2005 Berner et al.
6,854,882 B2 2/2005 Chen
6,862,465 B2 3/2005 Shults et al.
6,873,268 B2 3/2005 Lebel et al.
6,881,551 B2 4/2005 Heller et al.
6,892,085 B2 5/2005 McIvor et al.
6,893,545 B2 5/2005 Gotoh et al.
6,895,265 B2 5/2005 Silver
6,923,763 B1 8/2005 Kovatchev et al.
6,931,327 B2 8/2005 Goode, Jr. et al.
6,932,892 B2 8/2005 Chen et al.
6,932,894 B2 8/2005 Mao et al.
6,936,006 B2 8/2005 Sabra
6,942,518 B2 9/2005 Liamos et al.
6,950,708 B2 9/2005 Bowman, IV et al.
6,954,662 B2 10/2005 Freger et al.
6,958,705 B2 10/2005 Lebel et al.
6,959,211 B2 10/2005 Rule et al.
6,968,294 B2 11/2005 Gutta et al.
6,971,274 B2 12/2005 Olin
6,971,999 B2 12/2005 Py et al.
6,974,437 B2 12/2005 Lebel et al.
6,990,366 B2 1/2006 Say et al.
6,997,907 B2 2/2006 Safabash et al.
6,998,247 B2 2/2006 Monfre et al.
6,999,854 B2 2/2006 Roth
7,003,336 B2 2/2006 Holker et al.
7,003,340 B2 2/2006 Say et al.
7,003,341 B2 2/2006 Say et al.
7,010,356 B2 3/2006 Jog et al.
7,015,817 B2 3/2006 Copley et al.
7,016,713 B2 3/2006 Gardner et al.
7,022,219 B2 4/2006 Mansouri et al.
7,024,245 B2 4/2006 Lebel et al.
7,025,743 B2 4/2006 Mann et al.
7,027,848 B2 4/2006 Robinson et al.
7,041,057 B1 5/2006 Faupel et al.
7,041,068 B2 5/2006 Freeman et al.
7,041,468 B2 5/2006 Drucker et al.
7,046,153 B2 5/2006 Oja et al.
7,052,483 B2 5/2006 Wojcik
7,056,302 B2 6/2006 Douglas
7,074,307 B2 7/2006 Simpson et al.
7,081,195 B2 7/2006 Simpson et al.
7,097,637 B2 8/2006 Triplett et al.
7,098,803 B2 8/2006 Mann et al.
7,108,778 B2 9/2006 Simpson et al.
7,110,803 B2 9/2006 Shults et al.
7,113,821 B1 9/2006 Sun et al.
7,118,667 B2 10/2006 Lee
7,120,483 B2 10/2006 Russel et al.
7,123,950 B2 10/2006 Mannheimer
7,134,999 B2 11/2006 Brauker et al.
7,136,689 B2 11/2006 Shults et al.
7,146,202 B2 12/2006 Ward et al.
7,155,290 B2 12/2006 Von Arx et al.
7,167,818 B2 1/2007 Brown

(56) **References Cited**

U.S. PATENT DOCUMENTS

7,171,274	B2	1/2007	Starkweather et al.
7,174,199	B2	2/2007	Berner et al.
7,179,226	B2	2/2007	Crothall et al.
7,190,988	B2	3/2007	Say et al.
7,192,450	B2	3/2007	Brauker et al.
7,198,606	B2	4/2007	Boecker et al.
7,207,974	B2	4/2007	Safabash et al.
7,225,535	B2	6/2007	Feldman et al.
7,226,442	B2	6/2007	Sheppard et al.
7,226,978	B2	6/2007	Tapsak et al.
7,276,029	B2	10/2007	Goode, Jr. et al.
7,278,983	B2	10/2007	Ireland et al.
7,286,894	B1	10/2007	Grant et al.
7,297,151	B2	11/2007	Boecker et al.
7,299,082	B2	11/2007	Feldman et al.
7,310,544	B2	12/2007	Brister et al.
7,318,816	B2	1/2008	Bobroff et al.
7,324,012	B2	1/2008	Maim et al.
7,329,239	B2	2/2008	Safabash et al.
7,335,294	B2	2/2008	Heller et al.
7,340,287	B2	3/2008	Mason et al.
7,340,309	B2	3/2008	Miazga et al.
7,354,420	B2	4/2008	Steil et al.
7,364,592	B2	4/2008	Carr-Brendel et al.
7,366,556	B2	4/2008	Brister et al.
7,379,765	B2	5/2008	Petisce et al.
7,381,184	B2	6/2008	Funderburk et al.
7,402,153	B2	7/2008	Steil et al.
7,416,541	B2	8/2008	Yuzhakov et al.
7,424,318	B2	9/2008	Brister et al.
7,433,727	B2	10/2008	Ward et al.
7,455,663	B2	11/2008	Bikovsky
7,460,898	B2	12/2008	Brister et al.
7,462,264	B2	12/2008	Heller et al.
7,467,003	B2	12/2008	Brister et al.
7,468,125	B2	12/2008	Kraft et al.
7,471,972	B2	12/2008	Rhodes et al.
7,494,465	B2	2/2009	Brister et al.
7,497,827	B2	3/2009	Brister et al.
7,499,002	B2	3/2009	Blasko et al.
7,519,408	B2	4/2009	Rasdal et al.
7,583,990	B2	9/2009	Goode, Jr. et al.
7,591,801	B2	9/2009	Brauker et al.
7,599,726	B2	10/2009	Goode, Jr. et al.
7,604,592	B2	10/2009	Freeman et al.
7,613,491	B2	11/2009	Boock et al.
7,615,007	B2	11/2009	Shults et al.
7,632,228	B2	12/2009	Brauker et al.
7,635,594	B2	12/2009	Holmes et al.
7,637,868	B2	12/2009	Saint et al.
7,640,048	B2	12/2009	Dobbles et al.
7,651,596	B2	1/2010	Petisce et al.
7,651,845	B2	1/2010	Doyle, III et al.
7,654,956	B2	2/2010	Brister et al.
7,657,297	B2	2/2010	Simpson et al.
7,666,149	B2	2/2010	Simons et al.
7,682,338	B2	3/2010	Griffin
7,697,967	B2	4/2010	Stafford
7,699,775	B2	4/2010	Desai et al.
7,711,402	B2	5/2010	Shults et al.
7,713,574	B2	5/2010	Brister et al.
7,715,893	B2	5/2010	Kamath et al.
7,727,147	B1	6/2010	Osorio et al.
7,729,737	B2	6/2010	Ward
7,731,657	B2	6/2010	Stafford
7,736,310	B2	6/2010	Taub et al.
7,736,344	B2	6/2010	Moberg et al.
7,763,042	B2	7/2010	Iio et al.
7,766,829	B2	8/2010	Sloan et al.
7,768,387	B2	8/2010	Fennell et al.
7,771,352	B2	8/2010	Shults et al.
7,775,444	B2	8/2010	DeRocco et al.
7,783,333	B2	8/2010	Brister et al.
7,792,562	B2	9/2010	Shults et al.
7,811,231	B2	10/2010	Jin et al.
7,813,809	B2	10/2010	Strother et al.
7,822,454	B1	10/2010	Alden et al.
7,826,981	B2	11/2010	Goode, Jr. et al.
7,866,026	B1	1/2011	Wang et al.
7,889,069	B2	2/2011	Fifolt et al.
7,899,511	B2	3/2011	Shults et al.
7,899,545	B2	3/2011	John
7,905,833	B2	3/2011	Brister et al.
7,914,450	B2	3/2011	Goode, Jr. et al.
7,920,906	B2	4/2011	Goode et al.
7,920,907	B2	4/2011	McGarraugh et al.
7,938,797	B2	5/2011	Estes
7,941,200	B2	5/2011	Weinert et al.
7,946,985	B2	5/2011	Mastrototaro et al.
7,970,448	B2	6/2011	Shults et al.
7,970,449	B2	6/2011	Ward
7,972,296	B2	7/2011	Braig et al.
7,974,672	B2	7/2011	Shults et al.
7,978,063	B2	7/2011	Baldus et al.
7,996,158	B2	8/2011	Hayter et al.
8,005,524	B2	8/2011	Brauker et al.
8,010,174	B2	8/2011	Goode et al.
8,010,256	B2	8/2011	Oowada
8,103,471	B2	1/2012	Hayter
8,140,312	B2	3/2012	Hayter et al.
8,160,670	B2	4/2012	Quyang et al.
8,160,900	B2	4/2012	Taub et al.
8,192,394	B2	6/2012	Estes et al.
8,216,138	B1	7/2012	McGarraugh et al.
8,224,410	B2	7/2012	Hadvary et al.
8,239,166	B2	8/2012	Hayter et al.
8,255,026	B1	8/2012	Al-Ali
8,260,558	B2	9/2012	Hayter et al.
8,282,549	B2	10/2012	Brauker et al.
8,346,335	B2	1/2013	Harper et al.
8,346,337	B2	1/2013	Heller et al.
8,374,668	B1	2/2013	Hayter et al.
8,376,945	B2	2/2013	Hayter et al.
8,377,271	B2	2/2013	Mao et al.
8,409,093	B2	4/2013	Bugler
8,444,560	B2	5/2013	Hayter et al.
8,461,985	B2	6/2013	Fennell et al.
8,512,243	B2	8/2013	Stafford
8,560,038	B2	10/2013	Hayter et al.
8,571,808	B2	10/2013	Hayter
8,583,205	B2	11/2013	Budiman et al.
8,597,570	B2	12/2013	Terashima et al.
8,600,681	B2	12/2013	Hayter et al.
8,612,163	B2	12/2013	Hayter et al.
8,682,408	B2	3/2014	Boock et al.
8,682,615	B2	3/2014	Hayter et al.
8,710,993	B2	4/2014	Hayter et al.
8,834,366	B2	9/2014	Hayter et al.
8,845,536	B2	9/2014	Brauker et al.
9,060,719	B2	6/2015	Hayter et al.
9,186,098	B2	11/2015	Lee et al.
9,289,179	B2	3/2016	Hayter et al.
9,357,951	B2	6/2016	Simpson et al.
9,398,872	B2	7/2016	Hayter et al.
9,439,586	B2	9/2016	Bugler
9,480,421	B2	11/2016	Stafford
9,483,608	B2	11/2016	Hayter et al.
9,558,325	B2	1/2017	Hayter et al.
2001/0034479	A1	10/2001	Ring et al.
2001/0037366	A1	11/2001	Webb et al.
2002/0002344	A1	1/2002	Douglas et al.
2002/0013538	A1	1/2002	Teller
2002/0016534	A1	2/2002	Trepagnier et al.
2002/0019022	A1	2/2002	Dunn et al.
2002/0022855	A1	2/2002	Bobroff et al.
2002/0023852	A1	2/2002	McLvor et al.
2002/0032386	A1	3/2002	Sackner et al.
2002/0042090	A1	4/2002	Heller et al.
2002/0050250	A1	5/2002	Peterson et al.
2002/0055711	A1	5/2002	Lavi et al.
2002/0057993	A1	5/2002	Maisey et al.
2002/0065454	A1	5/2002	Lebel et al.
2002/0066764	A1	6/2002	Perry et al.
2002/0072720	A1	6/2002	Hague et al.

(56) **References Cited**

U.S. PATENT DOCUMENTS

2002/0076966 A1 6/2002 Carron et al.
2002/0082487 A1 6/2002 Kollias et al.
2002/0095076 A1 7/2002 Krausman et al.
2002/0103499 A1 8/2002 Perez et al.
2002/0106709 A1 8/2002 Potts et al.
2002/0117639 A1 8/2002 Paolini et al.
2002/0119711 A1 8/2002 Vanantwerp et al.
2002/0120186 A1 8/2002 Keimel
2002/0128594 A1 9/2002 Das et al.
2002/0130042 A1 9/2002 Moerman et al.
2002/0133066 A1 9/2002 Miller et al.
2002/0147135 A1 10/2002 Schnell
2002/0150959 A1 10/2002 Lejeunne et al.
2002/0154050 A1 10/2002 Krupp et al.
2002/0161288 A1 10/2002 Shin et al.
2002/0161290 A1 10/2002 Chance
2002/0165462 A1 11/2002 Westbrook et al.
2002/0169369 A1 11/2002 Ward et al.
2002/0198444 A1 12/2002 Ughigaki et al.
2003/0023317 A1 1/2003 Brauker et al.
2003/0023461 A1 1/2003 Quintanilla et al.
2003/0028089 A1 2/2003 Galley et al.
2003/0032077 A1 2/2003 Itoh et al.
2003/0032867 A1 2/2003 Crothall et al.
2003/0032874 A1 2/2003 Rhodes et al.
2003/0042137 A1 3/2003 Mao et al.
2003/0050546 A1 3/2003 Desai et al.
2003/0054428 A1 3/2003 Monfre et al.
2003/0060753 A1 3/2003 Starkweather et al.
2003/0065308 A1 4/2003 Lebel et al.
2003/0069510 A1 4/2003 Semler
2003/0078481 A1 4/2003 McIvor et al.
2003/0078560 A1 4/2003 Miller et al.
2003/0083686 A1 5/2003 Freeman et al.
2003/0097092 A1 5/2003 Flaherty
2003/0100040 A1 5/2003 Bonnecaze et al.
2003/0109775 A1 6/2003 O'Neil et al.
2003/0114897 A1 6/2003 Von Arx et al.
2003/0134347 A1 7/2003 Heller et al.
2003/0135127 A1 7/2003 Sackner et al.
2003/0135333 A1 7/2003 Aceti et al.
2003/0144581 A1 7/2003 Conn et al.
2003/0144608 A1 7/2003 Kojima et al.
2003/0155656 A1 8/2003 Chiu et al.
2003/0168338 A1 9/2003 Gao et al.
2003/0176933 A1 9/2003 Lebel et al.
2003/0187338 A1 10/2003 Say et al.
2003/0199744 A1 10/2003 Buse et al.
2003/0199790 A1 10/2003 Boecker et al.
2003/0199910 A1 10/2003 Boecker et al.
2003/0212379 A1 11/2003 Bylund et al.
2003/0217966 A1 11/2003 Tapsak et al.
2003/0225361 A1 12/2003 Sabra
2004/0002682 A1 1/2004 Kovelman et al.
2004/0010207 A1 1/2004 Flaherty et al.
2004/0011671 A1 1/2004 Shults et al.
2004/0034289 A1 2/2004 Teller et al.
2004/0040840 A1 3/2004 Mao et al.
2004/0045879 A1 3/2004 Shults et al.
2004/0054263 A1 3/2004 Moerman et al.
2004/0063435 A1 4/2004 Sakamoto et al.
2004/0064068 A1 4/2004 DeNuzzio et al.
2004/0064133 A1 4/2004 Miller et al.
2004/0072357 A1 4/2004 Steine et al.
2004/0096959 A1 5/2004 Steine et al.
2004/0106858 A1 6/2004 Say et al.
2004/0106859 A1 6/2004 Say et al.
2004/0111017 A1 6/2004 Say et al.
2004/0116847 A1 6/2004 Wall
2004/0116865 A1 6/2004 Bengtsson
2004/0117204 A1 6/2004 Mazar et al.
2004/0122353 A1 6/2004 Shahmirian et al.
2004/0122489 A1 6/2004 Mazar et al.
2004/0116866 A1 7/2004 Gorman et al.
2004/0133164 A1* 7/2004 Funderburk A61B 5/14532 604/134
2004/0133390 A1 7/2004 Osorio et al.
2004/0135571 A1 7/2004 Uutela et al.
2004/0135684 A1 7/2004 Steinthal et al.
2004/0138544 A1 7/2004 Ward et al.
2004/0138588 A1 7/2004 Saikley et al.
2004/0138688 A1 7/2004 Giraud
2004/0140211 A1 7/2004 Broy et al.
2004/0142403 A1 7/2004 Hetzel et al.
2004/0147872 A1 7/2004 Thompson
2004/0147996 A1 7/2004 Miazga et al.
2004/0152622 A1 8/2004 Keith et al.
2004/0158207 A1 8/2004 Hunn et al.
2004/0162521 A1 8/2004 Bengtsson et al.
2004/0162678 A1 8/2004 Hetzel et al.
2004/0167801 A1 8/2004 Say et al.
2004/0171910 A1 9/2004 Moore-Steele
2004/0171921 A1 9/2004 Say et al.
2004/0176672 A1 9/2004 Silver et al.
2004/0186362 A1 9/2004 Brauker et al.
2004/0186365 A1 9/2004 Jin et al.
2004/0193020 A1 9/2004 Chiba et al.
2004/0193090 A1 9/2004 Lebel et al.
2004/0199056 A1 10/2004 Husemann et al.
2004/0199059 A1 10/2004 Brauker et al.
2004/0204687 A1 10/2004 Mogensen et al.
2004/0210122 A1 10/2004 Sleburg
2004/0223985 A1 11/2004 Dunfiled et al.
2004/0225338 A1 11/2004 Lebel et al.
2004/0236200 A1 11/2004 Say et al.
2004/0236251 A1 11/2004 Roe et al.
2004/0249253 A1 12/2004 Racchini et al.
2004/0254433 A1 12/2004 Bandis et al.
2004/0254434 A1 12/2004 Goodnow et al.
2004/0267300 A1 12/2004 Mace
2005/0001024 A1 1/2005 Kusaka et al.
2005/0003470 A1 1/2005 Nelson et al.
2005/0004494 A1 1/2005 Perez et al.
2005/0006122 A1 1/2005 Burnette
2005/0010269 A1 1/2005 Lebel et al.
2005/0017864 A1 1/2005 Tsoukalis
2005/0027177 A1 2/2005 Shin et al.
2005/0027180 A1 2/2005 Goode, Jr. et al.
2005/0027181 A1 2/2005 Goode, Jr. et al.
2005/0027462 A1 2/2005 Goode, Jr. et al.
2005/0027463 A1 2/2005 Goode, Jr. et al.
2005/0031689 A1 2/2005 Shults et al.
2005/0033132 A1 2/2005 Shults et al.
2005/0043598 A1 2/2005 Goode, Jr. et al.
2005/0049179 A1 3/2005 Davidson et al.
2005/0051427 A1 3/2005 Brauker et al.
2005/0051440 A1 3/2005 Simpson et al.
2005/0056552 A1 3/2005 Simpson et al.
2005/0070774 A1 3/2005 Addison et al.
2005/0070819 A1 3/2005 Poux et al.
2005/0085872 A1 4/2005 Yanagihara et al.
2005/0090607 A1 4/2005 Tapsak
2005/0090850 A1 4/2005 Thoes et al.
2005/0096516 A1 5/2005 Soykan et al.
2005/0096520 A1 5/2005 Maekawa et al.
2005/0101912 A1 5/2005 Faust et al.
2005/0106713 A1 5/2005 Phan et al.
2005/0112169 A1 5/2005 Brauker et al.
2005/0113648 A1 5/2005 Yang et al.
2005/0113886 A1 5/2005 Fischell et al.
2005/0114068 A1 5/2005 Chey et al.
2005/0115832 A1 6/2005 Simpson et al.
2005/0116683 A1 6/2005 Cheng et al.
2005/0121322 A1 6/2005 Say et al.
2005/0131346 A1 6/2005 Douglas
2005/0134731 A1 6/2005 Lee et al.
2005/0137530 A1 6/2005 Campbell et al.
2005/0143635 A1 6/2005 Kamath et al.
2005/0154271 A1 7/2005 Rasdal et al.
2005/0154410 A1 7/2005 Conway et al.
2005/0159678 A1 7/2005 Taniike et al.
2005/0161346 A1 7/2005 Simpson et al.
2005/0165404 A1 7/2005 Miller

(56) **References Cited**

U.S. PATENT DOCUMENTS

2005/0173245 A1 8/2005 Feldman et al.
2005/0176136 A1 8/2005 Burd et al.
2005/0182306 A1 8/2005 Sloan
2005/0187442 A1 8/2005 Cho et al.
2005/0187720 A1 8/2005 Goode, Jr. et al.
2005/0192557 A1 9/2005 Brauker et al.
2005/0195930 A1 9/2005 Spital et al.
2005/0197554 A1 9/2005 Polcha
2005/0197793 A1 9/2005 Baker, Jr.
2005/0199494 A1 9/2005 Say et al.
2005/0203360 A1 9/2005 Brauker et al.
2005/0204134 A1 9/2005 Von Arx et al.
2005/0214892 A1 9/2005 Kovatchev et al.
2005/0222518 A1 10/2005 Dib
2005/0222599 A1 10/2005 Czernecki et al.
2005/0236277 A9 10/2005 Imran et al.
2005/0236361 A1 10/2005 Ufer et al.
2005/0239154 A1 10/2005 Feldman et al.
2005/0239156 A1 10/2005 Drucker et al.
2005/0241957 A1 11/2005 Mao et al.
2005/0245795 A1 11/2005 Goode, Jr. et al.
2005/0245799 A1 11/2005 Brauker et al.
2005/0245839 A1 11/2005 Stivoric et al.
2005/0245844 A1 11/2005 Mace et al.
2005/0251033 A1 11/2005 Scarantino et al.
2005/0267327 A1 12/2005 Iizuka et al.
2005/0269214 A1 12/2005 Lee
2005/0277164 A1 12/2005 Drucker et al.
2005/0277912 A1 12/2005 John
2005/0283114 A1 12/2005 Bresina et al.
2005/0287620 A1 12/2005 Heller et al.
2006/0001538 A1 1/2006 Kraft et al.
2006/0004303 A1 1/2006 Weidenhaupt et al.
2006/0009727 A1 1/2006 O'Mahony et al.
2006/0010098 A1 1/2006 Goodnow et al.
2006/0015020 A1 1/2006 Neale et al.
2006/0015024 A1 1/2006 Brister et al.
2006/0016700 A1 1/2006 Brister et al.
2006/0019327 A1 1/2006 Brister et al.
2006/0020186 A1 1/2006 Brister et al.
2006/0020187 A1 1/2006 Brister et al.
2006/0020188 A1 1/2006 Kamath et al.
2006/0020189 A1 1/2006 Brister et al.
2006/0020190 A1 1/2006 Kamath et al.
2006/0020191 A1 1/2006 Brister et al.
2006/0020192 A1 1/2006 Brister et al.
2006/0020300 A1 1/2006 Nghiem et al.
2006/0025662 A1 2/2006 Buse et al.
2006/0025663 A1 2/2006 Talbot et al.
2006/0036139 A1 2/2006 Brister et al.
2006/0036140 A1 2/2006 Brister et al.
2006/0036141 A1 2/2006 Kamath et al.
2006/0036142 A1 2/2006 Brister et al.
2006/0036143 A1 2/2006 Brister et al.
2006/0036144 A1 2/2006 Brister et al.
2006/0036145 A1 2/2006 Brister et al.
2006/0040402 A1 2/2006 Brauker et al.
2006/0047220 A1 3/2006 Sakata et al.
2006/0058588 A1 3/2006 Zdeblick
2006/0068208 A1 3/2006 Tapsak et al.
2006/0079740 A1 4/2006 Silver et al.
2006/0086624 A1 4/2006 Tapsak et al.
2006/0091006 A1 5/2006 Wang et al.
2006/0095014 A1 5/2006 Ethelfeld
2006/0129173 A1 6/2006 Wilkinson
2006/0135908 A1 6/2006 Liniger et al.
2006/0142651 A1 6/2006 Brister et al.
2006/0154642 A1 7/2006 Scannell
2006/0155180 A1 7/2006 Brister et al.
2006/0155210 A1 7/2006 Beckman et al.
2006/0155317 A1 7/2006 List et al.
2006/0166629 A1 7/2006 Reggiardo
2006/0173444 A1 8/2006 Choy et al.
2006/0183984 A1 8/2006 Dobbles et al.
2006/0183985 A1 8/2006 Brister et al.
2006/0189851 A1 8/2006 Tvig et al.
2006/0189863 A1 8/2006 Peyser et al.
2006/0189939 A1 8/2006 Gonnelli et al.
2006/0193375 A1 8/2006 Lee
2006/0195029 A1 8/2006 Shults et al.
2006/0200020 A1 9/2006 Brister et al.
2006/0200022 A1 9/2006 Brauker et al.
2006/0200181 A1 9/2006 Fukuzawa et al.
2006/0200970 A1 9/2006 Brister et al.
2006/0202805 A1 9/2006 Schulman et al.
2006/0211921 A1 9/2006 Brauker et al.
2006/0222566 A1 10/2006 Brauker et al.
2006/0224108 A1 10/2006 Brauker et al.
2006/0224109 A1 10/2006 Steil et al.
2006/0224141 A1 10/2006 Rush et al.
2006/0226985 A1 10/2006 Goodnow et al.
2006/0247508 A1 11/2006 Fennell
2006/0247985 A1 11/2006 Liamos et al.
2006/0253086 A1 11/2006 Moberg et al.
2006/0258929 A1 11/2006 Goode, Jr. et al.
2006/0258939 A1 11/2006 Pesach et al.
2006/0258959 A1 11/2006 Sode
2006/0264888 A1 11/2006 Moberg et al.
2006/0270922 A1 11/2006 Brauker et al.
2006/0270923 A1 11/2006 Brauker et al.
2006/0276724 A1 12/2006 Freeman et al.
2006/0281985 A1 12/2006 Ward et al.
2006/0282042 A1 12/2006 Walters et al.
2006/0287591 A1 12/2006 Ocvirk et al.
2006/0290496 A1 12/2006 Peeters et al.
2006/0293607 A1 12/2006 Alt et al.
2007/0007133 A1 1/2007 Mang et al.
2007/0016381 A1 1/2007 Kamath et al.
2007/0017983 A1 1/2007 Frank et al.
2007/0027381 A1 2/2007 Stafford
2007/0027384 A1 2/2007 Brister et al.
2007/0027385 A1 2/2007 Brister et al.
2007/0027507 A1 2/2007 Burdett et al.
2007/0032706 A1 2/2007 Kamath et al.
2007/0032717 A1 2/2007 Brister et al.
2007/0032718 A1 2/2007 Shults et al.
2007/0038044 A1 2/2007 Dobbles et al.
2007/0045902 A1 3/2007 Brauker et al.
2007/0056858 A1 3/2007 Chen et al.
2007/0060814 A1 3/2007 Stafford
2007/0060869 A1 3/2007 Tolle et al.
2007/0068807 A1 3/2007 Feldman et al.
2007/0073129 A1 3/2007 Shah et al.
2007/0078320 A1 4/2007 Stafford
2007/0078321 A1 4/2007 Mazza et al.
2007/0078322 A1 4/2007 Stafford
2007/0088377 A1 4/2007 Levaughn et al.
2007/0093704 A1 4/2007 Brister et al.
2007/0093754 A1 4/2007 Mogensen et al.
2007/0093786 A1 4/2007 Goldsmith et al.
2007/0095661 A1 5/2007 Wang et al.
2007/0106135 A1 5/2007 Sloan et al.
2007/0108048 A1 5/2007 Wang et al.
2007/0110124 A1 5/2007 Shiraki et al.
2007/0123819 A1 5/2007 Mernoe et al.
2007/0129619 A1 6/2007 Ward et al.
2007/0129621 A1 6/2007 Kellogg et al.
2007/0135696 A1 6/2007 Ward
2007/0149873 A1 6/2007 Say et al.
2007/0149875 A1 6/2007 Ouyang et al.
2007/0153705 A1 7/2007 Rosar et al.
2007/0156094 A1 7/2007 Safabash et al.
2007/0163880 A1 7/2007 Woo et al.
2007/0173706 A1 7/2007 Neinast et al.
2007/0173709 A1 7/2007 Petisce et al.
2007/0173710 A1 7/2007 Petisce et al.
2007/0173741 A1 7/2007 Deshmukh et al.
2007/0191701 A1 8/2007 Feldman et al.
2007/0191702 A1 8/2007 Yodfat et al.
2007/0197889 A1 8/2007 Brister et al.
2007/0199818 A1 8/2007 Petyt et al.
2007/0202562 A1 8/2007 Curry et al.
2007/0203407 A1 8/2007 Hoss et al.
2007/0203966 A1 8/2007 Brauker et al.

(56) **References Cited**

U.S. PATENT DOCUMENTS

2007/0208244 A1 9/2007 Brauker et al.
2007/0208245 A1 9/2007 Brauker et al.
2007/0208246 A1 9/2007 Brauker et al.
2007/0213611 A1 9/2007 Simpson et al.
2007/0219496 A1 9/2007 Kamen et al.
2007/0227911 A1 10/2007 Wang et al.
2007/0232878 A1 10/2007 Kovatchev et al.
2007/0232879 A1 10/2007 Brister et al.
2007/0233013 A1 10/2007 Schoenberg et al.
2007/0235331 A1 10/2007 Simpson et al.
2007/0244368 A1 10/2007 Bayloff et al.
2007/0244379 A1 10/2007 Boock et al.
2007/0244398 A1 10/2007 Lo et al.
2007/0249922 A1 10/2007 Peyser et al.
2007/0255302 A1 11/2007 Koeppel et al.
2007/0255321 A1 11/2007 Gerber et al.
2007/0255348 A1 11/2007 Holtzclaw
2007/0270672 A1 11/2007 Hayter
2008/0004512 A1 1/2008 Funderburk et al.
2008/0004515 A1 1/2008 Jennewine et al.
2008/0004573 A1 1/2008 Kaufmann et al.
2008/0004601 A1 1/2008 Jennewine et al.
2008/0009692 A1 1/2008 Stafford
2008/0009805 A1 1/2008 Ethelfeld
2008/0017522 A1 1/2008 Heller et al.
2008/0021666 A1 1/2008 Goode, Jr. et al.
2008/0027296 A1 1/2008 Hadvary et al.
2008/0027474 A1 1/2008 Curry et al.
2008/0029391 A1 2/2008 Mao et al.
2008/0033254 A1 2/2008 Kamath et al.
2008/0033268 A1 2/2008 Stafford
2008/0033318 A1 2/2008 Mace et al.
2008/0039702 A1 2/2008 Hayter et al.
2008/0045824 A1 2/2008 Tapsak et al.
2008/0057484 A1 3/2008 Miyata et al.
2008/0058625 A1 3/2008 McGarraugh et al.
2008/0058626 A1 3/2008 Miyata et al.
2008/0058678 A1 3/2008 Miyata et al.
2008/0058773 A1 3/2008 John
2008/0060955 A1 3/2008 Goodnow
2008/0061961 A1 3/2008 John
2008/0064937 A1 3/2008 McGarraugh et al.
2008/0064941 A1 3/2008 Funderburk et al.
2008/0064944 A1 3/2008 VanAntwerp et al.
2008/0065646 A1 3/2008 Zhang et al.
2008/0066305 A1 3/2008 Wang et al.
2008/0071156 A1 3/2008 Brister et al.
2008/0071157 A1 3/2008 McGarraugh et al.
2008/0071158 A1 3/2008 McGarraugh et al.
2008/0083617 A1 4/2008 Simpson et al.
2008/0086042 A1 4/2008 Brister et al.
2008/0086044 A1 4/2008 Brister et al.
2008/0086273 A1 4/2008 Shults et al.
2008/0092638 A1 4/2008 Brenneman et al.
2008/0097246 A1 4/2008 Stafford
2008/0099332 A1 5/2008 Scott et al.
2008/0102441 A1 5/2008 Chen et al.
2008/0108942 A1 5/2008 Brister et al.
2008/0112848 A1 5/2008 Huffstodt et al.
2008/0114228 A1 5/2008 McCluskey et al.
2008/0114280 A1 5/2008 Stafford
2008/0119707 A1 5/2008 Stafford
2008/0133702 A1 6/2008 Sharma et al.
2008/0139910 A1 6/2008 Mastrototaro et al.
2008/0148873 A1 6/2008 Wang
2008/0161664 A1 7/2008 Mastrototaro et al.
2008/0167578 A1 7/2008 Bryer et al.
2008/0177149 A1 7/2008 Weinert et al.
2008/0177165 A1 7/2008 Blomquist et al.
2008/0183061 A1 7/2008 Goode, Jr. et al.
2008/0183399 A1 7/2008 Goode, Jr. et al.
2008/0188731 A1 8/2008 Brister et al.
2008/0189051 A1 8/2008 Goode, Jr. et al.
2008/0194934 A1 8/2008 Ray et al.
2008/0194935 A1 8/2008 Brister et al.
2008/0194936 A1 8/2008 Goode, Jr. et al.
2008/0194937 A1 8/2008 Goode, Jr. et al.
2008/0194938 A1 8/2008 Brister et al.
2008/0195049 A1 8/2008 Thalmann et al.
2008/0195232 A1 8/2008 Carr-Brendel et al.
2008/0195967 A1 8/2008 Goode, Jr. et al.
2008/0197024 A1 8/2008 Simpson et al.
2008/0200788 A1 8/2008 Brister et al.
2008/0200789 A1 8/2008 Brister et al.
2008/0200791 A1 8/2008 Simpson et al.
2008/0200897 A1 8/2008 Hoss et al.
2008/0201325 A1 8/2008 Doniger et al.
2008/0208025 A1 8/2008 Shults et al.
2008/0208026 A1 8/2008 Noujaim et al.
2008/0214481 A1 9/2008 Challoner et al.
2008/0214900 A1 9/2008 Fennell et al.
2008/0214910 A1 9/2008 Buck
2008/0214915 A1 9/2008 Brister et al.
2008/0214918 A1 9/2008 Brister et al.
2008/0228051 A1 9/2008 Shults et al.
2008/0228054 A1 9/2008 Shults et al.
2008/0234943 A1 9/2008 Ray et al.
2008/0242961 A1 10/2008 Brister et al.
2008/0242963 A1 10/2008 Essenpreis et al.
2008/0254544 A1 10/2008 Modzelewski et al.
2008/0255440 A1 10/2008 Eilersen et al.
2008/0262330 A1 10/2008 Reynolds et al.
2008/0262469 A1 10/2008 Brister et al.
2008/0267823 A1 10/2008 Wang et al.
2008/0269584 A1 10/2008 Shekalim
2008/0269673 A1 10/2008 Butoi et al.
2008/0269714 A1 10/2008 Mastrototaro et al.
2008/0275313 A1 11/2008 Brister et al.
2008/0281178 A1 11/2008 Chuang et al.
2008/0283396 A1 11/2008 Wang et al.
2008/0287764 A1 11/2008 Rasdal et al.
2008/0287765 A1 11/2008 Rasdal et al.
2008/0287766 A1 11/2008 Rasdal et al.
2008/0294024 A1 11/2008 Cosentino et al.
2008/0294096 A1 11/2008 Uber et al.
2008/0296155 A1 12/2008 Shults et al.
2008/0300476 A1 12/2008 Stafford
2008/0300572 A1 12/2008 Rankers et al.
2008/0306368 A1 12/2008 Goode, Jr. et al.
2008/0306434 A1 12/2008 Dobbles et al.
2008/0306435 A1 12/2008 Kamath et al.
2008/0306444 A1 12/2008 Brister et al.
2008/0319085 A1 12/2008 Wright et al.
2009/0005659 A1 1/2009 Kollias et al.
2009/0005666 A1 1/2009 Shin et al.
2009/0005729 A1 1/2009 Hendrixson et al.
2009/0006061 A1 1/2009 Thukral et al.
2009/0012376 A1 1/2009 Agus
2009/0012377 A1 1/2009 Jennewine et al.
2009/0012379 A1 1/2009 Goode, Jr. et al.
2009/0018424 A1 1/2009 Kamath et al.
2009/0018425 A1 1/2009 Ouyang et al.
2009/0030293 A1 1/2009 Cooper et al.
2009/0030294 A1 1/2009 Petisce et al.
2009/0036758 A1 2/2009 Brauker et al.
2009/0036763 A1 2/2009 Brauker et al.
2009/0036915 A1 2/2009 Karbowniczek et al.
2009/0040022 A1 2/2009 Finkenzeller
2009/0043181 A1 2/2009 Brauker et al.
2009/0043182 A1 2/2009 Brauker et al.
2009/0043525 A1 2/2009 Brauker et al.
2009/0043541 A1 2/2009 Brauker et al.
2009/0043542 A1 2/2009 Brauker et al.
2009/0045055 A1 2/2009 Rhodes et al.
2009/0048503 A1 2/2009 Dalal et al.
2009/0048563 A1 2/2009 Ethelfeld et al.
2009/0054745 A1 2/2009 Jennewine et al.
2009/0054747 A1 2/2009 Fennell
2009/0054748 A1 2/2009 Feldman et al.
2009/0054753 A1 2/2009 Robinson et al.
2009/0054866 A1 2/2009 Teisen-Simony et al.
2009/0062633 A1 3/2009 Brauker et al.
2009/0062635 A1 3/2009 Brauker et al.
2009/0069658 A1 3/2009 Say et al.

(56) **References Cited**

U.S. PATENT DOCUMENTS

2009/0069750 A1 3/2009 Schraga
2009/0076356 A1 3/2009 Simpson et al.
2009/0076359 A1 3/2009 Peyser
2009/0076360 A1 3/2009 Brister et al.
2009/0076361 A1 3/2009 Kamath et al.
2009/0082693 A1 3/2009 Stafford
2009/0085873 A1 4/2009 Betts et al.
2009/0088614 A1 4/2009 Taub
2009/0088787 A1 4/2009 Koike et al.
2009/0093687 A1 4/2009 Telfort et al.
2009/0099436 A1 4/2009 Brister et al.
2009/0102678 A1 4/2009 Mazza et al.
2009/0105568 A1 4/2009 Bugler
2009/0105569 A1 4/2009 Stafford
2009/0105570 A1 4/2009 Sloan et al.
2009/0105571 A1 4/2009 Fennell et al.
2009/0124877 A1 5/2009 Goode et al.
2009/0124878 A1 5/2009 Goode et al.
2009/0124879 A1 5/2009 Brister et al.
2009/0124964 A1 5/2009 Leach et al.
2009/0124979 A1 5/2009 Raymond et al.
2009/0131768 A1 5/2009 Simpson et al.
2009/0131769 A1 5/2009 Leach et al.
2009/0131776 A1 5/2009 Simpson et al.
2009/0131777 A1 5/2009 Simpson et al.
2009/0131860 A1 5/2009 Nielsen
2009/0137886 A1 5/2009 Shariati et al.
2009/0137887 A1 5/2009 Shariati et al.
2009/0143659 A1 6/2009 Li et al.
2009/0143660 A1 6/2009 Brister et al.
2009/0156919 A1 6/2009 Brister et al.
2009/0156924 A1 6/2009 Shariati et al.
2009/0163790 A1 6/2009 Brister et al.
2009/0163791 A1 6/2009 Brister et al.
2009/0163855 A1 6/2009 Shin et al.
2009/0171182 A1 7/2009 Stafford
2009/0177068 A1 7/2009 Stivoric et al.
2009/0178459 A1 7/2009 Li et al.
2009/0182217 A1 7/2009 Li et al.
2009/0192366 A1 7/2009 Mensinger et al.
2009/0192380 A1 7/2009 Shariati et al.
2009/0192722 A1 7/2009 Shariati et al.
2009/0192724 A1 7/2009 Brauker et al.
2009/0192745 A1 7/2009 Kamath et al.
2009/0192751 A1 7/2009 Kamath et al.
2009/0198215 A1 8/2009 Chong et al.
2009/0203981 A1 8/2009 Brauker et al.
2009/0204341 A1 8/2009 Brauker et al.
2009/0212766 A1 8/2009 Olson et al.
2009/0216100 A1 8/2009 Ebner et al.
2009/0216103 A1 8/2009 Brister et al.
2009/0240120 A1 9/2009 Mensinger et al.
2009/0240128 A1 9/2009 Mensinger et al.
2009/0240193 A1 9/2009 Mensinger et al.
2009/0242399 A1 10/2009 Kamath et al.
2009/0242425 A1 10/2009 Kamath et al.
2009/0247855 A1 10/2009 Boock et al.
2009/0247856 A1 10/2009 Boock et al.
2009/0247857 A1 10/2009 Harper et al.
2009/0247931 A1 10/2009 Damgaard-Sorensen
2009/0259118 A1 10/2009 Feldman et al.
2009/0259201 A1 10/2009 Hwang et al.
2009/0259202 A1 10/2009 Leeflang et al.
2009/0270765 A1 10/2009 Ghesquire et al.
2009/0281406 A1 11/2009 McGarraugh et al.
2009/0287073 A1 11/2009 Boock et al.
2009/0287074 A1 11/2009 Shults et al.
2009/0292184 A1 11/2009 Funderburk et al.
2009/0292185 A1 11/2009 Funderburk et al.
2009/0294277 A1 12/2009 Thomas et al.
2009/0298182 A1 12/2009 Schulat et al.
2009/0299155 A1 12/2009 Yang et al.
2009/0299156 A1 12/2009 Simpson et al.
2009/0299162 A1 12/2009 Brauker et al.
2009/0299167 A1 12/2009 Seymour
2009/0299276 A1 12/2009 Brauker et al.
2010/0004597 A1 1/2010 Gryn et al.
2010/0010324 A1 1/2010 Brauker et al.
2010/0010329 A1 1/2010 Taub et al.
2010/0010331 A1 1/2010 Brauker et al.
2010/0010332 A1 1/2010 Brauker et al.
2010/0016687 A1 1/2010 Brauker et al.
2010/0016698 A1 1/2010 Rasdal et al.
2010/0022855 A1 1/2010 Brauker et al.
2010/0022863 A1 1/2010 Mogensen et al.
2010/0022988 A1 1/2010 Wochner et al.
2010/0030038 A1 2/2010 Brauker et al.
2010/0030053 A1 2/2010 Goode, Jr. et al.
2010/0030484 A1 2/2010 Brauker et al.
2010/0030485 A1 2/2010 Brauker et al.
2010/0036215 A1 2/2010 Goode, Jr. et al.
2010/0036216 A1 2/2010 Goode, Jr. et al.
2010/0036222 A1 2/2010 Goode, Jr. et al.
2010/0036223 A1 2/2010 Goode, Jr. et al.
2010/0036225 A1 2/2010 Goode, Jr. et al.
2010/0036281 A1 2/2010 Doi
2010/0041971 A1 2/2010 Goode, Jr. et al.
2010/0045465 A1 2/2010 Brauker et al.
2010/0049014 A1 2/2010 Funderburk et al.
2010/0049024 A1 2/2010 Saint et al.
2010/0063373 A1 3/2010 Kamath et al.
2010/0069728 A1 3/2010 Funderburk et al.
2010/0076283 A1 3/2010 Simpson et al.
2010/0081908 A1 4/2010 Dobbles et al.
2010/0081910 A1 4/2010 Brister et al.
2010/0081953 A1 4/2010 Syeda-Mahmood et al.
2010/0087724 A1 4/2010 Brauker et al.
2010/0094251 A1 4/2010 Estes et al.
2010/0096259 A1 4/2010 Zhang et al.
2010/0099970 A1 4/2010 Shults et al.
2010/0099971 A1 4/2010 Shults et al.
2010/0100113 A1 4/2010 Iio et al.
2010/0105999 A1 4/2010 Dixon et al.
2010/0106088 A1 4/2010 Yodfat et al.
2010/0113897 A1 5/2010 Brenneman et al.
2010/0119693 A1 5/2010 Tapsak et al.
2010/0121167 A1 5/2010 McGarraugh et al.
2010/0121169 A1 5/2010 Petisce et al.
2010/0141656 A1 6/2010 Krieftewirth
2010/0152554 A1 6/2010 Steine et al.
2010/0160759 A1 6/2010 Celentano et al.
2010/0168538 A1 7/2010 Keenan et al.
2010/0168677 A1 7/2010 Gabriel et al.
2010/0174157 A1 7/2010 Brister et al.
2010/0174158 A1 7/2010 Kamath et al.
2010/0174163 A1 7/2010 Brister et al.
2010/0174164 A1 7/2010 Brister et al.
2010/0174165 A1 7/2010 Brister et al.
2010/0174166 A1 7/2010 Brister et al.
2010/0174167 A1 7/2010 Kamath et al.
2010/0174168 A1 7/2010 Goode et al.
2010/0174266 A1 7/2010 Estes
2010/0179401 A1 7/2010 Rasdal et al.
2010/0179402 A1 7/2010 Goode et al.
2010/0179404 A1 7/2010 Kamath et al.
2010/0179408 A1 7/2010 Kamath et al.
2010/0179409 A1 7/2010 Kamath et al.
2010/0185065 A1 7/2010 Goode et al.
2010/0185069 A1 7/2010 Brister et al.
2010/0185070 A1 7/2010 Brister et al.
2010/0185071 A1 7/2010 Simpson et al.
2010/0185072 A1 7/2010 Goode et al.
2010/0185075 A1 7/2010 Brister et al.
2010/0185175 A1 7/2010 Kamen et al.
2010/0191082 A1 7/2010 Brister et al.
2010/0198033 A1 8/2010 Krulevitch et al.
2010/0198034 A1 8/2010 Thomas et al.
2010/0198035 A1 8/2010 Kamath et al.
2010/0198036 A1 8/2010 Kamath et al.
2010/0198142 A1 8/2010 Sloan et al.
2010/0204557 A1 8/2010 Kiaie et al.
2010/0204653 A1 8/2010 Gryn et al.
2010/0212583 A1 8/2010 Brister et al.
2010/0213057 A1 8/2010 Feldman et al.

(56) **References Cited**

U.S. PATENT DOCUMENTS

2010/0213080 A1 8/2010 Celentano et al.
2010/0214104 A1 8/2010 Goode et al.
2010/0217105 A1 8/2010 Yodfat et al.
2010/0217557 A1 8/2010 Kamath et al.
2010/0223013 A1 9/2010 Kamath et al.
2010/0223022 A1 9/2010 Kamath et al.
2010/0223023 A1 9/2010 Kamath et al.
2010/0228109 A1 9/2010 Kamath et al.
2010/0228497 A1 9/2010 Kamath et al.
2010/0240975 A1 9/2010 Goode et al.
2010/0240976 A1 9/2010 Goode et al.
2010/0261987 A1 10/2010 Kamath et al.
2010/0262201 A1 10/2010 He et al.
2010/0274107 A1 10/2010 Boock et al.
2010/0274111 A1 10/2010 Say et al.
2010/0275108 A1 10/2010 Sloan et al.
2010/0280341 A1 11/2010 Boock et al.
2010/0286496 A1 11/2010 Simpson et al.
2010/0298684 A1 11/2010 Leach et al.
2010/0313105 A1 12/2010 Nekoomaram et al.
2010/0317952 A1 12/2010 Budiman et al.
2010/0324392 A1 12/2010 Yee et al.
2010/0324403 A1 12/2010 Brister et al.
2010/0326842 A1 12/2010 Mazza et al.
2010/0331642 A1 12/2010 Bruce et al.
2010/0331644 A1 12/2010 Neale et al.
2010/0331647 A1 12/2010 Shah et al.
2010/0331648 A1 12/2010 Kamath et al.
2010/0331653 A1 12/2010 Stafford
2010/0331656 A1 12/2010 Mensinger et al.
2010/0331657 A1 12/2010 Mensinger et al.
2011/0004085 A1 1/2011 Mensinger et al.
2011/0009727 A1 1/2011 Mensinger et al.
2011/0021889 A1 1/2011 Hoss et al.
2011/0024043 A1 2/2011 Boock et al.
2011/0024307 A1 2/2011 Simpson et al.
2011/0027127 A1 2/2011 Simpson et al.
2011/0027453 A1 2/2011 Boock et al.
2011/0027458 A1 2/2011 Boock et al.
2011/0028815 A1 2/2011 Simpson et al.
2011/0028816 A1 2/2011 Simpson et al.
2011/0031986 A1 2/2011 Bhat et al.
2011/0040163 A1 2/2011 Telson et al.
2011/0040256 A1 2/2011 Bobroff et al.
2011/0040263 A1 2/2011 Hordum et al.
2011/0046456 A1 2/2011 Hordum et al.
2011/0046467 A1 2/2011 Simpson et al.
2011/0054275 A1 3/2011 Stafford
2011/0054282 A1 3/2011 Nekoomaram et al.
2011/0060196 A1 3/2011 Stafford
2011/0060530 A1 3/2011 Fennell
2011/0073475 A1 3/2011 Kastanos et al.
2011/0077490 A1 3/2011 Simpson et al.
2011/0077494 A1 3/2011 Doniger et al.
2011/0081726 A1 4/2011 Berman et al.
2011/0082484 A1 4/2011 Saravia et al.
2011/0106126 A1 5/2011 Love et al.
2011/0112696 A1 5/2011 Yodfat et al.
2011/0118579 A1 5/2011 Goode et al.
2011/0118580 A1 5/2011 Goode et al.
2011/0124992 A1 5/2011 Brauker et al.
2011/0124997 A1 5/2011 Goode et al.
2011/0125410 A1 5/2011 Goode et al.
2011/0130970 A1 6/2011 Goode et al.
2011/0130971 A1 6/2011 Goode et al.
2011/0130998 A1 6/2011 Goode et al.
2011/0137257 A1 6/2011 Gyrn et al.
2011/0144465 A1 6/2011 Shults et al.
2011/0148905 A1 6/2011 Simmons et al.
2011/0178378 A1 7/2011 Brister et al.
2011/0178461 A1 7/2011 Chong et al.
2011/0184258 A1 7/2011 Stafford
2011/0190603 A1 8/2011 Stafford
2011/0190614 A1 8/2011 Brister et al.
2011/0191044 A1 8/2011 Stafford
2011/0201910 A1 8/2011 Rasdal et al.
2011/0201911 A1 8/2011 Johnson et al.
2011/0208027 A1 8/2011 Wagner et al.
2011/0213225 A1 9/2011 Bernstein
2011/0218414 A1 9/2011 Kamath et al.
2011/0231107 A1 9/2011 Brauker et al.
2011/0231140 A1 9/2011 Goode et al.
2011/0231141 A1 9/2011 Goode et al.
2011/0231142 A1 9/2011 Goode et al.
2011/0253533 A1 10/2011 Shults et al.
2011/0257495 A1 10/2011 Hoss et al.
2011/0257521 A1 10/2011 Fraden
2011/0257895 A1 10/2011 Brauker et al.
2011/0263958 A1 10/2011 Brauker et al.
2011/0270062 A1 11/2011 Goode et al.
2011/0270158 A1 11/2011 Brauker et al.
2011/0275919 A1 11/2011 Petisce et al.
2011/0282327 A1 11/2011 Kellogg et al.
2011/0287528 A1 11/2011 Fern et al.
2011/0288574 A1 11/2011 Curry et al.
2011/0289497 A1 11/2011 Kiaie et al.
2011/0290645 A1 12/2011 Brister et al.
2011/0313543 A1 12/2011 Brauker et al.
2011/0319729 A1 12/2011 Donnay et al.
2011/0319733 A1 12/2011 Stafford
2011/0319738 A1 12/2011 Woodruff et al.
2011/0319739 A1 12/2011 Kamath et al.
2011/0320130 A1 12/2011 Valdes et al.
2012/0010642 A1 1/2012 Lee et al.
2012/0035445 A1 2/2012 Boock et al.
2012/0040101 A1 2/2012 Tapsak et al.
2012/0046534 A1 2/2012 Simpson et al.
2012/0078071 A1 3/2012 Bohm et al.
2012/0088995 A1 4/2012 Fennell et al.
2012/0108934 A1 5/2012 Valdes et al.
2012/0108983 A1 5/2012 Banet et al.
2012/0123385 A1 5/2012 Edwards et al.
2012/0165626 A1 6/2012 Irina et al.
2012/0165640 A1 6/2012 Galley et al.
2012/0173200 A1 7/2012 Breton et al.
2012/0184909 A1 7/2012 Gyrn et al.
2012/0190989 A1 7/2012 Kaiser et al.
2012/0245447 A1 9/2012 Karan et al.
2012/0296327 A1 11/2012 Hutchins et al.
2013/0035575 A1 2/2013 Mayou et al.
2013/0047981 A1 2/2013 Bacon
2013/0109940 A1 5/2013 Yang et al.
2013/0184547 A1 7/2013 Taub et al.
2013/0225959 A1 8/2013 Bugler
2013/0235166 A1 9/2013 Jones et al.
2013/0253289 A1 9/2013 Hadvary et al.
2014/0121480 A1 5/2014 Budiman et al.
2014/0148667 A1 5/2014 Boock et al.
2015/0105644 A1 4/2015 Yang et al.
2015/0241407 A1 8/2015 Ou et al.

FOREIGN PATENT DOCUMENTS

EP 0320109 6/1989
EP 0353328 2/1990
EP 0390390 10/1990
EP 0396788 11/1990
EP 0286118 1/1995
EP 1048264 11/2000
EP 1177802 2/2002
EP 0987982 1/2007
EP 2060284 5/2009
EP 2201969 6/2010
EP 2327362 6/2011
EP 2335587 6/2011
JP 11-506629 6/1999
JP 2003-527138 9/2003
JP 2004-520103 7/2004
JP 2004-520898 7/2004
JP 2006-517804 8/2006
WO WO-1996/039977 5/1996
WO WO 1996/025089 8/1996
WO WO-1996/035370 11/1996
WO WO-1997/021457 6/1997

(56) **References Cited**

FOREIGN PATENT DOCUMENTS

WO	WO 1998/035053	8/1998
WO	WO-1998/056293	12/1998
WO	WO-1999/033504	7/1999
WO	WO-1999/056613	11/1999
WO	WO-2000/049940	8/2000
WO	WO-2000/059370	10/2000
WO	WO 2000/078992	12/2000
WO	WO-2001/052935	7/2001
WO	WO-2001/054753	8/2001
WO	WO-2002/016905	2/2002
WO	WO-2002/050534	6/2002
WO	WO-2002/058537	8/2002
WO	WO-2003/028784	4/2003
WO	WO-2003/073936	9/2003
WO	WO-2003/076893	9/2003
WO	WO-2003/082091	10/2003
WO	WO-2003/085372	10/2003
WO	WO-2004/030726	4/2004
WO	WO-2004/054445	7/2004
WO	WO-2004/060436	7/2004
WO	WO-2004/061420	7/2004
WO	WO-2004/098684	11/2004
WO	WO-2004/098685	11/2004
WO	WO-2004/107971	12/2004
WO	WO-2004/112602	12/2004
WO	WO-2005/037184	4/2005
WO	WO-2005/084534	9/2005
WO	WO-2005/089103	9/2005
WO	WO-2005/092177	10/2005
WO	WO-2006/001024	1/2006
WO	WO-2006/015922	2/2006
WO	WO-2006/024671	3/2006
WO	WO-2006/042811	4/2006
WO	WO-2006/061354	6/2006
WO	WO-2006/108809	10/2006
WO	WO-2007/097754	8/2007
WO	WO-2007/140783	12/2007
WO	WO-2008/065646	6/2008
WO	WO-2008/133702	11/2008
WO	WO-2009/062675	5/2009
WO	WO-2010/112521	10/2010
WO	WO-2011/002815	1/2011

OTHER PUBLICATIONS

Alcock, S. J., et al., "Continuous Analyte Monitoring to Aid Clinical Practice", *IEEE Engineering in Medicine and Biology Magazine*, 1994, pp. 319-325.

Armour, J. C., et al., "Application of Chronic Intravascular Blood Glucose Sensor in Dogs", *Diabetes*, vol. 39, 1990, pp. 1519-1526.

Aussedat, B., et al., "A User-Friendly Method for Calibrating a Subcutaneous Glucose Sensor-Based Hypoglycemic Alarm", *Biosensors & Bioelectronics*, vol. 12, No. 11, 1997, pp. 1061-1071.

Bennion, N., et al., "Alternate Site Glucose Testing: A Crossover Design", *Diabetes Technology & Therapeutics*, vol. 4, No. 1, 2002, pp. 25-33.

Bindra, D. S., et al., "Design and in Vitro Studies of a Needle-Type Glucose Sensor for Subcutaneous Monitoring", *Analytical Chemistry*, vol. 63, No. 17, 1991, pp. 1692-1696.

Blank, T. B., et al., "Clinical Results From a Non-Invasive Blood Glucose Monitor", *Optical Diagnostics and Sensing of Biological Fluids and Glucose and Cholesterol Monitoring II, Proceedings of SPIE*, vol. 4624, 2002, pp. 1-10.

Bobbioni-Harsch, E., et al., "Lifespan of Subcutaneous Glucose Sensors and Their Performances During Dynamic Glycaemia Changes in Rats", *Journal of Biomedical Engineering*, vol. 15, 1993, pp. 457-463.

Brooks, S. L., et al., "Development of an On-Line Glucose Sensor for Fermentation Monitoring", *Biosensors*, vol. 3, 1987/88, pp. 45-56.

Cass, A. E., et al., "Ferrocene-Medicated Enzyme Electrode for Amperometric Determination of Glucose", *Analytical Chemistry*, vol. 56, No. 4, 1984, 667-671.

Choleau, C., et al., "Calibration of a Subcutaneous Amperometric Glucose Sensor Implanted for 7 Days in Diabetic Patients Part 2. Superiority of the One-Point Calibration Method", *Biosensors and Bioelectronics*, vol. 17, No. 8, 2002, pp. 647-654.

Choleau, C., et al., "Calibration of a Subcutaneous Amperometric Glucose Sensor Part 1: Effect of Measurement Uncertainties on the Determination of Sensor Sensitivity and Background Current", *Biosensors and Bioelectronics*, vol. 17, 2002, pp. 641-646.

Csoregi, E., et al., "Design and Optimization of a Selective Subcutaneously Implantable Glucose Electrode Based on 'Wired' Glucose Oxidase", *Analytical Chemistry*, vol. 67, No. 7, 1995, pp. 1240-1244.

DexCom, "STS User's Guide", *DexCom, Inc.*, 2006, pp. 1-111.

Feldman, B., et al., "A Continuous Glucose Sensor Based on Wired Enzyme™ Technology—Results from a 3-Day Trial in Patients with Type 1 Diabetes", *Diabetes Technology & Therapeutics*, vol. 5, No. 5, 2003, pp. 769-779.

Feldman, B., et al., "Correlation of Glucose Concentrations in Interstitial Fluid and Venous Blood During Periods of Rapid Glucose Change", *Abbott Diabetes Care, Inc. Freestyle Navigator. Continuous Glucose Monitor Pamphlet*, 2004.

Gregg, B. A., et al., "Cross-Linked Redox Gels Containing Glucose Oxidase for Amperometric Bionsensor Applications", *Analytical Chemistry*, vol. 62, No. 3, 1990, pp. 258-263.

Guerci, B., et al., "Clinical Performance of CGMS in Type 1 Diabetic Patients Treated by Continuous Subcutaneous Insulin Infusion Using Insulin Analogs", *Diabetes Care*, vol. 26, 2003, pp. 582-589.

Gunasingham, et al., "Electrochemically Modulated Optrode for Glucose", *Biosensors & Bioelectronics*, vol. 7, 1992, pp. 353-359.

Harrison, D. J., et al., "Characterization of Perfluorosulfonic Acid Polymer Coated Enzyme Electrodes and a Miniatureized Integrated Potentiostat for Glucose Analysis in Whole Blood", *Analytical Chemistry*, vol. 60, No. 19, 1988, pp. 2002-2007.

Heller, A., "Electrical Connection Enzyme Redox Centers to Electrodes", *Journal of Physical Chemistry*, vol. 96, No. 9, 1990, pp. 3579-3587.

Ikeda, T., et al., "Artificial Pancreas—Investigation of the Stability of Glucose Sensors Using a Telemetry System" (English language translation of abstract), *Jpn. J. Artif. Organs*, vol. 19, No. 2, 1990, pp. 889-892.

Isermann, R., "Supervision, Fault-Detection and Fault-Diagnosis Methods—An Introduction", *Control Engineering Practice*, vol. 5, No. 5, 1997, pp. 639-652.

Isermann, R., et al., "Trends in the Application of Model-Based Fault Detection and Diagnosis of Technical Processes", *Control Engineering Practice*, vol. 5, No. 5, 1997, pp. 709-719.

Johnson, K. W., et al., "In vivo Evaluation of an Electroenzymatic Glucose Sensor Implanted in Subcutaneous Tissue", *Biosensors & Bioelectronics*, vol. 7, 1992, pp. 709-714.

Johnson, P. C., "Peripheral Circulation", *John Wiley & Sons*, 1978, pp. 198.

Jungheim, K., et al., "How Rapid Does Glucose Concentration Change in Daily Life of Patients with Type 1 Diabetes?", 2002, pp. 250.

Jungheim, K., et al., "Risky Delay of Hypoglycemia Detection by Glucose Monitoring at the Arm", *Diabetes Care*, vol. 24, No. 7, 2001, pp. 1303-1304.

Kaplan, S. M., "Wiley Electrical and Electronics Engineering Dictionary", *IEEE Press*, 2004, pp. 141, 142, 548, 549.

Kovatchev, B. P., et al., "Evaluating the Accuracy of Continuous Glucose-Monitoring Sensors", *Diabetes Care*, vol. 27, No. 8, 2004, pp. 1922-1928.

Lortz, J., et al., "What is Bluetooth? We Explain The Newest Short-Range Connectivity Technology", *Smart Computing Learning Series, Wireless Computing*, vol. 8, Issue 5, 2002, pp. 72-74.

Maidan, R., et al., "Elimination of Electrooxidizable Interferant-Produced Currents in Amperometric Biosensors", *Analytical Chemistry*, vol. 64, No. 23, 1992, pp. 2889-2896.

Malin, S. F., et al., "Noninvasive Prediction of Glucose by Near-Infrared Diffuse Reflectance Spectoscopy", *Clinical Chemistry*, vol. 45 No. 9, 1999, pp. 1651-1658.

(56) **References Cited**

OTHER PUBLICATIONS

Mastrototaro, J. J., et al., "An Electroenzymatic Glucose Sensor Fabricated on a Flexible Substrate", *Sensors and Actuators B*, vol. 5, 1991, pp. 139-144.
Mauras, N., et al., "Lack of Accuracy of Continuous Glucose Sensors in Healthy, Nondiabetic Children: Results of the Diabetes Research in Children Network (DirecNet) Accuracy Study," *Journal of Pediatrics*, 2004, pp. 770-775.
McGarraugh, G., et al., "Glucose Measurements Using Blood Extracted from the Forearm and the Finger", *TheraSense, Inc.*, 2001, 16 Pages.
McGarraugh, G., et al., "Physiological Influences on Off-Finger Glucose Testing", *Diabetes Technology & Therapeutics*, vol. 3 No. 3, 2001, pp. 367-376.
McKean, B. D., et al., "A Telemetry-Instrumentation System for Chronically Implanted Glucose and Oxygen Sensors", *IEEE Transactions on Biomedical Engineering*, vol. 35, No. 7, 1988, pp. 526-532.
Minimed Technologies, "Tape Tips and Other Infusion Site Information", 1995.
Moatti-Sirat, D., et al., "Towards Continuous Glucose Monitoring: In Vivo Evaluation of a Miniaturized Glucose Sensor Implanted for Several Days in Rat Subcutaneous Tissue", *Diabetologia*, vol. 35, 1992, pp. 224-330.
Ohara, T. J., et al., "Glucose Electrodes Based on Cross-Linked $[Os(bpy)_2Cl]^{+/2+}$ Complexed Poly(1-Vinylimidazole) Films" *Analytical Chemistry*, vol. 65, No. 23, 1993, pp. 3512-3517.
Pickup, J., et al., "Implantable Glucose Sensors: Choosing the Appropriate Sensing Strategy", *Biosensors*, vol. 3, 1987/88, pp. 335-346.
Pickup, J., et al., "In Vivo Molecular Sensing in Diabetes Mellitus: An Implantable Glucose Sensor with Direct Electron Transfer", *Diabetologia*, vol. 32, 1989, pp. 213-217.
Pishko, M. V., et al., "Amperometric Glucose Microelectrodes Prepared Through Immobilization of Glucose Oxidase in Redox Hydrogels", *Analytical Chemistry*, vol. 63, No. 20, 1991, pp. 2268-2272.
Poitout, V., et al., "In Vitro and In Vivo Evaluation in Dogs of a Miniaturized Glucose Sensor", *ASAIO Transactions*, vol. 37, No. 3, 1991, pp. M298-M300.
Quinn, C. P., et al., "Kinetics of Glucose Delivery to Subcutaneous Tissue in Rats Measured with 0.3-mm Amperometric Microsensors", *The American Physiological Society*, 1995, E155-E161.
Reach, G., et al., "Can Continuous Glucose Monitoring Be Used for the Treatment of Diabetes'?" *Analytical Chemistry*, vol. 64, No. 6, 1992, pp. 381-386.
Rebrin, K., et al., "Automated Feedback Control of Subcutaneous Glucose Concentration in Diabetic Dogs" *Diabetologia*, vol. 32, 1989, pp. 573-576.
Roe, J. N., et al., "Bloodless Glucose Measurements", *Critical Review in Therapeutic Drug Carrier Systems*, vol. 15, Issue 3, 1998, pp. 199-241.
Sakakida, M., et al., "Development of Ferrocene-Mediated Needle-Type Glucose Sensor as a Measure of True Subcutaneous Tissue Glucose Concentrations", *Artificial Organs Today*, vol. 2, No. 2, 1992, pp. 145-158.
Sakakida, M., et al., "Ferrocene-Mediated Needle-Type Glucose Sensor Covered with Newly Designed Biocompatible Membrane", *Sensors and Actuators B*, vol. 1344, 1993, pp. 319-322.
Salehi, C., et al., "A Telemetry-Instrumentation System for Long-Term Implantable Glucose and Oxygen Sensors", *Analytical Letters*, vol. 29, No. 13, 1996, pp. 2289-2308.
Schmidt, F. J., et al., "Calibration of a Wearable Glucose Sensor", *The International Journal of Artificial Organs*, vol. 15, No. 1, 1992, pp. 55-61.
Schmidtke, D. W., et al., "Accuracy of the One-Point in Vivo Calibration of 'Wired' Glucose Oxidase Electrodes Implanted in Jugular Veins of Rats in Periods of Rapid Rise and Decline of the Glucose Concentration", *Analytical Chemistry*, vol. 70, No. 10, 1998, pp. 2149-2155.
Schmidtke, D. W., et al., "Measurement and Modeling of the Transient Difference Between Blood and Subcutaneous Glucose Concentrations in the Rat After Injection of Insulin", *Proceedings of the National Academy of Sciences*, vol. 95, 1998, pp. 294-299.
Shaw, G. W., et al., "In Vitro Testing of a Simply Constructed, Highly Stable Glucose Sensor Suitable for Implantation in Diabetic Patients", *Biosensors & Bioelectronics*, vol 6, 1991, pp. 401-406.
Shichiri, M., et al., "Glycaemic Control in Pancreatectomized Dogs with a Wearable Artificial Endocrine Pancreas", *Diabetologia*, vol. 24, 1983, pp. 179-184.
Shichiri, M., et al., "In Vivo Characteristics of Needle-Type Glucose Sensor—Measurements of Subcutaneous Glucose Concentrations in Human Volunteers", *Hormone and Metabolic Research Supplement Series*, vol. 20, 1988, pp. 17-20.
Shichiri, M., et al., "Membrane Design for Extending the Long-Life of an Implantable Glucose Sensor", *Diabetes Nutrition and Metabolism*, vol. 2, 1989, pp. 309-313.
Shichiri, M., et al., "Needle-type Glucose Sensor for Wearable Artificial Endocrine Pancreas", *Implantable Sensors for Closed-Loop Prosthetic Systems*, Chapter 15, 1985, pp. 197-210.
Shichiri, M., et al., "Telemetry Glucose Monitoring Device With Needle-Type Glucose Sensor: A Useful Tool for Blood Glucose Monitoring in Diabetic Individuals", *Diabetes Care*, vol. 9, No. 3, 1986, pp. 298-301.
Shichiri, M., et al., "Wearable Artificial Endocrine Pancreas With Needle-Type Glucose Sensor", *The Lancet*, 1982, pp. 1129-1131.
Shults, M. C., et al., "A Telemetry-Instrumentation System for Monitoring Multiple Subcutaneously Implanted Glucose Sensors", *IEEE Transactions on Biomedical Engineering*, vol. 41, No. 10, 1994, pp. 937-942.
Sternberg, R. et al., "Study and Development of Multilayer Needle-Type Enzyme-Based Glucose Microsensors", *Biosensors*, vol. 4, 1988, pp. 27-40.
Thompson, M., et al., "In Vivo Probes: Problems and Perspectives", *Clinical Biochemistry*, vol. 19, 1986, pp. 255-261.
Tierney, M. J., et al., "Effect of Acetaminophen on the Accuracy of Glucose Measurements Obtained with the GlucoWatch Biographer", *Diabetes Technology & Therapeutics*, vol. 2, No. 2, 2000, pp. 199-207.
Tsalikian, E., et al., "Accuracy of the GlucoWatch G2® Biographer and the Continuous Glucose Monitoring System During Hypoglycemia: Experience of the Diabetes Research in Children Network", *Diabetes Care*, vol. 27, No. 3, 2004, pp. 722-726.
Turner, A., et al., "Diabetes Mellitus: Biosensors for Research and Management", *Biosensors*, vol. 1, 1985, pp. 85-115.
Updike, S. J., et al., "Principles of Long-Term Fully Implanted Sensors with Emphasis on Radiotelemetric Monitoring of Blood Glucose from Inside a Subcutaneous Foreign Body Capsule (FBC)", *Biosensors in the Body: Continuous in vivo Monitoring*, Chapter 4, 1997, pp. 117-137.
Velho, G., et al., "Strategies for Calibrating a Subcutaneous Glucose Sensor", *Biomedica.Biochimica Acta*, vol. 48, 1989, pp. 957-964.
Ward, W. K., et al., "Rise in Background Current Over Time in a Subcutaneous Glucose Sensor in the Rabbit: Relevance to Calibration and Accuracy", *Biosensors & Bioelectronics*, vol. 15,.2000, pp. 53-61.
Wilson, G. S., et al., "Progress Toward the Development of an Implantable Sensor for Glucose", *Clinical Chemistry*, vol. 38, No. 9, 1992, pp. 1613-1617.
Ye, L., et al., "High Current Density 'Wired' Quinoprotein Glucose Dehydrogenase Electrode", *Analytical Chemistry*, vol. 65, No. 3, 1993, pp. 238-241.
Canadian Patent Application No. 2872576, Examiner's Report dated Feb. 17, 2015.
Canadian Patent Application No. 2872576, Examiner's Report dated Feb. 19, 2016.
European Patent Application No. 15002441.2, Extended European Search Report dated Dec. 18, 2015.
European Patent Application No. EP-06851063.5, Extended European Search Report dated Sep. 21, 2009.
European Patent Application No. EP-07843396.8, Extended European Search Report dated Dec. 22, 2010.

(56) **References Cited**

OTHER PUBLICATIONS

European Patent Application No. EP-07843396.8, Intention to Grant a European Patent dated Sep. 17, 2012.
European Patent Application No. EP-13000104.3, Extended European Search Report dated Mar. 12, 2013.
European Patent Application No. EP-14179905.6, Notice of Opposition filed May 19, 2016.
PCT Application No. PCT/US2006/062690, International Preliminary Report on Patentability and Written Opinion of the International Searching Authority dated Jul. 10, 2008.
PCT Application No. PCT/US2006/062690, International Search Report and Written Opinion of the International Searching Authority dated Jan. 2, 2008.
PCT Application No. PCT/US2007/079774, International Preliminary Report on Patentability and Written Opinion of the International Searching Authority dated Apr. 9, 2009.
PCT Application No. PCT/US2007/079774, International Search Report and Written Opinion of the International Searching Authority dated Mar. 13, 2008.
U.S. Appl. No. 11/535,983, Notice of Allowance dated Feb. 19, 2010.
U.S. Appl. No. 11/535,983, Office Action dated Jun. 26, 2009.
U.S. Appl. No. 11/535,983, Office Action dated Oct. 3, 2008.
U.S. Appl. No. 11/617,698, Notice of Allowance dated May 24, 2013.
U.S. Appl. No. 11/617,698, Office Action dated Dec. 17, 2009.
U.S. Appl. No. 11/617,698, Office Action dated Jun. 21, 2010.
U.S. Appl. No. 11/617,698, Office Action dated Jun. 26, 2009.
U.S. Appl. No. 11/617,698, Office Action dated Nov. 29, 2010.
U.S. Appl. No. 11/617,698, Office Action dated Oct. 2, 2012.
U.S. Appl. No. 11/617,698, Office Action dated Oct. 3, 2008.
U.S. Appl. No. 12/571,349, Notice of Allowance dated Aug. 18, 2014.
U.S. Appl. No. 12/571,349, Office Action dated Apr. 29, 2011.
U.S. Appl. No. 12/571,349, Office Action dated Mar. 14, 2014.
U.S. Appl. No. 12/571,349, Office Action dated Nov. 10, 2010.
U.S. Appl. No. 12/571,349, Office Action dated Oct. 11, 2013.
U.S. Appl. No. 14/500,705, Interview Summary dated Dec. 18, 2015.
U.S. Appl. No. 14/500,705, Notice of Allowance dated Feb. 24, 2016.
U.S. Appl. No. 14/500,705, Notice of Allowance dated Jan. 20, 2016.
U.S. Appl. No. 14/500,705, Office Action dated May 7, 2015.
U.S. Appl. No. 14/500,705, Office Action dated Nov. 5, 2015.
U.S. Appl. No. 15/141,819, Advisory Action dated Aug. 28, 2017.
U.S. Appl. No. 15/141,819, Notice of Allowance dated Sep. 7, 2017.
U.S. Appl. No. 15/141,819, Office Action dated Jul. 28, 2016.
U.S. Appl. No. 15/141,819, Office Action dated Jun. 1, 2017.
U.S. Appl. No. 14/040,674, Office Action dated Oct. 21, 2016.
U.S. Patent Reexamination Application No. 90/008,172, Request for Reexamination of U.S. Pat. No. 6,990,366, filed Aug. 16, 2006.
U.S. Patent Reexamination Application No. 90/008,457, Notice of Intent to Issue Reexamination Certificate dated Mar. 13, 2008.
U.S. Patent Reexamination Application No. 90/008,457, Order Granting Request for Reexamination dated Feb. 23, 2007.
U.S. Patent Reexamination Application No. 90/008,457, Request for Reexamination of U.S. Pat. No. 6,990,366, filed Jan. 23, 2007.
U.S. Patent Reexamination Application No. 90/009,104 & 90/009,328, Notice of Intent to Issue Reexamination Certificate dated Nov. 20, 2009.
U.S. Patent Reexamination Application No. 90/009,104 & 90/009,328, Office Action dated Aug. 4, 2009.
U.S. Patent Reexamination Application No. 90/009,104 & 90/009,328, Office Action dated Sep. 30, 2009.
U.S. Patent Reexamination Application No. 90/009,104, Office Action dated Oct. 16, 2008.
U.S. Patent Reexamination Application No. 90/009,104, Order Granting Request for Reexamination dated Jun. 5, 2008.
U.S. Patent Reexamination Application No. 90/009,104, Request for Reexamination of U.S. Pat. No. 6,990,366 filed Apr. 8, 2008.
U.S. Patent Reexamination Application No. 90/009,328, Order Granting Request for Reexamination dated Dec. 9, 2008.
U.S. Patent Reexamination Application No. 90/009,328, Request for Reexamination of U.S. Pat. No. 6,990,366 filed Nov. 10, 2008.
U.S. Patent Reexamination Application No. 90/010,791, Notice of Intent to Issue Reexamination Certificate dated May 17, 2011.
U.S. Patent Reexamination Application No. 90/010,791, Office Action dated Dec. 17, 2010.
U.S. Patent Reexamination Application No. 90/010,791, Office Action dated May 28, 2010.
U.S. Patent Reexamination Application No. 90/010,791, Order Granting Request for Reexamination dated Feb. 22, 2010.
U.S. Patent Reexamination Application No. 90/010,791, Request for Reexamination of U.S. Pat. No. 6,990,366 filed Dec. 22, 2009.
U.S. Patent Reexamination Application No. 90/011,730, Notice of Intent to Issue Reexam Certificate for U.S. Pat. No. 6,990,366 dated Apr. 5, 2012.
U.S. Patent Reexamination Application No. 90/011,730, Office Action dated Jan. 11, 2012.
U.S. Patent Reexamination Application No. 90/011,730, Order Granting Request for Reexamination of U.S. Pat. No. 6,990,366 dated Aug. 24, 2011.
U.S. Patent Reexamination Application No. 90/011,730, Request for Reexamination of U.S. Pat. No. 6,990,366 filed Jun. 3, 2011.
U.S. Patent Reexamination Application No. 95/002,113, Order Denying Request for Reexamination of U.S. Pat. No. 6,990,366 dated Nov. 13, 2012.
U.S. Patent Reexamination Application No. 95/002,113, Petition for Review of the Order Denying Request Reexamination of U.S. Pat. No. 6,990,366 dated Dec. 13, 2012.
U.S. Patent Reexamination Application No. 95/002,113, Request for Reexamination of U.S. Pat. No. 6,990,366 filed Aug. 30, 2012.
U.S. Patent Reexamination Application No. 95/002,162, Order Denying Request for Reexamination of U.S. Pat. No. 8,175,673 dated Nov. 13, 2012.
U.S. Patent Reexamination Application No. 95/002,162, Petition for Review of the Order Denying Request Reexamination of U.S. Pat. No. 8,175,673 dated Dec. 13, 2012.
U.S. Patent Reexamination Application No. 95/002,162, Request for Reexamination of U.S. Pat. No. 8,175,673 filed Sep. 7, 2012.

* cited by examiner

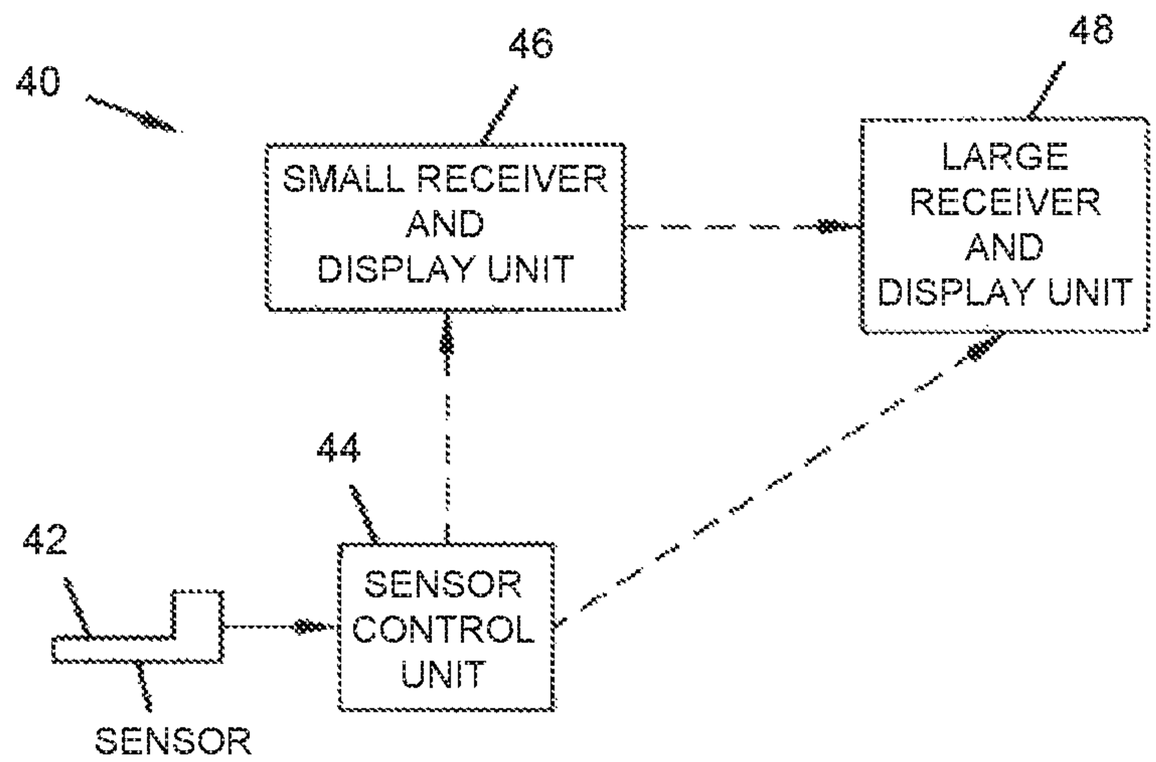
40
46
SMALL RECEIVER AND DISPLAY UNIT
48
LARGE RECEIVER AND DISPLAY UNIT
44
42
SENSOR CONTROL UNIT
SENSOR

FIG. 1

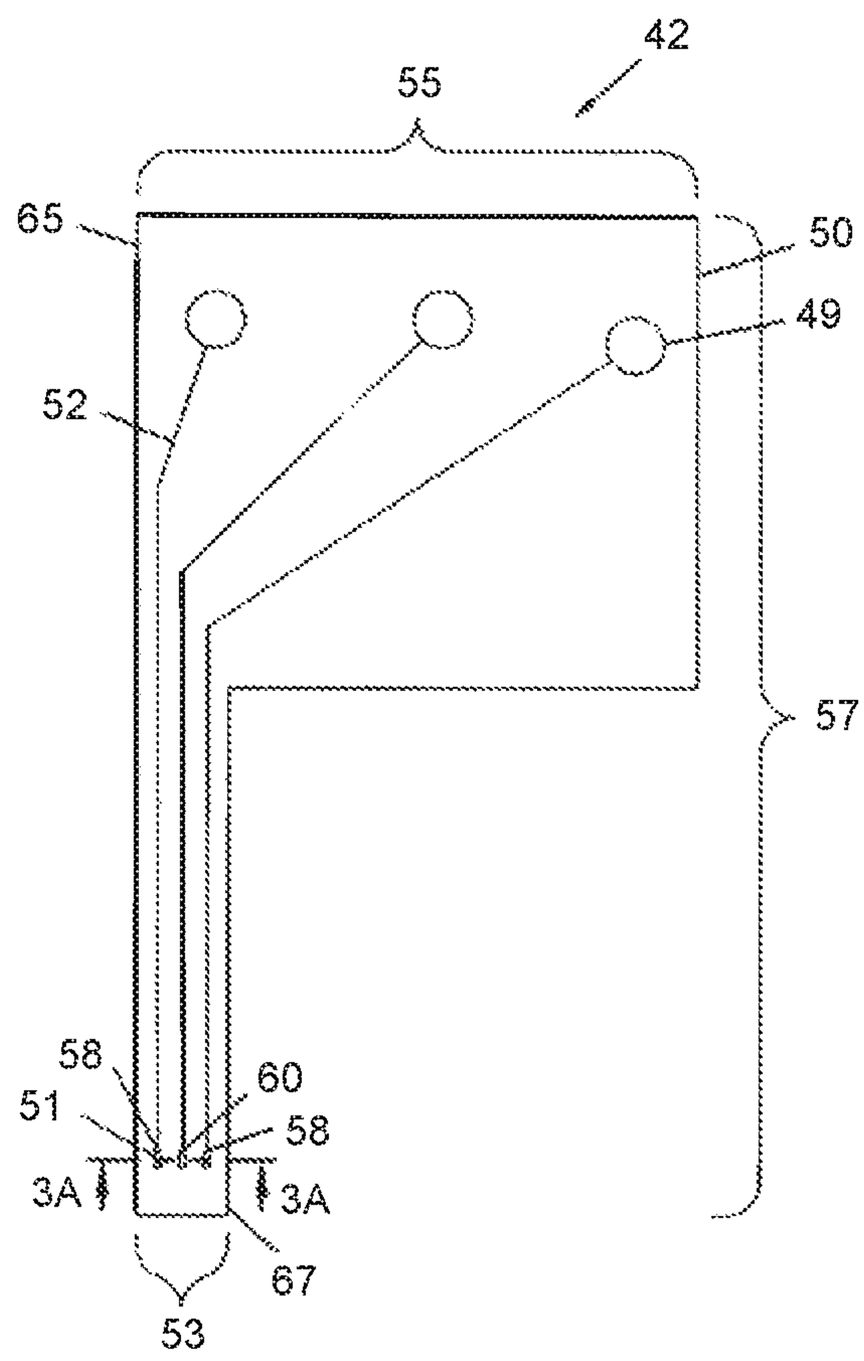
42
55
65
50
49
52
57
58
60
51
58
3A
3A
67
53

FIG. 2

FIG. 3A

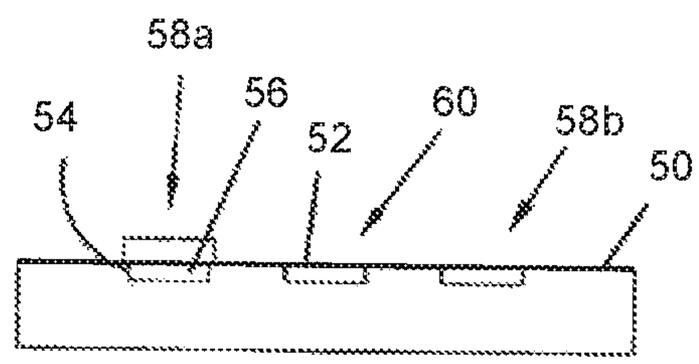

FIG. 3B

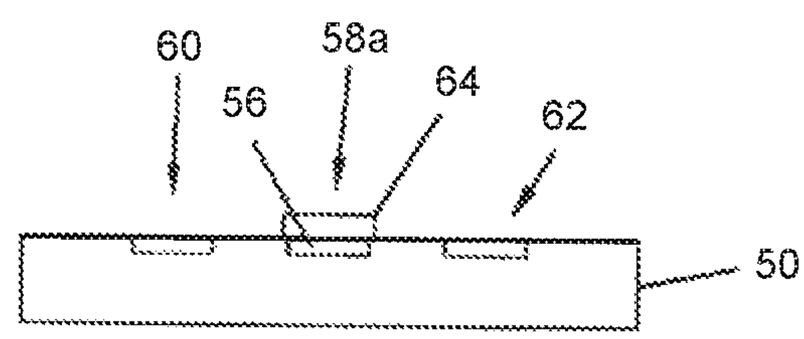

FIG. 4A

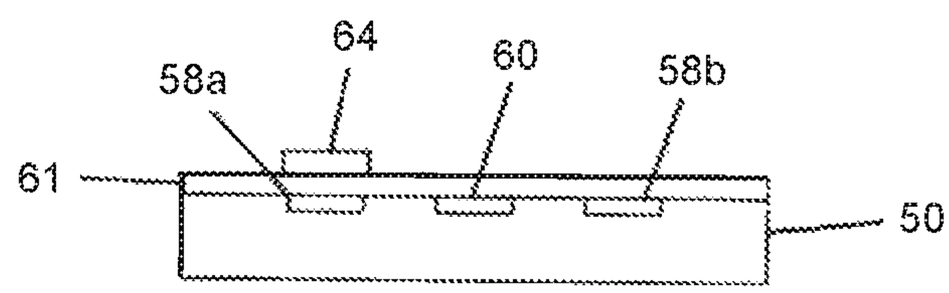

FIG. 4B

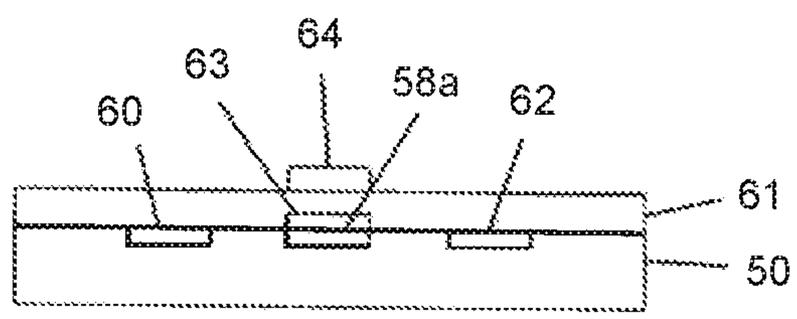

FIG. 5

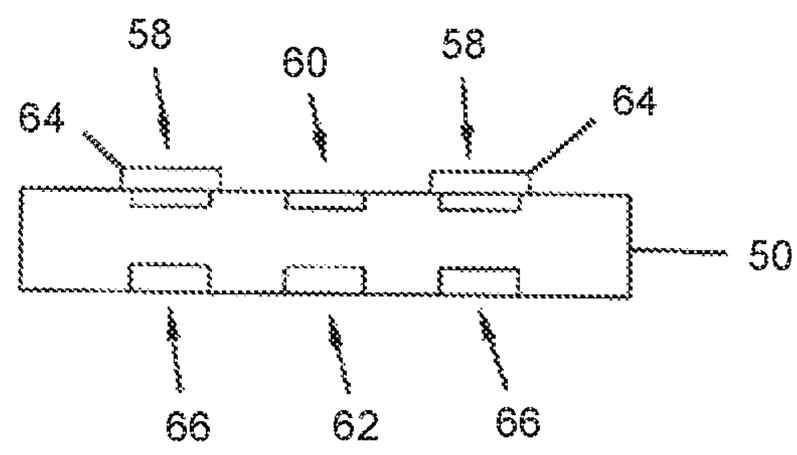

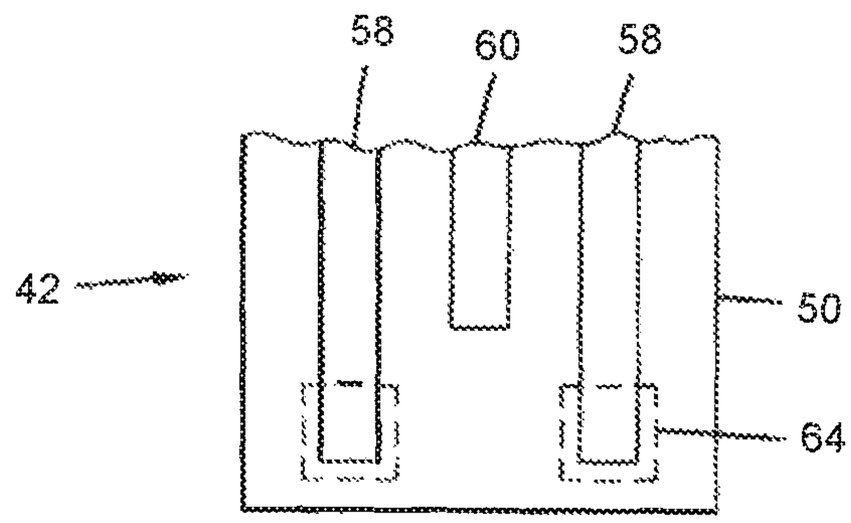

FIG. 6

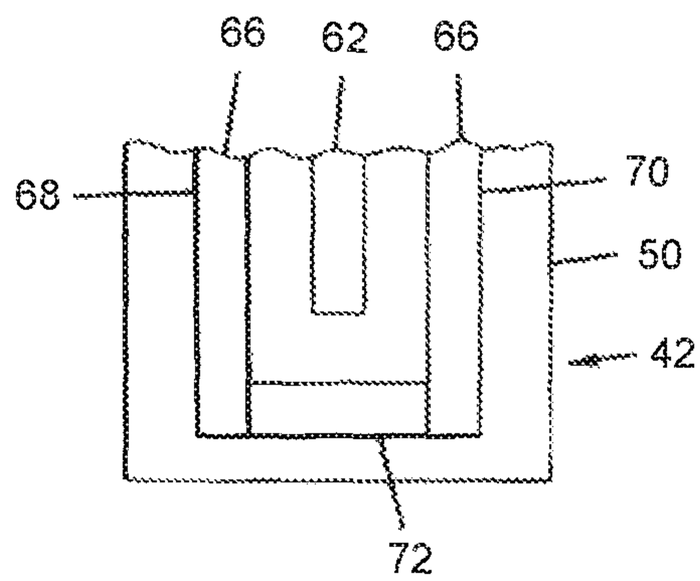

FIG. 7

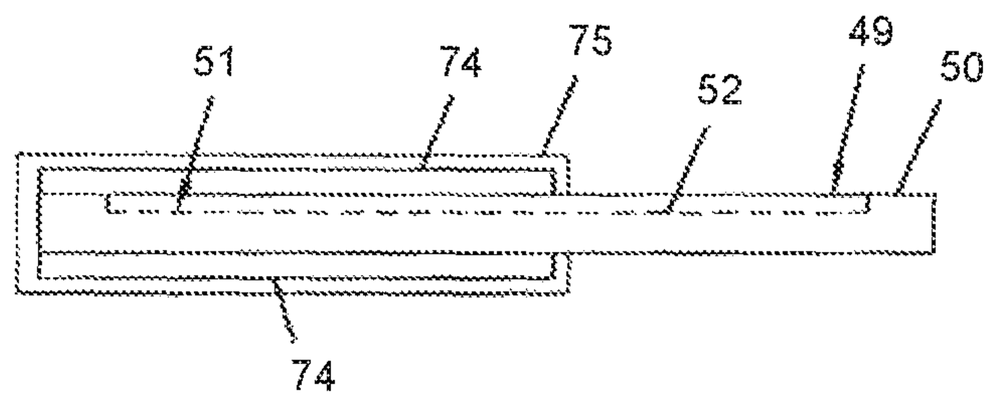

FIG. 8

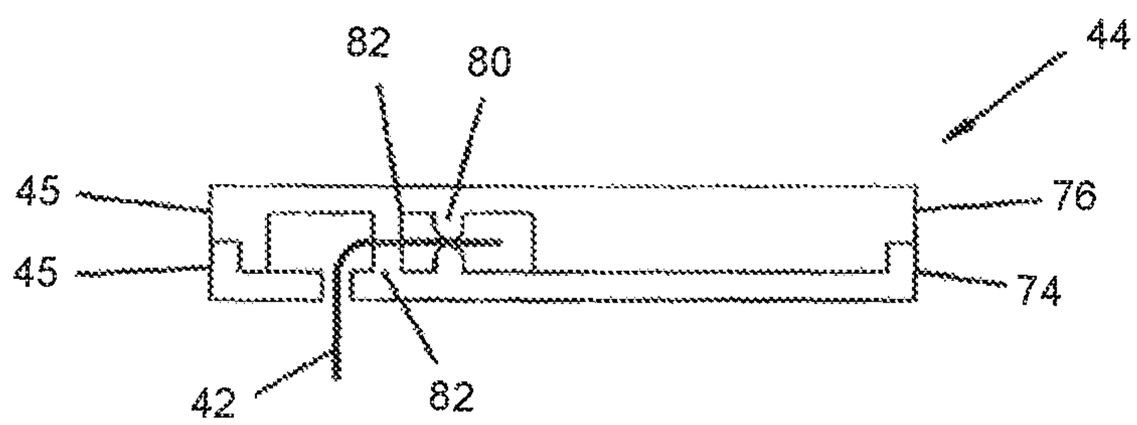

FIG. 9

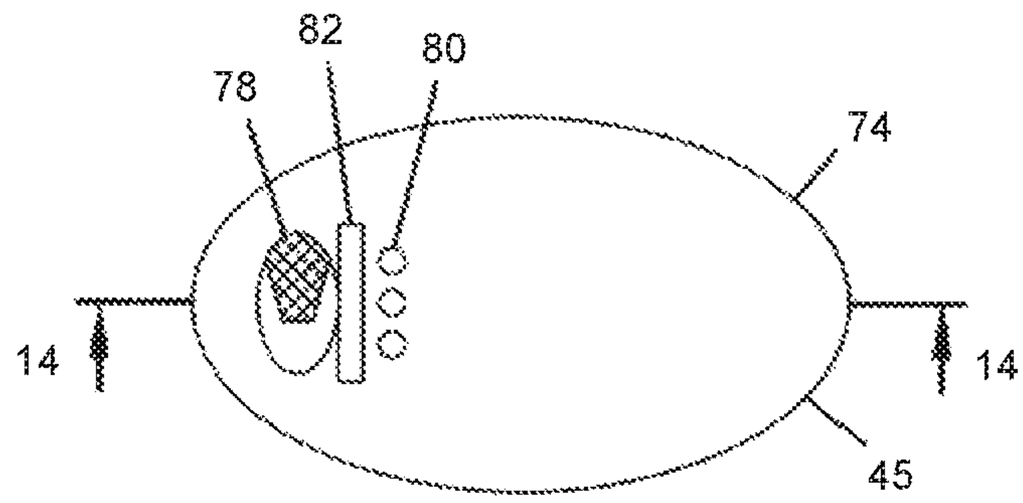

FIG. 10

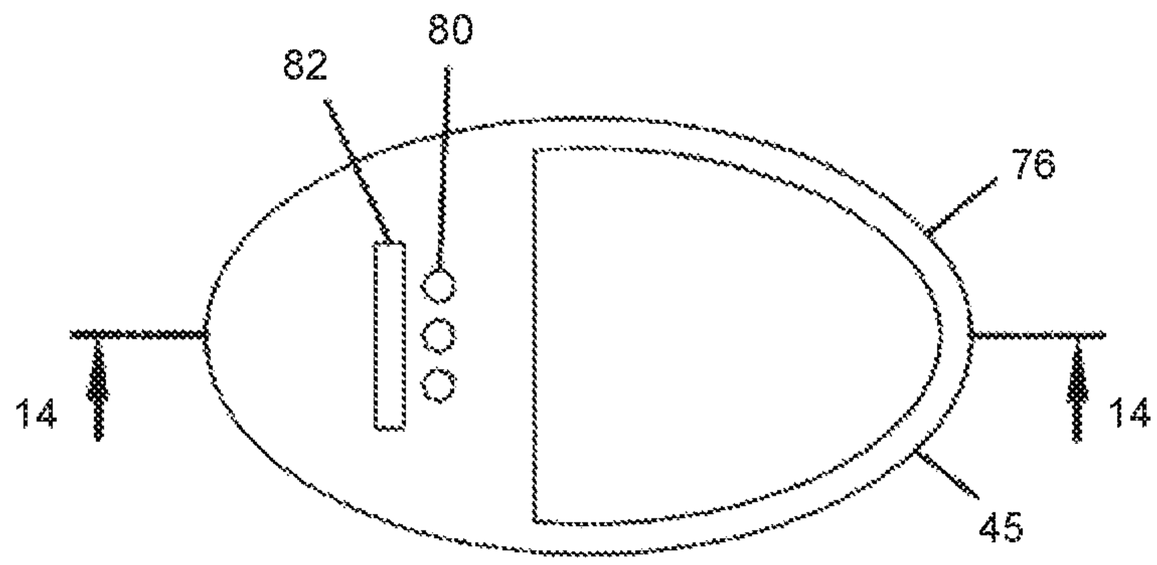

FIG. 11

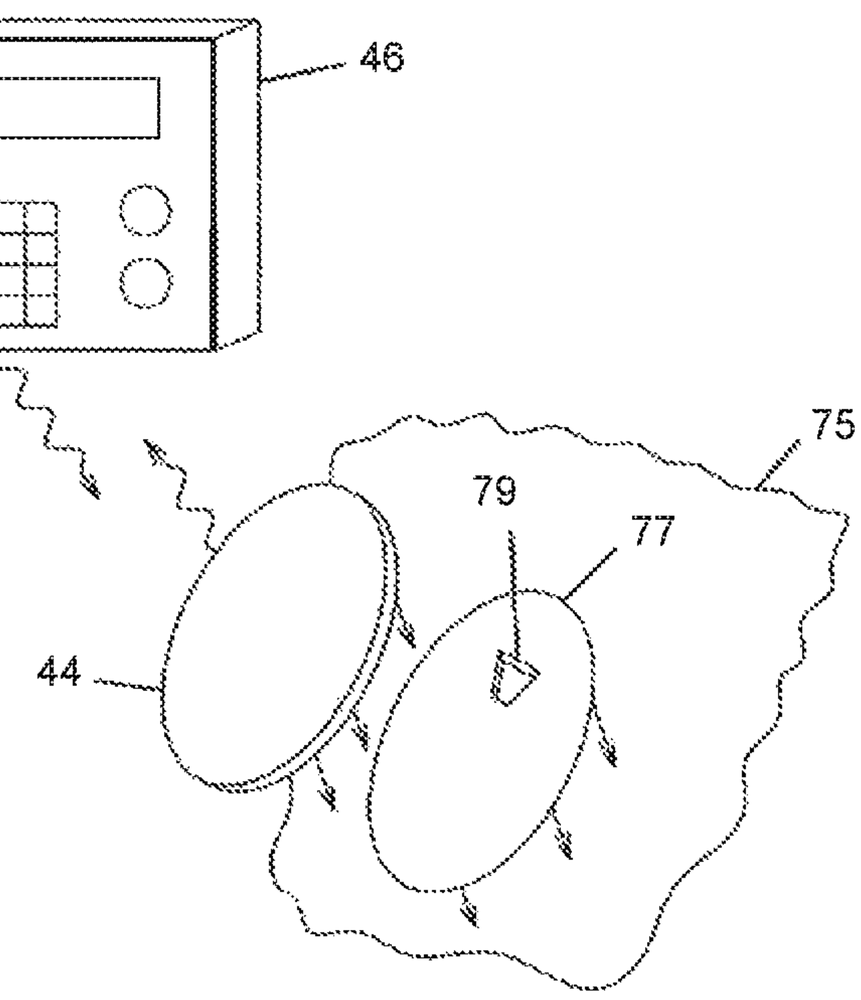

FIG. 12

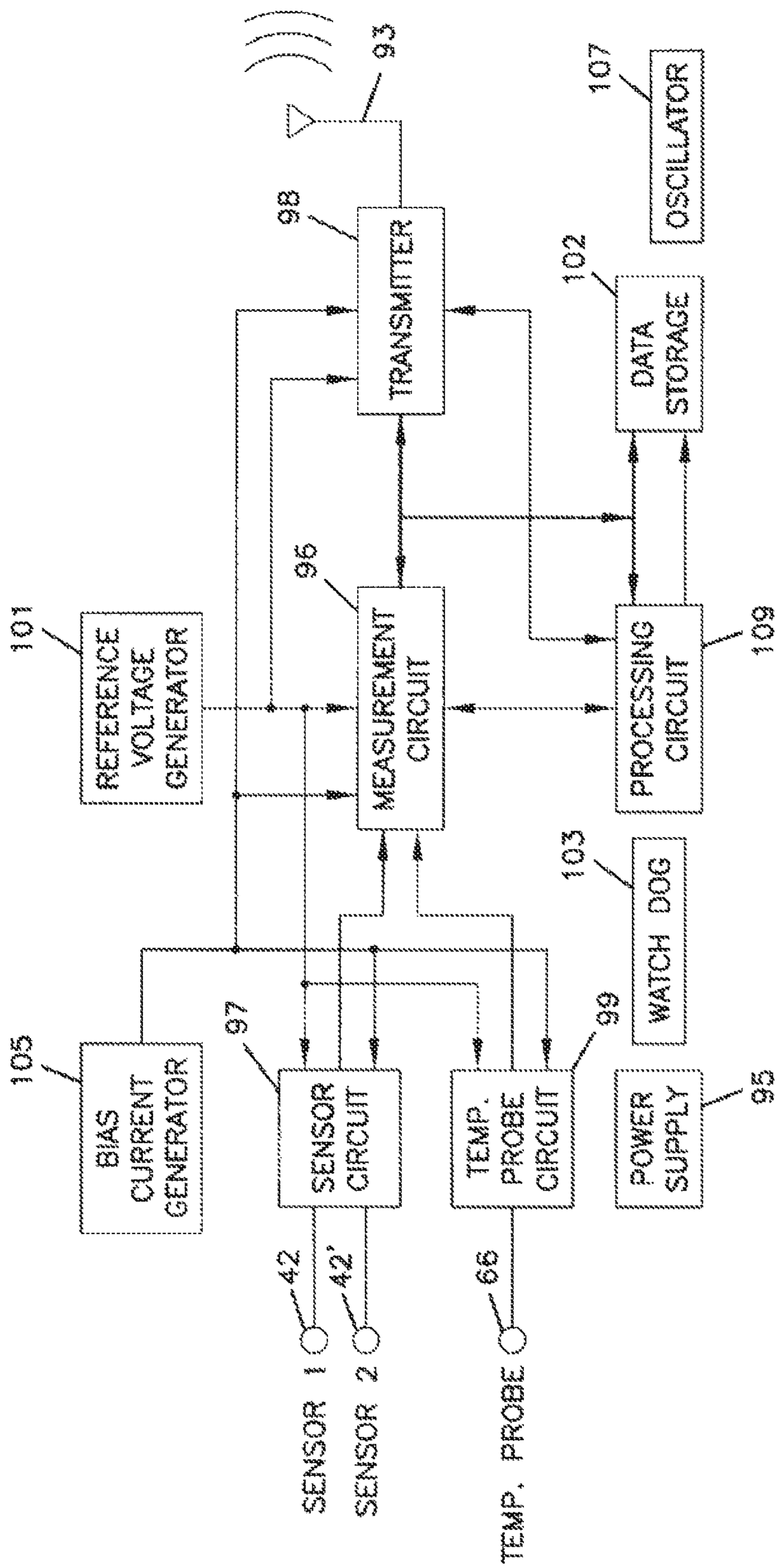
93
98
TRANSMITTER
107
OSCILLATOR
102
DATA STORAGE
101
REFERENCE VOLTAGE GENERATOR
96
MEASUREMENT CIRCUIT
PROCESSING CIRCUIT
109
103
WATCH DOG
105
BIAS CURRENT GENERATOR
97
SENSOR CIRCUIT
TEMP. PROBE CIRCUIT
99
POWER SUPPLY
95
42
SENSOR 1
42'
SENSOR 2
66
TEMP. PROBE

FIG. 13A

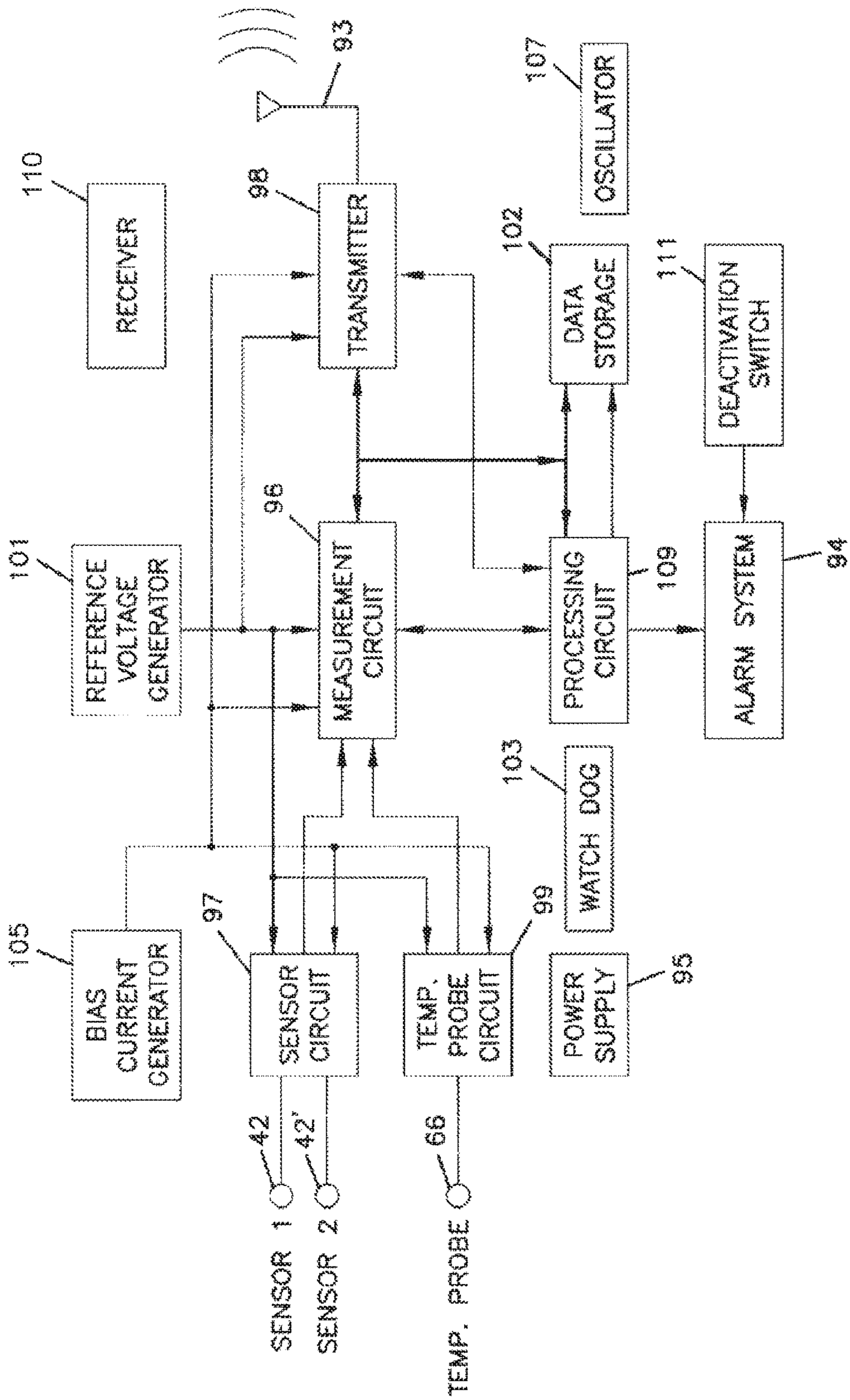
93
110
RECEIVER
98
TRANSMITTER
107
OSCILLATOR
102
DATA STORAGE
111
DEACTIVATION SWITCH
101
REFERENCE VOLTAGE GENERATOR
96
MEASUREMENT CIRCUIT
PROCESSING CIRCUIT
109
ALARM SYSTEM
94
103
WATCH DOG
105
BIAS CURRENT GENERATOR
97
SENSOR CIRCUIT
TEMP. PROBE CIRCUIT
99
POWER SUPPLY
95
42
42'
66
SENSOR 1
SENSOR 2
TEMP. PROBE

FIG. 13B

FIG. 14

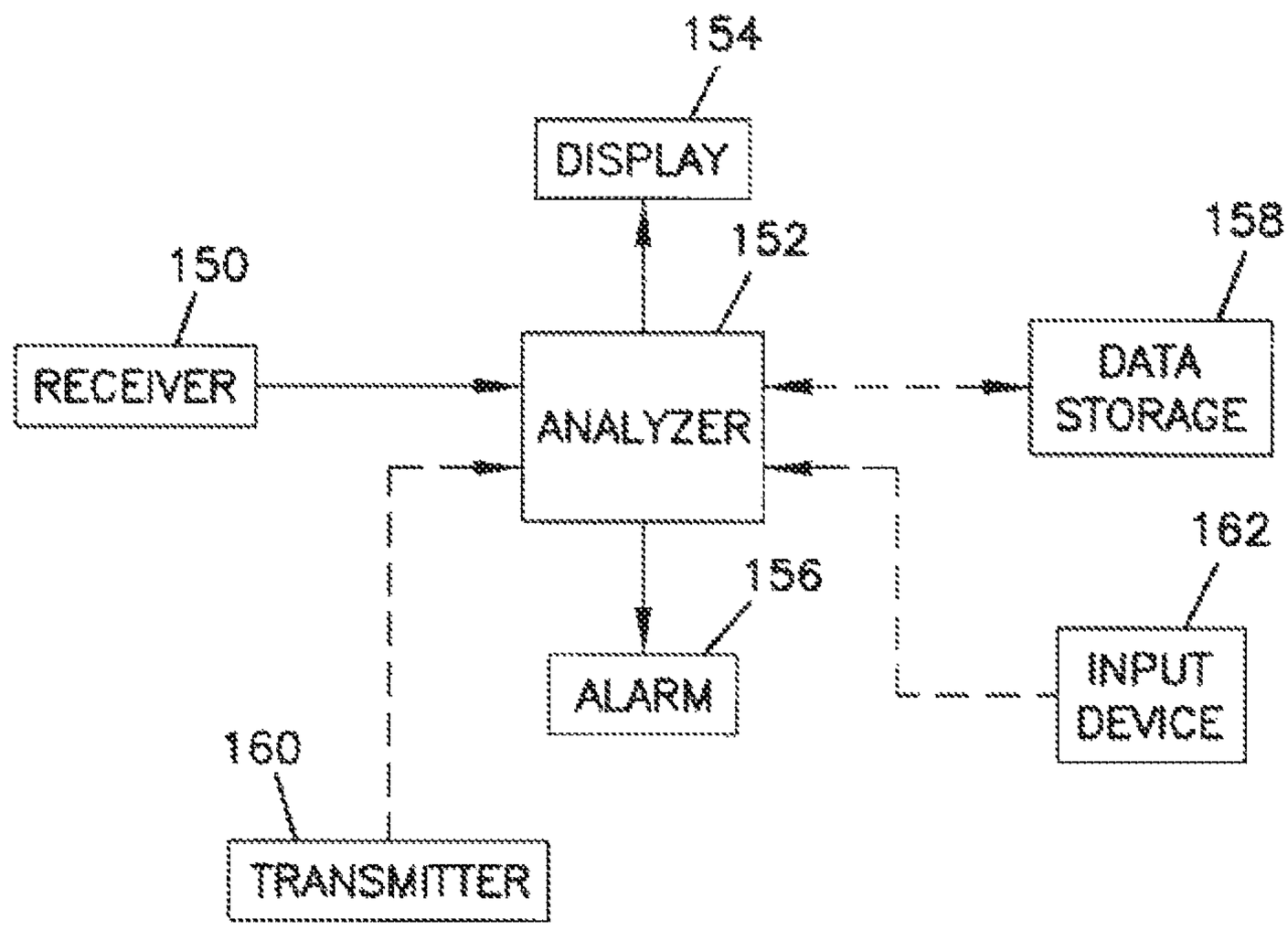
154
DISPLAY
152
158
150
RECEIVER
ANALYZER
DATA STORAGE
162
156
ALARM
INPUT DEVICE
160
TRANSMITTER

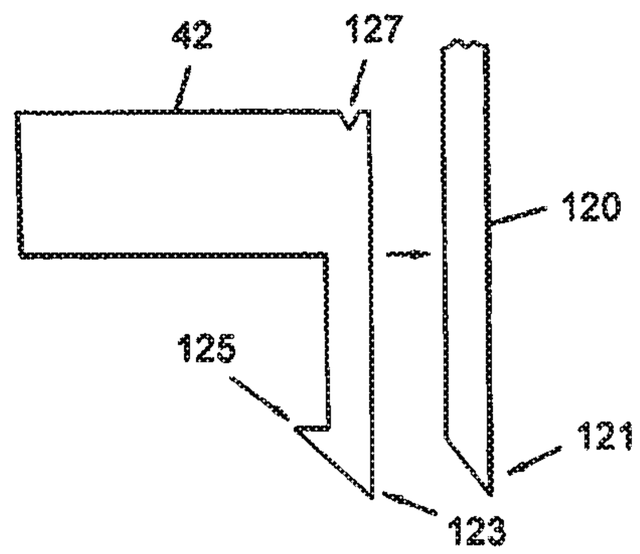

FIG. 15

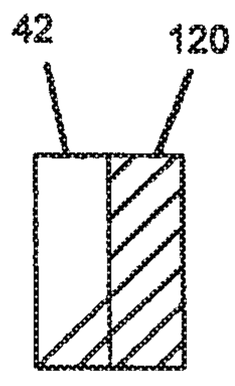

FIG. 16A

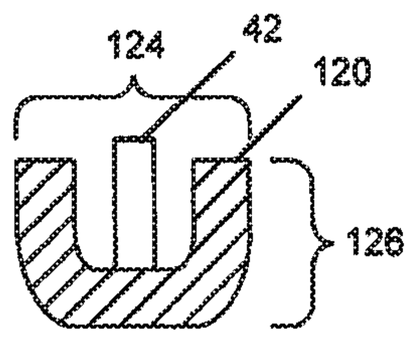

FIG. 16B

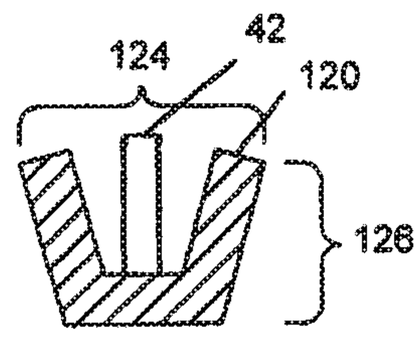

FIG. 16C

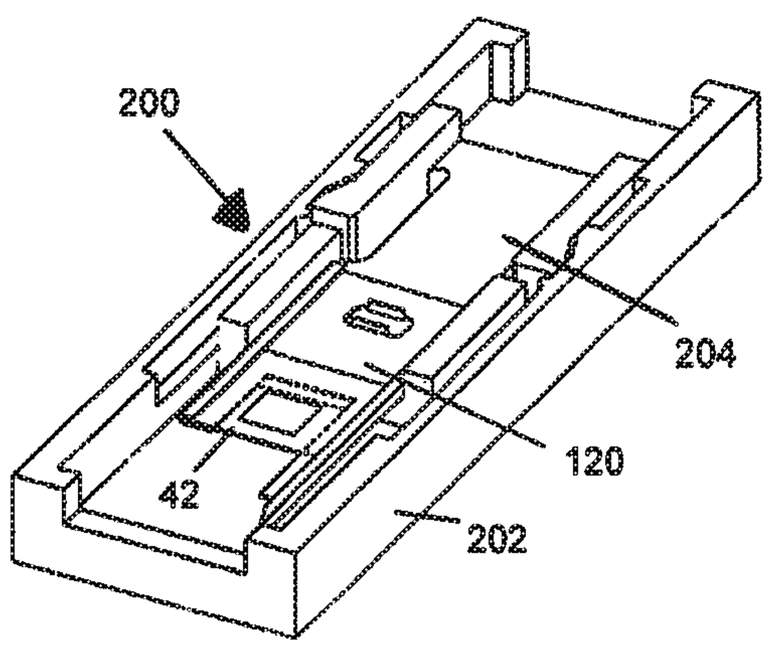

FIG. 17

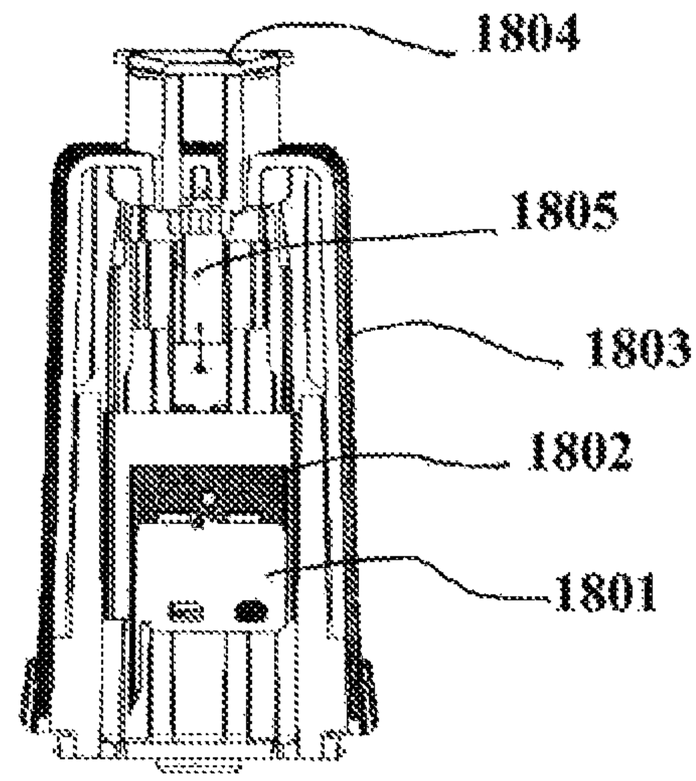

FIG. 18A

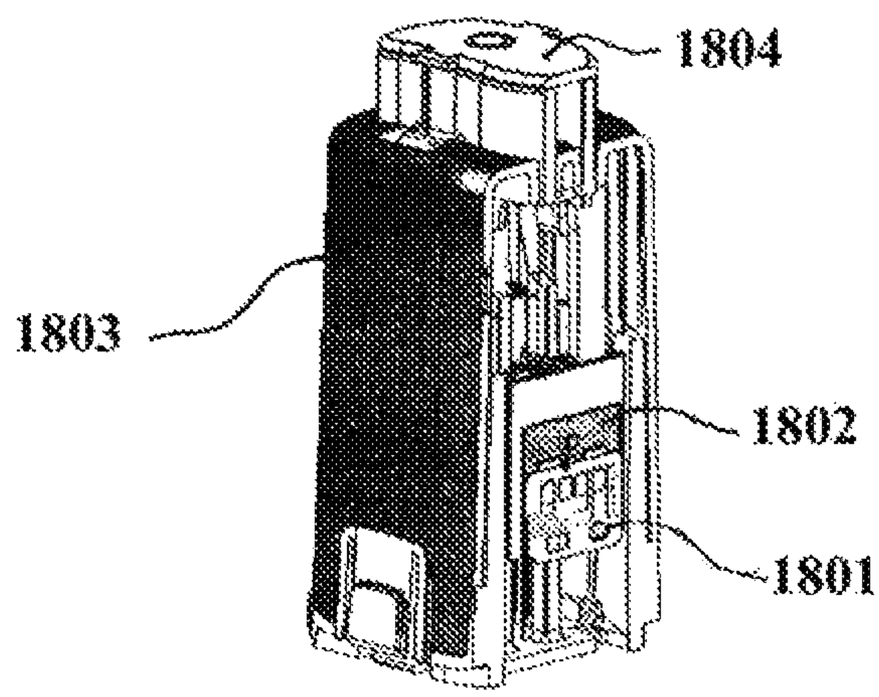

FIG. 18B

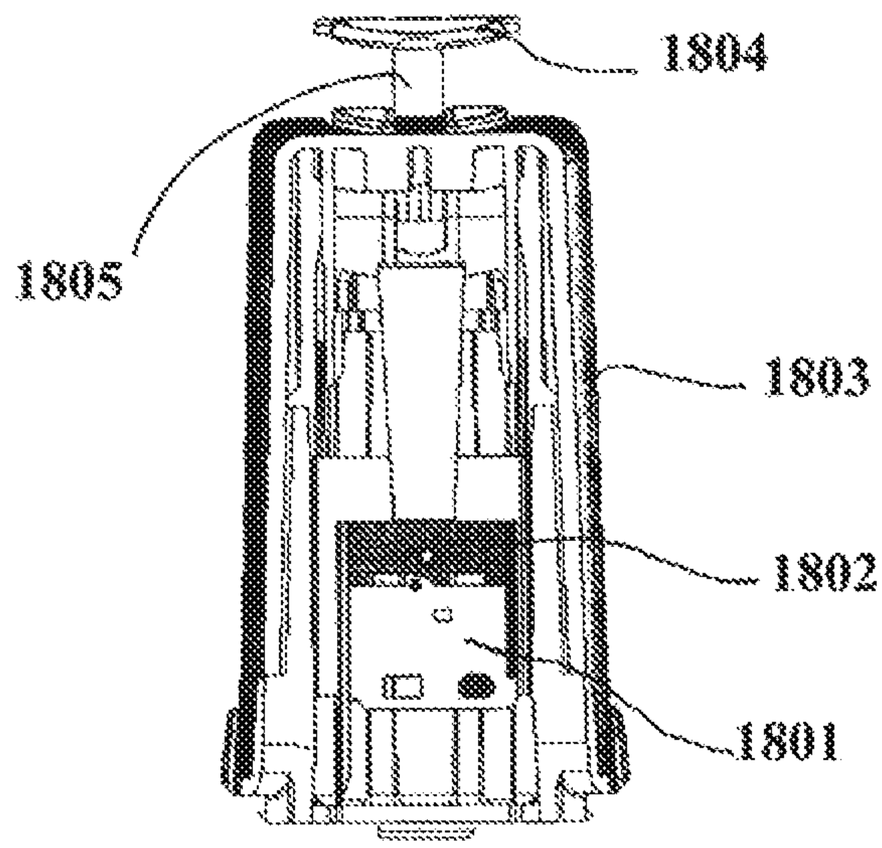

FIG. 19A

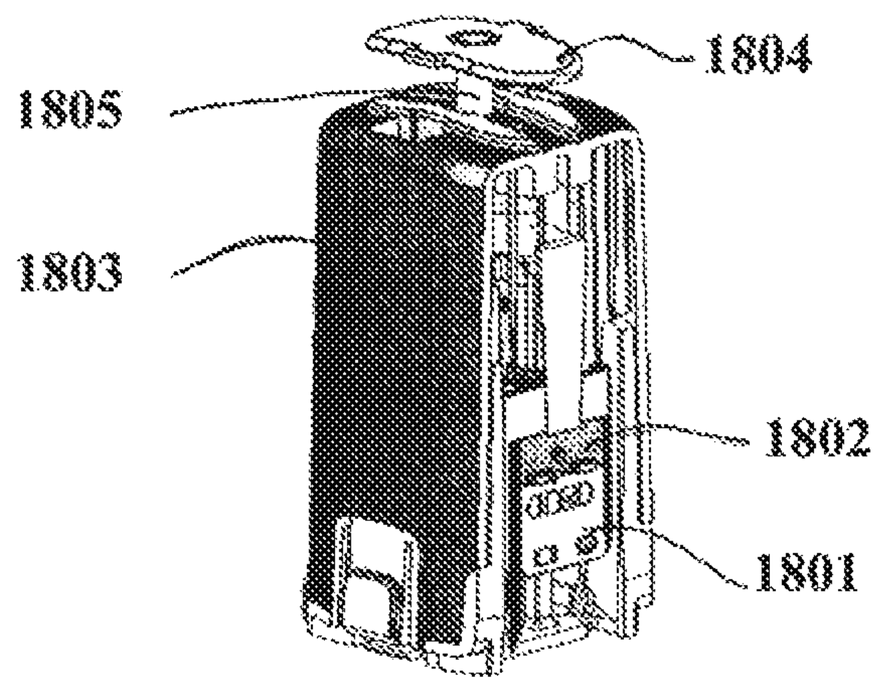

FIG. 19B

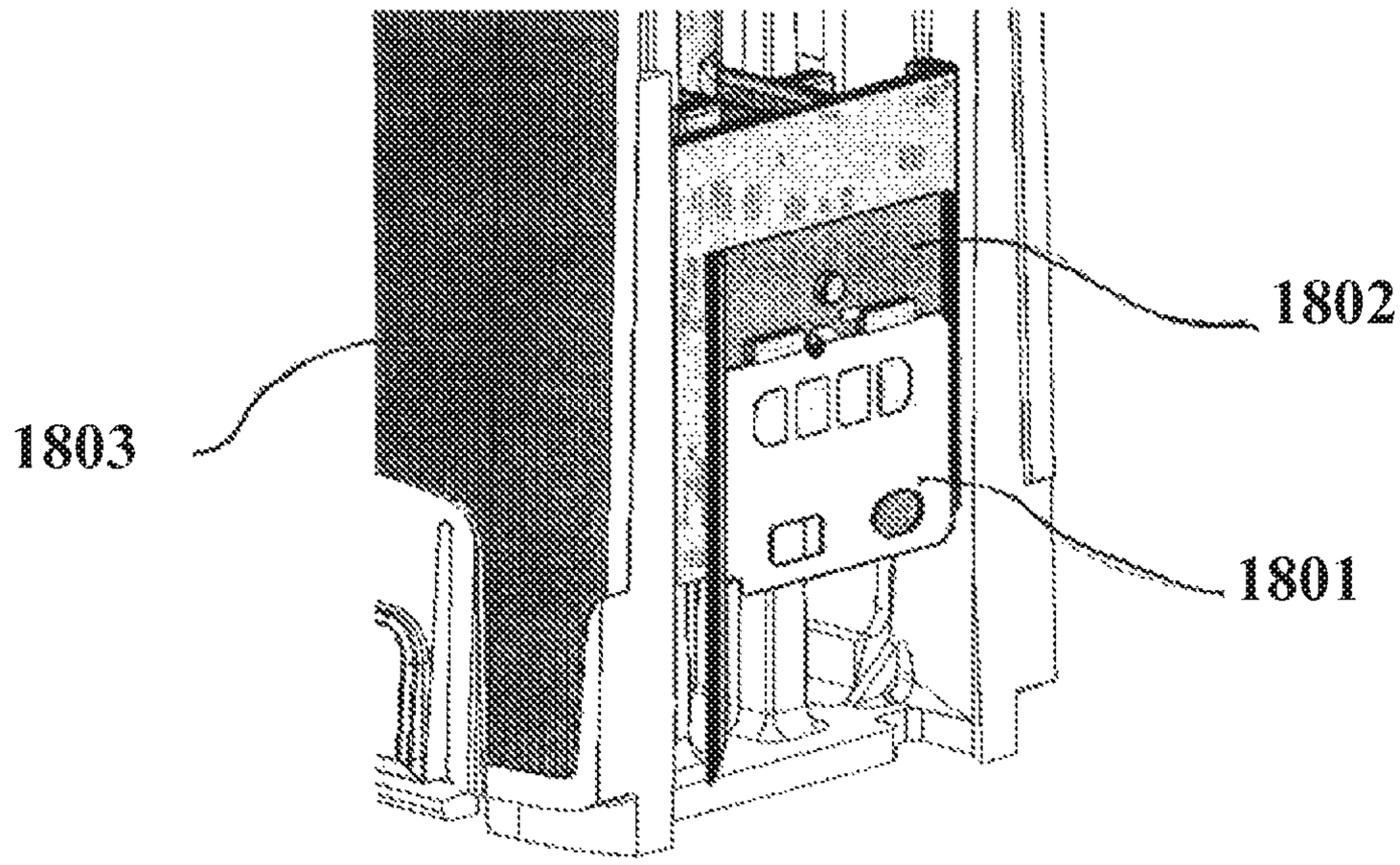

FIG. 19C

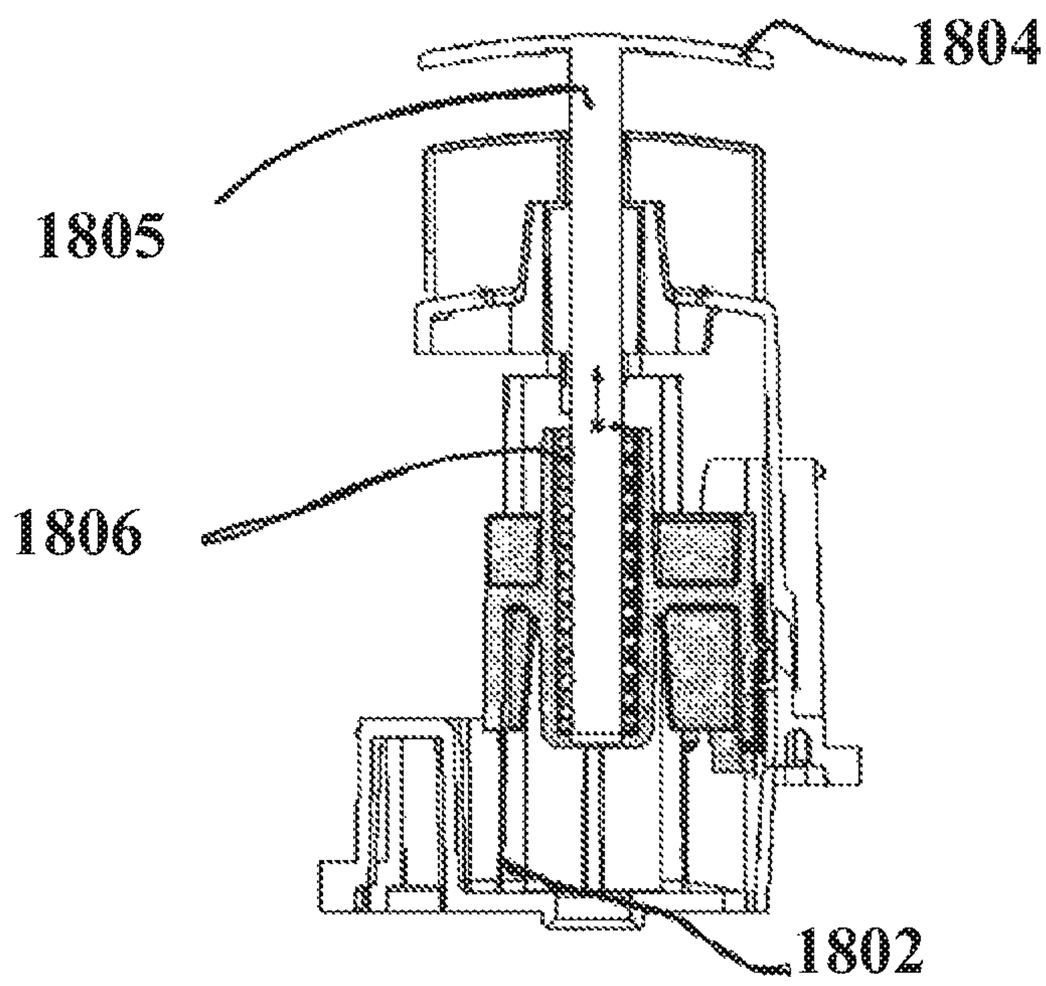

FIG. 19D

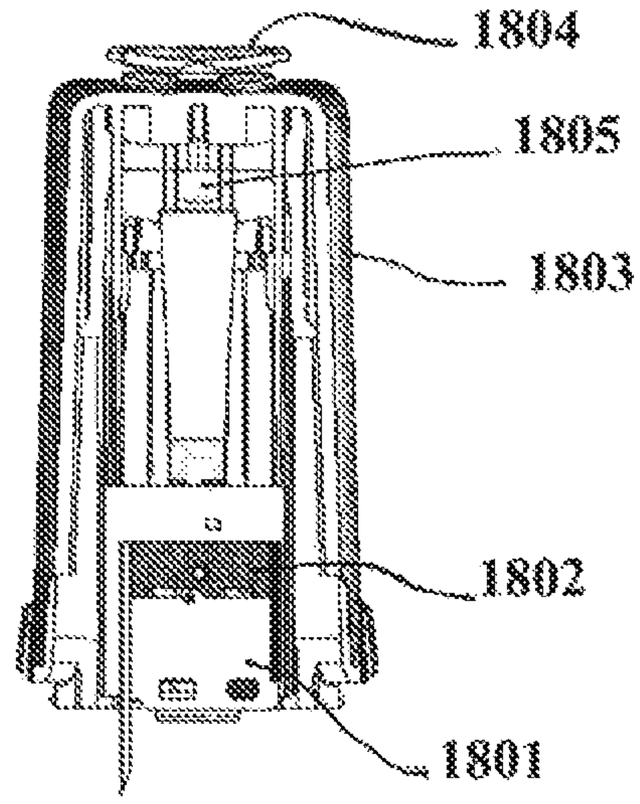

FIG. 20A

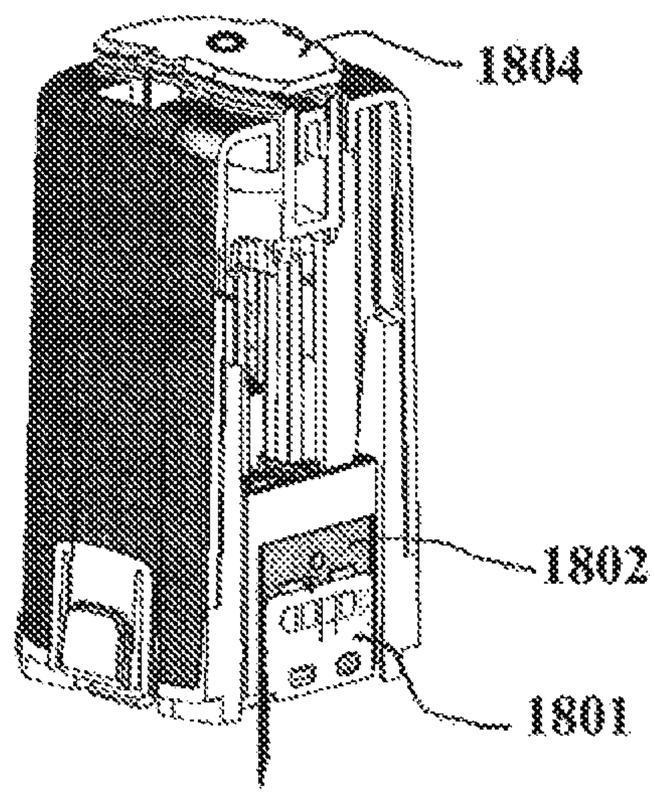

FIG. 20B

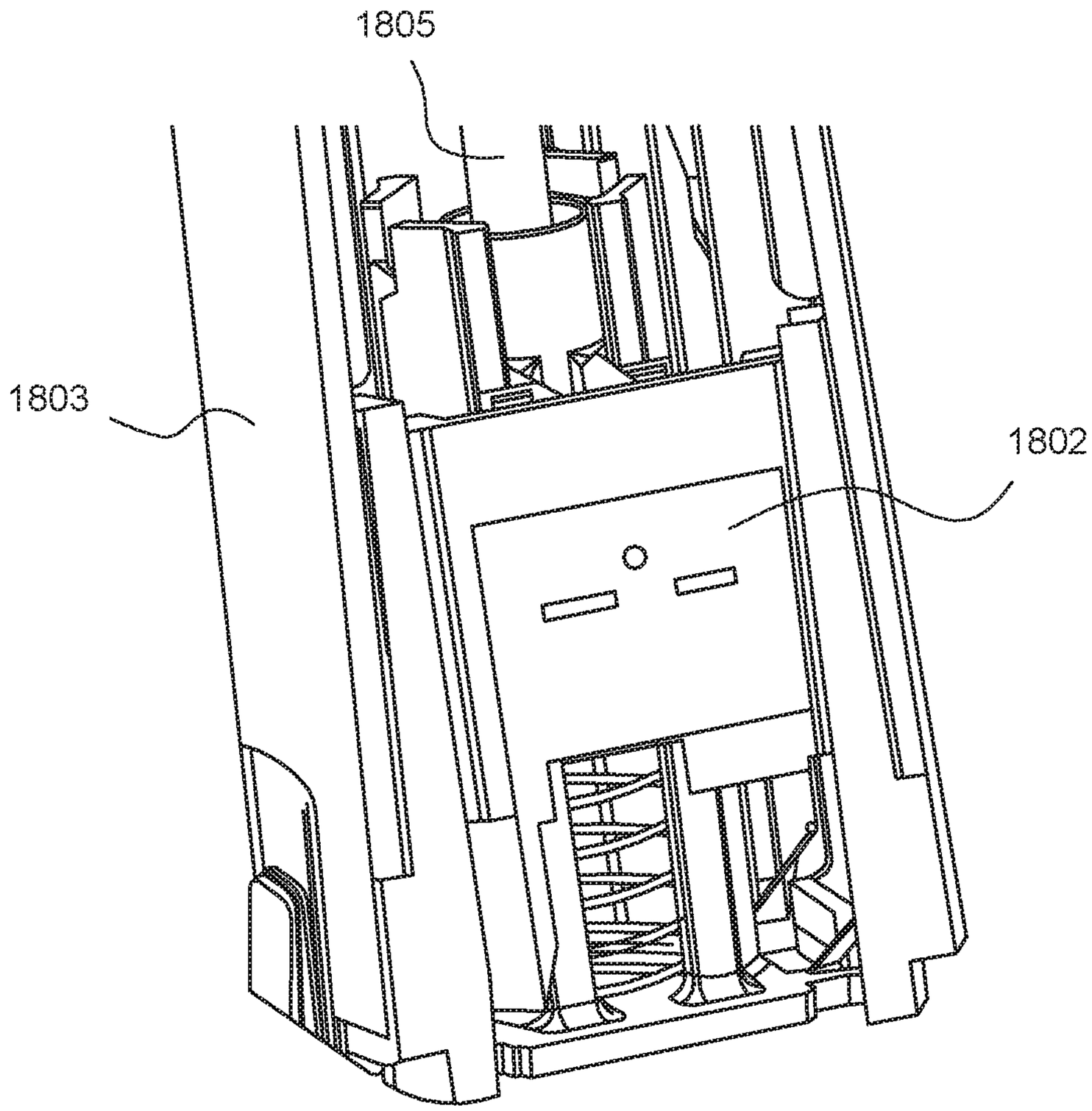

FIG. 21

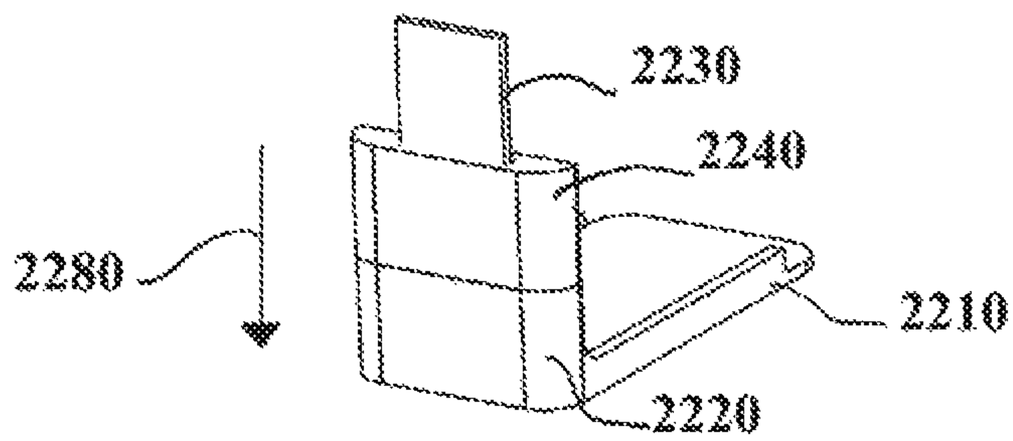

FIG. 22A

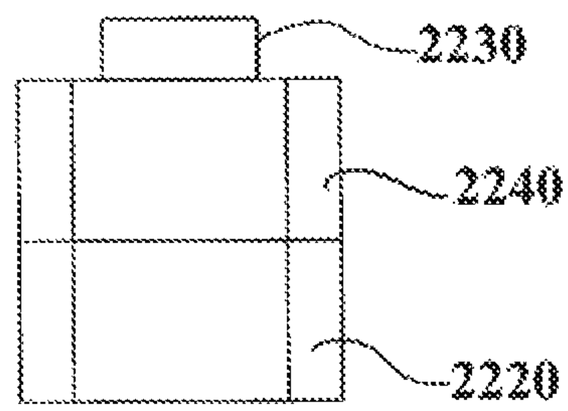

FIG. 22B

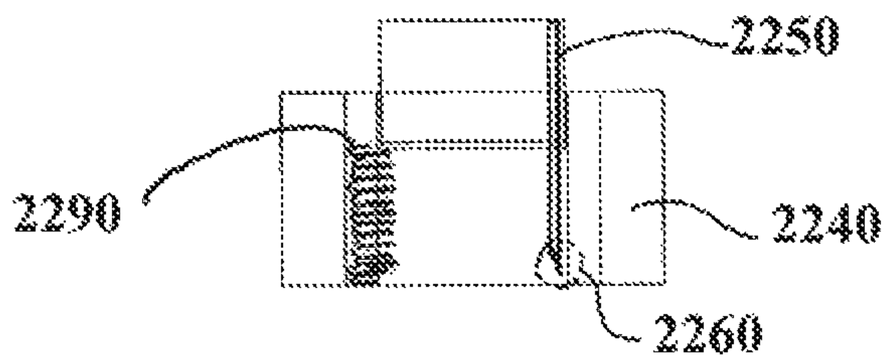

FIG. 22C

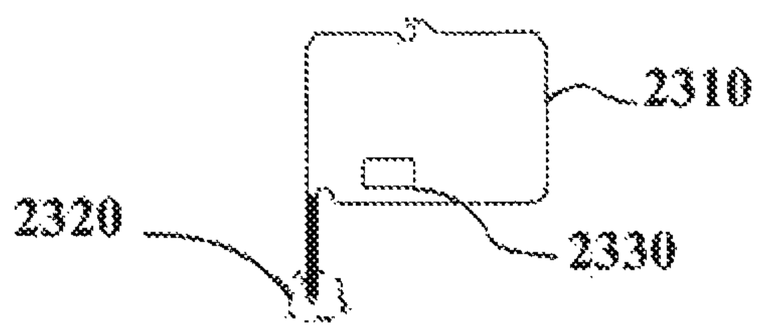

FIG. 23A

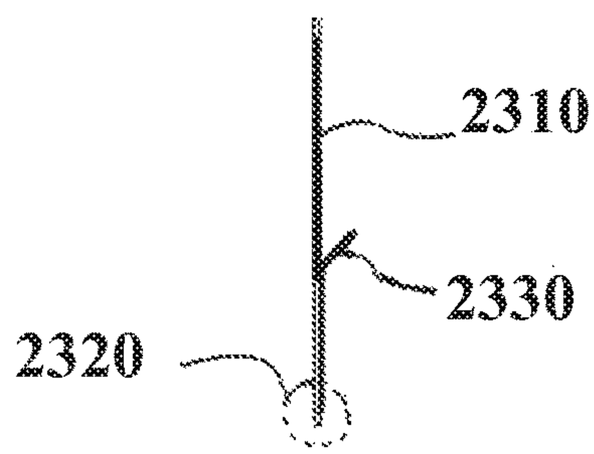

FIG. 23B

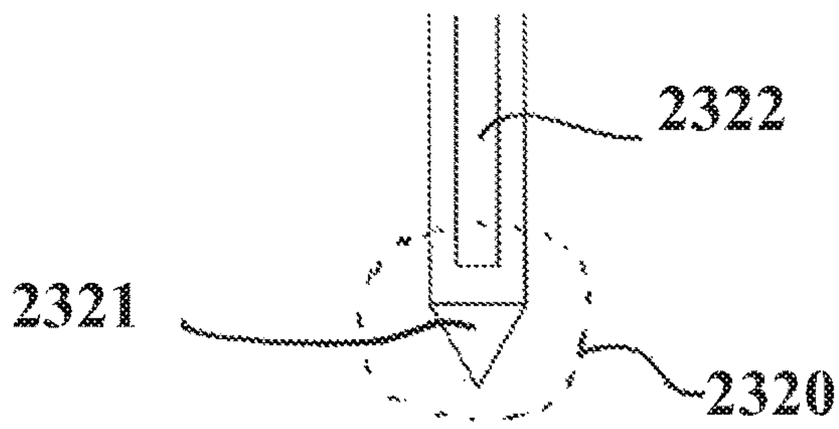

FIG. 23C

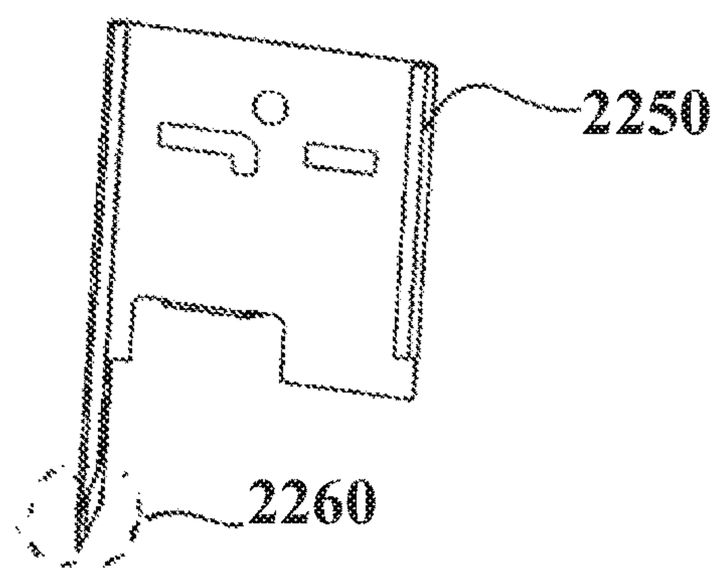

FIG. 23D

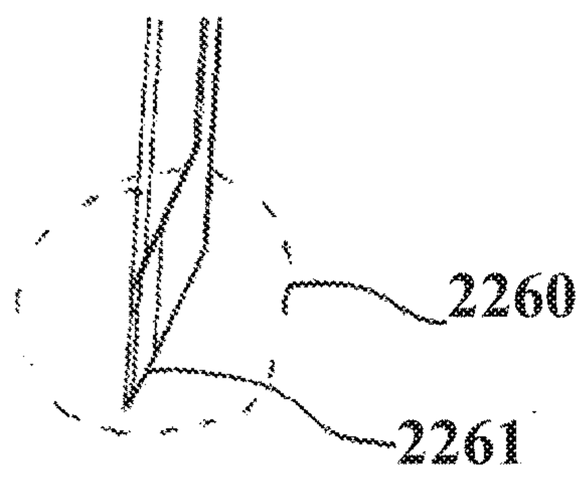

FIG. 23E

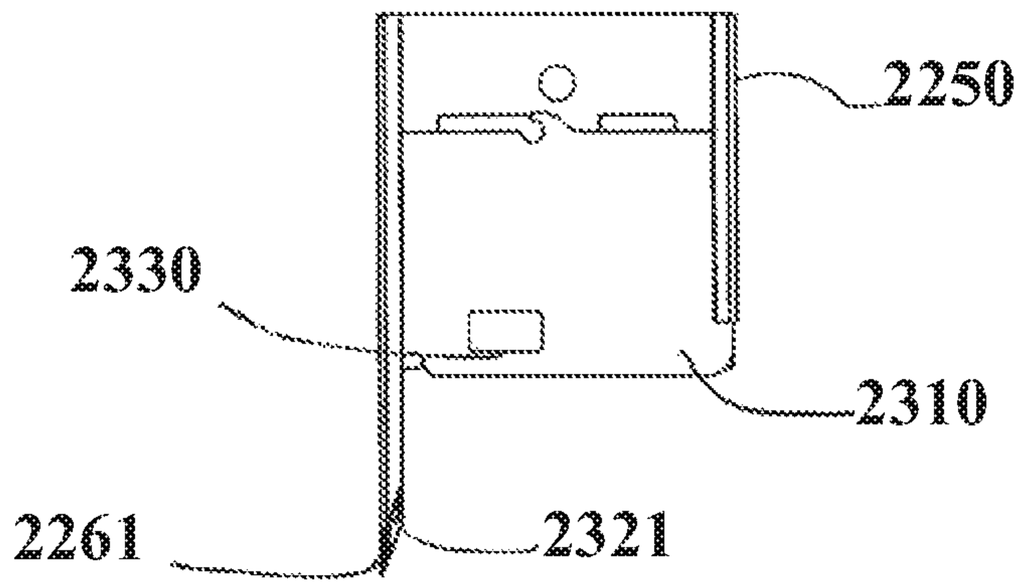

FIG. 23F

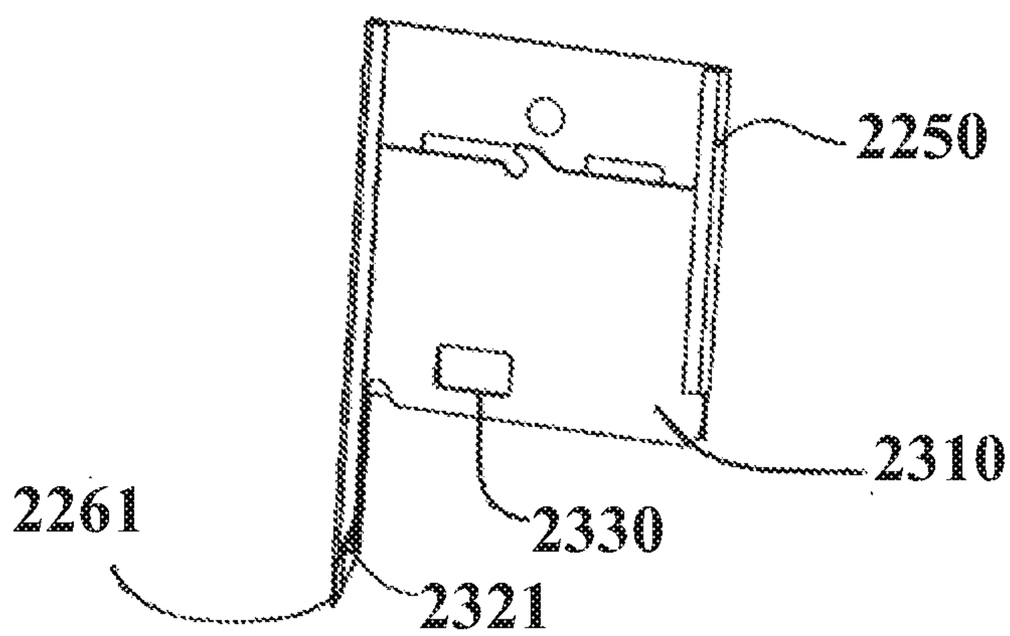

FIG. 23G

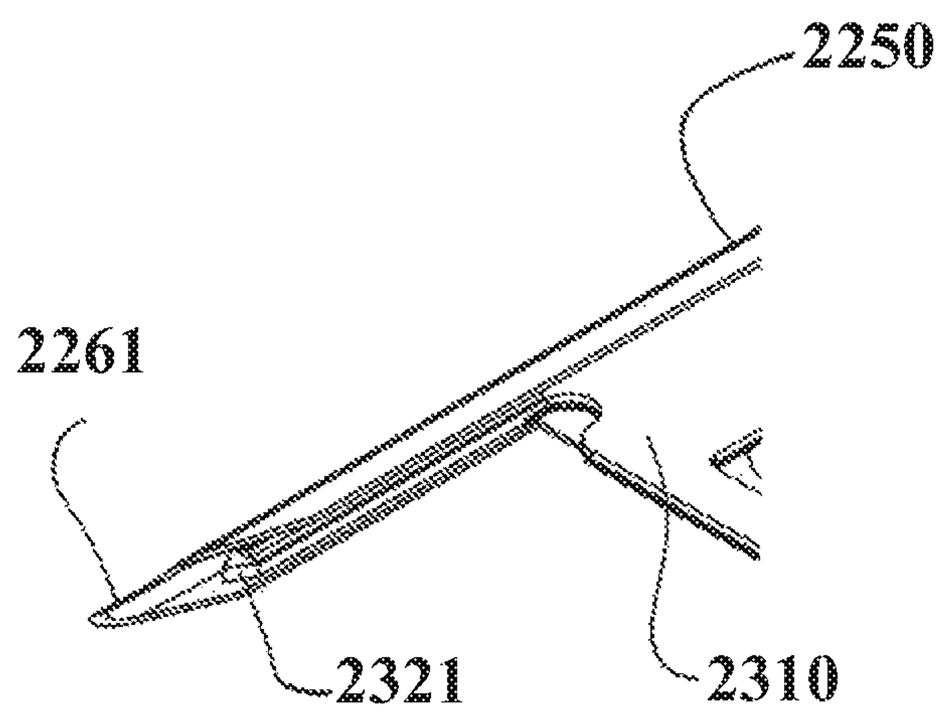

FIG. 23H

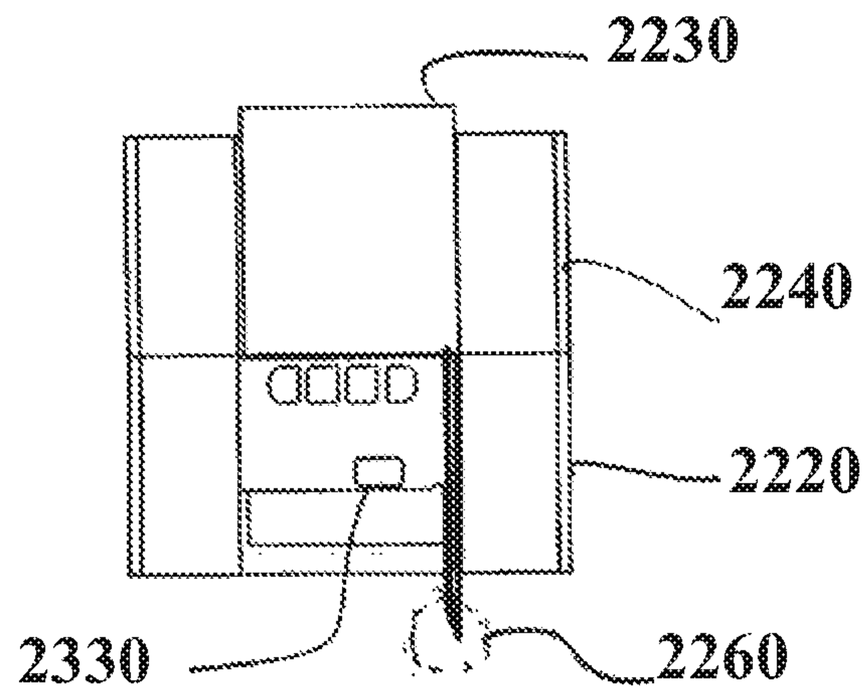

FIG. 24

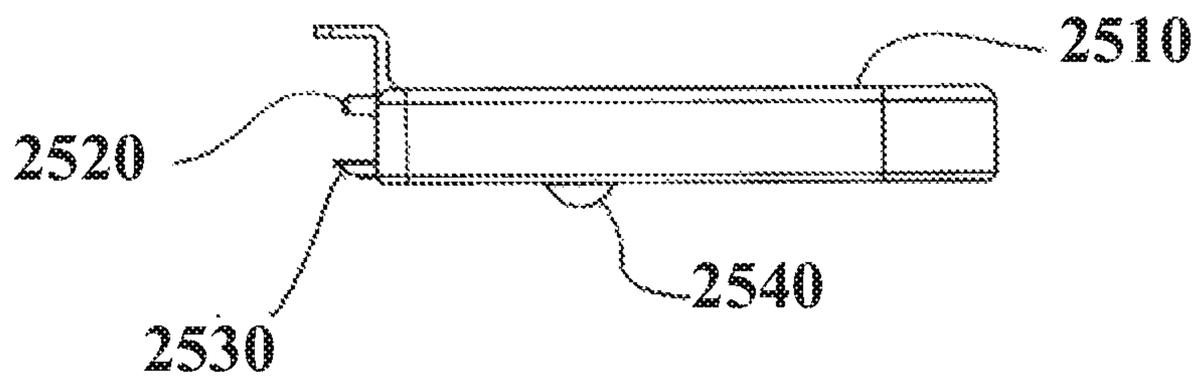

FIG. 25A

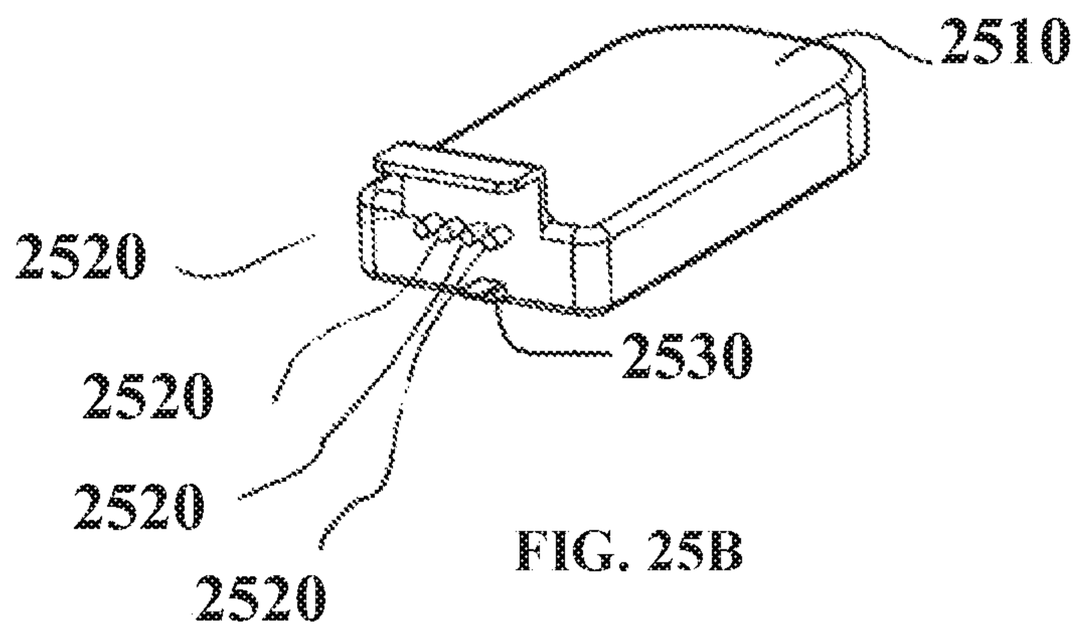

FIG. 25B

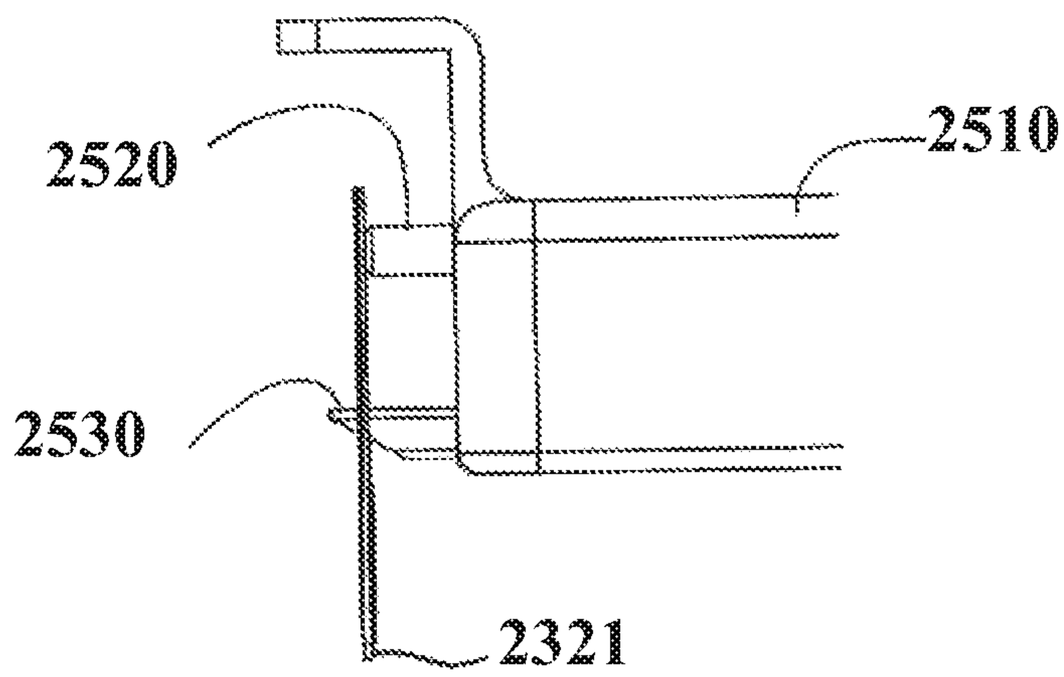

FIG. 25C

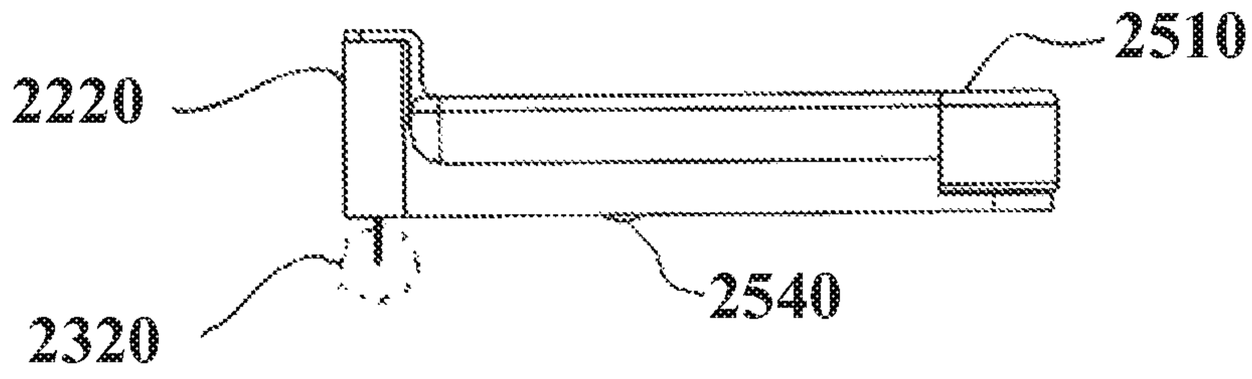

FIG. 25D

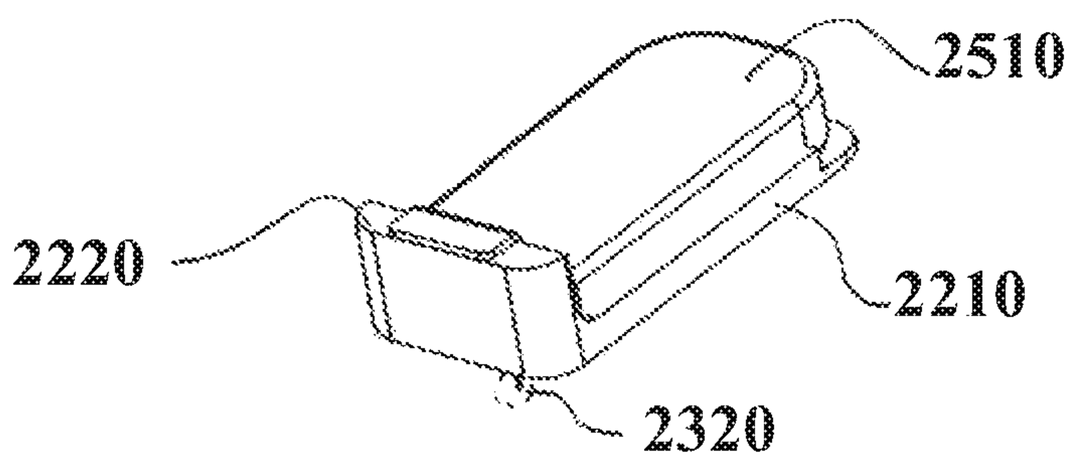

FIG. 25E

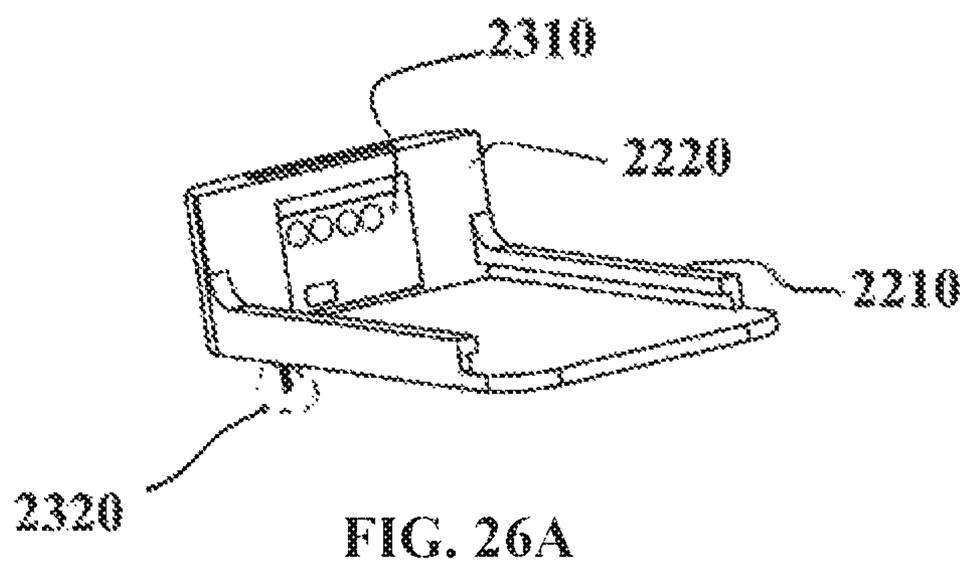

FIG. 26A

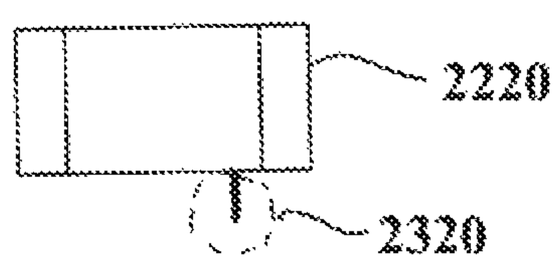

FIG. 26B

METHOD AND APPARATUS FOR PROVIDING ANALYTE SENSOR INSERTION

RELATED APPLICATION

The present application is a continuation of U.S. patent application Ser. No. 15/141,819 filed Apr. 28, 2016, now U.S. Pat. No. 9,795,331, which is a continuation of U.S. patent application Ser. No. 14/500,705 filed Sep. 29, 2014, now U.S. Pat. No. 9,332,933, which is a continuation of U.S. patent application Ser. No. 12/571,349 filed Sep. 30, 2009, now U.S. Pat. No. 8,852,101, which is a continuation of U.S. patent application Ser. No. 11/535,983 filed Sep. 28, 2006, now U.S. Pat. No. 7,697,967, entitled "Method and Apparatus for Providing Analyte Sensor Insertion", which claims priority to U.S. Provisional Application No. 60/754,870 filed on Dec. 28, 2005 entitled "Medical Device Insertion", the disclosures of each of which are incorporated in their entirety by reference for all purposes.

BACKGROUND

There are many instances in which it is necessary to position at least a portion of a medical device beneath the epidermis of a patient, e.g., in the subcutaneous layer or elsewhere.

For example, the monitoring of the level of glucose or other analytes, such as lactate or oxygen or the like, in certain individuals is vitally important to their health. The monitoring of glucose is particularly important to individuals with diabetes, as they must determine when insulin is needed to reduce glucose levels in their bodies or when additional glucose is needed to raise the level of glucose in their bodies.

In this regard, devices have been developed for continuous or automatic monitoring of analytes, such as glucose, in the blood stream or interstitial fluid. Many of these analyte measuring devices are configured so that at least a portion of the devices is positioned below the epidermis, e.g., in a blood vessel or in the subcutaneous tissue of a patient.

These devices, as well as other medical devices, may be positioned manually, e.g., by a user or a healthcare worker, or automatically or semi-automatically with the aid of a sensor positioning device. Regardless of the manner in which the device is inserted beneath the skin, it is important that the device positioning process does not adversely affect the operation of the device. Furthermore, it is important that pain is minimal.

As interest in inserting medical devices, e.g., continuous analyte monitoring devices, beneath the epidermis of a patient continues, there is interest in devices and methods for operably inserting such devices. Of interest are such devices and methods that have minimal impact on device function and which produce minimal pain. Of particular interest are continuous analyte monitoring positioning devices that enable clinically accurate analyte information to be obtained substantially immediately following device positioning in a patient.

SUMMARY

Generally, the present invention relates to methods and devices for positioning a medical device at least partially beneath the epidermal layer of skin. In certain embodiments, the present invention relates to the continuous and/or automatic in vivo monitoring of the level of an analyte using an analyte sensor and more specifically devices and methods for operably positioning analyte sensors at least partially beneath the epidermal layer of skin. The subject invention is further described with respect to positioning an analyte sensing device (also referred to herein as a "sensor", "analyte monitoring device/sensor", and the like) and analyte sensing systems, where such description is in no way intended to limit the scope of the invention. It is understood that the subject invention is applicable to any medical device in which at least a portion of the device is intended to be positioned beneath the epidermis.

Embodiments of the subject invention include analyte sensor positioning devices and methods that are adapted to provide clinically accurate analyte data (e.g., analyte-related signal) substantially immediately after a sensor has been operably positioned in a patient (e.g., at least a portion of the sensor in the subcutaneous tissue, or elsewhere).

Embodiments of the subject invention include systems in which the period of time after a sensor is positioned in a patient, when a first (or only) sensor calibration is required, is substantially reduced (excluding any factory-set calibration) and/or the number of calibrations (excluding any factory-set calibration) is reduced, e.g., to three or less calibrations, e.g., two or less calibrations, e.g., one calibration or no calibrations.

Also provided are sensor positioning devices and methods that at least minimize, and in many instances eliminate, the occurrence of periods of spurious, low analyte readings, e.g., substantially immediately following sensor positioning, during the night, etc.

Embodiments include devices and methods that modulate the sensor positioning speed, or stated otherwise the rate at which a sensor is delivered to a site in a patient, e.g., using at least two different velocities.

Also provided are positioning devices and methods that operably position a sensor in a site of a patient using an acute angle, relative to the skin.

Embodiments also include sensor positioning devices and methods that employ an anesthetic agent.

Aspects include minimal pain, including substantially pain-free, sensor positioning methods and devices and sensor positioning methods and devices that do not substantially interfere with sensor function.

Also provided are systems and kits.

BRIEF DESCRIPTION OF THE DRAWINGS

The invention may be more completely understood in consideration of the following detailed description of various embodiments of the invention in connection with the accompanying drawings, in which:

FIG. **1** shows a block diagram of an exemplary embodiment of an analyte monitor using an implantable analyte sensor, according to the invention;

FIG. **2** is a top view of one embodiment of an analyte sensor, according to the invention;

FIG. **3**A is a cross-sectional view of the analyte sensor of FIG. **2**;

FIG. **3**B is a cross-sectional view of another embodiment of an analyte sensor, according to the invention;

FIG. **4**A is a cross-sectional view of another embodiment of an analyte sensor, according to the invention;

FIG. **4**B is a cross-sectional view of a fourth embodiment of another embodiment of a sensor, according to the invention;

FIG. **5** is a cross-sectional view of another embodiment of an analyte sensor, according to the invention;

FIG. **6** is an expanded top view of a tip-portion of the analyte sensor of FIG. **2**;

FIG. **7** is an expanded bottom view of a tip-portion of the analyte sensor of FIG. **2**;

FIG. **8** is a side view of the analyte sensor of FIG. **2**;

FIG. **9** is a cross-sectional view of an embodiment of an on-skin sensor control unit, according to the invention;

FIG. **10** is a top view of a base of an on-skin sensor control unit;

FIG. **11** is a bottom view of a cover of an on-skin sensor control unit;

FIG. **12** is a perspective view of an on-skin sensor control unit on the skin of a patient;

FIG. **13**A is a block diagram of one embodiment of an on-skin sensor control unit, according to the invention;

FIG. **13**B is a block diagram of another embodiment of an on-skin sensor control unit, according to the invention;

FIG. **14** is a block diagram of one embodiment of a receiver/display unit, according to the invention;

FIG. **15** is an expanded view of an exemplary embodiment of a sensor and a sensor positioning device, according to the invention;

FIGS. **16**A, **16**B, **16**C are cross-sectional views of three embodiments of the insertion device of FIG. **15**;

FIG. **17** is a perspective view of the internal structure of an exemplary embodiment of an insertion gun, according to the invention;

FIGS. **18**A-**18**B are front component view and perspective view, respectively, of the two stage sensor insertion mechanism including the insertion device armed and ready for insertion, further illustrating the sensor introducer and sensor to make the first stage puncture, and also showing the plunger and the button in accordance with one embodiment of the present invention;

FIG. **19**A illustrates a front component view of the two stage sensor insertion mechanism after the firing of the first stage trigger button to achieve the initial puncture, and with the plunger exposed for the second stage insertion activation, and also illustrating the sensor/introducer position after the initial first stage puncture (for example, at 1.55 mm depth) in accordance with one embodiment of the present invention;

FIGS. **19**B-**19**D illustrate a perspective view, a close-up perspective view, and a side view, respectively, of the two stage sensor insertion mechanism after the first stage trigger button firing shown in FIG. **19**A, where the side view shown in FIG. **19**D further illustrates the special relationship of the carrier and drive spring with the plunger and the trigger button;

FIGS. **20**A-**20**B illustrate the front component view and the perspective view, respectively, of the two stage sensor insertion mechanism after the sensor placement at the predetermined depth with the plunger depressed down to deliver the sensor to the maximum predetermined depth in accordance with one embodiment of the present invention;

FIG. **21** illustrates a front perspective component view of the return spring of the two stage sensor insertion mechanism to retain the sensor introducer in a safe position after sensor insertion in accordance with one embodiment of the present invention, where the return spring may be configured to help retract or remove the introducer from the puncture site after sensor deployment to the predetermined depth;

FIG. **22**A is a perspective view of a first stage sensor introducer mechanism in accordance with one embodiment of the present invention;

FIG. **22**B is a side planar view of the first stage sensor introducer mechanism of FIG. **22**A in accordance with one embodiment of the present invention;

FIG. **22**C is a side planar view of the sensor introducer coupled to the first stage sensor introducer mechanism of FIG. **22**A in accordance with one embodiment of the present invention;

FIG. **23**A is a front planar view of the sensor in accordance with one embodiment of the present invention;

FIG. **23**B is a side view of the sensor shown in FIG. **23**A in accordance with one embodiment of the present invention;

FIG. **23**C is a close up view of the tip portion of the sensor shown in FIG. **23**A in accordance with one embodiment of the present invention;

FIG. **23**D is a perspective view of the sensor introducer in the first stage sensor introducer mechanism of FIG. **22**A in accordance with one embodiment of the present invention;

FIG. **23**E is a close up view of the tip portion of the sensor introducer of FIG. **23**D in accordance with one embodiment of the present invention;

FIG. **23**F is a front planar view of the sensor and sensor introducer of the first stage sensor introducer mechanism of FIG. **22**A in accordance with one embodiment of the present invention;

FIG. **23**G is a perspective view of the sensor and sensor introducer shown in FIG. **23**F in accordance with one embodiment of the present invention;

FIG. **23**H is a close up view of the tip portion of the sensor and sensor introducer shown in FIG. **23**F in accordance with one embodiment of the present invention;

FIG. **24** is a front planar view of the first stage sensor insertion of the sensor introducer mechanism of FIG. **22**A in accordance with one embodiment of the present invention;

FIG. **25**A is a side view of a transmitter unit for coupling to the first stage sensor introducer mechanism of FIG.**22**A in accordance with one embodiment of the present invention;

FIG. **25**B is a perspective view of the transmitter unit of FIG. **25**A in accordance with one embodiment of the present invention;

FIG. **25**C is a side view of the transmitter unit engaged with the sensor for the second stage sensor insertion in accordance with one embodiment of the present invention;

FIG. **25**D is a side view of the transmitter unit mounted to the overall assembly in accordance with one embodiment of the present invention;

FIG. **25**E is a perspective view of the transmitter unit mounted to the overall assembly of FIG. **25**D in accordance with one embodiment of the present invention;

FIG. **26**A is a perspective view of the sensor in the final position with respect to the sensor introducer mechanism without the transmitter unit in accordance with one embodiment of the present invention; and

FIG. **26**B is a front planar view of the sensor in the final position shown in FIG. **26**A in accordance with one embodiment of the present invention.

DEFINITIONS

Throughout the present application, unless a contrary intention appears, the following terms refer to the indicated characteristics.

A "biological fluid" or "physiological fluid" or "body fluid", is any body fluid in which an analyte can be measured, for example, blood, interstitial fluid, dermal fluid, sweat, tears, and urine. "Blood" includes whole blood and its cell-free components, such as, plasma and serum.

A "counter electrode" refers to an electrode paired with the working electrode, through which passes a current equal in magnitude and opposite in sign to the current passing through the working electrode. In the context of the invention, the term "counter electrode" is meant to include counter electrodes which also function as reference electrodes (i.e., a counter/reference electrode).

An "electrochemical sensor" is a device configured to detect the presence and/or measure the level of an analyte in a sample via electrochemical oxidation and reduction reactions on the sensor. These reactions are transduced to an electrical signal that can be correlated to an amount, concentration, or level of an analyte in the sample.

"Electrolysis" is the electrooxidation or electroreduction of a compound either directly at an electrode or via one or more electron transfer agents.

A compound is "immobilized" on a surface when it is entrapped on or chemically bound to the surface.

A "non-leachable" or "non-releasable" compound or a compound that is "non-leachably disposed" is meant to define a compound that is affixed on the sensor such that it does not substantially diffuse away from the working surface of the working electrode for the period in which the sensor is used (e.g., the period in which the sensor is implanted in a patient or measuring a sample).

Components are "immobilized" within a sensor, for example, when the components are covalently, ionically, or coordinatively bound to constituents of the sensor and/or are entrapped in a polymeric or sol-gel matrix or membrane which precludes mobility. For example, in certain embodiments an anesthetic agent or precursor thereof may be immobilized within a sensor.

An "electron transfer agent" is a compound that carries electrons between the analyte and the working electrode, either directly, or in cooperation with other electron transfer agents. One example of an electron transfer agent is a redox mediator.

A "working electrode" is an electrode at which the analyte (or a second compound whose level depends on the level of the analyte) is electrooxidized or electroreduced with or without the agency of an electron transfer agent.

A "working surface" is that portion of the working electrode which is coated with or is accessible to the electron transfer agent and configured for exposure to an analyte-containing fluid.

A "sensing layer" is a component of the sensor which includes constituents that facilitate the electrolysis of the analyte. The sensing layer may include constituents such as an electron transfer agent, a catalyst which catalyzes a reaction of the analyte to produce a response at the electrode, or both. In some embodiments of the sensor, the sensing layer is non-leachably disposed in proximity to or on the working electrode.

A "non-corroding" conductive material includes non-metallic materials, such as carbon and conductive polymers.

When one item is indicated as being "remote" from another, this is referenced that the two items are at least in different buildings, and may be at least one mile, ten miles, or at least one hundred miles apart. When different items are indicated as being "local" to each other they are not remote from one another (for example, they can be in the same building or the same room of a building). "Communicating", "transmitting" and the like, of information reference conveying data representing information as electrical or optical signals over a suitable communication channel (for example, a private or public network, wired, optical fiber, wireless radio or satellite, or otherwise). Any communication or transmission can be between devices which are local or remote from one another. "Forwarding" an item refers to any means of getting that item from one location to the next, whether by physically transporting that item or using other known methods (where that is possible) and includes, at least in the case of data, physically transporting a medium carrying the data or communicating the data over a communication channel (including electrical, optical, or wireless). "Receiving" something means it is obtained by any possible means, such as delivery of a physical item. When information is received it may be obtained as data as a result of a transmission (such as by electrical or optical signals over any communication channel of a type mentioned herein), or it may be obtained as electrical or optical signals from reading some other medium (such as a magnetic, optical, or solid state storage device) carrying the information. However, when information is received from a communication it is received as a result of a transmission of that information from elsewhere (local or remote).

When two items are "associated" with one another they are provided in such a way that it is apparent that one is related to the other such as where one references the other.

Items of data are "linked" to one another in a memory when a same data input (for example, filename or directory name or search term) retrieves those items (in a same file or not) or an input of one or more of the linked items retrieves one or more of the others.

It will also be appreciated that throughout the present application, that words such as "cover", "base" "front", "back", "top", "upper", and "lower" are used in a relative sense only.

"May" refers to optionally.

When two or more items (for example, elements or processes) are referenced by an alternative "or", this indicates that either could be present separately or any combination of them could be present together except where the presence of one necessarily excludes the other or others.

Any recited method can be carried out in the order of events recited or in any other order which is logically possible. Reference to a singular item, includes the possibility that there are plural of the same item present.

DETAILED DESCRIPTION

Before the present invention is described, it is to be understood that this invention is not limited to particular embodiments described, as such may, of course, vary. It is also to be understood that the terminology used herein is for the purpose of describing particular embodiments only, and is not intended to be limiting, since the scope of the present invention will be limited only by the appended claims.

Where a range of values is provided, it is understood that each intervening value, to the tenth of the unit of the lower limit unless the context clearly dictates otherwise, between the upper and lower limit of that range and any other stated or intervening value in that stated range, is encompassed within the invention. The upper and lower limits of these smaller ranges may independently be included in the smaller ranges as also encompassed within the invention, subject to any specifically excluded limit in the stated range. Where the stated range includes one or both of the limits, ranges excluding either or both of those included limits are also included in the invention.

Unless defined otherwise, all technical and scientific terms used herein have the same meaning as commonly understood by one of ordinary skill in the art to which this invention belongs. Although any methods and materials

similar or equivalent to those described herein can also be used in the practice or testing of the present invention, the preferred methods and materials are now described.

It must be noted that as used herein and in the appended claims, the singular forms "a", "an", and "the" include plural referents unless the context clearly dictates otherwise.

As will be apparent to those of skill in the art upon reading this disclosure, each of the individual embodiments described and illustrated herein has discrete components and features which may be readily separated from or combined with the features of any of the other several embodiments without departing from the scope or spirit of the present invention.

The figures shown herein are not necessarily drawn to scale, with some components and features being exaggerated for clarity.

As summarized above, the present invention is related to analyte sensor positioning devices and methods (the term "positioning" is used herein interchangeably with "delivery", "insertion", and the like). The present invention is applicable to an analyte monitoring system using a sensor—at least a portion of which is positionable beneath the skin of the user for the in vivo determination of a concentration of an analyte, such as glucose, lactate, and the like, in a body fluid. The sensor may be, for example, subcutaneously positionable in a patient for the continuous or periodic monitoring of an analyte in a patient's interstitial fluid. This may be used to infer the glucose level in the patient's bloodstream. The sensors of the subject invention also include in vivo analyte sensors insertable into a vein, artery, or other portion of the body containing fluid. A sensor of the subject invention is typically configured for monitoring the level of the analyte over a time period which may range from minutes, hours, days, weeks, or longer. Of interest are analyte sensors, such as glucose sensors, that are capable of providing analyte data for about one hour or more, e.g., about a few hours or more, e.g., about a few days of more, e.g., about three days or more, e.g., about five days or more, e.g., about seven days or more, e.g., about several weeks or months.

Embodiments include positioning devices and systems, and methods that provide clinically accurate analyte data (e.g., relative to a reference) substantially immediately, as shown by any suitable technique known to those of skill in the art, e.g., a Clark Error Grid, Parks Error Grid, Continuous Glucose Error Grid, MARD analysis, and the like. For example, in those embodiments in which the sensor is a continuous sensor and at least a portion of the sensor is adapted to be positioned under the skin of a patient, the sensor is adapted to provide clinically accurate analyte data (e.g., relative to a reference) substantially immediately after the sensor is operably positioned in a patient. In other words, the waiting period from the time a sensor is positioned in a user and the time clinically accurate data may be obtained and used by the user, is greatly reduced relative to prior art devices that require a greater waiting period before accurate analyte data may be obtained and used by a user. By "substantially immediately" is meant from about 0 hours to less than about 5 hours, e.g., from about 0 hours to about 3 hours, e.g., from about 0 hours to less than about 1 hour, e.g., from about 30 minutes or less, where in many embodiments the sensors according to the subject invention are capable of providing clinically accurate analyte data once the sensor has been operatively positioned in the patient.

As noted above, embodiments also include analyte monitoring devices and methods having substantially reduced (including eliminated) periods of time of spurious, low analyte readings, as compared to a control, i.e., the period of time in which clinically accurate analyte data is obtainable is greater, as compared to a control. The subject invention may be employed to minimize or eliminate spurious low analyte readings obtained at any time during sensor use, including a period of time immediately after sensor activation (e.g., positioning of an analyte sensor in or on a patient) and/or anytime thereafter. Accordingly, embodiments include sensors positioning devices and methods that enable sensors to provide clinically accurate analyte data substantially immediately after the sensor has been operably positioned in a patient (e.g., in the subcutaneous tissue, etc.) and/or without substantial interruption due to spurious analyte readings

Embodiments include minimal tissue trauma-producing analyte positioning devices and methods, where embodiments include modulating the rate at which a sensor is delivered to a target site. For example, at least two velocities may be used in the positioning of a sensor, where embodiments include a multiple rate sensor delivery protocol having a first sensor delivery rate, followed by a second sensor delivery rate that is less than the first. Embodiments may include opening the skin with a first velocity, and inserting the sensor through the thus-formed skin opening to a target site (e.g., into the subcutaneous tissue) with a second, minimal tissue trauma-producing velocity, where the second velocity is less than the first velocity. Such may be accomplished automatically or semi-automatically with a sensor positioning device. The positioning device may include a sharp portion and a sensor-carrying portion and may be adapted to provide a skin incision and position a sensor in a patient using variable speeds. It is to be understood that such may be accomplished wholly or at least partially manually.

Certain embodiments include two-stage sensor delivery devices and methods and include devices capable of producing at least first and second velocities. Specific embodiments include devices capable of producing a superficial cut in the skin that is no deeper than the epidermis using a first velocity, and inserting the sensor through the thus-formed cut to a target site using a second velocity that is slower than the first velocity. The speed of the first velocity may be selected to minimize the patient's perception of pain and the speed of the second velocity may be selected to minimize tissue damage at the site of eventual glucose measurements. For example, the high speed of the first velocity (e.g., from about 4 to about 8 m/s in certain embodiments) may minimize the patient's pain while the slower speed of the second velocity (e.g., from about 0.025 to about 0.5 m/s in certain embodiments) may minimize the damage due to the tissue at the site of the eventual glucose sensor measurements. Accordingly, a user contacts the device to a skin surface and actuates the device to cut the skin and insert the sensor through the cut to the target site, using at least two different velocities for the incision forming and sensor delivery operations.

The various velocities employed may differ by any suitable amount. For example, in certain embodiments in which two velocities are employed, the velocities may differ by about 25% to about 95%, e.g., by about 60% to about 90%. Velocity change may be gradual or stepped. The change in velocity may be perceptible to the user or not, where in many embodiments the velocity change is not perceptible by the user. In certain embodiments, the sensor positioning process is automatic in that a user need only activate the device, e.g., actuate a button, lever, contact with a skin surface, or the like, to initiate the sensor positioning process, which process then proceeds to completion without any further user inter-

vention. However, in some embodiments one or more parameters may be controllable by the user, e.g., the timing of velocity change, magnitudes of velocity(ies), etc.

Embodiments of the above-described two-speed sensor insertion minimize tissue damage to the superficial layer of the skin, the stratum corneum and epidermis, as a greater force is required to penetrate these outer layers of the skin, and hence a greater likelihood of tissue damage. By limiting the depth of the incision to the upper layers of the skin, i.e., the stratum corneum and epidermis, minimization of tissue damage at the site of the eventual analyte sensor placement in the subcutaneous adipose tissue layer is achieved.

Furthermore, since in certain embodiments a separate sharp is not employed to penetrate below the outer layer of skin, not only is the tissue damage in the subcutaneous adipose layer minimized by use of the slower speed in the second velocity portion of the insertion, but the physical size and dimension of the wound is greatly reduced by eliminating the use of a separate sharp device penetrating below the outer layer of the skin.

In certain embodiments, the sharp device which disrupts the stratum corneum and epidermis may penetrate from about 0.5 mm to about 1.5 mm below the surface of the skin in certain embodiments. In certain analyte sensing systems, the analyte-sensing chemistry layer on the sensor, by contrast, may be positioned below or deeper than this penetration, e.g., below about 0.5 mm to about 1.5 mm below the surface of the skin. The slow speed of the second velocity portion of the insertion displaces the adipose cells in the subcutaneous adipose tissue layer rather than physically disrupting the cells and effectively coring out a cylinder in which the sensor may be subsequently placed. By contrast, in the present invention, the slow speed of the second velocity portion of the insertion minimizes the volume of tissue which has been removed or even displaced by the sensor insertion. As a result, the sensing portion of the sensor is in immediate proximal contact with the surrounding tissue. In contrast to typical insertion methods in which a cylindrical core of tissue is displaced or removed by a high-speed insertion, in the present invention there is no open volume of tissue in which fluids may accumulate forming edema typical of wound response to trauma of this nature. The absence of or the significant reduction of edema in the present invention associated with the minimization of the perturbed volume of tissue contributes to rapid sensor equilibration with the method of sensor insertion described herein compared with conventional sensor insertion procedures.

Embodiments include making a large wide cut through the epidermis, then a much smaller incision in terms of its cross-sectional dimensions through the dermis and into the underlying subcutaneous adipose tissue layer, where in certain embodiments as much as about a fourfold difference in the cross-sectional area (e.g., 0.48 mm^2 for the incision in the epidermis compared to 0.12 mm^2 for the incision in the subcutaneous layer).

The subject invention also includes anesthetic agents in sensor positioning. That is, certain embodiments include sensor positioning devices, methods and/or sensors that include an anesthetic agent ("active agent"). The active agent may be any suitable anesthetic agent(s) known or to be discovered. Examples of anesthetic agents include, but are not limited to, lidocaine (with or without epinephrine), prilocaine, bupivacaine, benzocaine, and ropivacaine, marcaine (with or without epinephrine) and the like, and combinations thereof, as well as cold sprays such as ethyl chloride sprays.

The active-agent containing devices may be analyte sensors and/or analyte sensor positioning devices in certain embodiments, and/or may be a structure that is positionable near a skin location site at which site an incision is or will be made and sensor is or will be inserted (a body fluid sampling site). In certain embodiments, the structure may be a sensor positioning device, drug delivery device (e.g., insulin delivery device), etc.

In certain embodiments, an active agent may not be carried by a device, but rather may be otherwise applied at or substantially near the sensor insertion site. Accordingly, embodiments include systems having an active agent delivery unit and an analyte sensor.

Active agent employed in the subject invention may be delivered transdermally, by a topical route, formulated as applicator sticks, solutions, suspensions, emulsions, gels, creams, ointments, pastes, jellies, paints, powders, and aerosols. For example, embodiments may include an active agent in the form of a discrete patch or film or plaster or the like adapted to remain in intimate contact with the epidermis of the recipient for a period of time. For example, such transdermal patches may include a base or matrix layer, e.g., polymeric layer, in which active agent is retained. The base or matrix layer may be operably associated with a support or backing. Active agents suitable for transdermal administration may also be delivered by iontophoresis and may take the form of an optionally buffered aqueous solution that includes the active agent. Suitable formulations may include citrate or bis/tris buffer (pH 6) or ethanol/water and contain a suitable amount of active ingredient.

Active agents may be applied via parenteral administration, such as intravenous ("IV") administration, intramuscular ("IM"), subcutaneous ("SC" or "SQ"), mucosal. The formulations for such administration may include a solution of the active agent dissolved in a pharmaceutically acceptable carrier. Among the acceptable vehicles and solvents that may be employed, include, but are not limited to, water and Ringer's solution, an isotonic sodium chloride, etc. Active agents may be formulated into preparations for injection by dissolving, suspending or emulsifying them in an aqueous or nonaqueous solvent, such as vegetable or other similar oils, synthetic aliphatic acid glycerides, esters of higher aliphatic acids or propylene glycol; and if desired, with conventional additives such as solubilizers, isotonic agents, suspending agents, emulsifying agents, stabilizers and preservatives. These solutions are sterile and generally free of undesirable matter.

In other embodiments, the active agent may be delivered by the use of liposomes which fuse with the cellular membrane or are endocytosed, i.e., by employing ligands attached to the liposome, or attached directly to the oligonucleotide, that bind to surface membrane protein receptors of the cell resulting in endocytosis. By using liposomes, particularly where the liposome surface carries ligands specific for target cells, or are otherwise preferentially directed to a specific organ, one can focus the delivery of the pharmacological agent into the target cells in vivo. (See, e.g., Al-Muhammed, J. Microencapsul. 13:293-306, 1996; Chonn, Curr. Opin. Biotechnol. 6:698-708, 1995; Ostro, Am. J. Hosp. Pharm. 46:1576-1587, 1989). Methods for preparing liposomal suspensions are known in the art and thus will not be described herein in great detail.

Embodiments may also include administration of active agent using an active agent administration device other than a sensor positioning device and a sensor such as, but not limited to, pumps (implantable or external devices and combinations of both (e.g., certain components may be

implantable and others may be external to the body such as controls for the implantable components)), epidural injectors, syringes or other injection apparatus, catheter and/or reservoir operably associated with a catheter, etc. For example, in certain embodiments a device employed to deliver active agent to a subject may be a pump, syringe, catheter or reservoir operably associated with a connecting device such as a catheter, tubing, or the like. Containers suitable for delivery of active agent to an active agent administration device include instruments of containment that may be used to deliver, place, attach, and/or insert the active agent into the delivery device for administration of the active agent to a subject and include, but are not limited to, vials, ampules, tubes, capsules, bottles, syringes and bags. Embodiments may also include administration of active agent via a biodegradable implant active agent delivery device. Such may be accomplished by employing syringes to deposit such a biodegradable delivery device under the skin of a subject. The implants degrade completely, so that removal is not necessary.

Embodiments may include employing an electrode to deliver active agent to a subject. For example, an electrode may be used that has a small port at its tip which is connected to a reservoir or pump containing active agent. The active agent delivery electrode may be implanted using any suitable technique such as surgical cut down, laparoscopy, endoscopy, percutaneous procedure, and the like. In certain embodiments a reservoir or pump may also be implanted in the subject's body. The active agent delivery electrode, or other analogous device, may be controllable such that the amount of active agent delivered, the rate at which the active agent may be delivered, and the time period over which the active agent may be delivered, etc., may be controllable and may be adjusted, e.g., by a user and/or healthcare worker.

Accordingly, embodiments include contacting an analyte determination site with active agent, and determining the concentration of an analyte, where the contacting may be by way of an analyte sensor, analyte sensor positioning device or other structure, transdermal administration, parenteral administration, etc.

In those embodiments in which a sensor positioning device and/or sensor or other device includes active agent, the active agent-containing structure may include or incorporate active agent in any suitable manner. For example, at least a portion of a positioning device and/or sensor, e.g., a body fluid-contacting portion, may include active agent, where in certain embodiments substantially the entire positioning device and/or sensor may include active agent. Active agent may be immobilized on a surface of a positioning device and/or sensor or may be configured to diffuse away from a surface of a positioning device and/or sensor. In certain embodiments, at least the portion of the positioning device that is adapted to provide a skin incision, e.g., a sharp of a sensor positioning device, may include active agent.

In certain embodiments, active agent is a coating on at least a portion of positioning device and/or sensor. In certain embodiments, active agent is incorporated, e.g., embedded, or otherwise integrated into a positioning device and/or sensor.

A positioning device and/or sensor may also have the ability to emit or diffuse active agent at a controllable rate, e.g., may include a controlled release, such as a time release, formulation. For example, a positioning device and/or sensor may include a formulation that is designed to release active agent gradually over time, e.g., over about a period of time commensurate with sensor positioning. A controlled release formulation may employ a polymer or other non-anesthetic agent material to control the release of the active agent. The active agent release rate may be slowed by diffusion through the polymer, or the active agent may be released as the polymer degrades or disintegrates in the body.

The active agent may be added to a positioning device and/or sensor during fabrication thereof and/or may be applied after fabrication. For example, a coating containing active agent thereof may be applied to a positioning device and/or sensor after it has been fabricated.

Active agent may be applied to a positioning device and/or sensor by any of a variety of methods, e.g., by spraying the active agent onto at least a portion of a positioning device and/or sensor or by dipping a positioning device and/or sensor into the active agent, or otherwise immersing or flooding a positioning device and/or sensor with the active agent.

The amount of active agent employed may vary depending on a variety of factors such as the particular active agent used, the particulars of the positioning device and/or sensor, etc. In any event, an effective amount of active agent is used—an amount sufficient to provide the requisite anesthetic result for the desired period of time.

Representative analyte sensors, analyte monitoring systems and sensor positioning devices are now described, where such description is for exemplary purposes only and is in no way intended to limit the scope of the invention.

Analyte Sensors and Sensor Systems

The analyte sensors and analyte monitoring systems of the present invention can be utilized under a variety of conditions. The particular configuration of a sensor and other units used in an analyte monitoring system may depend on the use for which the sensor and system are intended and the conditions under which the sensor and system will operate. As noted above, embodiments include a sensor configured for implantation into a patient or user. The term "implantation" is meant broadly to include wholly implantable sensors and sensors in which only a portion of which is implantable under the skin and a portion of which resides above the skin, e.g., for contact to a transmitter, receiver, transceiver, processor, etc. For example, implantation of the sensor may be made in the arterial or venous systems for direct testing of analyte levels in blood. Alternatively, a sensor may be implanted in the interstitial tissue for determining the analyte level in interstitial fluid. This level may be correlated and/or converted to analyte levels in blood or other fluids. The site and depth of implantation may affect the particular shape, components, and configuration of the sensor. Subcutaneous implantation may be desired, in some cases, to limit the depth of implantation of the sensor. Sensors may also be implanted in other regions of the body to determine analyte levels in other fluids. Examples of suitable sensors for use in the analyte monitoring systems of the invention are described in U.S. Pat. Nos. 6,134,461, 6,175,752, and elsewhere.

An exemplary embodiment of an analyte monitoring system **40** for use with an implantable sensor **42**, e.g., for use with a subcutaneously implantable sensor, is illustrated in block diagram form in FIG. **1**. The analyte monitoring system **40** includes, at minimum, a sensor **42**, at least a portion of the sensor which is configured for implantation (e.g., subcutaneous, venous, or arterial implantation) into a patient, and a sensor control unit **44**. The sensor **42** is coupleable to the sensor control unit **44** which is typically attachable to the skin of a patient. The sensor control unit **44**

operates the sensor **42**, including, for example, providing a voltage across the electrodes of the sensor **42** and collecting signals from the sensor **42**.

The sensor control unit **44** may evaluate the signals from the sensor **42** and/or transmit the signals to one or more optional receiver/display units **46**, **48** for evaluation. The sensor control unit **44** and/or the receiver/display units **46**, **48** may display or otherwise communicate the current level of the analyte. Furthermore, the sensor control unit **44** and/or the receiver/display units **46**, **48** may indicate to the patient, via, for example, an audible, visual, or other sensory-stimulating alarm, when the level of the analyte is at or near a threshold level. In some embodiments, an electrical shock may be delivered to the patient as a warning through one of the electrodes or the optional temperature probe of the sensor. For example, if glucose is monitored then an alarm may be used to alert the patient to a hypoglycemic or hyperglycemic glucose level and/or to impending hypoglycemia or hyperglycemia.

A sensor **42** includes at least one working electrode **58** and a substrate **50**, as shown in FIG. **2**. The sensor **42** may also include at least one counter electrode **60** (or counter/reference electrode) and/or at least one reference electrode **62** (see for example FIG. **7**). The counter electrode **60** and/or reference electrode **62** may be formed on the substrate **50** or may be separate units. For example, the counter electrode and/or reference electrode may be formed on a second substrate which is also implantable in the patient or, for some embodiments of the sensors, the counter electrode and/or reference electrode may be placed on the skin of the patient with the working electrode or electrodes being implanted into the patient. The use of an on-the-skin counter and/or reference electrode with an implantable working electrode is described in, e.g., U.S. Pat. No. 5,593,852.

The working electrode or electrodes **58** are formed using conductive materials **52**. The counter electrode **60** and/or reference electrode **62**, as well as other optional portions of the sensor **42**, such as a temperature probe **66** (see for example FIG. **7**), may also be formed using conductive material **52**. The conductive material **52** may be formed over a smooth surface of the substrate **50** or within channels **54** formed by, for example, embossing, indenting or otherwise creating a depression in the substrate **50**.

A sensing layer **64** (see for example FIGS. **3**, **4**, **5** and **6**) may be provided proximate to or on at least one of the working electrodes **58** to facilitate the electrochemical detection of the analyte and the determination of its level in the sample fluid, particularly if the analyte cannot be electrolyzed at a desired rate and/or with a desired specificity on a bare electrode.

In addition to the electrodes **58**, **60**, **62** and the sensing layer **64**, the sensor **42** may also include optional components such as one or more of the following: a temperature probe **66** (see for example FIGS. **5** and **7**), a mass transport limiting layer **74**, e.g., a matrix such as a membrane or the like, (see for example FIG. **8**), a biocompatible layer **75** (see for example FIG. **8**), and/or other optional components, as described below. Each of these optional items enhances the functioning of and/or results from the sensor **42**, as discussed below.

The substrate **50** may be formed using a variety of non-conducting materials, including, for example, polymeric or plastic materials and ceramic materials. Suitable materials for a particular sensor **42** may be determined, at least in part, based on the desired use of the sensor **42** and properties of the materials.

In addition to considerations regarding flexibility, it is often desirable that a sensor **42** should have a substrate **50** which is non-toxic. Preferably, the substrate **50** is approved by one or more appropriate governmental agencies or private groups for in vivo use. Although the substrate **50** in at least some embodiments has uniform dimensions along the entire length of the sensor **42**, in other embodiments, the substrate **50** has a distal end **67** and a proximal end **65** with different widths **53**, **55**, respectively, as illustrated in FIG. **2**.

At least one conductive trace **52** may be formed on the substrate for use in constructing a working electrode **58**. Typically, the working surface **51** of the working electrode **58** is at least a portion of the conductive trace **52** that is in contact with the analyte-containing fluid (e.g., implanted in the patient). In addition, other conductive traces **52** may be formed on the substrate **50** for use as electrodes (e.g., additional working electrodes, as well as counter, counter/reference, and/or reference electrodes) and other components, such as a temperature probe. The conductive traces **52** may extend most of the distance along a length **57** of the sensor **50**, as illustrated in FIG. **2**, although this is not necessary. The placement of the conductive traces **52** may depend on the particular configuration of the analyte monitoring system (e.g., the placement of control unit contacts and/or the sample chamber in relation to the sensor **42**). For implantable sensors, particularly subcutaneously implantable sensors, the conductive traces may extend close to the tip of the sensor **42** to minimize the amount of the sensor that must be implanted.

The conductive traces may be formed using a conductive material **56** such as carbon (e.g., graphite), a conductive polymer, a metal or alloy (e.g., gold or gold alloy), or a metallic compound (e.g., ruthenium dioxide or titanium dioxide), and the like. Conductive traces **52** (and channels **54**, if used) may be formed with relatively narrow widths. In embodiments with two or more conductive traces **52** on the same side of the substrate **50**, the conductive traces **52** are separated by distances sufficient to prevent conduction between the conductive traces **52**. The working electrode **58** and the counter electrode **60** (if a separate reference electrode is used) may be made using a conductive material **56**, such as carbon.

The reference electrode **62** and/or counter/reference electrode may be formed using conductive material **56** that is a suitable reference material, for example silver/silver chloride or a non-leachable redox couple bound to a conductive material, for example, a carbon-bound redox couple.

The electrical contact **49** may be made using the same material as the conductive material **56** of the conductive traces **52**, or alternatively, may be made from a carbon or other non-metallic material, such as a conducting polymer.

A number of exemplary electrode configurations are described below, however, it will be understood that other configurations may also be used. FIG. **3**A is a cross-sectional view of the analyte sensor taken along lines **3**A-**3**A of FIG. **2**. In certain embodiments, e.g., illustrated in FIG. **3**A, the sensor **42** includes two working electrodes **58***a*, **58***b* and one counter electrode **60**, which also functions as a reference electrode. In another embodiment, the sensor includes one working electrode **58***a*, one counter electrode **60**, and one reference electrode **62**, as shown for example in FIG. **3**B. Each of these embodiments is illustrated with all of the electrodes formed on the same side of the substrate **50**.

Alternatively, one or more of the electrodes may be formed on an opposing side of the substrate **50**. In another embodiment, two working electrodes **58** and one counter electrode **60** are formed on one side of the substrate **50** and

one reference electrode **62** and two temperature probes **66** are formed on an opposing side of the substrate **50**, as illustrated in FIG. **5**. The opposing sides of the tip of this embodiment of the sensor **42** are illustrated in FIGS. **6** and **7**.

Some analytes, such as oxygen, may be directly electrooxidized or electroreduced on the working electrode **58**. Other analytes, such as glucose and lactate, require the presence of at least one electron transfer agent and/or at least one catalyst to facilitate the electrooxidation or electroreduction of the analyte. Catalysts may also be used for those analytes, such as oxygen, that can be directly electrooxidized or electroreduced on the working electrode **58**. For these analytes, each working electrode **58** has a sensing layer **64** formed proximate to or on a working surface of the working electrode **58**. In many embodiments, the sensing layer **64** is formed near or on only a small portion of the working electrode **58**, e.g., near a tip of the sensor **42**.

The sensing layer **64** includes one or more components designed to facilitate the electrolysis of the analyte. The sensing layer **64** may be formed as a solid composition of the desired components (e.g., an electron transfer agent and/or a catalyst). These components may be non-leachable from the sensor **42** and may be immobilized on the sensor **42**. For example, the components may be immobilized on a working electrode **58**. Alternatively, the components of the sensing layer **64** may be immobilized within or between one or more membranes or films disposed over the working electrode **58** or the components may be immobilized in a polymeric or sol-gel matrix. Examples of immobilized sensing layers are described in, e.g., U.S. Pat. Nos. 5,262,035; 5,264,104; 5,264,105; 5,320,725; 5,593,852; and 5,665,222; and PCT Patent Application No. US1998/002403 entitled "Electrochemical Analyte Sensors Using Thermostable Soybean Peroxidase" filed on Feb. 11, 1998, published as WO-1998/035053.

Sensors having multiple working electrodes **58***a* may also be used, e.g., and the signals therefrom may be averaged or measurements generated at these working electrodes **58***a* may be averaged. In addition, multiple readings at a single working electrode **58***a* or at multiple working electrodes may be averaged.

In many embodiments, the sensing layer **64** contains one or more electron transfer agents in contact with the conductive material **56** of the working electrode **58**, as shown for example in FIGS. **3**A and **3**B. Useful electron transfer agents and methods for producing them are described in, e.g., U.S. Pat. Nos. 5,264,104; 5,356,786; 5,262,035; 5,320,725, 6,175,752, 6,329,161, and elsewhere. In another embodiment, the sensing layer **64** is not deposited directly on the working electrode **58***a*. Instead, the sensing layer **64** is spaced apart from the working electrode **58***a*, as illustrated in FIG. **4**A, and separated from the working electrode **58***a* by a separation layer **61**.

The sensing layer **64** may also include a catalyst which is capable of catalyzing a reaction of the analyte. The catalyst may also, in some embodiments, act as an electron transfer agent. In another embodiment, two sensing layers **63**, **64** are used, as shown in FIG. **4**B.

To electrolyze the analyte, a potential (versus a reference potential) is applied across the working and counter electrodes **58**, **60**. When a potential is applied between the working electrode **58** and the counter electrode **60**, an electrical current will flow.

Those skilled in the art will recognize that there are many different reactions that will achieve the same result; namely the electrolysis of an analyte or a compound whose level depends on the level of the analyte.

A variety of optional items may be included in the sensor. One optional item is a temperature probe **66** (see for example FIG. **7**). One exemplary temperature probe **66** is formed using two probe leads **68**, **70** connected to each other through a temperature-dependent element **72** that is formed using a material with a temperature-dependent characteristic. An example of a suitable temperature-dependent characteristic is the resistance of the temperature-dependent element **72**. The temperature probe **66** can provide a temperature adjustment for the output from the working electrode **58** to offset the temperature dependence of the working electrode **58**.

The sensors of the subject invention are biocompatible. Biocompatibility may be achieved in a number of different manners. For example, an optional biocompatible layer **75** may be formed over at least that portion of the sensor **42** which is inserted into the patient, as shown in FIG. **8**.

An interferant-eliminating layer (not shown) may be included in the sensor **42**. The interferant-eliminating layer may include ionic components, such as Nafion® or the like, incorporated into a polymeric matrix to reduce the permeability of the interferant-eliminating layer to ionic interferants having the same charge as the ionic components.

A mass transport limiting layer **74** may be included with the sensor to act as a diffusion-limiting barrier to reduce the rate of mass transport of the analyte, for example, glucose or lactate, into the region around the working electrodes **58**. Exemplary layers that may be used are described for example, in U.S. Pat. No. 6,881,551, and elsewhere.

A sensor of the subject invention may be adapted to be a replaceable component in an in vivo analyte monitor, and particularly in an implantable analyte monitor. As described above, in many embodiments the sensor is capable of operation over a period of days or more, e.g., a period of operation may be at least about one day, e.g., at least about three days, e.g., at least about five days, e.g., at least about one week or more, e.g., one month or more. The sensor may then be removed and replaced with a new sensor.

As described above, sensor positioning devices are provided. Embodiments of the subject positioning devices include low impact, minimal pain-producing devices, where certain embodiments are configured to obtain clinically accurate analyte information substantially immediately after sensor positioning. Device embodiments include variable insertion speed devices. Embodiments of the two stage sensor inserters described herein include single use, disposable, self-contained Sensor Delivery Units ("SDU") which may be included in a continuous glucose monitoring system.

Referring to FIG. **15**, sensor positioning device **120** may be used to insert, e.g., subcutaneously insert, at least a portion of the sensor **42** into the patient. The sensor positioning device **120** may be formed using structurally rigid materials, such as metal or rigid plastic. Exemplary materials include, but are not limited to, stainless steel and ABS (acrylonitrile-butadiene-styrene) plastic. In some embodiments, the sensor positioning device **120** is pointed and/or sharp at the tip **121** to facilitate penetration of the skin of the patient. A sharp, thin sensor positioning device may reduce pain felt by the patient upon insertion of the sensor **42**. In other embodiments, the tip **121** of the sensor positioning device **120** has other shapes, including a blunt or flat shape. These embodiments may be particularly useful when the sensor positioning device **120** does not penetrate the skin but rather serves as a structural support for the sensor **42** as the sensor **42** is pushed into the skin. In embodiments in which

at least a portion of the positioning device includes an anesthetic agent, such may be included in any suitable location of device **120**, e.g., at least a portion of tip **121**.

The sensor positioning device **120** may have a variety of cross-sectional shapes, as shown in FIGS. **16**A, **16**B, and **16**C. The sensor positioning device **120** illustrated in FIG. **16**A is a flat, planar, pointed strip of rigid material which may be attached or otherwise coupled to the sensor **42** to ease insertion of the sensor **42** into the skin of the patient, as well as to provide structural support to the sensor **42** during insertion. The sensor positioning devices **120** of FIGS. **16**B and **16**C are U- or V-shaped implements that support the sensor **42** to limit the amount that the sensor **42** may bend or bow during insertion. The cross-sectional width **124** of the sensor positioning devices **120** illustrated in FIGS. **16**B and **16**C may be about 1 mm or less, e.g., about 700 μm or less, e.g., about 500 μm or less, e.g., about 300 μm or less. The cross-sectional height **126** of the sensor positioning device **120** illustrated in FIGS. **16**B and **16**C may be about 1 mm or less, e.g., about 700 μm or less, e.g., about 500 μm or less in certain embodiments.

The sensor **42** itself may include optional features to facilitate insertion. For example, the sensor **42** may be pointed at the tip **123** to ease insertion, as illustrated in FIG. **15**. In addition, the sensor **42** may include a barb **125** which helps retain the sensor **42** in the subcutaneous tissue of the patient. The barb **125** may also assist in anchoring the sensor **42** at the target site, e.g., within the subcutaneous tissue, of the patient during operation of the sensor **42**. However, the barb **125** is typically small enough that little damage is caused to the subcutaneous tissue when the sensor **42** is removed for replacement. The sensor **42** may also include a notch **127** that can be used in cooperation with a corresponding structure (not shown) in the sensor positioning device to apply pressure against the sensor **42** during insertion, but disengage as the sensor positioning device **120** is removed. One example of such a structure in the sensor positioning device is a rod (not shown) between two opposing sides of a sensor positioning device **120** and at an appropriate height of the sensor positioning device **120**.

In operation, a sensor is carried by the positioning device to the target site. For example, the sensor **42** is placed within or next to the sensor positioning device **120** (e.g., may be partially or completely held within the sharp of the device, e.g., in a nested configuration or the like) and then a force is provided against the sensor positioning device **120** and/or sensor **42** to carry the sensor **42** into the skin of the patient. As described above, in certain embodiments various speeds may be used in a given insertion, e.g., a first speed followed by a second speed where the first speed is greater relative to the second speed.

In one embodiment, the force is applied to the sensor **42** to push the sensor into the skin, while the sensor positioning device **120** remains stationary and provides structural support to the sensor **42**. Alternatively, the force is applied to the sensor positioning device **120** and optionally to the sensor **42** to push a portion of both the sensor **42** and the sensor positioning device **120** through the skin of the patient and into the subcutaneous tissue. In any event, the forces used may be the same or different, as noted herein. The sensor positioning device **120** is optionally pulled out of the skin and subcutaneous tissue with the sensor **42** remaining in the subcutaneous tissue due to frictional forces between the sensor **42** and the patient's tissue. If the sensor **42** includes the optional barb **125**, then this structure may also facilitate the retention of the sensor **42** within the interstitial tissue as the barb catches in the tissue. The force applied to the sensor positioning device **120** and/or the sensor **42** may be applied manually or mechanically. The sensor **42** is reproducibly inserted through the skin of the patient.

In certain embodiments, an insertion gun may be used to insert the sensor. One example of an insertion gun **200** for inserting a sensor **42** is shown in FIG. **17**. The insertion gun **200** includes a housing **202** and a carrier **204**. The sensor positioning device **120** is typically mounted on the carrier **204** and the sensor **42** is pre-loaded into the sensor positioning device **120**. The carrier **204** drives the sensor **42** and, optionally, the sensor positioning device **120** into the skin of the patient using, for example, a cocked or wound spring, a burst of compressed gas, an electromagnet repelled by a second magnet, or the like, within the insertion gun **200**. In some instances, for example, when using a spring, the carrier **204** and sensor positioning device may be moved, cocked, or otherwise prepared to be directed towards the skin of the patient.

After the sensor **42** is inserted, the insertion gun **200** may contain a mechanism which pulls the sensor positioning device **120** out of the skin of the patient. Such a mechanism may use a spring, electromagnet, or the like to remove the sensor positioning device **120**.

The insertion gun may be reusable. The sensor positioning device **120** is often disposable to avoid the possibility of contamination. Alternatively, the sensor positioning device **120** may be sterilized and reused. In addition, the sensor positioning device **120** and/or the sensor **42** may be coated with an anticlotting agent to prevent fouling of the sensor **42**.

In one embodiment, the sensor **42** is injected between about 2 to about 12 mm into the interstitial tissue of the patient for subcutaneous implantation, e.g., the sensor is injected about 3 to about 9 mm, e.g., about 5 to about 7 mm, into the interstitial tissue. Other embodiments of the invention may include sensors implanted in other portions of the patient, including, for example, in an artery, vein, or organ. The depth of implantation varies depending on the desired implantation target. In any event, in certain embodiments the injection is at a speed that differs from the speed employed to create an opening in the skin through which the sensor is injected.

Although the sensor **42** may be inserted anywhere in the body, it is often desirable that the insertion site be positioned so that the on-skin sensor control unit **44** may be concealed. In addition, it is often desirable that the insertion site be at a place on the body with a low density of nerve endings to reduce the pain to the patient. Examples of preferred sites for insertion of the sensor **42** and positioning of the on-skin sensor control unit **44** include the abdomen, thigh, leg, upper arm, and shoulder.

Any suitable angle of insertion may be used. An insertion angle is measured from the plane of the skin (i.e., inserting the sensor perpendicular to the skin would be a 90 degree insertion angle). As noted herein, in certain embodiments an angle less than about 90 degrees is used. The orientation of the two stage or two speed sensor inserter device may be either at normal angle to the skin or at an oblique angle to the skin such as but not limited to about 20, about 25, about 30, about 45 or about 60 degrees with respect to the skin surface itself. In contrast with the sensor used in the case of normal or 90 degree insertion, in instances in which other angles are used, the length of the sensor itself may be adjusted by standard trigonometric relations so that the actual depth of placement remains the same (e.g., remains comparable to that achieved using a 90 degree angle), e.g.,

in certain embodiments about 5.0 mm below the surface of the skin, i.e. in the midst of the subcutaneous adipose tissue layer.

The use of an angled insertion (i.e. less than about 90 degrees relative to the skin) in the present achieves physical separation of the superficial incision from the position in the tissue at which the sensor will be measuring the analyte of interest. Furthermore, the use of angled insertion may decrease the physical displacement of the sensor itself relative to the subcutaneous adipose tissue layer when physical pressure is applied to the sensor mount and transmitter in the course of a patient's normal daily living. This may be especially important for minimizing the occurrences of spurious low readings during periods of sleep.

The use of an angled insertion in the present invention takes advantage of the stratum corneum's reduced susceptibility to shear disruption or penetration compared with rupture due to direct normal insertion. Less force is required to penetrate the stratum corneum and the epidermis using an angled insertion than an insertion conducted at normal incidence. The latter may be accompanied by greater degrees of damage to the underlying tissue as well as the release of various chemical messengers active in the wound response of the epidermis and dermis.

Embodiments also include devices and methods for determining the thickness of the subcutaneous adipose tissue layer in a given individual at a given anatomical site such as the lower left or right abdominal quadrant or the posterior or lateral upper arm. Such devices and/or algorithms may be integrated with a positioning device or may be separate. For example, in the event that the subcutaneous adipose tissue layer at the desired location for the placement of the sensor is less than or approximately equal to a predetermined amount, e.g., about 5.0 mm, sensor lengths and/or angles which correctly place the active glucose transduction area of the sensor in the middle of the targeted subcutaneous adipose tissue layer may be determined and used.

Sensor positioning devices may involve manual, semi-automatic, or automatic operation, referring to the origin of the force that is used both to insert the sensor and to retract any portion of the sensor positioning device out of the skin of the patient that is not intended to remain inserted during the period of sensor operation. Semi-automatic or automatic operation refers to the incorporation of one or more force-generating methods, e.g., wound springs, compressed gas, electromagnet repulsion of a second magnet, and the like, either in combination with manual force or replacing manual force entirely, for the purpose of inserting the sensor and/or retracting any portion of the sensor positioning device out of the skin of the patient that is not intended to remain inserted during the period of sensor operation.

In certain embodiments, a plunger-type button is used as the actuation mechanism of an insertion gun. The button serves the purpose of releasing a compressed spring that drives the sharp tip of the sensor positioning device into the skin of the patient at a fast speed, consistent with minimizing pain, so as to create a superficial skin incision that is no deeper than the epidermis. The sharp tip of the positioning device may then be retracted out of the skin of the patient, manually or using a mechanism such as a spring, electromagnet, or the like. The continued travel of the actuator button would then also serve the purpose of manually driving the sensor into the skin, through the incision created by the sharp tip of the positioning device, at a velocity less than that used to create the incision.

In certain other embodiments of the device, the insertion gun includes a housing and a carrier. The sensor positioning device is typically mounted on the carrier and the sensor is pre-loaded into the sensor positioning device. The carrier drives the sensor positioning device into the skin of the patient using, for example, a cocked or wound spring, a burst of compressed gas, an electromagnet repelled by a second magnet, and the like, within the insertion gun. The velocity of the carrier may be decreased, after the creation of the superficial skin incision, through mechanical means e.g., viscous dashpots, air damping, friction, the addition of mass to the carrier, or the like. The continued motion of the carrier, for the purpose of inserting the sensor into the incision created by the sharp tip of the positioning device, would then occur at a velocity less than that used to create the incision. The sharp tip of the positioning device may be retracted out of the skin of the patient, either after the creation of the skin incision or after sensor insertion, manually or using a mechanism such as a spring, electromagnet, or the like.

Embodiments include a two stage or two velocity sensor inserter device that includes a base, housing, carrier/introducer/sensor assembly, high speed activation button, drive spring, return spring and manual plunger. These inserters may be provided to users fully assembled and armed with a sensor enclosed inside the introducer.

In use, the first stage of the insertion may begin by activating the device, e.g., by pressing the plunger and activation button, to cause the introducer to be propelled into the skin at a higher rate of speed than the speed that will be used at the second stage. The introducer makes a "shallow puncture", but does not release the sensor.

The "shallow puncture" depth may be controlled by the height and location of the latch ledge features on the housing, or the type and force (rate) of the drive spring or in other ways such as hard stop, increase of friction, magnets, safety lock, or dial (similar to a lancet device), and the like. The "shallow puncture" or superficial incision may not provide a channel into which the glucose sensor is placed, but rather may provide an opening in the upper layer of the skin only with mechanical strength.

After the "shallow puncture" or superficial incision is made through the stratum corneum and epidermis, the return spring retracts the sharp portion of the introducer out of the skin. The overall (uncompressed) height of the return spring positions the introducer/sensor slightly above the surface of the skin (puncture) for the second stage of the insertion.

When the first stage is activated (releasing the latches of the carrier mechanism), the high speed button comes to rest in a lower position on top of the housing, thereby leaving the plunger in the "up" and ready position. The introducer having made the puncture is now in the "next" position (with the sensor still intact).

The second stage of the insertion may be accomplished manually (e.g., similar to and approximately as slow or slower than injection via syringe) by the user. Pressing down on the plunger causes the introducer/carrier/sensor to move from the "next" position and continue into the shallow puncture until the prescribed sensor insertion depth is reached. The prescribed insertion depth may be controlled by the compressed (solid) height of the return spring or in some other way such as hard stop, adhesive mount, safety lock or other similar restraining or limiting device.

When the prescribed depth is reached, the sensor body may be captured by features on an adhesive mount mounted on the patient's skin and released from the introducer for contact with the transmitter which is connectable to the mount. The insertion is complete when the first phase has provided an opening through the outer layer of the skin and

the second phase has resulted in the placement of the sensor at the desired depth in the subcutaneous adipose tissue layer,

The user releases the plunger (e.g., by removing their finger) and the return spring causes the introducer to exit the skin and into the "safe for disposal position". The SDU may then be detached from the mount and discarded accordingly.

A sensor insertion such as described above may be accomplished with one hand and without the benefit of direct line of sight.

The two stage insertion process may be achieved in one motion, (e.g., by the user pressing the top of the plunger and pushing down until it comes to rest on the top of the housing). However, the user may make a "2 motion-2 stage" insertion (by pressing the plunger, stopping after the high speed button has been activated then pressing the plunger).

FIGS. **18**A-**18**B are a front component view and perspective view, respectively, of an exemplary embodiment of a two stage sensor insertion mechanism including the insertion device armed and ready for insertion, further illustrating the sensor introducer and sensor to make the first stage puncture, and also showing the plunger and the button in accordance with one embodiment of the present invention. Referring to the Figures, the insertion device in one embodiment includes sensor **1801** operatively coupled to a sensor introducer **1802** substantially provided in the housing **1803** of the sensor insertion mechanism. Also shown in the Figures is a trigger button **1804** operatively coupled to a plunger **1805** in one embodiment, and where the actuation of the trigger button **1804** may be configured to deploy the sensor **1801** to a first insertion depth under the skin layer of the patient, guided by the sensor introducer **1802**.

FIG. **19**A illustrates a front component view of the two stage sensor insertion mechanism after the firing of the first stage trigger button to achieve the initial puncture, and with the plunger exposed for the second stage insertion activation, and also illustrating the sensor/introducer position after the initial first stage puncture (for example, at 1.55 mm depth) in accordance with one embodiment of the present invention.

FIGS. **19**B-**19**D illustrate a perspective view, a close-up perspective view, and a side view, respectively, of the two stage sensor insertion mechanism after the first stage trigger button firing shown in FIG. **19**A, where the side view shown in FIG. **19**D further illustrates the configuration of the carrier or the housing **1803** and drive spring **1806** with the plunger **1805** and the trigger button **1804**.

FIGS. **20**A-**20**B illustrate the front component view and the perspective view, respectively, of the two stage sensor insertion mechanism after the sensor placement at the predetermined depth with the plunger depressed down to deliver the sensor to the maximum predetermined depth in accordance with one embodiment of the present invention.

FIG. **21** illustrates a front perspective component view of the return spring of the two stage sensor insertion mechanism to retain the sensor introducer in a safe position after sensor insertion in accordance with one embodiment of the present invention, where the return spring may be configured to help retract or remove the introducer from the puncture site after sensor deployment to the predetermined depth. In one embodiment, the return spring and the drive spring **1806** may be integrally formed and disposed in the housing **1803**. Alternatively, in other embodiments, the return spring and the drive spring **1806** may be separate components disposed substantially within the housing **1803** of the insertion mechanism.

FIG. **22**A is a perspective view of a first stage sensor introducer mechanism in accordance with one embodiment of the present invention. Referring to FIG. **22**A the first stage sensor introducer mechanism in one embodiment includes a mounting unit comprising a base portion **2210** and a sensor guide portion **2220**. As shown, the guide portion **2220** of the mounting unit may be coupled to a sensor introducer assembly housing **2240** configured to operatively couple to a sensor introducer deployment section **2230**. In one embodiment, the sensor introducer deployment section **2230** and the sensor introducer assembly housing **2240** may be configured to be detachably removed from the sensor guide portion **2220** of the mounting unit upon actuation of the sensor introducer deployment section **2230** for transcutaneous positioning of the analyte sensor through the skin layer of the patient, for example, so as to place the sensor at the first deployment position.

Referring back to FIG. **22**A, in one embodiment, a sensor introducer **2250** (FIG. **22**C) is provided substantially within the sensor introducer assembly housing **2240** so as to couple to the sensor introducer deployment section **2230**. As such, in one embodiment, the actuation of the sensor introducer deployment section **2230**, for example, by manual depression thereupon with an application of a predetermined amount of force in a substantially downward direction as shown by directional arrow **2280**. In a further embodiment, the actuation of the sensor introducer deployment section **2230** may include an automated or semi-automated mechanism which the patient or the user may deploy. In such an embodiment, the deployment of the automated or semi-automated mechanism (for example, by triggering a switch) is configured to translate the sensor introducer deployment section **2230** in the downward direction so as to transcutaneously position the sensor introducer **2250** through the skin layer of the patient.

FIG. **22**B is a front planar view of the first stage sensor introducer mechanism of FIG. **22**A, and FIG. **22**C shows the sensor introducer **2250** coupled to the sensor introducer deployment section **2230** of FIG. **22**A in accordance with one embodiment of the present invention. As shown, in one embodiment, the sensor introducer **2250** is operatively coupled to the sensor introducer deployment section **2230** such that the sensor introducer **2250** is moved in a downward direction upon actuation of the sensor introducer deployment section **2230**. Referring to FIG. **22**C, in one embodiment, the sensor introducer **2250** is provided with a tip portion **2260** which is configured to be coupled to a tip portion **2320** (FIG. **23**A) of the sensor **2310**, and further to puncture through the skin of the patient upon actuation of the sensor introducer deployment section **2230** so as to position the sensor **2310** at a first predetermined subcutaneous position. Thereafter, as discussed in further detail below, the position of the sensor **2310** is further modified, for example, by the coupling of the transmitter unit **2510** (FIG. **25**A) substantially on the base portion **2210** of the mounting unit.

Referring again to FIG. **22**C, also shown is a return spring **2290** substantially provided in the sensor introducer assembly housing **2240**, and coupled to the sensor introducer deployment section **2230**. In this manner, in one embodiment, the sensor introducer **2250** coupled to the sensor introducer deployment section **2230** may be configured to return to its original pre-deployment position after the initial actuation or deployment of the sensor introducer deployment section **2230** such that the sensor introducer **2250** is substantially removed from the sensor guide portion **2220** of the mounting unit. In this manner, upon completion of the first stage sensor positioning using the sensor introducer deployment section **2230**, the sensor introducer deployment

section **2230**, the sensor introducer assembly housing **2240** and the sensor introducer **2250** may be detachably removed from the mounting unit.

Optionally, in an alternate embodiment, the sensor introducer assembly housing **2240** may be configured to be retained coupled to the sensor guide portion **2220** after the actuation of the sensor introducer deployment section **2230**, such that the sensor introducer assembly housing **2240** may be configured to substantially entirely house or retain the sensor introducer **2250** to avoid contact with the patient, for example. In such configuration, the sensor introducer deployment section **2230** may be configured to be detachably removed from the sensor introducer assembly housing **2240** and discarded after actuation.

FIG. **23**A is a front planar view of the sensor in accordance with one embodiment of the present invention. As shown, the sensor includes a body portion **2310** and a tip portion **2320**, where the tip portion **2320** in one embodiment is configured to couple to the tip portion **2260** of the sensor introducer **2250** for transcutaneous positioning. The body portion **2310** in one embodiment is provided with a plurality of contacts for establishing electrical contact with the transmitter unit. Referring again to FIG. **23**A, the body portion **2310** in one embodiment may be provided with an engagement portion **2330** which is configured to mate with a portion of the transmitter unit housing.

As described in further detail below, when the transmitter unit housing **2510** is coupled to the mounting unit, in one embodiment, the transmitter unit housing **2510** may be configured to couple to the engagement portion **2330** of the sensor to displace the sensor from the first predetermined position to the second predetermined position. In this manner, in one embodiment, the sensor introducer **2250** (FIG. **22**C) may be configured to transcutaneously position the sensor at the first predetermined position under the skin layer of the patient, while the transmitter unit may be configured to further displace the sensor from the first predetermined position to the second predetermined position such that the sensor tip portion **2320** is in fluid contact with the patient's analyte.

FIG. **23**B is a side view of the sensor and FIG. **23**C is a close up view of the tip portion of the sensor shown in FIG. **23**A in accordance with one embodiment of the present invention. Referring to FIG. **23**B, in one embodiment, the engagement portion **2330** may be configured to protrude from the sensor body portion **2310** so as to engage with the corresponding portion of the transmitter unit. Referring to FIG. **23**C, the sensor tip portion **2320** in one embodiment includes a sharp tip end **2321** to facilitate the movement of the sensor from the first predetermined position to the second predetermined position substantially in response to the force applied upon the engagement portion **2330** of the sensor by the transmitter unit housing **2510**. Moreover, in one embodiment, the sensor tip portion **2320** may also include a rib portion **2322** configured to provide additional rigidity to the sensor tip portion **2320** to aid the insertion process.

FIG. **23**D is a perspective view of the sensor introducer and FIG. **23**E is a close up view of the tip portion of the sensor introducer in the first stage sensor introducer mechanism of FIG. **22**A in accordance with one embodiment of the present invention. Referring to FIG. **23**E, in one embodiment, the tip portion **2260** of the sensor introducer **2250** includes a sharp edge section **2261** configured to pierce through the skin layer of the patient when the sensor introducer deployment section **2230** is actuated.

FIG. **23**F is a front planar view of the sensor and sensor introducer, FIG. **23**G is a perspective view of the sensor and sensor introducer, and FIG. **23**H is a close up view of the tip portion of the sensor and sensor introducer in accordance with one embodiment of the present invention. Moreover, FIG. **24** is a front planar view of the first stage of sensor insertion using the sensor introducer mechanism of FIG. **22**A in accordance with one embodiment of the present invention. As can be seen, in one embodiment, the tip portion **2320** of the sensor is substantially provided within the tip portion **2260** of the sensor introducer **2250** such that when the sensor introducer tip portion **2260** pierces through the skin of the patient, the tip portion **2320** of the sensor is configured to transcutaneously move with the movement of the sensor introducer **2250**.

FIG. **25**A is a side view of a transmitter unit and FIG. **25**B is a perspective view of the transmitter unit of FIG. **25**A in accordance with one embodiment of the present invention. Referring to FIGS. **25**A-**25**B, in one embodiment, the transmitter unit **2510** includes a plurality of contacts **2520** each configured to establish electrical contact with a corresponding one of a plurality of contacts disposed on the sensor body **2310**. Referring again to FIG. **25**A, the transmitter unit **2510** in one embodiment includes a guide section **2530**. In one embodiment, the guide section **2530** is configured to correspondingly couple to the engagement portion **2330** of the sensor during positioning of the transmitter unit **2510** to couple to the mounting unit. In this manner, in one embodiment, the positioning of the transmitter unit **2510** on the mounting unit provides sufficient force applied on the sensor (and in particular, at the engagement portion **2330** of the sensor) to displace the sensor from the first predetermined position to the second predetermined position.

Referring again to the Figures, a temperature detection section **2540** may in one embodiment be provided to the lower surface of the transmitter unit **2510** so as to be in physical contact with the patient's skin when the transmitter unit **2510** is coupled to the mounting unit. In this manner, the transmitter unit **2510** may be configured to monitor the on skin temperature of the patient, for example, in analyzing and processing signals received from the sensor associated with the detected analyte levels.

FIG. **25**C is a side view of the transmitter unit engaged with the sensor for the second stage sensor insertion in accordance with one embodiment of the present invention. Furthermore, FIG. **25**D is a side view of the transmitter unit and FIG. **25**E is a perspective view of the transmitter unit mounted to the mounting in accordance with one embodiment of the present invention. Referring to FIG. **25**C, in one embodiment, the positioning of the transmitter unit **2510** to couple to the mounting unit correspondingly engages the guide section **2530** of the transmitter unit **2510** with the engagement portion **2330** of the sensor (where the sensor is already transcutaneously positioned at the first predetermined position by the sensor introducer **2250**), and with the aid of the sharp tip end **2321**, positions the tip portion **2320** of the sensor at the second predetermined position in fluid contact with the patient's analyte.

FIG. **26**A is a perspective view of the sensor in the final position (second predetermined position) with respect to the sensor introducer mechanism without the transmitter unit, and FIG. **26**B is a front planar view of the sensor in the final position shown in FIG. **26**A in accordance with one embodiment of the present invention.

In the manner described above, in particular embodiments, the analyte sensor deployment includes a two stage insertion process where the first transcutaneous placement is

achieved by the sensor introducer **2250** at a substantially high velocity, and thereafter, a second subsequent positioning of the sensor is obtained using the manual force applied upon the transmitter unit **2510** when the transmitter unit **2510** is coupled to the mounting unit. In this manner, in one embodiment, actual or perceived pain or trauma associated with the initial skin puncture to trancutaneously position the sensor through the skin layer of the patient is substantially minimized using a high speed introduction mechanism, while the subsequent final positioning of the sensor is thereafter achieved at a relatively slower speed (for example, using manual force applied upon the transmitter unit **2510**).

Referring back to FIG. **1**, the on-skin sensor control unit **44** is configured to be placed on the skin of a patient. One embodiment of the on-skin sensor control unit **44** has a thin, oval shape to enhance concealment, as illustrated in FIGS. **9-11**. However, other shapes and sizes may be used. The base **74** and cover **76** of the on-skin sensor control unit **44** are formed such that, when the sensor **42** is within the on-skin sensor control unit **44** and the base **74** and cover **76** are fitted together, the sensor **42** is bent. The sensor **42** may be inserted into the subcutaneous tissue of the patient through the sensor port **78**. The on-skin sensor control unit **44** includes a housing **45**, as illustrated in FIGS. **9-11**. FIG. **9** is a cross-sectional view of the on-skin sensor control unit taken along lines **14-14** of FIGS. **10-11**. The on-skin sensor control unit **44** is typically attachable to the skin **75** of the patient, as illustrated in FIG. **12**. Another method of attaching the housing **45** of the on-skin sensor control unit **44** to the skin **75** includes using a mounting unit **77** with opening **79**.

The sensor **42** and the electronic components within the on-skin sensor control unit **44** are coupled via conductive contacts **80**. The one or more working electrodes **58**, counter electrode **60** (or counter/reference electrode), optional reference electrode **62**, and optional temperature probe **66** are attached to individual conductive contacts **80**. The on-skin sensor control unit **44** may optionally contain a support structure **82** to hold, support, and/or guide the sensor **42** into the correct position. In the illustrated embodiment of FIGS. **9-11**, the conductive contacts **80** are provided on the interior of the on-skin sensor control unit **44**.

Referring back to the Figures, the on-skin sensor control unit **44** may include at least a portion of the electronic components that operate the sensor **42** and the analyte monitoring device system **40**. One embodiment of the electronics in the on-skin control unit **44** is illustrated as a block diagram in FIG. **13**A. The electronic components of the on-skin sensor control unit **44** may include a power supply **95** for operating the on-skin control unit **44** and the sensor **42**, a sensor circuit **97** for obtaining signals from and operating the sensor **42**, **42'**, a measurement circuit **96** that converts sensor signals to a desired format, and a processing circuit **109** that, at minimum, obtains signals from the sensor circuit **97** and/or measurement circuit **96** and provides the signals to an optional transmitter **98**. In some embodiments, the processing circuit **109** may also partially or completely evaluate the signals from the sensor **42** and convey the resulting data to the optional transmitter **98** and/or activate an optional alarm system **94** (see FIG. **13**B) if the analyte level exceeds a threshold. The processing circuit **109** often includes digital logic circuitry.

The on-skin sensor control unit **44** may optionally contain a transmitter or transceiver **98** for transmitting the sensor signals or processed data from the processing circuit **109** to receiver (or transceiver)/display units **46**, **48**; a data storage unit **102** for temporarily or permanently storing data from the processing circuit **109**; a temperature probe circuit **99** for receiving signals from and operating a temperature probe **66**; a reference voltage generator **101** for providing a reference voltage for comparison with sensor-generated signals; and/or a watch dog circuit **103** that monitors the operation of the electronic components in the on-skin sensor control unit **44**.

Moreover, the sensor control unit **44** may include a bias control generator **105** to correctly bias analog and digital semiconductor devices, an oscillator **107** to provide a clock signal, and a digital logic and timing component to provide timing signals and logic operations for the digital components of the circuit.

FIG. **13**B illustrates a block diagram of another exemplary on-skin control unit **44** that also includes optional components such as a receiver (or transceiver) **110** to receive, for example, calibration data; a calibration storage unit (not shown) to hold, for example, factory-set calibration data, calibration data obtained via the receiver **110** and/or operational signals received, for example, from a receiver/display unit **46**, **48** or other external device; an alarm system **94** for warning the patient; and a deactivation switch **111** to turn off the alarm system.

The electronics in the on-skin sensor control unit **44** and the sensor **42**, **42'** are operated using a power supply **95**. The sensor control unit **44** may also optionally include a temperature probe circuit **99**.

The output from the sensor circuit **97** and optional temperature probe circuit is coupled into a measurement circuit **96** that obtains signals from the sensor circuit **97** and optional temperature probe circuit **99** and, at least in some embodiments, provides output data in a form that, for example can be read by digital circuits.

In some embodiments, the data from the processing circuit **109** is analyzed and directed to an alarm system **94** (see FIG. **13**B) to warn the user.

In some embodiments, the data (e.g., a current signal, a converted voltage or frequency signal, or fully or partially analyzed data) from processing circuit **109** is transmitted to one or more receiver/display units **46**, **48** using a transmitter **98** in the on-skin sensor control unit **44**. The transmitter has an antenna **93**, such as a wire or similar conductor, formed in the housing **45**.

In addition to a transmitter **98**, an optional receiver **110** may be included in the on-skin sensor control unit **44**. In some cases, the transmitter **98** is a transceiver, operating as both a transmitter and a receiver. The receiver **110** (and/or receiver display/units **46**, **48**) may be used to receive calibration data for the sensor **42**. The calibration data may be used by the processing circuit **109** to correct signals from the sensor **42**. This calibration data may be transmitted by the receiver/display unit **46**, **48** or from some other source such as a control unit in a doctor's office.

Calibration data may be obtained in a variety of ways. For instance, the calibration data may simply be factory-determined calibration measurements which can be input into the on-skin sensor control unit **44** using the receiver **110** or may alternatively be stored in a calibration data storage unit within the on-skin sensor control unit **44** itself or elsewhere such as, e.g., receiver display/units **46**, **48**, (in which case a receiver **110** may not be needed). The calibration data storage unit may be, for example, a readable or readable/writeable memory circuit.

Alternative or additional calibration data may be provided based on tests performed by a doctor or some other professional or by the patient himself. For example, it is common for diabetic individuals to determine their own blood glu-

cose concentration using commercially available testing kits. The result of this test is input into the on-skin sensor control unit **44** (and/or receiver display/units **46**, **48**) either directly, if an appropriate input device (e.g., a keypad, an optical signal receiver, or a port for connection to a keypad or computer) is incorporated in the on-skin sensor control unit **44**, or indirectly by inputting the calibration data into the receiver/display unit **46**, **48** and transmitting the calibration data to the on-skin sensor control unit **44**.

Other methods of independently determining analyte levels may also be used to obtain calibration data. This type of calibration data may supplant or supplement factory-determined calibration values.

In some embodiments of the invention, calibration data may be required at periodic intervals, for example, about every ten hours, eight hours, about once a day, or about once a week, to confirm that accurate analyte levels are being reported. Calibration may also be required each time a new sensor **42** is implanted or if the sensor exceeds a threshold minimum or maximum value or if the rate of change in the sensor signal exceeds a threshold value. In some cases, it may be necessary to wait a period of time after the implantation of the sensor **42** before calibrating to allow the sensor **42** to achieve equilibrium. In some embodiments, the sensor **42** is calibrated only after it has been inserted. In other embodiments, no calibration of the sensor **42** is needed (e.g., a factory calibration may be sufficient).

Regardless of the type of analyte monitoring system employed, it has been observed that transient, low readings may occur for a period of time. These anomalous low readings may occur during the first hours of use, or anytime thereafter. In certain embodiments, spurious low readings may occur during the night and may be referred to as "night time dropouts". For example, in the context of an operably positioned continuous monitoring analyte sensor under the skin of a user, such spurious low readings may occur for a period of time following sensor positioning and/or during the first night post-positioning. In many instances, the low readings resolve after a period of time. However, these transient, low readings put constraints on analyte monitoring during the low reading period. Attempts to address this problem vary and include delaying calibration and/or reporting readings to the user until after this period of low readings passes after positioning of the sensor or frequent calibration of the sensor—both of which are inconvenient and neither of which are desirable.

However, as noted above embodiments of the subject invention have at least a minimal period, if at all, of spurious low readings, i.e., a substantially reduced sensor equilibration period, including substantially no equilibration period. In this regard, in those embodiments in which an initial post-positioning calibration is required, such may be performed substantially immediately after sensor positioning. For example, in certain embodiments a calibration protocol may include a first post-positioning calibration at less than about 10 hours after a sensor has been operably positioned, e.g., less than about 5 hours, e.g., less than about 3 hours, e.g., less than about 1 hour, e.g., less than about 0.5 hours. One or more additional calibrations may not be required, or may be performed at suitable times thereafter.

The on-skin sensor control unit **44** may include an optional data storage unit **102** which may be used to hold data (e.g., measurements from the sensor or processed data).

In some embodiments of the invention, the analyte monitoring device **40** includes only an on-skin control unit **44** and a sensor **42**.

One or more receiver/display units **46**, **48** may be provided with the analyte monitoring device **40** for easy access to the data generated by the sensor **42** and may, in some embodiments, process the signals from the on-skin sensor control unit **44** to determine the concentration or level of analyte in the subcutaneous tissue. The receiver may be a transceiver. Receivers may be palm-sized and/or may be adapted to fit on a belt or within a bag or purse that the patient carries.

The receiver/display units **46**, **48**, as illustrated in block form at FIG. **14**, typically include a receiver **150** to receive data from the on-skin sensor control unit **44**, an analyzer **152** to evaluate the data, a display **154** to provide information to the patient, and an alarm system **156** to warn the patient when a condition arises. The receiver/display units **46**, **48** may also optionally include a data storage device **158**, a transmitter **160**, and/or an input device **162**.

Data received by the receiver **150** is then sent to an analyzer **152**.

The output from the analyzer **152** is typically provided to a display **154**. The receiver/display units **46**, **48** may also include a number of optional items such as a data storage unit **158** to store data, a transmitter **160** which can be used to transmit data, and an input device **162**, such as a keypad or keyboard.

In certain embodiments, the receiver/display unit **46**, **48** is integrated with a calibration unit (not shown). For example, the receiver/display unit **46**, **48** may, for example, include a conventional blood glucose monitor. Devices may be used including those that operate using, for example, electrochemical and colorimetric blood glucose assays, assays of interstitial or dermal fluid, and/or non-invasive optical assays. When a calibration of the implanted sensor is needed, the patient uses the integrated in vitro monitor to generate a reading. The reading may then, for example, automatically be sent by the transmitter **160** of the receiver/display unit **46**, **48** to calibrate the sensor **42**.

In certain embodiments, analyte data (processed or not) may be forwarded (such as by communication) to a remote location such as a doctor's office if desired, and received there for further use (such as further processing).

Integration with a Drug Administration System

The subject invention also includes sensors used in sensor-based drug delivery systems. The system may provide a drug to counteract the high or low level of the analyte in response to the signals from one or more sensors. Alternatively, the system may monitor the drug concentration to ensure that the drug remains within a desired therapeutic range. The drug delivery system may include one or more (e.g., two or more) sensors, a sensor positioning device, an on-skin sensor control unit, a receiver/display unit, a data storage and controller module, and a drug administration system. In some cases, the receiver/display unit, data storage and controller module, and drug administration system may be integrated in a single unit. The sensor-based drug delivery system may use data from the one or more sensors to provide necessary input for a control algorithm/mechanism in the data storage and controller module to adjust the administration of drugs. As an example, a glucose sensor could be used to control and adjust the administration of insulin. According to certain embodiments of the subject invention, accurate data from the one or more sensors may be obtained substantially immediately after sensor positioning to provide necessary input for a control algorithm/mechanism in the data storage and controller module to adjust the administration of drugs substantially immediately.

Kits

Finally, kits for use in practicing the subject invention are also provided. The subject kits may include one or more sensors as described herein. Embodiments may also include a sensor and/or a sensor positioning device and/or transmitter and/or receiver and/or anesthetic agent, which may or may not be independent of the sensor and/or sensor positioning device.

In addition to one or more of the above-described components, the subject kits may also include written instructions for using a sensor, e.g., positioning a sensor using a sensor positioning device and/or using a sensor to obtain analyte information. The instructions may be printed on a substrate, such as paper or plastic, etc. As such, the instructions may be present in the kits as a package insert, in the labeling of the container of the kit or components thereof (i.e., associated with the packaging or sub-packaging) etc. In other embodiments, the instructions are present as an electronic storage data file present on a suitable computer readable storage medium, e.g., CD-ROM, diskette, etc. In yet other embodiments, the actual instructions are not present in the kit, but means for obtaining the instructions from a remote source, e.g., via the Internet, are provided. An example of this embodiment is a kit that includes a web address where the instructions can be viewed and/or from which the instructions can be downloaded. As with the instructions, this means for obtaining the instructions is recorded on a suitable substrate.

In many embodiments of the subject kits, the components of the kit are packaged in a kit containment element to make a single, easily handled unit, where the kit containment element, e.g., box or analogous structure, may or may not be an airtight container, e.g., to further preserve the one or more sensors and additional reagents (e.g., control solutions), if present, until use.

Various other modifications and alterations in the structure and method of operation of this invention will be apparent to those skilled in the art without departing from the scope and spirit of the invention. Although the invention has been described in connection with specific preferred embodiments, it should be understood that the invention as claimed should not be unduly limited to such specific embodiments. It is intended that the following claims define the scope of the present invention and that structures and methods within the scope of these claims and their equivalents be covered thereby.

What is claimed is:

1. A method, comprising:

positioning at least a portion of an analyte sensor at a first predetermined location under a skin surface at a first predetermined speed;

displacing the portion of the analyte sensor from the first predetermined location to a second predetermined location at a second predetermined speed slower than the first predetermined speed;

detecting one or more signals associated with an analyte level of a patient at the second predetermined location; and

wirelessly transmitting data corresponding to the one or more signals associated with the analyte level of the patient to a receiving device.

2. The method of claim **1**, wherein the receiving device is a first receiving device, and further comprising wirelessly transmitting the data corresponding to the one or more signals associated with the analyte level of the patient to a second receiving device concurrently with wirelessly transmitting the data corresponding to the one or more signals associated with the analyte level of the patient to the first receiving device.

3. The method of claim **2**, further comprising forming a communication link between the first receiving device and the second receiving device.

4. The method of claim **1**, wherein the receiving device comprises a display.

5. The method of claim **4**, further comprising determining that the analyte level is at or near a threshold level, and in response providing a notification on the display.

6. The method of claim **1**, wherein the analyte sensor comprises a plurality of electrodes including a working electrode comprising an analyte-responsive enzyme bonded to a polymer disposed on the working electrode.

7. The method of claim **6**, wherein the analyte-responsive enzyme is chemically bonded to the polymer.

8. The method of claim **6**, wherein the working electrode further comprises a mediator.

9. The method of claim **1**, wherein the analyte sensor comprises a plurality of electrodes including a working electrode comprising a mediator bonded to a polymer disposed on the working electrode.

10. The method of claim **9**, wherein the mediator is chemically bonded to the polymer.

11. A system, comprising:

a receiving device;

an analyte sensor having a portion for positioning at a first predetermined location under a skin surface at a first predetermined speed, the analyte sensor further configured to have the portion displaced from the first predetermined location to a second predetermined location at a second predetermined speed slower than the first predetermined speed, wherein the analyte sensor is configured to detect one or more signals associated with an analyte level of a patient at the second predetermined location; and

sensor electronics communicatively coupled to the analyte sensor for wirelessly transmitting data corresponding to the one or more signals associated with the analyte level of the patient to the receiving device.

12. The system of claim **11**, wherein the receiving device is a first receiving device; further comprising a second receiving device; and wherein the sensor electronics is further configured to wirelessly transmit the data corresponding to the one or more signals associated with the analyte level of the patient to the second receiving device concurrently with wirelessly transmitting the data corresponding to the one or more signals associated with the analyte level of the patient to the first receiving device.

13. The system of claim **12**, wherein a communication link exists between the first receiving device and the second receiving device.

14. The system of claim **11**, wherein the receiving device comprises a display.

15. The system of claim **14**, wherein the receiving device is configured to determine that the analyte level is at or near a threshold level, and in response provide a notification on the display.

16. The system of claim **11**, wherein the analyte sensor comprises a plurality of electrodes including a working electrode comprising an analyte-responsive enzyme bonded to a polymer disposed on the working electrode.

17. The system of claim **16**, wherein the analyte-responsive enzyme is chemically bonded to the polymer.

18. The system of claim **16**, wherein the working electrode further comprises a mediator.

19. The system of claim **11**, wherein the analyte sensor comprises a plurality of electrodes including a working electrode comprising a mediator bonded to a polymer disposed on the working electrode.

20. The system of claim **19**, wherein the mediator is chemically bonded to the polymer.

* * * * *