US010339495B2

(12) **United States Patent**
Swafford et al.

(10) **Patent No.: US 10,339,495 B2**
(45) **Date of Patent: Jul. 2, 2019**

(54) **SYSTEM FOR INVENTORY MANAGEMENT**

(71) Applicant: **RTC Industries, Inc.**, Rolling Meadows, IL (US)

(72) Inventors: **John Swafford**, Palatine, IL (US); **Patrick Costello**, Arlington Heights, IL (US)

(73) Assignee: **RTC Industries, Inc.**, Rolling Meadows, IL (US)

(*) Notice: Subject to any disclaimer, the term of this patent is extended or adjusted under 35 U.S.C. 154(b) by 646 days.

(21) Appl. No.: **14/939,220**

(22) Filed: **Nov. 12, 2015**

(65) **Prior Publication Data**

US 2016/0132823 A1 May 12, 2016

Related U.S. Application Data

(60) Provisional application No. 62/078,809, filed on Nov. 12, 2014.

(51) **Int. Cl.**

G06Q 10/00	(2012.01)
G06Q 10/08	(2012.01)
A47F 1/12	(2006.01)
A47F 1/10	(2006.01)
A47F 5/00	(2006.01)

(52) **U.S. Cl.**

CPC ***G06Q 10/087*** (2013.01); ***A47F 1/126*** (2013.01)

(58) **Field of Classification Search**

CPC A47F 5/0861; A47F 5/0006; A47F 5/0823; A47F 2010/025; G08B 13/14; G08B 13/1409; G08B 13/1463; G08B 13/149; Y10T 70/5004; G01P 1/127

See application file for complete search history.

(56) **References Cited**

U.S. PATENT DOCUMENTS

154,940	A	9/1874	Adams
355,511	A	1/1887	Danner
632,231	A	12/1905	Blades
808,067	A	12/1905	Briggs
847,863	A	3/1907	Watts
1,156,140	A	10/1915	Hair
1,703,987	A	3/1929	Butler

(Continued)

FOREIGN PATENT DOCUMENTS

BE	906083	A2	4/1987
BE	1008382	A3	4/1996

(Continued)

OTHER PUBLICATIONS

Nov. 7, 2017—(EP)—Communication 94(3) EPC—App 14716461.0.

(Continued)

Primary Examiner — Florian M Zeender
Assistant Examiner — Dana Amsdell
(74) *Attorney, Agent, or Firm* — Banner & Witcoff, Ltd.

(57) **ABSTRACT**

Systems and methods related to sensor-equipped display management systems. In one aspect, the systems and methods may be utilized to calculate a number of products removed from a display management system based upon motion of one or more mechanisms within the display management system. In another aspect, the systems and methods may be utilized to detect patterns from the sensor data, which may be indicative of attempted theft of products stored within the display management system.

17 Claims, 47 Drawing Sheets

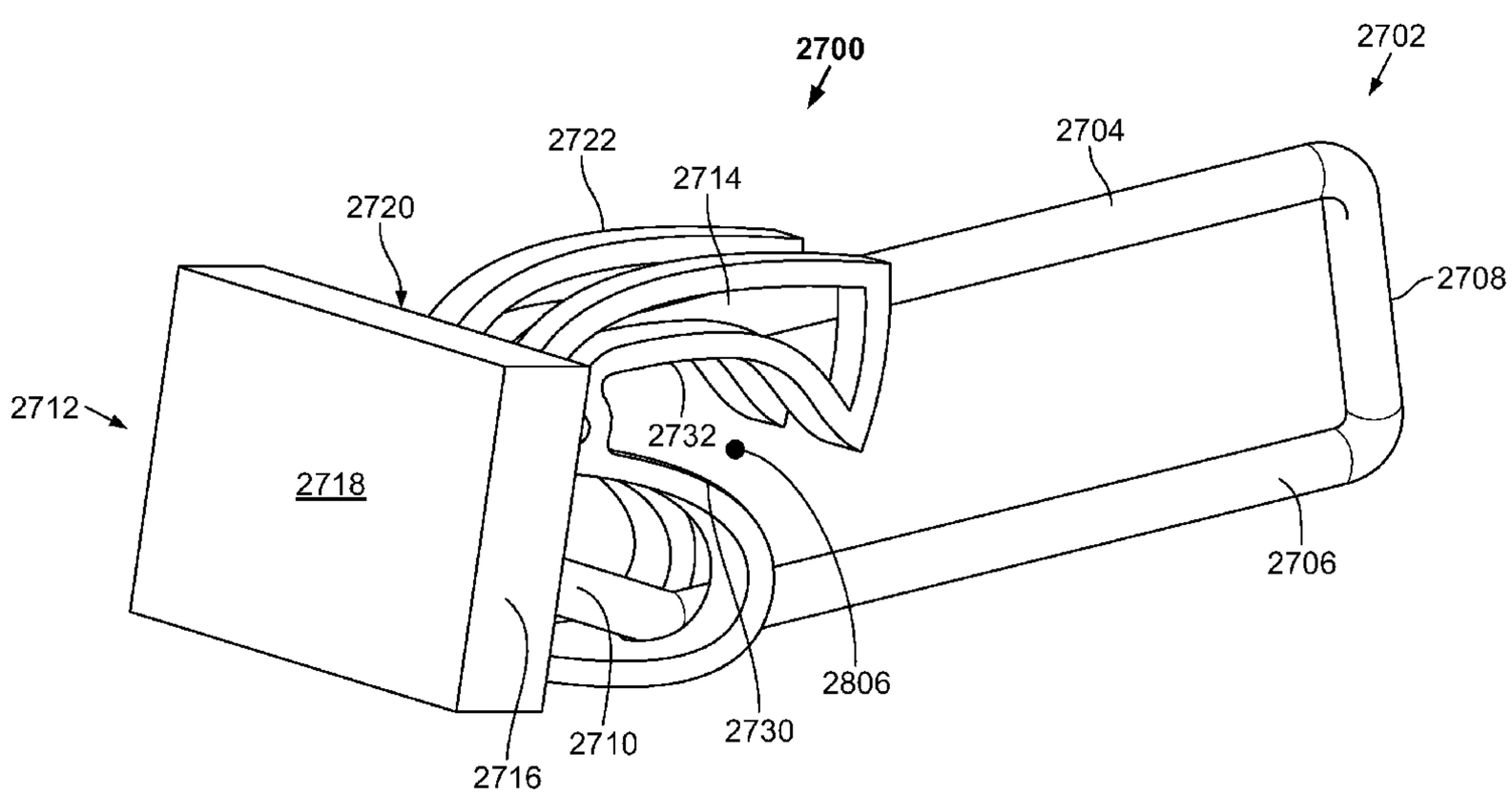

(56) **References Cited**

U.S. PATENT DOCUMENTS

1,712,080 A 5/1929 Kelly
1,714,266 A 5/1929 Johnson
1,734,031 A 11/1929 Carlston
1,786,392 A 12/1930 Kemp
1,964,597 A 6/1934 Rapellin
1,971,749 A 8/1934 Hamilton
1,991,102 A 2/1935 Kemaghan
2,057,627 A 10/1936 Ferris
2,079,754 A 5/1937 Waxgiser
2,085,479 A 6/1937 Shaffer et al.
2,110,299 A 3/1938 Hinkle
2,111,496 A 3/1938 Scriba
2,129,122 A 9/1938 Follett
2,218,444 A 10/1940 Vineyard
2,499,088 A 2/1950 Brill
2,563,570 A 2/1950 Williams
2,516,122 A 7/1950 Hughes
2,555,102 A 5/1951 Anderson
2,652,154 A 9/1953 Stevens
2,670,853 A 3/1954 Schneider
2,678,045 A 5/1954 Erhard
2,738,881 A 3/1956 Michel
2,750,049 A 6/1956 Hunter
2,775,365 A 12/1956 Mestman
2,893,596 A 7/1959 Gabrielsen
2,918,295 A 12/1959 Milner
2,934,212 A 4/1960 Jacobson
2,948,403 A 8/1960 Vallez
3,083,067 A 3/1963 Vos et al.
3,103,396 A 9/1963 Portnoy
3,151,576 A 10/1964 Patterson
3,161,295 A 12/1964 Chesley
3,166,195 A 1/1965 Taber
3,285,429 A 11/1966 Propst
3,308,961 A 3/1967 Chesley
3,308,964 A 3/1967 Pistone
3,348,732 A 10/1967 Shwarz
3,405,716 A 10/1968 Cafiero
3,452,899 A 7/1969 Libberton
3,497,081 A 2/1970 Field
3,501,020 A 3/1970 Krikorian
D219,058 S 10/1970 Kaczur
3,550,979 A 12/1970 Protzmann
3,598,246 A 8/1971 Galli
3,652,154 A 3/1972 Gebel
3,667,826 A 6/1972 Wood
3,698,568 A 10/1972 Armstrong
3,709,371 A 1/1973 Luck
3,724,715 A 4/1973 Auriemma
3,751,129 A 8/1973 Wright et al.
3,814,490 A 6/1974 Dean et al.
3,815,519 A 6/1974 Meyer
3,830,169 A 8/1974 Madey
3,848,745 A 11/1974 Smith
3,868,021 A 2/1975 Heinrich
3,870,156 A 3/1975 O'Neill
4,007,841 A 2/1977 Seipel
4,042,096 A 8/1977 Smith
4,106,668 A 8/1978 Gebhardt et al.
4,269,326 A 5/1981 Delbrouck
4,300,693 A 11/1981 Spamer
4,303,162 A 12/1981 Suttles
4,314,700 A 2/1982 Dylag
4,331,243 A 5/1982 Doll
4,351,439 A 9/1982 Taylor
4,378,872 A 4/1983 Brown
4,448,653 A 5/1984 Wegmann
4,454,948 A 6/1984 Spamer
4,460,096 A 7/1984 Ricci
4,463,854 A 8/1984 MacKenzie
4,467,927 A 8/1984 Nathan
4,482,066 A 11/1984 Dykstra
4,488,653 A 12/1984 Belokin
4,504,100 A 3/1985 Chaumard
4,588,093 A 5/1986 Field
4,589,349 A 5/1986 Gebhardt et al.
4,602,560 A 7/1986 Jacky
4,615,276 A 10/1986 Garabedian
4,620,489 A 11/1986 Albano
4,629,072 A 12/1986 Loew
4,651,883 A 3/1987 Gullett et al.
4,685,574 A 8/1987 Young et al.
4,705,175 A 11/1987 Howard et al.
4,706,821 A 11/1987 Kohls et al.
4,724,968 A 2/1988 Wombacher
4,729,481 A 3/1988 Hawkinson et al.
4,730,741 A 3/1988 Jackle, III et al.
4,742,936 A 5/1988 Rein
4,762,235 A 8/1988 Howard et al.
4,762,236 A 8/1988 Jackle, III et al.
4,775,058 A 10/1988 Yatsko
4,776,472 A 10/1988 Rosen
4,790,037 A 12/1988 Phillips
4,809,856 A 3/1989 Muth
4,828,144 A 5/1989 Garrick
4,830,201 A 5/1989 Breslow
4,836,390 A 6/1989 Polvere
4,846,367 A 7/1989 Guigan et al.
4,883,169 A 11/1989 Flanagan, Jr.
4,899,668 A 2/1990 Valiulis
4,901,853 A 2/1990 Maryatt
4,901,869 A 2/1990 Hawkinson et al.
4,907,707 A 3/1990 Crum
4,934,645 A 6/1990 Breslow
4,954,697 A 9/1990 Kokubun et al.
5,009,334 A 4/1991 Bodkins
5,012,936 A 5/1991 Crum
5,025,936 A 6/1991 Lamoureaux
5,027,957 A 7/1991 Skalski
5,082,125 A 1/1992 Ninni
5,088,607 A 2/1992 Risafi et al.
5,110,192 A 5/1992 Lauterbach
5,111,942 A 5/1992 Bernardin
5,123,546 A 6/1992 Crum
5,148,927 A 9/1992 Gebka
5,161,702 A 11/1992 Skalski
5,172,314 A 12/1992 Poland et al.
5,178,258 A 1/1993 Smalley et al.
5,183,166 A 2/1993 Belokin, Jr. et al.
5,190,186 A 3/1993 Yablans et al.
5,203,463 A 4/1993 Gold
5,215,199 A 6/1993 Bejarano
5,255,802 A 10/1993 Krinke et al.
5,257,090 A 10/1993 Meinzer et al.
5,265,738 A 11/1993 Yablans et al.
5,316,154 A 5/1994 Hajec, Jr.
5,341,945 A 8/1994 Gibson
5,351,839 A 10/1994 Beeler et al.
5,366,099 A 11/1994 Schmid
5,381,908 A 1/1995 Hepp
5,390,802 A 2/1995 Pappagallo et al.
5,413,229 A 5/1995 Zuberbuhler et al.
5,415,297 A 5/1995 Klein et al.
5,448,226 A 9/1995 Failing, Jr. et al.
5,450,969 A 9/1995 Johnson et al.
5,458,248 A 10/1995 Alain
5,464,105 A 11/1995 Mandeltort
5,469,975 A 11/1995 Fajnsztajn
5,469,976 A 11/1995 Burchell
5,537,312 A 7/1996 Sekiguchi et al.
5,542,552 A 8/1996 Yablans et al.
5,548,282 A 8/1996 Escritt et al.
5,562,217 A 10/1996 Salveson et al.
5,613,621 A 3/1997 Gervasi et al.
D378,888 S 4/1997 Bertilsson
5,615,780 A 4/1997 Nimetz et al.
5,634,564 A 6/1997 Spamer et al.
5,638,963 A 6/1997 Finnelly et al.
5,665,304 A 9/1997 Heinen et al.
5,671,362 A 9/1997 Cowe et al.
5,671,851 A 9/1997 Johnson et al.
5,673,801 A 10/1997 Markson
D386,363 S 11/1997 Dardashti
5,685,664 A 11/1997 Parham et al.

(56) **References Cited**

U.S. PATENT DOCUMENTS

5,730,320 A 3/1998 David
5,737,504 A 4/1998 Yamada
5,738,019 A 4/1998 Parker
5,740,944 A 4/1998 Crawford
5,743,428 A 4/1998 Rankin, VI
5,746,328 A 5/1998 Beeler et al.
5,788,090 A 8/1998 Kajiwara
5,803,276 A 9/1998 Vogler
5,826,731 A 10/1998 Dardashti
5,839,588 A 11/1998 Hawkinson
5,855,283 A 1/1999 Johnson
5,859,414 A 1/1999 Grimes et al.
5,873,473 A 2/1999 Pater
5,878,895 A 3/1999 Springs
5,880,449 A 3/1999 Teicher et al.
5,906,283 A 5/1999 Kump et al.
5,933,813 A 8/1999 Teicher et al.
5,963,134 A 10/1999 Bowers et al.
5,971,204 A 10/1999 Apps
5,992,652 A 11/1999 Springs
6,006,678 A 12/1999 Merit et al.
6,041,720 A 3/2000 Hardy
6,082,557 A 7/2000 Leahy
6,105,004 A 8/2000 Halperin et al.
6,105,791 A 8/2000 Chalson et al.
6,112,938 A 9/2000 Apps
6,129,218 A 10/2000 Henry et al.
6,142,317 A 11/2000 Merl
6,158,598 A 12/2000 Josefsson
6,164,491 A 12/2000 Bustos et al.
6,173,845 B1 1/2001 Higgins et al.
6,209,733 B1 4/2001 Higgins et al.
6,227,385 B1 5/2001 Nickerson
6,234,325 B1 5/2001 Higgins et al.
6,234,326 B1 5/2001 Higgins et al.
6,234,328 B1 5/2001 Mason
6,253,190 B1 6/2001 Sutherland
D445,615 S 7/2001 Burke
6,253,954 B1 7/2001 Yasaka
6,269,285 B1 7/2001 Mignault
6,289,326 B1 9/2001 LaFleur
6,357,606 B1 3/2002 Henry
6,382,431 B1 5/2002 Burke
6,389,991 B1 5/2002 Morrisson
6,401,942 B1 6/2002 Eckert
6,405,880 B1 6/2002 Webb
6,409,027 B1 6/2002 Chang et al.
6,409,028 B2 6/2002 Nickerson
6,464,089 B1 10/2002 Rankin, VI
6,484,891 B2 11/2002 Burke
6,497,326 B1 12/2002 Osawa
6,497,367 B2 12/2002 Conzola et al.
6,507,352 B1 1/2003 Cohen et al.
6,523,703 B1 2/2003 Robertson
6,527,127 B2 3/2003 Dumontet
6,533,131 B2 3/2003 Bada
6,536,658 B1 3/2003 Rantze
D472,411 S 4/2003 Burke
6,550,674 B1 4/2003 Neumark
6,598,754 B2 7/2003 Weiler
6,622,874 B1 9/2003 Hawkinson
6,655,536 B2 12/2003 Jo et al.
6,666,533 B1 12/2003 Stavros
D485,699 S 1/2004 Mueller et al.
6,717,516 B2 4/2004 Bridgelall
6,738,628 B1 5/2004 McCall et al.
6,772,888 B2 8/2004 Burke
6,866,156 B2 3/2005 Nagel et al.
6,886,699 B2 5/2005 Johnson et al.
6,889,854 B2 5/2005 Burke
6,897,763 B2 5/2005 Schulmerich et al.
6,914,648 B2 7/2005 Niiyama et al.
6,948,900 B1 9/2005 Neuman
6,964,235 B2 11/2005 Hardy
7,002,451 B2 2/2006 Freeman
7,084,769 B2 8/2006 Bauer et al.
7,090,125 B2 8/2006 Goel et al.
7,093,546 B2 8/2006 Hardy
7,152,040 B1 12/2006 Hawthorne et al.
7,152,791 B2 12/2006 Chappidi et al.
7,155,238 B2 12/2006 Katz
7,216,770 B2 5/2007 Mueller et al.
7,252,230 B1 8/2007 Sheikh et al.
7,319,397 B2 1/2008 Chung et al.
7,400,251 B2 7/2008 Czyszczewski et al.
7,458,473 B1 12/2008 Mason
7,493,336 B2 2/2009 Noonan
7,520,429 B2 4/2009 Koster
7,526,762 B1 4/2009 Astala et al.
7,542,283 B1 6/2009 Curran et al.
7,565,108 B2 7/2009 Kotola et al.
7,580,845 B2 8/2009 Burman et al.
7,614,065 B2 11/2009 Weissmueller, Jr. et al.
7,641,057 B2 1/2010 Mueller et al.
7,675,422 B2 3/2010 Stevens et al.
7,743,984 B2 6/2010 Olsen et al.
7,775,130 B2 8/2010 Harish et al.
7,775,430 B2 8/2010 Lin
7,792,711 B2 9/2010 Swafford, Jr. et al.
7,837,106 B2 11/2010 Fabre et al.
7,853,477 B2 12/2010 O'Shea et al.
7,864,041 B2 1/2011 Godlewski
7,904,333 B1 3/2011 Perkowski
7,982,622 B2 7/2011 Burchell et al.
8,047,385 B2 * 11/2011 Hardy A47F 1/12 211/59.3
8,089,357 B2 1/2012 Irmscher et al.
8,135,482 B2 3/2012 Caldwell et al.
8,144,245 B2 3/2012 Vik
8,171,142 B2 5/2012 Kolin et al.
8,184,005 B2 5/2012 Kamel
8,207,819 B2 6/2012 Bonner et al.
8,219,558 B1 7/2012 Trandal et al.
8,231,017 B2 7/2012 Clontz et al.
8,240,486 B2 * 8/2012 Niederhuefner A47F 1/128 211/51
8,255,500 B2 8/2012 Cacheria, III et al.
8,280,784 B2 10/2012 Hurtis et al.
8,284,059 B2 10/2012 Ross
8,284,061 B1 10/2012 Dione
8,321,302 B2 11/2012 Bauer et al.
8,410,931 B2 4/2013 Petite et al.
8,463,431 B2 6/2013 Segal et al.
8,534,469 B2 * 9/2013 Northrup, Jr. A47F 5/0861 211/57.1
8,629,772 B2 * 1/2014 Valiulis G08B 13/149 340/568.8
8,698,606 B2 4/2014 Choi et al.
8,751,318 B2 6/2014 Kim et al.
8,781,622 B2 7/2014 Mockus et al.
8,810,392 B1 8/2014 Teller et al.
8,844,181 B2 * 9/2014 Wildrick A47F 1/04 211/59.2
9,129,494 B2 * 9/2015 Valiulis G08B 13/14
9,167,916 B2 * 10/2015 Grant A47F 5/0861
9,247,833 B2 * 2/2016 Pena A47F 5/0861
9,318,007 B2 * 4/2016 Valiulis G08B 13/149
9,318,008 B2 4/2016 Valiulis et al.
9,339,123 B1 * 5/2016 Stoddard A47F 1/126
9,706,857 B2 * 7/2017 Hardy A47F 1/12
9,898,712 B2 2/2018 Johnson et al.
2001/0010302 A1 8/2001 Nickerson
2001/0051901 A1 12/2001 Hager et al.
2002/0036178 A1 3/2002 Tombu
2002/0108916 A1 8/2002 Nickerson
2002/0148794 A1 10/2002 Marihugh
2002/0158133 A1 10/2002 Conzola et al.
2002/0170866 A1 11/2002 Johnson et al.
2002/0178013 A1 11/2002 Hoffman et al.
2003/0000956 A1 1/2003 Maldonado
2003/0010732 A1 1/2003 Burke
2003/0053014 A1 3/2003 Niiyama et al.
2003/0055727 A1 3/2003 Walker et al.
2003/0057167 A1 3/2003 Johnson et al.

(56) **References Cited**

U.S. PATENT DOCUMENTS

2003/0061973 A1 4/2003 Bustos
2003/0078691 A1 4/2003 Holt et al.
2003/0085187 A1 5/2003 Johnson et al.
2003/0141265 A1 7/2003 Jo et al.
2003/0193481 A1 10/2003 Sokolsky
2003/0217980 A1 11/2003 Johnson et al.
2003/0233288 A1 12/2003 Sweeney et al.
2004/0104239 A1 6/2004 Black et al.
2004/0140278 A1 7/2004 Mueller et al.
2004/0140279 A1 7/2004 Mueller et al.
2004/0145451 A1 7/2004 Failing
2004/0245197 A1 12/2004 McElvaney
2004/0260572 A1 12/2004 George et al.
2005/0108098 A1 5/2005 Syed et al.
2005/0131578 A1 6/2005 Weaver
2005/0165649 A1 7/2005 Mahaffey et al.
2005/0168345 A1 8/2005 Swafford et al.
2005/0190072 A1 9/2005 Brown et al.
2005/0195081 A1* 9/2005 Studnicki G01C 9/06 340/539.26
2005/0228718 A1 10/2005 Austin
2005/0279722 A1* 12/2005 Ali A47F 10/00 211/59.3
2006/0049122 A1 3/2006 Mueller et al.
2006/0071774 A1 4/2006 Brown et al.
2006/0102718 A1 5/2006 Kajino et al.
2006/0157431 A1* 7/2006 Nagelski A47F 5/0861 211/54.1
2006/0163272 A1 7/2006 Gamble
2006/0163349 A1 7/2006 Neugebauer
2006/0186064 A1 8/2006 Merit et al.
2006/0237381 A1 10/2006 Lockwood et al.
2006/0279527 A1 12/2006 Zehner et al.
2006/0289637 A1 12/2006 Brice et al.
2007/0016494 A1 1/2007 Brown et al.
2007/0034581 A1* 2/2007 Weck A47F 5/0823 211/59.1
2007/0159298 A1 7/2007 Zegelin et al.
2007/0283615 A1* 12/2007 Vlastakis A47F 5/0861 43/55
2007/0289344 A1* 12/2007 Fawcett A47F 5/0861 70/58
2008/0074264 A1 3/2008 Sharpe et al.
2008/0164310 A1 7/2008 Dupuy et al.
2008/0203253 A1* 8/2008 Vogler A47F 1/128 248/220.31
2008/0208695 A1 8/2008 Condron
2008/0228346 A1 9/2008 Lucas et al.
2008/0249658 A1 10/2008 Walker et al.
2008/0250464 A1 10/2008 Masucci et al.
2008/0255894 A1 10/2008 Falls et al.
2008/0303637 A1 12/2008 Gelbman et al.
2009/0133301 A1 5/2009 Saxena et al.
2009/0134103 A1 5/2009 Saxena et al.
2009/0157515 A1 6/2009 Lafauci et al.
2009/0179825 A1 7/2009 Enarvi et al.
2009/0248198 A1 10/2009 Siegel et al.
2009/0287992 A1 11/2009 Bresolin et al.
2009/0313365 A1 12/2009 Whitehead
2009/0319399 A1 12/2009 Resta et al.
2010/0017025 A1 1/2010 Lockwood
2010/0100460 A1 4/2010 Aronson
2010/0106588 A1 4/2010 Jones et al.
2010/0106662 A1 4/2010 Ramaswamy
2010/0138304 A1 6/2010 Boyarsky et al.
2010/0169189 A1 7/2010 Allison et al.
2010/0169190 A1* 7/2010 Allison G06Q 10/087 705/28
2010/0205045 A1 8/2010 Zhang et al.
2010/0262554 A1 10/2010 Elliott
2011/0010271 A1 1/2011 Black et al.
2011/0017532 A1 1/2011 Langford et al.
2011/0018685 A1 1/2011 Tanaka et al.
2011/0022980 A1 1/2011 Segal et al.
2011/0106653 A1 5/2011 Wein
2011/0128378 A1 6/2011 Raji
2011/0161146 A1 6/2011 Walker et al.
2011/0178863 A1 7/2011 Daigle
2011/0234514 A1 9/2011 Gothard
2011/0251920 A1 10/2011 Watson
2012/0004769 A1 1/2012 Hallenbeck et al.
2012/0044056 A1 2/2012 Byun et al.
2012/0120327 A1 5/2012 Marx et al.
2012/0147055 A1 6/2012 Pallakoff et al.
2012/0204458 A1* 8/2012 Goehring A47F 1/12 40/642.02
2012/0223943 A1 9/2012 Williams et al.
2012/0228240 A1 9/2012 Gentile et al.
2012/0245969 A1 9/2012 Campbell
2012/0246023 A1 9/2012 Starr
2012/0273442 A1 11/2012 Hardy
2012/0280810 A1 11/2012 Wheeler
2012/0284085 A1 11/2012 Walker et al.
2012/0284132 A1 11/2012 Kim et al.
2012/0286937 A1 11/2012 Cote et al.
2012/0330781 A1 12/2012 Borrero
2013/0002422 A1 1/2013 Wiese
2013/0024023 A1 1/2013 Siegel et al.
2013/0030953 A1 1/2013 Marsic
2013/0105418 A1* 5/2013 Northrup, Jr. A47F 5/0861 211/4
2013/0109323 A1 5/2013 Ruutu et al.
2013/0132216 A1 5/2013 Aihara et al.
2013/0141240 A1* 6/2013 Valiulis G08B 13/149 340/568.8
2013/0157569 A1 6/2013 Torvmark et al.
2013/0210360 A1 8/2013 Ljung et al.
2013/0214909 A1 8/2013 Meijers et al.
2013/0226742 A1 8/2013 Johnson et al.
2013/0235206 A1 9/2013 Smith et al.
2013/0275261 A1 10/2013 Yoked
2013/0317903 A1 11/2013 Majrani
2013/0332271 A1 12/2013 Hay
2014/0006225 A1 1/2014 Bowman et al.
2014/0006229 A1 1/2014 Birch et al.
2014/0043162 A1 2/2014 Siciliano
2014/0047745 A1* 2/2014 Wildrick A47F 1/04 40/661.06
2014/0055243 A1 2/2014 Kerai
2014/0061218 A1* 3/2014 Vogler A47F 1/126 221/1
2014/0100769 A1 4/2014 Wurman et al.
2014/0100999 A1 4/2014 Mountz et al.
2014/0110584 A1 4/2014 Campbell
2014/0113560 A1 4/2014 Graube et al.
2014/0139548 A1 5/2014 Byers
2014/0145828 A1 5/2014 Bassan-Eskenazi et al.
2014/0197953 A1* 7/2014 Valiulis G08B 13/149 340/568.8
2014/0201042 A1 7/2014 Meyer
2014/0210692 A1 7/2014 Waters et al.
2014/0214195 A1 7/2014 Worsley
2014/0220883 A1 8/2014 Emigh et al.
2014/0239061 A1 8/2014 Smith et al.
2014/0247116 A1 9/2014 Davidson
2014/0258028 A1 9/2014 Bynum et al.
2014/0268949 A1 9/2014 Kayser
2014/0291405 A1 10/2014 Harkes
2014/0299620 A1 10/2014 Swafford, Jr. et al.
2014/0352372 A1* 12/2014 Grant A47F 5/0861 70/57.1
2015/0088306 A1 3/2015 Varrasso
2015/0173528 A1* 6/2015 Hester-Redmond A47F 5/08 211/26
2015/0382150 A1 12/2015 Ansermet et al.
2016/0132822 A1 5/2016 Swafford

FOREIGN PATENT DOCUMENTS

CA 2822926 A1 * 2/2014 ..... A47F 1/04
CA 2822926 C * 3/2018
CH 223095 A 8/1942

(56) **References Cited**

FOREIGN PATENT DOCUMENTS

CH	412251	A	4/1966
CN	1972228	A	5/2007
CN	101472509	A	7/2009
DE	969003	C	4/1958
DE	1819158	U	10/1960
DE	2002720	A1	7/1971
DE	7311113	U	8/1973
DE	2232398	A1	1/1974
DE	2825724	C3	5/1981
DE	3116145	A1	11/1982
DE	8308485	U1	9/1983
DE	8426651	U1	2/1985
DE	8520125	U1	1/1986
DE	3628609	A1	2/1988
DE	19745813	A1	4/1999
DE	299026888		7/1999
DE	102004037365	A1	3/2006
EP	0004921	A1	10/1979
EP	0018003	A2	10/1980
EP	0048479	A1	3/1982
EP	0176209	A2	4/1986
EP	0224107	A2	6/1987
EP	270016	A2	6/1988
EP	337340	A3	5/1990
EP	0398500	A1	11/1990
EP	398500	A1	11/1990
EP	0408400	A1	1/1991
EP	0572119	A2	12/1993
EP	0587059	A2	3/1994
EP	454586	B1	7/1995
EP	0806749	A1	11/1997
EP	986980	A1	3/2000
EP	779047	B1	4/2000
EP	1057164	A1	12/2000
EP	1249804	A2	10/2002
EP	1356425	A1	10/2003
EP	1395152	A1	3/2004
EP	2309377	A1	4/2011
EP	2367101	A1	9/2011
FR	2385365	B1	6/1982
FR	2526338	A1	11/1983
FR	2617385	A1	1/1989
GB	697994	A	10/1953
GB	740311	A	11/1955
GB	881700	A	11/1961
GB	1082150	A	9/1967
GB	1088654	A	10/1967
GB	2027339	B	8/1982
GB	2180527	A	4/1987
GB	2 232 398	A	12/1990
GB	D2037553		7/1994
GB	2281289	A	3/1995
GB	2290077	A	12/1995
GB	2297241	A	7/1996
GB	2283407	B	10/1997
GB	2392667	B	11/2004
GB	2480462	A	11/2011
JP	54168195		11/1979
JP	59218113		8/1984
JP	62060521	A	3/1987
JP	6329463		2/1988
JP	6056224		3/1994
JP	6202945		7/1994
JP	7257714		9/1994
JP	11342054		12/1999
JP	2007525393	A	9/2007
JP	2007-284238	A	11/2007
KR	1020040089123	A	10/2004
KR	1020060123497		6/2008
KR	20100136240		12/2010
KR	1020100022890		8/2011
KR	1020100041969		11/2011
NL	106617	A	11/1963
RU	2101731	C1	1/1998
SE	394537	B	6/1977
SU	1600615	A3	10/1990
WO	91/15141	A1	10/1991
WO	9311449	A1	6/1993
WO	0061438	A1	10/2000
WO	0071004	A1	11/2000
WO	2002091885		11/2002
WO	03016938	A2	2/2003
WO	2003032775		4/2003
WO	03039301	A1	5/2003
WO	2004104951	A1	12/2004
WO	2005057444	A1	6/2005
WO	2006023954	A2	3/2006
WO	06133487	A1	12/2006
WO	2007024639	A2	3/2007
WO	2007073334	A1	6/2007
WO	07140800	A1	12/2007
WO	2007149967	A2	12/2007
WO	10082835	A1	7/2010
WO	10137883	A2	12/2010
WO	11001024		1/2011
WO	2011089452	A1	7/2011
WO	2012166613	A1	12/2012
WO	14080252	A1	5/2014

OTHER PUBLICATIONS

Feb. 23, 2018—(CN) Second Office Action—App. No. 201480026575.9.

Mar. 14, 2018—(EP) Communication Pursuant to Article 94(3) EPC—App 15798644.9.

Apr. 6, 2018—(KR) Office Action—App 10-2017-7015819.

Jan. 18, 2018—(AU) Examination Report—App 2015346254.

Revolutionary Shelf Edge Displays from in the UK http://crystal-display.com/digital-signage/shelf-edge-displays/.

XDS-1068: 10-inch All-in-One Multi-touch Signboard with Power-over-Ethernet http://www.iadea.com/product/xds-1068.

ZBD Solutions, Shelf Edge Labelling http://www.zbdsolutions.com/solutions/index.html (printed Jan. 29, 2013).

Vectron, Speedy POS Solutions to make ezi-profits. 15 pages.

"How physics drives the supermarket industry," IOP Institute of Physics, Physicsworks. 4 pages.

John Ross, "Retail technology and the evolving shopper," Shopper Sciences. 11 pages.

Altierre Digital Retail, Altierre Corp., "Altierre Unveils E-Paper Product Family for Digital Signs and Price Tags." 2 pages, http://www.altierre.com/pr_e-paper.html (printed Jan. 31, 2013).

Suzanne Vita Palazzo, "New life for ESLs?, Advanced capabilities being built into electronic shelf labels may help overcome retailers' concerns about ROI.", Grocery Headquarters (www.groceryheadquarters.com), Mar. 2007, pp. 97-100.

Scott D. Walkins & Megan E. Henriksen of Anderson Economic Group, LLC, "Michigan's Item Pricing Law: The Price Tag for Retailers and Consumers," Dec. 11, 2010 (http://www.AndersonEiectronicGroup.com) 39 pages.

"Electronic Shelf Label controlling various information in real lime (ESL)," hllp:I/cesl.co.kr/eng/product-inlroduction/cest-esl.hlml, CEST—Center for Embedded Software Technology, printed on Mar. 5, 2013, 3 pages.

FFr Yello pp. 02003 Product Catalog, "Merchandising Ideas Made Easy for Every Retail Environment!", Cover pg., 9-11, 48-49, 52-58, Back Cover.

Document entitled "Relevant Prior Art for U.S. Appl. No. 10/772,010".

Shelf-edge digital price tags invade the South of France http://www.digitalsignagetoday.com/article/196299/Shelf-edge-digital-price-tags-invade-the-South-of-France.

eSignage http://www.episys.com/page/25/esignage.htm.

Electronic Shelf-Edge Labels ("Realprice system") http://www.hitech-Icd.com/ESL.html.

"Product Range :: I LID—The next generation in electronic shelf labels," http://www.ilid.com.au/product-range.php, printed on Mar. 5, 2013, 3 pgs.

Electronic Shelf-Edge Labels http://www.fujitsu.com/downloads/EU/uk/pdf/industries/retail/retail-solutions-electronic-self-edge-labels.pdf.

(56) **References Cited**

OTHER PUBLICATIONS

The NZ ESL range from pricer http://www.electronicshelflabelling.co.nz/products/.
Retailer introduces electronic shelf-edge labelling http://www.conveniencestore.co.uk/news/retailer-introduces-electronic-shelf-edge-labelling/231511.article.
Apr. 22, 2016—(WO) International Search Report and Written Opinion—App PCT/US2015/060404.
Aug. 18, 2016—(EP) Office Action—App 14716461.0.
Sep. 19, 2016—(PCT) International Search Report—App PCT/US2016/032328.
Robertson, "Food Packaging: Principles and Practice, Second Edition", CRC Press, XP055301114, ISBN: 978-0-8493-3775-8, vol. 0, p. 308, dated Sep. 22, 2005.
George Coulouris et al., "Distributed Systems: Concepts and Design (5th Edition)", Addison-Wesley, US, XP055261658, ISBN: 978-0-13-214301-1 pp. Ch01-Ch06, Ch09-Ch10, ch13,, Chapters 1, 3 and 19, dated May 7, 2011.
Apr. 2, 2018—(CN) First Office Action—App 201480024831.0.
May 30, 2018—(AU) Examination Report—App 2015346254.
Jul. 6, 2018—(CN) Third Office Action—App 201480026575.9.
Oct. 28, 2018—(KR) Final Rejection—App 10-2017-7015819.

* cited by examiner

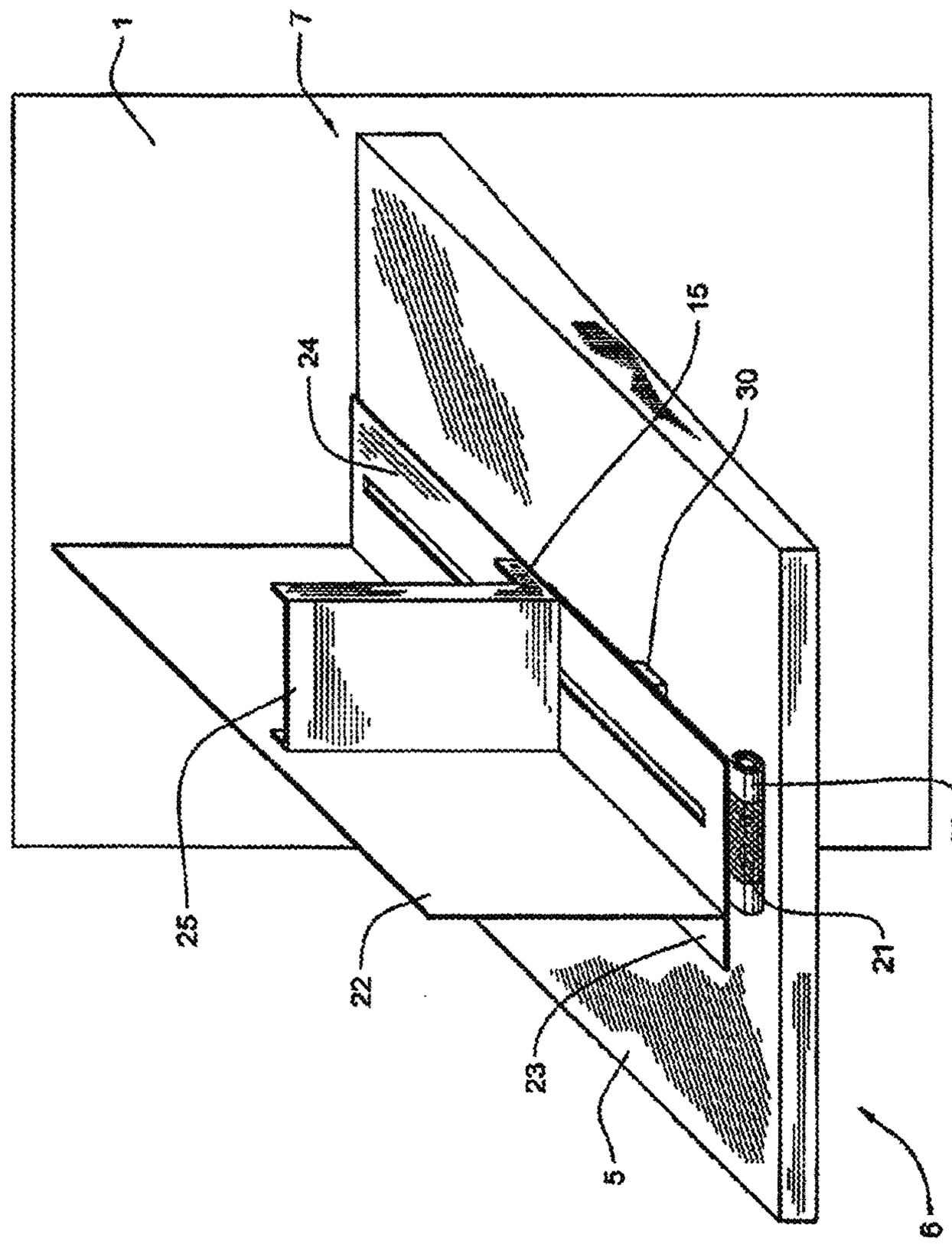

FIG. 1a

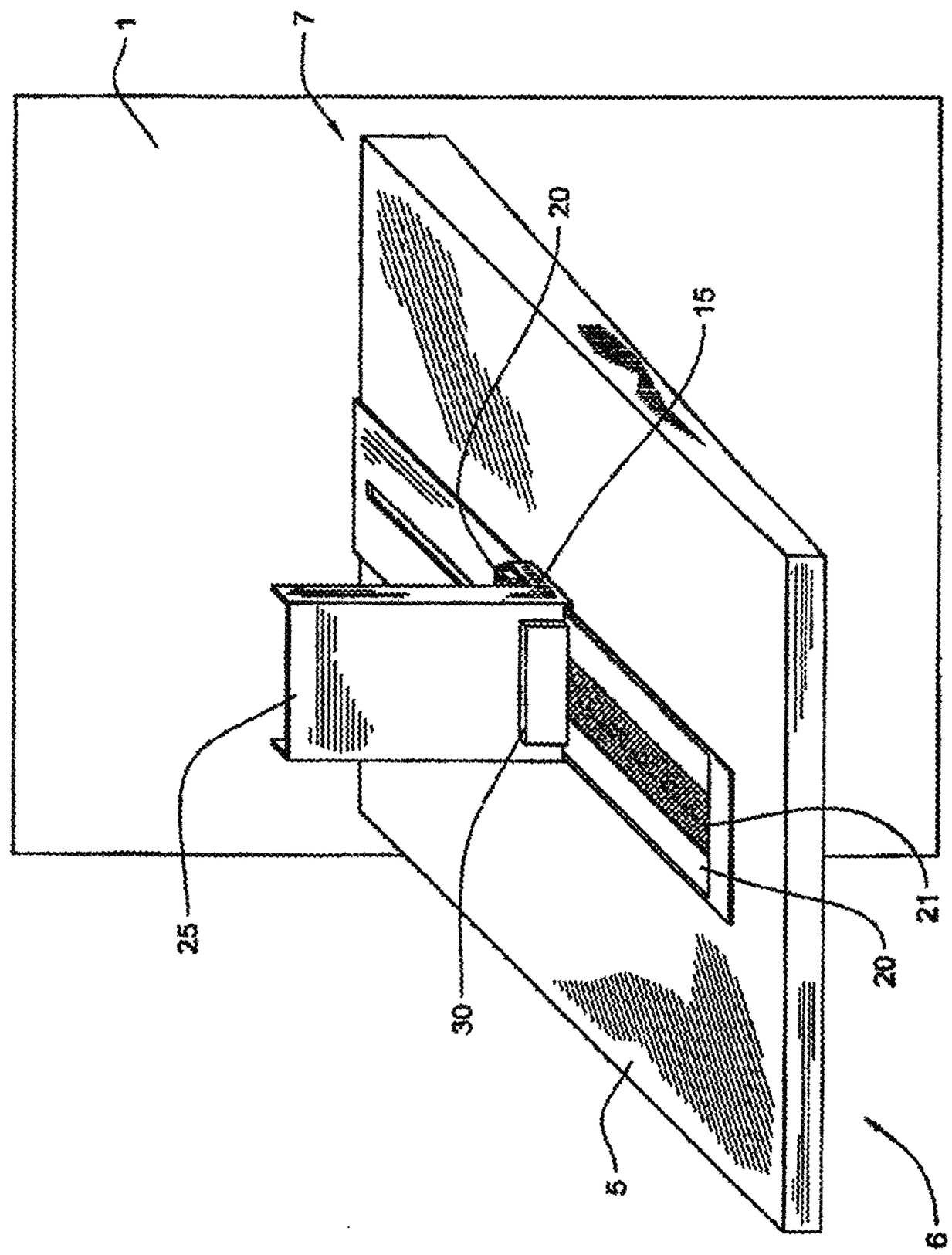

FIG. 1b

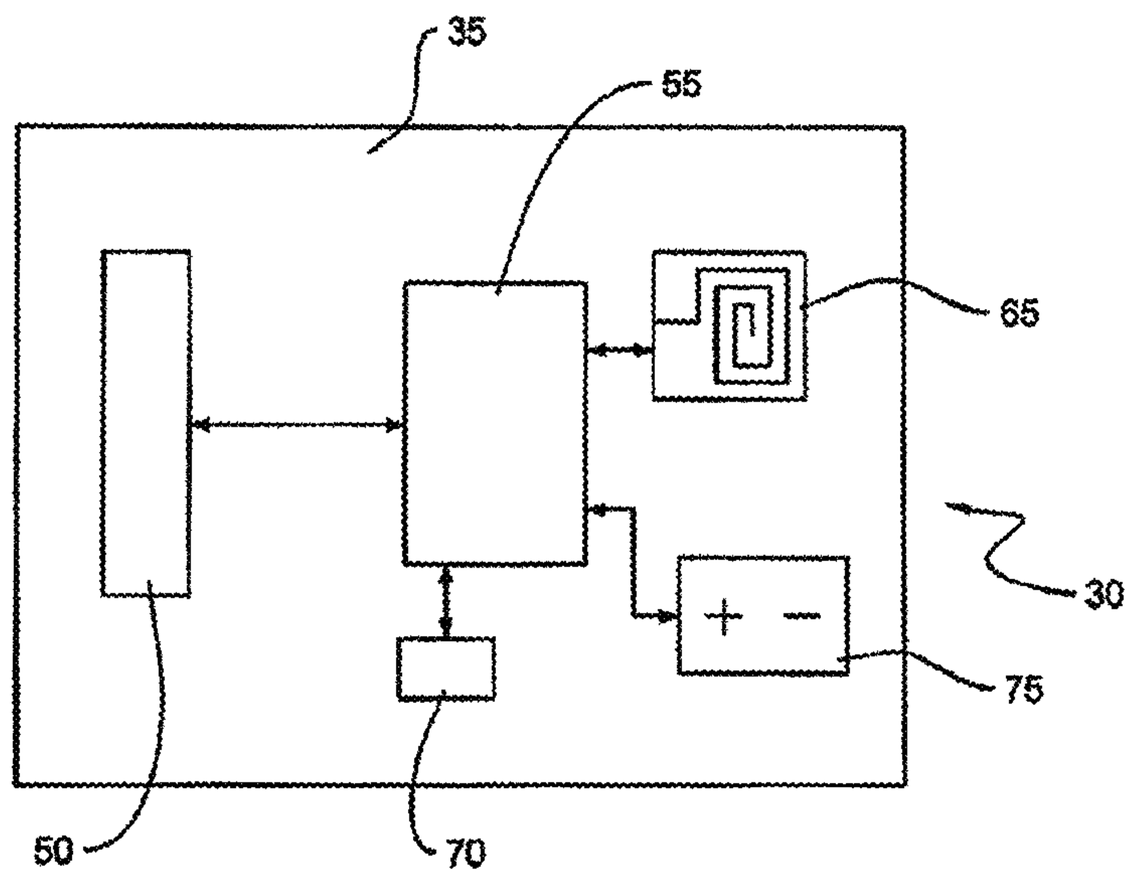

FIG. 2a

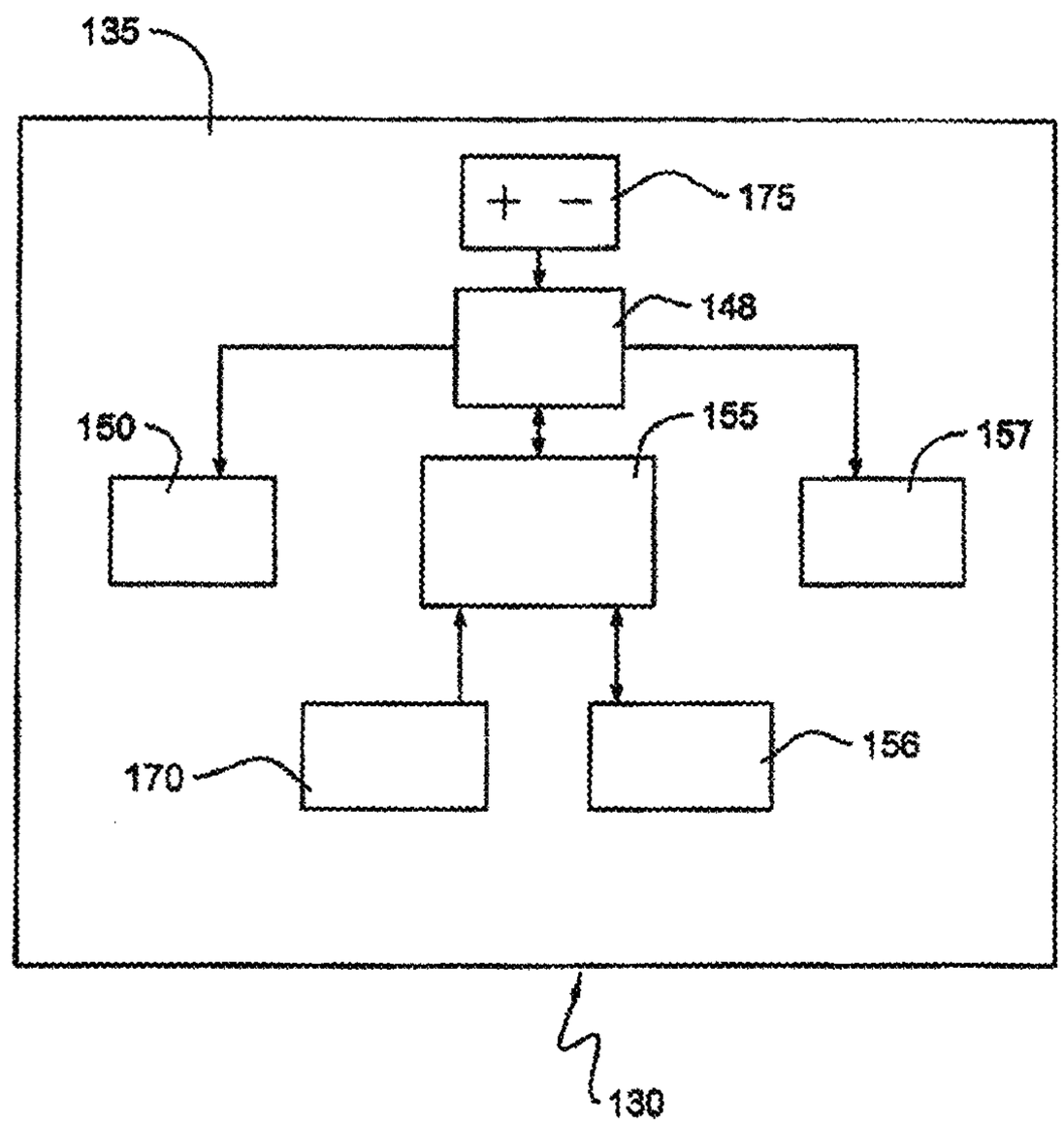

FIG. 2b

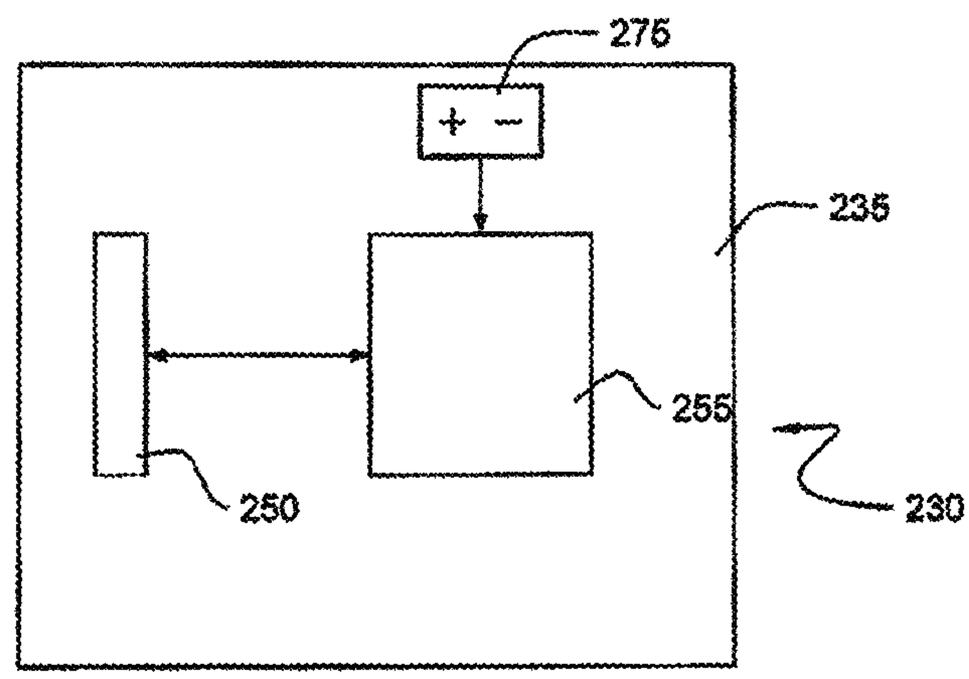

FIG. 2c

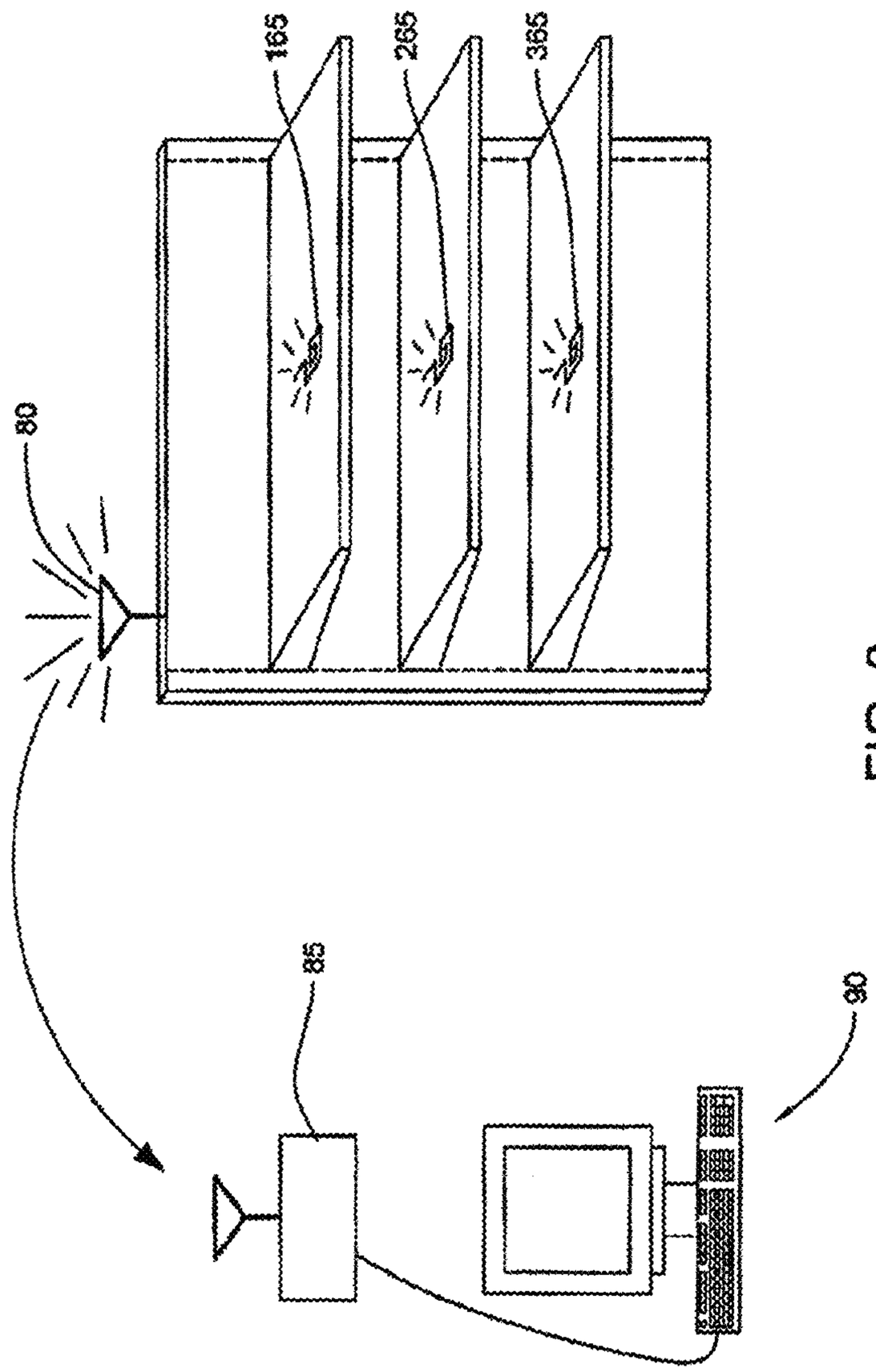

FIG. 3

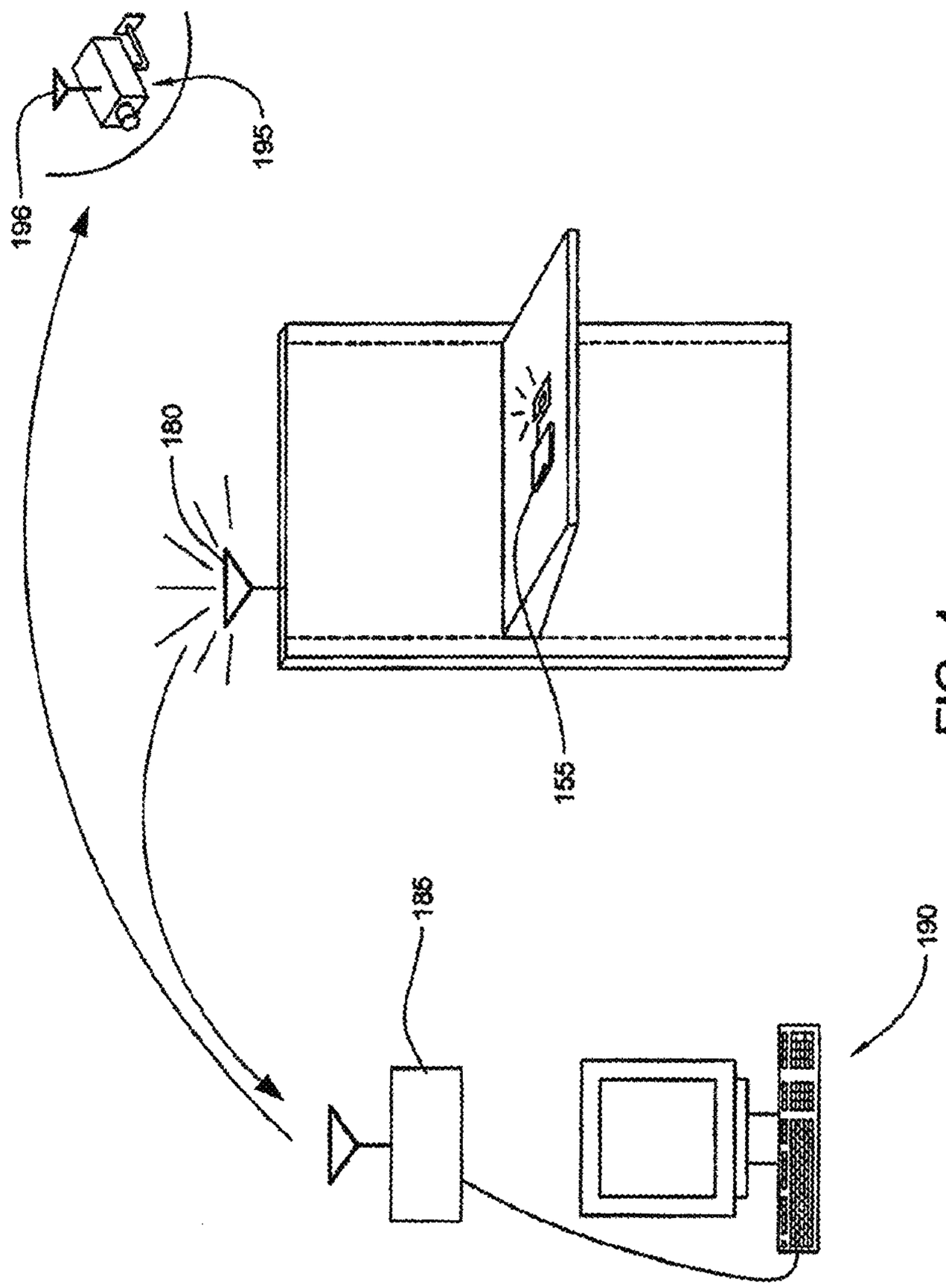

FIG. 4

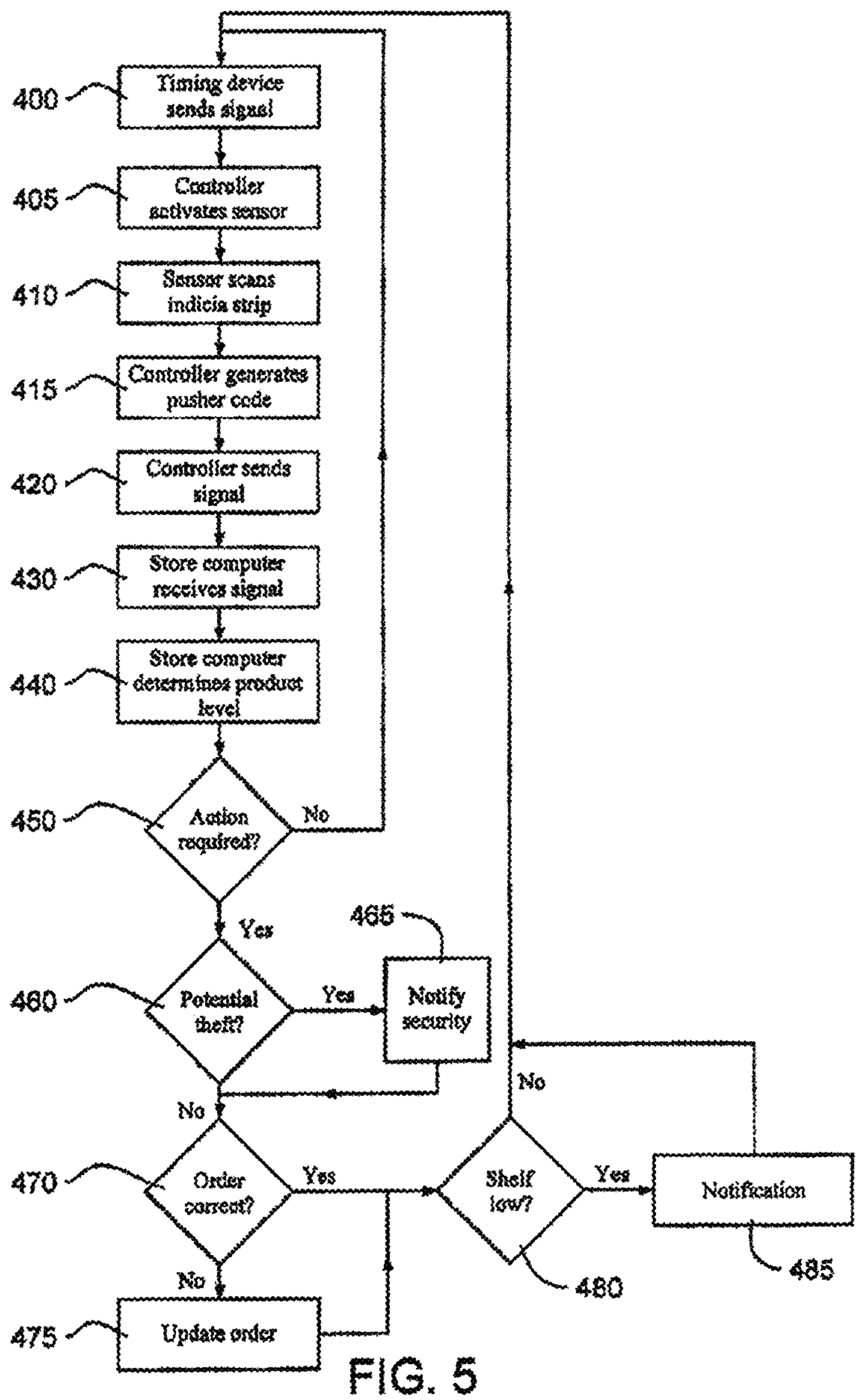
400
Timing device sends signal
405
Controller activates sensor
410
Sensor scans indicia strip
415
Controller generates pusher code
420
Controller sends signal
430
Store computer receives signal
440
Store computer determines product level
450
Action required?
No
Yes
465
460
Potential theft?
Yes
Notify security
No
No
470
Order correct?
Yes
Shelf low?
Yes
Notification
485
480
No
475
Update order

FIG. 5

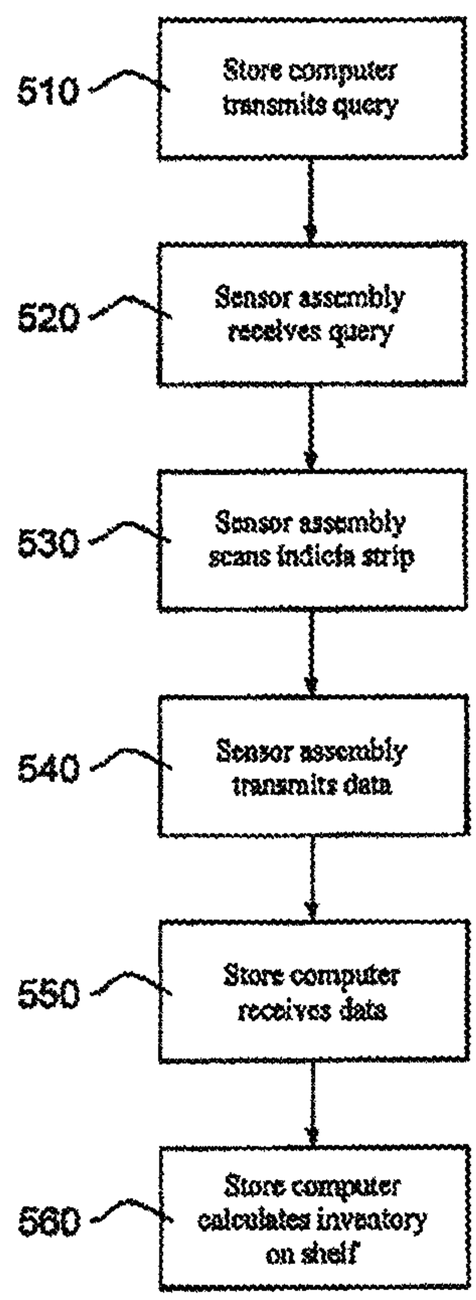
510
Store computer transmits query
520
Sensor assembly receives query
530
Sensor assembly scans indicia strip
540
Sensor assembly transmits data
550
Store computer receives data
560
Store computer calculates inventory on shelf

FIG. 6

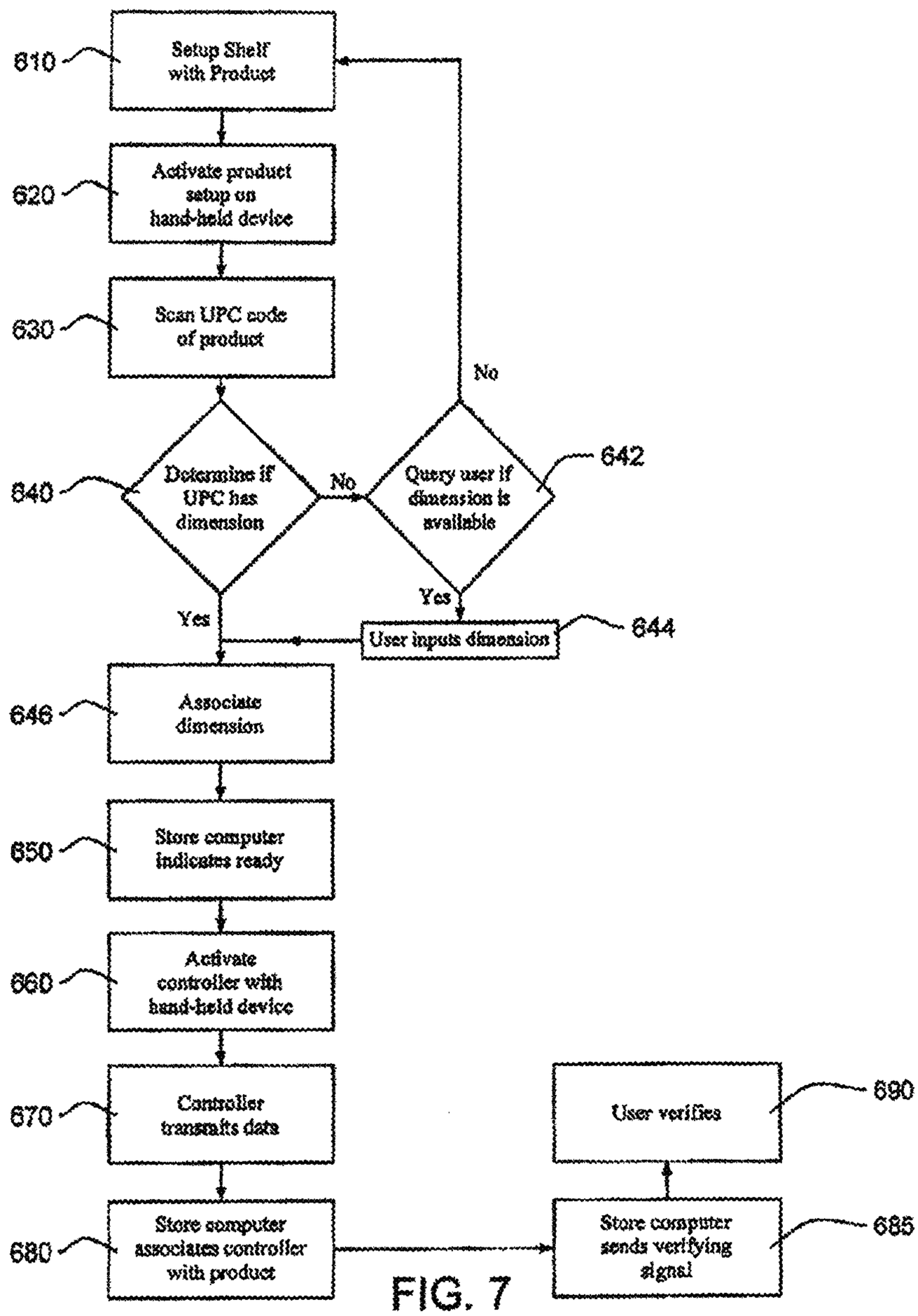
610
Setup Shelf with Product
620
Activate product setup on hand-held device
630
Scan UPC code of product
640
Determine if UPC has dimension
No
642
Query user if dimension is available
No
Yes
Yes
644
User inputs dimension
646
Associate dimension
650
Store computer indicates ready
660
Activate controller with hand-held device
670
Controller transmits data
680
Store computer associates controller with product
685
Store computer sends verifying signal
690
User verifies

FIG. 7

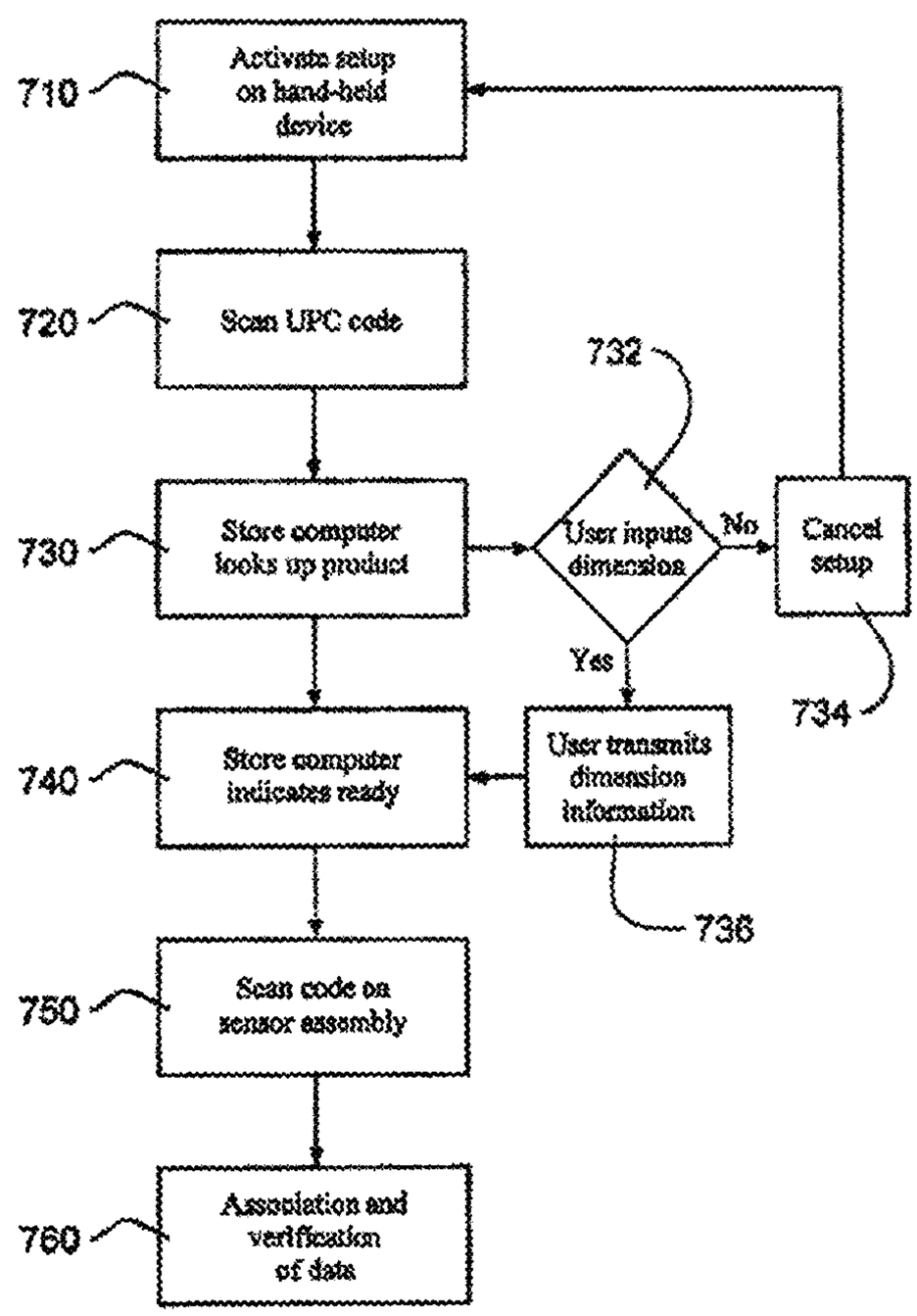
710
Activate setup on hand-held device
720
Scan UPC code
730
Store computer looks up product
732
User inputs dimension
No
Cancel setup
734
Yes
740
Store computer indicates ready
User transmits dimension information
736
750
Scan code on sensor assembly
760
Association and verification of data

FIG. 8

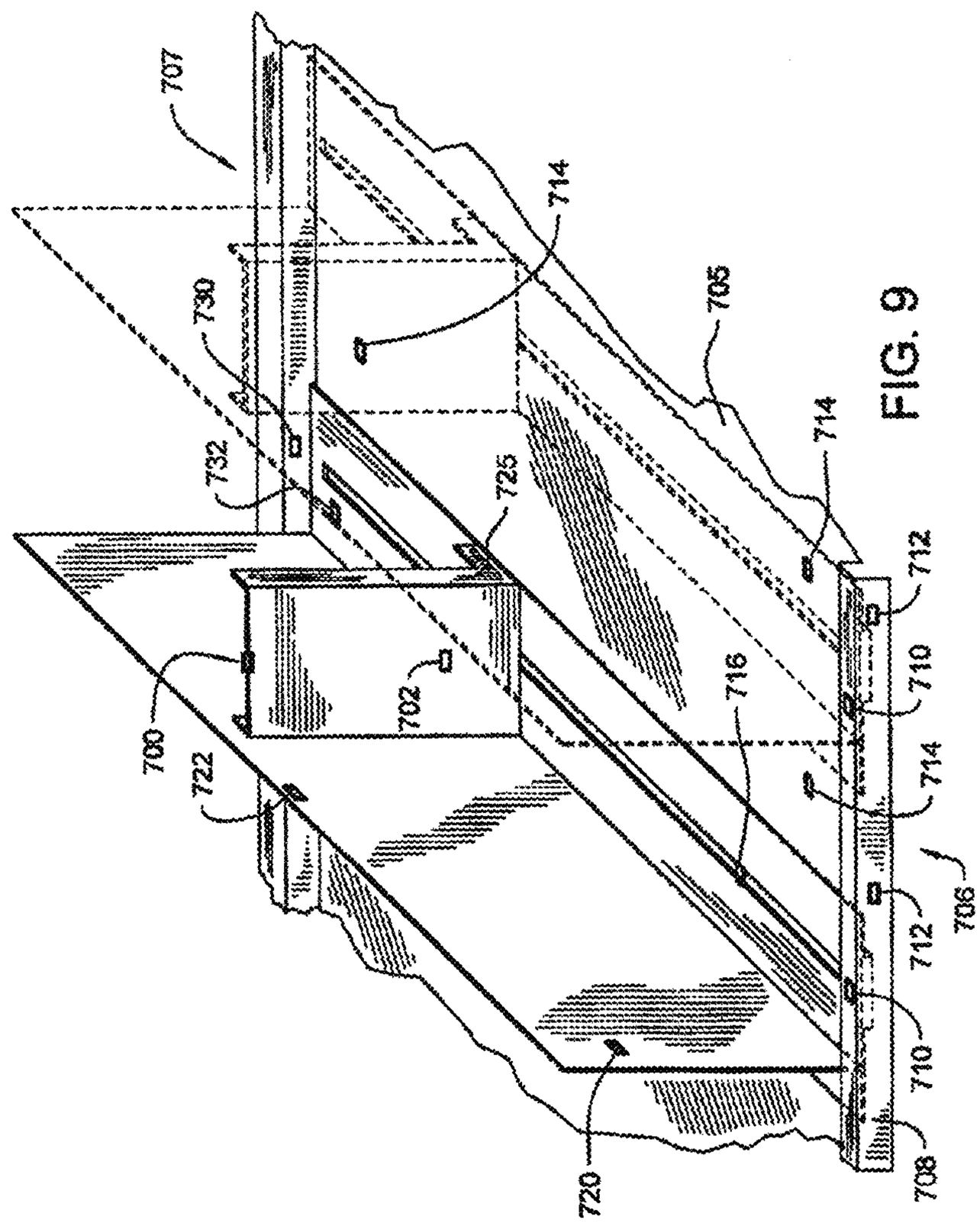
707
714
730
705
732
725
714
712
702
710
700
716
722
714
706
712
710
720
708

FIG. 9

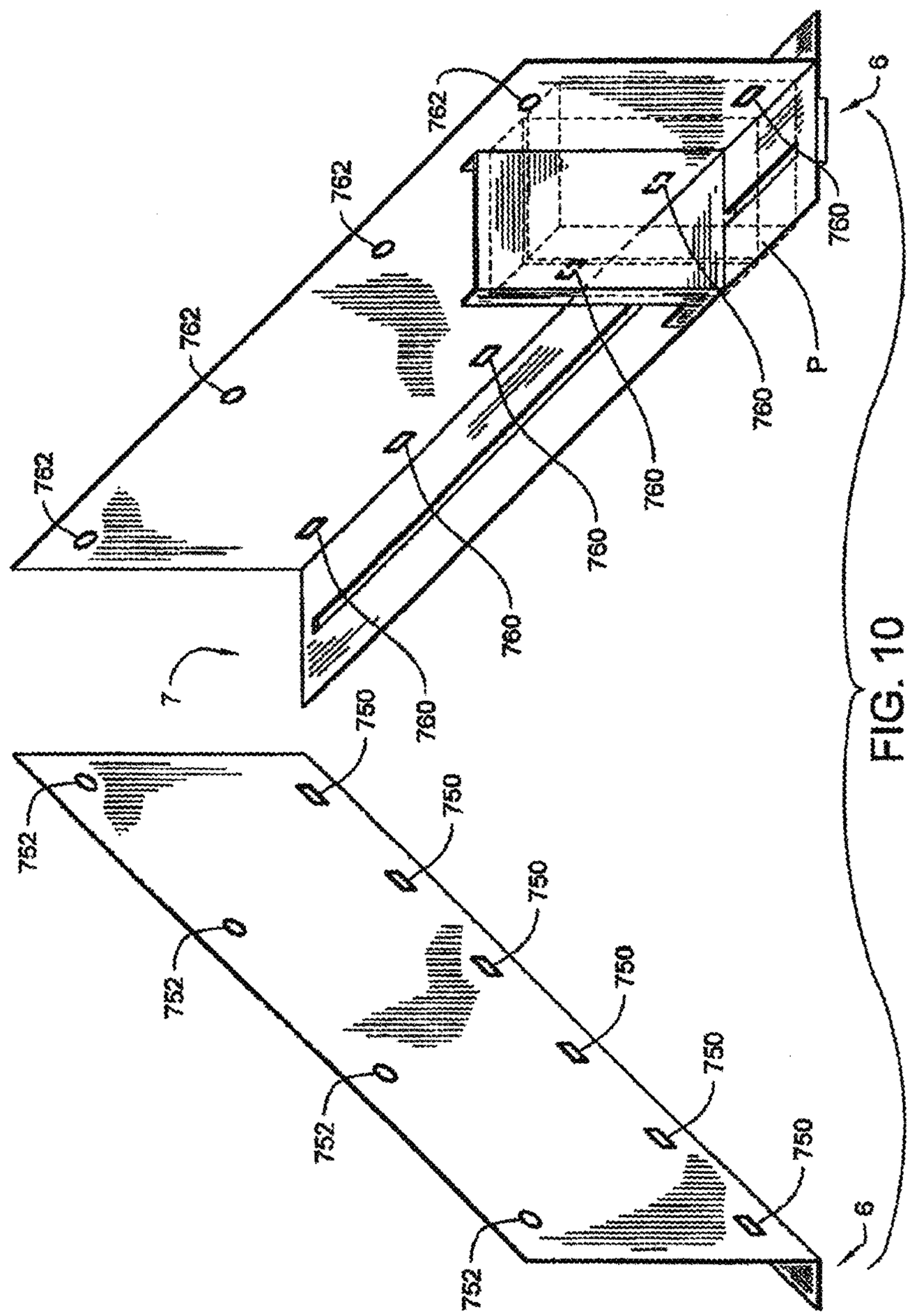
762
762
762
762
760
760
760
760
760
760
P
6
7
750
750
750
750
750
750
752
752
752
752
6

FIG. 10

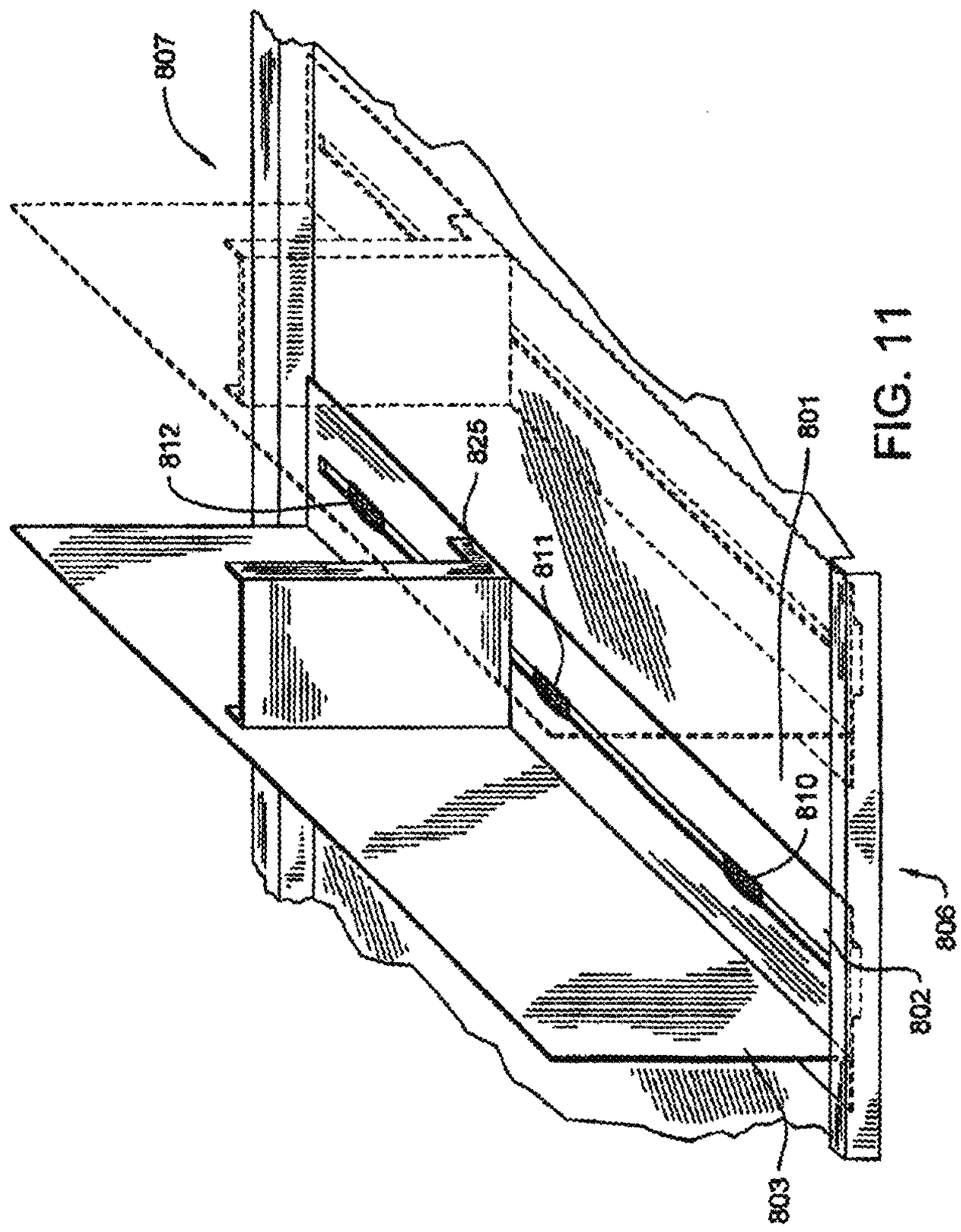

FIG. 11

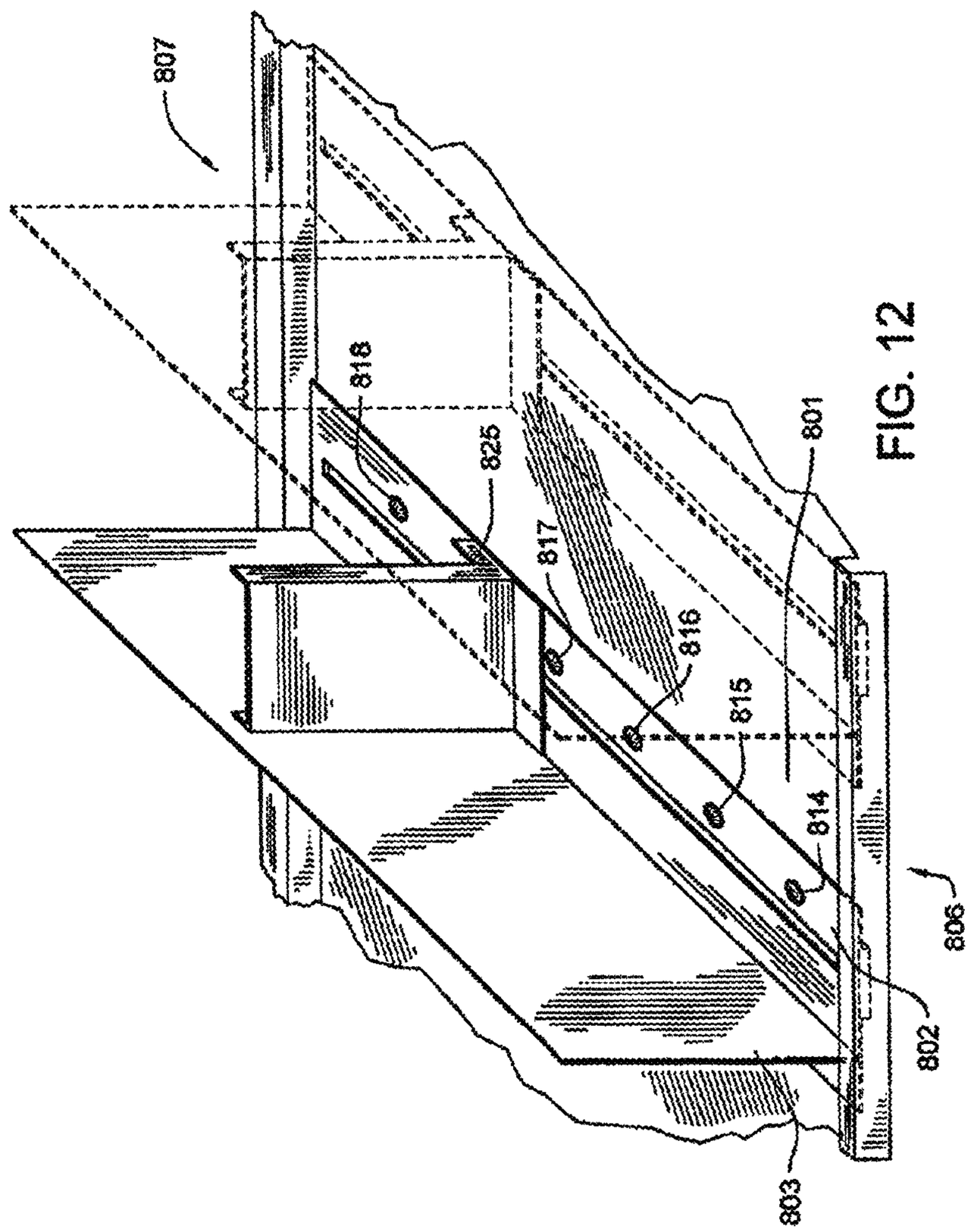

FIG. 12

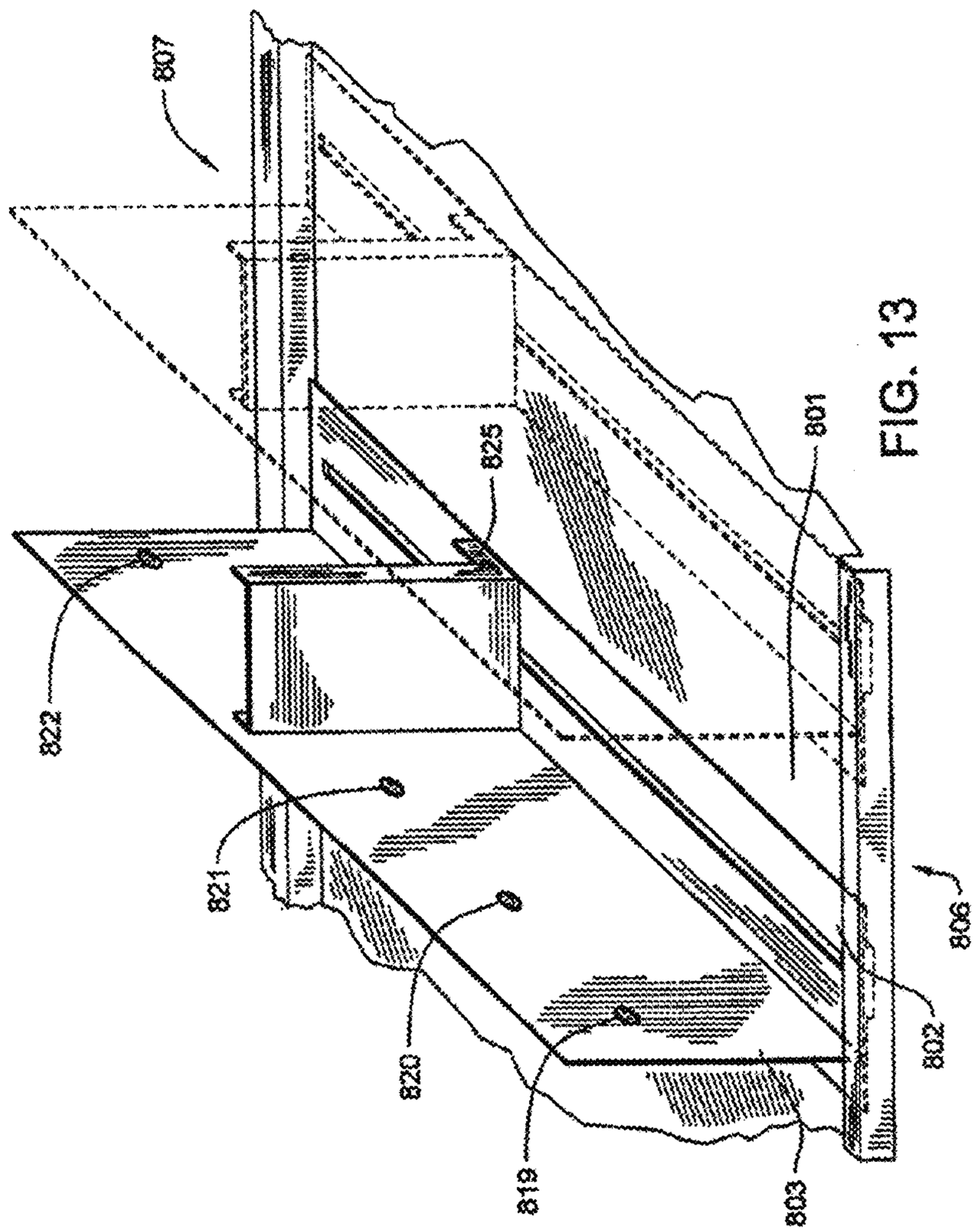

FIG. 13

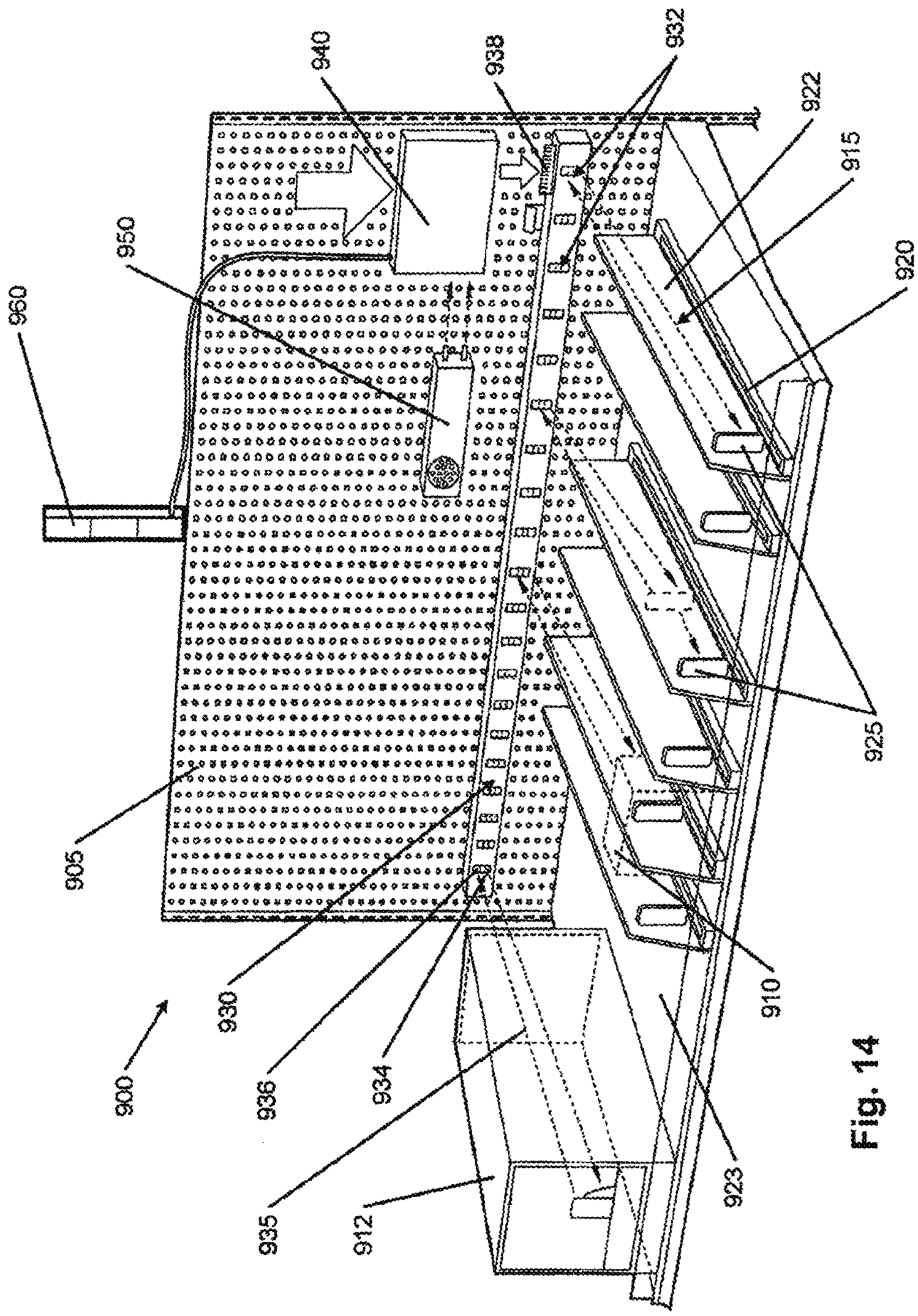
940
938
932
922
915
950
960
920
925
905
930
910
900
936
934
923
935
912

Fig. 14

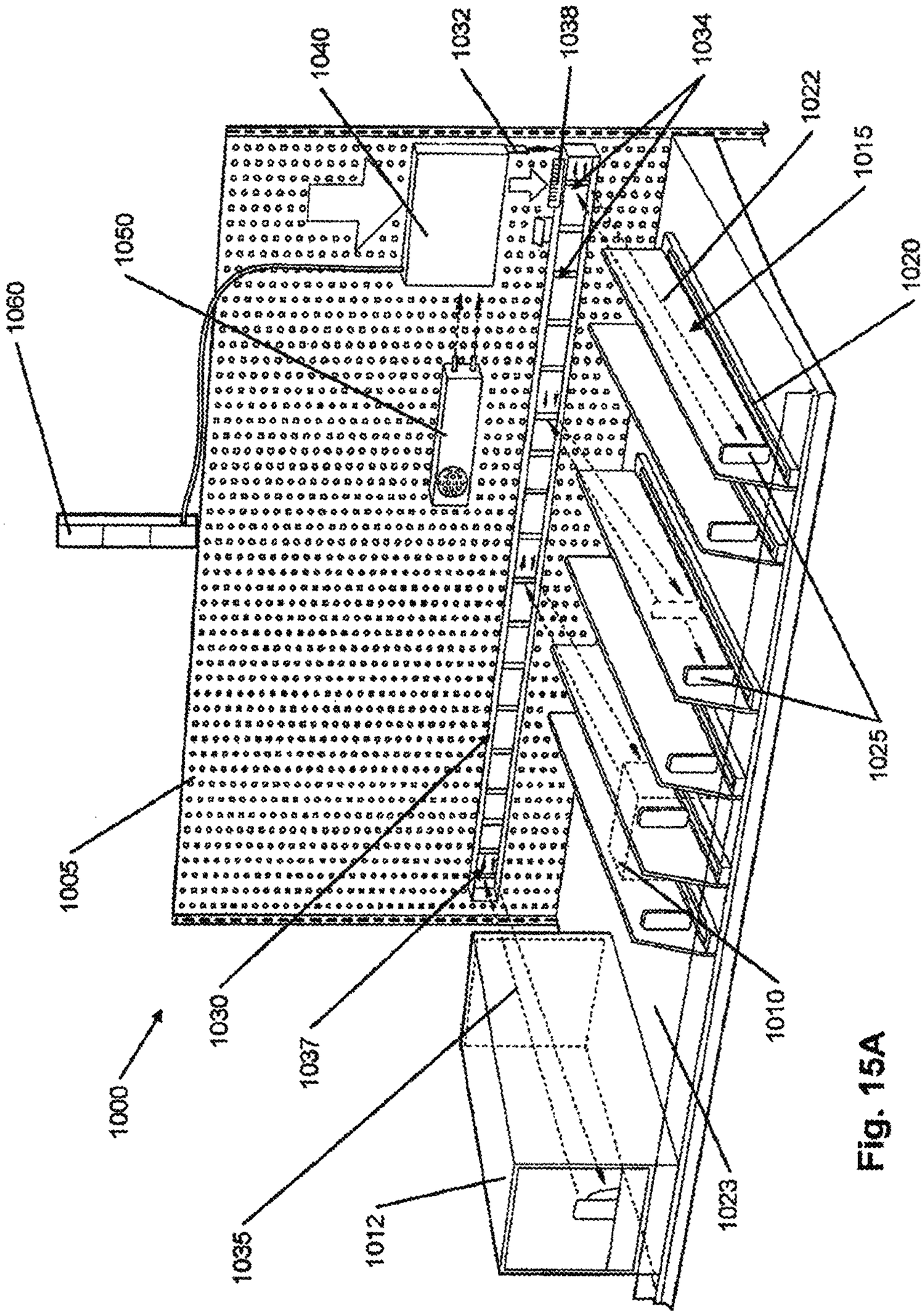
1000
1005
1010
1012
1015
1020
1022
1023
1025
1030
1032
1034
1035
1037
1038
1040
1050
1060

Fig. 15A

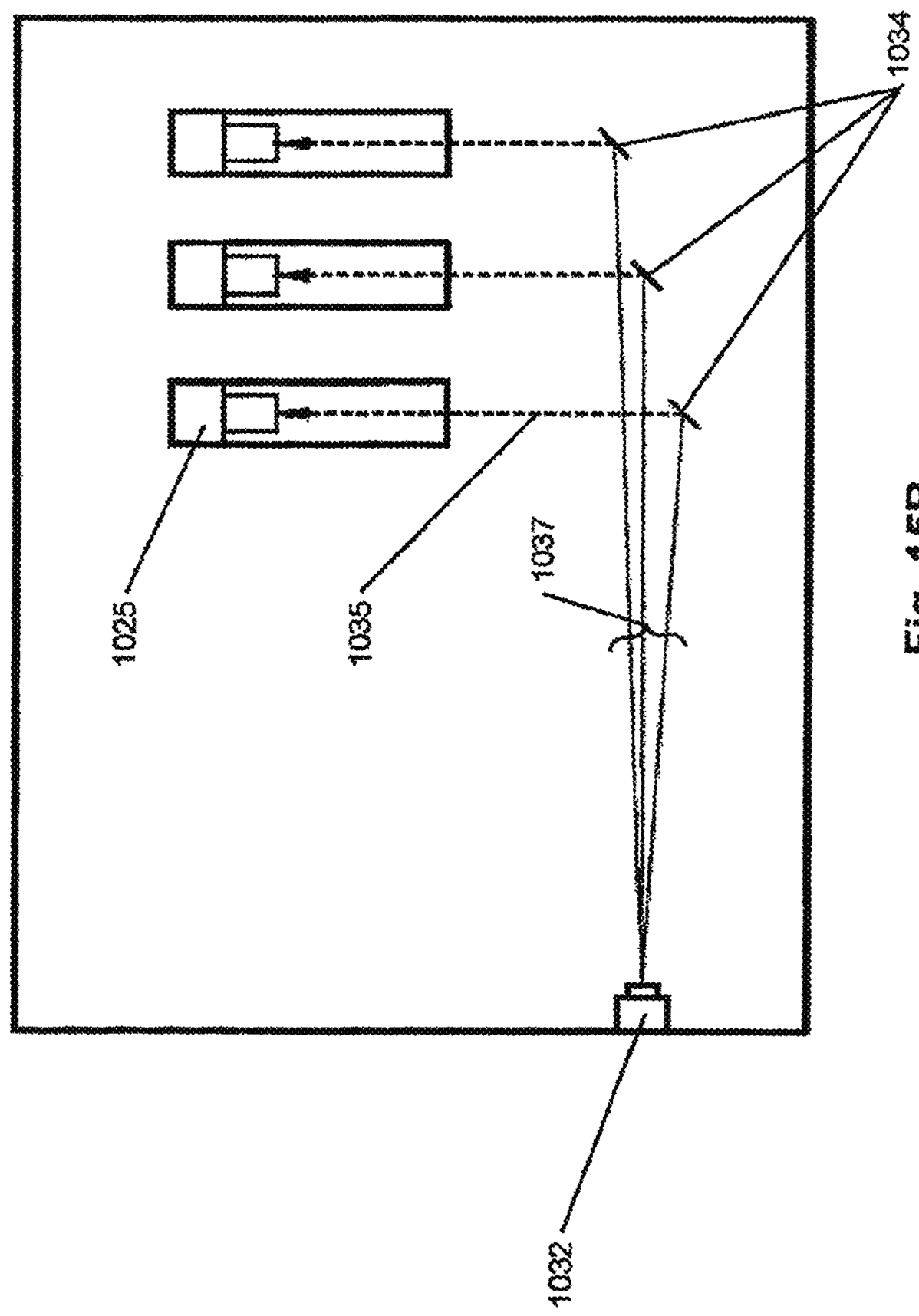

Fig. 15B

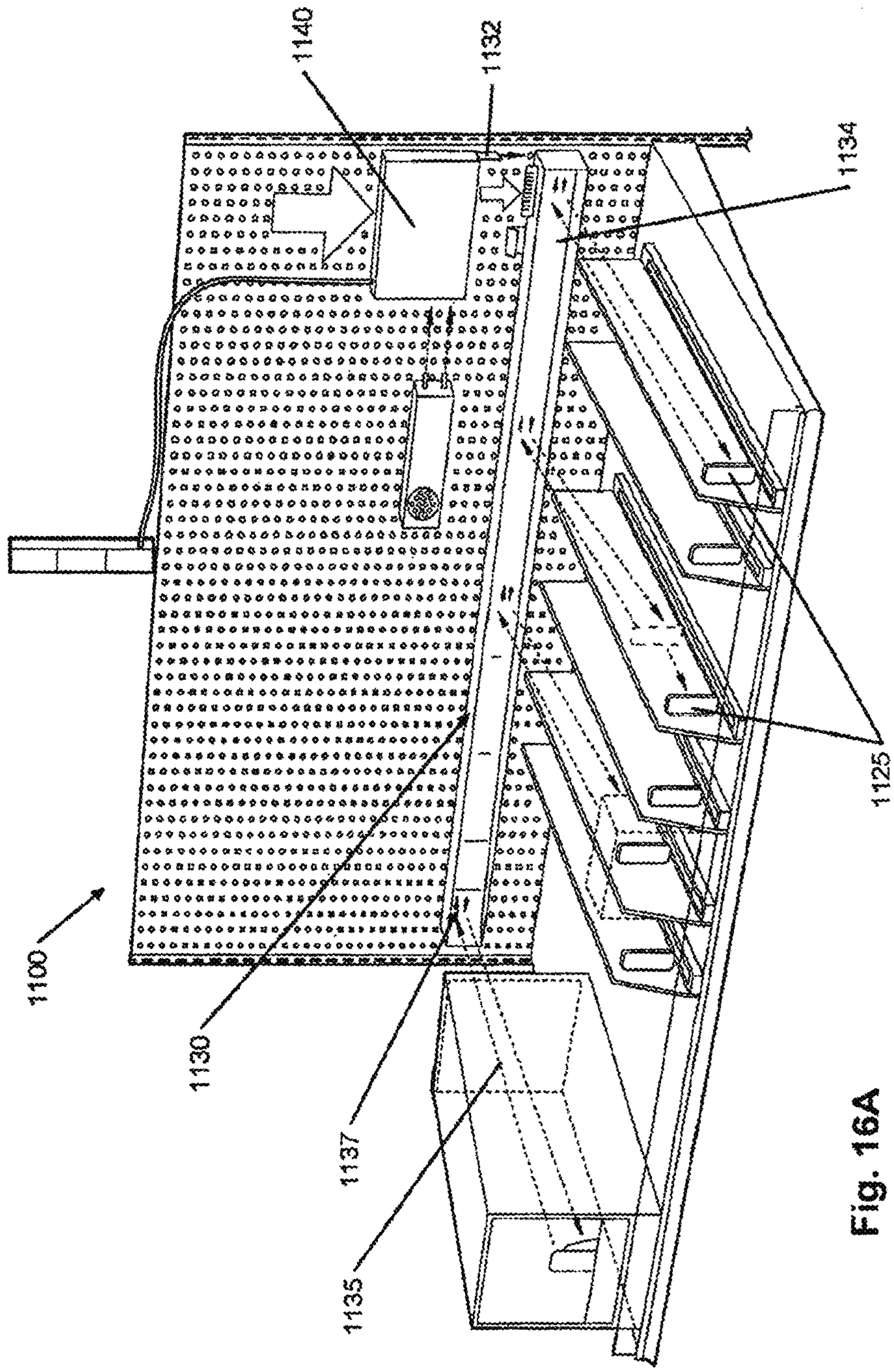

Fig. 16A

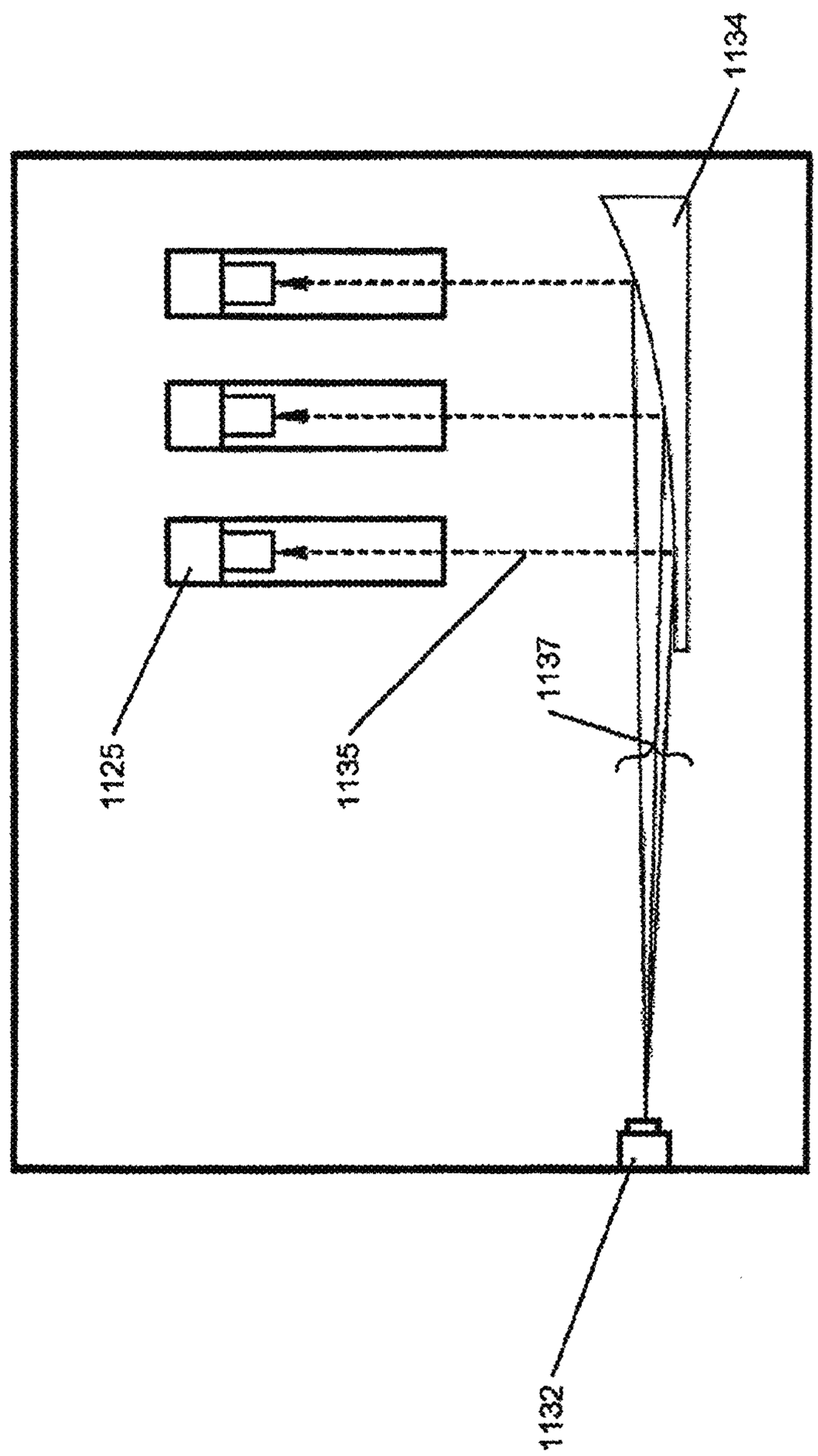

Fig. 16B

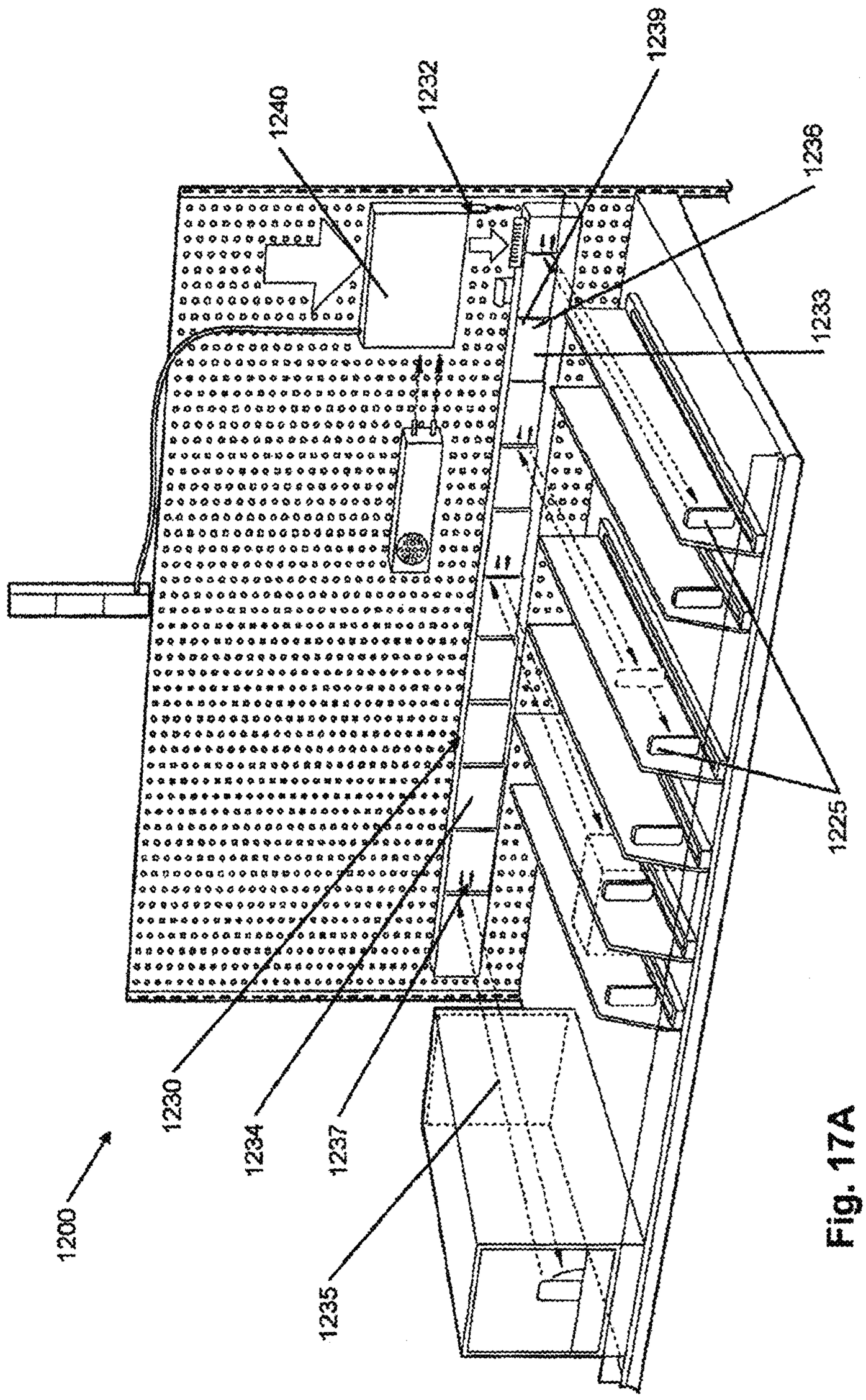

Fig. 17A

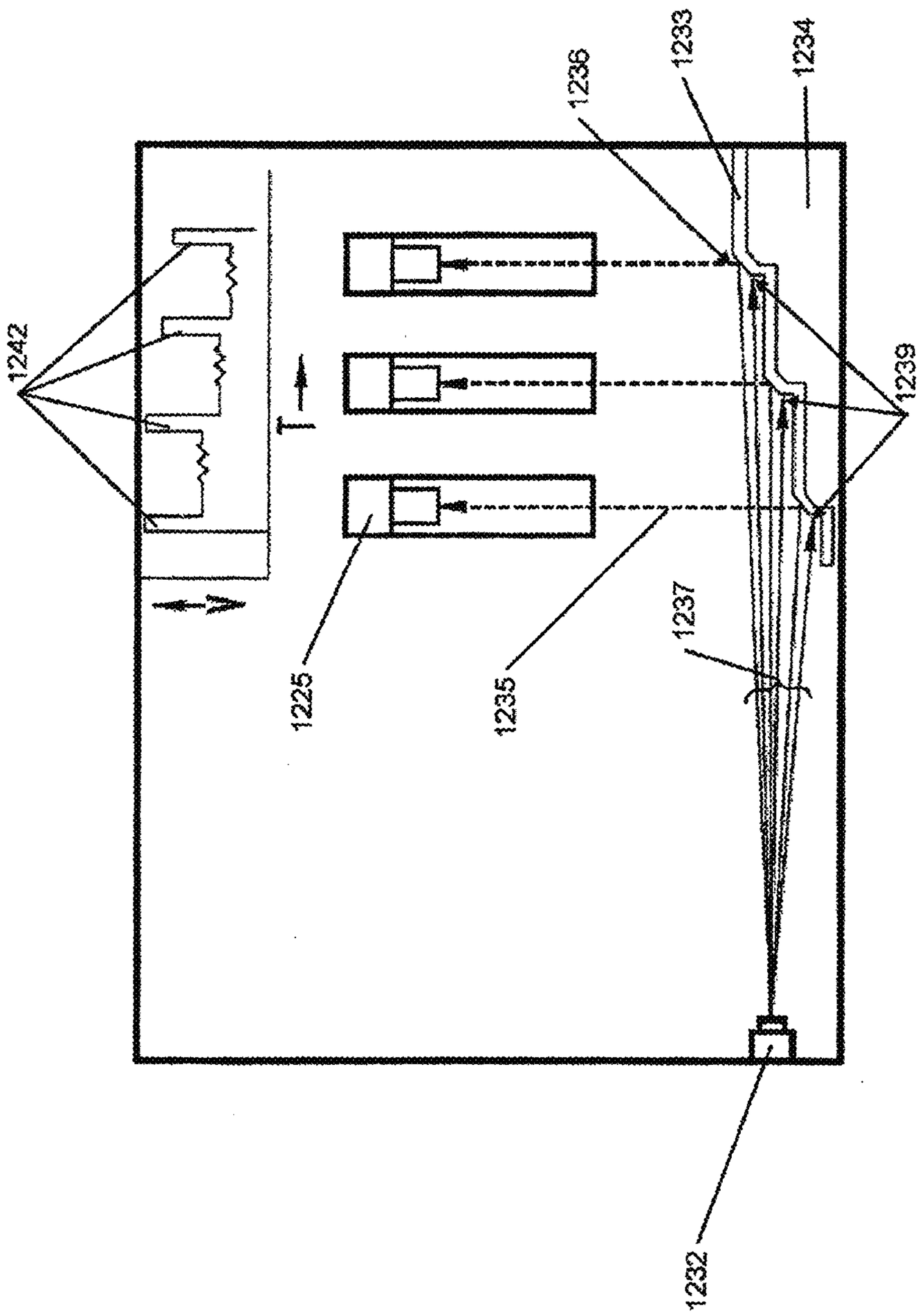

Fig. 17B

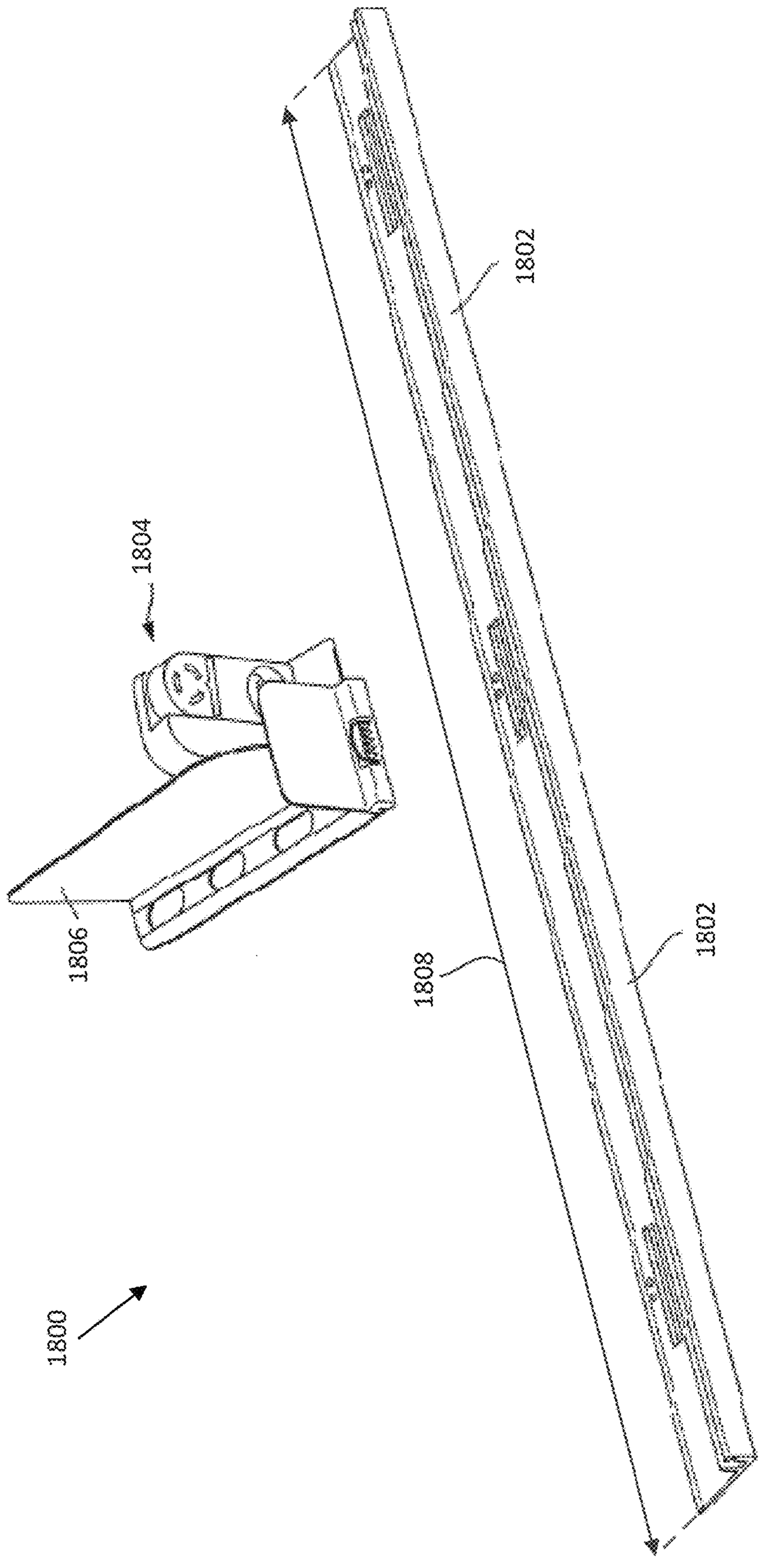

FIG 18A

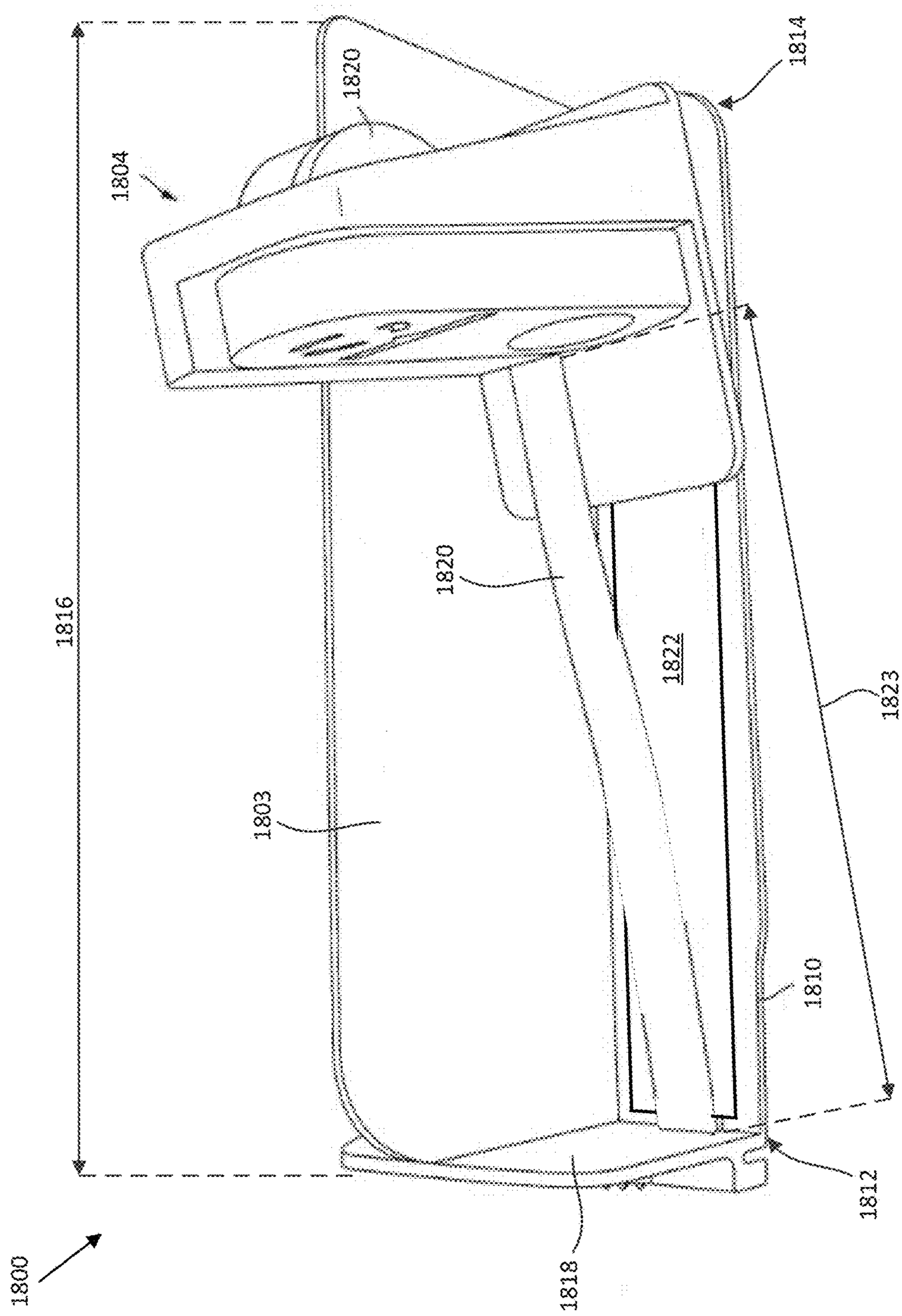

FIG 18B

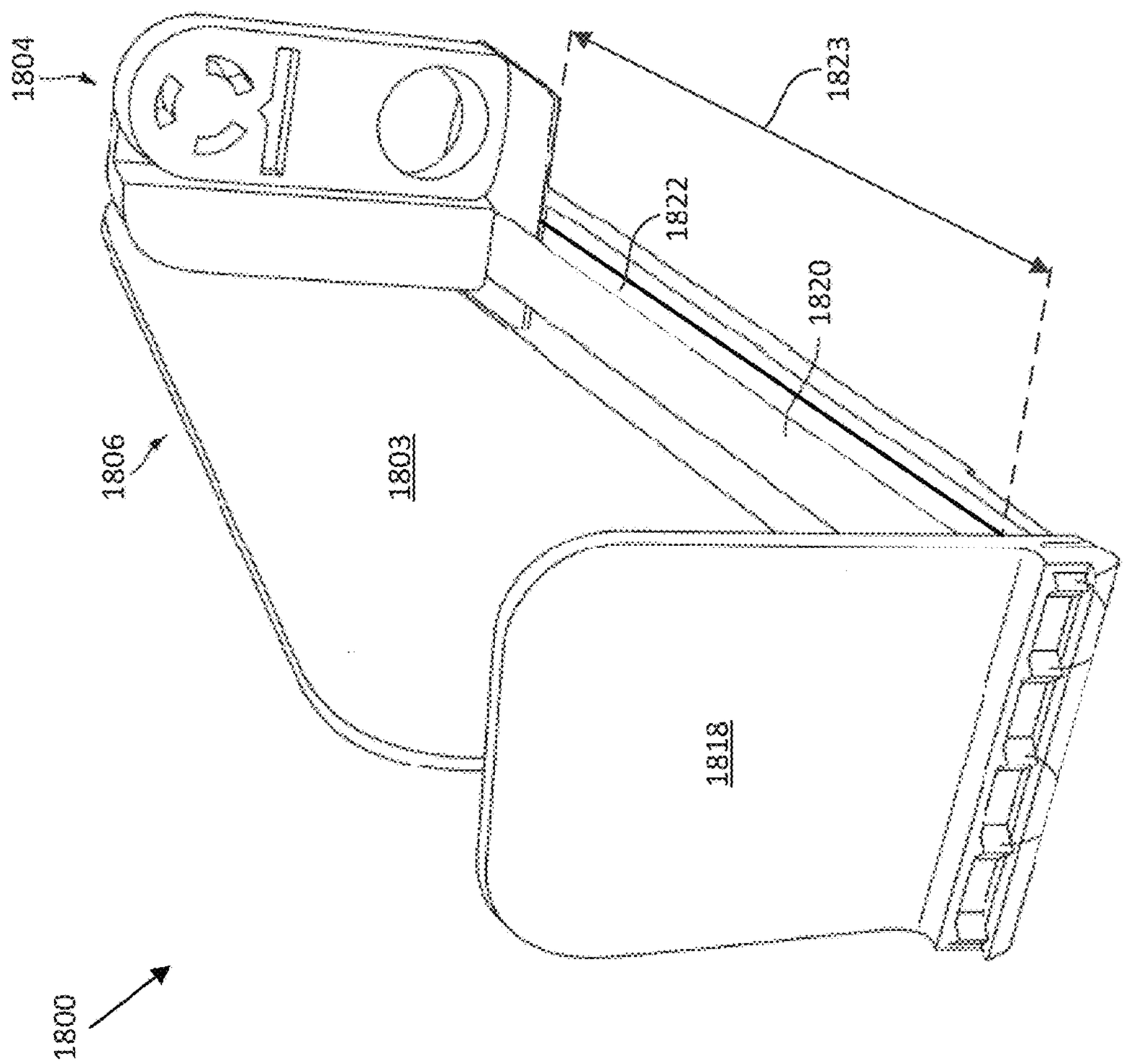

FIG 18C

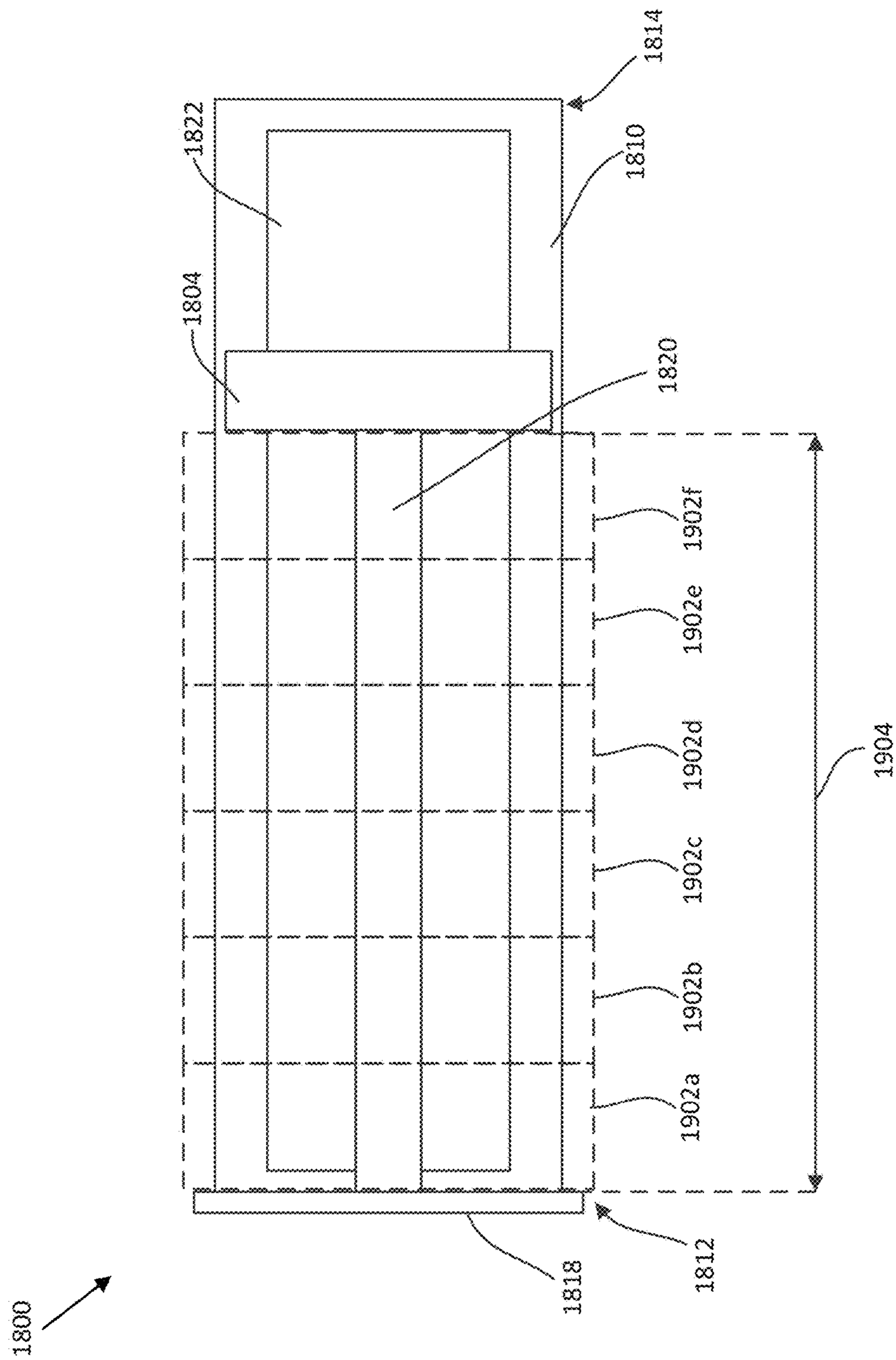
1814
1822
1810
1804
1820
1902f
1902e
1902d
1904
1902c
1902b
1902a
1818
1812
1800

FIG 19A

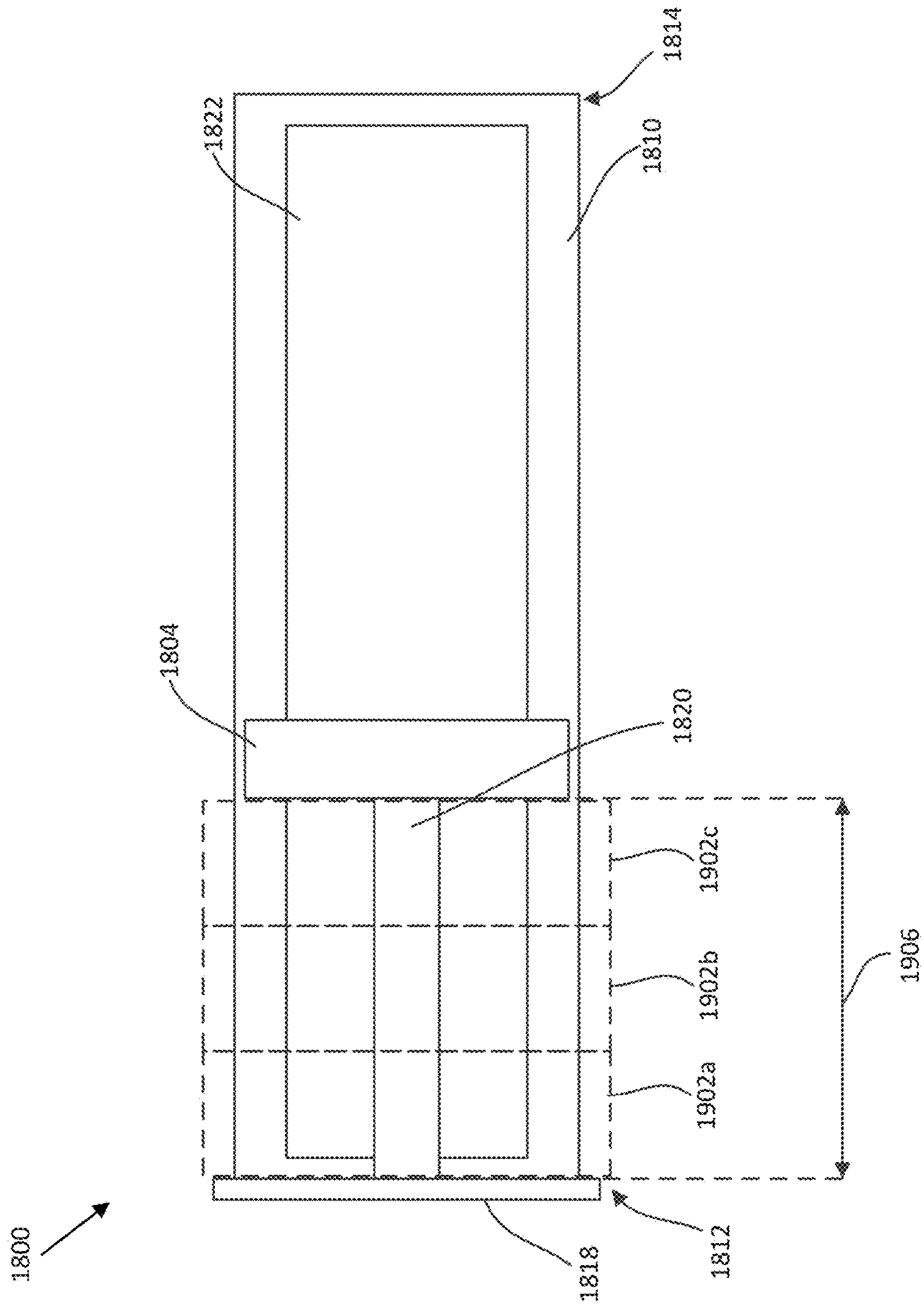
1814
1822
1810
1804
1820
1902c
1906
1902b
1902a
1800
1818
1812

FIG 19B

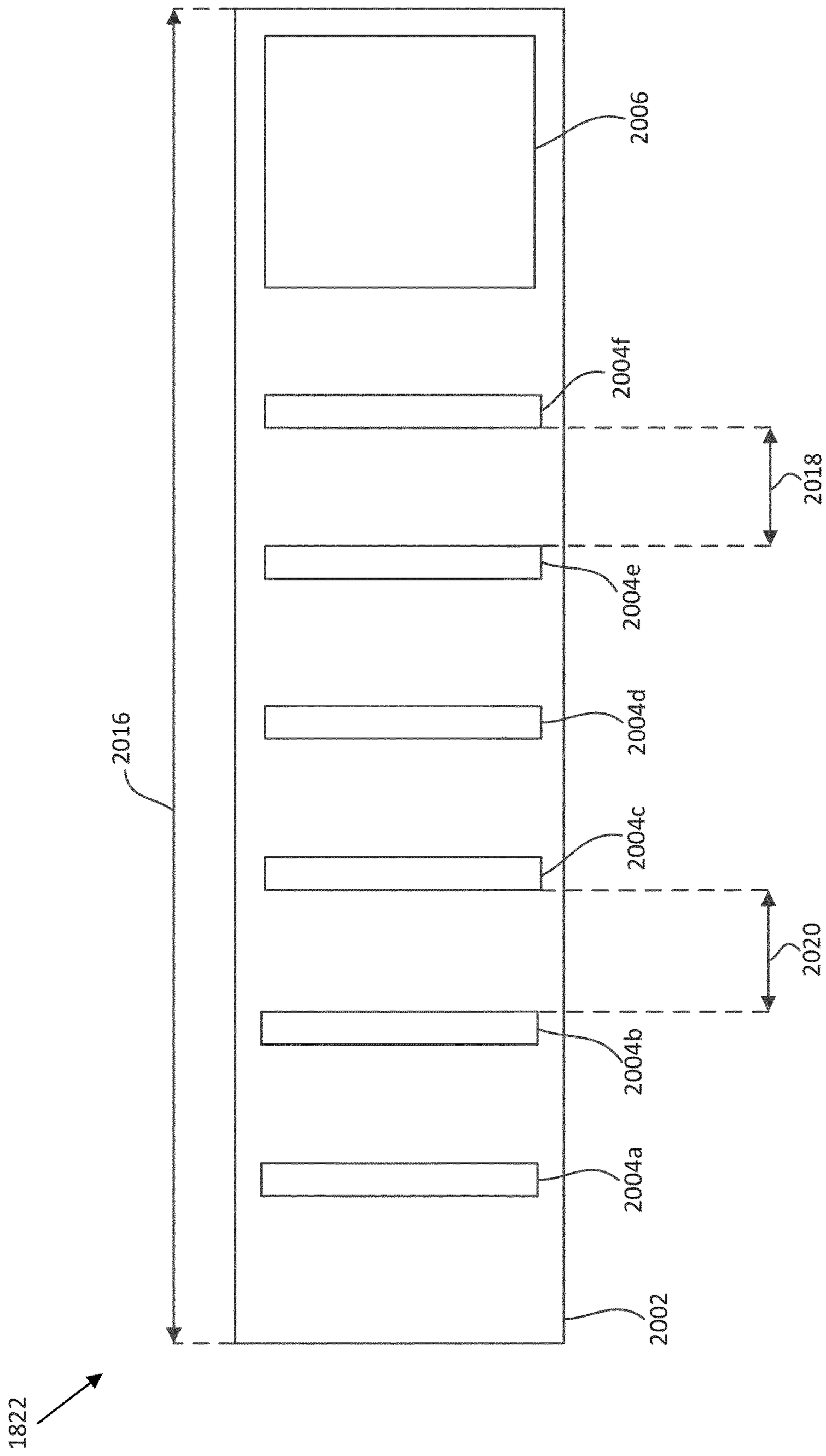
2006
2004f
2018
2004e
2004d
2016
2004c
2020
2004b
2004a
2002
1822

FIG 20A

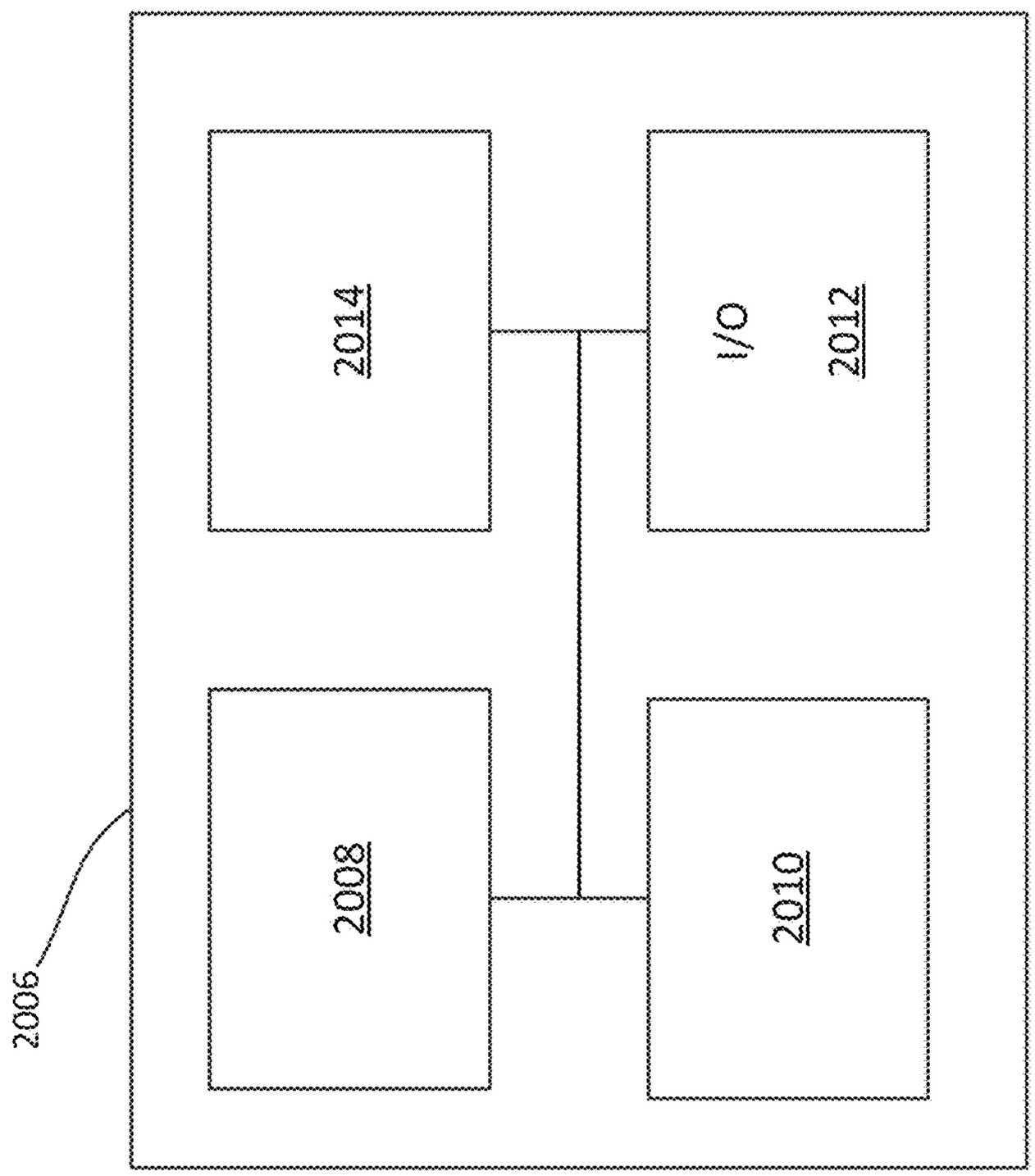

FIG 20B

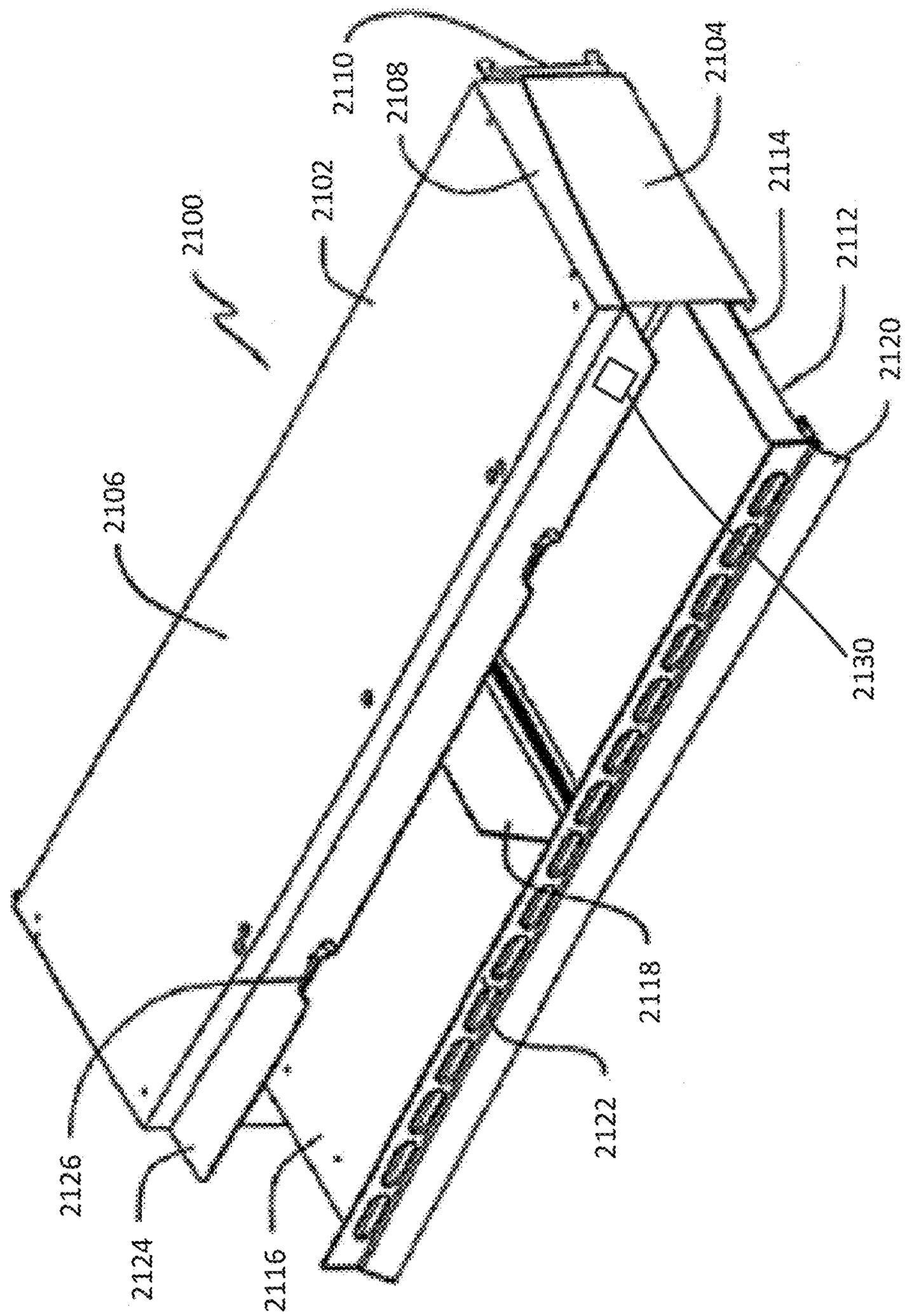
2100
2102
2104
2106
2108
2110
2112
2114
2116
2118
2120
2122
2124
2126
2130

FIG 21A

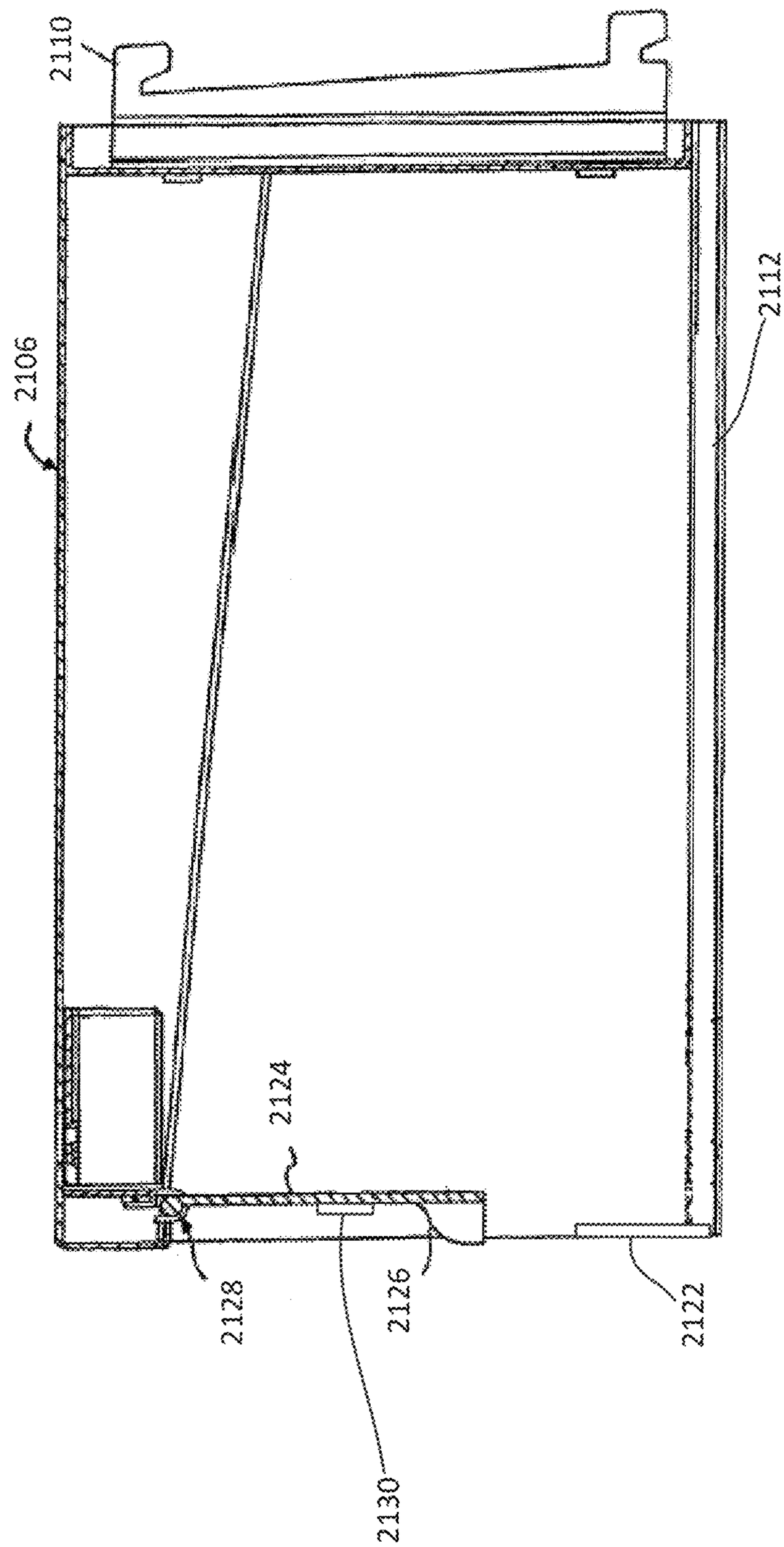

FIG 21B

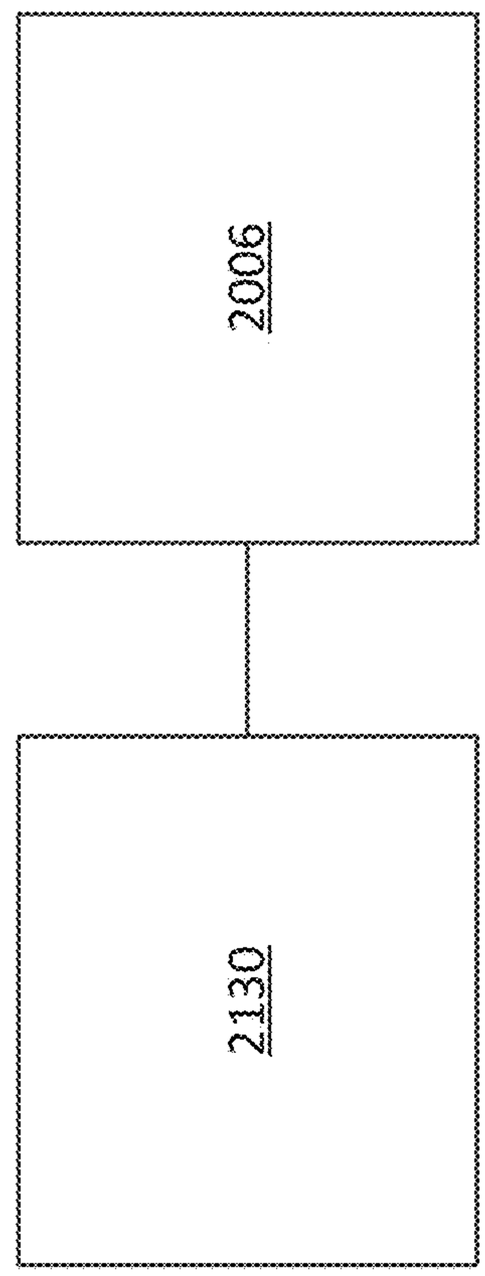

FIG 22B

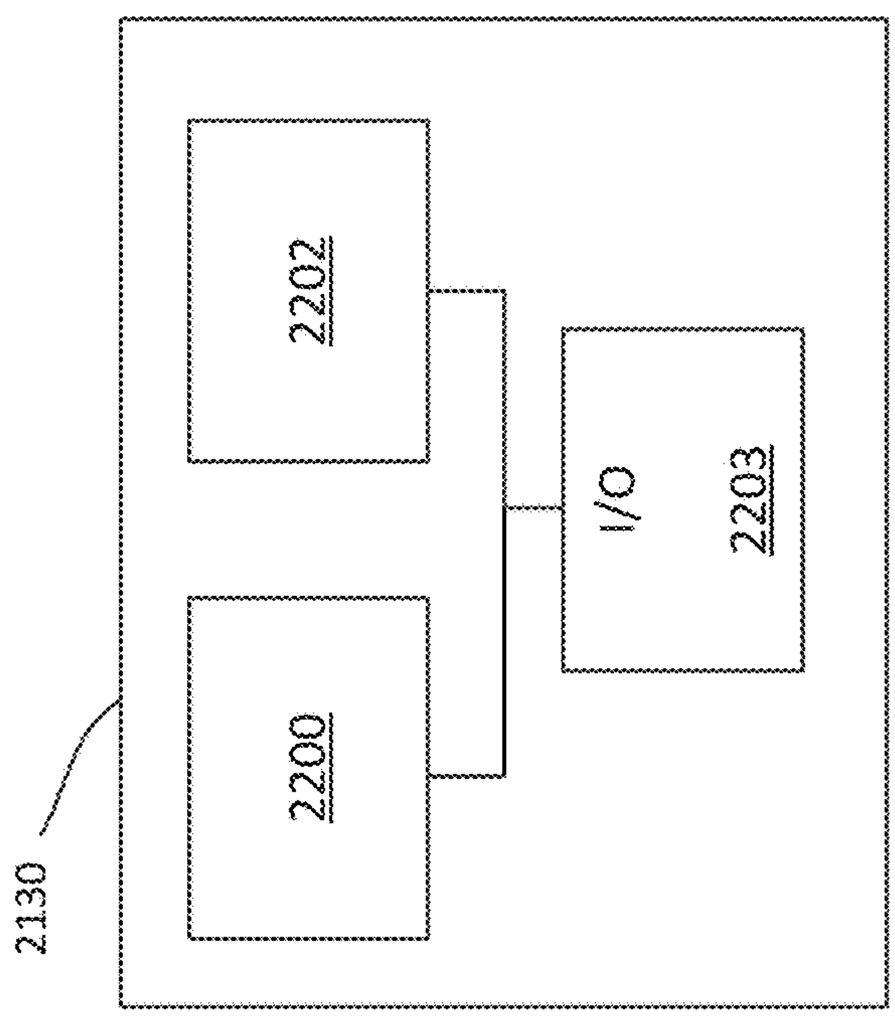

FIG 22A

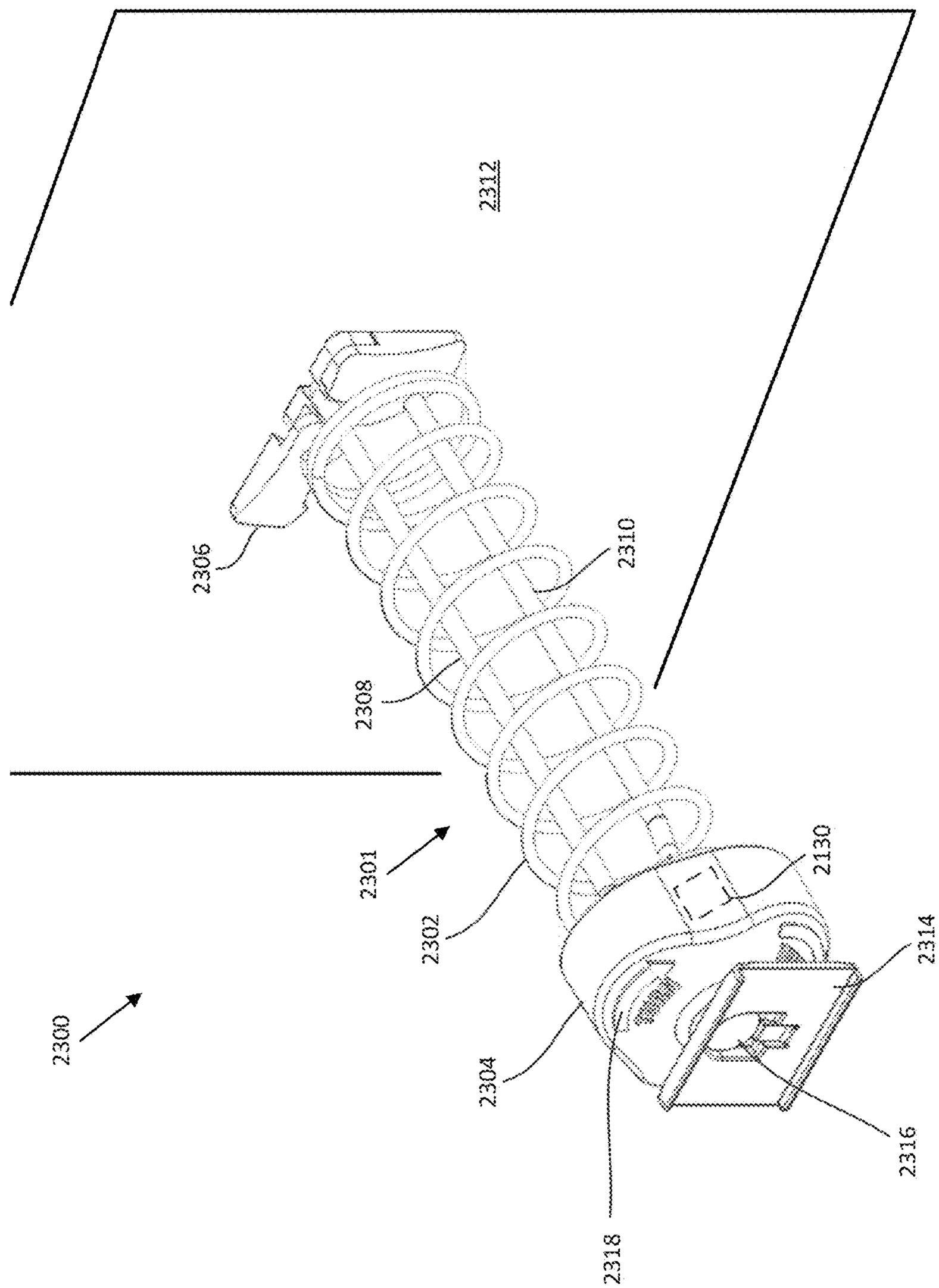

FIG 23

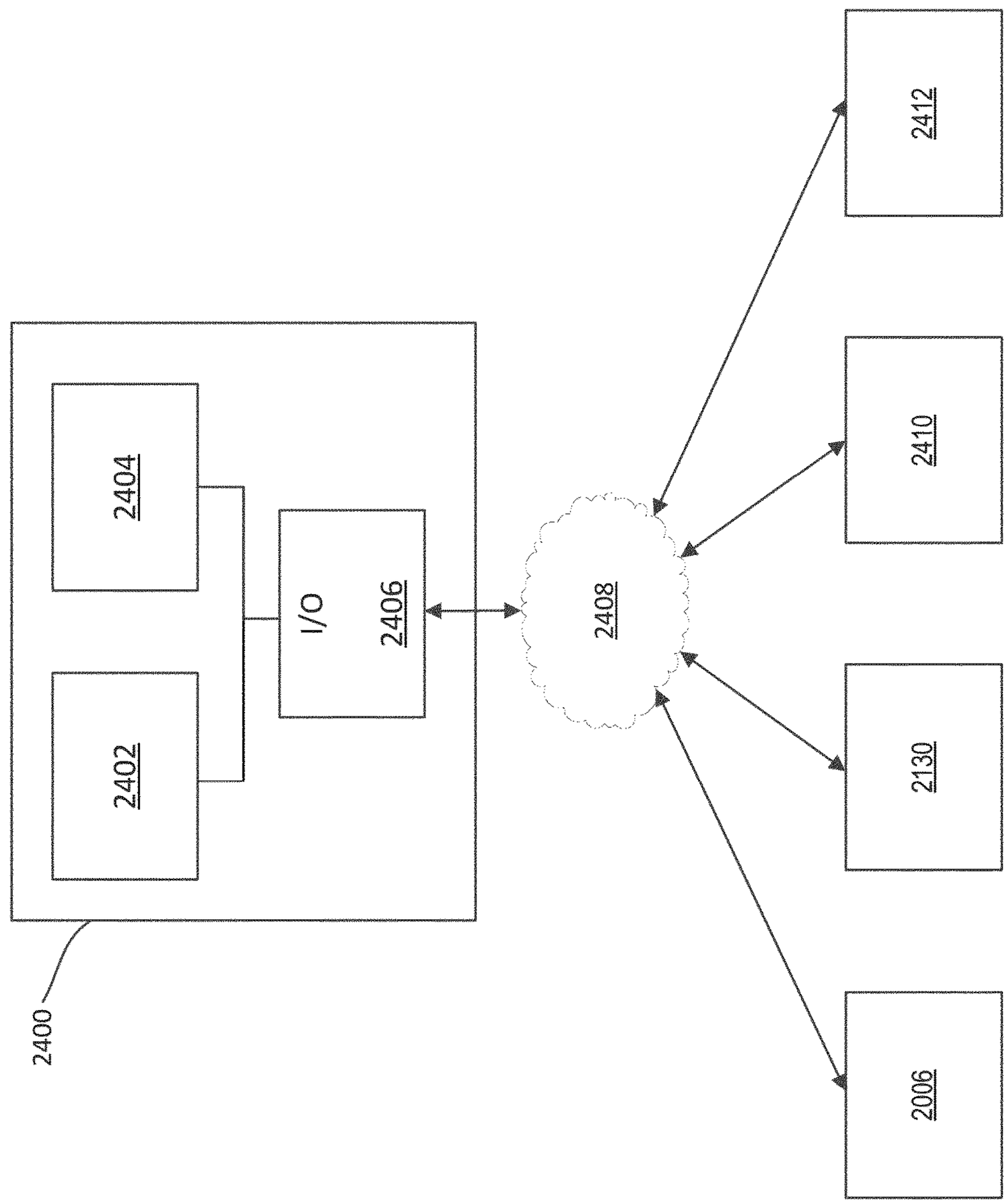

FIG 24

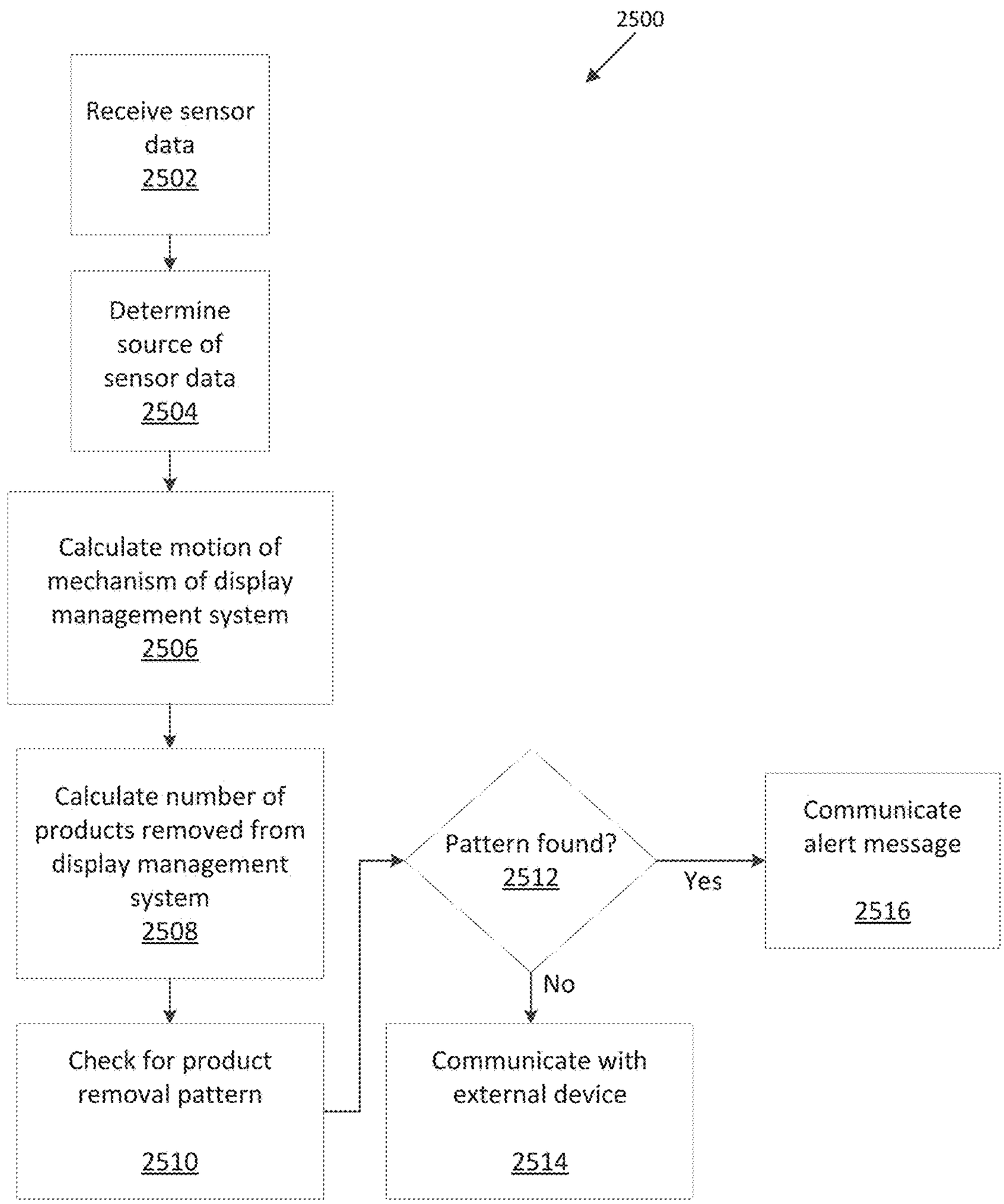
2500
Receive sensor data 2502
Determine source of sensor data 2504
Calculate motion of mechanism of display management system 2506
Calculate number of products removed from display management system 2508
Check for product removal pattern 2510
Pattern found? 2512
Yes
No
Communicate alert message 2516
Communicate with external device 2514

FIG 25

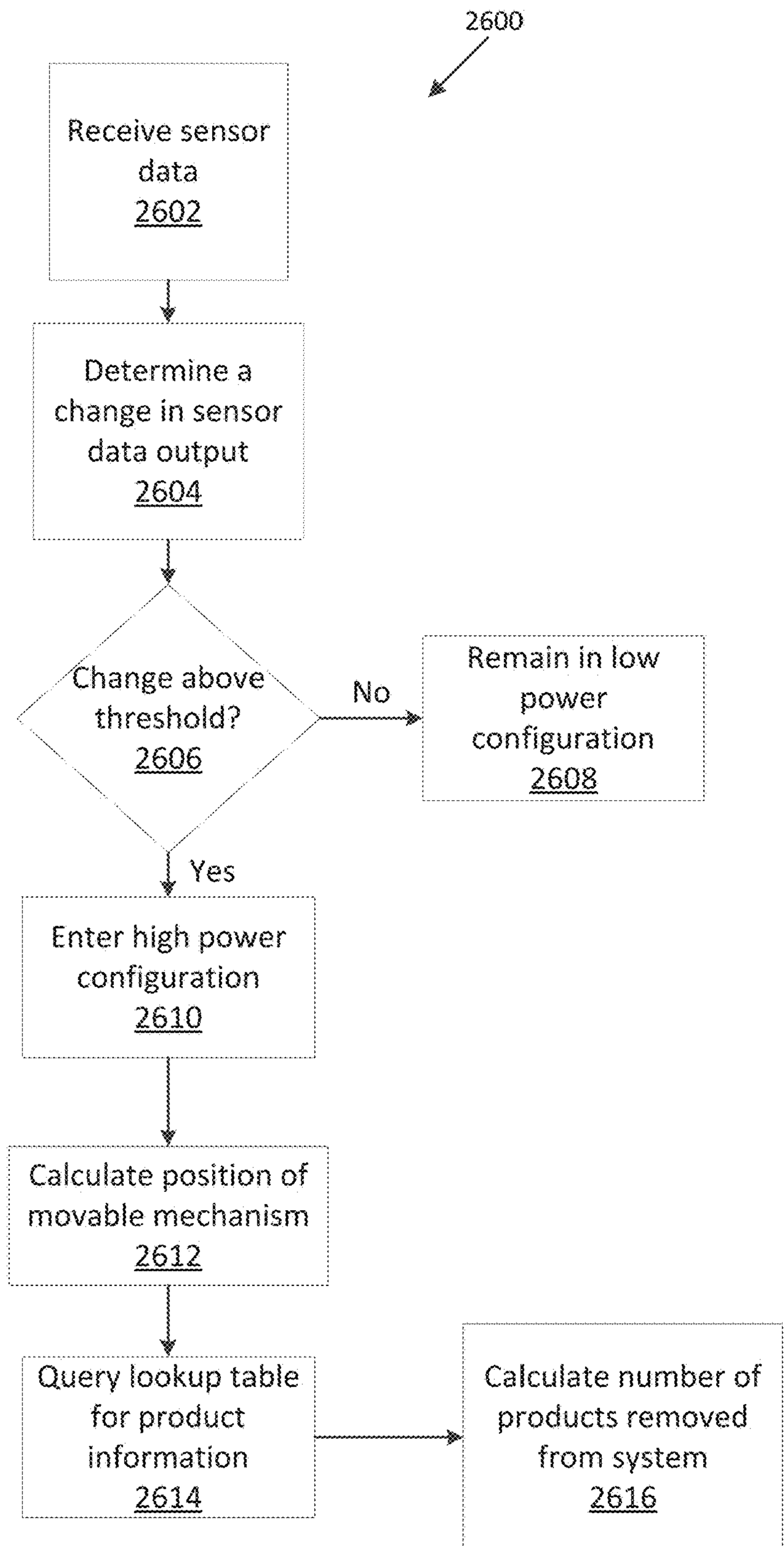
2600
Receive sensor data 2602
Determine a change in sensor data output 2604
Change above threshold? 2606
No
Remain in low power configuration 2608
Yes
Enter high power configuration 2610
Calculate position of movable mechanism 2612
Query lookup table for product information 2614
Calculate number of products removed from system 2616

FIG 26

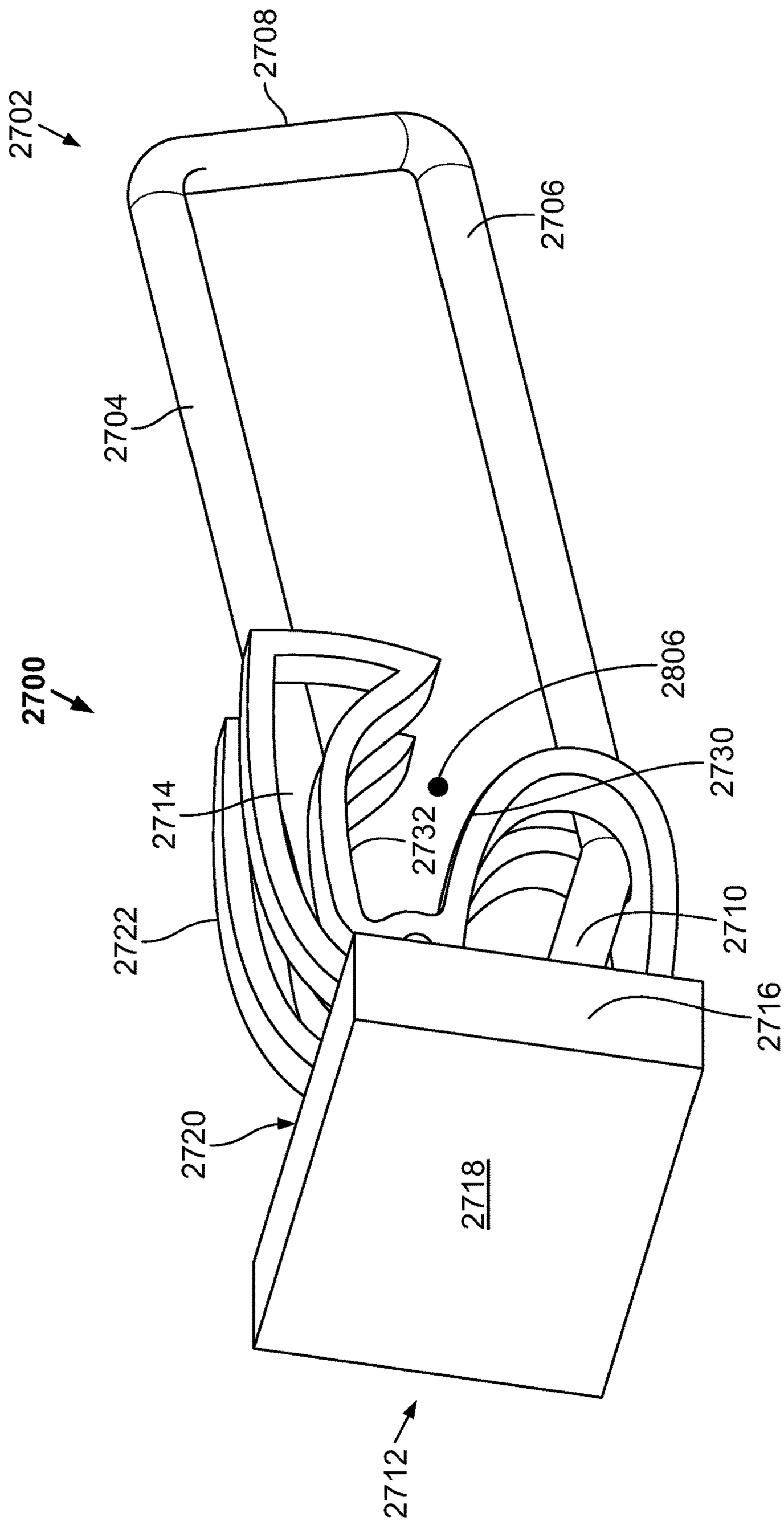
2702
2708
2706
2704
2700
2806
2730
2714
2732
2710
2722
2716
2720
2718
2712

FIG 27

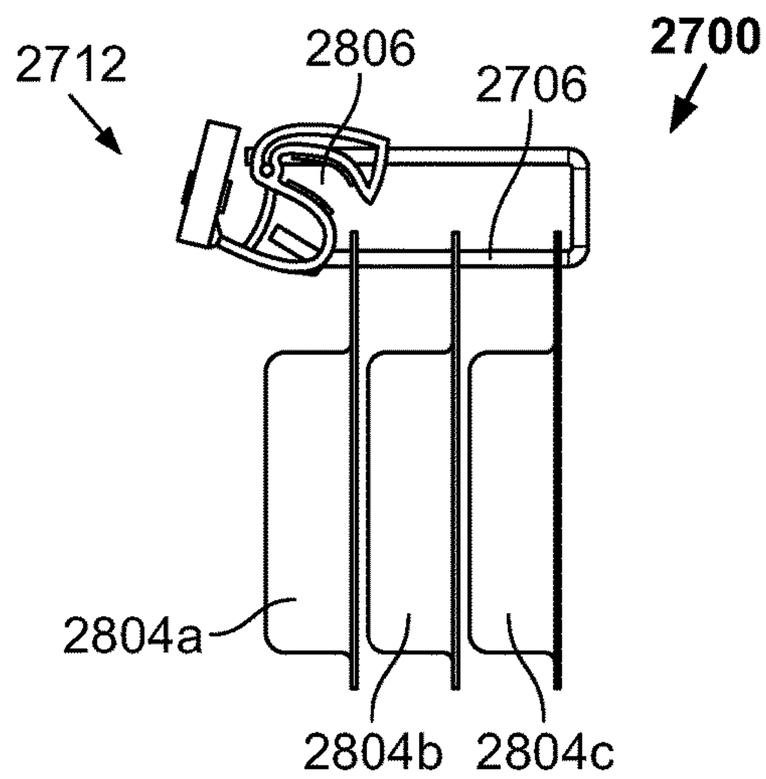

FIG 28A

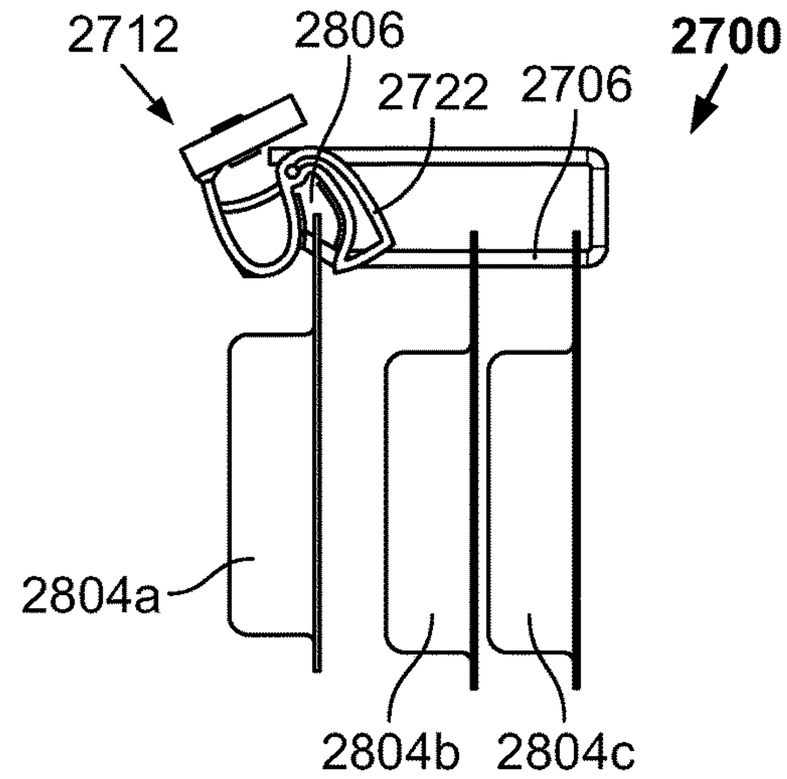

FIG 28B

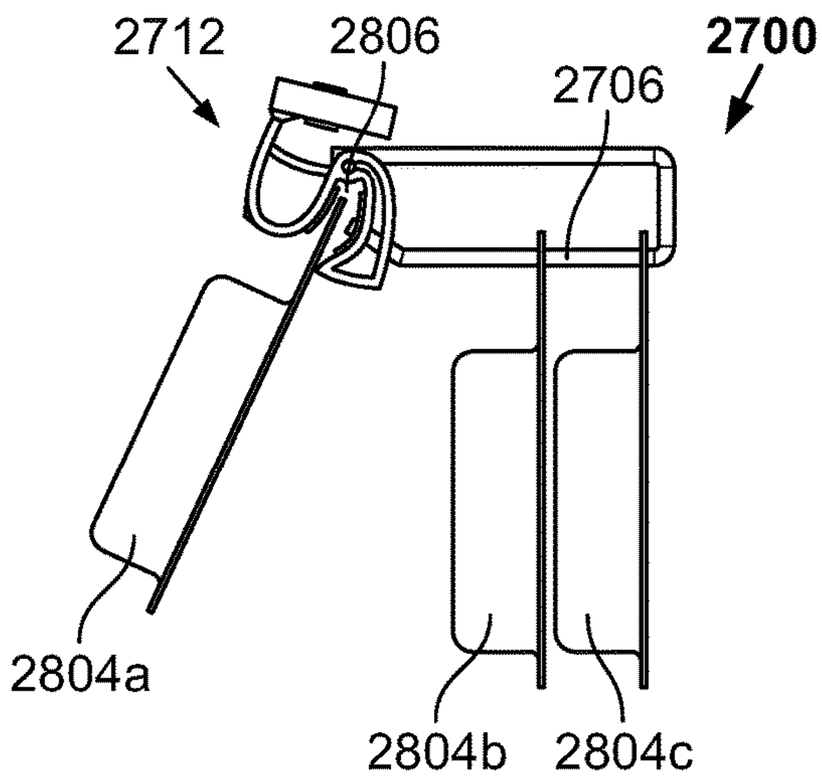

FIG 28C

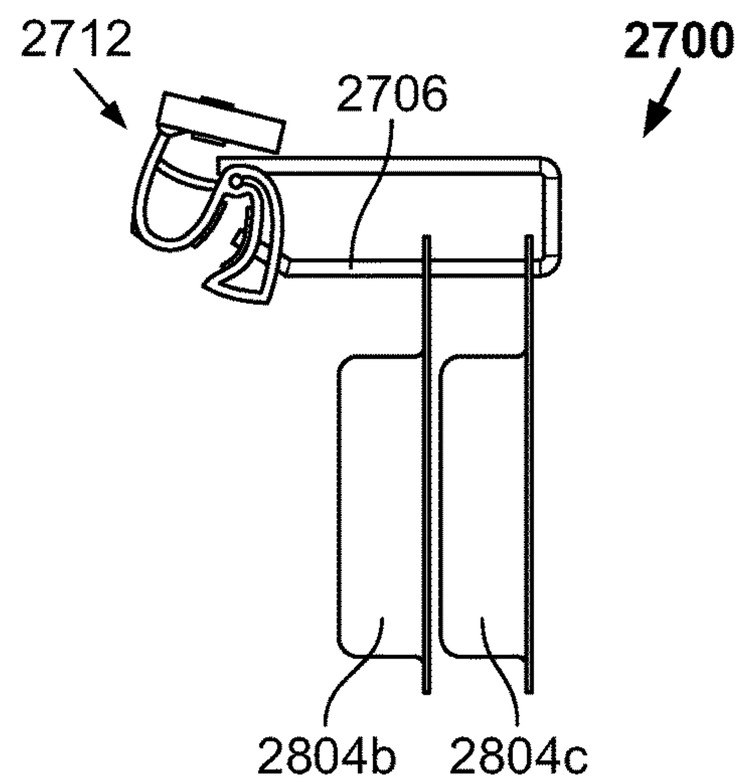

FIG 28D

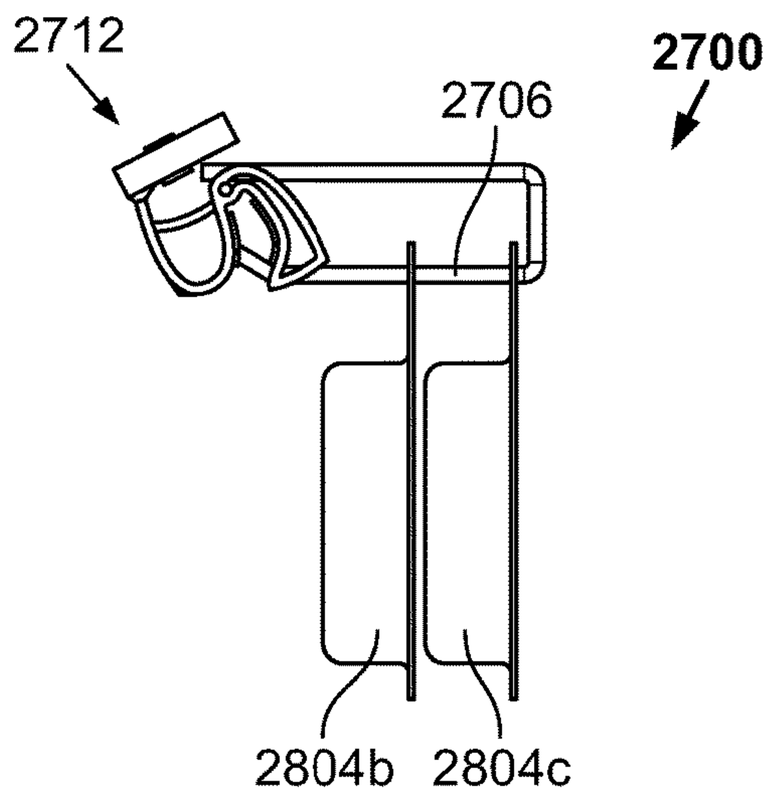

FIG 28E

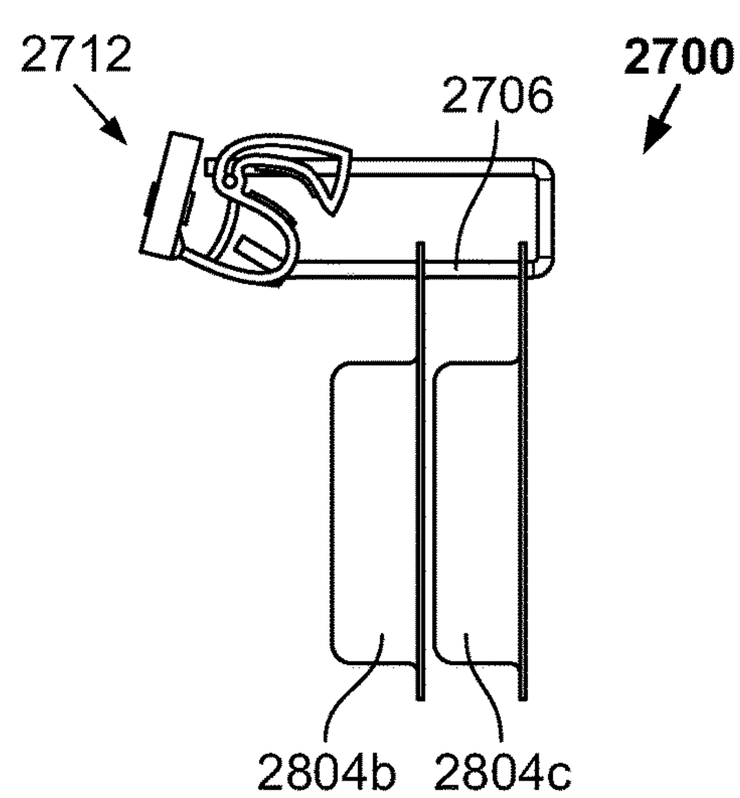

FIG 28F

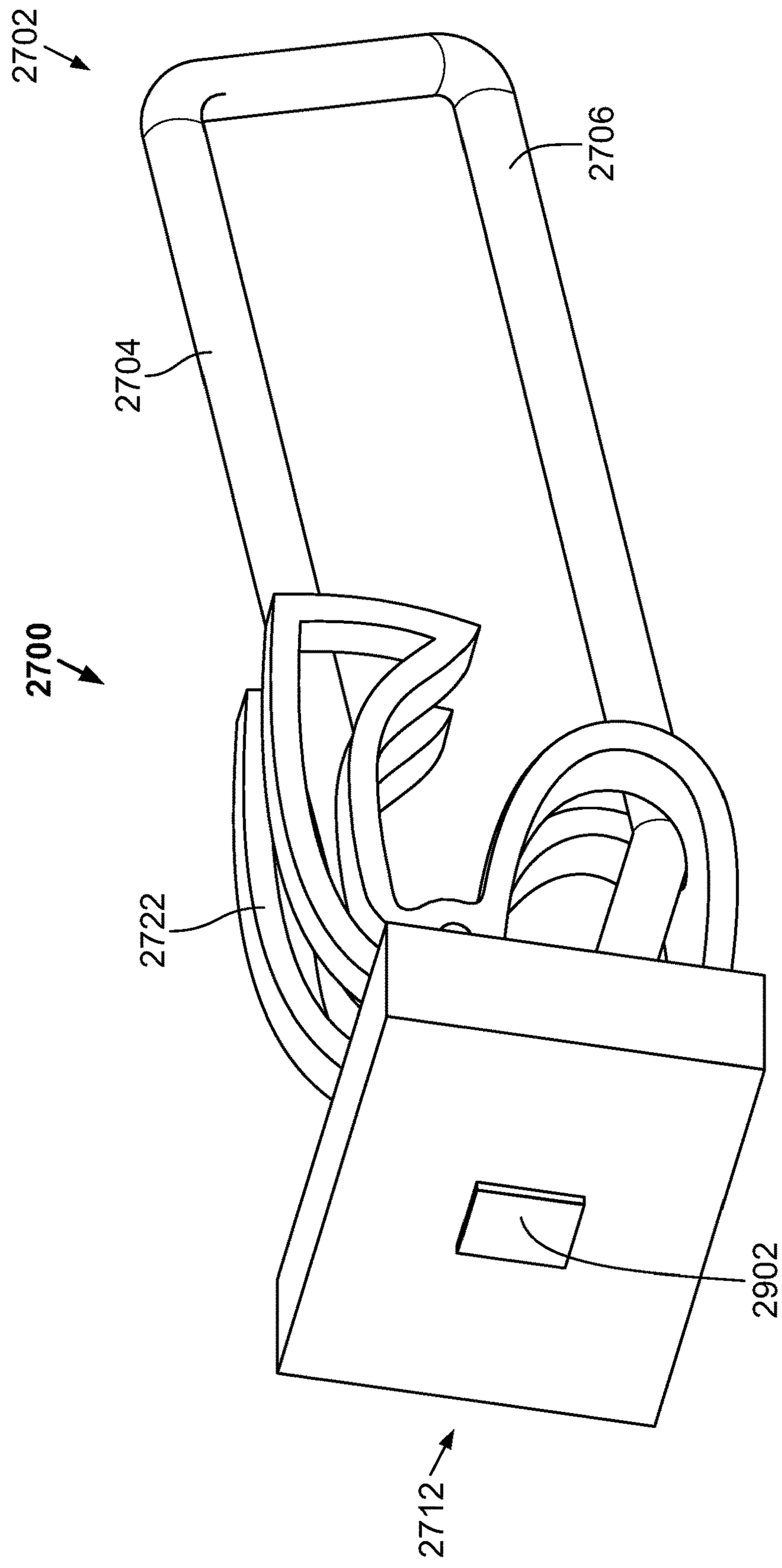

FIG 29

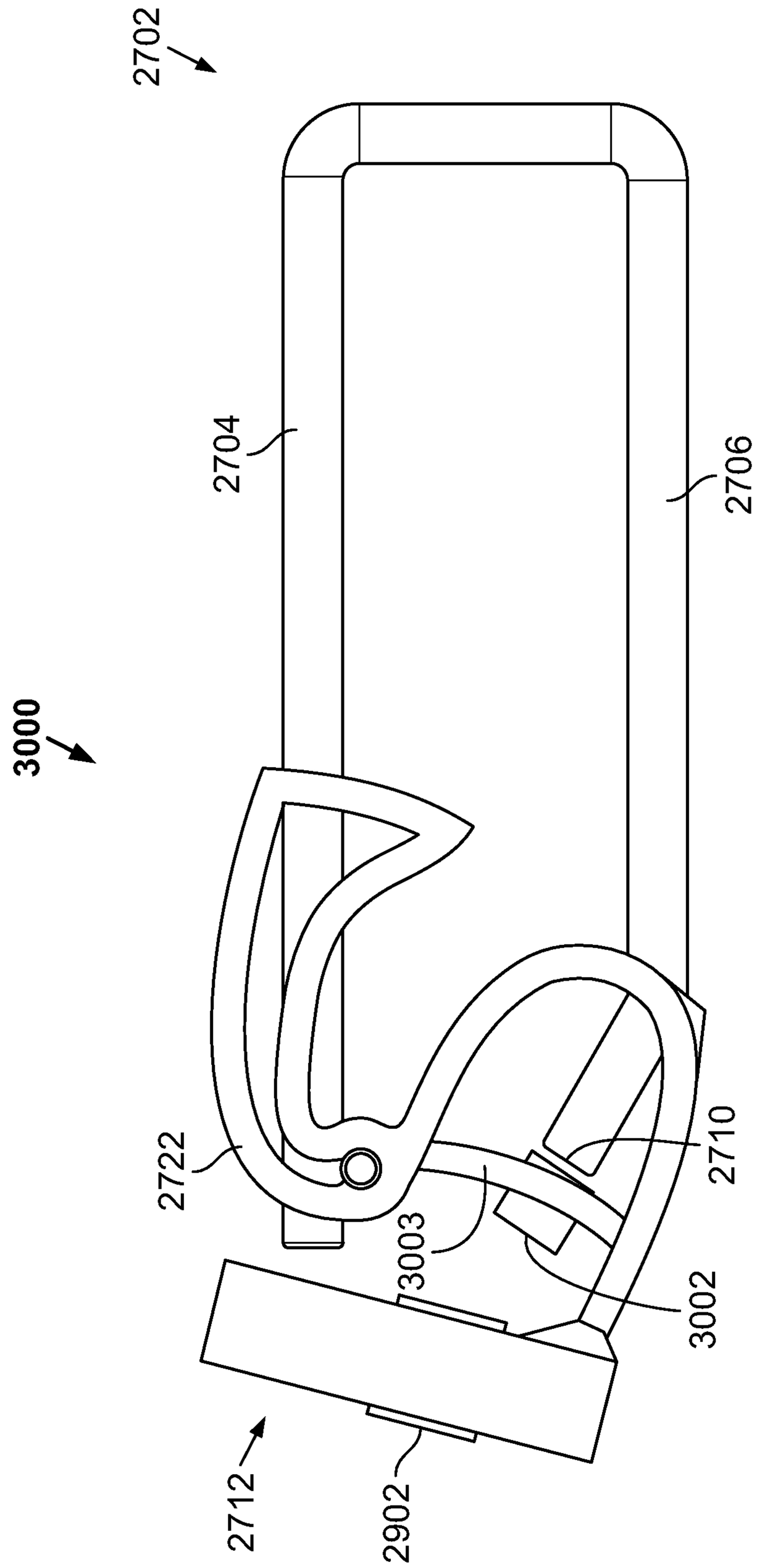

FIG 30

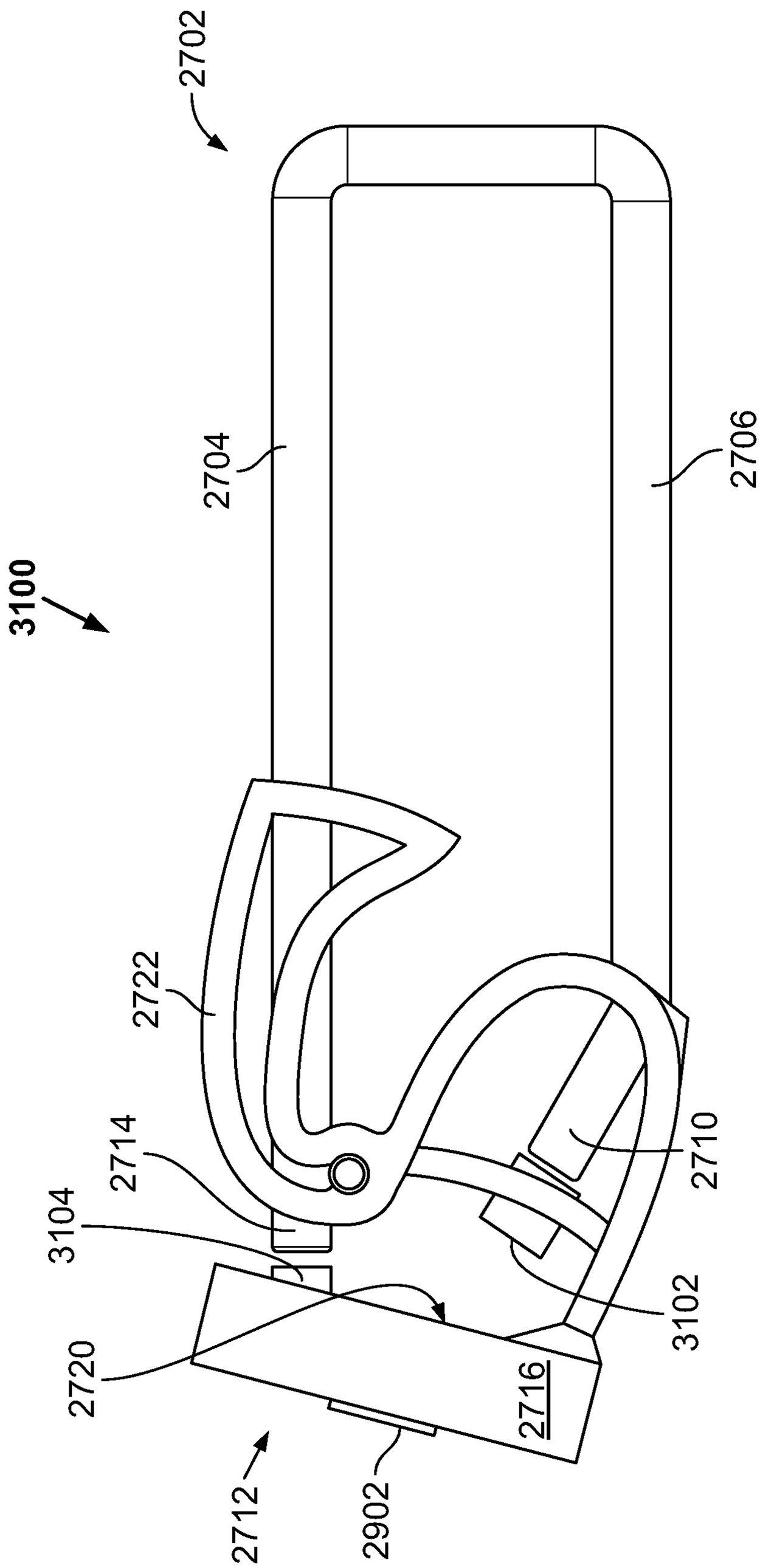
2702
2704
2706
3100
2722
2714
3104
2720
2712
2902
2716
3102
2710

FIG 31

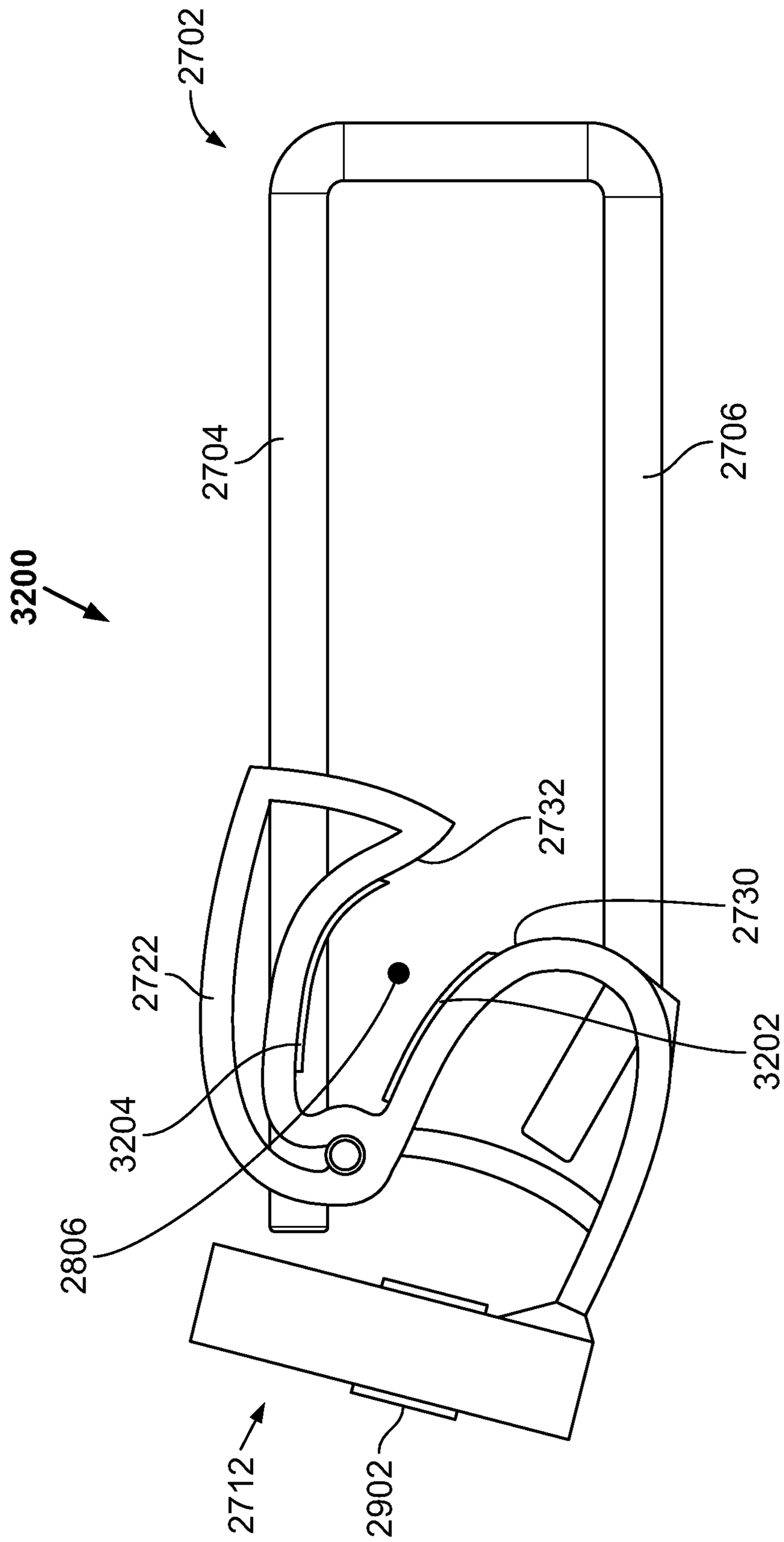

FIG 32

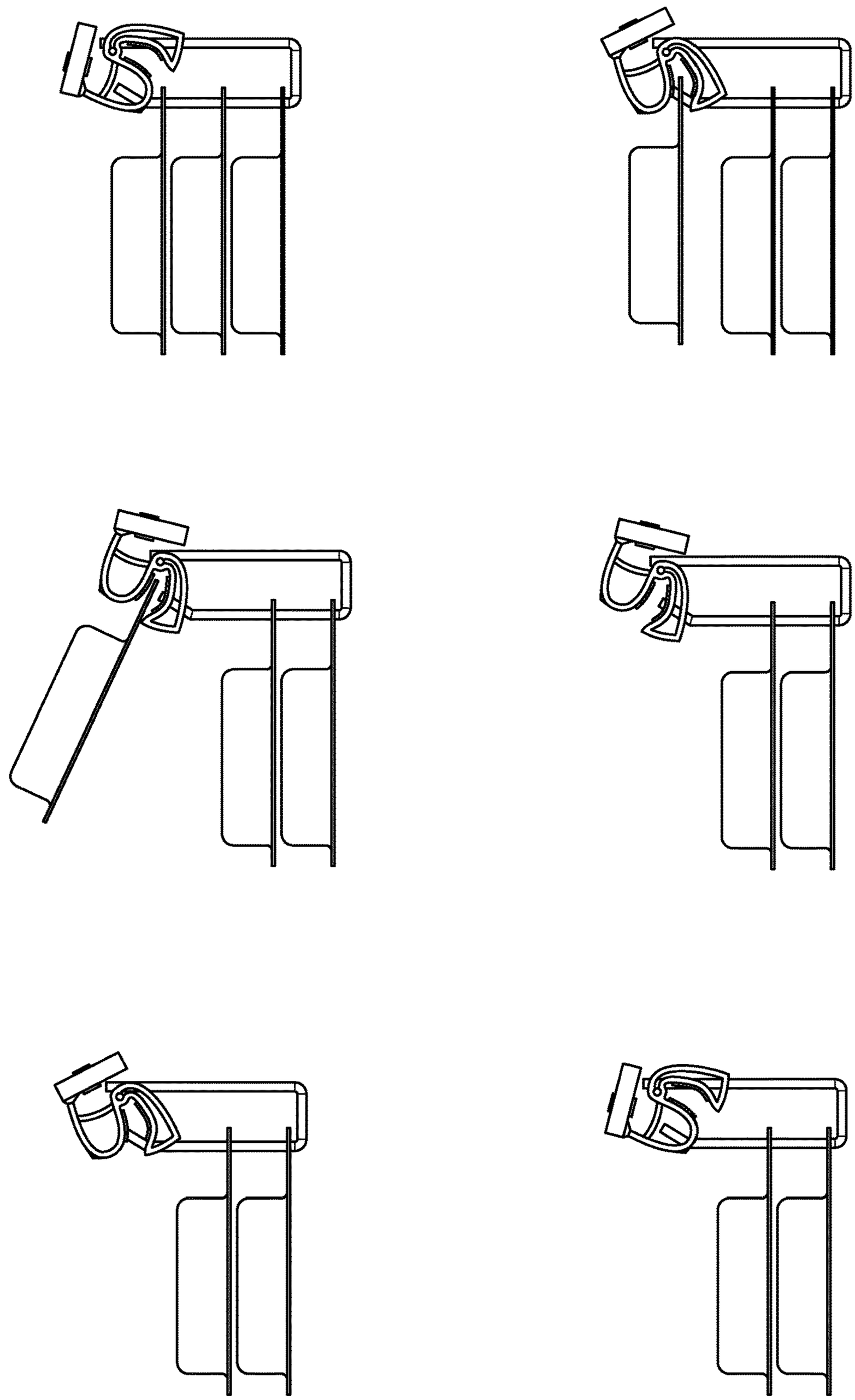

FIG 32A

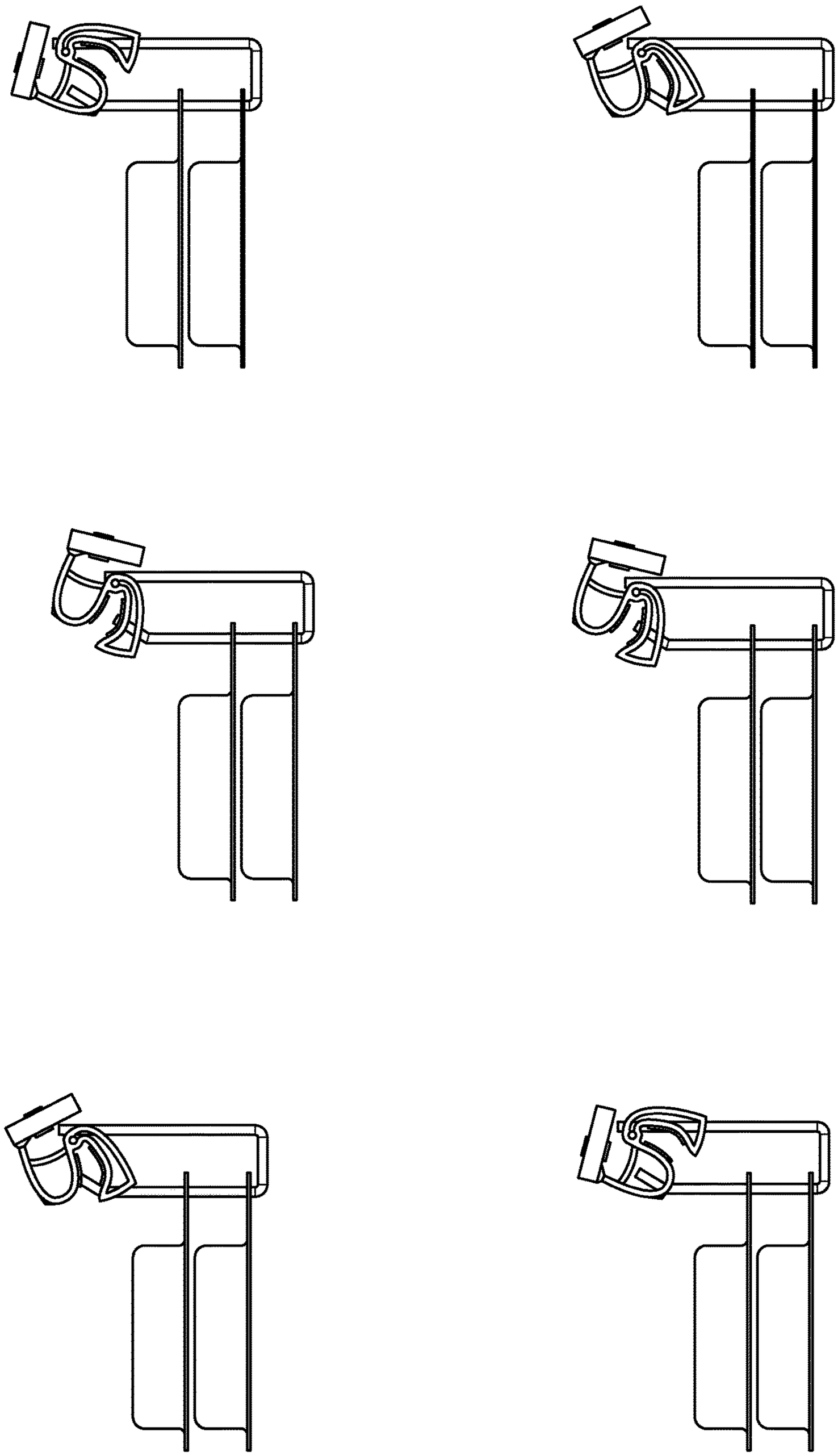

FIG 32B

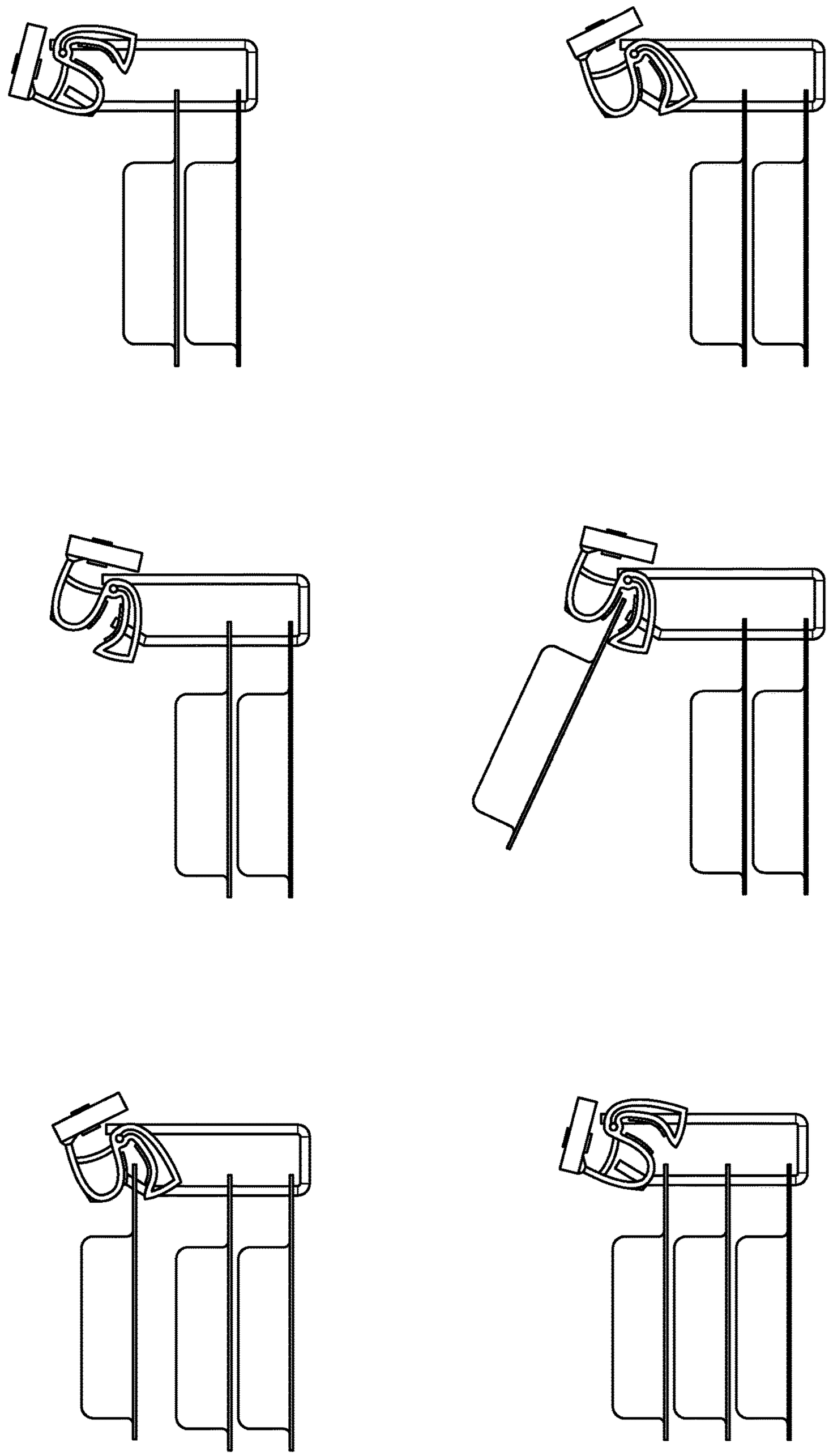

FIG 32C

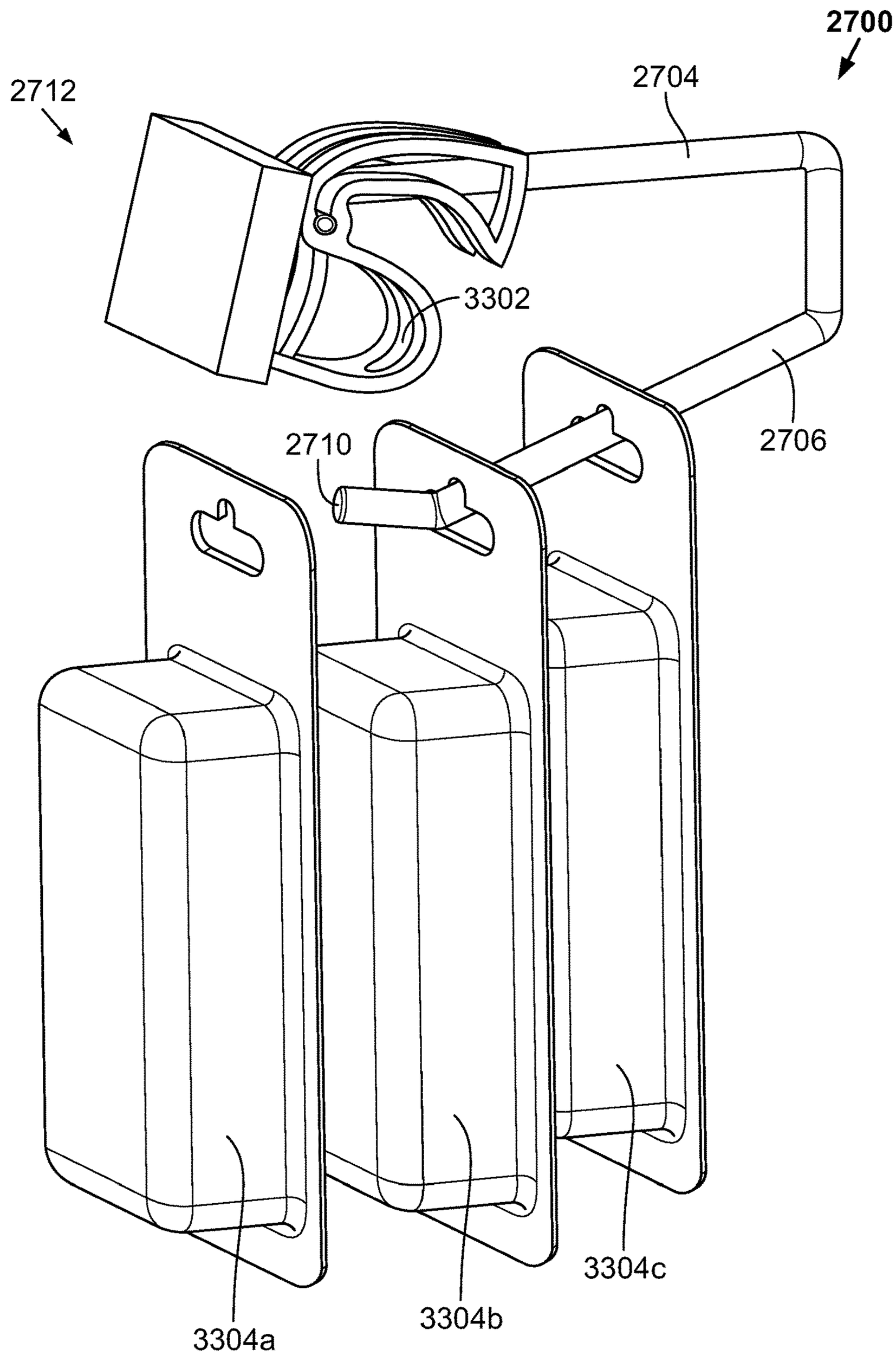

FIG 33

SYSTEM FOR INVENTORY MANAGEMENT

CROSS REFERENCE TO RELATED APPLICATIONS

This application claims priority to U.S. Provisional Application No. 62/078,809, filed 12 Nov. 2014. This application also relates to U.S. application Ser. No. 14/308,989, filed 19 Jun. 2014, which is a divisional of U.S. application Ser. No. 13/194,649, filed Jul. 29, 2011, which claims priority to U.S. Provisional Application No. 61/371,417, filed Aug. 6, 2010 and is a continuation of U.S. application Ser. No. 12/876,919, filed Sep. 7, 2010, which is a continuation-in-part of U.S. application Ser. No. 10/772,010, filed Feb. 3, 2004, now U.S. Pat. No. 7,792,711. Each of the above references is fully incorporated by reference herein.

BACKGROUND

Field

The present disclosure relates to shelving and product display and a system for aiding in determining the inventory on the shelf in a retail store.

Description of Related Art

A major cost in the operation of retail stores relates to inventory management, which includes the tracking and storing of inventory. A significant portion of this cost relates to product inventory management in the selling area of the store. A considerable portion of inventory management cost is the periodic counting of product on the store shelves. This counting is necessary to determine the amount of product on the shelf and to help ensure the shelves are fully stocked.

Historically, the counting of inventory on store shelves was done manually, and the results were recorded on paper. More recently, however, inventory has been counted manually with the use of a small hand-held computer that can be configured to transmit the entered data to a central computer that compiles data and can be programmed to make decisions regarding the purchase of products for restocking the shelves. These recent advances have helped reduce the cost of inventory management; however, counting inventory still requires significant manual labor. It would be beneficial to reduce the amount of manual labor required to count the inventory.

Another significant cost relating to inventory management is product theft. Certain items are relatively small but represent a high value to potential thieves who can either resell the items or use them for other illegitimate purposes, as in the case of certain pharmaceutical products. The losses generated by such thefts have a negative impact on the profitability of retail stores.

Theft can be the result of both customers' and employees' actions and has been difficult to eliminate. Attempts to deter and prevent theft have proven to be only partially effective. For instance, in-store cameras often do not observe the theft clearly enough to catch or prosecute the thief. In addition, in-store security personnel are rarely in the correct position to actually observe a thief in action. As a result, theft continues to be a significant problem and cost in the management of inventory. It would be beneficial to provide aid in monitoring for theft.

Currently, retail stores can track the amount of product sold based on a number of items scanned at the checkout counter. While this ability has proven useful, certain inherent disadvantages result from the use of such a system. One inherent disadvantage is that the scanner only counts the number of products that are legitimately purchased. Therefore, if product is removed from the shelf but not purchased, the store is unable to determine the fact that product has been misplaced or stolen without visual inspection or detection. It would be useful to compare changes in product level on the shelves with the amount of product sold.

A second inherent disadvantage relates to store-run product promotions. A typical promotion will have a product located at the end of an aisle or in some type of promotional location that increase customer awareness of the product. Usually the product is also placed on the shelf in its traditional location so that customers familiar with the product placement of the store can find the product without undue searching. Therefore, customers can obtain the product being promoted in multiple places, and it can be difficult to determine the effectiveness of a particular promotional display, i.e., the effect of a promotional discount offered for the product versus the normal purchasing of the product. It would be beneficial to more accurately determine the effectiveness of in-store promotions.

Another major cost of inventory management is associated with having to maintain more inventory in the store then is actually needed to meet customer demand. As current systems of inventory do not automatically indicate that a shelf is empty, retail stores tend to rely on output measured through the checkout or, alternatively, through visual inspection to determine if additional product needs to be placed on the shelf. In order to ensure the shelves are stocked with product, often more product than is typically needed for a given period of time will be placed on the shelf, sometimes in multiple facings on each shelf. The use of multiple facings tends to take up valuable shelf space that could otherwise be allocated towards additional product choices so as to maximize consumer satisfaction. It would be beneficial to reduce the amount of inventory of a particular product in the retail store.

Methods of minimizing the amount of required shelf space are known. For example, U.S. Pat. No. 6,041,720 to Hardy and U.S. Pat. No. 4,830,201 to Breslow, which are incorporated by reference in their entirety, teach a system for organizing and displaying items on a shelf through the use of a pusher assembly.

BRIEF SUMMARY

In one aspect, this disclosure includes a display management system having a mechanism that may be configured to move in response to a product being removed from the display management system. The display management system may additionally have a sensor that outputs motion data in response to movement of the mechanism. Further, the display management system may have a control circuit that receives the motion data and communicates the motion data to a remote processor if it exceeds a threshold value. Additionally, the display management system may have a non-transitory computer-readable medium comprising computer-executable instructions that may be executed by the remote processor to calculate the current position of the mechanism from the motion data, and calculate the number of products removed from the display management system based on the position of the mechanism.

In another aspect, this disclosure includes a display management system that may have a mechanism configured to move in response to a product being removed from the display management system. The display management system may further have a sensor that outputs motion data in response to movement of the mechanism. Additionally, the display management system may have a transmitter circuit

that transmits the motion data to a remote processor, and a non-transitory computer readable medium comprising computer-executable instructions that may be executed by the remote processor to calculate the current position of the mechanism and calculate a product removal pattern.

In yet another aspect, this disclosure includes a non-transitory computer-readable medium comprising computer-executable instructions that when executed by a processor may be configured to receive sensor data from sensors associated with one or more display management systems. Additionally, the sensor data may be used to calculate a number of products removed from the one or more display management system, and may be used to detect product removal pattern based on the number of products removed from the display management systems.

In another aspect, this disclosure includes a display management system that has a support structure with an upper rail connected to a lower rail, the lower rail configured to support a hanging product. The display management system may have a label holder that is pivotably coupled to one end of the upper rail, with the label holder pivoting between a closed position and an open position. The label holder may further have a display plate that has a front surface for receiving a display label, and a back surface. Additionally, the label holder may have an arm structure extending from the back surface of the display plate, with the arm structure having a geometry that prevents more than one product from being removed from, or added to, the lower rail each time the label holder is pivoted from the closed position to the open position.

In another aspect, this disclosure relates to a display management system that has a support structure with an upper rail coupled to a lower rail, with the lower rail configured to support a hanging product. The display management system may have a label holder that is pivotably coupled to one end of the upper rail, with the label holder pivoting between a closed position and an open position. The label holder may also include a display plate that has a front surface configured to receive a display label, and a back surface. Additionally, the label holder may have a sensor device and a non-transitory computer-readable medium that has computer-executable instructions. When executed by a processor, the computer-executable instructions may receive data from the sensor device, and calculate a product removal pattern from the display management system.

This Summary is provided to introduce a selection of concepts in a simplified form that are further described below in the Detailed Description. The Summary is not intended to identify key features or essential features of the claimed subject matter, nor is it intended to be used to limit the scope of the claimed subject matter.

BRIEF DESCRIPTION OF THE DRAWINGS

Several embodiments of the present invention are illustrated by way of example, but are not limited to the accompanying figures in which like reference numerals indicate similar elements and in which:

FIG. **1***a* illustrates an isometric view of an embodiment of the present invention including a pusher assembly and a sensor assembly.

FIG. **1***b* illustrates another isometric view of an embodiment of the present invention including a pusher assembly and a sensor assembly

FIG. **2***a* illustrates a schematic view of an embodiment of the sensor assembly used with the present invention.

FIG. **2***b* illustrates a schematic view of an alternative embodiment of a sensor assembly used with the present invention.

FIG. **2***c* illustrates a schematic view of another alternative embodiment of a sensor assembly used with the present invention.

FIG. **3** illustrates a schematic view of an embodiment of the present invention, including an antenna, an access point and a store computer.

FIG. **4** illustrates a schematic view of an embodiment of the present invention, including an access point, a store computer and a security camera.

FIG. **5** illustrates a flow chart demonstrating a method of providing data from the indicia strip to a store computer.

FIG. **6** illustrates a flow chart demonstrating a method of determining the amount of product on the shelf via a query from store computer.

FIG. **7** illustrates a flow chart demonstrating a method of updating the association of particular product with a particular shelf location.

FIG. **8** illustrates a flow chart demonstrating an alternative method of updating the association of a particular product with a particular shelf location.

FIG. **9** illustrates an isometric view of an alternative embodiment of the present invention.

FIG. **10** illustrates a partially exploded view of an alternative embodiment of the present invention.

FIG. **11** illustrate an isometric view of an alternative embodiment of the present invention.

FIG. **12** illustrates an isometric view of another alternative embodiment of the present invention.

FIG. **13** illustrates an isometric view of yet another alternative embodiment of the present invention.

FIG. **14** illustrates an isometric view of yet another alternative embodiment of the present invention.

FIG. **15***a* illustrates an isometric view of yet another alternative embodiment of the present invention.

FIG. **15***b* illustrates a schematic of a beam, a fixed mirror, and a pusher assembly in accordance with the embodiment illustrated in FIG. **15***a*.

FIG. **16***a* illustrates an isometric view of yet another alternative embodiment of the present invention.

FIG. **16***b* illustrates a schematic of a beam, a fixed mirror, and a pusher assembly in accordance with the embodiment illustrated in FIG. **16***a*.

FIG. **17***a* illustrates an isometric view of yet another alternative embodiment of the present invention.

FIG. **17***b* illustrates a schematic of a beam, a fixed mirror, and a pusher assembly in accordance with the embodiment illustrated in FIG. **17***a*.

FIGS. **18**A-**18**C depict an alternative implementation of a display management system, according to one or more aspects described herein.

FIGS. **19**A and **19**B schematically depict plan views of an alternative implementation of a display management system, according to one or more aspects described herein.

FIG. **20**A schematically depicts a capacitive sensor, according to one or more aspects described herein.

FIG. **20**B schematically depicts a control circuit, according to one or more aspects described herein.

FIGS. **21**A and **21**B depict an alternative implementation of a display management system, according to one or more aspects described herein.

FIG. **22**A schematically depicts an integrated accelerometer device, according to one or more aspects described herein.

FIG. **22**B schematically depicts an integrated accelerometer device in communication with a control circuit, according to one or more aspects described herein.

FIG. **23** depicts an alternative implementation of a display management system, according to one or more aspects described herein.

FIG. **24** schematically depicts a sensor network configured to implement one or more inventory management, security, and/or recognition functions in combination with one or more display management systems, according to one or more aspects described herein.

FIG. **25** schematically depicts a flowchart diagram of a process that may be executed by a display management system controller device to determine a number of products removed from a sensor-equipped display management system, according to one or more aspects described herein.

FIG. **26** is a flowchart diagram of a process for calculation of a number of products removed from a display management system, according to one or more aspects described herein.

FIG. **27** depicts another implementation of a display management system, according to one or more aspects described herein, according to one or more aspects described herein.

FIGS. **28**A-**28**F depict a sequence of movements of a label holder as a product is removed from the display management system of FIG. **27**, according to one or more aspects described herein.

FIG. **29** schematically depicts the display management system of FIG. **27**, including a label holder rotation sensor device, according to one or more aspects described herein.

FIG. **30** schematically depicts another implementation of a display management system, according to one or more aspects described herein.

FIG. **31** schematically depicts another implementation of a display management system, according to one or more aspects described herein.

FIG. **32** schematically depicts another implementation of a display management system, according to one or more aspects described herein.

FIGS. **32**A-**32**C schematically depict a product-removal event, a non-removal event, and a product-stocking event, according to one or more aspects described herein.

FIG. **33** schematically depicts another view of the display management system of FIG. **27**, according to one or more aspects described herein.

Before the embodiments of the invention are explained in detail, it is to be understood that the invention is not limited in its application to the details of construction and the arrangement of the components set forth in the following description or illustrated in the drawings. The invention is capable of other embodiments and of being practiced or being carried out in various ways. Also, it is to be understood that the phraseology and terminology used herein are for the purpose of description and should not be regarded as limiting. The use of "including" and "comprising" and variations thereof is meant to encompass the items listed thereafter and equivalents thereof as well as additional items and equivalents thereof.

DETAILED DESCRIPTION

The present disclosure may be used with the shelf and pusher assembly system described in either U.S. Pat. No. 6,041,720 to Hardy or U.S. Pat. No. 4,830,201 to Breslow. The present disclosure may also be used with other pusher assemblies and shelf configurations known in the art.

FIG. **1***a* illustrates an embodiment of the present disclosure. A shelf wall **1** is configured to support a shelf **5**. The shelf **5** has a front side **6**, the front side **6** typically facing the aisle where customers walk when shopping, and a rear side **7**. Mounted on the shelf is a pusher assembly **15**. As depicted, the pusher assembly **15** includes a biasing mechanism such as a sheet coil spring **20** containing an indicia strip **21**. The pusher assembly **15** further includes an integral divider wall **22** and a floor section **23** on one side of the divider wall **22** and a floor section **24** on the other side of the divider wall **22**. The sheet coil spring **20** is operatively connected to a pusher **25** and can be used to urge the pusher **25**, and the associated product, toward the front side **6** of the shelf **5**. The pusher assembly **15** may be modular and can include a divider wall or an additional floor section that fit or mate in place.

As depicted FIG. **1***a*, a sensor assembly **30** can be mounted to the underside of the floor **24** over which the pusher **25** travels or to the shelf **5** and is configured to read the indicia strip **21**. The sensor assembly **30** can be located at any position along the floor **24** and preferably near the coil spring **20**. The indicia strip **21** is configured to provide a pattern that includes a representation associated with the position of the pusher **25**. Thus, when the pusher **25** is moved as far as possible towards the rear side **7** (i.e. the facing is full of product), the sensor assembly **30** can scan a representation on the indicia strip **21** that reflects the pusher **25** being in that position.

The indicia strip **21** is depicted in FIG. **1***a* as a strip mounted on the sheet coil spring **20**. The indicia strip **21** can be printed on a paper that can be attached to the coil spring **20**, and can be black on white, white on black, or some other colors in a known manner. Alternatively, the indicia strip **21** can be printed or acid etched or laser etched, depending on the sensor assembly **30** used to read the indicia strip **21**, in a known manner. Moreover, the indicia strip **21** can be separate from the coil spring **20**. In this embodiment, the indicia strip **21** can be mounted alongside or adjacent to the coil spring **20**.

The representations in the pattern contained on the indicia strip **21** can be optically readable or can be read based on other methods, including but not limited to passive variable capacitance, inductance, resistance, or magnetic, or active signal detection.

FIG. **1***b* depicts an alternative embodiment of the invention with the sensor assembly **30** mounted on the front side of the pusher **25**, the sensor assembly **30** configured to read the indicia strip **21**. In an alternative embodiment, the sensor assembly **30** could be mounted behind the pusher **25**. Depending on the location of the coil spring **20**, the sensor assembly **30** can be mounted in different places. Preferably, the sensor assembly **30** will be mounted in such a manner so as to avoid direct contact with the product on the shelf so as to minimize damage to the sensor assembly **30**.

In another alternative embodiment, the sensor assembly **30** may be mounted within or on the pusher **25** and configured to read the indicia strip **21**. In this embodiment, the indicia strip **21** is not mounted to or part of the coil spring; rather, the indicia strip **21** may be positioned along the top of the floor **24** or along the underside of the floor **24** and is read by the sensor assembly **30**. In one aspect of this embodiment, the indicia strip **21** is of the type that may have variable magnetic or capacitive characteristics. The sensor assembly **30** may incorporate an analog oscillator whose frequency is determined by the magnetism or capacitance of the indicia strip **21** at the particular position of the pusher **25**. The oscillator can directly modulate the radio frequency

signal and send that signal to a central access point, as discussed below. The central access point can then demodulate the signal and use the signal to determine the position of the pusher **25**.

For a black/white printed indicia strip **21**, an optical infrared or visible light LED retro-reflective sensor array can be used. In an embodiment, the indicia strip **21** pattern containing the various representations could be 6 bits wide. In an alternative embodiment, depending on the width of the shelf and the desired precision, the pattern on the indicia strip could be more than 6 bits wide.

In yet another alternative embodiment, the indicia strip **21** could be less than 6 bits wide. Reducing the number of bits on the indicia strip **21** reduces the precision regarding the position of the pusher **25** but has the advantage of potentially avoiding the need to determine the dimension of the product. An embodiment with a reduced number of bits will be discussed below. The indicia strip will preferably include at least two representations so that the two representations can be used to reflect at least two positions of the pusher.

Depending on the indicia strip **21** and the sensor assembly **30**, the number of measurable positions of the pusher **25** can be varied. For example, a configuration of a 6 bit wide pattern on an indicia strip **21** with a sensor assembly **30** that can scan 6 bits could scan at least 64 representations associated with 64 positions of the pusher **25**. The representations in the pattern on the indicia strip **21** can be in many symbologies but a Gray Code provides that only one bit will change in each increment of movement, reducing potential errors. The sensor assembly **30** and the indicia strip **21** can be configured depending on the distance of travel of the pusher **25** and the expected size of the product.

In an embodiment, the coil spring **20** has a width of about 1 inch and the indicia strip **21** covers approximately 80% of the width of the coil spring **20**. One skilled in the art will understand that other widths of the coil spring **20**, and other dimensions of the indicia strip **21** are possible with the invention.

In an embodiment, the number of products on the shelf could be measured by the number of measurable positions of pusher **25**. In such an embodiment, the position of the pusher **25** could be used to determine the amount of product on the shelf without the need to manually count the product. In an alternative embodiment, the number of measurable positions could exceed the number of products that can be placed in a facing. In this alternative embodiment, it would be preferable to have the number of measurable positions be an integer multiple of the number of products for ease of calculating the amount of product on the shelf. Increasing the number of measurable positions can therefore improve the ability of the system to precisely calculate the amount of product in a facing. This can become more important when a product package is unusually thin and therefore the incremental movement of the pusher **25** from one code to the next becomes a large percentage of the thickness of each product package that it is pushing.

Thus, as different products have different dimensions, a configuration of the sensor assembly **30** and indicia strip **21** might be desired with an increased number of measurable positions. For example, a configuration where 256 positions of the pusher **25** are measured might be desirable. Such a configuration could be used to determine the actual number of product on the shelf for a wide variety of product dimensions.

In an alternative embodiment, the sensor assembly **30** and indicia strip **21** can be configured to provide a decreased number of measurable positions. In an embodiment, four positions of the pusher **25** are measurable. In such a configuration, the shelf would provide information regarding how full the shelf was but would not provide the actual quantity of items on the shelf (assuming that 4 products would not fill the facing). This configuration could be useful in providing an automatic notification that a shelf was running out of product and needed to be restocked without the need to determine the product dimensions.

FIG. **2***a* depicts a schematic of an embodiment of the sensor assembly **30**. A printed circuit board ("PCB") **35** is configured to support a sensor **50**, the sensor **50** being compatible with the chosen type of indicia strip **21**. A controller **55** is mounted to the PCB **35** and is configured to control the sensor **50** and transmit signals regarding the position of the pusher **25** via an antenna **65**. The controller **55** can be configured to actuate the sensor **50** based on an input from the timing device **70**. The timing device **70** can include, but is not limited to, a low power interval timer or a real time clock and is configured to provide information relating to the passage of time.

For a black/white printed indicia strip **21**, the sensor **50** can include, but is not limited to, an optical infrared or visible light LED retro-reflective sensor. Preferably, for a 6 bit wide pattern, a linear array of 6 emitters/sensors will be used where one emitter/sensor is aligned with each bit position printed on the indicia strip **21**. In an embodiment, the sensor **50** is positioned approximately 0.1 inches from the surface of the printed strip mounted on the indicia strip **21**. As each emitter/sensor pair illuminates its bit position, a binary code can be assembled by the controller **55** that corresponds to the representation on the indicia strip **21**, the representation associated with a position of the pusher **25**.

Regardless of how the position of the pusher **25** is determined, the controller **55** generates a pusher code that represents the position of the pusher **25**. The pusher code can be in digital or analog form and reflects the position of the pusher **25**. In addition, the pusher code can be processed data or unprocessed data. Thus, the pusher code can be, but is not limited to, the scanned representation or a controller processed representation. Alternatively, the pusher code can be some other data that reflects the relative position of the pusher **25**.

The controller **55** is powered by a power source **75**. The power source **75** can be, but is not limited to, a long life battery, a wired power supply, or a solar panel. As can be appreciated, the type of power supply will have an impact on the functionality of the sensor assembly **30**. If the power source **75** is a long life battery, a system configuration designed to utilize less energy will be preferable to avoid the need to change the battery on a frequent basis. If the power source **75** is a wired power source, the sensor **50** can be used more frequently without the need to replenish the power supply and the sensor assembly **30** can even be configured to provide real time information.

The controller **55** can be manufactured with a unique serial number. In this embodiment, each pusher **25** would be associated with a unique serial number or identity code. Alternatively, each indicia strip **21** can include a unique identity code along with the representation associated with the position of the pusher **25**. Encoding the indicia strip **21** with a unique identity code can reduce the complexity of the controller **55** but typically will result in increased complexity of the sensor **50**. Regardless, when the information is transmitted from the sensor assembly **30**, the information may include an identity code and the pusher code representative of the pusher **25** position. In addition, information

such as time of sending and the status of the circuitry or the status of the power source may also be transmitted.

FIG. **2***b* illustrates a schematic of an alternative embodiment of a sensor assembly **130**. A PCB **135** has a power management circuit **148** configured to minimize use of power. The power management circuit **148** provides power to a sensor **150**, a controller **155** and associated memory **156**. The memory **156** can be volatile type memory, such as dynamic random access memory, but preferably the memory is non-volatile type memory, such as flash memory, so as to minimize power consumption. As depicted, the power management circuit **148** also provides power to a communication control **157**. The power management circuit **148** can also provide power to a timing device **170**. As depicted, the power management circuit **148** is powered by a power source **175**.

In this embodiment, an input signal is provided to the controller **155**. The input signal can be a signal generated by the timing device **170** or can be from some other source. The controller **155**, in response, activates the sensor **150** by sending a signal to the power management circuit **148**. The controller **155** receives data from the sensor **150** which is used to form the pusher code representative of the position of the pusher **25**. The controller **155** compares the data scanned by the sensor **150** with the previous data scanned by the sensor **150**, which is data residing in the memory **156**. Depending on the configuration of the system, if the data scanned by the sensor **150** is the same as the previous scanned data, the controller **155** can be configured to wait until the end of the next interval of the timer. If the data scanned by the sensor **150** is different, the controller **155** can then activate the communication control **157** and provide the pusher code to the communication control **157** for transmission. The communication control **157** can then transmit the pusher code for further processing. The terms "transmit" and "transmission," unless otherwise specified, include sending of information over a wire or via a wireless system and can be direct or indirect (i.e. through a network). If the power source **175** is not a wired power supply, however, it is preferable to use a method of communication that consumes relatively little power.

FIG. **2***c* illustrates a schematic of an alternative embodiment of a sensor assembly **230**. A PCB **235** is configured to support a sensor **250** and a controller **255**. The controller **255** is powered by a power source **275** and is configured to control the sensor **250** and has integrated functionality, including but not limited to, time keeping, power management, and communication control. In an alternative embodiment, the controller **255** transmits the data scanned by the sensor **250** without any processing of the data. Thus, in this embodiment the pusher code is the data scanned by the sensor **250**. In another alternative embodiment, the sensor and controller can be integrated together.

FIG. **3** illustrates a possible configuration for providing data regarding the position of the pusher **25** to a processing device, such as a store computer **90**. As depicted, an access point **80** is configured to transmit information to a central access point **85**. The central access point **85** is connected to the store computer **90** and provides the data received from the access point **80** to the store computer **90**. The data sent from the access point **80** is received from antenna **165**, antenna **265** and antenna **365**. The antenna **165** is associated with a particular pusher **25** and sensor assembly **30**, typically via the use of a unique serial number that can be associated with a controller. The antenna **265** and the antenna **365** are also associated with different pushers **25** and sensor assemblies **30**, each with a unique serial number. Alternatively, one or more antennas could be associated with more than one pushers **25**.

In general, the power required to transmit wireless signals increases as the transmission distance increases. Thus, especially with a battery powered controller, the preferred wireless communication configuration will transmit low powered signals over a short distance. As depicted in FIG. **3**, the various antennas **165**, **265** and **365** transmit a wireless signal to the access point **80**, located nearby, thus a low powered transmission is suitable. The access point **80** then re-transmits the signal to the central access point **85** using higher power during the secondary transmission. In this manner, the power source for the various controllers connected to the antenna **165**, **265** and **365** can more readily utilize a power source **75** consisting of a long life battery. While the transmission method between access point **80** and central access point **85** is depicted as wireless, the access point **80** and central access point **85** can also communicate over wires.

In an alternative embodiment, the controller **55** corresponding to each pusher **25** can be hard-wired to an access point **80** so that the controller **55** transmits the data to access point **80** over one or more wires. The access point **80** can then transmit the data to the store computer **90**. In another alternative embodiment, the data is transmitted directly from the sensor assembly **30** to the store computer **90**. In this embodiment, the transmission can be either wireless, such as an infrared, ultrasonic or electromagnetic wave transmission, or can be hard-wired. Depending on the method of transmission, it may be desirable to transmit the data from the sensor assembly **30** to the store computer **90** via a network protocol that can compensate for, or minimize, communication errors.

The use of a wired connection can provide a useful source of power and can reduce the possibility of communication collisions, especially if the signals are directly to the store computer **90**. In addition, by providing additional power, the controller **55** can be configured to provide a real time update on the level of product on the shelf or in the store so that more accurate decisions regarding the need to order additional product can be made. This configuration also makes it possible to recognize and send alerts regarding potential theft situations based on the real-time movement of the pusher **25**. The real time product information may make it possible to provide a more responsive inventory system so as to lower the amount of inventory in the store and therefore reduce the cost of inventory.

Wireless systems, on the other hand, provide increased flexibility in installation and can be readily installed in existing shelves without the need to install wires for either power or communication. In addition, the use of a wireless system allows for the gradual installation of an inventory system. For example, items of high value (and therefore suffering from an increased likelihood of being stolen) or items that tend to have significant variations in customer demand can be monitored first.

In an embodiment, the sensor assemblies **30** may be networked together via a series of wireless access points **80** where each access point **80** accepts transmissions from any sensor assembly **30** in the vicinity of the access point **80**. Thus, in an embodiment, there exist a number of wireless access points **80** and the access points **80** are connected via a network, where the network transmits the data to the store computer **90**. In an alternative embodiment, each wireless access point **80** transmits the data directly to the store computer **90**.

Naturally, some combination of network and direct transmission is also possible and is considered within the scope of the present invention. For example, a battery powered sensor assembly **30** could communicate via a low powered wireless transmission to an access point **80**, the access point **80** being powered by a wired power supply. The access point would transmit a wireless signal to a central access point **85** that was powered by a wired power supply. The central access point **85** could be connected via a wire to the store computer **90**.

Referring back to FIG. **2***a*, if a timing device **70** comprises a low powered timer, the controller **55** can rest dormant until a signal from the timing device **70** indicates it is time to send an update regarding the position of the pusher **25**. An example of a low powered timer includes a low powered, low cost interval timer. Low powered, low cost interval timers may not be highly accurate and therefore multiple pusher devices in a store will likely randomize their transmission times so as to reduce transmission collisions. The period of data transmission typically will be on the order of a few milliseconds, and therefore, it is unlikely that signals from different controllers will be sent at the same time. This likelihood can be further decreased if the controllers are not all started at the same time. If the transmissions only occur a few times per day (i.e. to provide periodic updates on the amount of product on the shelf), the likelihood of communication collisions is further reduced. In addition, the decreased frequency of transmission and the short transmission period helps reduce the amount of power consumed.

In an alternative embodiment, the sensor **50** continuously monitors the indicia strip **21**. When a product is removed from the shelf, the pusher **25** will move and the sensor **50** can scan a new representation on the indicia strip **21** corresponding to the new position of the pusher **25**. The controller **55** can then send a transmission including the new position of the pusher **25** to the store computer **90** (i.e. the controller **55** can send a new pusher code). In this alternative embodiment, the store computer **90** can monitor the amount of product on the shelf in real time.

As depicted in FIG. **3**, the transmission of signals, from the antenna **165** to the store computer **90** for example, is a one-way transmission. In an alternative embodiment, the system may be set up to handle two-way transmission of signals between the sensor assembly **30** and the store computer **90**. In a two-way wireless system, additional hardware such as a receiver is included in the sensor assembly **30**. The two-way system allows for bi-directional transfer of information.

For example, the store computer **90** could query a particular controller **55** about the position of the associated pusher **25**. The controller **55** could activate the sensor **50** in response to the query and determine a pusher code reflecting the position of the pusher **25**. The controller **55** could then transmit the pusher code along with the identity code of the controller **55** to the store computer **90**. Based on the pusher code, the store computer **90** could determine the inventory level of a product. To avoid activating the wrong controller **55**, the store computer **90** could include the identifying code in the transmission. The store computer **90** may store, access, and perform functions with the identifying codes of all or a subset of the controllers or pusher systems in the store.

In an embodiment, all the controllers **55** associated with products purchased from the same vendor could be queried just before the order to the respective vendor was placed. The order to that vendor could then be updated with the latest product inventory information. In this manner, the order placed to the vendor could be made more accurate without the need for laborious counting of products on the shelf.

Some vendors are responsible for stocking the shelves in a retail store instead of the store personnel. In a situation where a vendor was responsible for stocking the shelves, an embodiment of the present invention could provide the vendor with updates in response to queries from the vendor's computer. In an embodiment, the vendor could track the amount of product available on the shelves as frequently as desired, even in real time.

For example, a vendor could send a query to a controller **55** via a wide area network ("WAN"). The controller **55** could determine the position of the pusher **25** and transmit a signal back to the vendor via the WAN. In an alternative embodiment, the vendor could communicate with the store computer **90** to obtain information regarding the inventory level of products on the shelf.

In an embodiment, the vendor could control the manufacturing process of the product in response to inventory levels on the shelves. As can be appreciated, the vendor would have an increasingly effective inventory system if multiple stores were networked to the vendor's computer so that the aggregate amount of product on all the store shelves could be determined. If the vendor was only connected to a single store, the information, while less indicative of the total inventory, could provide valuable details regarding patterns of behavior of the consumers.

FIG. **4** illustrates an embodiment of the present invention that includes the use of a security camera **195**. As depicted, an access point **180** receives a signal from a controller **155** indicating that pusher **25**, not shown, has moved. The access point **180** transmits the signal to a central access point **185** that is connected to a store computer **190**. The store computer **190** determines that the rate of change in product level of the product associated with the controller **155** is indicative of a potential theft. The store computer **190** then transmits a signal, either wired, or wirelessly, to an antenna **196**, which is mounted to the security camera **195**. The signal instructs the security camera **195** to monitor a position associated with the location of the controller **155**. As can be appreciated, security personnel can sometimes provide a more nuanced response, thus it is advantageous to notify security personnel. Therefore, the store computer **190** can also notify security personnel to monitor the area by displaying a warning on the store computer screen or by transmitting a signal to a security computer or by activating an audible tone or flashing light in the vicinity of the potential theft or by other known methods of notification such as a signal to the pager or beeper carried by the security personnel.

Information from the security camera could be sent to a television or other visual display device that is located near the location where the potential theft is occurring. The visual display device could display an image of the potential thief such that the potential thief could appreciate the fact that the thief was being watched.

As can be appreciated, the controller **155** preferably monitors the position of pusher **25** on a frequent or even real time basis so as to provide a more timely response. If a power source **75** consisting of a long life battery is utilized, it may be beneficial to utilize a controller that can determine a potential theft situation without the need to transmit data to the store computer **190**. In such an embodiment, the controller can be configured to transmit data to provide inventory level updates and also to provide security notifications.

As can be appreciated, the position of the potential theft relative to the security camera **195** would be beneficial to provide an instruction to the security camera **195** to focus on a particular position. This positional information could be generated by a number of methods, including providing the store computer **190** with the security camera coordinate system for the security camera **195**. The position of the controller **155** relative to the security camera **195** could be determined during setup and during a potential theft situation; the position of the controller **155** could be used to direct the focus of the security camera **195**. Alternatively, the security camera **195** could be configured to focus in several positions, such as three points along an aisle, and the store computer **190** could indicate which position was the most appropriate for the particular situation. The described methods are illustrative because of the numerous methods of controlling the security camera **195** that exist.

In an embodiment with a two-way transmission between the store computer **190** and the controller **155**, the store computer **190** could signal to the controller **155** to activate a device capable of providing an audible warning tone.

In another embodiment, the controller **155** could determine that a potential theft had occurred and could provide a notification, including the sounding of an audible warning tone. In addition, the controller **155** could transmit a signal to the store computer **190**. In this alternative embodiment, the sensor assembly **30** would preferably include a timing device **70** so as to allow the controller **155** to more readily determine whether the rate of movement of pusher **25** exceeds a preset level.

In another embodiment, a two-tiered response could be implemented. If the change in position of the pusher **25** was greater than normal, a signal could be transmitted to the security camera **195**. In addition, an inaudible notification could be provided directly to security personnel. If the positional change of the pusher **25** more clearly indicated a potential theft, an audible alarm and flashing lights could also be activated. Thus, the response could be configured to more carefully match the situation.

FIG. **5** illustrates an embodiment of a method for determining the amount of a particular product available in a facing on a shelf. In this embodiment, the sensor assembly **30** uses a timing device **70** consisting of a low powered interval timer. The controller **55** is initially in a dormant state and only the timing device **70** is running. In step **400**, the timing device **70** provides a signal to the controller **55** that the time interval is complete. In step **405** the controller **55**, in response to the signal from the timing device **70**, becomes activated and the controller **55** then activates the sensor **50**.

In step **410**, the sensor **50** scans the representation contained in the pattern on the indicia strip **21** so that the controller **55** can generate the pusher code representative of the position of the pusher **25**. In step **415**, the controller **55** generates the pusher code in response to the pattern scanned by the sensor **50**. In step **420**, the controller **55** transmits a signal that can include the unique serial number of the controller **55** and the pusher code, to the store computer **90**.

Next, in step **430**, the store computer **90** receives the data from the controller **55**. In an embodiment, the transfer of data from the controller **55** to the store computer **90** is direct. In another embodiment, the controller **55** transmits data to the store computer **90** indirectly through an access point or a network.

Then, in step **440**, the store computer **90** calculates the amount of product on the shelf based on the position of the pusher **25**. The store computer **90** also updates the inventory list at this point. In an embodiment where multiple facings have the same product, the total amount of product on all of the facings that have that product can be calculated. In an embodiment, the calculation of product in a facing can be accomplished through the use of a database of products and the relevant dimensions of a product, and the position of the pusher. In another embodiment, the number of products placed in the facing can be provided during setup of the controller **55** for that product. The position of the pusher **25** and the number of products corresponding to that position of the pusher **25** can be used to calculate the quantity of remaining products based on a later position of the pusher **25** through the use of well known extrapolation techniques.

In another embodiment, the position of the pusher **25** can be one of four positions representing $X>\frac{3}{4}$, $\frac{3}{4}\geq X>\frac{1}{2}$, $\frac{1}{2}\geq X>\frac{1}{4}$, and $X\leq\frac{1}{4}$. This latter embodiment provides less precise information but also requires less computation effort to provide the approximate inventory level. In addition, this embodiment can be used to manage inventory without the need to determine and track the dimension of the product. In an embodiment, the amount product on the shelf can be roughly determined based the number of facings containing the product and whether the pusher **25** for each facing is in a position representative of a full, mostly full, low or almost empty facing.

In step **450**, the store computer **90** determines whether any action is required. In an embodiment, a potential theft, a decrease in the inventory below a pre-set level or the emptying of a facing of product while ample product still remains on the shelf in other facings would indicate that some action was required. For example, the store computer **90** could determine that, based on historical usage and the average delivery time and the cost per delivery, the current level of inventory was low. In an alternative embodiment, the minimum inventory level could be preset and once the inventory level drops below a preset level, the store computer **90** could determine that the product level was low.

In step **460**, the store computer **90** would determine if a potential theft was taking place. In an embodiment, the store computer **90** could compare the current level of inventory, based on the position of the pusher **25**, to the previous level of inventory. If the rate of change in inventory level exceeded a preset level, the store computer **90** would determine that a potential theft was taking place. In step **465**, the store computer **90** would notify security. The notification could include a page to security or a signal to a security camera **195** to focus in a particular direction.

Next, in step **470**, the store computer **90** would determine if the existing order needed to be modified. The store computer **90** could compare the current product requirement to the current order. If the store computer **90** determined that an amount of product ordered was insufficient, the store computer **90** would proceed to step **475**. In step **475**, the store computer **90** would update the current inventory order so that the inventory order matched the current product requirements.

Next, in step **480**, the store computer **90** would determine if a facing on a shelf was empty. If there was an empty facing, the store computer **90** would then notify the store management that there was an undesirable empty facing in step **485**. The store management could then decide the appropriate action to take depending on the type of product and the availability of substitute goods. If the facing was not empty, the store computer **90** would wait until the next product update.

FIG. **6** depicts an embodiment of a method for determining the amount of inventory on the shelf in a two-way system. In step **510**, the store computer **90** sends a query to

a sensor assembly **30**. The sensor assembly **30** contains a controller **55** that is identified by a unique serial number or identifying code.

In step **520**, the sensor assembly **30** receives the query from the store computer **90**. In response to the query, the controller **55** activates the sensor **50** and prepares to receive data reflecting the position of the pusher **25**. In step **530**, the sensor **50** scans the indicia strip **21** and the controller **55** generates a pusher code representative of the position of the pusher **25**.

In step **540**, the sensor assembly **30** transmits the pusher code representative of the position of the pusher **25** along with the unique serial number of the controller **55** to the store computer **90**.

Next, the store computer **90** receives this transmission in step **550**. This transmission can be sent directly from the sensor assembly **30** to the store computer **90** or, preferably, it can be indirectly through a network. The transmission can be sent in a wireless manner, over wires, or some combination of a wireless and wired transmission.

Then, in step **560**, the store computer **90** determines the level of inventory on the shelf. In an embodiment, the determination can be based on the product dimension and the position of the pusher **25**. In an alternative embodiment, the determination can be based solely on the position of the pusher **25**.

FIG. **7** depicts an embodiment of a method for setting up a controller for a particular product. In step **610**, the product can be placed on the shelf in the appropriate facing. Alternatively, step **610** can be skipped and the set-up can start with step **620**.

In step **620**, a set-up button on a hand-held device is pressed. The hand-held device is configured to transmit a signal to a store computer **90** indicating that the user of the hand-held device is about to associate a product with a serial number or identifying code of a controller **55**. Preferably, the transmission of signals between the hand-held device and the store computer **90** is done in a wireless manner. In an embodiment, the store computer **90** provides feedback to the user indicating that the store computer **90** is ready to proceed. In an alternative embodiment, no feedback is provided.

Next, in step **630**, the UPC code of the product is scanned and transmitted to the store computer **90**. Then, in step **640**, the store computer **90** looks up the product dimension based on the UPC code. If the UPC code does not have a listed dimension, the store computer **90** checks if the user can input the needed dimension in step **642**. If the user cannot, the setup is terminated and the user can try to setup a new product. If the user can determine the dimension, the user enters the dimension in step **644**.

Next, in step **646**, a dimension is associated with the UPC code. Then, in step **650** the store computer **90** sends a signal to the hand-held device to indicate that the user should proceed with the setup.

Next, in step **660** the user activates the controller **55** with the hand-held device. In an embodiment, an optical setup sensor is mounted on the pusher assembly and is connected to the controller **55**. Preferably, the setup sensor is recessed in the pusher **25** but could be mounted in other locations such as on the top or the side of the pusher **25**. The hand-held device will be configured to transmit a signal to the setup sensor. The act of transmitting the setup signal to the setup sensor will cause the controller **55** to awake from a dormant state.

Then in step **670**, the controller **55**, in response to the setup signal, will send data indicating that the controller **55** is being setup to the store computer **90**. The data will include the unique serial number of the controller **55**. The data may also include a generic setup code or a setup code corresponding to the hand-held scanner and can include a pusher code representative of the position of the pusher **25**. In the event that multiple hand-held devices are being utilized at the same time, it may be beneficial to provide a setup code associated with a particular hand-held device.

Next, in step **680**, the store computer **90** will receive the data from the controller **55**. If the data includes the pusher code, the store computer **90** can calculate the amount of product in the facing at this time. In step **685**, the store computer **90** sends a signal to the hand-held device indicating that the controller **55** has been setup and associated with the UPC code of a particular product. In addition, if the position of the pusher **25** was originally included, the store computer **90** can also provide a calculation of the current quantity of product in the facing that was just set up. In addition, the store computer **90** requests that the user verify that the setup information is correct.

Finally, in step **690**, the user indicates the information is correct. Upon verification, the setup for the controller **55** is complete. To change the product associated with the controller **55**, the process can be repeated.

FIG. **8** illustrates an alternative method of associating a controller with a product. In step **710**, a hand-held device is activated to indicate that the user is about to setup controller **55**. The activation includes the transmission of a signal to a store computer **90**.

In step **720**, the hand-held device is used to scan the UPC code of the product and transmit the information to the store computer **90**. Next, in step **730**, the store computer **90** looks to see if a product dimension is listed for that scanned UPC code. In the event that no dimension is associated with the UPC code, the computer, in step **732**, transmits a signal to the hand-held device requesting the user to input the appropriate product dimension.

If the user does not know the product dimension or cannot measure the dimension, the user can cancel the setup and start over with a new product in step **734**.

If the user does know the dimension or is able to measure the dimension, the user then enters the dimension and transmits the information to the store computer **90** in step **736**. After the product dimension is determined, in step **740**, the store computer **90** sends a signal to the hand held device indicating that the user should proceed.

Next, in step **750**, the user scans the serial number of the controller **55**. Preferably, the serial number of the controller **55** is printed in a black/white code on a sticker mounted to the sensor assembly **30**. After scanning the serial number, the hand held device transmits the serial number to the store computer **90**.

Then, in step **760**, the store computer **90** associates the UPC code of the product with the serial number of the controller **55**. The store computer **90** then signals the hand held device that the setup for the device is complete. To avoid potential communication problems during setup, all communications between the hand-held device and the store computer **90** can include a code representing the hand-held device.

In an alternative embodiment, the method of associating a product with a controller **55** could be done without sending a signal to the store computer **90**. In this embodiment, the data would be uploaded from the hand-held device once the user had associated the various controllers with the various products.

As can be appreciated, numerous methods of product association with a controller **55** are possible, thus the above methods are illustrative.

A system for determining the location of the pusher with an indicia strip and sensor has been described. Numerous additional methods exist for measuring the distance between the front or rear of a shelf and the pusher or the final product in a facing of products. Based on this distance, and understanding the dimension of the products in the facing, a simple calculation can be performed to determine the number of products in the facing. This calculation can be performed by a microprocessor, store computer, controller or some other processing device which has received the information regarding the distance between the shelf front and the last product in a facing. Moreover, the pusher assembly has been described to include a spring. However, some other biasing method, such as gravity or magnetism, would also work to move the pusher and the product forward.

In an embodiment of the present invention, as illustrated in FIG. **9**, the use of transmitted light or other signal, such as a radio frequency signal, that is passed between a position near the back of the facing of products and a stationary position can be used to measure the distance between the front of the shelf and the pusher. In one embodiment, a transmitter **700** or **702** is incorporated into a pusher **725**. The transmitter generates a light or other signal that can be transmitted on command, periodically or continuously. A light emitting diode (LED), radio frequency or ultrasonic generator or other signal generation device can be used to generate the light or signal.

A corresponding receiver is incorporated into a location that is stationary in relation to the pusher **725**. The receiver **712** can be incorporated into a front rail or another location at or near the front of the shelf, a receiver **730** can be incorporated into a rear rail or other location at or near the rear of the shelf, it also can be incorporated into the floor of the shelf, the track of the pusher, the roof of the shelf or the divider wall. The receiver detects the signal that is sent from the transmitter. For example, a LED may radiate light having a particular intensity. A phototransistor acting as a receiver detects the light signals being emitted from the LED. The sensitivity of the phototransistor and the intensity of the LED may be adjusted by the microprocessor in order to adjust the overall sensitivity of the optical components. In an embodiment, the adjustment can be done remotely. Thus, the transmitter can communicate in a wireless fashion with the receiver through RF, IR or other known means such as magnetic fields, electrical fields, sound waves and the like.

The transmitter and receiver may be in communication with a controller that tracks the time of sending and receiving. This data can be provided to a processing device such as a microprocessor or a store computer, thus in this embodiment the pusher code would include the time interval between sending and receiving. Information regarding the time at which the signal was sent and the time at which it was received may be utilized by a processing device to determine the time between the transmission and the receipt of the signal. Based on this length of time, the processing device can calculate the distance between the transmitter and the receiver. Knowing the dimensions of the shelf, the pusher system and the components thereof, this distance can then be translated into the distance between the front side **6** of the shelf and the face of the pusher **25** that is biased against the back of the facing of products. Such a translation is well known and within the knowledge of one of ordinary skill. If the relevant dimension of the products in the facing is known, the processing device can then calculate the number of products in the facing based on the known dimension of the products.

In an alternative embodiment, the transmitter and the receiver switch locations. The transmitter can be placed at or near the front or the rear of the shelf or other relatively stationary position and the receiver can be placed on or near the pusher. In an alternative embodiment, the transmitter and the receiver can be incorporated into the same device which merely bounces a signal off a stationary position. For example, a reflector can be placed on the pusher and a transmitter/receiver using a laser, or some other light source, can determine the distance between the reflector and the transmitter/receiver based on the time of travel. Examples of possible transmitter/receivers include, but are not limited to, optical displacement measurement sensors and reflective laser sensors. As can be appreciated, if a transmitter and a receiver are used to determine distance, it is preferable that the location of either the part that is stationary be located near the front side or the rear side of the shelf so as to make the distance calculation simpler and to avoid problems with symmetric distances on both sides of the stationary unit mounted to the shelf. For example, mounting a transmitter halfway between the front and rear of the shelf would make determining the location of the pusher more complicated because there would be two possible locations for a given distance.

In an embodiment, depicted in FIG. **9**, a transmitter (**700**, **702**) is incorporated into a pusher **725**. The transmitter is a light emitting diode and is located at any location on the pusher **725** that allows the transmitter to function. The transmitter can be located at the top of the pusher **725** at **700** or at the base of the pusher **725** at **702** or at other locations on the pusher **725**.

A receiver is located at a position that is fixed in relation to the movement of the pusher **725**. The receiver may be a phototransistor and can be located on the front of the shelf **705**, such as receiver **710** or on a front rail **708** connected to the front of the shelf, such as receiver **712**. The receiver can further be located on the floor of the shelf at any number of positions as represented by **714**, on the floor of the pusher track at **716** or at a location above the shelf **705** such as on another shelf (not shown) mounted above the shelf **705**. The receiver can be located on the divider wall at **720** or **722** or other location on the divider wall. The receiver also can be located near the rear side **707** at **730** or at **732**. Preferably, the receiver will be mounted near the either front side **706** or the rear side **707** so as to make distance calculation simpler.

The receiver and the transmitter can also switch locations. The pusher can incorporate a receiver, and a transmitter can be incorporated at any of the locations **710-732** as well as in any other location that is fixed in relation to the movement of the pusher. Preferably, however, the location of the transmitter will be near either the front side **706** or the rear side **707** so as to make calculation of distance simpler.

In an embodiment, the transmitter is located at **700** and the receiver is located at **710**. When the pusher moves backward or forward on the shelf, the transmitter **700**, mounted on the pusher **725**, moves with the pusher **725**. When the pusher **725** is located near the back of the shelf, a signal will take a certain amount of time to travel from the transmitter **700** to the receiver **710**. When the pusher **725** is located closer to the front of the shelf, a signal will take less time to travel from the transmitter **700** to the receiver **710**. Data regarding the transmission and receipt of the signal (i.e. the pusher code) is sent to a microprocessor or other

processing device. The processing device determines the amount of time it takes the signal to travel from the transmitter to the receiver. Knowing the signal travel speed, the processing device determines the distance between the transmitter and the receiver.

With an understanding of the location of the transmitter in relation to the products and an understanding of the location of the receiver in relation to the front or back of the shelf, the processing device will be able to determine the distance between the pusher and the front of the shelf. Using the dimension of the products, the processing device can then determine the number of products in the facing. The light emitting diode or other transmitter can be set to function periodically, continuously or on command from a remote location.

Alternatively, the processing device may control both the LED and phototransistor. The processing device may record a time T**1** in which the microprocessor issues a command to generate a pulse from the LED and a time T**2** in which the light signal is detected by the phototransistor. Both of these times T**1** and T**2** may be stored in memory and used to determine the number of product in the facing, using the above described relationships.

In an alternative sensing environment, a capacitive proximity sensor may be utilized to measure the distance between the front of the shelf and the pusher or the final product in a facing of products. The capacitive proximity sensor detects the pusher which acts as a target for the capacitive proximity sensor. The capacitive proximity sensor generates an electrostatic field which is directed at the target. As the distance of the pusher changes with respect to the location of the capacitive proximity sensor, the capacitive proximity sensor reacts to the changes in capacitance caused by the movement of the pusher in relation to the sensor.

Additional sensing environments may also include the use of magnetic proximity sensor or an inductive proximity sensor. In both sensing environments, the proximity sensors may be utilized to measure the distance between the front of the shelf and the pusher or the final product in a facing of product.

An inductive proximity sensor is useful in detection of metal targets as the inductive proximity sensor uses an induced field to sense the target object. In an embodiment with an inductive proximity sensor, the proximity of a pusher in relation to the inductive proximity sensor can be detected as the distance of the pusher changes with respect to the location of the inductive proximity sensor. Similarly, a magnetic proximity sensor based on the Hall Effect principle may also be utilized to sense the location of the pusher.

In an embodiment, a proximity sensor could be mounted near the rear side **707**, the proximity sensor configured to sense the distance to the pusher **25**. A processing device, such as the store computer or microprocessor, could determine the distance between the pusher **725** and the front side **706** and use that distance to determine how much product was left on the shelf.

In an alternative embodiment, a Radio Frequency Identifying Transponder ("RFIT") having a unique identity code is mounted to the pusher **725**. A sensor assembly including a transmitter/receiver can be mounted on the rear side **707** of the shelf **705**. The transmitter/receiver, when activated, transmits an activation signal that activates the RFIT. The RFIT, upon activation, transmits a responsive signal that includes the unique identifying code. The transmitter/receiver receives the responsive signal from the RFIT. The sensor assembly is equipped with a timing device and measures the time between the initial transmission of the signal from the transmitter/receiver until the receipt of the responsive signal from the RFIT. In an embodiment, a controller can initiate the transmission of the signal and record the receipt of the responsive signal into memory. The controller is also equipped with a timing device to measure the delay. The delay in time can be used to calculate the distance between the transmitter/receiver and the RFIT. In an embodiment, the controller can calculate the distance and provide a pusher code that includes the distance. Alternatively, the pusher code will include data regarding the delay and the pusher code will be forwarded to a processing device for distance calculation. As discussed above, the distance between the pusher **25** and the transmitter/receiver can be used to calculate the amount of product remaining in the shelf.

An advantage of using an RFIT in combination with a transmitter/receiver is that it can be easily retro-fitted to existing systems. As the RFIT does not require internal power, this embodiment eliminates the need to provide a powered device on the pusher **725**. The transmitter/receiver, however, is powered. Preferably, the transmitter/receiver transmits a focused or low powered signal so that only the RFIT associated with the transmitter/receiver is activated. Alternatively, the transmitter/receiver ignores responsive signals from RFIT's that do not include the proper unique identifying code.

In another alternative embodiment, a low powered, one-chip radar sensor may be used to determine the distance between the radar sensor and the pusher **725**. Preferably the radar sensor may be mounted near the rear side **707** so as to make distance determinations less complex.

In an alternative embodiment of the present invention, a device for measuring the tension of the spring used for pushing the products can be used. The tension on the spring will, at least in part, be dependent upon the number of products in front of the pusher. As more products are placed in front of the pusher, the spring either further compresses or expands. In the case of a coil spring, as more products are placed in front of the pusher, the two ends of the spring move further apart and the spring further uncoils. As the spring uncoils, the amount of tension or pressure within the remaining coil of the spring increases. By measuring the tension of the spring, the length of the spring that is uncoiled can be determined.

The spring tension measuring device can incorporate a processing device or can transmit the information it measures to a microprocessor or other processing device. With a previous understanding of how the tension on the spring relates to the length of the spring, the processing device can determine the amount or length of spring that is uncoiled. For example, if the coil spring has a fixed spring constant, "k", then the formula $F=-kX$ can be used to calculate the length of spring that is uncoiled. This information can be used to determine the distance between the front of the shelf and the pusher. Understanding the dimensions of the products, the computing device can then determine the number of products in a facing.

A spring tension measuring device may include a force measuring unit that includes, but is not limited to, strain gauges, tensiometers, torque transducers or some other force measuring device to determine the tension exerted on the coil spring. The force measuring unit is preferably connected to a controller, where the controller is configured to convert the data from the force measuring unit into a force value. The controller could then transmit the force value to a processing device. In this embodiment, the pusher code

would include a force value. Numerous other methods of measuring spring tension will be apparent to one of skill in the art and are within the scope of the invention.

In an alternative embodiment of the present invention, the number of products remaining in a particular facing is determined in part through the use of one or more transmitter (s) and receiver(s) placed on opposite lateral sides of the products. In one embodiment the transmitters or receivers may be placed on divider walls that separate facings of products. In one embodiment, a series of transmitters is incorporated into or onto the base of a divider wall. A series of receivers in incorporated into or onto the other side of the divider wall. In this manner, when products are on a shelf, those products that are being pushed are between the transmitters on one divider wall and the receivers on another divider wall.

Periodically, when prompted, or continuously, the transmitter sends a signal. If there is no product between the transmitter and the receiver, the receiver will receive the signal. If there is a product between the transmitter and the receiver, the product will block the signal, and the signal will not be received by the receiver.

A microprocessor receives the information regarding whether or not the various receivers received a signal. Based on this information, the microprocessor can determine the approximate distance between the front of the facing and the last product in the facing. With an understanding of the dimension of the products, the information regarding receipt and non-receipt of signals can be translated into an understanding of the approximate number of products in the particular facing. In an embodiment, one transmitter and one receiver is used to indicate that a particular shelf is running low on the associated product. In this embodiment, the location of the transmitter/receiver is preferably closer to the front side **706** then the rear side **707**. Preferably a controller with a unique identifying code is associated with the transmitter and receiver so that the unique identifying code can be associated with the product.

The transmitter and the receiver can be incorporated into the same device which attempts to bounce a signal off a predetermined target affixed to a particular location. If the signal bounces as expected, it indicates that there is no product between the transmitter and the target location. If the signal does not bounce as expected, a product exists between the transmitter and the target location.

FIG. **10** depicts a partially exploded view of an alternative embodiment of a shelf and pusher assembly, the shelf having divider walls. As depicted in FIG. **10**, several transmitters **750** are placed on the left side of the divider wall toward the bottom. The transmitters also can be placed higher on the divider wall as shown at **752**. Corresponding receivers **760** are placed on the right side of the divider wall toward the bottom. These receivers also can be placed higher on the divider wall as shown at **762**. The receivers and the transmitters are positioned such that an unobstructed signal can be sent from a transmitter and received by a corresponding receiver. When product, such as product P, is positioned in front of a pusher, it can obstruct the signal sent from the transmitter. As shown in FIG. **10**, product P (shown in dashed lines) will prevent the signal from reaching the receiver **760** nearest the front side **6** of the shelf. The receivers that are positioned further back than product P will receive the signals sent to them. A microprocessor receives the information regarding whether each of the receivers **760** received signals. Based on this information, the microprocessor can determine the distance between the front of the shelf and the last product in a particular facing. With an understanding of the width of each product, the microprocessor can determine the number of products in a particular facing.

In one embodiment of the present invention, the pusher contacts a variety of sensing devices as it moves backward or forward on a shelf. Sensing devices are placed on a surface below, above, or on the sides of a pusher. These sensing devices include devices that are mechanical, electrical and electromechanical, optical and magnetic, and can include spring loaded latches, electrical contacts, light emitting diodes or metal wires or other sensors such as linear position sensors.

As the pusher moves backward or forward on a shelf, it interacts with the sensing devices. The pusher may interact with the devices through the mechanical contact of the pusher and the devices. The pusher may also be equipped with a separate sensing device that interacts with the stationary sensing devices as the pusher moves backward or forward.

Information regarding the interaction between the pusher and the sensing devices (i.e. the pusher code) is sent to a processing device. Based on the determination of the devices with which the pusher interacted, the processing device can determine the approximate position of the pusher in relation to the front of the shelf. With an understanding of product data, such as the dimension of the product, a processing device can then determine the approximate number of products that are in the particular facing related to the pusher and the sensing devices.

In an embodiment, as depicted in FIG. **11**, sensing devices **810**, **811** and **812** are incorporated into the base of the track on which the products rest. When products are resting directly over the switches, the sensing devices are closed. As products are removed and the pusher **825** travels forward, the sensing devices that are to the rear of the pusher **825** are released and open. A controller determines which sensing devices are open or closed. Based on this information, a processing device can determine the approximate distance between the pusher **825** and the front side **806** of the shelf. Knowing the dimension of the products, the processing device can determine the number of products in a particular facing.

In an alternative embodiment, as depicted in FIG. **12**, sensing devices **814**, **815**, **816**, **817**, and **818** are placed on the pusher track **802**. A separate contact (not shown) is placed on the bottom of the pusher **825**. The contact on the pusher **825** is configured such that when the contact on the pusher **825** is adjacent to a sensing device mounted on the pusher track **802**, the sensing device on the pusher track **802** is activated. When the sensing device is activated, a signal is sent to a processing device, the signal providing information as to which sensing devices has been activated. Based on this information, the processing devise can determine the approximate distance of the pusher from the front of the shelf. Knowing additional data about the products, such as the product dimensions, the processing device can determine the number of products in a particular facing.

For example, while contact **816** is activated, the processing device can determine that the amount product is equal to the amount of product that can fit in the space between the contact **816** and the front side **806** of the shelf **801**. In the event that the contact **816** is activated and then deactivated, the processing device can determine that the pusher **825** is between contacts **815** and **817**. This, therefore, provides an approximate position of the pusher **825** and the approximate position can be used to determine the approximate quantity of product remaining on the shelf. In an embodiment, the

contacts can be spaced closer together near the front side **806** of the shelf **801** so that more accurate measurements can be taken as the amount of product on the shelf decreases. Alternatively, enough contacts can be used to provide a relatively precise location of the pusher **825**.

In an alternative embodiment, as depicted in FIG. **13**, the contacts **819**, **820**, **821** and **822** can be mounted to the divider wall **803**. As with contacts **814-818**, the activation of one of the contacts **819-822** indicates the location or the approximate location of the pusher **825**. Locating the contacts along the divider wall **803** can help prevent problems with accidental activation of the contacts by product on the shelf. As with the contacts mounted in the pusher track **802**, the distance between contacts **819-822** can be non-uniform so that greater precision is provided as the shelf becomes less full.

In an alternative embodiment similar to the embodiments described above, a shelf management system **900** for detecting and communicating the position of a pusher assembly on a shelf is depicted in FIG. **14**. The shelf management system **900** may include a pusher assembly **915**, a light assembly, and a control module **940**. The pusher assembly **915**, light assembly, and control module **940** may all be secured to a gondola wall **905** or similar structure that holds a product **910**. The product **910** may be aligned or arranged along the pusher assembly **915**. Additionally, the product **910** may be contained in separate product container box **912** as illustrated in FIG. **14**.

As depicted, the pusher assembly **915** may include a biasing mechanism such as a coil spring. The pusher assembly **915** may include an integral divider wall **922** and a floor section **920** on one or both sides of the divider wall **922**. The coil spring may be operatively connected or associated with a pusher **925** and can be used to urge the pusher **925**, and the associated product **910**, toward the front side of the shelf. The pusher assembly **915** may be modular and can include a divider wall or an additional floor section that fits or mates in place. Additionally, since the present invention has no connection to the pusher assembly **915**, the present invention may work with any product shelving system.

The light assembly may include a light channel **930** and a light transceiver **932**. The light transceiver **932** may be one of many light transceivers located on the light channel **930**. The light transceiver **932** may be located behind the product **910** to be measured on a shelf. The light transceiver **932** may consist of a light transmitter **934** and a light sensor **936**. The light transmitter **934** is configured to send a light signal **935** towards the pusher **925**, while the light sensor **936** is configured to receive the light signal **935** from the pusher **925**. In an alternative embodiment, the light transmitter **934** and the light sensor **936** may be the same component as part of the light transceiver **932**. The spacing of the light transmitters **934** and the light sensors **936** on the light channel **930** may ensure that at least one light transmitter **934** and one light sensor **936** is focused on or sees every pusher **925**. Additionally, the light channel **930** may include an electronic connection **938**.

Without departing from this invention, the light assembly may utilize one of many different types of light, with one type of light being utilized is in the "infrared spectrum." For example, the light assembly could include an infrared (IR) transceiver, wherein the IR transceiver may consist of an IR transmitter and an IR sensor.

As illustrated in FIG. **14**, the shelf management system **900** may also include a control module **940**. The control module **940** may align with the electronic connection **938** on the light channel **930** and lock into place. The control module **940** may include a microcomputer. Additionally, the control module **930** may have internal wireless capability without departing from the invention.

As illustrated in FIG. **14**, the product **910** may be pushed forward by the spring-urged pusher **925** or pusher paddle in the shelf management system **900**. As the product **910** is pushed forward, a light signal **935** is transmitted from the light transmitter **934** found on the light channel **930**. The light signal **935** may then reflect off the back of the pusher paddle **925** or the product **910** and then back to the light sensors **936**. This information may then be relayed to the control module **940**, thereby measuring the distance to the pusher **925** or the product **910**. The light transceiver **932** may be controlled by the control module **940** and microcomputer connected to the light transceiver **932**. The process of sending the light signal **935** to and from the pusher paddle **925** or the product **910** may be taken on a continuous or near continuous basis, such as a fraction of a second, or may be taken on a periodic basis such as a second, or 5 seconds.

In an aspect of the invention, the microcomputer in the control module **940** may compare the most current position of the pusher **925** with a previous position of the pusher. The difference in positions of the pusher **925** may result in the microcomputer determining a condition of the shelf management system **900**. First, the microcomputer may determine that no activity has occurred since the last reading. Second, the microcomputer may determine that a normal shopping instance has occurred, and if so how many product packages are still being urged by the pusher **925**. Third, if more than a predetermined number of product packages have been removed in less than a predetermined amount of time, the microcomputer may determine that a potential theft situation is in progress. Another condition that may be communicated is a low product condition. For example, the microcomputer may determine a low product condition if any pusher location is empty of product packages or less than a predetermined number of product packages are still being urged by the pusher **925**.

As illustrated in FIG. **14**, without departing from the present invention, the shelf management system may include a local audio box **950**. Any of the conditions described above may be communicated by the microcomputer to the local audio box **950** remotely via wired or wireless communication devices to a remote computer, a store public announcement system, a cell phone, a pager, or a remote annuciator. Additionally, without departing from the present invention, the shelf management system may include a light annunciator **960**. Any of the conditions described above may be communicated by the microcomputer to the light annunciator **960** remotely via wired or wireless means to a remote computer, a store public announcement system, a cell phone, a pager, or a remote annunciator. An internal wireless capability of the control module **940** may wirelessly transmit signals to/from a remote location to indicate the condition of the shelf management system.

Additionally, for the shelf system **900** illustrated in FIG. **14**, the number of products aligned on the shelf could be measured. In such an embodiment, the position of the pusher **925** could be used to determine the amount of product **910** on the shelf without the need to manually count the product. For example, the light transceiver **932** transmits the light signal **935** to the pusher **925** or the product **910**. The light signal **935** may then be reflected back to the light transceiver **932** to determine the location of the pusher **925** by measuring and calculating the time to receive the light signal **935** at the light transceiver **932**. When one product is removed,

for example by a purchaser, the time to receive the light signal **935** back at the light transceiver **932** increases a particular amount. Based on the dimensions of the product **910**, specifically the thickness of the product, the control module can calculate how many products have been removed from the shelf by an algorithm of how fast the light signal is traveling back to the light transceiver **932**. The control module also can calculate the number of products that remain on the shelf in front of the pusher using in part information regarding the shelf dimensions, including the shelf depth. Additionally, the system can be used in an inventory management mode to help the retailer determine the number of products for inventory purposes and restocking in low-stock or no-stock situations. Without departing from this invention, a user may input the thickness of the product **910** as a setting into the control module **940** during the set-up or loading of the product **910** on the shelf. Additionally, without departing from this invention, the thickness of the product **910** may be determined by the control module **940** after taking a number of different readings from the system, such as a smart or learning system for determining the thickness of the product **910**.

The thickness of the product also may be determined by the system when products are initially stocked in the system. The light transceiver **932** transmits the light signal **935** to the pusher **925** when no product is on the shelf. The light signal **935** may then be reflected back to the light transceiver **932** to determine the location of the pusher **925** by measuring and calculating the time to receive the light signal **935** at the light transceiver **932**. When one product is added to the shelf, for example by an employee, the time to receive the light signal **935** back at the light transceiver **932** decreases a particular amount. Based on this decrease in the amount of time, the control module can calculate the thickness of the product.

In an alternative embodiment similar to the embodiments described above, FIGS. **15***a* and **15***b* illustrate another shelf management system **1000** for detecting and communicating the position of a pusher assembly on a shelf similar to the shelf management system **900** described above and illustrated in FIG. **14**. The shelf management system **1000** may include a pusher assembly **1015**, a laser assembly, and a control module **1040**. The pusher assembly **1015**, laser assembly, and control module **1040** may all be secured to a gondola wall **1005** or similar structure that holds a product **1010**. The product **1010** may be aligned or arranged along the pusher assembly **1015**. Additionally, the product **1010** may be contained in separate product container box **1012** as illustrated in FIG. **15***a*.

The pusher assembly **1015** may include a biasing mechanism such as a sheet coil spring. The pusher assembly **1015** may include an integral divider wall **1022** and a floor section **1020** on one or both sides of the divider wall **1022**. The sheet coil spring may be operatively connected to a pusher **1025** and can be used to urge the pusher **1025**, and the associated product **1010**, toward the front side of the shelf. The pusher assembly **1015** may be modular and can include a divider wall or an additional floor section that fits or mates in place.

The laser assembly may include a rear reflector strip **1030** and a single light transceiver or laser scanner **1032**. The laser scanner **1032** may emit or transmit a laser light or output beam **1035**. The laser scanner **1032** may include a moving mirror or rotating mirror (not shown) located within or associated with the laser scanner **1032**. Without departing from this invention, in place of or in addition to the moving mirror, the laser scanner **1032** may include an integrated circuit mirror technology, such as microelectromechanical systems (MEMS) mirrors used in the Digital Light Projector (DLP) field, wherein an array of tiny microscopic mirrors are used to direct and alter the output beam **1035**. The moving mirror may rotate within the laser scanner to alter the output beam **1035** being emitted from the laser scanner **1032**. The transmission and angles of the output beam **1035** may also be altered by other various ways. The moving mirror may be controlled by a microcomputer within the control module **1040**. The moving mirror may direct the output beam **1035** from the laser scanner **1032** at various angles, thereby creating a swept beam **1037**. The swept beam **1037** may be directed along the rear reflector strip. An example of a portion of the swept beam **1037** is illustrated in FIG. **15***b*. The process of transmitting the swept beam **1037** from the laser scanner **1032** to and from the pusher paddle **1025** or the product **1010** may be taken on a continuous or near continuous basis, such as a fraction of a second, a second, or 5 seconds.

As further illustrated in FIGS. **15***a* and **15***b*, the rear reflector strip **1030** may include piece-wise linear or smooth fixed mirrors **1034**. The fixed mirrors **1034** may be positioned along the rear reflector strip **1030**. The fixed mirrors **1034** may be along, parallel or near-parallel to the path of the swept beam **1037** such that each individual fixed mirror **1034** intercepts the output beam **1035** along its swept path (as shown in FIG. **15***b*). The fixed mirrors **1034** may also be located along the rear reflector strip **1034** and located behind and essentially perpendicular to the direction of travel of the pushers **1025** in the shelf management system **1000**. Additionally, the rear reflector strip **1030** may include an electronic connection **1038**.

As illustrated in FIG. **15***a*, the shelf management system **1000** may also include a control module **1040**. The control module **1040** may align with the electronic connection **1038** on the rear reflector strip **1030** and lock into place. The control module **1040** may include a microcomputer. Additionally, the control module **1040** may have internal wireless capability without departing from the invention.

As illustrated in FIGS. **15***a* and **15***b*, the product **1010** may be pushed forward by the spring-urged pusher **1025** or pusher paddle in the shelf management system **1000**. As the product **1010** is pushed forward, the laser scanner **1032** directs the swept beam **1037** along the rear reflector strip **1030** at one of the fixed mirrors **1034**. The fixed mirror **1034** may then redirect the output beam **1035** at a preferred angle (such as a right angle) to the altered path of the output beam **1035** such that the fixed mirror **1034** essentially directs the output beam **1035** to the back of the pusher **1025**. The output beam **1035** may then reflect off the back of the pusher **1025** wherein the output beam **1035** then returns back to the laser scanner **1032** for analysis. This information may then be relayed to the control module **1040**. The laser scanner **1032** may be configured to measure the distance to the pusher **1025**. The laser scanner **1032** may be controlled by the control module **1040** and the microcomputer.

The microcomputer in the control module **1040** may compare the most current position of the pusher **1025** with a previous position. The difference in positions of the pusher **1025** may result in the microcomputer determining a condition of the shelf management system **1000**. First, the microcomputer may determine that no activity has occurred since the last reading. Second, the microcomputer may determine that a normal shopping instance has occurred, and if so how many product packages are still being urged by the pusher **1025**. Third, if more than a predetermined number of product packages have been removed in less than a predetermined amount of time, the microcomputer may determine

that a potential theft situation is in progress. Another condition that may be communicated is a low product condition. For example, the microcomputer may determine a low product condition if any pusher location is empty of product packages or less than a predetermined number of product packages are still being urged by the pusher **1025**.

As illustrated in FIGS. **15***a* and **15***b*, without departing from the present invention, the shelf management system **1000** may include a local audio annunciator **1050**. Any of the conditions described above may be communicated by the microcomputer via wired or wireless means to various communication modules, such as: a local or remote audio annunciator **1050**, a local or remote light annunciator **1060**, a remote computer, a store public announcement system, a cell phone, a pager, or an other remote annuciator. An internal wireless capability of the control module **1040** may wirelessly transmit signals to/from a remote location to indicate the condition of the shelf management system.

In another embodiment similar to the embodiments described above, as illustrated in in FIGS. **16***a* and **16***b*, a shelf management system **1100** may include one fixed mirror **1134** located along the length of the rear reflector strip **1130**. In this embodiment, and as illustrated in FIGS. **16***a* and **16***b*, the shape of the fixed mirror **1134** may be curved and may be approximately a parabola shape. Since the laser scanner **1132**, the moving mirror, and ultimately the swept beam **1137**, are controlled by the microcomputer or control module **1140**, the microcomputer is capable of determining the position of each pusher **1125** on the shelf by knowing and using the position of the moving mirror at any point in time during the sweeping motion and analyzing the output beam **1135**. Additionally, the process of transmitting the swept beam **1137** from the laser scanner **1132** to and from the pusher paddle **1125** may be taken on a continuous or near continuous basis, such as a fraction of a second, or on a periodic bases such as a second, or every 5 seconds.

Additionally, the microcomputer may execute an algorithm which determines that multiple readings represent only one wide pusher **1125**. This might be the case if readings are taken every 1 inch along the length of an example 48 inch-long shelf. A product position **1110** in front of a pusher **1125** on the shelf may be six inches wide. Therefore, in this example, five or six readings may be taken across the back of the pusher **1125** and product as the mirror sweeps and directs the swept beam **1137**. If one of the six-inch wide products is removed from the pusher **1125**, the microcomputer detects that at least five or six sensing positions essentially simultaneously changed an equal amount. The microcomputer may then be able to determine that all five or six readings represent one product width. This can be a learned aspect of the shelf management system **1100** which can change as different products are merchandised on the shelf over time.

In another embodiment similar to the embodiments described above, as illustrated in FIGS. **17***a* and **17***b*, a parabolic piece-wise linear mirror **1234** with a piece-wise linear approximation of a parabola may be utilized. As illustrated in FIGS. **17***a* and **17***b*, a shelf management system **1200** may include a piece-wise parabolic mirror **1234** that may be positioned along the rear reflector strip **1230**. This piece-wise parabolic mirror **1234** may include multiple linear sections **1233** with multiple leading edges **1236**. The linear sections **1233** may be wide enough to be easily manufacturable. Additionally, the linear sections **1233** may be narrow enough so that a shelf filled with the narrowest pushers **1225** will have at least one linear mirror section **1233** reflecting the output beam **1235** to/from it. As illustrated in FIGS. **17***a* and **17***b*, the leading edge **1236** of each linear mirror section **1233** may include a small flat section **1239** and an angled leading edge **1236**. The small flat section **1239** may retro-reflect the swept beam **1237** directly back to the laser scanner **1232**, without first allowing it to reflect from the back of a pusher **1225**. The process of transmitting the swept beam **1137** from the laser scanner **1132** to and from the pusher paddle **1125** may be taken on a continuous or near continuous basis, such as a fraction of a second, or a periodic basis such as a second, or 5 seconds.

For example, as specifically illustrated in FIG. **17***b*, as the beam **1237** sweeps, the laser scanner **1232** will see a series of short bright bursts directed back to the laser scanner **1232**, followed by a reflection from the angled leading edge **1236**. The reflection from the angled leading edge **1236** indicates the position of a pusher **1225**. As the moving mirror sweeps the beam beyond the edge of the first linear section, the mirror will again encounter a small flat section **1239** preceding the second angled leading edge **1236**. These small flat sections **1239** may represent cue points on the piece-wise parabolic mirror **1234**. These cue points **1239** may be interpreted by the microcomputer as 'cue' signals **1242**. Additionally, these small flat sections **1239** may divide the shelf up into designated sections that can be analyzed by the microcomputer for movement. Based on the distance and location of the small flat sections **1239**, the laser scanner **1232** may alert the control module **1240** that an angled leading edge **1236** is about to be encountered and a reading should be taken. In this way, the control module **1240** does not need to have a fine level of measurement of the moving mirror position. Additionally, the length of the piece-wise parabolic mirror **1234** can be any length. The control module **1240** may determine the number of pusher positions to read based on the number of cueing signals **1244** it receives between the 'home' and 'end' positions of the swept beam **1237**.

Additionally, for the shelf system illustrated in FIGS. **15***a*-**17***b*, the number of products aligned on the shelf could be measured. In such an embodiment, the position of the pusher could be used to determine the amount of product on the shelf without the need to manually count the product. For example, the laser scanner sends the output beam to the pusher or the product. The output beam may then be reflected back to the laser scanner to determine the location of the pusher by measuring and calculating the time to receive the output beam at the laser scanner. When one product is removed, for example by a purchaser, the time to receive the output beam back at the laser scanner may increase a set amount. Based on the dimensions of the product, specifically the thickness of the product, the control module can calculate how many products have been removed from the shelf by an algorithm of how fast the output beam is traveling back to the laser scanner. Without departing from this invention, the thickness of the product may be a setting or input that can be input into the control module during the set-up of the product on the shelf. Additionally, without departing from this invention, the thickness of the product may be determined by the control module after taking a number of different readings from the system, such as a smart or learning system for determining the thickness of the product.

The advantage of the invention illustrated in FIGS. **14**-**17***b* is evident in several ways. First, the present invention has no connection to the spring-urged pusher system and hence can work with almost any system currently in use. Second, the present invention has no physical moving connection to the pusher system or the product which precludes

the system from wearing out or getting dirty and reducing its effectiveness over time or with the number of products sold. Third, the present invention can operate from batteries for an extended period of time. RFID inventory systems require relatively high power radio-frequency transmitters to scan the product on the shelf and cannot operate from batteries. Fourth, the cost of the system may be amortized over the number of products sold from the shelf over a number of years. This cost of the system is as opposed to having to justify the cost of an individual RFID tag on each product package as well as amortizing an expensive reader system and infrastructure in each product's price. Lastly, the present invention can be programmed to ignore the replacement of product back onto the shelf as is the case when the shelf is being restocked.

The sensors of the various sensing configurations discussed in the above embodiments may output a signal representing the sensed parameter in either analog or digital format. The analog output may in the form of a voltage or current signal. As one skilled in the art will realize, an analog-to-digital converter may be utilized to transform the analog signal to a digital signal for use by a controller or processing device.

Variations and modifications of the foregoing are within the scope of the present invention. It should be understood that the invention disclosed and defined herein extends to all alternative combinations of two or more of the individual features mentioned or evident from the text and/or drawings. All of these different combinations constitute various alternative aspects of the present invention. The embodiments described herein explain the best modes known for practicing the invention and will enable others skilled in the art to utilize the invention. The claims are to be construed to include alternative embodiments to the extent permitted by the prior art.

FIGS. **18**A-**18**C depict an alternative implementation of a display management system **1800**. In particular, the display management system **1800** comprises a front rail **1802**, configured to be removably-coupled to a display surface (not shown). In one example, a display surface may comprise a shelf structure, and the like. As such, in one example, the front rail **1802** may be configured to be removably-coupled at a front edge of a display surface (not shown). However, those of ordinary skill in the art will recognize that the front rail **1802** may be removably-coupled to a display surface at a position other than an edge of the display surface, such as at a central portion of a surface, and the like. In one implementation, the front rail **1802** has a front rail length **1808**. Front rail **1802** may be configured such that the front rail length **1808** is parallel to a front edge of a display surface (not shown). Accordingly, the front rail length **1808** may be embodied with any dimensions, without departing from the scope of the disclosures described herein. As such, the front rail length **1808** may be configured to fit one or more physical dimensions of a given display surface (not shown).

The display management system **1800** may comprise a pusher **1804**. In one implementation, pusher **1804** may be generally referred to as a movable mechanism of a display management system, such as display management system **1800**. As depicted in FIG. **18**B, the pusher **1804** may be configured to urge one or more display products (not shown) along a floor structure **1810** towards a first end **1812** of the floor structure from a second end **1814** of the floor structure. Additionally or alternatively, the display management system **1800** may comprise one or more dividers **1806**. As such, a divider **1806**, and a divider wall **1803**, may be configured to separate a first group of display products (not shown) associated with a first pusher **1804** from a second group of display products (not shown) associated with a second pusher on a display surface (not shown). In one example, the divider **1806**, including the divider wall **1803**, the floor structure **1810**, and/or the barrier **1818**, may have a divider length **1816**. As such, in one implementation, the divider **1806** may be configured to be removably-coupled to the front rail **1802** such that the front rail length **1808** is substantially perpendicular to the divider length **1816**. However, those of ordinary skill in the art will recognize that the display management system **1800** may be implemented such that the front rail length **1808** may be configured to be positioned at any angle relative to the divider length **1816**, and such that an angle between the front rail length **1808** and the divider length **1816** may not be substantially 90°, and without departing from the scope of the disclosures described herein.

In one implementation, and as depicted in FIGS. **18**B and **18**C, the pusher **1804** may be urged towards the first end of the floor structure **1812** by a coiled spring **1820**. As such, a barrier **1818** may be configured to retain one or more display products (not pictured in FIG. **18**A-**18**C) within the display management system **1800** as the pusher **1804**, urged by the coiled spring **1820**, exerts a force on the one or more display products to slide them towards the barrier **1818**. Further, the pusher **1804** may be configured to slide along the floor structure **1810** without being guided by one or more rail structures. One or more elements of the display management system **1800**, including the front rail **1802**, the pusher **1804**, the divider **1806**, the divider wall **1803**, the floor structure **1810**, the coiled spring **1820**, and the barrier **1818**, may provide functionality similar to the front rail 580, the pusher 520, the divider 550, the divider wall 552, the floor 554, the coiled spring 534, and the barrier 556, respectively, as described in FIG. 58, FIG. 62, and FIG. 72 of U.S. patent application Ser. No. 14/444,357, filed 28 Jul. 2014, the entire contents of which are incorporated herein by reference for any and all non-limiting purposes.

In one implementation, and as depicted in FIGS. **18**B and **18**C, the display management system **1800** may comprise a capacitive sensor **1822**. As such, the capacitive sensor **1822** may be configured to output a signal that may be processed to determine a position of one or more elements of the display management system **1800**. In one example, the capacitive sensor **1822** may be configured to output a signal that may be processed to determine a position of the pusher **1804**. As such, the capacitive sensor **1822** may be utilized to determine a number of display products retained within the display management system **1800**.

The capacitive sensor **1822** may be utilized to determine a position of the pusher **1804** within the display management system **1800**, independently of specific geometrical features of the display management system **1800**. As such, the systems and methods described herein related to the capacitive sensor **1822** may be practiced with alternative display management systems described throughout this paper, as well as U.S. patent application Ser. No. 14/444,357, which has been incorporated herein by reference. In one implementation, the capacitive sensor **1822** may be configured to be positioned along the divider length **1816** on the floor structure **1810**, and such that an uncoiled length **1823** of the coiled spring **1820** makes contact with a portion of the capacitive sensor **1822** extending along the divider length **1816**. Accordingly, the capacitive sensor **1822** is described in further detail in relation to FIG. **20**.

FIGS. **19**A and **19**B schematically depict plan views of the display management system **1800**. Accordingly, FIG.

19A schematically depicts the display management system **1800** in a first configuration having a first plurality of display products **1902***a*-**1902***f* sandwiched between the barrier **1818** and the pusher **1804**. As such, in this depicted first configuration of the display management system **1800**, the coiled spring **1820** has a first uncoiled length **1904**. Turning to FIG. **19**B, the display management system **1800** is depicted in a second configuration having a reduced number of display products **1902***a*-**1902***c* contained within the system **1800**. Consequently, the coiled spring **1820** has a reduced, or a second, uncoiled length **1906**.

In one example, a conductive material (in one example, a metal or alloy) from which the coiled spring **1820** in constructed makes contact with the capacitive sensor **1822**. In one implementation, the extent to which the coiled spring **1820** makes contact with the capacitive sensor **1822** is proportional to an uncoiled length, such as, in one example, uncoiled length **1904** or **1906**. In turn, an output signal from the capacitive sensor **1822** may vary based upon a length of the coiled spring **1820** in contact with the capacitive sensor **1822**. In another example, a position of the pusher **1804** may be detected based on a point of contact of a portion of the coiled spring **1820** with the capacitive sensor **1822**. Accordingly, an output signal from the capacitive sensor **1822** may vary based upon a position of the pusher **1804**, and correspondingly, a number of display products (**1902***a*-**1902***f*) retained within the display management system **1800**.

FIG. **20**A schematically depicts a detailed view of a capacitive sensor **1822**. In one implementation, the capacitive sensor **1822** comprises a circuit board **2002**, the circuit board **2002** having a longitudinal length **2016**. As schematically depicted in FIGS. **18**A-**18**C, the capacitive sensor **1822** may be coupled to a floor structure **1812** of a divider **1806**, and such that the longitudinal length **2016** of the capacitive sensor **1822** is substantially parallel to the divider length **1816**. The capacitive sensor **1822** may be configured to be retrofitted into a display management system **1800**, such that all electronic components associated with capacitive sensor **1822** may be self-contained on the circuit board **2002**. In one example, the capacitive sensor **1822** may comprise a plurality of capacitive sensor elements **2004***a*-**2004***f*. As such, those of ordinary skill in the art will recognize that the capacitive sensor elements **2004***a*-**2004***f* depicted in FIG. **20**A merely represent one example implementation of the capacitive sensor **1822**, and various alternative implementations of capacitive sensor **1822** may be realized, having a different number of capacitive sensor elements to those capacitive sensor elements **2004***a*-**2004***f* depicted in FIG. **20**A.

In one example, the capacitive sensor **1822** may be configured to output a signal proportional to a capacitance value, and such that the capacitance value may be based upon an uncoiled length (e.g. uncoiled lengths **1904** and **1906**) of the coiled spring **1820**. In one example, the control circuit **2006** comprises electronic elements configured to calculate one or more capacitance values associated with the capacitive sensor elements **2004***a*-**2004***f*. In another implementation, the control circuit **2006** may be referred to as a transmitter circuit, and configured to transmit one or more data points received from the capacitive sensor elements **2004***a*-**2004***f* to a remote processor, such as the display management system controller device **2400** from FIG. **24**. In another example, one or more calculated capacitance values may vary based upon a length of a conductor in contact with the circuit board **2002**. As such, the one or more calculated capacitance values may vary based upon an uncoiled length of the coiled spring **1820**, such as those uncoiled lengths **1904** and **1906** depicted as examples in FIGS. **19**A and **19**B. In yet another example, a capacitance value may vary based on a point of contact of a portion of the coiled spring **1820** with the circuit board **2002**. In one specific example, the control circuit **2006** may be configured to calculate a value of capacitance between one or more successive pairs of capacitive sensor elements, selected from the capacitive sensor elements **2004***a*-**2004***f*. Accordingly, a value of capacitance calculated between a pair of capacitive sensor elements, selected from the capacitive sensor elements **2004***a*-**2004***f* may change if one or more of the pair of capacitive sensor elements comes into contact with a portion of an uncoiled length of the coiled spring **1820**. As such, a change in capacitance between successive pairs of the capacitive sensor elements **2004***a*-**2004***f* may be utilized to indicate a position of the pusher **1804**. As such, one or more of the capacitive sensor elements **2004***a*-**2004***f* may comprise an exposed electrically-conducting structure configured to contact a portion of the electrically-conducting uncoiled length of coiled spring **1820**. In another example, the capacitive sensor elements **2004***a*-**2004***f* may comprise one or more insulating materials, but still allow for a capacitance between successive pairs of the capacitive sensor elements **2004***a*-**2004***f* to be detected.

In one implementation, the circuit board **2002** may comprise a substantially insulating material configured to electrically insulate the capacitive sensor elements **2004***a*-**2004***f* from one another. Further, the capacitive sensor elements **2004***a*-**2004***f* may be connected to the control circuit **2006** by electrical conductors (not depicted in FIG. **20**A). In one example, a pair of capacitive sensor elements, selected from the capacitive sensor elements **2004***a*-**2004***f*, may be separated by a separation distance **2018**. Accordingly, in one implementation, the separation distance **2018** may be uniform between each pair of capacitive sensor elements, selected from the capacitive sensor elements **2004***a*-**2004***f*, or may be non-uniform, such that a first separation distance **2018** may be different from a second separation distance **2020**. Further, those of ordinary skill in the art will recognize that separation distances **2018** and **2020** may be embodied with any dimensions, without departing from the scope of the disclosures described herein. For example, the separation distances **2018** and **2020** may range from a millimeter or less to several hundred millimeters or more, and the like.

In one example, a separation distance, such as separation distance **2018** and/or **2020**, between a pair of capacitive sensor elements, selected from capacitive sensor elements **2004***a*-**2004***f*, may determine a resolution of the capacitive sensor **1822**. As such, a resolution of the capacitive sensor **1822** may be proportional to a precision with which the capacitive sensor **1822** can determine a location of a pusher, such as pusher **1804**. In particular, as a number of capacitive sensor elements, such as capacitive sensor elements **2004***a*-**2004***f*, is increased, the precision with which the capacitive sensor **1822** can determine the location of a pusher on the floor structure **1810** may also increase.

In one implementation, the capacitive sensor **1822** may be utilized to calculate an absolute location of the pusher **1804** on the floor structure **1810**. As such, the location of the pusher **1804** may not be calibrated based upon a zeroed position on the floor structure **1810**. Accordingly, a location of pusher **1804** may not be determined relative to another location on the capacitive sensor **1822**, and the like.

In yet another implementation, the control circuit **2006** may be utilized to calculate a position of the pusher **1804** on the capacitive sensor **1822** using interpolation methodology. In particular, the control circuit **2006** may receive signals

(otherwise referred to as sensor data) from multiple capacitive sensor elements, from the capacitive sensor elements **2004***a*-**2004***f*, and by processing the received signals, determine that the location of the pusher **1804** lies between a pair of the capacitive sensor elements, selected from capacitive sensor elements **2004***a*-**2004***f*. Specifically, the control circuit **2006** may be utilized to interpolate a closeness of a pusher **1804** to a first capacitive sensor element versus a second, adjacent, capacitive sensor element. In this way, those of ordinary skill in the art will recognize that the capacitive sensor **1822** may be implemented, in one example, using a single pair of capacitive sensor elements **2004** spaced apart between the first end **1812** and the second end **1814** of the floor structure **1810**.

FIG. **20**B schematically depicts a more detailed view of the control circuit **2006**. In particular, and in one example, the control circuit **2006** comprises a power supply **2008**, a memory **2010**, an interface **2012**, and a processor **2014**. In one implementation, the memory **2010**, interface **2012**, and processor **2014** may be embodied as a single microcontroller circuit, or may be implemented as discrete electronic elements. In one example, the power supply **2008** may represent a source of electrical energy provided by one or more electrochemical cells, otherwise referred to simply as a cell or as a battery. In one specific example, power supply **2008** may be implemented as a single "button cell" or "coin cell." In another example, power supply **2008** may be a rechargeable or a non-rechargeable battery. In another example, power supply **2008** may represent electronic hardware configured to receive, and potentially to condition (rectify AC to DC, and/or step-up/step-down a voltage, smoothen, among others) a wired electrical supply. In yet another example, power supply **2008** may represent electronic hardware configured to receive, and potentially to condition, a power supply received from an external source wirelessly, such as by electromagnetic induction (electrodynamic induction, electrostatic induction, and the like). In another implementation, power supply **2008** may comprise one or more photovoltaic (solar cells). Further, those of ordinary skill in the art will recognize that power supply **2008** may represent any technology, or combination of technologies, configured to provide electrical power to the control circuit **2006**, without departing from the scope of the disclosures described herein. Similarly, power supply **2008** may be configured to store any amount of energy (J), and/or to provide an electrical potential (voltage (V)), or an electrical current (A) of any value, without departing from the scope of the disclosures described herein.

Memory **2010** may be a form of persistent memory, or a form of volatile memory, or a combination thereof. As such, memory **2010** may comprise a form of random access memory (RAM) that is cleared by a power cycle or other reboot operation of the control circuit **2006**. In other embodiments, memory **2010** may be non-volatile, such that it does not require power from power supply **2008** to maintain information. As such, memory **2010** may comprise a form of read only memory (ROM), or flash memory. Generally, memory **2010** may be referred to as a form of a non-transitory, computer-readable medium and utilized to store instructions that may be executed by processor **2014**.

Interface **2012** may comprise hardware and/or firmware configured to facilitate communication between the control circuit **2006** and one or more external devices. For example, interface **2012** may be utilized to facilitate communication between processor **2014** and an external computer device across a network. In this way, interface **2012** may be configured to communicate via one or more of a wired connection, such as utilizing an Ethernet connection, or a wireless connection, such as utilizing a Bluetooth connection, a Wi-Fi connection, or the industrial, scientific, and medical (ISM) radio bands. Interface **2012** may be configured to facilitate communication between the control circuit **2006** and any wired or wireless link or network, and using any communication protocol.

In one implementation, processor **2014** comprises a microprocessor having one or more processing cores. As such, processor **2014** may be configured to execute instructions stored within memory **2010**. Further, one or more processes executed by processor **2014** may be utilized to drive one or more electrical circuits associated with the circuit board **2002** and the plurality of capacitive sensor elements **2004***a*-**2004***f*. Additionally, processor **2014** may be configured to receive and process, via interface **2012**, one or more sensor readings from the plurality of capacitive sensor elements **2004***a*-**2004***f* In one specific example, a capacitive sensor element, from the plurality of capacitive sensor elements **2004***a*-**2004***f* may be configured to output an analog signal (voltage, current, and the like) or a digital signal (for example, a binary signal, among others).

In one example, one or more signals communicated from the plurality of capacitive sensor elements **2004***a*-**2004***f* may be received by processor **2014**. In turn, the processor **2014** may execute one or more processes on the received signals before communicating, via the interface **2012**, the received signals to a remote processor, such as that processor **2404** associated with the display management system controller device **2400** described in FIG. **24**. These one or more processes may include determining that a received signal is above a threshold value, compressing the received signals for communication, or filtering the received signals, among others. Accordingly, in this example, the processor **2404** of the display management system controller device **2400** may calculate one or more capacitance values as previously described in relation to FIG. **20**A, and further calculate a position of a pusher **1804** on a display management system **1800**. In another example, one or more signals communicated from the plurality of capacitive sensor elements **2004***a*-**2004***f* may be processed by processor **2014** to calculate the one or more capacitance values as previously described in relation to FIG. **20**A. In turn, the calculated capacitance values may be utilized to calculate the location of the pusher **1804** on the display management system **1800**. In yet another example, a combination of processor **2014** and processor **2404** may be utilized to determine a location of a pusher **1804**, and the like.

In one implementation, control circuit **2006** may be configured to communicate directly with a mobile device. As such, in one specific example, control circuit **2006** may be configured to establish a Bluetooth connection with a smart phone or tablet of a shopper in a store in order to receive one or more pieces of biographic information associated with the shopper. In this way, upon activation of pusher **1804** as one or more display products, such as display products **1902***a*-**1902***f*, are removed from the display management system **1800**, the control circuit **2006** may be configured to query a mobile device of a user removing the one or more display products to receive one or more pieces of biographic information associated with the user. The biography information may include, among others, a name, a gender, a preferred spoken language, an age, or an approximate age range. In another implementation, upon activation of the pusher **1804** as one or more display products are removed from the display management system, the control circuit **2006** may be configured to communicate with the

display management system controller device **2400**. In turn, the display management system controller device **2400** may attempt to establish a connection (via Bluetooth, and the like) to a mobile device associated with a user removing said one or more display products.

In one example, the capacitive sensor **1822** may be configured to operate within a low power mode until the pusher **1804** is moved as a result of one or more display products, such as display products **1902***a*-**1902***f*, or removed from the display management system **1800**. In particular, this low power mode may include processor **2014** operating in a low power configuration that continuously monitors the sensor outputs from the capacitive sensor elements **2004***a*-**2004***f* Accordingly, in this example, the processor **2014** may execute one or more processes to enter a high power configuration upon receiving one or more sensor signals indicative of movement of the pusher **1804**. Specifically, the high power configuration may include executing one or more processes to deliver additional electrical power to memory **2010**, interface **2012**, and/or processor **2014** in order to execute additional processes on the received sensor data and/or communicate the received sensor data to a remote processor. In this way, the capacitive sensor **1822** may be configured to consume a reduced amount of electrical energy while the pusher **1804** remains stationary. As such, this low power configuration may be utilized to prolong a battery life associated with power supply **2008**. In another example, the capacitive sensor **1822** may be configured to operate within a low power configuration while the pusher **1804** remains stationary, and such that the low power configuration delivers electrical energy to one or more of the plurality of capacitive sensor elements **2004***a*-**2004***f*. Accordingly, in response to motion of the pusher **1804**, one or more of the capacitive sensor elements **2004***a*-**2004***f* may be configured to communicate a wake signal to the control circuit **2006** in order to enter a high power configuration. As such, the wake signal may be received by the control circuit **2006**, and in response, additional power may be delivered to one or more of the memory **2010**, interface **2012**, and/or processor **2014**. In this way, maintaining the capacitive sensor **1822**, and in particular, the control circuit **2006**, within a low power configuration for a period of time during which the pusher **1804** is stationary may allow for decreased overall energy consumption, and in one example, increased battery life of the capacitive sensor **1822**.

FIGS. **21**A and **21**B depict an alternative implementation of a display management system **2100**. In particular, FIG. **21**A depicts an isometric view of a display management system **2100** configured as a box-shelf. In particular, the box-shelf display management system **2100** comprises a top **2102** and two sides **2104** that can be connected together to form part of a housing **2106**. A recessed portion **2108** is provided so that in the event that the box-shelf display management system **2100** is mounted under a shelf (not shown), the recessed portion **2108** will aid in ensuring that there is no interference with the brackets that support the shelf or other structure that may extend downward (not shown). One or more shelf supports **2110** are mounted to the box-shelf display management system **2100** to facilitate the box-shelf display management system **2100** to be mounted to a vertical support (not shown) in a traditional manner.

A slidable shelf **2112** is mounted to one or more tracks **2114**, which may be supported at least in part by the sides **2104**. As depicted, the slidable shelf **2112** may include a support surface **2116** that supports a divider **2118**. In one example, the support surface **2116** may support one or more display management systems, such as systems **1800** described previously. In one implementation, the support surface **2116** includes a rail **2120** mounted to the front of the shelf **2112**. The rail, in turn, supports a retainer **2122**. As depicted, a door **2124** with one or more handles **2126** may be mounted to the top **2102** via a hinge system **2128**. In another implementation, the door **2124** may be referred to as a flip window **2124**, and such that the flip window **2124** may be partially or wholly transparent to visible light. In this way, flip window **2124** may facilitate viewing of one or more display products within the box-shelf display management system **2100**. In one specific example, the box-shelf display management system **2100** may be similar to the box-shelf 3405 described in U.S. application Ser. No. 14/046,385 filed 4 Oct. 2013, the entire contents of which are incorporated herein by reference for any and all non-limiting purposes.

In one implementation, the box-shelf display management system **2100** may be configured to retain one or more display products, such as display products **1902***a*-**1902***f* schematically depicted in FIG. **19**A. Accordingly, in one configuration, the box-shelf display management system **2100** positions the slidable shelf **2112** within the housing **2106**. As such, in order to remove one or more display products (not shown in FIG. **21**A) from the box-shelf display management system **2100**, a user may rotate the flip window **2124** from a substantially vertical position (depicted in FIG. **21**B to a substantially horizontal position depicted in FIG. **21**A).

In one implementation, the box-shelf display management system **2100** may be configured with a sensor **2130**. In particular, sensor **2130** may be an accelerometer. Further, the accelerometer sensor **2130** may be sensitive to accelerations (due to gravity or otherwise) along a single axis (one-axis accelerometer), along two mutually-perpendicular axes (a 2-axis accelerometer), or along three mutually-perpendicular axes (a 3-axis accelerometer). Those of ordinary skill in the art will recognize various specific implementations of one-axis, two-axis and three-axis accelerometer electronic circuits that may be utilized with the box-shelf display management system **2100**, or other display management systems, such as systems **1800** and **2300**, without departing from the disclosures described herein. Further, those of ordinary skill in the art will recognize that an accelerometer sensor **2130** may be utilized to determine an orientation of a structure to which it is affixed. As such, accelerometer sensor **2130** from FIG. **21**A may be utilized to determine an orientation of the flip window **2124**. Advantageously, the accelerometer sensor **2130** may offer improved accuracy in determining an orientation of the flip window **2124** when compared to one or more alternative sensor technologies positioned as hinge **2128**, wherein a range of motion of hinge **2128** may be comparatively more limited.

In one implementation, an accelerometer sensor, such as accelerometer sensor **2130**, may be utilized to determine an orientation of the flip window **2124**. As such, those of ordinary skill in the art will recognize that the accelerometer sensor **2130** may be located on the flip window **2124** at any location configured to move in conjunction with the movement of the flip window **2124**, without departing from the scope of the disclosures described herein. Additionally, those of ordinary skill in the art will recognize that the accelerometer sensor **2130** may be generally utilized to determine an orientation of a flip window, similar to flip window **2124**, as part of any display management system. As such, display management system **2100**, having flip window **2124**, is merely one example of a display management system with which an accelerometer sensor **2130** may be utilized. Accordingly, those of ordinary skill in the art will

readily recognize various additional or alternative implementations of a display management structure similar to the housing **2106** having a movable feature similar to the flip window **2124** that is configured to be moved in order to remove one or more products from the display management structure. In turn, the accelerometer sensor **2130** may be coupled to a movable feature of the various additional or alternative implementations of display management structures that may be envisioned by those of ordinary skill in the art.

In one example, accelerometer sensor **2130** may be implemented as part of an integrated accelerometer device, as schematically depicted in FIG. **22**A. As such, the integrated accelerometer device **2130** may comprise an accelerometer circuit board **2200**, a power supply **2202**, and an interface **2203**. Accordingly, and as previously described, those of ordinary skill the art will recognize various specific accelerometer circuits that may be implemented as the accelerometer circuit board **2200**, without departing from the scope of the disclosures described herein. In one example, power supply **2202** may be configured to provide electrical energy to the accelerometer circuit board **2200** and the interface **2203**. As such, the power supply **2202** may be similar to power supply **2008**, and may be embodied as a wired electrical supply, one or more batteries, hardware configured to accommodate wireless transmission of electrical energy, or combinations thereof. In another example, interface **2203** may be similar to interface **2012**, and such that interface **2203** may be configured to communicate one or more acceleration signals from the accelerometer sensor **2130** via a wired or wireless network.

In one implementation, the integrated accelerometer device **2130** may be configured to output one or more sensor signals (otherwise referred to as motion data) indicative of an orientation of the flip window **2124**. In one example, the one or more sensor signals may comprise an analog or a digital signal indicative of an acceleration along one or more of the axes to which the integrated accelerometer device **2130** is sensitive. Accordingly, in one example, the sensor signal output from the integrated accelerometer device **2130** may be as a result of an acceleration due to gravity resolved along one, two, or three mutually perpendicular axes (x-, y-, and/or z-axis) to which the integrated accelerometer device **2330** is sensitive. In one example, the integrated accelerometer device **2130** is configured to communicate a sensor signal (otherwise referred to as motion data) via the interface **2203** to a control circuit, such as control circuit **2006** depicted in FIG. **22**B. As such, in one implementation, communication between the control circuit **2006** and the integrated accelerometer device **2130** may be via a hardware (wired) connection. However, communication between the control circuit **2006** and the integrated accelerometer device **2130** may be, additionally or alternatively, via a wireless connection. As such, an output signal from the integrated accelerometer device **2130** may be processed and utilized in a similar manner to a sensor output from the capacitive sensor **1822** previously described. In another implementation, a sensor output from the integrated accelerometer device **2130** may be communicated directly to a display management system controller device **2400**, described in further detail in relation to FIG. **24**.

In one example, accelerometer sensor (otherwise referred to as an integrated accelerometer device) **2130** may be configured to operate in a low power configuration while a movable structure to which the accelerometer sensor **2130** is coupled remains stationary. As such, the accelerometer sensor **2130** may be configured to operate in this low power configuration while an output from the accelerometer circuit board **2200** is unchanging (indicative of, in one example, the flip window **2124** remaining at a fixed orientation). Accordingly, upon detection of motion of the flip window **2124**, one or more of the accelerometer circuit board **2200**, the control circuit **2006**, and/or the display management system controller device **2400** may be configured to implement a high power configuration. As such, this high power configuration may be configured to execute one or more processes in response to movement of the flip window **2124**, wherein movement of the flip window **2124** may be indicative of one or more display products, such as display products **1902***a*-**1902***f*, being removed from a display management system, such as system **2100**, **1800**, and/or **2300**.

FIG. **23** depicts an alternative implementation of a display management system **2300**. In particular, FIG. **23** depicts a spiral peghook security device **2301**. As such, the spiral peghook security device **2301** may comprise a front structure **2314**, rigidly-coupled to a back structure **2306** by a support rail **2308**. Further, the back structure **2306** may comprise one or more coupling elements (not shown) configured to removably-couple the spiral peghook security device **2301** to a surface **2312**. In one example, surface **2312** may be similar to the gondola wall **905** described in relation to FIG. **14**. However, those of ordinary skill the art will recognize that surface **2312** may comprise any support structure configured to receive one or more coupling elements (not shown) of the spiral peghook security device **2301**. In one implementation, the spiral peg hook security device **2301** comprises a knob **2304**, rotatably-coupled to the front structure **2314**, and configured to rotate about the center axis of bearing **2316**. Additionally, the front structure **2340** may be configured to receive one or more labels associated with one or more display products supported by the spiral peghook security device **2301**.

In one example, upon application of a manual rotational force to the knob **2304** in a first direction (e.g. that direction indicated by arrow **2318**), spiral rail **2302** may be configured to rotate about the center axis of bearing **2316**. In turn, based upon the rotation of the spiral rail **2302**, one or more display products supported by (hanging from) support rail **2310** may be urged by the spiral rail **2302** towards the front structure **2314**. Conversely, upon application of a manual rotational force to the knob **2304** in a second direction (e.g. a direction opposite to by arrow **2318**), spiral rail **2302** may be configured to urge one or more display products hanging from support rail **2310** towards the back structure **2306**.

In one example, the spiral peghook security device **2301** may be configured to display one or more products within a store. As such, in one embodiment, the spiral peghook security device **2301** may be utilized to prevent multiple products that are supported by support rail **2310** from being quickly removed from the spiral peghook security device **2301**. In this way, the spiral peghook security device **2301** may be utilized to deter theft of one or more products hanging from support rail **2310**, due to the extended time needed to rotate knob **2304** and spiral rail **2302** in order to remove the one or more products from the device **2301**.

In one implementation, an accelerometer sensor **2130** may be utilized with the display management system **2300** in order to detect motion of the knob **2304** and/or spiral rail **2302**. As previously described, the spiral rail **2302** may be rotated in order to insert and/or remove one or more display products from the display management system **2300**. In this way, the accelerometer sensor **2130** may be coupled to a structure that is configured to rotate upon application of a manual force to knob **2304**. In one specific example, the

accelerometer sensor **2130** may be coupled within a structure of the knob **2304**, as schematically depicted in FIG. **23**. However, those of ordinary skill in the art will recognize additional or alternative placement options for the accelerometer sensor **2130** that may be utilized without departing from the scope of the disclosures described herein. In one example, a change in a sensor output from the accelerometer sensor **2130** as the spiral rail **2302** is being rotated may be utilized by one or more of the accelerometer circuit board **2200**, the control circuit **2006**, and/or the display management system controller device **2400**, to track the rotation of the spiral rail **2302**, and thus, determine a number of display products inserted onto/removed from the display management system **2300**.

Similar to the display management system **2100**, display management system **2300** may utilize the accelerometer sensor **2130** to detect motion, and in response, execute one or more processes. In one example, a motion of the spiral rail **2302** may execute one or more processes to transition the accelerometer sensor **2130** from a low power configuration into a high power configuration, as described previously.

FIG. **24** schematically depicts a sensor network **2401** configured to implement one or more inventory management, security, and/or recognition functions in combination with one or more display management systems, such as systems **1800**, **2100**, and **2300**, among others. In particular, the sensor network **2401** comprises a display management system controller device **2400**. Accordingly, the display management system controller device **2400** may comprise a memory **2402**. As such, memory **2402** may be a form of persistent or volatile memory, or combinations thereof. In this way, memory **2402** may comprise a form of random access memory (RAM) that is cleared by a power cycle or other reboot operation of the device **2400**. In other embodiments, memory **2402** may be non-volatile, such that it does not require power to maintain information. As such, memory **2402** may comprise a form of read only memory (ROM), or flash memory, among others. Generally, memory **2402** may be referred to as a form of a non-transitory, computer-readable medium and utilized to store instructions that may be executed by processor **2404**. Additionally, device **2400** may comprise an interface **2406**, wherein interface **2406** is configured with hardware and supporting firmware that allow device **2400** to connect to network **2408**. Further, device **2400** may comprise a processor **2404**, wherein processor **2404** may comprise a microprocessor having one or more processing cores. As such, processor **2404** may be configured to execute instructions stored within memory **2402**.

Generally, the display management system controller device **2400** may be configured to execute one or more processes in response to receiving sensor information from one or more of a capacitive sensor **1822** (via control circuit **2006**), or from an accelerometer sensor **2130** (directly, or via control circuit **2006**). In one example, communication between one or more of the control circuit **2006**, the accelerometer sensor **2130**, and the display management system controller device **2400** may be unidirectional, or may be bi-directional. In one implementation, the display management system controller device **2400** may be referred to as a remote processor, and may be positioned remotely from one or more display management systems (**1800**, **2100** and/or **2300**) to which one or more sensors (**1822**, **2130**) are attached for detection of motion indicative of one or more display products being removed. As such, a distance between the display management system controller device **2400** and one or more sensors with which it may be in communication may be any given distance, without departing from the scope of the disclosures described herein. For example, the display management system controller device **2400** may be positioned within a same geographic location (in one example, a same store) as the one or more sensor devices with which the display management system controller device **2400** is in communication. In another example, the display management system controller device **2400** may be positioned at a different geographic location to one or more display management systems (e.g. **1800**, **2100**, and/or **2300**) with which the device **2400** in communication via network **2408**.

In one implementation, the display management system controller device **2400** may be configured to calculate a position of a pusher **1804**, a flip window **2124**, and/or a spiral rail **2302**. Accordingly, the display management system controller device **2400** may be configured to calculate a number of display products removed from one or more display management systems (e.g. **1800**, **2100**, and/or **2300**) based upon detected motion of one or more pushers **1804**, flip windows **2124**, and/or spiral rails **2302**.

In one specific example, the display management system controller device **2400** may be configured to determine a number of display products removed from the display management system **1800** based upon comparison of a first position of a pusher **1804** with a second position of said pusher **1804**. In particular, processor **2404** may calculate a distance moved by pusher **1804**, and execute one or more processes to consult a lookup table (stored, for example, in memory **2402**) for a depth dimension associated with a plurality of products held within the display management system **1800**. As such, processor **2404** may determine a product type held within display management system **1800** based upon information input by a user, or information sensed by one or more sensors **2410** (e.g. by scanning a barcode on the one or more products, or detecting a RFID signal associated with the one or more products within the display management system **1800**, among others). In this way, upon receiving, from a lookup table within memory **2402**, a depth dimension of a product held within the display management system **1800**, and having calculated a distance moved by the pusher **1804**, the processor **2404** may determine a number of products removed from the display management system **1800**. Similarly, the processor **2404** may be utilized to determine a number of products inserted into a display management system **1800** (e.g. during a restocking process, and the like).

In another example, the display management system controller device **2400** may infer a depth dimension of a product type stored within a display management system **1800**. In particular, without having information available within a lookup table stored in memory **2402**, processor **2404** may determine a depth dimension of a product based upon one or more discrete motions of the pusher **1804**. Specifically, after repeated instances of products being removed from the display management system **1800**, processor **2404** may execute one or more processes to recognize a consistent distance moved by pusher **1804**, and from this recognized distance, infer a depth dimension of a product to be utilized in determining a number of products removed from the display management system **1800** in response to future movements of pusher **1804**.

Accordingly, the display management system controller device **2400** may be configured to execute one or more processes based upon information received from one or more control circuits, such as control circuit **2006**, or accelerometer sensors, such as accelerometer sensor **2130**.

In addition, the display management system controller device **2400** may be configured to communicate with device **2410**. In one example, device **2410** may comprise a camera, a speaker, a microphone, a proximity sensor, a motion sensor, an ambient light sensor, or an electronic display, among many others. In one specific example, the display management system controller device **2400** may be configured to display, on an electronic display device **2410**, a message associated with one or more products stored within a display management system (e.g. system **1800**, **2100**, or **2300**).

The display management system controller device **2400** may be configured to communicate with one or more mobile devices, such as mobile device **2412**. As such, communication between the display management system controller device **2400** and one or more of a control circuit **2006**, an accelerometer sensor **2130**, device **2410**, and/or mobile device **2412** may be via a network **2408**. In turn, network **2408** may be a wired or wireless network that may utilize any communication protocol. As such, network **2408** may be the Internet, a wide area network (WAN), a local area network (LAN), or a Bluetooth connection, among many others. In one specific example, network **2408** may utilize one or more bands of the industrial, scientific and medical (ISM) radio bands.

In one implementation, the display management system controller device **2400** may execute one or more processes to receive and store one or more pieces of biographic information associated with a user, such as a user removing one or more display products from one or more display management systems (e.g. **1800**, **2100**, and/or **2300**) in communication with the device **2400**. In one example, the display management system controller device **2400** may receive one or more pieces of biographic information associated with the user, and received from a mobile device **2412** carried by the user. Specifically, the mobile device **2412** may comprise a smart phone or tablet carried by a user, and configured to communicate with the display management system controller device **2400** via one or more of a Bluetooth connection, an NFC connection, or a Wi-Fi connection, among others.

In one implementation, the display management system controller device **2400** may execute one or more processes to receive data from an additional sensor **2410**, in response to receiving motion data from one or more sensors (e.g. one or more sensors **1822** and/or **2130**) associated with one or more display management systems (e.g. **1800**, **2100**, and/or **2300**). In one specific example, the display management system controller device **2400** may communicate with a camera device **2410**, and execute one or more facial recognition processes to determine, in one example, an identity of a customer from a database of customers who are members of a store loyalty program. In another example, the display management system controller device **2400** may communicate with the camera device **2410**, and execute one or more facial recognition processes to determine one or more points of information associated with a user removing the one or more products from the display management systems from which motion data is received. This information may include a gender and/or an approximate age range of the user removing the one or more products from the display management systems from which motion data is received. In this way, the display management system controller device **2400** may be utilized to collect shopper behavior information that may be utilized to plan product displays within a store, to determine a popularity of a given product for a given age range, and/or gender, and the like.

In yet another implementation, the display management system controller device **2400** may execute one or more processes to recognize one or more patterns from the data received from sensors associated with motion of one or more display management systems (e.g. systems **1800**, **2100**, and/or **2300**). As such, processor **2404** may receive motion data from a plurality of sensors (e.g. one or more sensors **1822** and/or **2130**), and based upon the received motion data, determine whether the sensor data represents a recognized pattern (stored in memory **2402**) resulting from products being removed from the one or more display management systems (e.g. systems **1800**, **2100**, and/or **2300**).

In one specific example, the display management system controller device **2400** may receive motion data from a single display management system (e.g. system **1800**, **2100**, or **2300**) and determine that the received motion data represents removal of a plurality of a same product from the display management system. Further, the display management system controller device **2400** may calculate a rate at which products are being removed from this display management system. In one example, if a rate at which the products are being removed from this display management system is above a threshold level, the display management system controller device **2400** may determine that the removal of products may represent an attempted theft. In response, the display management system controller device **2400** may execute one or more processes to communicate a warning message to security personnel. In one example, this warning message may be communicated as an electronic message delivered via network **2408**. Additionally or alternatively, the display management system controller device **2400** may, in response to determining that motion data represents a pattern associated with an attempted theft, communicate with a camera device **2410** to capture one or more images of a user of the display management system from which the motion data has been received. In this way, one or more images of a suspected thief may be recorded. Further, the display management system controller device **2400** may, in response to determining that received motion data may represents an attempted theft, execute one or more processes to sound an audible message and/or siren.

In another example, the display management system controller device **2400** may receive sensor data, otherwise referred to as motion data, from a plurality of sensors (e.g. one or more sensors **1822** and/or **2130**, among others) associated with a plurality of display management systems (e.g. **1800**, **2100**, and/or **2300**). Accordingly, the display management system controller device **2400** may execute one or more processes to recognize one or more patterns from the data received from the sensors. In this way, the display management system controller device **2400** may determine, in response to a rate at which products are being removed from the display management systems in close proximity to one another within a store being above a threshold rate level, that the received sensor data may represent an attempted theft. In response, the display management system controller device **2400** may communicate with a camera **2410**, or communicate a message to security personnel, among others.

In one implementation, the display management system controller device **2400** may receive sensor data from an accelerometer sensor **2130** coupled to a flip window **2124**. As such, data received from the accelerometer sensor **2130** may represent an orientation of the flip window **2124**. In one embodiment, the display management system controller device **2400** may be configured to recalibrate a rest position (otherwise referred to as a zeroed position) associated with

the accelerometer sensor **2130**. In particular, the processor **2404** may execute one or more processes to recognize that the flip window **2124** is positioned at a specific angle when the flip window **2124** is not being moved. As such, this specific angle may not be equal to a 0° angle from a vertical orientation. In response, the processor **2404** may determine that the specific angle represents a rest position from which motion of the accelerometer sensor **2130** is to be calculated.

In one implementation, the display management system controller device **2400** may be configured to postpone one or more processes associated with recognition of an attempted theft. As such, processor **2404** may execute one or more processes to allow for restocking of one or more display management systems in communication with the display management system controller device **2400**, and the like. In one example, a physical key may be utilized to disarm communication between a display management system (**1800**, **2100** and/or **2300**) and the display management system controller device **2400**. In another example, and electronic communication device (not shown) may be carried by a user restocking one or more of the display management systems in communication with the display management system controller device **2400**. As such, the electronic medication device may communicate across network **2408** to identify the user as a person engaged in restocking a display management system. In yet another example, one or more security features associated with the display management system controller device **2400** configured to identify potential attempted thefts may be temporarily suspended based upon instructions received by the display management system controller device **2400** from a user. In one specific example, this user may be a store manager, and the like. As such, a temporary suspension may be applied to a subset of display management systems (e.g. one or more of the display management systems **1800**, **2100** and/or **2300**) in communication with the display management system controller device **2400**.

In yet another example, display management system controller device **2400** may be connected to an inventory control system (not shown). As such, information gathered by the display management system controller device **2400** related to a number of products removed from one or more display management systems (e.g. one or more of the display management systems **1800**, **2100** and/or **2300**) may be communicated to an inventory control system such that information related to an inventory held within a store may be updated in real-time, and the like.

In another example, the display management system controller device **2400** may communicate with one or more devices configured to provide data associated with one or more display management systems (e.g. one or more of the display management systems **1800**, **2100** and/or **2300**), one or more individuals within a store (e.g. customers removing one or more products from the display management systems), and/or one or more communication devices (e.g. cameras, electronic display screens, microphones, ambient light sensors, motion sensors, mobile devices, and the like), among others. As such, the display management system controller device **2400** may communicate with one or more of devices **2006**, **2330**, **2410**, and/or **2412**. However, in one implementation, communication between one or more of the devices **2006**, **2130**, **2410**, and/or **2412** may not be using a direct network connection. As such, in one example, communication between one or more of the depicted devices **2006**, **2130**, **2410**, and/or **2412** may utilize mesh networking methodologies, without departing from the scope of the disclosures described herein.

FIG. **25** schematically depicts a flowchart diagram of a process **2500** that may be executed by a display management system controller device **2400**, and in particular, processor **2404**. In particular, processor **2404** may receive sensor data from one or more sensors (e.g. one or more sensors **1822** and/or **2130**, among others). In one example, the sensor data may be received at block **2502**. In response to receiving sensor data, processor **2404** may execute one or more processes to determine a source of the received sensor data. In one implementation, processor **2404** may determine a source of the sensor data at block **2504** of process **2500**. As such, the processor **2404** may determine a display management system source of the received sensor data, such as one or more of display management systems **1800**, **2100**, and/or **2300**.

Upon determining a source of received sensor data, processor **2404** may execute one or more processes to calculate a motion of a mechanism of a display management system. In particular, the processor **2404** may calculate a position of one or more of a pusher **1804**, a flip window **2124**, and/or a spiral rail **2302**. From this position information, processor **2404** may calculate a distance moved by one or more of the respective mechanisms (**1804**, **2124**, and/or **2302**). As such, these one or more processes to calculate a motion of a mechanism of a display management system may be executed at block **2506** in accordance with motion calculation methods previously described in this document.

Further, process **2500** may calculate a number of products removed from the display management system. In particular, processor **2404** may execute one or more processes to infer, or lookup, from a lookup table stored within memory **2402**, a depth of a product. Using this information, processor **2404** may compare a depth of a product to a distance moved by, in one example, a pusher **1804**. In turn, processor **2404** may calculate the number of products removed from a display management system **1800**. Similarly, processor **2404** may utilize substantially similar processes to determine a number of products inserted into a display management system **1800**. Accordingly, this determination of a number of products removed from a display management system may be executed at block **2508** of process **2500**.

In one example, upon calculation of a number of products removed from a display management system, processor **2404** may execute one or more processes to attempt to identify a pattern from the received sensor data. As such, processor **2404** may execute one or more processes to attempt to identify a product removal pattern from one or more display management systems, such as systems **1800**, **2100**, and/or **2300**. In particular, processor **2404** may identify one or more product removal pattern indicative of a potential attempted theft based upon one or more product removal rates being above one or more threshold rate levels, and/or products being removed from a same display management system and/or multiple display management systems within a predetermined physical radius of one another. In one example, processor **2404** may attempt to identify one or more patterns from received sensor data at block **2510**. Accordingly, decision block **2512** represents one or more processes executed by processor **2404** two check whether one or more one or more product removal patterns have been found from received sensor data. In one example, if a product removal pattern is identified by processor **2404**, process **2500** may proceed to block **2516**, wherein processor **2404** may communicate an alert message. As such, this alert message may be an audible message and/or siren emitted by a local audio box, such as local audio box **950**. In another example, this alert message may be an electronic message

communicated to security personnel within a store, among others. In another example, if a product removal pattern is not identified by processor **2404**, process **2500** may proceed to block **2514**, and such that display management system controller device **2400** may communicate with an external device, such as device **2410** and/or **2412**.

FIG. **26** is a flowchart diagram of a process **2600** for calculation of a number of products removed from a display management system. In particular, process **2600** is described based upon sensor data received from a sensor (e.g. sensors **1822**, and/or **2130**) configured to output signals responsive to a motion of a movable mechanism (pusher **1804**, flip window **2124**, and/or spiral rail **2302**, among others) within a display management system, such as display management system **1800**, **2100**, and/or **2300**. In one example, this sensor data may be received at block **2602** of process **2600** by processor **2014**. In response, one or more processes may be executed by processor **2014** to determine a change in the received output data. In particular, processor **2014** may execute one or more processes to query memory **2010** for a stored sensor value indicative of a previous output from a same sensor from which the data was received at block **2602**. Accordingly, the processor **2014** may compare the stored sensor value to the new sensor value received from a display management system, and calculate a change in an output from the sensor

In one implementation, and at decision block **2606**, the processor **2014** may compare the calculated change in the output signal from the sensor to one or more predetermined threshold values. As such, the one or more predetermined threshold values may represent motion thresholds below which processor **2014** may discard the sensor data received at block **2602**. Specifically, if the received sensor data is below the one or more predetermined threshold values, it may not be as a result of a product removal from a display management system, and may be due to random motion/vibration of a store shelf, among others. As such, in one example, block **2606** may have the behavior of an electronic filter, among others.

In one example, the processor **2014** may execute those processes associated with blocks **2602** and **2604** while operating in a low power configuration. In this way, assessment of received sensor data may be carried out while consuming a reduced amount of electrical energy, and thereby prolonging, in one example, the battery life of a sensor **1822**, and/or **2130**. Accordingly, if, at decision block **2606**, it is determined that the received sensor data does not represent motion of a mechanism of a display management system above one or more threshold values, process **2600** proceeds to block **2608**, and the processor **2014** remains in a low power configuration. If, however, it is determined that the received sensor data represents a motion of a mechanism of a display management system above the one or more threshold values, process **2600** proceeds to block **2610**, and the processor **2014** may enter a high power configuration. In one example, the high power configuration may include communication of the sensor data to a remote processor, such as processor **2404**. In another example, the high power configuration may include execution of one or more additional processes by the same processor **2014**, wherein these additional processes may consume electrical energy at a higher rate than the processor **2014** consumers in a low power configuration.

In one example, process **2600** includes calculation of a position of a movable mechanism (e.g. pusher **1804**, flip window **2124**, and/or spiral rail **2302**, among others) of a display management system. In particular, this calculation of a position of a movable mechanism of the display management system may be executed at block **2612**. As such, calculation of a position of a movable mechanism of a display management system may include execution of one or more sub-processes to convert received sensor data into an indication of a position of the movable mechanism. Specifically, block **2612** may include execution of one or more processes to convert a value proportional to a capacitance of sensor **1822** into a position of pusher **1804**. Additionally or alternatively, block **2612** may include execution of one or more processes to convert a value proportional to an acceleration sensed by accelerometer **2130** into a position of flip window **2124** or spiral rail **2302**.

Upon calculation of a position of a movable mechanism of a display management system, processor **2014** and/or processor **2404** may query a lookup table, stored in memory **2010** and/or **2402** for information associated with one or more products stored within the display management system. This information may include a depth dimension of the product stored within the display management system. Accordingly, using this information, the processor **2014** and/or **2404** may calculate a number of products removed from the display management system. In particular, processor **2014** and/or **2404** may compare a distance moved by a movable mechanism of the display management system with the specific product dimensions. In one specific example, a distance moved by pusher **1804** may be divided by a depth dimension of a product stored within the display management system **1800**. In one example, this calculation of a number of products removed from the display management system may be executed at block **2616**.

FIG. **27** depicts another implementation of a display management system **2700**. The display management system **2700** may be referred to as a peghook system, and comprise a support structure **2702** that has an upper rail **2704** coupled to a lower rail **2706** at a first end **2708**. The lower rail **2706** may be configured to support one or more hanging products (not shown in FIG. **27**) that are added to, and removed from, the lower rail **2706** at a second end **2710**. A label holder **2712** may be pivotably-coupled to a second end **2714** of the upper rail **2704**. The display management system **2700** may be configured to be removably-coupled to a surface (not shown) at the first end **2708**, such that the support structure **2702** may, in one example, be cantilevered out from a vertical peghook surface, similar to surface **2312** as depicted in FIG. **23**, for example. Accordingly, any coupling mechanism and geometry (peghooks, and the like) may be utilized to removably-couple the display management system **2700** to a surface. The upper rail **2704** and the lower rail **2706** may comprise an electrically-conductive structure formed from a metal or alloy, and such that an electrical current may be passed from the second end **2714** of the upper rail **2704** to the second end **2710** of the lower rail **2706**.

The label holder **2712** may comprise a display plate **2716** that has a front surface **2718** and a back surface **2720**. In one example, the front surface **2718** of the display plate **2716** may be configured to receive a display label (not shown in FIG. **27**). Accordingly, in one example, this display label may be configured to communicate product information (e.g. a product name, price, and the like) to a customer in a store, and the like. The label holder **2712** may also comprise an arm structure **2722** that is coupled to the back surface **2720** of the display plate **2718**. As will be discussed in further detail below, the arm structure **2722** may comprise a geometry that prevents more than one product from being removed from the lower rail **2706** as the label holder **2712** is pivoted from a closed position, as depicted in FIG. **27**, to

an open position, as depicted in FIG. **28**C. As such, the arm structure **2722** may comprise a lower bumper surface **2730** spaced apart from an upper bumper surface **2732** to form a channel **2806** therebetween. In one example, the label holder **2712** may be formed from one or more injection molding processes of one or more polymer materials. Additionally or alternatively, the label holder **2712** may be wholly or partially formed from one or more metals or alloys.

FIGS. **28**A-**28**F depict a sequence of movements of the label holder **2712** as a product **2804***a* is removed from the display management system **2700**. As such, the label holder **2712** may be configured to pivot between a closed position, as depicted in FIG. **28**A, and an open position, as depicted in FIG. **28**C. In one example, the arm structure **2722** may be configured to prevent more than one product (e.g. more than one of products **2804***a-c*) hanging from the lower rail **2706** from being removed from the display management system **2700** each time the label holder **2712** is pivoted from the closed position depicted in FIG. **28**A to the open position depicted in FIG. **28**C. Taking each step in turn, FIG. **28**A depicts the label holder **2712** in a closed position, FIG. **28**B depicts the label holder **2712** is a partially-pivoted position with product **2804***a* within channel **2806** of the arm structure **2722**. Accordingly, the geometry of the arm structure **2722** is such that only one of the products, from products **2804***a*-**2804***c*, will fit into the channel **2806**. FIG. **28**C depicts the label holder **2712** in a fully-pivoted position. FIG. **28**D depicts the label holder **2712** in the fully-pivoted position after the product **2804***a* is removed from the lower rail **2706**. Further, FIG. **28**E depicts the label holder **2712** in the partially-pivoted position as it is returned to the closed position, as depicted in FIG. **28**E.

In one example, the display management system **2700** may comprise a sensor device configured to output data responsive to a motion of the label holder **2712**. As such, FIG. **29** schematically depicts the display management system **2700** that includes a label holder rotation sensor device **2902**. In one implementation, the label holder rotation sensor device **2902** may comprise an accelerometer sensor, and may be substantially similar to sensor **2130**, as previously described. In another example, the label holder rotation sensor device **2902** may be similar to the control circuit **2006**, as previously described. As such, the label holder rotation sensor device **2902** may comprise a power supply similar to power supply **2008**, a memory similar to memory **2010**, an interface similar to interface **2012**, and a processor similar to processor **2014**. Accordingly, the label holder rotation sensor device **2902** may be configured to receive and process sensor data received from one or more sensor types, including, among others, accelerometers, force sensors, capacitance sensors, current sensors (ammeters/galvanometers), and voltage sensors (voltmeters). Accordingly, the label holder rotation sensor device **2902** may be configured to receive sensor data and detect a movement of the label holder **2712**. For example, the label holder rotation sensor device **2902** can be configured to measure the angular movement of the label holder **2712**. For example, the label holder rotation sensor device **2902** may be configured to measure a change in angle with a resolution of 10°, 5°, 1°, 0.1° or less. Further, other measurement resolutions may be utilized with the angular movement of the label holder **2712**, without departing from the scope of these disclosures. The angular movement of the label holder **2712** may also measure an absolute angle of inclination of the label holder **2712** relative to a vertical plane (e.g. relative to gravity), and with a resolution of 10°, 5°, 1°, 0.1° or less. As such, an output from the label holder rotation sensor device **2902** may comprise a signal (e.g. an electronic analog or digital signal), that may be processed to receive an angular value that may correspond to a change in angular rotation of the label holder **2712**, or an absolute value of inclination/rotation of the label holder **2712** (e.g. 14°, 61°, 104° etc.). The label holder rotation sensor device **2902** may, in one example, be positioned within a display plate **2716** of the label holder **2712**. As such, the label holder rotation sensor device **2902** may comprise a circuit board, or a circuit shielded with a protective covering (e.g. a casing configured to receive the device **2902**). The label holder rotation sensor device **2902** may be received into a recess (not depicted) on the front surface **2718** or back surface **2720** of the display plate **2716**. In one example, the label holder rotation sensor device **2902** may be covered within the recess by a covering such that it is not externally visible. A display label, received by the label holder **2712** may, in one example, cover a recess configured to receive the label holder rotation sensor device **2902**. In another example, the label holder rotation sensor device **2902** be may be overmolded within the label holder **2712**. The label holder rotation sensor device **2902** may, in another example, be externally visible on or within the label holder **2712**. The label holder rotation sensor device **2902** may be removably-coupled to the label holder **2712**, or may be rigidly coupled to the label holder **2712**. Further, the label holder rotation sensor device **2902** may be coupled to a portion of the label holder **2712** other than the display plate **2716**. For example, the label holder rotation sensor device **2902** may be coupled to the arm structure **2722**.

In one implementation, the label holder rotation sensor device **2902** and can predict certain conditions of the label holder **2712**. Specifically, in certain instances, the label holder rotation sensor device **2902** may execute one or more processes to detect a pattern from the received sensor data which may be indicative of an attempted theft of one or more products from the display management system **2700**. For example, the label holder rotation sensor device **2902** may detect high-frequency movement of the label holder **2712** above a threshold frequency (it will be understood that any special frequency may be utilized without departing from the scope of these disclosures), which may be indicative of an attempted theft. In another example, the label holder rotation sensor device **2902** may detect that the whole display management system **2700** has been removed from a surface to which it was coupled (not depicted in FIG. **29**). As such, this detection of a removal of the display management system **2700**, which may be detected as a change in orientation from an accelerometer sensor, may be interpreted as an attempt to steal one or more products from the display management system **2700**. Further, the label holder rotation sensor device **2902** may utilize multiple sensors of different types in combination with one another in order to interpret a movement of the label holder **2712**. In other examples, the label holder rotation sensor device **2902** may be utilized for product inventory tracking on the display management system **2700**. In particular, for example, the arm structure **2722**, which only allows one product to be removed from the display management system **2700** at a time, the label holder rotation sensor device **2902** may recognize each transition of the label holder **2712** from a closed position (e.g. as depicted in FIG. **28**A) to an open position (e.g. as depicted in FIG. **28**C) as indicating a removal of a single product from the display management system **2700**. In other examples, the label holder rotation sensor device **2902** may be utilized to track product inventory on the display management system **2700** utilizing one or more optical sensors to detect one or more products being inserted onto, or removed from, the

display management system **2700**. Additionally or alternatively, the label holder rotation sensor device **2902** may utilize an RFID sensor to track a number of products being inserted onto or removed from the display management system **2700**.

In one example, the label holder rotation sensor device **2902** may include one or more sensors on an integrated circuit. In another example, the label holder rotation sensor device **2902** may receive sensor data from a sensor element positioned elsewhere on the display management system **2700**. For example, FIG. **30** schematically depicts a display management system **3000** similar to display management system **2700**, and including the label holder **2712** comprising the label holder rotation sensor device **2902**. In the example depicted in FIG. **30**, display management system **3000** may also include an additional label holder contact sensor **3002**, label holder contact sensor **3002**, which may be configured to make contact with the second end **2710** of the lower rail **2706** when the label holder **2712** is in the closed position depicted FIG. **30**. Label holder contact sensor **3002** may be configured to communicate data to label holder rotation sensor device **2902**. Further, label holder contact sensor **3002** may comprise one or more of a force sensor, a capacitance sensor, a voltage sensor, or a current sensor configured to detect contact between label holder contact sensor **3002** and the second end **2710** of the lower rail **2706**. Accordingly, the label holder contact sensor **3002** may be removably or rigidly coupled to a support arm **3003** of the arm structure **2722**. As such, the label holder contact sensor **3002** may be coupled to the support arm **3003** by overmolding a portion or all of the label holder contact sensor **3002**, by a fastener (such as a one or more screws, rivets, or bolts, or any other fastener known in the art), by an adhesive, by a weld process (including a polymer or a metallic weld), among others.

As will be discussed in further detail below with respect to FIG. **33**, the label holder contact sensor **3002** can detect the bending of the lower rail **2706** to predict a potential theft. Also in certain examples, it is contemplated that the label holder contact sensor **3002** can be implemented in conjunction with the label holder rotation sensor device **2902** or alone as a lower cost option for predicting potential theft situations. As such, in one example, the label holder contact sensor **3002** may generate an electrical (analog or digital) signal that may be communicated by a wired or wireless pathway to the label holder rotation sensor device **2902**. Further, the label holder rotation sensor device **2902** may receive the electrical signal from the label holder contact sensor **2002**, and interpret the received signal as indicating that, among others, there is contact, partial contact, or no contact between the label holder contact sensor **3002** and the second end **2710** of the lower rail **2706**. As such, the label holder rotation sensor device **2902** may receive periodic data from the label holder contact sensor **3002** with a frequency (any frequency may be utilized without departing from these disclosures e.g. 0.1 Hz, 1 Hz, 60 Hz). In another example, the label holder contact sensor **3002** may generate a non-periodic, or a continuous output signal. Additionally or alternatively, the label holder rotation sensor device **2902** may query the label holder contact sensor **3002** with a periodicity (any frequency may be utilized without departing from the scope of these disclosures), or with a non-periodic frequency. As such, the label holder contact sensor **3002** may only generate an output signal upon receipt of a query from the label holder rotation sensor device **2902**.

FIG. **31** schematically depicts another display management system **3100** similar display management system **2700**, having the label holder **2712** comprising the label holder rotation sensor device **2902**. In the example depicted in FIG. **31**, display management system **3100** may also include an upper label holder contact sensor **3104** and a lower label holder contact sensor **3102**. In one example, the lower label holder contact sensor **3102** may be similar to the label holder contact sensor **3002** with regard to one or more of the functionality and location on the label holder **2712** described in relation to the label holder contact sensor **3002**. Similarly, the upper label holder contact sensor **3104** may have functionality similar to the label holder contact sensor **2002** described in relation to FIG. **30**, but may be removably or rigidly coupled to the back surface **2720** of the display plate **2716**. Accordingly, the upper label holder contact sensor **3104** and the lower label holder contact sensor **3102** may be configured to make contact with the second end **2714** of the upper rail **2704** and the second end **2710** of the lower rail **2706**, respectively, when the label holder **2712** is in the closed position depicted in FIG. **31**. As such, sensors **3102** and **3104** may be configured to communicate data to label holder rotation sensor device **2902** or other devices as discussed herein. Further, upper label holder contact sensor **3104** and the lower label holder contact sensor **3102** may comprise one or more of a force sensor, a capacitance sensor, a voltage sensor, or a current sensor. In one example, contact between the lower label holder contact sensor **3102** and the second end **2710** of the lower rail **2706**, and contact between the upper label holder contact sensor **3104** and the second end **2714** of the upper rail **2704** completes an electrical circuit such that an electrical current may be passed through the support structure **2702** between sensors **3102** and **3104**. As such, detection of an electrical current at one or more of sensors **3102** and/or **3104** may be communicated to label holder rotation sensor device **2902** in order to determine that the label holder **2712** is in a closed position.

FIG. **32** schematically depicts another display management system **3200**, similar to display management system **2700**. The display management system **3200** may include the label holder **2712** comprising the label holder rotation sensor device **2902**, and the support structure **2702**. The display management system **3200** may include an upper product contact sensor **3204** and a lower product contact sensor **3202**. As such, the upper product contact sensor **3204** and the lower product contact sensor **3202** may be configured to make contact with a product (e.g. a product similar to products **2804***a-c* as schematically depicted in FIG. **28**A) as it is inserted onto and/or removed from the lower rail **2706**. The sensors **3202** and **3204** may comprise force sensors. As such, the sensors **3202** and **3204** may utilize piezoelectric elements configured to generate an output signal responsive to one or more of the upper product contact sensor **3204** and the lower product contact sensor **3202** making contact with another object, such a product hanging on lower rail **2706** (not depicted in FIG. **32**). In one implementation, sensors **3202** and **3204** may be coupled to surfaces **2730** and **2732** of the arm structure **2722** within the channel **2806** such that it is likely that a product being removed from, or inserted onto, the lower rail **2706** will make contact with one or more of the sensors **3202** and/or **3204**. Accordingly, the coupling of the upper product contact sensor **3204** and the lower product contact sensor **3202** to surfaces **2730** and **2732** may be by partial overmolding, by a welding process, or using a fastener, among others. In other implementations, one or more of sensors **3202** and **3204** may comprise a capacitive sensor, an electrical resistance sensor, a voltage sensor, a current sensor, or a proximity sensor, among others. In yet another example the

upper product contact sensor **3204** and the lower product contact sensor **3202** may comprise infra-red sensors. Accordingly, a product may be detected within the channel **2806** upon breaking an infra-red beam between the sensors **3204** and **3202**.

In one example, and as schematically depicted in FIGS. **32**A-**32**C, sensors **3202** and **3204** can detect a product-removal event (FIG. **32**A), a non-removal event (FIG. **32**B), or a product-stocking event (FIG. **32**C). The combination of the sensors **3202** and **3204** with the label holder rotation sensor device **2902** can help predict these events. Specifically referring to FIG. **32**A, which shows a product removal event, the sensors **3202** and **3204** can sense product therebetween as the label holder **2712** is rotated from the closed position to the opened position. Additionally, as shown in FIG. **32**B, although the output of the label holder rotation sensor device **2902** indicates that the label holder **2712** has been rotated because the output of the sensors **3202** and **3204** show no product therebetween, the system can log this event as a non-removal or false alarm event. Finally with respect to FIG. **32**C, the combination of the label holder rotation sensor device **2902** and the sensors **3202** and **3204** can predict a product restocking event where product is added to the display management system **2700**.

FIG. **33** schematically depicts another view of the display management system **2700** of FIG. **27**. In particular, FIG. **33** depicts the display management system **2700** with the lower rail **2706** bent such that one or more products **3304***a-c* may be removed from the display management system **2700** without the label holder **2712** pivoting from a closed position to an open position for each product being removed. However, in one implementation, the label holder **2712** may comprise an opening **3302** configured to receive the second end **2710** of the lower rail **2706** when the label holder **2712** is in a closed position, as schematically depicted FIG. **33**. Accordingly, the opening **3302** may prevent the lower rail **2706** from being bent into the position schematically depicted in FIG. **33** without moving the label holder **2712**. Accordingly, for those label holders **2712** comprising the label holder rotation sensor device **2902**, as described in relation to FIGS. **29**-**31**, motion of the label holder **2712**, or a lack of contact between the label holder **2712** and one or more of the second end **2710** of the lower rail **2706** and/or the second end **2714** of the upper rail **2704** may be detected by the label holder rotation sensor device **2902**. In turn, the label holder rotation sensor device **2902** may execute one or more processes to identify a potential attempted theft of products from the display management system **2700**. In addition, FIG. **34** illustrates another potential theft situation. The bending of the lower rail **2706** may also cause the label holder **2712** to rotate upwardly. As discussed above, the label holder rotation sensor device **2902** can detect the rotation of the label holder **2712**, which may also trigger one or more processes to indicate that a potential attempted theft of products is occurring.

The various embodiments described herein may be implemented by general-purpose or specialized computer hardware. In one example, the computer hardware may comprise one or more processors, otherwise referred to as microprocessors, having one or more processing cores configured to allow for parallel processing/execution of instructions. As such, the various disclosures described herein may be implemented as software coding, wherein those of skill in the art will recognize various coding languages that may be employed with the disclosures described herein. Additionally, the disclosures described herein may be utilized in the implementation of application-specific integrated circuits (ASICs), or in the implementation of various electronic components comprising conventional electronic circuits (otherwise referred to as off-the-shelf components). Furthermore, those of ordinary skill in the art will understand that the various descriptions included in this disclosure may be implemented as data signals communicated using a variety of different technologies and processes. For example, the descriptions of the various disclosures described herein may be understood as comprising one or more streams of data signals, data instructions, or requests, and physically communicated as bits or symbols represented by differing voltage levels, currents, electromagnetic waves, magnetic fields, optical fields, or combinations thereof.

One or more of the disclosures described herein may comprise a computer program product having computer-readable medium/media with instructions stored thereon/therein that, when executed by a processor, are configured to perform one or more methods, techniques, systems, or embodiments described herein. As such, the instructions stored on the computer-readable media may comprise actions to be executed for performing various steps of the methods, techniques, systems, or embodiments described herein. Furthermore, the computer-readable medium/media may comprise a storage medium with instructions configured to be processed by a computing device, and specifically a processor associated with a computing device. As such the computer-readable medium may include a form of persistent or volatile memory such as a hard disk drive (HDD), a solid state drive (SSD), an optical disk (CD-ROMs, DVDs), tape drives, floppy disk, ROM, RAM, EPROM, EEPROM, DRAM, VRAM, flash memory, RAID devices, remote data storage (cloud storage, and the like), or any other media type or storage device suitable for storing data thereon/therein. Additionally, combinations of different storage media types may be implemented into a hybrid storage device. In one implementation, a first storage medium may be prioritized over a second storage medium, such that different workloads may be implemented by storage media of different priorities.

Further, the computer-readable media may store software code/instructions configured to control one or more of a general-purpose, or a specialized computer. Said software may be utilized to facilitate interface between a human user and a computing device, and wherein said software may include device drivers, operating systems, and applications. As such, the computer-readable media may store software code/instructions configured to perform one or more implementations described herein.

Those of ordinary skill in the art will understand that the various illustrative logical blocks, modules, circuits, techniques, or method steps of those implementations described herein may be implemented as electronic hardware devices, computer software, or combinations thereof. As such, various illustrative modules/components have been described throughout this disclosure in terms of general functionality, wherein one of ordinary skill in the art will understand that the described disclosures may be implemented as hardware, software, or combinations of both.

The one or more implementations described throughout this disclosure may utilize logical blocks, modules, and circuits that may be implemented or performed with a general-purpose processor, a digital signal processor (DSP), an application-specific integrated circuit (ASIC), a field programmable gate array (FPGA) or other programmable logic device, discrete gate or transistor logic, discrete hardware components, or any combination thereof designed to perform the functions described herein. A general-purpose processor may be a microprocessor, or any conventional

processor, controller, microcontroller, or state machine. A processor may also be implemented as a combination of computing devices, e.g., a combination of a DSP and a microprocessor, a plurality of microprocessors, one or more microprocessors in conjunction with a DSP core, or any other such configuration.

The techniques or steps of a method described in connection with the embodiments disclosed herein may be embodied directly in hardware, in software executed by a processor, or in a combination of the two. In some embodiments, any software module, software layer, or thread described herein may comprise an engine comprising firmware or software and hardware configured to perform embodiments described herein. Functions of a software module or software layer described herein may be embodied directly in hardware, or embodied as software executed by a processor, or embodied as a combination of the two. A software module may reside in RAM memory, flash memory, ROM memory, EPROM memory, EEPROM memory, registers, hard disk, a removable disk, a CD-ROM, or any other form of storage medium known in the art. An example storage medium is coupled to the processor such that the processor can read data from, and write data to, the storage medium. In the alternative, the storage medium may be integral to the processor. The processor and the storage medium may reside in an ASIC. The ASIC may reside in a user device. In the alternative, the processor and the storage medium may reside as discrete components in a user device.

Accordingly, it will be understood that the invention is not to be limited to the embodiments disclosed herein, but is to be understood from the following claims, which are to be interpreted as broadly as allowed under the law.

What is claimed is:

1. A display management system comprising:

a support structure having an upper rail coupled to a lower rail at a first end,

wherein the support structure is configured to be removably coupled to a surface at the first end, and wherein the lower rail is configured to support one or more hanging products that are added to, and removed from, the lower rail at a second end of the lower rail;

a label holder pivotably coupled to a second end of the upper rail, wherein the label holder is configured to pivot between a closed position and an open position, the label holder further comprising:

a display plate having a front surface configured to receive a display label, and a back surface; and

an arm structure coupled to the back surface of the display plate comprising a channel formed between an upper bumper surface and a lower bumper surface configured to receive a single hanging product, wherein when the label holder is pivoted from the closed position to the open position, the channel is pivoted, blocking more than one product from being added to, or removed from, the lower rail; and

a sensor device comprising at least one of a label holder rotation sensor and label holder contact sensor.

2. The display management system of claim **1**, further comprising: wherein the sensor device is a label holder rotation sensor device in operative communication with a sensor, and having a non-transitory computer-readable medium comprising computer-executable instructions that when executed by a processor cause the processor to perform at least: receive motion data from the sensor; detect, from the received data, a motion of the label holder; and output a signal indicating that the label holder has moved.

3. The display management system of claim **2**, wherein when in the closed position, the label holder abuts the second end of the lower rail to form a closed electrical circuit.

4. The display management system of claim **3**, wherein the label holder rotation sensor device outputs data indicative of an electrical current through the closed electrical circuit.

5. The display management system of claim **2**, wherein the sensor is an accelerometer.

6. The display management system of claim **1**, wherein the label holder further comprises an opening configured to receive the second end of the lower rail when in the closed position.

7. The display management system of claim **1**, wherein the label holder is urged into the closed position by the force of gravity.

8. The display management system of claim **2**, further comprising a transceiver, and wherein the non-transitory computer-readable medium further comprises computer-executable instructions that when executed by the processor further cause the processor to:

communicate the signal to a remote processor.

9. The display management system of claim **2**, wherein the sensor comprises a capacitive sensor.

10. The display management system of claim **1**, wherein the sensor device is a label holder contact sensor configured to detect contact between the label holder and either the upper rail or the lower rail.

11. The display management system of claim **10**, wherein the label holder contact sensor assists in predicting when a potential theft is occurring.

12. The display management system of claim **10** further comprising a second label holder contact sensor configured to engage the other of the upper rail or the lower rail and wherein the label holder sensor and the second label holder sensor completes an electrical circuit such that an electrical current can pass through the upper rail and the lower rail.

13. The display management system of claim **1**, wherein the sensor device is configured to predict a product removal pattern.

14. The display management system of claim **1**, wherein the sensor device comprises a label holder rotation sensor wherein the system comprises one or more product sensors and wherein the one or more product sensors together with the label holder rotation sensor are configured to detect a product-removal event, a non-removal event, and a product-stocking event.

15. The display management system of claim **1**, wherein the sensor is a label holder rotation sensor and wherein the label holder rotation sensor measures an angular movement of the label holder.

16. The display management system of claim **15**, wherein the label rotation sensor predicts a product removal pattern from the display management system.

17. The display management system of claim **1**, wherein the label holder further comprises an opening configured to receive the second end of the lower rail when in the closed position.

* * * * *