US007524293B2

(12) **United States Patent**
Freeman et al.

(10) **Patent No.: US 7,524,293 B2**
(45) **Date of Patent: Apr. 28, 2009**

(54) **METHOD AND APPARATUS FOR PENETRATING TISSUE**

(75) Inventors: **Dominique M. Freeman**, La Honda, CA (US); **Dirk Boecker**, Palo Alto, CA (US); **Don Alden**, Sunnyvale, CA (US)

(73) Assignee: **Pelikan Technologies, Inc.**, Palo Alto, CA (US)

(*) Notice: Subject to any disclaimer, the term of this patent is extended or adjusted under 35 U.S.C. 154(b) by 514 days.

(21) Appl. No.: **10/335,073**

(22) Filed: **Dec. 31, 2002**

(65) **Prior Publication Data**

US 2003/0199896 A1 Oct. 23, 2003

Related U.S. Application Data

(63) Continuation-in-part of application No. 10/127,395, filed on Apr. 19, 2002, now Pat. No. 7,025,774.

(51) **Int. Cl.**

A61B 5/00	(2006.01)
A61B 17/32	(2006.01)
A61B 17/14	(2006.01)
B65D 81/00	(2006.01)

(52) **U.S. Cl.** **600/583**; 600/573; 600/575; 600/576; 600/584; 606/167; 606/172; 606/181; 606/182; 606/183

(58) **Field of Classification Search** 600/573, 600/583, 575, 576, 584, 172, 181, 182, 183; 606/167, 172, 181–183

See application file for complete search history.

(56) **References Cited**

U.S. PATENT DOCUMENTS

2,801,633	A	8/1957	Mauze et al.	
3,358,689	A	12/1967	Higgins	128/329
3,494,358	A	2/1970	Grossenbacher	128/218
3,626,929	A	12/1971	Sanz	128/2 R
3,742,954	A	7/1973	Strickland	128/302
3,953,172	A	4/1976	Shapiro	23/230
4,224,125	A	9/1980	Nakamura	204/195 B
4,338,174	A	7/1982	Tamura	204/195
4,340,669	A	7/1982	Bauer	435/14
4,353,984	A	10/1982	Yamada	435/14
4,360,016	A	11/1982	Sarrine	128/763
4,391,905	A	7/1983	Bauer	435/14
4,391,906	A	7/1983	Bauer	435/14
4,414,975	A	11/1983	Ryder	128/314

(Continued)

FOREIGN PATENT DOCUMENTS

DE	4420232	12/1995

(Continued)

Primary Examiner—Jeffrey G. Hoekstra
(74) *Attorney, Agent, or Firm*—Paul Davis; Goodwin Procter LLP

(57) **ABSTRACT**

A body fluid sampling system for use on a tissue site includes a single drive force generator. A plurality of penetrating members are operatively coupled to the force generator. The force generator moves each of the members along a path out of a housing with a penetrating member exit, into the tissue site, stops in the tissue site, and withdraws out of the tissue site. A flexible support member couples the penetrating members to define a linear array. The support member is movable and configured to move each of the penetrating members to a launch position associated with the force generator.

23 Claims, 32 Drawing Sheets

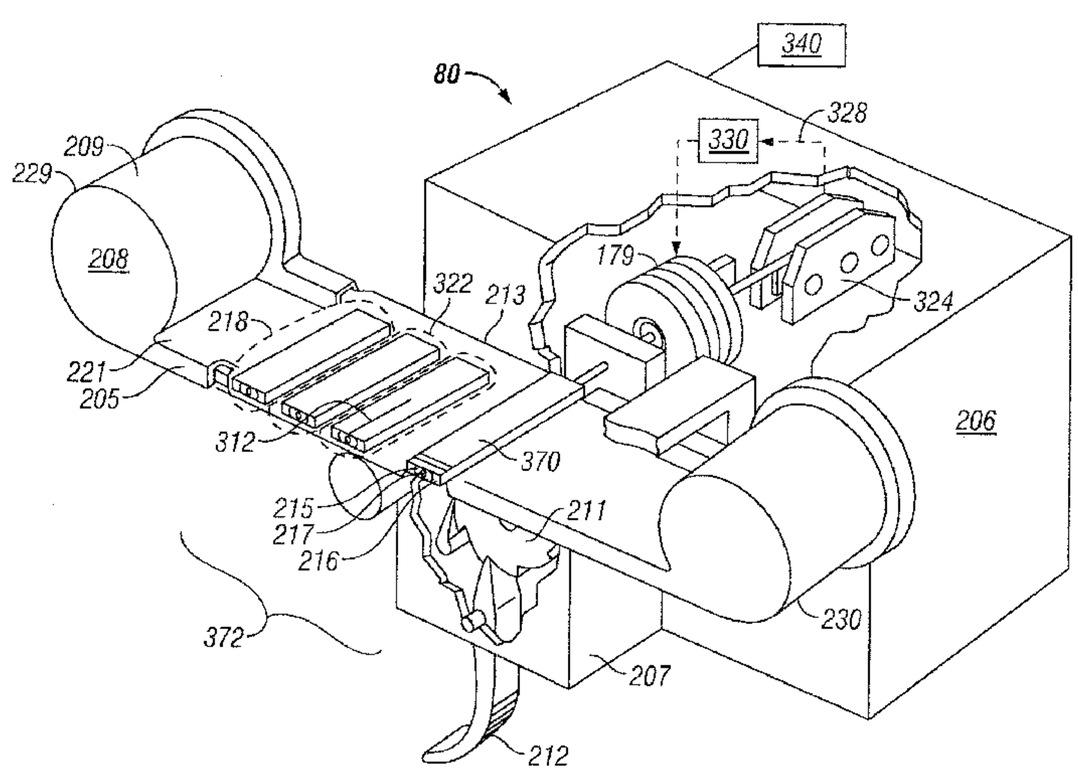

U.S. PATENT DOCUMENTS

4,420,564	A	12/1983	Tsuji	435/288
4,426,451	A	1/1984	Columbus	436/518
4,426,884	A	1/1984	Polchaninoff	73/172
4,469,110	A	9/1984	Slama	128/770
4,517,978	A	5/1985	Levin	128/314
4,539,988	A	9/1985	Shirley	128/314
4,545,382	A	10/1985	Higgins	128/635
4,553,541	A	11/1985	Burns	128/314
4,577,630	A	3/1986	Nitzsche	128/314
4,580,564	A	4/1986	Anderson	502/8
4,580,565	A	4/1986	Cornell	128/314
4,590,411	A	5/1986	Kelly	318/687
4,595,479	A	6/1986	Kimura	204/294
4,608,997	A	9/1986	Conway	128/763
4,615,340	A	10/1986	Cronenberg	128/635
4,616,649	A	10/1986	Burns	128/314
4,619,754	A	10/1986	Niki	204/290
4,622,974	A	11/1986	Coleman	128/634
4,624,253	A	11/1986	Burns	128/314
4,637,393	A	1/1987	Ray	128/305
4,643,189	A	2/1987	Mintz	128/314
4,648,408	A	3/1987	Hutcheson	128/770
4,653,511	A	3/1987	Goch	128/763
4,676,244	A	6/1987	Enstrom	128/314
4,677,979	A	7/1987	Burns	128/314
4,711,245	A	12/1987	Higgins	128/635
4,712,548	A	12/1987	Enstrom	128/314
4,715,374	A	12/1987	Maggio	128/314
4,735,203	A	4/1988	Ryder	128/314
4,758,323	A	7/1988	Davis	204/403
4,794,926	A	1/1989	Munsch et al.	606/183
4,814,142	A	3/1989	Gleisner	422/56
4,814,661	A	3/1989	Ratzlaff	310/328
4,820,010	A	4/1989	Sciefres	385/43
4,820,399	A	4/1989	Senda	204/403
4,824,639	A	4/1989	Hildenbrand	422/56
RE32,922	E	5/1989	Levin	128/314
4,827,763	A	5/1989	Bourland	73/172
4,830,959	A	5/1989	McNeill	435/53
4,836,904	A	6/1989	Armstron	204/294
4,844,095	A	7/1989	Chiodo	128/314
4,850,973	A	7/1989	Jordan	604/157
4,857,274	A	8/1989	Simon	422/72
4,869,249	A	9/1989	Crossman	128/314
4,869,265	A	9/1989	McEwen	128/774
4,873,993	A	10/1989	Meserol	128/780
4,882,013	A	11/1989	Turner	204/1
4,883,068	A	11/1989	Dechow	128/760
4,886,499	A	12/1989	Cirelli	604/131
4,889,529	A	12/1989	Haindl	604/274
4,892,097	A	1/1990	Ranalletta	606/182
4,895,147	A	1/1990	Bodicky	606/182
4,897,173	A	1/1990	Nankai	204/403
4,900,424	A	2/1990	Birch	204/409
4,911,794	A	3/1990	Parce	204/1 T
4,920,977	A	5/1990	Haynes	128/770
4,945,045	A	7/1990	Forrest	435/25
4,948,727	A	8/1990	Cass	435/18
4,952,515	A	8/1990	Gleisner	436/169
4,953,552	A	9/1990	DeMarzo	128/635
4,966,671	A	10/1990	Nylander	204/153.14
4,976,724	A	12/1990	Nieto	606/182
4,983,178	A	1/1991	Schnell	606/181
4,990,154	A	2/1991	Brown	606/182
4,999,582	A	3/1991	Parks	324/438
5,010,772	A	4/1991	Bourland	73/862.04
5,010,774	A	4/1991	Kikuo	73/862.04
5,014,718	A	5/1991	Mitchen	128/771
5,019,974	A	5/1991	Beckers	364/413.02
5,026,388	A	6/1991	Ingalz	606/182
5,054,499	A	10/1991	Swierczek	128/770
5,059,789	A	10/1991	Salcudean	435/4
5,060,174	A	10/1991	Gross	702/139
5,070,886	A	12/1991	Mitchen	128/771
5,074,872	A	12/1991	Brown	606/182
5,089,112	A	2/1992	Skotheim	204/403
5,092,842	A	3/1992	Bechtold	604/135
5,100,427	A	3/1992	Crossman	606/182
5,100,428	A	3/1992	Mumford	606/182
5,104,380	A	4/1992	Holman	604/117
5,104,619	A	4/1992	Castro	422/56
5,108,564	A	4/1992	Szuminsky	204/153.12
5,116,759	A	5/1992	Klainer	435/288
5,120,420	A	6/1992	Nankai	204/403
5,122,244	A	6/1992	Hoenes	204/153
5,126,034	A	6/1992	Carter	204/403
5,128,015	A	7/1992	Szuminsky	204/403
5,128,171	A	7/1992	Gleisner	427/2
5,133,730	A	7/1992	Biro	606/182
5,139,685	A	8/1992	Castro	210/767
5,141,868	A	8/1992	Shanks	435/288
5,156,611	A	10/1992	Haynes	606/181
5,163,442	A	11/1992	Ono	128/760
5,170,364	A	12/1992	Gross	702/139
D332,490	S	1/1993	Brown	D24/146
5,178,142	A	1/1993	Harjunmaa	128/633
5,181,910	A	1/1993	Scanlon	604/67
5,181,914	A	1/1993	Zook	604/307
5,183,042	A	2/1993	Harjunmaa	128/633
5,185,256	A	2/1993	Nankai	435/174
5,187,100	A	2/1993	Matzinger	436/16
5,192,415	A	3/1993	Yoshioka	204/403
5,196,025	A	3/1993	Ranalletta	606/182
5,201,324	A	4/1993	Swierczek	128/770
5,205,920	A	4/1993	Oyama	204/403
5,212,879	A	5/1993	Biro	29/437
5,216,597	A	6/1993	Beckers	364/413.02
5,217,480	A	6/1993	Haber	606/182
5,228,972	A	7/1993	Osaka	204/415
5,229,282	A	7/1993	Yoshioka	435/177
5,230,866	A	7/1993	Shartle	422/103
5,231,993	A	8/1993	Haber et al.	128/770
5,250,066	A	10/1993	Lambert	606/181
5,251,126	A	10/1993	Kahn	364/413.11
5,253,656	A	10/1993	Rincoe	128/782
5,256,998	A	10/1993	Becker	335/229
5,264,103	A	11/1993	Yoshioka	204/403
5,264,105	A	11/1993	Gregg	204/403
5,264,106	A	11/1993	McAleer	204/403
5,266,179	A	11/1993	Nankai	204/401
5,272,087	A	12/1993	El Murr	435/291
5,277,181	A	1/1994	Mendelson	128/633
5,282,822	A	2/1994	Macors	606/182
5,286,362	A	2/1994	Hoenes	204/403
5,286,364	A	2/1994	Yacynych	204/418
5,288,636	A	2/1994	Pollmann	435/288
5,304,192	A	4/1994	Crouse	606/181
5,304,193	A	4/1994	Zhadanov	606/182
5,312,590	A	5/1994	Gunasingham	422/56
5,314,441	A	5/1994	Cusack	606/182
5,314,442	A	5/1994	Morita	606/182
5,316,012	A	5/1994	Siegal	128/744
5,318,583	A	6/1994	Rabenau	606/182
5,320,607	A	6/1994	Ishibashi	604/115
5,324,302	A	6/1994	Crouse	606/181
5,324,303	A	6/1994	Strong	606/181
5,332,479	A	7/1994	Uenoyama	204/153.12
5,350,392	A	9/1994	Purcell	606/182
5,352,351	A	10/1994	White	204/406
5,354,287	A	10/1994	Wacks	604/232
5,354,447	A	10/1994	Uenoyama	204/403
5,356,420	A	10/1994	Czernecki	606/182
5,360,410	A	11/1994	Wacks	604/232
5,366,469	A	11/1994	Steg	606/182

5,366,470 A 11/1994 Ramel 606/183
5,366,609 A 11/1994 White 204/403
5,371,687 A 12/1994 Holmes 364/514
5,378,628 A 1/1995 Graetzel 435/288
5,382,346 A 1/1995 Uenoyama 204/403
5,383,885 A 1/1995 Bland 606/182
5,389,534 A 2/1995 Gentezkow 435/180
5,393,903 A 2/1995 Graetzel 556/137
5,395,387 A 3/1995 Burns 606/181
5,397,334 A 3/1995 Schenk 606/182
5,401,376 A 3/1995 Foos 204/415
5,402,798 A 4/1995 Swierczek 128/770
5,405,511 A 4/1995 White 204/153.1
5,407,545 A 4/1995 Hirose 204/153.12
5,407,554 A 4/1995 Saurer 204/403
5,407,818 A 4/1995 Gentezkow 435/180
5,409,583 A 4/1995 Yoshioka 204/153.12
5,410,059 A 4/1995 Fraser 546/10
5,423,847 A 6/1995 Strong et al. 606/182
5,436,161 A 7/1995 Bergstrom 435/291
5,437,999 A 8/1995 Diebold 435/288
5,438,271 A 8/1995 White 324/444
5,443,701 A 8/1995 Willner 204/153
5,445,920 A 8/1995 Saito 430/311
D362,719 S 9/1995 Kaplan D24/147
5,454,828 A 10/1995 Schraga 606/181
5,456,875 A 10/1995 Lambert 264/328.1
5,464,418 A 11/1995 Schraga 606/182
5,471,102 A 11/1995 Becker 310/50
5,476,474 A 12/1995 Davis 606/182
5,480,387 A 1/1996 Gabriel 604/134
5,487,748 A 1/1996 Marshall 606/182
5,496,453 A 3/1996 Uenoyama 205/777.5
5,498,542 A 3/1996 Corey 435/283.1
5,507,288 A 4/1996 Bocker 128/633
5,508,171 A 4/1996 Walling 205/777.5
5,509,410 A 4/1996 Hill 128/637
5,510,266 A 4/1996 Bonner et al. 436/43
5,512,159 A 4/1996 Yoshioka 204/403
5,518,006 A 5/1996 Mawhirt 128/770
5,524,636 A 6/1996 Sarvazyan 128/774
5,525,511 A 6/1996 D'Costa 435/287.9
5,527,333 A 6/1996 Nikkels 606/182
5,527,334 A 6/1996 Kanner 606/182
5,540,709 A 7/1996 Ramel 606/183
5,543,326 A 8/1996 Heller 435/287.9
5,545,174 A 8/1996 Schenk 606/182
5,547,702 A 8/1996 Gleisner 427/2.13
5,554,166 A 9/1996 Lange 606/182
5,558,834 A 9/1996 Chu 422/55
5,569,286 A 10/1996 Peckham 606/181
5,569,287 A 10/1996 Tezuka 606/182
5,571,132 A 11/1996 Mawhirt 606/182
5,575,895 A 11/1996 Ikeda 204/403
5,582,697 A 12/1996 Ikeda 204/403
5,584,846 A 12/1996 Mawhirt 606/181
5,593,852 A 1/1997 Heller 435/14
5,609,749 A 3/1997 Yamauchi 205/777.5
5,613,978 A 3/1997 Harding 606/181
5,620,579 A 4/1997 Genshaw 204/402
5,624,537 A 4/1997 Turner 204/403
D379,516 S 5/1997 Rutter D24/146
5,628,764 A 5/1997 Schraga 606/182
5,628,765 A 5/1997 Morita 606/182
5,628,890 A 5/1997 Carter 204/403
5,640,954 A 6/1997 Pfeiffer 128/635
5,643,306 A 7/1997 Schraga 606/182
5,645,555 A 7/1997 Davis 606/182
5,650,062 A 7/1997 Ikeda 205/778
5,653,863 A 8/1997 Genshaw 205/777.5
5,657,760 A 8/1997 Ying et al. 128/660.03
5,658,444 A 8/1997 Black 204/415
5,662,127 A 9/1997 De Vaughn 128/765
5,662,672 A 9/1997 Pambianchi 606/181
5,676,143 A 10/1997 Simonsen 128/633
5,680,858 A 10/1997 Hansen et al. 128/635
5,680,872 A 10/1997 Sesekura 128/760
5,682,884 A 11/1997 Hill 128/637
5,683,562 A 11/1997 Schaffar 204/403
5,695,947 A 12/1997 Guo 435/11
5,700,695 A 12/1997 Yassinzadeh 436/180
5,705,045 A 1/1998 Park 204/403
5,708,247 A 1/1998 McAleer 204/403
5,709,668 A 1/1998 Wacks 604/232
5,709,699 A 1/1998 Warner 606/181
5,710,011 A 1/1998 Forrow 435/25
5,720,862 A 2/1998 Hamamoto 204/403
5,720,924 A 2/1998 Eikmeier 422/102
D392,391 S 3/1998 Douglas D24/225
5,723,284 A 3/1998 Ye 435/4
5,727,548 A 3/1998 Hill 128/637
5,730,753 A 3/1998 Morita 606/181
5,733,300 A 3/1998 Pambianchi 606/181
D393,716 S 4/1998 Brenneman D24/147
D393,717 S 4/1998 Brenneman D24/147
5,741,228 A 4/1998 Lambrecht 604/93
5,741,634 A 4/1998 Nozoe 435/4
RE35,803 E 5/1998 Lange 606/182
5,746,217 A * 5/1998 Erickson et al. 600/573
5,746,898 A 5/1998 Preidel 204/403
5,755,733 A 5/1998 Morita 606/182
5,759,364 A 6/1998 Charlton 204/403
5,762,770 A 6/1998 Pritchard 204/403
5,770,369 A 6/1998 Meade 435/6
5,772,586 A 6/1998 Heinonen 600/300
5,772,677 A 6/1998 Mawhirt 606/181
5,773,270 A 6/1998 D'Orazio 435/177
5,776,719 A 7/1998 Douglas 435/28
5,782,770 A 7/1998 Mooradian 600/476
5,782,852 A 7/1998 Foggia 606/182
5,788,652 A 8/1998 Rahn 600/577
5,794,219 A 8/1998 Brown 705/37
5,795,725 A 8/1998 Buechler 435/7.1
5,795,774 A 8/1998 Matsumoto 435/287.9
5,797,940 A 8/1998 Mawhirt 606/167
5,797,942 A 8/1998 Schraga 606/182
5,798,030 A 8/1998 Raguse 204/403
5,798,031 A 8/1998 Charlton 204/403
5,801,057 A 9/1998 Smart 436/68
5,807,375 A 9/1998 Gross 604/890.1
5,820,551 A 10/1998 Hill 600/347
5,822,715 A 10/1998 Worthington 702/19
5,824,491 A 10/1998 Priest 435/28
5,828,943 A 10/1998 Brown 434/258
5,832,448 A 11/1998 Brown 705/2
5,840,020 A 11/1998 Heinonen 600/309
5,840,171 A 11/1998 Birch 205/335
5,849,174 A 12/1998 Sanghera 205/775
5,853,373 A 12/1998 Griffith 600/554
D403,975 S 1/1999 Douglas D10/81
5,857,983 A 1/1999 Douglas 600/538
5,860,922 A 1/1999 Gordon et al. 600/431
5,866,353 A 2/1999 Berneth 435/26
5,868,135 A 2/1999 Kaufman 128/630
5,868,772 A 2/1999 LeVaughn 606/181
5,869,972 A 2/1999 Birch 324/439
5,871,494 A 2/1999 Simons et al.
5,872,713 A 2/1999 Douglas 702/85
5,873,887 A 2/1999 King 606/182
5,876,957 A 3/1999 Douglas 435/28
5,879,163 A 3/1999 Brown 434/236
5,879,310 A 3/1999 Sopp 600/578
5,879,373 A 3/1999 Roeper 606/344
5,882,494 A 3/1999 van Antwerp 204/403
5,885,211 A 3/1999 Eppstein 600/309
5,887,133 A 3/1999 Brown 395/200.3

RE36,191	E	4/1999	Solomon	395/308
5,893,870	A	4/1999	Talen	606/201
5,897,493	A	4/1999	Brown	600/300
5,899,855	A	5/1999	Brown	600/301
5,900,130	A	5/1999	Benvegnu	204/453
5,906,921	A	5/1999	Ikeda	435/25
D411,619	S	6/1999	Duchon	D24/146
5,913,310	A	6/1999	Brown	128/897
5,916,156	A	6/1999	Hildenbrand	600/347
5,916,229	A	6/1999	Evans	606/171
5,916,230	A	6/1999	Brenneman	606/172
5,918,603	A	7/1999	Brown	128/897
5,921,963	A	7/1999	Erez	604/192
5,922,188	A	7/1999	Ikeda	204/777.5
RE36,268	E	8/1999	Szuminsky	205/777.5
5,933,136	A	8/1999	Brown	345/327
5,935,075	A	8/1999	Casscells et al.	600/474
5,942,102	A	8/1999	Hodges	205/775
5,951,300	A	9/1999	Brown	434/236
5,951,492	A	9/1999	Douglas	600/583
5,951,493	A	9/1999	Douglas et al.	600/583
5,951,836	A	9/1999	McAleer	204/403
5,954,738	A	9/1999	LeVaughn	606/181
5,956,501	A	9/1999	Brown	395/500.32
5,958,199	A	9/1999	Miyamoto	204/403
5,960,403	A	9/1999	Brown	705/2
5,964,718	A	10/1999	Duchon	600/583
5,965,380	A	10/1999	Heller	435/14
5,972,199	A	10/1999	Heller	205/777.5
5,972,715	A	10/1999	Celentano	436/164
5,974,124	A	10/1999	Schlueter	379/106.02
5,983,193	A	11/1999	Heinonen	705/2
5,985,116	A	11/1999	Ikeda	204/403
5,985,559	A	11/1999	Brown	435/6
5,993,400	A	11/1999	Rincoe	600/595
5,997,476	A	12/1999	Brown	600/300
5,997,561	A	12/1999	Boecker	606/182
5,997,817	A	12/1999	Crismore	422/58
5,997,818	A	12/1999	Hackner	422/681
6,001,067	A	12/1999	Shults	600/584
6,015,392	A	1/2000	Douglas	600/583
6,020,110	A	2/2000	Williams	430/315
6,022,324	A	2/2000	Skinner	600/566
6,022,366	A	2/2000	Schraga	606/181
6,023,686	A	2/2000	Brown	705/37
6,030,399	A	2/2000	Ignotz	606/167
6,030,827	A	2/2000	Davis	435/287
6,032,119	A	2/2000	Brown	705/2
6,033,421	A	3/2000	Theiss	606/186
6,033,866	A	3/2000	Guo	435/14
6,041,253	A	3/2000	Kost	604/20
6,048,352	A	4/2000	Douglas	606/181
D424,696	S	5/2000	Ray	D24/169
6,056,701	A	5/2000	Duchon	600/583
6,060,327	A	5/2000	Keen	436/518
6,061,128	A	5/2000	Zweig	356/243.4
6,063,039	A	5/2000	Cunningham	600/573
6,066,103	A	5/2000	Duchon	600/583
6,066,296	A	5/2000	Brady	422/63
6,067,463	A	5/2000	Jeng	600/336
6,068,615	A	5/2000	Brown	604/207
D426,638	S	6/2000	Ray	D24/169
6,071,249	A	6/2000	Cunningham	600/578
6,071,250	A	6/2000	Douglas	600/583
6,071,251	A	6/2000	Cunningham	600/584
6,074,360	A	6/2000	Haar et al.	604/57
6,077,408	A	6/2000	Miyamoto	204/403
6,080,172	A	6/2000	Fujiwara	606/166
6,083,710	A	7/2000	Heller	435/14
6,086,545	A	7/2000	Roe	600/570
6,086,562	A	7/2000	Jacobsen	604/156
6,090,078	A	7/2000	Erskine	604/198
6,093,146	A	7/2000	Filangeri	600/300
6,101,478	A	8/2000	Brown	705/2
6,103,033	A	8/2000	Say	156/73.1
6,107,083	A	8/2000	Collins	435/288
6,113,578	A	9/2000	Brown	604/207
6,120,676	A	9/2000	Heller	205/777.5
6,121,009	A	9/2000	Heller	435/14
6,122,536	A	9/2000	Sun	600/341
6,129,823	A	10/2000	Hughes	204/403.01
6,133,837	A	10/2000	Riley	340/573.1
6,134,461	A	10/2000	Say	600/345
6,144,837	A	11/2000	Quy	434/307 R
6,151,586	A	11/2000	Brown	705/14
6,153,069	A	11/2000	Pottgen	204/403
RE36,991	E	12/2000	Yamamoto	204/403
6,155,267	A	12/2000	Nelson	128/899
6,155,992	A	12/2000	Henning et al.	600/583
6,157,442	A	12/2000	Raskas	356/39
6,161,095	A	12/2000	Brown	705/2
6,162,611	A	12/2000	Heller	435/14
6,167,362	A	12/2000	Brown	703/11
6,167,386	A	12/2000	Brown	705/37
6,168,563	B1	1/2001	Brown	600/301
6,171,325	B1	1/2001	Mauze et al.	606/171
6,175,752	B1	1/2001	Say	600/345
6,177,000	B1	1/2001	Peterson	205/777.5
6,177,931	B1	1/2001	Alexander et al.	
6,186,145	B1	2/2001	Brown	128/897
6,190,612	B1	2/2001	Berger	422/82.07
6,191,852	B1	2/2001	Paffhausen	356/244
6,192,891	B1	2/2001	Gravel	128/920
6,194,900	B1	2/2001	Freeman	324/321
6,197,257	B1	3/2001	Raskas	422/82.05
6,210,272	B1	4/2001	Brown	463/1
6,212,417	B1	4/2001	Ikeda	204/403.14
6,214,804	B1	4/2001	Felgner	514/44
6,221,238	B1	4/2001	Grundig	205/777.5
6,225,078	B1	5/2001	Ikeda	435/25
6,228,100	B1 *	5/2001	Schraga	606/183
6,230,501	B1	5/2001	Bailey	62/51.1
6,233,471	B1	5/2001	Berner	600/345
6,233,539	B1	5/2001	Brown	703/11
6,240,393	B1	5/2001	Brown	705/1
6,241,862	B1	6/2001	McAleer	204/403
6,245,060	B1	6/2001	Loomis	606/9
6,246,992	B1	6/2001	Brown	705/2
6,248,065	B1	6/2001	Brown	600/300
6,251,260	B1	6/2001	Heller	205/777.5
6,254,831	B1	7/2001	Barnard	422/82.08
6,256,533	B1	7/2001	Vuzhakov	604/21
6,258,229	B1	7/2001	Winarta	204/403
6,258,254	B1	7/2001	Miyamoto	205/777.5
6,268,161	B1	7/2001	Han	435/14
6,270,455	B1	8/2001	Brown	600/300
6,270,637	B1	8/2001	Crismore	204/403
6,272,359	B1	8/2001	Kivela	455/567
6,281,006	B1	8/2001	Heller	435/287.9
6,283,982	B1	9/2001	Levaughn	606/172
6,284,478	B1	9/2001	Heller	435/14
6,285,448	B1	9/2001	Kuenstner	356/39
6,290,683	B1	9/2001	Erez	604/273
6,294,897	B1	9/2001	Champlin	320/153
6,295,506	B1	9/2001	Heinonen	702/104
6,299,757	B1	10/2001	Feldman	205/775
6,302,844	B1	10/2001	Walker	600/300
6,302,855	B1	10/2001	Lav	600/584
6,305,804	B1	10/2001	Rice	351/221
6,306,347	B1	10/2001	Mason	422/58
6,309,535	B1	10/2001	Williams	205/777.5
6,312,612	B1	11/2001	Sherman	216/2
6,322,574	B1	11/2001	Lloyd	606/181
6,329,161	B1	12/2001	Heller	435/14
6,330,426	B2	12/2001	Brown	434/307 R
6,331,163	B1	12/2001	Kaplan	600/486

6,334,363 B1 1/2002 Testud 73/862
6,334,778 B1 1/2002 Brown 434/258
6,334,856 B1 1/2002 Allen 604/191
6,338,790 B1 1/2002 Feldman 205/777.5
6,349,229 B1 2/2002 Watanabe 600/345
6,350,273 B1 2/2002 Minagawa 606/186
6,350,451 B1 2/2002 Horn 424/184.1
6,352,523 B1 3/2002 Brown 604/207
6,353,753 B1 3/2002 Flock 600/473
6,364,889 B1 * 4/2002 Kheiri et al. 606/181
6,368,273 B1 4/2002 Brown 600/300
6,375,469 B1 4/2002 Brown 434/236
6,379,301 B1 4/2002 Worthington 600/309
6,379,324 B1 4/2002 Gartstein 604/22
6,381,577 B1 4/2002 Brown 705/2
6,387,709 B1 5/2002 Mason 436/164
6,391,005 B1 * 5/2002 Lum et al. 604/117
6,399,394 B1 6/2002 Dahm 436/180
6,413,410 B1 7/2002 Hodges 205/775
6,413,411 B1 7/2002 Pottgen 205/777.5
6,421,633 B1 7/2002 Heinonen 703/11
6,428,664 B1 8/2002 Bhullar 204/403.03
6,436,256 B1 8/2002 Williams 204/403.06
6,436,721 B1 8/2002 Kuo 436/514
6,440,645 B1 8/2002 Yon-Hin 430/322
6,451,040 B1 9/2002 Purcell 606/181
6,458,258 B2 10/2002 Taniike 204/403
6,462,162 B2 10/2002 Van Antwerp 528/77
6,464,649 B1 10/2002 Duchon 600/583
6,471,903 B2 10/2002 Sherman 264/328.1
6,475,436 B1 11/2002 Schabbach 422/64
6,477,394 B2 11/2002 Rice 600/318
6,477,424 B1 11/2002 Thompson 607/60
6,484,046 B1 11/2002 Say 600/345
6,494,830 B1 12/2002 Wessel 600/300
6,501,404 B2 12/2002 Walker 341/143
6,503,231 B1 1/2003 Prausnitz 604/272
6,503,381 B1 1/2003 Gotoh 204/403.14
6,506,168 B1 1/2003 Fathallah 600/578
6,508,785 B1 1/2003 Eppstein 604/113
6,514,270 B1 2/2003 Schraga 606/182
6,514,460 B1 2/2003 Fendrock 422/55
6,519,241 B1 2/2003 Theimer 370/338
6,520,326 B2 2/2003 McIvor 206/305
6,527,778 B2 3/2003 Athanasiou 606/80
6,530,892 B1 3/2003 Kelly 600/583
6,530,937 B1 3/2003 Schraga 606/182
6,533,949 B1 3/2003 Yeshurun 216/11
6,537,207 B1 3/2003 Rice 600/121
6,537,242 B1 3/2003 Palmer 604/22
6,537,292 B1 3/2003 Lee 606/182
6,540,672 B1 4/2003 Simonsen 600/300
6,540,675 B2 * 4/2003 Aceti et al. 600/309
6,540,762 B1 4/2003 Bertling 606/182
6,540,891 B1 4/2003 Stewart 204/403.14
6,541,266 B2 4/2003 Modzelewski 436/95
6,547,954 B2 4/2003 Ikeda 205/777.5
6,549,796 B2 4/2003 Sohrab 600/345
6,551,494 B1 4/2003 Heller 205/777.5
6,553,244 B2 4/2003 Lesho 600/347
6,554,381 B2 4/2003 Locher 347/7
6,555,061 B1 4/2003 Leong 422/58
6,558,320 B1 5/2003 Causey 600/300
6,558,361 B1 5/2003 Yeshurun 604/272
6,558,402 B1 5/2003 Chelak 606/182
6,558,528 B1 5/2003 Matzinger 205/777.5
6,560,471 B1 5/2003 Heller 600/347
6,561,978 B1 5/2003 Conn 600/309
6,561,989 B2 5/2003 Whitson 600/573
6,562,210 B1 5/2003 Bhullar 204/403.3
6,565,509 B1 5/2003 Say 600/365
6,565,808 B2 5/2003 Hudak 422/58
6,569,157 B1 5/2003 Shain 606/12
6,571,651 B1 6/2003 Hodges 73/864.72
6,572,566 B2 6/2003 Effenhauser 600/584
6,574,490 B2 6/2003 Abbink 600/316
6,575,905 B2 6/2003 Knobbe 600/365
6,576,101 B1 * 6/2003 Heller et al. 204/403.14
6,576,117 B1 6/2003 Iketaki et al. 205/777.5
6,576,416 B2 6/2003 Haviland 435/4
6,582,573 B2 6/2003 Douglas 204/403.1
6,587,705 B1 7/2003 Kim 600/347
6,589,260 B1 7/2003 Schmelzeisen-R 606/181
6,589,261 B1 7/2003 Abulhaj 606/181
6,591,125 B1 7/2003 Buse 600/347
6,592,745 B1 7/2003 Feldman 205/777.5
6,595,919 B2 7/2003 Berner 600/365
6,599,407 B2 7/2003 Taniike 204/403.1
6,599,693 B1 7/2003 Webb 435/4
6,602,205 B1 8/2003 Erickson 600/573
6,602,268 B2 8/2003 Kuhr 606/181
6,602,678 B2 8/2003 Kwon 435/14
6,604,050 B2 8/2003 Trippel 702/19
6,607,494 B1 8/2003 Fowler 600/570
6,607,658 B1 8/2003 Heller 205/777.5
6,616,616 B2 9/2003 Fritz 600/583
6,616,819 B1 9/2003 Liamos 204/403.02
6,618,934 B1 9/2003 Feldman 29/830
6,620,112 B2 9/2003 Klitmose 600/583
6,623,501 B2 9/2003 Heller 606/181
6,626,851 B2 9/2003 Hirao 600/576
6,635,222 B2 10/2003 Kent 422/22
6,638,772 B1 10/2003 Douglas 436/518
6,641,533 B2 11/2003 Causey 600/300
6,645,142 B2 11/2003 Braig 600/300
6,645,219 B2 11/2003 Roe 606/182
6,645,368 B1 11/2003 Beatty 205/792
6,650,915 B2 11/2003 Routt 600/319
6,652,720 B1 11/2003 Mansouri 204/403.11
6,656,702 B1 12/2003 Yugawa 435/26
6,659,966 B2 12/2003 Essenpreis 600/583
6,671,527 B2 12/2003 Peterson 600/316
6,679,841 B2 1/2004 Bojan 600/309
6,679,852 B1 1/2004 Schmelzeisen-Redeker et al. 600/583
6,706,000 B2 3/2004 Perez 600/583
6,706,049 B2 3/2004 Moerman 606/181
6,706,159 B2 * 3/2004 Moerman et al. 204/403.03
6,706,232 B2 3/2004 Hasegawa 264/403.09
6,713,660 B1 3/2004 Roe 604/361
6,719,887 B2 4/2004 Hasegawa 204/403.09
6,719,923 B2 4/2004 Stiene 252/511
6,721,586 B2 4/2004 Kiser 600/345
6,723,046 B2 4/2004 Lichtenstein 600/300
6,723,111 B2 4/2004 Abulhaj 606/181
6,723,371 B2 4/2004 Chih-hui 472/2.13
6,723,500 B2 4/2004 Yu 435/4
6,726,818 B2 4/2004 Cui et al. 204/403.01
6,733,493 B2 5/2004 Gruzdev 606/9
6,736,777 B2 5/2004 Kim 600/365
6,740,215 B1 5/2004 Nakaminami et al. .. 204/403.14
6,743,211 B1 6/2004 Prausnitz 604/239
6,743,635 B2 6/2004 Neel 436/95
6,749,618 B2 6/2004 Levaughn 606/182
6,749,792 B2 6/2004 Olsen 264/328.1
6,751,491 B2 6/2004 Lew 600/345
6,752,817 B2 6/2004 Flora 606/181
6,759,190 B2 7/2004 Lin 435/4
6,764,496 B2 7/2004 Schraga 606/182
6,764,581 B1 7/2004 Forrow 204/403
6,767,441 B1 7/2004 Cai 204/403.03
6,773,671 B1 8/2004 Lewis 422/58
6,776,888 B2 8/2004 Yamamoto 204/403.06
6,780,645 B2 8/2004 Hayter 436/8
6,780,647 B2 8/2004 Fujiwara 436/169
6,783,502 B2 8/2004 Orloff 600/583

6,783,537 B1 8/2004 Kuhr 606/182
6,784,274 B2 8/2004 Van Antwerp 528/77
6,786,874 B2 9/2004 Grace 600/573
6,787,013 B2 9/2004 Chang 204/412
6,787,109 B2 9/2004 Haar 422/82.05
6,790,327 B2 9/2004 Ikeda 204/403.1
6,790,599 B1 9/2004 Madou 430/320
6,792,791 B2 9/2004 Sato 73/1.02
6,793,632 B2 9/2004 Sohrab 600/573
6,793,633 B2 9/2004 Douglas 600/583
6,793,802 B2 9/2004 Lee 205/777.5
6,797,150 B2 9/2004 Kermani 205/777.5
6,800,488 B2 10/2004 Khan 436/166
6,801,041 B2 10/2004 Karinka 324/444
6,801,804 B2 10/2004 Miller 604/20
6,802,199 B2 10/2004 Hilgers 72/370.1
6,802,811 B1 10/2004 Slepian 600/309
6,802,957 B2 10/2004 Jung 205/777.5
6,805,780 B1 10/2004 Ryu 204/403.01
6,808,499 B1 10/2004 Churchill 600/587
6,808,908 B2 10/2004 Yao 435/181
6,808,937 B2 10/2004 Ligler 436/518
6,809,807 B1 10/2004 Erickson 356/213
6,811,557 B2 11/2004 Schraga 606/182
6,811,659 B2 11/2004 Vachon 204/224
6,811,753 B2 11/2004 Hirao 422/101
6,811,792 B2 11/2004 Roser 424/423
6,812,031 B1 11/2004 Carlsson 436/52
6,814,843 B1 11/2004 Bhullar 204/403.01
6,814,844 B2 11/2004 Bhullar 204/403.1
6,814,845 B2 11/2004 Wilson 204/486
6,815,186 B2 11/2004 Clark 435/183
6,816,742 B2 11/2004 Kim 600/345
6,818,180 B2 11/2004 Douglas 422/58
6,821,483 B2 11/2004 Phillips 422/58
6,823,750 B2 11/2004 Hodges 73/864.72
6,825,047 B1 11/2004 Woudenberg 436/518
6,827,250 B2 12/2004 Uhland 228/110.1
6,827,829 B2 12/2004 Kawanaka 204/403.02
6,830,551 B1 12/2004 Uchigaki 600/584
6,830,668 B2 12/2004 Musho 204/400
6,830,669 B2 12/2004 Miyazaki 204/409
6,833,540 B2 12/2004 MacKenzie 250/214
6,835,184 B1 12/2004 Sage 604/46
6,835,553 B2 12/2004 Han 435/14
6,837,858 B2 * 1/2005 Cunningham et al. 600/573
6,837,976 B2 1/2005 Cai 204/403.14
6,837,988 B2 1/2005 Leong 205/792
6,840,912 B2 1/2005 Kloepfer 600/583
6,841,052 B2 1/2005 Musho 204/401
6,843,254 B2 1/2005 Tapper 128/898
6,847,451 B2 1/2005 Pugh 356/436
6,849,052 B2 2/2005 Uchigaki 600/584
6,849,168 B2 2/2005 Crumly 204/416
6,849,216 B2 2/2005 Rappin 264/134
6,850,790 B2 2/2005 Berner 600/347
6,869,418 B2 3/2005 Marano-Ford 604/192
6,872,200 B2 3/2005 Mann 604/890.1
6,875,208 B2 4/2005 Santini 604/890.1
6,875,223 B2 4/2005 Argauer 606/181
6,875,613 B2 4/2005 Shartle 436/63
6,878,120 B2 4/2005 Roe 600/583
6,878,251 B2 4/2005 Hodges 204/403.14
6,878,255 B1 4/2005 Wang 204/452
6,878,262 B2 4/2005 Taniike 205/777.5
6,880,968 B1 4/2005 Haar 374/131
6,881,203 B2 4/2005 Delmore 604/272
6,881,322 B2 4/2005 Tokunaga 205/775
6,881,378 B1 4/2005 Zimmer 422/58
6,881,550 B2 4/2005 Phillips 435/14
6,881,551 B2 4/2005 Heller 435/14
6,881,578 B2 4/2005 Otake 436/44
6,882,940 B2 4/2005 Potts 702/23
6,884,592 B2 4/2005 Matzinger 435/7.1
6,885,196 B2 4/2005 Taniike 324/444
6,885,883 B2 4/2005 Parris 600/347
6,887,239 B2 5/2005 Elstrom 606/41
6,887,253 B2 5/2005 Schraga 606/181
6,887,254 B1 5/2005 Curie 606/181
6,887,426 B2 5/2005 Phillips 422/56
6,887,709 B2 5/2005 Leong 436/8
6,889,069 B2 5/2005 Routt 600/319
6,890,319 B1 5/2005 Crocker 604/131
6,890,421 B2 5/2005 Ohara 205/777.5
6,890,484 B2 5/2005 Bautista 422/58
6,891,936 B2 5/2005 Kai 379/106.02
6,892,085 B2 5/2005 McIvor 600/347
6,893,396 B2 5/2005 Schulze 600/300
6,893,545 B2 5/2005 Gotoh 204/403.5
6,893,552 B1 5/2005 Wang 205/777.5
6,895,263 B2 5/2005 Shin 600/316
6,895,264 B2 5/2005 Rice 600/319
6,895,265 B2 5/2005 Silver 600/345
6,896,793 B2 5/2005 Erdosy 205/775
6,897,788 B2 5/2005 Khair 340/870.16
6,902,905 B2 6/2005 Burson 435/14
6,904,301 B2 6/2005 Raskas 600/310
6,905,733 B2 6/2005 Russel 427/393.5
6,908,008 B2 6/2005 Pugh 221/135
6,908,535 B2 6/2005 Rankin 204/406
6,908,591 B2 6/2005 MacPhee 422/22
6,908,593 B1 6/2005 Shartle 422/58
6,911,130 B2 6/2005 Brenneman 204/400
6,911,131 B2 6/2005 Miyazaki 204/403.14
6,911,621 B2 6/2005 Bhullar 219/121.69
6,916,410 B2 7/2005 Katsuki 204/403
6,918,874 B1 7/2005 Hatch 600/365
6,918,918 B1 7/2005 Schraga 606/182
6,922,576 B2 7/2005 Raskas 600/316
6,922,578 B2 7/2005 Eppstein 600/347
6,923,764 B2 8/2005 Aceti 600/309
6,923,894 B2 8/2005 Huang 204/403.06
6,923,936 B2 8/2005 Swanson 422/22
6,924,093 B2 8/2005 Haviland 435/4
6,925,317 B1 8/2005 Samuels 600/344
6,925,393 B1 8/2005 Kalatz 702/27
6,929,649 B2 8/2005 Pugh 606/182
6,929,650 B2 8/2005 Fukuzawa 606/182
6,931,327 B2 8/2005 Goode 702/22
6,931,328 B2 8/2005 Braig 702/23
6,939,310 B2 9/2005 Matzinger 600/573
6,939,312 B2 9/2005 Hodges 600/583
6,939,450 B2 9/2005 Karinka 204/409
6,940,591 B2 9/2005 Sopp 356/244
6,942,518 B2 9/2005 Liamos 439/495
6,942,769 B2 9/2005 Cheng 204/400
6,942,770 B2 9/2005 Cai 204/403.04
6,944,486 B2 9/2005 Braig 600/310
6,945,943 B2 9/2005 Pugh 600/584
6,946,067 B2 9/2005 Hodges 205/792
6,946,098 B2 9/2005 Miekka 422/22
6,946,299 B2 9/2005 Neel 436/95
6,949,111 B2 9/2005 Schraga 606/182
6,949,221 B2 9/2005 Kiser 422/56
6,951,631 B1 10/2005 Catt 422/56
6,951,728 B2 10/2005 Qian 435/14
6,952,603 B2 10/2005 Gerber 600/310
6,952,604 B2 10/2005 DeNuzzio 600/345
6,953,693 B2 10/2005 Neel 436/149
6,954,662 B2 10/2005 Freger 600/316
6,958,072 B2 10/2005 Schraga 606/182
6,958,129 B2 10/2005 Galen 422/57
6,958,809 B2 10/2005 Sterling 356/39
6,959,211 B2 10/2005 Rule 600/310
6,959,247 B2 10/2005 Neel 702/19
6,960,287 B2 11/2005 Charlton 205/775

6,960,289	B2	11/2005	Hodges	205/778
6,964,871	B2	11/2005	Bell	436/95
6,965,791	B1	11/2005	Hitchcock	600/345
6,966,880	B2	11/2005	Boecker	600/583
6,966,977	B2	11/2005	Hasegawa	204/403.07
6,967,105	B2	11/2005	Nomura	436/169
6,968,375	B1	11/2005	Brown	709/224
6,969,359	B2	11/2005	Duchon	600/583
6,969,450	B2	11/2005	Taniike	204/403.01
6,969,451	B2	11/2005	Shin	204/412
6,973,706	B2	12/2005	Say	29/595
6,975,893	B2	12/2005	Say	600/347
6,977,032	B2	12/2005	Hasegawa	204/403.05
6,979,544	B2	12/2005	Keen	435/6
6,979,571	B2	12/2005	Modzelewski	436/164
6,982,027	B2	1/2006	Yagi	204/403.06
6,983,176	B2	1/2006	Gardner	600/310
6,983,177	B2	1/2006	Rule	600/310
6,984,307	B2	1/2006	Zweig	205/777.5
6,986,777	B2	1/2006	Kim	606/182
6,986,869	B2	1/2006	Tuohy	422/56
6,988,996	B2	1/2006	Roe	600/584
6,989,243	B2	1/2006	Yani	435/14
6,989,891	B2	1/2006	Braig	356/39
6,990,365	B1	1/2006	Parker	600/328
6,990,366	B2	1/2006	Say	600/345
6,990,367	B2	1/2006	Kiser	600/345
6,990,849	B2	1/2006	Bohm	73/53.01
6,991,918	B2	1/2006	Keith	435/31
6,991,940	B2	1/2006	Carroll	436/514
6,994,825	B2	2/2006	Haviland	422/58
6,997,317	B2	2/2006	Catelli	206/438
6,997,343	B2	2/2006	May	221/232
6,997,344	B2	2/2006	Brown	221/258
6,997,936	B2	2/2006	Marshall	606/181
6,998,247	B2	2/2006	Monfre	435/14
6,998,248	B2	2/2006	Yani	435/14
6,999,810	B2	2/2006	Berner	600/345
7,001,343	B2	2/2006	Erickson	600/573
7,001,344	B2	2/2006	Freeman	600/583
7,003,337	B2	2/2006	Harjunmaa	600/316
7,003,340	B2	2/2006	Say	600/345
7,003,341	B2	2/2006	Say	600/345
7,004,928	B2 *	2/2006	Aceti et al.	604/191
7,005,048	B1	2/2006	Watanabe	204/403.04
7,005,273	B2	2/2006	Heller	435/25
7,005,459	B2	2/2006	Hekal	523/102
7,005,857	B2	2/2006	Stiene	324/449
7,006,857	B2	2/2006	Braig	600/310
7,006,858	B2	2/2006	Silver	600/345
7,008,384	B2	3/2006	Tapper	600/573
7,010,432	B2	3/2006	Kermani	702/19
7,011,630	B2	3/2006	Desai	600/309
7,011,954	B2	3/2006	Ouyang	435/7.9
7,014,615	B2	3/2006	Erickson	600/573
7,015,262	B2	3/2006	Leong	523/205
7,016,713	B2	3/2006	Gardner	600/310
7,018,568	B2	3/2006	Tierney	252/511
7,018,848	B2	3/2006	Douglas	436/524
7,022,217	B2	4/2006	Hodges	205/777.5
7,022,218	B2	4/2006	Taniike	205/777.5
7,022,286	B2	4/2006	Lemke	422/67
7,024,236	B2	4/2006	Ford	600/345
7,024,248	B2	4/2006	Penner	607/60
7,024,399	B2	4/2006	Sumner	706/45
7,025,425	B2	4/2006	Kovatchev	300/365
7,025,774	B2	4/2006	Freeman	606/181
7,027,848	B2	4/2006	Robinson	600/310
7,029,444	B2	4/2006	Shin	600/365
7,033,322	B2	4/2006	Silver	600/486
7,033,371	B2	4/2006	Alden	606/181
7,039,560	B2	5/2006	Kawatahara	702/187
7,041,057	B1	5/2006	Faupel	600/365
7,041,063	B2	5/2006	Abreu	600/549
7,041,068	B2	5/2006	Freeman	600/583
7,041,254	B2	5/2006	Haviland	422/58
7,041,468	B2	5/2006	Drucker	435/14
7,043,287	B1	5/2006	Khalil	600/310
7,044,911	B2	5/2006	Drinan	600/300
7,045,054	B1	5/2006	Buck	205/778
7,045,097	B2	5/2006	Kovacs	422/82.08
7,045,310	B2	5/2006	Buck	435/7.93
7,045,361	B2	5/2006	Heiss	436/172
7,047,070	B2	5/2006	Wilkinson	604/20
7,047,795	B2	5/2006	Sato	73/64.56
7,049,130	B2	5/2006	Carroll	435/287.2
7,050,843	B2	5/2006	Shartle	600/345
7,051,495	B2	5/2006	Lang	53/475
7,052,268	B2	5/2006	Powell	425/542
7,052,591	B2	5/2006	Gao	204/490
7,052,652	B2	5/2006	Zanzucchi	422/82.05
7,052,864	B2	5/2006	Durkop	435/25
7,054,682	B2	5/2006	Young	604/20
7,054,759	B2	5/2006	Fukunaga	702/23
D523,555	S	6/2006	Loerwald	D24/146
7,056,425	B2	6/2006	Hasegawa	204/403.04
7,056,495	B2	6/2006	Roser	424/45
7,058,437	B2	6/2006	Buse	600/347
7,060,059	B2	6/2006	Keith	604/504
7,060,192	B2	6/2006	Yuzhakov	216/11
7,061,593	B2	6/2006	Braig	356/39
7,063,234	B2	6/2006	Giraud	221/271
7,063,774	B2	6/2006	Bhullar	204/403.02
7,063,775	B2	6/2006	Yamaoka	204/403.06
7,063,776	B2	6/2006	Huang	204/403.14
7,066,884	B2	6/2006	Custer	600/309
7,066,885	B2	6/2006	Erickson	600/309
7,070,564	B2	7/2006	Matzinger	600/300
7,070,680	B2	7/2006	Bae	204/403.04
7,073,246	B2	7/2006	Bhullar	29/595
7,074,307	B2	7/2006	Simpson	204/403.04
7,074,308	B2	7/2006	Mao	204/403.14
7,077,328	B2	7/2006	Krishnaswamy	235/472.01
7,077,828	B2	7/2006	Kuhr	604/207
7,078,480	B2	7/2006	Nagel	530/322
7,081,188	B1	7/2006	Cho	204/403.04
7,083,712	B2	8/2006	Morita	205/775
7,086,277	B2	8/2006	Tess	73/53.01
7,087,149	B1	8/2006	Muguruma	205/778
7,090,764	B2	8/2006	Iyengar	205/775
7,096,053	B2	8/2006	Loeb	600/317
7,096,124	B2	8/2006	Sterling	702/23
7,097,631	B2	8/2006	Trautman	604/46
7,098,038	B2	8/2006	Fukuoka	436/164
7,103,578	B2	9/2006	Beck	705/75
7,105,066	B2	9/2006	Schraga	606/182
7,107,253	B1	9/2006	Sumner	706/45
7,108,680	B2	9/2006	Rohr	604/151
7,108,778	B2	9/2006	Simpson	205/778
7,109,271	B2	9/2006	Liu	525/283
7,110,112	B2	9/2006	Uchida	356/364
7,110,803	B2	9/2006	Shults	600/347
7,112,265	B1	9/2006	McAleer	204/403.09
7,112,451	B2	9/2006	Takahashi	436/514
7,115,362	B2	10/2006	Douglas	435/4
7,118,351	B2	10/2006	Effenhauser	417/208
7,118,667	B2	10/2006	Lee	205/777.5
7,118,668	B1	10/2006	Edelbrock	205/777.5
7,118,916	B2	10/2006	Matzinger	436/34
7,118,919	B2	10/2006	Yatscoff	436/56
7,120,483	B2	10/2006	Russell	600/345
7,122,102	B2	10/2006	Wogoman	204/400
7,122,110	B2	10/2006	Deng	205/777.5
7,122,111	B2	10/2006	Tokunaga	205/792
7,125,481	B2	10/2006	Musho	205/775
7,129,038	B2	10/2006	Gopalan	435/4

RE39,390 E 11/2006 Hasegawa 204/403.09
D531,725 S 11/2006 Loerwald D24/146
7,131,342 B2 11/2006 Hodges 73/864.72
7,131,984 B2 11/2006 Sato 606/182
7,132,041 B2 11/2006 Deng 205/777.5
7,133,710 B2 11/2006 Acosta 600/316
7,134,999 B2 11/2006 Brauker 600/309
7,135,100 B1 11/2006 Lau 204/403.14
7,137,957 B2 11/2006 Erickson 600/573
7,138,041 B2 11/2006 Su 204/403.04
7,138,089 B2 11/2006 Aitken 422/82.01
7,141,058 B2 11/2006 Briggs 606/181
7,144,404 B2 12/2006 Whitson 606/181
7,144,485 B2 12/2006 Hsu 204/403.02
7,144,495 B2 12/2006 Teodorezyk 205/792
7,144,496 B2 12/2006 Meserol 205/792
7,147,825 B2 12/2006 Matsuda 422/58
7,150,755 B2 12/2006 Levaughn 606/181
7,150,975 B2 12/2006 Tamada 435/14
7,150,995 B2 12/2006 Xie 436/67
7,153,696 B2 12/2006 Fukuoka 436/164
7,155,371 B2 12/2006 Kawatahara 702/187
7,160,251 B2 1/2007 Neel 600/365
7,160,313 B2 1/2007 Galloway 606/167
7,163,616 B2 1/2007 Vreeke 205/777.5
7,166,074 B2 1/2007 Reghabi 600/365
7,167,734 B2 1/2007 Khalil 600/310
7,167,818 B2 1/2007 Brown 703/11
2001/0011157 A1 8/2001 Latterell 600/576
2001/0016682 A1 8/2001 Berner 600/345
2001/0017269 A1 8/2001 Heller 205/777.5
2001/0027328 A1 10/2001 Lum 606/186
2001/0054319 A1 12/2001 Heller 73/849
2002/0016606 A1 2/2002 Moerman 606/181
2002/0019748 A1 2/2002 Brown 705/2
2002/0025469 A1 2/2002 Heller 429/43
2002/0029058 A1 3/2002 Levaughn 606/181
2002/0040230 A1 4/2002 Kuhr 606/181
2002/0042090 A1 4/2002 Heller 435/14
2002/0044890 A1 4/2002 Black 422/56
2002/0052618 A1 5/2002 Haar 606/181
2002/0053523 A1 5/2002 Liamos 205/787
2002/0057993 A1 5/2002 Maisey 422/82.01
2002/0076349 A1 6/2002 Aitken 422/58
2002/0078091 A1 6/2002 Vu 707/513
2002/0081559 A1 6/2002 Brown ..... 434/307 R
2002/0081588 A1 6/2002 Lumley-Woodyear 435/6
2002/0084196 A1 7/2002 Liamos 205/792
2002/0087056 A1 7/2002 Aceti
2002/0092612 A1 7/2002 Davies 156/292
2002/0120216 A1 8/2002 Fritz 600/583
2002/0120261 A1 8/2002 Morris 606/41
2002/0130042 A1 9/2002 Moerman 204/403.01
2002/0133377 A1 9/2002 Brown 705/3
2002/0136667 A1 9/2002 Subramanian 422/100
2002/0136863 A1 9/2002 Subramanian 428/156
2002/0137998 A1 9/2002 Smart 600/347
2002/0138040 A1 9/2002 Flora 604/116
2002/0148739 A2 10/2002 Liamos 205/787
2002/0160520 A1 10/2002 Orloff 436/72
2002/0161289 A1 10/2002 Hopkins 600/322
2002/0168290 A1 11/2002 Yuzhakov 422/56
2002/0176984 A1 11/2002 Smart 428/336
2002/0177761 A1 11/2002 Orloff 600/309
2002/0188224 A1 12/2002 Roe 600/584
2003/0018282 A1 1/2003 Effenhauser 600/583
2003/0018300 A1 1/2003 Duchon 604/164.01
2003/0028125 A1 2/2003 Yuzhakov
2003/0028126 A1 2/2003 List 600/583
2003/0050537 A1 3/2003 Wessel 600/300
2003/0050573 A1 3/2003 Kuhr 600/567
2003/0050656 A1 3/2003 Schraga 606/182
2003/0060730 A1 3/2003 Perez 600/576
2003/0069753 A1 4/2003 Brown 705/2
2003/0073089 A1 4/2003 Mauze 435/6
2003/0073229 A1 4/2003 Greenstein 435/287.2
2003/0073931 A1 4/2003 Boecker 600/573
2003/0083685 A1 5/2003 Freeman 606/181
2003/0083686 A1 5/2003 Freeman 606/181
2003/0088160 A1 5/2003 Halleck 600/300
2003/0088191 A1 5/2003 Freeman et al. 600/583
2003/0089730 A1 5/2003 May 221/232
2003/0093010 A1 5/2003 Essenpreis 600/583
2003/0100040 A1 5/2003 Bonnecaze 435/14
2003/0106810 A1 6/2003 Douglas 205/777.5
2003/0109777 A1 6/2003 Kloepfer 600/367
2003/0111357 A1 6/2003 Black 205/775
2003/0113827 A1 6/2003 Burkoth 435/14
2003/0116447 A1 6/2003 Sturridge 205/777.5
2003/0135333 A1 7/2003 Aceti 702/31
2003/0139653 A1 7/2003 Manser 600/300
2003/0143113 A2 7/2003 Yuzhakov 422/56
2003/0144608 A1 7/2003 Kojima 600/583
2003/0144609 A1 7/2003 Kennedy 600/583
2003/0146110 A1 8/2003 Karinka 205/777.5
2003/0149348 A1 8/2003 Raskas 600/310
2003/0149377 A1 8/2003 Erickson 600/573
2003/0153900 A1 8/2003 Aceti 604/890.1
2003/0159944 A1 8/2003 Pottgen 205/777.5
2003/0163351 A1 8/2003 Brown 705/2
2003/0178322 A1 9/2003 Iyengar 205/775
2003/0191415 A1 10/2003 Moerman 600/584
2003/0195435 A1 10/2003 Williams 600/583
2003/0195540 A1 10/2003 Moerman 606/181
2003/0199744 A1 10/2003 Buse 600/347
2003/0199789 A1 10/2003 Boecker 600/575
2003/0199790 A1 10/2003 Boecker 600/576
2003/0199791 A1 10/2003 Boecker 600/576
2003/0199891 A1 10/2003 Argauer 606/181
2003/0199893 A1 10/2003 Boecker 606/181
2003/0199894 A1 10/2003 Boecker 606/181
2003/0199895 A1 10/2003 Boecker 606/181
2003/0199896 A1 10/2003 Boecker 606/181
2003/0199897 A1 10/2003 Boecker 606/181
2003/0199898 A1 10/2003 Boecker 606/181
2003/0199899 A1 10/2003 Boecker 606/181
2003/0199900 A1 10/2003 Boecker 606/181
2003/0199901 A1 10/2003 Boecker 606/181
2003/0199903 A1 10/2003 Boecker 606/181
2003/0199904 A1 10/2003 Boecker 606/181
2003/0199905 A1 10/2003 Boecker 606/181
2003/0199906 A1 10/2003 Boecker 606/181
2003/0199907 A1 10/2003 Boecker 606/181
2003/0199908 A1 10/2003 Boecker 606/181
2003/0199909 A1 10/2003 Boecker 606/181
2003/0199910 A1 10/2003 Boecker 606/181
2003/0199911 A1 10/2003 Boecker 606/181
2003/0199912 A1 10/2003 Pugh 606/182
2003/0201194 A1 10/2003 Heller 205/777.5
2003/0203352 A1 10/2003 Haviland 435/4
2003/0206828 A1 11/2003 Bell 422/44
2003/0208140 A1 11/2003 Pugh 600/584
2003/0212344 A1 11/2003 Yuzhakov 600/583
2003/0212345 A1 11/2003 McAllister 600/584
2003/0212346 A1 11/2003 Yuzhakov 600/584
2003/0212347 A1 11/2003 Sohrab 600/584
2003/0212423 A1 11/2003 Pugh 606/181
2003/0212424 A1 11/2003 Briggs 606/181
2003/0212579 A1 11/2003 Brown 705/2
2003/0216767 A1 11/2003 List 606/181
2003/0217918 A1 11/2003 Davies 204/403.14
2003/0220552 A1 11/2003 Reghabi 600/365
2003/0220663 A1 11/2003 Fletcher 606/182
2003/0223906 A1 12/2003 McAllister 422/58
2003/0225317 A1 12/2003 Schell 600/300
2003/0225429 A1 12/2003 Garthe 606/182

2003/0225430 A1 12/2003 Schraga 606/182
2003/0228637 A1 12/2003 Wang 435/7.9
2003/0229514 A2 12/2003 Brown 705/2
2003/0232370 A1 12/2003 Trifiro 435/6
2003/0233055 A1 12/2003 Erickson 600/573
2003/0233112 A1 12/2003 Alden et al. 606/181
2003/0233113 A1 12/2003 Alden et al. 606/182
2004/0006285 A1 1/2004 Douglas 600/583
2004/0007585 A1 1/2004 Griffith 221/232
2004/0009100 A1 1/2004 Simons 422/102
2004/0010279 A1 1/2004 Freeman 606/182
2004/0015064 A1 1/2004 Parsons 600/347
2004/0019250 A1 1/2004 Catelli 600/1
2004/0019259 A1 1/2004 Brown 600/300
2004/0026243 A1 2/2004 Davies 204/403.14
2004/0030353 A1 2/2004 Schmelzeisen 606/201
2004/0031682 A1 2/2004 Wilsey 204/403.1
2004/0034318 A1 2/2004 Fritz 604/19
2004/0038045 A1 2/2004 Smart 428/446
2004/0039303 A1 2/2004 Wurster 600/584
2004/0039342 A1 2/2004 Eppstein 604/200
2004/0039407 A1 2/2004 Schraga 606/181
2004/0039408 A1 2/2004 Abulhaj 606/181
2004/0049219 A1 3/2004 Briggs 606/181
2004/0049220 A1 3/2004 Boecker 606/181
2004/0050694 A1 3/2004 Yang 204/403.02
2004/0054267 A1 3/2004 Feldman 600/316
2004/0059256 A1 3/2004 Perez 600/583
2004/0060818 A1 4/2004 Feldman 204/403.01
2004/0061841 A1 4/2004 Black 355/30
2004/0064068 A1 4/2004 DeNuzzio 600/583
2004/0087990 A1 5/2004 Boecker 606/181
2004/0092842 A1 5/2004 Boecker 600/575
2004/0092994 A1 5/2004 Briggs 606/181
2004/0092995 A1 5/2004 Boecker 606/181
2004/0096991 A1 5/2004 Zhang 436/518
2004/0098009 A1 5/2004 Boecker 606/181
2004/0098010 A1 5/2004 Davison 606/181
2004/0102803 A1 5/2004 Boecker 606/183
2004/0106855 A1 6/2004 Brown 600/301
2004/0106858 A1 6/2004 Say 600/345
2004/0106859 A1 6/2004 Say 600/345
2004/0106860 A1 6/2004 Say 600/345
2004/0106904 A1 6/2004 Gonnelli 604/173
2004/0106941 A1 6/2004 Roe 606/181
2004/0107116 A1 6/2004 Brown 705/2
2004/0115754 A1 6/2004 Chang 435/14
2004/0115831 A1 6/2004 Meathrel 436/514
2004/0116780 A1 6/2004 Brown 600/300
2004/0116829 A1 6/2004 Raney 600/573
2004/0117207 A1 6/2004 Brown 705/2
2004/0117208 A1 6/2004 Brown 705/2
2004/0117209 A1 6/2004 Brown 705/2
2004/0117210 A1 6/2004 Brown 705/2
2004/0122339 A1 6/2004 Roe
2004/0127818 A1 7/2004 Roe 600/583
2004/0127819 A1 7/2004 Roe 600/583
2004/0127928 A1 7/2004 Whitson 606/181
2004/0127929 A1 7/2004 Roe 606/181
2004/0132167 A1 7/2004 Rule 435/287.1
2004/0133125 A1 7/2004 Miyashita 600/573
2004/0133127 A1 7/2004 Roe 600/583
2004/0137640 A1 7/2004 Hirao 436/514
2004/0138541 A1 7/2004 Ward 600/345
2004/0138588 A1 7/2004 Saikley 600/583
2004/0138688 A1 7/2004 Giraud 606/181
2004/0146958 A1 7/2004 Bae 435/14
2004/0154932 A1 8/2004 Deng 205/777.5
2004/0157017 A1 8/2004 Mauze 428/35.7
2004/0157149 A1 8/2004 Hofmann 430/131
2004/0157319 A1 8/2004 Keen 435/287.2
2004/0157338 A1 8/2004 Burke 436/147
2004/0157339 A1 8/2004 Burke 436/149
2004/0158137 A1 8/2004 Eppstein 600/347
2004/0158271 A1 8/2004 Hamamoto 606/181
2004/0161737 A1 8/2004 Yang 435/5
2004/0162473 A1 8/2004 Sohrab 600/345
2004/0162474 A1 8/2004 Kiser 600/345
2004/0162506 A1 8/2004 Duchon 600/583
2004/0162573 A1 8/2004 Kheiri 606/182
2004/0167383 A1 8/2004 Kim 600/365
2004/0171057 A1 9/2004 Yang 435/6
2004/0171968 A1 9/2004 Katsuki 600/583
2004/0172000 A1 9/2004 Roe 604/361
2004/0173472 A1 9/2004 Jung 205/777.5
2004/0173488 A1 9/2004 Griffin 206/363
2004/0176705 A1 9/2004 Stevens 600/584
2004/0176732 A1 9/2004 Frazier 604/345
2004/0178066 A1 9/2004 Miyazaki 204/403.01
2004/0178067 A1 9/2004 Miyazaki 204/403.1
2004/0178216 A1 9/2004 Brickwood 221/268
2004/0180379 A1 9/2004 van Duyne 435/7.1
2004/0182703 A1 9/2004 Bell 204/403.11
2004/0185568 A1 9/2004 Matsumoto 436/8
2004/0186359 A1 9/2004 Beaudoin 600/310
2004/0186394 A1 9/2004 Roe 600/598
2004/0186500 A1 9/2004 Koike 606/181
2004/0193201 A1 9/2004 Kim 606/181
2004/0193377 A1 9/2004 Brown 702/19
2004/0194302 A1 10/2004 Bhullar 29/847
2004/0197231 A1 10/2004 Katsuki 422/68.1
2004/0197821 A1 10/2004 Bauer 437/7.1
2004/0199062 A1 10/2004 Petersson 600/316
2004/0199409 A1 10/2004 Brown 705/3
2004/0200720 A1 10/2004 Musho 204/403.01
2004/0200721 A1 10/2004 Bhullar 204/403.01
2004/0202576 A1 10/2004 Aceti 422/82.05
2004/0204662 A1 10/2004 Perez 600/583
2004/0206625 A1 10/2004 Bhullar 204/403.1
2004/0206636 A1 10/2004 Hodges 205/792
2004/0206658 A1 10/2004 Hammerstedt 206/524.1
2004/0209307 A1 10/2004 Valkirs 435/7.1
2004/0209350 A1 10/2004 Sakata 435/287.1
2004/0209354 A1 10/2004 Mathies 435/287.2
2004/0210279 A1 10/2004 Gruzdev 607/89
2004/0211666 A1 10/2004 Pamidi 204/403.01
2004/0214253 A1 10/2004 Paek 435/7.92
2004/0215224 A1 10/2004 Sakata 606/181
2004/0215225 A1 10/2004 Nakayama 606/182
2004/0216516 A1 11/2004 Sato 73/64.56
2004/0217019 A1 11/2004 Cai 205/792
2004/0219500 A1 11/2004 Brown ..... 434/307 R
2004/0219535 A1 11/2004 Bell 435/6
2004/0220456 A1 11/2004 Eppstein 600/309
2004/0220495 A1 11/2004 Cahir 600/562
2004/0220564 A1 11/2004 Ho 606/47
2004/0220603 A1 11/2004 Rutynowski 606/181
2004/0222092 A1 11/2004 Musho 204/401
2004/0224369 A1 11/2004 Cai 435/7.7
2004/0225230 A1 11/2004 Liamos 600/583
2004/0225311 A1 11/2004 Levaughn 606/181
2004/0225312 A1 11/2004 Orloff 606/182
2004/0230216 A1 11/2004 Levaughn 606/181
2004/0231984 A1 11/2004 Lauks 204/416
2004/0232009 A1 11/2004 Okuda 205/789
2004/0236250 A1 11/2004 Hodges 600/583
2004/0236251 A1 11/2004 Roe 600/583
2004/0236268 A1 11/2004 Mitragotri 604/20
2004/0236362 A1 11/2004 Schraga 606/181
2004/0238357 A1 12/2004 Bhullar 204/400
2004/0238358 A1 12/2004 Forrow 204/403
2004/0238359 A1 12/2004 Ikeda 204/403.1
2004/0241746 A1 12/2004 Adlassnig 435/7.1
2004/0242977 A1 12/2004 Dosmann 600/315
2004/0243164 A1 12/2004 D'Agostino 606/181
2004/0243165 A1 12/2004 Koike 606/181

2004/0245101 A1 12/2004 Willner 204/403
2004/0248282 A1 12/2004 Sobha 435/287.2
2004/0248312 A1 12/2004 Vreeke 436/95
2004/0249254 A1 12/2004 Racchini 600/347
2004/0249310 A1 12/2004 Shartle 600/583
2004/0249311 A1 12/2004 Haar 600/584
2004/0249405 A1 12/2004 Watanabe 606/181
2004/0249406 A1 12/2004 Griffin 606/182
2004/0251131 A1 12/2004 Ueno 204/403
2004/0253634 A1 12/2004 Wang 435/7.1
2004/0254434 A1 12/2004 Goodnow 600/365
2004/0254599 A1 12/2004 Lipoma 606/181
2004/0256228 A1 12/2004 Huang 204/434
2004/0256248 A1 12/2004 Burke 205/792
2004/0256685 A1 12/2004 Chou 257/414
2004/0258564 A1 12/2004 Charlton 422/58
2004/0260204 A1 12/2004 Boecker 600/584
2004/0260324 A1 12/2004 Fukuzawa 606/181
2004/0260325 A1 12/2004 Kuhr 606/181
2004/0260326 A1 12/2004 Lipoma 606/182
2004/0260511 A1 12/2004 Burke 702/182
2004/0267105 A1 12/2004 Monfre 600/344
2004/0267160 A9 12/2004 Perez 600/583
2004/0267229 A1 12/2004 Moerman 604/500
2004/0267299 A1 12/2004 Kuriger 606/181
2004/0267300 A1 12/2004 Mace 606/182
2005/0000806 A1 1/2005 Hsieh 203/403.1
2005/0000807 A1 1/2005 Wang 204/403.81
2005/0000808 A1 1/2005 Cui 203/403.14
2005/0003470 A1 1/2005 Nelson 435/14
2005/0004437 A1 1/2005 Kaufmann 600/300
2005/0004494 A1 1/2005 Perez 600/583
2005/0008537 A1 1/2005 Mosolu 422/56
2005/0008851 A1 1/2005 Ezoe 428/336
2005/0009191 A1 1/2005 Swenson 436/43
2005/0010090 A1 1/2005 Acosta 600/316
2005/0010093 A1 1/2005 Ford 600/345
2005/0010134 A1 1/2005 Douglas 600/573
2005/0010137 A1 1/2005 Hodges 600/583
2005/0010198 A1 1/2005 Marchitto 606/9
2005/0011759 A1 1/2005 Moerman 204/403.03
2005/0013731 A1 1/2005 Burke 422/56
2005/0014997 A1 1/2005 Ruchti 600/310
2005/0015020 A1 1/2005 Levaughn 600/583
2005/0016844 A1 1/2005 Burke 204/403.1
2005/0019212 A1 1/2005 Bhullar 422/56
2005/0019219 A1 1/2005 Oshiman 422/82.12
2005/0019805 A1 1/2005 Groll 435/6
2005/0019945 A1 1/2005 Groll 436/169
2005/0019953 A1 1/2005 Groll 436/514
2005/0021066 A1 1/2005 Kuhr 600/181
2005/0027181 A1 2/2005 Goode et al.
2005/0027211 A1 2/2005 Kuhr 600/583
2005/0027562 A1 2/2005 Brown 705/2
2005/0033341 A1 2/2005 Vreeke 606/181
2005/0034983 A1 2/2005 Chambers 204/403.01
2005/0036020 A1 2/2005 Li 347/100
2005/0036146 A1 2/2005 Braig 356/246
2005/0036906 A1 2/2005 Katsuji 422/58
2005/0036909 A1 2/2005 Erickson 422/61
2005/0037482 A1 2/2005 Braig 435/287
2005/0038329 A1 2/2005 Morris 600/319
2005/0038330 A1 2/2005 Jansen 600/345
2005/0038463 A1 2/2005 Davar 606/181
2005/0038464 A1 2/2005 Schraga 606/182
2005/0038465 A1 2/2005 Schraga 606/182
2005/0038674 A1 2/2005 Braig 705/2
2005/0042766 A1 2/2005 Ohman 436/174
2005/0043894 A1 2/2005 Fernandez 702/19
2005/0043965 A1 2/2005 Heller 705/2
2005/0045476 A1 3/2005 Neel 204/403.2
2005/0049473 A1 3/2005 Desai 600/347
2005/0050859 A1 3/2005 Coppeta 53/471
2005/0054082 A1 3/2005 Pachl 435/287.2
2005/0059895 A1 3/2005 Brown 600/481
2005/0060194 A1 3/2005 Brown 705/2
2005/0067280 A1 3/2005 Reid 204/403.14
2005/0067737 A1 3/2005 Rappin 264/272.19
2005/0070771 A1 3/2005 Rule 600/316
2005/0070819 A1 3/2005 Poux 600/576
2005/0070945 A1 3/2005 Schraga 606/182
2005/0072670 A1 4/2005 Hasegawa 204/403.01
2005/0077176 A1 4/2005 Hodges 204/403.01
2005/0077584 A1 4/2005 Uhland 257/414
2005/0079542 A1 4/2005 Cullen 435/7.1
2005/0080652 A1 4/2005 Brown 705/2
2005/0085839 A1 4/2005 Allen 606/181
2005/0085840 A1 4/2005 Yi 606/182
2005/0086083 A1 4/2005 Brown 705/2
2005/0090754 A1 4/2005 Wolf 600/509
2005/0090850 A1 4/2005 Toes 606/182
2005/0096520 A1 5/2005 Maekawa 600/365
2005/0096565 A1 5/2005 Chang 600/584
2005/0096586 A1 5/2005 Trautman 604/46
2005/0096587 A1 5/2005 Santini, Jr. 604/66
2005/0096686 A1 5/2005 Allen 606/181
2005/0098431 A1 5/2005 Hodges 204/403.01
2005/0098432 A1 5/2005 Grundel 204/403.2
2005/0098433 A1 5/2005 Grundel 204/403.2
2005/0098434 A1 5/2005 Grundel 204/403.02
2005/0100880 A1 5/2005 Chang 435/4
2005/0101841 A9 5/2005 Kaylor 600/300
2005/0101979 A1 5/2005 Alden 606/181
2005/0101980 A1 5/2005 Alden 606/181
2005/0101981 A1 5/2005 Alden 606/181
2005/0103624 A1 5/2005 Bhullar 204/403.01
2005/0106713 A1 5/2005 Phan 435/287.2
2005/0109637 A1 5/2005 Iyengar 205/775
2005/0112782 A1 5/2005 Buechler 436/518
2005/0113658 A1 5/2005 Jacobson 600/342
2005/0113717 A1 5/2005 Matzinger 600/573
2005/0114062 A1 5/2005 Davies 702/104
2005/0114154 A1 5/2005 Wolkowiez 705/1
2005/0114444 A1 5/2005 Brown 709/203
2005/0118056 A1 6/2005 Swanson 423/23
2005/0119681 A1 6/2005 Marshall 606/181
2005/0123443 A1 6/2005 Fujiwara 422/58
2005/0123680 A1 6/2005 Kang 427/248.1
2005/0124869 A1 6/2005 Hefti 600/316
2005/0125017 A1 6/2005 Kudrna 606/181
2005/0125018 A1 6/2005 Galloway 606/181
2005/0125019 A1 6/2005 Kudrna 606/182
2005/0126929 A1 6/2005 Mansouri 205/778
2005/0130248 A1 6/2005 Willner 435/14
2005/0130249 A1 6/2005 Parris 435/14
2005/0130292 A1 6/2005 Ahn 435/287.1
2005/0131286 A1 6/2005 Parker 600/328
2005/0131441 A1 6/2005 Iio 606/182
2005/0133368 A1 6/2005 Davies 204/403.01
2005/0136471 A1 6/2005 Bhullar 435/6
2005/0136501 A1 6/2005 Kuriger 435/14
2005/0136529 A1 6/2005 Yang 435/287
2005/0136550 A1 6/2005 Yang 436/514
2005/0137531 A1 6/2005 Gonnelli 604/173
2005/0137536 A1 6/2005 Gonnelli 604/264
2005/0143675 A1 6/2005 Neel 600/583
2005/0143713 A1 6/2005 Delmore 604/506
2005/0143771 A1 6/2005 Stout 606/181
2005/0145490 A1 7/2005 Shinno 204/403
2005/0145491 A1 7/2005 Amano 204/403
2005/0145520 A1 7/2005 Ilo 206/365
2005/0149088 A1 7/2005 Fukuda 606/181
2005/0149089 A1 7/2005 Trissel 606/181
2005/0150762 A1 7/2005 Butters 204/403
2005/0150763 A1 7/2005 Butters 204/403
2005/0154277 A1 7/2005 Ting 600/407

2005/0154374 A1 7/2005 Hunter 604/890
2005/0154410 A1 7/2005 Conway 606/181
2005/0154616 A1 7/2005 Iliff 705/3
2005/0158850 A1 7/2005 Kubo 435/287.2
2005/0159656 A1 7/2005 Hockersmith 600/315
2005/0159768 A1 7/2005 Boehm 606/182
2005/0164322 A1 7/2005 Heller 435/14
2005/0164329 A1 7/2005 Wallace-Davis 435/25
2005/0165285 A1 7/2005 Iliff 600/300
2005/0165393 A1 7/2005 Eppstein 606/41
2005/0165622 A1 7/2005 Neel 705/2
2005/0169961 A1 8/2005 Hunter 424/423
2005/0170448 A1 8/2005 Burson 435/14
2005/0171567 A1 8/2005 DeHart 606/181
2005/0172021 A1 8/2005 Brown 709/224
2005/0172022 A1 8/2005 Brown 709/224
2005/0173245 A1 8/2005 Feldman 204/403.01
2005/0173246 A1 8/2005 Hodges 204/403.11
2005/0175509 A1 8/2005 Nakaminami 422/82.03
2005/0176084 A1 8/2005 Burkoth 435/14
2005/0176133 A1 8/2005 Miyashita 435/287.1
2005/0177071 A1 8/2005 Nakayama 600/583
2005/0177201 A1 8/2005 Freeman 607/46
2005/0177398 A1 8/2005 Watanabe 705/3
2005/0178218 A1 8/2005 Montagu 73/864.34
2005/0181010 A1 8/2005 Hunter 424/423
2005/0181497 A1 8/2005 Salto 435/287.1
2005/0182307 A1 8/2005 Currie 600/300
2005/0187439 A1 8/2005 Blank 600/310
2005/0187444 A1 8/2005 Hubner 600/322
2005/0192488 A1 9/2005 Bryenton 600/301
2005/0196821 A1 9/2005 Monfre 435/14
2005/0197666 A1 9/2005 Raney 606/181
2005/0201897 A1 9/2005 Zimmer 422/82.05
2005/0202567 A1 9/2005 Zanzucchi 436/95
2005/0203358 A1 9/2005 Monfre 600/331
2005/0203364 A1 9/2005 Monfre 600/365
2005/0204939 A1 9/2005 Krejci 101/129
2005/0205422 A1 9/2005 Moser 204/403.06
2005/0205816 A1 9/2005 Hayenga 251/61.1
2005/0209515 A1 9/2005 Hockersmith 600/316
2005/0209564 A1 9/2005 Bonner 604/173
2005/0209625 A1 9/2005 Chan 606/181
2005/0211571 A1 9/2005 Schulein 205/777.5
2005/0211572 A1 9/2005 Buck 205/778
2005/0214881 A1 9/2005 Azarnia 435/7.92
2005/0214892 A1 9/2005 Kovatchev 435/25
2005/0215871 A1 9/2005 Feldman 600/309
2005/0215872 A1 9/2005 Berner 600/347
2005/0215923 A1 9/2005 Wiegel 600/573
2005/0215925 A1 9/2005 Chan 600/583
2005/0216046 A1 9/2005 Yeoh 606/181
2005/0218024 A1 10/2005 Lang 206/438
2005/0221276 A1 10/2005 Rozakis 435/4
2005/0221470 A1 10/2005 Matsumoto 435/287.1
2005/0222599 A1 10/2005 Czernecki 606/182
2005/0227372 A1 10/2005 Khan 436/514
2005/0228242 A1 10/2005 Kawamura 600/300
2005/0228883 A1 10/2005 Brown 709/224
2005/0230252 A1 10/2005 Tsai 204/450
2005/0230253 A1 10/2005 Marquant 204/451
2005/0232813 A1 10/2005 Karmali 422/58
2005/0232815 A1 10/2005 Ruhl 422/66
2005/0234368 A1 10/2005 Wong 600/583
2005/0234486 A1 10/2005 Allen 606/181
2005/0234487 A1 10/2005 Shi 600/181
2005/0234488 A1 10/2005 Allen 606/181
2005/0234489 A1 10/2005 Allen 606/181
2005/0234490 A1 10/2005 Allen 606/181
2005/0234491 A1 10/2005 Allen 606/181
2005/0234492 A1 10/2005 Tsai 606/181
2005/0234494 A1 10/2005 Conway 606/181
2005/0234495 A1 10/2005 Schraga 606/181
2005/0235060 A1 10/2005 Brown 709/224
2005/0239154 A1 10/2005 Feldman 435/14
2005/0239156 A1 10/2005 Drucker 435/14
2005/0239194 A1 10/2005 Takahashi 435/287.2
2005/0240090 A1 10/2005 Ruchti 600/316
2005/0240119 A1 10/2005 Draudt 600/583
2005/0240207 A1 10/2005 Marshall 606/181
2005/0240778 A1 10/2005 Saito 713/186
2005/0245798 A1 11/2005 Yamaguchi 600/345
2005/0245843 A1 11/2005 Day 600/583
2005/0245844 A1 11/2005 Mace 600/583
2005/0245845 A1 11/2005 Roe 600/583
2005/0245846 A1 11/2005 Day 600/583
2005/0245954 A1 11/2005 Roe 606/181
2005/0245955 A1 11/2005 Schraga 606/181
2005/0256534 A1 11/2005 Alden 606/182
2005/0258035 A1 11/2005 Harding 204/403.01
2005/0258036 A1 11/2005 Harding 204/403.01
2005/0258050 A1 11/2005 Harding 205/775
2005/0265094 A1 12/2005 Harding 365/203
2005/0276133 A1 12/2005 Harding 365/203
2005/0278945 A1 12/2005 Feldman 29/830
2005/0279631 A1 12/2005 Celentano 204/403.01
2005/0279647 A1 12/2005 Beaty 205/792
2005/0283094 A1 12/2005 Thym 600/583
2005/0284110 A1 12/2005 Lang 53/473
2005/0284757 A1 12/2005 Allen 204/400
2005/0287620 A1 12/2005 Heller 435/14
2005/0288637 A1 12/2005 Kuhr 604/204
2005/0288698 A1 12/2005 Matsumoto 606/181
2005/0288699 A1 12/2005 Schraga 606/181
2006/0000549 A1 1/2006 Lang 156/320
2006/0003398 A1 1/2006 Heller 435/14
2006/0004270 A1 1/2006 Bedard 600/316
2006/0004271 A1 1/2006 Peyser 600/362
2006/0004272 A1 1/2006 Shah 600/365
2006/0006574 A1 1/2006 Lang 264/165
2006/0008389 A1 1/2006 Sacherer 422/102
2006/0015129 A1 1/2006 Shahrokni 606/181
2006/0016698 A1 1/2006 Lee 205/777.5
2006/0020228 A1 1/2006 Fowler 600/583
2006/0024774 A1 2/2006 Zocchi 435/14
2006/0025662 A1 2/2006 Buse 600/347
2006/0029979 A1 2/2006 Bai 435/7.1
2006/0029991 A1 2/2006 Hagino 435/14
2006/0030028 A1 2/2006 Nakaminami 435/287.2
2006/0030788 A1 2/2006 Wong 600/583
2006/0034728 A1 2/2006 Kloepfer 422/68.1
2006/0040333 A1 2/2006 Zocchi 435/14
2006/0047220 A1 3/2006 Sakata 600/583
2006/0047294 A1 3/2006 Mori 606/181
2006/0052723 A1 3/2006 Roe 600/583
2006/0052724 A1 3/2006 Roe 600/583
2006/0052809 A1 3/2006 Karbowniczek 606/181
2006/0052810 A1 3/2006 Freeman 606/181
2006/0058827 A1 3/2006 Sakata 606/181
2006/0058828 A1 3/2006 Shi 606/181
2006/0062852 A1 3/2006 Holmes 424/484
2006/0063988 A1 3/2006 Schurman 600/316
2006/0064035 A1 3/2006 Wang 600/583
2006/0079739 A1 4/2006 Chen Wang 600/300
2006/0079810 A1 4/2006 Patel 600/583
2006/0079811 A1 4/2006 Roe 600/583
2006/0079920 A1 4/2006 Schraga 606/181
2006/0081469 A1 4/2006 Lee 204/403.02
2006/0085020 A1 4/2006 Freeman 606/181
2006/0085137 A1 4/2006 Bartkowiak 702/19
2006/0086624 A1 4/2006 Tapsak 205/775
2006/0088945 A1 4/2006 Douglas 436/518
2006/0089566 A1 4/2006 DeHart 600/573
2006/0091006 A1 5/2006 Wang 204/403.02
2006/0094944 A1 5/2006 Chuang 600/347
2006/0094947 A1 5/2006 Kovatchev 600/365

2006/0094986 A1 5/2006 Neel 600/583
2006/0095061 A1 5/2006 Trautman 606/185
2006/0096859 A1 5/2006 King Tong Lau 204/403.14
2006/0099107 A1 5/2006 Yamamoto 422/57
2006/0099703 A1 5/2006 Choi 435/287.1
2006/0100542 A9 5/2006 Wong 600/583
2006/0100543 A1 5/2006 Raney 600/583
2006/0100654 A1 5/2006 Fukuda 606/181
2006/0100655 A1 5/2006 Leong 606/181
2006/0100656 A1 5/2006 Olsen 606/181
2006/0106373 A1 5/2006 Cahir 606/9
2006/0108236 A1 5/2006 Kasielke 205/792
2006/0113187 A1 6/2006 Deng 204/403.01
2006/0115857 A1 6/2006 Keen 435/7.1
2006/0116562 A1 6/2006 Acosta 600/316
2006/0116704 A1 6/2006 Ashby 606/167
2006/0116705 A1 6/2006 Schraga 606/181
2006/0119362 A1 6/2006 Kermani 324/324
2006/0121547 A1 6/2006 McIntire 435/14
2006/0121625 A1 6/2006 Clemens 436/514
2006/0121759 A1 6/2006 Kasai 439/188
2006/0122099 A1 6/2006 Aoki 514/3
2006/0122536 A1 6/2006 Haar 600/581
2006/0129065 A1 6/2006 Matsumoto 600/583
2006/0129172 A1 6/2006 Crossman 606/181
2006/0129173 A1 6/2006 Wilkinson 606/181
2006/0134713 A1 6/2006 Rylatt 435/7.92
2006/0140457 A1 6/2006 Simshauser 382/124
2006/0144704 A1 7/2006 Ghesquiere 204/403.01
2006/0151323 A1 7/2006 Cho 204/403.04
2006/0151342 A1 7/2006 Yaguchi 206/306
2006/0155215 A1 7/2006 Cha 600/583
2006/0155316 A1 7/2006 Perez 606/181
2006/0155317 A1 7/2006 List 606/181
2006/0156796 A1 7/2006 Burke 73/61.44
2006/0157362 A1 7/2006 Schraga 206/363
2006/0161078 A1 7/2006 Schraga 600/583
2006/0161194 A1 7/2006 Freeman 606/185
2006/0166302 A1 7/2006 Clarke 435/25
2006/0167382 A1 7/2006 Deshmukh 600/583
2006/0169599 A1 8/2006 Feldman 205/792
2006/0173254 A1 8/2006 Acosta 600/316
2006/0173255 A1 8/2006 Acosta 600/316
2006/0173379 A1 8/2006 Rasch-Menges 600/583
2006/0173380 A1 8/2006 Hoenes 600/583
2006/0173478 A1 8/2006 Schraga 606/181
2006/0175216 A1 8/2006 Freeman 206/363
2006/0178573 A1 8/2006 Kermani 600/347
2006/0178599 A1 8/2006 Faupel 600/578
2006/0178600 A1 8/2006 Kennedy 600/584
2006/0178686 A1 8/2006 Schraga 606/181
2006/0178687 A1 8/2006 Freeman 606/181
2006/0178688 A1 8/2006 Freeman 606/181
2006/0178689 A1 8/2006 Freeman 606/181
2006/0178690 A1 8/2006 Freeman 606/181
2006/0183871 A1 8/2006 Ward 525/464
2006/0183983 A1 8/2006 Acosta 600/316
2006/0184101 A1 8/2006 Srinivasan 604/68
2006/0188395 A1 8/2006 Taniike 422/57
2006/0189895 A1 8/2006 Neel 600/584
2006/0191787 A1 8/2006 Wang 204/400
2006/0195023 A1 8/2006 Acosta 600/316
2006/0195047 A1 8/2006 Freeman 600/583
2006/0195128 A1 8/2006 Alden 606/181
2006/0195129 A1 8/2006 Freeman 606/181
2006/0195130 A1 8/2006 Freeman 606/181
2006/0195131 A1 8/2006 Freeman 606/181
2006/0195132 A1 8/2006 Freeman 606/181
2006/0195133 A1 8/2006 Freeman 606/181
2006/0196031 A1 9/2006 Hoenes 29/432
2006/0196795 A1 9/2006 Windus-Smith 206/438
2006/0200044 A1 9/2006 Freeman 600/583
2006/0200045 A1 9/2006 Roe 600/583
2006/0200046 A1 9/2006 Windus-Smith 600/583
2006/0200181 A1 9/2006 Fukuzawa 606/181
2006/0200981 A1 9/2006 Bhullar 29/847
2006/0200982 A1 9/2006 Bhullar 29/847
2006/0204399 A1 9/2006 Freeman 422/58
2006/0205029 A1 9/2006 Heller 435/25
2006/0205060 A1 9/2006 Kim 435/287.2
2006/0206135 A1 9/2006 Uehata 606/181
2006/0211127 A1 9/2006 Iwaki 436/169
2006/0211927 A1 9/2006 Acosta 600/316
2006/0211931 A1 9/2006 Blank 600/344
2006/0219551 A1 10/2006 Edelbrock 204/403.14
2006/0222567 A1 10/2006 Kloepfer 422/68.1
2006/0224171 A1 10/2006 Sakata 606/181
2006/0224172 A1 10/2006 Levaughn 606/181
2006/0229532 A1 10/2006 Wong 600/583
2006/0229533 A1 10/2006 Hoenes 600/584
2006/0229651 A1 10/2006 Marshall 606/181
2006/0231396 A1 10/2006 Yamaoka 204/403.14
2006/0231418 A1 10/2006 Harding 205/775
2006/0231442 A1 10/2006 Windus-Smith 206/438
2006/0234369 A1 10/2006 Sih 435/287.1
2006/0235284 A1 10/2006 Lee 600/345
2006/0235454 A1 10/2006 LeVaughn 606/181
2006/0241517 A1 10/2006 Fowler 600/583
2006/0241666 A1 10/2006 Briggs 606/181
2006/0241667 A1 10/2006 Freeman 606/181
2006/0241668 A1 10/2006 Schraga 606/181
2006/0241669 A1 10/2006 Stout 606/182
2006/0247554 A1 11/2006 Roe 600/583
2006/0247555 A1 11/2006 Harttig 600/584
2006/0247670 A1 11/2006 LeVaughn 606/181
2006/0247671 A1 11/2006 Levaughn 606/182
2006/0259057 A1 11/2006 Kim 606/181
2006/0259058 A1 11/2006 Schiff 606/181
2006/0259060 A1 11/2006 Whitson 606/182
2006/0264718 A1 11/2006 Ruchti 600/310
2006/0264996 A1 11/2006 Levaughn 606/181
2006/0264997 A1 11/2006 Colonna 606/181
2006/0271083 A1 11/2006 Boecker 606/181
2006/0271084 A1 11/2006 Schraga 606/182
2006/0276724 A1 12/2006 Freeman 600/583
2006/0277048 A1 12/2006 Kintzig 704/275
2006/0278545 A1 12/2006 Henning 206/363
2006/0282109 A1 12/2006 Jansen 606/181
2006/0286620 A1 12/2006 Werner 435/14
2006/0287664 A1 12/2006 Grage 606/181
2006/0293577 A1 12/2006 Morrison 600/365
2007/0004989 A1 1/2007 Dhillon 600/583
2007/0004990 A1 1/2007 Kistner 600/583
2007/0007183 A1 1/2007 Schulat 209/573
2007/0009381 A1 1/2007 Schulat 422/58
2007/0010839 A1 1/2007 Galloway 606/167
2007/0010841 A1 1/2007 Teo 606/181
2007/0015978 A1 1/2007 Kanayama 600/310
2007/0016079 A1 1/2007 Freeman 600/476
2007/0016103 A1 1/2007 Calasso 600/583
2007/0016104 A1 1/2007 Jansen 600/583

FOREIGN PATENT DOCUMENTS

DE 29824204 10/2000
DE 10032042 1/2002
DE 10057832 2/2002
DE 10057832 C1 2/2002
DE 10142232 3/2003
DE 10208575 C1 8/2003
DE 10245721 12/2003
DE 10361560 A1 7/2005
EP 0199484 A2 10/1986
EP 0289269 A2 11/1988
EP 0320109 A1 6/1989
EP 0170375 B1 5/1990

EP	0136362		12/1990
EP	0453283		10/1991
EP	0263948		2/1992
EP	0374355	B1	6/1993
EP	0351891	B1	9/1993
EP	0593096	A2	4/1994
EP	0415388	B1	5/1995
EP	0505494	B1	7/1995
EP	0359831		8/1995
EP	0471986	B1	10/1995
EP	0368474	B1	12/1995
EP	0461601	B1	12/1995
EP	0429076		1/1996
EP	0552223	B1	7/1996
EP	0735363		10/1996
EP	0505504	B1	3/1997
EP	0406304		8/1997
EP	0537761		8/1997
EP	0795601		9/1997
EP	0562370		11/1997
EP	0415393	B1	12/1997
EP	0560336		5/1998
EP	0878708		11/1998
EP	0505475	B1	3/1999
EP	0901018		3/1999
EP	0470649	B1	6/1999
EP	0847447		11/1999
EP	0964059		12/1999
EP	0969097	A2	1/2000
EP	1021950		7/2000
EP	0894869		2/2001
EP	1074832		2/2001
EP	1093854		4/2001
EP	1114995	A2	7/2001
EP	0736607		8/2001
EP	0874984		11/2001
EP	0730037		12/2001
EP	0636879		1/2002
EP	01174083		1/2002
EP	0851224		3/2002
EP	0759553		5/2002
EP	0856586		5/2002
EP	0817809		7/2002
EP	0872728		7/2002
EP	0795748		8/2002
EP	0685737		9/2002
EP	0958495		11/2002
EP	0937249		12/2002
EP	0880692		1/2004
EP	01374770		1/2004
EP	1246688		5/2004
EP	1502614		2/2005
GB	2168815		6/1986
GB	233936	A	6/1999
JP	9-276235		10/1997
WO	WO 80/01389		7/1980
WO	WO 8504089		9/1985
WO	WO 86/07632		12/1986
WO	WO 91/09139		6/1991
WO	WO 93/02720		2/1993
WO	WO 93/06979		4/1993
WO	WO 93/12726		7/1993
WO	WO 93/25898		12/1993
WO	WO 94/27140		11/1994
WO	WO 94/29703		12/1994
WO	WO 94/29704		12/1994
WO	WO 94/29731		12/1994
WO	WO 95/00662		1/1995
WO	WO 95/10223	A2	4/1995
WO	WO 95/22597		8/1995
WO	WO 96/30431		10/1996
WO	WO 97/02359		1/1997
WO	WO 97/02487		1/1997
WO	WO 97/18464		5/1997
WO	WO 97/30344		8/1997
WO	WO 97/42882		11/1997
WO	WO 97/45720		12/1997
WO	WO 98/03431		1/1998
WO	WO 98/19159		5/1998
WO	WO 98/20332		5/1998
WO	WO 98/20348		5/1998
WO	WO 98/24366	A3	6/1998
WO	WO 98/35225		8/1998
WO	WO 99/03584		1/1999
WO	WO 99/05966		2/1999
WO	WO 99/07431	A1	2/1999
WO	WO 99/13100		3/1999
WO	WO 99/17854		4/1999
WO	WO 99/18532		4/1999
WO	WO 99/19507		4/1999
WO	WO 99/19717		4/1999
WO	WO 99/27483		6/1999
WO	WO 99/27852		6/1999
WO	WO 99/62576		12/1999
WO	WO 99/64580		12/1999
WO	WO 00/06024		2/2000
WO	WO 00/09184		2/2000
WO	WO 00/11578		3/2000
WO	WO 00/15103		3/2000
WO	WO 00/17799		3/2000
WO	WO 00/17800		3/2000
WO	WO 00/18293		4/2000
WO	WO 00/19346		4/2000
WO	WO 00/30186		5/2000
WO	WO 00/32097		6/2000
WO	WO 00/32098		6/2000
WO	WO 00/33236		6/2000
WO	WO 00/39914		7/2000
WO	WO 00/42422		7/2000
WO	WO 00/44084	A2	7/2000
WO	WO 00/50771		8/2000
WO	WO 00/60340		10/2000
WO	WO 00/64022		10/2000
WO	WO 00/67245		11/2000
WO	WO 00/67268		11/2000
WO	WO 00/72452		11/2000
WO	WO 01/00090		1/2001
WO	WO 01/75433		3/2001
WO	WO 01/23885	A1	4/2001
WO	WO 01/25775		4/2001
WO	WO 01/26813		4/2001
WO	WO 01/33216		5/2001
WO	WO 01/34029		5/2001
WO	WO 01/36955		5/2001
WO	WO 01/37174		5/2001
WO	WO 01/40788		7/2001
WO	WO 01/57510	A2	8/2001
WO	WO 01/64105	A1	9/2001
WO	WO 01/66010		9/2001
WO	WO 01/69505		9/2001
WO	WO 01/72225	A1	10/2001
WO	WO 01/73124	A2	10/2001
WO	WO 01/73395		10/2001
WO	WO 01/89691		11/2001
WO	WO 02/00101		1/2002
WO	WO 02/02796		1/2002
WO	WO 02/08750		1/2002
WO	WO 02/08753	A2	1/2002
WO	WO 02/08950		1/2002
WO	WO 02/18940	A2	3/2002
WO	WO 02/21317		3/2002
WO	WO 02/25551		3/2002
WO	WO 02/32559		4/2002
WO	WO 02/41227		5/2002
WO	WO 02/41779		5/2002
WO	WO 02/44948		6/2002

WO	WO 02/059734		8/2002
WO	WO 02/069791		9/2002
WO	WO 02/077638	A2	10/2002
WO	WO 02/100251		12/2002
WO	WO 02/100252		12/2002
WO	WO 02/100253		12/2002
WO	WO 02/100254		12/2002
WO	WO 02/100460		12/2002
WO	WO 02/100461		12/2002
WO	WO 02/101343		12/2002
WO	WO 02/101359		12/2002
WO	WO 03/000321		1/2003
WO	WO 03/023389	A2	3/2003
WO	WO 03/042691		5/2003
WO	WO 03/045557	A2	6/2003
WO	WO 03/046542	A2	6/2003
WO	WO 03/049609		6/2003
WO	WO 03/050534		6/2003
WO	WO 03/066128	A2	8/2003
WO	WO 03/070099		8/2003
WO	WO 03/071940		9/2003
WO	WO 03/094752		11/2003
WO	WO 03/101297		12/2003
WO	WO 2004/022133		3/2004
WO	WO 2004/026130		4/2004
WO	WO 2004/040285	A2	5/2004
WO	WO 2004/040287	A1	5/2004
WO	WO 2004/040948		5/2004
WO	WO 2004/041082		5/2004
WO	WO 2004/054455		7/2004
WO	WO 2004/060174		7/2004
WO	WO 2004/060446		7/2004
WO	WO 2004/098405		11/2004
WO	WO 2004/003147		12/2004
WO	WO 2004/107964		12/2004
WO	WO 2004/107975		12/2004
WO	WO 2004/112602		12/2004
WO	WO 2005/001418		1/2005
WO	WO 2005/006939		1/2005
WO	WO 2005/011774		2/2005
WO	WO 2005/016125		2/2005
WO	WO 2005/018425		3/2005
WO	WO 2005/018430		3/2005
WO	WO 2005/018454		3/2005
WO	WO 2005/018709		3/2005
WO	WO 2005/018710		3/2005
WO	WO 2005/018711		3/2005
WO	WO 2005/022143		3/2005
WO	WO 2005/023088		3/2005
WO	WO 2005/033659		4/2005
WO	WO 2005/034720		4/2005
WO	WO 2005/034721		4/2005
WO	WO 2005/034741		4/2005
WO	WO 2005/034778		4/2005
WO	WO 2005/035017		4/2005
WO	WO 2005/035018		4/2005
WO	WO 2005/037095		4/2005
WO	WO 2005/046477		5/2005
WO	WO 2005/065399		7/2005
WO	WO 2005/065414		7/2005
WO	WO 2005/065415		7/2005
WO	WO 2005/072604		8/2005
WO	WO 2005/084557		9/2005
WO	WO 2005/116622		12/2005
WO	WO 2005/119234		12/2005
WO	WO 2005/121759		12/2005
WO	WO 2006/001973		1/2006
WO	WO 2006/005545	A2	1/2006
WO	WO 2006/011062		2/2006
WO	WO 2006/013045		2/2006
WO	WO 2006/027702	A2	3/2006
WO	WO 2006/032391		3/2006
WO	WO 2006/072004		7/2006

* cited by examiner

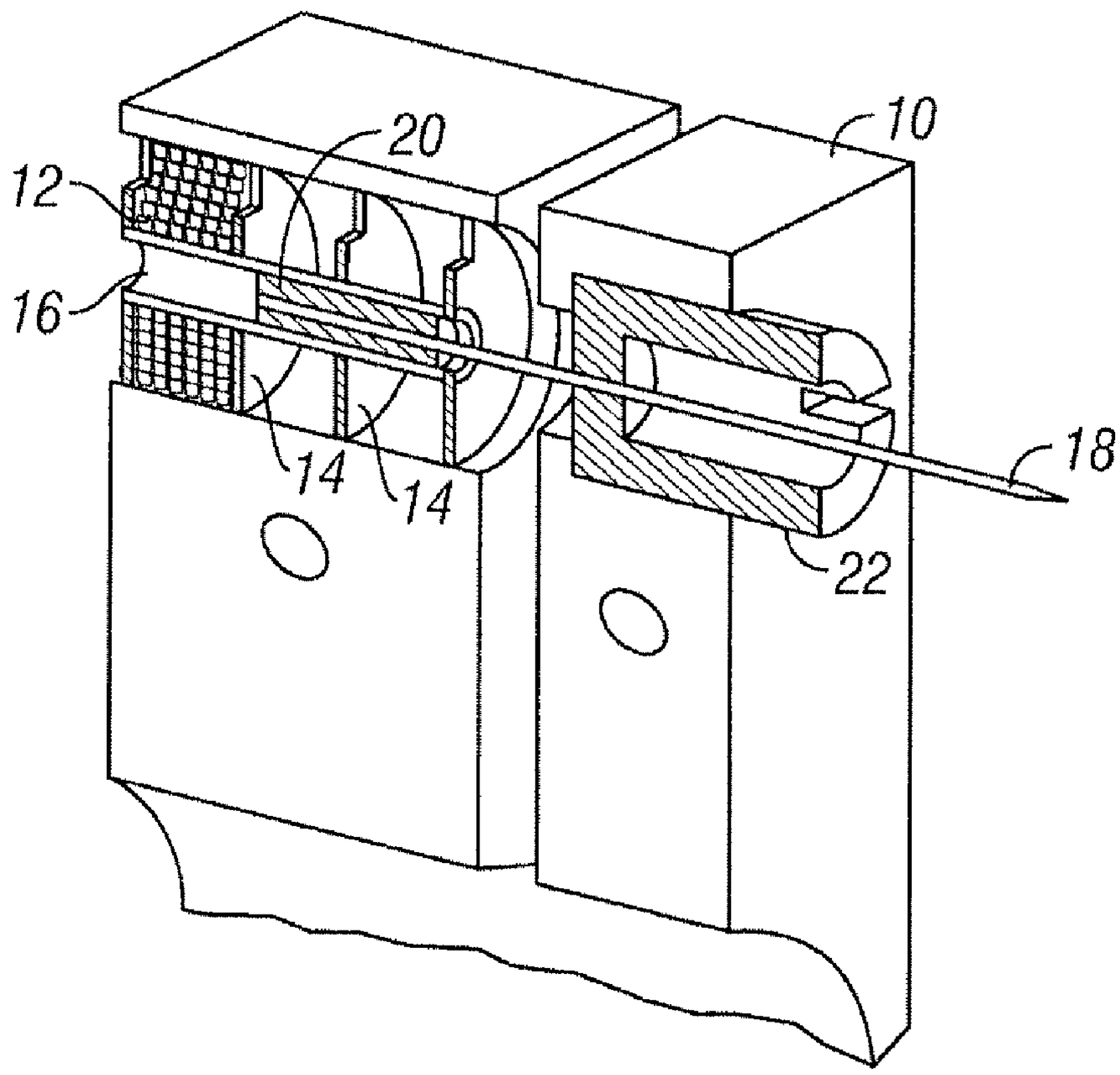

FIG. 1

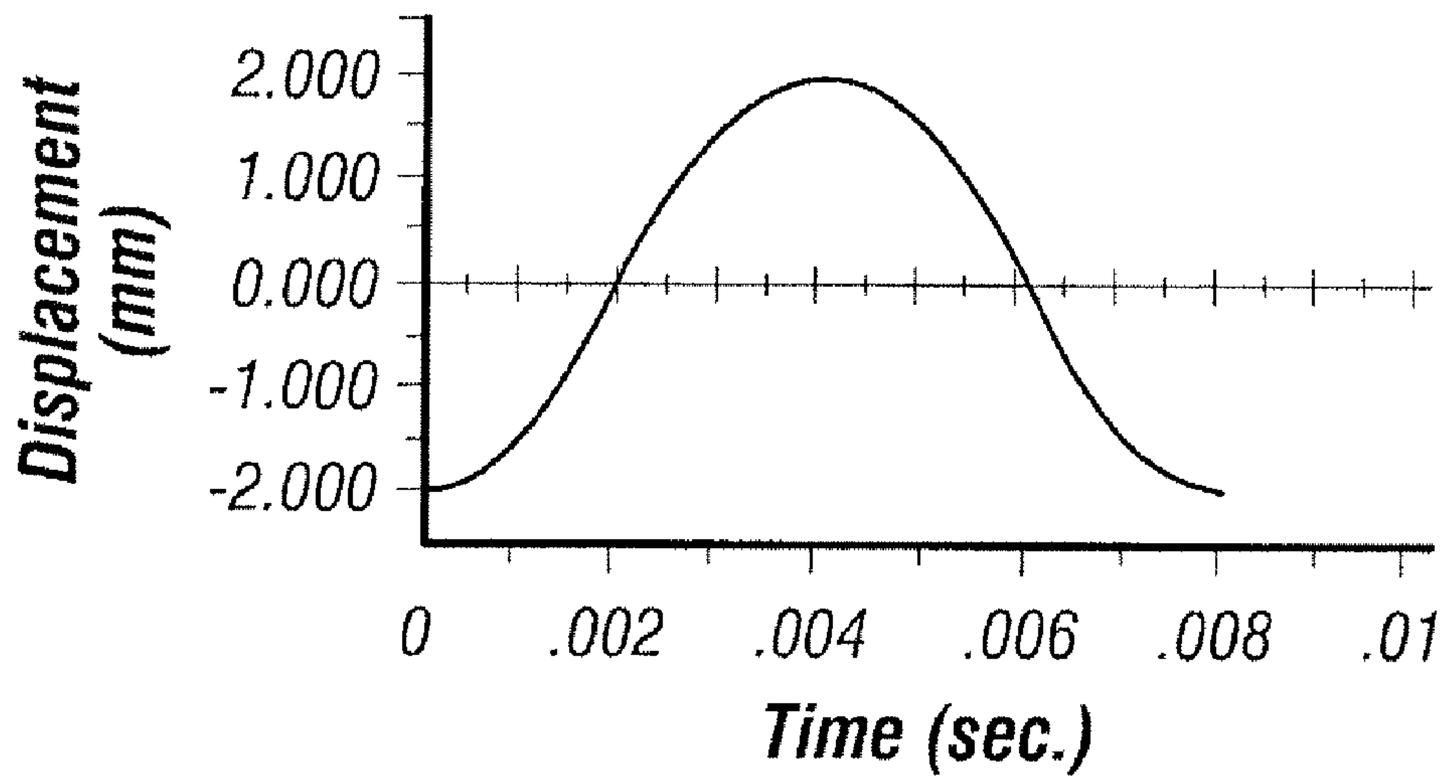
Displacement (mm)
2.000
1.000
0.000
-1.000
-2.000
0
.002
.004
.006
.008
.01
Time (sec.)

FIG. 2A

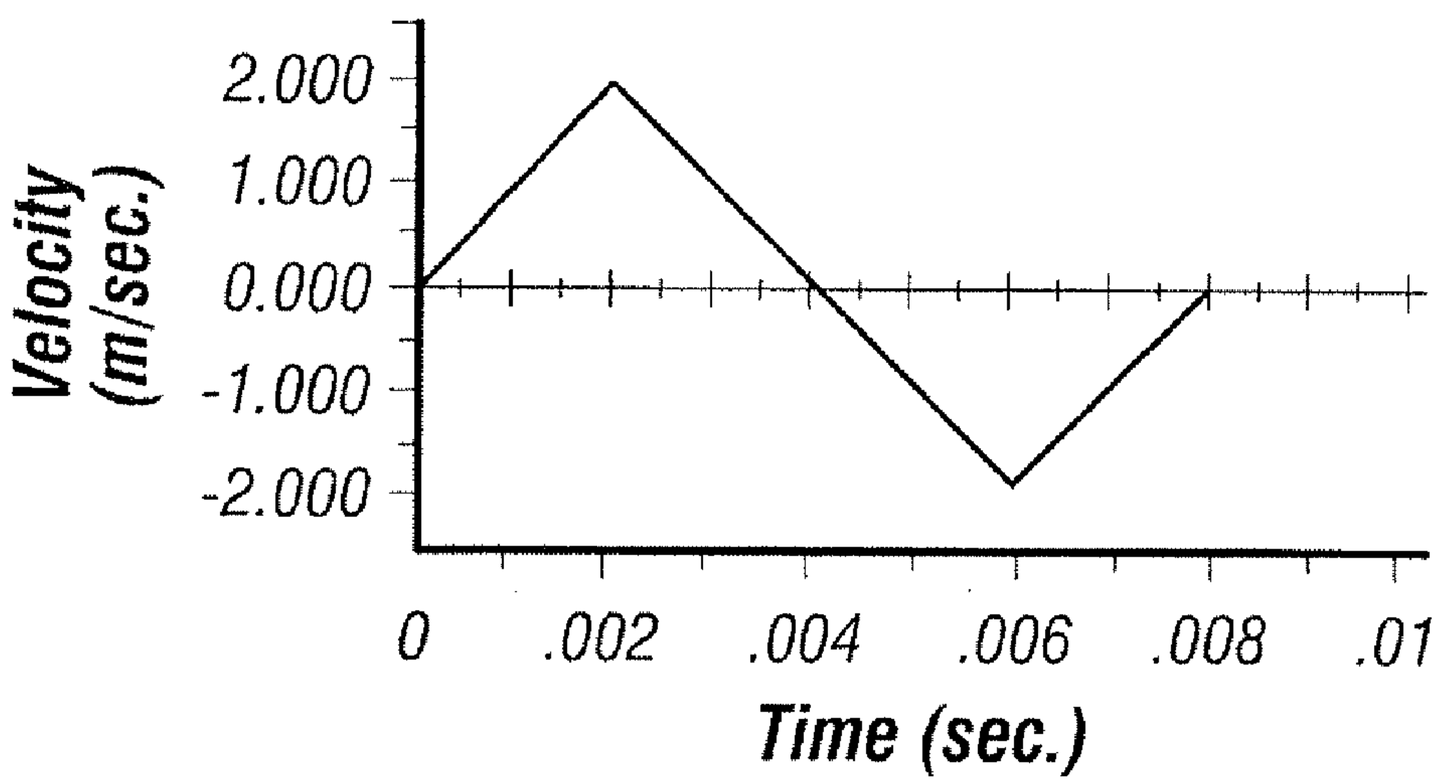
Velocity (m/sec.)
2.000
1.000
0.000
-1.000
-2.000
0
.002
.004
.006
.008
.01
Time (sec.)

FIG. 2B

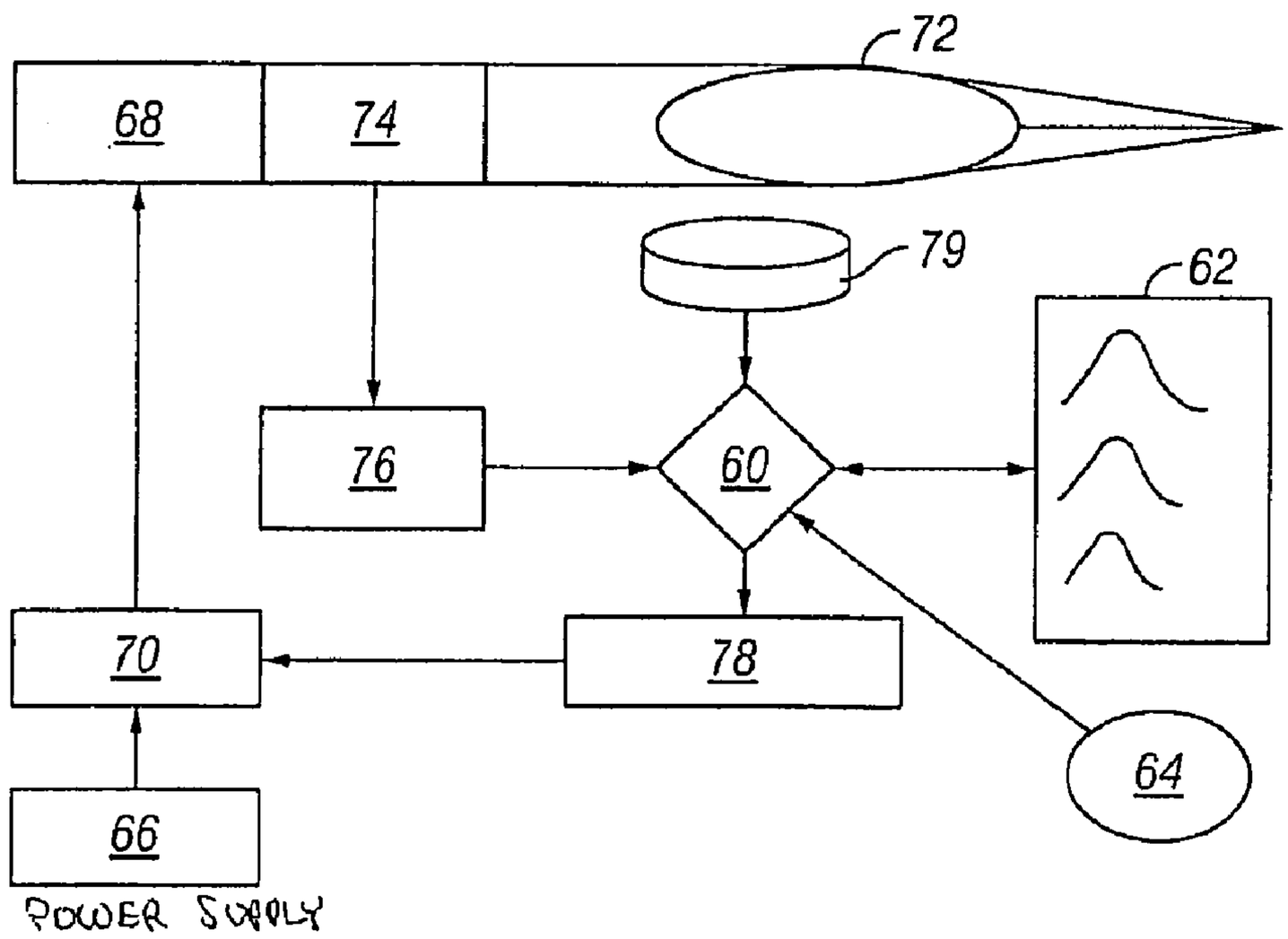

FIG. 3

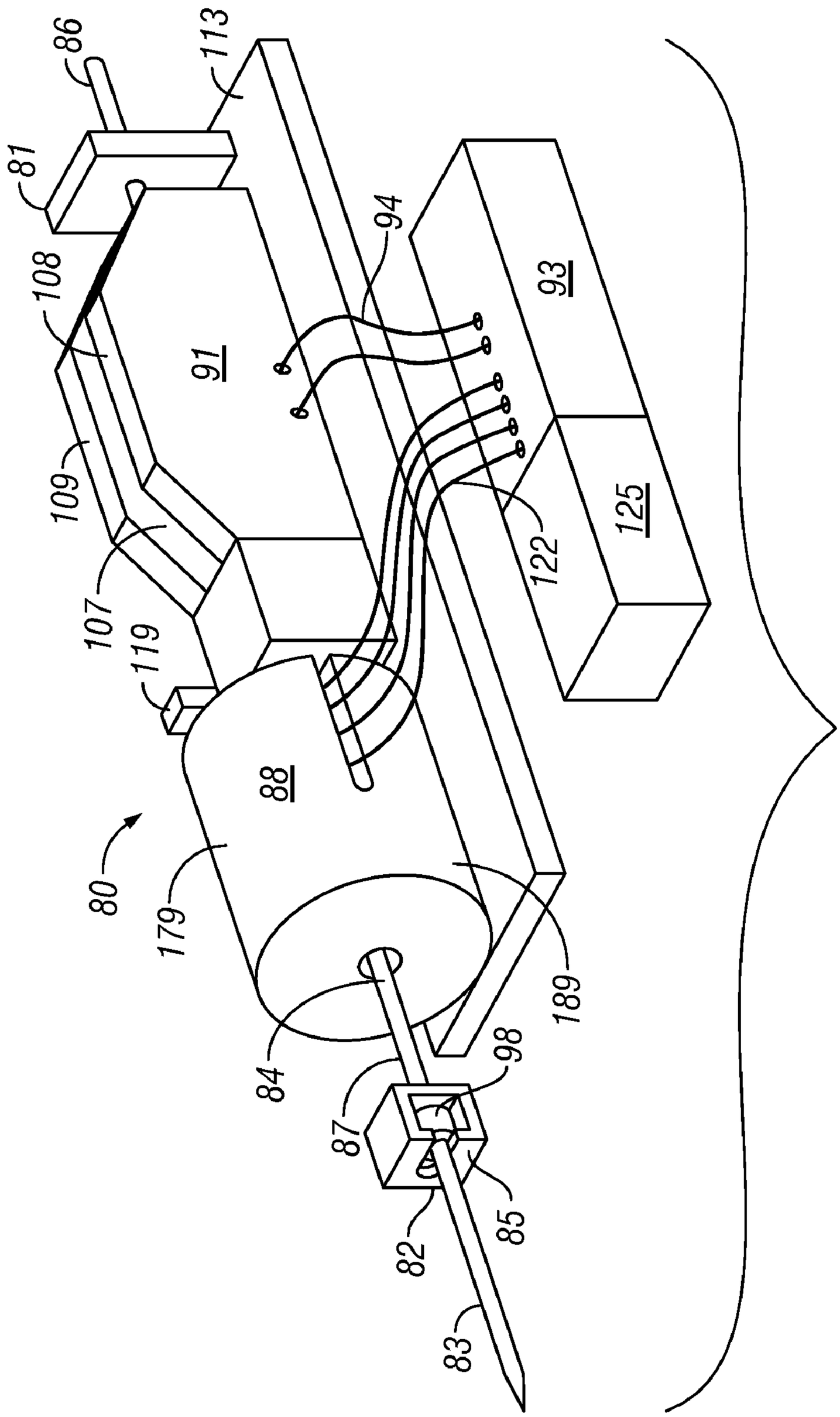
86
113
81
108
91
94
93
109
107
119
122
125
88
80
179
189
84
98
87
82
85
83

FIG. 4

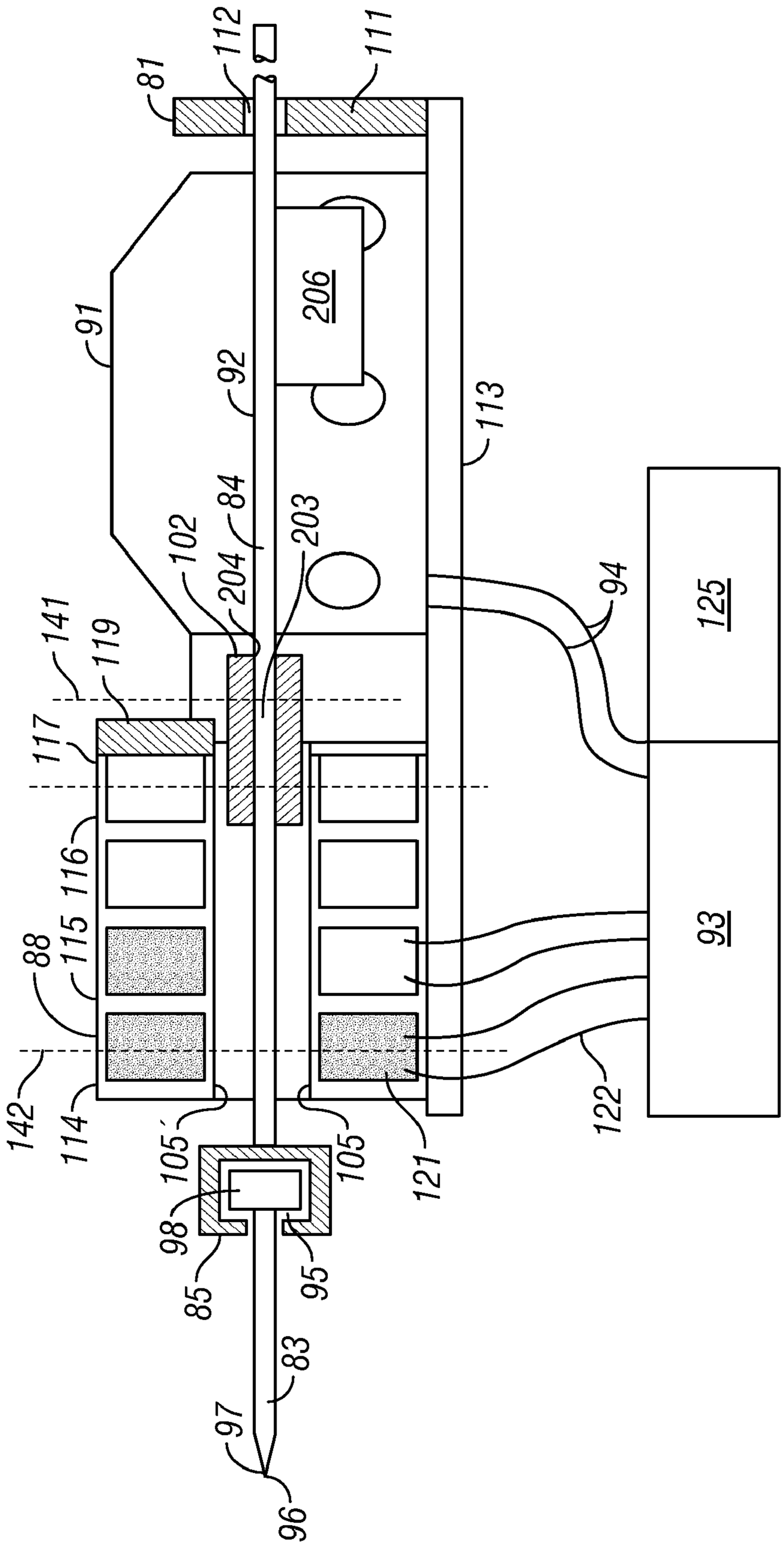
81
112
111
91
206
92
113
84
203
102
204
94
125
141
119
117
116
115
88
93
142
114
105'
105
121
122
98
85
95
83
97
96

FIG. 5

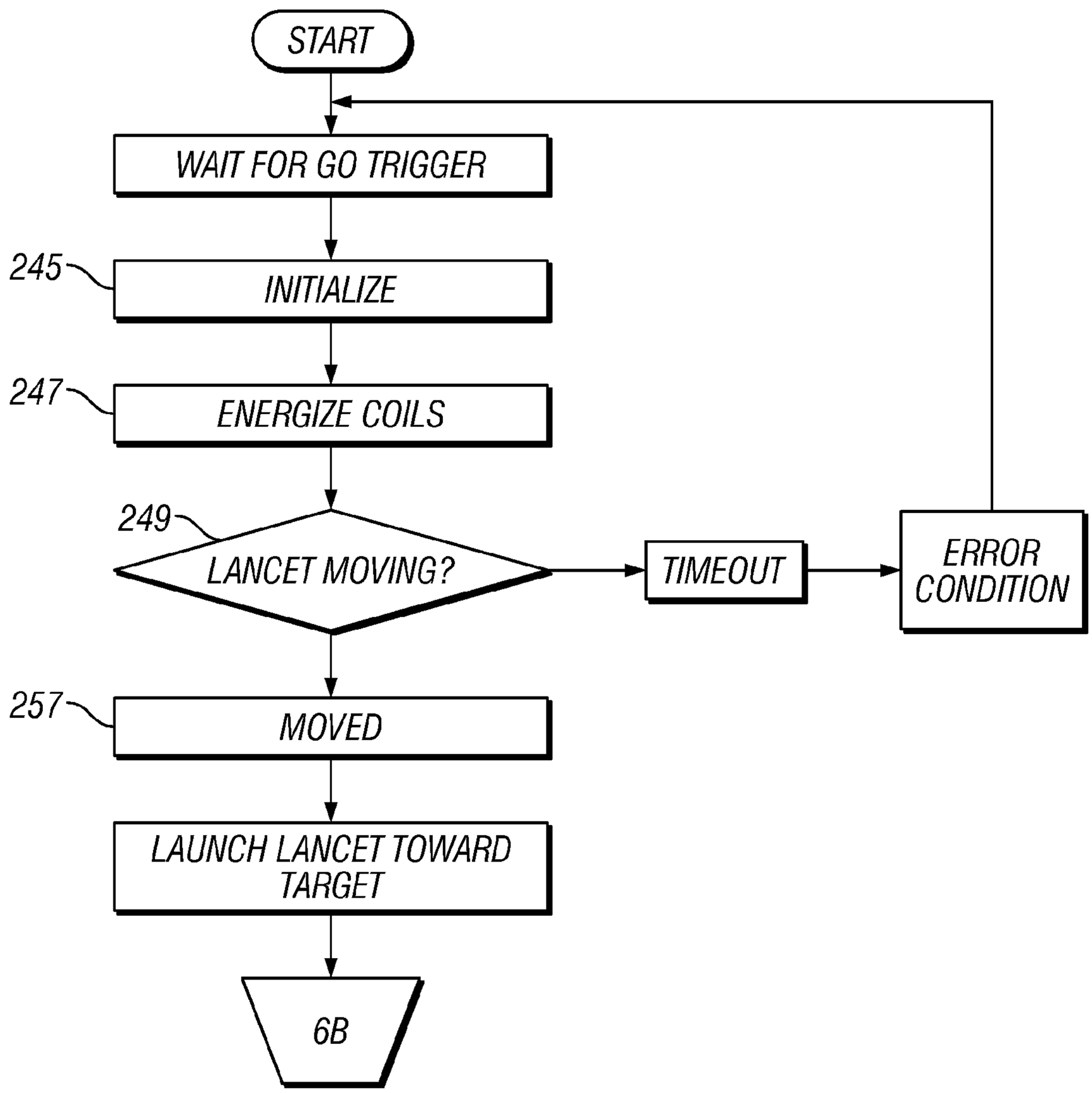
START
WAIT FOR GO TRIGGER
245
INITIALIZE
247
ENERGIZE COILS
249
LANCET MOVING?
TIMEOUT
ERROR CONDITION
257
MOVED
LAUNCH LANCET TOWARD TARGET
6B

FIG. 6A

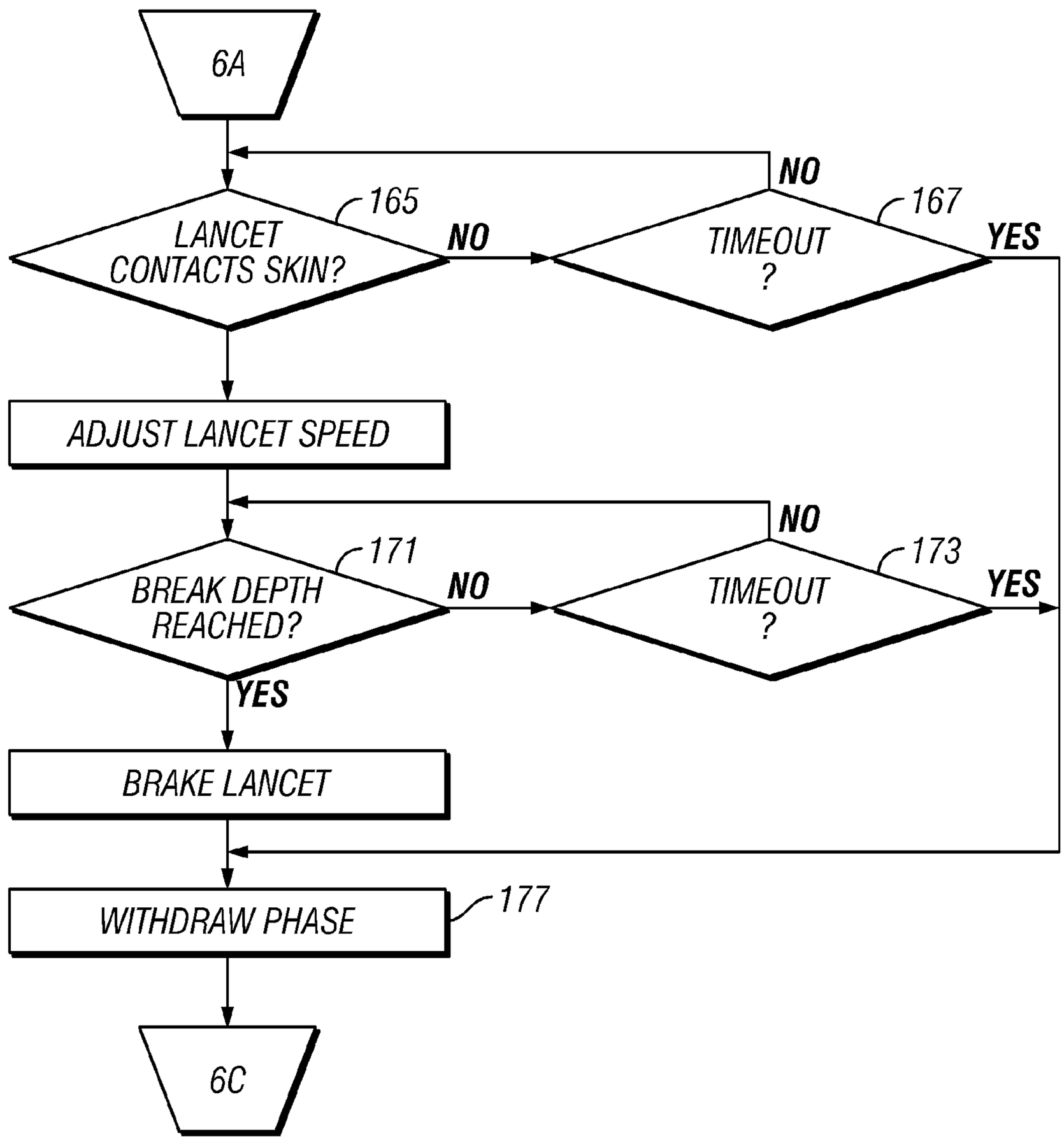
6A
LANCET CONTACTS SKIN?
165
NO
TIMEOUT ?
167
NO
YES
ADJUST LANCET SPEED
BREAK DEPTH REACHED?
171
NO
TIMEOUT ?
173
NO
YES
YES
BRAKE LANCET
WITHDRAW PHASE
177
6C

FIG. 6B

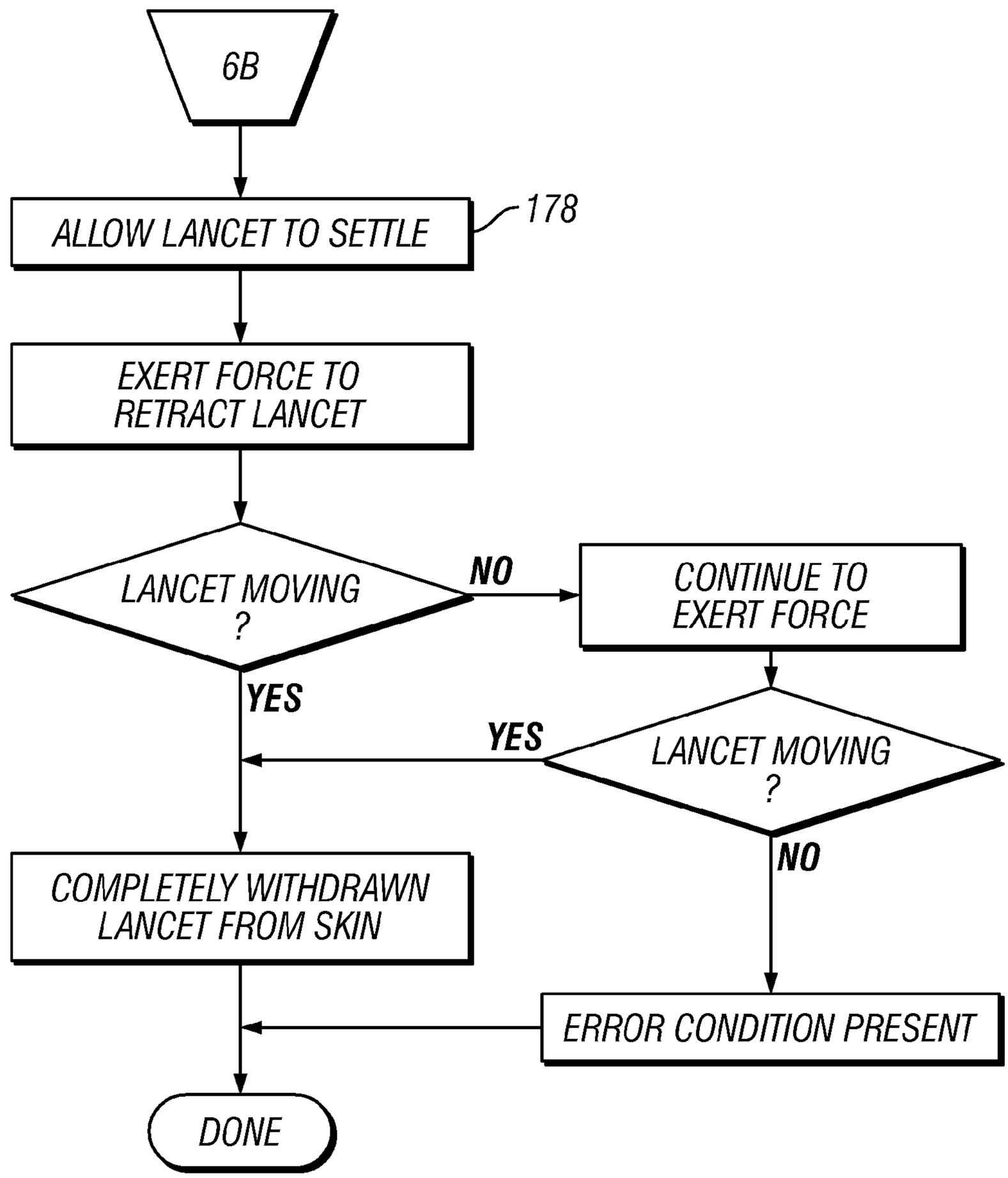
6B
ALLOW LANCET TO SETTLE
178
EXERT FORCE TO RETRACT LANCET
LANCET MOVING ?
NO
CONTINUE TO EXERT FORCE
YES
YES
LANCET MOVING ?
NO
COMPLETELY WITHDRAWN LANCET FROM SKIN
ERROR CONDITION PRESENT
DONE

FIG. 6C

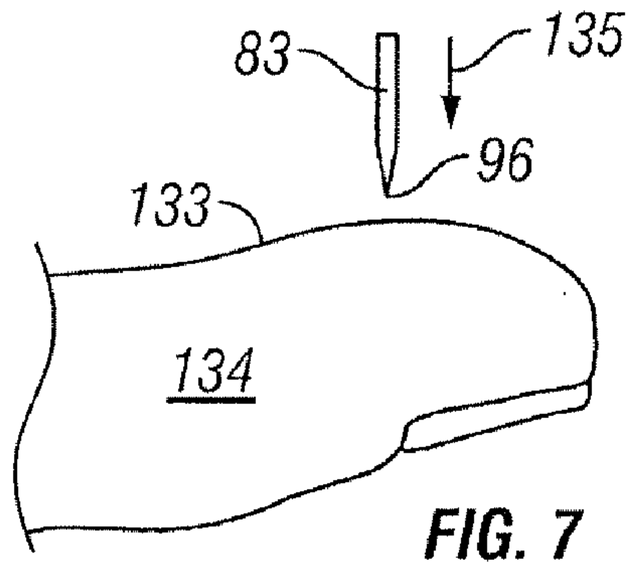

FIG. 7

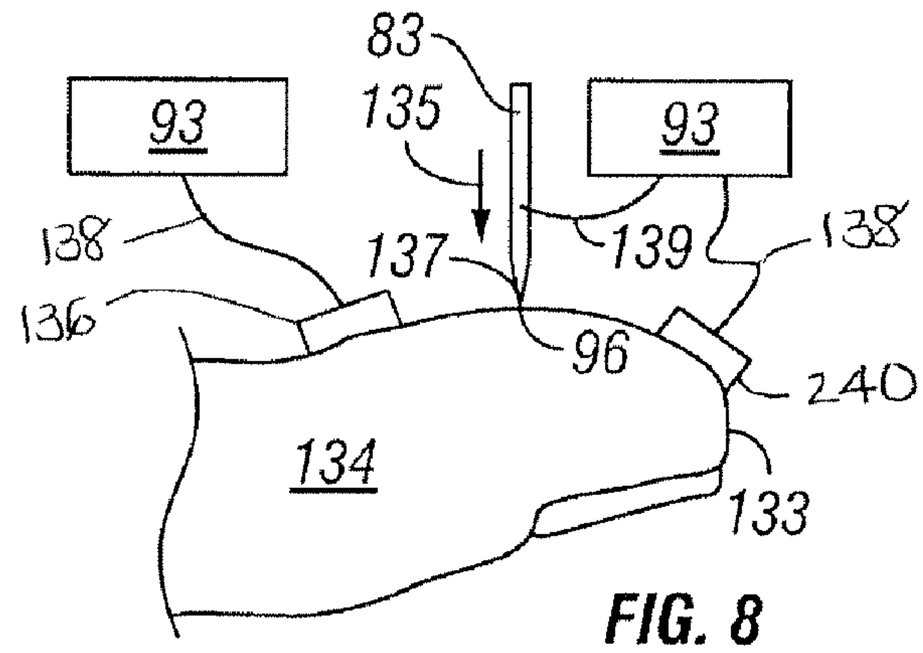

FIG. 8

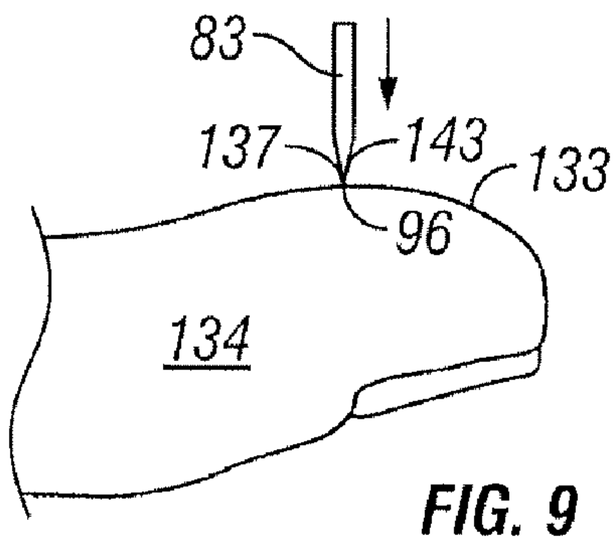

FIG. 9

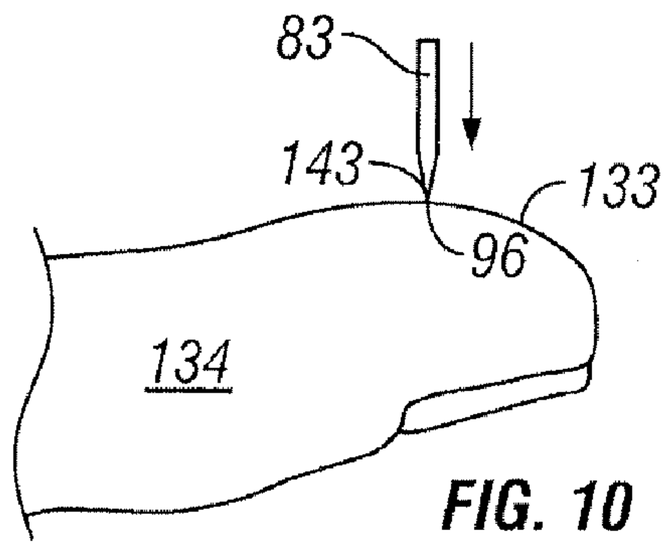

FIG. 10

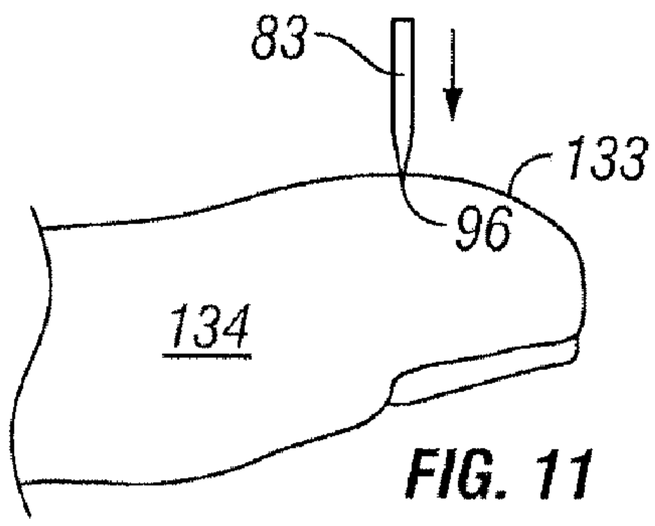

FIG. 11

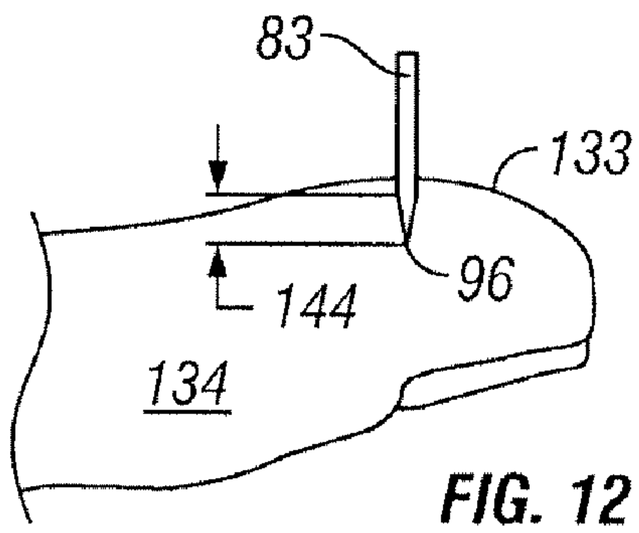

FIG. 12

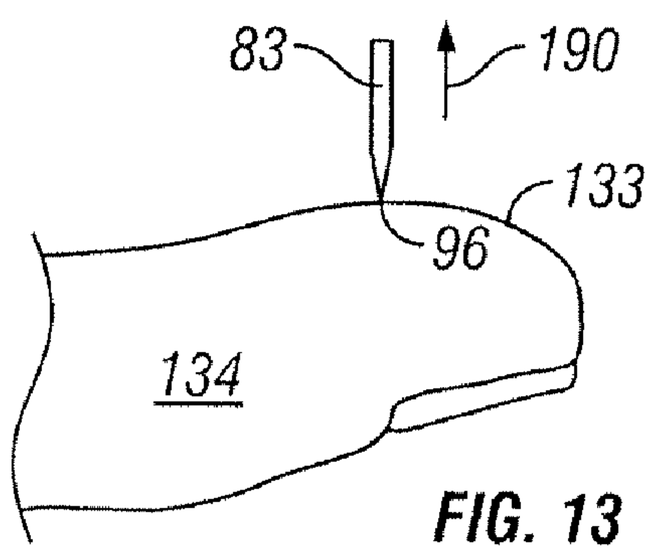

FIG. 13

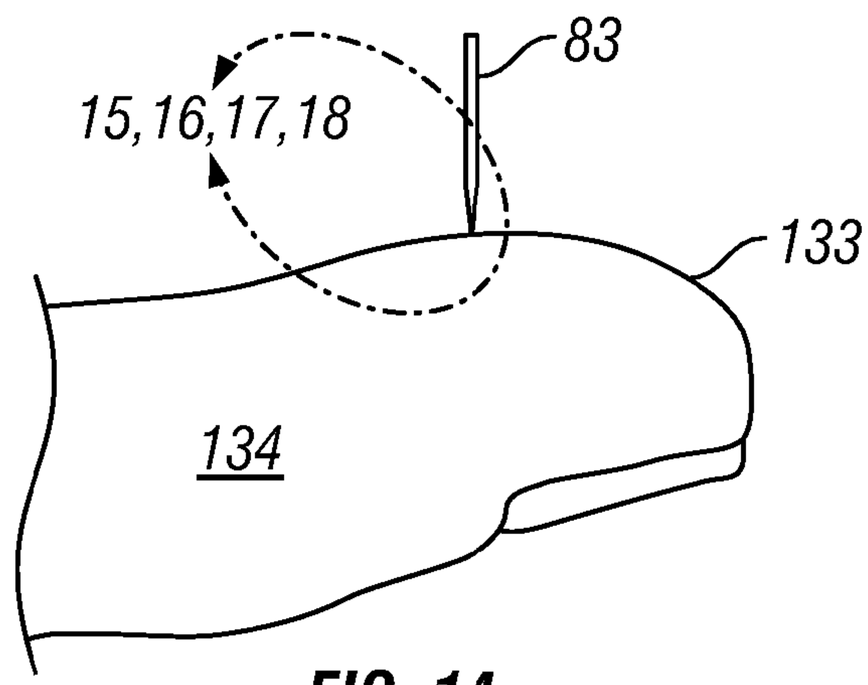

FIG. 14

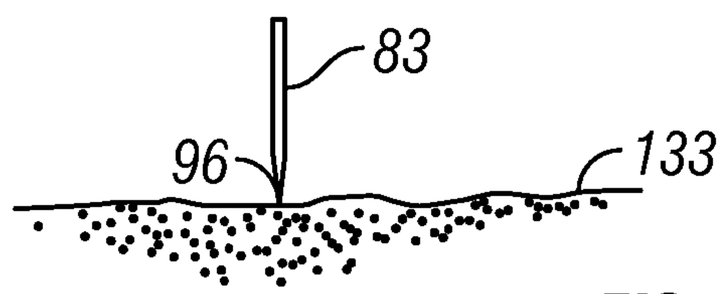

FIG. 15

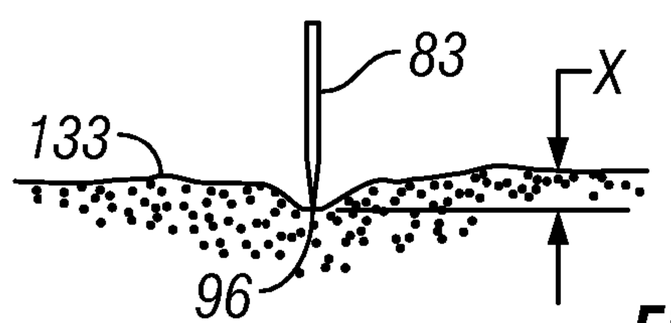

FIG. 16

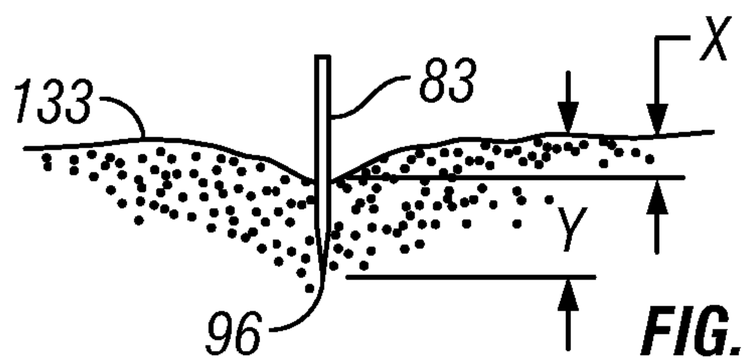

FIG. 17

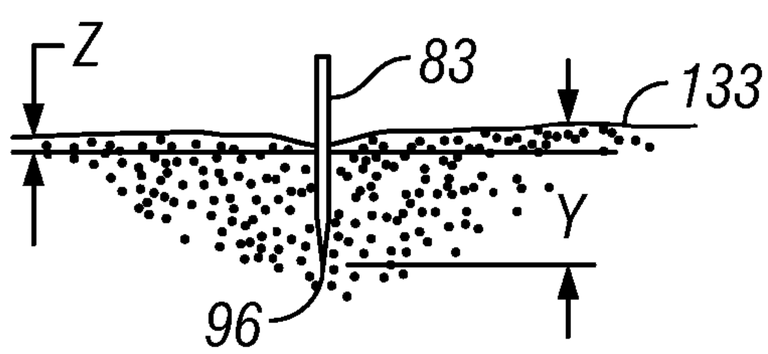

FIG. 18

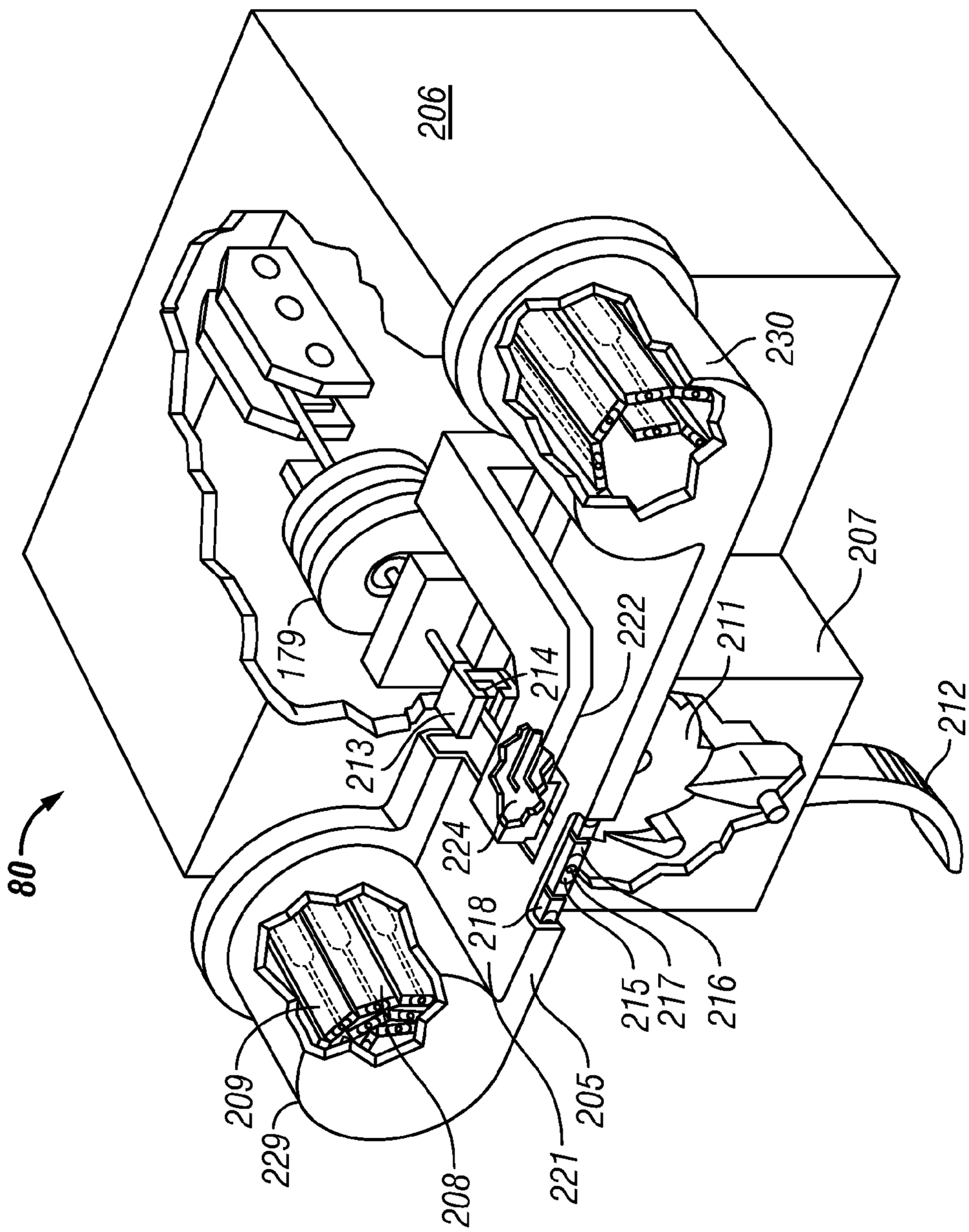
80
206
230
207
179
214
222
211
212
213
224
218
215
217
216
209
229
208
221
205

FIG. 19

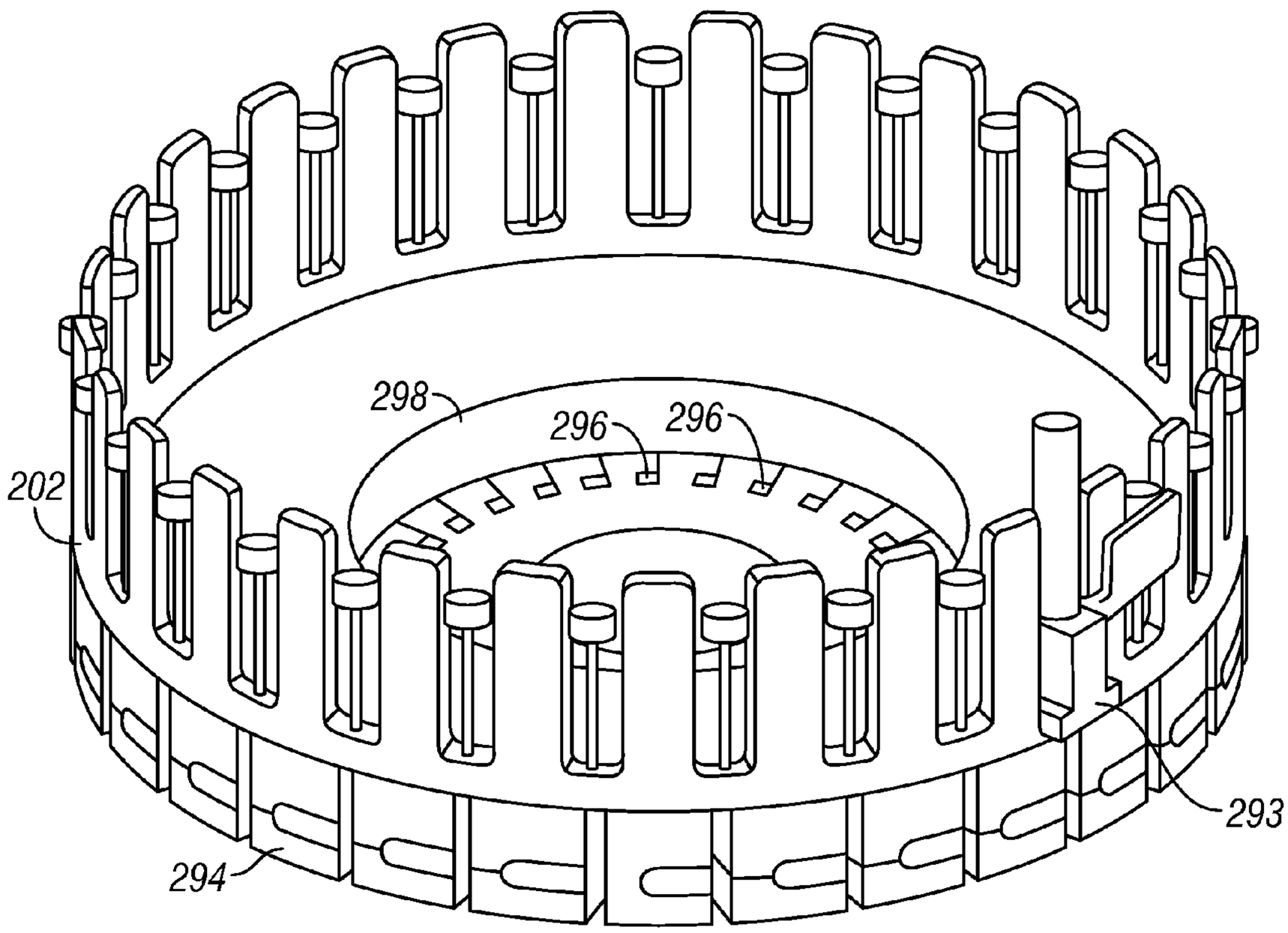

FIG. 20

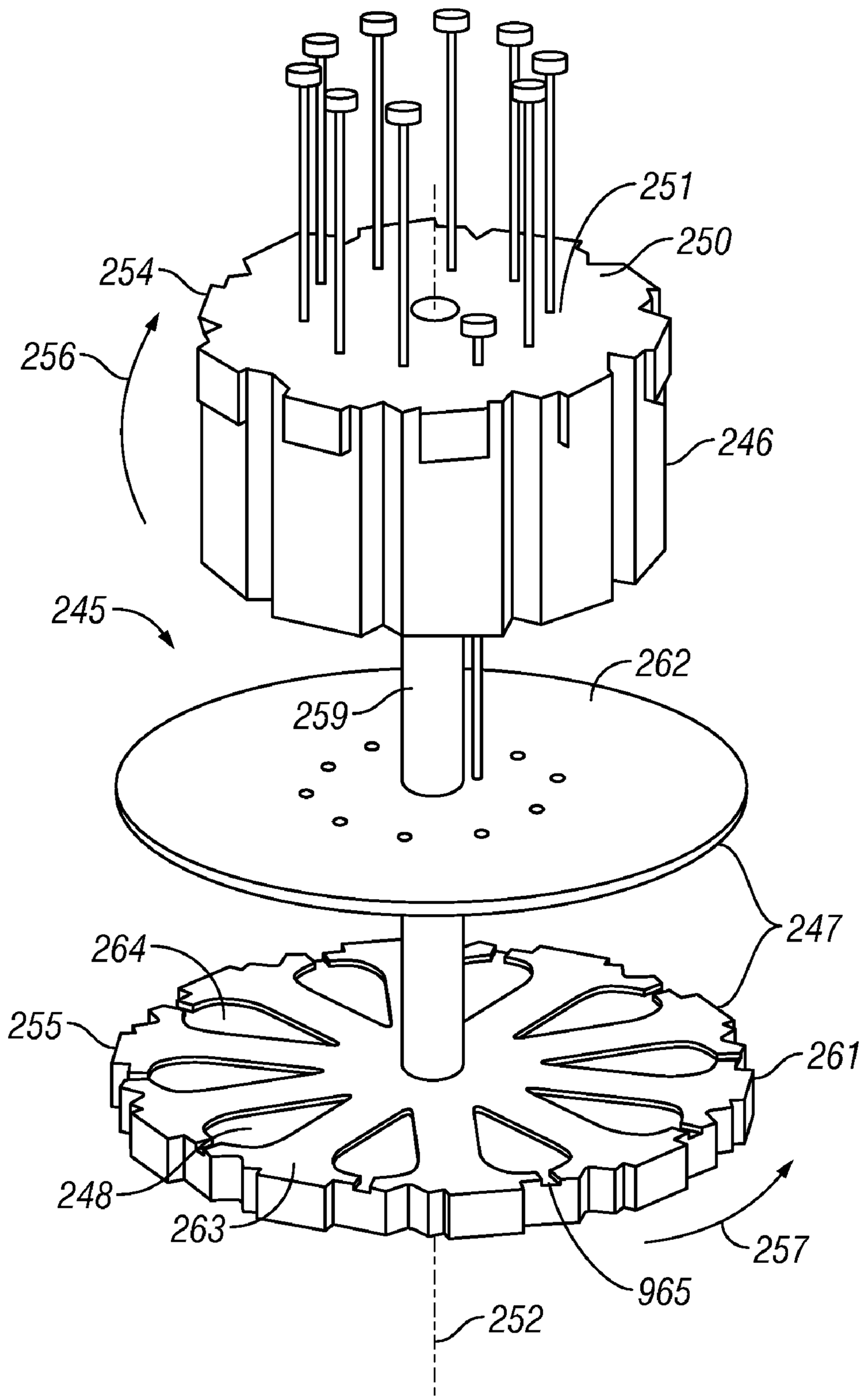
251
250
254
256
246
245
262
259
247
264
255
261
248
263
257
965
252

FIG. 21

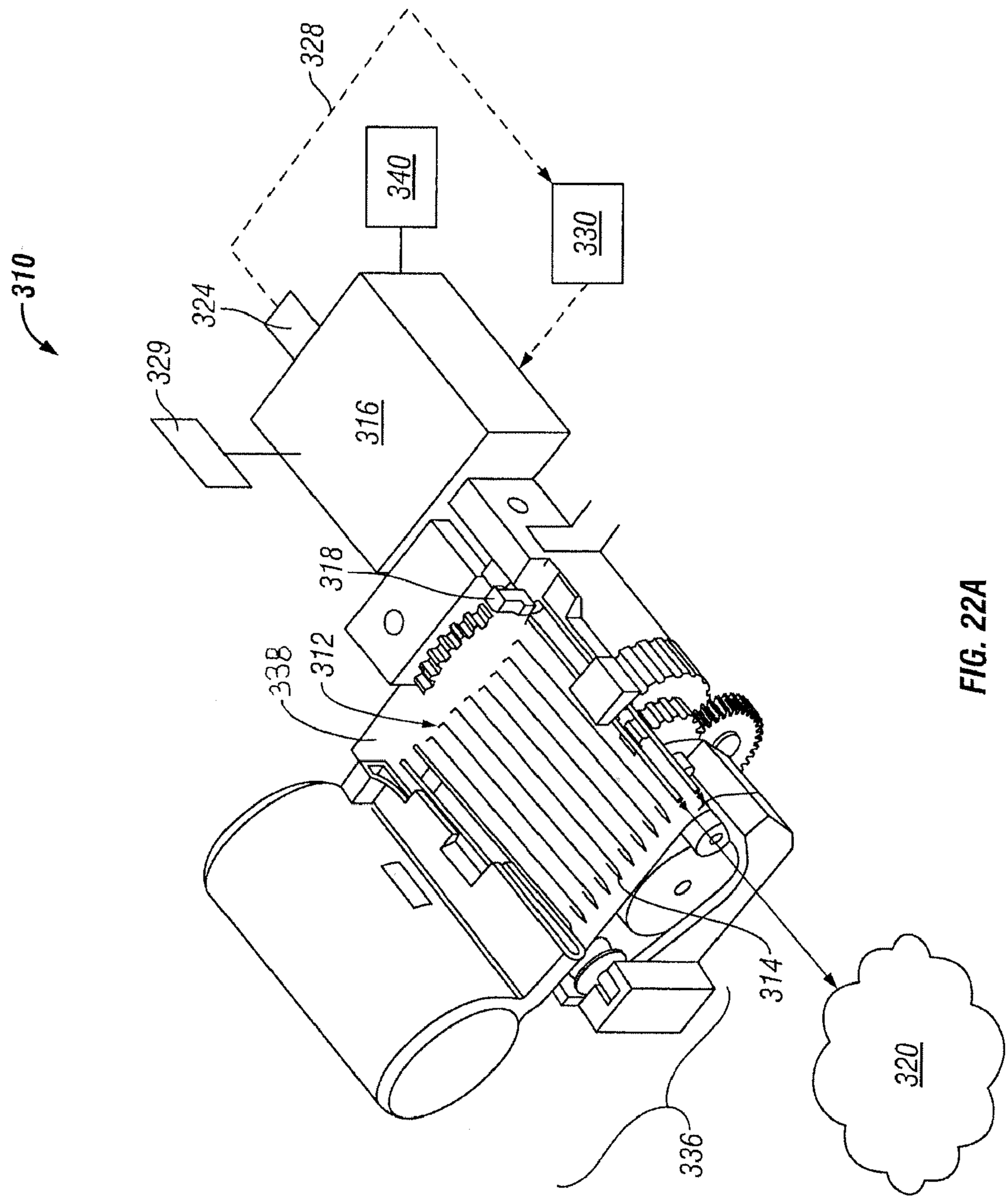

FIG. 22A

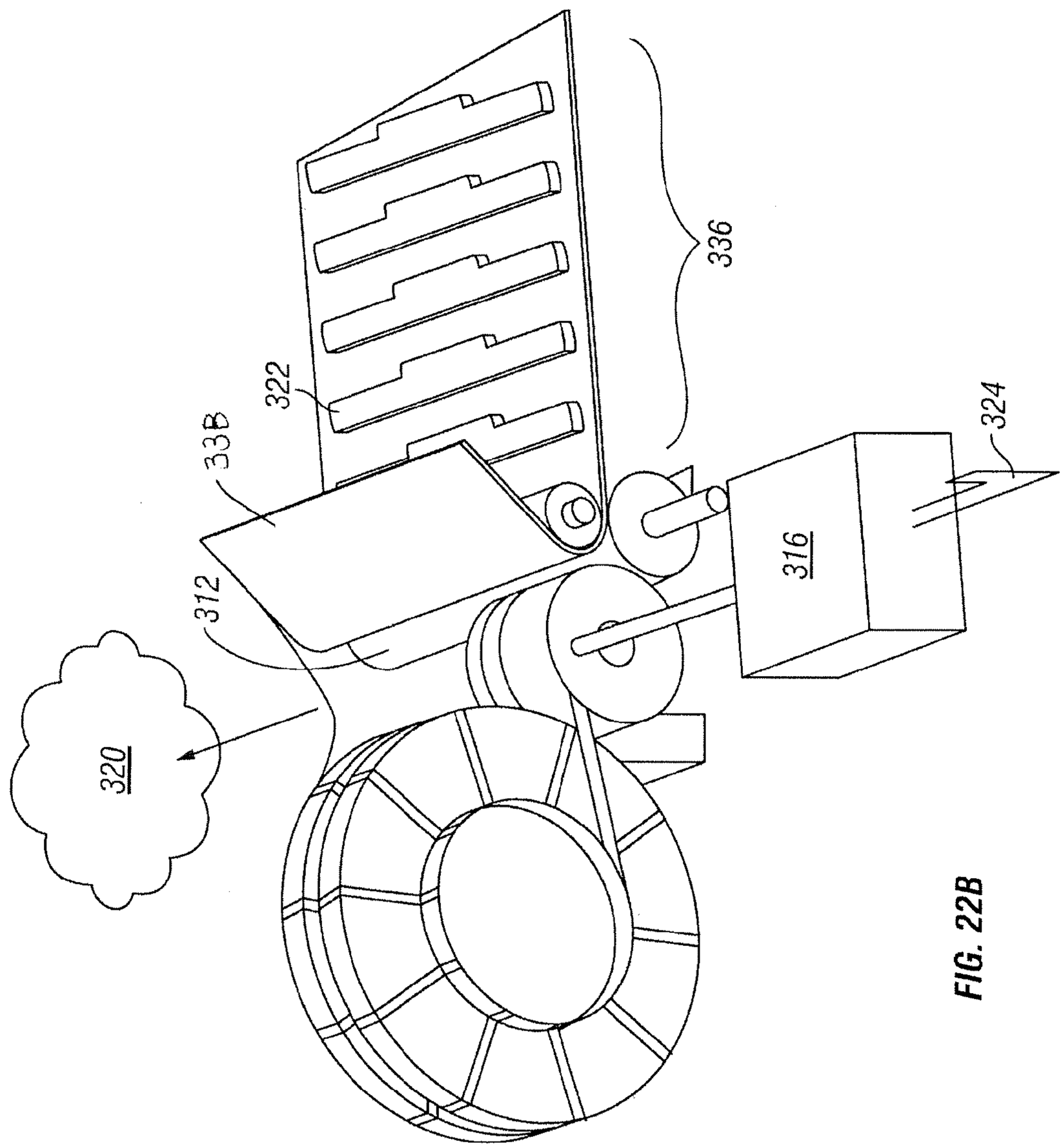

FIG. 22B

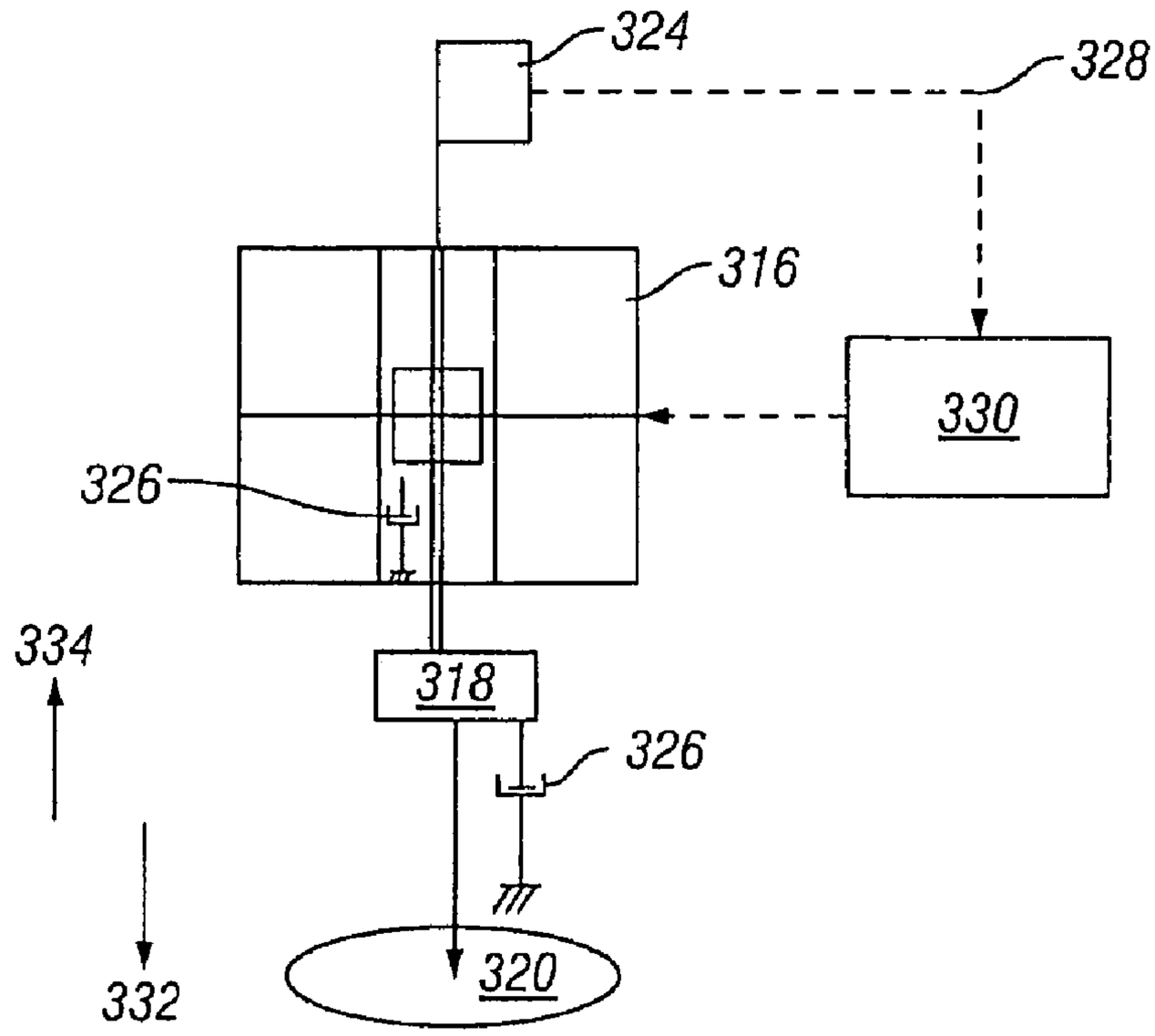

FIG. 22C

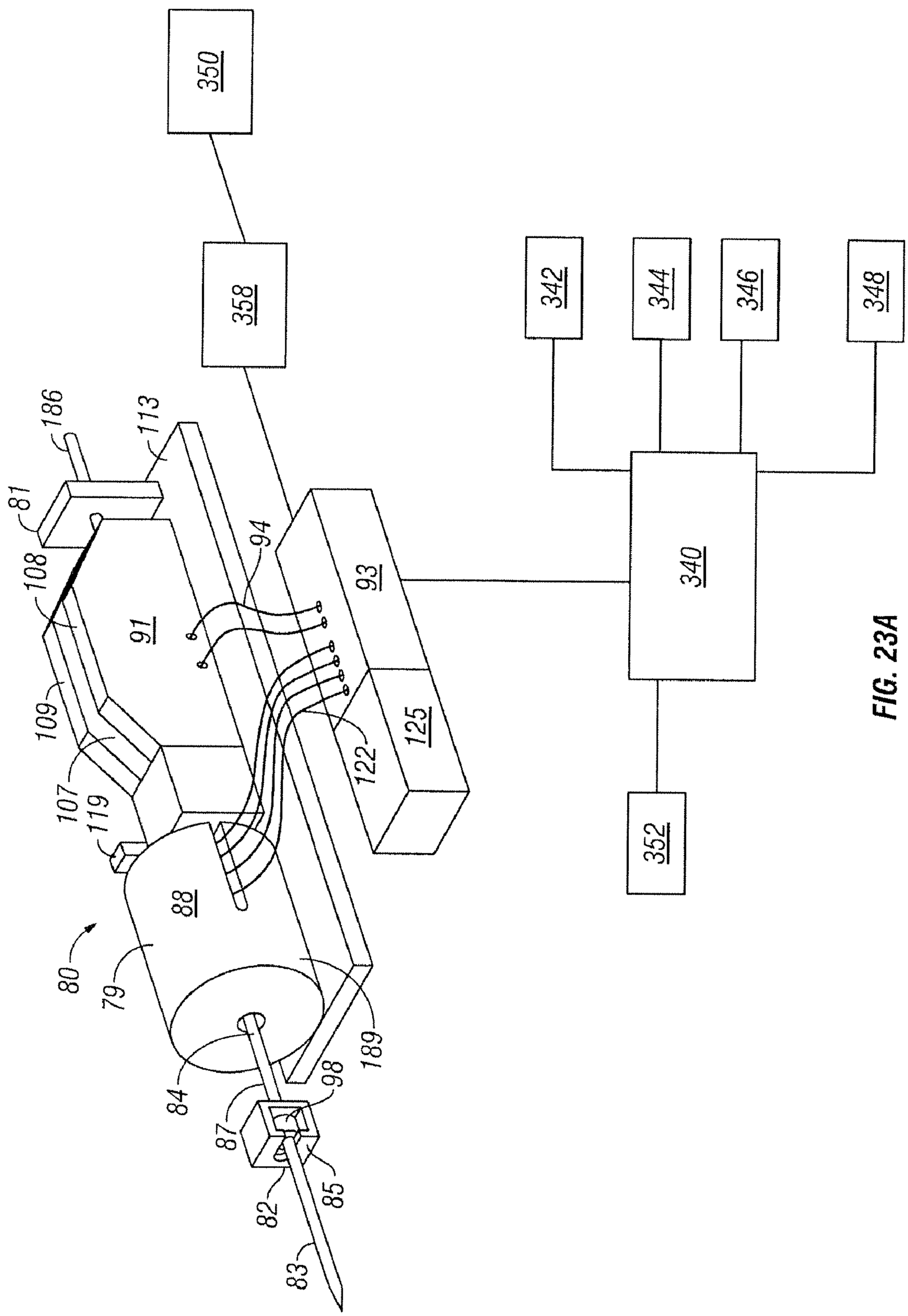
350
358
342
344
346
348
340
352
186
113
81
108
94
93
91
125
122
109
107
119
88
80
79
189
84
98
87
85
82
83

FIG. 23A

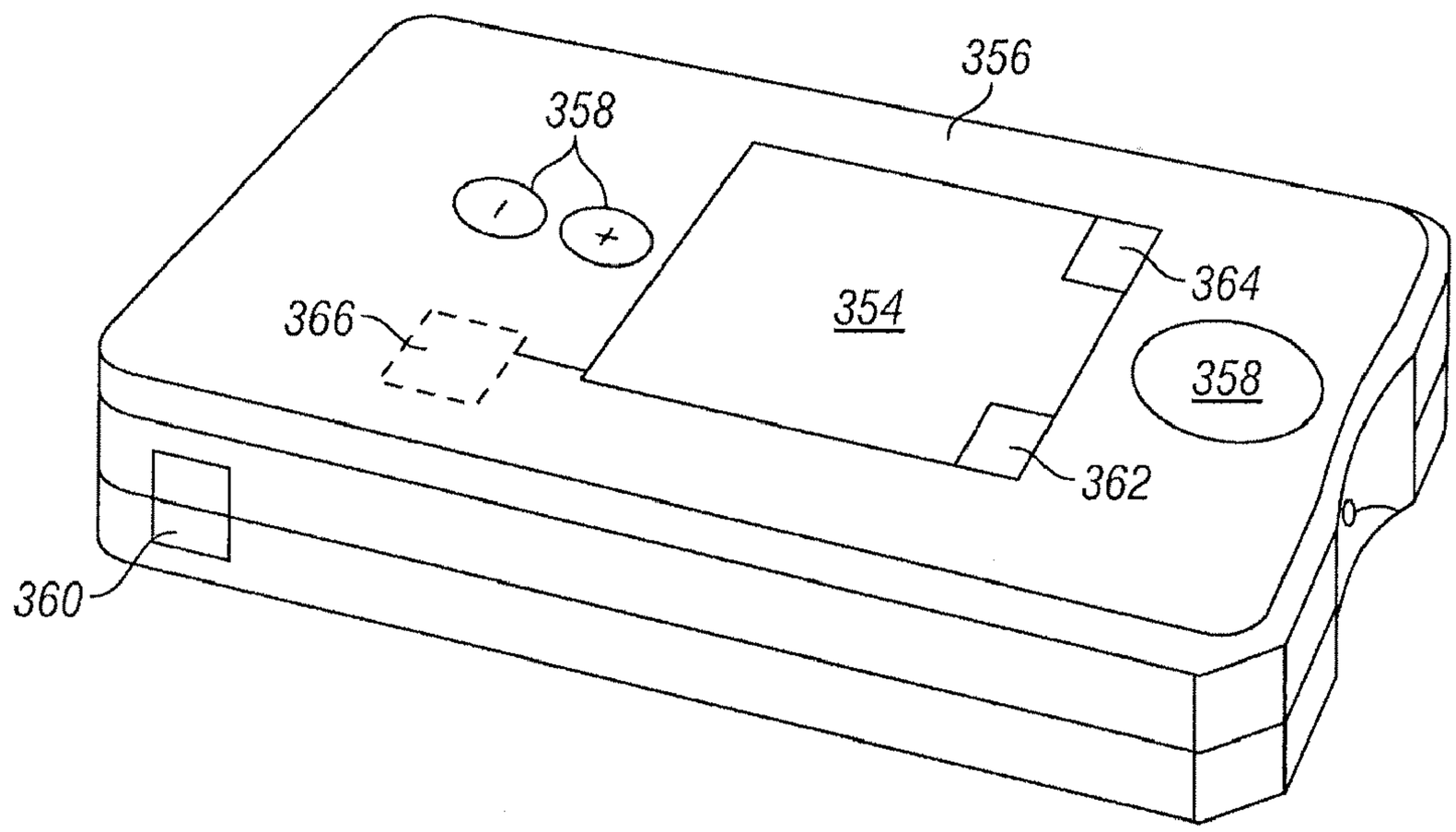

FIG. 23B

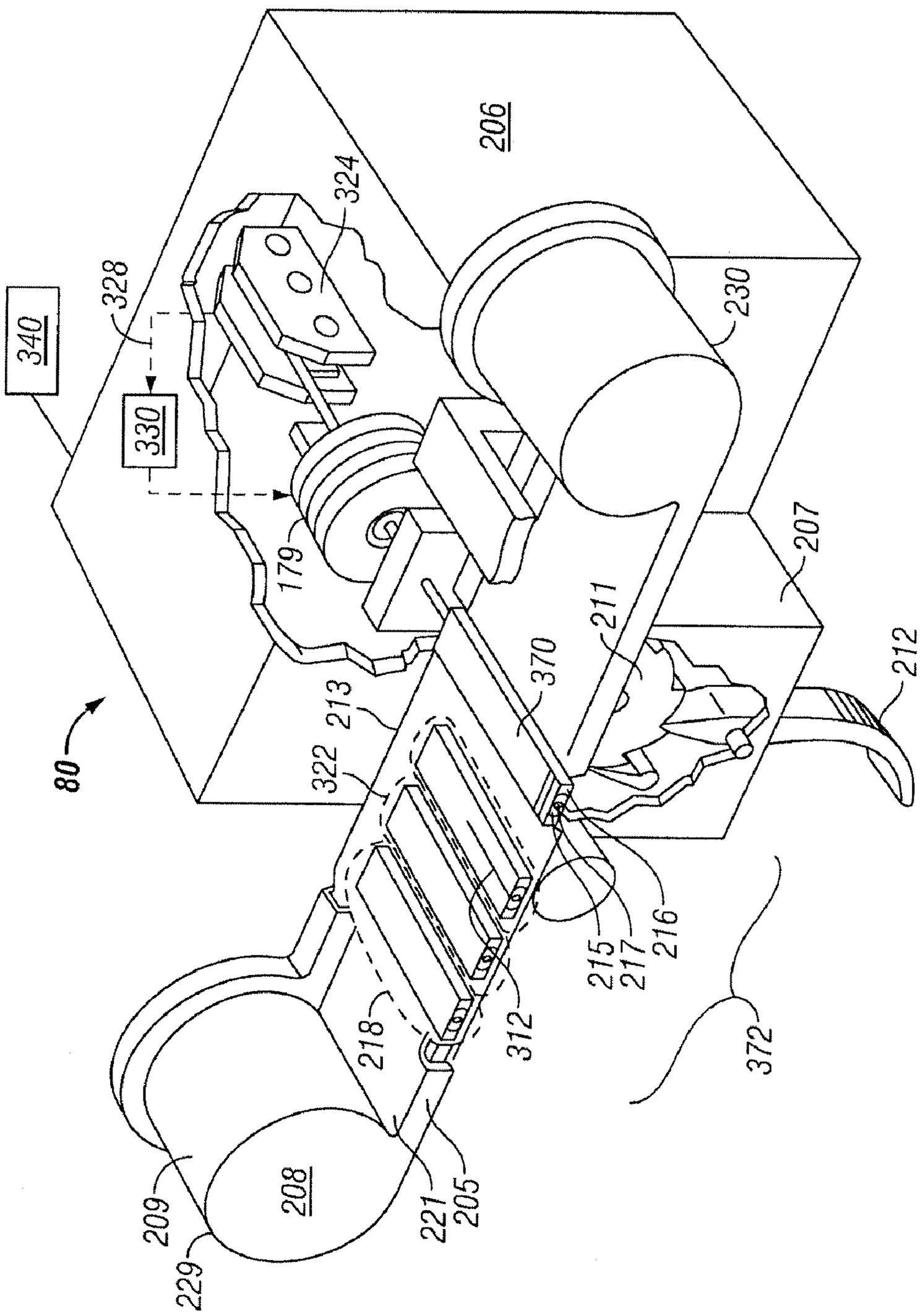
340
328
330
324
206
230
207
179
211
212
370
213
322
80
215
217
216
312
218
372
209
229
208
221
205

FIG. 24

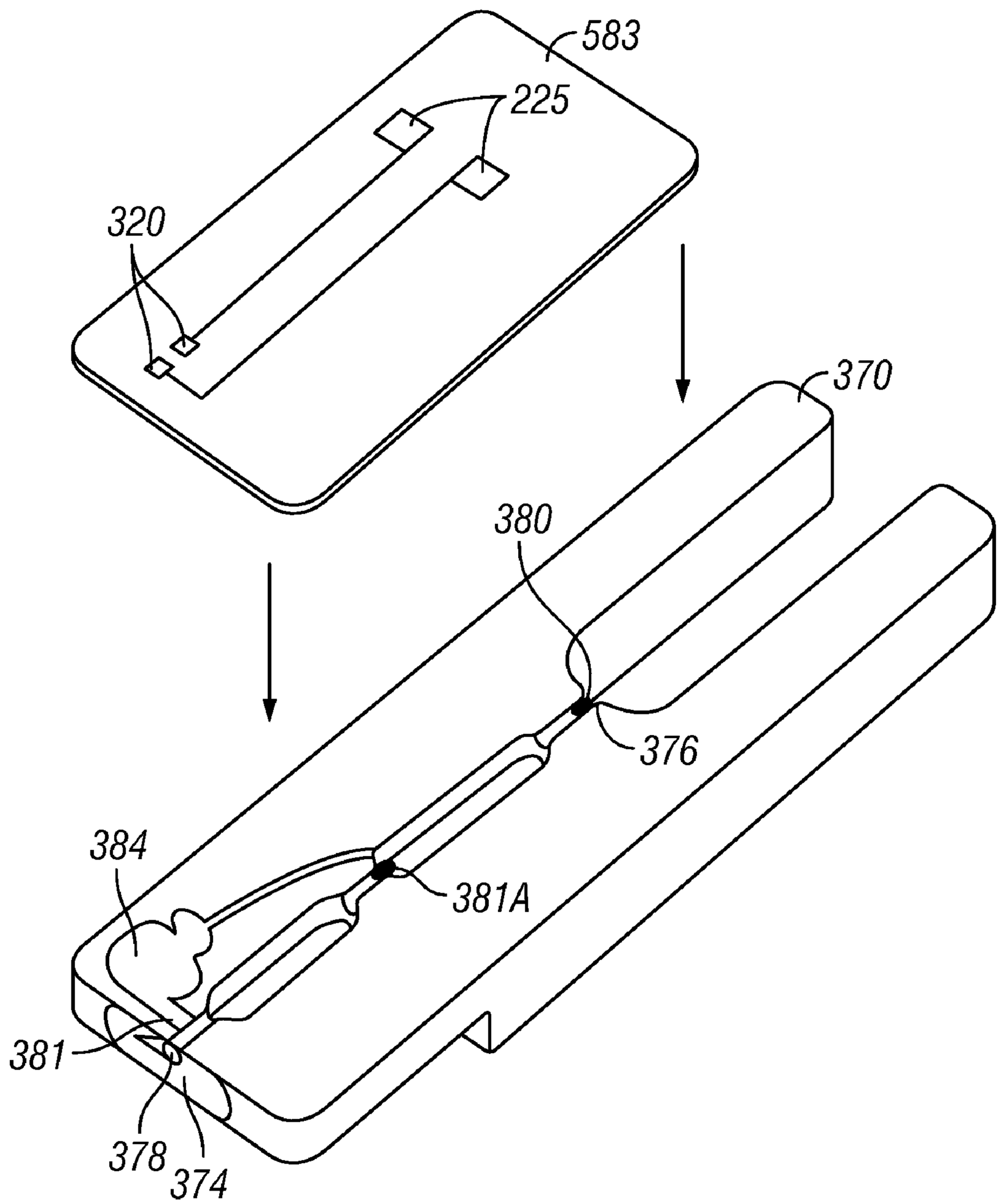

FIG. 25

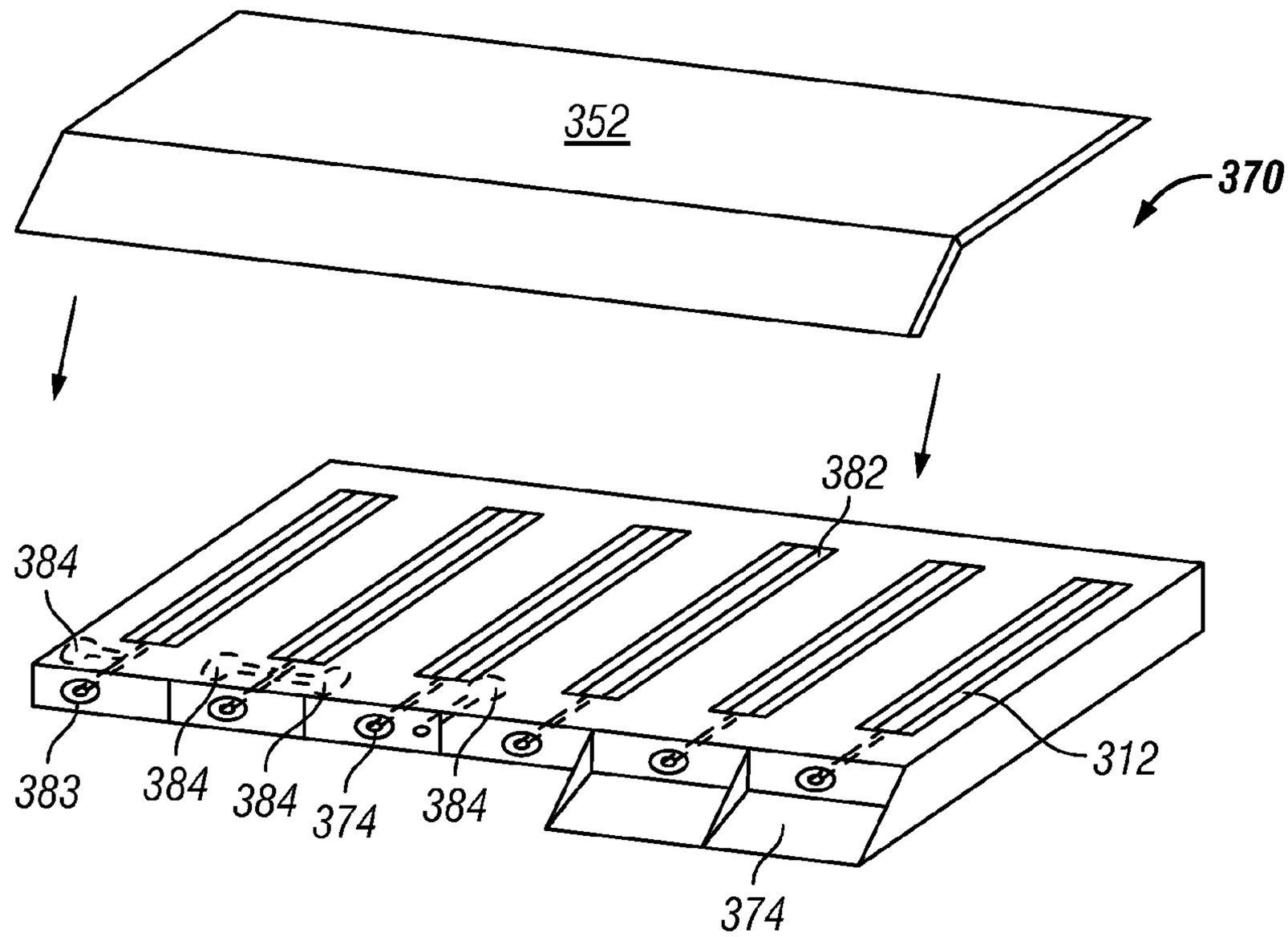

FIG. 26

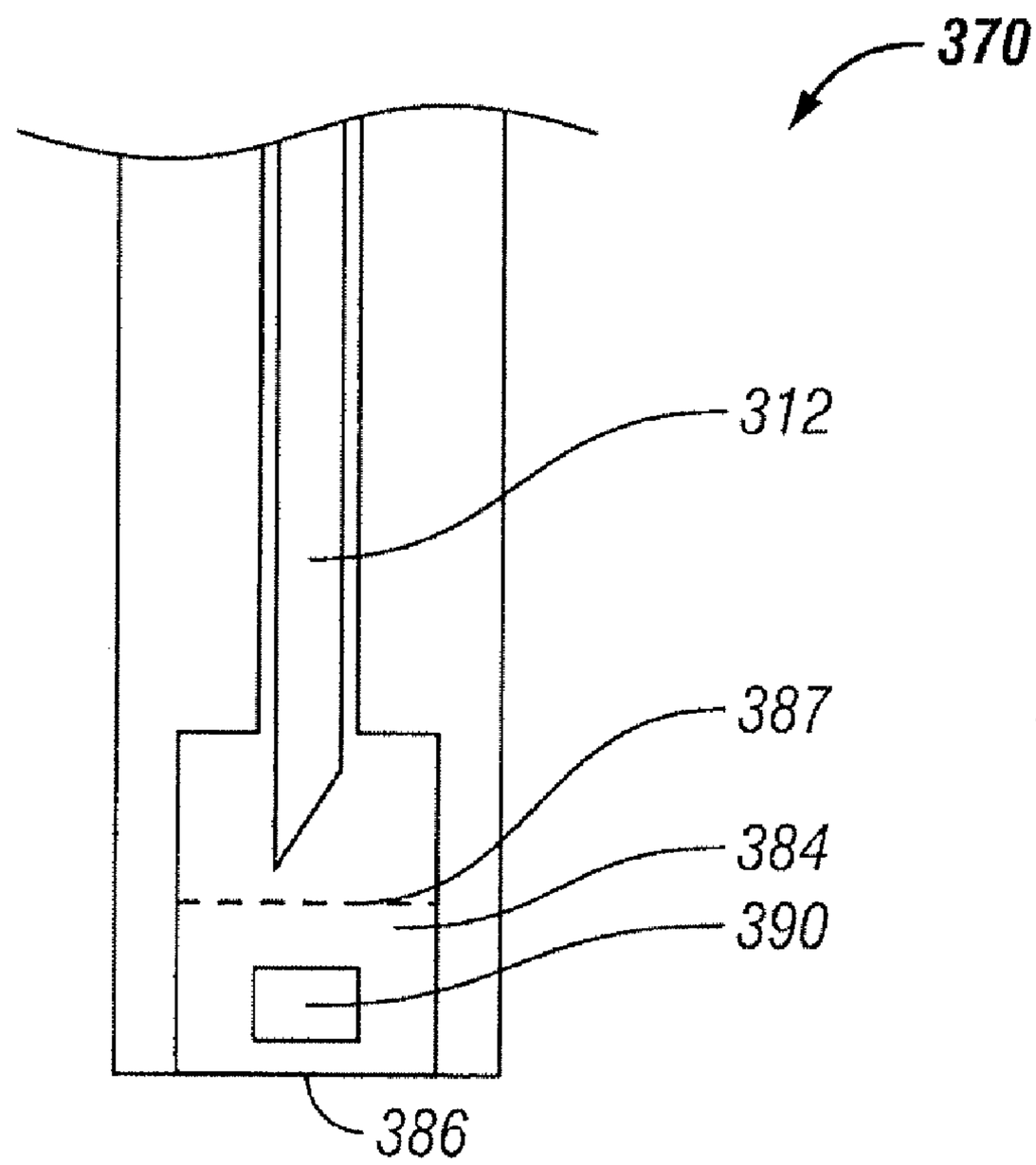

FIG. 27

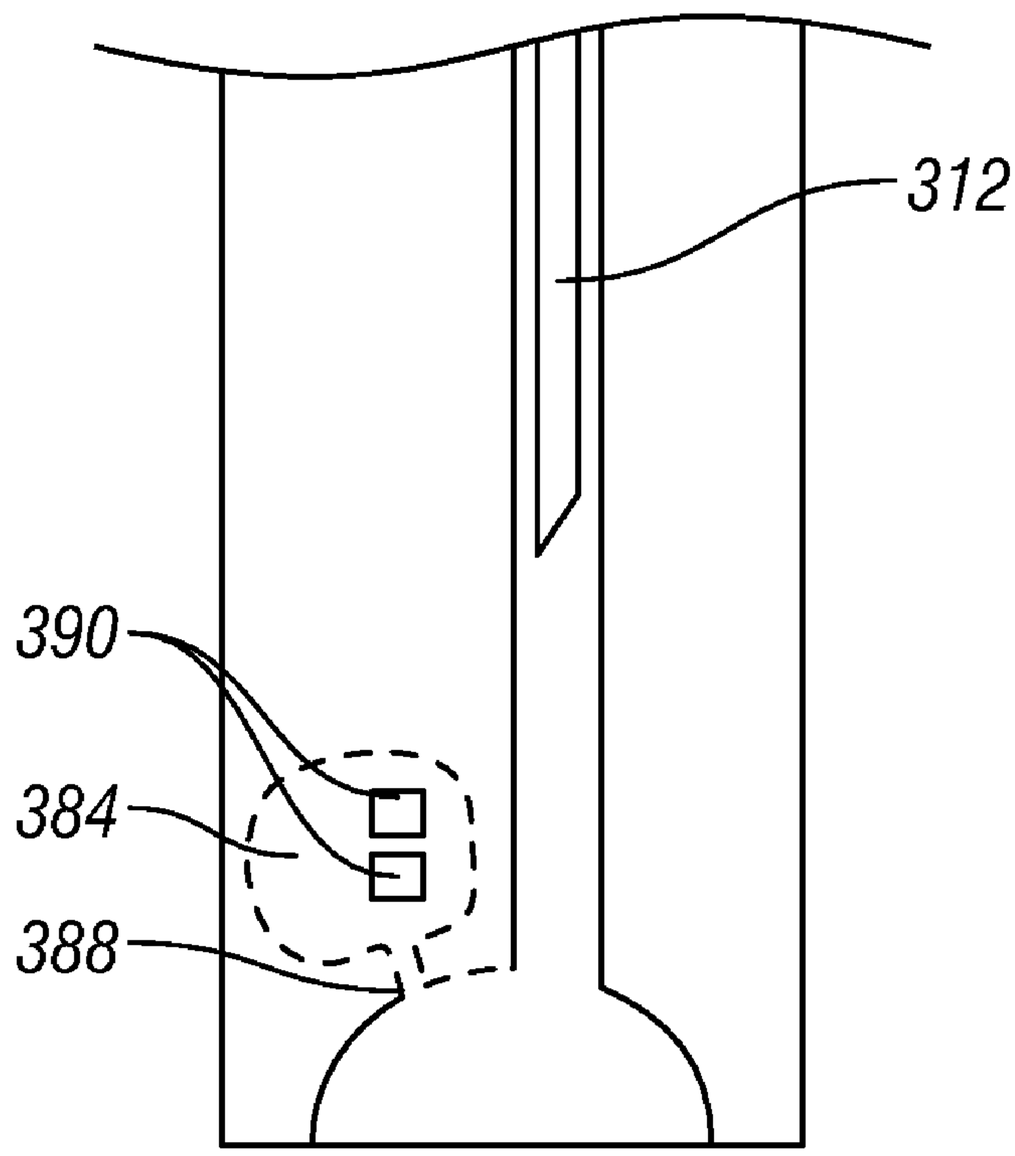

FIG. 28

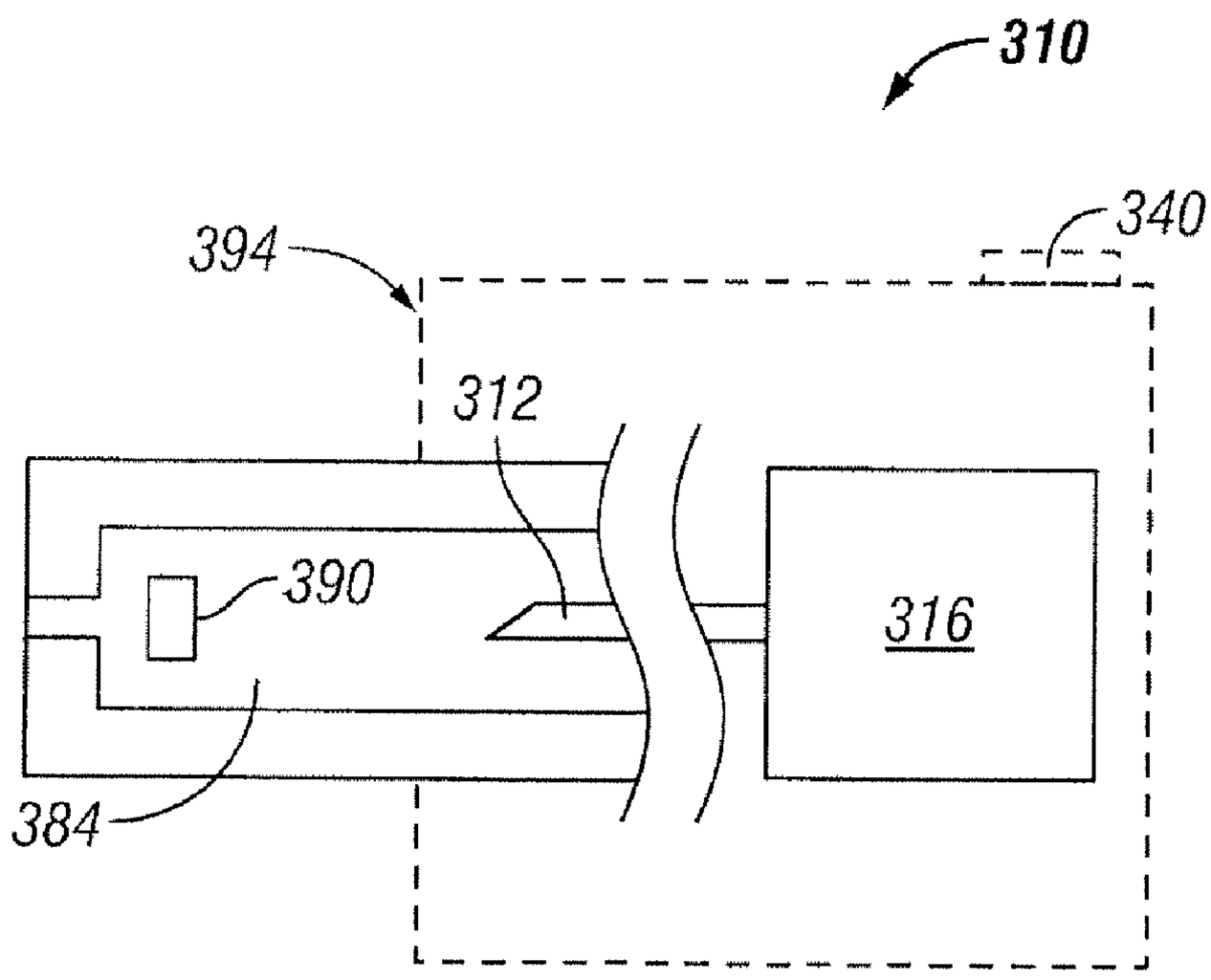

FIG. 29

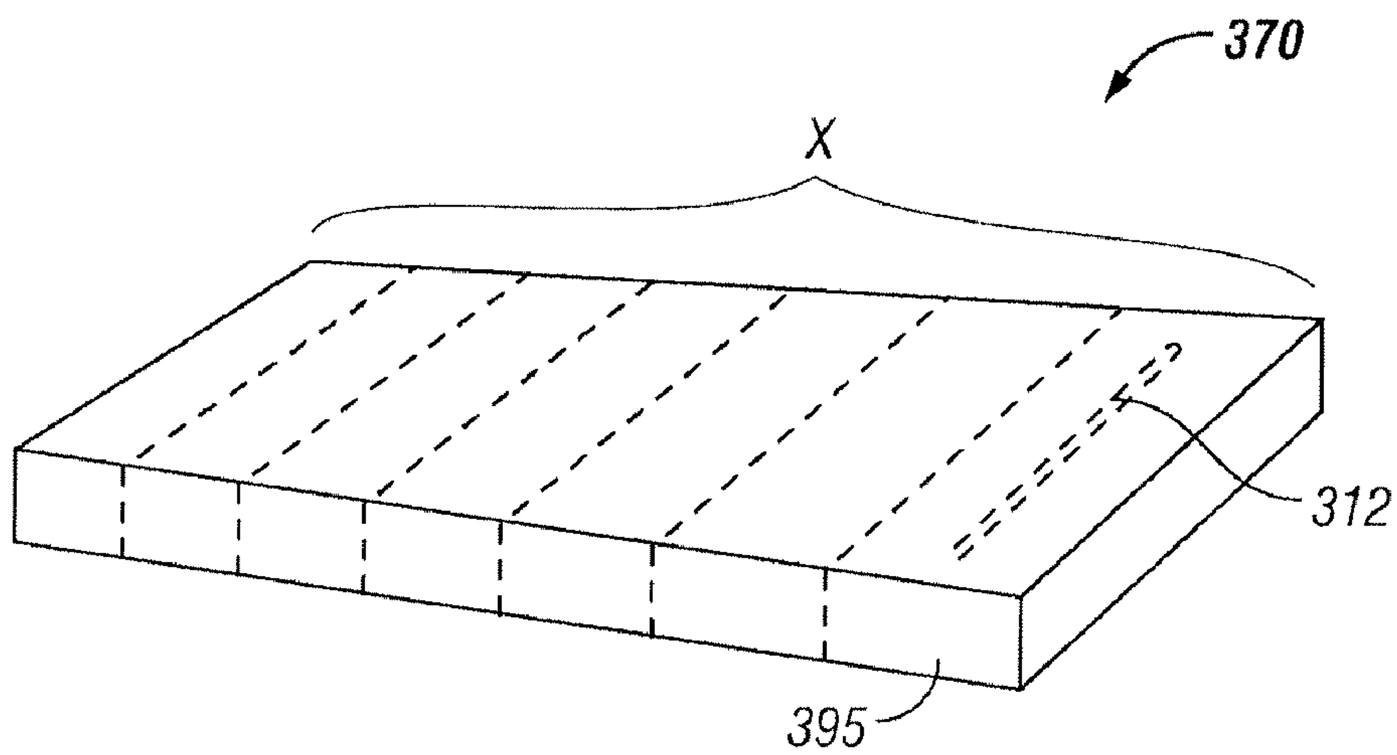

FIG. 30

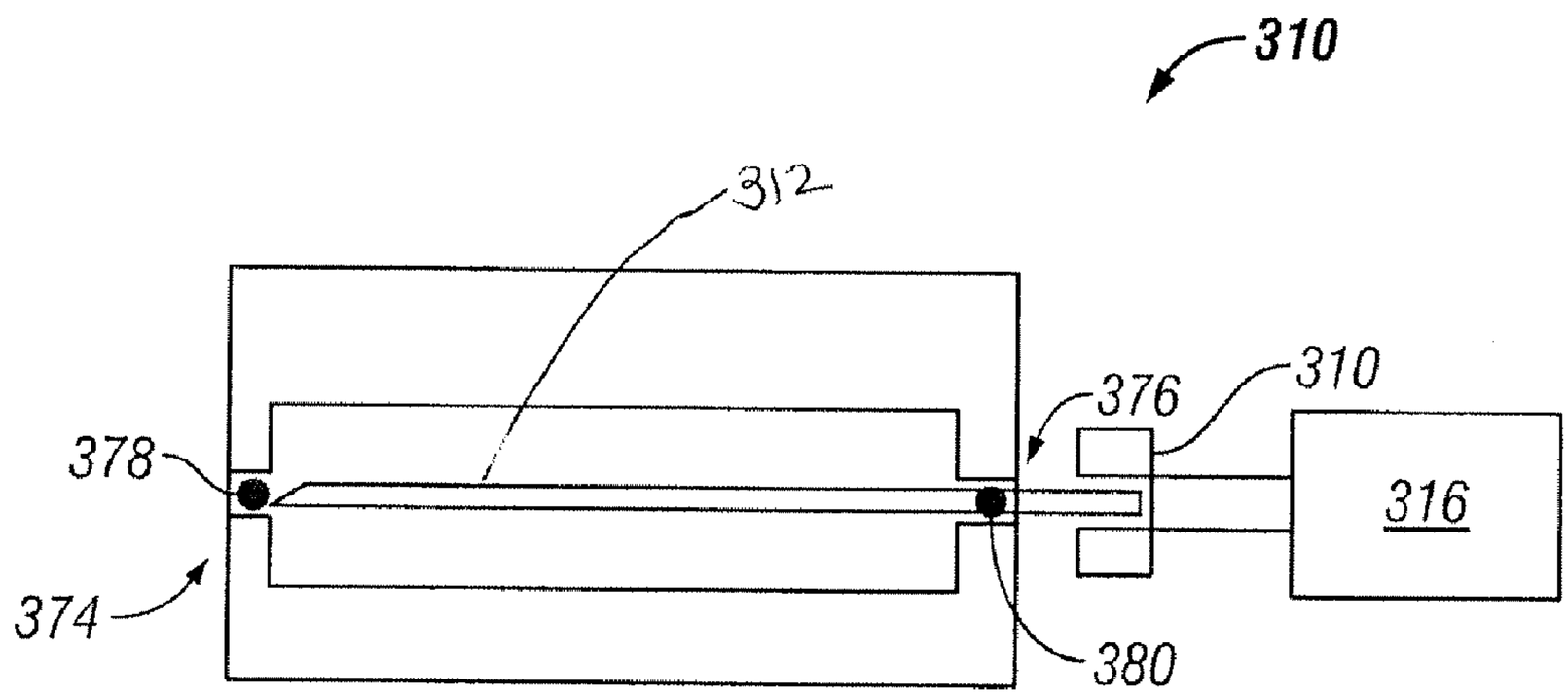

FIG. 31

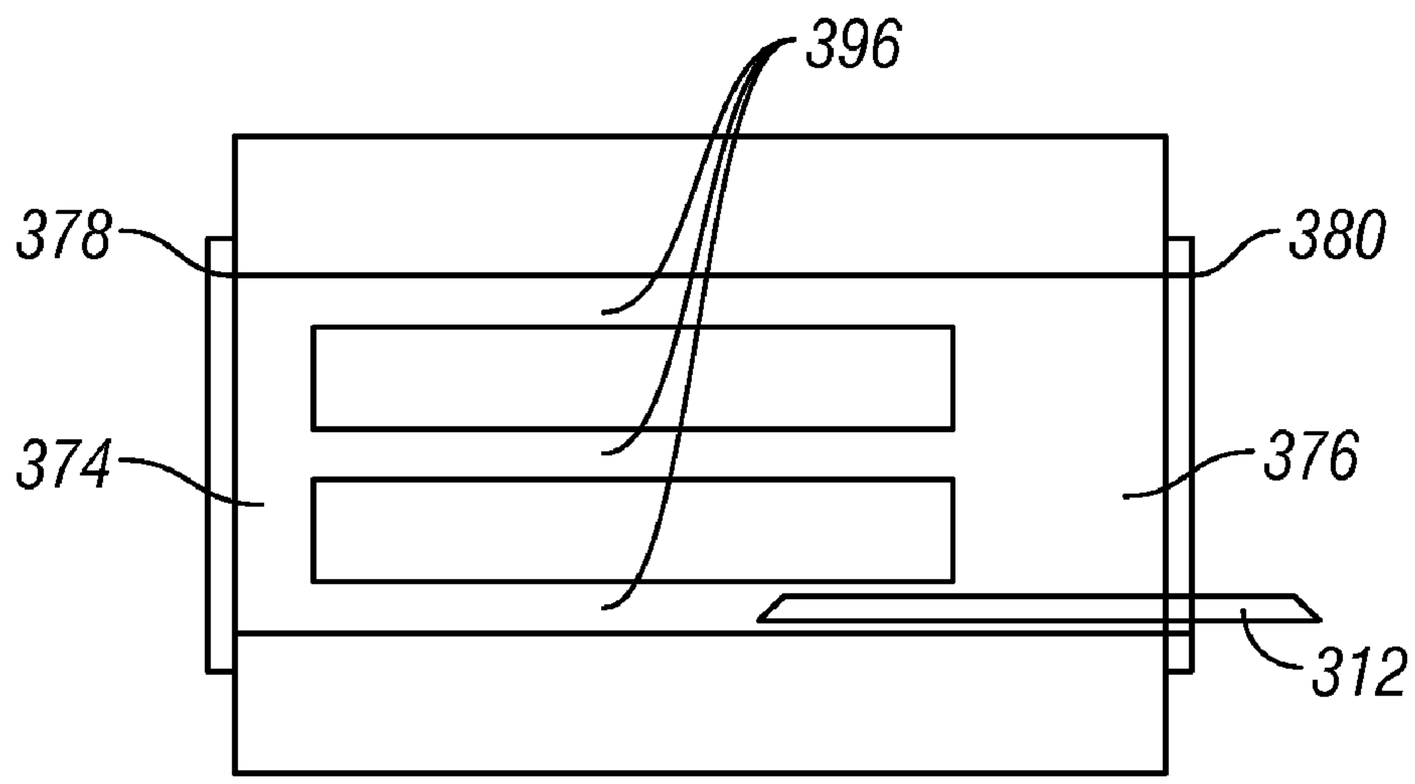

FIG. 32

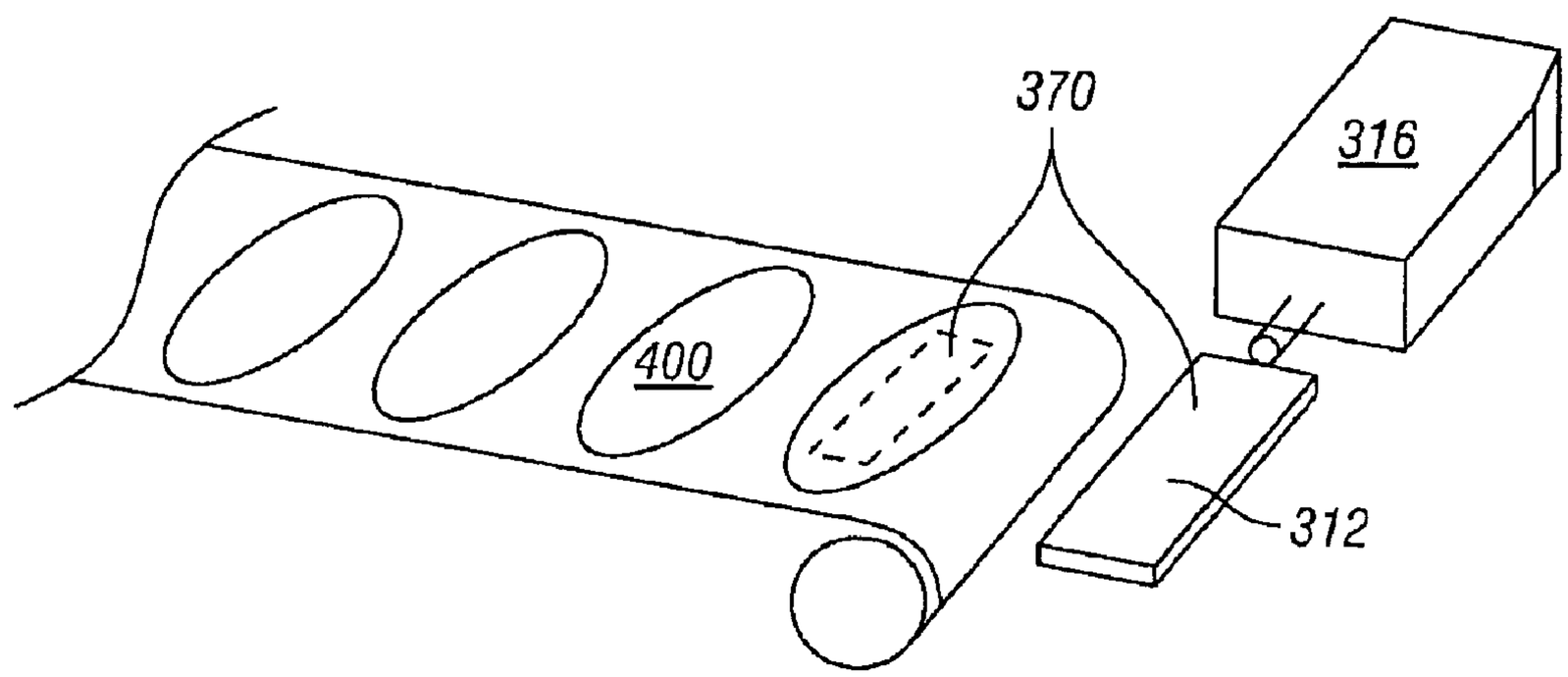

FIG. 33

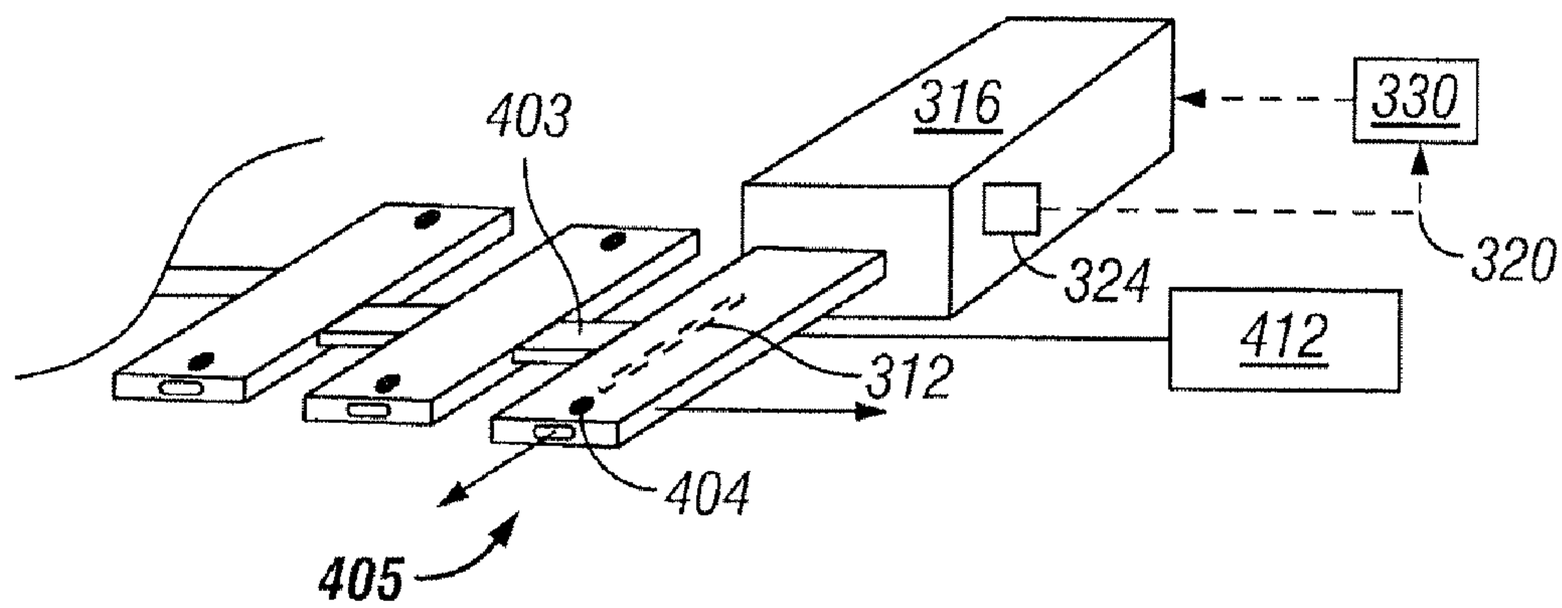

FIG. 34

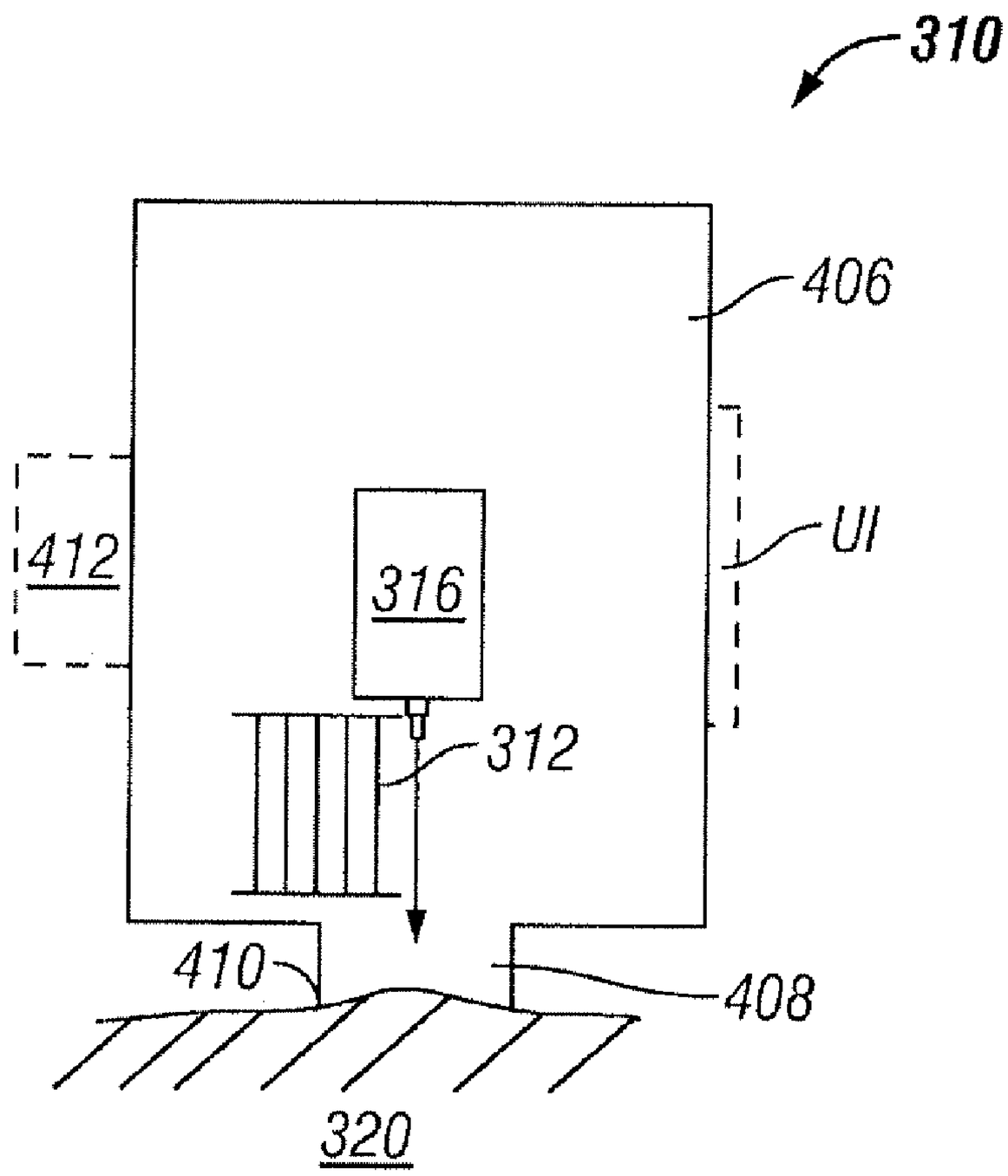

FIG. 35

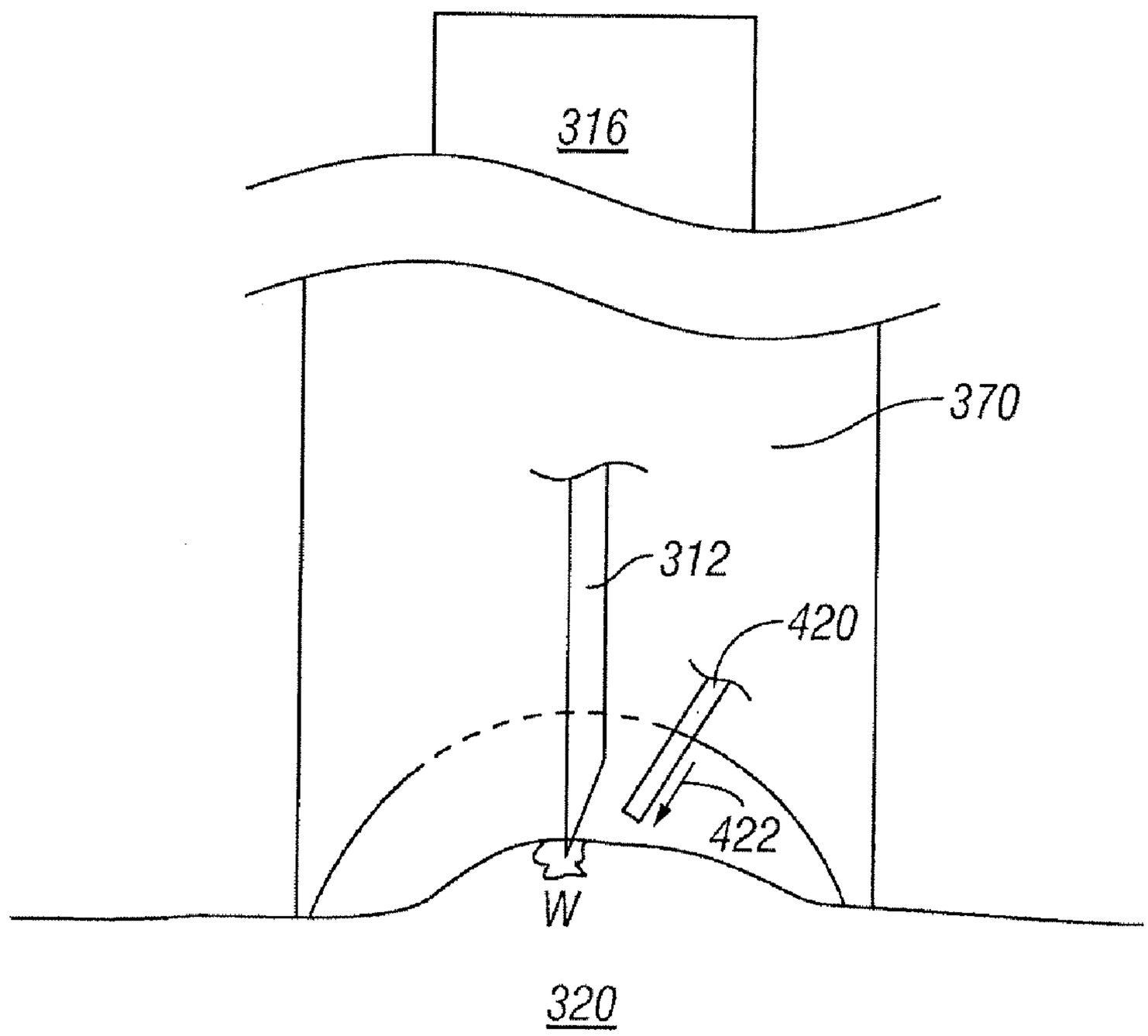

FIG. 36

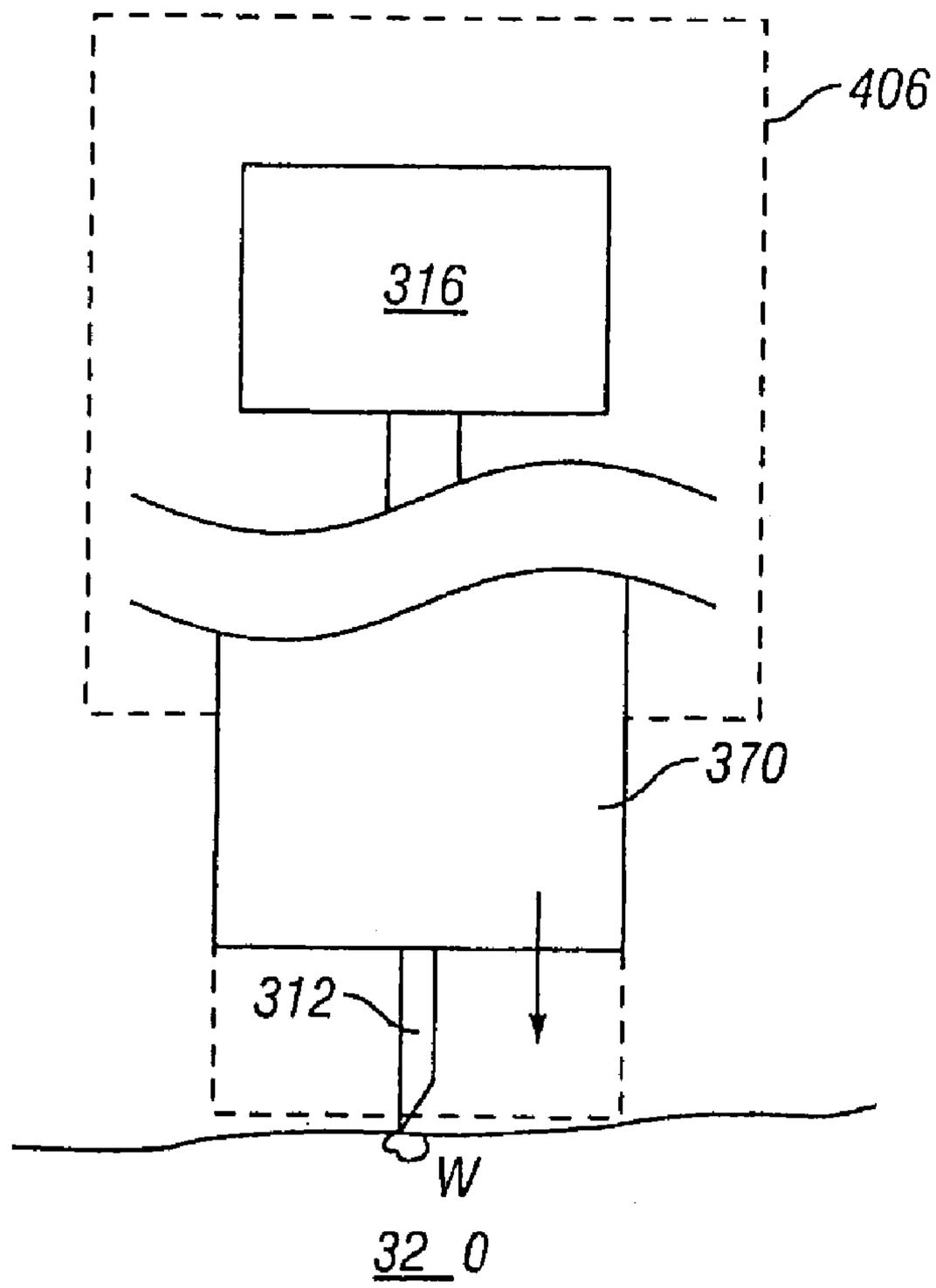

FIG. 37

METHOD AND APPARATUS FOR PENETRATING TISSUE

CROSS-REFERENCE TO RELATED APPLICATION

This application is a continuation-in-part of commonly assigned, U.S. patent application Ser. No. 10/127,395 filed Apr. 19, 2002, now U.S. Pat. No. 7,025,774. This Application also claims the benefit of priority from commonly assigned, U.S. patent application Ser. No. 10/237,261 filed Sep. 5, 2002 and commonly assigned, U.S. patent application Ser. No. 10/237,262 filed Sep. 5, 2002. All applications listed above are fully incorporated herein by reference for all purposes.

BACKGROUND OF THE INVENTION

Lancing devices are known in the medical health-care products industry for piercing the skin to produce blood for analysis. Typically, a drop of blood for this type of analysis is obtained by making a small incision in the fingertip, creating a small wound, which generates a small blood droplet on the surface of the skin.

Early methods of lancing included piercing or slicing the skin with a needle or razor. Current methods utilize lancing devices that contain a multitude of spring, cam and mass actuators to drive the lancet. These include cantilever springs, diaphragms, coil springs, as well as gravity plumbs used to drive the lancet. The device may be held against the skin and mechanically triggered to ballistically launch the lancet. Unfortunately, the pain associated with each lancing event using known technology discourages patients from testing. In addition to vibratory stimulation of the skin as the driver impacts the end of a launcher stop, known spring based devices have the possibility of harmonically oscillating against the patient tissue, causing multiple strikes due to recoil. This recoil and multiple strikes of the lancet against the patient is one major impediment to patient compliance with a structured glucose monitoring regime.

Another impediment to patient compliance is the lack of spontaneous blood flow generated by known lancing technology. In addition to the pain as discussed above, a patient may need more than one lancing event to obtain a blood sample since spontaneous blood generation is unreliable using known lancing technology. Thus the pain is multiplied by the number of tries it takes to successfully generate spontaneous blood flow. Different skin thickness may yield different results in terms of pain perception, blood yield and success rate of obtaining blood between different users of the lancing device. Known devices poorly account for these skin thickness variations.

A still further impediment to improved compliance with glucose monitoring are the many steps and hassle associated with each lancing event. Many diabetic patients that are insulin dependent may need to self-test for blood glucose levels five to six times daily. The large number of steps required in traditional methods of glucose testing, ranging from lancing, to milking of blood, applying blood to the test strip, and getting the measurements from the test strip, discourages many diabetic patients from testing their blood glucose levels as often as recommended. Older patients and those with deteriorating motor skills encounter difficulty loading lancets into launcher devices, transferring blood onto a test strip, or inserting thin test strips into slots on glucose measurement meters. Additionally, the wound channel left on the patient by known systems may also be of a size that discourages those who are

active with their hands or who are worried about healing of those wound channels from testing their glucose levels.

SUMMARY OF THE INVENTION

Accordingly, an object of the present invention is to provide improved tissue penetrating systems, and their methods of use.

Another object of the present invention is to provide tissue penetrating systems, and their methods of use, that provide reduced pain when penetrating a target tissue.

Yet another object of the present invention is to provide tissue penetrating systems, and their methods of use, that provide controlled depth of penetration.

Still a further object of the present invention is to provide tissue penetrating systems, and their methods of use, that provide controlled velocities into and out of target tissue.

A further object of the present invention is to provide tissue penetrating systems, and their methods of use, that provide stimulation to a target tissue.

Another object of the present invention is to provide tissue penetrating systems, and their methods of use, that apply a pressure to a target tissue.

Yet another object of the present invention is to provide tissue penetrating systems, and their methods of use, with penetrating members that remain in sterile environments prior to launch.

Still another object of the present invention is to provide tissue penetrating systems, and their methods of use, with penetrating members that remain in sterile environments prior to launch, and the penetrating members are not used to breach the sterile environment.

A further object of the present invention is to provide improved tissue penetrating systems, and their methods of use, that have user interfaces.

Another object of the present invention is to provide improved tissue penetrating systems, and their methods of use, that have human interfaces.

Yet another object of the present invention is to provide tissue penetrating systems, and their methods of use, that have low volume sample chambers.

Still another object of the present invention is to provide tissue penetrating systems, and their methods of use, that have sample chambers with volumes that do not exceed 1 μL.

Another object of the present invention is to provide tissue penetrating systems, and their methods of use, that have multiple penetrating members housed in a cartridge.

These and other objects of the present invention are achieved in a body fluid sampling system for use on a tissue site that includes a single drive force generator. A plurality of penetrating members are operatively coupled to the force generator. The force generator moves each of the members along a path out of a housing with a penetrating member exit, into the tissue site, stops in the tissue site, and withdraws out of the tissue site. A flexible support member couples the penetrating members to define a linear array. The support member is movable and configured to move each of the penetrating members to a launch position associated with the force generator.

In another embodiment of the present invention, a body fluid sampling system for use on a tissue site includes a drive force generator. A plurality of penetrating members are operatively coupled to the force generator. The force generator moves each of the members along a path out of a housing with a penetrating member exit, into the tissue site, stops in the tissue site, and withdraws out of the tissue site. A flexible support member couples the penetrating members to define a

linear array. The support member is movable and configured to move each of the penetrating members to a launch position associated with the force generator. The drive force generator is configured to be controlled to follow a predetermined velocity trajectory into the tissue and out of the tissue.

In another embodiment of the present invention, a body fluid sampling system for use on a tissue site includes a drive force generator. A plurality of penetrating members are operatively coupled to the force generator. The force generator moves each of the members along a path out of a housing with a penetrating member exit, into the tissue site, stops in the tissue site, and withdraws out of the tissue site. A flexible support member couples the penetrating members to define a linear array. The support member is movable and configured to move each of the penetrating members to a launch position associated with the force generator. A position sensor is configured to provide an indication of a position of the penetrating member during actuation.

In another embodiment of the present invention, a body fluid sampling system for use on a tissue site includes a drive force generator. A plurality of penetrating members are operatively coupled to the force generator. The force generator moves each of the members along a path out of a housing with a penetrating member exit, into the tissue site, stops in the tissue site, and withdraws out of the tissue site. A flexible support member couples the penetrating members to define a linear array. The support member is movable and configured to move each of the penetrating members to a launch position associated with the force generator. The penetrating member is an elongate member without a molded attachment. A coupler, on the force generator, is configured to engage at least a portion of the elongate portion of the penetrating member and drive the member along a path into a tissue site and withdrawn from a tissue site.

In another embodiment of the present invention, a body fluid sampling system for use on a tissue site includes an electrically powered drive force generator. A plurality of cartridges are provided, each containing a penetrating member. Each of the cartridges is coupled together to define a flexible array. A transport device moves each of the cartridges into a launch position to operatively couple the penetrating member to the force generator. A flexible support member couples the cartridges to define a linear array. The support member is movable and configured to move each of the cartridges to the launch position associated with the force generator.

In another embodiment of the present invention, a body fluid sampling system for use on a tissue site includes a drive force generator. A plurality of penetrating members are operatively coupled to the force generator. The force generator moves each of the members along a path out of a housing with a penetrating member exit, into the tissue site, stops in the tissue site, and withdraws out of the tissue site. A flexible support member couples the penetrating members to define a linear array. The support member is movable and configured to move each of the penetrating members to a launch position associated with the force generator. A sterility enclosure covers at least a tip of the penetrating member. The sterility enclosure is removed from the penetrating member prior to actuation of the member and positioned so that the penetrating member will not contact the enclosure during actuation.

In another embodiment of the present invention, a body fluid sampling system for use on a tissue site includes a drive force generator. A plurality of penetrating members are operatively coupled to the force generator. The force generator moves each of the members along a path out of a housing with a penetrating member exit, into the tissue site, stops in the tissue site, and withdraws out of the tissue site. A flexible support member couples the penetrating members to define a linear array. The support member is movable and configured to move each of the penetrating members to a launch position associated with the force generator. A sterility enclosure creates a sterile environment around at least a tip of the penetrating member. The penetrating member breaches the sterile environment during actuation.

In another embodiment of the present invention, a body fluid sampling system for use on a tissue site includes a drive force generator. A plurality of penetrating members are operatively coupled to the force generator. The force generator moves each of the members along a path out of a housing with a penetrating member exit, into the tissue site, stops in the tissue site, and withdraws out of the tissue site. A flexible support member couples the penetrating members to define a linear array. The support member is movable and configured to move each of the penetrating members to a launch position associated with the force generator. A skin stabilizer device is provided for stretching a surface of a tissue site. The skin stabilizer at least partially surrounds the penetrating member exit.

In another embodiment of the present invention, a body fluid sampling system for use on a tissue site includes a drive force generator. A plurality of penetrating members are operatively coupled to the force generator. The force generator moves each of the members along a path out of a housing with a penetrating member exit, into the tissue site, stops in the tissue site, and withdraws out of the tissue site. A flexible support member couples the penetrating members to define a linear array. The support member is movable and configured to move each of the penetrating members to a launch position associated with the force generator. An analyte detection member is positioned to receive fluid from a wound created by the penetrating member. The detection member is configured to determine a concentration of an analyte in the fluid using a sample of less than 1 μL of the fluid.

In another embodiment of the present invention, a body fluid sampling system for use on a tissue site includes a drive force generator. A plurality of penetrating members are operatively coupled to the force generator. The force generator moves each of the members along a path out of a housing with a penetrating member exit, into the tissue site, stops in the tissue site, and withdraws out of the tissue site. A flexible support member couples the penetrating members to define a linear array. The support member is movable and configured to move each of the penetrating members to a launch position associated with the force generator. A spool is in contact with at least one portion of the flexible support member. The spool is configured to hold unused portions of the support member in a roll configuration.

A further understanding of the nature and advantages of the invention will become apparent by reference to the remaining portions of the specification and drawings.

BRIEF DESCRIPTION OF THE DRAWINGS

FIG. **1** illustrates an embodiment of a controllable force driver in the form of a cylindrical electric penetrating member driver using a coiled solenoid-type configuration.

FIG. **2**A illustrates a displacement over time profile of a penetrating member driven by a harmonic spring/mass system.

FIG. **2**B illustrates the velocity over time profile of a penetrating member driver by a harmonic spring/mass system.

FIG. **2**C illustrates a displacement over time profile of an embodiment of a controllable force driver.

FIG. **2**D illustrates a velocity over-time profile of an embodiment of a controllable force driver.

FIG. **3** is a diagrammatic view illustrating a controlled feed-back loop.

FIG. **4** is a perspective view of a tissue penetration device having features of the invention.

FIG. **5** is an elevation view in partial longitudinal section of the tissue penetration device of FIG. **4**.

FIGS. **6**A-**6**C show a flowchart illustrating a penetrating member control method.

FIG. **7** is a diagrammatic view of a patient's finger and a penetrating member tip moving toward the skin of the finger.

FIG. **8** is a diagrammatic view of a patient's finger and the penetrating member tip making contact with the skin of a patient's finger.

FIG. **9** is a diagrammatic view of the penetrating member tip depressing the skin of a patient's finger.

FIG. **10** is a diagrammatic view of the penetrating member tip further depressing the skin of a patient's finger.

FIG. **11** is a diagrammatic view of the penetrating member tip penetrating the skin of a patient's finger.

FIG. **12** is a diagrammatic view of the penetrating member tip penetrating the skin of a patient's finger to a desired depth.

FIG. **13** is a diagrammatic view of the penetrating member tip withdrawing from the skin of a patient's finger.

FIGS. **14**-**18** illustrate a method of tissue penetration that may measure elastic recoil of the skin.

FIG. **19** is a perspective view in partial section of a tissue penetration sampling device with a cartridge of sampling modules.

FIG. **20** is a perspective view of a sampling module cartridge with the sampling modules arranged in a ring configuration.

FIG. **21** illustrate an embodiment of a cartridge for use in sampling having a sampling cartridge body and a penetrating member cartridge body.

FIG. **22**A shows a device for use on a tissue site having a plurality of penetrating members.

FIG. **22**B shows rear view of a device for use on a tissue site having a plurality of penetrating members.

FIG. **22**C shows a schematic of a device for use on a tissue site with a feedback loop and optionally a damper.

FIG. **23**A shows an embodiment of a device with a user interface.

FIG. **23**B shows an outer view of a device with a user interface.

FIG. **24** is a cut away view of a system for sampling body fluid.

FIG. **25** is an exploded view of a cartridge for use with a system for sampling body fluid.

FIG. **26** is an exploded view of a cartridge having multiple penetrating members for use with a system for sampling body fluid.

FIGS. **27**-**28** show cartridges for use with a system for sampling body fluid.

FIG. **29** shows a cutaway view of another embodiment of a system for sampling body fluid.

FIG. **30** shows the density associated with a cartridge according to the present invention.

FIG. **31** shows a cutaway view of another embodiment of a system for sampling body fluid.

FIG. **32** is a cut away view of a cartridge according to the present invention.

FIGS. **33**-**34** show views of a body sampling system using multiple cartridges.

FIG. **35** shows an embodiment of the present invention with a tissue stabilizing member.

FIG. **36** shows a cartridge according to the present invention with a tissue stabilizing member.

FIG. **37** shows a system according to the present invention with a moveable cartridge.

DESCRIPTION OF THE SPECIFIC EMBODIMENTS

The present invention provides a solution for body fluid sampling. Specifically, some embodiments of the present invention provide a penetrating member device for consistently creating a wound with spontaneous body fluid flow from a patient. The invention may be a multiple penetrating member device with an optional high density design. It may use penetrating members of smaller size than known penetrating members. The device may be used for multiple lancing events without having to remove a disposable from the device or for the user to handle sharps. The invention may provide improved sensing capabilities. At least some of these and other objectives described herein will be met by embodiments of the present invention.

It is to be understood that both the foregoing general description and the following detailed description are exemplary and explanatory only and are not restrictive of the invention, as claimed. It should be noted that, as used in the specification and the appended claims, the singular forms "a", "an" and "the" include plural referents unless the context clearly dictates otherwise. Thus, for example, reference to "a material" may include mixtures of materials, reference to "a chamber" may include multiple chambers, and the like. References cited herein are hereby incorporated by reference in their entirety, except to the extent that they conflict with teachings explicitly set forth in this specification.

In this specification and in the claims which follow, reference will be made to a number of terms which shall be defined to have the following meanings:

"Optional" or "optionally" means that the subsequently described circumstance may or may not occur, so that the description includes instances where the circumstance occurs and instances where it does not. For example, if a device optionally contains a feature for analyzing a blood sample, this means that the analysis feature may or may not be present, and, thus, the description includes structures wherein a device possesses the analysis feature and structures wherein the analysis feature is not present.

"Analyte detecting member" refers to any use, singly or in combination, of chemical test reagents and methods, electrical test circuits and methods, physical test components and methods, optical test components and methods, and biological test reagents and methods to yield information about a blood sample. Such methods are well known in the art and may be based on teachings of, e.g. Tietz Textbook of Clinical Chemistry, 3d Ed., Sec. V, pp. 776-78 (Burtis & Ashwood, Eds., W. B. Saunders Company, Philadelphia, 1999); U.S. Pat. No. 5,997,817 to Chrismore et al. (Dec. 7, 1999); U.S. Pat. No. 5,059,394 to Phillips et al. (Oct. 22, 1991); U.S. Pat. No. 5,001,054 to Wagner et al. (Mar. 19, 1991); and U.S. Pat. No. 4,392,933 to Nakamura et al. (Jul. 12, 1983), the teachings of which are hereby incorporated by reference, as well as others. Analyte detecting member may include tests in the sample test chamber that test electrochemical properties of the blood, or they may include optical means for sensing optical properties of the blood (e.g. oxygen saturation level), or they may include biochemical reagents (e.g. antibodies) to sense properties (e.g. presence of antigens) of the blood. The analyte detecting member may comprise biosensing or reagent material that will react with an analyte in blood (e.g.

glucose) or other body fluid so that an appropriate signal correlating with the presence of the analyte is generated and can be read by the reader apparatus. By way of example and not limitation, analyte detecting member may be "associated with", "mounted within", or "coupled to" a chamber or other structure when the analyte detecting member participates in the function of providing an appropriate signal about the blood sample to the reader device. Analyte detecting member may also include nanowire analyte detecting members as described herein. Analyte detecting member may use potentiometric, coulometric, or other method useful for detection of analyte levels.

The present invention may be used with a variety of different penetrating member drivers. It is contemplated that these penetrating member drivers may be spring based, solenoid based, magnetic driver based, nanomuscle based, or based on any other mechanism useful in moving a penetrating member along a path into tissue. It should be noted that the present invention is not limited by the type of driver used with the penetrating member feed mechanism. One suitable penetrating member driver for use with the present invention is shown in FIG. **1**. This is an embodiment of a solenoid type electromagnetic driver that is capable of driving an iron core or slug mounted to the penetrating member assembly using a direct current (DC) power supply. The electromagnetic driver includes a driver coil pack that is divided into three separate coils along the path of the penetrating member, two end coils and a middle coil. Direct current is alternated to the coils to advance and retract the penetrating member. Although the driver coil pack is shown with three coils, any suitable number of coils may be used, for example, 4, 5, 6, 7 or more coils may be used.

Referring to the embodiment of FIG. **1**, the stationary iron housing **10** may contain the driver coil pack with a first coil **12** flanked by iron spacers **14** which concentrate the magnetic flux at the inner diameter creating magnetic poles. The inner insulating housing **16** isolates the penetrating member **18** and iron core **20** from the coils and provides a smooth, low friction guide surface. The penetrating member guide **22** further centers the penetrating member **18** and iron core **20**. The penetrating member **18** is protracted and retracted by alternating the current between the first coil **12**, the middle coil, and the third coil to attract the iron core **20**. Reversing the coil sequence and attracting the core and penetrating member back into the housing retracts the penetrating member. The penetrating member guide **22** also serves as a stop for the iron core **20** mounted to the penetrating member **18**.

As discussed above, tissue penetration devices which employ spring or cam driving methods have a symmetrical or nearly symmetrical actuation displacement and velocity profiles on the advancement and retraction of the penetrating member as shown in FIGS. **2** and **3**. In most of the available lancet devices, once the launch is initiated, the stored energy determines the velocity profile until the energy is dissipated. Controlling impact, retraction velocity, and dwell time of the penetrating member within the tissue can be useful in order to achieve a high success rate while accommodating variations in skin properties and minimize pain. Advantages can be achieved by taking into account of the fact that tissue dwell time is related to the amount of skin deformation as the penetrating member tries to puncture the surface of the skin and variance in skin deformation from patient to patient based on skin hydration.

In this embodiment, the ability to control velocity and depth of penetration may be achieved by use of a controllable force driver where feedback is an integral part of driver control. Such drivers can control either metal or polymeric penetrating members or any other type of tissue penetration element. The dynamic control of such a driver is illustrated in FIG. **2**C which illustrates an embodiment of a controlled displacement profile and FIG. **2**D which illustrates an embodiment of a the controlled velocity profile. These are compared to FIGS. **2**A and **2**B, which illustrate embodiments of displacement and velocity profiles, respectively, of a harmonic spring/mass powered driver. Reduced pain can be achieved by using impact velocities of greater than about 2 m/s entry of a tissue penetrating element, such as a lancet, into tissue. Other suitable embodiments of the penetrating member driver are described in commonly assigned, U.S. patent application Ser. No. 10/127,395, filed Apr. 19, 2002 and previously incorporated herein.

FIG. **3** illustrates the operation of a feedback loop using a processor **60**. The processor **60** stores profiles **62** in non-volatile memory. A user inputs information **64** about the desired circumstances or parameters for a lancing event. The processor **60** selects a driver profile **62** from a set of alternative driver profiles that have been preprogrammed in the processor **60** based on typical or desired tissue penetration device performance determined through testing at the factory or as programmed in by the operator. The processor **60** may customize by either scaling or modifying the profile based on additional user input information **64**. Once the processor has chosen and customized the profile, the processor **60** is ready to modulate the power from the power supply **66** to the penetrating member driver **68** through an amplifier **70**. The processor **60** may measure the location of the penetrating member **72** using a position sensing mechanism **74** through an analog to digital converter **76** linear encoder or other such transducer. Examples of position sensing mechanisms have been described in the embodiments above and may be found in the specification for commonly assigned, U.S. patent application Ser. No. 10/127,395, filed Apr. 19, 2002 and previously incorporated herein. The processor **60** calculates the movement of the penetrating member by comparing the actual profile of the penetrating member to the predetermined profile. The processor **60** modulates the power to the penetrating member driver **68** through a signal generator **78**, which may control the amplifier **70** so that the actual velocity profile of the penetrating member does not exceed the predetermined profile by more than a preset error limit. The error limit is the accuracy in the control of the penetrating member.

After the lancing event, the processor **60** can allow the user to rank the results of the lancing event. The processor **60** stores these results and constructs a database **80** for the individual user. Using the database **79**, the processor **60** calculates the profile traits such as degree of painlessness, success rate, and blood volume for various profiles **62** depending on user input information **64** to optimize the profile to the individual user for subsequent lancing cycles. These profile traits depend on the characteristic phases of penetrating member advancement and retraction. The processor **60** uses these calculations to optimize profiles **62** for each user. In addition to user input information **64**, an internal clock allows storage in the database **79** of information such as the time of day to generate a time stamp for the lancing event and the time between lancing events to anticipate the user's diurnal needs. The database stores information and statistics for each user and each profile that particular user uses.

In addition to varying the profiles, the processor **60** can be used to calculate the appropriate penetrating member diameter and geometry suitable to realize the blood volume required by the user. For example, if the user requires about 1-5 microliter volume of blood, the processor **60** may select a 200 micron diameter penetrating member to achieve these

results. For each class of lancet, both diameter and lancet tip geometry, is stored in the processor **60** to correspond with upper and lower limits of attainable blood volume based on the predetermined displacement and velocity profiles.

The lancing device is capable of prompting the user for information at the beginning and the end of the lancing event to more adequately suit the user. The goal is to either change to a different profile or modify an existing profile. Once the profile is set, the force driving the penetrating member is varied during advancement and retraction to follow the profile. The method of lancing using the lancing device comprises selecting a profile, lancing according to the selected profile, determining lancing profile traits for each characteristic phase of the lancing cycle, and optimizing profile traits for subsequent lancing events.

FIG. **4** illustrates an embodiment of a tissue penetration device, more specifically, a lancing device **80** that includes a controllable driver **179** coupled to a tissue penetration element. The lancing device **80** has a proximal end **81** and a distal end **82**. At the distal end **82** is the tissue penetration element in the form of a penetrating member **83**, which is coupled to an elongate coupler shaft **84** by a drive coupler **85**. The elongate coupler shaft **84** has a proximal end **86** and a distal end **87**. A driver coil pack **88** is disposed about the elongate coupler shaft **84** proximal of the penetrating member **83**. A position sensor **91** is disposed about a proximal portion **92** of the elongate coupler shaft **84** and an electrical conductor **94** electrically couples a processor **93** to the position sensor **91**. The elongate coupler shaft **84** driven by the driver coil pack **88** controlled by the position sensor **91** and processor **93** form the controllable driver, specifically, a controllable electromagnetic driver.

Referring to FIG. **5**, the lancing device **80** can be seen in more detail, in partial longitudinal section. The penetrating member **83** has a proximal end **95** and a distal end **96** with a sharpened point at the distal end **96** of the penetrating member **83** and a drive head **98** disposed at the proximal end **95** of the penetrating member **83**. A penetrating member shaft **201** is disposed between the drive head **98** and the sharpened point **97**. The penetrating member shaft **201** may be comprised of stainless steel, or any other suitable material or alloy and have a transverse dimension of about 0.1 to about 0.4 mm. The penetrating member shaft may have a length of about 3 mm to about 50 mm, specifically, about 15 mm to about 20 mm. The drive head **98** of the penetrating member **83** is an enlarged portion having a transverse dimension greater than a transverse dimension of the penetrating member shaft **201** distal of the drive head **98**. This configuration allows the drive head **98** to be mechanically captured by the drive coupler **85**. The drive head **98** may have a transverse dimension of about 0.5 to about 2 mm.

A magnetic member **102** is secured to the elongate coupler shaft **84** proximal of the drive coupler **85** on a distal portion **203** of the elongate coupler shaft **84**. The magnetic member **102** is a substantially cylindrical piece of magnetic material having an axial lumen **204** extending the length of the magnetic member **102**. The magnetic member **102** has an outer transverse dimension that allows the magnetic member **102** to slide easily within an axial lumen **105** of a low friction, possibly lubricious, polymer guide tube **105'** disposed within the driver coil pack **88**. The magnetic member **102** may have an outer transverse dimension of about 1.0 to about 5.0 mm, specifically, about 2.3 to about 2.5 mm. The magnetic member **102** may have a length of about 3.0 to about 5.0 mm, specifically, about 4.7 to about 4.9 mm. The magnetic member **102** can be made from a variety of magnetic materials including ferrous metals such as ferrous steel, iron, ferrite, or the like. The magnetic member **102** may be secured to the distal portion **203** of the elongate coupler shaft **84** by a variety of methods including adhesive or epoxy bonding, welding, crimping or any other suitable method.

Proximal of the magnetic member **102**, an optical encoder flag **206** is secured to the elongate coupler shaft **84**. The optical encoder flag **206** is configured to move within a slot **107** in the position sensor **91**. The slot **107** of the position sensor **91** is formed between a first body portion **108** and a second body portion **109** of the position sensor **91**. The slot **107** may have separation width of about 1.5 to about 2.0 mm. The optical encoder flag **206** can have a length of about 14 to about 18 mm, a width of about 3 to about 5 mm and a thickness of about 0.04 to about 0.06 mm.

The optical encoder flag **206** interacts with various optical beams generated by LEDs disposed on or in the position sensor body portions **108** and **109** in a predetermined manner. The interaction of the optical beams generated by the LEDs of the position sensor **91** generates a signal that indicates the longitudinal position of the optical flag **206** relative to the position sensor **91** with a substantially high degree of resolution. The resolution of the position sensor **91** may be about 200 to about 400 cycles per inch, specifically, about 350 to about 370 cycles per inch. The position sensor **91** may have a speed response time (position/time resolution) of 0 to about 120,000 Hz, where one dark and light stripe of the flag constitutes one Hertz, or cycle per second. The position of the optical encoder flag **206** relative to the magnetic member **102**, driver coil pack **88** and position sensor **91** is such that the optical encoder **91** can provide precise positional information about the penetrating member **83** over the entire length of the penetrating member's power stroke.

An optical encoder that is suitable for the position sensor **91** is a linear optical incremental encoder, model HEDS 9200, manufactured by Agilent Technologies. The model HEDS 9200 may have a length of about 20 to about 30 mm, a width of about 8 to about 12 mm, and a height of about 9 to about 11 mm. Although the position sensor **91** illustrated is a linear optical incremental encoder, other suitable position sensor embodiments could be used, provided they possess the requisite positional resolution and time response. The HEDS 9200 is a two channel device where the channels are 90 degrees out of phase with each other. This results in a resolution of four times the basic cycle of the flag. These quadrature outputs make it possible for the processor to determine the direction of penetrating member travel. Other suitable position sensors include capacitive encoders, analog reflective sensors, such as the reflective position sensor discussed above, and the like.

A coupler shaft guide **111** is disposed towards the proximal end **81** of the lancing device **80**. The guide **111** has a guide lumen **112** disposed in the guide **111** to slidingly accept the proximal portion **92** of the elongate coupler shaft **84**. The guide **111** keeps the elongate coupler shaft **84** centered horizontally and vertically in the slot **107** of the optical encoder **91**.

The driver coil pack **88**, position sensor **91** and coupler shaft guide **111** are all secured to a base **113**. The base **113** is longitudinally coextensive with the driver coil pack **88**, position sensor **91** and coupler shaft guide **111**. The base **113** can take the form of a rectangular piece of metal or polymer, or may be a more elaborate housing with recesses, which are configured to accept the various components of the lancing device **80**.

As discussed above, the magnetic member **102** is configured to slide within an axial lumen **105** of the driver coil pack **88**. The driver coil pack **88** includes a most distal first coil

114, a second coil **115**, which is axially disposed between the first coil **114** and a third coil **116**, and a proximal-most fourth coil **117**. Each of the first coil **114**, second coil **115**, third coil **116** and fourth coil **117** has an axial lumen. The axial lumens of the first through fourth coils are configured to be coaxial with the axial lumens of the other coils and together form the axial lumen **105** of the driver coil pack **88** as a whole. Axially adjacent each of the coils **114-117** is a magnetic disk or washer **118** that augments completion of the magnetic circuit of the coils **114-117** during a lancing cycle of the device **80**. The magnetic washers **118** of the embodiment of FIG. **5** are made of ferrous steel but could be made of any other suitable magnetic material, such as iron or ferrite. The outer shell **89** of the driver coil pack **88** is also made of iron or steel to complete the magnetic path around the coils and between the washers **118**. The magnetic washers **118** have an outer diameter commensurate with an outer diameter of the driver coil pack **88** of about 4.0 to about 8.0 mm. The magnetic washers **118** have an axial thickness of about 0.05, to about 0.4 mm, specifically, about 0.15 to about 0.25 mm.

Wrapping or winding an elongate electrical conductor **121** about an axial lumen until a sufficient number of windings have been achieved forms the coils **114-117**. The elongate electrical conductor **121** is generally an insulated solid copper wire with a small outer transverse dimension of about 0.06 mm to about 0.88 mm, specifically, about 0.3 mm to about 0.5 mm. In one embodiment, 32 gauge copper wire is used for the coils **114-117**. The number of windings for each of the coils **114-117** of the driver pack **88** may vary with the size of the coil, but for some embodiments each coil **114-117** may have about 30 to about 80 turns, specifically, about 50 to about 60 turns. Each coil **114-117** can have an axial length of about 1.0 to about 3.0 mm, specifically, about 1.8 to about 2.0 mm. Each coil **114-117** can have an outer transverse dimension or diameter of about 4.0, to about 2.0 mm, specifically, about 9.0 to about 12.0 mm. The axial lumen **105** can have a transverse dimension of about 1.0 to about 3.0 mm.

It may be advantageous in some driver coil **88** embodiments to replace one or more of the coils with permanent magnets, which produce a magnetic field similar to that of the coils when the coils are activated. In particular, it may be desirable in some embodiments to replace the second coil **115**, the third coil **116** or both with permanent magnets. In addition, it may be advantageous to position a permanent magnet at or near the proximal end of the coil driver pack in order to provide fixed magnet zeroing function for the magnetic member (Adams magnetic Products 23A0002 flexible magnet material (800) 747-7543).

A permanent bar magnet **119** is disposed on the proximal end of the driver coil pack **88**. As shown in FIG. **5**, the bar magnet **119** is arranged so as to have one end disposed adjacent the travel path of the magnetic member **102** and has a polarity configured so as to attract the magnetic member **102** in a centered position with respect to the bar magnet **119**. Note that the polymer guide tube **105'** can be configured to extend proximally to insulate the inward radial surface of the bar magnet **119** from an outer surface of the magnetic member **102**. This arrangement allows the magnetic member **119** and thus the elongate coupler shaft **84** to be attracted to and held in a zero point or rest position without the consumption of electrical energy from the power supply **125**.

Having a fixed zero or start point for the elongate coupler shaft **84** and penetrating member **83** may be useful to properly controlling the depth of penetration of the penetrating member **83** as well as other lancing parameters. This can be because some methods of depth penetration control for a controllable driver measure the acceleration and displacement of the elongate coupler shaft **84** and penetrating member **83** from a known start position. If the distance of the penetrating member tip **96** from the target tissue is known, acceleration and displacement of the penetrating member is known and the start position of the penetrating member is know, the time and position of tissue contact and depth of penetration can be determined by the processor **93**.

Any number of configurations for a magnetic bar **119** can be used for the purposes discussed above. In particular, a second permanent bar magnet (not shown) could be added to the proximal end of the driver coil pack **88** with the magnetic fields of the two bar magnets configured to complement each other. In addition, a disc magnet could be used as illustrated in FIG. **23***a*. The disc magnet is shown disposed at the proximal end of the driver coiled pack **88** with a polymer non-magnetic disc disposed between the proximal-most coil **117** and the disc magnet and positions the disc magnet away from the proximal end of the proximal-most coil **117**. The polymer non-magnetic disc spacer is used so that the magnetic member **102** can be centered in a zero or start position slightly proximal of the proximal-most coil **117** of the driver coil pack **88**. This allows the magnetic member to be attracted by the proximal-most coil **117** at the initiation of the lancing cycle instead of being passive in the forward drive portion of the lancing cycle.

An inner lumen of the polymer non-magnetic disc can be configured to allow the magnetic member **102** to pass axially there through while an inner lumen of the disc magnet can be configured to allow the elongate coupler shaft **84** to pass through but not large enough for the magnetic member **102** to pass through. This results in the magnetic member **102** being attracted to the disc magnet and coming to rest with the proximal surface of the magnetic member **102** against a distal surface of the disc magnet. This arrangement provides for a positive and repeatable stop for the magnetic member, and hence the penetrating member.

Typically, when the electrical current in the coils **114-117** of the driver coil pack **88** is off, a magnetic member **102** made of soft iron is attracted to the bar magnet **119** or the disc magnet. The magnetic field of the driver coil pack **88** and the bar magnet **119** or the disc magnet, or any other suitable magnet, can be configured such that when the electrical current in the coils **114-117** is turned on, the leakage magnetic field from the coils **114-117** has the same polarity as the bar magnet **119** or the disc magnet. This results in a magnetic force that repels the magnetic member **102** from the bar magnet **119** or the disc magnet and attracts the magnetic member **102** to the activated coils **114-117**. For this configuration, the bar magnet **119** or disc magnet thus act to facilitate acceleration of the magnetic member **102** as opposed to working against the acceleration.

Electrical conductors **122** couple the driver coil pack **88** with the processor **93** which can be configured or programmed to control the current flow in the coils **114-117** of the driver coil pack **88** based on position feedback from the position sensor **91**, which is coupled to the processor **93** by electrical conductors **94**. A power source **125** is electrically coupled to the processor **93** and provides electrical power to operate the processor **93** and power the coil driver pack **88**. The power source **125** may be one or more batteries that provide direct current power to the **93** processor.

Referring to FIGS. **6**A-**6**C, a flow diagram is shown that describes the operations performed by the processor **93** in controlling the penetrating member **83** of the lancing device **80** discussed above during an operating cycle. FIGS. **7-13** illustrate the interaction of the penetrating member **83** and skin **133** of the patient's finger **134** during an operation cycle

of the penetrating member device **83**. The processor **93** operates under control of programming steps that are stored in an associated memory. When the programming steps are executed, the processor **93** performs operations as described herein. Thus, the programming steps implement the functionality of the operations described with respect to the flow diagrams of FIG. **6**. The processor **93** can receive the programming steps from a program product stored in recordable media, including a direct access program product storage device such as a hard drive or flash ROM, a removable program product storage device such as a floppy disk, or in any other manner known to those of skill in the art. The processor **93** can also download the programming steps through a network connection or serial connection.

In the first operation, represented by the flow diagram box numbered **245** in FIG. **6**A, the processor **93** initializes values that it stores in memory relating to control of the penetrating member, such as variables that it uses to keep track of the controllable driver **179** during movement. For example, the processor may set a clock value to zero and a penetrating member position value to zero or to some other initial value. The processor **93** may also cause power to be removed from the coil pack **88** for a period of time, such as for about 10 ms, to allow any residual flux to dissipate from the coils.

In the initialization operation, the processor **93** also causes the penetrating member to assume an initial stationary position. When in the initial stationary position, the penetrating member **83** is typically fully retracted such that the magnetic member **102** is positioned substantially adjacent the fourth coil **117** of the driver coil pack **88**, shown in FIG. **5** above. The processor **93** can move the penetrating member **83** to the initial stationary position by pulsing an electrical current to the fourth coil **117** to thereby attract the magnetic member **102** on the penetrating member **83** to the fourth coil **117**. Alternatively, the magnetic member can be positioned in the initial stationary position by virtue of a permanent magnet, such as bar magnet **119**, disc magnet **119'** or any other suitable magnet as discussed above with regard to the tissue penetration device illustrated in FIGS. **4**, **5** and **23**(*a*).

In the next operation, represented by the flow diagram box numbered **247**, the processor **93** energizes one or more of the coils in the coil pack **88**. This should cause the penetrating member **83** to begin to move (i.e., achieve a non-zero speed) toward the skin target **133**. The processor **93** then determines whether or not the penetrating member is indeed moving. The processor **93** can determine whether the penetrating member **83** is moving by monitoring the position of the penetrating member **83** to determine whether the position changes over time. The processor **93** can monitor the position of the penetrating member **83** by keeping track of the position of the optical encoder flag **106** secured to the elongate coupler shaft **84** wherein the encoder **91** produces a signal coupled to the processor **93** that indicates the spatial position of the penetrating member **83**.

If the processor **93** determines (via timeout without motion events) that the penetrating member **83** is not moving, then the process proceeds to the operation, where the processor deems that an error condition is present. This means that some error in the system is causing the penetrating member **83** not to move. The error may be mechanical, electrical, or software related. For example, the penetrating member **83** may be stuck in the stationary position because something is impeding its movement.

If the processor **93** determines that the penetrating member **83** is indeed moving (a "Yes" result from the decision box numbered **249**), then the process proceeds to the operation represented by the flow diagram box numbered **257**. In this operation, the processor **93** causes the penetrating member **83** to continue to accelerate and launch toward the skin target **133**, as indicated by the arrow **135** in FIG. **7**. The processor **93** can achieve acceleration of the penetrating member **83** by sending an electrical current to an appropriate coil **114-117** such that the coil **114-117** exerts an attractive magnetic launching force on the magnetic member **102** and causes the magnetic member **102** and the penetrating member **83** coupled thereto to move in a desired direction. For example, the processor **93** can cause an electrical current to be sent to the third coil **116** so that the third coil **116** attracts the magnetic member **102** and causes the magnetic member **102** to move from a position adjacent the fourth coil **117** toward the third coil **116**. The processor preferably determines which coil **114-117** should be used to attract the magnetic member **102** based on the position of the magnetic member **102** relative to the coils **114-117**. In this manner, the processor **93** provides a controlled force to the penetrating member that controls the movement of the penetrating member.

During this operation, the processor **93** periodically or continually monitors the position and/or velocity of the penetrating member **83**. In keeping track of the velocity and position of the penetrating member **83** as the penetrating member **83** moves towards the patient's skin **133** or other tissue, the processor **93** also monitors and adjusts the electrical current to the coils **114-117**. In some embodiments, the processor **93** applies current to an appropriate coil **114-117** such that the penetrating member **83** continues to move according to a desired direction and acceleration. In the instant case, the processor **93** applies current to the appropriate coil **114-117** that will cause the penetrating member **83** to continue to move in the direction of the patient's skin **133** or other tissue to be penetrated.

The processor **93** may successively transition the current between coils **114-117** so that as the magnetic member **102** moves past a particular coil **114-117**, the processor **93** then shuts off current to that coil **114-117** and then applies current to another coil **114-117** that will attract the magnetic member **102** and cause the magnetic member **102** to continue to move in the desired direction. In transitioning current between the coils **114-117**, the processor **93** can take into account various factors, including the speed of the penetrating member **83**, the position of the penetrating member **83** relative to the coils **114-117**, the number of coils **114-117**, and the level of current to be applied to the coils **114-117** to achieve a desired speed or acceleration.

In the next operation, the processor **93** determines whether the cutting or distal end tip **96** of the penetrating member **83** has contacted the patient's skin **133**, as shown in FIG. **8** and as represented by the decision box numbered **165** in FIG. **6**B. The processor **93** may determine whether the penetrating member **83** has made contact with the target tissue **133** by a variety of methods, including some that rely on parameters which are measured prior to initiation of a lancing cycle and other methods that are adaptable to use during a lancing cycle without any predetermined parameters.

In one embodiment, the processor **93** determines that the skin has been contacted when the end tip **96** of the penetrating member **83** has moved a predetermined distance with respect to its initial position. If the distance from the tip **96** of the penetrating member **83** to the target tissue **133** is known prior to initiation of penetrating member **83** movement, the initial position of the penetrating member **83** is fixed and known, and the movement and position of the penetrating member **83** can be accurately measured during a lancing cycle, then the position and time of penetrating member contact can be determined.

This method requires an accurate measurement of the distance between the penetrating member tip **96** and the patient's skin **133** when the penetrating member **83** is in the zero time or initial position. This can be accomplished in a number of ways. One way is to control all of the mechanical parameters that influence the distance from the penetrating member tip **96** to the patient's tissue or a surface of the lancing device **80** that will contact the patient's skin **133**. This could include the start position of the magnetic member **102**, magnetic path tolerance, magnetic member **102** dimensions, driver coil pack **88** location within the lancing device **80** as a whole, length of the elongate coupling shaft **84**, placement of the magnetic member **102** on the elongate coupling shaft **84**, length of the penetrating member **83** etc.

If all these parameters, as well as others can be suitably controlled in manufacturing with a tolerance stack-up that is acceptable, then the distance from the penetrating member tip **96** to the target tissue **133** can be determined at the time of manufacture of the lancing device **80**. The distance could then be programmed into the memory of the processor **93**. If an adjustable feature is added to the lancing device **80**, such as an adjustable length elongate coupling shaft **84**, this can accommodate variations in all of the parameters noted above, except length of the penetrating member **83**. An electronic alternative to this mechanical approach would be to calibrate a stored memory contact point into the memory of the processor **93** during manufacture based on the mechanical parameters described above.

In another embodiment, moving the penetrating member tip **96** to the target tissue **133** very slowly and gently touching the skin **133** prior to actuation can accomplish the distance from the penetrating member tip **96** to the tissue **133**. The position sensor can accurately measure the distance from the initialization point to the point of contact, where the resistance to advancement of the penetrating member **83** stops the penetrating member movement. The penetrating member **83** is then retracted to the initialization point having measured the distance to the target tissue **133** without creating any discomfort to the user.

In another embodiment, the processor **93** may use software to determine whether the penetrating member **83** has made contact with the patient's skin **133** by measuring for a sudden reduction in velocity of the penetrating member **83** due to friction or resistance imposed on the penetrating member **83** by the patient's skin **133**. The optical encoder **91** measures displacement of the penetrating member **83**. The position output data provides input to the interrupt input of the processor **93**. The processor **93** also has a timer capable of measuring the time between interrupts. The distance between interrupts is known for the optical encoder **91**, so the velocity of the penetrating member **83** can be calculated by dividing the distance between interrupts by the time between the interrupts.

This method requires that velocity losses to the penetrating member **83** and elongate coupler **84** assembly due to friction are known to an acceptable level so that these velocity losses and resulting deceleration can be accounted for when establishing a deceleration threshold above which contact between penetrating member tip **96** and target tissue **133** will be presumed. This same concept can be implemented in many ways. For example, rather than monitoring the velocity of the penetrating member **83**, if the processor **93** is controlling the penetrating member driver in order to maintain a fixed velocity, the power to the driver **88** could be monitored. If an amount of power above a predetermined threshold is required in order to maintain a constant velocity, then contact between the tip of the penetrating member **96** and the skin **133** could be presumed.

In yet another embodiment, the processor **93** determines skin **133** contact by the penetrating member **83** by detection of an acoustic signal produced by the tip **96** of the penetrating member **83** as it strikes the patient's skin **133**. Detection of the acoustic signal can be measured by an acoustic detector **136** placed in contact with the patient's skin **133** adjacent a penetrating member penetration site **137**, as shown in FIG. **8**. Suitable acoustic detectors **136** include piezo electric transducers, microphones and the like. The acoustic detector **136** transmits an electrical signal generated by the acoustic signal to the processor **93** via electrical conductors **138**. In another embodiment, contact of the penetrating member **83** with the patient's skin **133** can be determined by measurement of electrical continuity in a circuit that includes the penetrating member **83**, the patient's finger **134** and an electrical contact pad **240** that is disposed on the patient's skin **133** adjacent the contact site **137** of the penetrating member **83**, as shown in FIG. **8**. In this embodiment, as soon as the penetrating member **83** contacts the patient's skin **133**, the circuit **139** is completed and current flows through the circuit **139**. Completion of the circuit **139** can then be detected by the processor **93** to confirm skin **133** contact by the penetrating member **83**.

If the penetrating member **83** has not contacted the target skin **133**, then the process proceeds to a timeout operation, in FIG. **6**B. In the timeout operation, the processor **93** waits a predetermined time period. If the timeout period has not yet elapsed, then the processor continues to monitor whether the penetrating member has contacted the target skin **133**. The processor **93** preferably continues to monitor the position and speed of the penetrating member **83**, as well as the electrical current to the appropriate coil **114-117** to maintain the desired penetrating member **83** movement.

If the timeout period elapses without the penetrating member **83** contacting the skin, then it is deemed that the penetrating member **83** will not contact the skin and the process proceeds to a withdraw phase, where the penetrating member is withdrawn away from the skin **133**, as discussed more fully below. The penetrating member **83** may not have contacted the target skin **133** for a variety of reasons, such as if the patient removed the skin **133** from the lancing device or if something obstructed the penetrating member **83** prior to it contacting the skin.

The processor **93** may also proceed to the withdraw phase prior to skin contact for other reasons. For example, at some point after initiation of movement of the penetrating member **83**, the processor **93** may determine that the forward acceleration of the penetrating member **83** towards the patient's skin **133** should be stopped or that current to all coils **114-117** should be shut down. This can occur, for example, if it is determined that the penetrating member **83** has achieved sufficient forward velocity, but has not yet contacted the skin **133**. In one embodiment, the average penetration velocity of the penetrating member **83** from the point of contact with the skin to the point of maximum penetration may be about 2.0 to about 10.0 m/s, specifically, about 3.8 to about 4.2 m/s. In another embodiment, the average penetration velocity of the penetrating member may be from about 2 to about 8 meters per second, specifically, about 2 to about 4 m/s.

The processor **93** can also proceed to the withdraw phase if it is determined that the penetrating member **83** has fully extended to the end of the power stroke of the operation cycle of lancing procedure. In other words, the process may proceed to withdraw phase when an axial center **141** of the magnetic member **102** has moved distal of an axial center **142**

of the first coil **114** as show in FIG. **5**. In this situation, any continued power to any of the coils **114-117** of the driver coil pack **88** serves to decelerate the magnetic member **102** and thus the penetrating member **83**. In this regard, the processor **93** considers the length of the penetrating member **83** (which can be stored in memory) the position of the penetrating member **83** relative to the magnetic member **102**, as well as the distance that the penetrating member **83** has traveled.

With reference again to FIG. **6**B, if the processor **93** determines that the penetrating member **83** has contacted the skin **133** then the processor **93** can adjust the speed of the penetrating member **83** or the power delivered to the penetrating member **83** for skin penetration to overcome any frictional forces on the penetrating member **83** in order to maintain a desired penetration velocity of the penetrating member.

As the velocity of the penetrating member **83** is maintained after contact with the skin **133**, the distal tip **96** of the penetrating member **83** will first begin to depress or tent the contacted skin **137** and the skin **133** adjacent the penetrating member **83** to form a tented portion **143** as shown in FIG. **9** and further shown in FIG. **10**. As the penetrating member **83** continues to move in a distal direction or be driven in a distal direction against the patient's skin **133**, the penetrating member **83** will eventually begin to penetrate the skin **133**, as shown in FIG. **11**. Once penetration of the skin **133** begins, the static force at the distal tip **96** of the penetrating member **83** from the skin **133** will become a dynamic cutting force, which is generally less than the static tip force. As a result in the reduction of force on the distal tip **96** of the penetrating member **83** upon initiation of cutting, the tented portion **143** of the skin **133** adjacent the distal tip **96** of the penetrating member **83** which had been depressed as shown in FIGS. **9** and **10** will spring back as shown in FIG. **11**.

In the next operation, represented by the decision box numbered **171** in FIG. **6**B, the processor **93** determines whether the distal end **96** of the penetrating member **83** has reached a brake depth. The brake depth is the skin penetration depth for which the processor **93** determines that deceleration of the penetrating member **83** is to be initiated in order to achieve a desired final penetration depth **144** of the penetrating member **83** as show in FIG. **12**. The brake depth may be pre-determined and programmed into the processor's memory, or the processor **93** may dynamically determine the brake depth during the actuation. The amount of penetration of the penetrating member **83** in the skin **133** of the patient may be measured during the operation cycle of the penetrating member device **80**. In addition, as discussed above, the penetration depth suitable for successfully obtaining a useable sample can depend on the amount of tenting of the skin **133** during the lancing cycle. The amount of tenting of the patient's skin **133** can in turn depend on the tissue characteristics of the patient such as elasticity, hydration etc. A method for determining these characteristics is discussed below with regard to skin **133** tenting measurements during the lancing cycle and illustrated in FIGS. **14-18**.

Penetration measurement can be carried out by a variety of methods that are not dependent on measurement of tenting of the patient's skin. In one embodiment, the penetration depth of the penetrating member **83** in the patient's skin **133** is measured by monitoring the amount of capacitance between the penetrating member **83** and the patient's skin **133**. In this embodiment, a circuit includes the penetrating member **83**, the patient's finger **134**, the processor **93** and electrical conductors connecting these elements. As the penetrating member **83** penetrates the patient's skin **133**, the greater the amount of penetration, the greater the surface contact area between the penetrating member **83** and the patient's skin **133**. As the contact area increases, so does the capacitance between the skin **133** and the penetrating member **83**. The increased capacitance can be easily measured by the processor **93** using methods known in the art and penetration depth can then be correlated to the amount of capacitance. The same method can be used by measuring the electrical resistance between the penetrating member **83** and the patient's skin.

If the brake depth has not yet been reached, then a "No" results from the decision box **171** and the process proceeds to the timeout operation represented by the flow diagram box numbered **173**. In the timeout operation, the processor **93** waits a predetermined time period. If the timeout period has not yet elapsed (a "No" outcome from the decision box **173**), then the processor continues to monitor whether the brake depth has been reached. If the timeout period elapses without the penetrating member **83** achieving the brake depth (a "Yes" output from the decision box **173**), then the processor **93** deems that the penetrating member **83** will not reach the brake depth and the process proceeds to the withdraw phase, which is discussed more fully below. This may occur, for example, if the penetrating member **83** is stuck at a certain depth.

With reference again to the decision box numbered **171** in FIG. **6**B, if the penetrating member does reach the brake depth (a "Yes" result), then the process proceeds to the operation represented by the flow diagram box numbered **275**. In this operation, the processor **93** causes a braking force to be applied to the penetrating member to thereby reduce the speed of the penetrating member **83** to achieve a desired amount of final skin penetration depth **144**, as shown in FIG. **12**. Note that FIGS. **9** and **10** illustrate the penetrating member making contact with the patient's skin and deforming or depressing the skin prior to any substantial penetration of the skin. The speed of the penetrating member **83** is preferably reduced to a value below a desired threshold and is ultimately reduced to zero. The processor **93** can reduce the speed of the penetrating member **83** by causing a current to be sent to a **114-117** coil that will exert an attractive braking force on the magnetic member **102** in a proximal direction away from the patient's tissue or skin **133**, as indicated by the arrow **190** in FIG. **13**. Such a negative force reduces the forward or distally oriented speed of the penetrating member **83**. The processor **93** can determine which coil **114-117** to energize based upon the position of the magnetic member **102** with respect to the coils **114-117** of the driver coil pack **88**, as indicated by the position sensor **91**.

In the next operation, the process proceeds to the withdraw phase, as represented by the flow diagram box numbered **177**. The withdraw phase begins with the operation represented by the flow diagram box numbered **178** in FIG. **6**C. Here, the processor **93** allows the penetrating member **83** to settle at a position of maximum skin penetration **144**, as shown in FIG. **12**. In this regard, the processor **93** waits until any motion in the penetrating member **83** (due to vibration from impact and spring energy stored in the skin, etc.) has stopped by monitoring changes in position of the penetrating member **83**. The processor **93** preferably waits until several milliseconds (ms), such as on the order of about 8 ms, have passed with no changes in position of the penetrating member **83**. This is an indication that movement of the penetrating member **83** has ceased entirely. In some embodiments, the penetrating member may be allowed to settle for about 1 to about 2000 milliseconds, specifically, about 50 to about 200 milliseconds. For other embodiments, the settling time may be about 1 to about 200 milliseconds.

It is at this stage of the lancing cycle that a software method can be used to measure the amount of tenting of the patient's skin **133** and thus determine the skin **133** characteristics such

as elasticity, hydration and others. Referring to FIGS. **14-18**, a penetrating member **83** is illustrated in various phases of a lancing cycle with target tissue **133**. FIG. **14** shows tip **96** of penetrating member **83** making initial contact with the skin **133** at the point of initial impact.

FIG. **15** illustrates an enlarged view of the penetrating member **83** making initial contact with the tissue **133** shown in FIG. **14**. In FIG. **16**, the penetrating member tip **96** has depressed or tented the skin **133** prior to penetration over a distance of X, as indicated by the arrow labeled X in FIG. **16**. In FIG. **17**, the penetrating member **83** has reached the full length of the cutting power stroke and is at maximum displacement. In this position, the penetrating member tip **96** has penetrated the tissue **133** a distance of Y, as indicated by the arrow labeled Y in FIG. **16**. As can be seen from comparing FIG. **15** with FIG. **17**, the penetrating member tip **96** was displaced a total distance of X plus Y from the time initial contact with the skin **133** was made to the time the penetrating member tip **96** reached its maximum extension as shown in FIG. **17**. However, the penetrating member tip **96** has only penetrated the skin **133** a distance Y because of the tenting phenomenon.

At the end of the power stroke of the penetrating member **83**, as discussed above with regard to box **178** of FIG. **6**C, the processor **93** allows the penetrating member to settle for about 8 msec. It is during this settling time that the skin **133** rebounds or relaxes back to approximately its original configuration prior to contact by the penetrating member **83** as shown in FIG. **18**. The penetrating member tip **96** is still buried in the skin to a depth of Y, as shown in FIG. **18**, however the elastic recoil of the tissue has displaced the penetrating member rearward or retrograde to the point of inelastic tenting that is indicated by the arrows Z in FIG. **18**. During the rearward displacement of the penetrating member **83** due to the elastic tenting of the tissue **133**, the processor reads and stores the position data generated by the position sensor **91** and thus measures the amount of elastic tenting, which is the difference between X and z.

Referring to FIG. **19**, a tissue penetration sampling device **80** is shown with the controllable driver **179** of FIG. **4** coupled to a sampling module cartridge **205** and disposed within a driver housing **206**. A ratchet drive mechanism **207** is secured to the driver housing **206**, coupled to the sampling module cartridge **205** and configured to advance a sampling module belt **208** within the sampling module cartridge **205** so as to allow sequential use of each sampling module **209** in the sampling module belt **208**. The ratchet drive mechanism **207** has a drive wheel **211** configured to engage the sampling modules **209** of the sampling module belt **208**. The drive wheel **211** is coupled to an actuation lever **212** that advances the drive wheel **211** in increments of the width of a single sampling module **209**. A T-slot drive coupler **213** is secured to the elongated coupler shaft **84**.

A sampling module **209** is loaded and ready for use with the drive head **98** of the penetrating member **83** of the sampling module **209** loaded in the T-slot **214** of the drive coupler **213**. A sampling site **215** is disposed at the distal end **216** of the sampling module **209** disposed about a penetrating member exit port **217**. The distal end **216** of the sampling module **209** is exposed in a module window **218**, which is an opening in a cartridge cover **221** of the sampling module cartridge **205**. This allows the distal end **216** of the sampling module **209** loaded for use to be exposed to avoid contamination of the cartridge cover **221** with blood from the lancing process.

A reader module **222** is disposed over a distal portion of the sampling module **209** that is loaded in the drive coupler **213** for use and has two contact brushes **224** that are configured to align and make electrical contact with analyte detecting member contacts **225** of the sampling module **209** as shown in FIG. **25**. With electrical contact between the analyte detecting member contacts **225** and contact brushes **224**, the processor **93** of the controllable driver **179** can read a signal from an analytical region **226** of the sampling module **209** after a lancing cycle is complete and a blood sample enters the analytical region **226** of the sampling module **209**. The contact brushes **224** can have any suitable configuration that will allow the sampling module belt **208** to pass laterally beneath the contact brushes **224** and reliably make electrical contact with the sampling module **209** loaded in the drive coupler **213** and ready for use. A spring loaded conductive ball bearing is one example of a contact brush **224** that could be used. A resilient conductive strip shaped to press against the inside surface of the flexible polymer sheet **227** along the analyte detecting member region **228** of the sampling module **209** is another embodiment of a contact brush **224**.

The sampling module cartridge **205** has a supply canister **229** and a receptacle canister **230**. The unused sampling modules of the sampling module belt **208** are disposed within the supply canister **229** and the sampling modules of the sampling module belt **208** that have been used are advanced serially after use into the receptacle canister **230**.

FIG. **20** illustrates a further embodiment of sampling module cartridges. FIG. **20** shows a sampling module cartridge **202** in a carousel configuration with adjacent sampling modules **294** connected rigidly and with analyte detecting members **296** from the analytical regions of the various sampling modules **294** disposed near an inner radius **298** of the carousel. The sampling modules **294** of the sampling module cartridge **202** are advanced through a drive coupler **293** but in a circular as opposed to a linear fashion.

FIG. **21** shows an exploded view in perspective of the cartridge **245**, which has a proximal end portion **254** and a distal end portion **255**. The penetrating member cartridge body **246** is disposed at the proximal end portion **254** of the cartridge **245** and has a plurality of penetrating member module portions **250**, such as the penetrating member module portion **25**. Each penetrating member module portion **250** has a penetrating member channel **251** with a penetrating member **83** slidably disposed within the penetrating member channel **251**. The penetrating member channels **251** are substantially parallel to the longitudinal axis **252** of the penetrating member cartridge body **246**. The penetrating members **83** shown have a drive head **98**, shaft portion **201** and sharpened tip **96**. The drive head **98** of the penetrating members are configured to couple to a drive coupler (not shown), such as the drive coupler **85** discussed above.

The penetrating members **83** are free to slide in the respective penetrating member channels **251** and are nominally disposed with the sharpened tip **96** withdrawn into the penetrating member channel **251** to protect the tip **96** and allow relative rotational motion between the penetrating member cartridge body **246** and the sampling cartridge body **247** as shown by arrow **256** and arrow **257** in FIG. **21**. The radial center of each penetrating member channel **251** is disposed a fixed, known radial distance from the longitudinal axis **252** of the penetrating member cartridge body **246** and a longitudinal axis **258** of the cartridge **245**. By disposing each penetrating member channel **251** a fixed known radial distance from the longitudinal axes **252** and **258** of the penetrating member cartridge body **246** and cartridge **245**, the penetrating member channels **251** can then be readily and repeatably aligned in a functional arrangement with penetrating member channels **253** of the sampling cartridge body **247**. The penetrating member cartridge body **246** rotates about a removable pivot

shaft **259** which has a longitudinal axis **260** that is coaxial with the longitudinal axes **252** and **250** of the penetrating member cartridge body **246** and cartridge **245**.

The sampling cartridge body **247** is disposed at the distal end portion **255** of the cartridge and has a plurality of sampling module portions **248** disposed radially about the longitudinal axis **249** of the sampling cartridge body **247**. The longitudinal axis **249** of the sampling cartridge body **247** is coaxial with the longitudinal axes **252**, **258** and **260** of the penetrating member cartridge body **246**, cartridge **245** and pivot shaft **259**. The sampling cartridge body **247** may also rotate about the pivot shaft **259**. In order to achieve precise relative motion between the penetrating member cartridge body **246** and the sampling cartridge body **247**, one or both of the cartridge bodies **246** and **247** may be rotatable about the pivot shaft **259**, however, it is not necessary for both to be rotatable about the pivot shaft **259**, that is, one of the cartridge bodies **246** and **247** may be secured, permanently or removably, to the pivot shaft **259**.

The sampling cartridge body **247** includes a base **261** and a cover sheet **262** that covers a proximal surface **263** of the base forming a fluid tight seal. Each sampling module portion **248** of the sampling cartridge body **247**, such as the sampling module portion **248**, has a sample reservoir **264** and a penetrating member channel **253**. The sample reservoir **264** has a vent **965** at an outward radial end that allows the sample reservoir **264** to readily fill with a fluid sample. The sample reservoir **264** is in fluid communication with the respective penetrating member channel **253** which extends substantially parallel to the longitudinal axis **249** of the sampling cartridge body **247**. The penetrating member channel **253** is disposed at the inward radial end of the sample reservoir **264**. Still further description of the device of FIG. **21** may be found in commonly assigned, U.S. patent application Ser. No. 10/127,395 filed Apr. 19, 2002.

Referring to FIG. **22**A, one embodiment of the present invention is a tissue penetrating system **310** with a plurality of penetrating members **312** that each have a tissue penetrating tip **314**. The number of penetrating members **312** can vary, but numbers in the ranges of 10, 15, 25, 50, 75, 100, 500 or any other number, are suitable. Each penetrating member **312** can be a lancet, a traditional lancet with a molded body, a needle with a lumen, a knife like element, an elongate member without molded attachments, and the like, and may have a size in the range of 20 mm to 10 mm in length and between 0.012-0.040 mm in diameter. It should be understood of course that penetrating members of a variety of different sizes useful for lancing such as those of conventional lancets may be used in other embodiments. As seen in FIG. **22**A, the penetrating member may have an elongate portion with a bend near a proximal end of the member.

Each penetrating member **312** is coupled to a penetrating member driver **316**. Suitable penetrating member drivers **316** include but are not limited to, an electric drive force member, a voice coil drive force generator, a linear voice coil device, a rotary voice coil device, and the like. Suitable drive force generators can be found in commonly assigned, U.S. patent application Ser. No. 10/127,395 filed Apr. 19, 2002. In one embodiment, the penetrating member driver or drive force generator **316** may be a single actuator used to advance the penetrating member and to withdraw the member. The driver **316** may also be used to stop the penetrating member in the tissue site. Penetrating member driver **316** can be a non-spring actuator for drawing penetrating member **312** in a direction back towards penetrating member driver **316**. A coupler **318** on penetrating member driver **316** is configured to engage at least a portion of an elongate portion of a penetrating member **312** in order to drive the penetrating member **312** along a path into and through target tissue **320**, and then withdrawn from target tissue **320**.

Referring now to FIG. **22**B, the tips of the penetrating members **312** can be uncovered when they are launched into a selected target tissue **320**. In one embodiment, sterility enclosures **322** are provided for covering at least the tip of each penetrating member **312**. FIG. **22**B shows that the enclosure may also cover the entire lancet. In one embodiment, each sterility enclosure **322** is removed from the penetrating member **312** prior to actuation, launch, of penetrating member **312** and positioned so that penetrating member **312** does not contact the associated sterility enclosure **322** during actuation. As seen in FIG. **22**B, the enclosure **322** may be peel away to reveal the penetrating member **312** prior to coupling of the member **312** to the drive force generator **316**. In another embodiment, each penetrating member **312** breaches its associated sterility enclosure **322** during launch.

Tissue penetrating system **310** can also include one or more penetrating member sensors **324** that are coupled to penetrating members **312**. Examples of suitable penetrating member sensors **324** include but are not limited to, a capacitive incremental encoder, an incremental encoder, an optical encoder, an interference encoder, and the like. Each penetrating member sensor **324** is configured to provide information relative to a depth of penetration of a penetrating member **312** through a target tissue **320** surface, including but not limited to a skin surface, and the like. The penetrating member sensor **324** may be positioned as shown in FIG. **22**B. The penetrating member sensor **324** may also be positioned in a variety of location such as but not limited to being closer to the distal end of the penetrating member, in a position as shown in FIG. **5**, or in any other location useful for providing an indication of the position of a penetrating member **312** being driven by the force generator **316**.

In various embodiments, the penetration depth of a penetrating member **312** through the surface of a target tissue **320** can be, 100 to 2500 microns, 500 to 750 microns, and the like. Each penetrating member sensor **324** can also provide an indication of velocity of a penetrating member **312**. Referring to FIG. **22**C, a damper **326** can be coupled to penetrating member driver **316**. Damper **326** prevents multiple oscillations of penetrating member **312** in target tissue **320**, particularly after penetrating member **312** has reached a desired depth of penetration. The damper **326** may be placed in a variety of positions such as but not limited to being coupled to the penetrating member, being coupled to the coupler **318**, being coupled to a core or shaft in the drive force generator **316**, or at any other position useful for slowing the motion of the penetrating member **312**.

A feedback loop **328** can also be included that is coupled to penetrating member sensor **324**. Each penetrating member **312** sensor can be coupled to a processor **330** that has control instructions for penetrating member driver **316**. By way of illustration, and without limitation, processor **330** can include a memory for storage and retrieval of a set of penetrating member **312** profiles utilized with penetrating member driver **316**. Processor **330** can also be utilized to monitor position and speed of a penetrating member **312** as it moves in first direction **332** to and through the target tissue **32**

Processor **330** can adjust an application of force to a penetrating member **312** in order to achieve a desired speed of a penetrating member **312**. Additionally, processor **330** can also be used to adjust an application of force applied to a penetrating member **312** when penetrating member **312** contacts target tissue **320** so that penetrating member **312** penetrates target tissue **320** within a desired range of speed.

Further, processor **330** can also monitor position and speed of a penetrating member **312** as penetrating member **312** moves in first direction **332** toward the target tissue **320**. Application of a launching force to penetrating member **312** can be controlled based on position and speed of penetrating member **312**. Processor **330** can control a withdraw force, from target tissue **320**, to penetrating member **312** so that penetrating member **312** moves in second direction **334** away from target tissue **320**.

Processor **330** can produce a signal that is indicative of a change in direction and magnitude of force exerted on penetrating member **312**. Additionally, processor **330** can cause a braking force to be applied to penetrating member **312**.

In one embodiment, in first direction **332** penetrating member **312** moves toward target tissue **320** at a speed that is different than a speed at which penetrating member **312** moves away from target tissue **320** in second direction **334**. In one embodiment, the speed of penetrating member **312** in first direction **332** is greater than the speed of penetrating member **312** in second direction **334**. The speed of penetrating member **312** in first direction **332** can be a variety of different ranges including but not limited to, 0.05 to 60 m/sec, 0.1 to 20.0 m/sec, 1.0 to 10.0 m/sec, 3.0 to 8.0 m/sec, and the like. Additionally, the dwell time of penetrating member **312** in target tissue **320**, below a surface of the skin or other structure, can be in the range of, 1 microsecond to 2 seconds, 500 milliseconds to 1.5 second, 100 milliseconds to 1 second, and the like.

As seen in FIGS. **22**A and **22**B, tissue penetrating system **310** can include a penetrating member transport device **336** for moving each of penetrating member **312** into a position for alignment with penetrating member driver **316**. Penetrating members **312** can be arranged in an array configuration by a number of different devices and structures defining support **338**, including but not limited to, a belt, a flexible or non-flexible tape device, support channel, cog, a plurality of connectors, and the like. Support **338** can have a plurality of openings each receiving a penetrating member **312**. Suitable supports **338** may also include but are not limited to, a bandolier, drum, disc and the like. A description of supports **338** can be found in commonly assigned, U.S. patent application Ser. No. 10/127,395 filed Apr. 19, 2002; commonly assigned, U.S. Provisional Patent Application Ser. No. 60/437,359 filed Dec. 31, 2002; and commonly assigned, U.S. Provisional Patent Application Ser. No. 60/437,205 filed Dec. 31, 2002. All applications listed above are fully incorporated herein by reference for all purposes.

As illustrated in FIG. **23**, tissue penetrating system **310** can include a single penetrating member driver **316** and a plurality of penetrating members **312**. Penetrating member driver **316** moves each penetrating member **312** along a path out of a housing that has a penetrating member exit and then into target tissue **320**, stopping in target tissue **320**, and then withdrawing out of the target tissue **320**. Support **338** couples the penetrating members **312** to define a linear array. Support **338** is movable and configured to move each penetrating member **312** to a launch position associated with penetrating member driver **316**. Penetrating member driver **316** can be controlled to follow a predetermined velocity trajectory into and out of target tissue **32**

Tissue penetrating system **310** can include a user interface **340** configured to relay different information, including but not limited to, skin penetrating performance, a skin penetrating setting, and the like. User interface **340** can provide a user with at a variety of different outputs, including but not limited to, penetration depth of a penetrating member **312**, velocity of a penetrating member **312**, a desired velocity profile, a velocity of penetrating member **312** into target tissue **320**, velocity of the penetrating member **312** out of target tissue **320**, dwell time of penetrating member **312** in target tissue **320**, a target tissue relaxation parameter, and the like. User interface **340** can include a variety of components including but not limited to, a real time clock **342**, one or more alarms **344** to provide a user with a reminder of a next target penetrating event is needed, a user interface processor **346**, and the like.

User interface **340** can provide a variety of different outputs to a user including but not limited to, number of penetrating members **312** available, number of penetrating members **312** used, actual depth of penetrating member **312** penetration on target tissue **320**, stratum corneum thickness in the case where the target tissue **320** is the skin and an area below the skin, force delivered on target tissue **320**, energy used by penetrating member driver **316** to drive penetrating member **312** into target tissue **320**, dwell time of penetrating member **312**, battery status of tissue penetrating system **310**, status of tissue penetrating system **310**, the amount of energy consumed by tissue penetrating system **310**, or any component of tissue penetrating system **310**, speed profile of penetrating member **312**, information relative to contact of penetrating member **312** with target tissue **320** before penetration by penetrating member **312**, information relative to a change of speed of penetrating member **312** as in travels in target tissue **320**, and the like.

User interface **340** can include a data interface **348** that couples tissue penetrating system **310** to support equipment **350** with an interface, the internet, and the like. The data interface **348** may also be coupled to the processor **93**. Suitable support equipment **350** includes but is not limited to, a base station, home computer, central server, main processing equipment for storing analyte, such as glucose, level information, and the like.

Data interface **348** can be a variety of interfaces including but not limited to, Serial RS-232, modem interface, USB, HPNA, Ethernet, optical interface, IRDA, RF interface, BLUETOOTH interface, cellular telephone interface, two-way pager interface, parallel port interface standard, near field magnetic coupling, RF transceiver, telephone system, and the like.

User interface **340** may be coupled to a memory **352** that stores, a target tissue parameter, target tissue **320** penetrating performance, and the like. The memory **352** may also be connected to processor **93** and store data from the user interface **340**.

In one embodiment, memory **352** can store, the number of target tissue penetrating events, time and date of the last selected number of target tissue penetrating events, time interval between alarm and target tissue penetrating event, stratum corneum thickness, time of day, energy consumed by penetrating member driver **316** to drive penetrating member **312** into target tissue **320**, depth of penetrating member **312** penetration, velocity of penetrating member **312**, a desired velocity profile, velocity of penetrating member **312** into target tissue **320**, velocity of penetrating member **312** out of target tissue **320**, dwell time of penetrating member **312** in target tissue **320**, a target tissue relaxation parameter, force delivered on target tissue **320** by any component of tissue penetrating device, dwell time of penetrating member **312**, battery status of tissue penetrating system **310**, tissue penetrating system **310** status, consumed energy by tissue penetrating system **310** or any of its components, speed profile of penetrating member **312** as it penetrates and advances through target tissue **320**, a tissue target tissue relaxation parameter, information relative to contact of penetrating member **312** with target tissue **320** before penetration by

penetrating member **312**, information relative to a change of speed of penetrating member **312** as in travels in and through target tissue **320**, information relative to consumed analyte detecting members, and information relative to consumed penetrating members **312**.

In one embodiment, processor **330** is coupled to and receives any of a different type of signals from user interface **340**. User interface **340** can respond to a variety of different commands, including but not limited to audio commands, and the like. User interface **340** can include a sensor for detecting audio commands. Information can be relayed to a user of tissue penetrating system **310** by way of an audio device, wireless device **329**, and the like.

In another embodiment as seen in FIG. **23**B, tissue penetrating device includes a human, interface **354** with at least one output. The human interface **354** is specific for use by humans while a user interface **340** may be for any type of user, with user defined generically. Human interface **354** can be coupled to processor **330** and penetrating member sensor **324**. Human interface **354** can be a variety of different varieties including but not limited to, LED, LED digital display, LCD display, sound generator, buzzer, vibrating device, and the like.

The output of human interface **354** can be a variety of outputs including but not limited to, a penetration event by penetrating member **312**, number of penetrating members **312** remaining, time of day, alarm, penetrating member **312** trajectory waveform profile information, force of last penetration event, last penetration event, battery status of tissue penetrating system **310**, analyte status, time to change cassette status, jamming malfunction, tissue penetrating system **310** status, and the like.

Human interface **354** is coupled to a housing **356**. Suitable housings **356** include but are not limited to a, telephone, watch, PDA, electronic device, medical device, point of care device, decentralized diagnostic device and the like. An input device **358** is coupled to housing. Suitable input devices **358** include but are not limited to, one or more pushbuttons, a touch pad independent of the display device, a touch sensitive screen on a visual display, and the like.

A data exchange device **360** can be utilized for coupling tissue penetrating system **310** to support equipment **350** including but not limited to, personal computer, modem, PDA, computer network, and the like. Human interface **354** can include a real time clock **362**, and one or more alarms **364** that enable a user to set and use for reminders for the next target tissue penetration event. Human interface **354** can be coupled to a human interface processor **366** which is distinct from processor **330**. Human interface processor **366** can include a sleep mode and can run intermittently to conserve power. Human interface processor **366** includes logic that can provide an alarm time set for a first subset of days, and a second alarm time set for a second subset of days. By way of example, and without limitation, the first subset of days can be Monday through Friday, and the second subset of days can be Saturday and Sunday.

Human interface **354** can be coupled to a memory **368** for storing a variety of information, including but not limited to, the number of target tissue penetrating events, time and date of the last selected number of target tissue penetrating events, time interval between alarm and target tissue penetrating event, stratum corneum thickness when target tissue **320** is below the skin surface and underlying tissue, time of day, energy consumed by penetrating member driver **316** to drive penetrating member **312** into target tissue **320**, depth of penetrating member **312** penetration, velocity of penetrating member **312**, a desired velocity profile, velocity of penetrating member **312** into target tissue **320**, velocity of penetrating member **312** out of target tissue **320**, dwell time of penetrating member **312** in target tissue **320**, a target tissue relaxation parameter, force delivered on target tissue **320**, dwell time of penetrating member **312**, battery status of tissue penetrating system **310** and its components, tissue penetrating system **310** status, consumed energy, speed profile of penetrating member **312** as it advances through target tissue **320**, a target tissue relaxation parameter, information relative to contact of a penetrating member **312** with target tissue **320** before penetration by penetrating member **312**, information relative to a change of speed of penetrating member **312** as in travels in target tissue **320**, information relative to consumed sensors, information relative to consumed penetrating members **312**.

As illustrated in FIG. **24**, tissue penetrating system **310** can include a penetrating member driver **316** and a plurality of cartridges **370**. Each cartridge **370** contains a penetrating member **312**. The cartridges **370** can be coupled together in an array, which can be a flexible array. A cartridge transport device **372** moves cartridges **370** into a launch position that operatively couples a penetrating member **312** to penetrating member driver **316**. A support couples cartridges **370** to define an array. A plurality of sterility enclosures **322** can be provided to at least cover tips of penetrating members **312**. Sterility enclosure **322** (shown in phantom) is removed from their associated penetrating members **312** prior to launch of the penetrating member **312**. The enclosure may be peeled away (not shown) in a manner similar to that as seen in FIG. **22**B, with the enclosure **322** on one tape surface being peeled away. The enclosure **322** may be a blister sack, a sack tightly formed about each cartridge **370**, or other enclosure useful for maintaining a sterile environment about the cartridge **370** prior to actuation or launch. The enclosure **322** may contain the entire cartridge **370** or some portion of the cartridge **370** which may need to remain sterile prior to launch. During launch, enclosure or sterility barrier **322** can be breached by a device other than penetrating member **312**, or can be breached by penetrating member **312** itself. An analyte detection member, sensor, may be positioned to receive fluid from a wound created by the penetrating member **312**. The member may be on the cartridge **370** or may be on the device **80**.

Referring to FIGS. **24** and **25**, one embodiment of tissue penetrating system **310** includes cartridge transport device **372** and a plurality of cartridges **370**. Each cartridge **370** is associated with a penetrating member **312**. Cartridge transport device **372** moves each cartridge **370** to a position to align the associated penetrating member **312** with penetrating member driver **316** to drive penetrating member **312** along a path into target tissue **320**. In one embodiment as seen in FIG. **25**, each cartridge **370** has at least one of a distal port **374** and a proximal port **376**. A first seal **378** is positioned at distal or proximal ports. As seen in FIG. **25**, the seal **378** may be placed at the distal port. First seal **378** is formed of a material that is fractured by penetrating member **312** before it is launched. A second seal **380** can be positioned at the other port. It will be appreciated that only one or both of distal and proximal ports **374** and **376** can be sealed, and that each cartridge **370** can include only one port **374** and **376**. For ease of illustration, the penetrating member **312** extending longitudinally through the lumen in the cartridge **370** is not shown. The seals **380** and **378** may be fracturable seals formed between the penetrating member and the cartridge **370**. During actuation, the seals **378** and **380** are broken. Seal **378** may be also be positioned to cover the distal port or exit port **374** without being sealed against the penetrating member (i.e. covering the port without touching the penetrating member). A third seal **381** may be positioned to cover an entrance to sample chamber **384**. The

seal **381** may be configured to be broken when the penetrating member **312** is actuated. A still further seal **381**A may be placed in the lumen. The tip of a penetrating member may be located at any position along the lumen, and may also be at or surrounded by one of the seals **378**, **381**, **381**A, or **376**.

Referring still to FIG. **25**, a cover sheet **583** may be a flexible polymer sheet as described in commonly assigned, U.S. patent application Ser. No. 10/127,395 filed Apr. 19, 2002. It should be understood of course that the sheet may be made of a variety of materials useful for coupling an analyte detecting member **390**. This allows the analyte detecting member **390** to be sterilized separately from the cartridge **370** and assembled together with the cartridge at a later time. This process may be used on certain analyte detecting members **390** that may be damaged if exposed to the sterilization process used on the cartridge **370**. Of course, some embodiments may also have the analyte detecting member **390** coupled to the cartridge **370** during sterilization. The cover sheet **583** may also form part of the seal to maintain a sterile environment about portions of the penetrating member. In other embodiments, the lumen housing penetrating member may be enclosed and not use a sheet **583** to help form a sterile environment. In still further embodiments, the sheet **583** may be sized to focus on covering sample chamber **384**.

As illustrated in FIG. **26**, cartridge **370** has at least one port **374**. A plurality of penetrating members **312** are in cartridge **370**. Although cartridge **370** is shown in FIG. **26** to have a linear design, the cartridge **370** may also have a curved, round, circular, triangular, or other configuration useful for positioning a penetrating member for use with a drive force generator. A seal **382** is associated with each penetrating member **312** in order to maintain each penetrating member **312** in a sterile environment in cartridge **370** prior to launch. Prior to launch, seal **382** associated with the penetrating member **312** to be launched is broken. In one embodiment, a punch (not shown) is used to push down on the seal **382** covering the port **376** of the cartridge **370**. This breaks the seal **382** and also pushes it downward, allowing the penetrating member to exit the cartridge without contacting the seal **382**. The timing of the breaking of the seal **382** may be varied so long as the penetrating member remains substantially sterile when being launched towards the tissue site **320**. In other embodiments, the port **376** may have a seal **383** that protrudes outward and is broken off by the downward motion of the punch. One or more sample chambers **384** are included in cartridge **370**. In one embodiment, each penetrating member **312** has an associated sample chamber **384**. In one embodiment, illustrated in FIG. **27**, penetrating member **312** is extendable through an opening **386** of its associated sample chamber **384**. In some embodiments, a seal **387** may be included in the sample chamber **384**. Seals **382** and **387** may be made from a variety of materials such as but not limited to metallic foil, aluminum foil, paper, polymeric material, or laminates combining any of the above. The seals may also be made of a fracturable material. The seals may be made of a material that can easily be broken when a device applies a force thereto. The seals alone or in combination with other barriers may be used to create a sterile environment about at least the tip of the penetrating member prior to lancing or actuation.

With reference now to the embodiment of FIG. **28**, each sample chamber **384** may have an opening **388** for transport of a body fluid into the sample chamber **384**. The size of sample chambers **384** in FIGS. **26** through **28** can vary. In various embodiments, sample chambers **384** are sized to receive, no more than 1.0 μL of the body fluid, no more than 0.75 μL of the body fluid, no more than 0.5 μL of the body fluid, no more than 0.25 μL of the body fluid, no more than 0.1 μL of the body fluid, and the like. It will be appreciated that sample chambers **384** can have larger or smaller sizes.

An analyte detecting member **390** may associated with each sample chamber **384**. The analyte detecting member **390** may be designed for use with a variety of different sensing techniques as described in commonly assigned, U.S. patent application Ser. No. 10/127,395 filed Apr. 19, 2002. Analyte detecting member **390** can be positioned in sample chamber **384**, at an exterior of sample chamber **384**, or at other locations useful for obtaining an analyte. Analyte detecting member **390** can be in a well **392**, or merely be placed on a support.

In one embodiment, analyte detecting member **390** includes chemistries that are utilized to measure and detect glucose, and other analytes. In another embodiment, analyte detecting member **390** is utilized to detect and measure the amount of different analytes in a body fluid or sample. In various embodiments, analyte detecting member **390** determines a concentration of an analyte in a body fluid using a sample that does not exceed a volume of, 1 μL of a body fluid disposed in sample chamber **384**, 0.75 μL of a body fluid disposed in sample chamber **384**, 0.5 μL of a body fluid disposed in sample chamber **384**, 0.25 μL of a body fluid disposed in sample chamber **384**, 0.1 μL of a body fluid disposed in sample chamber **384**, and the like. For example and not by way of limitation, the sample chamber **384** may be of a size larger than the volumes above, but the analyte detecting member **390** can obtain an analyte reading using the amounts of fluid described above.

As illustrated in FIG. **29**, tissue penetrating system **310** can include a housing member **394**, a penetrating member **312** positioned in housing member **394**, and analyte detecting member **390** coupled to a sample chamber **384**. Analyte detecting member **390** is configured to determine a concentration of an analyte in a body fluid using with a variety of different body fluid, sample, volumes. In various embodiments, the volume is less than 1 μL of body fluid disposed in sample chamber **384**, 0.75 of body fluid disposed in sample chamber **384**, 0.5 of body fluid disposed in sample chamber **384**, 0.25 of body fluid disposed in sample chamber **384**, 0.1 of body fluid disposed in sample chamber **384** and the like. Each tip of a penetrating member **312** is configured to extend through an opening of sample chamber **384**. A plurality of penetrating members **312** can be positioned in housing member **394**. Housing member **394** can be the same as cartridge **370**. Cartridge **370** can have distal and proximal ports **374** and **376**, respectively. Additionally, in this embodiment, a plurality of cartridges **370** can be provided, each associated with a penetrating member **312**.

Referring to FIG. **30**, each penetrating member **312** has a packing density, or occupied volume, in cartridge **370**. In various embodiments, the packing density of each penetrating member **312** in cartridge **370** can be no more than, 5.0 cm3/penetrating member **312**, 4.0 cm3/penetrating member **312**, 3.0 cm3/penetrating member **312**, 2.0 cm3/penetrating member **312**, 1.0 cm3/penetrating member **312**, 0.75 cm3/penetrating member **312**, 0.5 cm3/penetrating member **312**, 0.25 cm3/penetrating member **312**, 0.1 cm3/penetrating member **312**, and the like. In other words, the volume required for each penetrating member does not exceed 5.0 cm3/penetrating member **312**, 4.0 cm3/penetrating member **312**, 3.0 cm3/penetrating member **312**, 2.0 cm3/penetrating member **312**, 1.0 cm3/penetrating member **312**, 0.75 cm3/penetrating member **312**, 0.5 cm3/penetrating member **312**, 0.25 cm3/penetrating member **312**, 0.1 cm3/penetrating member **312**, and the like. So, as seen in FIG. **30**, if the total package volume of the cartridge is defined as X and the

cartridge includes Y number of penetrating members **312**, penetrating members **312** and test area, or other unit **395**, the volume for each unit does not exceed 5.0 cm3/unit, 4.0 cm3/unit, 3.0 cm3/unit, 2.0 cm3/unit, 1.0 cm3/unit, 0.75 cm3/unit, 0.5 cm3/unit, 0.25 cm3/unit, 0.1 cm3/unit, and the like.

In various embodiments, each penetrating member **312** and its associated sample chamber **384** have a combined packing density of no more than about 5.0 cm3, 4.0 cm3, 3.0 cm3, 2.0 cm3, 1.0 cm3, 0.75 cm3, 0.5 cm3, 0.25 cm3, 0.1 cm3, and the like.

With reference now to FIG. **31**, tissue penetrating system **310** can have a first seal **378** formed at distal port **374** and a second seal **380** formed at proximal port **376** of cartridge **37**. Prior to launching of penetrating member **312**, distal seal **378** and second seal **380** maintain a distal tip of penetrating member **312** and sample chamber **384** in a sterile environment. Second seal **380** is breached, and penetrating member **312** is then launched.

As illustrated in FIG. **32**, a plurality of lumens **396** can be positioned between distal port **374** and proximal port **376** of cartridge **370** for slidably receiving a penetrating member **312**. Sample chamber **384** is defined by cartridge **370**, has an opening **398** and is associated with penetrating member **312**. First seal **378** covers distal port **374**, and a second seal **380** covers proximal port **376**.

In another embodiment as shown in FIG. **33**, tissue penetrating system **310** includes a plurality of cartridges **370**, penetrating member driver **316**, and a plurality of penetrating members **312** coupled to penetrating member driver **316**. Each penetrating member **312** is associated with a cartridge **370**. A plurality of gas-tightly sealed enclosures **400** are coupled in an array. Each enclosure **400** fully contains at least one of cartridge **370**. Enclosures **400** are configured to be advanceable on cartridge transport device **372** that individually releases cartridges **370** from sacks or enclosures **400** and loads them individually onto penetrating member driver **316**. The enclosures **400** may be removed by peeling back a top portion of the tape as shown in FIG. **22**B.

In another embodiment, a plurality of penetrating members **312** each have a sharpened distal tip. A penetrating member driver **316** is coupled to each penetrating member **312**. A plurality of cartridges **370** are coupled in an array. Each cartridge **370** houses a penetrating member **312** and is configured to permit penetrating member driver **316** to engage each of penetrating members **312** sequentially. Each cartridge **370** has a plurality of seals positioned to provide that the sharpened distal tips remain in a sterile environment before penetrating target tissue **320**. Penetrating members **312** are launched without breaking a seal using the penetrating member.

Referring now to FIG. **34**, a plurality of cartridges **370** are provided, each having distal and proximal ports **374** and **376**, respectively. A plurality of penetrating members **312** are each associated with a cartridge **370**. Each penetrating member **312** has a sharpened distal tip and a shaft portion slidably disposed within cartridge **370**. As seen in FIG. **34**, the cartridges **370** may be coupled together by a connector or flexible support **403**. A seal **404** is formed by a fracturable material between the penetrating member **312** and each cartridge **370**. Seal **404** is positioned in at least one of distal or proximal ports **374** and **376**, respectively, of cartridge **370**. Cartridge transport device **372** moves each cartridge **370** to a position **405** that aligns penetrating member **312** with penetrating member driver **316** so that penetrating member **312** can be driven along a path into target tissue **320**.

In another embodiment of the present invention as seen in FIG. **35**, tissue penetrating system **310** includes a housing member **406**, the plurality of penetrating members **312** positioned in housing member **406**, and a tissue stabilizing member **408**, which can also be a pressure applicator, stimulating member, stimulating vibratory member that imparts motion to a tissue surface, and the like. Tissue stabilizing member **408** can be positioned to at least partially surround an impact location of the penetrating member **312** on the target tissue **320** site. Tissue stabilizing member **408** can, enhance fluid flow from target tissue **320**, stretch a target tissue **320** surface, apply a vacuum to target tissue **320**, apply a force to target tissue **320** and cause target tissue **320** to press in an inward direction relative to housing member **406**, apply a stimulation to target tissue **320**, and the like. Tissue stabilizing member **408** can have a variety of different configurations. In one embodiment, tissue stabilizer member **408** includes a plurality of protrusions **410**. In some further embodiments, a vacuum source **412** may be provided to assist the creation of a low pressure environment in the tissue stabilizing member **408** or along the fluid path to a sample chamber associated with the system **310**. In some embodiments, the tissue stabilizing member **408** is mounted on the cartridge **370**. In other embodiments, the member **408** may be mounted on the housing **406**. The member **408** may also be pressed against the tissue site **320** and act as a pressure applicator. The member **408** may also be used against a variety of tissue including but not limited to skin or other body tissue.

Referring now to FIGS. **36** and **37**, a cartridge **370** is shown with a penetrating member **312** creating a wound W in the tissue site **320**. In FIG. **36**, a movable capillary member **420** is extended towards the wound W as indicated by arrow **422** to gather body fluid being expressed from the wound. The fluid may be drawn to a sample chamber **384** (not shown). In FIG. **37**, the wound W is created and then the entire cartridge is moved to the tissue site **320** to gather body fluid from the wound W. In some embodiments, the cartridge **370** moves towards the wound W relative to the housing **406**.

Tissue penetrating systems **310** of FIGS. **22** through **37**, can be utilized in a variety of different applications to detect any number of different analytes, including but not limited to glucose. The systems **310** may be used to measure potassium, other ions, or analytes associated with the process of glucose monitoring. The analyte detecting member **390** may further be adapted to measure other analytes found in body fluid.

In a still further embodiment, penetrating member **312** may be moved and positioned to be in engagement with penetrating member driver **316**. Penetrating member **312** is in a sterile environment, and prior to launch, the sterilizing covering, which can be a seal is removed. Tissue stabilizing member can apply a stimulation to a surface of the target tissue **320** prior to, and during penetration by penetration member. Penetrating member **312** is engaged with penetrating driving member and controllably pierces a target tissue **320** site. Penetrating member sensor **324** is utilized to control penetration depth and velocity of penetrating member **312**. Penetrating member **312** is stopped at a desired depth below a surface of target tissue **320** in order to reduce or eliminate without multiple oscillations against the surface of target tissue **320**. A wound is created, causing blood to flow into sample chamber **384**. In various embodiments, no more than 1 mL of a body fluid is collected in sample chamber **384**.

A number of different preferences, options, embodiment, and features have been given above, and following any one of these may results in an embodiment of this invention that is more presently preferred than a embodiment in which that particular preference is not followed. These preferences, options, embodiment, and features may be generally independent, and additive; and following more than one of these

preferences may result in a more presently preferred embodiment than one in which fewer of the preferences are followed.

While the invention has been described and illustrated with reference to certain particular embodiments thereof, those skilled in the art will appreciate that various adaptations, changes, modifications, substitutions, deletions, or additions of procedures and protocols may be made without departing from the spirit and scope of the invention. Any of the embodiments of the invention may be modified to include any of the features described above or feature incorporated by reference herein. For example, the cartridge of FIG. **26** may be adapted to include a distal portion with a tissue stabilizing member. The cartridge of FIG. **26** may be adapted for use with a vacuum device. The cartridge may include indexing features such as notches on the distal portion or outer radial periphery for those cartridges with a radial configuration. The notches will facilitate positioning, among other things, and may be used for movement. Other cartridges or tapes herein may be modified with notches or tractor holes to facilitate movement. User interfaces, human interfaces, and other interfaces may be added to any of the embodiments of the present invention.

With any of the above embodiments, the location of the penetrating member drive device may be varied, relative to the penetrating members or the cartridge. With any of the above embodiments, the penetrating member tips may be uncovered during actuation (i.e. penetrating members do not pierce the penetrating member enclosure or protective foil during launch). With any of the above embodiments, the penetrating members may be a bare penetrating member during launch. With any of the above embodiments, the penetrating members may be bare penetrating members prior to launch as this may allow for significantly tighter densities of penetrating members. In some embodiments, the penetrating members may be bent, curved, textured, shaped, or otherwise treated at a proximal end or area to facilitate handling by an actuator. The penetrating member may be configured to have a notch or groove to facilitate coupling to a gripper or coupler. The notch or groove may be formed along an elongate portion of the penetrating member. The coupler may be designed to create a frictional only type grip on the penetrating member.

With any of the above embodiments, any open cavity housing the penetrating may be on the bottom or the top of the cartridge, with the gripper on the other side. In some embodiments, sensors may be printed on the top, bottom, or side of the cavities. The front end of the cartridge maybe in contact with a user during lancing. The same driver may be used for advancing and retraction of the penetrating member. The penetrating member may have a diameters and length suitable for obtaining the blood volumes described herein. The penetrating member driver may also be in substantially the same plane as the cartridge. The driver may use a through hole or other opening to engage a proximal end of a penetrating member to actuate the penetrating member along a path into and out of the tissue.

Any of the features described in this application or any reference disclosed herein may be adapted for use with any embodiment of the present invention. For example, the devices of the present invention may also be combined for use with injection penetrating members or needles as described in commonly assigned, U.S. patent application Ser. No. 10/127,395 filed Apr. 19, 2002. A sensor to detect the presence of foil may also be included in the lancing apparatus. For example, if a cavity has been used before, the foil or sterility barrier will be punched. The sensor can detect if the cavity is fresh or not based on the status of the barrier. It should be understood that in optional embodiments, the sterility barrier may be designed to pierce a sterility barrier of thickness that does not dull a tip of the penetrating member. The lancing apparatus may also use improved drive mechanisms. For example, a solenoid force generator may be improved to try to increase the amount of force the solenoid can generate for a given current. A solenoid for use with the present invention may have five coils and in the present embodiment the slug is roughly the size of two coils. One change is to increase the thickness of the outer metal shell or windings surround the coils. By increasing the thickness, the flux will also be increased. The slug may be split; two smaller slugs may also be used and offset by ½ of a coil pitch. This allows more slugs to be approaching a coil where it could be accelerated. This creates more events where a slug is approaching a coil, creating a more efficient system.

In another optional alternative embodiment, a gripper in the inner end of the protective cavity may hold the penetrating member during shipment and after use, eliminating the feature of using the foil, protective end, or other part to retain the used penetrating member. Some other advantages of the disclosed embodiments and features of additional embodiments include: same mechanism for transferring the used penetrating members to a storage area; a high number of penetrating members such as 25, 50, 75, 100, 500, or more penetrating members may be put on a disk or cartridge; molded body about a penetrating member becomes unnecessary; manufacturing of multiple penetrating member devices is simplified through the use of cartridges; handling is possible of bare rods metal wires, without any additional structural features, to actuate them into tissue; maintaining extreme (better than 50 micron-lateral- and better than 20 micron vertical) precision in guiding; and storage system for new and used penetrating members, with individual cavities/slots is provided. The housing of the lancing device may also be sized to be ergonomically pleasing. In one embodiment, the device has a width of about 56 mm, a length of about 105 mm and a thickness of about 15 mm. Additionally, some embodiments of the present invention may be used with non-electrical force generators or drive mechanism. For example, the punch device and methods for releasing the penetrating members from sterile enclosures could be adapted for use with spring based launchers. The gripper using a frictional coupling may also be adapted for use with other drive technologies.

Still further optional features may be included with the present invention. For example, with any of the above embodiments, the location of the penetrating member drive device may be varied, relative to the penetrating members or the cartridge. With any of the above embodiments, the penetrating member tips may be uncovered during actuation (i.e. penetrating members do not pierce the penetrating member enclosure or protective foil during launch). The penetrating members may be a bare penetrating member during launch. The same driver may be used for advancing and retraction of the penetrating member. Different analyte detecting members detecting different ranges of glucose concentration, different analytes, or the like may be combined for use with each penetrating member. Non-potentiometric measurement techniques may also be used for analyte detection. For example, direct electron transfer of glucose oxidase molecules adsorbed onto carbon nanotube powder microelectrode may be used to measure glucose levels. In all methods, nanoscopic wire growth can be carried out via chemical vapor deposition (CVD). In all of the embodiments of the invention, preferred nanoscopic wires may be nanotubes. Any method useful for depositing a glucose oxidase or other analyte detection material on a nanowire or nanotube may be used with the present invention. Expected variations or differences in the results are contemplated in accordance with the objects and practices of

the present invention. It is intended, therefore, that the invention be defined by the scope of the claims which follow and that such claims be interpreted as broadly as is reasonable.

What is claimed is:

1. A body fluid sampling system for use on a tissue site, the system comprising:

a single drive force generator;

a housing including a plurality of analyte sensors and a plurality of sample chambers, each of an analyte sensor being associated with a sample chamber; each analyte sensor and associated sample chamber positioned and sized to receive body fluid from a wound in tissue created by a penetrating member;

a plurality of penetrating members operatively coupled to said force generator, said force generator moving each of said members along a path out of the housing into the tissue site, stopping in the tissue site, and withdrawing out of said tissue site;

a flexible support member coupling the penetrating members at the flexible support member to form an array of penetrating members and positioned to move each of said penetrating members to a launch position associated with said force generator;

each of a penetrating member at least partially positioned adjacent to an analyte sensor in a sample chamber that does not exceed 1 μL, each sample chamber positioned to receive body fluid from a wound in tissue created by a penetrating member, and each analyte sensor interacting with the body fluid to determine analyte levels; and

a penetrating member sensor positioned to monitor a penetrating member coupled to said force generator, the penetrating member sensor in communication with a processor providing information relative to a depth of penetration of a penetrating member through a skin surface; wherein the penetrating member sensor and the processor providing an indication of velocity of a penetrating member.

2. The system of claim **1**, wherein an active penetrating member moves along a substantially linear path into the tissue site.

3. The system of claim **1**, wherein an active penetrating member moves along an at least partially curved path into the tissue site.

4. The system of claim **1**, wherein the driver is a voice coil drive force generator.

5. The system of claim **1**, wherein the drive force generator is a rotary voice coil drive force generator.

6. The system of claim **1**, wherein the penetrating member sensor is coupled to a processor with control instructions for the drive force generator.

7. The system of claim **6**, wherein the processor includes a memory for storage and retrieval of a set of penetrating member profiles utilized with the drive force generator.

8. A body fluid sampling system for use on a tissue site, the system comprising:

a single drive force generator;

a housing including a plurality of analyte sensors and a plurality of sample chambers, each of an analyte sensor being associated with a sample chamber that does not exceed 1 μL, each analyte sensor and sample chamber positioned and sized to receive body fluid from a wound in tissue created by a penetrating member;

a plurality of penetrating members operatively coupled to said force generator, said force generator moving each of said members along a path out of the housing into the tissue site, stopping in the tissue site, and withdrawing out of said tissue site;

a flexible support member coupling the penetrating members at the flexible support member to form an array of penetrating members and positioned to move each of said penetrating members to a launch position associated with said force generator; and

each of a penetrating member at least partially positioned adjacent to an analyte sensor in a sample chamber, each sample chamber positioned to receive body fluid from a wound in tissue created by a penetrating member, and each analyte sensor interacting with the body fluid to determine analyte levels; and

a penetrating member sensor positioned to monitor a penetrating member coupled to said force generator, the penetrating member sensor in communication with a processor providing information relative to a depth of penetration of a penetrating member through a skin surface, the penetrating member sensor being coupled to a processor with control instructions for the single drive force generator, the processor being utilized to monitor position and speed of a penetrating member as the penetrating member moves in a first direction.

9. The system of claim **8**, wherein the processor is utilized to adjust an application of force to a penetrating member to achieve a desired speed of the penetrating member.

10. The system of claim **8**, wherein the processor is utilized to adjust an application of force to a penetrating member when the penetrating member contacts a target tissue so that the penetrating member penetrates the target tissue within a desired range of speed.

11. A body fluid sampling system for use on a tissue site, the system comprising:

a single drive force generator;

a housing including a plurality of analyte sensors and a plurality of sample chambers, each of an analyte sensor being associated with a sample chamber that does not exceed 1 μL; each analyte sensor and sample chamber positioned and sized to receive body fluid from a wound in tissue created by a penetrating member;

a plurality of penetrating members operatively coupled to said force generator, said force generator moving each of said members along a path out of the housing into the tissue site, stopping in the tissue site, and withdrawing out of said tissue site;

a flexible support member coupling the penetrating members at the flexible support member o form an array of penetrating members and positioned to move each of said penetrating members to a launch position associated with said force generator; and

each of a penetrating member at least partially positioned adjacent to an analyte sensor in a sample chamber, each sample chamber positioned to receive body fluid from a wound in tissue created by a penetrating member, and each analyte sensor interacting with the body fluid to determine analyte levels; and

a penetrating member sensor positioned to monitor a penetrating member coupled to said force generator, the penetrating member sensor and a processor providing information relative to a depth of penetration of a penetrating member through a skin surface, the penetrating member sensor being coupled to a processor with control instructions for the single drive force generator,

the processor being utilized to monitor position and speed of a penetrating member as the penetrating member moves in a first direction toward a target tissue, wherein the application of a launching force to the penetrating member is controlled based on position and speed of the penetrating member.

12. The system of claim **11**, wherein the processor is utilized to control a withdraw force to the penetrating member so that the penetrating member moves in a second direction away from the target tissue.

13. The system of claim **12**, wherein in the first direction the penetrating member moves toward the target tissue at a speed that is different than a speed at which the penetrating member moves away from the target tissue.

14. The system of claim **12**, wherein in the first direction the penetrating member moves toward the target tissue at a speed that is greater than a speed at which the penetrating member moves away from the target tissue.

15. The system of claim **11**, wherein a speed of a penetrating member in the first direction is the range of about 2.0 to 10.0 m/sec.

16. The system of claim **11**, wherein a speed of a penetrating member in the first direction is the range of 0.05 to 60 m/sec.

17. The system of claim **11**, wherein a speed of a penetrating member in the first direction is the range of 0.1 to 20.0 m/sec.

18. The system of claim **11**, wherein a speed of a penetrating member in the first direction is the range of 1.0 to 10.0 m/sec.

19. The system of claim **11**, wherein a speed of a penetrating member in the first direction is the range of 3.0 to 8.0 m/sec.

20. The system of claim **11**, wherein a dwell time of the penetrating member in the target tissue below a skin surface is in the range of 1 microsecond to 2 seconds.

21. The system of claim **11**, wherein a dwell time of the penetrating member in the target tissue below a skin surface is in the range of 500 milliseconds to 1.5 second.

22. The system of claim **11**, wherein a dwell time of the penetrating member in the target tissue below a skin surface is in the range of 100 milliseconds to 1 second.

23. A body fluid sampling system for use on a tissue site, the system comprising:

a single drive force generator;

a housing including a plurality of analyte sensors and a plurality of sample chambers, each of an analyte sensor being associated with a sample chamber that does not exceed 1 μL; each analyte sensor and associated sample chamber positioned and sized to receive body fluid from a wound in tissue created by a penetrating member;

a plurality of penetrating members operatively coupled to said force generator, said force generator moving each of said members along a path out of the housing into the tissue site, stopping in the tissue site, and withdrawing out of said tissue site;

a flexible support member coupling the penetrating members at the flexible support member to form an array of penetrating members and positioned to move each of said penetrating members to a launch position associated with said force generator; and

each of a penetrating member at least partially positioned adjacent to an analyte sensor in a sample chamber, each sample chamber positioned to receive body fluid from a wound in tissue created by a penetrating member, and each analyte sensor interacting with the body fluid to determining analyte levels; and

a penetrating member sensor positioned to monitor a penetrating member coupled to said force generator, the penetrating member sensor in communication with a processor providing information relative to a depth of penetration of a penetrating member through a skin surface, the penetrating member sensor being coupled to a processor with control instructions for the single drive force generator, the processor being utilized to monitor position and speed of a penetrating member as the penetrating member moves in the first direction toward a target tissue and control a withdraw force to the penetrating member so that the penetrating member moves in a second direction away from the target tissue, wherein the application of a launching force to the penetrating member is controlled based on position and speed of the penetrating member; and

wherein the average velocity of the penetrating member during a tissue penetration stroke in a first direction is about 100 to about 1000 times greater than the average velocity of the penetrating member during a withdrawal stroke in a second direction.

* * * * *