US010382976B2

(12) **United States Patent**
**Bennett et al.**

(10) **Patent No.: US 10,382,976 B2**
(45) **Date of Patent: Aug. 13, 2019**

(54) **METHOD AND APPARATUS FOR MANAGING WIRELESS COMMUNICATIONS BASED ON COMMUNICATION PATHS AND NETWORK DEVICE POSITIONS**

(71) Applicant: **AT&T INTELLECTUAL PROPERTY I, L.P.**, Atlanta, GA (US)

(72) Inventors: **Robert Bennett**, Southold, NY (US); **Irwin Gerszberg**, Kendall Park, NJ (US); **Donald J. Barnickel**, Flemington, NJ (US); **Thomas M. Willis, III**, Tinton Falls, NJ (US); **Farhad Barzegar**, Branchburg, NJ (US); **Paul Shala Henry**, Holmdel, NJ (US)

(73) Assignee: **AT&T Intellectual Property I, L.P.**, Atlanta, GA (US)

( * ) Notice: Subject to any disclaimer, the term of this patent is extended or adjusted under 35 U.S.C. 154(b) by 42 days.

(21) Appl. No.: **15/370,539**

(22) Filed: **Dec. 6, 2016**

(65) **Prior Publication Data**

US 2018/0160315 A1 Jun. 7, 2018

(51) **Int. Cl.**
***H04W 40/00*** (2009.01)
***H04W 16/26*** (2009.01)
(Continued)

(52) **U.S. Cl.**
CPC ..... ***H04W 16/26*** (2013.01); ***H01Q 13/20*** (2013.01); ***H04B 3/52*** (2013.01); ***H04B 3/56*** (2013.01);
(Continued)

(58) **Field of Classification Search**
CPC ..... H04W 16/02; H04W 16/18; H04W 16/24; H04W 24/00; H04W 24/02; H04W 16/26;
(Continued)

(56) **References Cited**

U.S. PATENT DOCUMENTS

395,814 A 1/1889 Henry et al.
529,290 A 11/1894 Harry et al.
(Continued)

FOREIGN PATENT DOCUMENTS

AU 565039 B2 9/1987
AU 582630 B2 4/1989
(Continued)

OTHER PUBLICATIONS

"AirCheck G2 Wireless Tester", NetScout®, enterprise.netscout.com, Dec. 6, 2016, 10 pages.
(Continued)

*Primary Examiner* — Khoi H Tran
*Assistant Examiner* — B M M Hannan
(74) *Attorney, Agent, or Firm* — Guntin & Gust, PLC; Andrew D. Raymond

(57) **ABSTRACT**

Aspects of the subject disclosure may include, for example, different groups of network devices mounted on utility poles. The different groups of network devices can be arranged along different paths. A communication path for transmitting wireless signals can alternate between the different groups of network devices. Other embodiments are disclosed.

**20 Claims, 32 Drawing Sheets**

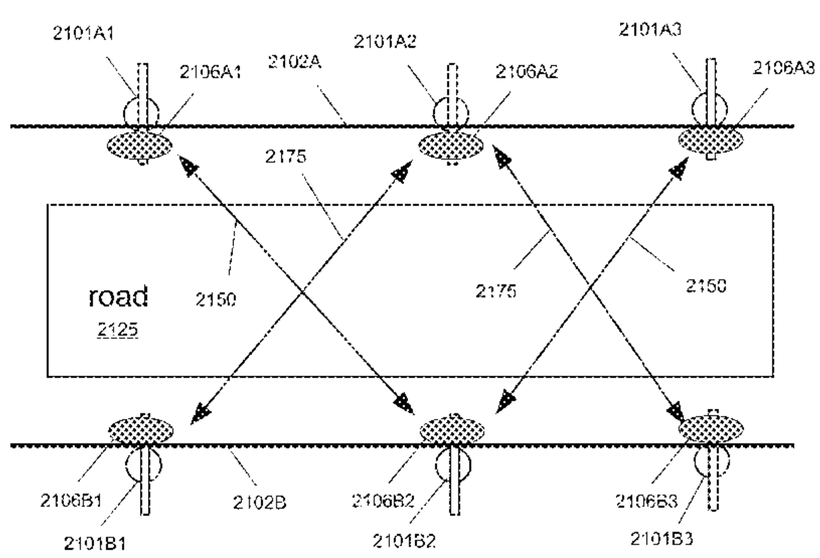


2100

(51) **Int. Cl.**

| | |
|---|---|
| ***H04B 3/56*** | (2006.01) |
| ***H04B 3/52*** | (2006.01) |
| ***H04W 16/32*** | (2009.01) |
| ***H01Q 13/20*** | (2006.01) |
| ***H04B 3/58*** | (2006.01) |
| *H01Q 13/02* | (2006.01) |
| *H04W 88/08* | (2009.01) |

(52) **U.S. Cl.**
CPC ..... ***H04B 3/58*** (2013.01); ***H04W 16/32*** (2013.01); *H01Q 13/02* (2013.01); *H04B 2203/5425* (2013.01); *H04B 2203/5441* (2013.01); *H04B 2203/5445* (2013.01); *H04B 2203/5479* (2013.01); *H04B 2203/5483* (2013.01); *H04B 2203/5495* (2013.01); *H04W 88/08* (2013.01)

(58) **Field of Classification Search**
CPC ..... H04W 16/32; H04W 88/08; H01P 3/10; H01P 5/08; H01Q 13/02; H01Q 13/20; H04B 3/52; H04B 3/56; H04B 3/58; H04B 2203/5425; H04B 2203/5441; H04B 2203/5445; H04B 2203/5479; H04B 2203/5483; H04B 2203/5495
USPC ..... 455/446
See application file for complete search history.

(56) **References Cited**

U.S. PATENT DOCUMENTS

1,721,785 A 7/1929 Meyer
1,798,613 A 3/1931 Manson et al.
1,860,123 A 5/1932 Yagi
2,058,611 A 10/1936 Merkle et al.
2,106,770 A 2/1938 Southworth et al.
2,129,711 A 9/1938 Southworth
2,129,714 A 9/1938 Southworth et al.
2,147,717 A 2/1939 Schelkunoff
2,187,908 A 1/1940 McCreary
2,199,083 A 4/1940 Schelkunoff
2,232,179 A 2/1941 King
2,283,935 A 5/1942 King
2,398,095 A 4/1946 Katzin
2,402,622 A 6/1946 Hansen
2,405,242 A 8/1946 Southworth et al.
2,407,068 A 9/1946 Fiske et al.
2,407,069 A 9/1946 Fiske
2,410,113 A 10/1946 Turner, Jr.
2,411,338 A 11/1946 Roberts
2,415,089 A 2/1947 Feldman et al.
2,415,807 A 2/1947 Barrow et al.
2,419,205 A 4/1947 Feldman et al.
2,420,007 A 5/1947 Olden
2,422,058 A 6/1947 Whinnery
2,432,134 A 12/1947 Bagnall
2,461,005 A 2/1949 Southworth
2,471,021 A 5/1949 Bradley
2,488,400 A 11/1949 Harder
2,513,205 A 6/1950 Roberts et al.
2,514,679 A 7/1950 Southworth
2,519,603 A 8/1950 Reber
2,540,839 A 2/1951 Southworth
2,541,843 A 2/1951 Tiley et al.
2,542,980 A 2/1951 Barrow
2,557,110 A 6/1951 Jaynes
2,562,281 A 7/1951 Mumford
2,596,190 A 5/1952 Wiley
2,599,864 A 6/1952 Robertson-Shersby-Ha et al.
2,659,817 A 11/1953 Cutler et al.
2,667,578 A 1/1954 Carlson et al.
2,677,055 A 4/1954 Allen
2,685,068 A 7/1954 Goubau
2,688,732 A 9/1954 Kock
2,691,766 A 10/1954 Clapp
2,706,279 A 4/1955 Aron
2,711,514 A 6/1955 Rines
2,723,378 A 11/1955 Clavier, et al.
2,727,232 A 12/1955 Pryga
2,735,092 A 2/1956 Brown
2,740,826 A 4/1956 Bondon
2,745,101 A 5/1956 Marie
2,748,350 A 5/1956 Miller et al.
2,749,545 A 6/1956 Kostriza
2,754,513 A 7/1956 Goubau
2,761,137 A 8/1956 Atta et al.
2,769,147 A 10/1956 Black et al.
2,769,148 A 10/1956 Clogston, et al.
2,794,959 A 6/1957 Fox
2,805,415 A 9/1957 Berkowitz
2,806,177 A 9/1957 Haeff et al.
2,806,972 A 9/1957 Sensiper
2,810,111 A 10/1957 Cohn
2,819,451 A 1/1958 Sims et al.
2,820,083 A 1/1958 Hendrix
2,825,060 A 2/1958 Ruze et al.
2,835,871 A 5/1958 Raabe
2,851,686 A 9/1958 Hagaman et al.
2,852,753 A 9/1958 Walter et al.
2,867,776 A 1/1959 Wilkinson, Jr.
2,883,135 A 4/1959 Smalley et al.
2,883,136 A 4/1959 Smalley et al.
2,900,558 A 8/1959 Watkins et al.
2,910,261 A 10/1959 Ward et al.
2,912,695 A 11/1959 Cutler
2,914,741 A 11/1959 Unger
2,915,270 A 12/1959 Gladsden et al.
2,921,277 A 1/1960 Goubau
2,925,458 A 2/1960 Lester et al.
2,933,701 A 4/1960 Lanctot et al.
2,946,970 A 7/1960 Hafner et al.
2,949,589 A 8/1960 Hafner
2,960,670 A 11/1960 Marcatili et al.
2,970,800 A 2/1961 Smalley et al.
2,972,148 A 2/1961 Rupp et al.
2,974,297 A 3/1961 Ros
2,981,949 A 4/1961 Elliott et al.
2,990,151 A 6/1961 Phillips et al.
2,993,205 A 7/1961 Cooper et al.
3,016,520 A 1/1962 Chaimowicz et al.
3,025,478 A 3/1962 Marcatili et al.
3,028,565 A 4/1962 Walker et al.
3,040,278 A 6/1962 Griemsmann et al.
3,045,238 A 7/1962 Cheston et al.
3,046,550 A 7/1962 Schlaud et al.
3,047,822 A 7/1962 Lakatos et al.
3,065,945 A 11/1962 Newsome et al.
3,072,870 A 1/1963 Walker
3,077,569 A 2/1963 Ikrath et al.
3,096,462 A 7/1963 Joseph et al.
3,101,472 A 8/1963 Goubau
3,109,175 A 10/1963 Lloyd
3,129,356 A 4/1964 Phillips
3,134,951 A 5/1964 Huber et al.
3,146,297 A 8/1964 Hahne
3,146,453 A 8/1964 Hagaman
3,201,724 A 8/1965 Hafner
3,205,462 A 9/1965 Meinke
3,218,384 A 11/1965 Shaw
3,219,954 A 11/1965 Rutelli
3,234,559 A 2/1966 Bartholoma et al.
3,255,454 A 6/1966 Walter et al.
3,296,364 A 1/1967 Jefferson et al.
3,296,685 A 1/1967 Menahem et al.
3,310,808 A 3/1967 Friis et al.
3,316,344 A 4/1967 Toms et al.
3,316,345 A 4/1967 Toms et al.
3,318,561 A 5/1967 Robertson, Jr. et al.
3,321,763 A 5/1967 Ikrath et al.
3,329,958 A 7/1967 Anderson et al.
3,351,947 A 11/1967 Hart et al.
3,355,738 A 11/1967 Algeo et al.
3,369,788 A 2/1968 Eisele

(56) **References Cited**

U.S. PATENT DOCUMENTS

3,389,394 A 6/1968 Lewis et al.
3,392,388 A 7/1968 Tsuneo et al.
3,392,395 A 7/1968 Hannan
3,411,112 A 11/1968 Honig et al.
3,413,637 A 11/1968 Goebels, Jr. et al.
3,413,642 A 11/1968 Cook
3,414,903 A 12/1968 Bartlett et al.
3,420,596 A 1/1969 Osterberg
3,427,573 A 2/1969 White et al.
3,448,455 A 6/1969 Alfandari et al.
3,453,617 A 7/1969 Brickey et al.
3,459,873 A 8/1969 Harris et al.
3,465,346 A 9/1969 Patterson et al.
3,474,995 A 10/1969 Amidon et al.
3,482,251 A 12/1969 Bowes
3,487,158 A 12/1969 Killian
3,495,262 A 2/1970 Robert et al.
3,500,422 A 3/1970 Grady et al.
3,509,463 A 4/1970 Woodward et al.
3,522,560 A 8/1970 Hayany
3,524,192 A 8/1970 Sakiotis et al.
3,529,205 A 9/1970 Miller
3,530,481 A 9/1970 Tanaka et al.
3,531,803 A 9/1970 Hudspeth et al.
3,536,800 A 10/1970 Hubbard
3,555,553 A 1/1971 Boyns
3,557,341 A 1/1971 Sochilin et al.
3,566,317 A 2/1971 Theodore
3,568,204 A 3/1971 Blaisdell
3,569,979 A 3/1971 Munk et al.
3,573,838 A 4/1971 Ajioka
3,588,754 A 6/1971 Theodore
3,588,755 A 6/1971 Kunio et al.
3,589,121 A 6/1971 Mulvey
3,594,494 A 7/1971 Ross et al.
3,599,219 A 8/1971 Hansen et al.
3,603,904 A 9/1971 Theodore
3,603,951 A 9/1971 Bracken et al.
3,609,247 A 9/1971 Halstead
3,623,114 A 11/1971 Seaton
3,624,655 A 11/1971 Yamada et al.
3,638,224 A 1/1972 Bailey et al.
3,653,622 A 4/1972 Farmer
3,666,902 A 5/1972 Owen et al.
3,668,459 A 6/1972 Symons et al.
3,668,574 A 6/1972 Barlow
3,672,202 A 6/1972 Barber et al.
3,686,596 A 8/1972 Albee
3,693,922 A 9/1972 Gueguen
3,699,574 A 10/1972 Plunk et al.
3,703,690 A 11/1972 Ravenscroft et al.
3,704,001 A 11/1972 Sloop
3,725,937 A 4/1973 Schreiber
3,753,086 A 8/1973 Shoemaker et al.
3,760,127 A 9/1973 Grossi et al.
3,765,021 A 10/1973 Chiron et al.
3,772,528 A 11/1973 Anderson et al.
3,775,769 A 11/1973 Heeren et al.
3,787,872 A 1/1974 Kauffman
3,796,970 A 3/1974 Snell
3,806,931 A 4/1974 Wright
3,833,909 A 9/1974 Schaufelberger
3,835,407 A 9/1974 Yariv et al.
3,845,426 A 10/1974 Barlow
3,858,214 A 12/1974 Jones
3,877,032 A 4/1975 Rosa
3,888,446 A 6/1975 O'Brien et al.
3,896,380 A 7/1975 Martin
3,906,508 A 9/1975 Foldes
3,911,415 A 10/1975 Whyte
3,921,949 A 11/1975 Coon
3,925,763 A 12/1975 Wadhwani
3,935,577 A 1/1976 Hansen et al.
3,936,836 A 2/1976 Wheeler et al.
3,936,838 A 2/1976 Foldes et al.
3,952,984 A 4/1976 Dimitry et al.
3,956,751 A 5/1976 Herman
3,959,794 A 5/1976 Chrepta et al.
3,973,087 A 8/1976 Fong et al.
3,973,240 A 8/1976 Fong et al.
3,976,358 A 8/1976 Thompson et al.
3,983,560 A 9/1976 MacDougall et al.
4,010,799 A 3/1977 Kern et al.
4,012,743 A 3/1977 Maciejewski et al.
4,020,431 A 4/1977 Saunders et al.
4,026,632 A 5/1977 Hill et al.
4,030,048 A 6/1977 Foldes et al.
4,030,953 A 6/1977 Rutschow et al.
4,031,536 A 6/1977 Alford et al.
4,035,054 A 7/1977 Lattanzi et al.
4,047,180 A 9/1977 Kuo et al.
4,079,361 A 3/1978 Woode et al.
4,080,600 A 3/1978 Toman et al.
4,099,184 A 7/1978 Rapshys et al.
4,114,121 A 9/1978 Barlow et al.
4,115,782 A 9/1978 Han et al.
4,123,759 A 10/1978 Hines et al.
4,125,768 A 11/1978 Jackson et al.
4,129,872 A 12/1978 Toman et al.
4,141,015 A 2/1979 Wong et al.
4,149,170 A 4/1979 Campbell et al.
4,155,108 A 5/1979 Tuttle et al.
4,156,241 A 5/1979 Mobley et al.
4,166,669 A 9/1979 Leonberger et al.
4,175,257 A 11/1979 Smith et al.
4,188,595 A 2/1980 Cronson et al.
4,190,137 A 2/1980 Shimada et al.
4,191,953 A 3/1980 Woode et al.
4,195,302 A 3/1980 Leupelt et al.
4,210,357 A 7/1980 Adachi et al.
4,216,449 A 8/1980 Kach
4,220,957 A 9/1980 Britt et al.
4,231,042 A 10/1980 Turrin et al.
4,234,753 A 11/1980 Clutter
4,238,974 A 12/1980 Fawcett et al.
4,246,584 A 1/1981 Noerpel et al.
4,247,858 A 1/1981 Eichweber et al.
4,250,489 A 2/1981 Dudash et al.
4,268,804 A 5/1981 Spinner et al.
4,274,097 A 6/1981 Krall et al.
4,274,112 A 6/1981 Leysieffer et al.
4,278,955 A 7/1981 Lunden et al.
4,293,833 A 10/1981 Popa et al.
4,298,877 A 11/1981 Sletten et al.
4,300,242 A 11/1981 Nava et al.
4,307,938 A 12/1981 Dyott et al.
4,316,646 A 2/1982 Siebens et al.
4,319,074 A 3/1982 Yaste et al.
4,329,690 A 5/1982 Parker et al.
4,333,082 A 6/1982 Susman et al.
4,335,613 A 6/1982 Luukkala et al.
4,336,719 A 6/1982 Lynnworth
4,345,256 A 8/1982 Rainwater et al.
4,366,565 A 12/1982 Herskowitz
4,367,446 A 1/1983 Hall et al.
4,378,143 A 3/1983 Winzer et al.
4,384,289 A 5/1983 Fernandes et al.
4,398,058 A 8/1983 Gerth et al.
4,398,121 A 8/1983 Chodorow et al.
4,413,263 A 11/1983 Amitay et al.
4,447,811 A 5/1984 Hamid et al.
4,458,250 A 7/1984 Bodnar et al.
4,463,329 A 7/1984 Suzuki et al.
4,468,672 A 8/1984 Dragone et al.
4,475,209 A 10/1984 Udren
4,477,814 A 10/1984 Brumbaugh et al.
4,482,899 A 11/1984 Dragone et al.
4,488,156 A 12/1984 DuFort et al.
4,491,386 A 1/1985 Negishi et al.
4,495,498 A 1/1985 Petrelis et al.
4,516,130 A 5/1985 Dragone
4,525,432 A 6/1985 Saito et al.
4,525,693 A 6/1985 Suzuki et al.
4,533,875 A 8/1985 Lau et al.

(56) **References Cited**

U.S. PATENT DOCUMENTS

4,541,303 A 9/1985 Kuzunishi et al.
4,550,271 A 10/1985 Lau et al.
4,553,112 A 11/1985 Saad et al.
4,556,271 A 12/1985 Hubbard
4,558,325 A 12/1985 Stroem et al.
4,565,348 A 1/1986 Larsen
4,566,012 A 1/1986 Choung et al.
4,567,401 A 1/1986 Barnett et al.
4,568,943 A 2/1986 Bowman
4,573,215 A 2/1986 Oates et al.
4,589,424 A 5/1986 Vaguine et al.
4,598,262 A 7/1986 Chen et al.
4,599,598 A 7/1986 Komoda et al.
4,604,551 A 8/1986 Moeller et al.
4,604,624 A 8/1986 Amitay et al.
4,604,627 A 8/1986 Saad et al.
4,618,867 A 10/1986 Gans et al.
4,636,753 A 1/1987 Geller et al.
4,638,322 A 1/1987 Lamberty et al.
4,641,916 A 2/1987 Oestreich et al.
4,642,651 A 2/1987 Kuhn et al.
4,644,365 A 2/1987 Horning et al.
4,647,329 A 3/1987 Oono et al.
4,660,050 A 4/1987 Phillips et al.
4,665,660 A 5/1987 Krall et al.
4,672,384 A 6/1987 Roy et al.
4,673,943 A 6/1987 Hannan
4,680,558 A 7/1987 Ghosh et al.
4,694,599 A 9/1987 Hart et al.
4,704,611 A 11/1987 Edwards et al.
4,715,695 A 12/1987 Nishimura et al.
4,717,974 A 1/1988 Baumeister et al.
4,728,910 A 3/1988 Owens et al.
4,730,172 A 3/1988 Bengeult
4,730,888 A 3/1988 Darcie et al.
4,731,810 A 3/1988 Watkins
4,735,097 A 4/1988 Lynnworth et al.
4,743,915 A 5/1988 Rammos et al.
4,743,916 A 5/1988 Bengeult
4,745,377 A 5/1988 Stern et al.
4,746,241 A 5/1988 Burbank, III et al.
4,749,244 A 6/1988 Luh
4,755,830 A 7/1988 Plunk et al.
4,757,324 A 7/1988 Dhanjal et al.
4,758,962 A 7/1988 Fernandes
4,764,738 A 8/1988 Fried et al.
4,772,891 A 9/1988 Svy
4,777,457 A 10/1988 Ghosh et al.
4,785,304 A 11/1988 Stern et al.
4,786,913 A 11/1988 Barendregt et al.
4,788,553 A 11/1988 Phillips et al.
4,792,771 A 12/1988 Siu et al.
4,792,812 A 12/1988 Rinehart et al.
4,799,031 A 1/1989 Lang et al.
4,800,350 A 1/1989 Bridges et al.
4,801,937 A 1/1989 Fernandes
4,818,963 A 4/1989 Green et al.
4,818,990 A 4/1989 Fernandes
4,821,006 A 4/1989 Ishikawa et al.
4,825,221 A 4/1989 Suzuki et al.
4,829,310 A 5/1989 Losee et al.
4,829,314 A 5/1989 Barbier et al.
4,831,346 A 5/1989 Brooker et al.
4,832,148 A 5/1989 Becker et al.
4,835,517 A 5/1989 van der Gracht et al.
4,839,659 A 6/1989 Stern et al.
4,845,508 A 7/1989 Krall et al.
4,847,610 A 7/1989 Ozawa et al.
4,849,611 A 7/1989 Whitney et al.
4,851,788 A 7/1989 Ives et al.
4,855,749 A 8/1989 DeFonzo et al.
4,866,454 A 9/1989 Droessler et al.
4,873,534 A 10/1989 Wohlleben et al.
4,879,544 A 11/1989 Maki et al.
4,881,028 A 11/1989 Bright et al.
4,886,980 A 12/1989 Fernandes et al.
4,897,663 A 1/1990 Kusano et al.
4,904,996 A 2/1990 Fernandes
4,915,468 A 4/1990 Kim et al.
4,916,460 A 4/1990 Powell et al.
4,922,180 A 5/1990 Saffer et al.
4,929,962 A 5/1990 Begout et al.
4,931,808 A 6/1990 Munson et al.
4,932,620 A 6/1990 Foy
4,946,202 A 8/1990 Perricone et al.
4,956,620 A 9/1990 Moeller et al.
4,965,856 A 10/1990 Swanic
4,977,593 A 12/1990 Ballance
4,977,618 A 12/1990 Allen
4,989,011 A 1/1991 Rosen et al.
4,998,095 A 3/1991 Shields
5,003,318 A 3/1991 Hall et al.
5,006,846 A 4/1991 Granville et al.
5,006,859 A 4/1991 Wong et al.
5,015,914 A 5/1991 Ives et al.
5,017,936 A 5/1991 Massey et al.
5,017,937 A 5/1991 Newham et al.
5,018,180 A 5/1991 Shoulders
5,019,832 A 5/1991 Ekdahl et al.
5,036,335 A 7/1991 Jairam et al.
H956 H 8/1991 Reindel
5,042,903 A 8/1991 Jakubowski et al.
5,043,538 A 8/1991 Hughey et al.
5,043,629 A 8/1991 Doane et al.
5,044,722 A 9/1991 Voser et al.
5,045,820 A 9/1991 Oehlerking et al.
5,057,106 A 10/1991 Kasevich et al.
5,065,760 A 11/1991 Krause et al.
5,065,969 A 11/1991 McLean et al.
5,072,228 A 12/1991 Kuwahara et al.
5,082,349 A 1/1992 Cordova-Plaza et al.
5,086,467 A 2/1992 Malek
5,107,231 A 4/1992 Knox et al.
5,109,232 A 4/1992 Monte et al.
5,113,197 A 5/1992 Luh et al.
5,117,237 A 5/1992 Legg
5,121,129 A 6/1992 Lee et al.
5,126,750 A 6/1992 Wang et al.
5,132,968 A 7/1992 Cephus
5,134,251 A 7/1992 Martin et al.
5,134,423 A 7/1992 Haupt et al.
5,134,965 A 8/1992 Tokuda et al.
5,136,671 A 8/1992 Dragone et al.
5,142,767 A 9/1992 Adams et al.
5,148,509 A 9/1992 Kannabiran et al.
5,152,861 A 10/1992 Hann
5,153,676 A 10/1992 Bergh et al.
5,166,698 A 11/1992 Ashbaugh et al.
5,174,164 A 12/1992 Wilheim et al.
5,175,560 A 12/1992 Lucas et al.
5,182,427 A 1/1993 McGaffigan et al.
5,187,409 A 2/1993 Ito et al.
5,193,774 A 3/1993 Rogers et al.
5,198,823 A 3/1993 Litchford et al.
5,212,755 A 5/1993 Holmberg et al.
5,214,394 A 5/1993 Wong et al.
5,214,438 A 5/1993 Smith et al.
5,216,616 A 6/1993 Masters
5,218,657 A 6/1993 Tokudome et al.
5,235,662 A 8/1993 Prince et al.
5,239,537 A 8/1993 Sakauchi
5,241,321 A 8/1993 Tsao et al.
5,241,701 A 8/1993 Andoh et al.
5,248,876 A 9/1993 Kerstens et al.
5,254,809 A 10/1993 Martin
5,265,266 A 11/1993 Trinh
5,266,961 A 11/1993 Milroy et al.
5,276,455 A 1/1994 Fitzsimmons et al.
5,278,687 A 1/1994 Jannson et al.
5,280,297 A 1/1994 Profera et al.
5,291,211 A 3/1994 Tropper et al.
5,298,911 A 3/1994 Li et al.
5,299,773 A 4/1994 Bertrand et al.
5,304,999 A 4/1994 Roberts et al.

(56) **References Cited**

U.S. PATENT DOCUMENTS

5,311,596 A 5/1994 Scott et al.
5,327,149 A 7/1994 Kuffer et al.
5,329,285 A 7/1994 McCandless et al.
5,341,088 A 8/1994 David
5,345,522 A 9/1994 Vali et al.
5,347,287 A 9/1994 Speciale et al.
5,352,984 A 10/1994 Piesinger et al.
5,353,036 A 10/1994 Baldry
5,359,338 A 10/1994 Hatcher et al.
5,371,623 A 12/1994 Eastmond et al.
5,379,455 A 1/1995 Koschek et al.
5,380,224 A 1/1995 Dicicco
5,381,160 A 1/1995 Landmeier
5,389,442 A 2/1995 Kathiresan et al.
5,400,040 A 3/1995 Lane et al.
5,402,140 A 3/1995 Rodeffer et al.
5,402,151 A 3/1995 Duwaer
5,404,146 A 4/1995 Rutledge et al.
5,410,318 A 4/1995 Wong et al.
5,412,654 A 5/1995 Perkins
5,428,364 A 6/1995 Lee et al.
5,428,818 A 6/1995 Meidan et al.
5,434,575 A 7/1995 Jelinek et al.
5,440,660 A 8/1995 Dombrowski et al.
5,451,969 A 9/1995 Toth et al.
5,457,469 A 10/1995 Diamond et al.
5,479,176 A 12/1995 Zavrel et al.
5,481,268 A 1/1996 Higgins
5,482,525 A 1/1996 Kajioka et al.
5,486,839 A 1/1996 Rodeffer et al.
5,488,380 A 1/1996 Harvey et al.
5,495,546 A 2/1996 Bottoms et al.
5,499,308 A 3/1996 Arai et al.
5,499,311 A 3/1996 DeCusatis et al.
5,502,392 A 3/1996 Arjavalingam et al.
5,512,906 A 4/1996 Speciale et al.
5,513,176 A 4/1996 Dean et al.
5,514,965 A 5/1996 Westwood et al.
5,515,059 A 5/1996 How et al.
5,519,408 A 5/1996 Schnetzer et al.
5,528,208 A 6/1996 Kobayashi et al.
5,539,421 A 7/1996 Hong et al.
5,543,000 A 8/1996 Lique
5,557,283 A 9/1996 Sheen
5,559,359 A 9/1996 Reyes
5,566,022 A 10/1996 Segev
5,566,196 A 10/1996 Scifres
5,576,721 A 11/1996 Hwang et al.
5,586,054 A 12/1996 Jensen et al.
5,592,183 A 1/1997 Henf
5,600,630 A 2/1997 Takano et al.
5,603,089 A 2/1997 Searle et al.
5,619,015 A 4/1997 Kirma
5,621,421 A 4/1997 Kolz et al.
5,627,879 A 5/1997 Russell et al.
5,628,050 A 5/1997 McGraw et al.
5,630,223 A 5/1997 Bahu et al.
5,637,521 A 6/1997 Rhodes et al.
5,640,168 A 6/1997 Heger et al.
5,646,936 A 7/1997 Shah et al.
5,650,788 A 7/1997 Jha
5,652,554 A 7/1997 Krieg et al.
5,663,693 A 9/1997 Doughty et al.
5,671,304 A 9/1997 Duguay
5,677,699 A 10/1997 Strickland
5,677,909 A 10/1997 Heide
5,680,139 A 10/1997 Huguenin et al.
5,682,256 A 10/1997 Motley et al.
5,684,495 A 11/1997 Dyott et al.
5,686,930 A 11/1997 Brydon
5,724,168 A 3/1998 Oschmann et al.
5,726,980 A 3/1998 Rickard et al.
5,748,153 A 5/1998 McKinzie et al.
5,750,941 A 5/1998 Ishikawa et al.
5,757,323 A 5/1998 Spencer et al.
5,767,807 A 6/1998 Pritchett et al.
5,768,689 A 6/1998 Borg
5,769,879 A 6/1998 Levay et al.
5,784,033 A 7/1998 Boldissar, Jr. et al.
5,784,034 A 7/1998 Konishi et al.
5,784,683 A 7/1998 Sistanizadeh et al.
5,787,673 A 8/1998 Noble
5,793,334 A 8/1998 Harrison et al.
5,800,494 A 9/1998 Campbell et al.
5,805,983 A 9/1998 Naidu et al.
5,809,395 A 9/1998 Hamilton-Piercy et al.
5,812,524 A 9/1998 Moran et al.
5,818,390 A 10/1998 Hill
5,818,396 A 10/1998 Anderson et al.
5,818,512 A 10/1998 Fuller
5,845,391 A 12/1998 Miklosko et al.
5,848,054 A 12/1998 Mosebrook et al.
5,850,199 A 12/1998 Wan et al.
5,854,608 A 12/1998 Leisten
5,859,618 A 1/1999 Miller, II et al.
5,861,843 A 1/1999 Sorace et al.
5,867,763 A 2/1999 Dean et al.
5,870,060 A 2/1999 Chen et al.
5,872,544 A 2/1999 Schay et al.
5,872,547 A 2/1999 Martek
5,873,324 A 2/1999 Kaddas et al.
5,886,666 A 3/1999 Schellenberg et al.
5,889,449 A 3/1999 Fiedziuszko
5,890,055 A 3/1999 Chu et al.
5,892,480 A 4/1999 Killen et al.
5,898,133 A 4/1999 Bleich et al.
5,898,830 A 4/1999 Wesinger, Jr. et al.
5,900,847 A 5/1999 Ishikawa et al.
5,903,373 A 5/1999 Welch et al.
5,905,438 A 5/1999 Weiss et al.
5,905,949 A 5/1999 Hawkes et al.
5,910,790 A 6/1999 Ohmuro et al.
5,917,977 A 6/1999 Barrett et al.
5,922,081 A 7/1999 Seewig et al.
5,926,128 A 7/1999 Brash et al.
5,933,422 A 8/1999 Suzuki et al.
5,936,589 A 8/1999 Kawahata
5,948,044 A 9/1999 Varley et al.
5,948,108 A 9/1999 Lu et al.
5,952,964 A 9/1999 Chan et al.
5,952,972 A 9/1999 Ittipiboon et al.
5,952,984 A 9/1999 Kuramoto et al.
5,955,992 A 9/1999 Shattil
5,959,578 A 9/1999 Kreutel et al.
5,959,590 A 9/1999 Sanford et al.
5,973,641 A 10/1999 Smith et al.
5,977,650 A 11/1999 Rickard et al.
5,978,738 A 11/1999 Brown et al.
5,982,276 A 11/1999 Stewart
5,986,331 A 11/1999 Letavic et al.
5,987,099 A 11/1999 O'Neill et al.
5,990,848 A 11/1999 Annamaa et al.
5,994,984 A 11/1999 Stancil et al.
5,994,998 A 11/1999 Fisher et al.
6,005,694 A 12/1999 Liu
6,005,758 A 12/1999 Spencer et al.
6,009,124 A 12/1999 Smith
6,011,520 A 1/2000 Howell et al.
6,011,524 A 1/2000 Jervis et al.
6,014,110 A 1/2000 Bridges et al.
6,018,659 A 1/2000 Ayyagari et al.
6,023,619 A 2/2000 Kaminsky
6,026,173 A 2/2000 Svenson et al.
6,026,208 A 2/2000 Will et al.
6,026,331 A 2/2000 Feldberg et al.
6,031,455 A 2/2000 Grube et al.
6,034,638 A 3/2000 Thiel et al.
6,037,894 A 3/2000 Pfizenmaier et al.
6,038,425 A 3/2000 Jeffrey et al.
6,049,647 A 4/2000 Register et al.
6,057,802 A 5/2000 Nealy
6,061,035 A 5/2000 Kinasewitz et al.
6,063,234 A 5/2000 Chen et al.
6,075,451 A 6/2000 Lebowitz et al.

(56) **References Cited**

U.S. PATENT DOCUMENTS


| | | | |
|---|---|---|---|
| 6,075,493 | A | 6/2000 | Sugawara et al. |
| 6,076,044 | A | 6/2000 | Brown et al. |
| 6,078,297 | A | 6/2000 | Kormanyos et al. |
| 6,088,001 | A | 7/2000 | Burger et al. |
| 6,095,820 | A | 8/2000 | Luxon et al. |
| 6,100,846 | A | 8/2000 | Li et al. |
| 6,103,031 | A | 8/2000 | Aeschbacher et al. |
| 6,107,897 | A | 8/2000 | Hewett et al. |
| 6,111,553 | A | 8/2000 | Steenbuck et al. |
| 6,114,998 | A | 9/2000 | Schefte et al. |
| 6,121,885 | A | 9/2000 | Masone et al. |
| 6,122,753 | A | 9/2000 | Masuo et al. |
| 6,140,911 | A | 10/2000 | Fisher et al. |
| 6,140,976 | A | 10/2000 | Locke et al. |
| 6,142,434 | A | 11/2000 | Brinkman et al. |
| 6,146,330 | A | 11/2000 | Tujino et al. |
| 6,150,612 | A | 11/2000 | Grandy et al. |
| 6,151,145 | A | 11/2000 | Srivastava et al. |
| 6,154,488 | A | 11/2000 | Hunt |
| 6,158,383 | A | 12/2000 | Watanabe et al. |
| 6,163,296 | A | 12/2000 | Lier et al. |
| 6,166,694 | A | 12/2000 | Ying et al. |
| 6,167,055 | A | 12/2000 | Ganek et al. |
| 6,175,917 | B1 | 1/2001 | Arrow et al. |
| 6,177,801 | B1 | 1/2001 | Chong et al. |
| 6,184,828 | B1 | 2/2001 | Shoki et al. |
| 6,195,058 | B1 | 2/2001 | Nakamura et al. |
| 6,195,395 | B1 | 2/2001 | Frodsham et al. |
| 6,198,440 | B1 | 3/2001 | Krylov et al. |
| 6,208,161 | B1 | 3/2001 | Suda et al. |
| 6,208,308 | B1 | 3/2001 | Lemons et al. |
| 6,208,903 | B1 | 3/2001 | Richards et al. |
| 6,211,836 | B1 | 4/2001 | Manasson et al. |
| 6,211,837 | B1 | 4/2001 | Crouch et al. |
| 6,215,443 | B1 | 4/2001 | Komatsu et al. |
| 6,219,006 | B1 | 4/2001 | Rudish et al. |
| 6,222,503 | B1 | 4/2001 | Gietema et al. |
| 6,225,960 | B1 | 5/2001 | Collins et al. |
| 6,229,327 | B1 | 5/2001 | Boll et al. |
| 6,236,365 | B1 | 5/2001 | Karr et al. |
| 6,239,377 | B1 | 5/2001 | Nishikawa et al. |
| 6,239,379 | B1 | 5/2001 | Cotter et al. |
| 6,239,761 | B1 | 5/2001 | Guo et al. |
| 6,241,045 | B1 | 6/2001 | Reeve et al. |
| 6,243,049 | B1 | 6/2001 | Chandler et al. |
| 6,246,821 | B1 | 6/2001 | Hemken et al. |
| 6,252,553 | B1 | 6/2001 | Solomon et al. |
| 6,259,337 | B1 | 7/2001 | Wen et al. |
| 6,266,016 | B1 | 7/2001 | Bergstedt et al. |
| 6,266,025 | B1 | 7/2001 | Popa et al. |
| 6,268,835 | B1 | 7/2001 | Toland et al. |
| 6,271,790 | B2 | 8/2001 | Smith et al. |
| 6,271,799 | B1 | 8/2001 | Rief et al. |
| 6,271,952 | B1 | 8/2001 | Epworth et al. |
| 6,278,357 | B1 | 8/2001 | Croushore et al. |
| 6,278,370 | B1 | 8/2001 | Underwood et al. |
| 6,281,855 | B1 | 8/2001 | Aoki et al. |
| 6,282,354 | B1 | 8/2001 | Jones et al. |
| 6,283,425 | B1 | 9/2001 | Liljevik |
| 6,285,325 | B1 | 9/2001 | Nalbandian et al. |
| 6,292,139 | B1 | 9/2001 | Yamamoto et al. |
| 6,292,143 | B1 | 9/2001 | Romanofsky et al. |
| 6,292,153 | B1 | 9/2001 | Aiello et al. |
| 6,300,898 | B1 | 10/2001 | Schneider et al. |
| 6,300,906 | B1 | 10/2001 | Rawnick et al. |
| 6,301,420 | B1 | 10/2001 | Greenaway et al. |
| 6,308,085 | B1 | 10/2001 | Shoki et al. |
| 6,311,288 | B1 | 10/2001 | Heeren et al. |
| 6,317,028 | B1 | 11/2001 | Valiulis et al. |
| 6,317,092 | B1 | 11/2001 | de Schweinitz et al. |
| 6,320,509 | B1 | 11/2001 | Brady et al. |
| 6,320,553 | B1 | 11/2001 | Ergene et al. |
| 6,323,819 | B1 | 11/2001 | Ergene et al. |
| 6,329,959 | B1 | 12/2001 | Varadan et al. |
| 6,348,683 | B1 | 2/2002 | Verghese et al. |
| 6,351,247 | B1 | 2/2002 | Linstrom et al. |
| 6,357,709 | B1 | 3/2002 | Parduhn et al. |
| 6,362,788 | B1 | 3/2002 | Louzir |
| 6,362,789 | B1 | 3/2002 | Trumbull et al. |
| 6,366,238 | B1 | 4/2002 | DeMore et al. |
| 6,373,436 | B1 | 4/2002 | Chen et al. |
| 6,373,441 | B1 | 4/2002 | Porath et al. |
| 6,376,824 | B1 | 4/2002 | Michenfelder et al. |
| 6,388,564 | B1 | 5/2002 | Piercy et al. |
| 6,396,440 | B1 | 5/2002 | Chen et al. |
| 6,404,773 | B1 | 6/2002 | Williams et al. |
| 6,404,775 | B1 | 6/2002 | Leslie |
| 6,421,021 | B1 | 7/2002 | Rupp et al. |
| 6,433,736 | B1 | 8/2002 | Timothy et al. |
| 6,433,741 | B2 | 8/2002 | Tanizaki et al. |
| 6,436,536 | B2 | 8/2002 | Peruzzotti et al. |
| 6,441,723 | B1 | 8/2002 | Mansfield, Jr. et al. |
| 6,445,351 | B1 | 9/2002 | Baker et al. |
| 6,445,774 | B1 | 9/2002 | Kidder et al. |
| 6,452,467 | B1 | 9/2002 | McEwan |
| 6,452,569 | B1 | 9/2002 | Park et al. |
| 6,452,923 | B1 | 9/2002 | Gerszberg et al. |
| 6,455,769 | B1 | 9/2002 | Belli et al. |
| 6,456,251 | B1 | 9/2002 | Rao et al. |
| 6,462,700 | B1 | 10/2002 | Schmidt et al. |
| 6,463,295 | B1 | 10/2002 | Yun et al. |
| 6,469,676 | B1 | 10/2002 | Fehrenbach et al. |
| 6,473,049 | B2 | 10/2002 | Takeuchi et al. |
| 6,480,168 | B1 | 11/2002 | Lam et al. |
| 6,483,470 | B1 | 11/2002 | Hohnstein et al. |
| 6,489,928 | B2 | 12/2002 | Sakurada |
| 6,489,931 | B2 | 12/2002 | Liu et al. |
| 6,492,957 | B2 | 12/2002 | Carillo, Jr. et al. |
| 6,501,433 | B2 | 12/2002 | Popa et al. |
| 6,507,573 | B1 | 1/2003 | Brandt et al. |
| 6,510,152 | B1 | 1/2003 | Gerszberg et al. |
| 6,515,635 | B2 | 2/2003 | Chiang et al. |
| 6,522,305 | B2 | 2/2003 | Sharman et al. |
| 6,531,991 | B2 | 3/2003 | Adachi et al. |
| 6,532,215 | B1 | 3/2003 | Muntz et al. |
| 6,534,996 | B1 | 3/2003 | Amrany et al. |
| 6,535,169 | B2 | 3/2003 | Fourdeux et al. |
| 6,542,739 | B1 | 4/2003 | Garner |
| 6,549,106 | B2 | 4/2003 | Martin et al. |
| 6,549,173 | B1 | 4/2003 | King et al. |
| 6,552,693 | B1 | 4/2003 | Leisten et al. |
| 6,559,811 | B1 | 5/2003 | Cash et al. |
| 6,563,981 | B2 | 5/2003 | Weisberg et al. |
| 6,567,573 | B1 | 5/2003 | Domash et al. |
| 6,573,803 | B1 | 6/2003 | Ziegner et al. |
| 6,573,813 | B1 | 6/2003 | Joannopoulos et al. |
| 6,580,295 | B2 | 6/2003 | Takekuma et al. |
| 6,584,084 | B1 | 6/2003 | Barany et al. |
| 6,584,252 | B1 | 6/2003 | Schier et al. |
| 6,587,077 | B2 | 7/2003 | Vail et al. |
| 6,593,893 | B2 | 7/2003 | Hou et al. |
| 6,594,238 | B1 | 7/2003 | Wallentin et al. |
| 6,596,944 | B1 | 7/2003 | Clark et al. |
| 6,600,456 | B2 | 7/2003 | Gothard et al. |
| 6,606,057 | B2 | 8/2003 | Chiang et al. |
| 6,606,066 | B1 | 8/2003 | Fawcett et al. |
| 6,606,077 | B2 | 8/2003 | Ebling et al. |
| 6,611,252 | B1 | 8/2003 | DuFaux et al. |
| 6,614,237 | B2 | 9/2003 | Ademian et al. |
| 6,628,859 | B2 | 9/2003 | Huang et al. |
| 6,631,229 | B1 | 10/2003 | Norris et al. |
| 6,634,225 | B1 | 10/2003 | Reime et al. |
| 6,639,484 | B2 | 10/2003 | Tzuang et al. |
| 6,639,566 | B2 | 10/2003 | Knop et al. |
| 6,642,887 | B2 | 11/2003 | Owechko et al. |
| 6,643,254 | B1 | 11/2003 | Abe et al. |
| 6,650,296 | B2 | 11/2003 | Wong et al. |
| 6,653,598 | B2 | 11/2003 | Sullivan et al. |
| 6,653,848 | B2 | 11/2003 | Adamian et al. |
| 6,657,437 | B1 | 12/2003 | LeCroy et al. |
| 6,659,655 | B2 | 12/2003 | Dair et al. |
| 6,661,391 | B2 | 12/2003 | Ohara et al. |
| 6,668,104 | B1 | 12/2003 | Mueller-Fiedler et al. |
| 6,670,921 | B2 | 12/2003 | Sievenpiper et al. |

(56) **References Cited**

U.S. PATENT DOCUMENTS

6,671,824 B1 12/2003 Hyland et al.
6,677,899 B1 1/2004 Lee et al.
6,680,903 B1 1/2004 Moriguchi et al.
6,683,580 B2 1/2004 Kuramoto
6,686,832 B2 2/2004 Abraham et al.
6,686,873 B2 2/2004 Patel et al.
6,686,875 B1 2/2004 Wolfson et al.
6,697,027 B2 2/2004 Mahon et al.
6,697,030 B2 2/2004 Gleener
6,703,981 B2 3/2004 Meitzler et al.
6,714,165 B2 3/2004 Verstraeten
6,720,935 B2 4/2004 Lamensdorf et al.
6,725,035 B2 4/2004 Jochim et al.
6,727,470 B2 4/2004 Reichle et al.
6,727,891 B2 4/2004 Moriya et al.
6,728,439 B2 4/2004 Weisberg et al.
6,728,552 B2 4/2004 Chatain et al.
6,731,210 B2 5/2004 Swanson et al.
6,731,649 B1 5/2004 Silverman
6,741,705 B1 5/2004 Nelson et al.
6,747,557 B1 6/2004 Petite et al.
6,750,827 B2 6/2004 Manasson et al.
6,754,470 B2 6/2004 Hendrickson et al.
6,755,312 B2 6/2004 Dziedzic et al.
6,756,538 B1 6/2004 Murga-Gonzalez et al.
6,765,479 B2 7/2004 Stewart et al.
6,768,454 B2 7/2004 Kingsley et al.
6,768,456 B1 7/2004 Lalezari et al.
6,768,471 B2 7/2004 Bostwick et al.
6,768,474 B2 7/2004 Hunt et al.
6,771,216 B2 8/2004 Patel et al.
6,771,225 B2 8/2004 Tits et al.
6,771,739 B1 8/2004 Beamon et al.
6,774,859 B2 8/2004 Schantz et al.
6,788,865 B2 9/2004 Kawanishi et al.
6,788,951 B2 9/2004 Aoki et al.
6,789,119 B1 9/2004 Zhu et al.
6,792,290 B2 9/2004 Proctor, Jr. et al.
6,798,223 B2 9/2004 Huang et al.
6,806,710 B1 10/2004 Renz et al.
6,809,633 B2 10/2004 Cern et al.
6,809,695 B2 10/2004 Le Bayon et al.
6,812,895 B2 11/2004 Anderson et al.
6,819,744 B1 11/2004 Galli et al.
6,822,615 B2 11/2004 Quan et al.
6,839,032 B2 1/2005 Teshirogi et al.
6,839,160 B2 1/2005 Tsuda et al.
6,839,846 B2 1/2005 Mangold et al.
6,842,157 B2 1/2005 Phelan et al.
6,842,430 B1 1/2005 Melnik et al.
6,850,128 B2 2/2005 Park
6,853,351 B1 2/2005 Mohuchy et al.
6,856,273 B1 2/2005 Bognar et al.
6,859,185 B2 2/2005 Royalty et al.
6,859,187 B2 2/2005 Ohlsson et al.
6,859,590 B1 2/2005 Zaccone
6,861,998 B2 3/2005 Louzir
6,864,851 B2 3/2005 McGrath et al.
6,864,853 B2 3/2005 Judd et al.
6,867,744 B2 3/2005 Toncich et al.
6,868,258 B2 3/2005 Hayata et al.
6,870,465 B1 3/2005 Song et al.
6,873,265 B2 3/2005 Bleier et al.
6,885,674 B2 4/2005 Hunt et al.
6,886,065 B2 4/2005 Sides et al.
6,888,623 B2 5/2005 Clements
6,901,064 B2 5/2005 Billhartz et al.
6,904,218 B2 6/2005 Sun et al.
6,906,676 B2 6/2005 Killen et al.
6,906,681 B2 6/2005 Hoppenstein et al.
6,909,893 B2 6/2005 Aoki et al.
6,917,974 B1 7/2005 Stytz et al.
6,920,289 B2 7/2005 Zimmerman et al.
6,920,315 B1 7/2005 Wilcox et al.
6,920,407 B2 7/2005 Phillips et al.
6,922,135 B2 7/2005 Abraham et al.
6,924,732 B2 8/2005 Yokoo et al.
6,924,776 B2 8/2005 Le et al.
6,933,887 B2 8/2005 Regnier et al.
6,934,655 B2 8/2005 Jones et al.
6,937,595 B2 8/2005 Barzegar et al.
6,943,553 B2 9/2005 Zimmermann et al.
6,944,555 B2 9/2005 Blackett et al.
6,947,147 B2 9/2005 Motamedi et al.
6,947,376 B1 9/2005 Deng et al.
6,947,635 B2 9/2005 Kohns et al.
6,948,371 B2 9/2005 Tanaka et al.
6,950,567 B2 9/2005 Kline et al.
6,952,143 B2 10/2005 Kinayman et al.
6,952,183 B2 10/2005 Yuanzhu et al.
6,956,506 B2 10/2005 Koivumaeki et al.
6,958,729 B1 10/2005 Metz et al.
6,965,302 B2 11/2005 Mollenkopf et al.
6,965,355 B1 11/2005 Durham et al.
6,965,784 B2 11/2005 Kanamaluru et al.
6,967,627 B2 11/2005 Roper et al.
6,970,502 B2 11/2005 Kim et al.
6,970,682 B2 11/2005 Crilly, Jr. et al.
6,972,729 B2 12/2005 Wang et al.
6,980,091 B2 12/2005 White, II et al.
6,982,611 B2 1/2006 Cope et al.
6,982,679 B2 1/2006 Kralovec et al.
6,983,174 B2 1/2006 Hoppenstein et al.
6,985,118 B2 1/2006 Killen et al.
6,992,639 B1 1/2006 Lier et al.
6,999,667 B2 2/2006 Jang et al.
7,008,120 B2 3/2006 Zaborsky et al.
7,009,471 B2 3/2006 Elmore
7,012,489 B2 3/2006 Fisher et al.
7,012,572 B1 3/2006 Schaffner et al.
7,016,585 B2 3/2006 Diggle, III et al.
7,019,704 B2 3/2006 Weiss et al.
7,023,400 B2 4/2006 Hill et al.
7,026,917 B2 4/2006 Berkman et al.
7,027,003 B2 4/2006 Sasaki et al.
7,027,454 B2 4/2006 Dent et al.
7,032,016 B2 4/2006 Cerami et al.
7,038,636 B2 5/2006 Larouche et al.
7,039,048 B1 5/2006 Monta et al.
7,042,403 B2 5/2006 Sievenpiper et al.
7,042,416 B2 5/2006 Kingsley et al.
7,042,420 B2 5/2006 Ebling et al.
7,043,271 B1 5/2006 Seto et al.
7,054,286 B2 5/2006 Ertel et al.
7,054,376 B1 5/2006 Rubinstain et al.
7,054,513 B2 5/2006 Herz et al.
7,055,148 B2 5/2006 Marsh et al.
7,057,558 B2 6/2006 Yasuho et al.
7,057,573 B2 6/2006 Ohira et al.
7,058,524 B2 6/2006 Hayes et al.
7,061,370 B2 6/2006 Cern et al.
7,061,891 B1 6/2006 Kilfoyle et al.
7,064,726 B2 6/2006 Kitamori et al.
7,068,998 B2 6/2006 Zavidniak et al.
7,069,163 B2 6/2006 Gunther et al.
7,075,414 B2 7/2006 Giannini et al.
7,075,485 B2 7/2006 Song et al.
7,075,496 B2 7/2006 Hidai et al.
7,082,321 B2 7/2006 Kuwahara et al.
7,084,742 B2 8/2006 Haines et al.
7,088,221 B2 8/2006 Chan
7,088,306 B2 8/2006 Chiang et al.
7,098,405 B2 8/2006 Glew et al.
7,098,773 B2 8/2006 Berkman et al.
7,102,581 B1 9/2006 West et al.
7,106,265 B2 9/2006 Robertson et al.
7,106,270 B2 9/2006 Iigusa et al.
7,106,273 B1 9/2006 Brunson et al.
7,109,939 B2 9/2006 Lynch et al.
7,113,002 B2 9/2006 Otsuka et al.
7,113,134 B1 9/2006 Berkman et al.
7,119,755 B2 10/2006 Harvey et al.
7,120,338 B2 10/2006 Gunn, III et al.
7,120,345 B2 10/2006 Naitou et al.

(56) **References Cited**

U.S. PATENT DOCUMENTS

7,122,012 B2 10/2006 Bouton et al.
7,123,191 B2 10/2006 Goldberg et al.
7,123,801 B2 10/2006 Fitz et al.
7,125,512 B2 10/2006 Crump et al.
7,126,557 B2 10/2006 Warnagiris et al.
7,126,711 B2 10/2006 Fruth
7,130,516 B2 10/2006 Wu et al.
7,132,950 B2 11/2006 Stewart et al.
7,133,930 B2 11/2006 Sabio et al.
7,134,012 B2 11/2006 Doyle et al.
7,134,135 B2 11/2006 Cerami et al.
7,136,397 B2 11/2006 Sharma et al.
7,136,772 B2 11/2006 Duchi et al.
7,137,605 B1 11/2006 Guertler et al.
7,138,767 B2 11/2006 Chen et al.
7,138,958 B2 11/2006 Syed et al.
7,139,328 B2 11/2006 Thomas et al.
7,145,440 B2 12/2006 Gerszberg et al.
7,145,552 B2 12/2006 Hollingsworth et al.
7,151,497 B2 12/2006 Crystal et al.
7,151,508 B2 12/2006 Schaffner et al.
7,155,238 B2 12/2006 Katz et al.
7,161,934 B2 1/2007 Buchsbaum et al.
7,164,354 B1 1/2007 Panzer et al.
7,167,139 B2 1/2007 Kim et al.
7,171,087 B2 1/2007 Takahashi et al.
7,171,308 B2 1/2007 Campbell et al.
7,171,493 B2 1/2007 Shu et al.
7,176,589 B2 2/2007 Rouquette et al.
7,180,459 B2 2/2007 Damini et al.
7,180,467 B2 2/2007 Fabrega-Sanchez
7,183,922 B2 2/2007 Mendolia et al.
7,183,991 B2 2/2007 Bhattacharyya et al.
7,183,998 B2 2/2007 Wilhelm et al.
7,193,562 B2 3/2007 Kish et al.
7,194,528 B1 3/2007 Davidow et al.
7,199,680 B2 4/2007 Fukunaga et al.
7,200,391 B2 4/2007 Chung et al.
7,200,658 B2 4/2007 Goeller et al.
7,205,950 B2 4/2007 Imai et al.
7,212,163 B2 5/2007 Huang et al.
7,215,220 B1 5/2007 Jia et al.
7,215,928 B2 5/2007 Gage et al.
7,218,285 B2 5/2007 Davis et al.
7,224,170 B2 5/2007 Graham et al.
7,224,243 B2 5/2007 Cope et al.
7,224,272 B2 5/2007 White, II et al.
7,224,320 B2 5/2007 Cook et al.
7,224,985 B2 5/2007 Caci et al.
7,228,123 B2 6/2007 Moursund et al.
7,234,413 B2 6/2007 Suzuki et al.
7,234,895 B2 6/2007 Richardson et al.
7,239,284 B1 7/2007 Staal et al.
7,243,610 B2 7/2007 Ishii et al.
7,248,148 B2 7/2007 Kline et al.
7,250,772 B2 7/2007 Furse et al.
7,255,821 B2 8/2007 Priedeman, Jr. et al.
7,259,657 B2 8/2007 Mollenkopf et al.
7,260,424 B2 8/2007 Schmidt et al.
7,266,154 B2 9/2007 Gundrum et al.
7,266,275 B2 9/2007 Hansen et al.
7,272,281 B2 9/2007 Stahulak et al.
7,272,362 B2 9/2007 Jeong et al.
7,274,305 B1 9/2007 Luttrell
7,274,936 B2 9/2007 Stern-Berkowitz et al.
7,276,990 B2 10/2007 Sievenpiper et al.
7,280,033 B2 10/2007 Berkman et al.
7,280,803 B2 10/2007 Nelson et al.
7,282,922 B2 10/2007 Lo et al.
7,286,099 B1 10/2007 Lier et al.
7,289,449 B1 10/2007 Rubinstein et al.
7,289,704 B1 10/2007 Wagman et al.
7,289,828 B2 10/2007 Cha et al.
7,292,125 B2 11/2007 Mansour et al.
7,292,196 B2 11/2007 Waterhouse et al.
7,295,161 B2 11/2007 Gaucher et al.
7,297,869 B2 11/2007 Hiller et al.
7,301,440 B2 11/2007 Mollenkopf
7,301,508 B1 11/2007 O'Loughlin et al.
7,307,357 B2 12/2007 Kopp et al.
7,307,596 B1 12/2007 West et al.
7,308,264 B2 12/2007 Stern-Berkowitz et al.
7,308,370 B2 12/2007 Mason, Jr. et al.
7,309,873 B2 12/2007 Ishikawa
7,310,065 B2 12/2007 Anguera et al.
7,310,335 B1 12/2007 Garcia-Luna-Aceves et al.
7,311,605 B2 12/2007 Moser
7,312,686 B2 12/2007 Bruno
7,313,087 B2 12/2007 Patil et al.
7,313,312 B2 12/2007 Kimball et al.
7,315,224 B2 1/2008 Gurovich et al.
7,315,678 B2 1/2008 Siegel
7,318,564 B1 1/2008 Marshall et al.
7,319,717 B2 1/2008 Zitting et al.
7,321,291 B2 1/2008 Gidge et al.
7,321,707 B2 1/2008 Noda et al.
7,324,046 B1 1/2008 Wu et al.
7,324,817 B2 1/2008 Iacono et al.
7,329,815 B2 2/2008 Johnston et al.
7,333,064 B1 2/2008 Timothy et al.
7,333,593 B2 2/2008 Beamon et al.
7,339,466 B2 3/2008 Mansfield et al.
7,339,897 B2 3/2008 Larsson et al.
7,340,768 B2 3/2008 Rosenberger et al.
7,345,623 B2 3/2008 McEwan et al.
7,346,244 B2 3/2008 Gowan et al.
7,346,359 B2 3/2008 Damarla et al.
7,353,293 B2 4/2008 Hipfinger et al.
7,355,560 B2 4/2008 Nagai et al.
7,358,808 B2 4/2008 Berkman et al.
7,358,921 B2 4/2008 Snyder et al.
7,369,085 B1 5/2008 Jacomb-Hood et al.
7,369,095 B2 5/2008 Thudor et al.
7,376,191 B2 5/2008 Melick et al.
7,380,272 B2 5/2008 Sharp et al.
7,381,089 B2 6/2008 Hosler, Sr.
7,382,232 B2 6/2008 Gidge et al.
7,383,577 B2 6/2008 Hrastar et al.
7,388,450 B2 6/2008 Camiade et al.
7,397,422 B2 7/2008 Tekawy et al.
7,398,946 B1 7/2008 Marshall
7,400,304 B2 7/2008 Lewis et al.
7,403,169 B2 7/2008 Svensson et al.
7,406,337 B2 7/2008 Kim et al.
7,408,426 B2 8/2008 Broyde et al.
7,408,507 B1 8/2008 Paek et al.
7,408,923 B1 8/2008 Khan et al.
7,410,606 B2 8/2008 Atkinson et al.
7,417,587 B2 8/2008 Iskander et al.
7,418,178 B2 8/2008 Kudou et al.
7,418,273 B2 8/2008 Suyama et al.
7,420,474 B1 9/2008 Elks et al.
7,420,525 B2 9/2008 Colburn et al.
7,423,604 B2 9/2008 Nagai et al.
7,426,554 B2 9/2008 Kennedy et al.
7,427,927 B2 9/2008 Borleske et al.
7,430,257 B1 9/2008 Shattil et al.
7,430,932 B2 10/2008 Mekhanoshin et al.
7,443,334 B2 10/2008 Rees et al.
7,444,404 B2 10/2008 Wetherall et al.
7,446,567 B2 11/2008 Otsuka et al.
7,450,000 B2 11/2008 Gidge et al.
7,450,001 B2 11/2008 Berkman
7,453,352 B2 11/2008 Kline et al.
7,453,393 B2 11/2008 Duivenvoorden et al.
7,456,650 B2 11/2008 Lee et al.
7,459,834 B2 12/2008 Knowles et al.
7,460,834 B2 12/2008 Johnson et al.
7,463,877 B2 12/2008 Iwamura
7,465,879 B2 12/2008 Glew et al.
7,466,225 B2 12/2008 White, II et al.
7,468,657 B2 12/2008 Yaney
7,477,285 B1 1/2009 Johnson et al.
7,479,776 B2 1/2009 Renken et al.

(56) **References Cited**

U.S. PATENT DOCUMENTS


7,479,841 B2 1/2009 Stenger et al.
7,486,247 B2 2/2009 Ridgway et al.
7,490,275 B2 2/2009 Zerbe et al.
7,492,317 B2 2/2009 Tinsley et al.
7,496,674 B2 2/2009 Jorgensen et al.
7,498,822 B2 3/2009 Lee et al.
7,502,619 B1 3/2009 Katz et al.
7,504,938 B2 3/2009 Eiza et al.
7,508,834 B2 3/2009 Berkman et al.
7,509,009 B2 3/2009 Suzuki et al.
7,509,675 B2 3/2009 Aaron et al.
7,511,662 B2 3/2009 Mathews et al.
7,512,090 B2 3/2009 Benitez Pelaez et al.
7,515,041 B2 4/2009 Eisold et al.
7,516,487 B1 4/2009 Szeto et al.
7,518,529 B2 4/2009 O'Sullivan et al.
7,518,952 B1 4/2009 Padden et al.
7,519,323 B2 4/2009 Mohebbi et al.
7,522,115 B2 4/2009 Waltman et al.
7,522,812 B2 4/2009 Zitting
7,525,501 B2 4/2009 Black et al.
7,525,504 B1 4/2009 Song et al.
7,531,803 B2 5/2009 Mittleman et al.
7,532,792 B2 5/2009 Skovgaard et al.
7,535,867 B1 5/2009 Kilfoyle et al.
7,539,381 B2 5/2009 Li et al.
7,541,981 B2 6/2009 Piskun et al.
7,545,818 B2 6/2009 Chen et al.
7,546,214 B2 6/2009 Rivers, Jr. et al.
7,548,212 B2 6/2009 Chekroun et al.
7,551,921 B2 6/2009 Petermann et al.
7,554,998 B2 6/2009 Simonsson et al.
7,555,182 B2 6/2009 Martin et al.
7,555,186 B2 6/2009 De et al.
7,555,187 B2 6/2009 Bickham et al.
7,557,563 B2 7/2009 Cowan et al.
7,561,025 B2 7/2009 Gerszberg et al.
7,567,154 B2 7/2009 Elmore
7,567,740 B2 7/2009 Bayindir et al.
7,570,137 B2 8/2009 Kintis et al.
7,570,470 B2 8/2009 Holley
7,577,398 B2 8/2009 Tennant et al.
7,580,643 B2 8/2009 Moore et al.
7,581,702 B2 9/2009 Wheeler et al.
7,583,074 B1 9/2009 Lynch et al.
7,583,233 B2 9/2009 Goldberg et al.
7,584,470 B2 9/2009 Barker et al.
7,589,470 B2 9/2009 Oksuz et al.
7,589,630 B2 9/2009 Drake et al.
7,589,686 B2 9/2009 Balzovsky et al.
7,590,404 B1 9/2009 Johnson et al.
7,591,020 B2 9/2009 Kammer et al.
7,591,792 B2 9/2009 Bouton et al.
7,593,067 B2 9/2009 Taguchi et al.
7,596,222 B2 9/2009 Jonas et al.
7,598,844 B2 10/2009 Corcoran et al.
7,602,333 B2 10/2009 Hiramatsu et al.
7,602,815 B2 10/2009 Houghton et al.
7,605,768 B2 10/2009 Ebling et al.
7,620,370 B2 11/2009 Barak et al.
7,625,131 B2 12/2009 Zienkewicz et al.
7,626,489 B2 12/2009 Berkman et al.
7,626,542 B2 12/2009 Kober et al.
7,627,300 B2 12/2009 Abramov et al.
7,633,442 B2 12/2009 Lynch et al.
7,634,250 B1 12/2009 Prasad et al.
7,639,201 B2 12/2009 Marklein et al.
7,640,562 B2 12/2009 Bouilloux-Lafont et al.
7,640,581 B1 12/2009 Brenton et al.
7,653,363 B2 1/2010 Karr et al.
RE41,147 E 2/2010 Pang et al.
7,656,167 B1 2/2010 McLean et al.
7,656,358 B2 2/2010 Haziza et al.
7,660,244 B2 2/2010 Kadaba et al.
7,660,252 B1 2/2010 Huang et al.
7,660,328 B1 2/2010 Oz et al.
7,664,117 B2 2/2010 Lou et al.
7,669,049 B2 2/2010 Wang et al.
7,671,701 B2 3/2010 Radtke
7,671,820 B2 3/2010 Tokoro et al.
7,672,271 B2 3/2010 Lee et al.
7,676,679 B2 3/2010 Weis et al.
7,680,478 B2 3/2010 Willars et al.
7,680,516 B2 3/2010 Lovberg et al.
7,680,561 B2 3/2010 Rodgers et al.
7,683,848 B2 3/2010 Musch et al.
7,684,383 B1 3/2010 Thompson et al.
7,693,079 B2 4/2010 Cerami et al.
7,693,162 B2 4/2010 McKenna et al.
7,693,939 B2 4/2010 Wu et al.
7,697,417 B2 4/2010 Chen et al.
7,701,931 B2 4/2010 Kajiwara
7,705,747 B2 4/2010 Twitchell, Jr.
7,710,346 B2 5/2010 Bloss et al.
7,714,536 B1 5/2010 Silberg et al.
7,714,709 B1 5/2010 Daniel et al.
7,714,725 B2 5/2010 Medve et al.
7,715,672 B2 5/2010 Dong et al.
7,716,660 B2 5/2010 Mackay et al.
7,724,782 B2 5/2010 Wang et al.
7,728,772 B2 6/2010 Mortazawi et al.
7,729,285 B2 6/2010 Yoon et al.
7,733,094 B2 6/2010 Bright et al.
7,734,717 B2 6/2010 Saarimäki et al.
7,737,903 B1 6/2010 Rao et al.
7,739,402 B2 6/2010 Graham et al.
7,743,403 B2 6/2010 McCarty et al.
7,747,356 B2 6/2010 Andarawis et al.
7,747,774 B2 6/2010 Aaron et al.
7,750,244 B1 7/2010 Melding et al.
7,750,763 B2 7/2010 Praβmayer et al.
7,751,054 B2 7/2010 Backes et al.
7,760,978 B2 7/2010 Fishteyn et al.
7,761,079 B2 7/2010 Mollenkopf et al.
7,764,943 B2 7/2010 Radtke et al.
7,773,664 B2 8/2010 Myers et al.
7,782,156 B2 8/2010 Woods et al.
7,783,195 B2 8/2010 Riggsby et al.
7,786,894 B2 8/2010 Polk et al.
7,786,945 B2 8/2010 Baldauf et al.
7,786,946 B2 8/2010 Diaz et al.
7,791,549 B2 9/2010 Clymer et al.
7,792,016 B2 9/2010 Arai et al.
7,795,877 B2 9/2010 Radtke et al.
7,795,994 B2 9/2010 Radtke et al.
7,796,025 B2 9/2010 Berkman et al.
7,796,122 B2 9/2010 Shih et al.
7,796,890 B1 9/2010 Johnson
7,797,367 B1 9/2010 Girod et al.
7,805,029 B2 9/2010 Bayindir et al.
7,808,441 B2 10/2010 Parsche et al.
7,809,223 B2 10/2010 Miyabe et al.
7,812,686 B2 10/2010 Woods et al.
7,812,778 B2 10/2010 Hasegawa et al.
7,813,344 B2 10/2010 Cheswick
7,817,063 B2 10/2010 Hawkins et al.
7,825,793 B1 11/2010 Spillman et al.
7,825,867 B2 11/2010 Tuttle et al.
7,826,602 B1 11/2010 Hunyady et al.
7,827,610 B2 11/2010 Wang et al.
7,830,228 B2 11/2010 Evans et al.
7,835,128 B2 11/2010 Divan et al.
7,835,600 B1 11/2010 Yap et al.
7,843,375 B1 11/2010 Rennie et al.
7,844,081 B2 11/2010 McMakin et al.
7,848,517 B2 12/2010 Britz et al.
7,852,752 B2 12/2010 Kano
7,852,837 B1 * 12/2010 Au ..... H04B 1/74
370/389
7,853,267 B2 12/2010 Jensen et al.
7,855,612 B2 12/2010 Zienkewicz et al.
7,856,007 B2 12/2010 Corcoran et al.
7,869,391 B2 1/2011 Lee et al.
7,872,610 B2 1/2011 Motzer et al.

(56) **References Cited**

U.S. PATENT DOCUMENTS


| | | | |
|---|---|---|---|
| 7,873,249 | B2 | 1/2011 | Kachmar et al. |
| 7,876,174 | B2 | 1/2011 | Radtke et al. |
| 7,884,285 | B2 | 2/2011 | Spencer |
| 7,884,648 | B2 | 2/2011 | Broyde et al. |
| 7,885,542 | B2 | 2/2011 | Riggsby et al. |
| 7,889,129 | B2 | 2/2011 | Fox et al. |
| 7,889,148 | B2 | 2/2011 | Diaz et al. |
| 7,889,149 | B2 | 2/2011 | Peebles et al. |
| 7,890,053 | B2 | 2/2011 | Washiro |
| 7,893,789 | B2 | 2/2011 | Paynter et al. |
| 7,894,770 | B2 | 2/2011 | Washiro et al. |
| 7,898,480 | B2 | 3/2011 | Rebeiz et al. |
| 7,899,403 | B2 | 3/2011 | Aaron |
| 7,903,918 | B1 | 3/2011 | Bickham et al. |
| 7,903,972 | B2 | 3/2011 | Riggsby et al. |
| 7,906,973 | B1 | 3/2011 | Orr et al. |
| 7,907,097 | B2 | 3/2011 | Syed et al. |
| 7,915,980 | B2 | 3/2011 | Hardacker et al. |
| 7,916,081 | B2 | 3/2011 | Lakkis et al. |
| 7,928,750 | B2 | 4/2011 | Miller et al. |
| 7,929,940 | B1 | 4/2011 | Dianda et al. |
| 7,930,750 | B1 | 4/2011 | Gauvin et al. |
| 7,937,699 | B2 | 5/2011 | Schneider et al. |
| 7,940,207 | B1 | 5/2011 | Kienzle et al. |
| 7,940,731 | B2 | 5/2011 | Gao et al. |
| 7,956,818 | B1 | 6/2011 | Hsu et al. |
| 7,958,120 | B2 | 6/2011 | Muntz et al. |
| 7,961,710 | B2 | 6/2011 | Lee et al. |
| 7,962,957 | B2 | 6/2011 | Keohane et al. |
| 7,965,842 | B2 | 6/2011 | Whelan et al. |
| 7,970,365 | B2 | 6/2011 | Martin et al. |
| 7,970,937 | B2 | 6/2011 | Shuster et al. |
| 7,971,053 | B2 | 6/2011 | Gibson, Sr. et al. |
| 7,973,296 | B2 | 7/2011 | Quick et al. |
| 7,974,387 | B2 | 7/2011 | Lutz et al. |
| 7,983,740 | B2 | 7/2011 | Culver et al. |
| 7,986,711 | B2 | 7/2011 | Horvath et al. |
| 7,990,146 | B2 | 8/2011 | Lazar et al. |
| 7,990,329 | B2 | 8/2011 | Deng et al. |
| 7,991,877 | B2 | 8/2011 | Keohane et al. |
| 7,992,014 | B2 | 8/2011 | Langgood et al. |
| 7,994,996 | B2 | 8/2011 | Rebeiz et al. |
| 7,994,999 | B2 | 8/2011 | Maeda et al. |
| 7,997,546 | B1 | 8/2011 | Andersen et al. |
| 8,010,116 | B2 | 8/2011 | Scheinert |
| 8,013,694 | B2 | 9/2011 | Sagala et al. |
| 8,019,288 | B2 | 9/2011 | Yu et al. |
| 8,022,885 | B2 | 9/2011 | Smoyer et al. |
| 8,022,887 | B1 | 9/2011 | Zarnaghi et al. |
| 8,023,410 | B2 | 9/2011 | O'Neill et al. |
| 8,027,391 | B2 | 9/2011 | Matsubara et al. |
| 8,036,207 | B2 | 10/2011 | Chen et al. |
| 8,049,576 | B2 | 11/2011 | Broyde et al. |
| 8,054,199 | B2 | 11/2011 | Addy et al. |
| 8,059,576 | B2 | 11/2011 | Vavik et al. |
| 8,059,593 | B2 | 11/2011 | Shih et al. |
| 8,060,308 | B2 | 11/2011 | Breed et al. |
| 8,063,832 | B1 | 11/2011 | Weller et al. |
| 8,064,744 | B2 | 11/2011 | Atkins et al. |
| 8,064,944 | B2 | 11/2011 | Yun et al. |
| 8,065,099 | B2 | 11/2011 | Gibala et al. |
| 8,069,483 | B1 | 11/2011 | Matlock et al. |
| 8,072,323 | B2 | 12/2011 | Kodama et al. |
| 8,072,386 | B2 | 12/2011 | Lier et al. |
| 8,073,810 | B2 | 12/2011 | Maes |
| 8,077,049 | B2 | 12/2011 | Yaney et al. |
| 8,077,113 | B2 | 12/2011 | Renilson et al. |
| 8,081,854 | B2 | 12/2011 | Yoon et al. |
| 8,089,356 | B2 | 1/2012 | Moore et al. |
| 8,089,404 | B2 | 1/2012 | Nichols et al. |
| 8,089,952 | B2 | 1/2012 | Spade et al. |
| 8,090,258 | B2 | 1/2012 | DeLew et al. |
| 8,090,379 | B2 | 1/2012 | Lambert et al. |
| 8,094,081 | B1 | 1/2012 | Boone et al. |
| 8,094,985 | B2 | 1/2012 | Imamura et al. |
| 8,095,093 | B2 | 1/2012 | Takinami et al. |
| 8,098,198 | B2 | 1/2012 | Thiesen et al. |
| 8,102,324 | B2 | 1/2012 | Tuau et al. |
| 8,102,779 | B2 | 1/2012 | Kim et al. |
| 8,106,749 | B2 | 1/2012 | Ina et al. |
| 8,106,849 | B2 | 1/2012 | Suddath et al. |
| RE43,163 | E | 2/2012 | Anderson |
| 8,111,148 | B2 | 2/2012 | Parker et al. |
| 8,112,649 | B2 | 2/2012 | Potkonjak et al. |
| 8,120,488 | B2 | 2/2012 | Bloy et al. |
| 8,121,624 | B2 | 2/2012 | Cai et al. |
| 8,125,282 | B2 | 2/2012 | Bao et al. |
| 8,125,399 | B2 | 2/2012 | McKinzie et al. |
| 8,126,393 | B2 | 2/2012 | Wu et al. |
| 8,129,817 | B2 | 3/2012 | Jou et al. |
| 8,131,125 | B2 | 3/2012 | Molin et al. |
| 8,131,266 | B2 | 3/2012 | Cai et al. |
| 8,132,239 | B2 | 3/2012 | Wahl |
| 8,134,424 | B2 | 3/2012 | Kato et al. |
| 8,134,458 | B2 | 3/2012 | Lund |
| 8,135,050 | B1 | 3/2012 | Stadler et al. |
| 8,140,113 | B2 | 3/2012 | Rofougaran et al. |
| 8,150,311 | B2 | 4/2012 | Hart et al. |
| 8,151,306 | B2 | 4/2012 | Rakib |
| 8,156,520 | B2 | 4/2012 | Casagrande et al. |
| 8,159,316 | B2 | 4/2012 | Miyazato et al. |
| 8,159,342 | B1 | 4/2012 | Medina, III et al. |
| 8,159,385 | B2 | 4/2012 | Farneth et al. |
| 8,159,394 | B2 | 4/2012 | Hayes et al. |
| 8,159,742 | B2 | 4/2012 | McKay et al. |
| 8,159,933 | B2 | 4/2012 | Henry |
| 8,159,955 | B2 | 4/2012 | Larsson et al. |
| 8,160,064 | B2 | 4/2012 | Kokernak et al. |
| 8,160,530 | B2 | 4/2012 | Corman et al. |
| 8,160,825 | B1 | 4/2012 | Roe, Jr. et al. |
| 8,164,531 | B2 | 4/2012 | Lier et al. |
| 8,171,146 | B2 | 5/2012 | Chen et al. |
| 8,172,173 | B2 | 5/2012 | Carlson et al. |
| 8,173,943 | B2 | 5/2012 | Vilo et al. |
| 8,175,535 | B2 | 5/2012 | Mu et al. |
| 8,175,649 | B2 | 5/2012 | Harel et al. |
| 8,179,787 | B2 | 5/2012 | Knapp et al. |
| 8,180,917 | B1 | 5/2012 | Yan et al. |
| 8,184,015 | B2 | 5/2012 | Lilien et al. |
| 8,184,059 | B2 | 5/2012 | Bunch et al. |
| 8,184,311 | B2 | 5/2012 | Sakai et al. |
| 8,185,062 | B2 | 5/2012 | Rofougaran et al. |
| 8,188,855 | B2 | 5/2012 | Sharma et al. |
| 8,199,762 | B2 | 6/2012 | Michelson et al. |
| 8,203,501 | B2 | 6/2012 | Kim et al. |
| 8,212,635 | B2 | 7/2012 | Miller, II et al. |
| 8,212,722 | B2 | 7/2012 | Ngo et al. |
| 8,213,758 | B2 | 7/2012 | Dong et al. |
| 8,218,929 | B2 | 7/2012 | Bickham et al. |
| 8,222,919 | B2 | 7/2012 | Broyde et al. |
| 8,222,977 | B2 | 7/2012 | Oyama et al. |
| 8,225,379 | B2 | 7/2012 | van de Groenendaal et al. |
| 8,233,905 | B2 | 7/2012 | Vaswani et al. |
| 8,237,617 | B1 | 8/2012 | Johnson et al. |
| 8,238,824 | B2 | 8/2012 | Washiro |
| 8,238,840 | B2 | 8/2012 | Iio et al. |
| 8,242,358 | B2 | 8/2012 | Park et al. |
| 8,243,603 | B2 | 8/2012 | Gossain et al. |
| 8,249,028 | B2 | 8/2012 | Porras et al. |
| 8,251,307 | B2 | 8/2012 | Goossen et al. |
| 8,253,516 | B2 | 8/2012 | Miller, II et al. |
| 8,255,952 | B2 | 8/2012 | Boylan, III et al. |
| 8,258,743 | B2 | 9/2012 | Tyler et al. |
| 8,259,028 | B2 | 9/2012 | Hills et al. |
| 8,264,417 | B2 | 9/2012 | Snow et al. |
| 8,269,583 | B2 | 9/2012 | Miller, II et al. |
| 8,284,102 | B2 | 10/2012 | Hayes et al. |
| 8,287,323 | B2 | 10/2012 | Kiesow et al. |
| 8,295,301 | B2 | 10/2012 | Yonge, III et al. |
| 8,300,538 | B2 | 10/2012 | Kim et al. |
| 8,300,640 | B2 | 10/2012 | Al-Banna et al. |
| 8,316,228 | B2 | 11/2012 | Winslow et al. |
| 8,316,364 | B2 | 11/2012 | Stein et al. |
| 8,324,990 | B2 | 12/2012 | Vouloumanos |

(56) **References Cited**

U.S. PATENT DOCUMENTS

8,325,034 B2 12/2012 Moore et al.
8,325,636 B2 12/2012 Binder
8,325,693 B2 12/2012 Binder et al.
8,330,259 B2 12/2012 Soler et al.
8,335,596 B2 12/2012 Raman et al.
8,343,145 B2 1/2013 Brannan et al.
8,344,829 B2 1/2013 Miller, II et al.
8,354,970 B2 1/2013 Armbrecht et al.
8,359,124 B2 1/2013 Zhou et al.
8,362,775 B2 1/2013 Speckner et al.
8,363,313 B2 1/2013 Nakaguma et al.
8,369,667 B2 2/2013 Rose et al.
8,373,095 B2 2/2013 Huynh et al.
8,373,597 B2 2/2013 Schadler et al.
8,374,821 B2 2/2013 Rousselle et al.
8,384,600 B2 2/2013 Huang et al.
8,385,978 B2 2/2013 Leung et al.
8,386,198 B2 2/2013 Lancaster
8,390,307 B2 3/2013 Slupsky et al.
8,390,402 B2 3/2013 Kunes et al.
8,405,567 B2 3/2013 Park et al.
8,406,239 B2 3/2013 Hurwitz et al.
8,406,593 B2 3/2013 Molin et al.
8,407,687 B2 3/2013 Moshir et al.
8,412,130 B2 4/2013 Suematsu et al.
8,414,326 B2 4/2013 Bowman
8,415,884 B2 4/2013 Chen et al.
8,428,033 B2 4/2013 Hettstedt et al.
8,433,168 B2 4/2013 Filippov et al.
8,434,103 B2 4/2013 Tsuchida et al.
8,437,383 B2 5/2013 Wiwel et al.
8,452,555 B2 5/2013 Hayward et al.
8,457,027 B2 6/2013 Dougherty et al.
8,458,453 B1 6/2013 Mahalingaiah et al.
8,462,063 B2 6/2013 Gummalla et al.
8,467,363 B2 6/2013 Lea et al.
8,468,244 B2 6/2013 Redlich et al.
8,471,513 B2 6/2013 Han
8,472,327 B2 6/2013 DelRegno et al.
8,484,137 B2 7/2013 Johnson et al.
8,484,511 B2 7/2013 Tidwell et al.
8,495,718 B2 7/2013 Han et al.
8,497,749 B2 7/2013 Elmore
8,503,845 B2 8/2013 Winzer et al.
8,504,135 B2 8/2013 Bourqui et al.
8,505,057 B2 8/2013 Rogers
8,509,114 B1 8/2013 Szajdecki
8,514,980 B2 8/2013 Kuhtz
8,515,383 B2 8/2013 Prince et al.
8,516,129 B1 8/2013 Skene et al.
8,516,470 B1 8/2013 Joshi et al.
8,516,474 B2 8/2013 Lamba et al.
8,519,892 B2 8/2013 Ding et al.
8,520,578 B2 8/2013 Rayment et al.
8,520,636 B2 8/2013 Xu
8,528,059 B1 9/2013 Saluzzo et al.
8,532,023 B2 9/2013 Buddhikot et al.
8,532,046 B2 9/2013 Hu et al.
8,532,492 B2 9/2013 Sadowski et al.
8,536,857 B2 9/2013 Nero, Jr. et al.
8,537,068 B2 9/2013 Call et al.
8,537,705 B2 9/2013 Afkhamie et al.
8,538,428 B2 9/2013 Bartlett et al.
8,539,540 B2 9/2013 Zenoni
8,539,569 B2 9/2013 Mansour
8,542,968 B2 9/2013 Dong et al.
8,545,322 B2 10/2013 George et al.
8,548,294 B2 10/2013 Toge et al.
8,553,646 B2 10/2013 Kumar
8,561,104 B1 10/2013 Dow et al.
8,561,181 B1 10/2013 Sobel et al.
8,565,568 B2 10/2013 Bigot-Astruc et al.
8,566,058 B2 10/2013 Pupalaikis et al.
8,572,247 B2 10/2013 Larson et al.
8,572,639 B2 10/2013 Ficco
8,572,661 B2 10/2013 Strong et al.
8,578,076 B2 11/2013 van der Linden et al.
8,578,486 B2 11/2013 Lifliand et al.
8,582,502 B2 11/2013 Conte et al.
8,584,195 B2 11/2013 Sherlock et al.
8,587,490 B2 11/2013 Niver et al.
8,587,492 B2 11/2013 Runyon et al.
8,588,567 B2 11/2013 Kamps et al.
8,588,840 B2 11/2013 Truong et al.
8,588,991 B1 11/2013 Forbes, Jr.
8,593,238 B2 11/2013 Miller, II et al.
8,594,956 B2 11/2013 McBee et al.
8,595,141 B2 11/2013 Hao et al.
8,599,150 B2 12/2013 Philipp
8,600,602 B1 12/2013 Watson et al.
8,604,982 B2 12/2013 Gummalla et al.
8,604,999 B2 12/2013 Abumrad et al.
8,605,361 B2 12/2013 Batchko et al.
8,605,579 B2 12/2013 Abraham et al.
8,612,550 B2 12/2013 Yoo et al.
8,613,020 B2 12/2013 Knudson et al.
8,615,190 B2 12/2013 Lu
8,625,547 B1 1/2014 Miller et al.
8,629,811 B2 1/2014 Gaynor et al.
8,639,260 B2 1/2014 Fox et al.
8,639,390 B2 1/2014 Tamarkin et al.
8,639,934 B2 1/2014 Kruglick
8,644,219 B2 2/2014 Nishizaka
8,653,906 B2 2/2014 Mahon et al.
8,655,396 B2 2/2014 Malladi et al.
8,656,458 B2 2/2014 Heffez et al.
8,660,526 B1 2/2014 Heiderscheit et al.
8,660,698 B2 2/2014 Phillips et al.
8,665,102 B2 3/2014 Salewske et al.
8,666,553 B2 3/2014 Phillips et al.
8,670,946 B2 3/2014 Salazar et al.
8,674,630 B1 3/2014 Cornelius et al.
8,676,186 B2 3/2014 Niu
8,680,450 B2 3/2014 Pritchard et al.
8,680,706 B2 3/2014 Zyren et al.
8,681,463 B2 3/2014 Franks et al.
8,686,911 B2 4/2014 Kim et al.
8,687,650 B2 4/2014 King
8,688,153 B2 4/2014 Komori et al.
8,699,454 B2 4/2014 Hapsari et al.
8,699,461 B2 4/2014 Qian et al.
8,705,925 B2 4/2014 Terada et al.
8,706,026 B2 4/2014 Truong et al.
8,707,432 B1 4/2014 Rathi et al.
8,711,538 B2 4/2014 Woodworth et al.
8,711,732 B2 4/2014 Johnson et al.
8,711,806 B2 4/2014 Lim et al.
8,711,857 B2 4/2014 Jackson et al.
8,712,200 B1 4/2014 Abernathy et al.
8,719,938 B2 5/2014 Demeter et al.
8,723,730 B2 5/2014 Lu et al.
8,724,102 B2 5/2014 Urban et al.
8,729,857 B2 5/2014 Stählin et al.
8,731,358 B2 5/2014 Pare et al.
8,732,476 B1 5/2014 Van et al.
8,736,502 B1 5/2014 Mehr et al.
8,737,793 B2 5/2014 Imamura et al.
8,738,318 B2 5/2014 Spillane
8,742,997 B2 6/2014 McPeak et al.
8,743,004 B2 6/2014 Haziza
8,749,449 B2 6/2014 Caldwell et al.
8,750,097 B2 6/2014 Maenpaa et al.
8,750,664 B2 6/2014 Huang et al.
8,754,852 B2 6/2014 Lee et al.
8,755,659 B2 6/2014 Imamura et al.
8,760,354 B2 6/2014 Flannery et al.
8,761,792 B2 6/2014 Sennett et al.
8,763,097 B2 6/2014 Bhatnagar et al.
8,766,657 B2 7/2014 DeJean et al.
8,767,071 B1 7/2014 Marshall
8,769,622 B2 7/2014 Chang et al.
8,773,312 B1 7/2014 Diaz et al.
8,780,012 B2 7/2014 Llombart Juan et al.
8,782,195 B2 7/2014 Foti

(56) **References Cited**

U.S. PATENT DOCUMENTS

8,786,284 B2 7/2014 Sirigiri et al.
8,786,514 B2 7/2014 Dickie et al.
8,789,091 B2 7/2014 Eldering et al.
8,792,760 B2 7/2014 Choi et al.
8,792,933 B2 7/2014 Chen et al.
8,793,363 B2 7/2014 Sater et al.
8,793,742 B2 7/2014 Macrae et al.
8,797,207 B2 8/2014 Kienzle et al.
8,804,667 B2 8/2014 Wang
8,806,202 B2 8/2014 Shoemake et al.
8,810,404 B2 8/2014 Bertoncini et al.
8,810,421 B2 8/2014 Deaver, Sr. et al.
8,810,468 B2 8/2014 Cannon et al.
8,811,278 B2 8/2014 Hori et al.
8,811,912 B2 8/2014 Austin et al.
8,812,050 B1 8/2014 Bencheikh et al.
8,812,154 B2 8/2014 Vian et al.
8,817,741 B2 8/2014 Shaheen
8,824,380 B2 9/2014 Jetcheva et al.
8,825,239 B2 9/2014 Cooper et al.
8,829,934 B2 9/2014 Sellathamby et al.
8,830,112 B1 9/2014 Buehler et al.
8,831,506 B2 9/2014 Claret et al.
8,836,503 B2 9/2014 Girod et al.
8,836,607 B2 9/2014 Cook et al.
8,839,350 B1 9/2014 Shapcott et al.
8,847,840 B1 9/2014 Diaz et al.
8,847,846 B1 9/2014 Diaz et al.
8,856,239 B1 10/2014 Oliver et al.
8,856,530 B2 10/2014 Lamberg et al.
8,863,245 B1 10/2014 Abhyanker
8,866,691 B2 10/2014 Montgomery et al.
8,866,695 B2 10/2014 Jefferson et al.
8,867,226 B2 10/2014 Colomb et al.
8,872,032 B2 10/2014 Su et al.
8,875,224 B2 10/2014 Gross et al.
8,878,740 B2 11/2014 Coupland et al.
8,880,765 B2 11/2014 Seal et al.
8,881,588 B2 11/2014 Baer et al.
8,885,689 B2 11/2014 Blasco et al.
8,886,229 B2 11/2014 Agrawal et al.
8,887,212 B2 11/2014 Dua
8,890,759 B2 11/2014 Pantea et al.
8,893,246 B2 11/2014 El-Moussa et al.
8,897,215 B2 11/2014 Hazani et al.
8,897,499 B2 11/2014 Rekimoto
8,897,695 B2 11/2014 Becker et al.
8,897,697 B1 * 11/2014 Bennett ..... H04B 7/022 455/14
8,901,916 B2 12/2014 Rodriquez et al.
8,903,214 B2 12/2014 Alkeskjold
8,907,222 B2 12/2014 Stransky
8,907,845 B2 12/2014 Jones
8,908,502 B2 12/2014 Hayashitani
8,908,573 B1 12/2014 Wang et al.
8,913,862 B1 12/2014 Emmerich et al.
8,917,210 B2 12/2014 Shamim et al.
8,917,215 B2 12/2014 Pohl
8,917,964 B2 12/2014 Blew et al.
8,918,108 B2 12/2014 Van et al.
8,918,135 B2 12/2014 Kang et al.
8,922,447 B2 12/2014 Gao et al.
8,925,079 B2 12/2014 Miyake et al.
8,929,841 B2 1/2015 Rofougaran et al.
8,934,747 B2 1/2015 Smith et al.
8,937,577 B2 1/2015 Gerini et al.
8,938,144 B2 1/2015 Hennink et al.
8,938,255 B2 1/2015 Dalla et al.
8,941,912 B2 1/2015 Ichii et al.
8,947,258 B2 2/2015 Reid et al.
8,948,235 B2 2/2015 Proctor, Jr. et al.
8,948,690 B2 2/2015 Duerksen et al.
8,952,678 B2 2/2015 Giboney et al.
8,955,051 B2 2/2015 Marzii
8,955,075 B2 2/2015 Smith et al.
8,957,818 B2 2/2015 Chen et al.
8,957,821 B1 2/2015 Matyas et al.
8,958,356 B2 2/2015 Lu et al.
8,958,665 B2 2/2015 Ziari et al.
8,958,812 B2 2/2015 Weiguo
8,963,424 B1 2/2015 Neilson et al.
8,963,790 B2 2/2015 Brown et al.
8,964,433 B2 2/2015 Hai-Maharsi
8,966,609 B2 2/2015 Lee et al.
8,968,287 B2 3/2015 Shroff et al.
8,970,438 B2 3/2015 Hager et al.
8,984,113 B2 3/2015 Li et al.
8,989,788 B2 3/2015 Kim et al.
8,994,473 B2 3/2015 Levi et al.
8,994,474 B2 3/2015 Mahon et al.
8,996,188 B2 3/2015 Frader-Thompson et al.
8,996,728 B2 3/2015 Cochinwala et al.
9,000,353 B2 4/2015 Seo et al.
9,001,689 B1 4/2015 Ponnampalam et al.
9,001,717 B2 4/2015 Chun et al.
9,003,492 B2 4/2015 Katar
9,008,208 B2 4/2015 Khandani
9,008,513 B2 4/2015 Kim et al.
9,009,460 B2 4/2015 Chen
9,013,361 B1 4/2015 Lam et al.
9,014,621 B2 4/2015 Mohebbi
9,015,467 B2 4/2015 Buer
9,019,164 B2 4/2015 Syed et al.
9,019,595 B2 4/2015 Jain et al.
9,019,846 B2 4/2015 Shetty et al.
9,019,892 B2 4/2015 Zhou et al.
9,020,555 B2 4/2015 Sheikh et al.
9,021,251 B2 4/2015 Chawla
9,021,575 B2 4/2015 Martini
RE45,514 E 5/2015 Brown
9,024,831 B2 5/2015 Wang et al.
9,031,725 B1 5/2015 Diesposti et al.
9,037,516 B2 5/2015 Abhyanker
9,042,245 B2 5/2015 Tzannes et al.
9,042,812 B1 5/2015 Bennett et al.
9,065,172 B2 6/2015 Lewry et al.
9,065,177 B2 6/2015 Alexopoulos
9,066,224 B2 6/2015 Schwengler
9,070,962 B2 6/2015 Kobayashi
9,070,964 B1 6/2015 Schuss et al.
9,079,349 B2 7/2015 Slafer
9,082,307 B2 7/2015 Sharawi
9,083,083 B2 7/2015 Hills et al.
9,083,425 B1 7/2015 Moussouris et al.
9,083,581 B1 7/2015 Addepalli et al.
9,084,124 B2 7/2015 Nickel et al.
9,092,962 B1 7/2015 Merrill et al.
9,092,963 B2 7/2015 Fetzer et al.
9,094,407 B1 7/2015 Matthieu
9,094,840 B2 7/2015 Liu et al.
9,098,325 B2 8/2015 Reddin
9,099,787 B2 8/2015 Blech
9,103,864 B2 8/2015 Ali
9,105,981 B2 8/2015 Syed
9,106,617 B2 8/2015 Kshirsagar et al.
9,112,281 B2 8/2015 Bresciani et al.
9,113,347 B2 8/2015 Henry
9,119,127 B1 8/2015 Henry
9,119,179 B1 8/2015 Firoiu et al.
9,128,941 B2 9/2015 Shulman
9,130,641 B2 9/2015 Mohebbi
9,134,945 B2 9/2015 Husain
9,137,485 B2 9/2015 Bar-Niv et al.
9,142,334 B2 9/2015 Muto et al.
9,143,084 B2 9/2015 Perez et al.
9,143,196 B2 9/2015 Schwengler
9,154,641 B2 10/2015 Shaw
9,157,954 B2 10/2015 Nickel
9,158,418 B2 10/2015 Oda et al.
9,158,427 B1 10/2015 Wang
9,167,535 B2 10/2015 Christoffersson et al.
9,171,458 B2 10/2015 Salter
9,173,217 B2 10/2015 Teng et al.
9,178,282 B2 11/2015 Mittleman et al.

(56) **References Cited**

U.S. PATENT DOCUMENTS


| | | | |
|---|---|---|---|
| 9,194,930 | B2 | 11/2015 | Pupalaikis |
| 9,201,556 | B2 | 12/2015 | Free et al. |
| 9,202,371 | B2 | 12/2015 | Jain |
| 9,203,149 | B2 | 12/2015 | Henderson et al. |
| 9,204,418 | B2 | 12/2015 | Siomina et al. |
| 9,207,168 | B2 | 12/2015 | Lovely et al. |
| 9,209,902 | B2 | 12/2015 | Willis, III et al. |
| 9,210,192 | B1 | 12/2015 | Pathuri et al. |
| 9,210,586 | B2 | 12/2015 | Catovic et al. |
| 9,219,307 | B2 | 12/2015 | Takahashi et al. |
| 9,219,594 | B2 | 12/2015 | Khlat |
| 9,225,396 | B2 | 12/2015 | Maltsev et al. |
| 9,240,835 | B2 | 1/2016 | Cune et al. |
| 9,244,117 | B2 | 1/2016 | Khan et al. |
| 9,246,231 | B2 | 1/2016 | Ju |
| 9,246,334 | B2 | 1/2016 | Lo et al. |
| 9,253,588 | B2 | 2/2016 | Schmidt et al. |
| 9,260,244 | B1 | 2/2016 | Cohn |
| 9,264,204 | B2 | 2/2016 | Seo et al. |
| 9,265,078 | B2 | 2/2016 | Lim et al. |
| 9,270,013 | B2 | 2/2016 | Ley |
| 9,271,185 | B2 | 2/2016 | Abdelmonem et al. |
| 9,276,303 | B2 | 3/2016 | Chang et al. |
| 9,276,304 | B2 | 3/2016 | Behan |
| 9,277,331 | B2 | 3/2016 | Chao et al. |
| 9,281,564 | B2 | 3/2016 | Vincent |
| 9,282,144 | B2 | 3/2016 | Tebay et al. |
| 9,285,461 | B2 | 3/2016 | Townley et al. |
| 9,287,605 | B2 | 3/2016 | Daughenbaugh et al. |
| 9,288,844 | B1 | 3/2016 | Akhavan-Saraf et al. |
| 9,289,177 | B2 | 3/2016 | Samsudin et al. |
| 9,293,798 | B2 | 3/2016 | Ye |
| 9,293,801 | B2 | 3/2016 | Courtney et al. |
| 9,302,770 | B2 | 4/2016 | Cohen et al. |
| 9,306,682 | B2 | 4/2016 | Singh |
| 9,312,919 | B1 | 4/2016 | Barzegar et al. |
| 9,312,929 | B2 | 4/2016 | Forenza et al. |
| 9,315,663 | B2 | 4/2016 | Appleby |
| 9,319,311 | B2 | 4/2016 | Wang et al. |
| 9,324,020 | B2 | 4/2016 | Nazarov |
| 9,325,067 | B2 | 4/2016 | Ali et al. |
| 9,325,516 | B2 | 4/2016 | Frei et al. |
| 9,326,316 | B2 | 4/2016 | Yonge et al. |
| 9,334,052 | B2 | 5/2016 | Ubhi et al. |
| 9,338,823 | B2 | 5/2016 | Saban et al. |
| 9,346,560 | B2 | 5/2016 | Wang |
| 9,350,063 | B2 | 5/2016 | Herbsommer et al. |
| 9,351,182 | B2 | 5/2016 | Elliott et al. |
| 9,356,358 | B2 | 5/2016 | Hu et al. |
| 9,362,629 | B2 | 6/2016 | Miller et al. |
| 9,363,333 | B2 | 6/2016 | Basso et al. |
| 9,363,690 | B1 | 6/2016 | Suthar et al. |
| 9,363,761 | B2 | 6/2016 | Venkatraman |
| 9,366,743 | B2 | 6/2016 | Doshi et al. |
| 9,368,275 | B2 | 6/2016 | McBee et al. |
| 9,369,177 | B2 | 6/2016 | Hui et al. |
| 9,372,228 | B2 | 6/2016 | Gavin et al. |
| 9,379,527 | B2 | 6/2016 | Jean et al. |
| 9,379,556 | B2 | 6/2016 | Haensgen et al. |
| 9,380,857 | B2 | 7/2016 | Davis et al. |
| 9,391,874 | B2 | 7/2016 | Corti et al. |
| 9,393,683 | B2 | 7/2016 | Kimberlin et al. |
| 9,394,716 | B2 | 7/2016 | Butler et al. |
| 9,397,380 | B2 | 7/2016 | Kudela et al. |
| 9,401,863 | B2 | 7/2016 | Hui et al. |
| 9,404,750 | B2 | 8/2016 | Rios et al. |
| 9,413,519 | B2 | 8/2016 | Khoshnood et al. |
| 9,414,126 | B1 | 8/2016 | Zinevich |
| 9,417,731 | B2 | 8/2016 | Premont et al. |
| 9,419,712 | B2 | 8/2016 | Heidler |
| 9,421,869 | B1 | 8/2016 | Ananthanarayanan et al. |
| 9,422,139 | B1 | 8/2016 | Bialkowski et al. |
| 9,432,478 | B2 | 8/2016 | Gibbon et al. |
| 9,432,865 | B1 | 8/2016 | Jadunandan et al. |
| 9,439,092 | B1 | 9/2016 | Chukka et al. |
| 9,443,417 | B2 | 9/2016 | Wang |
| 9,458,974 | B2 | 10/2016 | Townsend, Jr. et al. |
| 9,459,746 | B2 | 10/2016 | Zarraga et al. |
| 9,461,706 | B1 | 10/2016 | Bennett et al. |
| 9,465,397 | B2 | 10/2016 | Forbes, Jr. et al. |
| 9,467,219 | B2 | 10/2016 | Vilhar |
| 9,467,870 | B2 | 10/2016 | Bennett |
| 9,476,932 | B2 | 10/2016 | Furse et al. |
| 9,478,865 | B1 | 10/2016 | Willis et al. |
| 9,479,241 | B2 | 10/2016 | Pabla |
| 9,479,266 | B2 | 10/2016 | Henry et al. |
| 9,479,299 | B2 | 10/2016 | Kim et al. |
| 9,479,392 | B2 | 10/2016 | Anderson et al. |
| 9,479,535 | B2 | 10/2016 | Cohen et al. |
| 9,490,869 | B1 | 11/2016 | Henry |
| 9,490,913 | B2 | 11/2016 | Berlin |
| 9,495,037 | B2 | 11/2016 | King-Smith |
| 9,496,921 | B1 | 11/2016 | Corum |
| 9,497,572 | B2 | 11/2016 | Britt et al. |
| 9,503,170 | B2 | 11/2016 | Vu |
| 9,503,189 | B2 | 11/2016 | Henry et al. |
| 9,509,415 | B1 | 11/2016 | Henry et al. |
| 9,510,203 | B2 | 11/2016 | Jactat et al. |
| 9,515,367 | B2 | 12/2016 | Herbsommer et al. |
| 9,520,945 | B2 | 12/2016 | Gerszberg et al. |
| 9,525,524 | B2 | 12/2016 | Barzegar et al. |
| 9,564,947 | B2 | 2/2017 | Stuckman et al. |
| 9,608,740 | B2 | 3/2017 | Henry et al. |
| 9,627,768 | B2 | 4/2017 | Henry et al. |
| 9,640,850 | B2 | 5/2017 | Henry et al. |
| 9,653,770 | B2 | 5/2017 | Henry et al. |
| 9,680,670 | B2 | 6/2017 | Henry et al. |
| 9,705,561 | B2 | 7/2017 | Henry et al. |
| 9,705,571 | B2 | 7/2017 | Gerszberg et al. |
| 9,742,462 | B2 | 8/2017 | Bennett et al. |
| 9,748,626 | B2 | 8/2017 | Henry et al. |
| 9,749,053 | B2 | 8/2017 | Henry et al. |
| 9,768,833 | B2 | 9/2017 | Fuchs et al. |
| 9,769,020 | B2 | 9/2017 | Henry et al. |
| 9,780,834 | B2 | 10/2017 | Henry et al. |
| 9,793,951 | B2 | 10/2017 | Henry et al. |
| 9,793,954 | B2 | 10/2017 | Bennett et al. |
| 9,847,566 | B2 | 12/2017 | Henry et al. |
| 9,853,342 | B2 | 12/2017 | Henry et al. |
| 9,860,075 | B1 | 1/2018 | Gerszberg et al. |
| 9,865,911 | B2 | 1/2018 | Henry et al. |
| 9,866,309 | B2 | 1/2018 | Bennett et al. |
| 9,871,282 | B2 | 1/2018 | Henry et al. |
| 9,871,283 | B2 | 1/2018 | Henry et al. |
| 9,876,264 | B2 | 1/2018 | Barnickel et al. |
| 9,876,570 | B2 | 1/2018 | Henry et al. |
| 9,876,605 | B1 | 1/2018 | Henry et al. |
| 9,882,257 | B2 | 1/2018 | Henry et al. |
| 9,893,795 | B1 | 2/2018 | Willis et al. |
| 9,912,381 | B2 | 3/2018 | Bennett et al. |
| 9,917,341 | B2 | 3/2018 | Henry et al. |
| 9,991,580 | B2 | 6/2018 | Henry et al. |
| 9,997,819 | B2 | 6/2018 | Bennett et al. |
| 9,998,172 | B1 | 6/2018 | Barzegar et al. |
| 9,998,870 | B1 | 6/2018 | Bennett et al. |
| 9,999,038 | B2 | 6/2018 | Barzegar et al. |
| 10,003,364 | B1 | 6/2018 | Willis, III et al. |
| 10,009,063 | B2 | 6/2018 | Gerszberg et al. |
| 10,009,065 | B2 | 6/2018 | Henry et al. |
| 10,009,901 | B2 | 6/2018 | Gerszberg |
| 10,027,397 | B2 | 7/2018 | Kim |
| 10,027,427 | B2 | 7/2018 | Vannucci et al. |
| 10,033,107 | B2 | 7/2018 | Henry et al. |
| 10,033,108 | B2 | 7/2018 | Henry et al. |
| 10,044,409 | B2 | 8/2018 | Barzegar et al. |
| 10,051,483 | B2 | 8/2018 | Barzegar et al. |
| 10,051,488 | B1 | 8/2018 | Vannucci et al. |
| 10,062,970 | B1 | 8/2018 | Vannucci et al. |
| 10,069,535 | B2 | 9/2018 | Vannucci et al. |
| 10,079,661 | B2 | 9/2018 | Gerszberg et al. |
| 10,090,606 | B2 | 10/2018 | Henry et al. |
| 10,096,883 | B2 | 10/2018 | Henry et al. |
| 10,103,777 | B1 | 10/2018 | Henry et al. |
| 10,103,801 | B2 | 10/2018 | Bennett et al. |

(56) **References Cited**

U.S. PATENT DOCUMENTS

10,123,217 B1 11/2018 Barzegar et al.
10,129,057 B2 11/2018 Willis, III et al.
10,135,145 B2 11/2018 Henry et al.
10,136,434 B2 11/2018 Gerszberg et al.
10,142,086 B2 11/2018 Bennett et al.
10,148,016 B2 12/2018 Johnson et al.
10,154,493 B2 12/2018 Bennett et al.
2001/0029368 A1* 10/2001 Berube ..... A61B 18/18 606/33
2001/0030789 A1 10/2001 Jiang et al.
2002/0002040 A1 1/2002 Kline et al.
2002/0008672 A1 1/2002 Gothard et al.
2002/0011960 A1 1/2002 Yuanzhu et al.
2002/0021716 A1 2/2002 Terk et al.
2002/0024424 A1 2/2002 Burns et al.
2002/0027481 A1 3/2002 Fiedziuszko et al.
2002/0040439 A1 4/2002 Kellum et al.
2002/0057223 A1 5/2002 Hook
2002/0061217 A1 5/2002 Hillman et al.
2002/0069417 A1 6/2002 Kliger et al.
2002/0083194 A1 6/2002 Bak et al.
2002/0091807 A1 7/2002 Goodman et al.
2002/0099949 A1 7/2002 Fries et al.
2002/0101852 A1 8/2002 Say et al.
2002/0111997 A1 8/2002 Herlihy et al.
2002/0149533 A1* 10/2002 Toncich ..... G01R 27/2694 343/786
2002/0156917 A1 10/2002 Nye et al.
2002/0186694 A1 12/2002 Mahajan et al.
2002/0197979 A1 12/2002 Vanderveen et al.
2003/0002125 A1 1/2003 Fuse et al.
2003/0002476 A1 1/2003 Chung et al.
2003/0010528 A1 1/2003 Niles
2003/0022694 A1 1/2003 Olsen et al.
2003/0038753 A1 2/2003 Mahon et al.
2003/0049003 A1 3/2003 Ahmad et al.
2003/0054793 A1 3/2003 Manis et al.
2003/0054811 A1 3/2003 Han et al.
2003/0061346 A1 3/2003 Pekary et al.
2003/0094976 A1 5/2003 Miyashita et al.
2003/0095208 A1 5/2003 Chouraqui et al.
2003/0137464 A1 7/2003 Foti et al.
2003/0151548 A1 8/2003 Kingsley et al.
2003/0152331 A1 8/2003 Dair et al.
2003/0164794 A1 9/2003 Haynes et al.
2003/0167839 A1* 9/2003 Burger ..... G01F 23/284 73/290 V
2003/0188308 A1 10/2003 Kizuka
2003/0190110 A1 10/2003 Kline et al.
2003/0202756 A1 10/2003 Hurley et al.
2003/0210197 A1 11/2003 Cencich et al.
2003/0224784 A1 12/2003 Hunt et al.
2004/0015725 A1 1/2004 Boneh et al.
2004/0023640 A1 2/2004 Ballai et al.
2004/0024913 A1 2/2004 Ikeda et al.
2004/0048596 A1 3/2004 Wyrzykowska et al.
2004/0054425 A1 3/2004 Elmore
2004/0084582 A1 5/2004 Kralic et al.
2004/0085153 A1 5/2004 Fukunaga et al.
2004/0090312 A1 5/2004 Manis et al.
2004/0091032 A1 5/2004 Duchi et al.
2004/0100343 A1 5/2004 Tsu et al.
2004/0104410 A1 6/2004 Gilbert et al.
2004/0113756 A1 6/2004 Mollenkopf et al.
2004/0113757 A1 6/2004 White, II et al.
2004/0119564 A1 6/2004 Itoh et al.
2004/0131310 A1 7/2004 Walker et al.
2004/0163135 A1 8/2004 Giaccherini et al.
2004/0165669 A1 8/2004 Otsuka et al.
2004/0169572 A1 9/2004 Elmore et al.
2004/0196784 A1 10/2004 Larsson et al.
2004/0198228 A1 10/2004 Raghothaman et al.
2004/0212481 A1 10/2004 Abraham et al.
2004/0213147 A1 10/2004 Wiese et al.
2004/0213189 A1 10/2004 Alspaugh et al.
2004/0213294 A1 10/2004 Hughes et al.
2004/0242185 A1 12/2004 Lee et al.
2004/0250069 A1 12/2004 Kosamo et al.
2005/0002408 A1 1/2005 Lee et al.
2005/0005854 A1 1/2005 Suzuki et al.
2005/0017825 A1 1/2005 Hansen
2005/0031267 A1 2/2005 Sumimoto et al.
2005/0042989 A1 2/2005 Ho et al.
2005/0063422 A1 3/2005 Lazar et al.
2005/0068223 A1 3/2005 Vavik et al.
2005/0069321 A1 3/2005 Sullivan et al.
2005/0074208 A1 4/2005 Badcock et al.
2005/0097396 A1 5/2005 Wood
2005/0102185 A1 5/2005 Barker et al.
2005/0111533 A1 5/2005 Berkman et al.
2005/0141808 A1 6/2005 Cheben et al.
2005/0143868 A1 6/2005 Whelan et al.
2005/0151659 A1 7/2005 Donovan et al.
2005/0159187 A1 7/2005 Mendolia et al.
2005/0164666 A1 7/2005 Lang et al.
2005/0168326 A1 8/2005 White et al.
2005/0169056 A1 8/2005 Berkman et al.
2005/0169401 A1 8/2005 Abraham et al.
2005/0177463 A1 8/2005 Crutchfield et al.
2005/0190101 A1 9/2005 Hiramatsu et al.
2005/0208949 A1 9/2005 Chiueh et al.
2005/0212626 A1 9/2005 Takamatsu et al.
2005/0219126 A1 10/2005 Rebeiz et al.
2005/0219135 A1 10/2005 Lee et al.
2005/0220180 A1 10/2005 Barlev
2005/0226353 A1 10/2005 Gebara et al.
2005/0249245 A1 11/2005 Hazani et al.
2005/0258920 A1 11/2005 Elmore
2006/0034724 A1 2/2006 Hamano et al.
2006/0038660 A1 2/2006 Doumuki et al.
2006/0053486 A1 3/2006 Wesinger et al.
2006/0071776 A1 4/2006 White et al.
2006/0077906 A1 4/2006 Maegawa et al.
2006/0082516 A1 4/2006 Strickland et al.
2006/0085813 A1 4/2006 Giraldin et al.
2006/0094439 A1 5/2006 Christian et al.
2006/0106741 A1 5/2006 Janarthanan et al.
2006/0111047 A1 5/2006 Louberg et al.
2006/0113425 A1 6/2006 Rader et al.
2006/0114925 A1 6/2006 Gerszberg et al.
2006/0119528 A1 6/2006 Bhattacharyya et al.
2006/0120399 A1 6/2006 Claret et al.
2006/0128322 A1 6/2006 Igarashi et al.
2006/0132380 A1 6/2006 Imai et al.
2006/0153878 A1 7/2006 Savarino et al.
2006/0172781 A1 8/2006 Mohebbi et al.
2006/0176124 A1 8/2006 Mansour et al.
2006/0181394 A1 8/2006 Clarke et al.
2006/0187023 A1 8/2006 Iwamura et al.
2006/0192672 A1 8/2006 Gidge et al.
2006/0220833 A1 10/2006 Berkman et al.
2006/0221995 A1 10/2006 Berkman et al.
2006/0232493 A1 10/2006 Huang et al.
2006/0238347 A1 10/2006 Parkinson et al.
2006/0239501 A1 10/2006 Petrovic et al.
2006/0244672 A1 11/2006 Avakian et al.
2006/0249622 A1 11/2006 Steele et al.
2006/0255930 A1 11/2006 Berkman et al.
2006/0286927 A1 12/2006 Berkman et al.
2007/0002771 A1 1/2007 Berkman et al.
2007/0022475 A1 1/2007 Rossi et al.
2007/0025265 A1 2/2007 Marcotullio et al.
2007/0025386 A1 2/2007 Riedel et al.
2007/0040628 A1 2/2007 Kanno et al.
2007/0041464 A1 2/2007 Kim et al.
2007/0041554 A1 2/2007 Newman
2007/0054622 A1 3/2007 Berkman
2007/0063914 A1 3/2007 Becker et al.
2007/0090185 A1 4/2007 Lewkowitz et al.
2007/0105508 A1 5/2007 Tong et al.
2007/0135044 A1 6/2007 Rhodes et al.
2007/0144779 A1 6/2007 Vicente et al.
2007/0164908 A1 7/2007 Turchinetz et al.
2007/0189182 A1 8/2007 Berkman et al.

(56) **References Cited**

U.S. PATENT DOCUMENTS

2007/0201540 A1 8/2007 Berkman et al.
2007/0202913 A1 8/2007 Ban et al.
2007/0211689 A1 9/2007 Campero et al.
2007/0211786 A1 9/2007 Shattil et al.
2007/0216596 A1 9/2007 Lewis et al.
2007/0223381 A1 9/2007 Radtke et al.
2007/0226779 A1 9/2007 Yokomitsu et al.
2007/0229184 A1 10/2007 Liu et al.
2007/0229231 A1 10/2007 Hurwitz et al.
2007/0252998 A1 11/2007 Berthold et al.
2007/0257858 A1 11/2007 Liu et al.
2007/0258484 A1 11/2007 Tolaio et al.
2007/0268124 A1 11/2007 Berkman et al.
2007/0268846 A1 11/2007 Proctor et al.
2007/0300280 A1 12/2007 Turner et al.
2008/0002652 A1 1/2008 Gupta et al.
2008/0003872 A1 1/2008 Chen et al.
2008/0007416 A1 1/2008 Cern et al.
2008/0008116 A1 1/2008 Buga et al.
2008/0043655 A1 2/2008 Lee et al.
2008/0055149 A1 3/2008 Rees et al.
2008/0060832 A1 3/2008 Razavi et al.
2008/0064331 A1 3/2008 Washiro et al.
2008/0077336 A1 3/2008 Fernandes et al.
2008/0080389 A1 4/2008 Hart et al.
2008/0084937 A1 4/2008 Barthold et al.
2008/0094298 A1 4/2008 Kralovec et al.
2008/0120667 A1 5/2008 Zaltsman
2008/0122723 A1 5/2008 Rofougaran et al.
2008/0130639 A1 6/2008 Costa-Requena et al.
2008/0143491 A1 6/2008 Deaver et al.
2008/0150790 A1 6/2008 Voigtlaender et al.
2008/0153416 A1 6/2008 Washiro et al.
2008/0177678 A1 7/2008 Di Martini et al.
2008/0191851 A1 8/2008 Koga et al.
2008/0211727 A1 9/2008 Elmore et al.
2008/0247716 A1 10/2008 Thomas et al.
2008/0252522 A1 10/2008 Asbridge et al.
2008/0253723 A1 10/2008 Stokes et al.
2008/0255782 A1 10/2008 Bilac et al.
2008/0258993 A1 10/2008 Gummalla et al.
2008/0266060 A1 10/2008 Takei et al.
2008/0267076 A1 10/2008 Laperi et al.
2008/0279199 A1 11/2008 Park et al.
2008/0280574 A1 11/2008 Rofougaran et al.
2008/0313691 A1 12/2008 Cholas
2009/0002137 A1 1/2009 Radtke et al.
2009/0007189 A1 1/2009 Gutknecht
2009/0007190 A1 1/2009 Weber et al.
2009/0007194 A1 1/2009 Brady, Jr. et al.
2009/0009408 A1 1/2009 Rofougaran et al.
2009/0015239 A1 1/2009 Georgiou et al.
2009/0054056 A1 2/2009 Gil et al.
2009/0054737 A1 2/2009 Magar et al.
2009/0061940 A1 3/2009 Scheinert et al.
2009/0067441 A1 3/2009 Ansari et al.
2009/0079660 A1* 3/2009 Elmore ..... H04B 3/56 343/904
2009/0085726 A1 4/2009 Radtke et al.
2009/0088907 A1 4/2009 Lewis et al.
2009/0093267 A1 4/2009 Ariyur et al.
2009/0109981 A1 4/2009 Keselman
2009/0125351 A1 5/2009 Davis, Jr. et al.
2009/0129301 A1 5/2009 Belimpasakis et al.
2009/0135848 A1 5/2009 Chan et al.
2009/0138931 A1 5/2009 Lin et al.
2009/0140852 A1 6/2009 Stolarczyk et al.
2009/0144417 A1 6/2009 Kisel et al.
2009/0171780 A1 7/2009 Aldrey et al.
2009/0175195 A1 7/2009 Macauley et al.
2009/0181664 A1 7/2009 Kuruvilla et al.
2009/0201133 A1 8/2009 Bruns et al.
2009/0202020 A1 8/2009 Hafeez et al.
2009/0210901 A1 8/2009 Hawkins et al.
2009/0212938 A1 8/2009 Swaim et al.
2009/0213022 A1* 8/2009 Lier ..... H01P 3/12 343/785
2009/0250449 A1 10/2009 Petrenko et al.
2009/0254971 A1 10/2009 Herz et al.
2009/0258652 A1 10/2009 Lambert et al.
2009/0284429 A1* 11/2009 Lier ..... H01Q 13/02 343/785
2009/0284435 A1 11/2009 Elmore et al.
2009/0286482 A1 11/2009 Gorokhov et al.
2009/0311960 A1 12/2009 Farahani et al.
2009/0315668 A1 12/2009 Leete, III et al.
2009/0320058 A1 12/2009 Wehmeyer et al.
2009/0325479 A1 12/2009 Chakrabarti et al.
2009/0325628 A1 12/2009 Becker et al.
2010/0002618 A1 1/2010 Eichinger et al.
2010/0002731 A1 1/2010 Kimura et al.
2010/0013696 A1 1/2010 Schmitt et al.
2010/0026607 A1 2/2010 Imai et al.
2010/0039339 A1 2/2010 Kuroda et al.
2010/0045447 A1 2/2010 Mollenkopf et al.
2010/0052799 A1 3/2010 Watanabe et al.
2010/0053019 A1 3/2010 Ikawa et al.
2010/0057894 A1 3/2010 Glasser
2010/0066594 A1* 3/2010 Kienzle ..... G01F 23/284 342/175
2010/0080203 A1 4/2010 Reynolds et al.
2010/0085036 A1 4/2010 Banting et al.
2010/0090887 A1 4/2010 Cooper et al.
2010/0091712 A1 4/2010 Lu et al.
2010/0100918 A1 4/2010 Egan, Jr. et al.
2010/0111521 A1 5/2010 Kim et al.
2010/0119234 A1 5/2010 Suematsu et al.
2010/0121945 A1 5/2010 Gerber et al.
2010/0127848 A1 5/2010 Mustapha et al.
2010/0141527 A1 6/2010 Lalezari et al.
2010/0142435 A1 6/2010 Kim et al.
2010/0150215 A1 6/2010 Black et al.
2010/0153990 A1 6/2010 Ress et al.
2010/0169937 A1 7/2010 Atwal et al.
2010/0175080 A1 7/2010 Yuen et al.
2010/0176894 A1 7/2010 Tahara et al.
2010/0177894 A1 7/2010 Yasuma et al.
2010/0185614 A1 7/2010 O'Brien et al.
2010/0201313 A1 8/2010 Vorenkamp et al.
2010/0214183 A1 8/2010 Stoneback et al.
2010/0214185 A1 8/2010 Sammoura et al.
2010/0220024 A1 9/2010 Snow et al.
2010/0224732 A1 9/2010 Olson et al.
2010/0225426 A1 9/2010 Unger et al.
2010/0232539 A1 9/2010 Han et al.
2010/0243633 A1 9/2010 Huynh et al.
2010/0253450 A1 10/2010 Kim et al.
2010/0256955 A1 10/2010 Pupalaikis et al.
2010/0265877 A1 10/2010 Foxworthy et al.
2010/0266063 A1 10/2010 Harel et al.
2010/0277003 A1 11/2010 Von et al.
2010/0283693 A1 11/2010 Xie et al.
2010/0284446 A1 11/2010 Mu et al.
2010/0319068 A1 12/2010 Abbadessa et al.
2010/0327880 A1 12/2010 Stein et al.
2011/0018704 A1 1/2011 Burrows et al.
2011/0040861 A1 2/2011 Van der Merwe et al.
2011/0042120 A1 2/2011 Otsuka et al.
2011/0043051 A1 2/2011 Meskens et al.
2011/0053498 A1 3/2011 Nogueira-Nine
2011/0068893 A1 3/2011 Lahiri et al.
2011/0068988 A1 3/2011 Monte et al.
2011/0080301 A1 4/2011 Chang et al.
2011/0083399 A1 4/2011 Lettkeman et al.
2011/0103274 A1 5/2011 Vavik et al.
2011/0107364 A1 5/2011 Lajoie et al.
2011/0109936 A1 5/2011 Coffee et al.
2011/0110404 A1 5/2011 Washiro
2011/0118888 A1 5/2011 White et al.
2011/0132658 A1 6/2011 Miller, II et al.
2011/0133865 A1 6/2011 Miller, II et al.
2011/0133867 A1 6/2011 Miller, II et al.
2011/0136432 A1 6/2011 Miller, II et al.
2011/0140911 A1 6/2011 Pant et al.

(56) **References Cited**

U.S. PATENT DOCUMENTS

2011/0141555 A1 6/2011 Fermann et al.
2011/0143673 A1 6/2011 Landesman et al.
2011/0148578 A1 6/2011 Aloi et al.
2011/0148687 A1 6/2011 Wright et al.
2011/0164514 A1 7/2011 Afkhamie et al.
2011/0165847 A1 7/2011 Kawasaki et al.
2011/0169336 A1 7/2011 Yerazunis et al.
2011/0172000 A1 7/2011 Quigley et al.
2011/0173447 A1 7/2011 Zhang et al.
2011/0187578 A1 8/2011 Farneth et al.
2011/0199265 A1 8/2011 Lin et al.
2011/0208450 A1 8/2011 Salka et al.
2011/0214176 A1 9/2011 Burch et al.
2011/0219402 A1 9/2011 Candelore et al.
2011/0220394 A1 9/2011 Szylakowski et al.
2011/0225046 A1 9/2011 Eldering et al.
2011/0228814 A1 9/2011 Washiro et al.
2011/0235536 A1 9/2011 Nishizaka et al.
2011/0268085 A1 11/2011 Barany et al.
2011/0274396 A1 11/2011 Nakajima et al.
2011/0286506 A1 11/2011 Libby et al.
2011/0291878 A1 12/2011 Mclaughlin et al.
2011/0294509 A1 12/2011 Kim et al.
2011/0311231 A1 12/2011 Ridgway et al.
2011/0316645 A1 12/2011 Takeuchi et al.
2012/0002973 A1 1/2012 Bruzzi et al.
2012/0015382 A1 1/2012 Weitz et al.
2012/0015654 A1 1/2012 Palanki et al.
2012/0019420 A1 1/2012 Caimi et al.
2012/0019427 A1 1/2012 Ishikawa et al.
2012/0038520 A1 2/2012 Cornwell et al.
2012/0039366 A1 2/2012 Wood et al.
2012/0046891 A1 2/2012 Yaney et al.
2012/0054571 A1 3/2012 Howard et al.
2012/0068903 A1 3/2012 Thevenard et al.
2012/0077485 A1 3/2012 Shin et al.
2012/0078452 A1 3/2012 Daum et al.
2012/0084807 A1 4/2012 Thompson et al.
2012/0091820 A1 4/2012 Campanella et al.
2012/0092161 A1 4/2012 West et al.
2012/0093078 A1 4/2012 Perlman et al.
2012/0102568 A1 4/2012 Tarbotton et al.
2012/0105246 A1 5/2012 Sexton et al.
2012/0105637 A1 5/2012 Yousefi et al.
2012/0109545 A1 5/2012 Meynardi et al.
2012/0109566 A1 5/2012 Adamian et al.
2012/0117584 A1 5/2012 Gordon
2012/0129566 A1 5/2012 Lee et al.
2012/0133373 A1 5/2012 Ali et al.
2012/0137332 A1 5/2012 Kumar et al.
2012/0144420 A1 6/2012 Del Sordo et al.
2012/0146861 A1 6/2012 Armbrecht et al.
2012/0153087 A1 6/2012 Collette et al.
2012/0154239 A1 6/2012 Bar-Sade et al.
2012/0161543 A1 6/2012 Reuven et al.
2012/0176906 A1 7/2012 Hartenstein et al.
2012/0181258 A1 7/2012 Shan et al.
2012/0190386 A1 7/2012 Anderson
2012/0197558 A1 8/2012 Henig et al.
2012/0201145 A1 8/2012 Ree et al.
2012/0214538 A1 8/2012 Kim et al.
2012/0224807 A1 9/2012 Winzer et al.
2012/0226394 A1 9/2012 Marcus et al.
2012/0235864 A1 9/2012 Lu et al.
2012/0235881 A1 9/2012 Pan et al.
2012/0250534 A1 10/2012 Langer et al.
2012/0250752 A1 10/2012 McHann et al.
2012/0263152 A1 10/2012 Fischer et al.
2012/0267863 A1 10/2012 Kiest et al.
2012/0268340 A1 10/2012 Capozzoli et al.
2012/0270507 A1 10/2012 Qin et al.
2012/0272741 A1 11/2012 Xiao et al.
2012/0274528 A1 11/2012 McMahon et al.
2012/0287922 A1 11/2012 Heck et al.
2012/0299671 A1 11/2012 Ikeda et al.
2012/0304294 A1 11/2012 Fujiwara et al.
2012/0306587 A1 12/2012 Strid et al.
2012/0306708 A1 12/2012 Henderson et al.
2012/0313895 A1 12/2012 Haroun et al.
2012/0319903 A1 12/2012 Huseth et al.
2012/0322380 A1 12/2012 Nannarone et al.
2012/0322492 A1 12/2012 Koo et al.
2012/0324018 A1 12/2012 Metcalf et al.
2012/0327908 A1 12/2012 Gupta et al.
2012/0329523 A1 12/2012 Stewart et al.
2012/0330756 A1 12/2012 Morris et al.
2013/0002409 A1 1/2013 Molina et al.
2013/0003876 A1 1/2013 Bennett
2013/0010679 A1 1/2013 Ma et al.
2013/0015922 A1 1/2013 Liu et al.
2013/0016022 A1 1/2013 Heiks et al.
2013/0023302 A1 1/2013 Sivanesan et al.
2013/0039624 A1 2/2013 Scherer et al.
2013/0064178 A1 3/2013 Cs et al.
2013/0064311 A1 3/2013 Turner et al.
2013/0070621 A1 3/2013 Marzetta et al.
2013/0077612 A1 3/2013 Khorami et al.
2013/0077664 A1 3/2013 Lee et al.
2013/0080290 A1 3/2013 Kamm
2013/0086639 A1 4/2013 Sondhi et al.
2013/0093638 A1 4/2013 Shoemaker et al.
2013/0095875 A1 4/2013 Reuven et al.
2013/0108206 A1 5/2013 Sasaoka et al.
2013/0109317 A1 5/2013 Kikuchi et al.
2013/0117852 A1 5/2013 Stute et al.
2013/0122828 A1 5/2013 Choi et al.
2013/0124365 A1 5/2013 Pradeep
2013/0127678 A1 5/2013 Chandler et al.
2013/0136410 A1 5/2013 Sasaoka et al.
2013/0144750 A1 6/2013 Brown
2013/0148194 A1 6/2013 Altug et al.
2013/0159153 A1 6/2013 Lau et al.
2013/0159856 A1 6/2013 Ferren
2013/0160122 A1 6/2013 Choi et al.
2013/0162490 A1 6/2013 Blech et al.
2013/0166690 A1 6/2013 Shatzkamer et al.
2013/0169499 A1 7/2013 Lin et al.
2013/0173807 A1 7/2013 De Groot et al.
2013/0178998 A1 7/2013 Gadiraju et al.
2013/0182804 A1 7/2013 Yutaka et al.
2013/0185552 A1 7/2013 Steer et al.
2013/0187636 A1 7/2013 Kast et al.
2013/0191052 A1 7/2013 Fernandez et al.
2013/0201006 A1 8/2013 Kummetz et al.
2013/0201904 A1 8/2013 Toskala et al.
2013/0205370 A1 8/2013 Kalgi et al.
2013/0207681 A1 8/2013 Slupsky et al.
2013/0207859 A1 8/2013 Legay et al.
2013/0219308 A1 8/2013 Britton et al.
2013/0234904 A1 9/2013 Blech et al.
2013/0234961 A1 9/2013 Garfinkel et al.
2013/0235845 A1 9/2013 Kovvali et al.
2013/0235871 A1 9/2013 Brzozowski et al.
2013/0262656 A1 10/2013 Cao et al.
2013/0262857 A1 10/2013 Neuman et al.
2013/0263263 A1 10/2013 Narkolayev et al.
2013/0265732 A1 10/2013 Herbsommer et al.
2013/0268414 A1 10/2013 Lehtiniemi et al.
2013/0271349 A1 10/2013 Wright et al.
2013/0278464 A1 10/2013 Xia et al.
2013/0279523 A1 10/2013 Denney et al.
2013/0279561 A1 10/2013 Jin et al.
2013/0279868 A1 10/2013 Zhang et al.
2013/0285864 A1 10/2013 Clymer et al.
2013/0303089 A1 11/2013 Wang et al.
2013/0305369 A1 11/2013 Karta et al.
2013/0306351 A1 11/2013 Lambert et al.
2013/0307645 A1 11/2013 Mita et al.
2013/0311661 A1 11/2013 McPhee
2013/0314182 A1 11/2013 Takeda et al.
2013/0321225 A1 12/2013 Pettus et al.
2013/0326063 A1 12/2013 Burch et al.
2013/0326494 A1 12/2013 Nunez et al.
2013/0330050 A1 12/2013 Yang et al.

(56) **References Cited**

U.S. PATENT DOCUMENTS

2013/0335165 A1 12/2013 Arnold et al.
2013/0336418 A1 12/2013 Tomeba et al.
2013/0341094 A1 12/2013 Taherian et al.
2013/0342287 A1 12/2013 Randall et al.
2013/0343213 A1 12/2013 Reynolds et al.
2013/0343351 A1 12/2013 Sambhwani et al.
2014/0003394 A1 1/2014 Rubin et al.
2014/0003775 A1 1/2014 Ko et al.
2014/0007076 A1 1/2014 Kim et al.
2014/0009270 A1 1/2014 Yamazaki et al.
2014/0009822 A1 1/2014 Dong et al.
2014/0015705 A1 1/2014 Ebihara et al.
2014/0019576 A1 1/2014 Lobo et al.
2014/0026170 A1 1/2014 Francisco et al.
2014/0028184 A1 1/2014 Voronin et al.
2014/0028190 A1 1/2014 Voronin et al.
2014/0028532 A1 1/2014 Ehrenberg et al.
2014/0032005 A1 1/2014 Iwamura
2014/0036694 A1 2/2014 Courtice et al.
2014/0041925 A1 2/2014 Siripurapu et al.
2014/0043189 A1 2/2014 Lee et al.
2014/0043977 A1 2/2014 Wiley et al.
2014/0044139 A1 2/2014 Dong et al.
2014/0052810 A1 2/2014 Osorio et al.
2014/0057576 A1 2/2014 Liu et al.
2014/0062784 A1 3/2014 Rison et al.
2014/0071818 A1 3/2014 Wang et al.
2014/0072299 A1 3/2014 Stapleton et al.
2014/0077995 A1 3/2014 Artemenko et al.
2014/0086080 A1 3/2014 Hui et al.
2014/0086152 A1 3/2014 Bontu et al.
2014/0112184 A1 4/2014 Chai
2014/0124236 A1 5/2014 Vu et al.
2014/0126914 A1 5/2014 Berlin et al.
2014/0130111 A1 5/2014 Nulty et al.
2014/0132728 A1 5/2014 Verano et al.
2014/0139375 A1 5/2014 Faragher et al.
2014/0143055 A1 5/2014 Johnson
2014/0146902 A1 5/2014 Liu et al.
2014/0148107 A1 5/2014 Maltsev et al.
2014/0155054 A1 6/2014 Henry et al.
2014/0165145 A1 6/2014 Baentsch et al.
2014/0169186 A1 6/2014 Zhu et al.
2014/0177692 A1 6/2014 Yu et al.
2014/0179302 A1 6/2014 Polehn et al.
2014/0189677 A1 7/2014 Curzi et al.
2014/0189732 A1 7/2014 Shkedi et al.
2014/0191913 A1 7/2014 Ge et al.
2014/0204000 A1 7/2014 Sato et al.
2014/0204754 A1 7/2014 Jeong et al.
2014/0207844 A1 7/2014 Mayo et al.
2014/0208272 A1 7/2014 Vats et al.
2014/0222997 A1 8/2014 Mermoud et al.
2014/0223527 A1 8/2014 Bortz et al.
2014/0225129 A1 8/2014 Inoue et al.
2014/0227905 A1 8/2014 Knott et al.
2014/0227966 A1 8/2014 Artemenko et al.
2014/0233900 A1 8/2014 Hugonnot et al.
2014/0241718 A1 8/2014 Jiang et al.
2014/0254516 A1 9/2014 Lee et al.
2014/0254896 A1 9/2014 Zhou et al.
2014/0254979 A1 9/2014 Zhang et al.
2014/0266946 A1 9/2014 Stevenson et al.
2014/0266953 A1 9/2014 Yen et al.
2014/0269260 A1 9/2014 Xue et al.
2014/0269691 A1 9/2014 Xue et al.
2014/0269972 A1 9/2014 Rada et al.
2014/0273873 A1 9/2014 Huynh et al.
2014/0285277 A1 9/2014 Herbsommer et al.
2014/0285293 A1 9/2014 Schuppener et al.
2014/0285373 A1 9/2014 Kuwahara et al.
2014/0285389 A1 9/2014 Fakharzadeh et al.
2014/0286189 A1 9/2014 Kang et al.
2014/0286235 A1 9/2014 Chang et al.
2014/0287702 A1 9/2014 Schuppener et al.
2014/0299349 A1 10/2014 Yamaguchi et al.
2014/0304498 A1 10/2014 Gonuguntla et al.
2014/0317229 A1 10/2014 Hughes et al.
2014/0320364 A1 10/2014 Gu et al.
2014/0321273 A1 10/2014 Morrill et al.
2014/0334773 A1 11/2014 Mathai et al.
2014/0334789 A1 11/2014 Matsuo et al.
2014/0340271 A1 11/2014 Petkov et al.
2014/0343883 A1 11/2014 Libby et al.
2014/0349696 A1 11/2014 Hyde et al.
2014/0351571 A1 11/2014 Jacobs
2014/0355525 A1 12/2014 Barzegar et al.
2014/0355989 A1 12/2014 Finkelstein
2014/0357269 A1 12/2014 Zhou et al.
2014/0359275 A1 12/2014 Murugesan et al.
2014/0362374 A1 12/2014 Santori
2014/0362694 A1 12/2014 Rodrigues
2014/0368301 A1 12/2014 Herbsommer et al.
2014/0369430 A1 12/2014 Parnell
2014/0372068 A1 12/2014 Seto et al.
2014/0373053 A1 12/2014 Leley et al.
2014/0376655 A1 12/2014 Ruan et al.
2015/0008996 A1 1/2015 Jessup et al.
2015/0009089 A1 1/2015 Pesa
2015/0016260 A1 1/2015 Chow et al.
2015/0017473 A1 1/2015 Verhoeven et al.
2015/0022399 A1 1/2015 Clymer et al.
2015/0026460 A1 1/2015 Walton
2015/0029065 A1* 1/2015 Cheng ..... H01Q 19/06
343/753
2015/0036610 A1 2/2015 Kim et al.
2015/0042526 A1 2/2015 Zeine
2015/0048238 A1 2/2015 Kawai
2015/0049998 A1 2/2015 Dumais
2015/0061859 A1 3/2015 Matsuoka et al.
2015/0065166 A1 3/2015 Ward et al.
2015/0070231 A1 3/2015 Park et al.
2015/0071594 A1 3/2015 Register
2015/0073594 A1 3/2015 Trujillo et al.
2015/0077740 A1 3/2015 Fuse
2015/0078756 A1 3/2015 Soto
2015/0084660 A1 3/2015 Knierim et al.
2015/0084703 A1 3/2015 Sanduleanu
2015/0084814 A1 3/2015 Rojanski et al.
2015/0091650 A1 4/2015 Nobbe
2015/0094104 A1 4/2015 Wilmhoff et al.
2015/0098387 A1 4/2015 Garg et al.
2015/0099555 A1 4/2015 Krishnaswamy et al.
2015/0102972 A1 4/2015 Scire-Scappuzzo et al.
2015/0103685 A1 4/2015 Butchko et al.
2015/0104005 A1 4/2015 Holman
2015/0109178 A1 4/2015 Hyde et al.
2015/0116154 A1* 4/2015 Artemenko ..... H01Q 15/08
342/371
2015/0185425 A1 4/2015 Gundel et al.
2015/0122886 A1 5/2015 Koch
2015/0126107 A1 5/2015 Bennett et al.
2015/0130675 A1 5/2015 Parsche
2015/0138022 A1 5/2015 Takahashi
2015/0138144 A1 5/2015 Tanabe
2015/0153248 A1 6/2015 Hayward et al.
2015/0156266 A1 6/2015 Gupta
2015/0162988 A1 6/2015 Henry et al.
2015/0171522 A1 6/2015 Liu et al.
2015/0172036 A1 6/2015 Katar et al.
2015/0181449 A1 6/2015 Didenko et al.
2015/0195349 A1 7/2015 Cardamore
2015/0195719 A1 7/2015 Rahman
2015/0201228 A1 7/2015 Hasek
2015/0207527 A1 7/2015 Eliaz et al.
2015/0214615 A1 7/2015 Patel et al.
2015/0215268 A1 7/2015 Dinha
2015/0223078 A1 8/2015 Bennett et al.
2015/0223113 A1 8/2015 Matsunaga
2015/0223160 A1 8/2015 Ho
2015/0230109 A1 8/2015 Turner et al.
2015/0236778 A1 8/2015 Jalali
2015/0236779 A1 8/2015 Jalali
2015/0237519 A1 8/2015 Ghai

(56) **References Cited**

U.S. PATENT DOCUMENTS

2015/0249965 A1 9/2015 Dussmann et al.
2015/0263424 A1 9/2015 Sanford
2015/0271830 A1 9/2015 Shin et al.
2015/0276577 A1 10/2015 Ruege et al.
2015/0277569 A1 10/2015 Sprenger
2015/0280328 A1 10/2015 Sanford et al.
2015/0284079 A1 10/2015 Matsuda
2015/0288532 A1 10/2015 Veyseh et al.
2015/0289247 A1 10/2015 Liu et al.
2015/0303892 A1 10/2015 Desclos
2015/0304045 A1 10/2015 Henry et al.
2015/0304869 A1 10/2015 Johnson et al.
2015/0311596 A1* 10/2015 Nusseibeh ..... H01Q 1/225 343/785
2015/0311951 A1 10/2015 Hariz
2015/0312774 A1 10/2015 Lau
2015/0318610 A1 11/2015 Lee et al.
2015/0323948 A1 11/2015 Jeong
2015/0325913 A1 11/2015 Vagman
2015/0326274 A1 11/2015 Flood
2015/0326287 A1 11/2015 Kazmi et al.
2015/0333386 A1 11/2015 Kaneda et al.
2015/0333804 A1 11/2015 Yang et al.
2015/0334769 A1 11/2015 Kim et al.
2015/0339912 A1 11/2015 Farrand et al.
2015/0344136 A1 12/2015 Dahlstrom
2015/0349415 A1 12/2015 Iwanaka
2015/0356482 A1 12/2015 Whipple et al.
2015/0356848 A1 12/2015 Hatch
2015/0369660 A1 12/2015 Yu
2015/0370251 A1 12/2015 Siegel et al.
2015/0373557 A1 12/2015 Bennett et al.
2015/0380814 A1 12/2015 Boutayeb et al.
2015/0382208 A1 12/2015 Elliott et al.
2016/0006129 A1 1/2016 Haziza
2016/0012460 A1 1/2016 Kruglick
2016/0014749 A1 1/2016 Kang et al.
2016/0021545 A1 1/2016 Shaw
2016/0026301 A1 1/2016 Zhou et al.
2016/0029009 A1 1/2016 Lu et al.
2016/0038074 A1 2/2016 Brown et al.
2016/0043478 A1 2/2016 Hartenstein
2016/0044705 A1 2/2016 Gao
2016/0050028 A1 2/2016 Henry et al.
2016/0056543 A1 2/2016 Kwiatkowski
2016/0063642 A1 3/2016 Luciani et al.
2016/0064794 A1 3/2016 Henry et al.
2016/0065252 A1 3/2016 Preschutti
2016/0065335 A1 3/2016 Koo et al.
2016/0066191 A1 3/2016 Li
2016/0068265 A1 3/2016 Hoareau et al.
2016/0068277 A1 3/2016 Manitta
2016/0069934 A1 3/2016 Saxby et al.
2016/0070265 A1 3/2016 Liu et al.
2016/0072173 A1 3/2016 Herbsommer et al.
2016/0072191 A1 3/2016 Iwai
2016/0072287 A1 3/2016 Jia
2016/0079769 A1 3/2016 Corum et al.
2016/0079771 A1 3/2016 Corum
2016/0079809 A1 3/2016 Corum et al.
2016/0080035 A1 3/2016 Fuchs et al.
2016/0080839 A1 3/2016 Fuchs et al.
2016/0082460 A1 3/2016 McMaster et al.
2016/0087344 A1 3/2016 Artemenko et al.
2016/0088498 A1 3/2016 Sharawi
2016/0094420 A1 3/2016 Clemm et al.
2016/0094879 A1 3/2016 Gerszberg et al.
2016/0069935 A1 4/2016 Kreikebaum et al.
2016/0099749 A1 4/2016 Bennett et al.
2016/0100324 A1 4/2016 Henry et al.
2016/0103199 A1 4/2016 Rappaport
2016/0105218 A1 4/2016 Henry et al.
2016/0105233 A1 4/2016 Jalali
2016/0105239 A1 4/2016 Henry et al.
2016/0105255 A1 4/2016 Henry et al.
2016/0111890 A1 4/2016 Corum et al.
2016/0112092 A1 4/2016 Henry et al.
2016/0112093 A1 4/2016 Barzegar
2016/0112094 A1 4/2016 Stuckman et al.
2016/0112115 A1 4/2016 Henry et al.
2016/0112132 A1 4/2016 Henry et al.
2016/0112133 A1 4/2016 Henry et al.
2016/0112135 A1 4/2016 Henry et al.
2016/0112263 A1 4/2016 Henry et al.
2016/0116914 A1 4/2016 Mucci
2016/0118717 A1 4/2016 Britz et al.
2016/0124071 A1 5/2016 Baxley et al.
2016/0127931 A1 5/2016 Baxley et al.
2016/0131347 A1 5/2016 Hill et al.
2016/0134006 A1 5/2016 Ness et al.
2016/0135132 A1 5/2016 Donepudi et al.
2016/0137311 A1 5/2016 Peverill et al.
2016/0139731 A1 5/2016 Kim
2016/0149312 A1 5/2016 Henry et al.
2016/0149614 A1 5/2016 Barzegar
2016/0149636 A1 5/2016 Gerszberg et al.
2016/0149665 A1 5/2016 Henry et al.
2016/0149731 A1 5/2016 Henry et al.
2016/0149753 A1 5/2016 Gerszberg et al.
2016/0150427 A1 5/2016 Ramanath
2016/0153938 A1 6/2016 Balasubramaniam et al.
2016/0164571 A1 6/2016 Bennett et al.
2016/0164573 A1 6/2016 Birk et al.
2016/0165472 A1 6/2016 Gopalakrishnan et al.
2016/0165478 A1 6/2016 Yao et al.
2016/0174040 A1 6/2016 Roberts et al.
2016/0179134 A1 6/2016 Ryu
2016/0181701 A1 6/2016 Sangaran et al.
2016/0182096 A1 6/2016 Panioukov et al.
2016/0182161 A1 6/2016 Barzegar
2016/0182981 A1 6/2016 Minarik et al.
2016/0188291 A1 6/2016 Vilermo et al.
2016/0189101 A1 6/2016 Kantor et al.
2016/0197392 A1 7/2016 Henry et al.
2016/0197409 A1 7/2016 Henry et al.
2016/0197630 A1 7/2016 Kawasaki
2016/0197642 A1 7/2016 Henry et al.
2016/0207627 A1 7/2016 Hoareau et al.
2016/0212065 A1 7/2016 To et al.
2016/0212641 A1 7/2016 Kong et al.
2016/0214717 A1 7/2016 De Silva
2016/0218407 A1 7/2016 Henry et al.
2016/0218437 A1 7/2016 Guntupalli
2016/0221039 A1 8/2016 Fuchs et al.
2016/0224235 A1 8/2016 Forsstrom
2016/0226681 A1 8/2016 Henry et al.
2016/0244165 A1 8/2016 Patrick et al.
2016/0248149 A1 8/2016 Kim et al.
2016/0248165 A1 8/2016 Henry
2016/0248509 A1 8/2016 Henry
2016/0249233 A1 8/2016 Murray
2016/0252970 A1 9/2016 Dahl
2016/0261309 A1 9/2016 Henry
2016/0261310 A1 9/2016 Fuchs et al.
2016/0261311 A1 9/2016 Henry et al.
2016/0261312 A1 9/2016 Fuchs et al.
2016/0269156 A1 9/2016 Barzegar et al.
2016/0276725 A1 9/2016 Barnickel et al.
2016/0277939 A1 9/2016 Olcott et al.
2016/0278094 A1 9/2016 Henry et al.
2016/0285508 A1 9/2016 Bennett et al.
2016/0285512 A1 9/2016 Henry et al.
2016/0294444 A1 10/2016 Gerszberg et al.
2016/0294517 A1 10/2016 Barzegar et al.
2016/0295431 A1 10/2016 Henry et al.
2016/0315659 A1 10/2016 Henry
2016/0315660 A1 10/2016 Henry
2016/0315661 A1 10/2016 Henry
2016/0315662 A1 10/2016 Henry
2016/0322691 A1 11/2016 Bennett et al.
2016/0323015 A1 11/2016 Henry et al.
2016/0336091 A1 11/2016 Henry et al.
2016/0336092 A1 11/2016 Henry et al.
2016/0336636 A1 11/2016 Henry et al.

(56) **References Cited**

U.S. PATENT DOCUMENTS

| | | | |
|---|---|---|---|
| 2016/0336996 | A1 | 11/2016 | Henry |
| 2016/0336997 | A1 | 11/2016 | Henry |
| 2016/0351987 | A1 | 12/2016 | Henry |
| 2016/0359523 | A1 | 12/2016 | Bennett |
| 2016/0359524 | A1 | 12/2016 | Bennett et al. |
| 2016/0359529 | A1 | 12/2016 | Bennett et al. |
| 2016/0359530 | A1 | 12/2016 | Bennett |
| 2016/0359541 | A1 | 12/2016 | Bennett |
| 2016/0359542 | A1 | 12/2016 | Bennett |
| 2016/0359543 | A1 | 12/2016 | Bennett et al. |
| 2016/0359544 | A1 | 12/2016 | Bennett |
| 2016/0359546 | A1 | 12/2016 | Bennett |
| 2016/0359547 | A1 | 12/2016 | Bennett et al. |
| 2016/0359649 | A1 | 12/2016 | Bennett et al. |
| 2016/0360511 | A1 | 12/2016 | Barzegar |
| 2016/0360533 | A1 | 12/2016 | Bennett et al. |
| 2016/0365175 | A1 | 12/2016 | Bennett et al. |
| 2016/0365893 | A1 | 12/2016 | Bennett et al. |
| 2016/0365894 | A1 | 12/2016 | Bennett et al. |
| 2016/0365897 | A1 | 12/2016 | Gross |
| 2016/0365916 | A1 | 12/2016 | Bennett et al. |
| 2016/0365943 | A1 | 12/2016 | Henry et al. |
| 2016/0365966 | A1 | 12/2016 | Bennett et al. |
| 2016/0366586 | A1 | 12/2016 | Gross et al. |
| 2016/0366587 | A1 | 12/2016 | Gross |
| 2016/0373937 | A1 | 12/2016 | Bennett et al. |
| 2016/0380327 | A1 | 12/2016 | Henry |
| 2016/0380328 | A1 | 12/2016 | Henry |
| 2016/0380358 | A1 | 12/2016 | Henry |
| 2016/0380701 | A1 | 12/2016 | Henry et al. |
| 2016/0380702 | A1 | 12/2016 | Henry et al. |
| 2017/0012667 | A1 | 1/2017 | Bennett |
| 2017/0018174 | A1 | 1/2017 | Gerszberg |
| 2017/0018332 | A1 | 1/2017 | Barzegar et al. |
| 2017/0018830 | A1 | 1/2017 | Henry et al. |
| 2017/0018831 | A1 | 1/2017 | Henry et al. |
| 2017/0018832 | A1 | 1/2017 | Henry et al. |
| 2017/0018833 | A1 | 1/2017 | Henry et al. |
| 2017/0018851 | A1 | 1/2017 | Henry et al. |
| 2017/0018852 | A1 | 1/2017 | Adriazola et al. |
| 2017/0018856 | A1 | 1/2017 | Henry et al. |
| 2017/0019130 | A1 | 1/2017 | Henry et al. |
| 2017/0019131 | A1 | 1/2017 | Henry et al. |
| 2017/0019150 | A1 | 1/2017 | Henry |
| 2017/0019189 | A1 | 1/2017 | Henry et al. |
| 2017/0025728 | A1 | 1/2017 | Henry et al. |
| 2017/0025732 | A1 | 1/2017 | Henry et al. |
| 2017/0025734 | A1 | 1/2017 | Henry et al. |
| 2017/0025839 | A1 | 1/2017 | Henry et al. |
| 2017/0026063 | A1 | 1/2017 | Henry |
| 2017/0026082 | A1 | 1/2017 | Henry et al. |
| 2017/0026084 | A1 | 1/2017 | Henry et al. |
| 2017/0026129 | A1 | 1/2017 | Henry |
| 2018/0048497 | A1 | 2/2018 | Henry et al. |
| 2018/0054232 | A1 | 2/2018 | Henry et al. |
| 2018/0054233 | A1 | 2/2018 | Henry et al. |
| 2018/0054234 | A1 | 2/2018 | Stuckman et al. |
| 2018/0062886 | A1 | 3/2018 | Paul et al. |
| 2018/0069594 | A1 | 3/2018 | Henry et al. |
| 2018/0069731 | A1 | 3/2018 | Henry et al. |
| 2018/0076982 | A1 | 3/2018 | Henry et al. |
| 2018/0077709 | A1 | 3/2018 | Gerszberg |
| 2018/0108997 | A1 | 4/2018 | Henry et al. |
| 2018/0108998 | A1 | 4/2018 | Henry et al. |
| 2018/0108999 | A1 | 4/2018 | Henry et al. |
| 2018/0115040 | A1 | 4/2018 | Bennett et al. |
| 2018/0115058 | A1 | 4/2018 | Henry et al. |
| 2018/0115060 | A1 | 4/2018 | Bennett et al. |
| 2018/0115075 | A1 | 4/2018 | Bennett et al. |
| 2018/0115081 | A1 | 4/2018 | Johnson et al. |
| 2018/0123207 | A1 | 5/2018 | Henry et al. |
| 2018/0123208 | A1 | 5/2018 | Henry et al. |
| 2018/0123643 | A1 | 5/2018 | Henry et al. |
| 2018/0123836 | A1 | 5/2018 | Henry et al. |
| 2018/0151957 | A1 | 5/2018 | Bennett et al. |
| 2018/0159195 | A1 | 6/2018 | Henry et al. |
| 2018/0159228 | A1 | 6/2018 | Britz et al. |
| 2018/0159229 | A1 | 6/2018 | Britz |
| 2018/0159230 | A1 | 6/2018 | Henry et al. |
| 2018/0159232 | A1 | 6/2018 | Henry et al. |
| 2018/0159235 | A1 | 6/2018 | Wolniansky |
| 2018/0159238 | A1 | 6/2018 | Wolniansky |
| 2018/0159240 | A1 | 6/2018 | Henry et al. |
| 2018/0159243 | A1 | 6/2018 | Britz et al. |
| 2018/0166761 | A1 | 6/2018 | Henry et al. |
| 2018/0166784 | A1 | 6/2018 | Johnson et al. |
| 2018/0166785 | A1 | 6/2018 | Henry et al. |
| 2018/0166787 | A1 | 6/2018 | Johnson et al. |
| 2018/0167130 | A1 | 6/2018 | Vannucci |
| 2018/0167927 | A1 | 6/2018 | Beattie, Jr. et al. |
| 2018/0302162 | A1 | 10/2018 | Gerszberg et al. |

FOREIGN PATENT DOCUMENTS

| | | | |
|---|---|---|---|
| AU | 606303 | B2 | 1/1991 |
| AU | 7261000 | A | 4/2001 |
| AU | 760272 | B2 | 5/2003 |
| AU | 2005227368 | B2 | 2/2009 |
| AU | 2010101079 | A4 | 11/2010 |
| AU | 2007215252 | B2 | 1/2011 |
| AU | 2014200748 | A1 | 3/2014 |
| CA | 1136267 | A1 | 11/1982 |
| CA | 1211813 | A1 | 9/1986 |
| CA | 1328009 | C | 3/1994 |
| CA | 2260380 | C | 12/2000 |
| CA | 2348614 | A1 | 3/2001 |
| CA | 2449596 | A1 | 6/2005 |
| CA | 2515560 | A1 | 2/2007 |
| CA | 2664573 | A1 | 4/2008 |
| CA | 2467988 | C | 11/2010 |
| CA | 2777147 | A1 | 4/2011 |
| CA | 2814529 | A1 | 4/2012 |
| CA | 2787580 | A1 | 2/2013 |
| CA | 2927054 | A1 | 5/2015 |
| CA | 2940976 | | 9/2015 |
| CN | 2116969 | U | 9/1992 |
| CN | 1155354 | C | 7/1997 |
| CN | 1411563 | A | 4/2003 |
| CN | 1126425 | C | 10/2003 |
| CN | 2730033 | Y | 9/2005 |
| CN | 1833397 | A | 9/2006 |
| CN | 1885736 | A | 12/2006 |
| CN | 201048157 | Y | 4/2008 |
| CN | 201146495 | Y | 11/2008 |
| CN | 201207179 | Y | 3/2009 |
| CN | 100502181 | C | 6/2009 |
| CN | 201282193 | Y | 7/2009 |
| CN | 101834011 | U | 4/2010 |
| CN | 1823275 | B | 5/2010 |
| CN | 101785201 | A | 7/2010 |
| CN | 1820482 | B | 12/2010 |
| CN | 101075702 | B | 2/2011 |
| CN | 101978613 | A | 2/2011 |
| CN | 102130698 | A | 7/2011 |
| CN | 102136634 | A | 7/2011 |
| CN | 201985870 | U | 9/2011 |
| CN | 102208716 | A | 10/2011 |
| CN | 102280704 | A | 12/2011 |
| CN | 102280709 | A | 12/2011 |
| CN | 202093126 | U | 12/2011 |
| CN | 102351415 | A | 2/2012 |
| CN | 102396111 | A | 3/2012 |
| CN | 202253536 | U | 5/2012 |
| CN | 102544736 | A | 7/2012 |
| CN | 102590893 | A | 7/2012 |
| CN | 102694351 | A | 9/2012 |
| CN | 202424729 | U | 9/2012 |
| CN | 101662076 | B | 11/2012 |
| CN | 102780058 | A | 11/2012 |
| CN | 102017692 | B | 4/2013 |
| CN | 103078673 | A | 5/2013 |
| CN | 103117118 | A | 5/2013 |
| CN | 103163881 | A | 6/2013 |
| CN | 203204743 | U | 9/2013 |

(56) **References Cited**

FOREIGN PATENT DOCUMENTS

| | | | |
|---|---|---|---|
| CN | 1863244 | B | 10/2013 |
| CN | 101958461 | B | 11/2013 |
| CN | 103700442 | A | 4/2014 |
| CN | 103943925 | A | 7/2014 |
| CN | 104052742 | A | 9/2014 |
| CN | 104064844 | A | 9/2014 |
| CN | 203813973 | U | 9/2014 |
| CN | 104091987 | A | 10/2014 |
| CN | 104092028 | A | 10/2014 |
| CN | 203931626 | U | 11/2014 |
| CN | 203950607 | U | 11/2014 |
| CN | 104181552 | A | 12/2014 |
| CN | 204538183 | | 8/2015 |
| CN | 102412442 | B | 10/2015 |
| CN | 204760545 | U | 11/2015 |
| CN | 105262551 | A | 1/2016 |
| CN | 205265924 | | 1/2016 |
| CN | 105359572 | A | 2/2016 |
| CN | 105453340 | | 3/2016 |
| CN | 105594138 | A | 5/2016 |
| CN | 104162995 | B | 6/2016 |
| CN | 105813193 | A | 7/2016 |
| DE | 3504546 | A1 | 8/1986 |
| DE | 3533204 | A1 | 3/1987 |
| DE | 3533211 | A1 | 3/1987 |
| DE | 3827956 | A1 | 3/1989 |
| DE | 4027367 | C1 | 7/1991 |
| DE | 4225595 | C1 | 9/1993 |
| DE | 19501448 | A1 | 7/1996 |
| DE | 19939832 | A1 | 2/2001 |
| DE | 10043761 | C2 | 11/2002 |
| DE | 102004024356 | A1 | 9/2005 |
| DE | 69732676 | T2 | 4/2006 |
| DE | 4337835 | B4 | 5/2008 |
| DE | 102007049914 | A1 | 4/2009 |
| DE | 102012004998 | A1 | 7/2013 |
| DE | 102012203816 | A1 | 9/2013 |
| EP | 0102846 | | 3/1984 |
| EP | 0110478 | | 6/1984 |
| EP | 0136818 | | 4/1985 |
| EP | 0280379 | | 8/1988 |
| EP | 0330303 | | 8/1989 |
| EP | 0331248 | | 9/1989 |
| EP | 0342149 | | 11/1989 |
| EP | 0391719 | | 4/1990 |
| EP | 425979 | A2 | 5/1991 |
| EP | 0485467 | | 5/1992 |
| EP | 272785 | B1 | 2/1994 |
| EP | 0651487 | | 10/1994 |
| EP | 0371660 | | 4/1996 |
| EP | 0756392 | | 1/1997 |
| EP | 834722 | A2 | 4/1998 |
| EP | 0840464 | | 5/1998 |
| EP | 0871241 | B1 | 10/1998 |
| EP | 0890132 | | 1/1999 |
| EP | 755092 | A3 | 4/1999 |
| EP | 0896380 | | 10/1999 |
| EP | 676648 | B1 | 5/2000 |
| EP | 1085599 | A2 | 3/2001 |
| EP | 0907983 | B1 | 6/2001 |
| EP | 0756786 | | 8/2001 |
| EP | 1127283 | A1 | 8/2001 |
| EP | 1129550 | A1 | 9/2001 |
| EP | 1184930 | A1 | 3/2002 |
| EP | 1195847 | A2 | 4/2002 |
| EP | 1237303 | A2 | 9/2002 |
| EP | 1296146 | A1 | 3/2003 |
| EP | 0772061 | | 7/2003 |
| EP | 1346431 | A1 | 9/2003 |
| EP | 1249056 | B1 | 1/2004 |
| EP | 1376755 | A1 | 1/2004 |
| EP | 1401048 | A1 | 3/2004 |
| EP | 1454422 | A1 | 9/2004 |
| EP | 1488397 | A1 | 12/2004 |
| EP | 1509970 | | 3/2005 |
| EP | 1371108 | B1 | 6/2005 |
| EP | 1550327 | A2 | 7/2005 |
| EP | 1341255 | B8 | 8/2005 |
| EP | 1577687 | A1 | 9/2005 |
| EP | 1312135 | B1 | 11/2005 |
| EP | 1608110 | A1 | 12/2005 |
| EP | 1624685 | A2 | 2/2006 |
| EP | 1642468 | A2 | 4/2006 |
| EP | 1647072 | A1 | 4/2006 |
| EP | 1608110 | B1 | 10/2006 |
| EP | 1793508 | A1 | 6/2007 |
| EP | 1842265 | A1 | 10/2007 |
| EP | 1898532 | A2 | 3/2008 |
| EP | 1930982 | A1 | 6/2008 |
| EP | 1953940 | A1 | 8/2008 |
| EP | 1696509 | B1 | 10/2009 |
| EP | 2159749 | A1 | 3/2010 |
| EP | 2165550 | A1 | 3/2010 |
| EP | 1166599 | B1 | 5/2010 |
| EP | 1807950 | A4 | 1/2011 |
| EP | 2404347 | A2 | 1/2012 |
| EP | 2472671 | A1 | 7/2012 |
| EP | 1817855 | B1 | 1/2013 |
| EP | 2568528 | A2 | 3/2013 |
| EP | 2302735 | B1 | 9/2013 |
| EP | 2472737 | B1 | 9/2013 |
| EP | 2640115 | A1 | 9/2013 |
| EP | 2016643 | B1 | 7/2014 |
| EP | 2760081 | A1 | 7/2014 |
| EP | 2804259 | A1 | 11/2014 |
| EP | 2507939 | B1 | 12/2014 |
| EP | 2680452 | B1 | 1/2015 |
| EP | 2838155 | A1 | 2/2015 |
| EP | 2846480 | A1 | 3/2015 |
| EP | 2849524 | A1 | 3/2015 |
| EP | 2850695 | A1 | 3/2015 |
| EP | 2853902 | A1 | 4/2015 |
| EP | 2854361 | A1 | 4/2015 |
| EP | 2870802 | A1 | 5/2015 |
| EP | 2710400 | A4 | 6/2016 |
| EP | 3076482 | A1 | 10/2016 |
| ES | 2120893 | A1 | 11/1998 |
| FR | 2119804 | A1 | 8/1972 |
| FR | 2214161 | A1 | 8/1974 |
| FR | 2416562 | A1 | 8/1979 |
| FR | 2583226 | A1 | 12/1986 |
| FR | 2691602 | A1 | 11/1993 |
| FR | 2849728 | A1 | 7/2004 |
| FR | 2841387 | B1 | 4/2006 |
| FR | 2893717 | A1 | 5/2007 |
| FR | 2946466 | B1 | 3/2012 |
| FR | 2986376 | B1 | 10/2014 |
| FR | 3034203 | | 9/2016 |
| GB | 175489 | A | 2/1922 |
| GB | 462804 | A | 3/1937 |
| GB | 529290 | A | 11/1940 |
| GB | 603119 | A | 10/1945 |
| GB | 589603 | A | 6/1947 |
| GB | 640181 | A | 7/1950 |
| GB | 663166 | A | 12/1951 |
| GB | 667290 | A | 2/1952 |
| GB | 668827 | A | 3/1952 |
| GB | 682115 | A | 11/1952 |
| GB | 682817 | A | 11/1952 |
| GB | 731473 | A | 6/1955 |
| GB | 746111 | A | 3/1956 |
| GB | 751153 | A | 6/1956 |
| GB | 767506 | A | 2/1957 |
| GB | 835976 | A | 6/1960 |
| GB | 845492 | A | 8/1960 |
| GB | 859951 | A | 1/1961 |
| GB | 889856 | A | 2/1962 |
| GB | 905417 | A | 9/1962 |
| GB | 926958 | A | 5/1963 |
| GB | 993561 | A | 5/1965 |
| GB | 1004318 | A | 9/1965 |
| GB | 1076772 | A | 7/1967 |
| GB | 1141390 | A | 1/1969 |
| GB | 1298387 | A | 11/1972 |

(56) **References Cited**

FOREIGN PATENT DOCUMENTS

| | | | |
|---|---|---|---|
| GB | 1383549 | A | 2/1974 |
| GB | 1370669 | A | 10/1974 |
| GB | 1422956 | A | 1/1976 |
| GB | 1424351 | A | 2/1976 |
| GB | 1468310 | A | 3/1977 |
| GB | 1469840 | A | 4/1977 |
| GB | 1527228 | A | 10/1978 |
| GB | 2010528 | A | 6/1979 |
| GB | 2045055 | A | 10/1980 |
| GB | 1580627 | A | 12/1980 |
| GB | 1584193 | A | 2/1981 |
| GB | 2227369 | A | 7/1990 |
| GB | 2247990 | A | 3/1992 |
| GB | 2368468 | A | 5/2002 |
| GB | 2362472 | B | 10/2003 |
| GB | 2393370 | A | 3/2004 |
| GB | 2394364 | B | 6/2005 |
| GB | 2414862 | A | 12/2005 |
| GB | 2411554 | B | 1/2006 |
| GB | 705192 | | 4/2007 |
| GB | 714974 | | 9/2007 |
| GB | 718597 | | 10/2007 |
| GB | 2474037 | A | 4/2011 |
| GB | 2476787 | A | 7/2011 |
| GB | 2474605 | B | 9/2011 |
| GB | 2485355 | A | 5/2012 |
| GB | 2481715 | B | 1/2014 |
| GB | 2507269 | A | 4/2014 |
| GB | 2476149 | B | 7/2014 |
| GB | 2532207 | A | 5/2016 |
| IN | 261253 | A1 | 6/2014 |
| IN | 7352/CHENP/2015 | A | 7/2016 |
| IN | 201647015348 | A | 8/2016 |
| JP | S50109642 | | 9/1975 |
| JP | 55124303 | U | 9/1980 |
| JP | 55138902 | U | 10/1980 |
| JP | 574601 | | 1/1982 |
| JP | 61178682 | U | 11/1986 |
| JP | 61260702 | A | 11/1986 |
| JP | 62110303 | U | 7/1987 |
| JP | 62190903 | U | 8/1987 |
| JP | 02214307 | A | 8/1990 |
| JP | 03167906 | A | 7/1991 |
| JP | 0653894 | | 8/1991 |
| JP | 04369905 | A | 12/1992 |
| JP | 3001844 | U | 9/1994 |
| JP | 077769 | | 1/1995 |
| JP | 7212126 | | 11/1995 |
| JP | 0829545 | | 2/1996 |
| JP | 08167810 | A | 6/1996 |
| JP | 08196022 | A | 7/1996 |
| JP | 08316918 | A | 11/1996 |
| JP | 2595339 | B2 | 4/1997 |
| JP | 2639531 | B2 | 8/1997 |
| JP | 10206183 | A | 8/1998 |
| JP | 10271071 | A | 10/1998 |
| JP | 116928 | A | 1/1999 |
| JP | 1114749 | A | 1/1999 |
| JP | 11239085 | A | 8/1999 |
| JP | 11313022 | A | 11/1999 |
| JP | 2000077889 | A | 3/2000 |
| JP | 2000216623 | A | 8/2000 |
| JP | 2000244238 | A | 9/2000 |
| JP | 2001217634 | A | 8/2001 |
| JP | 2002029247 | A | 1/2002 |
| JP | 2002236174 | A | 8/2002 |
| JP | 200328219 | A | 1/2003 |
| JP | 2003008336 | A | 1/2003 |
| JP | 2003057464 | A | 2/2003 |
| JP | 2003511677 | A | 3/2003 |
| JP | 3411428 | B2 | 6/2003 |
| JP | 2003324309 | A | 11/2003 |
| JP | 3480153 | B2 | 12/2003 |
| JP | 2003344883 | A | 12/2003 |
| JP | 2004521379 | A | 7/2004 |
| JP | 2004253853 | A | 9/2004 |
| JP | 2004274656 | A | 9/2004 |
| JP | 2004297107 | A | 10/2004 |
| JP | 2004304659 | A | 10/2004 |
| JP | 2005110231 | A | 4/2005 |
| JP | 2005182469 | A | 7/2005 |
| JP | 3734975 | B2 | 1/2006 |
| JP | 2006153878 | A | 6/2006 |
| JP | 2006163886 | A | 6/2006 |
| JP | 2006166399 | A | 6/2006 |
| JP | 2007042009 | A | 2/2007 |
| JP | 2007072945 | A | 3/2007 |
| JP | 3938315 | B2 | 6/2007 |
| JP | 2007174017 | A | 7/2007 |
| JP | 2007259001 | A | 10/2007 |
| JP | 4025674 | B2 | 12/2007 |
| JP | 2008017263 | A | 1/2008 |
| JP | 2008021483 | A | 1/2008 |
| JP | 4072280 | B2 | 4/2008 |
| JP | 4142062 | B2 | 8/2008 |
| JP | 2008209965 | A | 9/2008 |
| JP | 2008218362 | A | 9/2008 |
| JP | 2009004986 | A | 1/2009 |
| JP | 4252573 | B2 | 4/2009 |
| JP | 4259760 | B2 | 4/2009 |
| JP | 2009124229 | A | 6/2009 |
| JP | 2010045471 | A | 2/2010 |
| JP | 2010192992 | A | 9/2010 |
| JP | 2010541468 | A | 12/2010 |
| JP | 2011160446 | A | 8/2011 |
| JP | 2012058162 | A | 3/2012 |
| JP | 2012090242 | A | 5/2012 |
| JP | 2012175680 | A | 9/2012 |
| JP | 2012205104 | A | 10/2012 |
| JP | 2012248035 | A | 12/2012 |
| JP | 2013046412 | A | 3/2013 |
| JP | 2013110503 | A | 6/2013 |
| JP | 5230779 | B2 | 7/2013 |
| JP | 2014045237 | A | 3/2014 |
| JP | 5475475 | B2 | 4/2014 |
| JP | 5497348 | B2 | 5/2014 |
| JP | 5618072 | B2 | 11/2014 |
| JP | 2015095520 | A | 5/2015 |
| JP | 2015188174 | | 10/2015 |
| KR | 20000074034 | | 12/2000 |
| KR | 20020091917 | | 12/2002 |
| KR | 100624049 | B1 | 9/2006 |
| KR | 200425873 | Y1 | 9/2006 |
| KR | 100636388 | B1 | 10/2006 |
| KR | 100725002 | B1 | 6/2007 |
| KR | 100849702 | B1 | 7/2008 |
| KR | 100916077 | B1 | 8/2009 |
| KR | 100952976 | B1 | 4/2010 |
| KR | 100989064 | B1 | 10/2010 |
| KR | 101060584 | B1 | 8/2011 |
| KR | 101070364 | B1 | 9/2011 |
| KR | 101212354 | B1 | 12/2012 |
| KR | 101259715 | B1 | 4/2013 |
| KR | 101288770 | B1 | 7/2013 |
| KR | 20140104097 | A | 8/2014 |
| KR | 101435538 | B1 | 9/2014 |
| KR | 101447809 | B1 | 10/2014 |
| KR | 20150087455 | | 7/2015 |
| KR | 101549622 | | 9/2015 |
| KR | 200479199 | Y1 | 12/2015 |
| KR | 101586236 | B1 | 1/2016 |
| KR | 101606803 | | 1/2016 |
| KR | 101607420 | B1 | 3/2016 |
| NL | 69072 | | 1/1945 |
| RU | 2129746 | C1 | 4/1999 |
| RU | 2432647 | C1 | 10/2011 |
| TW | 201537432 | | 10/2015 |
| WO | 8301711 | A1 | 5/1983 |
| WO | 9116770 | A1 | 10/1991 |
| WO | 9210014 | | 6/1992 |
| WO | 9323928 | | 11/1993 |
| WO | 9424467 | A1 | 10/1994 |
| WO | 9523440 | A1 | 8/1995 |
| WO | 9529537 | A1 | 11/1995 |

(56) **References Cited**

FOREIGN PATENT DOCUMENTS

| | | | |
|---|---|---|---|
| WO | 199529537 | | 11/1995 |
| WO | 9603801 | A1 | 2/1996 |
| WO | 199619089 | | 6/1996 |
| WO | 9639729 | A1 | 12/1996 |
| WO | WO96/41157 | | 12/1996 |
| WO | 9735387 | A1 | 9/1997 |
| WO | 9737445 | A1 | 10/1997 |
| WO | 9829853 | A1 | 7/1998 |
| WO | 9859254 | A1 | 12/1998 |
| WO | WO98/57207 | | 12/1998 |
| WO | 9923848 | A2 | 5/1999 |
| WO | 9948230 | A1 | 9/1999 |
| WO | 199945310 | | 9/1999 |
| WO | 9967903 | A1 | 12/1999 |
| WO | 0070891 | A1 | 11/2000 |
| WO | 2000/74428 | A1 | 12/2000 |
| WO | WO2001014985 | A1 | 3/2001 |
| WO | 0128159 | A2 | 4/2001 |
| WO | 0131746 | A1 | 5/2001 |
| WO | 0145206 | A1 | 6/2001 |
| WO | 0192910 | A2 | 12/2001 |
| WO | 02061467 | A2 | 8/2002 |
| WO | 02061971 | A1 | 8/2002 |
| WO | 03/005629 | | 1/2003 |
| WO | 2003009083 | | 1/2003 |
| WO | 03012614 | A1 | 2/2003 |
| WO | 200326166 | | 3/2003 |
| WO | 03026462 | A1 | 4/2003 |
| WO | 03044981 | A1 | 5/2003 |
| WO | 2003088418 | | 10/2003 |
| WO | 03099740 | A1 | 12/2003 |
| WO | 2004011995 | A1 | 2/2004 |
| WO | 2004038891 | A2 | 5/2004 |
| WO | 2004/051804 | | 6/2004 |
| WO | 2004054159 | A2 | 6/2004 |
| WO | 2004077746 | A1 | 9/2004 |
| WO | 2005015686 | A1 | 2/2005 |
| WO | 2005072469 | A2 | 8/2005 |
| WO | 2006012610 | A2 | 2/2006 |
| WO | 2006061865 | A1 | 6/2006 |
| WO | 2006085804 | A1 | 8/2006 |
| WO | 2006102419 | A2 | 9/2006 |
| WO | 2006111809 | A1 | 10/2006 |
| WO | 2006116396 | A2 | 11/2006 |
| WO | 2006122041 | A2 | 11/2006 |
| WO | 2006125279 | A1 | 11/2006 |
| WO | 2007000777 | B1 | 2/2007 |
| WO | 2006050331 | A3 | 3/2007 |
| WO | 2007031435 | A1 | 3/2007 |
| WO | 2007071797 | A1 | 6/2007 |
| WO | 2007148097 | A2 | 12/2007 |
| WO | 2008003939 | A1 | 1/2008 |
| WO | 2007094944 | A3 | 3/2008 |
| WO | 2007149746 | A3 | 4/2008 |
| WO | 2008044062 | A1 | 4/2008 |
| WO | 2008055084 | A2 | 5/2008 |
| WO | 2008061107 | A2 | 5/2008 |
| WO | 2008069358 | A1 | 6/2008 |
| WO | 2008070957 | A1 | 6/2008 |
| WO | 2008102987 | A1 | 8/2008 |
| WO | 2008117973 | A1 | 10/2008 |
| WO | 2008155769 | A2 | 12/2008 |
| WO | 2009014704 | A1 | 1/2009 |
| WO | 2007098061 | A3 | 2/2009 |
| WO | 2009031794 | A1 | 3/2009 |
| WO | 2009035285 | A2 | 3/2009 |
| WO | 2009090602 | A1 | 7/2009 |
| WO | 2009123404 | A4 | 10/2009 |
| WO | 2009131316 | A2 | 10/2009 |
| WO | 2010017549 | A1 | 2/2010 |
| WO | 2010050892 | A1 | 5/2010 |
| WO | 2010147806 | A1 | 12/2010 |
| WO | 2011006210 | A1 | 1/2011 |
| WO | 2011032605 | A1 | 3/2011 |
| WO | 2011085650 | A1 | 7/2011 |
| WO | 2011137793 | A1 | 11/2011 |
| WO | 2012/007831 | | 1/2012 |
| WO | 2012038816 | A1 | 3/2012 |
| WO | 2012050069 | A1 | 4/2012 |
| WO | 2012064333 | A1 | 5/2012 |
| WO | 2012113219 | A1 | 8/2012 |
| WO | 2012171205 | A1 | 12/2012 |
| WO | 2012172565 | A1 | 12/2012 |
| WO | 2013013162 | A2 | 1/2013 |
| WO | 2013013465 | A1 | 1/2013 |
| WO | 2013017822 | | 2/2013 |
| WO | 2013023226 | A1 | 2/2013 |
| WO | 2013028197 | A1 | 2/2013 |
| WO | 2013035110 | A2 | 3/2013 |
| WO | 2013073548 | A1 | 5/2013 |
| WO | 2013100912 | A1 | 7/2013 |
| WO | 2013112353 | A1 | 8/2013 |
| WO | 2013115802 | A1 | 8/2013 |
| WO | 2013121682 | A1 | 8/2013 |
| WO | 2013123445 | A1 | 8/2013 |
| WO | 2013/138627 | | 9/2013 |
| WO | 2013136213 | A1 | 9/2013 |
| WO | 2013157978 | A1 | 10/2013 |
| WO | 2013172502 | A1 | 11/2013 |
| WO | 2014/018434 | | 1/2014 |
| WO | 2014011438 | A1 | 1/2014 |
| WO | 2014/045236 | | 3/2014 |
| WO | 2014065952 | A1 | 5/2014 |
| WO | 2014069941 | A1 | 5/2014 |
| WO | 2014083500 | A1 | 6/2014 |
| WO | 2014092644 | A1 | 6/2014 |
| WO | 2014094559 | A1 | 6/2014 |
| WO | 2014096868 | A1 | 6/2014 |
| WO | 2014099340 | A2 | 6/2014 |
| WO | 2013076499 | A3 | 7/2014 |
| WO | 2014112994 | A1 | 7/2014 |
| WO | 2014128253 | A1 | 8/2014 |
| WO | 2014137546 | A1 | 9/2014 |
| WO | 2014145862 | A2 | 9/2014 |
| WO | 2014147002 | A1 | 9/2014 |
| WO | 2014197926 | A1 | 12/2014 |
| WO | 2015002658 | A1 | 1/2015 |
| WO | 2015006636 | A1 | 1/2015 |
| WO | 2015008442 | A1 | 1/2015 |
| WO | 2015024006 | A1 | 2/2015 |
| WO | 2015027033 | A1 | 2/2015 |
| WO | 2015035463 | A1 | 3/2015 |
| WO | 2015/055230 | | 4/2015 |
| WO | 2015052478 | | 4/2015 |
| WO | 2015052480 | | 4/2015 |
| WO | 2015069090 | A1 | 5/2015 |
| WO | 2015069431 | A2 | 5/2015 |
| WO | 2015077644 | | 5/2015 |
| WO | 2015088650 | A1 | 6/2015 |
| WO | 2015120626 | | 8/2015 |
| WO | 2015123623 | A1 | 8/2015 |
| WO | 2015132618 | A1 | 9/2015 |
| WO | 2015167566 | A1 | 11/2015 |
| WO | 2015175054 | A2 | 11/2015 |
| WO | 2015197580 | A1 | 12/2015 |
| WO | 2016003291 | A1 | 1/2016 |
| WO | 2016004003 | | 1/2016 |
| WO | 2016009402 | A2 | 1/2016 |
| WO | 2016012889 | | 1/2016 |
| WO | 2016027007 | A1 | 2/2016 |
| WO | 2016028767 | | 2/2016 |
| WO | 2016/043949 | | 3/2016 |
| WO | 2016032592 | A1 | 3/2016 |
| WO | 2016036951 | A1 | 3/2016 |
| WO | 2016043949 | A1 | 3/2016 |
| WO | 2016048214 | A1 | 3/2016 |
| WO | 2016048257 | A1 | 3/2016 |
| WO | 2016/064502 | | 4/2016 |
| WO | 2016053572 | A1 | 4/2016 |
| WO | 2016053573 | A1 | 4/2016 |
| WO | 2016060761 | A1 | 4/2016 |
| WO | 2016060762 | A1 | 4/2016 |
| WO | 2016061021 | A1 | 4/2016 |
| WO | 2016064505 | A1 | 4/2016 |

(56) **References Cited**

FOREIGN PATENT DOCUMENTS

| | | | |
|---|---|---|---|
| WO | 2016064516 | A1 | 4/2016 |
| WO | 2016064700 | A2 | 4/2016 |
| WO | 2016073072 | A1 | 5/2016 |
| WO | 2016081125 | | 5/2016 |
| WO | 2016081128 | | 5/2016 |
| WO | 2016081129 | A1 | 5/2016 |
| WO | 2016081134 | | 5/2016 |
| WO | 2016081136 | | 5/2016 |
| WO | 2015090382 | | 6/2016 |
| WO | 2016086306 | A1 | 6/2016 |
| WO | 2016089491 | | 6/2016 |
| WO | 2016089492 | A1 | 6/2016 |
| WO | 2016096029 | A1 | 6/2016 |
| WO | 2016/125161 | | 8/2016 |
| WO | 2016/133509 | | 8/2016 |
| WO | 2016122409 | A1 | 8/2016 |
| WO | 2016/137982 | | 9/2016 |
| WO | 2016145411 | | 9/2016 |
| WO | 2016161637 | A1 | 10/2016 |
| WO | 2016169058 | A1 | 10/2016 |
| WO | 2016171907 | | 10/2016 |
| WO | 2016176030 | | 11/2016 |
| WO | 2016200492 | | 12/2016 |
| WO | 2016200579 | | 12/2016 |
| WO | 2017/011099 | | 1/2017 |
| WO | 2017011100 | | 1/2017 |
| WO | 2017011101 | | 1/2017 |
| WO | 2017011102 | | 1/2017 |
| WO | 2017011103 | | 1/2017 |
| WO | 2017011227 | | 1/2017 |
| WO | 2017014840 | | 1/2017 |
| WO | 2017014842 | | 1/2017 |
| WO | 2018106455 | A1 | 6/2018 |
| WO | 2018106684 | A1 | 6/2018 |
| WO | 2018106915 | A1 | 6/2018 |

OTHER PUBLICATIONS

"Brackets, Conduit Standoff", Hubbell Power Systems, Inc., hubbellpowersystems.com, Dec. 2, 2010, 2 pages.
"Broadband Negligible Loss Metamaterials", Computer Electmagnetics and Antennas Research Laboratory, cearl.ee.psu.edu., May 15, 2012, 3 pages.
"Broadband Over Power Lines (BPL): Developments and Policy Issues", Organisation for Economic Co-operation and Development, Directorate for Science, Technology and Industry, Committee for Information, Computer and Communications Policy, Jun. 2, 2009, 35 pages.
"Broadband: Bringing Home the Bits: Chapter 4 Technology Options and Economic Factors", The National Academies Press, nap.edu, 2002, 61 pages.
"Cisco Aironet 1500 Series Access Point Large Pole Mounting Kit Instructions", www.cisco.com/c/en/us/td/docs/wireless/antenna/installation/guide/18098.html, 2008, 9 pages.
"Cisco IP VSAT Satellite WAN Network Module for Cisco Integrated Services Routers", www.cisco.com/c/en/us/products/collateral/interfaces-modules/ip-vsatsatellite-wan-module/product_data_sheet0900aecd804bbf6f.html, Jul. 23, 2014, 6 pages.
"Cloud Management", Cisco Meraki, cisco.com., Sep. 11, 2015, 2 pages.
"Decryption: Identify & Control Encrypted Traffic", Palo Alto Networks, paloaltonetworks.com, Mar. 7, 2011, 4 pages.
"Delivering broadband over existing wiring", Cabling Installation & Maintenance, cablinginstall.com, May 1, 2002, 6 pages.
"Directional Couplers—Coaxial and Waveguide", Connecticut Microwave Corporation, http://connecticutmicrowave.com, Accessed Aug. 2016, 21 pages.
"Doubly-fed Cage-cone Combined Broadband Antennas for Marine Applications", http://www.edatop.com/down/paper/antenna/%E5%A4%A9%E7%BA%BF%E8%AE%A1-890w5nebp5i1pq.pdf, 2007, 7 pages.
"Dual Band Switched-Parasitic Wire Antennas for Communications and Direction Finding", www.researchgate.net/profile/David_Thiel2/publication/3898574_Dual_band_switched-parasitic_wire_antennas_for_communications_and_direction_finding/links/0fcfd5091b4273ce54000000.pdf, 2000, 5 pages.
"Electronic Countermeasure (ECM) Antennas", vol. 8, No. 2, Apr. 2000, 2 pages.
"Elliptical Polarization", Wikipedia, http://en.wikipedia.org/wiki/Elliptical_polarization, Apr. 21, 2015, 3 pages.
"Harvest energy from powerline", www.physicsforums.com/threads/harvest-energy-from-powerline.685148/, Discussion thread about harvesting power from powerlines that includes the suggestion of clamping a device to the power line., 2013, 8 pages.
"Identity Management", Tuomas Aura CSE-C3400 Information Security, Aalto University, Autumn 2014, 33 pgs.
"IEEE Standard for Information technology—Local and metropolitan area networks—Specific requirements", Part 15.4: Wireless Medium Access Control (MAC) and Physical Layer (PHY) Specifications for Low Rate Wireless Personal Area Networks (WPANs), in IEEE Std 802.15.4, (Revision of IEEE Std 802.15.4-2003), Sep. 7, 2006, 1-320.
"International Preliminary Report on Patentability", PCT/US2014/039746, dated Dec. 10, 2015.
"International Preliminary Report on Patentability", PCT/US2014/060841, dated May 19, 2016, 8 pages.
"International Preliminary Report on Patentability & Written Opinion", PCT/US2014/061445, dated Jun. 23, 2016, 9 pages.
"International Search Report & Written Opinion", PCT/US2015/034827, dated Sep. 30, 2015.
"International Search Report & Written Opinion", PCT/US2015/056316, dated Jan. 21, 2016.
"International Search Report & Written Opinion", PCT/US2015/056320, dated Jan. 29, 2016.
"International Search Report & Written Opinion", PCT/US2015/056365, dated Jan. 22, 2016.
"International Search Report & Written Opinion", PCT/US2015/056368, dated Jan. 25, 2016.
"International Search Report & Written Opinion", PCT/US2015/056598, dated Jan. 28, 2016.
"International Search Report & Written Opinion", PCT/US2015/056615, dated Jan. 21, 2016.
"International Search Report & Written Opinion", PCT/US2015/056626, dated Jan. 21, 2016.
"International Search Report & Written Opinion", PCT/US2015/056632, dated Jan. 26, 2016.
"International Search Report & Written Opinion", PCT/US2016/013988, dated Apr. 8, 2016.
"International Search Report & Written Opinion", PCT/US2016/035384, dated Oct. 31, 2016.
"International Search Report & Written Opinion", PCT/US2016/020001, dated May 23, 2016.
"International Search Report & Written Opinion", PCT/US2016/026193, dated Jun. 1, 2016.
"International Search Report & Written Opinion", PCT/US2016/026860, dated Jun. 1, 2016.
"International Search Report & Written Opinion", PCT/US2016/026318, dated Jun. 15, 2016.
"International Search Report & Written Opinion", PCT/US16/027397, dated Jun. 24, 2016.
"International Search Report & Written Opinion", PCT/US2016/028412, dated Jun. 27, 2016.
"International Search Report & Written Opinion", PCT/US2016/028206, dated Jun. 29, 2016.
"International Search Report & Written Opinion", PCT/US16/033182, dated Jul. 12, 2016.
"International Search Report & Written Opinion", PCT/US2016/036290, dated Aug. 11, 2016.
"International Search Report & Written Opinion", PCT/US2016/036551, dated Aug. 11, 2016.
"International Search Report & Written Opinion", PCT/US2016/036798, dated Aug. 11, 2016.
"International Search Report & Written Opinion", PCT/US2016/028205, dated Aug. 16, 2016.

(56) **References Cited**

OTHER PUBLICATIONS

"International Search Report & Written Opinion", PCT/US2016/032460, dated Aug. 17, 2016.
"International Search Report & Written Opinion", PCT/US2016/036303, dated Aug. 24, 2016.
"International Search Report & Written Opinion", PCT/US2016/036288, dated Sep. 1, 2016.
"International Search Report & Written Opinion", PCT/2016/035383, dated Sep. 2, 2016.
"International Search Report & Written Opinion", PCT/US16/036284, dated Sep. 8, 2016.
"International Search Report & Written Opinion", PCT/US2016/036286, dated Sep. 13, 2016.
"International Search Report & Written Opinion", PCT/US2016/036293, dated Sep. 15, 2016.
"International Search Report & Written Opinion", PCT/US2014/039746, dated Jan. 12, 2015.
"International Search Report & Written Opinion", PCT/US2014/060841, dated Jan. 7, 2015.
"International Search Report & Written Opinion", PCT/US2016/040992, dated Oct. 17, 2006.
"International Search Report & Written Opinion", PCT/US2015/039848, dated Oct. 20, 2015.
"International Search Report & Written Opinion", PCT/US2015/047315, dated Oct. 30, 2015.
"International Search Report & Written Opinion", PCT/US2015/048454, dated Nov. 11, 2015.
"International Search Report & Written Opinion", PCT/US16/050488, dated Nov. 11, 2016.
"International Search Report & Written Opinion", PCT/US16/50345, dated Nov. 15, 2016.
"International Search Report & Written Opinion", PCT/US2015/049928, dated Nov. 16, 2015.
"International Search Report & Written Opinion", PCT/US2015/049932, dated Nov. 16, 2015.
"International Search Report & Written Opinion", PCT/US2016/050346, dated Nov. 17, 2016.
"International Search Report & Written Opinion", PCT/US2015/049927, dated Nov. 24, 2015.
"International Search Report & Written Opinion", PCT/US2015/051193, dated Nov. 27, 2015.
"International Search Report & Written Opinion", PCT/US2015/051146, dated Dec. 15, 2015.
"International Search Report & Written Opinion", PCT/US2015/051183, dated Dec. 15, 2015.
"International Search Report & Written Opinion", PCT/US2015/051194, dated Dec. 15, 2015.
"International Search Report & Written Opinion", PCT/US2015/051578, dated Dec. 17, 2015.
"International Search Report & Written Opinion", PCT/US2015/051583, dated Dec. 21, 2015.
"International Search Report & Written Opinion", PCT/US2015/048458, dated Dec. 23, 2015.
"International Search Report & Written Opinion", PCT/US2015/051213, dated Dec. 4, 2015.
"International Search Report & Written Opinion", PCT/US2015/051163, dated Dec. 7, 2015.
"International Search Report & Written Opinion", PCT/US2014/061445, dated Feb. 10, 2015.
"International Search Report & Written Opinion", PCT/US16/28207, dated Jun. 15, 2016.
"International Search Report & Written Opinion", PCT/US16/027403, dated Jun. 22, 2016.
"International Search Report & Written Opinion", PCT/US2016/015501, dated Apr. 29, 2016, 11 pages.
"International Search Report & Written Opinion", PCT/US2016/050860, dated Nov. 17, 2016, 11 pages.
"International Search Report & Written Opinion", PCT/US2016/050344, dated Nov. 25, 2016, 16 pages.
"International Search Report & Written Opinion", PCT/US2015/047225, dated Nov. 6, 2015, dated Nov. 6, 2015.
"International Search Report and Written Opinion", PCT/US16/027398, dated Jun. 24, 2016.
"International Search Report and Written Opinion", PCT/US16/028395, dated Jun. 29, 2016.
"International Search Report and Written Opinion", PCT/US2016/028417, Authorized officer Brigitte Bettiol, dated Jul. 5, 2016.
"International Search Report and Written Opinion", PCT/US16/032441, dated Jul. 29, 2016.
"International Search Report and Written Opinion", PCT/US2016/036285, dated Aug. 23, 2016.
"International Search Report and Written Opinion", PCT/US16/036388, dated Aug. 30, 2016.
"International Search Report and Written Opinion", PCT/US2016/036297, dated Sep. 5, 2016.
"International Search Report and Written Opinion", PCT/US2016/036292, dated Sep. 13, 2016.
"International Search Report and Written Opinion", PCT/US2016/046315, dated Nov. 3, 2016.
"International Search Report and Written Opinion", PCT/US2016/050039, dated Nov. 14, 2016.
"International Search Report and Written Opinion", PCT/US2016/050347, dated Nov. 15, 2016.
"International Search Report and Written Opinion", PCT/US2016/051217, dated Nov. 29, 2016.
"International Search Report and Written Opinion", PCT/US2016/028197, dated Jun. 24, 2016.
"International Search Report and Written Opinion", PCT/US2016/036289, dated Aug. 11, 2016.
"International Search Report and Written Opinion", PCT/US2016/036295, dated Aug. 30, 2016.
"International Search Report and Written Opinion", PCT/US2016/030964, dated Aug. 4, 2016.
"International Search Report and Written Opinion", PCT/US2016/036553, dated Aug. 30, 2016, 1-14.
"International Search Report and Written opinion", PCT/US2016/036556, dated Sep. 22, 2016.
"International Searching Authority", International Search Report and Written Opinion, dated Sep. 28, 2016, 1-12.
"Invitation to Pay Additional Fees & Partial Search Report", PCT/US2016/028205, dated Jun. 22, 2016.
"Invitation to Pay Additional Fees & Partial Search Report", PCT/US2016/032430, dated Jun. 22, 2016.
"Invitation to Pay Additional Fees and, Where Applicable, Protest Fee", PCT/US2016/035384, Aug. 31, 2016, 7 pages.
"Ipitek All-Optical Sensors", www.ipitek.com/solutions-by-industry/all-optical-sensors, Jun. 2, 2014, 3 pages.
"Micromem Demonstrates UAV Installation of Power Line Monitoring Mounting System", MicroMem, micromem.com, Mar. 4, 2015, 1-3.
"Newsletter 4.4—Antenna Magus version 4.4 released!", antennamagus.com, Aug. 10, 2013, 8 pages.
"PCT International Search Report", dated Oct. 24, 2016, 1-13.
"PCT International Search Report and Written Opinion", dated Oct. 10, 2016, 1-15.
"Quickly identify malicious traffics: Detect", lancope.com, Mar. 15, 2015, 8 pages.
"Radar at St Andrews", mmwaves.epr, st-andrews.ac.uk, Feb. 4, 2011, 2 pages.
"Resilience to Smart Meter Disconnect Attacks", ADSC Illinois at Singapore PTE LTD., http://publish.illinois.edu/integrativesecurityassessment/resiliencetosmartmeterdisconnectattacks, 2015, 2 pages.
"RF Sensor Node Development Platform for 6LoWPAN and 2.4 GHz Applications", www.ti.com/tool/TIDM-RF-SENSORNODE, Jun. 2, 2014, 3 pages.
"Technology Brief 13: Touchscreens and Active Digitizers", https://web.archive.org/web/20100701004625/http://web.engr.oregonstate.edu/~moon/engr203/read/read4.pdf, 2010, 289-311.

(56) **References Cited**

OTHER PUBLICATIONS

"The world's first achievement of microwave electric-field measurement utilizing an optical electric-field sensor mounted on an optical fiber, within a microwave discharge ion engine boarded on asteroid explorers etc.", Investigation of internal phenomena and performance improvement in microwave discharge ion engines, Japan Aerospace Exploration Agency (JAXA), Nippon Telegraph and Telephone Corporation, Aug. 7, 2013, 4 pages.
"Transducer", IEEE Std 100-2000, Sep. 21, 2015, 1154.
"Wireless powerline sensor", wikipedia.org, http://en.wikipedia.org/wiki/Wireless_powerline_sensor, 2014, 3 pages.
ACE, "Installing Satellite Accessories", www.acehardware.com, May 8, 2006, 4 pages.
Adabo, Geraldo J. "Long Range Unmanned Aircraft System for Power Line Inspection of Brazilian Electrical System", Journal of Energy and Power Engineering 8 (2014), Feb. 28, 2014, 394-398.
Aerohive Networks, "HiveManager Network Management System", www.aerohive.com, Sep. 2015, 3 pages.
Akiba, Shigeyuki et al., "Photonic Architecture for Beam Forming of RF Phased Array Antenna", Optical Fiber Communication Conference, Optical Society of America, Abstract Only, 2014, 1 page.
Al-Ali, A.R. et al., "Mobile RFID Tracking System", Information and Communication Technologies: From Theory to Applications, ICTTA 2008, 3rd International Conference on IEEE, 2008, 4 pages.
Alam, M. N. et al., "Novel Surface Wave Exciters for Power Line Fault Detection and Communications", Department of Electrical Engineering, University of South Carolina, Antennas and Propagation (APSURSI), 2011 IEEE International Symposium, IEEE, 2011, 1-4.
Alam, MD N. et al., "Design and Application of Surface Wave Sensors for nonintrusive Power Line Fault Detection", IEEE Sensors Journal, IEEE Service Center, New York, NY, US, vol. 13, No. 1, Jan. 1, 2013, 339-347.
Alaridhee, T. et al., "Transmission properties of slanted annular aperture arrays. Giant energy deviation over sub-wavelength distance", Optics express 23.9, 2015, 11687-11701.
Ali, Muhammad Q. et al., "Randomizing AMI configuration for proactive defense in smart grid", Smart Grid Communications (SmartGridComm), IEEE International Conference on. IEEE, Abstract Only, 2013, 2 pages.
Ali, Tariq et al., "Diagonal and Vertical Routing Protocol for Underwater Wireless Sensor Network", Procedia-Social and Behavioral Sciences 129, 2014, 372-379.
Allen, Jeffrey et al., "New Concepts in Electromagnetic Materials and Antennas", Air Force Research Laboratory, Jan. 2015, 80 pages.
Amirshahi, P. et al., "Transmission channel model and capacity of overhead multiconductor mediumvoltage powerlines for broadband communications", Consumer Communications and Networking Conference, 2005, 5 pages.
Amt, John H. et al., "Flight Testing of a Pseudolite Navigation System on a UAV", Air Force Institute of Technology: ION Conference, Jan. 2007, 9 pages.
Angove, Alex "How the NBN Differs from ADSL2+, Cable and Wireless", www.whistleout.com.au/Broadband/Guides/How-the-NBN-Differs-from-ADSL2-Cable-and-Wireless, Jul. 30, 2014, 4 pages.
Antenna Magus, "Waveguide-fed Conical Horn", www.atennamagus.com, Aug. 2015, 1 page.
Antennamagus, "Parabolic focus pattern fed reflector with shroud", antennamagus.com, Jul. 4, 2014, 2 pages.
Arage, Alebel et al., "Measurement of wet antenna effects on millimetre wave propagation", 2006 IEEE Conference on Radar, Abstract Only, 2006, 1 page.
Ares-Pena, Francisco J. et al., "A simple alternative for beam reconfiguration of array antennas", Progress in Electromagnetics Research 88, 2008, 227-240.
Arthur, Joseph Kweku et al., "Improving QoS in UMTS Network in ACCRA Business District Using Tower-Less Towers", IPASJ International Journal of Electrical Engineering (IIJEE), vol. 2, Issue 11, Nov. 2014, 11 pages.
Asadallahi, Sina et al., "Performance comparison of CSMA/CA Advanced Infrared (Alr) and a new pointtomultipoint optical MAC protocol", 2012 8th International Wireless Communications and Mobile Computing Conference (IWCMC), Abstract Only, Aug. 2012, 2 pages.
ASCOM, "TEMS Pocket—a Complete Measurement Smartphone System in your Hand", http://www.ascom.us/us-en/tems_pocket_14.0_feature_specific_datasheet.pdf, 2014, 2 pages.
A-Tech Fabrication, "Dual Antenna Boom Assembly", http://web.archive.org/web/20090126192215/http://atechfabrication.com/products/dual_antenna_boom.htm, 2009, 2 pages.
Atlas Sound, "Bi-Axial PA Horn with Gimbal Mount", MCM Electronics, mcmelectronics.com, 2011, 555-13580.
ATMEL, "Power Line Communications", www.atmel.com/products/smartenergy/powerlinecommunications/default.aspx, 2015, 3 pages.
Atwater, Harry A. "The promise of plasmonics", Scientific American 296.4, 2007, 56-62.
Baanto, "Surface Acoustive Wave (SAW) Touch Screen", http://baanto.com/surface-acoustic-wave-saw-touch-screen, 2016, 4 pages.
Babakhani, Aydin "Direct antenna modulation (DAM) for on-chip mm-wave transceivers", Diss. California Institute of Technology, 2008, 2 pages.
Bach, Christian "Current Sensor—Power Line Monitoring for Energy Demand Control", Application Note 308, http://www.enocean.com/fileadmin/redaktion/pdf/app_notes/AN308_CURRENT_SENSOR_Jan09.pdf, Jan. 2009, 4 pages.
Barlow, H. M. et al., "Surface Waves", 621.396.11 : 538.566, Paper No. 1482 Radio Section, 1953, pp. 329-341.
Barnes, Heidi et al., "DeMystifying the 28 Gb/s PCB Channel: Design to Measurement", Design Con. 2014, Feb. 28, 2014, 54 pages.
Barron, Ashleigh L. "Integrated Multicore Fibre Devices for Optical Trapping", Diss. Heriot-Watt University, 2014, 11-15.
Beal, J.C. et al., "Coaxial-slot surface-wave launcher", Electronics Letters 4.25: 557559, Abstract Only, Dec. 13, 1968, 1 page.
Benevent, Evangéline "Transmission lines in MMIC technology", Universitá Mediterranea di Reggio Calabria, Jan. 28, 2010, 63 pages.
Beninca, "Flashing Light: IR Lamp", www.beninca.com/en/news/2015/02/23/lampeggiante-irlamp.html, Feb. 23, 2015, 4 pages.
Benkhelifa, Elhadj "User Profiling for Energy Optimisation in Mobile Cloud Computing", 2015, 1159-1165.
Berweger, Samuel et al., "Light on the Tip of a Needle: Plasmonic Nanofocusing for Spectroscopy on the Nanoscale", The Journal of Physical Chemistry Letters; pubs.acs.org/JPCL, 2012, 945-952.
Bhushan, Naga et al., "Network densification: the dominant theme for wireless evolution into 5G", IEEE Communications Magazine, 52.2:, Feb. 2014, 82-89.
Bing, Benny "Ubiquitous Broadband Access Networks with Peer-to-Peer Application Support", Evolving the Access Network, 2006, 27-36.
Blanco-Redondo, Andrea et al., "Coupling midinfrared light from a photonic crystal waveguide to metallic transmission lines", Applied Physics Letters 104.1, 2014, 6 pages.
Blattenberger, Kirt "DroneBased Field Measurement System (dBFMS)", RF Cafe, rfcafe.com, Jul. 29, 2014, 3 pages.
Bock, James et al., "Optical coupling", Journal of Physics: Conference Series. vol. 155. No. 1, IOP Publishing, 2009, 32 pages.
Bowen, Leland H. et al., "A Solid Dielectric Lens Impulse Radiating Antenna with High Dielectric Constant Surrounded by a Cylindrical Shroud", Sensor and Simulation Note 498, Introduction, Apr. 2005, 3 pages.
Brambilla, Gilberto et al., "Ultra-low-loss optical fiber nanotapers", Optoelectronics Research Centre, University of Southampton; http://www.orc.soton.ac.uk, vol. 12, No. 10, May 7, 2004, 2258-2263.
Bridges, Greg E. et al., "Plane wave coupling to multiple conductor transmission lines above a lossy earth", Compatibility, IEEE Transactions on 31.1, Abstract Only, 1989, 21-33.
Bridges, William B. "Low-Loss Flexible Dielectric Waveguide for Millimeter-Wave Transmission and Its Application to Devices", California Institute of Technology, Office of Naval Research, Mar. 1981, 91 pages.

(56) **References Cited**

OTHER PUBLICATIONS

Briso-Rodriguez, "Measurements and Modeling of Distributed Antenna Systems in Railway Tunnels", IEEE Transactions on Vehicular Technology, vol. 56, No. 5, Sep. 2007, 2870-2879.
Brooke, Gary H. "Properties of surface waveguides with discontinuities and perturbations in cross-section", Diss. University of British Columbia, 1977, 42 pages.
Brown, J. et al., "The launching of radial cylindrical surface waves by a circumferential slot", Proceedings of the IEEE Part B: Radio and Electronic Engineering, vol. 106, Issue 26, Abstract Only, Mar. 1959, 1 page.
Brown-Iposs, "Integrated Radio Masts Fully camouflaged Outdoor-Wi-Fi APs in GRP-lamp poles", www.brown-iposs.com, Mar. 21, 2014, 4 pages.
Bruno, Joseph "Interference Reduction in Wireless Networks", Computing Research Topics, Computing Sciences Department, Villanova University, Nov. 14, 2007, 8 pages.
Budde, Matthias "Using a 2DST Waveguide for Usable, Physically Constrained Out-of-Band Wi-Fi Authentication", https://pdfs.semanticscholar.org/282e/826938ab7170c198057f9236799e92e21219.pdf, 2013, 8 pages.
Burkhart, Martin et al., "Does Topology Control Reduce Interference?", Department of Computer Science, ETH Zurich, Proceedings of the 5th ACM international symposium on Mobile ad hoc networking and computing, 2004, 11 pages.
Callis, R.W. et al., "An In-Line Power Monitor for HE11 Low Loss Transmission Lines", Proceedings of the 29th International Conference on Infrared and Millimeter Waves (IRMMW), Karlsruhe, Germany, Jun. 2004, 7 pages.
Campista, Miguel E. et al., "Improving the Data Transmission Throughput Over the Home Electrical Wiring", The IEEE Conference on Local Computer Networks 30th Anniversary, 2005, 1-8.
Capece, P. et al., "FDTD Analysis of a Circular Coaxial Feeder for Reflector Antenna", Antennas and Propagation Society International Symposium, IEEE Digest, vol. 3, 1997, pp. 1570-1573.
Carroll, John M. et al., "Developing the Blacksburg Electronic Village", Communications of the ACM, vol. 39, No. 12, Dec. 1996, 69-74.
Chaimae, Elmakfalji et al., "New Way of Passive RFID Deployment for Smart Grid", Journal of Theoretical and Applied Information Technology 82.1, Dec. 10, 2015, 81-84.
Chen, Dong et al., "A trust management model based on fuzzy reputation for internet of things", Computer Science and Information Systems 8.4: 12071228, Abstract Only, 2011, 1 page.
Chen, KE et al., "Geometric phase coded metasurface: from polarization dependent directive electromagnetic wave scattering to diffusionlike scattering", Scientific Reports 6, 2016, 1-10.
Chen, Yingying "Detecting and Localizing Wireless Spoofing Attacks", Sensor, Mesh and Ad Hoc Communications and Networks, SECON'07, 4th Annual IEEE Communications Society Conference on IEEE, 2007, 10 pages.
Chiba, Jiro "Experimental Studies of the Losses and Radiations Due to Bends in the Goubau Line", IEEE Transactions on Microwave Theory and Techniques, Feb. 1977, 94-100.
Chiba, Jiro "On the Equivalent Circuit for the G-Line Above Ground", International Wroclaw Symposium on Electromagnetic Compatibility, 1998, 78-82.
Choudhury, Romit R. "Utilizing Beamforming Antennas for Wireless Mult-hop Networks", www.slideserve.com, Sep. 20, 2012, 4 pages.
Chu, Eunmi et al., "Self-organizing and self-healing mechanisms in cooperative small cell networks", PIMRC, 2013, 6 pages.
Cimini, Carlos Alberto et al., "Temperature profile of progressive damaged overhead electrical conductors", Journal of Electrical Power & Energy Systems 49, 2013, 280-286.
CISCO, "Troubleshooting Problems Affecting Radio Frequency Communication", cisco.com, Oct. 19, 2009, 5 pages.
Cliff, Oliver M. et al., "Online localization of radio-tagged wildlife with an autonomous aerial robot system", Proceedings of Robotics Science and Systems XI, 2015, 1317.
Collins, D.D. et al., "Final Report on Advanced Antenna Design Techniques", GER 11246, Report No. 4, Sep. 6, 1963, 1-70.
Communication Power Solutions, I, "Power Communication", www.cpspower.biz/services/powercommunications, Oct. 2013, 6 pages.
COMSOL, "Fast Numerical Modeling of a Conical Horns Lens Antenna", comsol.com, Application ID: 18695, Sep. 16, 2016, 3 pages.
Corridor Systems, "A New Approach to Outdoor DAS Network Physical Layer Using E-Line Technology", Mar. 2011, 5 pages.
Costantine, Joseph et al., "The analysis of a reconfigurable antenna with a rotating feed using graph models", Antennas and Wireless Propagation Letters, vol. 8, 2009, 943-946.
Covington, Michael J. et al., "Threat implications of the internet of things", 2013 5th International Conference on IEEE Cyber Conflict (CyCon), Abstract Only, 2013, 1 page.
Cradle Point, "Out-of-Band Management", www.cradlepoint.com, Sep. 2015, 7 pages.
Crane, Robert K. "Analysis of the effects of water on the ACTS propagation terminal antenna", Antennas and Propagation, IEEE Transactions on 50.7: 954965, Abstract Only, 2002, 1 page.
Crisp, "Uplink and Downlink Coverage Improvements of 802.11g Signals Using a Distributed Antenna Network", Journal of Lightwave Technology ( vol. 25, Issue: 11), Dec. 6, 2007, 1-4.
Crosswell, "Aperture excited dielectric antennas", http://ntrs.nasa.gov/archive/nasa/casi.ntrs.nasa.gov/19740017567.pdf, 1974, 128 pages.
CST, "A Dielectric Lens Antenna with Enhanced Aperture Efficiency for Industrial Radar Applications", Computer Simulation Technology, cst.com, May 10, 2011, 3 pages.
Curry, James M. "A Web of Drones: A 2040 Strategy to Reduce the United States Dependance on Space Based Capabilities", Air War College, Feb. 17, 2015, 34 pages.
Cypress Perform, "Powerline Communication", www.cypress.com, Apr. 23, 2015, 2 pages.
Daniel, Kai et al., "Using Public Network Infrastructures for UAV Remote Sensing in Civilian Security Operations", Homeland Security Affairs, Supplement 3, Mar. 2011, 11 pages.
Darktrace, "www.darktrace.com", Jul. 10, 2014, 4 pages.
De Freitas, Carvalho et al., "Unmanned Air Vehicle Based Localization and Range Estimation of WiFi Nodes", 2014, 109 pages.
De Sabata, Aldo et al., "Universitatea "Politehnica"", din Timişoara Facultatea de Electronicăşi Telecomunicaţii, 2012, 149 pages.
DEA +, "24 Volt D.C Flashing Light With Built-in Antenna 433Mhz, DEA+ Product Guide", Meteor electrical, meteorelectrical.com, Code: LUMY/24A, Jul. 28, 2010, 3 pages.
Debord, Benoit et al., "Generation and confinement of microwave gas-plasma in photonic dielectric microstructure", Optics express 21.21, 2013, 25509-25516.
Deilmann, Michael "Silicon oxide permeation barrier coating and sterilization of PET bottles by pulsed low-pressure microwave plasmas", Dissertation, 2008, 142 pages.
Deng, Chuang et al., "Unmanned Aerial Vehicles for Power Line Inspection: A Cooperative Way in Platforms and Communications", Journal of Communicatinos vol. No. 9, No. 9, Sep. 2014, 687-692.
Denso, , Winn & Coales (Denso) Ltd. UK, www.denso.net, 2015, 1 page.
Dini, Gianluca et al., "MADAM: A Multilevel Anomaly Detector for Android Malware", MMMACNS. vol. 12, 2012, 16 pages.
Doane, J.L. et al., "Oversized rectangular waveguides with modefree bends and twists for broadband applications", Microwave Journal 32(3), Abstract Only, 1989, 153-160.
Doelitzscher, Frank et al., "ViteraaS: Virtual cluster as a Service", Cloud Computing Technology and Science (CloudCom), 2011 IEEE Third International Conference, 2011, 8 pages.
Dooley, Kevin "Out-of-Band Management", auvik, auvik.com, Apr. 12, 2014, 5 pages.
Doshi, D.A. et al., "Real Time Fault Failure Detection in Power Distribution Line using Power Line Communication", International Journal of Engineering Science, vol. 6, Issue No. 5, May 2016, 4834-4837.
Dostert, Klaus "Frequency-hopping spread-spectrum modulation for digital communications over electrical power lines", Selected Areas in Communications, IEEE Journal on 8.4, Abstract Only, 1990, 700-710.

(56) **References Cited**

OTHER PUBLICATIONS

Dragoo, R.E. et al., "Fiber Optic Data Bus for the AN/GYQ21(V)", Harris Corp, U.S. Communications Syst. Div. Chart, Microcopy Resolution Test, 1980, 115 pages.
Dutton, Harry J. "Understanding Optical Communications", International Technical Support Organization, SG24-5230-00, Sep. 1998, 55 pages.
Dyson, John D. "The Equiangular Spiral Antenna", IRE Transactions on Antennas and Propagation, 1959, 181-187.
Earth Data, "Remote Sensors", NASA, earthdata.nasa.gov, Oct. 17, 2016, 36 pages.
Ehyaie, Danial "Novel Approaches to the Design of Phased Array Antennas", Diss., The University of Michigan, 2011, 153 pages.
EIZO, "How can a screen sense touch? A basic understanding of touch panels", www.eizo.com/library/basics/basic_understanding_of_touch_panel, Sep. 27, 2010, 8 pages.
Ekstrom, "Slot-line end-fire antennas for THz frequencies", Third International Symposium on Space Terahertz Technology, 280-290.
Electric Power Research Institut, "Examination of the Exacter Outage-Avoidance System", www.epri.com/abstracts/Pages/ProductAbstract.aspx?ProductId=000000000001020393, Nov. 30, 2009, 2 pages.
ELine Corridor Systems, "How is ELine Different?", www.corridor.biz/ELine_is_different.html, Apr. 23, 2015, 1 page.
Elmore, Glenn et al., "A Surface Wave Transmission Line", QEX, May/Jun. 2012, pp. 3-9.
Elmore, Glenn "Introduction to the Propagating Wave on a Single Conductor", www.corridor.biz, Jul. 27, 2009, 30 pages.
Emerson, "About Rosemount 5300 Level Transmitter", www.emerson.com, Nov. 2016, 6 pages.
Eom, Seung-Hyun et al., "Pattern switchable antenna system using inkjet-printed directional bow-tie for bi-direction sensing applications", Sensors 15.12, 2015, 31171-31179.
EPRI—Electronic Power Research, "Product Abstract Program on Technology Innovation: Study on the Integration of High Temperature Superconducting DC Cables Within the Eastern and West urn North American Power Grids", epri.com, Product ID:10203, Nov. 25, 2009, 2 pages.
Erickson, Katherine "Conductive cylindrical surface waveguides", www.ideals.illinois.edu/bitstream/handle/2142/30914/Erickson_Katherine.pdf?sequence=1, 2012, 74 pages.
Ericsson, "Direct Bury Duct Assemblies, MPB 302 3+—Ribbonet Microducts", www.archive.ericsson.net, Jul. 30, 2014, 2 pages.
Eskelinen, Harri et al., "DFM (A)-aspects for a horn antenna design", Lappeenranta University of Technology, 2004, 34 pages.
Eskelinen, P. "A low-cost microwave rotary joint", International Radar Conference, 13-17, Abstract Only, Oct. 2014, 1-4.
Faggiani, Adriano "Smartphone-based crowdsourcing for network monitoring: opportunities, challenges, and a case study", http://vecchio.iet.unipi.it/vecchio/files/2010/02/article.pdf, 2014, 8 pages.
FARR Research, Inc., "An Improved Solid Dielectric Lens Impulse Radiating Antenna", SBIR/STTR, DoD, sbir.gov, 2004, 3 pages.
Farzaneh, Masoud et al., "Systems for Prediction and Monitoring of Ice Shedding, Anti-Cicing and De-Icing for Power Line Conductors and Ground Wires", Dec. 1, 2010, 1-100.
Fattah, E. Abdel et al., "Numerical 3D simulation of surface wave excitation in planar-type plasma processing device with a corrugated dielectric plate", Elsevier, Vacuum 86, 2011, 330-334.
FEKO, "Lens Antennas", Altair, feko.info, Jun. 30, 2014, 2 pages.
FEKO, "mmWave Axial Choke Horn Antenna with Lens", Sep. 24, 2013, 2 pages.
Feng, Taiming et al., "Design of a survivable hybrid wireless-optical broadband-access network", Journal of Optical Communications and Networking 3.5, 2011, 458-464.
Feng, Wei et al., "Downlink power allocation for distributed antenna systems in a multi-cell environment", 2009 5th International Conference on Wireless Communications, Networking and Mobile Computing, 2009, 2 pages.
Fenn, Alan J. et al., "A Terrestrial Air Link for Evaluating Dual-Polarization Techniques in Satellite Communications", vol. 9, No. 1, The Lincoln Laboratory Journal, 1996, 3-18.
Fenye, Bao et al., "Dynamic trust management for internet of things applications", Proceedings of the 2012 international workshop on Selfaware internet of things. ACM, Abstract Only, 2012, 1 page.
Fiorelli, Riccardo et al., "ST7580 power line communication systemonchip design guide", Doc ID 022923 Rev 2, Jul. 2012, 63 pages.
Firelight Media Group, "About Firelight Media Group", www.insurancetechnologies.com/Products/Products_firelight_overview.html, Apr. 19, 2015, 4 pages.
Firelight Media Group LLC, "Electronic Business Fulfillment FireLight", www.firelightmedia.net/fmg/index.php/home, Apr. 19, 2015, 2 pages.
Fitzgerald, William D. "A 35-GHz Beam Waveguide System for the Millimeter-Wave Radar", The Lincoln Laboratory Journal, vol. 5, No. 2, 1992, 245-272.
Ford, Steven "At&T's new antenna system will boost cellular coverage at Walt Disney World", Orlando Sentinel, orlandosentinel.com, Mar. 9, 2014, 4 pages.
Freyer, Dan et al., "Combating the Challenges of Ka-Band Signal Degradation", SatMagazine, satmagzine.com, Sep. 2014, 9 pages.
Friedman, M et al., "Low-loss RF transport over long distances", IEEE Transactions on Microwave Theory and Techniques, Jan. 1, 2001, 341-348.
Friedman, M et al., "Low-Loss RF Transport Over Long Distances", IEEE Transactions on Microwave Theory and Techniques, vol. 49, No. 2, Feb. 2001, 8 pages.
Friedman, M. et al., "Low-Loss RF Transport Over Long Distances", IEEE Transactions on Microwave Theory an Techniques, vol. 49, No. 2, Feb. 2001, 341-348.
Fromm, W. et al., "A new microwave rotary joint", 1958 IRE International Convention Record, 21-25, 6:78-82, Abstract Only, Mar. 1966, 2 pages.
Galli, "For the Grid and Through the Grid: The Role of Power Line Communications in the Smart Grid", Proceedings of the IEEE 99.6, Jun. 2011, 1-26.
Garcia-Etxarri, Aitzol et al., "A combination of concave/convex surfaces for fieldenhancement optimization: the indented nanocone", Optics express 20.23, 2012, 2520125212.
Gerini, Giampiero "Multilayer array antennas with integrated frequency selective surfaces conformal to a circular cylindrical surface", http://alexandria.tue.nl/openaccess/Metis248614.pdf, 2005, 2020-2030.
Geterud, Erik G. "Design and Optimization of Wideband Hat-Fed Reflector Antenna with Radome for Satellite Earth Station", http://publications.lib.chalmers.se/records/fulltext/163718.pdf, Discloses Frequency Selective Surfaces for antenna coverings for weather protection (table of materials on p. 29-30; pp. 37-46), 2012, 70 pages.
Ghazisaidi, Navid et al., "Survivability analysis of next-generation passive optical networks and fiber-wireless access networks", Reliability, IEEE Transactions on 60.2, 2011, 479-492.
Gigamon, "Out-of-Band Security Solution", www.gigamon.com, Aug. 3, 2014, 7 pages.
Gilbert, Barrie et al., "The Gears of Genius", IEEE SolidState Circuits Newsletter 4.12, 2007, 10-28.
Glockler, Roman "Phased Array for Millimeter Wave Frequencies", International Journal of Infrared and Millimeter Waves, Springer, vol. 11, No. 2, Feb. 1, 1990, 10 pages.
Godara, "Applications of Antenna Arrays to Mobile Communications, Part I: Performance Improvement, Feasibility, and System Considerations", Proceedings of the IEEE, vol. 85, No. 7, Jul. 1997, 1031-1060.
Goldsmith, Paul F. "Quasi-optical techniques", Proceedings of the IEEE., vol. 80, No. 11, Nov. 1, 1992, 1729-1747.
Golrezaei, Negin et al., "FemtoCaching: Wireless Video Content Delivery through Distributed Caching Helpers", INFOCOM, Proceedings IEEE, 2012, 9 pages.
Gomes, Nathan J. et al., "Radio-over-fiber transport for the support of wireless broadband services", Journal of Optical Networking, vol. 8, No. 2, 2009, 156-178.

(56) **References Cited**

OTHER PUBLICATIONS

Gonthier, François et al., "Mode coupling in nonuniform fibers: comparison between coupled-mode theory and finite-difference beam-propagation method simulations", JOSA B 8.2: 416421, Abstract Only, 1991, 3 pages.
Greco, R. "Soil water content inverse profiling from single TDR waveforms", Journal of hydrology 317.3, 2006, 325-339.
Gritzalis, Dimitris et al., "The Sphinx enigma in critical VoIP infrastructures: Human or botnet?", Information, Intelligence, Systems and Applications (IISA), 2013 Fourth International Conference, IEEE, 2013, 6 pages.
Gunduz, Deniz et al., "The multiway relay channel", IEEE Transactions on Information Theory 59.1, 2013, 5163.
Guo, Shuo et al., "Detecting Faulty Nodes with Data Errors for Wireless Sensor Networks", 2014, 25 pages.
Hadi, Ghozali S. et al., "Autonomous UAV System Development for Payload Dropping Mission", The Journal of Instrumentation, Automation and Systems, vol. 1, No. 2, 2014, pp. 72-22.
Hafeez, "Smart Home Area Networks Protocols within the Smart Grid Context", Journal of Communications vol. 9, No. 9, Sep. 2014, 665-671.
Haider, Muhammad Kumail et al., "Mobility resilience and overhead constrained adaptation in directional 60 GHz WLANs: protocol design and system implementation", Proceedings of the 17th ACM International Symposium on Mobile Ad Hoc Networking and Computing, 2016, 10 pages.
Halder, Achintya et al., "Low-cost alternate EVM test for wireless receiver systems", 23rd IEEE VLSI Test Symposium (VTS'05), 2005, 6 pages.
Hale, Paul et al., "A statistical study of deembedding applied to eye diagram analysis", IEEE Transactions on Instrumentation and Measurement 61.2, 2012, 475-488.
Halligan, Matthew S. "Maximum crosstalk estimation and modeling of electromagnetic radiation from PCB/highdensity connector interfaces", http://scholarsmine.mst.edu/cgi/viewcontent.cgiarticle=3326&context=doctoral_dissertations, 2014, 251 pages.
Han, Chong et al., "crosslayer communication module for the Internet of Things", Computer Networks 57.3: 622633, Abstract Only, 2013, 1 page.
Hanashi, Abdalla M. et al., "Effect of the Dish Angle on the Wet Antenna Attenuation", IEEE, 2014, 1-4.
Haroun, Ibrahim et al., "WLANs meet fiber optics-Evaluating 802.11 a WLANs over fiber optics links", www.rfdesign.com, 2003, 36-39.
Hassan, Karim "Fabrication and characterization of thermo-plasmonic routers for telecom applications", Diss. Univ. de Bourgogne., 2014, 59 pages.
Hassan, Maaly A. "Interference reduction in mobile ad hoc and sensor networks", Journal of Engineering and Computer Innovations vol. 2(7), Sep. 2011, 138-154.
Hassani, Alireza et al., "Porous polymer fibers for low-loss Terahertz guiding", Optics express 16.9, 2008, 6340-6351.
Hautakorpi, Jani et al., "Requirements from Session Initiation Protocol (SIP) Session Border Control (SBC) Deployments", RFC5853, IETF, 2010, 27 pages.
Hawrylyshen, A. et al., "Sipping Working Group", J. Hautakorpi, Ed. Internet-Draft G. Camarillo Intended status: Informational Ericsson Expires: Dec. 18, 2008 R. Penfield Acme Packet, Oct. 23, 2008, 26 pages.
Hays, Phillip "SPG-49 Tracking Radar", www.okieboat.com/SPG-49%20description.html, 2015, 15 pages.
Heo, Joon et al., "Identity-Based Mutual Device Authentication Schemes for PLC Systems", IEEE International Symposium on Power Line Communications and Its Applications, 2008, pp. 47-51.
Hoss, R.J. et al., "Manufacturing Methods and Technology Program for Ruggedized Tactical Fiber Optic Cable", No. ITT-80-03-078. ITT Electrooptical Products DIV Roanoke VA., 1980, 69 pages.
Howard, Courtney "UAV command, control & communications", Military & Aerospace Electronics, militaryaerospace.com, Jul. 11, 2013, 15 pages.
Hussain, Mohamed T. et al., "Closely Packed Millimeter-Wave MIMO Antenna Arrays with Dielectric Resonator Elements", Antennas and Propagation (EuCAP) 2016 10th European Conference, Apr. 2016, 1-5.
Huth, G. K. "Integrated source and channel encoded digital communication system design study", http://ntrs.nasa.gov/archive/nasa/casi.ntrs.nasa.gov/19750003064.pdf, 1974, 65 pages.
Ikrath, K. et al., "Antenna Innovation Glass-Fiber Tube Focuses Microwave Beam", Electronics, vol. 35, No. 38, Sep. 21, 1962, 44-47.
Illinois Historic Archive, "Antennas on the Web", Photo Archive of Antennas, ece.illinois.ed, 1-18, Dec. 2016.
Industrial Fiber Optics, "Asahi Multi-Core Fiber Cable", http://i-fiberoptics.com/multi-core-fiber-cable.php, Apr. 26, 2015, 2 pages.
Infoexpress, "Detecting and Preventing MAC Spoofing", Network Access Control Solutions, 2014, 1 page.
Ippolito, Louis J. "Propagation effects handbook for satellite systems design. A summary of propagation impairments on 10 to 100 GHz satellite links with techniques for system design", 1989, Abstract Only, 1989, 1 page.
Islam, M. T. "Coplanar Waveguide Fed Microstrip Patch Antenna", Information Technology Journal 9.2 (2010): 367-370., 2010, 367-370.
Izumiyama, Hidetaka et al., "Multicast over satellite", Applications and the Internet, (Saint 2002), IEEE Proceedings, 2002, 4 pages.
Jackson, Mark "Timico CTO Hit by Slow FTTC Broadband Speeds After Copper Corrosion", www.ispreview.co.uk, Mar. 5, 2013, 2 pages.
Jaeger, Raymond et al., "Radiation Performance of Germanium Phosphosilicate Optical Fibers", RADC-TR-81-69: Final Technical Report, Galileo Electro-Optical Corp, May 1981, 101 pages.
James, Graeme L. et al., "Diplexing Feed Assemblies for Application to Dual-Reflector Antennas", IEEE Transactions on Antennas and Propagation, vol. 51, No. 5, May 2003, 1024-1029.
James, J. R. et al., "Investigations and Comparisons of New Types of Millimetre-Wave Planar Arrays Using Microstrip and Dielectric Structures", Royal Military College of Science, Apr. 1985, 122 pages.
Jang, Hung-Chin "Applications of Geometric Algorithms to Reduce Interference in Wireless Mesh Network", Journal on Applications of Graph Theory in Wireless Ad hoc Networks and Sensor Networks (JGRAPH-HOC) vol. 2, No. 1, Abstract Only, Mar. 2010, 1 page.
Jawhar, Imad et al., "A hierarchical and topological classification of linear sensor networks", Wireless Telecommunications Symposium, WTS, IEEE, http://faculty.uaeu.ac.ae/Nader_M/papers/WTS2009.pdf, 2009, 8 pages.
Jee, George et al., "Demonstration of the Technical Viability of PLC Systems on Medium- and Low-Voltage Lines in the United States", Broadband is Power: Internet Access Via Power Line Networks, IEEE Communication Magazine, May 2003, 5 pages.
Jensen, Michael "Data-Dependent Fingerprints for Wireless Device Authentication", www.dtic.mil/cgi-bin/GetTRDoc?AD=ADA626320, 2014, 15 pages.
Jeong, et al., "Study of elliptical polarization requirement of KSTAR 84-GHz ECH system", Journal of the Korean Physical Society, vol. 49, Dec. 2006, 201-205.
Jiang, Peng "A New Method for Node Fault Detection in Wireless Sensor Networks", 2009, 1282-1294.
Jiang, Y.S. et al., "Electromagnetic orbital angular momentum in remote sensing", PIERS Proceedings, Moscow, Russia, Aug. 18-21, 2009, 1330-1337.
Jin, "Quasi-optical mode converter for a coaxial cavity gyrotron", Forschungszentrum Karlsruhe, Mar. 2007, 107 pages.
Jin, Yu et al., "NEVERMIND, the Problem is Already Fixed: Proactively Detecting and Troubleshooting Customer DSL Problems", ACM CoNEXT, Philadelphia, USA, Nov.-Dec. 2010, 12 pages.
Jones, Jr., Howard S. "Conformal and Small Antenna Designs", U.S. Army Electronics Research and Development Command, Harry Diamond Laboratories, Apr. 1981, 32 pages.
Kado, Yuichi et al., "Exploring SubTHz Waves for Communications, Imaging, and Gas Sensing", Fog 2: O2, PIERS Proceedings, Beijing, China, Mar. 23-27, 2009, 42-47.

(56) **References Cited**

OTHER PUBLICATIONS

Kamilaris, Andreas et al., "Exploring the Use of DNS as a Search Engine for the Web of Things", Internet of Things (WF-IoT), 2014 IEEE World Forum, 2014, 6 pages.
Kang, Eyung W. "Chapter 6: Array Antennas", www.globalspec.com/reference/75109/203279/chapter-6-array-antennas, Apr. 22, 2015, 2 pages.
Karbowiak, A. E. et al., "Characteristics of Waveguides for Long-Distance Transmission", Journal of Research of the National Bureau of Standards, vol. 65D, No. 1, Jan.-Feb. 1961, May 23, 1960, 75-88.
Katkovnik, Vladimir et al., "High-resolution signal processing for a switch antenna array FMCW radar with a single channel receiver", 2002 IEEE Sensor Array and Multichannel Signal Processing Workshop Proceedings, 2002, 6 pages.
Katrasnik, Jaka "New Robot for Power Line Inspection", 2008 IEEE Conference on Robotics, Automation and Mechatronics, 2008, 1-6.
Kedar, "Wide Beam Tapered Slot Antenna for Wide Angle Scanning Phased Array Antenna", Progress in Electromagnetics Research B, vol. 27, 2011, 235-251.
Khan, Kaleemullah "Authentication in Multi-Hop Wireless Mesh Networks", World Academy of Science, Engineering and Technology, International Journal of Electrical, Computer, Energetic, Electronic and Communication Engineering vol. 2, No. 10, 2008, 2406-2411.
Khan, Mohammed R. "A beam steering technique using dielectric wedges", Diss. University of London, Dec. 1985, 3 pages.
Khan, Ubaid Mahmood et al., "Dual polarized dielectric resonator antennas", Chalmers University of Technology, Jun. 2010, 128 pages.
Kikuchi, H. et al., "Hybrid transmission mode of Goubau lines", J.Inst.Electr.Comm.Engrs., Japan,vol. 43, 1960, 39-45.
Kim, Jong-Hyuk et al., "Real-time Navigation, Guidance, and Control of a UAV using Low-cost Sensors", Australian Centre for Field Robotics, Mar. 5, 2011, 6 pages.
Kim, Myungsik et al., "Automated RFID-based identification system for steel coils", Progress in Electromagnetics Research 131, 2012, 1-17.
Kima, Yi-Gon et al., "Generating and detecting torsional guided waves using magnetostrictive sensors of crossed coils", Chonnam National University, Republic of Korea, Elsevier Ltd,, 2010, 145-151.
Kirkham, H. et al., "Power system applications of fiber optics (Jet Propulsion Lab", JPL Publication 84-28, Electric Energy Systems Division, U.S. DoE, 1984, 180.
Kleinrock, Leonard et al., "On measured behavior of the ARPA network", National Computer Conference, 1974, 767-780.
Kliros, George S. "Dielectric-EBG covered conical antenna for UWB applications", www.researchgate.net/profile/George_Kliros/publication/235322849_Dielectric-EBG_covered_conical_antenna_for_UWB_applications/links/54329e410cf225bddcc7c037.pdf, 2010, 10 pages.
Koga, Hisao et al., "High-Speed Power Line Communication System Based on Wavelet OFDM", 7th International Symposium on Power-Line Communications and Its Applications, Mar. 26-28, 2003, 226-231.
Kolpakov, Stanislav A. et al., "Toward a new generation of photonic humidity sensors", Sensors 14.3, 2014, 3986-4013.
Koshiba, Masanori et al., "Analytical expression of average power-coupling coefficients for estimating intercore crosstalk in multicore fibers", Photonics Journal, IEEE 4.5, 2012, 1987-1995.
Kroon, Barnard et al., "Steady state RF fingerprinting for identity verification: one class classifier versus customized ensemble", Artificial Intelligence and Cognitive Science. Springer Berlin Heidelberg, 198206, Abstract Only, 2010, 3 pages.
Kroyer, Thomas "A Waveguide High Order Mode Reflectometer for the Large Hadron Collider Beam-pipe", Diss. TU Wien., 2003, 76 pages.
Kuehn, E "Self-configuration and self-optimization of 4G Radio Access Networks", http://wirelessman.org/tgm/contrib/S80216m-07_169.pdf, 2007, 13 pages.
Kuhn, Marc et al., "Power Line Enhanced Cooperative Wireless Communications", IEEE Journal on Selected Areas in Communications, vol. 24, No. 7, Jul. 2006, 10 pages.
Kumar, Sailesh "Survey of Current Network Intrusion Detection Techniques", Washington Univ. in St. Louis, Dec. 2007, 18 pages.
Kune, Denis F. et al., "Ghost Talk: Mitigating EMI Signal Injection Attacks against Analog Sensors", IEEE Symposium on Security and Privacy, 2013, 145-159.
Laforte, J.L. et al., "State-of-the-art on power line de-icing", Atmospheric Research 46, 1998, 143-158.
Lairdtech, "Allpurpose Mount Kit", www.lairdtech.com, Mar. 29, 2015, 2 pages.
Lappgroupusa, "Selection of Number of Cable Cores With Emphasis on Sizing Parameters", Industrial Cable & Connector Technology News, lappconnect.blogspot.com, http://lappconnect.blogspot.com/2014_10_01_archive.html, Oct. 30, 2014, 4 pages.
Lazaropoulos, Athanasios "TowardsModal Integration of Overhead and Underground Low-Voltage and Medium-Voltage Power Line Communication Channels in the Smart Grid Landscape:Model Expansion, Broadband Signal Transmission Characteristics, and Statistical Performance Metrics", International Scholarly Research Network, ISRN Signal Processing, vol. 2012, Article ID 121628, 17 pages, Mar. 26, 2012, 18 pages.
Lazaropoulos, Athanasios G. "Wireless sensor network design for transmission line monitoring, metering, and controlling: introducing broadband over power lines-enhanced network model (BPLeNM)", ISRN Power Engineering, 2014, 23 pages.
Lee, Joseph C. "A Compact Q-/K-Band Dual Frequency Feed Horn", No. TR-645, Massachusetts Institute of Technology, Lincoln Laboratory, May 3, 1983, 40 pages.
Lee, Sung-Woo "Mutual Coupling Considerations in the Development of Multi-feed Antenna Systems", http://ntrs.nasa.gov/archive/nasa/casi.ntrs.nasa.gov/19750003064.pdf,2008, 127 pages.
Leech, Jamie et al., "Experimental investigation of a low-cost, high performance focal-plane horn array", Terahertz Science and Technology, IEEE Transactions on 2.1, 2012, 61-70.
Li, Mo et al., "Underground structure monitoring with wireless sensor networks", Proceedings of the 6th international conference on Information processing in sensor networks, ACM, 2007, 69-78.
Li, Xi et al., "A FCM-Based peer grouping scheme for node failure recovery in wireless P2P file sharing", 2009 IEEE International Conference on Communications, 2009, 2 pages.
Li, Xiang-Yang et al., "Interference-Aware Topology Control for Wireless Sensor Networks", SECON. vol. 5, 2005, 12 pages.
Li, Xiaowei et al., "Integrated plasmonic semi-circular launcher for dielectric-loaded surface plasmonpolariton waveguide", Optics Express, vol. 19, Issue 7, 2011, 6541-6548.
Li, Xu et al., "Smart community: an internet of things application", Communications Magazine, IEEE 49.11, Nov. 2011, 68-75.
Liang, Bin "Cylindrical Slot FSS Configuration for Beam-Switching Applications", IEEE Transactions on Antennas and Propagation, vol. 63, No. 1, Jan. 2015, 166-173.
Lier, E. et al., "Simple hybrid mode horn feed loaded with a dielectric cone", Electronics Letters 21.13: 563564, 1985, 563-564.
Lier, Erik "A Dielectric Hybrid Mode Antenna Feed: A Simple Alternative to the Corrugated Horn", IEEE Transactions on Antennas and Propagation, vol. AP-34, No. 1, Jan. 1986, 21-30.
Lim, Christina et al., "Fiber-wireless networks and subsystem technologies", Lightwave Technology, Journal of 28.4, Feb. 5, 2010, 390-405.
Liu, et al., "A 25 Gb/s (/km 2) urban wireless network beyond IMTadvanced", IEEE Communications Magazine 49.2, 2011, 122-129.
Lou, Tiancheng "Minimizing Average Interference through Topology Control", Algorithms for Sensor Systems, Springer Berlin Heidelberg, 2012, 115-129.
L-TEL: Quanzhou L-TEL Communicat, "Products: GSM Mircro Repeater", www.l-tel.com, Apr. 24, 2015, 3 pages.
Lucyszyn, S. et al., "Novel RF MEMS Switches", Proceedings of Asia-Pacific Microwave Conference 2007, 2007, 55-58.

(56) **References Cited**

OTHER PUBLICATIONS

Lucyszyn, Stepan et al., "RF MEMS for antenna applications", 7th European Conference on Antennas and Propovation (EUCAP 2103), 2013, 1988-1992.
Lumerical Solutions, Inc., "Tapered waveguide", www.docs.lumerical.com, 2010, 3 pages.
Lumerical Solutions, Inc., "Waveguide Bragg Microcavity", www.lumerical.com, Sep. 2016, 6 pages.
Luo, Hailu et al., "Reversed propagation dynamics of Laguerre-Gaussian beams in left-handed materials", Physical Review A 77.2, 023812., Feb. 20, 2008, 1-7.
Luo, Qi et al., "Circularly polarized antennas", John Wiley & Sons, Book—description only, 2013, 1 page.
Mahato, Suvranshu Sekhar "Studies on an Infrared Sensor Based Wireless Mesh Network. Diss.", Abstract Only, 2010, 2 pages.
Maier, Martin et al., "The Audacity of Fiberwireless (FiWi) Networks", AccessNets, 2009, 16-35.
Makwana, G. D. et al., "Wideband Stacked Rectangular Dielectric Resonator Antenna at 5.2 GHz", International Journal of Electromagnetics and Applications 2012, 2(3), 2012, 41-45.
Marcatili, E.A. et al., "Hollow Metallic and Dielectric Waveguides for Long Distance Optical Transmission and Lasers", Bell System Technical Journal 43(4), Abstract Only, 2 pages, 1964, 1783-1809.
Marin, Leandro "Optimized ECC Implementation for Secure Communication between Heterogeneous IoT Devices", www.mdpi.com/1424-8220/15/9/21478/pdf, 2015, 21478-21499.
Marrucci, Lorenzo "Rotating light with light: Generation of helical modes of light by spin-to-orbital angular momentum conversion in inhomogeneous liquid crystals", International Congress on Optics and Optoelectronics. International Society for Optics and Photonics, 2007, 12 pages.
Marzetta, "Noncooperative Cellular Wireless with Unlimited Numbers of Base Station Antennas", IEEE Transactions on Wireless Communications, vol. 9, No. 11, Nov. 2010, 3590-3600.
Matsukawa, et al., "A dynamic channel assignment scheme for distributed antenna networks", Vehicular Technology Conference (VTC Spring), 2012 IEEE 75th, 2012, 5 pages.
McAllister, M.W. et al., "Resonant hemispherical dielectric antenna", Electronics Letters 20.16: 657659, Abstract Only, 1984, 1 page.
Meessen, A. "Production of EM Surface Waves by Superconducting Spheres: A New Type of Harmonic Oscillators", Progress in Electromagnetics Research Symposium Proceedings, Moscow, Russia, Aug. 19-23, 2012, pp. 529-533.
Mehta, "Advance Featuring Smart Energy Meter With Bi-Directional Communication", Electronics & Communication MEFGI, Feb. 9, 2014, 169-174.
Mena, F.P. et al., "Design and Performance of a 600720GHz SidebandSeparating Receiver Using and AIN SIS Junctions", IEEE Transactions on Microwave Theory and Techniques 59.1, 2011, 166-177.
Meng, H. et al., "A transmission line model for high-frequency power line communication channel", Power System Technology, PowerCon 2002, International Conference on IEEE, vol. 2, 2002, 6 pages.
Menon, S.S. et al., "Propagation characteristics of guided modes in a solid dielectric pyramidal horn", Proceedings of the 2012 International Conference on Communication Systems and Network Technologies, IEEE Computer Society, Abstract Only, 2012, 2 pages.
Microwave Technologies, Ind, "Dielectric Antenna", www.microwavetechnologiesinc.co.in/microwavecommunicationlabproducts.html#dielectricantenna, May 21, 2015, 13 pages.
Miller, Ashley et al., "Pathway to Ubiquitous Broadband: Environments, Policies, and Technologies to Implementation", Oct. 2016, 20 pages.
Miller, David A. "Establishing Optimal Wave Communication Channels Automatically", Journal of Lightwave Technology, vol. 31, No. 24, Dec. 15, 2013, 3987-3994.
Mishra, Sumita et al., "Load Balancing Optimization in LTE/LTEA Cellular Networks: A Review", arXiv preprint arXiv:1412.7273 (2014), 2014, 1-7.
Mitchell, John E. "Integrated Wireless Backhaul Over Optical Access Networks", Journal of Lightwave Technology 32.20, 2014, 3373-3382.
Miyagi, M. "Bending losses in hollow and dielectric tube leaky waveguides", Applied Optics 20(7), Abstract Only, 2 pages, 1981, 1221-1229.
Moaveni-Nejad, Kousha et al., "Low-Interference Topology Control for Wireless Ad Hoc Networks", Department of Computer Science, Illinois Institute of Technology, Ad Hoc & Sensor Wireless Networks 1.1-2, 2005, 41-64.
Moisan, M. et al., "Plasma sources based on the propagation of electromagnetic surface waves", Journal of Physics D: Applied Physics 24, 1991, 1025-1048.
Mokhtarian, Kianoosh et al., "Caching in Video CDNs: Building Strong Lines of Defense", EuroSys, Amsterdam, Netherlands, 2014, 13 pages.
Mori, A. et al., "The Power Line Transmission Characteristics for an OFDM Signal", Progress in Electromagnetics Research, PIER 61, Musashi Institute of Technology, 2006, 279-290.
Morse, T.F. "Research Support for the Laboratory for Lightwave Technology", Brown Univ Providence RI DIV of Engineering, 1992, 32 pages.
Mruk, Joseph Rene "Wideband monolithically integrated frontend subsystems and components", Diss. University of Colorado, 2011, 166 pages.
Mueller, G.E. et al., "Polyrod Antennas", Bell System Technical Journal, vol. 26., No. 4, Oct. 29, 1947, 837-851.
Mushref, Muhammad "Matrix solution to electromagnetic scattering by a conducting cylinder with an eccentric metamaterial coating", www.sciencedirect.com/science/article/pii/S0022247X06011450/pdf?md5=4823be0348a3771b5cec9ffb7f326c2c&pid=1-s2.0-S0022247X06011450-main.pdf, Discloses controlling antenna radiation pattern with coatings, 2007, 356-366.
Mwave, "Dual Linear C-Band Horn", www.mwavellc.com/custom-Band-LS-BandTelemetryHornAntennas.php, Jul. 6, 2012, 1 page.
Nakano, Hisamatsu "A Low-Profile Conical Beam Loop Antenna with an Electromagnetically Coupled Feed System", http://repo.lib.hosei.ac.jp/bitstream/10114/3835/1/31_TAP(Low-Profile).pdf, Dec. 2000, 1864-1866.
Nakano, Hisamatsu et al., "A Spiral Antenna Backed by a Conducting Plane Reflector", IEEE Transactions on Antennas and Propagation, vol. AP-34 No. 6, Jun. 1986, 791-796.
Nandi, Somen et al., "Computing for rural empowerment: enabled by last-mile telecommunications", IEEE Communications Magazine 54.6, 2016, 102-109.
Narayanan, Arvind "Fingerprinting of RFID Tags and HighTech Stalking", 33 Bits of Entropy, 33bits.org, Oct. 4, 2011, 4 pages.
Nassa, Vinay Kumar "Wireless Communications: Past, Present and Future", Dronacharya Research Journal: 50. vol. III, Issue-II, Jul.-Dec. 2011, 2011, 96 pages.
Nassar, "Local Utility Powerline Communications in the 3-500 kHz Band: Channel Impairments, Noise, and Standards", IEEE Signal Processing Magazine, 2012, 1-22.
NBNTM, "Network technology", nbnco.com.au, Jun. 27, 2014, 2 pages.
Netgear, "Powerline—Juice Up Your Network With Powerline", www.netgear.com/home/products/networking/powerline, Apr. 21, 2015, 3 pages.
Newmark System, Inc, "GM-12 Gimbal Mount", newmarksystems.com, 2015, 1 page.
Nibarger, John P. "An 84 pixel all-silicon corrugated feedhorn for CMB measurements", Journal of Low Temperature Physics 167.3-4, 2012, 522-527.
Nicholson, Basil J. "Microwave Rotary Joints for X-, C-, and S-band", Battelle Memorial Inst Columbus OH, 1965, 51 pages.
Niedermayer, Uwe et al., "Analytic modeling, simulation and interpretation of broadband beam coupling impedance bench measurements", Nuclear Instruments and Methods in Physics Research Section A: Accelerators, Spectrometers, Detectors and Associated Equipment 776, 2015, 129-143.

(56) **References Cited**

OTHER PUBLICATIONS

Nikitin, A. Y. et al., "Efficient Coupling of Light to Graphene Plasmons by Compressing Surface Polaritons with Tapered Bulk Materials", NanoLetters; pubs.acs.org/NanoLett, Apr. 28, 2014, 2896-2901.
Nikitin, Pavel V. et al., "Propagation Model for the HVAC Duct as a Communication Channel", IEEE Transactions on Antennas and Propagation 51.5, 2003, 7 pages.
Norse Appliance, "Block attacks before they target your network, and dramatically improve the ROI on your entire security infrastructure", norsecorp.com, 2015, 4 pages.
Nuvotronics, "PolyStrata—Phased Arrays & Antennas", Nuvotronics, www.nuvotronics.com/antennas.php, Apr. 26, 2015, 1 page.
Nwclimate, "Weather Instruments and Equipment Explained", nwclimate.org, May 7, 2015, 22 pages.
OECD, "Alternative Local Loop Technologies: A Review", Organisation for Economic Co-Operation and Development, Paris, https://www.oecd.org/sti/2090965.pdf, 1996, 25 pages.
Ohliger, Michael "An introduction to coil array design for parallel MRI", http://mriquestions.com/uploads/3/4/5/7/34572113/intro_to_coil_design_parallel_.pdf, 2006, 16 pages.
Olver, A. D. "Microwave horns and feeds", vol. 39. IET, Book description only, 1994, 1 page.
Olver, A.D. et al., "Dielectric cone loaded horn antennas", Microwaves, Antennas and Propagation, IEEE Proceedings H. vol. 135. No. 3. IET, Abstract Only, 1988, 1 page.
Opengear, "Smart Out-of-Band Management", www.opengear.com, Sep. 2015, 2 pages.
Orfanidis, Sophocles J. "Antenna Arrays", Rutgers University, 2002, 910-939.
Pahlavan, Kaveh et al., "Wireless data communications", Proceedings of the IEEE 82.9, 1994, 1398-1430.
Paruchuri, et al., "Securing Powerline Communication", IEEE, 2008, 64-69.
Patel, Pinak S. et al., "Sensor Fault Detection in Wireless Sensor Networks and Avoiding the Path Failure Nodes", International Journal of Industrial Electronics and Electrical Engineering, vol. 2, Issue-3, Mar. 2014, 2347-6982.
Patel, Shwetak N. et al., "The Design and Evaluation of an End-User-Deployable, Whole House, Contactless Power Consumption Sensor", CHI 2010: Domestic Life, Apr. 2010, 10 pages.
Pato, Silvia et al., "On building a distributed antenna system with joint signal processing for next generation wireless access networks: The FUTON approach", 7th Conference on Telecommunications, Portugal, 2008, 4 pages.
Paul, Sanjoy et al., "The Cache-And-Forward Network Architecture for Efficient Mobile Content Delivery Services in the Future Internet", Innovations in NGN: Future Network and Services, First ITU-T Kaleidoscope Academic Conference, 2008, 8 pages.
PCT, "International Search Report", dated Oct. 25, 2016, 1-12.
Perkons, Alfred R. et al., "TM surface-wave power combining by a planar active-lens amplifier", IEEE Transactions on Microwave Theory and Techniques, 46.6, Jun. 1998, 775-783.
Péter, Zsolt et al., "Assessment of the current intensity for preventing ice accretion on overhead conductors", Power Delivery, IEEE Transactions on 22.1: 4, 2007, 565-57.
Petrovsky, Oleg "The Internet of Things: A Security Overview", www.druva.com, Mar. 31, 2015, 3 pages.
Pham, Tien-Thang et al., "A WDM-PON-compatible system for simultaneous distribution of gigabit baseband and wireless ultrawideband services with flexible bandwidth allocation", Photonics Journal, IEEE 3.1, 2011, 13-19.
Pike, Kevin J. et al., "A spectrometer designed for 6.7 and 14.1 T DNP-enhanced solid-state MAS NMR using quasi-optical microwave transmission", Journal of Magnetic Resonance, 2012, 9 pages.
Piksa, Petr et al., "Elliptic and hyperbolic dielectric lens antennas in mmwaves", Radioengineering 20.1, 2011, 271.
Pixel Technologies, "Pro 600 Sirius XM Radio Amplified Outdoor Antenna", Oct. 3, 2014, 1 page.
Plagemann, Thomas et al., "Infrastructures for Community Networks", Content Delivery Networks. Springer Berlin Heidelberg, 2008, 367-388.
Pohl, Nils "A dielectric lens-based antenna concept for high-precision industrial radar measurements at 24GHz", Radar Conference (EuRAD), 2012 9th European, IEEE, 2012, 5 pages.
Ponchak, George E. et al., "A New Model for Broadband Waveguide to Microstrip Transition Design", NASA TM-88905, Dec. 1, 1986, 18 pgs.
Potlapally, Nachiketh R. et al., "Optimizing Public-Key Encryption for Wireless Clients", Proceedings of the IEEE International Conference on Communications, 2002, 1050-1056.
Pranonsatit, S. et al., "Sectorised horn antenna array using an RF MEMS rotary switch", Asia-Pacific Microwave Conference, 2010, 1909-1913.
Pranonsatit, Suneat et al., "Single-pole eight-throw RF MEMS rotary switch", Journal of Microelectromechanical Systems 15.6, 2006, 1735-1744.
Prashant, R.R. et al., "Detecting and Identifying the Location of Multiple Spoofing Adversaries in Wireless Network", International Journal of Computer Science and Mobile Applications, vol. 2 Issue. 5, May 2014, 1-6.
Qi, Xue et al., "Ad hoc QoS ondemand routing (AQOR) in mobile ad hoc networks", Journal of parallel and distributed computing 63.2, 2003, 154-165.
Qiu, Lili et al., "Fault Detection, Isolation, and Diagnosis in Multihop Wireless Networks", Dec. 2003, 16 pages.
Quan, Xulin "Analysis and Design of a Compact Dual-Band Directional Antenna", IEEE Antennas and Wireless Propagation Letters, vol. 11, 2012, 547-550.
Quinstar Technology, Inc., "Prime Focus Antenna (QRP series)", quinstar.com, Aug. 19, 2016, 2 pages.
Rahim, S. K. A. et al., "Measurement of wet antenna losses on 26 GHz terrestrial microwave link in Malaysia", Wireless Personal Communications 64.2, 2012, 225-231.
Rambabu, K. et al., "Compact single-channel rotary joint using ridged waveguide sections for phase adjustment", IEEE Transac-Compact single-channel rotary joint using ridged waveguide sections for phase adjustmenttions on Microwave Theory and Techniques, 51(8):1982-1986, Abstract Only, Aug. 2003, 2 pages.
Ranga, Yogesh et al., "An ultra-wideband quasi-planar antenna with enhanced gain", Progress in Electromagnetics Research C 49, 2014, 59-65.
Rangan, Sundeep et al., "Millimeter-Wave Cellular Wireless Networks: Potentials and Challenges", Proceedings of the IEEE, vol. 102, No. 3, Mar. 2014, 366-385.
Rangel, Rodrigo K. et al., "Sistema de Inspecao de Linhas de Transmissao de Energia Electrica Utilizando Veiculos Aereos Nao-Tripulados", Sep. 14-16, 2009, 1-9.
Rappaport, Theodore S. et al., "Mobile's Millimeter-Wave Makeover", Spectrum.IEEE.Org, Sep. 2014, 8 pages.
Raychaudhuri, Dipankar et al., "Emerging Wireless Technologies and the Future Mobile Internet", Cambridge University Press, Abstract Only, Mar. 2011, 1 page.
Rekimoto, Jun "SmartSkin: An Infrastructure for Freehand Manipulation on Interactive Surfaces", https://vs.inf.ethz.ch/edu/SS2005/DS/papers/surfaces/rekimoto-smartskin.pdf, 2002, 8 pages.
Ren-Bin, Zhong et al., "Surface plasmon wave propagation along single metal wire", Chin. Phys. B, vol. 21, No. 11, May 2, 2012, 9 pages.
Reynet, Olivier et al., "Effect of the magnetic properties of the inclusions on the high-frequency dielectric response of diluted composites", Physical Review B66.9: 094412, 2002, 10 pages.
RF Check, "Examples of Cell Antennas", https://web.archive.org/web/20100201214318/http//www.rfcheck.com/Examplesof-Cell-Antennas.php, Feb. 1, 2010, 1 page.
Ricardi, L. J. "Some Characteristics of a Communication Satellite Multiple-Beam Antenna", Massachusetts Institute of Technology, Lincoln Laboratory, Technical Note 1975-3, Jan. 28, 1975, 62 pages.

(56) **References Cited**

OTHER PUBLICATIONS

Rieke, M. et al., "High-Precision Positioning and Real-Time Data Processing of UAV Systems", International Archives of the Photogrammetry, Remote Sensing and Spatial Information Sciences, vol. XXXVIII-1/C22, 2011, 119-124.
Robinson, D.A. et al., "Advancing processbased watershed hydrological research using nearsurface geophysics: A vision for, and review of, electrical and magnetic geophysical methods", Hydrological Processes 22.18, Mar. 11, 2008, 3604-3635.
Robles, Rosslin John et al., "A Review on Security in Smart Home Development", International Journal of Advanced Science and Technology 15, Feb. 2010, 13-22.
Rosenberg, Uwe et al., "A novel frequency-selective power combiner/divider in single-layer substrate integrated waveguide technology", IEEE Microwave and Wireless Components Letters, vol. 23, No. 8, Aug. 2013, 406-408.
Rouse, Margaret "Transport Layer Security (TLS)", TechTarget, searchsecurity.techtarget.com, Jul. 2006, 4 pages.
Rousstia, M. W. "Switched-beam antenna array design for millimeter-wave applications", https://pure.tue.nl/ws/files/4418145/599448877400424.pdf, Jan. 1, 2011, 148 pages.
Roze, Mathieu et al., "Suspended core subwavelength fibers: towards practical designs for low-loss terahertz guidance", Optics express 19.10, 2011, 9127-9138.
Sagar, Nishant "Powerline Communications Systems: Overview and Analysis", Thesis, May 2011, 80 pages.
Sagues, Mikel et al., "Multi-tap complex-coefficient incoherent microwave photonic filters based on optical single-sideband modulation and narrow band optical filtering", Optics express 16.1, 2008, 295-303.
Sahoo, Srikanta "Faulty Node Detection in Wireless Sensor Networks Using Cluster", Apr. 2013, 212-223.
Saied, Yosra Ben et al., "Trust management system design for the internet of things: a contextaware and multiservice approach", Computers & Security 39: 351365, Abstract Only, 2013, 2 pages.
Salema, Carlos et al., "Solid Dielectric Horn Antennas", Artech House Publishers, Amazon, Book—description only, 1998, 3 pages.
Sarafi, Angeliki et al., "Hybrid wireless-broadband over power lines: A promising broadband solution in rural areas", Communications Magazine, IEEE 47.11, 2009, 140-147.
Sarnecki, Joseph et al., "Microcell design principles", Communications Magazine, IEEE 31.4, 1993, 76-82.
Saruhan, Ibrahim Halil "Detecting and Preventing Rogue Devices on the Network", SANS Institute InfoSec Reading Room, sans.org, Aug. 8, 2007, 1 page.
Scarfone, Karen et al., "Technical Guide to Information Security Testing and Assessment", National Institute of Standards and Technology, csrc.nist.gov, Special Publication, Sep. 2008, 800-115.
Scerri, Paul et al., "Geolocation of RF emitters by many UAVs", AIAA Infotech, Aerospace 2007 Conference and Exhibit, 2007, 1-13.
Schoning, Johannes et al., "Multi-Touch Surfaces: A Technical Guide", Johannes Schöning, Institute for Geoinformatics University of Munster, Technical Report TUM-I0833, 2008, 19 pages.
Sciencedaily, "New Wi-Fi antenna enhances wireless coverage", www.sciencedaily.com, Apr. 29, 2015, 2 pages.
Security Matters, "Product Overview: Introducing SilentDefense", secmatters.com, Nov. 9, 2013, 1 page.
Sembiring, Krisantus "Dynamic Resource Allocation for Cloud-based Media Processing", http://www.chinacloud.cn/upload/2013-04/13042109511919.pdf, 2013, 49-54.
Sengled, "Boost: The world's first WI-FI extending led bulb", www.sengled.com/sites/default/files/field/product/downloads/manual/a01-a60_na_user_manual.pdf, Dec. 2014, 32 pages.
Shafai, Lotfollah "Dielectric Loaded Antennas", John Wiley & Sons, Inc, www.researchgate.net/publication/227998803_Dielectric_Loaded_Antennas, Apr. 15, 2005, 82 pages.
Shafi, Mansoor et al., "Advances in Propagation Modeling for Wireless Systems", EURASIP Journal on Wireless Communications and Networking. Hindawi Publishing Corp, 2009, p. 5.
Shankland, Steven "Lowly DSL poised for gigabit speed boost", www.cnet.com, Oct. 21, 2014, 5 pages.
Sharma, Archana et al., "Dielectric Resonator Antenna for X band Microwave Application", Research & Reviews, International Journal of Advanced Research in Electrical, Electronics and Instrumentation Engineering, Oct. 2016, 9 pages.
Shekar, Chandra P. "Transmission Line Fault Detection & Indication through GSM", IRD India, ISSN (Online): 2347-2812, vol. 2, Issue 5, 2014, 28-30.
Shila, Devu M. "Load-Aware Traffic Engineering for Mesh Networks", Computer Communications 31.7, 2008, 1460-1469.
Shimabukuko, F.I. et al., "Attenuation measurement of very low-loss dielectric waveguides by the cavity resonator method in the millimeter/submillimeter wavelength range", No. TR-0086A (2925-06)-1, Aerospace Corp El Segundo CA Electronics Research Lab, Mar. 20, 1989, 35 pages.
Shindo, Shuichi et al., "Attenuation measurement of cylindrical dielectric-rod waveguide", Electronics Letters 12.5, 1976, 117-118.
Shumate, Paul W. et al., "Evolution of fiber in the residential loop plant", IEEE Communications Magazine 29.3, 1991, 68-74.
Sievenpiper, D.F. et al., "Two-dimensional beam steering using an electrically tunable impedance surface", IEEE Transactions on Antennas and Propagation, vol. 51, No. 10, Nov. 2003, pp. 2713-2722.
Silver, Ralph U. "Local Loop Overview", National Communications System (NCS), BellSouth Network Training, newnetworks.com, Aug. 2016, 100 pages.
Silvonen, Kimmo "Calibration and DeEmbedding of Microwave Measurements Using Any Combination of Oneor TwoPort Standards", Publication of the Circuit Theory Laboratory, CT4, 1987, 1-28.
Simionovici, Ana-Maria et al., "Predictive Modeling in a VoIP System", 2013, 32-40.
Simons, Rainee N. "Coplanar Waveguide Feeds for Phased Array Antennas", Solid State Technology Branch of NASA Lewis Research Center Fourth Annual Digest, Conference on Advanced Space Exploration Initiative Technologies cosponsored by AIAA, NASA and OAI, 1992, 1-9.
Singh, Seema M. et al., "Broadband Over Power Lines a White Paper", State of New Jersey, Division of the Ratepayer Advocate, NJ, Oct. 2016, 67 pages.
Sommerfeld, A. "On the propagation of electrodynamic waves along a wire", Annals of Physics and Chemistry New Edition, vol. 67, No. 2, 1899, 72 pages.
Song, Kaijun et al., "Broadband radial waveguide power amplifier using a spatial power combining technique", www.mtech.edu/academics/mines/geophysical/xzhou/publications/songfanzhou_2009b_impa.pdf, 2009, 7 pages.
Sospedra, Joaquim et al., "Badalona Oil PierBased Met-Ocean Monitoring Station", Campbell Scientific, www.campbellsci.com, Nov. 2016, 2 pages.
Souryal, Michael R. et al., "Rapidly Deployable Mesh Network Testbed", https://pdfs.semanticscholar.org/f914/1ce6999c4095eab3bdea645745761ebe5141.pdf, 2009, 6 pages.
Spencer, D G. "Novel Millimeter ACC Antenna Feed", IEEE Colloquium on Antennas for Automotives, Mar. 10, 2000, 10 pages.
Stancil, Daniel D. et al., "High-speed internet access via HVAC ducts: a new approach", Global Telecommunications Conference, IEEE vol. 6, 2001, 4 pages.
Steatite, "Custom Horn Antennas", Steatite QPar Antennas, steatiteqparantennas.co.uk, May 21, 2015, 1 page.
Strahler, Olivier "Network Based VPNs", SANS Institute InfoSec Reading Room, www.sans.org, Aug. 2002, 18 pages.
Strieby, M.E. et al., "Television transmission over wire lines", American Institute of Electrical Engineers, Transactions of the 60.12: 1090-1096, Abstract Only, 1941, 2 pages.
STUF, "How to Use STUF", STUF Page Link Info, www.crossdevices.com, http://www.crossdevices.com/cross_devices_010.htm, 2015, 1 page.
Sun, Zhi et al., "Magnetic Induction Communications for Wireless Underground Sensor Networks", IEEE Transactions on Antennas and Propagation, vol. 58, No. 7, Jul. 2010, 2426-2435.

(56) **References Cited**

OTHER PUBLICATIONS

Sundqvist, Lassi "Cellular Controlled Drone Experiment: Evaluation of Network Requirements", 2015, 71 pages.
Szabó, Csaba A. "European Broadband Initiatives with Public Participation", Broadband Services: 255, 2005, 305 pages.
Szczys, Mike "Cameras Perch on Power Lines, Steal Electricity", http://hackaday.com/2010/06/28/cameras-perch-on-power-lines-steal-electricity/, Discloses cameras that clamp on to power lines and use induction as a power source., 2010, 1 page.
Taboada, John M. et al., "Thermo-optically tuned cascaded polymer waveguide taps", Applied physics letters 75.2, 1999, 163-165.
Talbot, David "Adapting Old-Style Phone Wires for Superfast Internet", Jul. 30, 2013, 3 pages.
Tantawi, Sami G. et al., "High-power multimode X-band rf pulse compression system for future linear colliders", Physical Review Special Topics-Accelerators and Beams, 1098-4402/05/8(4)/042002, 2005, 19 pages.
Tech Briefs Media Group, "Tapered Waveguides Improve Fiber Light Coupling Efficiency", www.techbriefs.com, Jan. 1, 2006, 2 pages.
Templeton, Steven J. et al., "Detecting Spoofed Packets", DARPA Information Survivability Conference and Exposition, vol. 1, IEEE, 2003, 12 page.
Teng, Ervin et al., "Aerial Sensing and Characterization of ThreeDimensional RF Fields", Univ. at Buffalo, cse.buffalo.edu, Sep. 2016, 6 pages.
Tesoriero, Ricardo et al., "Tracking autonomous entities using RFID technology", IEEE Transactions on Consumer Electronics 55.2, 2009, 650-655.
Theoleyr, Fabrice "Internet of Things and M2M Communications", books.google.com, ISBN13: 9788792982483, Book—description only, Apr. 17, 2013, 1 page.
Thornton, John et al., "Modern lens antennas for communications engineering", vol. 39, 2013, 48 pages.
Thota, Saigopal et al., "Computing for Rural Empowerment: Enabled by Last-Mile Telecommunications (Extended Version)", Technical Report, 2013, 14 pages.
Thottapan, M. "Design and simulation of metal PBG waveguide mode launcher", www.researchgate.net/profile/Dr_M_Thottappan/publication/262415753_Design_and_Simulation_of_Metal_PBG_Waveguide_Mode_Launcher/links/0f317537ad93a5e2a4000000.pdf, 2014, 383-387.
Tillack, M. S. et al., "Configuration and engineering design of the ARIES-RS tokamak power plant", https://www.researchgate.net/publication/222496003_Configuration_and_engineering_design_of_the_ARIES-RS_tokamak_power_plant, 1997, 87-113.
Tucson Electric Power, "Energy-Harvesting Power Supply", http://sdpm.arizona.edu/projects/project-publi/upid/38a8cf3b42f35576de25de1f6dcc20f3, Discloses a project to harvest energy from a power line and that a device was built that clamps onto a power line., 2016, 1 page.
TYCO Electronics, "Raychem: Wire and Cable", Dimensions 2:1, 1996, 58 pages.
UK Essays, "Beam Adaptive Algorithms for Smart Antennas Computer Science Essay", www.ukessays.com, Mar. 23, 2015, 21 pages.
Valladares, Cindy "20 Critical Security Controls: Control 7—Wireless Device Control", Tripwire—The State of Security, www.tripwire.com, Mar. 21, 2013, 10 pages.
Van Atta, L.C. "Contributions to the antenna field during World War II", www.nonstopsystems.com/radio/pdf-hell/article-IRE-5-1962.pdf, 1962, 692-697.
Vogelgesang, Ralf et al., "Plasmonic nanostructures in aperture-less scanning near-field optical microscopy (aSNOM)", physica status solidi (b) 245.10, 2008, 2255-2260.
Volat, C. et al., "De-icing/anti-icing techniques for power lines: current methods and future direction", Proceedings of the 11th International Workshop on Atmospheric Icing of Structures, Montreal, Canada, Jun. 2005, 11 pages.
Wade, Paul "Multiple Reflector Dish Antennas", www.w1ghz.org/antbook/conf/Multiple_reflector_antennas.pdf, 2004, 45 pages.
Wagter, Herman "Fiber-to-the-X: the economics of last-mile fiber", ARS Technica, www.arstechnica.com, Mar. 31, 2010, 3 pages.
Wake, David et al., "Radio over fiber link design for next generation wireless systems", Journal of Lightwave Technology 28.16, 2010, 2456-2464.
Wang, Hao et al., "Dielectric Loaded Substrate Integrated Waveguide (SIW)—Plan Horn Antennas", IEEE Transactions on Antennas and Propagation, IEEE Service Center, Piscataway, NJ, US, vol. 56, No. 3, Mar. 1, 2010, 640-647.
Wang, Jing et al., "The influence of optical fiber bundle parameters on the transmission of laser speckle patterns", Optics express 22.8, 2014, 8908-8918.
Wang, Wei "Optimization Design of an Inductive Energy Harvesting Device for Wireless Power Supply System Overhead High-Voltage Power Lines", https://pdfs.semanticscholar.org/3941/601af7a21d55e8b57ab0c50d5f1d9f9f6868.pdf, Discloses an induction based energy harvesting device that takes energy from overhead powerlines (Figure 4)., 2016, 16 pages.
Wang, Xingfu et al., "Zigzag coverage scheme algorithm & analysis for wireless sensor networks", Network Protocols and Algorithms 5.4, 2013, 19-38.
Washiro, Takanori "Applications of RFIDF over power line for Smart Grid", Power Line Communications and Its Applications (ISPLC), 2012 16th IEEE International Symposium on. IEEE, 2012, 83-87.
Wenger, N. "The launching of surface waves on an axial-cylindrical reactive surface", IEEE Transactions on Antennas and Propagation 13.1, 1965, 126-134.
Werner, Louis B. et al., "Operation Greenhouse", Scientific Director's Report of Atomic Weapon Tests at Eniwetok, Annex 6.7 Contimation-Decontamination Studies Naval Radiological Defense Lab, 1951, 209 pages.
Wikipedia, "Angular Momentum of Light", https://en.wikipedia.org/wiki/Angular_momentum_of light, Nov. 10, 2016, 1-7.
Wilkes, Gilbert "Wave Length Lenses", Dec. 5, 1946, 49 pages.
Wilkins, George A. "Fiber Optic Telemetry in Ocean Cable Systems", Chapter in new edition of Handbook of Oceanographic Winch, Wire and Cable Technology, Alan H. Driscoll, Ed, 1986, 50 pages.
Wolfe, Victor et al., "Feasibility Study of Utilizing 4G LTE Signals in Combination With Unmanned Aerial Vehicles for the Purpose of Search and Rescue of Avalanche Victims (Increment 1)", University of Colorado at Boulder, Research Report, 2014, 26 pages.
Wolff, Christian "Phased Array Antenna", Radar Tutorial, web.archive.org, radartutorial.eu, Oct. 21, 2014, 2 pages.
Won Jung, Chang et al., "Reconfigurable Scan-Beam Single-Arm Spiral Antenna Integrated With RF-MEMS Switches", IEEE Transactions on Antennas and Propagation, vol. 54, No. 2, Feb. 2006, 455-463.
Woodford, Chris "How do touchscreens work?", www.explainthatstuff.com/touchscreens.html, Aug. 23, 2016, 8 pages.
Wu, Xidong et al., "Design and characterization of singleand multiplebeam mmwave circularly polarized substrate lens antennas for wireless communications", Microwave Theory and Techniques, IEEE Transactions on 49.3, 2001, 431-441.
Xi, Liu Xiao "Security services in SoftLayer", Sep. 21, 2015, 18 pages.
Xia, Cen et al., "Supermodes for optical transmission", Optics express 19.17, 2011, 16653-16664.
Xiao, Shiyi et al., "Spin-dependent optics with metasurfaces", Nanophotonics 6.1, 215-234., 2016, 215-234.
Yang, et al., "Power line sensornet—a new concept for power grid monitoring", IEEE Power Engineering Society General Meeting, Abstract Only, 2006, pp. 8.
Yang, Yi "Power Line Sensor Networks for Enhancing Power Line Reliability and Utilization", Georgia Institute of Technology, https://smartech.gatech.edu/bitstream/handle/1853/41087/Yang_Yi_201108_phd.pdf, Apr. 26, 2011, 264 pages.
Yeh, C. et al., "Ceramic Waveguides", Interplanetary Network Progress Report 141.26: 1, May 15, 2000, 21 pages.

(56) **References Cited**

OTHER PUBLICATIONS

Yeh, C. et al., "Thin-Ribbon Tapered Coupler for Dielectric Waveguides", 5/151994, 42-48.
Yilmaz, et al., "Self-optimization of coverage and capacity in LTE using adaptive antenna systems", Aalto University, Feb. 2010, 72 pages.
Yousuf, Muhammad Salman "Power line communications: An Overview Part I", King Fand University of Petroleum and Minerals, Dhahran, KSA, 2008, 5 pages.
Yu, Shui et al., "Predicted packet padding for anonymous web browsing against traffic analysis attacks", Information Forensics and Security, IEEE Transactions on 7.4, http://nsp.org.au/syu/papers/tifs12.pdf, 2012, 1381-1393.
Zelby, Leon W. "Propagation Modes on a Dielectric Coated Wire", Journal of The Franklin Institute, vol. 274(2), Aug. 1962, pp. 85-97.
Zhang, "Modified Tapered Slot-line Antennas for Special Applications", REV Journal on Electronics and Communications, vol. 2, Jul.-Dec. 2012, 106-112.
Zhang, Ming et al., "PlanetSeer: Internet Path Failure Monitoring and Characterization in Wide Area Services", OSDI, vol. 4, 2004, 33 pages.
Zhao, et al., "Energy harvesting for a wireless-monitoring system of overhead high-voltage power lines", IET Generation, Transmission & Distribution 7, IEEE Xplore Abstract, 2013, 2 pages.
Zheng, Zhu et al., "Efficient coupling of propagating broadband terahertz radial beams to metal wires", Optics express 21.9, 2013, 10642-10650.
Zucker, Francis J. "Surface-Wave Antennas", Antenna Engineering Handbook, Chapter 10, 2007, 32 pages.
Akalin, Tahsin et al., "Single-Wire Transmission Lines at Terahertz Frequencies", IEEE Transactions on Microwave Theory and Techniques, Vol. 54, No. 6, 2006, 2762-2767.
Wang, Kanglin , "Dispersion of Surface Plasmon Polaritons on Metal Wires in the Terahertz Frequency Range", Physical Review Letters, PRL 96, 157401, 2006, 4 pages.
"International Search Report and Written Opinion", PCT/US2018/015634, dated Jun. 25, 2018, 8 pages.

* cited by examiner

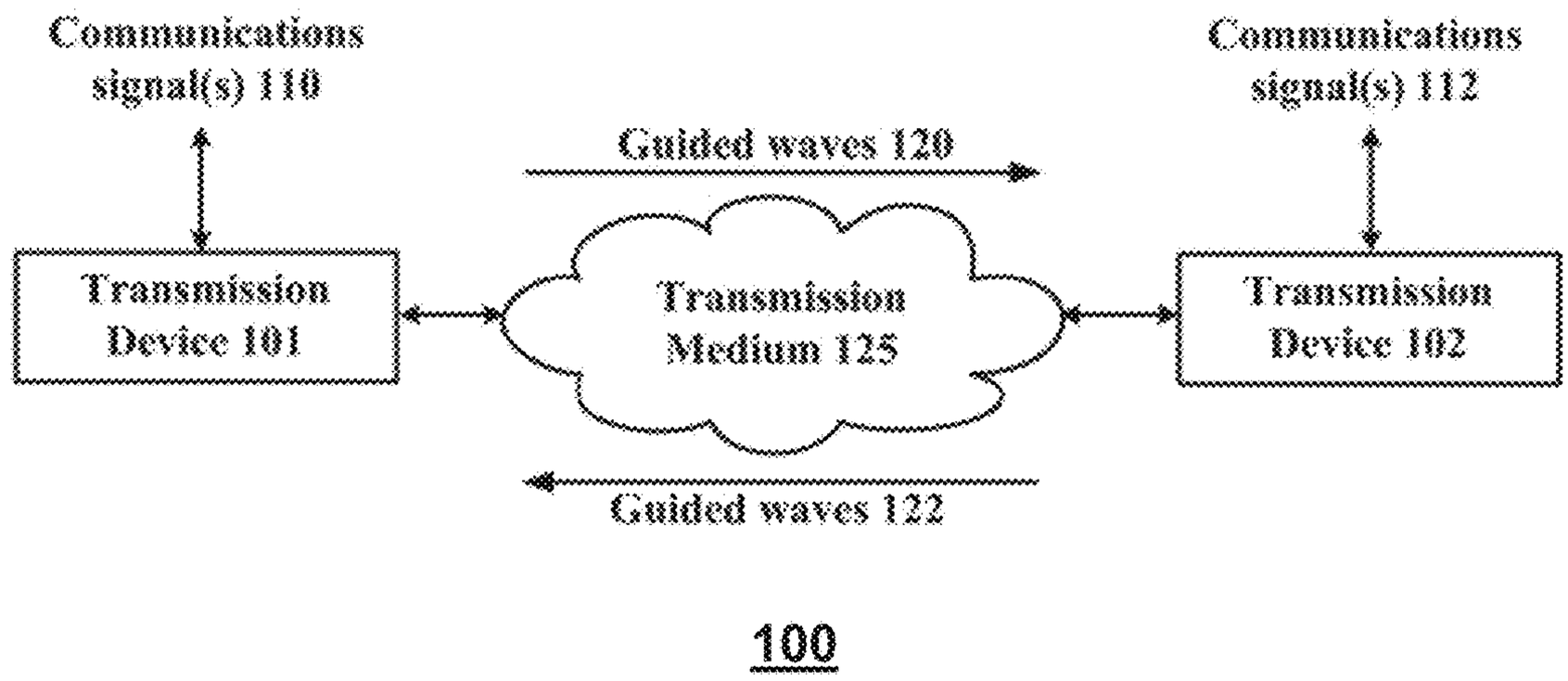
Communications signal(s) 110
Communications signal(s) 112
Guided waves 120
Transmission Device 101
Transmission Medium 125
Transmission Device 102
Guided waves 122
100

FIG. 1

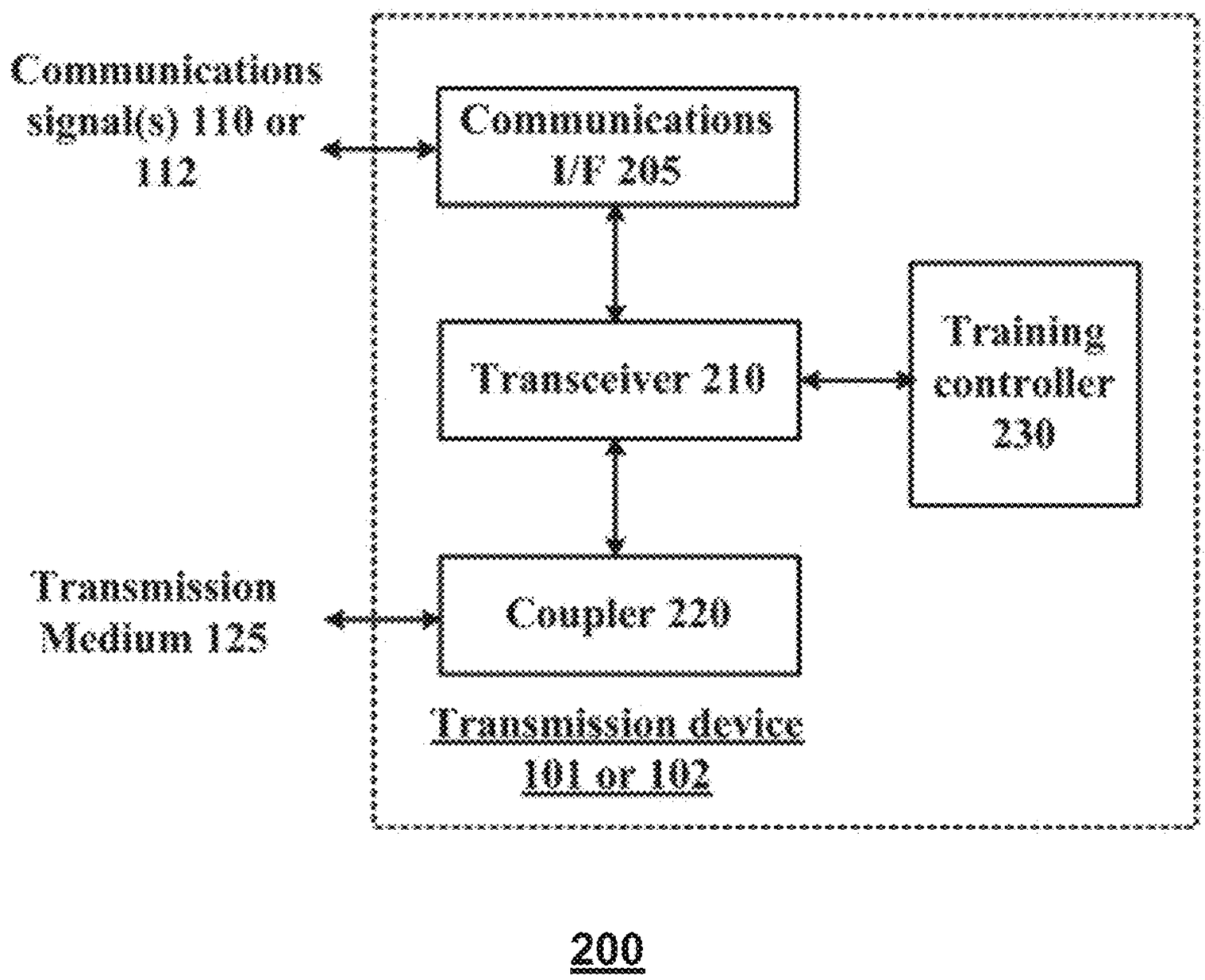
Communications signal(s) 110 or 112
Communications I/F 205
Transceiver 210
Training controller 230
Transmission Medium 125
Coupler 220
Transmission device 101 or 102
200

FIG. 2

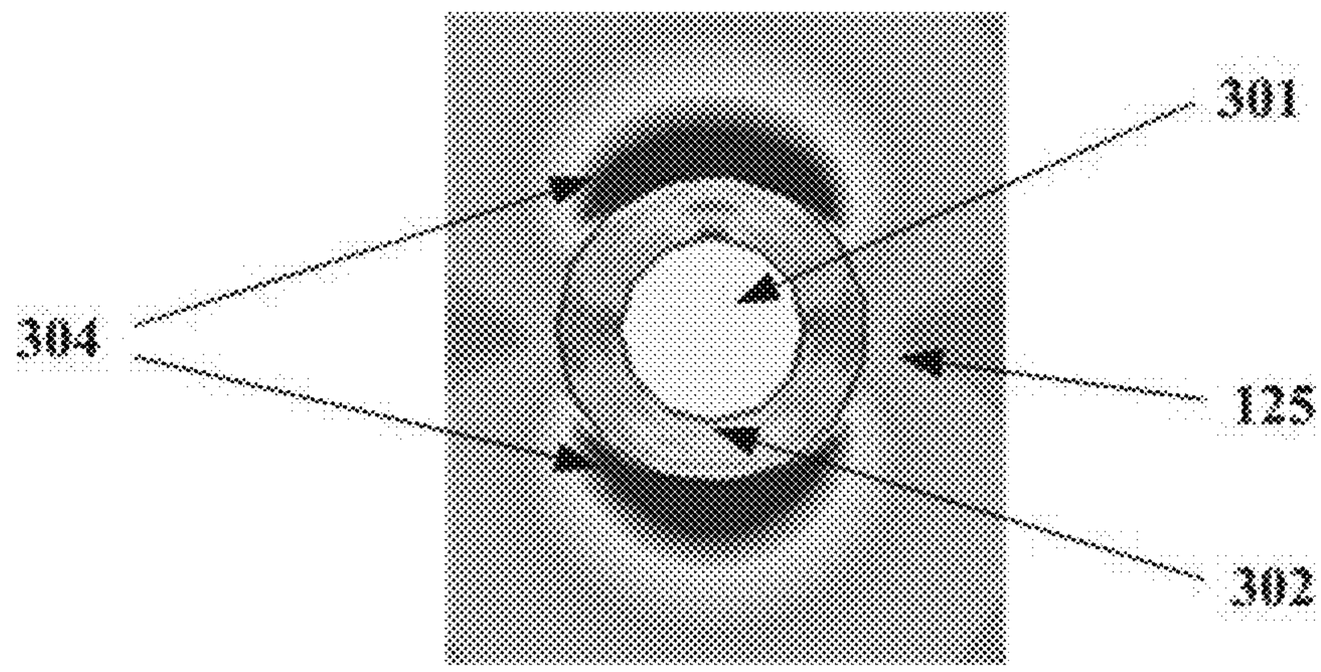


300

FIG. 3

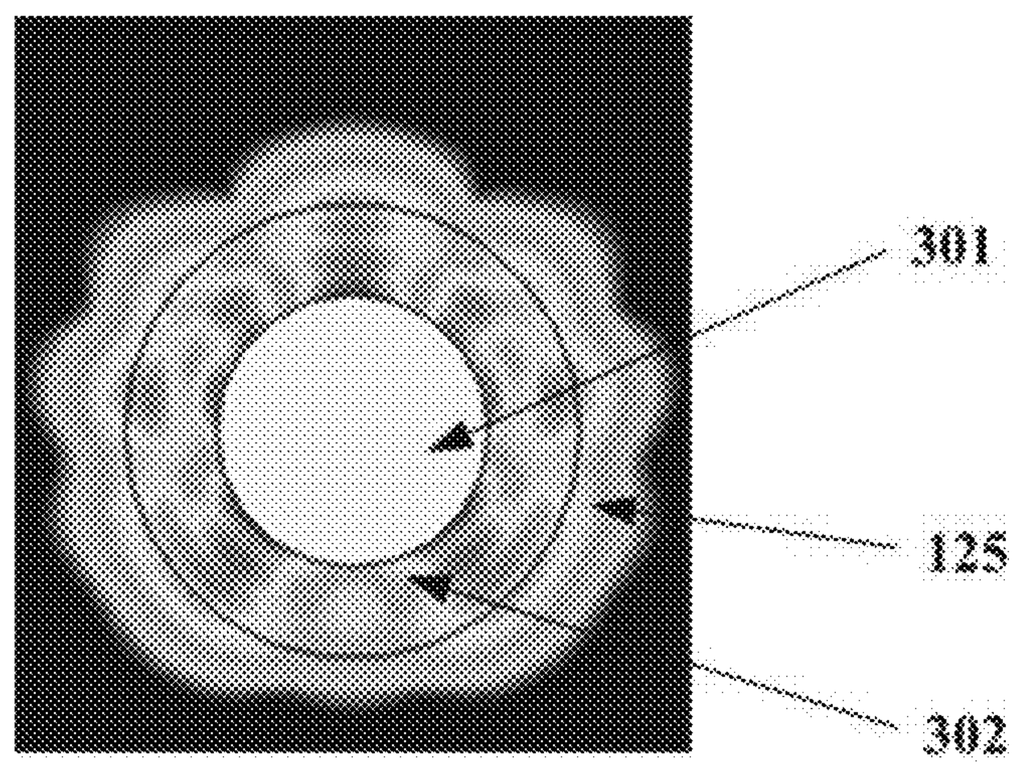


400

FIG. 4

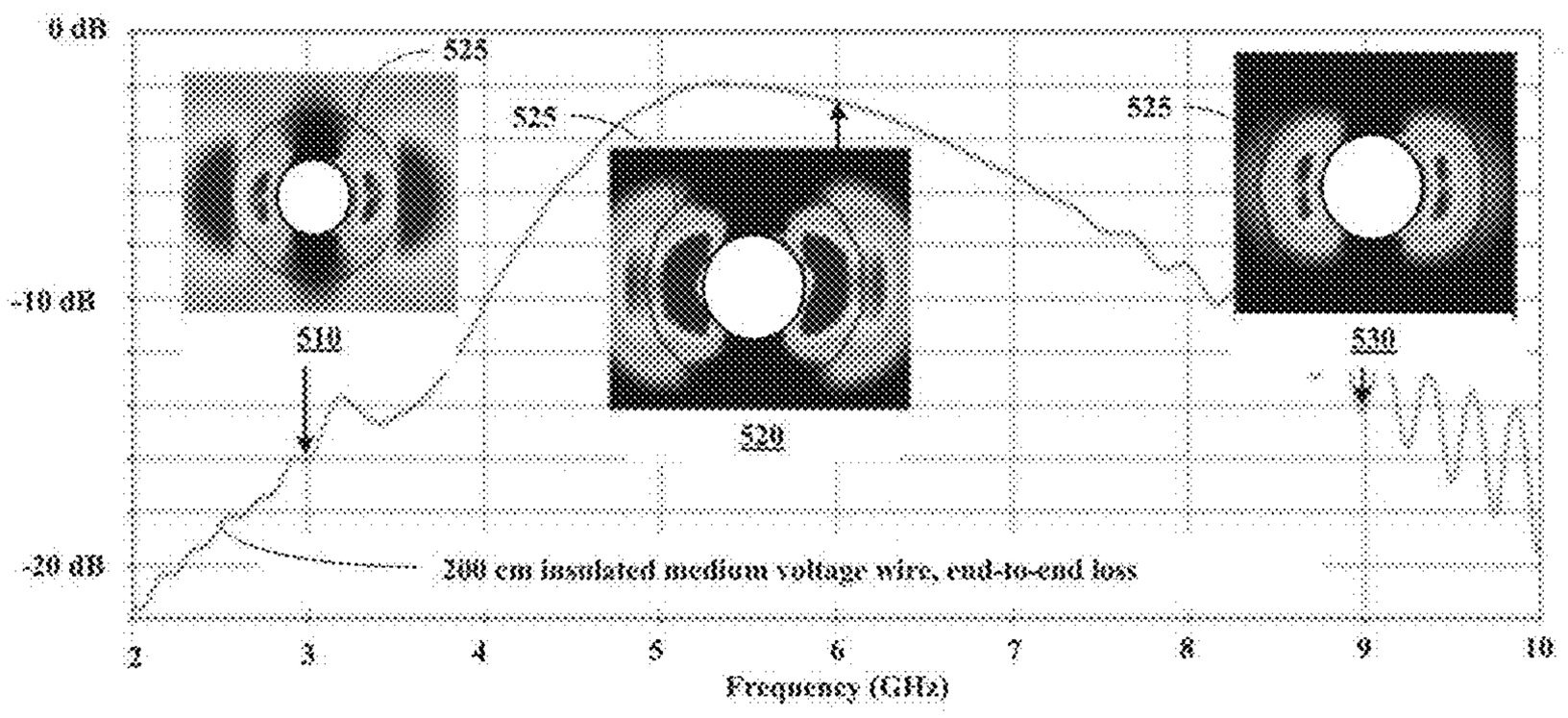


500

FIG. 5A

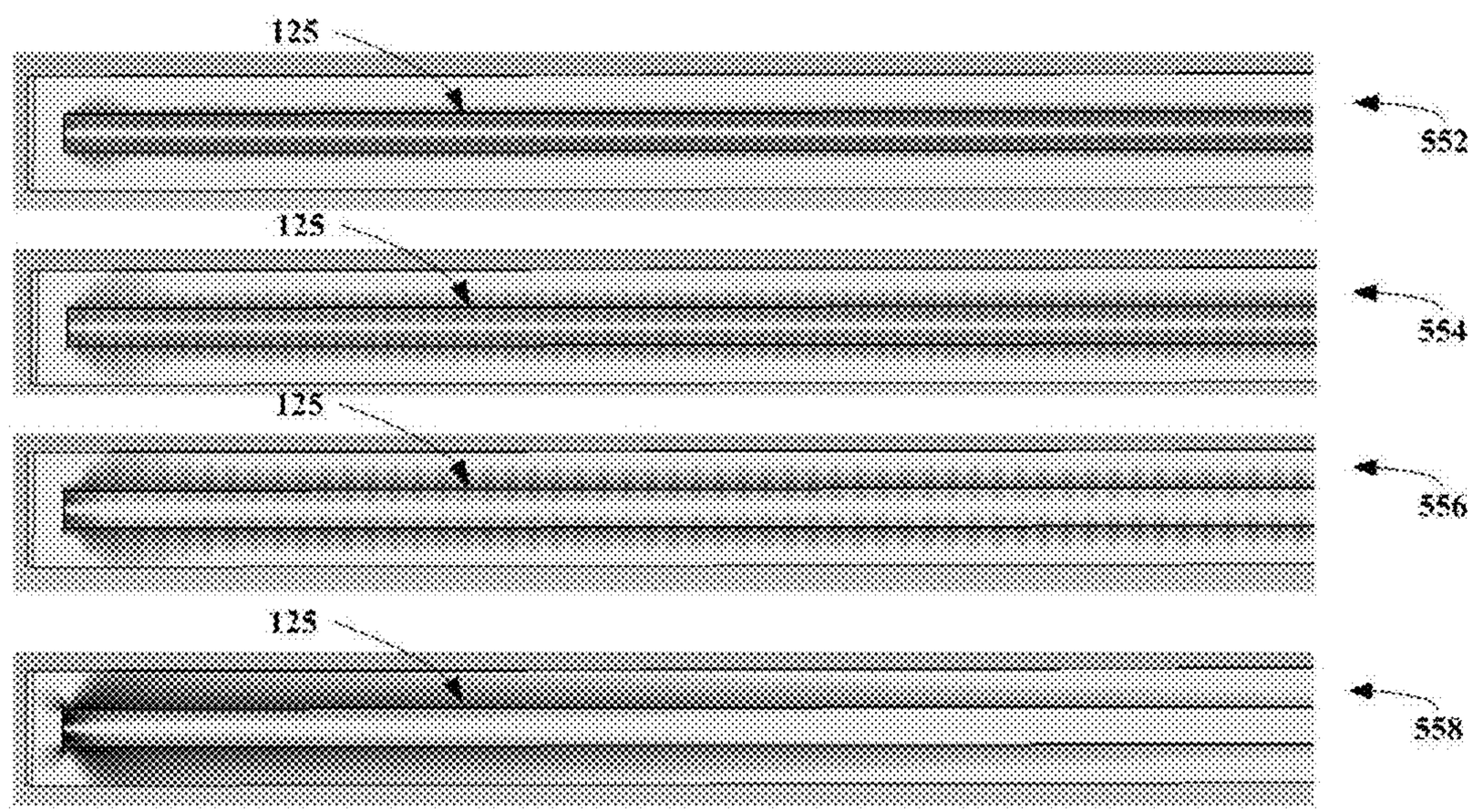


550

FIG. 5B

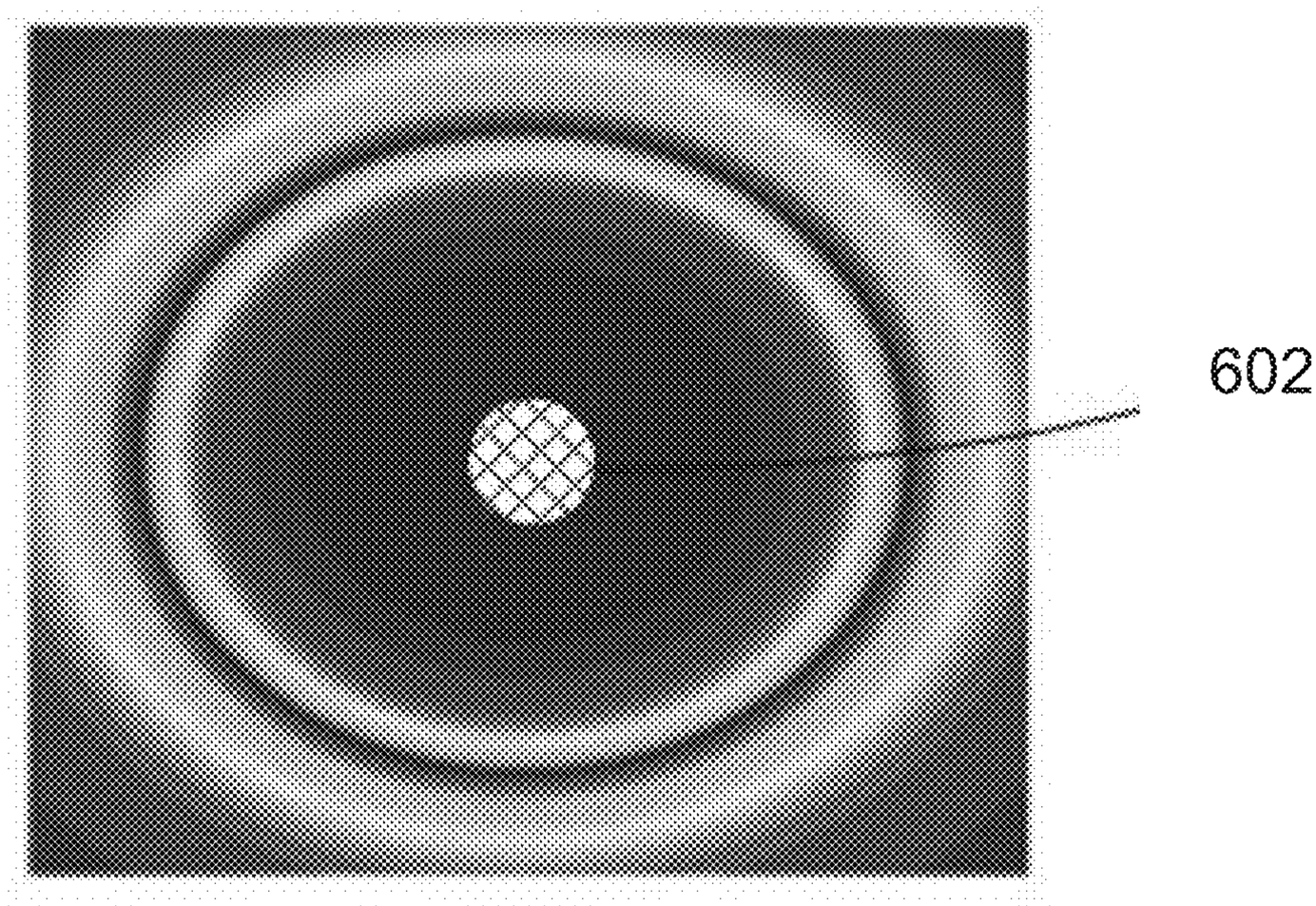


600

FIG. 6

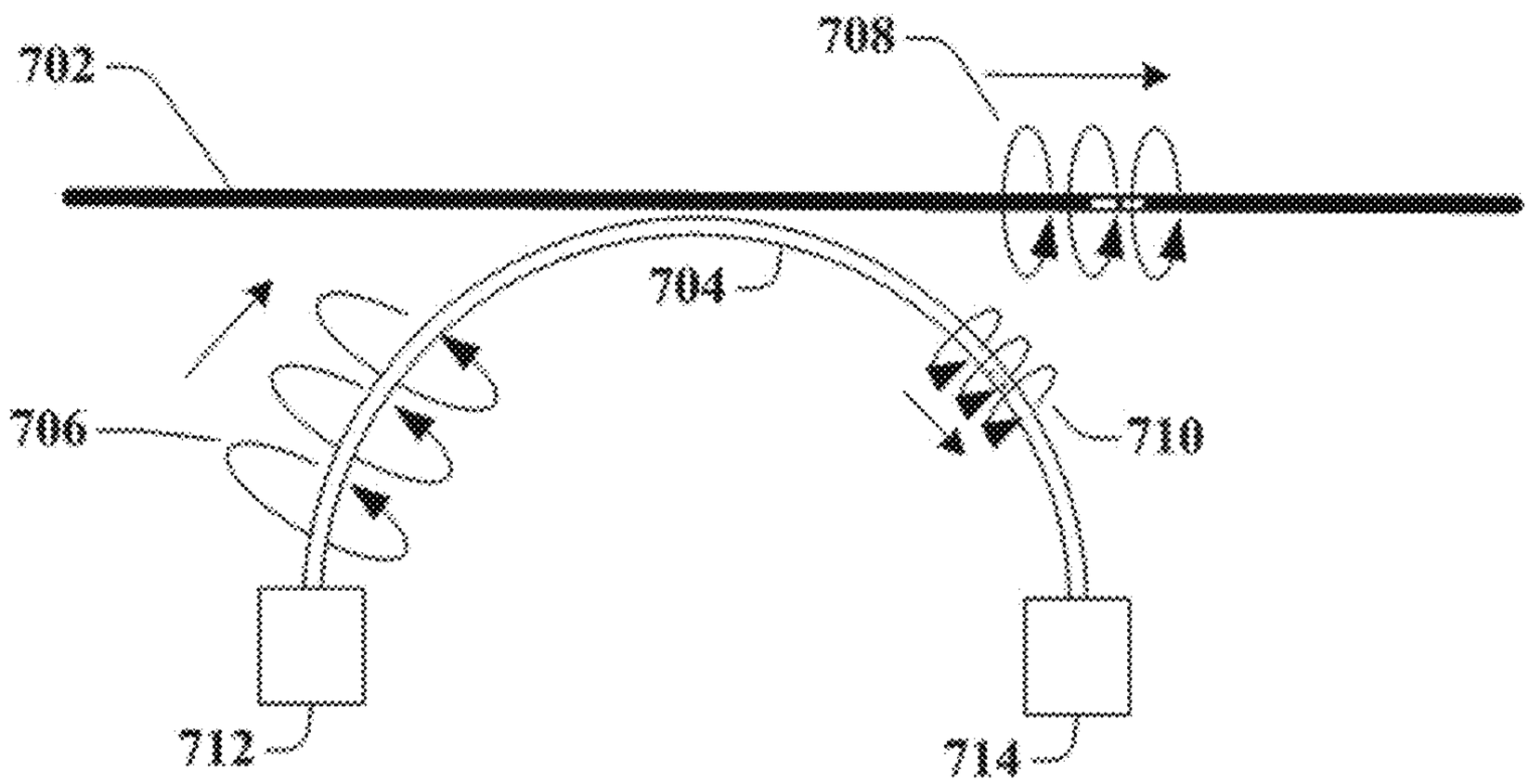


700

FIG. 7

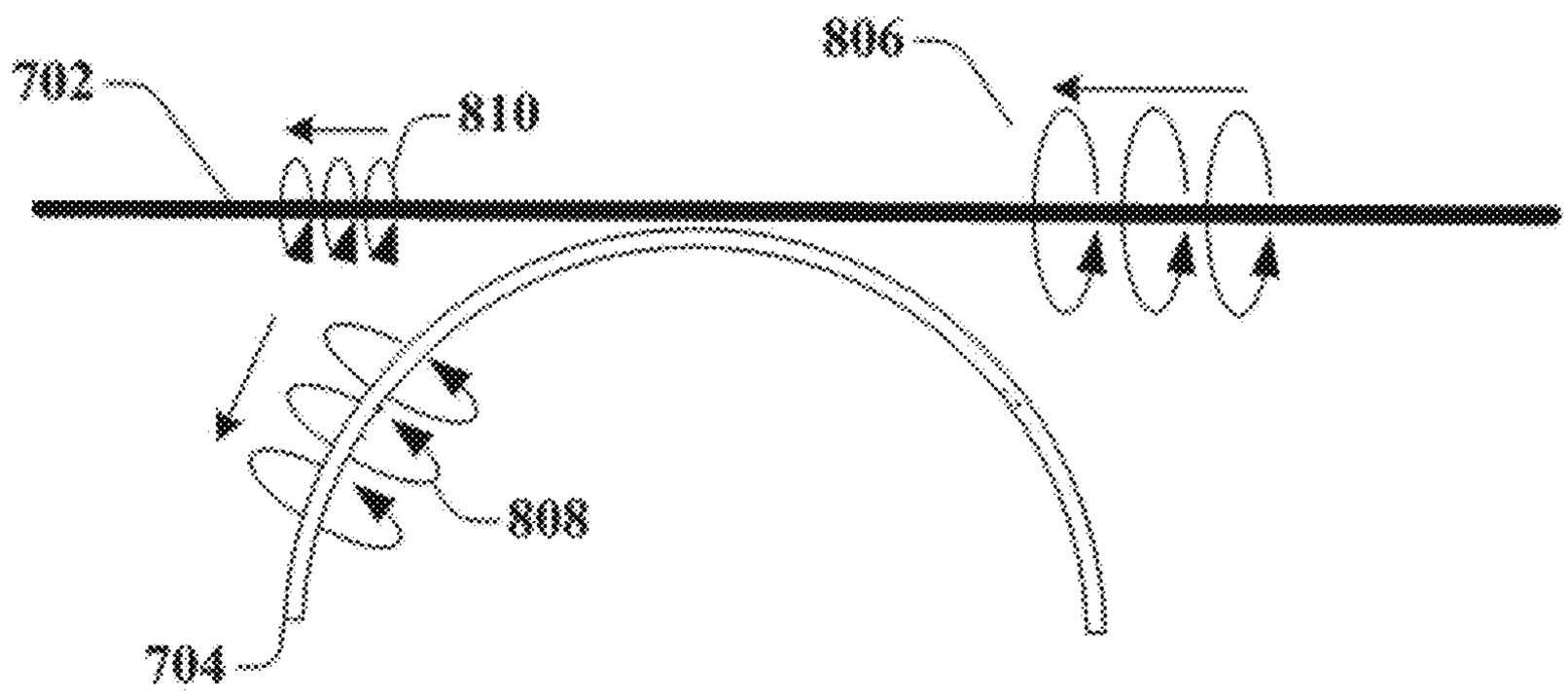


800

FIG. 8

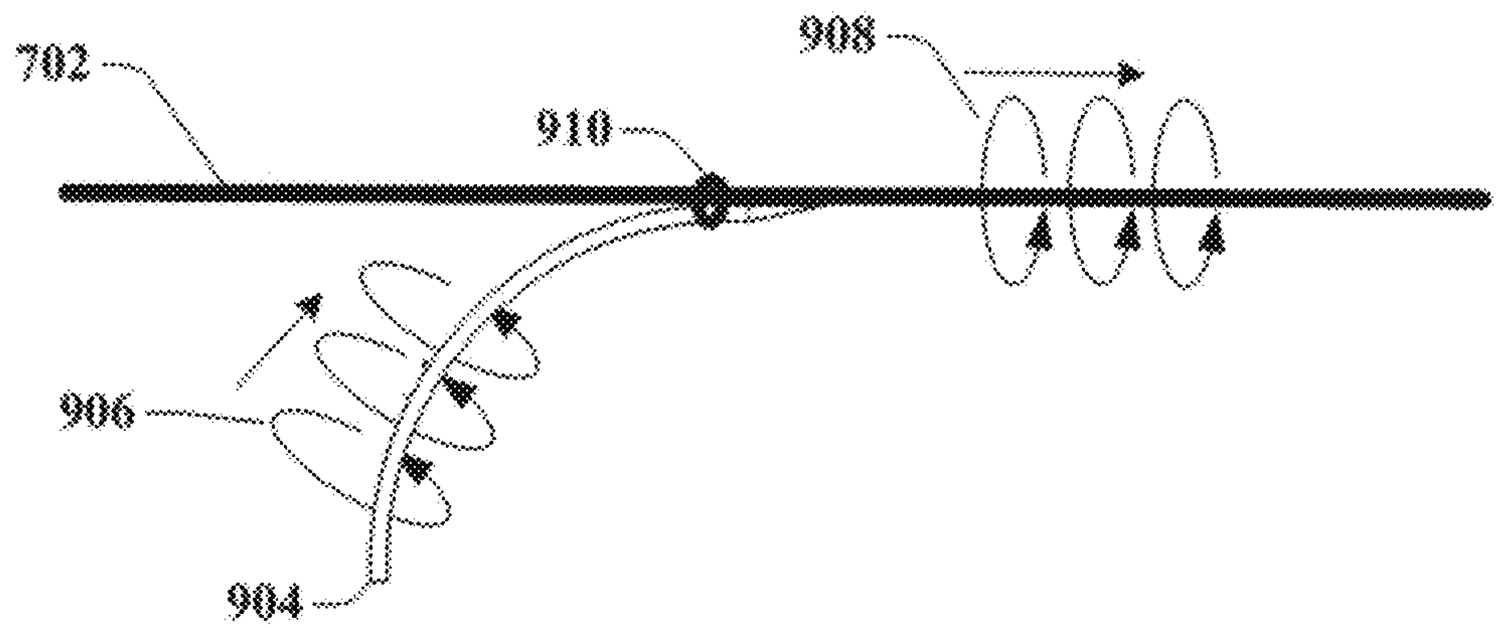


900

FIG. 9A

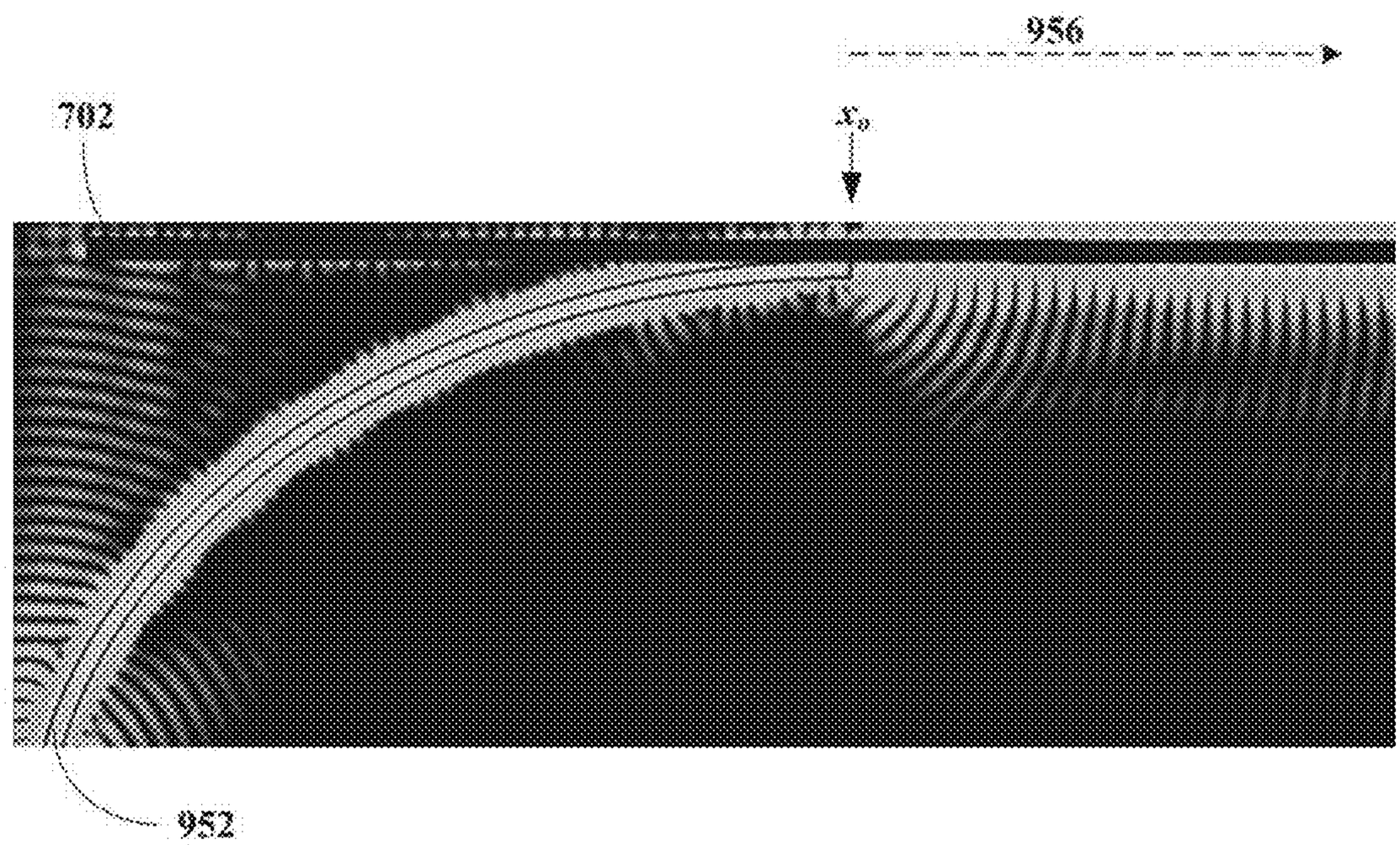


950

FIG. 9B

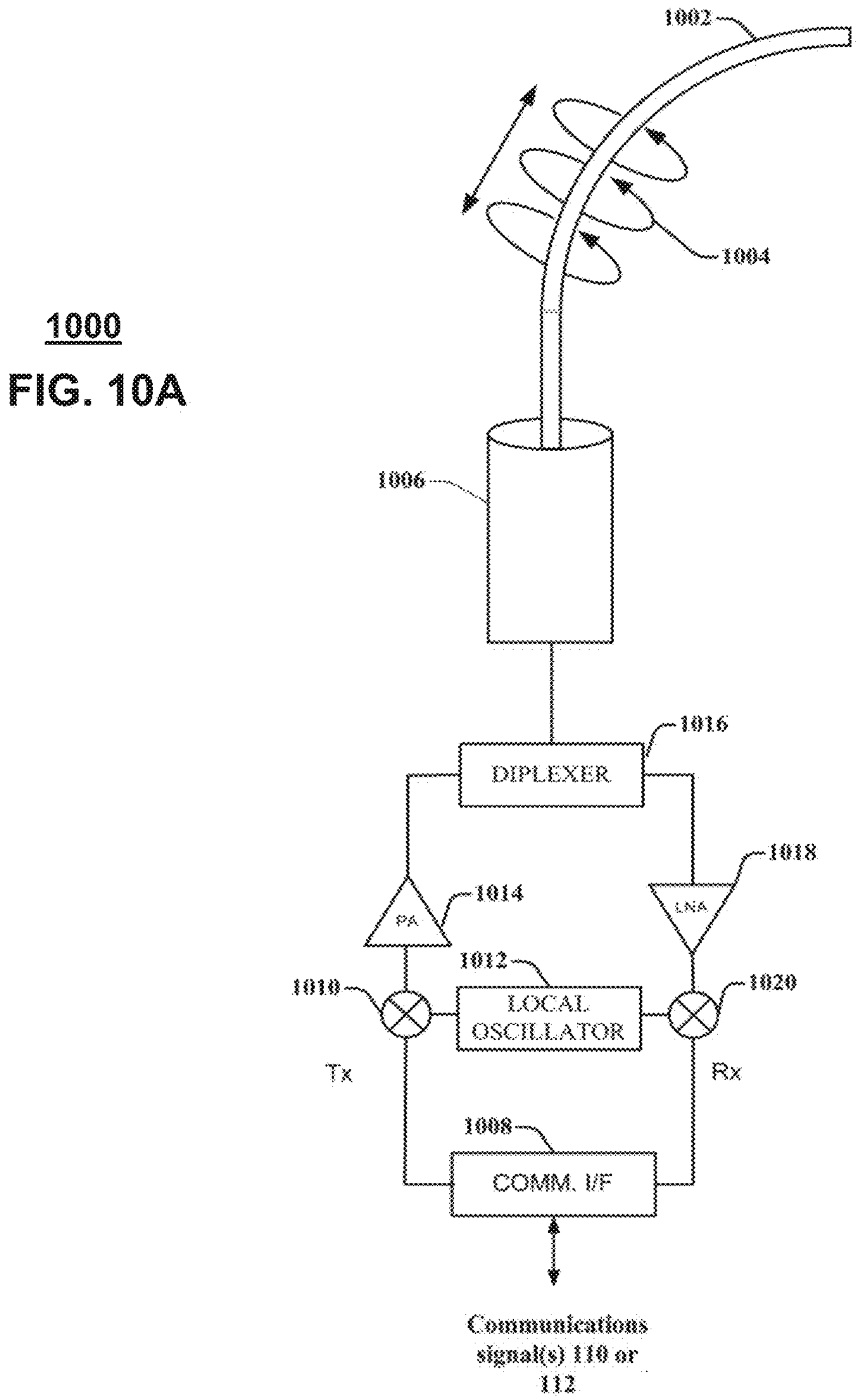
1000
1002
1004
1006
1016
DIPLEXER
1018
LNA
1014
PA
1012
1010
LOCAL OSCILLATOR
1020
Tx
Rx
1008
COMM. I/F
Communications signal(s) 110 or 112

FIG. 10A

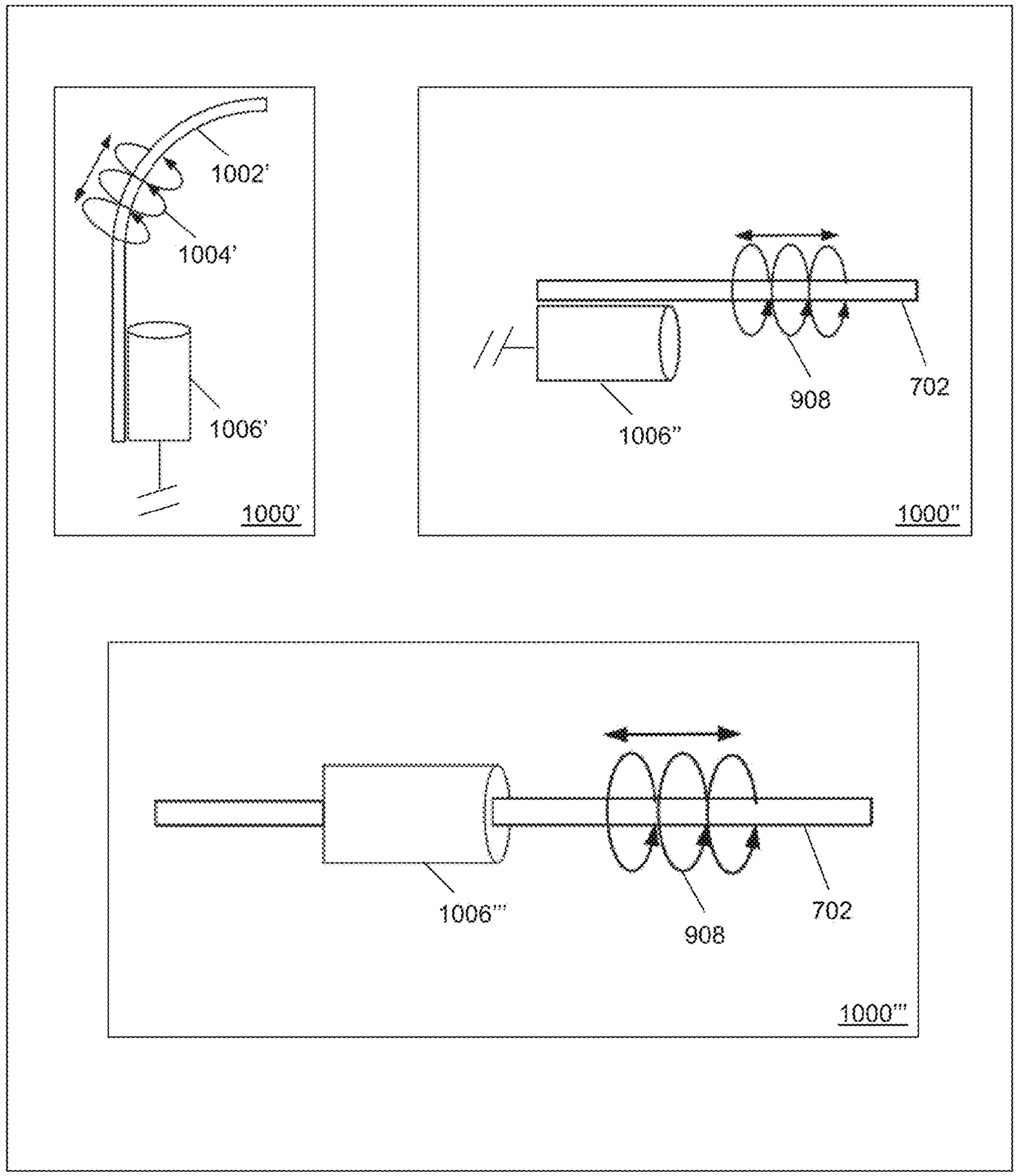


FIG. 10B

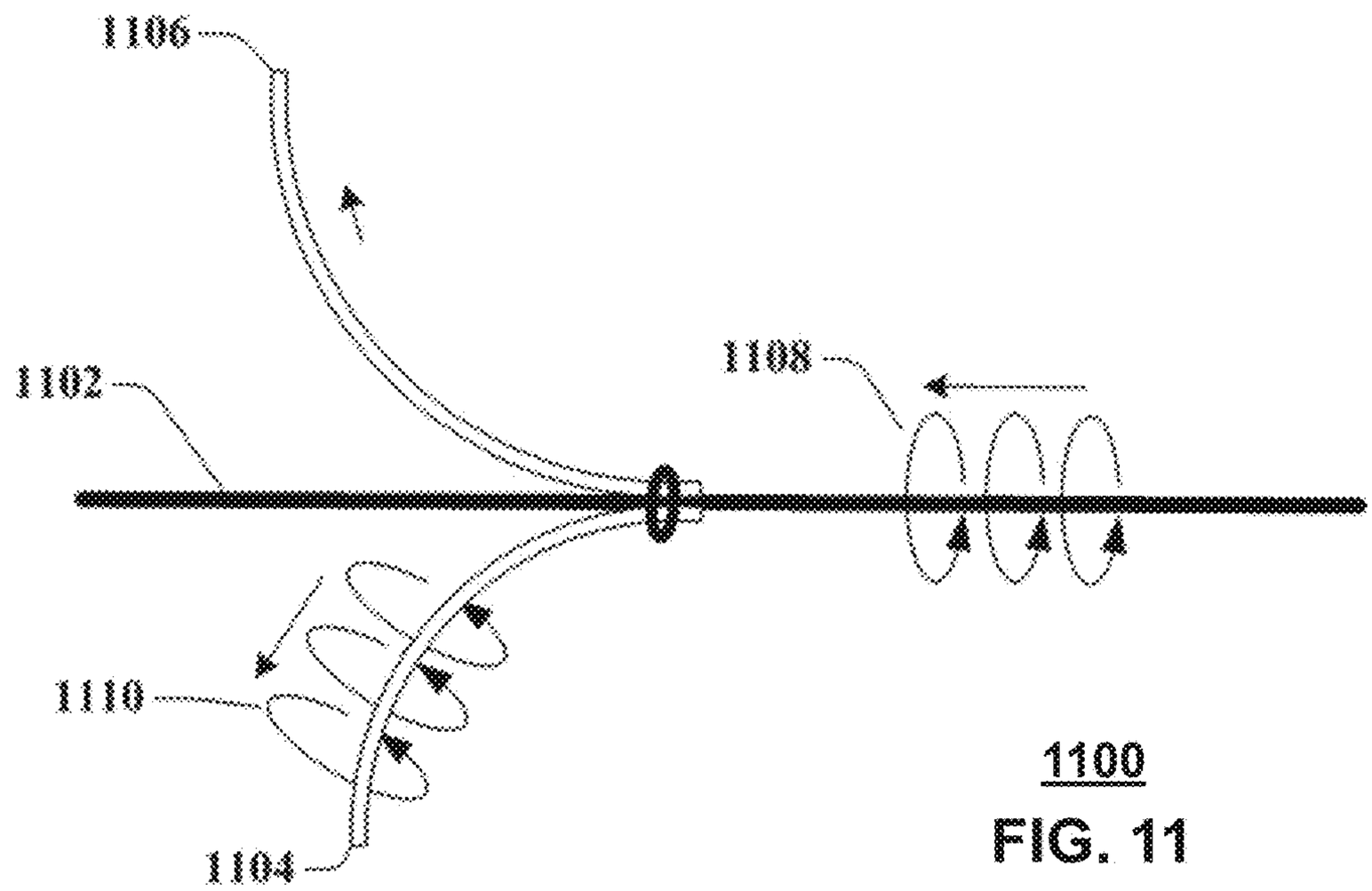


1100

FIG. 11

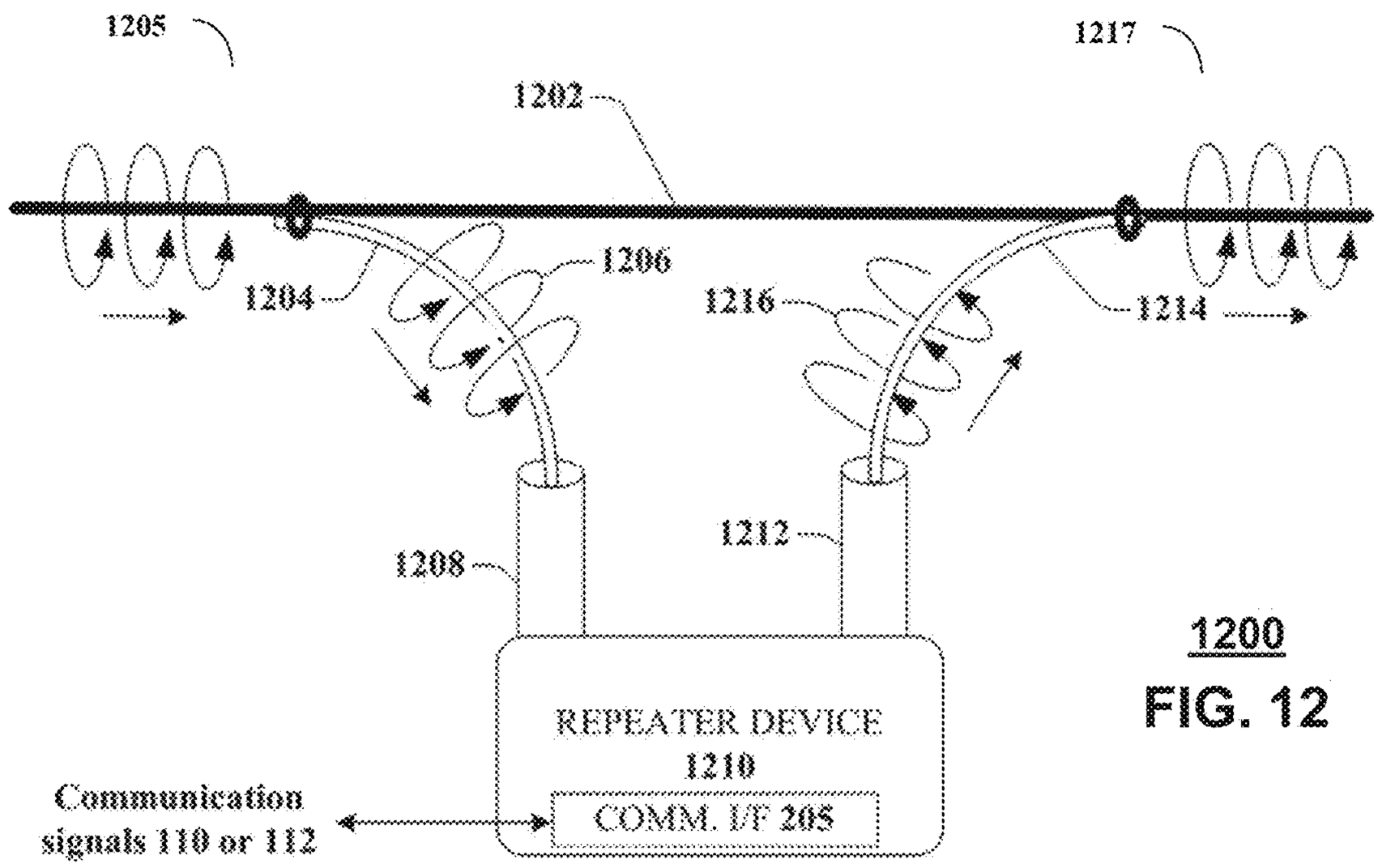


1200

FIG. 12

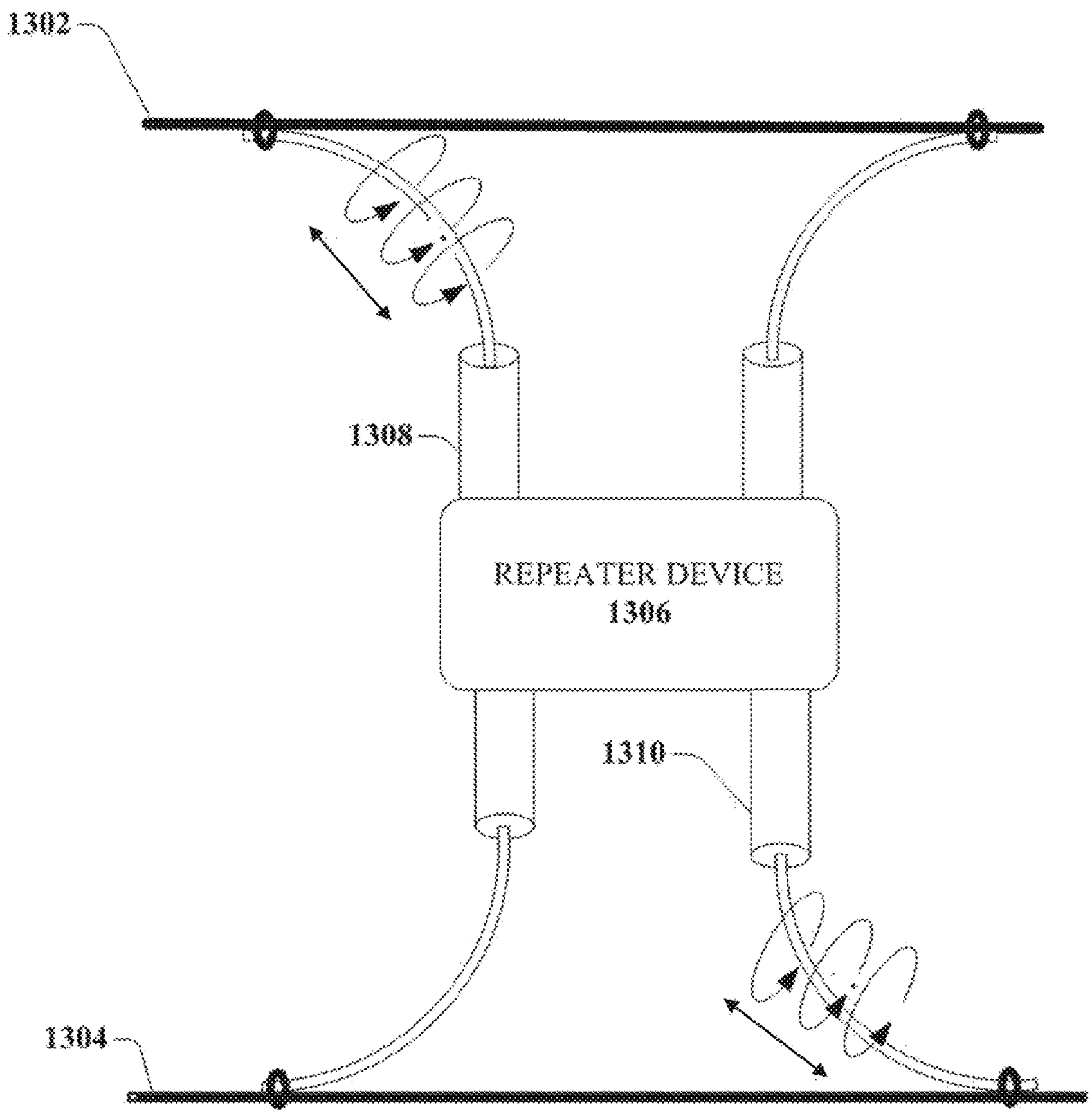


1300

FIG. 13

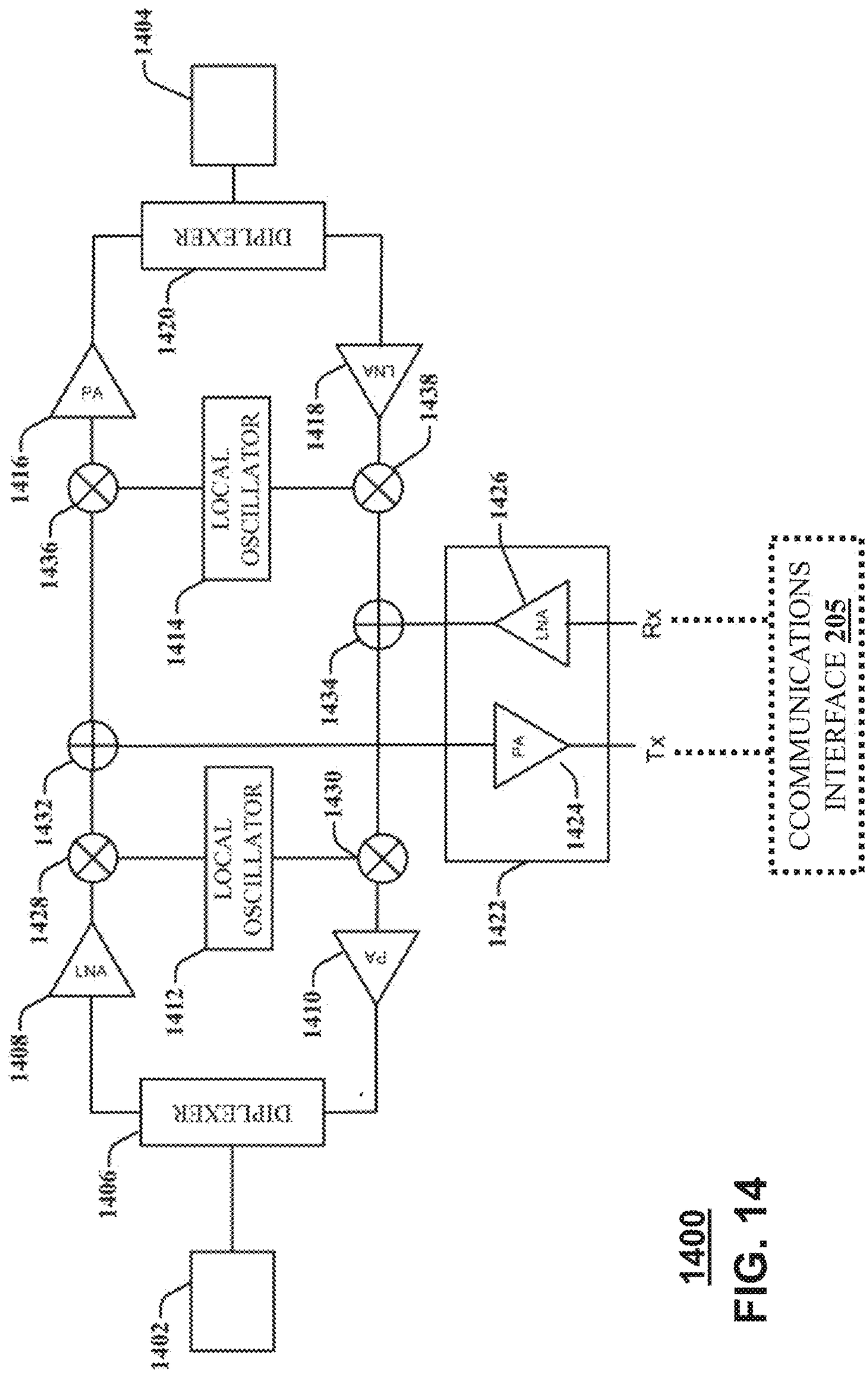
1404
DIPLEXER
1420
PA
1416
1436
LOCAL OSCILLATOR
1414
1418
LNA
1438
1426
LNA
Rx
1434
PA
Tx
1424
1422
1432
1430
1428
LOCAL OSCILLATOR
1412
1410
LNA
1408
DIPLEXER
1406
1402
COMMUNICATIONS INTERFACE 205

1400
FIG. 14

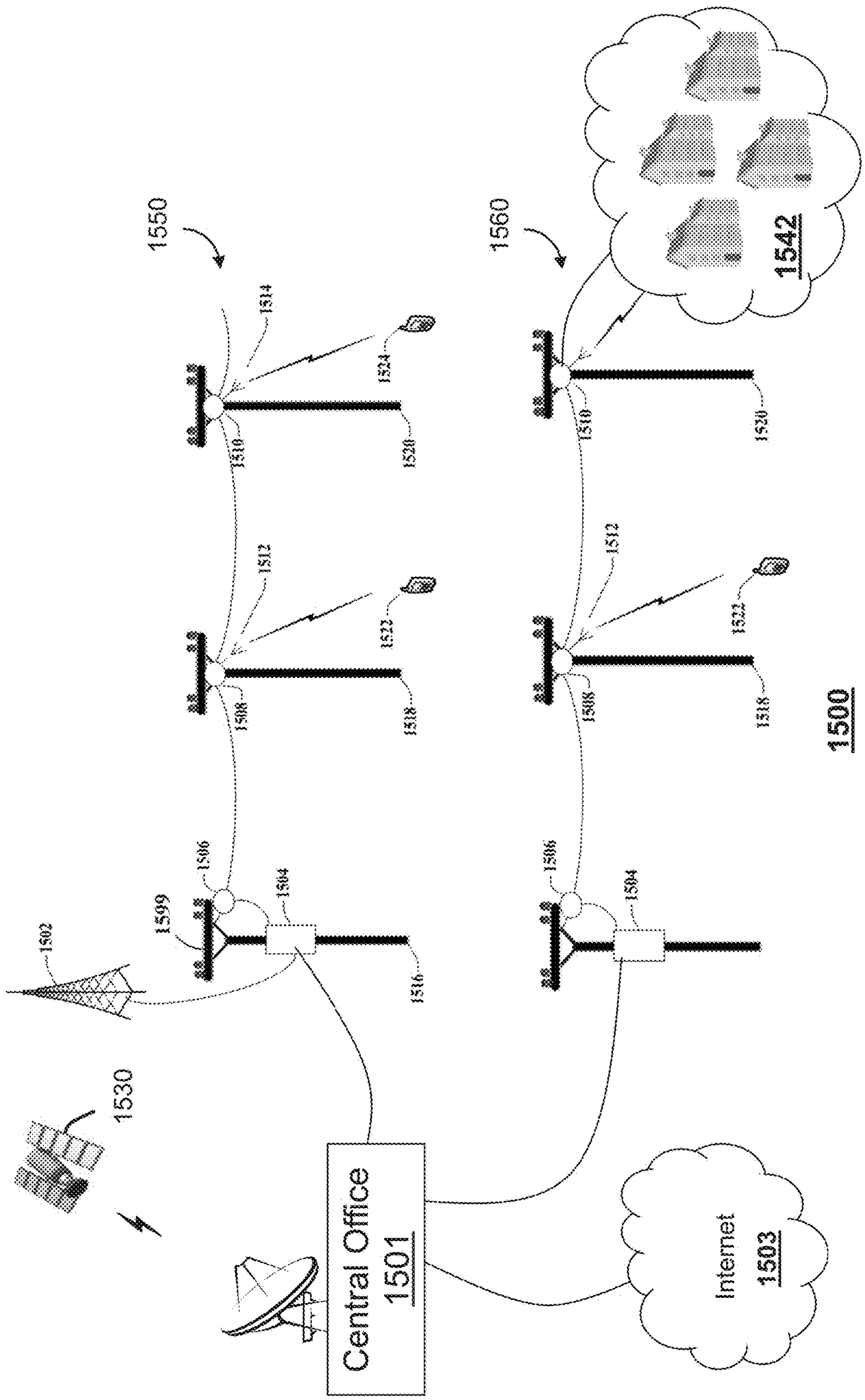
1550
1560
1542
1514
1524
1520
1510
1512
1522
1518
1508
1506
1504
1599
1502
1516
1530
Central Office
1501
Internet
1503

1500
FIG. 15

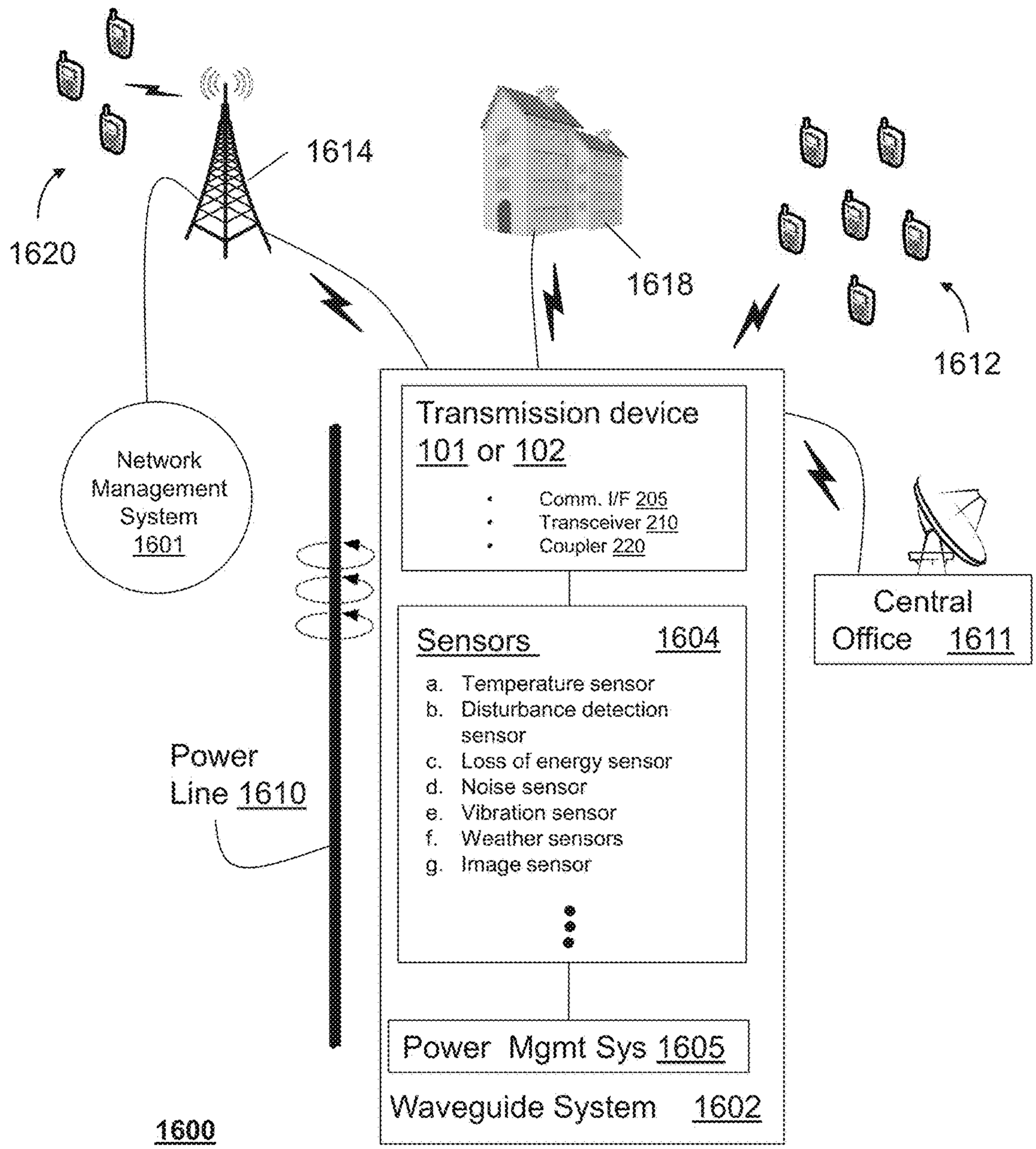
1614
1620
1618
1612
Network Management System 1601
Transmission device 101 or 102
Comm. I/F 205
Transceiver 210
Coupler 220
Central Office 1611
Sensors 1604
a. Temperature sensor
b. Disturbance detection sensor
c. Loss of energy sensor
d. Noise sensor
e. Vibration sensor
f. Weather sensors
g. Image sensor
Power Line 1610
Power Mgmt Sys 1605
Waveguide System 1602
1600

FIG. 16A

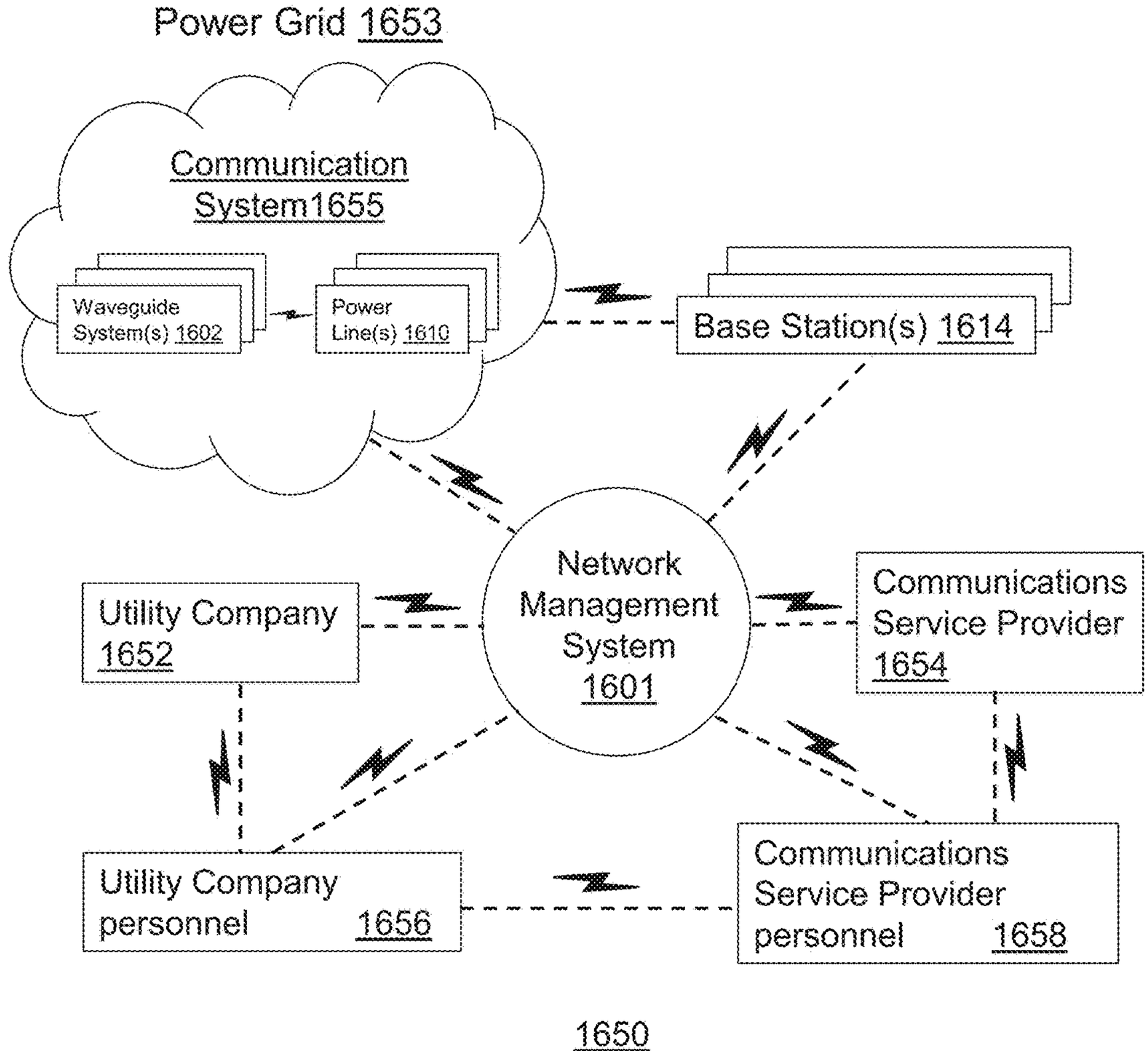
Power Grid 1653
Communication System1655
Waveguide System(s) 1602
Power Line(s) 1610
Base Station(s) 1614
Network Management System 1601
Utility Company 1652
Communications Service Provider 1654
Utility Company personnel 1656
Communications Service Provider personnel 1658
1650

FIG. 16B

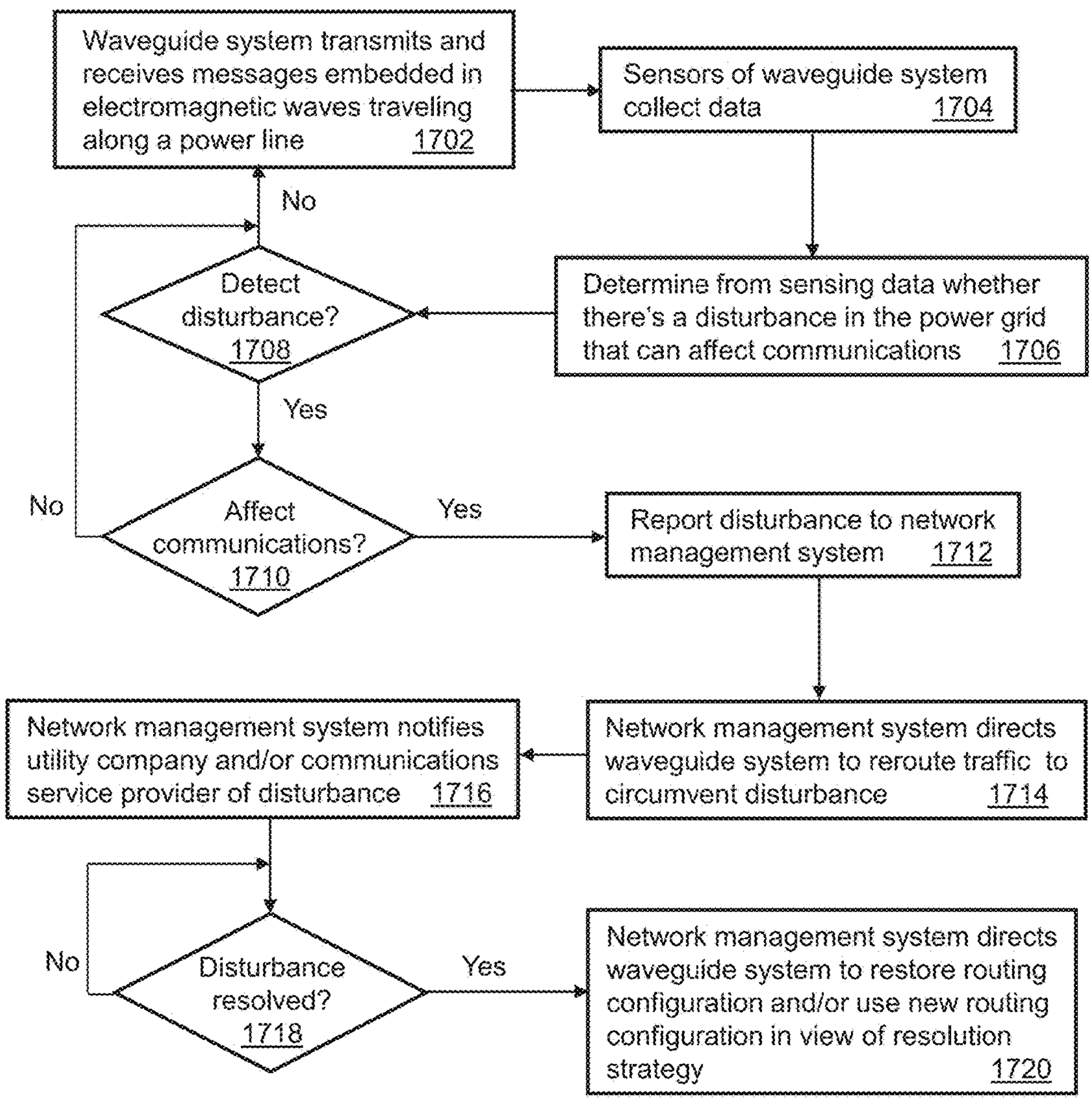
Waveguide system transmits and receives messages embedded in electromagnetic waves traveling along a power line 1702
Sensors of waveguide system collect data 1704
Determine from sensing data whether there's a disturbance in the power grid that can affect communications 1706
Detect disturbance? 1708
No
Yes
Affect communications? 1710
No
Yes
Report disturbance to network management system 1712
Network management system directs waveguide system to reroute traffic to circumvent disturbance 1714
Network management system notifies utility company and/or communications service provider of disturbance 1716
Disturbance resolved? 1718
No
Yes
Network management system directs waveguide system to restore routing configuration and/or use new routing configuration in view of resolution strategy 1720

1700

FIG. 17A

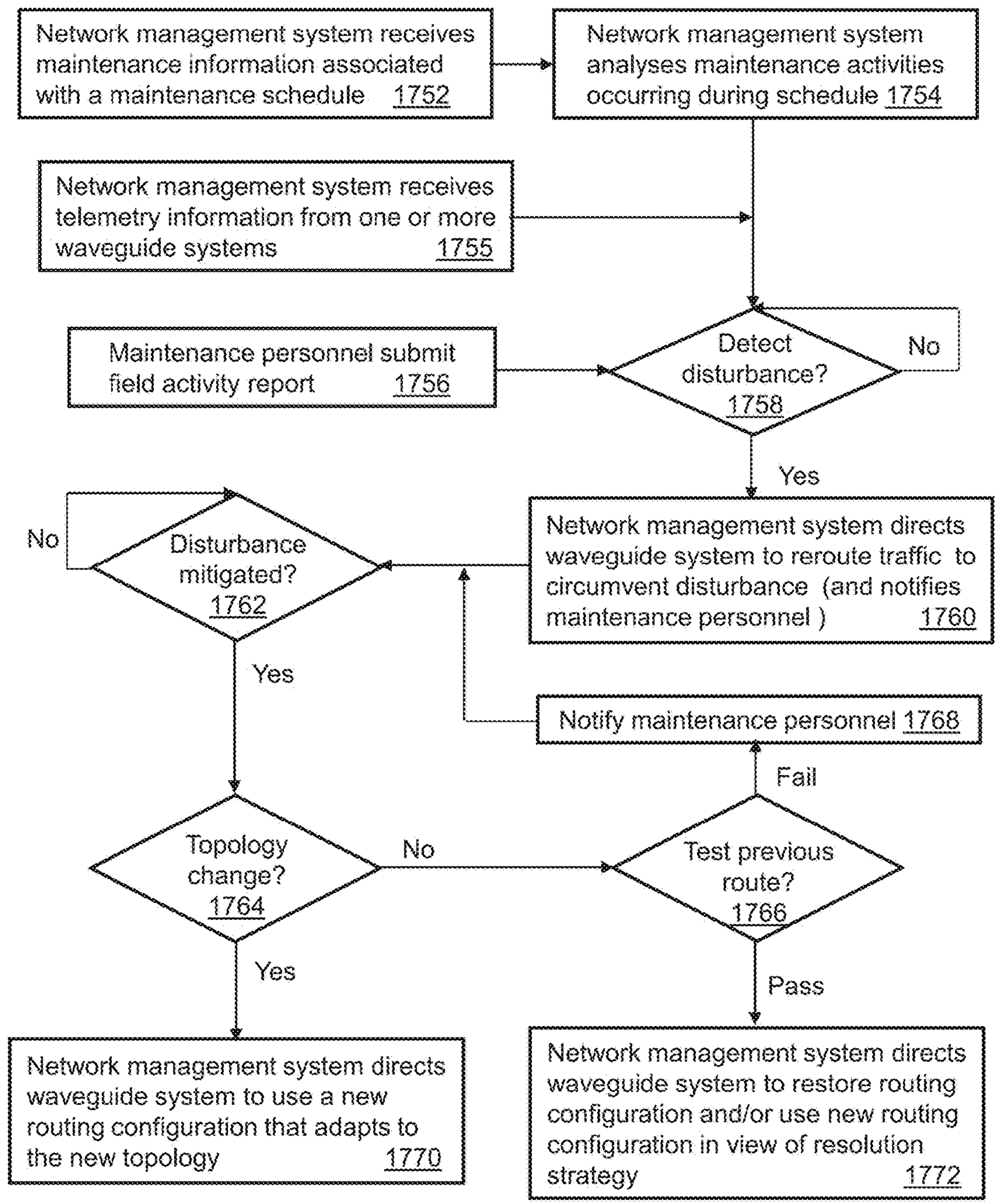
Network management system receives maintenance information associated with a maintenance schedule 1752
Network management system analyses maintenance activities occurring during schedule 1754
Network management system receives telemetry information from one or more waveguide systems 1755
Maintenance personnel submit field activity report 1756
Detect disturbance? 1758
No
Yes
Network management system directs waveguide system to reroute traffic to circumvent disturbance (and notifies maintenance personnel ) 1760
No
Disturbance mitigated? 1762
Yes
Notify maintenance personnel 1768
Fail
Topology change? 1764
No
Test previous route? 1766
Yes
Pass
Network management system directs waveguide system to use a new routing configuration that adapts to the new topology 1770
Network management system directs waveguide system to restore routing configuration and/or use new routing configuration in view of resolution strategy 1772

1750

FIG. 17B

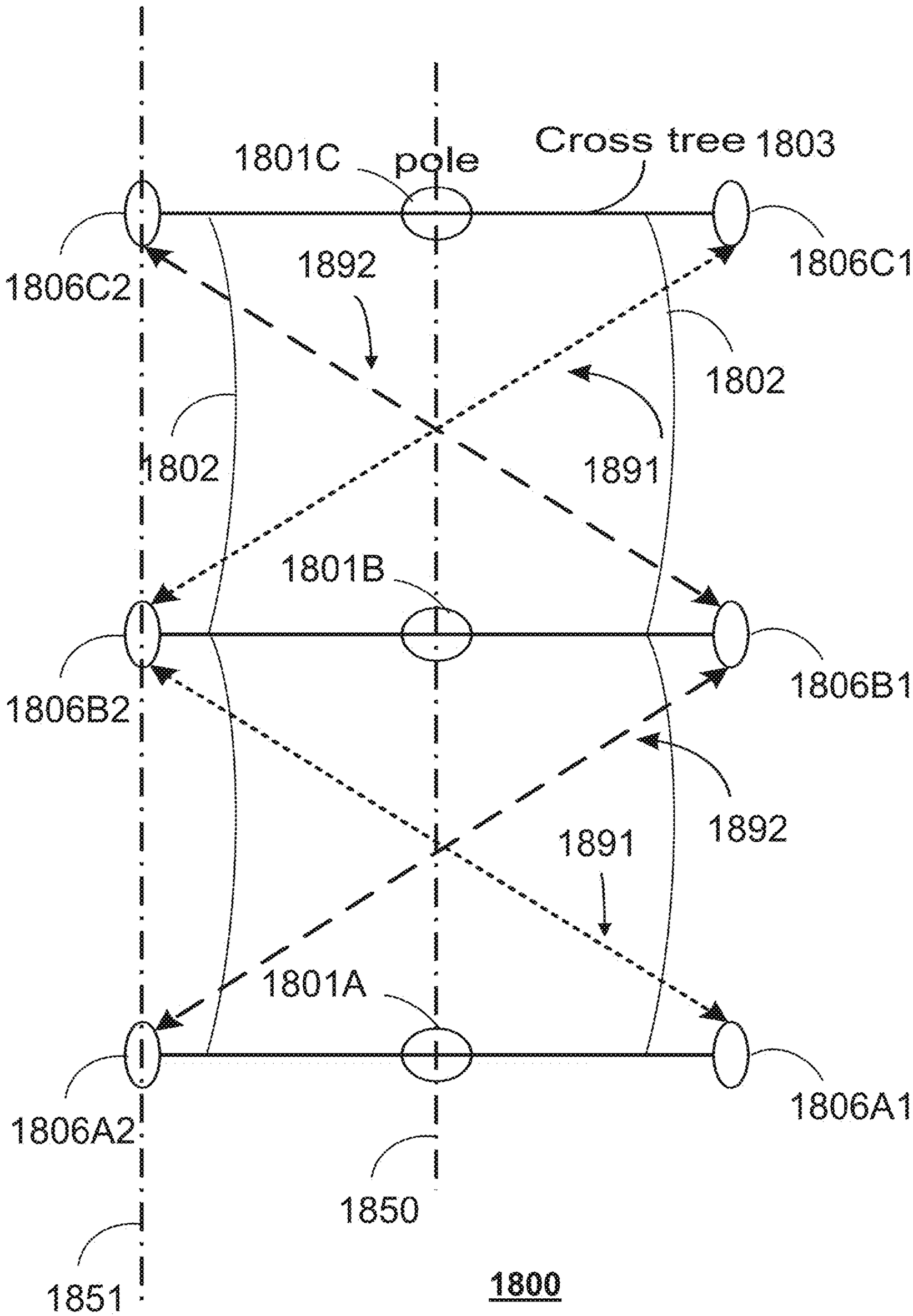
1801C
pole
Cross tree 1803
1806C2
1892
1806C1
1802
1802
1891
1801B
1806B2
1806B1
1892
1891
1801A
1806A2
1806A1
1850
1851
1800

FIG. 18

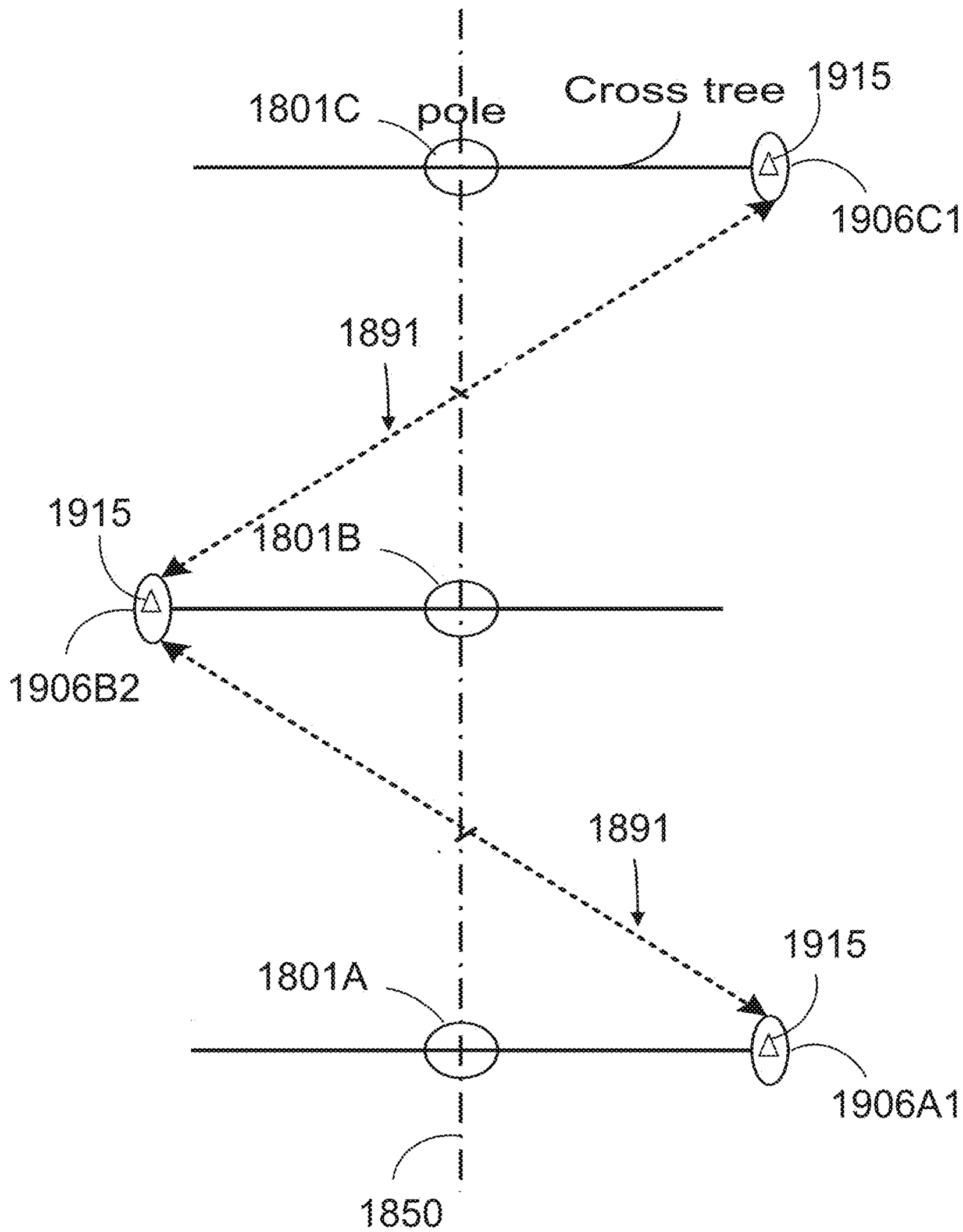
1801C
pole
Cross tree
1915
1906C1
1891
1915
1801B
1906B2
1891
1915
1801A
1906A1
1850

1900

FIG. 19

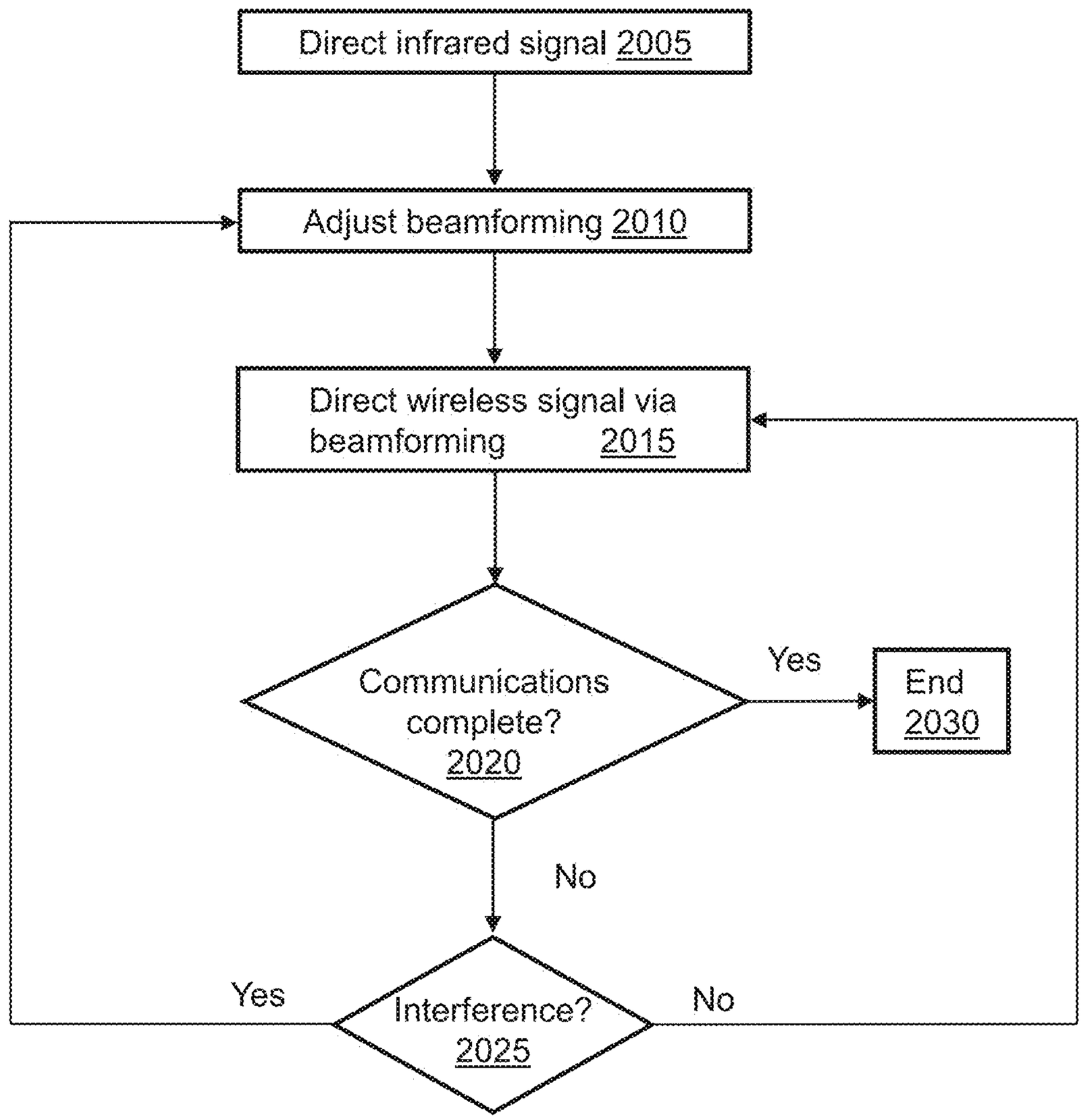
Direct infrared signal 2005
Adjust beamforming 2010
Direct wireless signal via beamforming 2015
Communications complete? 2020
Yes
End 2030
No
Interference? 2025
Yes
No

2000

FIG. 20

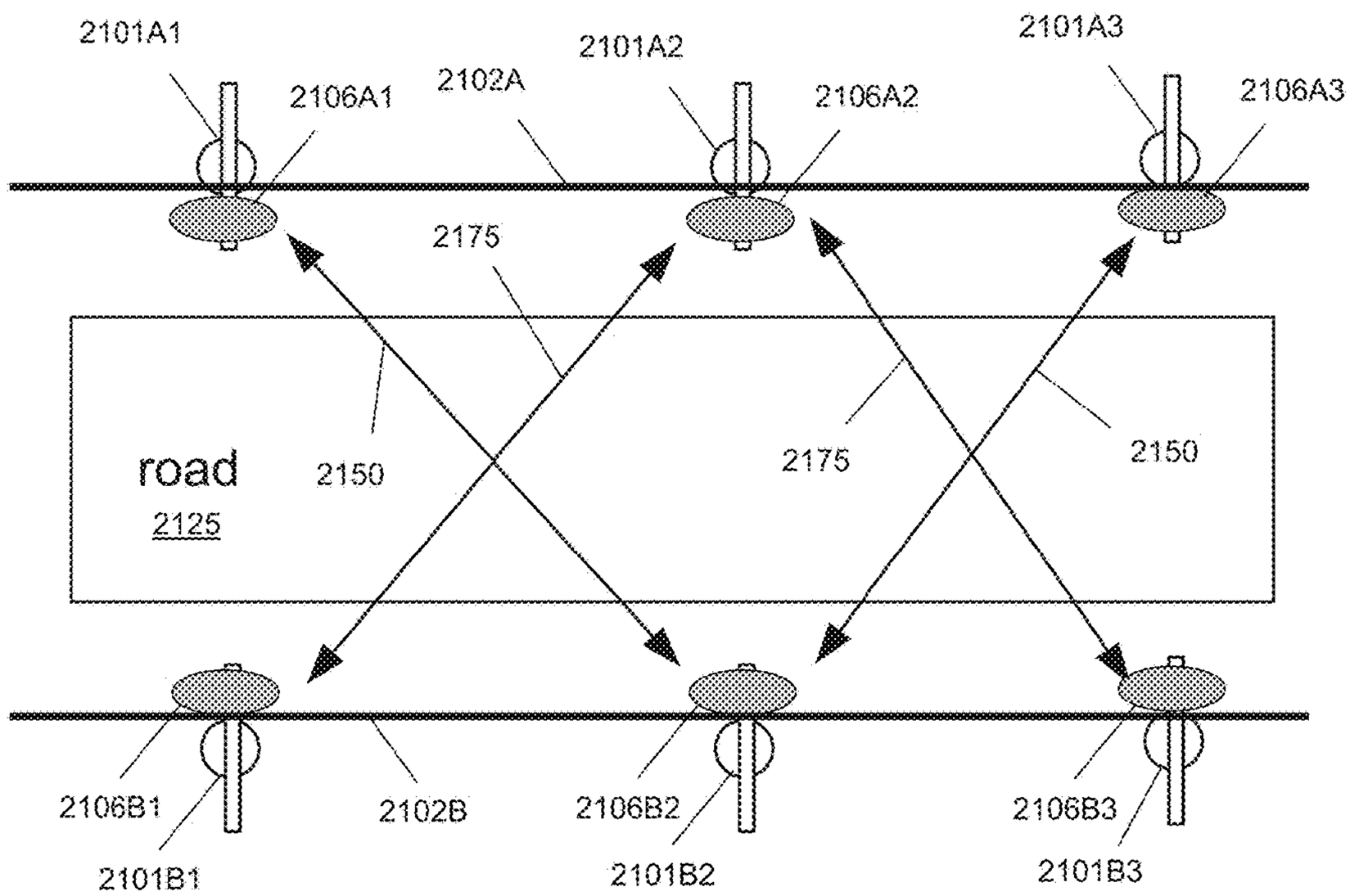
2101A1
2106A1
2102A
2101A2
2106A2
2101A3
2106A3
2175
road
2125
2150
2175
2150
2106B1
2101B1
2102B
2106B2
2101B2
2106B3
2101B3

2100

FIG. 21

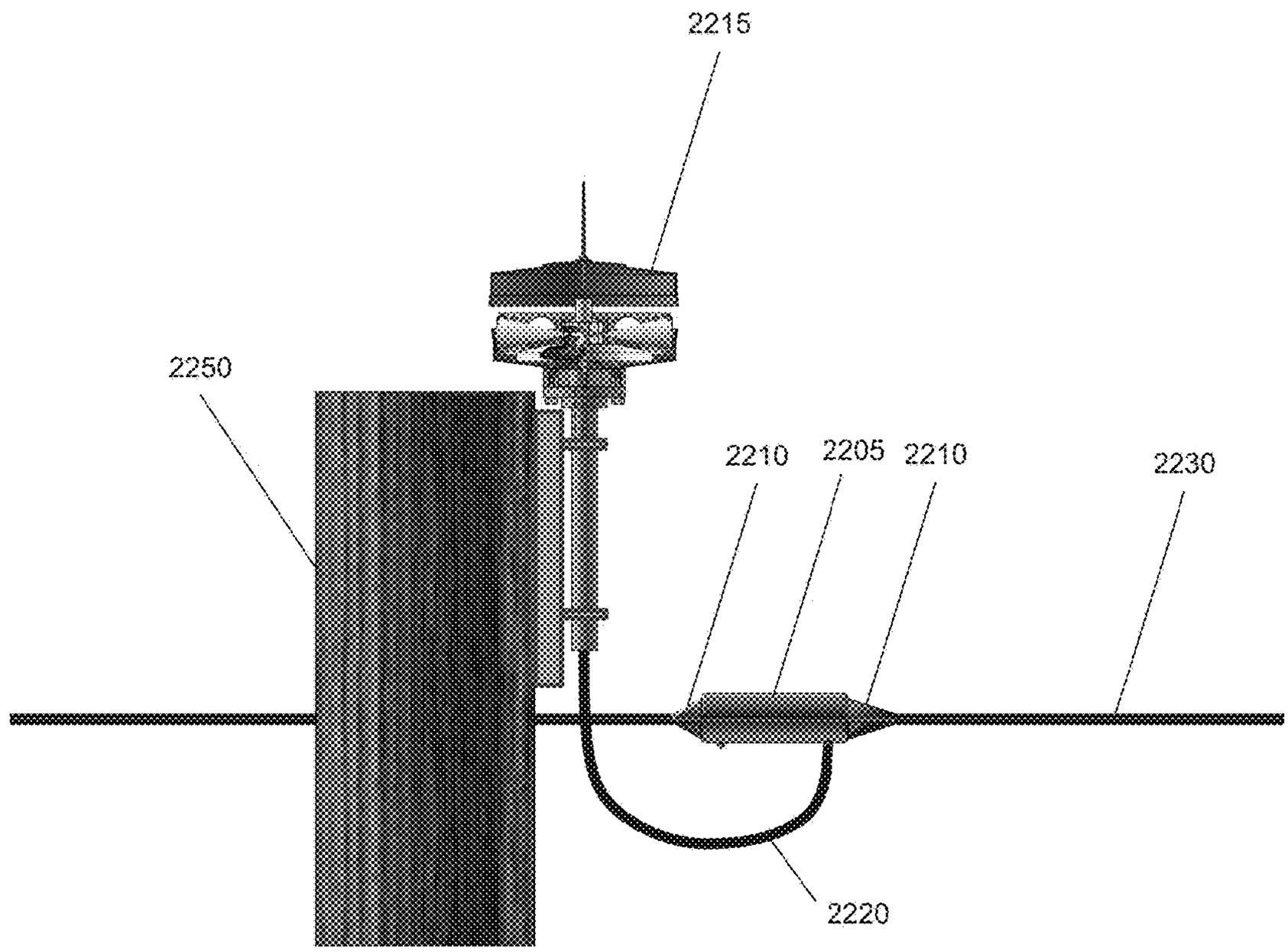


2200

FIG. 22

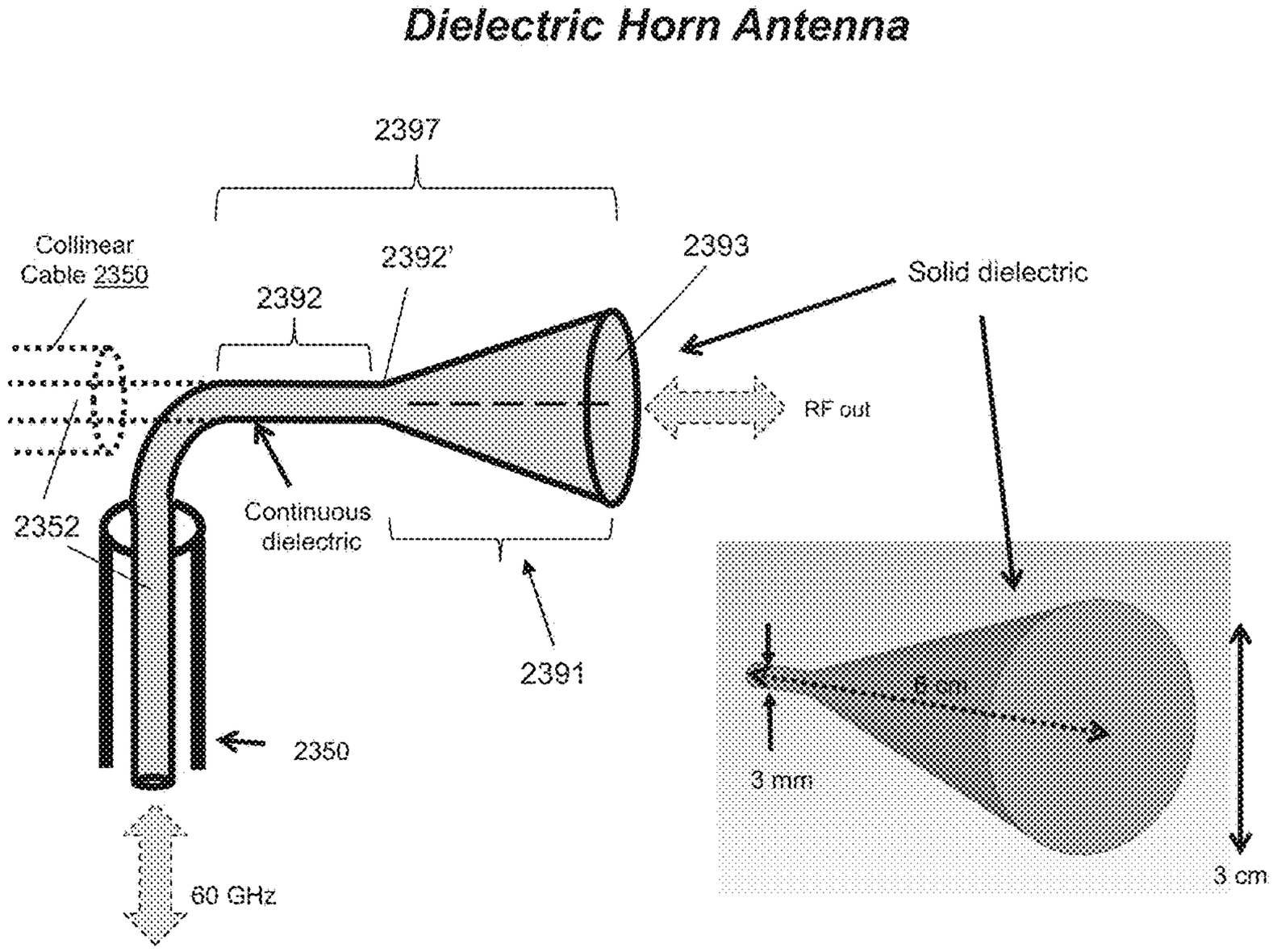
Dielectric Horn Antenna
2397
Collinear
Cable 2350
2392'
2393
Solid dielectric
2392
RF out
2352
Continuous
dielectric
2391
2350
60 GHz
8 cm
3 mm
3 cm

FIG. 23A

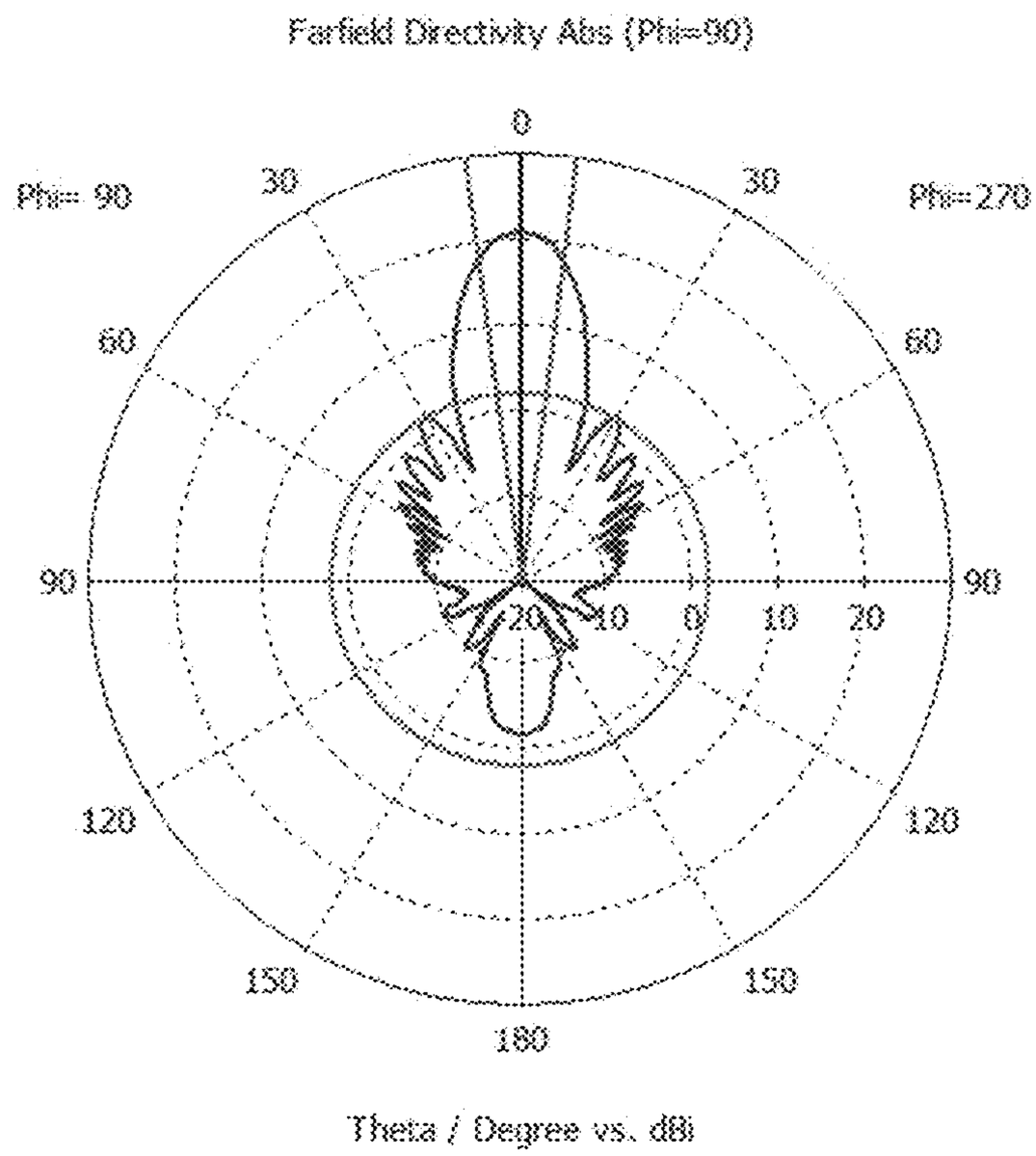


Antenna Gain Pattern

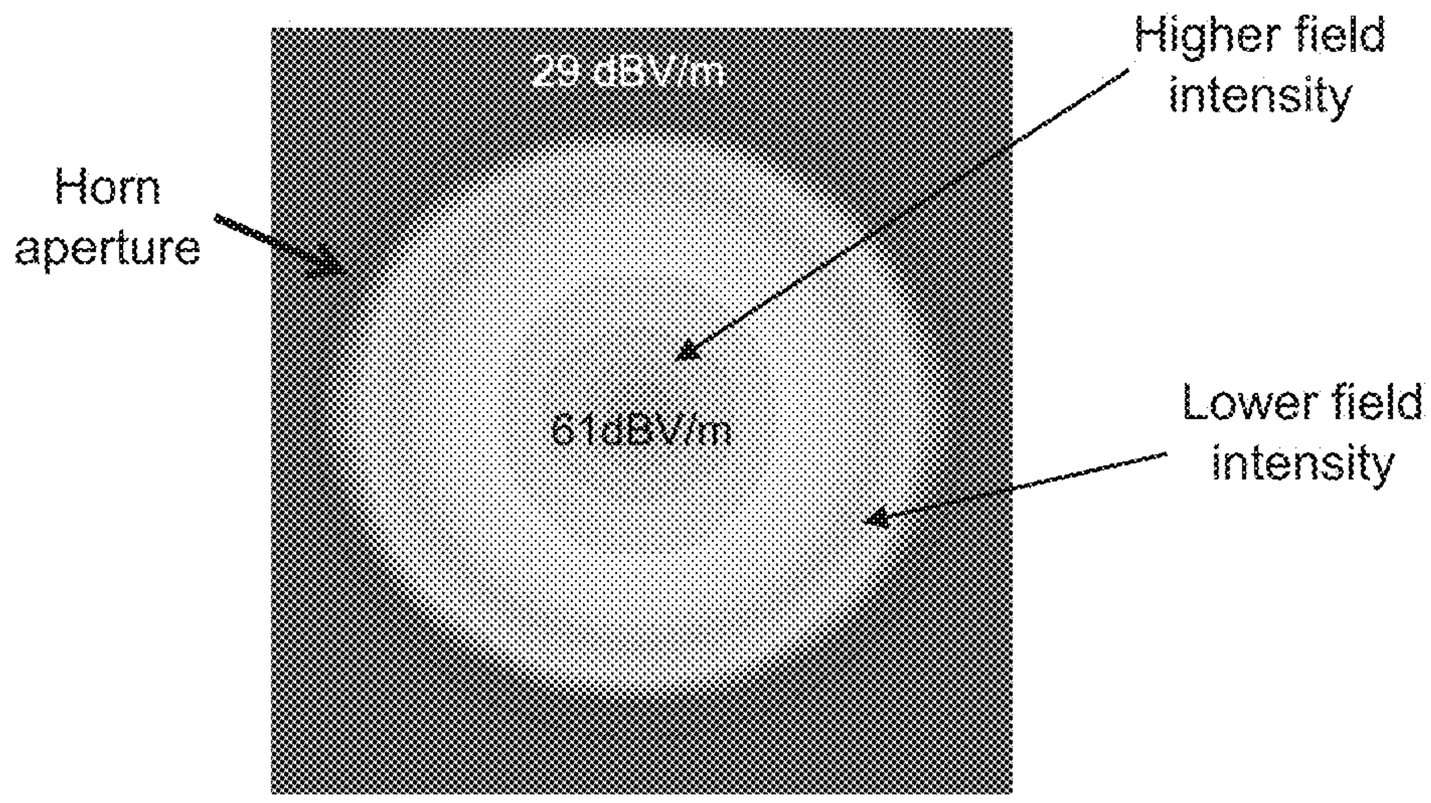


E-field Intensity Pattern

FIG. 23B

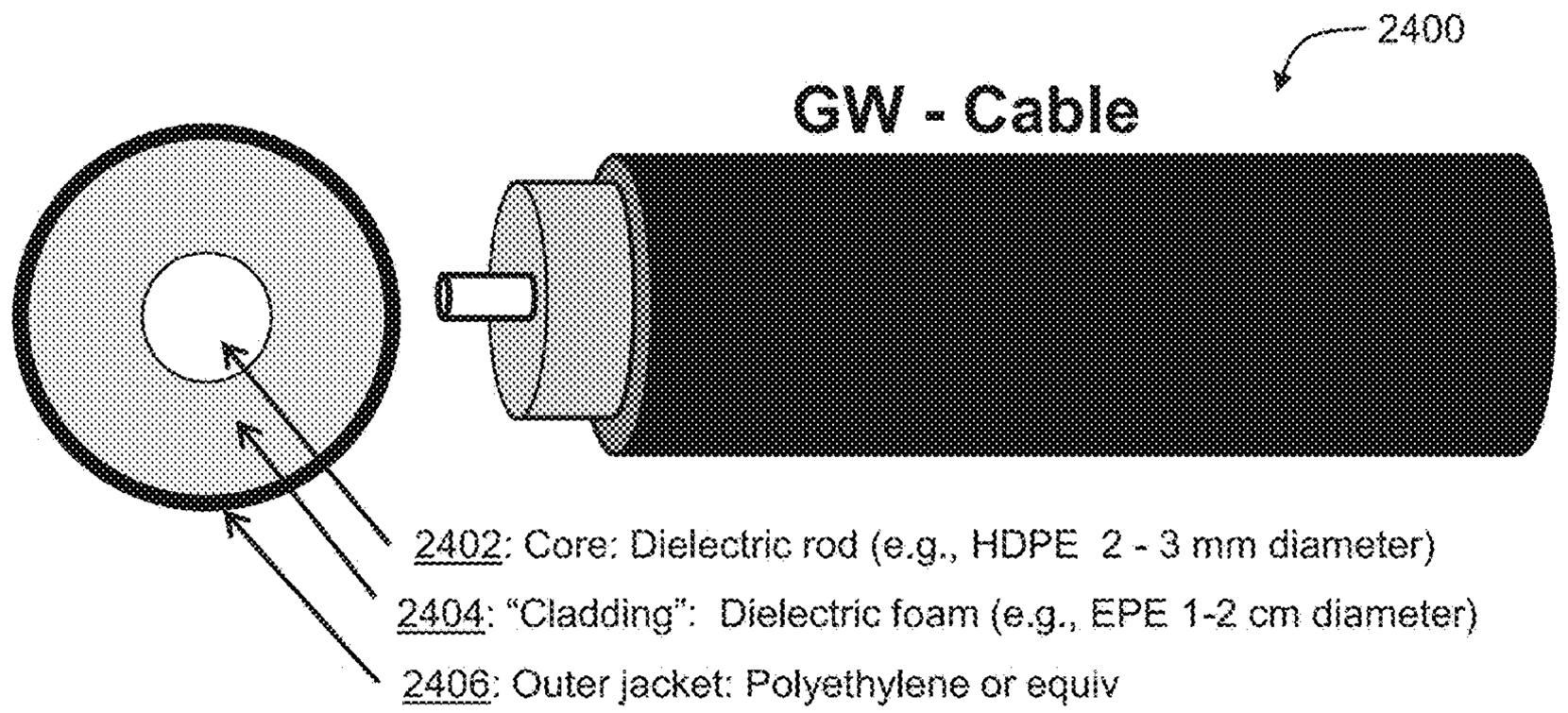
2400
GW - Cable
2402: Core: Dielectric rod (e.g., HDPE 2 - 3 mm diameter)
2404: "Cladding": Dielectric foam (e.g., EPE 1-2 cm diameter)
2406: Outer jacket: Polyethylene or equiv

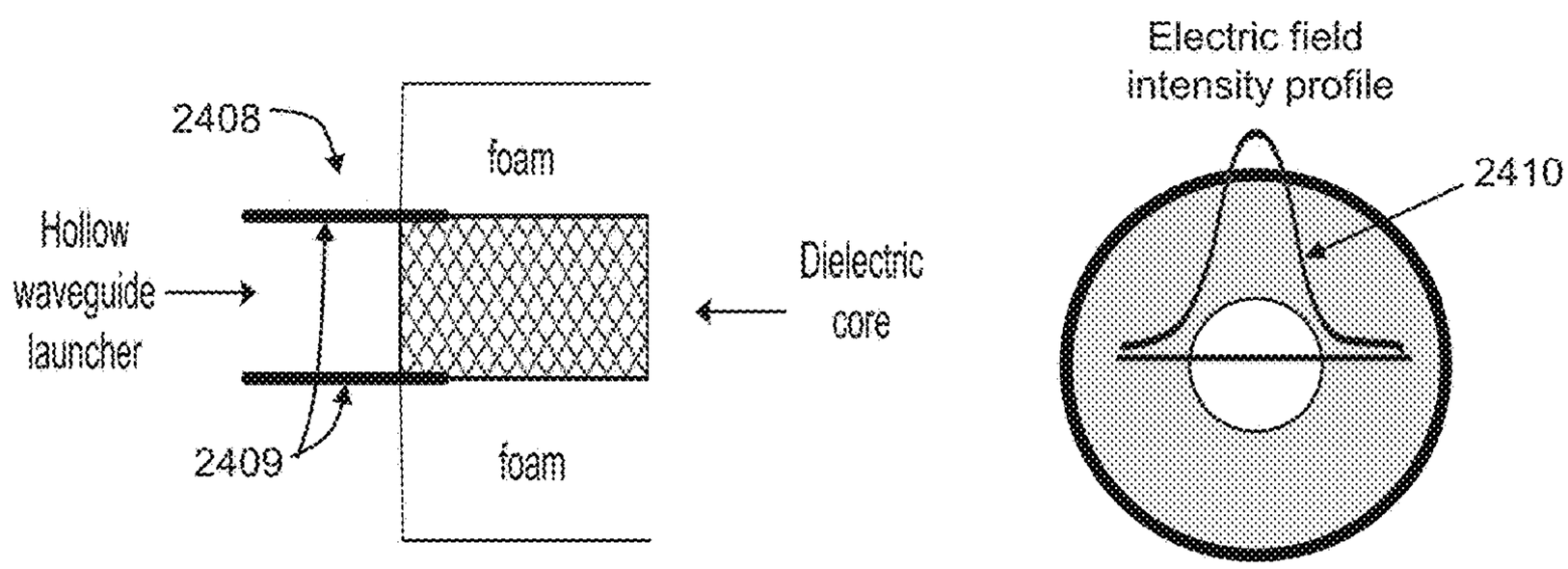
2408
foam
Hollow
waveguide
launcher
Dielectric
core
2409
foam
Electric field
intensity profile
2410

FIG. 24A

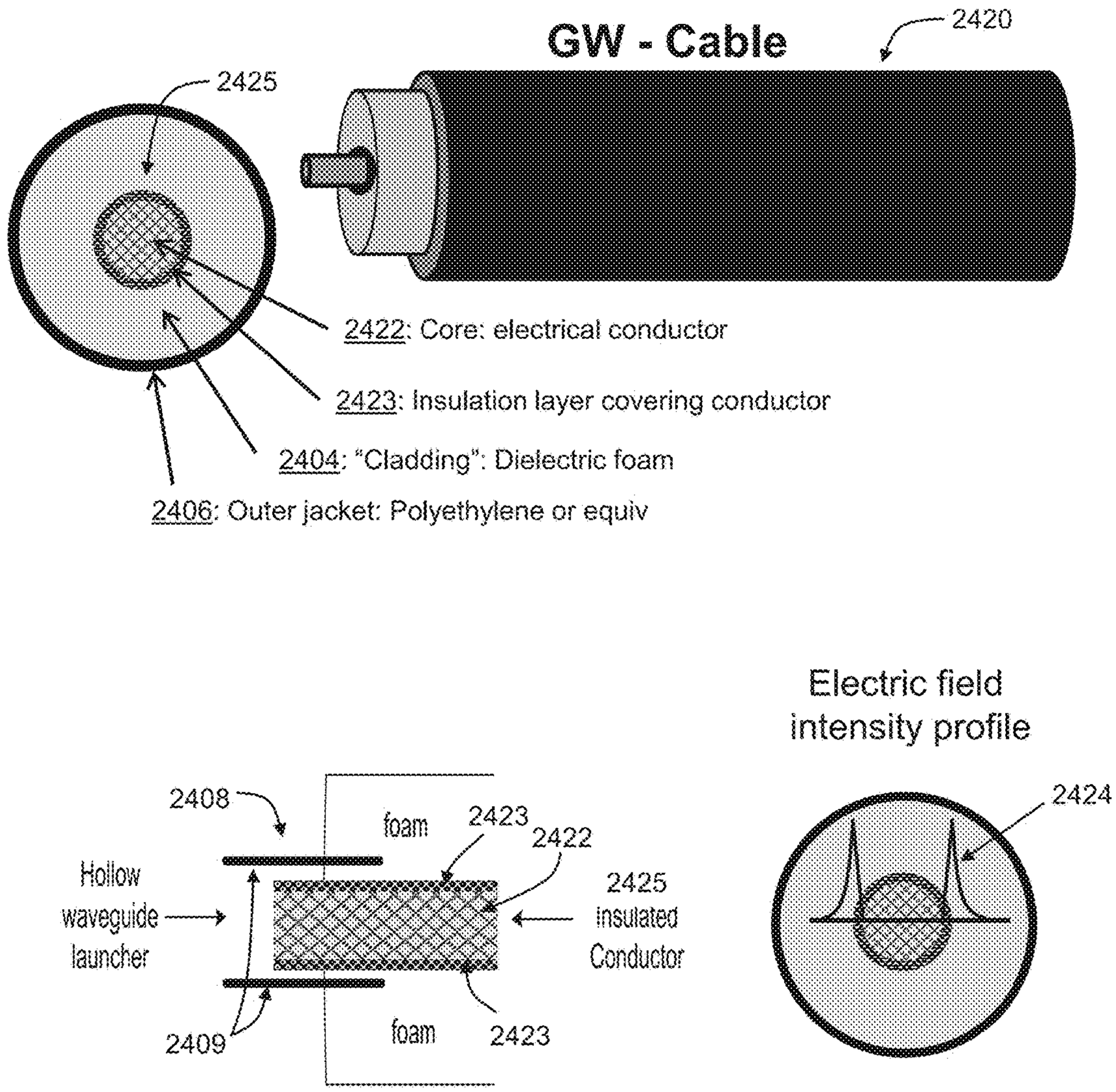
GW - Cable
2420
2425
2422: Core: electrical conductor
2423: Insulation layer covering conductor
2404: "Cladding": Dielectric foam
2406: Outer jacket: Polyethylene or equiv
Electric field intensity profile
2424
2408
foam
2423
2422
Hollow waveguide launcher
2425 insulated Conductor
2409
foam
2423

FIG. 24B

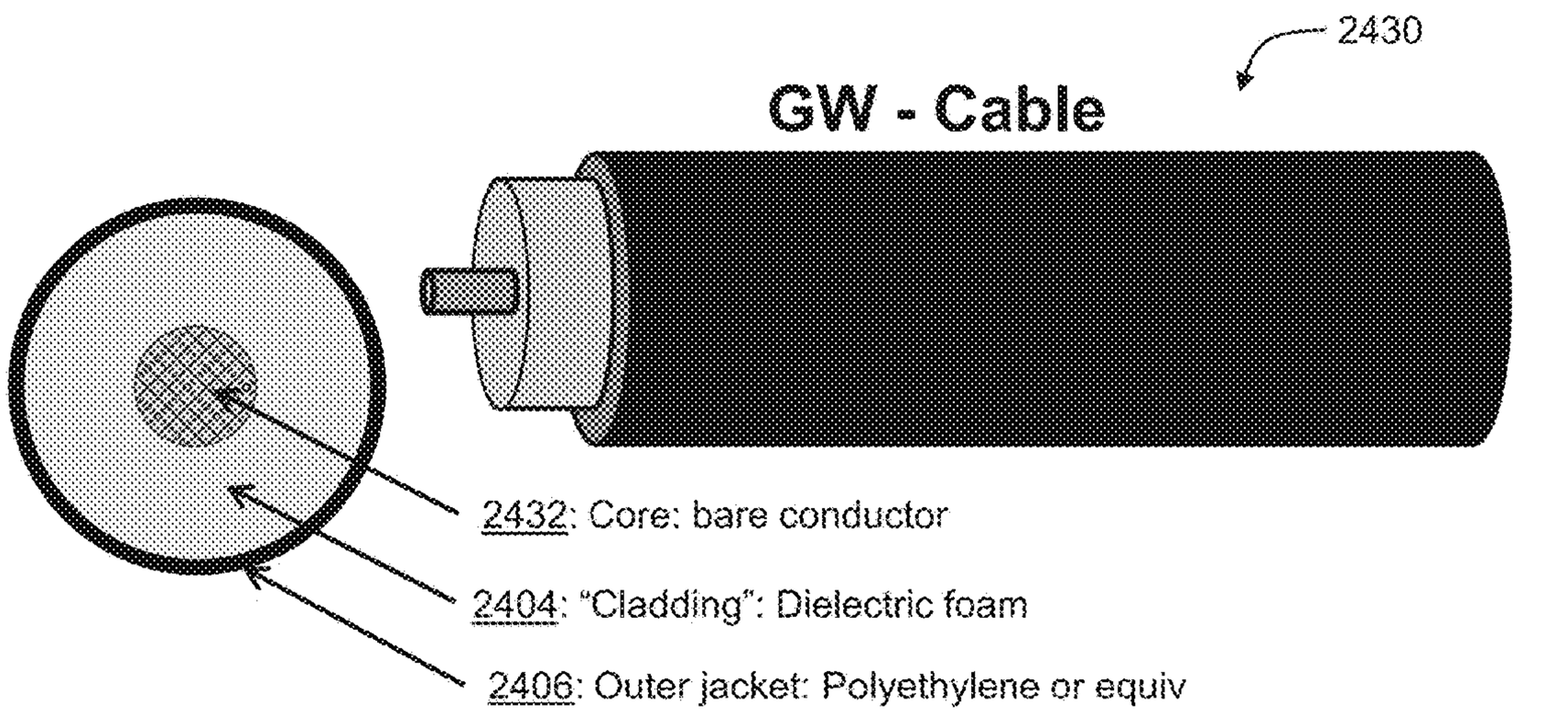
2430
GW - Cable
2432: Core: bare conductor
2404: "Cladding": Dielectric foam
2406: Outer jacket: Polyethylene or equiv

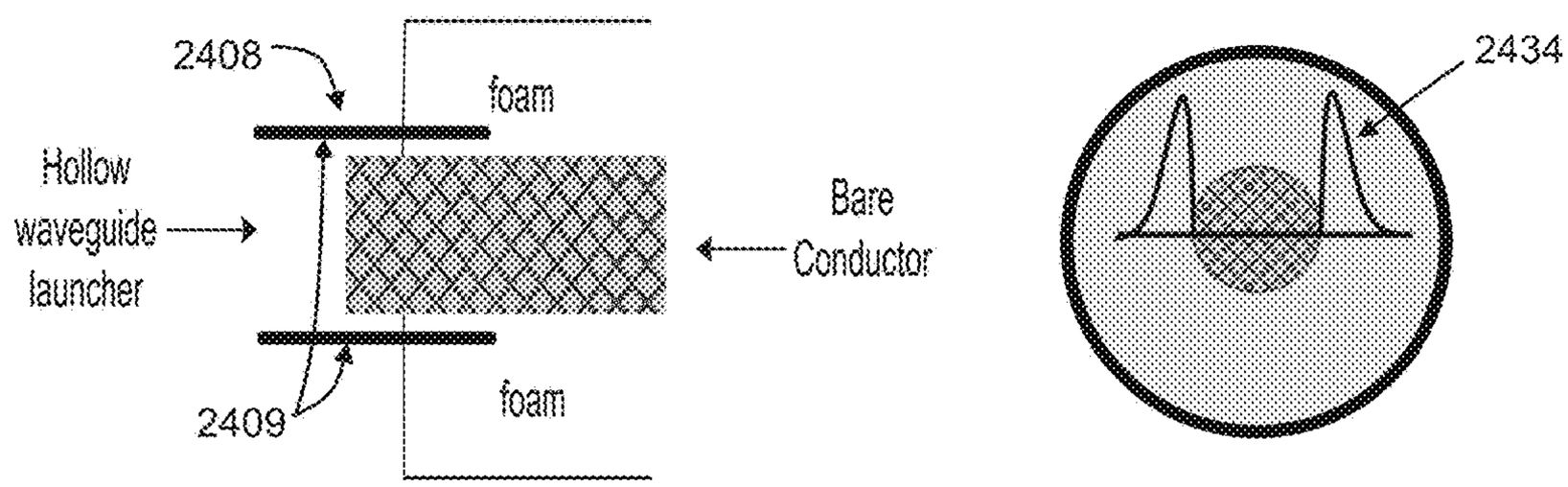
Electric field
intensity profile
2408
foam
Hollow
waveguide
launcher
Bare
Conductor
2409
foam
2434

FIG. 24C

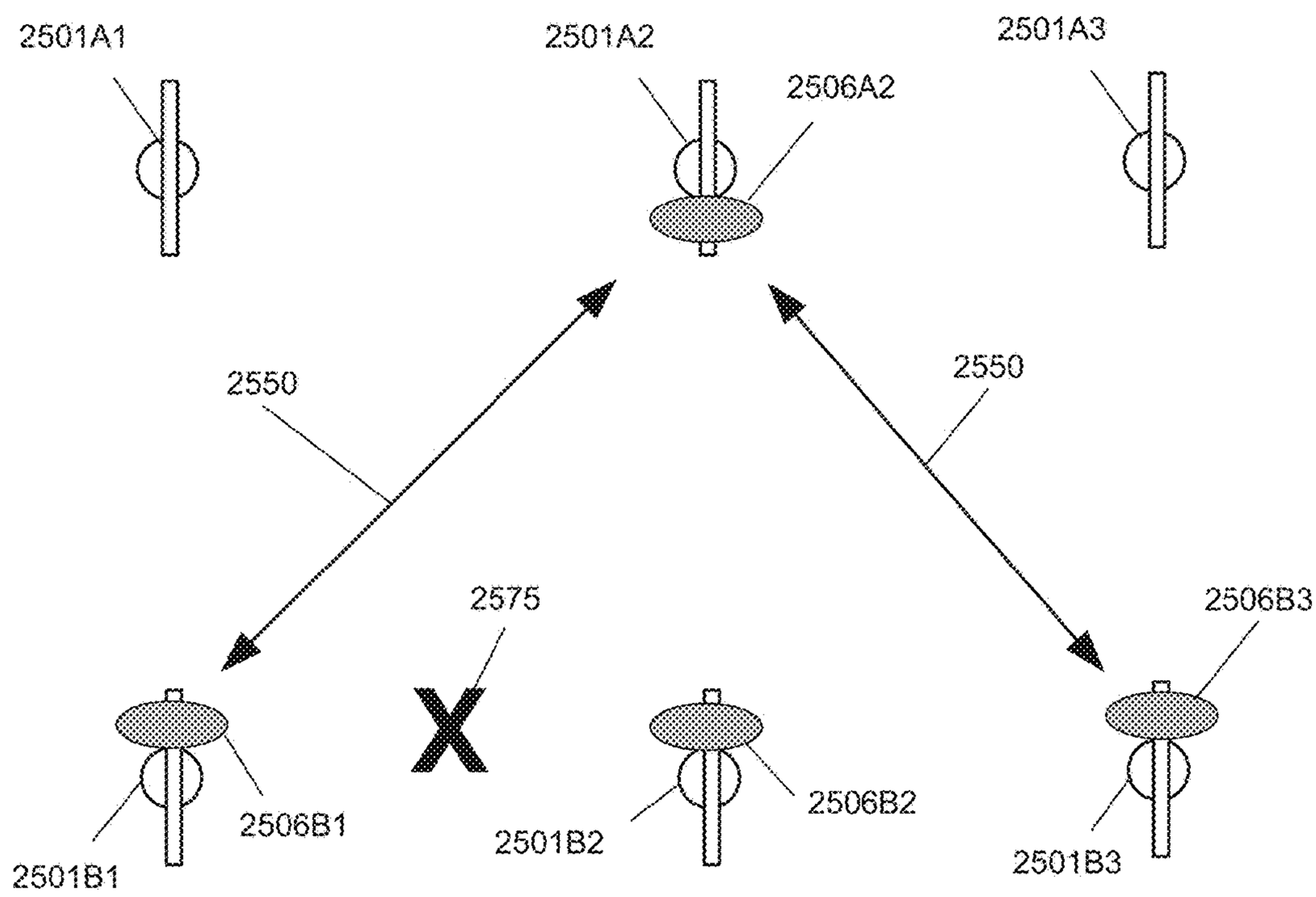
2501A1
2501A2
2506A2
2501A3
2550
2550
2575
2506B3
2506B1
2501B2
2506B2
2501B1
2501B3

2500

FIG. 25

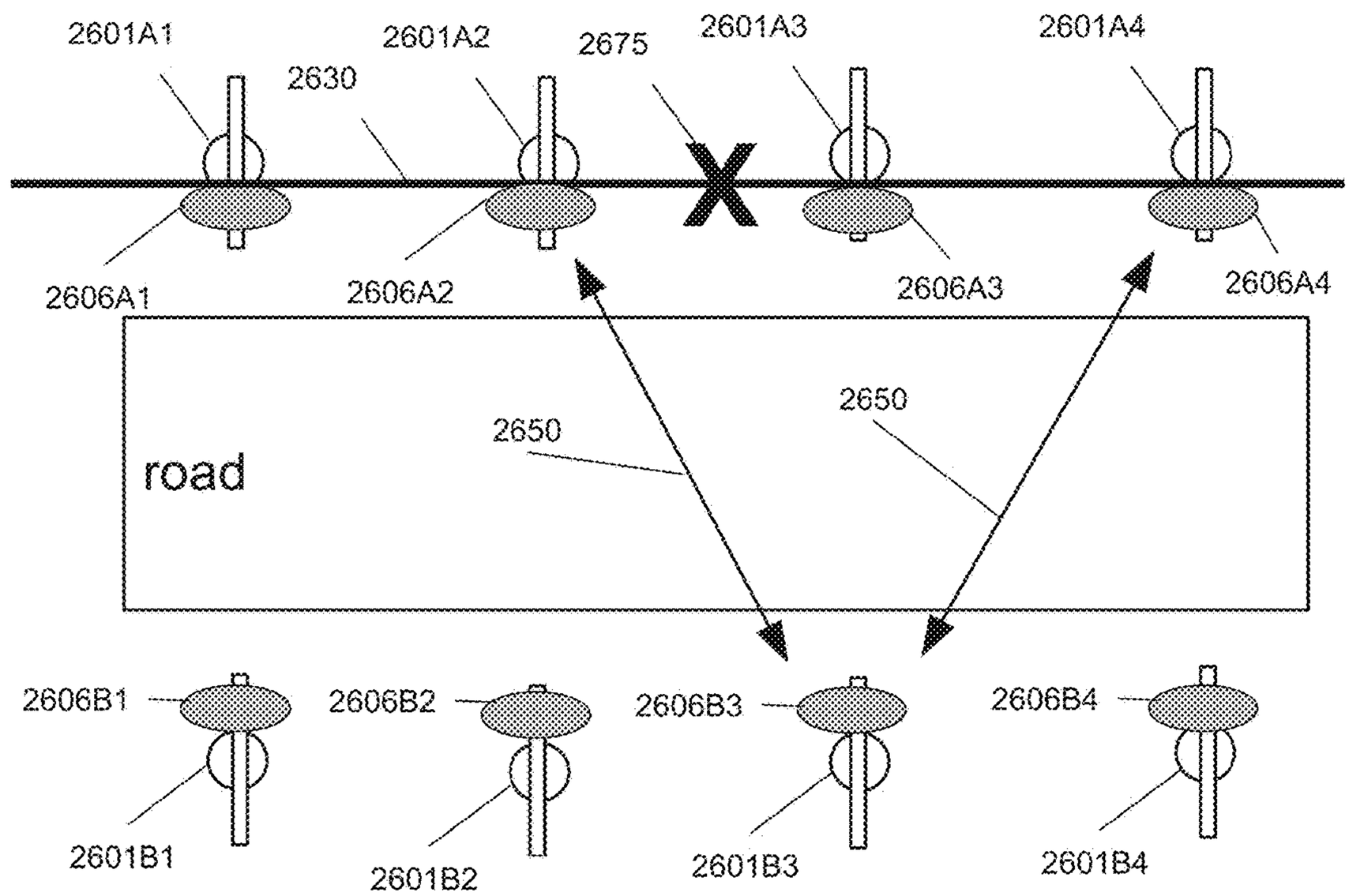
2601A1
2601A2
2675
2601A3
2601A4
2630
2606A1
2606A2
2606A3
2606A4
road
2650
2650
2606B1
2606B2
2606B3
2606B4
2601B1
2601B2
2601B3
2601B4

2600

FIG. 26

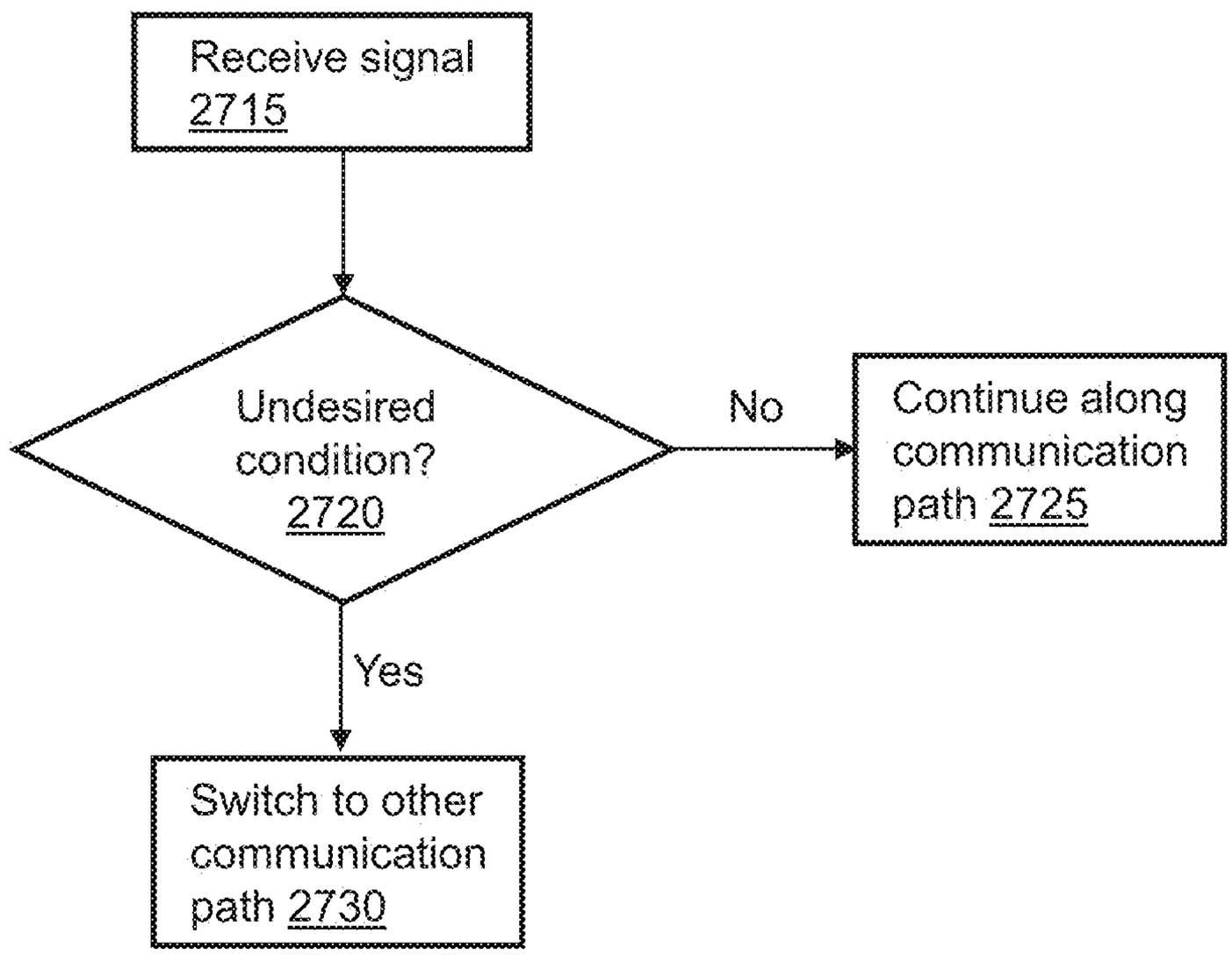
Receive signal
2715
Undesired condition?
2720
No
Continue along communication path 2725
Yes
Switch to other communication path 2730

2700

FIG. 27

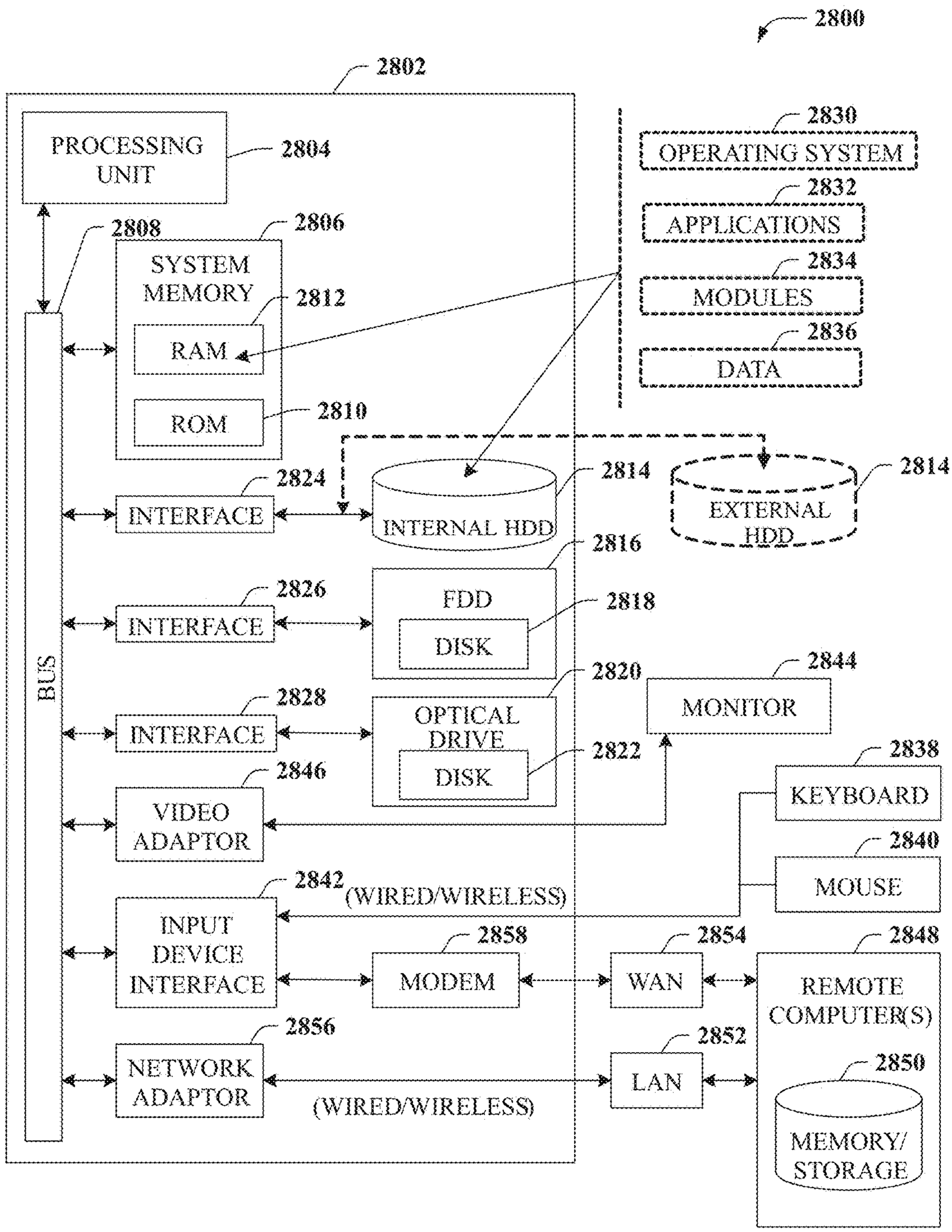
2800
2802
PROCESSING UNIT
2804
2808
2806
SYSTEM MEMORY
2812
RAM
ROM
2810
2830
OPERATING SYSTEM
2832
APPLICATIONS
2834
MODULES
2836
DATA
2824
INTERFACE
INTERNAL HDD
2814
EXTERNAL HDD
2814
2816
2826
INTERFACE
FDD
DISK
2818
BUS
2820
2844
MONITOR
2828
INTERFACE
OPTICAL DRIVE
DISK
2822
2838
KEYBOARD
2846
VIDEO ADAPTOR
2840
MOUSE
2842
(WIRED/WIRELESS)
INPUT DEVICE INTERFACE
2858
MODEM
2854
WAN
2848
REMOTE COMPUTER(S)
2856
NETWORK ADAPTOR
2852
LAN
2850
(WIRED/WIRELESS)
MEMORY/ STORAGE

FIG. 28

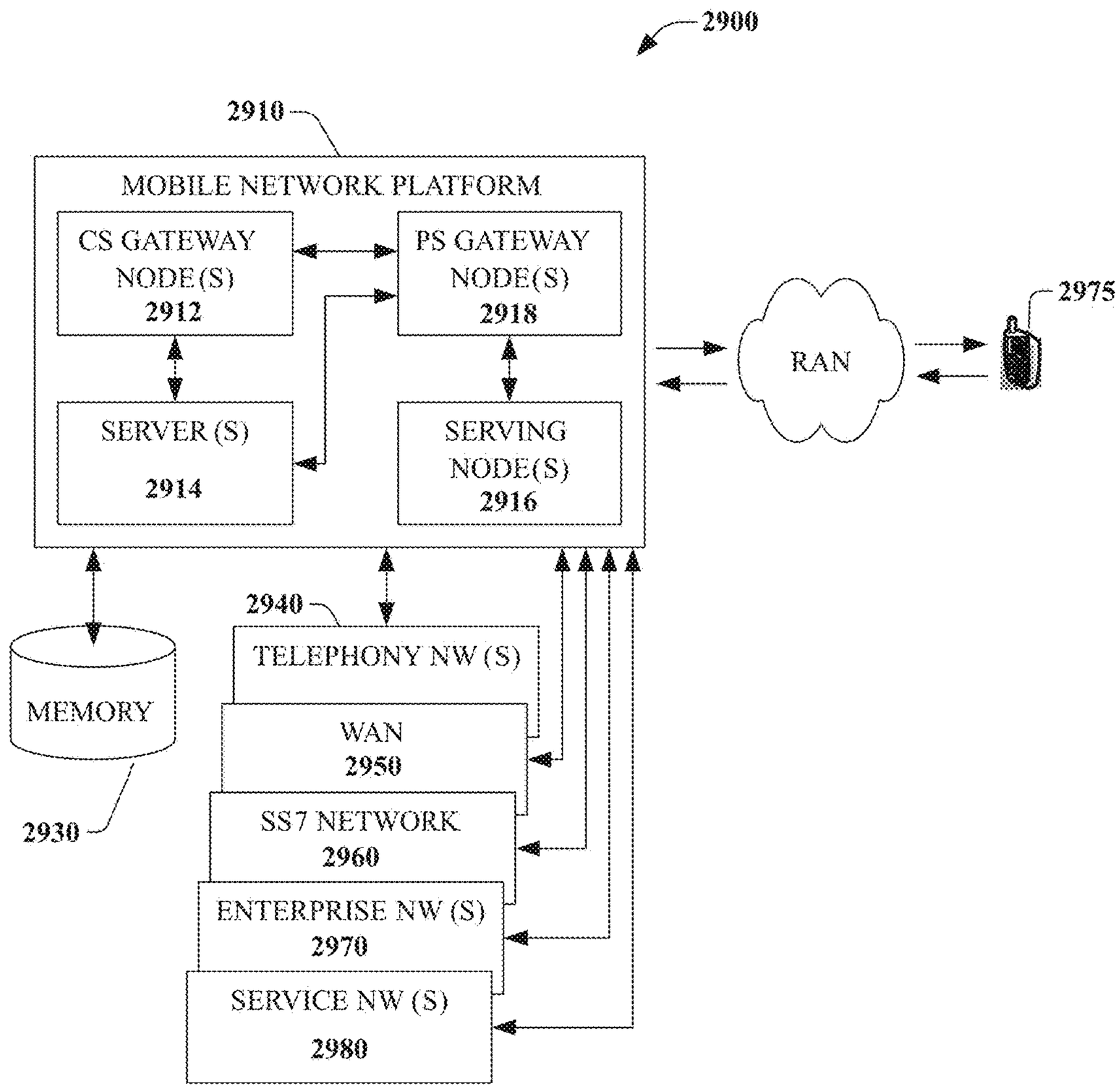
2900
2910
MOBILE NETWORK PLATFORM
CS GATEWAY NODE(S) 2912
PS GATEWAY NODE(S) 2918
SERVER (S) 2914
SERVING NODE(S) 2916
RAN
2975
2940
TELEPHONY NW (S)
MEMORY
WAN 2950
2930
SS7 NETWORK 2960
ENTERPRISE NW (S) 2970
SERVICE NW (S) 2980

FIG. 29

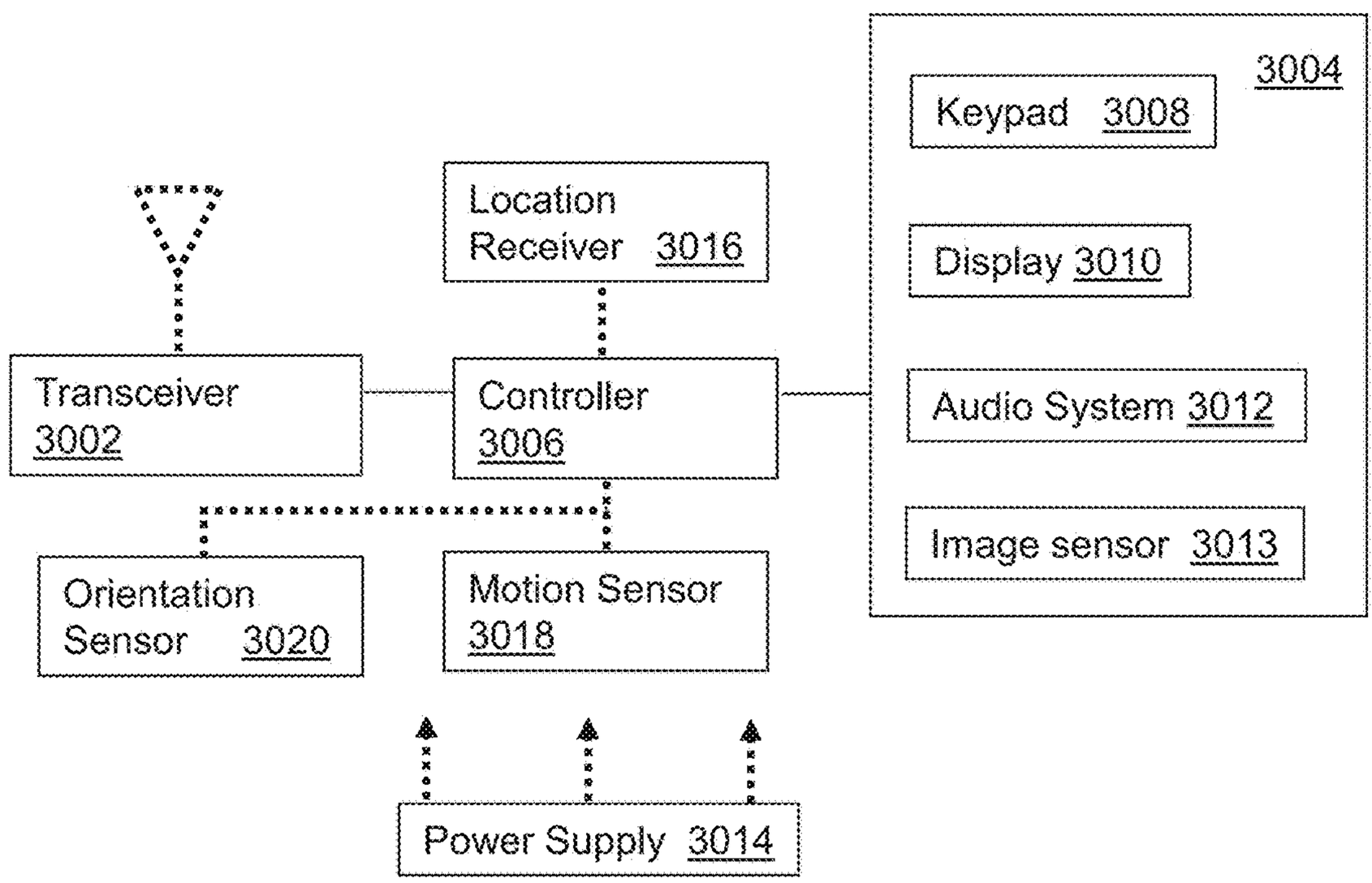
3004
Keypad 3008
Display 3010
Audio System 3012
Image sensor 3013
Location Receiver 3016
Transceiver 3002
Controller 3006
Orientation Sensor 3020
Motion Sensor 3018
Power Supply 3014

3000

FIG. 30

# METHOD AND APPARATUS FOR MANAGING WIRELESS COMMUNICATIONS BASED ON COMMUNICATION PATHS AND NETWORK DEVICE POSITIONS

## FIELD OF THE DISCLOSURE

The subject disclosure relates to guided electromagnetic wave communications.

## BACKGROUND

As smart phones and other portable devices increasingly become ubiquitous, and data usage increases, macrocell base station devices and existing wireless infrastructure in turn require higher bandwidth capability in order to address the increased demand. To provide additional mobile bandwidth, small cell deployment is being pursued, with microcells and picocells providing coverage for much smaller areas than traditional macrocells.

In addition, most homes and businesses have grown to rely on broadband data access for services such as voice, video and Internet browsing, etc. Broadband access networks include satellite, 4G or 5G wireless, power line communication, fiber, cable, and telephone networks.

Interference being experienced by network devices along a communication path can degrade the quality of service for users. The interference can be sourced by various devices, including end user devices and other network devices.

## BRIEF DESCRIPTION OF THE DRAWINGS

Reference will now be made to the accompanying drawings, which are not necessarily drawn to scale, and wherein:

FIG. **1** is a block diagram illustrating an example, non-limiting embodiment of a guided-wave communications system in accordance with various aspects described herein.

FIG. **2** is a block diagram illustrating an example, non-limiting embodiment of a transmission device in accordance with various aspects described herein.

FIG. **3** is a graphical diagram illustrating an example, non-limiting embodiment of an electromagnetic field distribution in accordance with various aspects described herein.

FIG. **4** is a graphical diagram illustrating an example, non-limiting embodiment of an electromagnetic field distribution in accordance with various aspects described herein.

FIG. **5**A is a graphical diagram illustrating an example, non-limiting embodiment of a frequency response in accordance with various aspects described herein.

FIG. **5**B is a graphical diagram illustrating example, non-limiting embodiments of a longitudinal cross-section of an insulated wire depicting fields of guided electromagnetic waves at various operating frequencies in accordance with various aspects described herein.

FIG. **6** is a graphical diagram illustrating an example, non-limiting embodiment of an electromagnetic field distribution in accordance with various aspects described herein.

FIG. **7** is a block diagram illustrating an example, non-limiting embodiment of an arc coupler in accordance with various aspects described herein.

FIG. **8** is a block diagram illustrating an example, non-limiting embodiment of an arc coupler in accordance with various aspects described herein.

FIG. **9**A is a block diagram illustrating an example, non-limiting embodiment of a stub coupler in accordance with various aspects described herein.



FIG. **9**B is a diagram illustrating an example, non-limiting embodiment of an electromagnetic distribution in accordance with various aspects described herein.

FIGS. **10**A and **10**B are block diagrams illustrating example, non-limiting embodiments of couplers and transceivers in accordance with various aspects described herein.

FIG. **11** is a block diagram illustrating an example, non-limiting embodiment of a dual stub coupler in accordance with various aspects described herein.

FIG. **12** is a block diagram illustrating an example, non-limiting embodiment of a repeater system in accordance with various aspects described herein.

FIG. **13** illustrates a block diagram illustrating an example, non-limiting embodiment of a bidirectional repeater in accordance with various aspects described herein.

FIG. **14** is a block diagram illustrating an example, non-limiting embodiment of a waveguide system in accordance with various aspects described herein.

FIG. **15** is a block diagram illustrating an example, non-limiting embodiment of a guided-wave communications system in accordance with various aspects described herein.

FIGS. **16**A & **16**B are block diagrams illustrating an example, non-limiting embodiment of a system for managing a power grid communication system in accordance with various aspects described herein.

FIG. **17**A illustrates a flow diagram of an example, non-limiting embodiment of a method for detecting and mitigating disturbances occurring in a communication network of the system of FIGS. **16**A and **16**B.

FIG. **17**B illustrates a flow diagram of an example, non-limiting embodiment of a method for detecting and mitigating disturbances occurring in a communication network of the system of FIGS. **16**A and **16**B.

FIG. **18** illustrates a block diagram illustrating an example, non-limiting embodiment of a system of wireless communications that mitigates interference in accordance with various aspects described herein.

FIG. **19** illustrates a block diagram illustrating an example, non-limiting embodiment of a system of wireless communications that mitigates interference in accordance with various aspects described herein.

FIG. **20** illustrates a flow diagram of an example, non-limiting embodiment of a method in accordance with various aspects described herein.

FIG. **21** illustrates a block diagram illustrating an example, non-limiting embodiment of a system of wireless communications that mitigates interference in accordance with various aspects described herein.

FIG. **22** illustrates a block diagram illustrating an example, non-limiting embodiment of a network device in accordance with various aspects described herein.

FIGS. **23**A and **23**B are block diagrams illustrating example, non-limiting embodiments of a dielectric antenna and corresponding gain and field intensity plots in accordance with various aspects described herein.

FIGS. **24**A, **24**B, and **24**C are block diagrams illustrating example, non-limiting embodiment of a transmission medium for propagating guided electromagnetic waves.

FIG. **25** illustrates a block diagram illustrating an example, non-limiting embodiment of a system of wireless communications that mitigates interference in accordance with various aspects described herein.

FIG. **26** illustrates a block diagram illustrating an example, non-limiting embodiment of a system of wireless

communications that mitigates interference in accordance with various aspects described herein.

FIG. **27** illustrates a flow diagram of an example, non-limiting embodiment of a method in accordance with various aspects described herein.

FIG. **28** is a block diagram of an example, non-limiting embodiment of a computing environment in accordance with various aspects described herein.

FIG. **29** is a block diagram of an example, non-limiting embodiment of a mobile network platform in accordance with various aspects described herein.

FIG. **30** is a block diagram of an example, non-limiting embodiment of a communication device in accordance with various aspects described herein.

## DETAILED DESCRIPTION

One or more embodiments are now described with reference to the drawings, wherein like reference numerals are used to refer to like elements throughout. In the following description, for purposes of explanation, numerous details are set forth in order to provide a thorough understanding of the various embodiments. It is evident, however, that the various embodiments can be practiced without these details (and without applying to any particular networked environment or standard).

In an embodiment, a guided wave communication system is presented for sending and receiving communication signals such as data or other signaling via guided electromagnetic waves. The guided electromagnetic waves include, for example, surface waves or other electromagnetic waves that are bound to or guided by a transmission medium. It will be appreciated that a variety of transmission media can be utilized with guided wave communications without departing from example embodiments. Examples of such transmission media can include one or more of the following, either alone or in one or more combinations: wires, whether insulated or not, and whether single-stranded or multi-stranded; conductors of other shapes or configurations including wire bundles, cables, rods, rails, pipes; non-conductors such as dielectric pipes, rods, rails, or other dielectric members; combinations of conductors and dielectric materials; or other guided wave transmission media.

The inducement of guided electromagnetic waves on a transmission medium can be independent of any electrical potential, charge or current that is injected or otherwise transmitted through the transmission medium as part of an electrical circuit. For example, in the case where the transmission medium is a wire, it is to be appreciated that while a small current in the wire may be formed in response to the propagation of the guided waves along the wire, this can be due to the propagation of the electromagnetic wave along the wire surface, and is not formed in response to electrical potential, charge or current that is injected into the wire as part of an electrical circuit. The electromagnetic waves traveling on the wire therefore do not require a circuit to propagate along the wire surface. The wire therefore is a single wire transmission line that is not part of a circuit. Also, in some embodiments, a wire is not necessary, and the electromagnetic waves can propagate along a single line transmission medium that is not a wire.

More generally, "guided electromagnetic waves" or "guided waves" as described by the subject disclosure are affected by the presence of a physical object that is at least a part of the transmission medium (e.g., a bare wire or other conductor, a dielectric, an insulated wire, a conduit or other hollow element, a bundle of insulated wires that is coated, covered or surrounded by a dielectric or insulator or other wire bundle, or another form of solid, liquid or otherwise non-gaseous transmission medium) so as to be at least partially bound to or guided by the physical object and so as to propagate along a transmission path of the physical object. Such a physical object can operate as at least a part of a transmission medium that guides, by way of an interface of the transmission medium (e.g., an outer surface, inner surface, an interior portion between the outer and the inner surfaces or other boundary between elements of the transmission medium), the propagation of guided electromagnetic waves, which in turn can carry energy, data and/or other signals along the transmission path from a sending device to a receiving device.

Unlike free space propagation of wireless signals such as unguided (or unbounded) electromagnetic waves that decrease in intensity inversely by the square of the distance traveled by the unguided electromagnetic waves, guided electromagnetic waves can propagate along a transmission medium with less loss in magnitude per unit distance than experienced by unguided electromagnetic waves.

Unlike electrical signals, guided electromagnetic waves can propagate from a sending device to a receiving device without requiring a separate electrical return path between the sending device and the receiving device. As a consequence, guided electromagnetic waves can propagate from a sending device to a receiving device along a transmission medium having no conductive components (e.g., a dielectric strip), or via a transmission medium having no more than a single conductor (e.g., a single bare wire or insulated wire). Even if a transmission medium includes one or more conductive components and the guided electromagnetic waves propagating along the transmission medium generate currents that flow in the one or more conductive components in a direction of the guided electromagnetic waves, such guided electromagnetic waves can propagate along the transmission medium from a sending device to a receiving device without requiring a flow of opposing currents on an electrical return path between the sending device and the receiving device.

In a non-limiting illustration, consider electrical systems that transmit and receive electrical signals between sending and receiving devices by way of conductive media. Such systems generally rely on electrically separate forward and return paths. For instance, consider a coaxial cable having a center conductor and a ground shield that are separated by an insulator. Typically, in an electrical system a first terminal of a sending (or receiving) device can be connected to the center conductor, and a second terminal of the sending (or receiving) device can be connected to the ground shield. If the sending device injects an electrical signal in the center conductor via the first terminal, the electrical signal will propagate along the center conductor causing forward currents in the center conductor, and return currents in the ground shield. The same conditions apply for a two terminal receiving device.

In contrast, consider a guided wave communication system such as described in the subject disclosure, which can utilize different embodiments of a transmission medium (including among others a coaxial cable) for transmitting and receiving guided electromagnetic waves without an electrical return path. In one embodiment, for example, the guided wave communication system of the subject disclosure can be configured to induce guided electromagnetic waves that propagate along an outer surface of a coaxial cable. Although the guided electromagnetic waves will cause forward currents on the ground shield, the guided

electromagnetic waves do not require return currents to enable the guided electromagnetic waves to propagate along the outer surface of the coaxial cable. The same can be said of other transmission media used by a guided wave communication system for the transmission and reception of guided electromagnetic waves. For example, guided electromagnetic waves induced by the guided wave communication system on an outer surface of a bare wire, or an insulated wire can propagate along the bare wire or the insulated bare wire without an electrical return path.

Consequently, electrical systems that require two or more conductors for carrying forward and reverse currents on separate conductors to enable the propagation of electrical signals injected by a sending device are distinct from guided wave systems that induce guided electromagnetic waves on an interface of a transmission medium without the need of an electrical return path to enable the propagation of the guided electromagnetic waves along the interface of the transmission medium.

It is further noted that guided electromagnetic waves as described in the subject disclosure can have an electromagnetic field structure that lies primarily or substantially outside of a transmission medium so as to be bound to or guided by the transmission medium and so as to propagate non-trivial distances on or along an outer surface of the transmission medium. In other embodiments, guided electromagnetic waves can have an electromagnetic field structure that lies primarily or substantially inside a transmission medium so as to be bound to or guided by the transmission medium and so as to propagate non-trivial distances within the transmission medium. In other embodiments, guided electromagnetic waves can have an electromagnetic field structure that lies partially inside and partially outside a transmission medium so as to be bound to or guided by the transmission medium and so as to propagate non-trivial distances along the transmission medium. The desired electronic field structure in an embodiment may vary based upon a variety of factors, including the desired transmission distance, the characteristics of the transmission medium itself, and environmental conditions/characteristics outside of the transmission medium (e.g., presence of rain, fog, atmospheric conditions, etc.).

Various embodiments described herein relate to coupling devices, that can be referred to as "waveguide coupling devices", "waveguide couplers" or more simply as "couplers", "coupling devices" or "launchers" for launching and/or extracting guided electromagnetic waves to and from a transmission medium at millimeter-wave frequencies (e.g., 30 to 300 GHz), wherein the wavelength can be small compared to one or more dimensions of the coupling device and/or the transmission medium such as the circumference of a wire or other cross sectional dimension, or lower microwave frequencies such as 300 MHz to 30 GHz. Transmissions can be generated to propagate as waves guided by a coupling device, such as: a strip, arc or other length of dielectric material; a horn, monopole, rod, slot or other antenna; an array of antennas; a magnetic resonant cavity, or other resonant coupler; a coil, a strip line, a waveguide or other coupling device. In operation, the coupling device receives an electromagnetic wave from a transmitter or transmission medium. The electromagnetic field structure of the electromagnetic wave can be carried inside the coupling device, outside the coupling device or some combination thereof. When the coupling device is in close proximity to a transmission medium, at least a portion of an electromagnetic wave couples to or is bound to the transmission medium, and continues to propagate as guided electromagnetic waves. In a reciprocal fashion, a coupling device can extract guided waves from a transmission medium and transfer these electromagnetic waves to a receiver.

According to an example embodiment, a surface wave is a type of guided wave that is guided by a surface of a transmission medium, such as an exterior or outer surface of the wire, or another surface of the wire that is adjacent to or exposed to another type of medium having different properties (e.g., dielectric properties). Indeed, in an example embodiment, a surface of the wire that guides a surface wave can represent a transitional surface between two different types of media. For example, in the case of a bare or uninsulated wire, the surface of the wire can be the outer or exterior conductive surface of the bare or uninsulated wire that is exposed to air or free space. As another example, in the case of insulated wire, the surface of the wire can be the conductive portion of the wire that meets the insulator portion of the wire, or can otherwise be the insulator surface of the wire that is exposed to air or free space, or can otherwise be any material region between the insulator surface of the wire and the conductive portion of the wire that meets the insulator portion of the wire, depending upon the relative differences in the properties (e.g., dielectric properties) of the insulator, air, and/or the conductor and further dependent on the frequency and propagation mode or modes of the guided wave.

According to an example embodiment, the term "about" a wire or other transmission medium used in conjunction with a guided wave can include fundamental guided wave propagation modes such as a guided waves having a circular or substantially circular field distribution, a symmetrical electromagnetic field distribution (e.g., electric field, magnetic field, electromagnetic field, etc.) or other fundamental mode pattern at least partially around a wire or other transmission medium. In addition, when a guided wave propagates "about" a wire or other transmission medium, it can do so according to a guided wave propagation mode that includes not only the fundamental wave propagation modes (e.g., zero order modes), but additionally or alternatively non-fundamental wave propagation modes such as higher-order guided wave modes (e.g., $1^{st}$ order modes, $2^{nd}$ order modes, etc.), asymmetrical modes and/or other guided (e.g., surface) waves that have non-circular field distributions around a wire or other transmission medium. As used herein, the term "guided wave mode" refers to a guided wave propagation mode of a transmission medium, coupling device or other system component of a guided wave communication system.

For example, such non-circular field distributions can be unilateral or multi-lateral with one or more axial lobes characterized by relatively higher field strength and/or one or more nulls or null regions characterized by relatively low-field strength, zero-field strength or substantially zero-field strength. Further, the field distribution can otherwise vary as a function of azimuthal orientation around the wire such that one or more angular regions around the wire have an electric or magnetic field strength (or combination thereof) that is higher than one or more other angular regions of azimuthal orientation, according to an example embodiment. It will be appreciated that the relative orientations or positions of the guided wave higher order modes or asymmetrical modes can vary as the guided wave travels along the wire.

As used herein, the term "millimeter-wave" can refer to electromagnetic waves/signals that fall within the "millimeter-wave frequency band" of 30 GHz to 300 GHz. The term "microwave" can refer to electromagnetic waves/signals

that fall within a "microwave frequency band" of 300 MHz to 300 GHz. The term "radio frequency" or "RF" can refer to electromagnetic waves/signals that fall within the "radio frequency band" of 10 kHz to 1 THz. It is appreciated that wireless signals, electrical signals, and guided electromagnetic waves as described in the subject disclosure can be configured to operate at any desirable frequency range, such as, for example, at frequencies within, above or below millimeter-wave and/or microwave frequency bands. In particular, when a coupling device or transmission medium includes a conductive element, the frequency of the guided electromagnetic waves that are carried by the coupling device and/or propagate along the transmission medium can be below the mean collision frequency of the electrons in the conductive element. Further, the frequency of the guided electromagnetic waves that are carried by the coupling device and/or propagate along the transmission medium can be a non-optical frequency, e.g., a radio frequency below the range of optical frequencies that begins at 1 THz.

As used herein, the term "antenna" can refer to a device that is part of a transmitting or receiving system to transmit/radiate or receive wireless signals.

In accordance with one or more embodiments, a system can include a first group of network devices mounted on first utility poles, where the first utility poles are arranged along a first path, and where the first utility poles connect segments of a first transmission medium. The system can include a second group of network devices mounted on second utility poles, where the second utility poles are arranged along a second path. Each network device of the first and second groups of network devices can include a dielectric antenna for transmitting and receiving communications. A communication path for wireless signals can alternate between the first and second groups of network devices.

In accordance with one or more embodiments, a method can include receiving, by a first network device from a second network device, wireless signals. The first network device can be one of a first group of network devices mounted on first utility poles, where the first utility poles are arranged along a first path, where the second network device is one of a second group of network devices mounted on second utility poles, and where the second utility poles are arranged along a second path. The method can include transmitting, by the first network device to a third network device, the wireless signals, where the third network device is one of the second group of network devices.

In accordance with one or more embodiments, a first network device can include a processing system having a processor, and can include a memory that stores executable instructions that, when executed by the processing system, facilitate performance of operations. The first network device can include receiving signals, from a second network device, by electromagnetic waves at a physical interface of a first transmission medium that propagate without utilizing an electrical return path, where the electromagnetic waves are guided by the first transmission medium, where the first and second network devices are part of a first group of network devices mounted on first utility poles, and where the first utility poles connect segments of the first transmission medium. The first network device can, responsive to a determination of an undesired condition associated with the first transmission medium, transmit, to a third network device, wireless signals representative of the signals received from the second network device.

Referring now to FIG. **1**, a block diagram **100** illustrating an example, non-limiting embodiment of a guided wave communications system is shown. In operation, a transmission device **101** receives one or more communication signals **110** from a communication network or other communications device that includes data and generates guided waves **120** to convey the data via the transmission medium **125** to the transmission device **102**. The transmission device **102** receives the guided waves **120** and converts them to communication signals **112** that include the data for transmission to a communications network or other communications device. The guided waves **120** can be modulated to convey data via a modulation technique such as phase shift keying, frequency shift keying, quadrature amplitude modulation, amplitude modulation, multi-carrier modulation such as orthogonal frequency division multiplexing and via multiple access techniques such as frequency division multiplexing, time division multiplexing, code division multiplexing, multiplexing via differing wave propagation modes and via other modulation and access strategies.

The communication network or networks can include a wireless communication network such as a mobile data network, a cellular voice and data network, a wireless local area network (e.g., WiFi or an 802.xx network), a satellite communications network, a personal area network or other wireless network. The communication network or networks can also include a wired communication network such as a telephone network, an Ethernet network, a local area network, a wide area network such as the Internet, a broadband access network, a cable network, a fiber optic network, or other wired network. The communication devices can include a network edge device, bridge device or home gateway, a set-top box, broadband modem, telephone adapter, access point, base station, or other fixed communication device, a mobile communication device such as an automotive gateway or automobile, laptop computer, tablet, smartphone, cellular telephone, or other communication device.

In an example embodiment, the guided wave communication system **100** can operate in a bi-directional fashion where transmission device **102** receives one or more communication signals **112** from a communication network or device that includes other data and generates guided waves **122** to convey the other data via the transmission medium **125** to the transmission device **101**. In this mode of operation, the transmission device **101** receives the guided waves **122** and converts them to communication signals **110** that include the other data for transmission to a communications network or device. The guided waves **122** can be modulated to convey data via a modulation technique such as phase shift keying, frequency shift keying, quadrature amplitude modulation, amplitude modulation, multi-carrier modulation such as orthogonal frequency division multiplexing and via multiple access techniques such as frequency division multiplexing, time division multiplexing, code division multiplexing, multiplexing via differing wave propagation modes and via other modulation and access strategies.

The transmission medium **125** can include a cable having at least one inner portion surrounded by a dielectric material such as an insulator or other dielectric cover, coating or other dielectric material, the dielectric material having an outer surface and a corresponding circumference. In an example embodiment, the transmission medium **125** operates as a single-wire transmission line to guide the transmission of an electromagnetic wave. When the transmission medium **125** is implemented as a single wire transmission system, it can include a wire. The wire can be insulated or uninsulated, and single-stranded or multi-stranded (e.g., braided). In other embodiments, the transmission medium **125** can contain conductors of other shapes or configurations including wire

bundles, cables, rods, rails, pipes. In addition, the transmission medium **125** can include non-conductors such as dielectric pipes, rods, rails, or other dielectric members; combinations of conductors and dielectric materials, conductors without dielectric materials or other guided wave transmission media. It should be noted that the transmission medium **125** can otherwise include any of the transmission media previously discussed.

Further, as previously discussed, the guided waves **120** and **122** can be contrasted with radio transmissions over free space/air or conventional propagation of electrical power or signals through the conductor of a wire via an electrical circuit. In addition to the propagation of guided waves **120** and **122**, the transmission medium **125** may optionally contain one or more wires that propagate electrical power or other communication signals in a conventional manner as a part of one or more electrical circuits.

Referring now to FIG. **2**, a block diagram **200** illustrating an example, non-limiting embodiment of a transmission device is shown. The transmission device **101** or **102** includes a communications interface (I/F) **205**, a transceiver **210** and a coupler **220**.

In an example of operation, the communications interface **205** receives a communication signal **110** or **112** that includes data. In various embodiments, the communications interface **205** can include a wireless interface for receiving a wireless communication signal in accordance with a wireless standard protocol such as LTE or other cellular voice and data protocol, WiFi or an 802.11 protocol, WIMAX protocol, Ultra Wideband protocol, Bluetooth protocol, Zigbee protocol, a direct broadcast satellite (DBS) or other satellite communication protocol or other wireless protocol. In addition or in the alternative, the communications interface **205** includes a wired interface that operates in accordance with an Ethernet protocol, universal serial bus (USB) protocol, a data over cable service interface specification (DOCSIS) protocol, a digital subscriber line (DSL) protocol, a Firewire (IEEE 1394) protocol, or other wired protocol. In additional to standards-based protocols, the communications interface **205** can operate in conjunction with other wired or wireless protocol. In addition, the communications interface **205** can optionally operate in conjunction with a protocol stack that includes multiple protocol layers including a MAC protocol, transport protocol, application protocol, etc.

In an example of operation, the transceiver **210** generates an electromagnetic wave based on the communication signal **110** or **112** to convey the data. The electromagnetic wave has at least one carrier frequency and at least one corresponding wavelength. The carrier frequency can be within a millimeter-wave frequency band of 30 GHz-300 GHz, such as 60 GHz or a carrier frequency in the range of 30-40 GHz or a lower frequency band of 300 MHz-30 GHz in the microwave frequency range such as 26-30 GHz, 11 GHz, 6 GHz or 3 GHz, but it will be appreciated that other carrier frequencies are possible in other embodiments. In one mode of operation, the transceiver **210** merely upconverts the communications signal or signals **110** or **112** for transmission of the electromagnetic signal in the microwave or millimeter-wave band as a guided electromagnetic wave that is guided by or bound to the transmission medium **125**. In another mode of operation, the communications interface **205** either converts the communication signal **110** or **112** to a baseband or near baseband signal or extracts the data from the communication signal **110** or **112** and the transceiver **210** modulates a high-frequency carrier with the data, the baseband or near baseband signal for transmission. It should be appreciated that the transceiver **210** can modulate the data received via the communication signal **110** or **112** to preserve one or more data communication protocols of the communication signal **110** or **112** either by encapsulation in the payload of a different protocol or by simple frequency shifting. In the alternative, the transceiver **210** can otherwise translate the data received via the communication signal **110** or **112** to a protocol that is different from the data communication protocol or protocols of the communication signal **110** or **112**.

In an example of operation, the coupler **220** couples the electromagnetic wave to the transmission medium **125** as a guided electromagnetic wave to convey the communications signal or signals **110** or **112**. While the prior description has focused on the operation of the transceiver **210** as a transmitter, the transceiver **210** can also operate to receive electromagnetic waves that convey other data from the single wire transmission medium via the coupler **220** and to generate communications signals **110** or **112**, via communications interface **205** that includes the other data. Consider embodiments where an additional guided electromagnetic wave conveys other data that also propagates along the transmission medium **125**. The coupler **220** can also couple this additional electromagnetic wave from the transmission medium **125** to the transceiver **210** for reception.

The transmission device **101** or **102** includes an optional training controller **230**. In an example embodiment, the training controller **230** is implemented by a standalone processor or a processor that is shared with one or more other components of the transmission device **101** or **102**. The training controller **230** selects the carrier frequencies, modulation schemes and/or guided wave modes for the guided electromagnetic waves based on feedback data received by the transceiver **210** from at least one remote transmission device coupled to receive the guided electromagnetic wave.

In an example embodiment, a guided electromagnetic wave transmitted by a remote transmission device **101** or **102** conveys data that also propagates along the transmission medium **125**. The data from the remote transmission device **101** or **102** can be generated to include the feedback data. In operation, the coupler **220** also couples the guided electromagnetic wave from the transmission medium **125** and the transceiver receives the electromagnetic wave and processes the electromagnetic wave to extract the feedback data.

In an example embodiment, the training controller **230** operates based on the feedback data to evaluate a plurality of candidate frequencies, modulation schemes and/or transmission modes to select a carrier frequency, modulation scheme and/or transmission mode to enhance performance, such as throughput, signal strength, reduce propagation loss, etc.

Consider the following example: a transmission device **101** begins operation under control of the training controller **230** by sending a plurality of guided waves as test signals such as pilot waves or other test signals at a corresponding plurality of candidate frequencies and/or candidate modes directed to a remote transmission device **102** coupled to the transmission medium **125**. The guided waves can include, in addition or in the alternative, test data. The test data can indicate the particular candidate frequency and/or guide-wave mode of the signal. In an embodiment, the training controller **230** at the remote transmission device **102** receives the test signals and/or test data from any of the guided waves that were properly received and determines the best candidate frequency and/or guided wave mode, a set of acceptable candidate frequencies and/or guided wave

modes, or a rank ordering of candidate frequencies and/or guided wave modes. This selection of candidate frequenc(ies) or/and guided-mode(s) are generated by the training controller **230** based on one or more optimizing criteria such as received signal strength, bit error rate, packet error rate, signal to noise ratio, propagation loss, etc. The training controller **230** generates feedback data that indicates the selection of candidate frequenc(ies) or/and guided wave mode(s) and sends the feedback data to the transceiver **210** for transmission to the transmission device **101**. The transmission device **101** and **102** can then communicate data with one another based on the selection of candidate frequenc(ies) or/and guided wave mode(s).

In other embodiments, the guided electromagnetic waves that contain the test signals and/or test data are reflected back, repeated back or otherwise looped back by the remote transmission device **102** to the transmission device **101** for reception and analysis by the training controller **230** of the transmission device **101** that initiated these waves. For example, the transmission device **101** can send a signal to the remote transmission device **102** to initiate a test mode where a physical reflector is switched on the line, a termination impedance is changed to cause reflections, a loop back mode is switched on to couple electromagnetic waves back to the source transmission device **102**, and/or a repeater mode is enabled to amplify and retransmit the electromagnetic waves back to the source transmission device **102**. The training controller **230** at the source transmission device **102** receives the test signals and/or test data from any of the guided waves that were properly received and determines selection of candidate frequenc(ies) or/and guided wave mode(s).

While the procedure above has been described in a start-up or initialization mode of operation, each transmission device **101** or **102** can send test signals, evaluate candidate frequencies or guided wave modes via non-test such as normal transmissions or otherwise evaluate candidate frequencies or guided wave modes at other times or continuously as well. In an example embodiment, the communication protocol between the transmission devices **101** and **102** can include an on-request or periodic test mode where either full testing or more limited testing of a subset of candidate frequencies and guided wave modes are tested and evaluated. In other modes of operation, the re-entry into such a test mode can be triggered by a degradation of performance due to a disturbance, weather conditions, etc. In an example embodiment, the receiver bandwidth of the transceiver **210** is either sufficiently wide or swept to receive all candidate frequencies or can be selectively adjusted by the training controller **230** to a training mode where the receiver bandwidth of the transceiver **210** is sufficiently wide or swept to receive all candidate frequencies.

Referring now to FIG. **3**, a graphical diagram **300** illustrating an example, non-limiting embodiment of an electromagnetic field distribution is shown. In this embodiment, a transmission medium **125** in air includes an inner conductor **301** and an insulating jacket **302** of dielectric material, as shown in cross section. The diagram **300** includes different gray-scales that represent differing electromagnetic field strengths generated by the propagation of the guided wave having an asymmetrical and non-fundamental guided wave mode.

In particular, the electromagnetic field distribution corresponds to a modal "sweet spot" that enhances guided electromagnetic wave propagation along an insulated transmission medium and reduces end-to-end transmission loss. In this particular mode, electromagnetic waves are guided by the transmission medium **125** to propagate along an outer surface of the transmission medium—in this case, the outer surface of the insulating jacket **302**. Electromagnetic waves are partially embedded in the insulator and partially radiating on the outer surface of the insulator. In this fashion, electromagnetic waves are "lightly" coupled to the insulator so as to enable electromagnetic wave propagation at long distances with low propagation loss.

As shown, the guided wave has a field structure that lies primarily or substantially outside of the transmission medium **125** that serves to guide the electromagnetic waves. The regions inside the conductor **301** have little or no field. Likewise regions inside the insulating jacket **302** have low field strength. The majority of the electromagnetic field strength is distributed in the lobes **304** at the outer surface of the insulating jacket **302** and in close proximity thereof. The presence of an asymmetric guided wave mode is shown by the high electromagnetic field strengths at the top and bottom of the outer surface of the insulating jacket **302** (in the orientation of the diagram)—as opposed to very small field strengths on the other sides of the insulating jacket **302**.

The example shown corresponds to a 38 GHz electromagnetic wave guided by a wire with a diameter of 1.1 cm and a dielectric insulation of thickness of 0.36 cm. Because the electromagnetic wave is guided by the transmission medium **125** and the majority of the field strength is concentrated in the air outside of the insulating jacket **302** within a limited distance of the outer surface, the guided wave can propagate longitudinally down the transmission medium **125** with very low loss. In the example shown, this "limited distance" corresponds to a distance from the outer surface that is less than half the largest cross sectional dimension of the transmission medium **125**. In this case, the largest cross sectional dimension of the wire corresponds to the overall diameter of 1.82 cm, however, this value can vary with the size and shape of the transmission medium **125**. For example, should the transmission medium **125** be of a rectangular shape with a height of 0.3 cm and a width of 0.4 cm, the largest cross sectional dimension would be the diagonal of 0.5 cm and the corresponding limited distance would be 0.25 cm. The dimensions of the area containing the majority of the field strength also vary with the frequency, and in general, increase as carrier frequencies decrease.

It should also be noted that the components of a guided wave communication system, such as couplers and transmission media can have their own cut-off frequencies for each guided wave mode. The cut-off frequency generally sets forth the lowest frequency that a particular guided wave mode is designed to be supported by that particular component. In an example embodiment, the particular asymmetric mode of propagation shown is induced on the transmission medium **125** by an electromagnetic wave having a frequency that falls within a limited range (such as Fc to 2Fc) of the lower cut-off frequency Fc for this particular asymmetric mode. The lower cut-off frequency Fc is particular to the characteristics of transmission medium **125**. For embodiments as shown that include an inner conductor **301** surrounded by an insulating jacket **302**, this cutoff frequency can vary based on the dimensions and properties of the insulating jacket **302** and potentially the dimensions and properties of the inner conductor **301** and can be determined experimentally to have a desired mode pattern. It should be noted however, that similar effects can be found for a hollow dielectric or insulator without an inner conductor. In this case, the cutoff frequency can vary based on the dimensions and properties of the hollow dielectric or insulator.

At frequencies lower than the lower cut-off frequency, the asymmetric mode is difficult to induce in the transmission medium **125** and fails to propagate for all but trivial distances. As the frequency increases above the limited range of frequencies about the cut-off frequency, the asymmetric mode shifts more and more inward of the insulating jacket **302**. At frequencies much larger than the cut-off frequency, the field strength is no longer concentrated outside of the insulating jacket, but primarily inside of the insulating jacket **302**. While the transmission medium **125** provides strong guidance to the electromagnetic wave and propagation is still possible, ranges are more limited by increased losses due to propagation within the insulating jacket **302**—as opposed to the surrounding air.

Referring now to FIG. **4**, a graphical diagram **400** illustrating an example, non-limiting embodiment of an electromagnetic field distribution is shown. In particular, a cross section diagram **400**, similar to FIG. **3** is shown with common reference numerals used to refer to similar elements. The example shown corresponds to a 60 GHz wave guided by a wire with a diameter of 1.1 cm and a dielectric insulation of thickness of 0.36 cm. Because the frequency of the guided wave is above the limited range of the cut-off frequency of this particular asymmetric mode, much of the field strength has shifted inward of the insulating jacket **302**. In particular, the field strength is concentrated primarily inside of the insulating jacket **302**. While the transmission medium **125** provides strong guidance to the electromagnetic wave and propagation is still possible, ranges are more limited when compared with the embodiment of FIG. **3**, by increased losses due to propagation within the insulating jacket **302**.

Referring now to FIG. **5**A, a graphical diagram illustrating an example, non-limiting embodiment of a frequency response is shown. In particular, diagram **500** presents a graph of end-to-end loss (in dB) as a function of frequency, overlaid with electromagnetic field distributions **510**, **520** and **530** at three points for a 200 cm insulated medium voltage wire. The boundary between the insulator and the surrounding air is represented by reference numeral **525** in each electromagnetic field distribution.

As discussed in conjunction with FIG. **3**, an example of a desired asymmetric mode of propagation shown is induced on the transmission medium **125** by an electromagnetic wave having a frequency that falls within a limited range (such as Fc to 2Fc) of the lower cut-off frequency Fc of the transmission medium for this particular asymmetric mode. In particular, the electromagnetic field distribution **520** at 6 GHz falls within this modal "sweet spot" that enhances electromagnetic wave propagation along an insulated transmission medium and reduces end-to-end transmission loss. In this particular mode, guided waves are partially embedded in the insulator and partially radiating on the outer surface of the insulator. In this fashion, the electromagnetic waves are "lightly" coupled to the insulator so as to enable guided electromagnetic wave propagation at long distances with low propagation loss.

At lower frequencies represented by the electromagnetic field distribution **510** at 3 GHz, the asymmetric mode radiates more heavily generating higher propagation losses. At higher frequencies represented by the electromagnetic field distribution **530** at 9 GHz, the asymmetric mode shifts more and more inward of the insulating jacket providing too much absorption, again generating higher propagation losses.

Referring now to FIG. **5**B, a graphical diagram **550** illustrating example, non-limiting embodiments of a longitudinal cross-section of a transmission medium **125**, such as an insulated wire, depicting fields of guided electromagnetic waves at various operating frequencies is shown. As shown in diagram **556**, when the guided electromagnetic waves are at approximately the cutoff frequency ($f_c$) corresponding to the modal "sweet spot", the guided electromagnetic waves are loosely coupled to the insulated wire so that absorption is reduced, and the fields of the guided electromagnetic waves are bound sufficiently to reduce the amount radiated into the environment (e.g., air). Because absorption and radiation of the fields of the guided electromagnetic waves is low, propagation losses are consequently low, enabling the guided electromagnetic waves to propagate for longer distances.

As shown in diagram **554**, propagation losses increase when an operating frequency of the guide electromagnetic waves increases above about two-times the cutoff frequency ($f_c$)—or as referred to, above the range of the "sweet spot". More of the field strength of the electromagnetic wave is driven inside the insulating layer, increasing propagation losses. At frequencies much higher than the cutoff frequency ($f_c$) the guided electromagnetic waves are strongly bound to the insulated wire as a result of the fields emitted by the guided electromagnetic waves being concentrated in the insulation layer of the wire, as shown in diagram **552**. This in turn raises propagation losses further due to absorption of the guided electromagnetic waves by the insulation layer. Similarly, propagation losses increase when the operating frequency of the guided electromagnetic waves is substantially below the cutoff frequency ($f_c$), as shown in diagram **558**. At frequencies much lower than the cutoff frequency ($f_c$) the guided electromagnetic waves are weakly (or nominally) bound to the insulated wire and thereby tend to radiate into the environment (e.g., air), which in turn, raises propagation losses due to radiation of the guided electromagnetic waves.

Referring now to FIG. **6**, a graphical diagram **600** illustrating an example, non-limiting embodiment of an electromagnetic field distribution is shown. In this embodiment, a transmission medium **602** is a bare wire, as shown in cross section. The diagram **300** includes different gray-scales that represent differing electromagnetic field strengths generated by the propagation of a guided wave having a symmetrical and fundamental guided wave mode at a single carrier frequency.

In this particular mode, electromagnetic waves are guided by the transmission medium **602** to propagate along an outer surface of the transmission medium—in this case, the outer surface of the bare wire. Electromagnetic waves are "lightly" coupled to the wire so as to enable electromagnetic wave propagation at long distances with low propagation loss. As shown, the guided wave has a field structure that lies substantially outside of the transmission medium **602** that serves to guide the electromagnetic waves. The regions inside the conductor **602** have little or no field.

Referring now to FIG. **7**, a block diagram **700** illustrating an example, non-limiting embodiment of an arc coupler is shown. In particular a coupling device is presented for use in a transmission device, such as transmission device **101** or **102** presented in conjunction with FIG. **1**. The coupling device includes an arc coupler **704** coupled to a transmitter circuit **712** and termination or damper **714**. The arc coupler **704** can be made of a dielectric material, or other low-loss insulator (e.g., Teflon, polyethylene, etc.), or made of a conducting (e.g., metallic, non-metallic, etc.) material, or any combination of the foregoing materials. As shown, the arc coupler **704** operates as a waveguide and has a wave **706**

propagating as a guided wave about a waveguide surface of the arc coupler **704**. In the embodiment shown, at least a portion of the arc coupler **704** can be placed near a wire **702** or other transmission medium, (such as transmission medium **125**), in order to facilitate coupling between the arc coupler **704** and the wire **702** or other transmission medium, as described herein to launch the guided wave **708** on the wire. The arc coupler **704** can be placed such that a portion of the curved arc coupler **704** is tangential to, and parallel or substantially parallel to the wire **702**. The portion of the arc coupler **704** that is parallel to the wire can be an apex of the curve, or any point where a tangent of the curve is parallel to the wire **702**. When the arc coupler **704** is positioned or placed thusly, the wave **706** travelling along the arc coupler **704** couples, at least in part, to the wire **702**, and propagates as guided wave **708** around or about the wire surface of the wire **702** and longitudinally along the wire **702**. The guided wave **708** can be characterized as a surface wave or other electromagnetic wave that is guided by or bound to the wire **702** or other transmission medium.

A portion of the wave **706** that does not couple to the wire **702** propagates as a wave **710** along the arc coupler **704**. It will be appreciated that the arc coupler **704** can be configured and arranged in a variety of positions in relation to the wire **702** to achieve a desired level of coupling or non-coupling of the wave **706** to the wire **702**. For example, the curvature and/or length of the arc coupler **704** that is parallel or substantially parallel, as well as its separation distance (which can include zero separation distance in an embodiment), to the wire **702** can be varied without departing from example embodiments. Likewise, the arrangement of arc coupler **704** in relation to the wire **702** may be varied based upon considerations of the respective intrinsic characteristics (e.g., thickness, composition, electromagnetic properties, etc.) of the wire **702** and the arc coupler **704**, as well as the characteristics (e.g., frequency, energy level, etc.) of the waves **706** and **708**.

The guided wave **708** stays parallel or substantially parallel to the wire **702**, even as the wire **702** bends and flexes. Bends in the wire **702** can increase transmission losses, which are also dependent on wire diameters, frequency, and materials. If the dimensions of the arc coupler **704** are chosen for efficient power transfer, most of the power in the wave **706** is transferred to the wire **702**, with little power remaining in wave **710**. It will be appreciated that the guided wave **708** can still be multi-modal in nature (discussed herein), including having modes that are non-fundamental or asymmetric, while traveling along a path that is parallel or substantially parallel to the wire **702**, with or without a fundamental transmission mode. In an embodiment, non-fundamental or asymmetric modes can be utilized to minimize transmission losses and/or obtain increased propagation distances.

It is noted that the term parallel is generally a geometric construct which often is not exactly achievable in real systems. Accordingly, the term parallel as utilized in the subject disclosure represents an approximation rather than an exact configuration when used to describe embodiments disclosed in the subject disclosure. In an embodiment, substantially parallel can include approximations that are within 30 degrees of true parallel in all dimensions.

In an embodiment, the wave **706** can exhibit one or more wave propagation modes. The arc coupler modes can be dependent on the shape and/or design of the coupler **704**. The one or more arc coupler modes of wave **706** can generate, influence, or impact one or more wave propagation modes of the guided wave **708** propagating along wire **702**. It should be particularly noted however that the guided wave modes present in the guided wave **706** may be the same or different from the guided wave modes of the guided wave **708**. In this fashion, one or more guided wave modes of the guided wave **706** may not be transferred to the guided wave **708**, and further one or more guided wave modes of guided wave **708** may not have been present in guided wave **706**. It should also be noted that the cut-off frequency of the arc coupler **704** for a particular guided wave mode may be different than the cutoff frequency of the wire **702** or other transmission medium for that same mode. For example, while the wire **702** or other transmission medium may be operated slightly above its cutoff frequency for a particular guided wave mode, the arc coupler **704** may be operated well above its cut-off frequency for that same mode for low loss, slightly below its cut-off frequency for that same mode to, for example, induce greater coupling and power transfer, or some other point in relation to the arc coupler's cutoff frequency for that mode.

In an embodiment, the wave propagation modes on the wire **702** can be similar to the arc coupler modes since both waves **706** and **708** propagate about the outside of the arc coupler **704** and wire **702** respectively. In some embodiments, as the wave **706** couples to the wire **702**, the modes can change form, or new modes can be created or generated, due to the coupling between the arc coupler **704** and the wire **702**. For example, differences in size, material, and/or impedances of the arc coupler **704** and wire **702** may create additional modes not present in the arc coupler modes and/or suppress some of the arc coupler modes. The wave propagation modes can comprise the fundamental transverse electromagnetic mode (Quasi-$TEM_{00}$), where only small electric and/or magnetic fields extend in the direction of propagation, and the electric and magnetic fields extend radially outwards while the guided wave propagates along the wire. This guided wave mode can be donut shaped, where few of the electromagnetic fields exist within the arc coupler **704** or wire **702**.

Waves **706** and **708** can comprise a fundamental TEM mode where the fields extend radially outwards, and also comprise other, non-fundamental (e.g., asymmetric, higher-level, etc.) modes. While particular wave propagation modes are discussed above, other wave propagation modes are likewise possible such as transverse electric (TE) and transverse magnetic (TM) modes, based on the frequencies employed, the design of the arc coupler **704**, the dimensions and composition of the wire **702**, as well as its surface characteristics, its insulation if present, the electromagnetic properties of the surrounding environment, etc. It should be noted that, depending on the frequency, the electrical and physical characteristics of the wire **702** and the particular wave propagation modes that are generated, guided wave **708** can travel along the conductive surface of an oxidized uninsulated wire, an unoxidized uninsulated wire, an insulated wire and/or along the insulating surface of an insulated wire.

In an embodiment, a diameter of the arc coupler **704** is smaller than the diameter of the wire **702**. For the millimeter-band wavelength being used, the arc coupler **704** supports a single waveguide mode that makes up wave **706**. This single waveguide mode can change as it couples to the wire **702** as guided wave **708**. If the arc coupler **704** were larger, more than one waveguide mode can be supported, but these additional waveguide modes may not couple to the wire **702** as efficiently, and higher coupling losses can result. However, in some alternative embodiments, the diameter of the arc coupler **704** can be equal to or larger than the

diameter of the wire **702**, for example, where higher coupling losses are desirable or when used in conjunction with other techniques to otherwise reduce coupling losses (e.g., impedance matching with tapering, etc.).

In an embodiment, the wavelength of the waves **706** and **708** are comparable in size, or smaller than a circumference of the arc coupler **704** and the wire **702**. In an example, if the wire **702** has a diameter of 0.5 cm, and a corresponding circumference of around 1.5 cm, the wavelength of the transmission is around 1.5 cm or less, corresponding to a frequency of 70 GHz or greater. In another embodiment, a suitable frequency of the transmission and the carrier-wave signal is in the range of 30-100 GHz, perhaps around 30-60 GHz, and around 38 GHz in one example. In an embodiment, when the circumference of the arc coupler **704** and wire **702** is comparable in size to, or greater, than a wavelength of the transmission, the waves **706** and **708** can exhibit multiple wave propagation modes including fundamental and/or non-fundamental (symmetric and/or asymmetric) modes that propagate over sufficient distances to support various communication systems described herein. The waves **706** and **708** can therefore comprise more than one type of electric and magnetic field configuration. In an embodiment, as the guided wave **708** propagates down the wire **702**, the electrical and magnetic field configurations will remain the same from end to end of the wire **702**. In other embodiments, as the guided wave **708** encounters interference (distortion or obstructions) or loses energy due to transmission losses or scattering, the electric and magnetic field configurations can change as the guided wave **708** propagates down wire **702**.

In an embodiment, the arc coupler **704** can be composed of nylon, Teflon, polyethylene, a polyamide, or other plastics. In other embodiments, other dielectric materials are possible. The wire surface of wire **702** can be metallic with either a bare metallic surface, or can be insulated using plastic, dielectric, insulator or other coating, jacket or sheathing. In an embodiment, a dielectric or otherwise non-conducting/insulated waveguide can be paired with either a bare/metallic wire or insulated wire. In other embodiments, a metallic and/or conductive waveguide can be paired with a bare/metallic wire or insulated wire. In an embodiment, an oxidation layer on the bare metallic surface of the wire **702** (e.g., resulting from exposure of the bare metallic surface to oxygen/air) can also provide insulating or dielectric properties similar to those provided by some insulators or sheathings.

It is noted that the graphical representations of waves **706**, **708** and **710** are presented merely to illustrate the principles that wave **706** induces or otherwise launches a guided wave **708** on a wire **702** that operates, for example, as a single wire transmission line. Wave **710** represents the portion of wave **706** that remains on the arc coupler **704** after the generation of guided wave **708**. The actual electric and magnetic fields generated as a result of such wave propagation may vary depending on the frequencies employed, the particular wave propagation mode or modes, the design of the arc coupler **704**, the dimensions and composition of the wire **702**, as well as its surface characteristics, its optional insulation, the electromagnetic properties of the surrounding environment, etc.

It is noted that arc coupler **704** can include a termination circuit or damper **714** at the end of the arc coupler **704** that can absorb leftover radiation or energy from wave **710**. The termination circuit or damper **714** can prevent and/or minimize the leftover radiation or energy from wave **710** reflecting back toward transmitter circuit **712**. In an embodiment, the termination circuit or damper **714** can include termination resistors, and/or other components that perform impedance matching to attenuate reflection. In some embodiments, if the coupling efficiencies are high enough, and/or wave **710** is sufficiently small, it may not be necessary to use a termination circuit or damper **714**. For the sake of simplicity, these transmitter **712** and termination circuits or dampers **714** may not be depicted in the other figures, but in those embodiments, transmitter and termination circuits or dampers may possibly be used.

Further, while a single arc coupler **704** is presented that generates a single guided wave **708**, multiple arc couplers **704** placed at different points along the wire **702** and/or at different azimuthal orientations about the wire can be employed to generate and receive multiple guided waves **708** at the same or different frequencies, at the same or different phases, at the same or different wave propagation modes.

FIG. **8**, a block diagram **800** illustrating an example, non-limiting embodiment of an arc coupler is shown. In the embodiment shown, at least a portion of the coupler **704** can be placed near a wire **702** or other transmission medium, (such as transmission medium **125**), in order to facilitate coupling between the arc coupler **704** and the wire **702** or other transmission medium, to extract a portion of the guided wave **806** as a guided wave **808** as described herein. The arc coupler **704** can be placed such that a portion of the curved arc coupler **704** is tangential to, and parallel or substantially parallel to the wire **702**. The portion of the arc coupler **704** that is parallel to the wire can be an apex of the curve, or any point where a tangent of the curve is parallel to the wire **702**. When the arc coupler **704** is positioned or placed thusly, the wave **806** travelling along the wire **702** couples, at least in part, to the arc coupler **704**, and propagates as guided wave **808** along the arc coupler **704** to a receiving device (not expressly shown). A portion of the wave **806** that does not couple to the arc coupler propagates as wave **810** along the wire **702** or other transmission medium.

In an embodiment, the wave **806** can exhibit one or more wave propagation modes. The arc coupler modes can be dependent on the shape and/or design of the coupler **704**. The one or more modes of guided wave **806** can generate, influence, or impact one or more guide-wave modes of the guided wave **808** propagating along the arc coupler **704**. It should be particularly noted however that the guided wave modes present in the guided wave **806** may be the same or different from the guided wave modes of the guided wave **808**. In this fashion, one or more guided wave modes of the guided wave **806** may not be transferred to the guided wave **808**, and further one or more guided wave modes of guided wave **808** may not have been present in guided wave **806**.

Referring now to FIG. **9**A, a block diagram **900** illustrating an example, non-limiting embodiment of a stub coupler is shown. In particular a coupling device that includes stub coupler **904** is presented for use in a transmission device, such as transmission device **101** or **102** presented in conjunction with FIG. **1**. The stub coupler **904** can be made of a dielectric material, or other low-loss insulator (e.g., Teflon, polyethylene and etc.), or made of a conducting (e.g., metallic, non-metallic, etc.) material, or any combination of the foregoing materials. As shown, the stub coupler **904** operates as a waveguide and has a wave **906** propagating as a guided wave about a waveguide surface of the stub coupler **904**. In the embodiment shown, at least a portion of the stub coupler **904** can be placed near a wire **702** or other transmission medium, (such as transmission medium **125**), in

order to facilitate coupling between the stub coupler **904** and the wire **702** or other transmission medium, as described herein to launch the guided wave **908** on the wire.

In an embodiment, the stub coupler **904** is curved, and an end of the stub coupler **904** can be tied, fastened, or otherwise mechanically coupled to a wire **702**. When the end of the stub coupler **904** is fastened to the wire **702**, the end of the stub coupler **904** is parallel or substantially parallel to the wire **702**. Alternatively, another portion of the dielectric waveguide beyond an end can be fastened or coupled to wire **702** such that the fastened or coupled portion is parallel or substantially parallel to the wire **702**. The fastener **910** can be a nylon cable tie or other type of non-conducting/dielectric material that is either separate from the stub coupler **904** or constructed as an integrated component of the stub coupler **904**. The stub coupler **904** can be adjacent to the wire **702** without surrounding the wire **702**.

Like the arc coupler **704** described in conjunction with FIG. **7**, when the stub coupler **904** is placed with the end parallel to the wire **702**, the guided wave **906** travelling along the stub coupler **904** couples to the wire **702**, and propagates as guided wave **908** about the wire surface of the wire **702**. In an example embodiment, the guided wave **908** can be characterized as a surface wave or other electromagnetic wave.

It is noted that the graphical representations of waves **906** and **908** are presented merely to illustrate the principles that wave **906** induces or otherwise launches a guided wave **908** on a wire **702** that operates, for example, as a single wire transmission line. The actual electric and magnetic fields generated as a result of such wave propagation may vary depending on one or more of the shape and/or design of the coupler, the relative position of the dielectric waveguide to the wire, the frequencies employed, the design of the stub coupler **904**, the dimensions and composition of the wire **702**, as well as its surface characteristics, its optional insulation, the electromagnetic properties of the surrounding environment, etc.

In an embodiment, an end of stub coupler **904** can taper towards the wire **702** in order to increase coupling efficiencies. Indeed, the tapering of the end of the stub coupler **904** can provide impedance matching to the wire **702** and reduce reflections, according to an example embodiment of the subject disclosure. For example, an end of the stub coupler **904** can be gradually tapered in order to obtain a desired level of coupling between waves **906** and **908** as illustrated in FIG. **9**A.

In an embodiment, the fastener **910** can be placed such that there is a short length of the stub coupler **904** between the fastener **910** and an end of the stub coupler **904**. Maximum coupling efficiencies are realized in this embodiment when the length of the end of the stub coupler **904** that is beyond the fastener **910** is at least several wavelengths long for whatever frequency is being transmitted.

Turning now to FIG. **9**B, a diagram **950** illustrating an example, non-limiting embodiment of an electromagnetic distribution in accordance with various aspects described herein is shown. In particular, an electromagnetic distribution is presented in two dimensions for a transmission device that includes coupler **952**, shown in an example stub coupler constructed of a dielectric material. The coupler **952** couples an electromagnetic wave for propagation as a guided wave along an outer surface of a wire **702** or other transmission medium.

The coupler **952** guides the electromagnetic wave to a junction at $x_0$ via a symmetrical guided wave mode. While some of the energy of the electromagnetic wave that propagates along the coupler **952** is outside of the coupler **952**, the majority of the energy of this electromagnetic wave is contained within the coupler **952**. The junction at $x_0$ couples the electromagnetic wave to the wire **702** or other transmission medium at an azimuthal angle corresponding to the bottom of the transmission medium. This coupling induces an electromagnetic wave that is guided to propagate along the outer surface of the wire **702** or other transmission medium via at least one guided wave mode in direction **956**. The majority of the energy of the guided electromagnetic wave is outside or, but in close proximity to the outer surface of the wire **702** or other transmission medium. In the example shown, the junction at $x_0$ forms an electromagnetic wave that propagates via both a symmetrical mode and at least one asymmetrical surface mode, such as the first order mode presented in conjunction with FIG. **3**, that skims the surface of the wire **702** or other transmission medium.

It is noted that the graphical representations of guided waves are presented merely to illustrate an example of guided wave coupling and propagation. The actual electric and magnetic fields generated as a result of such wave propagation may vary depending on the frequencies employed, the design and/or configuration of the coupler **952**, the dimensions and composition of the wire **702** or other transmission medium, as well as its surface characteristics, its insulation if present, the electromagnetic properties of the surrounding environment, etc.

Turning now to FIG. **10**A, illustrated is a block diagram **1000** of an example, non-limiting embodiment of a coupler and transceiver system in accordance with various aspects described herein. The system is an example of transmission device **101** or **102**. In particular, the communication interface **1008** is an example of communications interface **205**, the stub coupler **1002** is an example of coupler **220**, and the transmitter/receiver device **1006**, diplexer **1016**, power amplifier **1014**, low noise amplifier **1018**, frequency mixers **1010** and **1020** and local oscillator **1012** collectively form an example of transceiver **210**.

In operation, the transmitter/receiver device **1006** launches and receives waves (e.g., guided wave **1004** onto stub coupler **1002**). The guided waves **1004** can be used to transport signals received from and sent to a host device, base station, mobile devices, a building or other device by way of a communications interface **1008**. The communications interface **1008** can be an integral part of system **1000**. Alternatively, the communications interface **1008** can be tethered to system **1000**. The communications interface **1008** can comprise a wireless interface for interfacing to the host device, base station, mobile devices, a building or other device utilizing any of various wireless signaling protocols (e.g., LTE, WiFi, WiMAX, IEEE 802.xx, etc.) including an infrared protocol such as an infrared data association (IrDA) protocol or other line of sight optical protocol. The communications interface **1008** can also comprise a wired interface such as a fiber optic line, coaxial cable, twisted pair, category 5 (CAT-5) cable or other suitable wired or optical mediums for communicating with the host device, base station, mobile devices, a building or other device via a protocol such as an Ethernet protocol, universal serial bus (USB) protocol, a data over cable service interface specification (DOCSIS) protocol, a digital subscriber line (DSL) protocol, a Firewire (IEEE 1394) protocol, or other wired or optical protocol. For embodiments where system **1000** functions as a repeater, the communications interface **1008** may not be necessary.

The output signals (e.g., Tx) of the communications interface **1008** can be combined with a carrier wave (e.g.,

millimeter-wave carrier wave) generated by a local oscillator **1012** at frequency mixer **1010**. Frequency mixer **1010** can use heterodyning techniques or other frequency shifting techniques to frequency shift the output signals from communications interface **1008**. For example, signals sent to and from the communications interface **1008** can be modulated signals such as orthogonal frequency division multiplexed (OFDM) signals formatted in accordance with a Long-Term Evolution (LTE) wireless protocol or other wireless 3G, 4G, 5G or higher voice and data protocol, a Zigbee, WIMAX, UltraWideband or IEEE 802.11 wireless protocol; a wired protocol such as an Ethernet protocol, universal serial bus (USB) protocol, a data over cable service interface specification (DOCSIS) protocol, a digital subscriber line (DSL) protocol, a Firewire (IEEE 1394) protocol or other wired or wireless protocol. In an example embodiment, this frequency conversion can be done in the analog domain, and as a result, the frequency shifting can be done without regard to the type of communications protocol used by a base station, mobile devices, or in-building devices. As new communications technologies are developed, the communications interface **1008** can be upgraded (e.g., updated with software, firmware, and/or hardware) or replaced and the frequency shifting and transmission apparatus can remain, simplifying upgrades. The carrier wave can then be sent to a power amplifier ("PA") **1014** and can be transmitted via the transmitter receiver device **1006** via the diplexer **1016**.

Signals received from the transmitter/receiver device **1006** that are directed towards the communications interface **1008** can be separated from other signals via diplexer **1016**. The received signal can then be sent to low noise amplifier ("LNA") **1018** for amplification. A frequency mixer **1020**, with help from local oscillator **1012** can downshift the received signal (which is in the millimeter-wave band or around 38 GHz in some embodiments) to the native frequency. The communications interface **1008** can then receive the transmission at an input port (Rx).

In an embodiment, transmitter/receiver device **1006** can include a cylindrical or non-cylindrical metal (which, for example, can be hollow in an embodiment, but not necessarily drawn to scale) or other conducting or non-conducting waveguide and an end of the stub coupler **1002** can be placed in or in proximity to the waveguide or the transmitter/receiver device **1006** such that when the transmitter/receiver device **1006** generates a transmission, the guided wave couples to stub coupler **1002** and propagates as a guided wave **1004** about the waveguide surface of the stub coupler **1002**. In some embodiments, the guided wave **1004** can propagate in part on the outer surface of the stub coupler **1002** and in part inside the stub coupler **1002**. In other embodiments, the guided wave **1004** can propagate substantially or completely on the outer surface of the stub coupler **1002**. In yet other embodiments, the guided wave **1004** can propagate substantially or completely inside the stub coupler **1002**. In this latter embodiment, the guided wave **1004** can radiate at an end of the stub coupler **1002** (such as the tapered end shown in FIG. **4**) for coupling to a transmission medium such as a wire **702** of FIG. **7**. Similarly, if guided wave **1004** is incoming (coupled to the stub coupler **1002** from a wire **702**), guided wave **1004** then enters the transmitter/receiver device **1006** and couples to the cylindrical waveguide or conducting waveguide. While transmitter/receiver device **1006** is shown to include a separate waveguide—an antenna, cavity resonator, klystron, magnetron, travelling wave tube, or other radiating element can be employed to induce a guided wave on the coupler **1002**, with or without the separate waveguide.

In an embodiment, stub coupler **1002** can be wholly constructed of a dielectric material (or another suitable insulating material), without any metallic or otherwise conducting materials therein. Stub coupler **1002** can be composed of nylon, Teflon, polyethylene, a polyamide, other plastics, or other materials that are non-conducting and suitable for facilitating transmission of electromagnetic waves at least in part on an outer surface of such materials. In another embodiment, stub coupler **1002** can include a core that is conducting/metallic, and have an exterior dielectric surface. Similarly, a transmission medium that couples to the stub coupler **1002** for propagating electromagnetic waves induced by the stub coupler **1002** or for supplying electromagnetic waves to the stub coupler **1002** can, in addition to being a bare or insulated wire, be wholly constructed of a dielectric material (or another suitable insulating material), without any metallic or otherwise conducting materials therein.

It is noted that although FIG. **10**A shows that the opening of transmitter receiver device **1006** is much wider than the stub coupler **1002**, this is not to scale, and that in other embodiments the width of the stub coupler **1002** is comparable or slightly smaller than the opening of the hollow waveguide. It is also not shown, but in an embodiment, an end of the coupler **1002** that is inserted into the transmitter/receiver device **1006** tapers down in order to reduce reflection and increase coupling efficiencies.

Before coupling to the stub coupler **1002**, the one or more waveguide modes of the guided wave generated by the transmitter/receiver device **1006** can couple to the stub coupler **1002** to induce one or more wave propagation modes of the guided wave **1004**. The wave propagation modes of the guided wave **1004** can be different than the hollow metal waveguide modes due to the different characteristics of the hollow metal waveguide and the dielectric waveguide. For instance, wave propagation modes of the guided wave **1004** can comprise the fundamental transverse electromagnetic mode (Quasi-$TEM_{00}$), where only small electrical and/or magnetic fields extend in the direction of propagation, and the electric and magnetic fields extend radially outwards from the stub coupler **1002** while the guided waves propagate along the stub coupler **1002**. The fundamental transverse electromagnetic mode wave propagation mode may or may not exist inside a waveguide that is hollow. Therefore, the hollow metal waveguide modes that are used by transmitter/receiver device **1006** are waveguide modes that can couple effectively and efficiently to wave propagation modes of stub coupler **1002**.

It will be appreciated that other constructs or combinations of the transmitter/receiver device **1006** and stub coupler **1002** are possible. For example, a stub coupler **1002'** can be placed tangentially or in parallel (with or without a gap) with respect to an outer surface of the hollow metal waveguide of the transmitter/receiver device **1006'** (corresponding circuitry not shown) as depicted by reference **1000'** of FIG. **10**B. In another embodiment, not shown by reference **1000'**, the stub coupler **1002'** can be placed inside the hollow metal waveguide of the transmitter/receiver device **1006'** without an axis of the stub coupler **1002'** being coaxially aligned with an axis of the hollow metal waveguide of the transmitter/receiver device **1006'**. In either of these embodiments, the guided wave generated by the transmitter/receiver device **1006'** can couple to a surface of the stub coupler **1002'** to induce one or more wave propagation modes of the guided wave **1004'** on the stub coupler **1002'** including a fundamental mode (e.g., a symmetric mode) and/or a non-fundamental mode (e.g., asymmetric mode).

In one embodiment, the guided wave **1004'** can propagate in part on the outer surface of the stub coupler **1002'** and in part inside the stub coupler **1002'**. In another embodiment, the guided wave **1004'** can propagate substantially or completely on the outer surface of the stub coupler **1002'**. In yet other embodiments, the guided wave **1004'** can propagate substantially or completely inside the stub coupler **1002'**. In this latter embodiment, the guided wave **1004'** can radiate at an end of the stub coupler **1002'** (such as the tapered end shown in FIG. **9**) for coupling to a transmission medium such as a wire **702** of FIG. **9**.

It will be further appreciated that other constructs the transmitter/receiver device **1006** are possible. For example, a hollow metal waveguide of a transmitter/receiver device **1006"** (corresponding circuitry not shown), depicted in FIG. **10**B as reference **1000"**, can be placed tangentially or in parallel (with or without a gap) with respect to an outer surface of a transmission medium such as the wire **702** of FIG. **4** without the use of the stub coupler **1002**. In this embodiment, the guided wave generated by the transmitter/receiver device **1006"** can couple to a surface of the wire **702** to induce one or more wave propagation modes of a guided wave **908** on the wire **702** including a fundamental mode (e.g., a symmetric mode) and/or a non-fundamental mode (e.g., asymmetric mode). In another embodiment, the wire **702** can be positioned inside a hollow metal waveguide of a transmitter/receiver device **1006'"** (corresponding circuitry not shown) so that an axis of the wire **702** is coaxially (or not coaxially) aligned with an axis of the hollow metal waveguide without the use of the stub coupler **1002**—see FIG. **10**B reference **1000'"**. In this embodiment, the guided wave generated by the transmitter/receiver device **1006'"** can couple to a surface of the wire **702** to induce one or more wave propagation modes of a guided wave **908** on the wire including a fundamental mode (e.g., a symmetric mode) and/or a non-fundamental mode (e.g., asymmetric mode).

In the embodiments of **1000"** and **1000'"**, for a wire **702** having an insulated outer surface, the guided wave **908** can propagate in part on the outer surface of the insulator and in part inside the insulator. In embodiments, the guided wave **908** can propagate substantially or completely on the outer surface of the insulator, or substantially or completely inside the insulator. In the embodiments of **1000"** and **1000'"**, for a wire **702** that is a bare conductor, the guided wave **908** can propagate in part on the outer surface of the conductor and in part inside the conductor. In another embodiment, the guided wave **908** can propagate substantially or completely on the outer surface of the conductor.

Referring now to FIG. **11**, a block diagram **1100** illustrating an example, non-limiting embodiment of a dual stub coupler is shown. In particular, a dual coupler design is presented for use in a transmission device, such as transmission device **101** or **102** presented in conjunction with FIG. **1**. In an embodiment, two or more couplers (such as the stub couplers **1104** and **1106**) can be positioned around a wire **1102** in order to receive guided wave **1108**. In an embodiment, one coupler is enough to receive the guided wave **1108**. In that case, guided wave **1108** couples to coupler **1104** and propagates as guided wave **1110**. If the field structure of the guided wave **1108** oscillates or undulates around the wire **1102** due to the particular guided wave mode(s) or various outside factors, then coupler **1106** can be placed such that guided wave **1108** couples to coupler **1106**. In some embodiments, four or more couplers can be placed around a portion of the wire **1102**, e.g., at 90 degrees or another spacing with respect to each other, in order to receive guided waves that may oscillate or rotate around the wire **1102**, that have been induced at different azimuthal orientations or that have non-fundamental or higher order modes that, for example, have lobes and/or nulls or other asymmetries that are orientation dependent. However, it will be appreciated that there may be less than or more than four couplers placed around a portion of the wire **1102** without departing from example embodiments.

It should be noted that while couplers **1106** and **1104** are illustrated as stub couplers, any other of the coupler designs described herein including arc couplers, antenna or horn couplers, magnetic couplers, etc., could likewise be used. It will also be appreciated that while some example embodiments have presented a plurality of couplers around at least a portion of a wire **1102**, this plurality of couplers can also be considered as part of a single coupler system having multiple coupler subcomponents. For example, two or more couplers can be manufactured as single system that can be installed around a wire in a single installation such that the couplers are either pre-positioned or adjustable relative to each other (either manually or automatically with a controllable mechanism such as a motor or other actuator) in accordance with the single system.

Receivers coupled to couplers **1106** and **1104** can use diversity combining to combine signals received from both couplers **1106** and **1104** in order to maximize the signal quality. In other embodiments, if one or the other of the couplers **1104** and **1106** receive a transmission that is above a predetermined threshold, receivers can use selection diversity when deciding which signal to use. Further, while reception by a plurality of couplers **1106** and **1104** is illustrated, transmission by couplers **1106** and **1104** in the same configuration can likewise take place. In particular, a wide range of multi-input multi-output (MIMO) transmission and reception techniques can be employed for transmissions where a transmission device, such as transmission device **101** or **102** presented in conjunction with FIG. **1** includes multiple transceivers and multiple couplers.

It is noted that the graphical representations of waves **1108** and **1110** are presented merely to illustrate the principles that guided wave **1108** induces or otherwise launches a wave **1110** on a coupler **1104**. The actual electric and magnetic fields generated as a result of such wave propagation may vary depending on the frequencies employed, the design of the coupler **1104**, the dimensions and composition of the wire **1102**, as well as its surface characteristics, its insulation if any, the electromagnetic properties of the surrounding environment, etc.

Referring now to FIG. **12**, a block diagram **1200** illustrating an example, non-limiting embodiment of a repeater system is shown. In particular, a repeater device **1210** is presented for use in a transmission device, such as transmission device **101** or **102** presented in conjunction with FIG. **1**. In this system, two couplers **1204** and **1214** can be placed near a wire **1202** or other transmission medium such that guided waves **1205** propagating along the wire **1202** are extracted by coupler **1204** as wave **1206** (e.g. as a guided wave), and then are boosted or repeated by repeater device **1210** and launched as a wave **1216** (e.g. as a guided wave) onto coupler **1214**. The wave **1216** can then be launched on the wire **1202** and continue to propagate along the wire **1202** as a guided wave **1217**. In an embodiment, the repeater device **1210** can receive at least a portion of the power utilized for boosting or repeating through magnetic coupling with the wire **1202**, for example, when the wire **1202** is a power line or otherwise contains a power-carrying conductor. It should be noted that while couplers **1204** and **1214** are illustrated as stub couplers, any other of the coupler designs

described herein including arc couplers, antenna or horn couplers, magnetic couplers, or the like, could likewise be used.

In some embodiments, repeater device **1210** can repeat the transmission associated with wave **1206**, and in other embodiments, repeater device **1210** can include a communications interface **205** that extracts data or other signals from the wave **1206** for supplying such data or signals to another network and/or one or more other devices as communication signals **110** or **112** and/or receiving communication signals **110** or **112** from another network and/or one or more other devices and launch guided wave **1216** having embedded therein the received communication signals **110** or **112**. In a repeater configuration, receiver waveguide **1208** can receive the wave **1206** from the coupler **1204** and transmitter waveguide **1212** can launch guided wave **1216** onto coupler **1214** as guided wave **1217**. Between receiver waveguide **1208** and transmitter waveguide **1212**, the signal embedded in guided wave **1206** and/or the guided wave **1216** itself can be amplified to correct for signal loss and other inefficiencies associated with guided wave communications or the signal can be received and processed to extract the data contained therein and regenerated for transmission. In an embodiment, the receiver waveguide **1208** can be configured to extract data from the signal, process the data to correct for data errors utilizing for example error correcting codes, and regenerate an updated signal with the corrected data. The transmitter waveguide **1212** can then transmit guided wave **1216** with the updated signal embedded therein. In an embodiment, a signal embedded in guided wave **1206** can be extracted from the transmission and processed for communication with another network and/or one or more other devices via communications interface **205** as communication signals **110** or **112**. Similarly, communication signals **110** or **112** received by the communications interface **205** can be inserted into a transmission of guided wave **1216** that is generated and launched onto coupler **1214** by transmitter waveguide **1212**.

It is noted that although FIG. **12** shows guided wave transmissions **1206** and **1216** entering from the left and exiting to the right respectively, this is merely a simplification and is not intended to be limiting. In other embodiments, receiver waveguide **1208** and transmitter waveguide **1212** can also function as transmitters and receivers respectively, allowing the repeater device **1210** to be bi-directional.

In an embodiment, repeater device **1210** can be placed at locations where there are discontinuities or obstacles on the wire **1202** or other transmission medium. In the case where the wire **1202** is a power line, these obstacles can include transformers, connections, utility poles, and other such power line devices. The repeater device **1210** can help the guided (e.g., surface) waves jump over these obstacles on the line and boost the transmission power at the same time. In other embodiments, a coupler can be used to jump over the obstacle without the use of a repeater device. In that embodiment, both ends of the coupler can be tied or fastened to the wire, thus providing a path for the guided wave to travel without being blocked by the obstacle.

Turning now to FIG. **13**, illustrated is a block diagram **1300** of an example, non-limiting embodiment of a bidirectional repeater in accordance with various aspects described herein. In particular, a bidirectional repeater device **1306** is presented for use in a transmission device, such as transmission device **101** or **102** presented in conjunction with FIG. **1**. It should be noted that while the couplers are illustrated as stub couplers, any other of the coupler designs described herein including arc couplers, antenna or horn couplers, magnetic couplers, or the like, could likewise be used. The bidirectional repeater **1306** can employ diversity paths in the case of when two or more wires or other transmission media are present. Since guided wave transmissions have different transmission efficiencies and coupling efficiencies for transmission medium of different types such as insulated wires, un-insulated wires or other types of transmission media and further, if exposed to the elements, can be affected by weather, and other atmospheric conditions, it can be advantageous to selectively transmit on different transmission media at certain times. In various embodiments, the various transmission media can be designated as a primary, secondary, tertiary, etc. whether or not such designation indicates a preference of one transmission medium over another.

In the embodiment shown, the transmission media include an insulated or uninsulated wire **1302** and an insulated or uninsulated wire **1304** (referred to herein as wires **1302** and **1304**, respectively). The repeater device **1306** uses a receiver coupler **1308** to receive a guided wave traveling along wire **1302** and repeats the transmission using transmitter waveguide **1310** as a guided wave along wire **1304**. In other embodiments, repeater device **1306** can switch from the wire **1304** to the wire **1302**, or can repeat the transmissions along the same paths. Repeater device **1306** can include sensors, or be in communication with sensors (or a network management system **1601** depicted in FIG. **16**A) that indicate conditions that can affect the transmission. Based on the feedback received from the sensors, the repeater device **1306** can make the determination about whether to keep the transmission along the same wire, or transfer the transmission to the other wire.

Turning now to FIG. **14**, illustrated is a block diagram **1400** illustrating an example, non-limiting embodiment of a bidirectional repeater system. In particular, a bidirectional repeater system is presented for use in a transmission device, such as transmission device **101** or **102** presented in conjunction with FIG. **1**. The bidirectional repeater system includes waveguide coupling devices **1402** and **1404** that receive and transmit transmissions from other coupling devices located in a distributed antenna system or backhaul system.

In various embodiments, waveguide coupling device **1402** can receive a transmission from another waveguide coupling device, wherein the transmission has a plurality of subcarriers. Diplexer **1406** can separate the transmission from other transmissions, and direct the transmission to low-noise amplifier ("LNA") **1408**. A frequency mixer **1428**, with help from a local oscillator **1412**, can downshift the transmission (which is in the millimeter-wave band or around 38 GHz in some embodiments) to a lower frequency, such as a cellular band (~1.9 GHz) for a distributed antenna system, a native frequency, or other frequency for a backhaul system. An extractor (or demultiplexer) **1432** can extract the signal on a subcarrier and direct the signal to an output component **1422** for optional amplification, buffering or isolation by power amplifier **1424** for coupling to communications interface **205**. The communications interface **205** can further process the signals received from the power amplifier **1424** or otherwise transmit such signals over a wireless or wired interface to other devices such as a base station, mobile devices, a building, etc. For the signals that are not being extracted at this location, extractor **1432** can redirect them to another frequency mixer **1436**, where the signals are used to modulate a carrier wave generated by local oscillator **1414**. The carrier wave, with its subcarriers,

is directed to a power amplifier ("PA") **1416** and is retransmitted by waveguide coupling device **1404** to another system, via diplexer **1420**.

An LNA **1426** can be used to amplify, buffer or isolate signals that are received by the communication interface **205** and then send the signal to a multiplexer **1434** which merges the signal with signals that have been received from waveguide coupling device **1404**. The signals received from coupling device **1404** have been split by diplexer **1420**, and then passed through LNA **1418**, and downshifted in frequency by frequency mixer **1438**. When the signals are combined by multiplexer **1434**, they are upshifted in frequency by frequency mixer **1430**, and then boosted by PA **1410**, and transmitted to another system by waveguide coupling device **1402**. In an embodiment bidirectional repeater system can be merely a repeater without the output device **1422**. In this embodiment, the multiplexer **1434** would not be utilized and signals from LNA **1418** would be directed to mixer **1430** as previously described. It will be appreciated that in some embodiments, the bidirectional repeater system could also be implemented using two distinct and separate unidirectional repeaters. In an alternative embodiment, a bidirectional repeater system could also be a booster or otherwise perform retransmissions without downshifting and upshifting. Indeed in example embodiment, the retransmissions can be based upon receiving a signal or guided wave and performing some signal or guided wave processing or reshaping, filtering, and/or amplification, prior to retransmission of the signal or guided wave.

Referring now to FIG. **15**, a block diagram **1500** illustrating an example, non-limiting embodiment of a guided wave communications system is shown. This diagram depicts an exemplary environment in which a guided wave communication system, such as the guided wave communication system presented in conjunction with FIG. **1**, can be used.

To provide network connectivity to additional base station devices, a backhaul network that links the communication cells (e.g., macrocells and macrocells) to network devices of a core network correspondingly expands. Similarly, to provide network connectivity to a distributed antenna system, an extended communication system that links base station devices and their distributed antennas is desirable. A guided wave communication system **1500** such as shown in FIG. **15** can be provided to enable alternative, increased or additional network connectivity and a waveguide coupling system can be provided to transmit and/or receive guided wave (e.g., surface wave) communications on a transmission medium such as a wire that operates as a single-wire transmission line (e.g., a utility line), and that can be used as a waveguide and/or that otherwise operates to guide the transmission of an electromagnetic wave.

The guided wave communication system **1500** can comprise a first instance of a distribution system **1550** that includes one or more base station devices (e.g., base station device **1504**) that are communicably coupled to a central office **1501** and/or a macrocell site **1502**. Base station device **1504** can be connected by a wired (e.g., fiber and/or cable), or by a wireless (e.g., microwave wireless) connection to the macrocell site **1502** and the central office **1501**. A second instance of the distribution system **1560** can be used to provide wireless voice and data services to mobile device **1522** and to residential and/or commercial establishments **1542** (herein referred to as establishments **1542**). System **1500** can have additional instances of the distribution systems **1550** and **1560** for providing voice and/or data services to mobile devices **1522-1524** and establishments **1542** as shown in FIG. **15**.

Macrocells such as macrocell site **1502** can have dedicated connections to a mobile network and base station device **1504** or can share and/or otherwise use another connection. Central office **1501** can be used to distribute media content and/or provide internet service provider (ISP) services to mobile devices **1522-1524** and establishments **1542**. The central office **1501** can receive media content from a constellation of satellites **1530** (one of which is shown in FIG. **15**) or other sources of content, and distribute such content to mobile devices **1522-1524** and establishments **1542** via the first and second instances of the distribution system **1550** and **1560**. The central office **1501** can also be communicatively coupled to the Internet **1503** for providing internet data services to mobile devices **1522-1524** and establishments **1542**.

Base station device **1504** can be mounted on, or attached to, utility pole **1516**. In other embodiments, base station device **1504** can be near transformers and/or other locations situated nearby a power line. Base station device **1504** can facilitate connectivity to a mobile network for mobile devices **1522** and **1524**. Antennas **1512** and **1514**, mounted on or near utility poles **1518** and **1520**, respectively, can receive signals from base station device **1504** and transmit those signals to mobile devices **1522** and **1524** over a much wider area than if the antennas **1512** and **1514** were located at or near base station device **1504**.

It is noted that FIG. **15** displays three utility poles, in each instance of the distribution systems **1550** and **1560**, with one base station device, for purposes of simplicity. In other embodiments, utility pole **1516** can have more base station devices, and more utility poles with distributed antennas and/or tethered connections to establishments **1542**.

A transmission device **1506**, such as transmission device **101** or **102** presented in conjunction with FIG. **1**, can transmit a signal from base station device **1504** to antennas **1512** and **1514** via utility or power line(s) that connect the utility poles **1516**, **1518**, and **1520**. The transmission device **1506** can be mounted in various ways with the utility pole **1516**, such as on a cross-member or cross-tree **1599**, including at an end of the cross-tree. To transmit the signal, radio source and/or transmission device **1506** upconverts the signal (e.g., via frequency mixing) from base station device **1504** or otherwise converts the signal from the base station device **1504** to a microwave band signal and the transmission device **1506** launches a microwave band wave that propagates as a guided wave traveling along the utility line or other wire as described in previous embodiments. At utility pole **1518**, another transmission device **1508** receives the guided wave (and optionally can amplify it as needed or desired or operate as a repeater to receive it and regenerate it) and sends it forward as a guided wave on the utility line or other wire. The transmission device **1508** can also extract a signal from the microwave band guided wave and shift it down in frequency or otherwise convert it to its original cellular band frequency (e.g., 1.9 GHz or other defined cellular frequency) or another cellular (or non-cellular) band frequency. An antenna **1512** can wireless transmit the downshifted signal to mobile device **1522**. The process can be repeated by transmission device **1510**, antenna **1514** and mobile device **1524**, as necessary or desirable.

Transmissions from mobile devices **1522** and **1524** can also be received by antennas **1512** and **1514** respectively. The transmission devices **1508** and **1510** can upshift or otherwise convert the cellular band signals to microwave

band and transmit the signals as guided wave (e.g., surface wave or other electromagnetic wave) transmissions over the power line(s) to base station device **1504**.

Media content received by the central office **1501** can be supplied to the second instance of the distribution system **1560** via the base station device **1504** for distribution to mobile devices **1522** and establishments **1542**. The transmission device **1510** can be tethered to the establishments **1542** by one or more wired connections or a wireless interface. The one or more wired connections may include without limitation, a power line, a coaxial cable, a fiber cable, a twisted pair cable, a guided wave transmission medium or other suitable wired mediums for distribution of media content and/or for providing internet services. In an example embodiment, the wired connections from the transmission device **1510** can be communicatively coupled to one or more very high bit rate digital subscriber line (VDSL) modems located at one or more corresponding service area interfaces (SAIs—not shown) or pedestals, each SAI or pedestal providing services to a portion of the establishments **1542**. The VDSL modems can be used to selectively distribute media content and/or provide internet services to gateways (not shown) located in the establishments **1542**. The SAIs or pedestals can also be communicatively coupled to the establishments **1542** over a wired medium such as a power line, a coaxial cable, a fiber cable, a twisted pair cable, a guided wave transmission medium or other suitable wired mediums. In other example embodiments, the transmission device **1510** can be communicatively coupled directly to establishments **1542** without intermediate interfaces such as the SAIs or pedestals.

In another example embodiment, system **1500** can employ diversity paths, where two or more utility lines or other wires are strung between the utility poles **1516**, **1518**, and **1520** (e.g., for example, two or more wires between poles **1516** and **1520**) and redundant transmissions from base station/macrocell site **1502** are transmitted as guided waves down the surface of the utility lines or other wires. The utility lines or other wires can be either insulated or uninsulated, and depending on the environmental conditions that cause transmission losses, the coupling devices can selectively receive signals from the insulated or uninsulated utility lines or other wires. The selection can be based on measurements of the signal-to-noise ratio of the wires, or based on determined weather/environmental conditions (e.g., moisture detectors, weather forecasts, etc.). The use of diversity paths with system **1500** can enable alternate routing capabilities, load balancing, increased load handling, concurrent bi-directional or synchronous communications, spread spectrum communications, etc.

It is noted that the use of the transmission devices **1506**, **1508**, and **1510** in FIG. **15** are by way of example only, and that in other embodiments, other uses are possible. For instance, transmission devices can be used in a backhaul communication system, providing network connectivity to base station devices. Transmission devices **1506**, **1508**, and **1510** can be used in many circumstances where it is desirable to transmit guided wave communications over a wire, whether insulated or not insulated. Transmission devices **1506**, **1508**, and **1510** are improvements over other coupling devices due to no contact or limited physical and/or electrical contact with the wires that may carry high voltages. The transmission device can be located away from the wire (e.g., spaced apart from the wire) and/or located on the wire so long as it is not electrically in contact with the wire, as the dielectric acts as an insulator, allowing for cheap, easy, and/or less complex installation. However, as previously noted conducting or non-dielectric couplers can be employed, for example in configurations where the wires correspond to a telephone network, cable television network, broadband data service, fiber optic communications system or other network employing low voltages or having insulated transmission lines.

It is further noted, that while base station device **1504** and macrocell site **1502** are illustrated in an embodiment, other network configurations are likewise possible. For example, devices such as access points or other wireless gateways can be employed in a similar fashion to extend the reach of other networks such as a wireless local area network, a wireless personal area network or other wireless network that operates in accordance with a communication protocol such as a 802.11 protocol, WIMAX protocol, UltraWideband protocol, Bluetooth protocol, Zigbee protocol or other wireless protocol.

Referring now to FIGS. **16**A & **16**B, block diagrams illustrating an example, non-limiting embodiment of a system for managing a power grid communication system are shown. Considering FIG. **16**A, a waveguide system **1602** is presented for use in a guided wave communications system, such as the system presented in conjunction with FIG. **15**. The waveguide system **1602** can comprise sensors **1604**, a power management system **1605**, a transmission device **101** or **102** that includes at least one communication interface **205**, transceiver **210** and coupler **220**.

The waveguide system **1602** can be coupled to a power line **1610** for facilitating guided wave communications in accordance with embodiments described in the subject disclosure. In an example embodiment, the transmission device **101** or **102** includes coupler **220** for inducing electromagnetic waves on a surface of the power line **1610** that longitudinally propagate along the surface of the power line **1610** as described in the subject disclosure. The transmission device **101** or **102** can also serve as a repeater for retransmitting electromagnetic waves on the same power line **1610** or for routing electromagnetic waves between power lines **1610** as shown in FIGS. **12-13**.

The transmission device **101** or **102** includes transceiver **210** configured to, for example, up-convert a signal operating at an original frequency range to electromagnetic waves operating at, exhibiting, or associated with a carrier frequency that propagate along a coupler to induce corresponding guided electromagnetic waves that propagate along a surface of the power line **1610**. A carrier frequency can be represented by a center frequency having upper and lower cutoff frequencies that define the bandwidth of the electromagnetic waves. The power line **1610** can be a wire (e.g., single stranded or multi-stranded) having a conducting surface or insulated surface. The transceiver **210** can also receive signals from the coupler **220** and down-convert the electromagnetic waves operating at a carrier frequency to signals at their original frequency.

Signals received by the communications interface **205** of transmission device **101** or **102** for up-conversion can include without limitation signals supplied by a central office **1611** over a wired or wireless interface of the communications interface **205**, a base station **1614** over a wired or wireless interface of the communications interface **205**, wireless signals transmitted by mobile devices **1620** to the base station **1614** for delivery over the wired or wireless interface of the communications interface **205**, signals supplied by in-building communication devices **1618** over the wired or wireless interface of the communications interface **205**, and/or wireless signals supplied to the communications interface **205** by mobile devices **1612** roaming in a wireless

communication range of the communications interface **205**. In embodiments where the waveguide system **1602** functions as a repeater, such as shown in FIGS. **12-13**, the communications interface **205** may or may not be included in the waveguide system **1602**.

The electromagnetic waves propagating along the surface of the power line **1610** can be modulated and formatted to include packets or frames of data that include a data payload and further include networking information (such as header information for identifying one or more destination waveguide systems **1602**). The networking information may be provided by the waveguide system **1602** or an originating device such as the central office **1611**, the base station **1614**, mobile devices **1620**, or in-building devices **1618**, or a combination thereof. Additionally, the modulated electromagnetic waves can include error correction data for mitigating signal disturbances. The networking information and error correction data can be used by a destination waveguide system **1602** for detecting transmissions directed to it, and for down-converting and processing with error correction data transmissions that include voice and/or data signals directed to recipient communication devices communicatively coupled to the destination waveguide system **1602**.

Referring now to the sensors **1604** of the waveguide system **1602**, the sensors **1604** can comprise one or more of a temperature sensor **1604***a*, a disturbance detection sensor **1604***b*, a loss of energy sensor **1604***c*, a noise sensor **1604***d*, a vibration sensor **1604***e*, an environmental (e.g., weather) sensor **1604***f*, and/or an image sensor **1604***g*. The temperature sensor **1604***a* can be used to measure ambient temperature, a temperature of the transmission device **101** or **102**, a temperature of the power line **1610**, temperature differentials (e.g., compared to a setpoint or baseline, between transmission device **101** or **102** and **1610**, etc.), or any combination thereof. In one embodiment, temperature metrics can be collected and reported periodically to a network management system **1601** by way of the base station **1614**.

The disturbance detection sensor **1604***b* can perform measurements on the power line **1610** to detect disturbances such as signal reflections, which may indicate a presence of a downstream disturbance that may impede the propagation of electromagnetic waves on the power line **1610**. A signal reflection can represent a distortion resulting from, for example, an electromagnetic wave transmitted on the power line **1610** by the transmission device **101** or **102** that reflects in whole or in part back to the transmission device **101** or **102** from a disturbance in the power line **1610** located downstream from the transmission device **101** or **102**.

Signal reflections can be caused by obstructions on the power line **1610**. For example, a tree limb may cause electromagnetic wave reflections when the tree limb is lying on the power line **1610**, or is in close proximity to the power line **1610** which may cause a corona discharge. Other obstructions that can cause electromagnetic wave reflections can include without limitation an object that has been entangled on the power line **1610** (e.g., clothing, a shoe wrapped around a power line **1610** with a shoe string, etc.), a corroded build-up on the power line **1610** or an ice build-up. Power grid components may also impede or obstruct with the propagation of electromagnetic waves on the surface of power lines **1610**. Illustrations of power grid components that may cause signal reflections include without limitation a transformer and a joint for connecting spliced power lines. A sharp angle on the power line **1610** may also cause electromagnetic wave reflections.

The disturbance detection sensor **1604***b* can comprise a circuit to compare magnitudes of electromagnetic wave reflections to magnitudes of original electromagnetic waves transmitted by the transmission device **101** or **102** to determine how much a downstream disturbance in the power line **1610** attenuates transmissions. The disturbance detection sensor **1604***b* can further comprise a spectral analyzer circuit for performing spectral analysis on the reflected waves. The spectral data generated by the spectral analyzer circuit can be compared with spectral profiles via pattern recognition, an expert system, curve fitting, matched filtering or other artificial intelligence, classification or comparison technique to identify a type of disturbance based on, for example, the spectral profile that most closely matches the spectral data. The spectral profiles can be stored in a memory of the disturbance detection sensor **1604***b* or may be remotely accessible by the disturbance detection sensor **1604***b*. The profiles can comprise spectral data that models different disturbances that may be encountered on power lines **1610** to enable the disturbance detection sensor **1604***b* to identify disturbances locally. An identification of the disturbance if known can be reported to the network management system **1601** by way of the base station **1614**. The disturbance detection sensor **1604***b* can also utilize the transmission device **101** or **102** to transmit electromagnetic waves as test signals to determine a roundtrip time for an electromagnetic wave reflection. The round trip time measured by the disturbance detection sensor **1604***b* can be used to calculate a distance traveled by the electromagnetic wave up to a point where the reflection takes place, which enables the disturbance detection sensor **1604***b* to calculate a distance from the transmission device **101** or **102** to the downstream disturbance on the power line **1610**.

The distance calculated can be reported to the network management system **1601** by way of the base station **1614**. In one embodiment, the location of the waveguide system **1602** on the power line **1610** may be known to the network management system **1601**, which the network management system **1601** can use to determine a location of the disturbance on the power line **1610** based on a known topology of the power grid. In another embodiment, the waveguide system **1602** can provide its location to the network management system **1601** to assist in the determination of the location of the disturbance on the power line **1610**. The location of the waveguide system **1602** can be obtained by the waveguide system **1602** from a pre-programmed location of the waveguide system **1602** stored in a memory of the waveguide system **1602**, or the waveguide system **1602** can determine its location using a GPS receiver (not shown) included in the waveguide system **1602**.

The power management system **1605** provides energy to the aforementioned components of the waveguide system **1602**. The power management system **1605** can receive energy from solar cells, or from a transformer (not shown) coupled to the power line **1610**, or by inductive coupling to the power line **1610** or another nearby power line. The power management system **1605** can also include a backup battery and/or a super capacitor or other capacitor circuit for providing the waveguide system **1602** with temporary power. The loss of energy sensor **1604***c* can be used to detect when the waveguide system **1602** has a loss of power condition and/or the occurrence of some other malfunction. For example, the loss of energy sensor **1604***c* can detect when there is a loss of power due to defective solar cells, an obstruction on the solar cells that causes them to malfunction, loss of power on the power line **1610**, and/or when the backup power system malfunctions due to expiration of a backup battery, or a detectable defect in a super capacitor. When a malfunction and/or loss of power occurs, the loss of

energy sensor **1604***c* can notify the network management system **1601** by way of the base station **1614**.

The noise sensor **1604***d* can be used to measure noise on the power line **1610** that may adversely affect transmission of electromagnetic waves on the power line **1610**. The noise sensor **1604***d* can sense unexpected electromagnetic interference, noise bursts, or other sources of disturbances that may interrupt reception of modulated electromagnetic waves on a surface of a power line **1610**. A noise burst can be caused by, for example, a corona discharge, or other source of noise. The noise sensor **1604***d* can compare the measured noise to a noise profile obtained by the waveguide system **1602** from an internal database of noise profiles or from a remotely located database that stores noise profiles via pattern recognition, an expert system, curve fitting, matched filtering or other artificial intelligence, classification or comparison technique. From the comparison, the noise sensor **1604***d* may identify a noise source (e.g., corona discharge or otherwise) based on, for example, the noise profile that provides the closest match to the measured noise. The noise sensor **1604***d* can also detect how noise affects transmissions by measuring transmission metrics such as bit error rate, packet loss rate, jitter, packet retransmission requests, etc. The noise sensor **1604***d* can report to the network management system **1601** by way of the base station **1614** the identity of noise sources, their time of occurrence, and transmission metrics, among other things.

The vibration sensor **1604***e* can include accelerometers and/or gyroscopes to detect 2D or 3D vibrations on the power line **1610**. The vibrations can be compared to vibration profiles that can be stored locally in the waveguide system **1602**, or obtained by the waveguide system **1602** from a remote database via pattern recognition, an expert system, curve fitting, matched filtering or other artificial intelligence, classification or comparison technique. Vibration profiles can be used, for example, to distinguish fallen trees from wind gusts based on, for example, the vibration profile that provides the closest match to the measured vibrations. The results of this analysis can be reported by the vibration sensor **1604***e* to the network management system **1601** by way of the base station **1614**.

The environmental sensor **1604***f* can include a barometer for measuring atmospheric pressure, ambient temperature (which can be provided by the temperature sensor **1604***a*), wind speed, humidity, wind direction, and rainfall, among other things. The environmental sensor **1604***f* can collect raw information and process this information by comparing it to environmental profiles that can be obtained from a memory of the waveguide system **1602** or a remote database to predict weather conditions before they arise via pattern recognition, an expert system, knowledge-based system or other artificial intelligence, classification or other weather modeling and prediction technique. The environmental sensor **1604***f* can report raw data as well as its analysis to the network management system **1601**.

The image sensor **1604***g* can be a digital camera (e.g., a charged coupled device or CCD imager, infrared camera, etc.) for capturing images in a vicinity of the waveguide system **1602**. The image sensor **1604***g* can include an electromechanical mechanism to control movement (e.g., actual position or focal points/zooms) of the camera for inspecting the power line **1610** from multiple perspectives (e.g., top surface, bottom surface, left surface, right surface and so on). Alternatively, the image sensor **1604***g* can be designed such that no electromechanical mechanism is needed in order to obtain the multiple perspectives. The collection and retrieval of imaging data generated by the image sensor **1604***g* can be controlled by the network management system **1601**, or can be autonomously collected and reported by the image sensor **1604***g* to the network management system **1601**.

Other sensors that may be suitable for collecting telemetry information associated with the waveguide system **1602** and/or the power lines **1610** for purposes of detecting, predicting and/or mitigating disturbances that can impede the propagation of electromagnetic wave transmissions on power lines **1610** (or any other form of a transmission medium of electromagnetic waves) may be utilized by the waveguide system **1602**.

Referring now to FIG. **16**B, block diagram **1650** illustrates an example, non-limiting embodiment of a system for managing a power grid **1653** and a communication system **1655** embedded therein or associated therewith in accordance with various aspects described herein. The communication system **1655** comprises a plurality of waveguide systems **1602** coupled to power lines **1610** of the power grid **1653**. At least a portion of the waveguide systems **1602** used in the communication system **1655** can be in direct communication with a base station **1614** and/or the network management system **1601**. Waveguide systems **1602** not directly connected to a base station **1614** or the network management system **1601** can engage in communication sessions with either a base station **1614** or the network management system **1601** by way of other downstream waveguide systems **1602** connected to a base station **1614** or the network management system **1601**.

The network management system **1601** can be communicatively coupled to equipment of a utility company **1652** and equipment of a communications service provider **1654** for providing each entity, status information associated with the power grid **1653** and the communication system **1655**, respectively. The network management system **1601**, the equipment of the utility company **1652**, and the communications service provider **1654** can access communication devices utilized by utility company personnel **1656** and/or communication devices utilized by communications service provider personnel **1658** for purposes of providing status information and/or for directing such personnel in the management of the power grid **1653** and/or communication system **1655**.

FIG. **17**A illustrates a flow diagram of an example, non-limiting embodiment of a method **1700** for detecting and mitigating disturbances occurring in a communication network of the systems of FIGS. **16**A & **16**B. Method **1700** can begin with step **1702** where a waveguide system **1602** transmits and receives messages embedded in, or forming part of, modulated electromagnetic waves or another type of electromagnetic waves traveling along a surface of a power line **1610**. The messages can be voice messages, streaming video, and/or other data/information exchanged between communication devices communicatively coupled to the communication system **1655**. At step **1704** the sensors **1604** of the waveguide system **1602** can collect sensing data. In an embodiment, the sensing data can be collected in step **1704** prior to, during, or after the transmission and/or receipt of messages in step **1702**. At step **1706** the waveguide system **1602** (or the sensors **1604** themselves) can determine from the sensing data an actual or predicted occurrence of a disturbance in the communication system **1655** that can affect communications originating from (e.g., transmitted by) or received by the waveguide system **1602**. The waveguide system **1602** (or the sensors **1604**) can process temperature data, signal reflection data, loss of energy data, noise data, vibration data, environmental data, or any com-

bination thereof to make this determination. The waveguide system **1602** (or the sensors **1604**) may also detect, identify, estimate, or predict the source of the disturbance and/or its location in the communication system **1655**. If a disturbance is neither detected/identified nor predicted/estimated at step **1708**, the waveguide system **1602** can proceed to step **1702** where it continues to transmit and receive messages embedded in, or forming part of, modulated electromagnetic waves traveling along a surface of the power line **1610**.

If at step **1708** a disturbance is detected/identified or predicted/estimated to occur, the waveguide system **1602** proceeds to step **1710** to determine if the disturbance adversely affects (or alternatively, is likely to adversely affect or the extent to which it may adversely affect) transmission or reception of messages in the communication system **1655**. In one embodiment, a duration threshold and a frequency of occurrence threshold can be used at step **1710** to determine when a disturbance adversely affects communications in the communication system **1655**. For illustration purposes only, assume a duration threshold is set to 500 ms, while a frequency of occurrence threshold is set to 5 disturbances occurring in an observation period of 10 sec. Thus, a disturbance having a duration greater than 500 ms will trigger the duration threshold. Additionally, any disturbance occurring more than 5 times in a 10 sec time interval will trigger the frequency of occurrence threshold.

In one embodiment, a disturbance may be considered to adversely affect signal integrity in the communication systems **1655** when the duration threshold alone is exceeded. In another embodiment, a disturbance may be considered as adversely affecting signal integrity in the communication systems **1655** when both the duration threshold and the frequency of occurrence threshold are exceeded. The latter embodiment is thus more conservative than the former embodiment for classifying disturbances that adversely affect signal integrity in the communication system **1655**. It will be appreciated that many other algorithms and associated parameters and thresholds can be utilized for step **1710** in accordance with example embodiments.

Referring back to method **1700**, if at step **1710** the disturbance detected at step **1708** does not meet the condition for adversely affected communications (e.g., neither exceeds the duration threshold nor the frequency of occurrence threshold), the waveguide system **1602** may proceed to step **1702** and continue processing messages. For instance, if the disturbance detected in step **1708** has a duration of 1 msec with a single occurrence in a 10 sec time period, then neither threshold will be exceeded. Consequently, such a disturbance may be considered as having a nominal effect on signal integrity in the communication system **1655** and thus would not be flagged as a disturbance requiring mitigation. Although not flagged, the occurrence of the disturbance, its time of occurrence, its frequency of occurrence, spectral data, and/or other useful information, may be reported to the network management system **1601** as telemetry data for monitoring purposes.

Referring back to step **1710**, if on the other hand the disturbance satisfies the condition for adversely affected communications (e.g., exceeds either or both thresholds), the waveguide system **1602** can proceed to step **1712** and report the incident to the network management system **1601**. The report can include raw sensing data collected by the sensors **1604**, a description of the disturbance if known by the waveguide system **1602**, a time of occurrence of the disturbance, a frequency of occurrence of the disturbance, a location associated with the disturbance, parameters readings such as bit error rate, packet loss rate, retransmission requests, jitter, latency and so on. If the disturbance is based on a prediction by one or more sensors of the waveguide system **1602**, the report can include a type of disturbance expected, and if predictable, an expected time occurrence of the disturbance, and an expected frequency of occurrence of the predicted disturbance when the prediction is based on historical sensing data collected by the sensors **1604** of the waveguide system **1602**.

At step **1714**, the network management system **1601** can determine a mitigation, circumvention, or correction technique, which may include directing the waveguide system **1602** to reroute traffic to circumvent the disturbance if the location of the disturbance can be determined. In one embodiment, the waveguide coupling device **1402** detecting the disturbance may direct a repeater such as the one shown in FIGS. **13-14** to connect the waveguide system **1602** from a primary power line affected by the disturbance to a secondary power line to enable the waveguide system **1602** to reroute traffic to a different transmission medium and avoid the disturbance. In an embodiment where the waveguide system **1602** is configured as a repeater the waveguide system **1602** can itself perform the rerouting of traffic from the primary power line to the secondary power line. It is further noted that for bidirectional communications (e.g., full or half-duplex communications), the repeater can be configured to reroute traffic from the secondary power line back to the primary power line for processing by the waveguide system **1602**.

In another embodiment, the waveguide system **1602** can redirect traffic by instructing a first repeater situated upstream of the disturbance and a second repeater situated downstream of the disturbance to redirect traffic from a primary power line temporarily to a secondary power line and back to the primary power line in a manner that avoids the disturbance. It is further noted that for bidirectional communications (e.g., full or half-duplex communications), repeaters can be configured to reroute traffic from the secondary power line back to the primary power line.

To avoid interrupting existing communication sessions occurring on a secondary power line, the network management system **1601** may direct the waveguide system **1602** to instruct repeater(s) to utilize unused time slot(s) and/or frequency band(s) of the secondary power line for redirecting data and/or voice traffic away from the primary power line to circumvent the disturbance.

At step **1716**, while traffic is being rerouted to avoid the disturbance, the network management system **1601** can notify equipment of the utility company **1652** and/or equipment of the communications service provider **1654**, which in turn may notify personnel of the utility company **1656** and/or personnel of the communications service provider **1658** of the detected disturbance and its location if known. Field personnel from either party can attend to resolving the disturbance at a determined location of the disturbance. Once the disturbance is removed or otherwise mitigated by personnel of the utility company and/or personnel of the communications service provider, such personnel can notify their respective companies and/or the network management system **1601** utilizing field equipment (e.g., a laptop computer, smartphone, etc.) communicatively coupled to network management system **1601**, and/or equipment of the utility company and/or the communications service provider. The notification can include a description of how the disturbance was mitigated and any changes to the power lines **1610** that may change a topology of the communication system **1655**.

Once the disturbance has been resolved (as determined in decision **1718**), the network management system **1601** can direct the waveguide system **1602** at step **1720** to restore the previous routing configuration used by the waveguide system **1602** or route traffic according to a new routing configuration if the restoration strategy used to mitigate the disturbance resulted in a new network topology of the communication system **1655**. In another embodiment, the waveguide system **1602** can be configured to monitor mitigation of the disturbance by transmitting test signals on the power line **1610** to determine when the disturbance has been removed. Once the waveguide system **1602** detects an absence of the disturbance it can autonomously restore its routing configuration without assistance by the network management system **1601** if it determines the network topology of the communication system **1655** has not changed, or it can utilize a new routing configuration that adapts to a detected new network topology.

FIG. **17**B illustrates a flow diagram of an example, non-limiting embodiment of a method **1750** for detecting and mitigating disturbances occurring in a communication network of the system of FIGS. **16**A and **16**B. In one embodiment, method **1750** can begin with step **1752** where a network management system **1601** receives from equipment of the utility company **1652** or equipment of the communications service provider **1654** maintenance information associated with a maintenance schedule. The network management system **1601** can at step **1754** identify from the maintenance information, maintenance activities to be performed during the maintenance schedule. From these activities, the network management system **1601** can detect a disturbance resulting from the maintenance (e.g., scheduled replacement of a power line **1610**, scheduled replacement of a waveguide system **1602** on the power line **1610**, scheduled reconfiguration of power lines **1610** in the power grid **1653**, etc.).

In another embodiment, the network management system **1601** can receive at step **1755** telemetry information from one or more waveguide systems **1602**. The telemetry information can include among other things an identity of each waveguide system **1602** submitting the telemetry information, measurements taken by sensors **1604** of each waveguide system **1602**, information relating to predicted, estimated, or actual disturbances detected by the sensors **1604** of each waveguide system **1602**, location information associated with each waveguide system **1602**, an estimated location of a detected disturbance, an identification of the disturbance, and so on. The network management system **1601** can determine from the telemetry information a type of disturbance that may be adverse to operations of the waveguide, transmission of the electromagnetic waves along the wire surface, or both. The network management system **1601** can also use telemetry information from multiple waveguide systems **1602** to isolate and identify the disturbance. Additionally, the network management system **1601** can request telemetry information from waveguide systems **1602** in a vicinity of an affected waveguide system **1602** to triangulate a location of the disturbance and/or validate an identification of the disturbance by receiving similar telemetry information from other waveguide systems **1602**.

In yet another embodiment, the network management system **1601** can receive at step **1756** an unscheduled activity report from maintenance field personnel. Unscheduled maintenance may occur as result of field calls that are unplanned or as a result of unexpected field issues discovered during field calls or scheduled maintenance activities. The activity report can identify changes to a topology configuration of the power grid **1653** resulting from field personnel addressing discovered issues in the communication system **1655** and/or power grid **1653**, changes to one or more waveguide systems **1602** (such as replacement or repair thereof), mitigation of disturbances performed if any, and so on.

At step **1758**, the network management system **1601** can determine from reports received according to steps **1752** through **1756** if a disturbance will occur based on a maintenance schedule, or if a disturbance has occurred or is predicted to occur based on telemetry data, or if a disturbance has occurred due to an unplanned maintenance identified in a field activity report. From any of these reports, the network management system **1601** can determine whether a detected or predicted disturbance requires rerouting of traffic by the affected waveguide systems **1602** or other waveguide systems **1602** of the communication system **1655**.

When a disturbance is detected or predicted at step **1758**, the network management system **1601** can proceed to step **1760** where it can direct one or more waveguide systems **1602** to reroute traffic to circumvent the disturbance. When the disturbance is permanent due to a permanent topology change of the power grid **1653**, the network management system **1601** can proceed to step **1770** and skip steps **1762**, **1764**, **1766**, and **1772**. At step **1770**, the network management system **1601** can direct one or more waveguide systems **1602** to use a new routing configuration that adapts to the new topology. However, when the disturbance has been detected from telemetry information supplied by one or more waveguide systems **1602**, the network management system **1601** can notify maintenance personnel of the utility company **1656** or the communications service provider **1658** of a location of the disturbance, a type of disturbance if known, and related information that may be helpful to such personnel to mitigate the disturbance. When a disturbance is expected due to maintenance activities, the network management system **1601** can direct one or more waveguide systems **1602** to reconfigure traffic routes at a given schedule (consistent with the maintenance schedule) to avoid disturbances caused by the maintenance activities during the maintenance schedule.

Returning back to step **1760** and upon its completion, the process can continue with step **1762**. At step **1762**, the network management system **1601** can monitor when the disturbance(s) have been mitigated by field personnel. Mitigation of a disturbance can be detected at step **1762** by analyzing field reports submitted to the network management system **1601** by field personnel over a communications network (e.g., cellular communication system) utilizing field equipment (e.g., a laptop computer or handheld computer/device). If field personnel have reported that a disturbance has been mitigated, the network management system **1601** can proceed to step **1764** to determine from the field report whether a topology change was required to mitigate the disturbance. A topology change can include rerouting a power line **1610**, reconfiguring a waveguide system **1602** to utilize a different power line **1610**, otherwise utilizing an alternative link to bypass the disturbance and so on. If a topology change has taken place, the network management system **1601** can direct at step **1770** one or more waveguide systems **1602** to use a new routing configuration that adapts to the new topology.

If, however, a topology change has not been reported by field personnel, the network management system **1601** can proceed to step **1766** where it can direct one or more waveguide systems **1602** to send test signals to test a routing configuration that had been used prior to the detected

disturbance(s). Test signals can be sent to affected waveguide systems **1602** in a vicinity of the disturbance. The test signals can be used to determine if signal disturbances (e.g., electromagnetic wave reflections) are detected by any of the waveguide systems **1602**. If the test signals confirm that a prior routing configuration is no longer subject to previously detected disturbance(s), then the network management system **1601** can at step **1772** direct the affected waveguide systems **1602** to restore a previous routing configuration. If, however, test signals analyzed by one or more waveguide coupling device **1402** and reported to the network management system **1601** indicate that the disturbance(s) or new disturbance(s) are present, then the network management system **1601** will proceed to step **1768** and report this information to field personnel to further address field issues. The network management system **1601** can in this situation continue to monitor mitigation of the disturbance(s) at step **1762**.

In the aforementioned embodiments, the waveguide systems **1602** can be configured to be self-adapting to changes in the power grid **1653** and/or to mitigation of disturbances. That is, one or more affected waveguide systems **1602** can be configured to self-monitor mitigation of disturbances and reconfigure traffic routes without requiring instructions to be sent to them by the network management system **1601**. In this embodiment, the one or more waveguide systems **1602** that are self-configurable can inform the network management system **1601** of its routing choices so that the network management system **1601** can maintain a macro-level view of the communication topology of the communication system **1655**.

While for purposes of simplicity of explanation, the respective processes are shown and described as a series of blocks in FIGS. **17**A and **17**B, respectively, it is to be understood and appreciated that the claimed subject matter is not limited by the order of the blocks, as some blocks may occur in different orders and/or concurrently with other blocks from what is depicted and described herein. Moreover, not all illustrated blocks may be required to implement the methods described herein.

Turning now to FIG. **18**, a system **1800** is illustrated in which network devices can be positioned and operated so as to reduce or eliminate interference caused by wireless communication between some or all of those network devices. System **1800** can include network devices **1806**A**1**, **1806**A**2**, **1806**B**1**, **1806**B**2**, **1806**C**1** and **1806**C**2** (collectively referred to as network devices **1806**) which can be utilized for wirelessly transmitting signals of various types, including voice, video, data and/or messaging utilizing various protocols. Any number of network devices **1806** can be utilized in the system **1800**, only six of which are shown. Network devices **1806** can include various components that enable wireless communications including transceivers, antennas, power amplifiers, low noise amplifiers, processors, memories, and so forth.

In one embodiment, the network devices **1806** can be mounted to utility poles **1801**A, **1801**B and **1801**C (collectively referred to as utility poles **1801**). The particular mounting structure and techniques can vary. In one embodiment, the utility poles **1801** can be power line poles connecting power lines **1802**, although other types of utility poles can also be utilized. In one embodiment, a utility pole can include a structure that allows for mounting of one or more network devices thereon and can include structure with other purposes such as a building or tower. In one embodiment, pairs of network devices **1806** (e.g., first pair **1806**A**1** and **1806**A**2**, second pair **1806**B**1** and **1806**B**2**, third pair **1806**C**1** and **1806**C**2**) can be mounted to shared utility poles, such as utility poles **1801**A, **1801**B and **1801**C, respectively. In another embodiment, the pairs of network devices **1806** can be spaced apart from each other such as being positioned at opposing ends of a cross-tree **1803** of utility poles **1801**. The cross-tree **1803** can be a structure(s) that is substantially perpendicular to the utility poles **1801** (e.g., a T-shape as illustrated by cross-tree **1599** in FIG. **15**), although various configurations and shapes of cross-trees can be utilized in the exemplary embodiments, such as a double cross-tree, an X-shaped cross-tree, an L-shaped cross-tree, and so forth. In other embodiments, other numbers of network devices **1806** can be mounted on the utility poles **1801**, such as a single network device per utility pole. In one embodiment, system **1800** can include one or more utility poles **1801** having a single network device **1806** (see for example FIG. **19**) mounted thereto, as well as one or more utility poles that have a pair of network devices mounted thereto as illustrated in FIG. **18**.

In one or more embodiments, system **1800** enables select ones of the network devices **1806** to transmit wireless signals along a communication path such as a zig-zag path or other path that is not a straight path, even where the utility poles **1801** are in a substantially straight path **1850**. The path can be a non-straight path that includes the network devices. In one or more embodiments, a substantially straight path can include deviations of up to 20 degrees, up to 15 degrees, up to 10 degrees, up to 5 degrees, up to 4 degrees, up to 3 degrees, up to 2 degrees, or up to 1 degree from a straight line **1851** through the network devices. For example, network devices **1806**A**1**, **1806**B**2** and **1806**C**1** can wirelessly transmit signals along a first communication path **1891**, which is illustrated in two segments having a zig-zag pattern. In one embodiment, the path from origin to destination (or a portion thereof) is not in a straight path, but can include zig-zags, each of which could be individually a straight path. In one embodiment, the zig-zag path (or a portion thereof) is non-uniform, such as having non-adjacent segments (such as the first and third segments in a series of consecutively numbered segments) of the path that are not parallel to each other. In another embodiment, segments of the path can be straight but when combined can be along a non-straight path. First communication path **1891** can be bi-directional or unidirectional. Network devices **1806**A**2**, **1806**B**1** and **1806**C**2** can wirelessly transmit signals along a second communication path **1892**, which is illustrated in two segments having another zig-zag pattern. Second communication path **1892** can be bi-directional or unidirectional. In one embodiment, the first and second communication paths **1891**, **1892** are both unidirectional in opposite directions. In various embodiments, wireless communications provided by the system **1800** can be used as a supplemental communication path in a guided wave communication system that transmits signals via a transmission medium that is supported by the utility poles. For example, the system **1800** can be used as a wireless link in conjunction with any of the systems described in conjunction with the co-pending application entitled, "HOST NODE DEVICE AND METHODS FOR USE THEREWITH", having application Ser. No. 14/729,200, filed on Jun. 3, 2015, the contents of which are incorporated herein by reference for any and all purposes. It should also be noted that the system **1800** can be implemented in other ways in systems that may or may not include guided wave communications that are bound to a transmission medium.

The configuration of the network devices **1806** (e.g., their positioning) and the selection of particular ones of the pairs

of network devices for wirelessly communicating signals enables reduction or elimination of interference that would be experienced if a straight communication path were to be used (e.g., a straight communication path between network devices **1806**A**1**, **1806**B**1**, **1806**C**1** or a straight communication path between network devices **1806**A**2**, **1806**B**2**, **1806**C**2**). For instance, a wireless signal transmitted along a segment of the first communication path **1891** from network device **1806**A**1** to network device **1806**B**2** should not result in interference being experienced by network devices **1806**A**2**, **1806**B**1**, or **1806**C**2**. The beam width for the signal transmitted from network device **1806**A**1** can be made narrow enough to reduce or eliminate any interference for network devices **1806**A**2**, **1806**B**1**, or **1806**C**2**, particularly since there is no network device "behind" network device **1806**B**2**. In contrast, if network devices **1806**A**2**, **1806**B**2**, and **1806**C**2** were selected for communicating wireless signals (a straight communication path illustrated by dashed line **1851**), then the wireless signal transmitted from network device **1806**A**1** would be received by network device **1806**B**1** but would also travel past network device **1806**B**1** resulting in interference for network device **1806**C**1** (which would be "behind" network device **1806**B**1**).

In an embodiment where pairs of the network device **1806** are mounted to the utility poles **1801**, first and second communication paths **1891**, **1892** can be utilized for wireless communications where interference at the network devices is reduced or eliminated due to the non-straight communication paths (e.g., selecting network devices **1806**A**1**, **1806**B**2**, **1806**C**1** for the first communication path **1891** and selecting network devices **1806**A**2**, **1806**B**1**, **1806**C**2** for the second communication path **1892**). In this embodiment, the communication paths **1891**, **1892** would cross once per segment in-between the utility poles **1801**. The illustration of FIG. **18** shows communication paths **1891**, **1892** which each have two segments since there are only three utility poles **1801** shown. The exemplary embodiments can include any number of utility poles **1801** with any number of segments of the communication paths **1891**, **1892**.

In one or more embodiments, the system **1800** can include utility poles **1801** positioned in a straight path **1850** and other utility poles that are not positioned in a straight path (not shown). In such embodiments, the selection of particular ones of the pairs of network devices for wirelessly communicating signals can be done so as to reduce or eliminate interference. For instance, the particular network devices of the pairs of network devices (whether mounted to utility poles **1801** that are in the straight path **1850** or mounted to the other utility poles that are not in the straight path) can be selected for the communication path according to a pattern of alternating positions with respect to the shared utility pole (e.g., **1806**A**1**, **1806**B**2**, **1806**C**1**).

In one or more embodiments, the network devices **1806** can include or otherwise be coupled with waveguide systems that are nodes of a wired network, which, for example, can include the power lines **1802** as a transmission medium. In one embodiment, the waveguide systems (e.g., devices **101** or **102** of FIG. **1** or other waveguide systems described herein) can enable electromagnetic waves to be received at a physical interface of a transmission medium without utilizing an electrical return path, where the electromagnetic waves are guided by the transmission medium, and where the electromagnetic waves have a non-optical frequency range. In one or more embodiments, network devices **1806** on adjacent poles that are communicating with each other can be positioned at different portions of the utility poles **1801** such as device **1806**A**1** being at the opposite portion of the utility pole as compared to device **1806**B**2**. In one embodiment, a communication path (or a portion thereof such as a segment between network devices **1806** operating as adjacent nodes) can be non-parallel to a path of the corresponding utility poles **1801**. In one or more embodiments, portions of the total communication path between origin and recipient can include a combination of a non-straight communication path and a straight communication path. In one embodiment, portions of the total communication path between origin and recipient can include a combination of a utility poles **1801** that are arranged along a substantially straight path and utility poles that are not arranged along a substantially straight path.

Turning now to FIG. **19**, a system **1900** is illustrated in which network devices can be positioned and operated so as to reduce or eliminate interference caused by wireless communication between some or all of those network devices. System **1900** can include network devices **1906**A**1**, **1906**B**2**, and **1906**C**1** (collectively referred to as network devices **1906**) which can be utilized for wirelessly transmitting signals of various types, including voice, video, data and/or messaging utilizing various protocols. Any number of network devices **1906** can be utilized in the system **1900**, only three of which are shown. In this embodiment, each of the utility poles **1801** (positioned in a substantially straight path **1850**) has only a single network device **1906** mounted thereto, although the exemplary embodiments can include pairs (or other numbers) of network devices mounted on each utility pole. Network devices **1906** can include various components that enable wireless communication including transceivers, antennas, power amplifiers, low noise amplifiers, processors, memories, and so forth.

System **1900** enables the network devices **1906** to transmit wireless signals along the communication path **1891** that is not a straight path even where the utility poles **1801** are in the substantially straight path **1850**. In one or more embodiments, the network devices **1906** are multi-mode devices that enable wireless transmission according to different communication modes, such as different frequencies, different protocols, and so forth. The network devices **1906** can include an infrared interface **1915**. Infrared interface **1915** can include various components that enable transmitting infrared signals including transceivers, antennas, power amplifiers, processors, memories, and so forth. Infrared interface **1915** can enable generating, transmitting and/or receiving infrared signals between the network devices, such as network device **1906**B**2** transmitting infrared signals to network device **1906**A**1** and/or to network device **1906**C**1**. In one embodiment, the infrared signals can be utilized to facilitate calibration of wireless communications between the network devices **1906**, where the wireless communication is provided utilizing a different wireless interface of the network device. The calibration can include determining alignment for transmitting the wireless signals along communication path **1891**.

As an example, the utility poles **1801** over time may begin to shift (or for another reason the network device may experience a change in orientation or positioning on the utility pole) causing the network devices **1906** to become misaligned. Infrared signals can be utilized as test signals that are directed between network devices (e.g., at varying angles or directions and/or at varying beam widths) to detect a change in the alignment of the network devices **1906**. This detection can then be used during wireless communications (e.g., via a cellular transceiver of the network device) to determine adjustments to be made (e.g., by a beamforming component such as a phased array or adaptive beamformer)

to a direction, orientation and/or beam parameter (e.g., a beam width) associated with the transmitting of the wireless signals. Adjustments can be made to the directing of the wireless signals between network devices, such as a direction of a fixed transmitter antenna pointing to a receiver antenna and/or to parameters of beamforming (e.g., active antenna arrays). The transmitting, directing and/or beamforming adjustments can enable the wireless signals to be more accurately directed to, and more efficiently received by, the receiving antenna of the particular network device.

As an example, the network device **1906**A**1** can employ a beamformer to change the directionality of the array when transmitting wireless signals to network device **1906**B**2** by controlling or otherwise adjusting a phase and/or relative amplitude of the wireless signal at the transmitter, such as to create a desired pattern of constructive and destructive interference in a wavefront of the wireless signal. The exemplary embodiments can employ various techniques and components to implement the beamforming.

In one or more embodiments, the infrared signals can be utilized for carrying information, such as information to facilitate the calibration process including identification data, parametric data associated with the network device(s) **1906**, and so forth. In another embodiment, the infrared signals can be utilized for carrying other information which may or may not be associated with the calibration of communications between the network devices **1906** such as user data corresponding to users of the system **1800**, control signaling associated with the system **1800** that is unrelated to the calibration and/or other data. For example, the infrared signals can be utilized for carrying authentication information to enable peer-to-peer authentication between network devices **1906**. In another embodiment, the infrared signals can be used for carrying information associated with a communication session, such as lower priority data where higher priority data is transmitted via wireless signals of a cellular transceiver (and/or via a waveguide system of the network device that utilizes power lines or other wires as a transmission medium).

Interface **1915** is described as an infrared interface for the network devices **1906** that transmits infrared signals. The infrared signals can be at various bands including near-infrared, short-wavelength infrared, mid-wavelength infrared, long-wavelength infrared, and/or far-infrared. In one embodiment, one or more of the network devices **1906** can utilize other types of interfaces transmitting signals in other regions of the spectrum which may or may not be in the infrared spectrum.

Turning now to FIG. **20**, a flow diagram of an example, non-limiting embodiment of a method, is shown. In particular, a method is presented for use with one or more functions and features presented in conjunction with FIGS. **1**-**19**. Step **2005** includes directing a signal from a first network device towards a second network device mounted on a different utility pole, such as the next nearest utility pole in the direction of the communication path. Method **2000** is described with respect to utilizing an infrared signal, but, as described above, signals from various regions of the spectrum could be utilized which may or may not be in the infrared spectrum. The infrared signal can be used for calibration of wireless transmitting between the first and second network devices. As an example, at **2010**, an operational parameter can be measured, determined or otherwise obtained based on the infrared signal and the operational parameter can then be utilized as part of the beamforming for transmitting wireless signals.

In one example of an operational parameter, a misalignment between the first and second network devices (e.g., due to a shift in the utility pole) can be determined based on the infrared signal. For example, the infrared signal can be utilized as a test signal that is directed from the first network device to the second network device over a range of directions or angles to detect a change in the alignment of the first and second network devices. In one embodiment, signal strength measurements can be utilized in conjunction with testing different transmitting directions of the infrared signal to detect the most accurate or desired direction of transmitting.

At **2015**, beamforming at the first network device can be adjusted according to one or more operational parameters determined according to the transmitting of the infrared signals. The transmitting of the infrared signals and the adjustments to the beamforming can be performed at various times, such as prior to a communication session, periodically, according to an amount of network traffic, according to environmental conditions (e.g., a detection or otherwise knowledge of high winds or inclement weather), and so forth.

The beamforming adjustments can be based on various operational parameters which may or may not be determined from the infrared signals. For example, a misalignment of network devices **1906** can be detected based on the infrared signals and a beamforming adjustment can be made to change a direction of transmitting of the wireless signal. In another embodiment, a beamforming adjustment can be made according to an indication of interference being experienced by another network device that is not part of the communication path. In another embodiment, a beamforming adjustment can be made according to a signal strength measurement. The beamforming adjustment can cause various effects on the wireless signals including changing a direction of wireless signals so that they are being more accurately directed to the antenna of another network device. In another embodiment, beamforming adjustments can be made according to other factors, such as throughput, bit or packet error rates, retransmission rate, an amount or predicted amount of network traffic, operational capabilities associated with a receiving network device, the type of wireless communications (e.g., transmitting frequency), and so forth.

In another embodiment, a beam width for a wireless signal(s) (e.g., being transmitted from the first network device to the second network device) can be adjusted based on a number of factors including one or more of a received signal strength at the second network device, an amount of interference measured for other network devices where the interference is being caused by the wireless signals being transmitted between the first and second network devices, an amount or predicted amount of network traffic, operational capabilities associated with a receiving network device, the type of wireless communications (e.g., transmitting frequency), and so forth. As an example, the beam width can be increased where it is determined there is little or no interference being experienced by other network devices in the area (e.g., a network device mounted on a subsequent utility pole along the communication path or by a network device sharing the same utility pole as the first or second network devices). In another example, the beam width may be decreased if it is determined that interference is being experienced by other network devices in the area (e.g., a network device mounted on a subsequent utility pole along the communication path or by a network device sharing the

same utility pole as the first or second network devices) and/or it is determined that the received signal strength satisfies a strength threshold.

If the wireless communications along the particular path are completed at **2020** then at **2025** method **2000** can end at step **2030**. If the wireless communications continue then at **2025** interference detection can be implemented and the results can be utilized for additional beamforming adjustments (e.g., changing a beam direction away from a network device experiencing interference or reducing a beam width). The interference detection can be performed by each of the network devices **1906** or can be performed by select ones of the network devices. The particular method for detecting interference can vary and can include RSSI measurements at one or more of the network devices **1906**.

While for purposes of simplicity of explanation, the respective processes are shown and described as a series of blocks in FIG. **20**, it is to be understood and appreciated that the claimed subject matter is not limited by the order of the blocks, as some blocks may occur in different orders and/or concurrently with other blocks from what is depicted and described herein. Moreover, not all illustrated blocks may be required to implement the methods described herein.

Referring to FIG. **21**, a schematic diagram of a communication system **2100** is illustrated where network devices can be utilized for communicating signals along particular communication paths to reduce or eliminate interference and/or to mitigate undesired conditions. System **2100** depicts a first group of network devices **2106**A (three of which are shown as **2106A1**, **2106A2** and **2106A3**) that can perform wireless communications and that can include various components including a transmitter, receiver and/or transceiver, as well as other components that facilitate the wireless communications. Any number of network devices can be included in the first group of network devices **2106**A. The first group of network devices **2106**A can be mounted on corresponding first utility poles **2101**A (three of which are shown as **2101A1**, **2101A2**, **2101A3**). In one or more embodiments, utility poles in system **2100** can be various types of support structure, such as power line poles, towers, buildings, and so forth. The first utility poles **2101**A are arranged along a first path, which is illustrated as a straight path but can be various paths, such as non-linear paths including curving along the curves in a road or landscape. In one or more embodiments, the first utility poles **2101**A can be utilized for connecting segments of a first transmission medium **2102**A, such as a power line. In other embodiments, one or more of the first utility poles **2101**A do not include the first transmission medium **2102**A, such as being utilized for supporting the particular network device **2106**A without supporting any power line.

System **2100** further depicts a second group of network devices **2106**B (three of which are shown as **2106B1**, **2106B2** and **2106B3**) that can perform wireless communications and that can include various components including a transmitter, receiver and/or transceiver, as well as other components that facilitate the wireless communications. Any number of network devices can be included in the second group of network devices **2106**B. The second group of network devices **2106**B can be mounted on corresponding second utility poles **2101**B (three of which are shown as **2101B1**, **2101B2**, **2101B3**). The second utility poles **2101**B are arranged along a second path, which is illustrated as a straight path but can be various paths, such as non-linear paths including curving along the curves in a road or landscape. In one or more embodiments, the second utility poles **2101**B can be utilized for connecting segments of a second transmission medium **2102**B, such as a power line. In other embodiments, one or more of the second utility poles **2101**B may not include the second transmission medium **2102**B, such as being utilized for supporting other devices/structures or supporting only the particular network device **2106**B.

System **2100** enables selecting or utilizing a communication path that can diverge from the first path of the first group of network devices **2106**A or the second path of the second group of network devices **2106**B. In one embodiment, a first communication path **2150** for wireless signals can alternate between the first and second groups of network devices, such as transmitting from network device **2106A1** to network device **2106B2** to network device **2106A3**. In another embodiment, a second communication path **2175** for wireless signals can alternate between the first and second groups of network devices, such as transmitting from network device **2106B1** to network device **2106A2** to network device **2106B3**. In one or more embodiments, the first and/or second communication paths **2150**, **2175** can continue in the alternating pattern between the first group of network devices **2106**A and the second group of network devices **2106**B (e.g., a zig-zag like pattern).

In one or more embodiments, the first and/or second communication paths **2150**, **2175** can partially utilize an alternating pattern between the first group of network devices **2106**A and the second group of network devices **2106**B. For instance, a communication path can be from network device **2106A1** to network device **2106A2** (i.e., communicating within the first group of network devices **2106**A) and then to network device **2106B3** (i.e., communicating to the second group of network devices **2106**B). In one or more embodiments, the first and second paths of the first and second utility poles **2101**A, **2101**B can be substantially parallel (e.g., along a straight and/or non-straight path). In one or more embodiments, the first and second utility poles **2101**A, **2101**B can be located along opposing sides of a road **2125**. In one or more embodiments, the first and/or second communication paths **2150**, **2175** can utilize only a subset of the first and second groups of network devices, such as the first communication path **2150** not utilizing network devices **2106B1**, **2106A2**, **2106B3**.

In one or more embodiments, some or all of the network devices of the first and second groups of network devices **2106**A, **2106**B can include a dielectric antenna for transmitting and receiving communications. In one or more embodiments, some or all of the network devices of the first and second groups of network devices **2106**A, **2106**B can include a cable coupled to a feed point of the dielectric antenna, where communications is based on electromagnetic waves that propagate without utilizing an electrical return path, and where the electromagnetic waves are guided by a dielectric core of the cable coupled to the feed point of the dielectric antenna.

In one or more embodiments, some or all of the network devices of the first and second groups of network devices **2106**A, **2106**B can be physically connected with a transmission medium (e.g., transmission mediums **2102**A and/or **2102**B which may be power lines). In this example, another communication path utilizing some or all of the network devices of the first and second groups of network devices **2106**A, **2106**B can communicate by electromagnetic waves at a physical interface of the transmission medium(s) that propagate without utilizing an electrical return path, and where the electromagnetic waves are guided by the transmission medium(s).

In one or more embodiments, some or all of the network devices of the first and second groups of network devices **2106**A, **2106**B can receive signals by electromagnetic waves at a physical interface of the transmission medium(s) that propagate without utilizing an electrical return path, wherein the electromagnetic waves are guided by the transmission medium(s), and where the wireless signals of the communication path that are alternating between the first and second groups of network devices are generated based on the signals received by at least one network device of the first group of network devices. In one or more embodiments, both sides of a street can be used simultaneously for wireless communications. In this example, when a blockage occurs or interference is detected, a re-routing of the communication path can occur so that unblocked devices take over the load.

Referring to FIG. **22**, a schematic diagram is shown for a network device **2200** that can be utilized as one or more of the network devices illustrated in system **2100** of FIG. **21** which provides wireless communications along a selected communication path, such as a zig-zag pattern and so forth. In one or more embodiments, the network device **2200** allows for a connection with the transmission medium **2230**, allows for obtaining power via inductive coupling with the transmission medium, and/or allows for providing communications, including wireless communications. The network device **2200** being shown can include components that facilitate inductive coupling with the transmission medium **2230** to obtain power for the communication device and wireless communications.

In this example, the communication device **2200** can include an inductive power module **2205**, a waveguide(s) **2210** and a wireless device **2215**. The inductive power module **2205** and the waveguide **2210** can be integrated or otherwise physically connected to each other. The inductive power module **2205**, the waveguide **2210** and the wireless device **2215** can be coupled by way of a cable **2220** for providing communications and/or power. Inductive power module **2205** can include various features to facilitate obtaining, regulating and/or controlling power (via an inductive coupling with the transmission medium **2230**), such as housing portions, core portions, a secondary winding, a moveable or pivotal connection, a compressible material, a chargeable battery, a voltage rectifier and/or spike suppression circuit, a circuit board and so forth. Waveguide **2210** (two of which are shown but in one or more embodiments a single surface waveguide can also be utilized) can include various features to facilitate communications by electromagnetic waves guided by the transmission medium **2230**, such as a transceiver, radiating element(s), a dielectric coupler, various circuit components (e.g., MMICs), and so forth. Wireless device **2215** can include various features to facilitate wireless communications, such as a transceiver, a feed point, a dielectric antenna, various circuit components, and so forth. Cable **2220** can include various features to facilitate providing communications and/or power between the inductive power module **2205**, the surface waveguide **2210** and the wireless device **2215**, such as a dielectric core, cladding, outer jacket, and so forth.

In one or more embodiments, the inductive power module **2205** and the waveguide(s) **2210** can be physically connected to the transmission medium **2230**, such as through use of a separable core. In one or more embodiments, the wireless device **2215** can be coupled to a support structure **2250**, such as a pole that supports the transmission medium **2230**. In one or more embodiments, communications can be provided by the communication device **2200** by way of the waveguide(s) **2210** and/or by way of the wireless device **2215**. As an example, the surface waveguide **2210** can provide or receive electromagnetic waves at a physical interface of the transmission medium **2230** that propagate without utilizing an electrical return path, where the electromagnetic waves are guided by the transmission medium. Continuing with this example, a wireless signal can be radiated from a dielectric antenna of the wireless device **2215** in response to electromagnetic waves being received at a feed point of the dielectric antenna via a dielectric core of the cable **2220**. In one or more embodiments, the wireless device **2215** can receive wireless signals that are used in generating electromagnetic waves provided to the dielectric core of the cable **2220**. In one or more embodiments, communication device **2200** allows for selective use of different techniques of communication (wireless or guided by the transmission medium **2230**).

Turning now to FIGS. **23**A and **23**B, block diagrams illustrating example, non-limiting embodiments of a dielectric antenna and corresponding gain and field intensity plots in accordance with various aspects described herein are shown. FIG. **23**A depicts a dielectric horn antenna **2391** having a conical structure which can be used as one or more of the network devices illustrated in system **2100** of FIG. **21** which provides wireless communications along a selected communication path, such as a zig-zag pattern and so forth. The dielectric horn antenna **2391** is coupled to a feed point **2392**, which can also be comprised of a dielectric material. In one embodiment, for example, the dielectric horn antenna **2391** and the feed point **2392** can be constructed of dielectric materials such as a polyethylene material, a polyurethane material or other suitable dielectric material (e.g., a synthetic resin, other plastics, etc.). In an embodiment, the dielectric horn antenna **2391** and the feed point **2392** can be adapted to be substantially or entirely devoid of any conductive materials. For example, the external surfaces **2397** of the dielectric horn antenna **2391** and the feed point **2392** can be non-conductive substantially non-conductive with at least 95% of the external surface area being non-conductive and the dielectric materials used to construct the dielectric horn antenna **2391** and the feed point **2392** can be such that they substantially do not contain impurities that may be conductive (e.g., such as less than 1 part per thousand) or result in imparting conductive properties. In other embodiments however, a limited number of conductive components can be used such as a metallic connector component used at the feed point **2392**, one or more screw, rivets or other coupling elements used to bind components to one another, and/or one or more structural elements that do not significantly alter the radiation pattern of the dielectric antenna.

The feed point **2392** can be adapted to couple to a core **2352**. In one embodiment, the feed point **2392** can be coupled to the core **2352** utilizing a joint (not shown in FIG. **23**A) such as a splicing device. Other embodiments for coupling the feed point **2392** to the core **2352** can be used. In an embodiment, the joint can be configured to cause the feed point **2392** to touch an endpoint of the core **2352**. In another embodiment, the joint can create a gap between the feed point **2392** and the endpoint of the core **2352**. In yet another embodiment, the joint can cause the feed point **2392** and the core **2352** to be coaxially aligned or partially misaligned. Notwithstanding any combination of the foregoing embodiments, electromagnetic waves can in whole or at least in part propagate between the junction of the feed point **2392** and the core **2352**.

The cable **2350** can be coupled to a waveguide system configured to select a wave mode (e.g., non-fundamental

wave mode, fundamental wave mode, a hybrid wave mode, or combinations thereof as described earlier) and transmit instances of electromagnetic waves having a non-optical operating frequency (e.g., 60 GHz). The electromagnetic waves can be directed to an interface of the cable **2350**.

The instances of electromagnetic waves generated by the waveguide system can induce a combined electromagnetic wave having the selected wave mode that propagates from the core **2352** to the feed point **2392**. The combined electromagnetic wave can propagate partly inside the core **2352** and partly on an outer surface of the core **2352**. Once the combined electromagnetic wave has propagated through the junction between the core **2352** and the feed point **2392**, the combined electromagnetic wave can continue to propagate partly inside the feed point **2392** and partly on an outer surface of the feed point **2392**. In some embodiments, the portion of the combined electromagnetic wave that propagates on the outer surface of the core **2352** and the feed point **2392** is small. In these embodiments, the combined electromagnetic wave can be said to be guided by and tightly coupled to the core **2352** and the feed point **2392** while propagating longitudinally towards the dielectric antenna **2391**.

When the combined electromagnetic wave reaches a proximal portion of the dielectric antenna **2391** (at a junction **2392'** between the feed point **2392** and the dielectric antenna **2391**), the combined electromagnetic wave enters the proximal portion of the dielectric antenna **2391** and propagates longitudinally along an axis of the dielectric antenna **2391** (shown as a hashed line). By the time the combined electromagnetic wave reaches the aperture **2393**, the combined electromagnetic wave has an intensity pattern similar to the one shown in FIG. **23**B. The electric field intensity pattern of FIG. **23**B shows that the electric fields of the combined electromagnetic waves are strongest in a center region of the aperture **2393** and weaker in the outer regions. In an embodiment, where the wave mode of the electromagnetic waves propagating in the dielectric antenna **2391** is a hybrid wave mode (e.g., HE**11**), the leakage of the electromagnetic waves at the external surfaces **2397** is reduced or in some instances eliminated

In an embodiment, the far field antenna gain pattern depicted in FIG. **23**B can be widened by decreasing the operating frequency of the combined electromagnetic wave. Similarly, the gain pattern can be narrowed by increasing the operating frequency of the combined electromagnetic wave. Accordingly, a width of a beam of wireless signals emitted by the aperture **2393** can be controlled by configuring the waveguide system to increase or decrease the operating frequency of the combined electromagnetic wave.

The dielectric antenna **2391** of FIG. **23**A can also be used for receiving wireless signals. Wireless signals received by the dielectric antenna **2391** at the aperture **2393** induce electromagnetic waves in the dielectric antenna **2391** that propagate towards the feed point **2392**. The electromagnetic waves continue to propagate from the feed point **2392** to the core **2352**. In this configuration, the waveguide system can perform bidirectional communications utilizing the dielectric antenna **2391**. It is further noted that in some embodiments the core **2352** of the cable **2350** (shown with dashed lines) can be configured to be collinear with the feed point **2392** to avoid a bend shown in FIG. **23**A. In some embodiments, a collinear configuration can reduce an alteration of the electromagnetic due to the bend in cable **2350**.

In one or more embodiments, the cable can include a dielectric core covered by a shell, and the wireless signal radiates from an aperture of the dielectric antenna. In one or more embodiments, the dielectric antenna has substantially or entirely no conductive external surfaces, and the dielectric antenna has a composition that is substantially or entirely devoid of conductive materials. In one or more embodiments, the dielectric core is opaque, thereby resistant to propagation of electromagnetic waves having an optical operating frequency. In one or more embodiments, the shell comprises a dielectric layer disposed on the dielectric core. In one or more embodiments, the dielectric core comprises a first dielectric constant, where the shell comprises a second dielectric constant, and where the first dielectric constant exceeds the second dielectric constant to enable the electromagnetic waves to be bound to the dielectric core. In one or more embodiments, the dielectric antenna comprises a high density dielectric material. In one or more embodiments, the high density dielectric material comprises a high density polyethylene material, a high density polyurethane material, or a synthetic resin.

In one or more embodiments, the cross-sections of the dielectric feed point and the dielectric core have similar dimensions. In one or more embodiments, the shell comprises a low density dielectric material. In one or more embodiments, the low density dielectric material comprises an expanded polyethylene material. In one or more embodiments, the transmitter comprises a slotted waveguide for inducing the electromagnetic waves guided by the dielectric core. In one or more embodiments, the transmitter comprises a microwave circuit coupled to an antenna and a waveguide structure for inducing the electromagnetic waves guided by the dielectric core. In one or more embodiments, the transmitter is configured to perform waveform adjustments to the wireless signal radiated by the dielectric antenna. In one or more embodiments, the electromagnetic waves have a hybrid wave mode. In one or more embodiments, the dielectric antenna has a horn structure, such as conical or pyramidal.

Turning now to FIG. **24**A, a block diagram illustrating an example, non-limiting embodiment of a transmission medium **2400** for propagating guided electromagnetic waves is shown. Transmission medium **2400** can be utilized as cable **2220** in network device **2200**. In particular, a further example of transmission medium **125** presented in conjunction with FIG. **1** is presented. In an embodiment, the transmission medium **2400** can comprise a first dielectric material **2402** and a second dielectric material **2404** disposed thereon. In an embodiment, the first dielectric material **2402** can comprise a dielectric core (referred to herein as dielectric core **2402**) and the second dielectric material **2404** can comprise a cladding or shell such as a dielectric foam that surrounds in whole or in part the dielectric core (referred to herein as dielectric foam **2404**). In an embodiment, the dielectric core **2402** and dielectric foam **2404** can be coaxially aligned to each other (although not necessary). In an embodiment, the combination of the dielectric core **3002** and the dielectric foam **2404** can be flexed or bent at least by 45 degrees without damaging the materials of the dielectric core **2402** and the dielectric foam **2404**. In an embodiment, an outer surface of the dielectric foam **2404** can be further surrounded in whole or in part by a third dielectric material **2406**, which can serve as an outer jacket (referred to herein as jacket **2406**). The jacket **2406** can prevent exposure of the dielectric core **2402** and the dielectric foam **2404** to an environment that can adversely affect the propagation of electromagnetic waves (e.g., water, soil, etc.).

The dielectric core **2402** can comprise, for example, PTFE (Teflon) or other suitable dielectric material(s). The dielectric foam **2404** can comprise, for example, a cellular

plastic material such an expanded polyethylene material, or other suitable dielectric material(s). The jacket **2406** can comprise, for example, a polyethylene material or equivalent. In an embodiment, the dielectric constant of the dielectric foam **2404** can be (or substantially) lower than the dielectric constant of the dielectric core **2402**. For example, the dielectric constant of the dielectric core **2402** can be approximately 2.3 while the dielectric constant of the dielectric foam **2404** can be approximately 1.15 (slightly higher than the dielectric constant of air). In another embodiment, a positive pressurized interior using inert or dehydrated gas can be provided, thereby adding a rigidity to the shell structure and keeping moisture out.

The dielectric core **2402** can be used for receiving signals in the form of electromagnetic waves from a launcher or other coupling device described herein which can be configured to launch guided electromagnetic waves on the transmission medium **3000**. In one embodiment, the transmission **2400** can be coupled to a hollow waveguide **3008** structured as, for example, a circular waveguide **2409**, which can receive electromagnetic waves from a radiating device such as a stub antenna (not shown). The hollow waveguide **2408** can in turn induce guided electromagnetic waves in the dielectric core **2402**. In this configuration, the guided electromagnetic waves are guided by or bound to the dielectric core **2402** and propagate longitudinally along the dielectric core **2402**. By adjusting electronics of the launcher, an operating frequency of the electromagnetic waves can be chosen such that a field intensity profile **2410** of the guided electromagnetic waves extends nominally (or not at all) outside of the jacket **2406**.

By maintaining most (if not all) of the field strength of the guided electromagnetic waves within portions of the dielectric core **2402**, the dielectric foam **2404** and/or the jacket **2406**, the transmission medium **2400** can be used in hostile environments without adversely affecting the propagation of the electromagnetic waves propagating therein. For example, the transmission medium **2400** can be buried in soil with no (or nearly no) adverse effect to the guided electromagnetic waves propagating in the transmission medium **2400**. Similarly, the transmission medium **2400** can be exposed to water (e.g., rain or placed underwater) with no (or nearly no) adverse effect to the guided electromagnetic waves propagating in the transmission medium **2400**. In an embodiment, the propagation loss of guided electromagnetic waves in the foregoing embodiments can be 1 to 2 dB per meter or better at an operating frequency of 60 GHz. Depending on the operating frequency of the guided electromagnetic waves and/or the materials used for the transmission medium **2400** other propagation losses may be possible. Additionally, depending on the materials used to construct the transmission medium **2400**, the transmission medium **2400** can in some embodiments be flexed laterally with no (or nearly no) adverse effect to the guided electromagnetic waves propagating through the dielectric core **2402** and the dielectric foam **2404**.

FIG. **24**B depicts a transmission medium **2420** that differs from the transmission medium **2400** of FIG. **24**A, yet provides a further example of the transmission medium **125** presented in conjunction with FIG. **1**. The transmission medium **2420** shows similar reference numerals for similar elements of the transmission medium **2400** of FIG. **24**A. In contrast to the transmission medium **3000**, the transmission medium **2420** comprises a conductive core **2422** having an insulation layer **2423** surrounding the conductive core **2422** in whole or in part. The combination of the insulation layer **2423** and the conductive core **2422** will be referred to herein as an insulated conductor **2425**. In the illustration of FIG. **24**B, the insulation layer **2423** is covered in whole or in part by a dielectric foam **2404** and jacket **2406**, which can be constructed from the materials previously described. In an embodiment, the insulation layer **2423** can comprise a dielectric material, such as polyethylene, having a higher dielectric constant than the dielectric foam **2404** (e.g., 2.3 and 1.15, respectively). In an embodiment, the components of the transmission medium **2420** can be coaxially aligned (although not necessary). In an embodiment, a hollow waveguide **2408** having metal plates **2409**, which can be separated from the insulation layer **2423** (although not necessary) can be used to launch guided electromagnetic waves that substantially propagate on an outer surface of the insulation layer **2423**, however other coupling devices as described herein can likewise be employed. In an embodiment, the guided electromagnetic waves can be sufficiently guided by or bound by the insulation layer **2423** to guide the electromagnetic waves longitudinally along the insulation layer **2423**. By adjusting operational parameters of the launcher, an operating frequency of the guided electromagnetic waves launched by the hollow waveguide **2408** can generate an electric field intensity profile **2424** that results in the guided electromagnetic waves being substantially confined within the dielectric foam **2404** thereby preventing the guided electromagnetic waves from being exposed to an environment (e.g., water, soil, etc.) that adversely affects propagation of the guided electromagnetic waves via the transmission medium **2420**.

FIG. **24**C depicts a transmission medium **2430** that differs from the transmission mediums **2400** and **2420** of FIGS. **24**A and **24**B, yet provides a further example of the transmission medium **125** presented in conjunction with FIG. **1**. The transmission medium **2430** shows similar reference numerals for similar elements of the transmission mediums **2400** and **2420** of FIGS. **24**A and **24**B, respectively. In contrast to the transmission mediums **2400** and **2420**, the transmission medium **2430** comprises a bare (or uninsulated) conductor **2432** surrounded in whole or in part by the dielectric foam **2404** and the jacket **2406**, which can be constructed from the materials previously described. In an embodiment, the components of the transmission medium **2430** can be coaxially aligned (although not necessary). In an embodiment, a hollow waveguide **2408** having metal plates **2409** coupled to the bare conductor **2432** can be used to launch guided electromagnetic waves that substantially propagate on an outer surface of the bare conductor **2432**, however other coupling devices described herein can likewise be employed. In an embodiment, the guided electromagnetic waves can be sufficiently guided by or bound by the bare conductor **2432** to guide the guided electromagnetic waves longitudinally along the bare conductor **2432**. By adjusting operational parameters of the launcher, an operating frequency of the guided electromagnetic waves launched by the hollow waveguide **2408** can generate an electric field intensity profile **2434** that results in the guided electromagnetic waves being substantially confined within the dielectric foam **2404** thereby preventing the guided electromagnetic waves from being exposed to an environment (e.g., water, soil, etc.) that adversely affects propagation of the electromagnetic waves via the transmission medium **2430**.

It should be noted that the hollow launcher **2408** used with the transmission mediums **2400**, **2420** and **2430** of FIGS. **24**A, **24**B and **24**C, respectively, can be replaced with other launchers or coupling devices. Additionally, the propagation mode(s) of the electromagnetic waves for any of the fore-

going embodiments can be fundamental mode(s), a non-fundamental (or asymmetric) mode(s), or combinations thereof.

Referring to FIG. **25**, a schematic diagram of a communication system **2500** is illustrated where network devices can be utilized for communicating signals along selected communication paths. System **2500** depicts a first group of network devices **2506**A (one of which is shown as **2506**A**2**) and a second group of network devices **2506**B (three of which are shown as **2506**B**1**, **2506**B**2**, **2506**B**3**) that can perform wireless communications and that can include various components including a transmitter, receiver and/or transceiver, as well as other components that facilitate the wireless communications. Any number of network devices can be included in the first and second groups of network devices **2506**A, **2506**B. The first and second groups of network devices **2506**A, **2506**B can be mounted on corresponding first and second utility poles **2501**A (three of which are shown as **2501**A**1**, **2501**A**2**, **2501**A**3**), **2501**B (three of which are shown as **2501**B**1**, **2501**B**2**, **2501**B**3**). In one or more embodiments, utility poles in system **2500** can be various types of support structure, such as power line poles, towers, buildings, and so forth, that are arranged along various first and second paths, which are illustrated as straight but can be non-linear paths including curving around a particular landscape.

System **2100** enables selecting or utilizing a communication path that can diverge from a path of the second group of network devices **2506**B to a path of the first group of network devices **2506**A. In one or more embodiments, the communication path can also diverge back to the path of the first group of network devices **2506**A. In one or more embodiments, the determination to diverge or otherwise adjust the communication path can be based on determining or detecting an undesired condition along the path. For example, an interferer **2575** can exist along the path, such as a tree branch or other structures that interfere with wireless signals. The interferer **2575** can also be various types of interferers that generate various types of interference including RF signals, such as RF source generating signals that interfere with the communication path between network devices **2506**B**1**, **2506**B**2**.

In one or more embodiments, a first network device **2506**A**2** can receive wireless signals from a second network device **2506**B**1**, where the first network device is one of a first group of network devices **2506**A mounted on first utility poles **2501**A, where the first utility poles are arranged along a first path, where the second network device is one of a second group of network devices **2506**B mounted on second utility poles **2501**B, and where the second utility poles are arranged along a second path. Continuing with this example, the first network device **2506**A**2** can transmit the wireless signals to a third network device **2506**B**3**, where the third network device is one of the second group of network devices **2506**B. In one or more embodiments, the transmitting of the wireless signals by the first network device **2506**A**2** and/or by the second network device **2506**B**1** is by electromagnetic waves that propagate without utilizing an electrical return path, where the electromagnetic waves are guided by a dielectric core of a cable coupled to a feed point of a dielectric antenna of the first and/or second network devices.

In one or more embodiments, a communication path **2550** for the wireless signals alternates between the first and second groups of network devices **2506**A, **2506**B. In one or more embodiments, the communication path **2550** for the wireless signals utilizes only a subset of the first and second groups of network devices **2506**A, **2506**B. In one or more embodiments, the wireless signals are received by the first network device **2506**A**2** from the second network device **2506**B**1** responsive to a determination of an undesired condition associated with the communication path, such as a tree branch interfering with wireless signals, where the determination can be made by various devices, such as one of the network devices. In one or more embodiments, the transmitting of the wireless signals to the first network device **2506**A**2** can be stopped and an alternate path can be selected, such as where a determination is made that the undesired condition is no longer present or otherwise no longer interfering. In one or more embodiments, there can be two crossing or otherwise simultaneous zig-zag communication paths.

Referring to FIG. **26**, a schematic diagram of a communication system **2600** is illustrated where network devices can be utilized for communicating signals along particular communication paths which can include switching between paths and/or switching between wireless communications and communications guided by a transmission medium. System **2600** depicts a first group of network devices **2606**A (four of which are shown as **2606**A**1**, **2606**A**2**, **2606**A**3**, **2606**A**4**) and a second group of network devices **2606**B (four of which are shown as **2606**B**1**, **2606**B**2**, **2606**B**3**, **2606**B**4**) that can perform wireless communications and/or communications guided by a transmission medium. The first and second groups of network devices **2606**A, **2606**B can include various components including a transmitter, receiver and/or transceiver, as well as other components that facilitate the communications. Any number of network devices can be included in the first and second groups of network devices **2606**A, **2606**B. The first and second groups of network devices **2606**A, **2606**B can be mounted on corresponding first and second utility poles **2601**A (four of which are shown as **2601**A**1**, **2601**A**2**, **2601**A**3**, **2603**A**4**), **2601**B (four of which are shown as **2601**B**1**, **2601**B**2**, **2601**B**3**, **2601**B**4**). In one or more embodiments, utility poles in system **2600** can be various types of support structure, such as power line poles, towers, buildings, and so forth, that are arranged along a various first and second paths, which are illustrated as straight but can be non-linear paths including curving around a particular landscape.

In one or more embodiments, a first network device **2606**A**2** can receive signals from a second network device **2606**A**1** by electromagnetic waves at a physical interface of a first transmission medium **2630** that propagate without utilizing an electrical return path, where the electromagnetic waves are guided by the first transmission medium, where the first and second network devices are part of the first group of network devices **2606**A mounted on first utility poles **2601**A, and where the first utility poles **2601**A connect segments of the first transmission medium **2630**. Continuing with this example, responsive to a determination of an undesired condition **2675** associated with the first transmission medium **2630**, the first network device **2606**A**2** can transmit wireless signals to a third network device **2606**B**3** (of a second group of network devices **2606**B), where the wireless signals are representative of the signals received from the second network device **2606**A**1**.

In one or more embodiments, the undesired condition **2675** can be various types of conditions including undesired physical interference with the transmission medium **2630** (e.g., a tree branch), a break in the transmission medium, weather, or other conditions that are determined to interfere with the electromagnetic waves at the physical interface of the first transmission medium **2630**.

In one or more embodiments, the third network device **2606**B**3** can transmit the wireless signals to a fourth network device **2606**A**4**, which is part of the first group of network devices **2606**A. In another embodiment, the fourth network device **2606**A**4** can then transmit signals (which are representative of the wireless signals) by electromagnetic waves at the physical interface of the first transmission medium **2630** that propagate without utilizing the electrical return path, where the electromagnetic waves are guided by the first transmission medium.

In one or more embodiments, the third network device **2606**B**3** can transmit the wireless signals to another network device **2606**B**4** (which is part of the second group of network devices **2606**B). In one or more embodiments, the third network device **2606**B**3** can transmit signals (which are representative of the wireless signals) to the other network device **2606**B**4** by electromagnetic waves at a physical interface of another transmission medium (between the third and fourth network devices) that propagate without utilizing the electrical return path, where the electromagnetic waves are guided by the other transmission medium.

In one or more embodiments, one or more network devices of the first and/or second groups of network devices **2606**A, **2606**B can include a dielectric antenna and a cable connected with a feed point of the dielectric antenna, where the cable includes a dielectric core, where the transmitting of the wireless signals by electromagnetic waves that propagate without utilizing an electrical return path, and where the electromagnetic waves are guided by the dielectric core of the cable coupled to the feed point of the dielectric antenna.

In one or more embodiments, responsive to a determination that the undesired condition is no longer associated with the first transmission medium **2630**, the first network device **2606**A**2** can cease transmitting the wireless signals to the third network device **2606**B**3** and can transmit the signals to the network device **2606**A**3**, such as by electromagnetic waves at the physical interface of the first transmission medium **2630** that propagate without utilizing the electrical return path, where the electromagnetic waves are guided by the first transmission medium.

Turning now to FIG. **27**, a flow diagram **2700** of an example, non-limiting embodiment of a method, is shown. In particular, the method **2700** is presented for use with one or more functions and features presented in conjunction with FIGS. **1-26** for switching between communication paths, such as in response to determining an undesired condition associated with one of the communication paths. At **2715**, a first network device can receive signals from a second network device. As an example, the signals can be wireless signals, where the first network device is one of a first group of network devices mounted on first utility poles, where the first utility poles are arranged along a first path, where the second network device is one of a second group of network devices mounted on second utility poles, and where the second utility poles are arranged along a second path. In another embodiment, the received signals can be electromagnetic waves at a physical interface of a transmission medium that propagate without utilizing an electrical return path, where the electromagnetic waves are guided by the transmission medium and the first and second network devices are coupled with the transmission medium.

At **2720**, a determination can be made as to whether there is an undesired condition along the communication path defined by the first group of network devices, such as a fallen tree, interfering signals, and so forth. The determination can be made by various devices, such as one of the network devices, a network server, and so forth. For example in one embodiment, a receiving network device can measure signal strength or another parameter, compare this data to a threshold and determine an undesired condition according to failing to satisfy a particular threshold. In one embodiment, the threshold can be based on historical or baseline data, such as determining that historically a received signal strength is a particular value.

If no undesired condition is detected then at **2725** the signals can continue along the designated communication path, such as along the first group of network devices. If on the other hand an undesired condition is detected then at **2730** the communication path for the signals can be adjusted to another communication path, such as along a second group of network devices. In one or more embodiments, any number of communication paths (e.g., groups of network devices) can be merged or otherwise utilized together (in whole or in part) depending on detecting undesired conditions and/or detecting that undesired conditions are no longer present.

In one or more embodiments, the adjusted communication path can alternate between the first and second groups of network devices. In one or more embodiments, the adjusted communication path can utilize only a subset of the first and second groups of network devices. In one or more embodiments, the first network device can cease the transmitting of the wireless signals to another network device of the other communication path, responsive to a determination that the undesired condition is no longer associated with the transmission medium.

Referring now to FIG. **28**, there is illustrated a block diagram of a computing environment in accordance with various aspects described herein. In order to provide additional context for various embodiments of the embodiments described herein, FIG. **28** and the following discussion are intended to provide a brief, general description of a suitable computing environment **2800** in which the various embodiments of the subject disclosure can be implemented. While the embodiments have been described above in the general context of computer-executable instructions that can run on one or more computers, those skilled in the art will recognize that the embodiments can be also implemented in combination with other program modules and/or as a combination of hardware and software.

Generally, program modules comprise routines, programs, components, data structures, etc., that perform particular tasks or implement particular abstract data types. Moreover, those skilled in the art will appreciate that the inventive methods can be practiced with other computer system configurations, comprising single-processor or multiprocessor computer systems, minicomputers, mainframe computers, as well as personal computers, hand-held computing devices, microprocessor-based or programmable consumer electronics, and the like, each of which can be operatively coupled to one or more associated devices.

As used herein, a processing circuit includes processor as well as other application specific circuits such as an application specific integrated circuit, digital logic circuit, state machine, programmable gate array or other circuit that processes input signals or data and that produces output signals or data in response thereto. It should be noted that while any functions and features described herein in association with the operation of a processor could likewise be performed by a processing circuit.

The terms "first," "second," "third," and so forth, as used in the claims, unless otherwise clear by context, is for clarity only and doesn't otherwise indicate or imply any order in time. For instance, "a first determination," "a second deter-

mination," and "a third determination," does not indicate or imply that the first determination is to be made before the second determination, or vice versa, etc.

The illustrated embodiments of the embodiments herein can be also practiced in distributed computing environments where certain tasks are performed by remote processing devices that are linked through a communications network. In a distributed computing environment, program modules can be located in both local and remote memory storage devices.

Computing devices typically comprise a variety of media, which can comprise computer-readable storage media and/or communications media, which two terms are used herein differently from one another as follows. Computer-readable storage media can be any available storage media that can be accessed by the computer and comprises both volatile and nonvolatile media, removable and non-removable media. By way of example, and not limitation, computer-readable storage media can be implemented in connection with any method or technology for storage of information such as computer-readable instructions, program modules, structured data or unstructured data.

Computer-readable storage media can comprise, but are not limited to, random access memory (RAM), read only memory (ROM), electrically erasable programmable read only memory (EEPROM), flash memory or other memory technology, compact disk read only memory (CD-ROM), digital versatile disk (DVD) or other optical disk storage, magnetic cassettes, magnetic tape, magnetic disk storage or other magnetic storage devices or other tangible and/or non-transitory media which can be used to store desired information. In this regard, the terms "tangible" or "non-transitory" herein as applied to storage, memory or computer-readable media, are to be understood to exclude only propagating transitory signals per se as modifiers and do not relinquish rights to all standard storage, memory or computer-readable media that are not only propagating transitory signals per se.

Computer-readable storage media can be accessed by one or more local or remote computing devices, e.g., via access requests, queries or other data retrieval protocols, for a variety of operations with respect to the information stored by the medium.

Communications media typically embody computer-readable instructions, data structures, program modules or other structured or unstructured data in a data signal such as a modulated data signal, e.g., a carrier wave or other transport mechanism, and comprises any information delivery or transport media. The term "modulated data signal" or signals refers to a signal that has one or more of its characteristics set or changed in such a manner as to encode information in one or more signals. By way of example, and not limitation, communication media comprise wired media, such as a wired network or direct-wired connection, and wireless media such as acoustic, RF, infrared and other wireless media.

With reference again to FIG. **28**, the example environment **2800** for transmitting and receiving signals via or forming at least part of a base station (e.g., base station devices **1504**, macrocell site **1502**, or base stations **1614**) or central office (e.g., central office **1501** or **1611**). At least a portion of the example environment **2800** can also be used for transmission devices **101** or **102**. The example environment can comprise a computer **2802**, the computer **2802** comprising a processing unit **2804**, a system memory **2806** and a system bus **2808**. The system bus **2808** couples system components including, but not limited to, the system memory **2806** to the processing unit **2804**. The processing unit **2804** can be any of various commercially available processors. Dual microprocessors and other multiprocessor architectures can also be employed as the processing unit **2804**.

The system bus **2808** can be any of several types of bus structure that can further interconnect to a memory bus (with or without a memory controller), a peripheral bus, and a local bus using any of a variety of commercially available bus architectures. The system memory **2806** comprises ROM **2810** and RAM **2812**. A basic input/output system (BIOS) can be stored in a non-volatile memory such as ROM, erasable programmable read only memory (EPROM), EEPROM, which BIOS contains the basic routines that help to transfer information between elements within the computer **2802**, such as during startup. The RAM **2812** can also comprise a high-speed RAM such as static RAM for caching data.

The computer **2802** further comprises an internal hard disk drive (HDD) **2814** (e.g., EIDE, SATA), which internal hard disk drive **2814** can also be configured for external use in a suitable chassis (not shown), a magnetic floppy disk drive (FDD) **2816**, (e.g., to read from or write to a removable diskette **2818**) and an optical disk drive **2820**, (e.g., reading a CD-ROM disk **2822** or, to read from or write to other high capacity optical media such as the DVD). The hard disk drive **2814**, magnetic disk drive **2816** and optical disk drive **2820** can be connected to the system bus **2808** by a hard disk drive interface **2824**, a magnetic disk drive interface **2826** and an optical drive interface **2828**, respectively. The interface **2824** for external drive implementations comprises at least one or both of Universal Serial Bus (USB) and Institute of Electrical and Electronics Engineers (IEEE) 1394 interface technologies. Other external drive connection technologies are within contemplation of the embodiments described herein.

The drives and their associated computer-readable storage media provide nonvolatile storage of data, data structures, computer-executable instructions, and so forth. For the computer **2802**, the drives and storage media accommodate the storage of any data in a suitable digital format. Although the description of computer-readable storage media above refers to a hard disk drive (HDD), a removable magnetic diskette, and a removable optical media such as a CD or DVD, it should be appreciated by those skilled in the art that other types of storage media which are readable by a computer, such as zip drives, magnetic cassettes, flash memory cards, cartridges, and the like, can also be used in the example operating environment, and further, that any such storage media can contain computer-executable instructions for performing the methods described herein.

A number of program modules can be stored in the drives and RAM **2812**, comprising an operating system **2830**, one or more application programs **2832**, other program modules **2834** and program data **2836**. All or portions of the operating system, applications, modules, and/or data can also be cached in the RAM **2812**. The systems and methods described herein can be implemented utilizing various commercially available operating systems or combinations of operating systems. Examples of application programs **2832** that can be implemented and otherwise executed by processing unit **2804** include the diversity selection determining performed by transmission device **101** or **102**.

A user can enter commands and information into the computer **2802** through one or more wired/wireless input devices, e.g., a keyboard **2838** and a pointing device, such as a mouse **2840**. Other input devices (not shown) can comprise a microphone, an infrared (IR) remote control, a

joystick, a game pad, a stylus pen, touch screen or the like. These and other input devices are often connected to the processing unit **2804** through an input device interface **2842** that can be coupled to the system bus **2808**, but can be connected by other interfaces, such as a parallel port, an IEEE 1394 serial port, a game port, a universal serial bus (USB) port, an IR interface, etc.

A monitor **2844** or other type of display device can be also connected to the system bus **2808** via an interface, such as a video adapter **2846**. It will also be appreciated that in alternative embodiments, a monitor **2844** can also be any display device (e.g., another computer having a display, a smart phone, a tablet computer, etc.) for receiving display information associated with computer **2802** via any communication means, including via the Internet and cloud-based networks. In addition to the monitor **2844**, a computer typically comprises other peripheral output devices (not shown), such as speakers, printers, etc.

The computer **2802** can operate in a networked environment using logical connections via wired and/or wireless communications to one or more remote computers, such as a remote computer(s) **2848**. The remote computer(s) **2848** can be a workstation, a server computer, a router, a personal computer, portable computer, microprocessor-based entertainment appliance, a peer device or other common network node, and typically comprises many or all of the elements described relative to the computer **2802**, although, for purposes of brevity, only a memory/storage device **2850** is illustrated. The logical connections depicted comprise wired/wireless connectivity to a local area network (LAN) **2852** and/or larger networks, e.g., a wide area network (WAN) **2854**. Such LAN and WAN networking environments are commonplace in offices and companies, and facilitate enterprise-wide computer networks, such as intranets, all of which can connect to a global communications network, e.g., the Internet.

When used in a LAN networking environment, the computer **2802** can be connected to the local network **2852** through a wired and/or wireless communication network interface or adapter **2856**. The adapter **2856** can facilitate wired or wireless communication to the LAN **2852**, which can also comprise a wireless AP disposed thereon for communicating with the wireless adapter **2856**.

When used in a WAN networking environment, the computer **2802** can comprise a modem **2858** or can be connected to a communications server on the WAN **2854** or has other means for establishing communications over the WAN **2854**, such as by way of the Internet. The modem **2858**, which can be internal or external and a wired or wireless device, can be connected to the system bus **2808** via the input device interface **2842**. In a networked environment, program modules depicted relative to the computer **2802** or portions thereof, can be stored in the remote memory/storage device **2850**. It will be appreciated that the network connections shown are example and other means of establishing a communications link between the computers can be used.

The computer **2802** can be operable to communicate with any wireless devices or entities operatively disposed in wireless communication, e.g., a printer, scanner, desktop and/or portable computer, portable data assistant, communications satellite, any piece of equipment or location associated with a wirelessly detectable tag (e.g., a kiosk, news stand, restroom), and telephone. This can comprise Wireless Fidelity (Wi-Fi) and BLUETOOTH® wireless technologies. Thus, the communication can be a predefined structure as with a conventional network or simply an ad hoc communication between at least two devices.

Wi-Fi can allow connection to the Internet from a couch at home, a bed in a hotel room or a conference room at work, without wires. Wi-Fi is a wireless technology similar to that used in a cell phone that enables such devices, e.g., computers, to send and receive data indoors and out; anywhere within the range of a base station. Wi-Fi networks use radio technologies called IEEE 802.11 (a, b, g, n, ac, ag etc.) to provide secure, reliable, fast wireless connectivity. A Wi-Fi network can be used to connect computers to each other, to the Internet, and to wired networks (which can use IEEE 802.3 or Ethernet). Wi-Fi networks operate in the unlicensed 2.4 and 5 GHz radio bands for example or with products that contain both bands (dual band), so the networks can provide real-world performance similar to the basic 10BaseT wired Ethernet networks used in many offices.

FIG. **29** presents an example embodiment **2900** of a mobile network platform **2910** that can implement and exploit one or more aspects of the disclosed subject matter described herein. In one or more embodiments, the mobile network platform **2910** can generate and receive signals transmitted and received by base stations (e.g., base station devices **1504**, macrocell site **1502**, or base stations **1614**), central office (e.g., central office **1501** or **1611**), or transmission device **101** or **102** associated with the disclosed subject matter. Generally, wireless network platform **2910** can comprise components, e.g., nodes, gateways, interfaces, servers, or disparate platforms, that facilitate both packet-switched (PS) (e.g., internet protocol (IP), frame relay, asynchronous transfer mode (ATM)) and circuit-switched (CS) traffic (e.g., voice and data), as well as control generation for networked wireless telecommunication. As a non-limiting example, wireless network platform **2910** can be included in telecommunications carrier networks, and can be considered carrier-side components as discussed elsewhere herein. Mobile network platform **2910** comprises CS gateway node(s) **2922** which can interface CS traffic received from legacy networks like telephony network(s) **2940** (e.g., public switched telephone network (PSTN), or public land mobile network (PLMN)) or a signaling system #7 (SS7) network **2970**. Circuit switched gateway node(s) **2922** can authorize and authenticate traffic (e.g., voice) arising from such networks. Additionally, CS gateway node(s) **2922** can access mobility, or roaming, data generated through SS7 network **2970**; for instance, mobility data stored in a visited location register (VLR), which can reside in memory **2930**. Moreover, CS gateway node(s) **2922** interfaces CS-based traffic and signaling and PS gateway node(s) **2918**. As an example, in a 3GPP UMTS network, CS gateway node(s) **2922** can be realized at least in part in gateway GPRS support node(s) (GGSN). It should be appreciated that functionality and specific operation of CS gateway node(s) **2922**, PS gateway node(s) **2918**, and serving node(s) **2916**, is provided and dictated by radio technology(ies) utilized by mobile network platform **2910** for telecommunication.

In addition to receiving and processing CS-switched traffic and signaling, PS gateway node(s) **2918** can authorize and authenticate PS-based data sessions with served mobile devices. Data sessions can comprise traffic, or content(s), exchanged with networks external to the wireless network platform **2910**, like wide area network(s) (WANs) **2950**, enterprise network(s) **2970**, and service network(s) **2980**, which can be embodied in local area network(s) (LANs), can also be interfaced with mobile network platform **2910** through PS gateway node(s) **2918**. It is to be noted that

WANs **2950** and enterprise network(s) **2960** can embody, at least in part, a service network(s) like IP multimedia subsystem (IMS). Based on radio technology layer(s) available in technology resource(s) **2917**, packet-switched gateway node(s) **2918** can generate packet data protocol contexts when a data session is established; other data structures that facilitate routing of packetized data also can be generated. To that end, in an aspect, PS gateway node(s) **2918** can comprise a tunnel interface (e.g., tunnel termination gateway (TTG) in 3GPP UMTS network(s) (not shown)) which can facilitate packetized communication with disparate wireless network(s), such as Wi-Fi networks.

In embodiment **2900**, wireless network platform **2910** also comprises serving node(s) **2916** that, based upon available radio technology layer(s) within technology resource(s) **2917**, convey the various packetized flows of data streams received through PS gateway node(s) **2918**. It is to be noted that for technology resource(s) **2917** that rely primarily on CS communication, server node(s) can deliver traffic without reliance on PS gateway node(s) **2918**; for example, server node(s) can embody at least in part a mobile switching center. As an example, in a 3GPP UMTS network, serving node(s) **2916** can be embodied in serving GPRS support node(s) (SGSN).

For radio technologies that exploit packetized communication, server(s) **2914** in wireless network platform **2910** can execute numerous applications that can generate multiple disparate packetized data streams or flows, and manage (e.g., schedule, queue, format . . . ) such flows. Such application(s) can comprise add-on features to standard services (for example, provisioning, billing, customer support . . . ) provided by wireless network platform **2910**. Data streams (e.g., content(s) that are part of a voice call or data session) can be conveyed to PS gateway node(s) **2918** for authorization/authentication and initiation of a data session, and to serving node(s) **2916** for communication thereafter. In addition to application server, server(s) **2914** can comprise utility server(s), a utility server can comprise a provisioning server, an operations and maintenance server, a security server that can implement at least in part a certificate authority and firewalls as well as other security mechanisms, and the like. In an aspect, security server(s) secure communication served through wireless network platform **2910** to ensure network's operation and data integrity in addition to authorization and authentication procedures that CS gateway node(s) **2922** and PS gateway node(s) **2918** can enact. Moreover, provisioning server(s) can provision services from external network(s) like networks operated by a disparate service provider; for instance, WAN **2950** or Global Positioning System (GPS) network(s) (not shown). Provisioning server(s) can also provision coverage through networks associated to wireless network platform **2910** (e.g., deployed and operated by the same service provider), such as the distributed antennas networks shown in FIG. **1**(*s*) that enhance wireless service coverage by providing more network coverage. Repeater devices such as those shown in FIGS. **7**, **8**, and **9** also improve network coverage in order to enhance subscriber service experience by way of UE **2975**.

It is to be noted that server(s) **2914** can comprise one or more processors configured to confer at least in part the functionality of macro network platform **2910**. To that end, the one or more processor can execute code instructions stored in memory **2930**, for example. It is should be appreciated that server(s) **2914** can comprise a content manager **2915**, which operates in substantially the same manner as described hereinbefore.

In example embodiment **2900**, memory **2930** can store information related to operation of wireless network platform **2910**. Other operational information can comprise provisioning information of mobile devices served through wireless platform network **2910**, subscriber databases; application intelligence, pricing schemes, e.g., promotional rates, flat-rate programs, couponing campaigns; technical specification(s) consistent with telecommunication protocols for operation of disparate radio, or wireless, technology layers; and so forth. Memory **2930** can also store information from at least one of telephony network(s) **2940**, WAN **2950**, enterprise network(s) **2970**, or SS7 network **2960**. In an aspect, memory **2930** can be, for example, accessed as part of a data store component or as a remotely connected memory store.

In order to provide a context for the various aspects of the disclosed subject matter, FIG. **29**, and the following discussion, are intended to provide a brief, general description of a suitable environment in which the various aspects of the disclosed subject matter can be implemented. While the subject matter has been described above in the general context of computer-executable instructions of a computer program that runs on a computer and/or computers, those skilled in the art will recognize that the disclosed subject matter also can be implemented in combination with other program modules. Generally, program modules comprise routines, programs, components, data structures, etc. that perform particular tasks and/or implement particular abstract data types.

FIG. **30** depicts an illustrative embodiment of a communication device **3000**. The communication device **3000** can serve as an illustrative embodiment of devices such as mobile devices and in-building devices referred to by the subject disclosure (e.g., in FIGS. **15**, **16**A and **16**B).

The communication device **3000** can comprise a wireline and/or wireless transceiver **3002** (herein transceiver **3002**), a user interface (UI) **3004**, a power supply **3014**, a location receiver **3016**, a motion sensor **3018**, an orientation sensor **3020**, and a controller **3006** for managing operations thereof. The transceiver **3002** can support short-range or long-range wireless access technologies such as Bluetooth®, ZigBee®, WiFi, DECT, or cellular communication technologies, just to mention a few (Bluetooth® and ZigBee® are trademarks registered by the Bluetooth® Special Interest Group and the ZigBee® Alliance, respectively). Cellular technologies can include, for example, CDMA-1×, UMTS/HSDPA, GSM/GPRS, TDMA/EDGE, EV/DO, WiMAX, SDR, LTE, as well as other next generation wireless communication technologies as they arise. The transceiver **3002** can also be adapted to support circuit-switched wireline access technologies (such as PSTN), packet-switched wireline access technologies (such as TCP/IP, VoIP, etc.), and combinations thereof.

The UI **3004** can include a depressible or touch-sensitive keypad **3008** with a navigation mechanism such as a roller ball, a joystick, a mouse, or a navigation disk for manipulating operations of the communication device **3000**. The keypad **3008** can be an integral part of a housing assembly of the communication device **3000** or an independent device operably coupled thereto by a tethered wireline interface (such as a USB cable) or a wireless interface supporting for example Bluetooth®. The keypad **3008** can represent a numeric keypad commonly used by phones, and/or a QWERTY keypad with alphanumeric keys. The UI **3004** can further include a display **3010** such as monochrome or color LCD (Liquid Crystal Display), OLED (Organic Light Emitting Diode) or other suitable display technology for convey-

ing images to an end user of the communication device **3000**. In an embodiment where the display **3010** is touch-sensitive, a portion or all of the keypad **3008** can be presented by way of the display **3010** with navigation features.

The display **3010** can use touch screen technology to also serve as a user interface for detecting user input. As a touch screen display, the communication device **3000** can be adapted to present a user interface having graphical user interface (GUI) elements that can be selected by a user with a touch of a finger. The touch screen display **3010** can be equipped with capacitive, resistive or other forms of sensing technology to detect how much surface area of a user's finger has been placed on a portion of the touch screen display. This sensing information can be used to control the manipulation of the GUI elements or other functions of the user interface. The display **3010** can be an integral part of the housing assembly of the communication device **3000** or an independent device communicatively coupled thereto by a tethered wireline interface (such as a cable) or a wireless interface.

The UI **3004** can also include an audio system **3012** that utilizes audio technology for conveying low volume audio (such as audio heard in proximity of a human ear) and high volume audio (such as speakerphone for hands free operation). The audio system **3012** can further include a microphone for receiving audible signals of an end user. The audio system **3012** can also be used for voice recognition applications. The UI **3004** can further include an image sensor **3013** such as a charged coupled device (CCD) camera for capturing still or moving images.

The power supply **3014** can utilize common power management technologies such as replaceable and rechargeable batteries, supply regulation technologies, and/or charging system technologies for supplying energy to the components of the communication device **3000** to facilitate long-range or short-range portable communications. Alternatively, or in combination, the charging system can utilize external power sources such as DC power supplied over a physical interface such as a USB port or other suitable tethering technologies.

The location receiver **3016** can utilize location technology such as a global positioning system (GPS) receiver capable of assisted GPS for identifying a location of the communication device **3000** based on signals generated by a constellation of GPS satellites, which can be used for facilitating location services such as navigation. The motion sensor **3018** can utilize motion sensing technology such as an accelerometer, a gyroscope, or other suitable motion sensing technology to detect motion of the communication device **3000** in three-dimensional space. The orientation sensor **3020** can utilize orientation sensing technology such as a magnetometer to detect the orientation of the communication device **3000** (north, south, west, and east, as well as combined orientations in degrees, minutes, or other suitable orientation metrics).

The communication device **3000** can use the transceiver **3002** to also determine a proximity to a cellular, WiFi, Bluetooth®, or other wireless access points by sensing techniques such as utilizing a received signal strength indicator (RSSI) and/or signal time of arrival (TOA) or time of flight (TOF) measurements. The controller **3006** can utilize computing technologies such as a microprocessor, a digital signal processor (DSP), programmable gate arrays, application specific integrated circuits, and/or a video processor with associated storage memory such as Flash, ROM, RAM, SRAM, DRAM or other storage technologies for executing computer instructions, controlling, and processing data supplied by the aforementioned components of the communication device **3000**.

Other components not shown in FIG. **30** can be used in one or more embodiments of the subject disclosure. For instance, the communication device **3000** can include a slot for adding or removing an identity module such as a Subscriber Identity Module (SIM) card or Universal Integrated Circuit Card (UICC). SIM or UICC cards can be used for identifying subscriber services, executing programs, storing subscriber data, and so on.

In the subject specification, terms such as "store," "storage," "data store," data storage," "database," and substantially any other information storage component relevant to operation and functionality of a component, refer to "memory components," or entities embodied in a "memory" or components comprising the memory. It will be appreciated that the memory components described herein can be either volatile memory or nonvolatile memory, or can comprise both volatile and nonvolatile memory, by way of illustration, and not limitation, volatile memory, non-volatile memory, disk storage, and memory storage. Further, nonvolatile memory can be included in read only memory (ROM), programmable ROM (PROM), electrically programmable ROM (EPROM), electrically erasable ROM (EEPROM), or flash memory. Volatile memory can comprise random access memory (RAM), which acts as external cache memory. By way of illustration and not limitation, RAM is available in many forms such as synchronous RAM (SRAM), dynamic RAM (DRAM), synchronous DRAM (SDRAM), double data rate SDRAM (DDR SDRAM), enhanced SDRAM (ESDRAM), Synchlink DRAM (SLDRAM), and direct Rambus RAM (DRRAM). Additionally, the disclosed memory components of systems or methods herein are intended to comprise, without being limited to comprising, these and any other suitable types of memory.

Moreover, it will be noted that the disclosed subject matter can be practiced with other computer system configurations, comprising single-processor or multiprocessor computer systems, mini-computing devices, mainframe computers, as well as personal computers, hand-held computing devices (e.g., PDA, phone, smartphone, watch, tablet computers, netbook computers, etc.), microprocessor-based or programmable consumer or industrial electronics, and the like. The illustrated aspects can also be practiced in distributed computing environments where tasks are performed by remote processing devices that are linked through a communications network; however, some if not all aspects of the subject disclosure can be practiced on stand-alone computers. In a distributed computing environment, program modules can be located in both local and remote memory storage devices.

Some of the embodiments described herein can also employ artificial intelligence (AI) to facilitate automating one or more features described herein. For example, artificial intelligence can be used in optional training controller **230** evaluate and select candidate frequencies, modulation schemes, MIMO modes, and/or guided wave modes in order to maximize transfer efficiency. The embodiments (e.g., in connection with automatically identifying acquired cell sites that provide a maximum value/benefit after addition to an existing communication network) can employ various AI-based schemes for carrying out various embodiments thereof. Moreover, the classifier can be employed to determine a ranking or priority of the each cell site of the acquired network. A classifier is a function that maps an input

attribute vector, x=(x1, x2, x3, x4, . . . , xn), to a confidence that the input belongs to a class, that is, f(x)=confidence (class). Such classification can employ a probabilistic and/or statistical-based analysis (e.g., factoring into the analysis utilities and costs) to prognose or infer an action that a user desires to be automatically performed. A support vector machine (SVM) is an example of a classifier that can be employed. The SVM operates by finding a hypersurface in the space of possible inputs, which the hypersurface attempts to split the triggering criteria from the non-triggering events. Intuitively, this makes the classification correct for testing data that is near, but not identical to training data. Other directed and undirected model classification approaches comprise, e.g., naïve Bayes, Bayesian networks, decision trees, neural networks, fuzzy logic models, and probabilistic classification models providing different patterns of independence can be employed. Classification as used herein also is inclusive of statistical regression that is utilized to develop models of priority.

As will be readily appreciated, one or more of the embodiments can employ classifiers that are explicitly trained (e.g., via a generic training data) as well as implicitly trained (e.g., via observing UE behavior, operator preferences, historical information, receiving extrinsic information). For example, SVMs can be configured via a learning or training phase within a classifier constructor and feature selection module. Thus, the classifier(s) can be used to automatically learn and perform a number of functions, including but not limited to determining according to a predetermined criteria which of the acquired cell sites will benefit a maximum number of subscribers and/or which of the acquired cell sites will add minimum value to the existing communication network coverage, etc.

As used in some contexts in this application, in some embodiments, the terms "component," "system" and the like are intended to refer to, or comprise, a computer-related entity or an entity related to an operational apparatus with one or more specific functionalities, wherein the entity can be either hardware, a combination of hardware and software, software, or software in execution. As an example, a component may be, but is not limited to being, a process running on a processor, a processor, an object, an executable, a thread of execution, computer-executable instructions, a program, and/or a computer. By way of illustration and not limitation, both an application running on a server and the server can be a component. One or more components may reside within a process and/or thread of execution and a component may be localized on one computer and/or distributed between two or more computers. In addition, these components can execute from various computer readable media having various data structures stored thereon. The components may communicate via local and/or remote processes such as in accordance with a signal having one or more data packets (e.g., data from one component interacting with another component in a local system, distributed system, and/or across a network such as the Internet with other systems via the signal). As another example, a component can be an apparatus with specific functionality provided by mechanical parts operated by electric or electronic circuitry, which is operated by a software or firmware application executed by a processor, wherein the processor can be internal or external to the apparatus and executes at least a part of the software or firmware application. As yet another example, a component can be an apparatus that provides specific functionality through electronic components without mechanical parts, the electronic components can comprise a processor therein to execute software or firmware that confers at least in part the functionality of the electronic components. While various components have been illustrated as separate components, it will be appreciated that multiple components can be implemented as a single component, or a single component can be implemented as multiple components, without departing from example embodiments.

Further, the various embodiments can be implemented as a method, apparatus or article of manufacture using standard programming and/or engineering techniques to produce software, firmware, hardware or any combination thereof to control a computer to implement the disclosed subject matter. The term "article of manufacture" as used herein is intended to encompass a computer program accessible from any computer-readable device or computer-readable storage/communications media. For example, computer readable storage media can include, but are not limited to, magnetic storage devices (e.g., hard disk, floppy disk, magnetic strips), optical disks (e.g., compact disk (CD), digital versatile disk (DVD)), smart cards, and flash memory devices (e.g., card, stick, key drive). Of course, those skilled in the art will recognize many modifications can be made to this configuration without departing from the scope or spirit of the various embodiments.

In addition, the words "example" and "exemplary" are used herein to mean serving as an instance or illustration. Any embodiment or design described herein as "example" or "exemplary" is not necessarily to be construed as preferred or advantageous over other embodiments or designs. Rather, use of the word example or exemplary is intended to present concepts in a concrete fashion. As used in this application, the term "or" is intended to mean an inclusive "or" rather than an exclusive "or". That is, unless specified otherwise or clear from context, "X employs A or B" is intended to mean any of the natural inclusive permutations. That is, if X employs A; X employs B; or X employs both A and B, then "X employs A or B" is satisfied under any of the foregoing instances. In addition, the articles "a" and "an" as used in this application and the appended claims should generally be construed to mean "one or more" unless specified otherwise or clear from context to be directed to a singular form.

Moreover, terms such as "user equipment," "mobile station," "mobile," subscriber station," "access terminal," "terminal," "handset," "mobile device" (and/or terms representing similar terminology) can refer to a wireless device utilized by a subscriber or user of a wireless communication service to receive or convey data, control, voice, video, sound, gaming or substantially any data-stream or signaling-stream. The foregoing terms are utilized interchangeably herein and with reference to the related drawings.

Furthermore, the terms "user," "subscriber," "customer," "consumer" and the like are employed interchangeably throughout, unless context warrants particular distinctions among the terms. It should be appreciated that such terms can refer to human entities or automated components supported through artificial intelligence (e.g., a capacity to make inference based, at least, on complex mathematical formalisms), which can provide simulated vision, sound recognition and so forth.

As employed herein, the term "processor" can refer to substantially any computing processing unit or device comprising, but not limited to comprising, single-core processors; single-processors with software multithread execution capability; multi-core processors; multi-core processors with software multithread execution capability; multi-core processors with hardware multithread technology; parallel

platforms; and parallel platforms with distributed shared memory. Additionally, a processor can refer to an integrated circuit, an application specific integrated circuit (ASIC), a digital signal processor (DSP), a field programmable gate array (FPGA), a programmable logic controller (PLC), a complex programmable logic device (CPLD), a discrete gate or transistor logic, discrete hardware components or any combination thereof designed to perform the functions described herein. Processors can exploit nano-scale architectures such as, but not limited to, molecular and quantum-dot based transistors, switches and gates, in order to optimize space usage or enhance performance of user equipment. A processor can also be implemented as a combination of computing processing units.

As used herein, terms such as "data storage," data storage," "database," and substantially any other information storage component relevant to operation and functionality of a component, refer to "memory components," or entities embodied in a "memory" or components comprising the memory. It will be appreciated that the memory components or computer-readable storage media, described herein can be either volatile memory or nonvolatile memory or can include both volatile and nonvolatile memory.

What has been described above includes mere examples of various embodiments. It is, of course, not possible to describe every conceivable combination of components or methodologies for purposes of describing these examples, but one of ordinary skill in the art can recognize that many further combinations and permutations of the present embodiments are possible. Accordingly, the embodiments disclosed and/or claimed herein are intended to embrace all such alterations, modifications and variations that fall within the spirit and scope of the appended claims. Furthermore, to the extent that the term "includes" is used in either the detailed description or the claims, such term is intended to be inclusive in a manner similar to the term "comprising" as "comprising" is interpreted when employed as a transitional word in a claim.

In addition, a flow diagram may include a "start" and/or "continue" indication. The "start" and "continue" indications reflect that the steps presented can optionally be incorporated in or otherwise used in conjunction with other routines. In this context, "start" indicates the beginning of the first step presented and may be preceded by other activities not specifically shown. Further, the "continue" indication reflects that the steps presented may be performed multiple times and/or may be succeeded by other activities not specifically shown. Further, while a flow diagram indicates a particular ordering of steps, other orderings are likewise possible provided that the principles of causality are maintained.

As may also be used herein, the term(s) "operably coupled to", "coupled to", and/or "coupling" includes direct coupling between items and/or indirect coupling between items via one or more intervening items. Such items and intervening items include, but are not limited to, junctions, communication paths, components, circuit elements, circuits, functional blocks, and/or devices. As an example of indirect coupling, a signal conveyed from a first item to a second item may be modified by one or more intervening items by modifying the form, nature or format of information in a signal, while one or more elements of the information in the signal are nevertheless conveyed in a manner than can be recognized by the second item. In a further example of indirect coupling, an action in a first item can cause a reaction on the second item, as a result of actions and/or reactions in one or more intervening items.

Although specific embodiments have been illustrated and described herein, it should be appreciated that any arrangement which achieves the same or similar purpose may be substituted for the embodiments described or shown by the subject disclosure. The subject disclosure is intended to cover any and all adaptations or variations of various embodiments. Combinations of the above embodiments, and other embodiments not specifically described herein, can be used in the subject disclosure. For instance, one or more features from one or more embodiments can be combined with one or more features of one or more other embodiments. In one or more embodiments, features that are positively recited can also be negatively recited and excluded from the embodiment with or without replacement by another structural and/or functional feature. The steps or functions described with respect to the embodiments of the subject disclosure can be performed in any order. The steps or functions described with respect to the embodiments of the subject disclosure can be performed alone or in combination with other steps or functions of the subject disclosure, as well as from other embodiments or from other steps that have not been described in the subject disclosure. Further, more than or less than all of the features described with respect to an embodiment can also be utilized.

What is claimed is:

**1**. A system, comprising:

a first group of network devices mounted on first utility poles, wherein the first utility poles are arranged along a first path, wherein the first utility poles support first segments of a first transmission medium, and wherein the first group of network devices comprises a first network device associated with the first transmission medium and a third network device associated with the first transmission medium; and

a second group of network devices mounted on second utility poles, wherein the second utility poles are arranged along a second path, wherein the second utility poles support second segments of a second transmission medium, and wherein the second group of network devices comprises a second network device associated with the second transmission medium,

wherein each network device of the first and second groups of network devices includes a respective dielectric antenna for transmitting and receiving wireless communications, wherein each dielectric antenna has at least substantially no conductive external surfaces, and wherein each dielectric antenna has a respective composition that is at least substantially devoid of conductive materials, and

wherein wireless signals are sent, responsive to a determination of an undesired condition adversely affecting propagation of electromagnetic waves along the first transmission medium, over a communication path that alternates between network devices in the first group of network devices and a network device in the second group of network devices such that the communication path goes from the first network device associated with the first transmission medium to the second network device associated with the second transmission medium and then to the third network device associated with the first transmission medium.

**2**. The system of claim **1**, wherein each network device of the first group of network devices includes a respective cable coupled to a respective feed point of the respective dielectric antenna, wherein the wireless signals, sent by the first network device of the first group of network devices, are based on the electromagnetic waves that propagate without

requiring an electrical return path, and wherein the electromagnetic waves are guided by a respective dielectric core of the respective cable coupled to the respective feed point of the respective dielectric antenna.

**3**. The system of claim **1**, wherein the first and second paths are substantially parallel and located along opposing sides of a road, and wherein the first transmission medium and the second transmission medium are power lines.

**4**. The system of claim **1**, wherein the communication path for the wireless signals utilizes only a first subset of the first and second groups of network devices.

**5**. The system of claim **4**, wherein another communication path for other wireless signals alternates between the first and second groups of network devices, wherein the another communication path for the other wireless signals utilizes only a second subset of the first and second groups of network devices, and wherein the first and second subsets of the first and second groups of network devices are different.

**6**. The system of claim **1**, wherein each network device of the first group of network devices is physically connected with the first transmission medium, wherein another communication path utilizing the first group of network devices is by other electromagnetic waves, at a physical interface of the first transmission medium, that propagate without requiring an electrical return path, and wherein the other electromagnetic waves are guided by the first transmission medium.

**7**. The system of claim **1**, wherein the first network device of the first group of network devices receives signals by the electromagnetic waves, at a physical interface of the first transmission medium, that propagate without requiring an electrical return path, wherein the electromagnetic waves are guided by the first transmission medium, and wherein the wireless signals of the communication path alternating between the first and second groups of network devices are generated based on the signals received by the first network device of the first group of network devices.

**8**. A method comprising:

receiving, by a first network device from a second network device, wireless signals, wherein the first network device is one of a first group of network devices that are associated with a first transmission medium and that are mounted on first utility poles, wherein the first utility poles are arranged along a first path, wherein the second network device is one of a second group of network devices that are associated with a second transmission medium and that are mounted on second utility poles, wherein the second utility poles are arranged along a second path, wherein each network device of the first and second groups of network devices includes a respective dielectric antenna for transmitting and receiving wireless communications, wherein each dielectric antenna has at least substantially no conductive external surfaces, wherein each dielectric antenna has a respective composition that is at least substantially devoid of conductive materials, and wherein the receiving is responsive to a first determination of an undesired condition adversely affecting propagation of electromagnetic waves along the second transmission medium; and

transmitting responsive to the first determination of the undesired condition adversely affecting the propagation of the electromagnetic waves along the second transmission medium, by the first network device to a third network device, the wireless signals, wherein the third network device is one of the second group of network devices that are associated with the second transmission medium;

wherein the receiving and the transmitting form a communication path that alternates between network devices in the second group of network devices and a network device in the first group of network devices such that the communication path goes from the second network device associated with the second transmission medium to the first network device associated with the first transmission medium and then to the third network device associated with the second transmission medium.

**9**. The method of claim **8**, wherein the electromagnetic waves propagate without requiring an electrical return path.

**10**. The method of claim **8**, wherein the first and second paths are substantially parallel and located along opposing sides of a road.

**11**. The method of claim **10**, wherein the communication path for the wireless signals utilizes only a subset of the first and second groups of network devices.

**12**. The method of claim **8**, wherein the second utility poles connect segments of the second transmission medium, wherein the second network device of the second group of network devices receives signals by the electromagnetic waves at a physical interface of the second transmission medium, that propagate without requiring an electrical return path, wherein the electromagnetic waves are guided by the second transmission medium, and wherein the wireless signals received by the first network device are representative of the signals received by the second network device.

**13**. The method of claim **12**, wherein the first transmission medium and the second transmission medium are power lines.

**14**. The method of claim **8**, further comprising:

ceasing the transmitting of the wireless signals, by the first network device to the third network device, responsive to a second determination that the undesired condition is no longer detected.

**15**. The method of claim **8**, wherein the first utility poles connect first segments of the first transmission medium, and wherein the second utility poles connect second segments of the second transmission medium.

**16**. An apparatus comprising:

a processing system including a processor; and

a memory that stores executable instructions that, when executed by the processing system, facilitate performance of operations, the operations comprising:

receiving signals, by a first network device from a second network device, via electromagnetic waves that propagate without requiring an electrical return path, wherein the electromagnetic waves are guided by a first transmission medium, wherein the first and second network devices are part of a first group of network devices mounted on first utility poles, wherein the first utility poles connect first segments of the first transmission medium, wherein each network device of the first group of network devices and of a second group of network devices includes a respective dielectric antenna for transmitting and receiving wireless communications, wherein each dielectric antenna has at least substantially no conductive external surfaces, wherein each dielectric antenna has a respective composition that is at least substantially devoid of conductive materials; wherein the second group of network devices com-

prises a third network device, wherein the second group of network devices is mounted on second utility poles, and wherein the second utility poles connect second segments of a second transmission medium; and

sending wireless signals, responsive to a determination of an undesired condition adversely affecting propagation of other electromagnetic waves along the first transmission medium, over a communication path that alternates between network devices in the first group of network devices and a network device in the second group of network devices such that the communication path goes from the first network device associated with the first transmission medium to the third network device of the second group of network devices that is associated with the second transmission medium and then to a fourth network device of the first group of network devices that is associated with the first transmission medium.

**17**. The apparatus of claim **16**, wherein the first utility poles are arranged along a first path, and wherein the second utility poles are arranged along a second path.

**18**. The apparatus of claim **17**, wherein the first and second paths are substantially parallel and located along opposing sides of a road.

**19**. The apparatus of claim **16**, wherein:

the first transmission medium and the second transmission medium are power lines.

**20**. The apparatus of claim **16**, wherein the operations further comprise:

responsive to another determination that the undesired condition is no longer associated with the first transmission medium, transmitting, to a fifth network device, other signals received from the second network device, wherein the transmitting the other signals to the fifth network device utilizes the first transmission medium as a guide, and wherein the fifth network device is part of the first group of network devices.

* * * * *