US010396887B2

(12) **United States Patent**
Bennett et al.

(10) **Patent No.: US 10,396,887 B2**
(45) **Date of Patent: Aug. 27, 2019**

(54) **CLIENT NODE DEVICE AND METHODS FOR USE THEREWITH**

(71) Applicant: **AT&T INTELLECTUAL PROPERTY I, LP**, Atlanta, GA (US)

(72) Inventors: **Robert Bennett**, Southold, NY (US); **Paul Shala Henry**, Holmdel, NJ (US); **Irwin Gerszberg**, Kendall Park, NJ (US); **Farhad Barzegar**, Branchburg, NJ (US); **Donald J Barnickel**, Flemington, NJ (US); **Thomas M. Willis, III**, Tinton Falls, NJ (US)

(73) Assignee: **AT&T INTELLECTUAL PROPERTY I, L.P.**, Atlanta, GA (US)

(*) Notice: Subject to any disclaimer, the term of this patent is extended or adjusted under 35 U.S.C. 154(b) by 61 days.

(21) Appl. No.: **15/179,561**

(22) Filed: **Jun. 10, 2016**

(65) **Prior Publication Data**

US 2016/0359530 A1 Dec. 8, 2016

Related U.S. Application Data

(63) Continuation of application No. 14/729,178, filed on Jun. 3, 2015.

(51) **Int. Cl.**
H04B 7/155 (2006.01)
H04L 5/14 (2006.01)
(Continued)

(52) **U.S. Cl.**
CPC ***H04B 7/15507*** (2013.01); ***H04B 3/54*** (2013.01); ***H04B 3/56*** (2013.01); ***H04B 3/58*** (2013.01);
(Continued)

(58) **Field of Classification Search**
None
See application file for complete search history.

(56) **References Cited**

U.S. PATENT DOCUMENTS

529,290 A 11/1894 Harry et al.
1,721,785 A 7/1929 Meyer
(Continued)

FOREIGN PATENT DOCUMENTS

AU 565039 B2 9/1987
AU 7261000 A 4/2001
(Continued)

OTHER PUBLICATIONS

International Search Report and Written Opinion in PCT/US2016/028417, dated Jul. 5, 2016 13 pages.
(Continued)

Primary Examiner — Donald L Mills
(74) *Attorney, Agent, or Firm* — Ed Guntin; Bruce E. Stuckman

(57) **ABSTRACT**

Aspects of the subject disclosure may include, for example, a client node device having a radio configured to wirelessly receive downstream channel signals from a communication network. An access point repeater (APR) launches the downstream channel signals on a guided wave communication system as guided electromagnetic waves that propagate along a transmission medium and to wirelessly transmit the downstream channel signals to at least one client device. Other embodiments are disclosed.

20 Claims, 29 Drawing Sheets

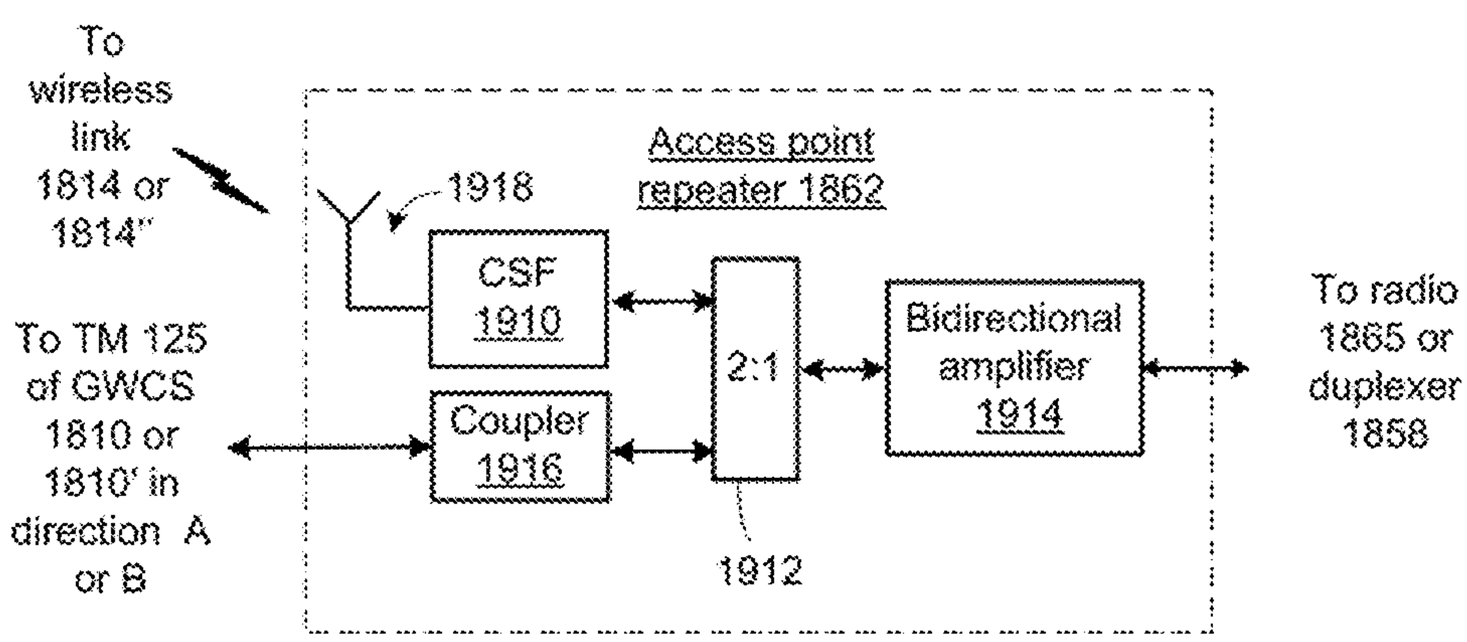

1900

(51) **Int. Cl.**

H04B 3/54	(2006.01)
H04B 7/04	(2017.01)
H04L 29/06	(2006.01)
H04B 3/56	(2006.01)
H04B 3/58	(2006.01)
H04B 3/52	(2006.01)

(52) **U.S. Cl.**
CPC ***H04B 7/04*** (2013.01); ***H04L 5/14*** (2013.01); ***H04L 67/42*** (2013.01); *H04B 3/52* (2013.01)

(56) **References Cited**

U.S. PATENT DOCUMENTS

1,860,123 A 5/1932 Yagi
2,129,711 A 9/1938 Southworth
2,147,717 A 2/1939 Schelkunoff
2,187,908 A 1/1940 McCreary
2,199,083 A 4/1940 Schelkunoff
2,232,179 A 2/1941 King
2,283,935 A 5/1942 King
2,398,095 A 4/1946 Katzin
2,402,622 A 6/1946 Hansen
2,407,068 A 9/1946 Fiske et al.
2,407,069 A 9/1946 Fiske
2,411,338 A 11/1946 Roberts
2,415,807 A 2/1947 Barrow et al.
2,420,007 A 5/1947 Olden
2,422,058 A 6/1947 Whinnery
2,432,134 A 12/1947 Bagnall
2,461,005 A 2/1949 Southworth
2,471,021 A 5/1949 Bradley
2,488,400 A 11/1949 Harder
2,514,679 A 7/1950 Southworth
2,519,603 A 8/1950 Reber
2,540,839 A 2/1951 Southworth
2,542,980 A 2/1951 Barrow
2,557,110 A 6/1951 Jaynes
2,562,281 A 7/1951 Mumford
2,596,190 A 5/1952 Wiley
2,677,055 A 4/1954 Allen
2,685,068 A 7/1954 Goubau
2,688,732 A 9/1954 Kock
2,691,766 A 10/1954 Clapp
2,706,279 A 4/1955 Aron
2,711,514 A 6/1955 Rines
2,723,378 A 11/1955 Clavier et al.
2,727,232 A 12/1955 Pryga
2,740,826 A 4/1956 Bondon
2,745,101 A 5/1956 Marie
2,749,545 A 6/1956 Kostriza
2,754,513 A 7/1956 Goubau
2,761,137 A 8/1956 Atta et al.
2,769,147 A 10/1956 Black et al.
2,794,959 A 6/1957 Fox
2,805,415 A 9/1957 Berkowitz
2,806,972 A 9/1957 Sensiper
2,810,111 A 10/1957 Cohn
2,820,083 A 1/1958 Hendrix
2,835,871 A 5/1958 Raabe
2,852,753 A 9/1958 Walter et al.
2,867,776 A 1/1959 Wilkinson, Jr.
2,912,695 A 11/1959 Cutler
2,914,741 A 11/1959 Unger
2,921,277 A 1/1960 Goubau
2,949,589 A 8/1960 Hafner
2,972,148 A 2/1961 Rupp et al.
2,974,297 A 3/1961 Ros
3,040,278 A 6/1962 Griemsmann et al.
3,072,870 A 1/1963 Walker
3,101,472 A 8/1963 Goubau
3,109,175 A 10/1963 Lloyd
3,129,356 A 4/1964 Phillips
3,134,951 A 5/1964 Huber et al.
3,146,297 A 8/1964 Hahne
3,146,453 A 8/1964 Hagaman
3,201,724 A 8/1965 Hafner
3,218,384 A 11/1965 Shaw
3,234,559 A 2/1966 Bartholoma et al.
3,255,454 A 6/1966 Walter et al.
3,296,364 A 1/1967 Jefferson et al.
3,316,344 A 4/1967 Toms et al.
3,316,345 A 4/1967 Toms et al.
3,321,763 A 5/1967 Ikrath et al.
3,389,394 A 6/1968 Lewis et al.
3,392,388 A 7/1968 Tsuneo et al.
3,392,395 A 7/1968 Hannan
3,411,112 A 11/1968 Honig et al.
3,413,642 A 11/1968 Cook
3,414,903 A 12/1968 Bartlett et al.
3,427,573 A 2/1969 White et al.
3,459,873 A 8/1969 Harris et al.
3,487,158 A 12/1969 Killian
3,500,422 A 3/1970 Grady et al.
3,509,463 A 4/1970 Woodward et al.
3,522,560 A 8/1970 Hayany
3,524,192 A 8/1970 Sakiotis et al.
3,530,481 A 9/1970 Tanaka et al.
3,531,803 A 9/1970 Hudspeth et al.
3,557,341 A 1/1971 Sochilin et al.
3,589,121 A 6/1971 Mulvey
3,609,247 A 9/1971 Halstead
3,623,114 A 11/1971 Seaton
3,668,459 A 6/1972 Symons et al.
3,668,574 A 6/1972 Barlow
3,672,202 A 6/1972 Barber
3,686,596 A 8/1972 Thomas
3,699,574 A 10/1972 Plunk et al.
3,725,937 A 4/1973 Schreiber
3,772,528 A 11/1973 Anderson et al.
3,806,931 A 4/1974 Wright
3,833,909 A 9/1974 Schaufelberger
3,835,407 A 9/1974 Yariv et al.
3,845,426 A 10/1974 Barlow
3,896,380 A 7/1975 Martin
3,935,577 A 1/1976 Hansen et al.
3,936,838 A 2/1976 Foldes et al.
3,959,794 A 5/1976 Chrepta et al.
4,010,799 A 3/1977 Kern et al.
4,020,431 A 4/1977 Saunders et al.
4,026,632 A 5/1977 Hill et al.
4,030,048 A 6/1977 Foldes et al.
4,035,054 A 7/1977 Lattanzi et al.
4,080,600 A 3/1978 Toman et al.
4,123,759 A 10/1978 Hines et al.
4,149,170 A 4/1979 Campbell et al.
4,156,241 A 5/1979 Mobley et al.
4,188,595 A 2/1980 Cronson et al.
4,190,137 A 2/1980 Shimada et al.
4,210,357 A 7/1980 Adachi et al.
4,216,449 A 8/1980 Kach
4,234,753 A 11/1980 Clutter
4,238,974 A 12/1980 Fawcett et al.
4,246,584 A 1/1981 Noerpel et al.
4,274,097 A 6/1981 Krall et al.
4,278,955 A 7/1981 Lunden et al.
4,293,833 A 10/1981 Popa et al.
4,307,938 A 12/1981 Dyott et al.
4,316,646 A 2/1982 Siebens et al.
4,319,074 A 3/1982 Yaste et al.
4,329,690 A 5/1982 Parker et al.
4,333,082 A 6/1982 Susman et al.
4,336,719 A 6/1982 Lynnworth
4,345,256 A 8/1982 Rainwater et al.
4,366,565 A 12/1982 Herskowitz
4,378,143 A 3/1983 Winzer et al.
4,398,058 A 8/1983 Gerth et al.
4,398,121 A 8/1983 Chodorow et al.
4,463,329 A 7/1984 Suzuki et al.
4,482,899 A 11/1984 Dragone et al.
4,491,386 A 1/1985 Negishi et al.
4,525,432 A 6/1985 Saito et al.
4,533,875 A 8/1985 Lau et al.
4,541,303 A 9/1985 Kuzunishi et al.

(56) **References Cited**

U.S. PATENT DOCUMENTS

4,550,271 A 10/1985 Lau et al.
4,556,271 A 12/1985 Hubbard
4,558,325 A 12/1985 Stroem et al.
4,566,012 A 1/1986 Choung et al.
4,567,401 A 1/1986 Barnett et al.
4,573,215 A 2/1986 Oates et al.
4,598,262 A 7/1986 Chen et al.
4,604,627 A 8/1986 Saad et al.
4,636,753 A 1/1987 Geller et al.
4,641,916 A 2/1987 Oestreich et al.
4,660,050 A 4/1987 Phillips et al.
4,665,660 A 5/1987 Krall et al.
4,680,558 A 7/1987 Ghosh et al.
4,704,611 A 11/1987 Edwards et al.
4,715,695 A 12/1987 Nishimura et al.
4,730,172 A 3/1988 Bengeult
4,730,888 A 3/1988 Darcie et al.
4,731,810 A 3/1988 Watkins
4,743,916 A 5/1988 Bengeult
4,745,377 A 5/1988 Stern et al.
4,749,244 A 6/1988 Luh
4,758,962 A 7/1988 Fernandes
4,764,738 A 8/1988 Fried et al.
4,772,891 A 9/1988 Svy
4,786,913 A 11/1988 Barendregt et al.
4,792,812 A 12/1988 Rinehart et al.
4,799,031 A 1/1989 Lang et al.
4,818,963 A 4/1989 Green et al.
4,818,990 A 4/1989 Fernandes
4,829,310 A 5/1989 Losee et al.
4,831,346 A 5/1989 Brooker et al.
4,835,517 A 5/1989 Van et al.
4,845,508 A 7/1989 Krall et al.
4,849,611 A 7/1989 Whitney et al.
4,851,788 A 7/1989 Ives et al.
4,873,534 A 10/1989 Wohlleben et al.
4,886,980 A 12/1989 Fernandes et al.
4,897,663 A 1/1990 Kusano et al.
4,904,996 A 2/1990 Fernandes
4,915,468 A 4/1990 Kim et al.
4,929,962 A 5/1990 Begout et al.
4,931,808 A 6/1990 Munson et al.
4,946,202 A 8/1990 Perricone et al.
4,977,618 A 12/1990 Allen
5,006,846 A 4/1991 Granville et al.
5,015,914 A 5/1991 Ives et al.
5,017,936 A 5/1991 Massey et al.
5,017,937 A 5/1991 Newham et al.
5,019,832 A 5/1991 Ekdahl et al.
5,042,903 A 8/1991 Jakubowski et al.
5,043,538 A 8/1991 Hughey, Jr. et al.
5,043,629 A 8/1991 Doane et al.
5,044,722 A 9/1991 Voser et al.
5,082,349 A 1/1992 Cordova-Plaza et al.
5,086,467 A 2/1992 Malek
5,107,231 A 4/1992 Knox et al.
5,109,232 A 4/1992 Monte et al.
5,117,237 A 5/1992 Legg
5,132,968 A 7/1992 Cephus
5,134,251 A 7/1992 Martin et al.
5,134,965 A 8/1992 Tokuda et al.
5,142,767 A 9/1992 Adams et al.
5,148,509 A 9/1992 Kannabiran et al.
5,153,676 A 10/1992 Bergh et al.
5,174,164 A 12/1992 Wilheim et al.
5,182,427 A 1/1993 McGaffigan et al.
5,187,409 A 2/1993 Ito et al.
5,198,823 A 3/1993 Litchford et al.
5,212,755 A 5/1993 Holmberg et al.
5,214,394 A 5/1993 Wong et al.
5,235,662 A 8/1993 Prince et al.
5,248,876 A 9/1993 Kerstens et al.
5,254,809 A 10/1993 Martin
5,265,266 A 11/1993 Trinh
5,266,961 A 11/1993 Milroy et al.
5,278,687 A 1/1994 Jannson et al.
5,291,211 A 3/1994 Tropper et al.
5,311,596 A 5/1994 Scott et al.
5,329,285 A 7/1994 McCandless et al.
5,341,088 A 8/1994 Davis
5,345,522 A 9/1994 Vali et al.
5,371,623 A 12/1994 Eastmond et al.
5,380,224 A 1/1995 Dicicco
5,389,442 A 2/1995 Kthiresan et al.
5,410,318 A 4/1995 Wong et al.
5,412,654 A 5/1995 Perkins
5,428,818 A 6/1995 Meidan et al.
5,434,575 A 7/1995 Jelinek et al.
5,440,660 A 8/1995 Dombrowski et al.
5,479,176 A 12/1995 Zavrel et al.
5,481,268 A 1/1996 Higgins
5,482,525 A 1/1996 Kajioka et al.
5,486,839 A 1/1996 Rodeffer et al.
5,495,546 A 2/1996 Bottoms et al.
5,499,311 A 3/1996 DeCusatis et al.
5,512,906 A 4/1996 Speciale et al.
5,515,059 A 5/1996 How et al.
5,528,208 A 6/1996 Kobayashi et al.
5,543,000 A 8/1996 Lique
5,559,359 A 9/1996 Reyes
5,566,022 A 10/1996 Segev
5,566,196 A 10/1996 Scifres
5,592,183 A 1/1997 Henf
5,603,089 A 2/1997 Searle et al.
5,619,015 A 4/1997 Kirma
5,630,223 A 5/1997 Bahu et al.
5,637,521 A 6/1997 Rhodes et al.
5,640,168 A 6/1997 Heger et al.
5,650,788 A 7/1997 Jha
5,652,554 A 7/1997 Krieg et al.
5,671,304 A 9/1997 Duguay
5,677,909 A 10/1997 Heide
5,684,495 A 11/1997 Dyott et al.
5,724,168 A 3/1998 Oschmann et al.
5,784,683 A 7/1998 Sistanizadeh et al.
5,793,334 A 8/1998 Harrison et al.
5,818,396 A 10/1998 Harrison et al.
5,818,512 A 10/1998 Fuller et al.
5,850,199 A 12/1998 Wan et al.
5,854,608 A 12/1998 Leisten
5,861,843 A 1/1999 Sorace et al.
5,870,060 A 2/1999 Chen et al.
5,873,324 A 2/1999 Kaddas et al.
5,890,055 A 3/1999 Chu et al.
5,898,133 A 4/1999 Bleich et al.
5,898,830 A 4/1999 Wesinger, Jr. et al.
5,900,847 A 5/1999 Ishikawa et al.
5,903,373 A 5/1999 Welch et al.
5,905,949 A 5/1999 Hawkes et al.
5,917,977 A 6/1999 Barrett et al.
5,926,128 A 7/1999 Brash et al.
5,936,589 A 8/1999 Kawahata
5,948,044 A 9/1999 Varley et al.
5,952,964 A 9/1999 Chan et al.
5,952,972 A 9/1999 Ittipiboon et al.
5,977,650 A 11/1999 Rickard et al.
5,982,276 A 11/1999 Stewart
5,986,331 A 11/1999 Letavic et al.
5,994,984 A 11/1999 Stancil et al.
5,994,998 A 11/1999 Fisher et al.
6,005,758 A 12/1999 Spencer et al.
6,011,520 A 1/2000 Howell et al.
6,014,110 A 1/2000 Bridges et al.
6,014,386 A 1/2000 Abraham
6,023,619 A 2/2000 Kaminsky
6,026,208 A 2/2000 Will et al.
6,026,331 A 2/2000 Feldberg et al.
6,037,894 A 3/2000 Pfizenmaier et al.
6,049,647 A 4/2000 Register et al.
6,063,234 A 5/2000 Chen et al.
6,078,297 A 6/2000 Kormanyos et al.
6,088,001 A 7/2000 Burger et al.
6,100,846 A 8/2000 Li et al.
6,103,031 A 8/2000 Aeschbacher et al.

(56) **References Cited**

U.S. PATENT DOCUMENTS

6,114,998 A 9/2000 Schefte et al.
6,140,911 A 10/2000 Fisher et al.
6,150,612 A 11/2000 Grandy et al.
6,151,145 A 11/2000 Srivastava et al.
6,154,488 A 11/2000 Hunt
6,158,383 A 12/2000 Watanabe et al.
6,166,694 A 12/2000 Ying et al.
6,184,828 B1 2/2001 Shoki et al.
6,195,395 B1 2/2001 Frodsham et al.
6,208,161 B1 3/2001 Suda et al.
6,211,837 B1 4/2001 Crouch et al.
6,222,503 B1 4/2001 Gietema et al.
6,225,960 B1 5/2001 Collins et al.
6,229,327 B1 5/2001 Boll et al.
6,239,377 B1 5/2001 Nishikawa et al.
6,239,379 B1 5/2001 Cotter et al.
6,246,821 B1 6/2001 Hemken et al.
6,259,337 B1 7/2001 Wen et al.
6,266,016 B1 7/2001 Bergstedt et al.
6,266,025 B1 7/2001 Popa et al.
6,271,790 B2 8/2001 Smith et al.
6,271,952 B1 8/2001 Epworth et al.
6,278,357 B1 8/2001 Croushore et al.
6,282,354 B1 8/2001 Jones et al.
6,292,139 B1 9/2001 Yamamoto et al.
6,292,143 B1 9/2001 Romanofsky et al.
6,301,420 B1 10/2001 Greenaway et al.
6,323,819 B1 11/2001 Ergene et al.
6,329,959 B1 12/2001 Varadan et al.
6,351,247 B1 2/2002 Linstrom et al.
6,362,789 B1 3/2002 Trumbull et al.
6,366,238 B1 4/2002 DeMore et al.
6,404,773 B1 6/2002 Williams et al.
6,421,021 B1 7/2002 Rupp et al.
6,433,736 B1 8/2002 Timothy et al.
6,433,741 B2 8/2002 Tanizaki et al.
6,436,536 B2 8/2002 Peruzzotti et al.
6,445,774 B1 9/2002 Kidder et al.
6,452,467 B1 9/2002 McEwan
6,455,769 B1 9/2002 Belli et al.
6,456,251 B1 9/2002 Rao et al.
6,462,700 B1 10/2002 Schmidt et al.
6,463,295 B1 10/2002 Yun et al.
6,469,676 B1 10/2002 Fehrenbach et al.
6,483,470 B1 11/2002 Hohnstein et al.
6,489,928 B2 12/2002 Sakurada
6,501,433 B2 12/2002 Popa et al.
6,515,635 B2 2/2003 Chiang et al.
6,522,305 B2 2/2003 Sharman et al.
6,531,991 B2 3/2003 Adachi et al.
6,542,739 B1 4/2003 Garner
6,549,106 B2 4/2003 Martin et al.
6,549,173 B1 4/2003 King et al.
6,552,693 B1 4/2003 Leisten et al.
6,563,981 B2 5/2003 Weisberg et al.
6,567,573 B1 5/2003 Domash et al.
6,573,813 B1 6/2003 Joannopoulos et al.
6,580,295 B2 6/2003 Takekuma et al.
6,584,084 B1 6/2003 Barany et al.
6,584,252 B1 6/2003 Schier et al.
6,596,944 B1 7/2003 Clark et al.
6,606,066 B1 8/2003 Fawcett et al.
6,606,077 B2 8/2003 Ebling et al.
6,631,229 B1 10/2003 Norris et al.
6,639,566 B2 10/2003 Knop et al.
6,650,296 B2 11/2003 Wong et al.
6,653,598 B2 11/2003 Sullivan et al.
6,659,655 B2 12/2003 Dair et al.
6,671,824 B1 12/2003 Hyland et al.
6,677,899 B1 1/2004 Lee et al.
6,683,580 B2 1/2004 Kuramoto
6,686,832 B2 2/2004 Abraham et al.
6,686,873 B2 2/2004 Patel et al.
6,686,875 B1 2/2004 Wolfson et al.
6,697,030 B2 2/2004 Gleener
6,703,981 B2 3/2004 Meitzler et al.
6,714,165 B2 3/2004 Verstraeten
6,725,035 B2 4/2004 Jochim et al.
6,727,470 B2 4/2004 Reichle et al.
6,731,649 B1 5/2004 Silverman
6,741,705 B1 5/2004 Nelson et al.
6,750,827 B2 6/2004 Manasson et al.
6,756,538 B1 6/2004 Murga-Gonzalez et al.
6,765,479 B2 7/2004 Stewart et al.
6,768,456 B1 7/2004 Lalezari et al.
6,768,471 B2 7/2004 Bostwick et al.
6,768,474 B2 7/2004 Hunt et al.
6,771,216 B2 8/2004 Patel et al.
6,771,225 B2 8/2004 Tits et al.
6,771,739 B1 8/2004 Beamon et al.
6,788,865 B2 9/2004 Kawanishi et al.
6,788,951 B2 9/2004 Aoki et al.
6,789,119 B1 9/2004 Zhu et al.
6,812,895 B2 11/2004 Anderson et al.
6,822,615 B2 11/2004 Quan et al.
6,839,846 B2 1/2005 Mangold et al.
6,842,157 B2 1/2005 Phelan et al.
6,842,430 B1 1/2005 Melnik et al.
6,850,128 B2 2/2005 Park
6,859,185 B2 2/2005 Royalty et al.
6,859,590 B1 2/2005 Zaccone
6,867,744 B2 3/2005 Toncich et al.
6,868,258 B2 3/2005 Hayata et al.
6,870,465 B1 3/2005 Song et al.
6,885,674 B2 4/2005 Hunt et al.
6,886,065 B2 4/2005 Sides et al.
6,888,623 B2 5/2005 Clements
6,901,064 B2 5/2005 Billhartz et al.
6,904,218 B2 6/2005 Sun et al.
6,906,676 B2 6/2005 Killen et al.
6,909,893 B2 6/2005 Aoki et al.
6,917,974 B1 7/2005 Stytz et al.
6,920,289 B2 7/2005 Zimmerman et al.
6,922,135 B2 7/2005 Abraham et al.
6,934,655 B2 8/2005 Jones et al.
6,937,595 B2 8/2005 Barzegar et al.
6,944,555 B2 9/2005 Blackett et al.
6,947,635 B2 9/2005 Kohns et al.
6,950,567 B2 9/2005 Kline et al.
6,958,729 B1 10/2005 Metz et al.
6,965,302 B2 11/2005 Mollenkopf et al.
6,965,355 B1 11/2005 Durham et al.
6,972,729 B2 12/2005 Wang et al.
6,980,091 B2 12/2005 White, II et al.
6,982,611 B2 1/2006 Cope et al.
6,982,679 B2 1/2006 Kralovec et al.
6,992,639 B1 1/2006 Lier et al.
6,999,667 B2 2/2006 Jang et al.
7,008,120 B2 3/2006 Zaborsky et al.
7,009,471 B2 3/2006 Elmore
7,012,572 B1 3/2006 Schaffner et al.
7,016,585 B2 3/2006 Diggle, III et al.
7,023,400 B2 4/2006 Hill et al.
7,032,016 B2 4/2006 Cerami et al.
7,039,048 B1 5/2006 Monta et al.
7,042,403 B2 5/2006 Sievenpiper et al.
7,042,416 B2 5/2006 Kingsley et al.
7,042,420 B2 5/2006 Ebling et al.
7,054,286 B2 5/2006 Ertel et al.
7,054,513 B2 5/2006 Herz et al.
7,055,148 B2 5/2006 Marsh et al.
7,068,998 B2 6/2006 Zavidniak et al.
7,082,321 B2 7/2006 Kuwahara et al.
7,098,405 B2 8/2006 Glew et al.
7,098,773 B2 8/2006 Berkman et al.
7,102,581 B1 9/2006 West et al.
7,106,265 B2 9/2006 Robertson et al.
7,113,002 B2 9/2006 Otsuka et al.
7,113,134 B1 9/2006 Berkman et al.
7,119,755 B2 10/2006 Harvey et al.
7,120,345 B2 10/2006 Naitou et al.
7,123,801 B2 10/2006 Fitz et al.
7,126,711 B2 10/2006 Fruth
7,130,516 B2 10/2006 Wu et al.

(56) **References Cited**

U.S. PATENT DOCUMENTS

7,132,950 B2 11/2006 Stewart et al.
7,133,930 B2 11/2006 Sabio et al.
7,134,012 B2 11/2006 Doyle et al.
7,134,135 B2 11/2006 Cerami et al.
7,137,605 B1 11/2006 Guertler et al.
7,145,440 B2 12/2006 Gerszberg et al.
7,151,497 B2 12/2006 Crystal et al.
7,161,934 B2 1/2007 Buchsbaum et al.
7,167,139 B2 1/2007 Kim et al.
7,171,087 B2 1/2007 Takahashi et al.
7,176,589 B2 2/2007 Rouquette et al.
7,180,459 B2 2/2007 Damini et al.
7,180,467 B2 2/2007 Fabrega-Sanchez
7,194,528 B1 3/2007 Davidow et al.
7,200,658 B2 4/2007 Goeller et al.
7,205,950 B2 4/2007 Imai et al.
7,212,163 B2 5/2007 Huang et al.
7,215,220 B1 5/2007 Jia et al.
7,215,928 B2 5/2007 Gage et al.
7,218,285 B2 5/2007 Davis et al.
7,224,243 B2 5/2007 Cope et al.
7,224,320 B2 5/2007 Cook et al.
7,228,123 B2 6/2007 Moursund et al.
7,234,413 B2 6/2007 Suzuki et al.
7,234,895 B2 6/2007 Richardson et al.
7,239,284 B1 7/2007 Staal et al.
7,243,610 B2 7/2007 Ishii et al.
7,248,148 B2 7/2007 Kline et al.
7,260,424 B2 8/2007 Schmidt et al.
7,266,154 B2 9/2007 Gundrum et al.
7,266,275 B2 9/2007 Hansen et al.
7,272,281 B2 9/2007 Stahulak et al.
7,274,305 B1 9/2007 Luttrell
7,276,990 B2 10/2007 Sievenpiper et al.
7,280,033 B2 10/2007 Berkman et al.
7,289,704 B1 10/2007 Wagman et al.
7,297,869 B2 11/2007 Hiller et al.
7,307,596 B1 12/2007 West et al.
7,308,370 B2 12/2007 Mason, Jr. et al.
7,310,335 B1 12/2007 Garcia-Luna-Aceves et al.
7,311,605 B2 12/2007 Moser
7,313,312 B2 12/2007 Kimball et al.
7,315,678 B2 1/2008 Siegel
7,319,717 B2 1/2008 Zitting et al.
7,321,291 B2 1/2008 Gidge et al.
7,324,046 B1 1/2008 Wu et al.
7,329,815 B2 2/2008 Johnston et al.
7,333,064 B1 2/2008 Timothy et al.
7,333,593 B2 2/2008 Beamon et al.
7,339,466 B2 3/2008 Mansfield et al.
7,339,897 B2 3/2008 Larsson et al.
7,340,768 B2 3/2008 Rosenberger et al.
7,345,623 B2 3/2008 McEwan et al.
7,346,244 B2 3/2008 Gowan et al.
7,346,359 B2 3/2008 Damarla et al.
7,355,560 B2 4/2008 Nagai et al.
7,358,808 B2 4/2008 Berkman et al.
7,369,085 B1 5/2008 Jacomb-Hood et al.
7,380,272 B2 5/2008 Sharp et al.
7,381,089 B2 6/2008 Hosler, Sr.
7,383,577 B2 6/2008 Hrastar et al.
7,397,422 B2 7/2008 Tekawy et al.
7,398,946 B1 7/2008 Marshall
7,406,337 B2 7/2008 Kim et al.
7,408,426 B2 8/2008 Broyde et al.
7,417,587 B2 8/2008 Iskander et al.
7,418,178 B2 8/2008 Kudou et al.
7,420,474 B1 9/2008 Elks et al.
7,426,554 B2 9/2008 Kennedy et al.
7,430,932 B2 10/2008 Mekhanoshin et al.
7,443,334 B2 10/2008 Rees et al.
7,444,404 B2 10/2008 Wetherall et al.
7,450,001 B2 11/2008 Berkman
7,453,352 B2 11/2008 Kline et al.
7,453,393 B2 11/2008 Duivenvoorden et al.
7,456,650 B2 11/2008 Lee et al.
7,459,834 B2 12/2008 Knowles et al.
7,463,877 B2 12/2008 Iwamura
7,465,879 B2 12/2008 Glew et al.
7,466,225 B2 12/2008 White, II et al.
7,468,657 B2 12/2008 Yaney et al.
7,492,317 B2 2/2009 Tinsley et al.
7,496,674 B2 2/2009 Jorgensen et al.
7,509,009 B2 3/2009 Suzuki et al.
7,509,675 B2 3/2009 Aaron et al.
7,512,090 B2 3/2009 Benitez Pelaez et al.
7,516,487 B1 4/2009 Szeto et al.
7,518,952 B1 4/2009 Padden et al.
7,519,323 B2 4/2009 Mohebbi et al.
7,522,115 B2 4/2009 Waltman et al.
7,522,812 B2 4/2009 Zitting
7,525,501 B2 4/2009 Black et al.
7,531,803 B2 5/2009 Mittleman et al.
7,532,792 B2 5/2009 Skovgaard et al.
7,539,381 B2 5/2009 Li et al.
7,545,818 B2 6/2009 Chen et al.
7,546,214 B2 6/2009 Rivers, Jr. et al.
7,554,998 B2 6/2009 Simonsson et al.
7,555,182 B2 6/2009 Martin et al.
7,555,186 B2 6/2009 De Montmorillon et al.
7,555,187 B2 6/2009 Bickham et al.
7,561,025 B2 7/2009 Gerszberg et al.
7,567,154 B2 7/2009 Elmore
7,567,740 B2 7/2009 Bayindir et al.
7,570,137 B2 8/2009 Kintis et al.
7,570,470 B2 8/2009 Holley
7,580,643 B2 8/2009 Moore et al.
7,583,074 B1 9/2009 Lynch et al.
7,584,470 B2 9/2009 Barker et al.
7,589,686 B2 9/2009 Balzovsky et al.
7,590,404 B1 9/2009 Johnson et al.
7,591,020 B2 9/2009 Kammer et al.
7,596,222 B2 9/2009 Jonas et al.
7,598,844 B2 10/2009 Corcoran et al.
7,602,333 B2 10/2009 Hiramatsu et al.
7,602,815 B2 10/2009 Houghton et al.
7,620,370 B2 11/2009 Barak et al.
7,625,131 B2 12/2009 Zienkewicz et al.
7,626,489 B2 12/2009 Berkman et al.
7,634,250 B1 12/2009 Prasad et al.
7,640,562 B2 12/2009 Bouilloux-Lafont et al.
7,640,581 B1 12/2009 Brenton et al.
7,653,363 B2 1/2010 Karr et al.
RE41,147 E 2/2010 Pang et al.
7,656,167 B1 2/2010 McLean et al.
7,660,252 B1 2/2010 Huang et al.
7,660,328 B1 2/2010 Oz et al.
7,664,117 B2 2/2010 Lou et al.
7,669,049 B2 2/2010 Wang et al.
7,671,701 B2 3/2010 Radtke
7,671,820 B2 3/2010 Tokoro et al.
7,676,679 B2 3/2010 Weis et al.
7,680,478 B2 3/2010 Willars et al.
7,680,516 B2 3/2010 Lovberg et al.
7,680,561 B2 3/2010 Rodgers et al.
7,683,848 B2 3/2010 Musch et al.
7,684,383 B1 3/2010 Thompson et al.
7,693,079 B2 4/2010 Cerami et al.
7,693,162 B2 4/2010 McKenna et al.
7,693,939 B2 4/2010 Wu et al.
7,701,931 B2 4/2010 Kajiwara
7,705,747 B2 4/2010 Twitchell, Jr.
7,715,672 B2 5/2010 Dong et al.
7,716,660 B2 5/2010 Mackay et al.
7,724,782 B2 5/2010 Wang et al.
7,728,772 B2 6/2010 Mortazawi et al.
7,734,717 B2 6/2010 Saarimäki et al.
7,743,403 B2 6/2010 McCarty et al.
7,747,356 B2 6/2010 Andarawis et al.
7,747,774 B2 6/2010 Aaron et al.
7,750,244 B1 7/2010 Melding
7,750,763 B2 7/2010 Praßmayer et al.
7,760,978 B2 7/2010 Fishteyn et al.
7,761,079 B2 7/2010 Mollenkopf et al.

(56) **References Cited**

U.S. PATENT DOCUMENTS

7,764,943	B2	7/2010	Radtke et al.
7,773,664	B2	8/2010	Myers et al.
7,782,156	B2	8/2010	Woods et al.
7,783,195	B2	8/2010	Riggsby et al.
7,786,894	B2	8/2010	Polk et al.
7,786,945	B2	8/2010	Baldauf et al.
7,786,946	B2	8/2010	Diaz et al.
7,791,549	B2	9/2010	Clymer et al.
7,795,877	B2	9/2010	Radtke et al.
7,795,994	B2	9/2010	Radtke et al.
7,796,025	B2	9/2010	Berkman et al.
7,796,890	B1	9/2010	Johnson
7,805,029	B2	9/2010	Bayindir et al.
7,808,441	B2	10/2010	Parsche et al.
7,809,223	B2	10/2010	Miyabe et al.
7,812,778	B2	10/2010	Hasegawa et al.
7,813,344	B2	10/2010	Cheswick
7,825,793	B1	11/2010	Spillman et al.
7,826,602	B1	11/2010	Hunyady et al.
7,827,610	B2	11/2010	Wang et al.
7,830,228	B2	11/2010	Evans et al.
7,835,600	B1	11/2010	Yap et al.
7,848,517	B2	12/2010	Britz et al.
7,852,837	B1	12/2010	Au et al.
7,869,391	B2	1/2011	Lee et al.
7,872,610	B2	1/2011	Motzer et al.
7,873,249	B2	1/2011	Kachmar et al.
7,876,174	B2	1/2011	Radtke et al.
7,884,285	B2	2/2011	Spencer
7,884,648	B2	2/2011	Broyde et al.
7,885,542	B2	2/2011	Riggsby et al.
7,889,148	B2	2/2011	Diaz et al.
7,889,149	B2	2/2011	Peebles et al.
7,890,053	B2	2/2011	Washiro
7,893,789	B2	2/2011	Paynter et al.
7,894,770	B2	2/2011	Washiro et al.
7,903,918	B1	3/2011	Bickham et al.
7,903,972	B2	3/2011	Riggsby et al.
7,929,940	B1	4/2011	Dianda et al.
7,930,750	B1	4/2011	Gauvin et al.
7,937,699	B2	5/2011	Schneider et al.
7,958,120	B2	6/2011	Muntz et al.
7,962,957	B2	6/2011	Keohane et al.
7,965,842	B2	6/2011	Whelan et al.
7,970,937	B2	6/2011	Shuster et al.
7,971,053	B2	6/2011	Gibson, Sr. et al.
7,974,387	B2	7/2011	Lutz et al.
7,983,740	B2	7/2011	Culver et al.
7,986,711	B2	7/2011	Horvath et al.
7,990,329	B2	8/2011	Deng et al.
7,991,877	B2	8/2011	Keohane et al.
7,992,014	B2	8/2011	Langgood et al.
8,013,694	B2	9/2011	Sagala et al.
8,019,288	B2	9/2011	Yu et al.
8,022,885	B2	9/2011	Smoyer et al.
8,022,887	B1	9/2011	Zarnaghi et al.
8,027,391	B2	9/2011	Matsubara et al.
8,036,207	B2	10/2011	Chen et al.
8,049,576	B2	11/2011	Broyde et al.
8,064,944	B2	11/2011	Yun et al.
8,065,099	B2	11/2011	Gibala et al.
8,069,483	B1	11/2011	Matlock et al.
8,072,323	B2	12/2011	Kodama et al.
8,073,810	B2	12/2011	Maes
8,077,049	B2	12/2011	Yaney et al.
8,081,854	B2	12/2011	Yoon et al.
8,089,404	B2	1/2012	Nichols et al.
8,089,952	B2	1/2012	Spade et al.
8,090,379	B2	1/2012	Lambert et al.
8,094,081	B1	1/2012	Boone et al.
8,094,985	B2	1/2012	Imamura et al.
8,095,093	B2	1/2012	Takinami et al.
8,098,198	B2	1/2012	Thiesen et al.
8,102,779	B2	1/2012	Kim et al.
RE43,163	E	2/2012	Anderson
8,111,148	B2	2/2012	Parker et al.
8,120,488	B2	2/2012	Bloy et al.
8,121,624	B2	2/2012	Cai et al.
8,126,393	B2	2/2012	Wu et al.
8,129,817	B2	3/2012	Jou et al.
8,131,125	B2	3/2012	Molin et al.
8,131,266	B2	3/2012	Cai et al.
8,132,239	B2	3/2012	Wahl
8,134,424	B2	3/2012	Kato et al.
8,134,458	B2	3/2012	Lund
8,140,113	B2	3/2012	Rofougaran et al.
8,150,311	B2	4/2012	Hart et al.
8,151,306	B2	4/2012	Rakib
8,156,520	B2	4/2012	Casagrande et al.
8,159,385	B2	4/2012	Farneth et al.
8,159,394	B2	4/2012	Hayes et al.
8,159,742	B2	4/2012	McKay et al.
8,159,933	B2	4/2012	Henry
8,160,064	B2	4/2012	Kokernak et al.
8,160,530	B2	4/2012	Corman et al.
8,160,825	B1	4/2012	Roe, Jr. et al.
8,171,146	B2	5/2012	Chen et al.
8,180,917	B1	5/2012	Yan et al.
8,184,015	B2	5/2012	Lilien et al.
8,184,059	B2	5/2012	Bunch et al.
8,184,311	B2	5/2012	Sakai et al.
8,188,855	B2	5/2012	Sharma et al.
8,199,762	B2	6/2012	Michelson et al.
8,203,501	B2	6/2012	Kim et al.
8,212,635	B2	7/2012	Miller, II et al.
8,213,758	B2	7/2012	Dong et al.
8,218,929	B2	7/2012	Bickham et al.
8,222,919	B2	7/2012	Broyde et al.
8,222,977	B2	7/2012	Oyama et al.
8,225,379	B2	7/2012	van et al.
8,237,617	B1	8/2012	Johnson
8,238,824	B2	8/2012	Washiro
8,242,358	B2	8/2012	Park et al.
8,243,603	B2	8/2012	Gossain et al.
8,249,028	B2	8/2012	Porras et al.
8,253,516	B2	8/2012	Miller, II et al.
8,255,952	B2	8/2012	Boylan, III et al.
8,258,743	B2	9/2012	Tyler et al.
8,264,417	B2	9/2012	Snow et al.
8,269,583	B2	9/2012	Miller, II et al.
8,295,301	B2	10/2012	Yonge, III et al.
8,300,538	B2	10/2012	Kim et al.
8,300,640	B2	10/2012	Al-Banna et al.
8,316,228	B2	11/2012	Winslow et al.
8,316,364	B2	11/2012	Stein et al.
8,343,145	B2	1/2013	Brannan et al.
8,344,829	B2	1/2013	Miller, II et al.
8,363,313	B2	1/2013	Nakaguma et al.
8,369,667	B2	2/2013	Rose et al.
8,374,821	B2	2/2013	Rousselle et al.
8,384,600	B2	2/2013	Huang et al.
8,385,978	B2	2/2013	Leung et al.
8,386,198	B2	2/2013	Lancaster
8,390,402	B2	3/2013	Kunes et al.
8,406,239	B2	3/2013	Hurwitz et al.
8,406,593	B2	3/2013	Molin et al.
8,407,687	B2	3/2013	Moshir et al.
8,412,130	B2	4/2013	Suematsu et al.
8,414,326	B2	4/2013	Bowman
8,415,884	B2	4/2013	Chen et al.
8,433,168	B2	4/2013	Filippov et al.
8,434,103	B2	4/2013	Tsuchida et al.
8,458,453	B1	6/2013	Mahalingaiah et al.
8,462,063	B2	6/2013	Gummalla et al.
8,467,363	B2	6/2013	Lea et al.
8,468,244	B2	6/2013	Redlich et al.
8,484,511	B2	7/2013	Tidwell et al.
8,495,718	B2	7/2013	Han et al.
8,497,749	B2	7/2013	Elmore
8,503,845	B2	8/2013	Winzer et al.
8,505,057	B2	8/2013	Rogers
8,509,114	B1	8/2013	Szajdecki
8,514,980	B2	8/2013	Kuhtz
8,515,383	B2	8/2013	Prince et al.

(56) **References Cited**

U.S. PATENT DOCUMENTS

8,516,470 B1 8/2013 Joshi et al.
8,516,474 B2 8/2013 Lamba et al.
8,520,636 B2 8/2013 Xu
8,528,059 B1 9/2013 Saluzzo et al.
8,532,023 B2 9/2013 Buddhikot et al.
8,532,046 B2 9/2013 Hu et al.
8,537,068 B2 9/2013 Call et al.
8,537,705 B2 9/2013 Afkhamie et al.
8,539,540 B2 9/2013 Zenoni
8,539,569 B2 9/2013 Mansour
8,542,968 B2 9/2013 Dong et al.
8,548,294 B2 10/2013 Toge et al.
8,553,646 B2 10/2013 Kumar
8,561,104 B1 10/2013 Dow et al.
8,561,181 B1 10/2013 Sobel et al.
8,565,568 B2 10/2013 Bigot-Astruc et al.
8,572,247 B2 10/2013 Larson et al.
8,572,639 B2 10/2013 Ficco
8,572,661 B2 10/2013 Strong et al.
8,578,076 B2 11/2013 van der Linden et al.
8,578,486 B2 11/2013 Lifliand et al.
8,584,195 B2 11/2013 Sherlock et al.
8,587,490 B2 11/2013 Niver et al.
8,587,492 B2 11/2013 Runyon et al.
8,588,567 B2 11/2013 Kamps et al.
8,588,840 B2 11/2013 Truong et al.
8,588,991 B1 11/2013 Forbes, Jr.
8,593,238 B2 11/2013 Miller, II et al.
8,604,982 B2 12/2013 Gummalla et al.
8,604,999 B2 12/2013 Abumrad et al.
8,605,579 B2 12/2013 Abraham et al.
8,612,550 B2 12/2013 Yoo et al.
8,613,020 B2 12/2013 Knudson et al.
8,625,547 B1 1/2014 Miller et al.
8,629,811 B2 1/2014 Gaynor et al.
8,639,934 B2 1/2014 Kruglick
8,653,906 B2 2/2014 Mahon et al.
8,656,458 B2 2/2014 Heffez et al.
8,660,526 B1 2/2014 Heiderscheit et al.
8,660,698 B2 2/2014 Phillips et al.
8,665,102 B2 3/2014 Salewske et al.
8,666,553 B2 3/2014 Phillips et al.
8,674,630 B1 3/2014 Cornelius et al.
8,681,463 B2 3/2014 Franks et al.
8,687,650 B2 4/2014 King
8,688,153 B2 4/2014 Komori et al.
8,699,454 B2 4/2014 Hapsari et al.
8,699,461 B2 4/2014 Qian et al.
8,705,925 B2 4/2014 Terada et al.
8,706,026 B2 4/2014 Truong et al.
8,707,432 B1 4/2014 Rathi et al.
8,711,732 B2 4/2014 Johnson et al.
8,711,806 B2 4/2014 Lim et al.
8,711,857 B2 4/2014 Jackson et al.
8,712,200 B1 4/2014 Abernathy et al.
8,719,938 B2 5/2014 Demeter et al.
8,731,358 B2 5/2014 Pare et al.
8,732,476 B1 5/2014 Van et al.
8,737,793 B2 5/2014 Imamura et al.
8,738,318 B2 5/2014 Spillane
8,743,004 B2 6/2014 Haziza
8,749,449 B2 6/2014 Caldwell et al.
8,750,664 B2 6/2014 Huang et al.
8,755,659 B2 6/2014 Imamura et al.
8,760,354 B2 6/2014 Flannery et al.
8,761,792 B2 6/2014 Sennett et al.
8,763,097 B2 6/2014 Bhatnagar et al.
8,769,622 B2 7/2014 Chang et al.
8,780,012 B2 7/2014 Llombart Juan et al.
8,782,195 B2 7/2014 Foti
8,786,284 B2 7/2014 Sirigiri et al.
8,786,514 B2 7/2014 Dickie et al.
8,789,091 B2 7/2014 Eldering et al.
8,792,760 B2 7/2014 Choi et al.
8,792,933 B2 7/2014 Chen et al.
8,793,363 B2 7/2014 Sater et al.
8,793,742 B2 7/2014 Macrae et al.
8,804,667 B2 8/2014 Wang
8,806,202 B2 8/2014 Shoemake et al.
8,810,404 B2 8/2014 Bertoncini et al.
8,810,421 B2 8/2014 Deaver, Sr. et al.
8,811,278 B2 8/2014 Takei et al.
8,817,741 B2 8/2014 Shaheen
8,825,239 B2 9/2014 Cooper et al.
8,830,112 B1 9/2014 Buehler et al.
8,836,607 B2 9/2014 Cook et al.
8,839,350 B1 9/2014 Shapcott et al.
8,847,840 B1 9/2014 Diaz et al.
8,856,239 B1 10/2014 Oliver et al.
8,856,530 B2 10/2014 Lamberg et al.
8,863,245 B1 10/2014 Abhyanker
8,867,226 B2 10/2014 Colomb et al.
8,872,032 B2 10/2014 Su et al.
8,875,224 B2 10/2014 Gross et al.
8,878,740 B2 11/2014 Coupland et al.
8,881,588 B2 11/2014 Baer et al.
8,885,689 B2 11/2014 Blasco et al.
8,887,212 B2 11/2014 Dua
8,890,759 B2 11/2014 Pantea et al.
8,893,246 B2 11/2014 El-Moussa et al.
8,897,697 B1 11/2014 Willis, III et al.
8,901,916 B2 12/2014 Rodriguez et al.
8,903,214 B2 12/2014 Alkeskjold
8,907,222 B2 12/2014 Stransky
8,913,862 B1 12/2014 Emmerich et al.
8,917,215 B2 12/2014 Pohl
8,917,964 B2 12/2014 Blew et al.
8,918,108 B2 12/2014 Van et al.
8,925,079 B2 12/2014 Miyake et al.
8,934,747 B2 1/2015 Smith et al.
8,937,577 B2 1/2015 Gerini et al.
8,938,144 B2 1/2015 Hennink et al.
8,941,912 B2 1/2015 Ichii et al.
8,955,051 B2 2/2015 Marzii
8,955,075 B2 2/2015 Smith et al.
8,957,818 B2 2/2015 Chen et al.
8,958,665 B2 2/2015 Ziari et al.
8,963,790 B2 2/2015 Brown et al.
8,964,433 B2 2/2015 Hai-Maharsi
8,966,609 B2 2/2015 Lee et al.
8,970,438 B2 3/2015 Hager et al.
8,984,113 B2 3/2015 Li et al.
8,994,474 B2 3/2015 Mahon et al.
8,996,188 B2 3/2015 Frader-thompson et al.
8,996,728 B2 3/2015 Cochinwala et al.
9,000,353 B2 4/2015 Seo et al.
9,001,689 B1 4/2015 Ponnampalam et al.
9,001,717 B2 4/2015 Chun et al.
9,003,492 B2 4/2015 Katar
9,008,513 B2 4/2015 Kim et al.
9,009,460 B2 4/2015 Chen
9,014,621 B2 4/2015 Mohebbi
9,015,467 B2 4/2015 Buer
9,019,595 B2 4/2015 Jain et al.
9,020,555 B2 4/2015 Sheikh et al.
9,021,251 B2 4/2015 Chawla
9,021,575 B2 4/2015 Martini
9,037,516 B2 5/2015 Abhyanker
9,042,812 B1 5/2015 Bennett et al.
9,082,307 B2 7/2015 Sharawi
9,094,407 B1 7/2015 Matthieu
9,098,325 B2 8/2015 Reddin
9,103,864 B2 8/2015 Ali
9,106,617 B2 8/2015 Kshirsagar et al.
9,113,347 B2 8/2015 Paul Shala
9,113,483 B2 8/2015 Zou et al.
9,119,127 B1 8/2015 Henry
9,128,941 B2 9/2015 Shulman
9,130,641 B2 9/2015 Mohebbi
9,134,945 B2 9/2015 Husain
9,142,334 B2 9/2015 Muto et al.
9,167,535 B2 10/2015 Christoffersson et al.
9,219,594 B2 12/2015 Khlat
9,306,682 B2 4/2016 Singh

(56) **References Cited**

U.S. PATENT DOCUMENTS

9,363,761 B2 6/2016 Venkatraman
9,674,825 B2 6/2017 Yerramalli et al.
9,722,666 B2 * 8/2017 Shen H04B 3/56
10,003,364 B1 6/2018 Willis, III et al.
10,009,065 B2 6/2018 Henry et al.
10,009,901 B2 6/2018 Gerszberg
10,027,397 B2 7/2018 Kim
10,027,427 B2 7/2018 Vannucci et al.
10,033,107 B2 7/2018 Henry et al.
10,033,108 B2 7/2018 Henry et al.
10,044,409 B2 8/2018 Barzegar et al.
2001/0030789 A1 10/2001 Jiang et al.
2002/0002040 A1 1/2002 Kline et al.
2002/0008672 A1 1/2002 Gothard et al.
2002/0024424 A1 2/2002 Burns et al.
2002/0040439 A1 4/2002 Kellum et al.
2002/0069417 A1 6/2002 Kliger et al.
2002/0099949 A1 7/2002 Fries et al.
2002/0111997 A1 8/2002 Herlihy et al.
2002/0156917 A1 10/2002 Nye et al.
2002/0186694 A1 12/2002 Mahajan et al.
2003/0002476 A1 1/2003 Chung et al.
2003/0010528 A1 1/2003 Niles
2003/0049003 A1 3/2003 Ahmad et al.
2003/0054793 A1 3/2003 Manis et al.
2003/0095208 A1 5/2003 Chouraqui et al.
2003/0152331 A1 8/2003 Dair et al.
2003/0188308 A1 10/2003 Kizuka
2003/0190110 A1 10/2003 Kline et al.
2003/0202756 A1 10/2003 Hurley et al.
2003/0210197 A1 11/2003 Cencich et al.
2003/0224784 A1 12/2003 Hunt et al.
2004/0015725 A1 1/2004 Boneh et al.
2004/0023640 A1 2/2004 Ballai et al.
2004/0048596 A1 3/2004 Wyrzykowska et al.
2004/0054425 A1 3/2004 Elmore
2004/0091032 A1 5/2004 Duchi et al.
2004/0100343 A1 5/2004 Tsu et al.
2004/0104410 A1 6/2004 Gilbert et al.
2004/0113756 A1 6/2004 Mollenkopf et al.
2004/0113757 A1 6/2004 White, II et al.
2004/0119564 A1 6/2004 Itoh et al.
2004/0131310 A1 7/2004 Walker et al.
2004/0163135 A1 8/2004 Giaccherini et al.
2004/0165669 A1 8/2004 Otsuka et al.
2004/0169572 A1 9/2004 Elmore et al.
2004/0196784 A1 10/2004 Larsson et al.
2004/0198228 A1 10/2004 Raghothaman et al.
2004/0212481 A1 10/2004 Abraham et al.
2004/0213147 A1 10/2004 Wiese et al.
2004/0213189 A1 10/2004 Alspaugh et al.
2004/0213294 A1 10/2004 Hughes et al.
2004/0250069 A1 12/2004 Kosamo et al.
2005/0005854 A1 1/2005 Suzuki et al.
2005/0017825 A1 1/2005 Hansen
2005/0042989 A1 2/2005 Ho et al.
2005/0068223 A1 3/2005 Vavik et al.
2005/0069321 A1 3/2005 Sullivan et al.
2005/0097396 A1 5/2005 Wood
2005/0102185 A1 5/2005 Barker et al.
2005/0111533 A1 5/2005 Berkman et al.
2005/0143868 A1 6/2005 Whelan et al.
2005/0169056 A1 8/2005 Berkman et al.
2005/0169401 A1 8/2005 Abraham et al.
2005/0177463 A1 8/2005 Crutchfield et al.
2005/0190101 A1 9/2005 Hiramatsu et al.
2005/0212626 A1 9/2005 Takamatsu et al.
2005/0219135 A1 10/2005 Lee et al.
2005/0226353 A1 10/2005 Gebara et al.
2005/0258920 A1 11/2005 Elmore
2006/0034724 A1 2/2006 Hamano et al.
2006/0053486 A1 3/2006 Wesinger et al.
2006/0077906 A1 4/2006 Maegawa et al.
2006/0082516 A1 4/2006 Strickland et al.
2006/0111047 A1 5/2006 Louberg et al.
2006/0114925 A1 6/2006 Gerszberg et al.
2006/0120399 A1 6/2006 Claret et al.
2006/0128322 A1 6/2006 Igarashi et al.
2006/0153878 A1 7/2006 Savarino et al.
2006/0172781 A1 8/2006 Mohebbi et al.
2006/0181394 A1 8/2006 Clarke et al.
2006/0187023 A1 8/2006 Iwamura et al.
2006/0192672 A1 8/2006 Gidge et al.
2006/0220833 A1 10/2006 Berkman et al.
2006/0221995 A1 10/2006 Berkman et al.
2006/0239501 A1 10/2006 Petrovic et al.
2006/0255930 A1 11/2006 Berkman et al.
2006/0286927 A1 12/2006 Berkman et al.
2007/0002771 A1 1/2007 Berkman et al.
2007/0022475 A1 1/2007 Rossi et al.
2007/0025265 A1 2/2007 Marcotullio et al.
2007/0025386 A1 2/2007 Riedel et al.
2007/0041464 A1 2/2007 Kim et al.
2007/0041554 A1 2/2007 Newman
2007/0054622 A1 3/2007 Berkman
2007/0063914 A1 3/2007 Becker et al.
2007/0090185 A1 4/2007 Lewkowitz et al.
2007/0105508 A1 5/2007 Tong et al.
2007/0135044 A1 6/2007 Rhodes et al.
2007/0144779 A1 6/2007 Vicente et al.
2007/0189182 A1 8/2007 Berkman et al.
2007/0211689 A1 9/2007 Campero et al.
2007/0211786 A1 9/2007 Shattil et al.
2007/0229231 A1 10/2007 Hurwitz et al.
2007/0252998 A1 11/2007 Berthold et al.
2007/0268124 A1 11/2007 Berkman et al.
2007/0300280 A1 12/2007 Turner et al.
2008/0002652 A1 1/2008 Gupta et al.
2008/0003872 A1 1/2008 Chen et al.
2008/0007416 A1 1/2008 Cern et al.
2008/0060832 A1 3/2008 Razavi et al.
2008/0064331 A1 3/2008 Washiro et al.
2008/0120667 A1 5/2008 Zaltsman
2008/0130639 A1 6/2008 Costa-Requena et al.
2008/0143491 A1 6/2008 Deaver et al.
2008/0153416 A1 6/2008 Washiro et al.
2008/0211727 A1 9/2008 Elmore et al.
2008/0247716 A1 10/2008 Thomas et al.
2008/0252522 A1 10/2008 Asbridge et al.
2008/0253723 A1 10/2008 Stokes et al.
2008/0255782 A1 10/2008 Bilac et al.
2008/0266060 A1 10/2008 Takei et al.
2008/0267076 A1 10/2008 Laperi et al.
2008/0279199 A1 11/2008 Park et al.
2008/0313691 A1 12/2008 Cholas
2008/0316004 A1 12/2008 Kiko
2009/0002137 A1 1/2009 Radtke et al.
2009/0007189 A1 1/2009 Gutknecht
2009/0007190 A1 1/2009 Weber et al.
2009/0015239 A1 1/2009 Georgiou et al.
2009/0061940 A1 3/2009 Scheinert et al.
2009/0067441 A1 3/2009 Ansari et al.
2009/0079660 A1 3/2009 Elmore
2009/0085726 A1 4/2009 Radtke et al.
2009/0093267 A1 4/2009 Ariyur et al.
2009/0109981 A1 4/2009 Keselman
2009/0125351 A1 5/2009 Davis, Jr. et al.
2009/0129301 A1 5/2009 Belimpasakis et al.
2009/0135848 A1 5/2009 Chan et al.
2009/0138931 A1 5/2009 Lin et al.
2009/0144417 A1 6/2009 Kisel et al.
2009/0171780 A1 7/2009 Aldrey et al.
2009/0201133 A1 8/2009 Bruns et al.
2009/0202020 A1 8/2009 Hafeez et al.
2009/0210901 A1 8/2009 Hawkins et al.
2009/0250449 A1 10/2009 Petrenko et al.
2009/0254971 A1 10/2009 Herz et al.
2009/0258652 A1 10/2009 Lambert et al.
2009/0284435 A1 11/2009 Elmore et al.
2009/0311960 A1 12/2009 Farahani et al.
2009/0315668 A1 12/2009 Leete, III et al.
2009/0325628 A1 12/2009 Becker et al.
2010/0026607 A1 2/2010 Imai et al.
2010/0045447 A1 2/2010 Mollenkopf et al.

(56) **References Cited**

U.S. PATENT DOCUMENTS

2010/0057894 A1 3/2010 Glasser
2010/0073193 A1* 3/2010 Flammer, III H04B 3/546 340/870.11
2010/0085036 A1 4/2010 Banting et al.
2010/0090887 A1 4/2010 Cooper et al.
2010/0100918 A1 4/2010 Egan, Jr. et al.
2010/0111521 A1 5/2010 Kim et al.
2010/0119234 A1 5/2010 Suematsu et al.
2010/0121945 A1 5/2010 Gerber et al.
2010/0150215 A1 6/2010 Black et al.
2010/0153990 A1 6/2010 Ress et al.
2010/0169937 A1 7/2010 Atwal et al.
2010/0175080 A1 7/2010 Yuen et al.
2010/0176894 A1 7/2010 Tahara et al.
2010/0177894 A1 7/2010 Yasuma et al.
2010/0185614 A1 7/2010 O'Brien et al.
2010/0201313 A1 8/2010 Vorenkamp et al.
2010/0214183 A1 8/2010 Stoneback et al.
2010/0214185 A1 8/2010 Sammoura et al.
2010/0225426 A1 9/2010 Unger et al.
2010/0243633 A1 9/2010 Huynh et al.
2010/0253450 A1 10/2010 Kim et al.
2010/0265877 A1 10/2010 Foxworthy et al.
2010/0266063 A1 10/2010 Harel et al.
2010/0277003 A1 11/2010 Von Novak et al.
2010/0283693 A1 11/2010 Xie et al.
2010/0284446 A1 11/2010 Mu et al.
2010/0319068 A1 12/2010 Abbadessa et al.
2010/0327880 A1 12/2010 Stein et al.
2011/0018704 A1 1/2011 Burrows et al.
2011/0040861 A1 2/2011 Van der Merwe et al.
2011/0042120 A1 2/2011 Otsuka et al.
2011/0053498 A1 3/2011 Nogueira-Nine
2011/0068893 A1 3/2011 Lahiri et al.
2011/0068988 A1 3/2011 Monte et al.
2011/0080301 A1 4/2011 Chang et al.
2011/0107364 A1 5/2011 Lajoie et al.
2011/0109936 A1 5/2011 Coffee et al.
2011/0110404 A1 5/2011 Washiro
2011/0118888 A1 5/2011 White et al.
2011/0132658 A1 6/2011 Miller, II et al.
2011/0133865 A1 6/2011 Miller, II et al.
2011/0133867 A1 6/2011 Miller, II et al.
2011/0136432 A1 6/2011 Miller, II et al.
2011/0140911 A1* 6/2011 Pant H04B 3/546 340/870.02
2011/0141555 A1 6/2011 Fermann et al.
2011/0148578 A1 6/2011 Aloi et al.
2011/0164514 A1 7/2011 Afkhamie et al.
2011/0165847 A1 7/2011 Kawasaki et al.
2011/0169336 A1 7/2011 Yerazunis et al.
2011/0172000 A1 7/2011 Quigley et al.
2011/0187578 A1 8/2011 Farneth et al.
2011/0208450 A1 8/2011 Salka et al.
2011/0219402 A1 9/2011 Candelore et al.
2011/0225046 A1 9/2011 Eldering et al.
2011/0228814 A1 9/2011 Washiro et al.
2011/0235536 A1 9/2011 Nishizaka et al.
2011/0243566 A1 10/2011 Truong et al.
2011/0268085 A1 11/2011 Barany et al.
2011/0274396 A1 11/2011 Nakajima et al.
2011/0294509 A1 12/2011 Kim et al.
2012/0039366 A1 2/2012 Wood et al.
2012/0046891 A1 2/2012 Yaney et al.
2012/0068903 A1 3/2012 Thevenard et al.
2012/0077485 A1 3/2012 Shin et al.
2012/0078452 A1 3/2012 Daum et al.
2012/0084807 A1 4/2012 Thompson et al.
2012/0091820 A1 4/2012 Campanella et al.
2012/0092161 A1 4/2012 West et al.
2012/0102568 A1 4/2012 Tarbotton et al.
2012/0105246 A1 5/2012 Sexton et al.
2012/0117584 A1 5/2012 Gordon
2012/0133373 A1 5/2012 Ali et al.
2012/0144420 A1 6/2012 Del Sordo et al.
2012/0154239 A1 6/2012 Bar-Sade et al.
2012/0161543 A1 6/2012 Reuven et al.
2012/0181258 A1 7/2012 Shan et al.
2012/0197558 A1 8/2012 Henig et al.
2012/0250534 A1 10/2012 Langer et al.
2012/0250752 A1 10/2012 McHann et al.
2012/0263152 A1 10/2012 Fischer et al.
2012/0272741 A1 11/2012 Xiao et al.
2012/0274528 A1 11/2012 McMahon et al.
2012/0287922 A1 11/2012 Heck et al.
2012/0304294 A1 11/2012 Fujiwara et al.
2012/0306587 A1 12/2012 Strid et al.
2012/0306708 A1 12/2012 Henderson et al.
2012/0324018 A1 12/2012 Metcalf et al.
2012/0327908 A1 12/2012 Gupta et al.
2012/0329523 A1 12/2012 Stewart et al.
2012/0330756 A1 12/2012 Morris et al.
2013/0002409 A1 1/2013 Molina et al.
2013/0003876 A1 1/2013 Bennett
2013/0016022 A1 1/2013 Heiks et al.
2013/0039624 A1 2/2013 Scherer et al.
2013/0064178 A1 3/2013 Cs et al.
2013/0064311 A1 3/2013 Turner et al.
2013/0077664 A1 3/2013 Lee et al.
2013/0080290 A1 3/2013 Kamm
2013/0086639 A1 4/2013 Sondhi et al.
2013/0093638 A1 4/2013 Shoemaker et al.
2013/0108206 A1 5/2013 Sasaoka et al.
2013/0109317 A1 5/2013 Kikuchi et al.
2013/0117852 A1 5/2013 Stute et al.
2013/0122828 A1 5/2013 Choi et al.
2013/0124365 A1 5/2013 Pradeep
2013/0127678 A1 5/2013 Chandler et al.
2013/0136410 A1 5/2013 Sasaoka et al.
2013/0144750 A1 6/2013 Brown
2013/0159856 A1 6/2013 Ferren
2013/0160122 A1 6/2013 Choi et al.
2013/0162490 A1 6/2013 Blech et al.
2013/0166690 A1 6/2013 Shatzkamer et al.
2013/0173807 A1 7/2013 De Groot et al.
2013/0201904 A1 8/2013 Toskala et al.
2013/0207859 A1 8/2013 Legay et al.
2013/0234904 A1 9/2013 Blech et al.
2013/0235845 A1 9/2013 Kovvali et al.
2013/0262656 A1 10/2013 Cao et al.
2013/0262857 A1 10/2013 Neuman et al.
2013/0263263 A1 10/2013 Narkolayev et al.
2013/0265732 A1 10/2013 Herbsommer et al.
2013/0279523 A1 10/2013 Denney et al.
2013/0279561 A1 10/2013 Jin et al.
2013/0279868 A1 10/2013 Zhang et al.
2013/0305369 A1 11/2013 Karta et al.
2013/0306351 A1 11/2013 Lambert et al.
2013/0311661 A1 11/2013 McPhee
2013/0314182 A1 11/2013 Takeda et al.
2013/0321225 A1 12/2013 Pettus et al.
2013/0326063 A1 12/2013 Burch et al.
2013/0326494 A1 12/2013 Nunez et al.
2013/0330050 A1 12/2013 Yang et al.
2013/0337821 A1 12/2013 Clegg et al.
2013/0341094 A1 12/2013 Taherian et al.
2013/0343213 A1 12/2013 Reynolds et al.
2014/0003394 A1 1/2014 Rubin et al.
2014/0003775 A1 1/2014 Ko et al.
2014/0007076 A1 1/2014 Kim et al.
2014/0009270 A1 1/2014 Yamazaki et al.
2014/0009822 A1 1/2014 Dong et al.
2014/0015705 A1 1/2014 Ebihara et al.
2014/0019576 A1 1/2014 Lobo et al.
2014/0026170 A1 1/2014 Francisco et al.
2014/0028184 A1 1/2014 Voronin et al.
2014/0028190 A1 1/2014 Voronin et al.
2014/0028532 A1 1/2014 Ehrenberg et al.
2014/0032005 A1 1/2014 Iwamura
2014/0043189 A1 2/2014 Lee et al.
2014/0043977 A1 2/2014 Wiley et al.
2014/0044139 A1 2/2014 Dong et al.
2014/0052810 A1 2/2014 Osorio et al.
2014/0071818 A1 3/2014 Wang et al.

(56) **References Cited**

U.S. PATENT DOCUMENTS

2014/0077995	A1	3/2014	Artemenko et al.	
2014/0086080	A1	3/2014	Hui et al.	
2014/0086152	A1	3/2014	Bontu et al.	
2014/0112279	A1*	4/2014	Yoshizawa	H04K 3/226 370/329
2014/0124236	A1	5/2014	Vu et al.	
2014/0130111	A1	5/2014	Nulty et al.	
2014/0132728	A1	5/2014	Verano et al.	
2014/0143055	A1	5/2014	Johnson	
2014/0155054	A1	6/2014	Henry et al.	
2014/0165145	A1	6/2014	Baentsch et al.	
2014/0169186	A1	6/2014	Zhu et al.	
2014/0179302	A1	6/2014	Polehn et al.	
2014/0189677	A1	7/2014	Curzi et al.	
2014/0189732	A1	7/2014	Shkedi et al.	
2014/0204754	A1	7/2014	Jeong et al.	
2014/0207844	A1	7/2014	Mayo et al.	
2014/0208272	A1	7/2014	Vats et al.	
2014/0222997	A1	8/2014	Mermoud et al.	
2014/0225129	A1	8/2014	Inoue et al.	
2014/0227905	A1	8/2014	Knott et al.	
2014/0227966	A1	8/2014	Artemenko et al.	
2014/0233900	A1	8/2014	Hugonnot et al.	
2014/0241718	A1	8/2014	Jiang et al.	
2014/0254979	A1	9/2014	Zhang et al.	
2014/0266946	A1	9/2014	Stevenson et al.	
2014/0269260	A1	9/2014	Xue et al.	
2014/0269691	A1	9/2014	Xue et al.	
2014/0269972	A1	9/2014	Rada et al.	
2014/0285277	A1	9/2014	Herbsommer et al.	
2014/0285293	A1	9/2014	Schuppener et al.	
2014/0287702	A1	9/2014	Schuppener et al.	
2014/0299349	A1	10/2014	Yamaguchi et al.	
2014/0304498	A1	10/2014	Gonuguntla et al.	
2014/0317229	A1	10/2014	Hughes et al.	
2014/0320364	A1	10/2014	Gu et al.	
2014/0334789	A1	11/2014	Matsuo et al.	
2014/0351571	A1	11/2014	Jacobs	
2014/0355525	A1	12/2014	Barzegar et al.	
2014/0355989	A1	12/2014	Finkelstein	
2014/0359275	A1	12/2014	Murugesan et al.	
2014/0362374	A1	12/2014	Santori	
2014/0362694	A1	12/2014	Rodriques	
2014/0369430	A1	12/2014	Parnell	
2014/0373053	A1	12/2014	Leley et al.	
2014/0376655	A1	12/2014	Ruan et al.	
2015/0009089	A1	1/2015	Pesa	
2015/0017473	A1	1/2015	Verhoeven et al.	
2015/0022399	A1	1/2015	Ehrenberg	
2015/0026460	A1	1/2015	Walton	
2015/0029065	A1	1/2015	Cheng	
2015/0036610	A1	2/2015	Kim et al.	
2015/0042526	A1	2/2015	Zeine	
2015/0061859	A1	3/2015	Matsuoka et al.	
2015/0065166	A1	3/2015	Ward et al.	
2015/0071594	A1	3/2015	Register	
2015/0077740	A1	3/2015	Fuse	
2015/0078756	A1	3/2015	Soto et al.	
2015/0084814	A1	3/2015	Rojanski et al.	
2015/0099555	A1	4/2015	Krishnaswamy et al.	
2015/0102972	A1	4/2015	Scire-Scappuzzo et al.	
2015/0104005	A1	4/2015	Holman	
2015/0116154	A1	4/2015	Artemenko	
2015/0122886	A1	5/2015	Michael	
2015/0126107	A1	5/2015	Bennett et al.	
2015/0130675	A1	5/2015	Parsche	
2015/0138022	A1	5/2015	Takahashi	
2015/0156266	A1	6/2015	Gupta	
2015/0162988	A1	6/2015	Henry et al.	
2015/0188584	A1	7/2015	Laurent-Michel	
2015/0195349	A1	7/2015	Cardamore	
2015/0195719	A1	7/2015	Rahman	
2015/0201228	A1	7/2015	Hasek	
2015/0215268	A1	7/2015	Dinha	
2015/0223078	A1	8/2015	Bennett et al.	
2015/0223115	A1	8/2015	Liang et al.	
2015/0223160	A1	8/2015	Ho	
2015/0304045	A1	10/2015	Henry et al.	
2015/0311951	A1	10/2015	Hariz	
2015/0318610	A1	11/2015	Lee et al.	
2015/0326274	A1	11/2015	Flood et al.	
2015/0341842	A1*	11/2015	Vorenkamp	H04M 19/08 455/127.1
2015/0358149	A1	12/2015	Ito et al.	
2015/0373557	A1	12/2015	Bennett et al.	
2016/0050028	A1	2/2016	Henry et al.	
2016/0064794	A1	3/2016	Henry et al.	
2016/0066257	A1*	3/2016	Liu	H04L 5/006 370/329
2016/0080035	A1	3/2016	Fuchs et al.	
2016/0080839	A1	3/2016	Fuchs et al.	
2016/0094879	A1	3/2016	Gerszberg et al.	
2016/0099749	A1	4/2016	Bennett	
2016/0100324	A1	4/2016	Henry et al.	
2016/0105218	A1	4/2016	Henry	
2016/0105239	A1	4/2016	Henry et al.	
2016/0105255	A1	4/2016	Henry et al.	
2016/0112092	A1	4/2016	Henry	
2016/0112093	A1	4/2016	Barzegar	
2016/0112094	A1	4/2016	Stuckman et al.	
2016/0112115	A1	4/2016	Henry et al.	
2016/0112132	A1	4/2016	Henry	
2016/0112133	A1	4/2016	Henry et al.	
2016/0112135	A1	4/2016	Henry et al.	
2016/0112263	A1	4/2016	Henry et al.	
2016/0149312	A1	5/2016	Henry et al.	
2016/0149614	A1	5/2016	Barzegar	
2016/0149636	A1	5/2016	Gerszberg et al.	
2016/0149665	A1	5/2016	Henry et al.	
2016/0149731	A1	5/2016	Henry et al.	
2016/0149753	A1	5/2016	Gerszberg et al.	
2016/0164571	A1	6/2016	Bennett et al.	
2016/0164573	A1	6/2016	Birk et al.	
2016/0182096	A1	6/2016	Panioukov et al.	
2016/0182161	A1	6/2016	Barzegar	
2016/0197392	A1	7/2016	Henry et al.	
2016/0197409	A1	7/2016	Henry et al.	
2016/0197642	A1	7/2016	Henry et al.	
2016/0218407	A1	7/2016	Henry et al.	
2016/0221039	A1	8/2016	Fuchs et al.	
2016/0226681	A1	8/2016	Henry et al.	
2016/0359541	A1	12/2016	Bennett	
2016/0359544	A1	12/2016	Bennett	
2016/0359546	A1	12/2016	Bennett	
2018/0007563	A1	1/2018	Zhang et al.	
2018/0048497	A1	2/2018	Henry et al.	
2018/0054232	A1	2/2018	Henry et al.	
2018/0159243	A1	6/2018	Britz et al.	

FOREIGN PATENT DOCUMENTS

AU	2010101079	A4	11/2010
AU	201400748		3/2014
AU	2014200748	A1	3/2014
CA	2449596	A1	6/2005
CA	2515560	A1	2/2007
CA	2467988	C	11/2010
CA	2777147	A1	4/2011
CA	2787580	A1	2/2013
CN	1833397	A	9/2006
CN	1885736	A	12/2006
CN	201146495	Y	11/2008
CN	100502181	C	6/2009
CN	201282193	Y	7/2009
CN	101834011	U	4/2010
CN	1823275	B	5/2010
CN	1820482	B	12/2010
CN	102130698	A	7/2011
CN	102136634	A	7/2011
CN	102280704	A	12/2011
CN	202093126	U	12/2011
CN	102351415	A	2/2012
CN	202253536	U	5/2012
CN	102694351	A	9/2012

(56) **References Cited**

FOREIGN PATENT DOCUMENTS

CN	101662076	B	11/2012
CN	103117118	A	5/2013
CN	103163881	A	6/2013
CN	203204743	U	9/2013
CN	103700442	A	4/2014
CN	103943925	A	7/2014
CN	104052742	A	9/2014
CN	203813973	U	9/2014
CN	104091987	A	10/2014
CN	203931626	U	11/2014
CN	203950607	U	11/2014
CN	105594138	A	5/2016
CN	107690754	A	2/2018
DE	102012203816	A1	9/2013
EP	0110478		6/1984
EP	0136818		4/1985
EP	0280379		8/1988
EP	0330303		8/1989
EP	0331248		9/1989
EP	0342149		11/1989
EP	0391719		4/1990
EP	425979	A2	5/1991
EP	0651487		10/1994
EP	0371660		4/1996
EP	0756392		1/1997
EP	0871241	B1	10/1998
EP	0890132		1/1999
EP	755092	A3	4/1999
EP	0896380		10/1999
EP	1085599	A2	3/2001
EP	0756786		8/2001
EP	1127283	A1	8/2001
EP	1129550	A1	9/2001
EP	1184930	A1	3/2002
EP	0772061		7/2003
EP	1346431	A1	9/2003
EP	1249056	B1	1/2004
EP	1376755	A1	1/2004
EP	1401048	A1	3/2004
EP	1454422	A1	9/2004
EP	1488397	A1	12/2004
EP	1371108	B1	6/2005
EP	1550327	A2	7/2005
EP	1341255	B8	8/2005
EP	1624685	A2	2/2006
EP	1642468	A2	4/2006
EP	1608110	B1	10/2006
EP	1793508	A1	6/2007
EP	1898532	A2	3/2008
EP	1930982	A1	6/2008
EP	2165550	A1	3/2010
EP	1166599	B1	5/2010
EP	2404347	A2	1/2012
EP	2568528	A2	3/2013
EP	2472737	B1	9/2013
EP	2854361	A1	4/2015
EP	2870802	A1	5/2015
FR	2214161	A1	8/1974
FR	2691602	A1	11/1993
FR	2849728	A1	7/2004
GB	175489	A	2/1922
GB	462804	A	3/1937
GB	529290	A	11/1940
GB	640181	A	7/1950
GB	667290	A	2/1952
GB	682817	A	11/1952
GB	746111	A	3/1956
GB	751153	A	6/1956
GB	835976	A	6/1960
GB	993561	A	5/1965
GB	1076772	A	7/1967
GB	1141390	A	1/1969
GB	1298387	A	11/1972
GB	1383549	A	2/1974
GB	1422956	A	1/1976
GB	2010528	A	6/1979
GB	2045055	A	10/1980
GB	2368468	A	5/2002
GB	2414862	A	12/2005
GB	2411554	B	1/2006
GB	714974		9/2007
GB	2474037	A	4/2011
GB	2485355	A	5/2012
GB	2507269	A	4/2014
IN	7352/CHENP/2015	A	7/2016
IN	201747047006	A	1/2018
JP	S50109642		9/1975
JP	55138902	U	10/1980
JP	61260702	A	11/1986
JP	03167906	A	7/1991
JP	0653894		8/1991
JP	3001844	U	9/1994
JP	08196022	A	7/1996
JP	08316918	A	11/1996
JP	2639531	B2	8/1997
JP	11239085	A	8/1999
JP	11313022	A	11/1999
JP	2000077889	A	3/2000
JP	2002029247	A	1/2002
JP	3480153	B2	12/2003
JP	2004253853	A	9/2004
JP	2004297107	A	10/2004
JP	2006153878	A	6/2006
JP	2006166399	A	6/2006
JP	2008021483	A	1/2008
JP	4072280	B2	4/2008
JP	2009004986	A	1/2009
JP	2009124229	A	6/2009
JP	2012090242	A	5/2012
JP	2012205104	A	10/2012
JP	2013046412	A	3/2013
JP	2013110503	A	6/2013
JP	2014045237	A	3/2014
JP	5475475	B2	4/2014
JP	5497348	B2	5/2014
KR	20000074034		12/2000
KR	200425873	Y1	9/2006
KR	101070364	B1	9/2011
KR	101212354	B1	12/2012
KR	20140104097	A	8/2014
RU	2129746	C1	4/1999
WO	8301711	A1	5/1983
WO	9210014		6/1992
WO	9323928		11/1993
WO	9424467	A1	10/1994
WO	9529537	A1	11/1995
WO	199529537		11/1995
WO	9735387	A1	9/1997
WO	9737445	A1	10/1997
WO	9829853	A1	7/1998
WO	9948230	A1	9/1999
WO	9967903	A1	12/1999
WO	2008070957	A1	6/2000
WO	0070891	A1	11/2000
WO	2000/74428	A1	12/2000
WO	WO2001014985	A1	3/2001
WO	0145206	A1	6/2001
WO	02061467	A2	8/2002
WO	03044981	A1	5/2003
WO	2003088418		10/2003
WO	03099740	A1	12/2003
WO	2004011995	A1	2/2004
WO	2004038891	A2	5/2004
WO	2004/051804		6/2004
WO	2004051804	A1	6/2004
WO	2004054159	A2	6/2004
WO	2004077746	A1	9/2004
WO	2006012610	A2	2/2006
WO	2006085804	A1	8/2006
WO	2006116396	A2	11/2006
WO	2006125279	A1	11/2006
WO	2006050331	A3	3/2007
WO	2007031435	A1	3/2007
WO	2007071797	A1	6/2007

(56) **References Cited**

FOREIGN PATENT DOCUMENTS

WO	2008003939	A1	1/2008
WO	2008117973	A1	10/2008
WO	2009014704	A1	1/2009
WO	2007098061	A3	2/2009
WO	2009035285	A2	3/2009
WO	2009090602	A1	7/2009
WO	2010017549	A1	2/2010
WO	2010147806	A1	12/2010
WO	2011032605	A1	3/2011
WO	2011137793	A1	11/2011
WO	2012/007831		1/2012
WO	2012038816	A1	3/2012
WO	2012172565	A1	12/2012
WO	2013013162	A2	1/2013
WO	2013035110	A2	3/2013
WO	2013/073548		5/2013
WO	2013073548	A1	5/2013
WO	2013100912	A1	7/2013
WO	2013115802	A1	8/2013
WO	2013123445	A1	8/2013
WO	2013/138627		9/2013
WO	2014/045236		9/2013
WO	2013136213	A1	9/2013
WO	2013138627	A1	9/2013
WO	2013157978	A1	10/2013
WO	2014/018434		1/2014
WO	2014018434	A2	1/2014
WO	2014065952	A1	5/2014
WO	2014099340	A2	6/2014
WO	2013076499	A3	7/2014
WO	2014128253	A1	8/2014
WO	2014145862	A2	9/2014
WO	2014197926	A1	12/2014
WO	2015002658	A1	1/2015
WO	2015006636	A1	1/2015
WO	2015027033	A1	2/2015
WO	2015035463	A1	3/2015
WO	2015052478		4/2015
WO	2015052480		4/2015
WO	2015069431	A2	5/2015
WO	2015077644		5/2015
WO	2015088650	A1	6/2015
WO	2016/043949		3/2016
WO	2016081125		5/2016
WO	2016081128		5/2016
WO	2016081134		5/2016
WO	2016081136		5/2016
WO	2016089491		6/2016
WO	2017214150		12/2017

OTHER PUBLICATIONS

PCT/US16/027397 International Search Report & Written Opinion dated Jun. 24, 2016.
PCT/US16/027398 International Search Report and Written Opinion dated Jun. 24, 2016.
PCT/US16/027403 International Search Report & Written Opinion dated Jun. 22, 2016.
PCT/US16/028395 International Search Report and Written Opinion dated Jun. 29, 2016.
PCT/US16/032441 International Search Report and Written Opinion dated Jul. 29, 2016.
"Cband & L/Sband Telemetry Horn Antennas," mWAVE, mwavellc.com, http://www.mwavellc.com/custom -Band-LS--BandTelemetryHornAntennas.php, Jul. 6, 2012.
"Product Abstract—Program on Technology Innovation: Study on the Integration of High Temperature Superconducting DC Cables Within the Eastern and West urn North American Power Grids." EPRI—Electronic Power Research Institute, epri.com, Product ID:10203, Nov. 25, 2009.
"Boost: The world's first Wi-FI extending led bulb," Sengled, sengled.com, http://www.sengled.com/sites/default/files/field/product/downloads/manual/a01-a60_na_user_manual.pdf, Dec. 2014.
"Examples of Cell Antennas," RF Check®, rfcheck.com, https://web.archive.org/web/20100201214318/http://www.rfcheck.com/Examplesof-Cell-Antennas.php, Feb. 1, 2010.
"Flashing Light : Ir.Lamp," Beninca®, beninca.com, http://www.beninca.com/en/news/2015/02/23/lampeggiante-irlamp.html, Feb. 23, 2015.
"An Improved Solid Dielectric Lens Impulse Radiating Antenna," SBIR/STTR, DoD, sbir.gov., 2004.
"Power line communications: An overview Part I." King Fahd University of Petroleum and Minerals, Dhahran, KSA., 2008.
"Power Line Communications," Atmel®, atmel.com http://www.atmel.com/products/smartenergy/powerlinecommunications/default.aspx., 2015.
"Integrated Radio Masts Fully camouflaged Outdoor-Wi-Fi APs in GRP-lamp poles," Brown-iposs, brown-iposs.com., Mar. 21, 2014.
"How is ELine Different?," ELine Corridor Systems, corridor.biz http://www.corridor.biz/ELine_is_different.html., Apr. 23, 2015.
"Powerline Communication," Cypress Perform, cypress.com http://www.cypress.com/?id=2330., Apr. 23, 2015.
"Products: GSM Mircro Repeater." L-TEL: Quanzhou L-TEL Communication Equipment Co., Ltd., l-tel.com., Apr. 24, 2015.
"New Wi-Fi antenna enhances wireless coverage," ScienceDaily®, sciencedaily.com., Apr. 29, 2015.
"Dielectric Antenna," Microwave Technologies, Ind., microwavetechnologiesinc.co.in http://www.microwavetechnologiesinc.co.in/microwavecommunicationlabproducts.html#dielectricantenna,, May 21, 2015.
"Horn Antennas," Steatite QPar Antennas, steatiteqparantennas.co.uk, http://www.steatiteqparantennas.co.uk/products hornantennas.html? http://www.steatiteqparantennas.co.uk/consultancy/customhornantennas/., May 21, 2015.
"24 Volt D.C Flashing Light With Built-in Antenna 433Mhz, DEA+ Product Guide" Meteor electrical, meteorelectrical.com, Code: LUMY/24A., Jul. 28, 2010.
"Waveguide-fed Conical Horn," Antenna Magus, antennamagus.com, © 2015 accessed:, Aug. 2015.
"Identity Management," Tuomas Aura CSE-C3400 Information Security, Aalto University, 33 pgs., Autumn 2014.
"Power Communication," Communication Power Solutions, Inc., cpspower.biz, http://www.cpspower.biz/services/powercommunications/., Oct. 2013.
"A Dielectric Lens Antenna with Enhanced Aperture Efficiency for Industrial Radar Applications", Computer Simulation Technology, cst.com, May 10, 2011.
"A New Approach to Outdoor DAS Network Physical Layer Using E-Line Technology", Corridor Systems, Mar. 2011, 5 pages.
"About Firelight Media Group", http://www. insu ra ncetechnologies.com/Products/Prod ucts_firelight_overview .shtml, Firelight®. Insurance Technologies, LLC,, Apr. 19, 2015.
"Asahi Multi-Core Fiber Cable", Industrial Fiber optics, i-fiberoptics.com http://i-fiberoptics.com/m u lti-core-fi ber-ca ble. ph p, Apr. 26, 2015.
"Bi-Axial PA Horn with Gimbal Mount", Atlas Sound, MCM Electronics, mcmelectronics.com, MCM Part #555-13580., 2011.
"Broadband Negligible Loss Metamaterials", Computer Electmagnetics and Antennas Research Laboratory, cearl.ee.psu.edu., May 15, 2012.
"Cisco IP VSAT Satellite WAN Network Module for Cisco Integrated Services Routers", http://www.cisco.com/c/en/us/products/collateral/interfaces-modules/ip-vsatsatellite-wan-module/product_data_sheet0900aecd804bbf6f.html, Jul. 23, 2014.
"Cloud Management", Cisco Meraki, cisco.com., Sep. 11, 2015.
"Decryption: Identify & Control Encrypted Traffic", Palo Alto Networks, paloaltonetworks.com, Mar. 7, 2011.
"Denso", Winn & Coales (Denso) Ltd. UK, denso.net, http://www.denso.net/voidfiller/voidpump.htm, 2015 1 page.
"Detecting and Preventing MAC Spoofing", Detecting and Preventing MAC Spoofing | Network Access Control Solutions, infoexpress, 2014.
"Electronic Business Fulfillment FireLight ®", Firelight Media Group LLC, firelightmedia.net http://www .firelightmedia .net/fmg/index.php/home, Apr. 19, 2015 2 pages.

(56) **References Cited**

OTHER PUBLICATIONS

"Elliptical Polarization", "Elliptical Polarization" Wikipedia, <http://en.wikipedia.org/wiki/Elliptical_polarization>, 3 pgs., Apr. 21, 2015.
"Exacter Outage-Avoidance System", http://www.epri.com/abstracts/Pages/ProductAbstract.aspx?ProductId=000000000001020393, Nov. 30, 2009.
"GM-12 Gimbal Mount", Newmark System, Inc, newmarksystems.com., 2015.
"HiveManager Network Management System", Aerohive® Networks, aerohive.com., Sep. 2015.
"Home", Darktrace, darktrace.com, Jul. 10, 2014.
"How to Use Stuf", STUF Page Link Info, crossdevices.com, http://www.crossdevices.com/cross_devices_010.htm, 2015 1 page.
"IEEE Standard for Information technology—Local and metropolitan area networks—Specific requirements", Part 15.4: Wireless Medium Access Control (MAC) and Physical Layer (PHY) Specifications for Low Rate Wireless Personal Area Networks (WPANs), in IEEE Std 802.15.4, (Revision of IEEE Std 802.15.4-2003), Sep. 7, 2006, 1-320.
"Installing Satellite Accessories", ACE®, acehardware.com., May 8, 2006.
"International Preliminary Report on Patentability"PCT/US2014/039746, dated Dec. 10, 2015.
"International Preliminary Report on Patentability"PCT/US2014/060841, dated May 19, 2016 8 pages.
International Preliminary Report on Patentability & Written Opinion PCT/US2014/061445, dated Jun. 23, 2016 9 pages.
International Search Report & Written Opinion PCT/US2015/034827, dated Sep. 30, 2015.
International Search Report & Written Opinion PCT/US2015/056316 dated Jan. 21, 2016.
International Search Report & Written Opinion PCT/US2015/056320, dated Jan. 29, 2016.
International Search Report & Written Opinion PCT/US2015/056365, dated Jan. 22, 2016.
International Search Report & Written Opinion PCT/US2015/056368, dated Jan. 25, 2016.
International Search Report & Written Opinion PCT/US2015/056598, dated Jan. 28, 2016.
International Search Report & Written Opinion PCT/US2015/056615 dated Jan. 21, 2016.
International Search Report & Written Opinion PCT/US2015/056626, dated Jan. 21, 2016.
International Search Report & Written Opinion PCT/US2015/056632, dated Jan. 26, 2016.
International Search Report & Written Opinion PCT/US2016/013988, dated Apr. 8, 2016.
International Search Report & Written Opinion PCT/US2016/020001, dated May 23, 2016.
International Search Report & Written Opinion PCT/US2016/026860, dated Jun. 1, 2016.
International Search Report & Written Opinion PCT/US2016/026318, dated Jun. 15, 2016.
International Search Report & Written Opinion PCT/US2016/028412, dated Jun. 27, 2016.
International Search Report & Written Opinion PCT/US2016/028206, dated Jun. 29, 2016.
International Search Report & Written Opinion PCT/US16/033182, dated Jul. 12, 2016.
International Search Report & Written Opinion PCT/US2014/039746, dated Jan. 12, 2015.
International Search Report & Written Opinion PCT/US2014/060841, dated Jan. 7, 2015.
International Search Report & Written Opinion PCT/US2015/039848, dated Oct. 20, 2015.
International Search Report & Written Opinion PCT/US2015/047315 dated Oct. 30, 2015.
International Search Report & Written Opinion PCT/US2015/048454, dated Nov. 11, 2015.
International Search Report & Written Opinion PCT/US2015/049928, dated Nov. 16, 2015.
International Search Report & Written Opinion PCT/US2015/049932, dated Nov. 16, 2015.
International Search Report & Written Opinion PCT/US2015/049927, dated Nov. 24, 2015.
International Search Report & Written Opinion PCT/US2015/051193, dated Nov. 27, 2015.
International Search Report & Written Opinion PCT/US2015/051146, dated Dec. 15, 2015.
International Search Report & Written Opinion PCT/US2015/051183, dated Dec. 15, 2015.
International Search Report & Written Opinion PCT/US2015/051194, dated Dec. 15, 2015.
International Search Report & Written Opinion PCT/US2015/051578, dated Dec. 17, 2015.
International Search Report & Written Opinion PCT/US2015/051583, dated Dec. 21, 2015.
International Search Report & Written Opinion PCT/US2015/048458, dated Dec. 23, 2015.
International Search Report & Written Opinion PCT/US2015/051213 dated Dec. 4, 2015.
International Search Report & Written Opinion PCT/US2015/051163, dated Dec. 7, 2015.
International Search Report & Written Opinion PCT/US2014/061445, dated Feb. 10, 2015.
International Search Report & Written Opinion PCT/US16/28207, dated Jun. 15, 2016.
International Search Report & Written Opinion PCT/US2016/015501, dated Apr. 29, 2016 11 pages.
International Search Report & Written Opinion PCT/US2015/047225, dated Nov. 6, 2015 dated Nov. 6, 2015.
International Search Report and Written Opinion PCT/US2016/028197, dated Jun. 24, 2016.
"Invitation to Pay Additional Fees & Partial Search Report"PCT/US2016/028205, dated Jun. 22, 2016.
"Invitation to Pay Additional Fees & Partial Search Report"PCT/US2016/032430, dated Jun. 22, 2016.
"Ipitek All-Optical Sensors", http://www.ipitek.com/solutions-by-industry/all-optical-sensors., Jun. 2, 2014.
"MmWave Axial Choke Horn Antenna with Lens", Feko, Sep. 24, 2013.
"Network technology", nbnTM, nbnco.com.au, Jun. 27, 2014.
"Norse Appliance™: Block attacks before they target your network, and dramatically improve the ROI on your entire security infrastructure", norsecorp.com, 2015.
"Out-of-Band Mgmt", Cradle Point, cradlepoint.com., Sep. 2015.
"Out-of-Band Security Solution", Gigamon®, gigamon.com., Aug. 3, 2014.
"PCT International Search Report & Written Opinion" PCT/US2016/026193, dated Jun. 1, 2016.
"Powerline—Juice Up Your Network With Powerline", Netgear®, netgear.com http://www.netgear.com/home/products/networking/powerline/, Apr. 21, 2015 3 pages.
"Pro 600 Sirius XM Radio Amplified Outdoor Antenna", Pixel Technologies, Oct. 3, 2014.
"Product Overview: Introducing SilentDefense", Security Matters, secmatters.com, Nov. 9, 2013.
"Quickly identify malicious traffics: Detect", Lancope®, lancope.com, Mar. 15, 2015.
"Radar at st Andrews", mmwaves.epr, st-andrews.ac.uk., Feb. 4, 2011.
"Resilience to Smart Meter Disconnect Attacks", ADSC Illinois at Singapore PTE, LTD., publish.illinois.edu http://publish.illinois.edu/integrativesecurityassessment/resiliencetosmartmeterdisconnectattacks/, 2015.
"RF Sensor Node Development Platform for 6LoWPAN and 2.4 GHz Applications", http://www.ti.com/tool/TIDM-RE-SENSORNODE., Jun. 2, 2014.
"Smart Out-Of-Band Management", Open Gear, opengear.com., Sep. 2015.
"Tapered waveguide", Lumerical Solutions, Inc., docs.lumerical.com., 2010.

(56) **References Cited**

OTHER PUBLICATIONS

"Tapered Waveguides Improve Fiber Light Coupling Efficiency", Tech Briefs, techbriefs.com, Molex Inc., Downers Grove, Illinois and KiloLambda Technologies Ltd., Tel Aviv, Israel., Jan. 1, 2006.
"Transducer", IEEE Std 100-2000, Sep. 21, 2015 1154.
"Wireless powerline sensor", wikipedia.org, http://en.wikipedia.org/wiki/Wireless_powerline_sensor, 2014, 3 pages.
Akiba, Shigeyuki et al., "Photonic Architecture for Beam Forming of RF Phased Array Antenna", Optical Fiber Communication Conference. Optical Society of America., Abstract Only, 2014.
Alam, M N et al., "Novel surface wave exciters for power line fault detection and communications", Antennas and Propagation (APSURSI), IEEE International Symposium on, IEEE, pp. 1139-1142, Jul. 3, 2011.
Alam, M.N. et al., "Novel surface wave exciters for power line fault detection and communications." Antennas and Propagation (APSURSI), 2011 IEEE International Symposium on. IEEE, 2011.
Alam, MD N. et al., "Design and Application of Surface Wave Sensors for nonintrusive Power Line Fault Detection," IEEE Sensors Journal, IEEE Service Center, New York, NY, US, vol. 13 No. 1, pp. 339-347, Jan. 1, 2013.
Ali, Muhammad Q. et al., "Randomizing AMI configuration for proactive defense in smart grid", Smart Grid Communications (SmartGridComm), IEEE International Conference on. IEEE, Abstract Only, http://ieeexplore.ieee.org/xpl/login.jsp?tp=&arnumber=6688027, 2013.
Angove, Alex , "Direct Bury Duct Assemblies, MPB 302 3+—Ribbonet Microducts", Ericsson, archive.ericsson.net, Jul. 30, 2014.
Angove, Alex , "How the NBN Differs from ADSL2+, Cable and Wireless", Whistle Out, whistleout.com.au, Jul. 30, 2014.
Arage, Alebel et al., "Measurement of wet antenna effects on millimetre wave propagation", Radar, IEEE Conference on IEEE., Abstract Only, 2006.
Arthur, Joseph Kweku , "Improving QoS in UMTS Network in Accra Business District Using Tower-Less Towers", IPASJ International Journal of Electrical Engineering (IIJEE), vol. 2, Issue 11., Nov. 2014.
Asadallahi, Sina et al., "Performance comparison of CSMA/CA Advanced Infrared (AIr) and a new pointtomultipoint optical MAC protocol." Wireless Communications and Mobile Computing Conference (IWCMC), 2012 8th International. IEEE., Abstract Only, 2012.
Atwater, Harry A. , "The promise of plasmonics." Scientific American 296.4: 56-62., 2007.
Bach, Christian , "Current Sensor—Power Line Monitoring for Energy Demand Control", Application Note 308, http://www.enocean.com/fileadmin/redaktion/pdf/app_notes/AN308_CURRENT_SENSOR_Jan09.pdf, Jan. 2009, 4 pages.
Barron, Ashleigh L. , "Integrated Multicore Fibre Devices for Optical Trapping", Diss. Heriot-Watt University, 2014, 11-15.
Beal, J.C. et al., "Coaxial-slot surface-wave launcher", Electronics Letters 4.25: 557559, Abstract Only, 1968.
Bhushan, Naga , "Network densification: the dominant theme for wireless evolution into 5G", Communications Magazine, IEEE 52.2: 82-89, 2014.
Bing, Benny , "Ubiquitous Broadband Access Networks with Peer-to-Peer Application Support", Evolving the Access Network: 27-36, 2006.
Bing, Benny , "Ubiquitous Broadband Access Networks with Peer-to-Peer Application Support", Evolving the Access Network, 2006, 27-36.
Bock, James et al., "Optical coupling." Journal of Physics: Conference Series. vol. 155. No. 1. IOP Publishing., 2009.
Bowen, Leland H. et al., "A Solid Dielectric Lens Impulse Radiating Antenna with High Dielectric Constant Surrounded by a Cylindrical Shroud," Sensor and Simulation Note 498., Introduction, Apr. 2005, 3 pages.
Bridges, Greg E. et al., "Plane wave coupling to multiple conductor transmission lines above a lossy earth", Compatibility, IEEE Transactions on 31.1, Abstract Only, 1989, 21-33.
Brooke, Gary H. , Properties of surface waveguides with discontinuities and perturbations in cross-section. Diss. University of British Columbia, 1977.
Brown, J. et al., "The launching of radial cylindrical surface waves by a circumferential slot", Proceedings of the IEE Part B: Radio and Electronic Engineering 106.26: 123128., Abstract Only, 1959.
Bruno, Joseph , "Interference Reduction in Wireless Networks", Computing Research Topics, Computing Sciences Department, Villanova University, Nov. 14, 2007, 8 pages.
Burkhart, Martin et al., "Does Topology Control Reduce Interference? ", Department of Computer Science, ETH Zurich, Proceedings of the 5th ACM international symposium on Mobile ad hoc networking and computing, ACM, 2004, 11 pages.
Callis, et al., "An In-Line Power Monitor for HE11 Low Loss Transmission Lines", Proceedings of the 29th International Conference on Infrared and Millimeter Waves (IRMMW), Karlsruhe, Germany, 2004.
Carroll, John M. et al., "Developing the Blacksburg electronic village", Communications of the ACM 39.12: 69-74, 1996.
Chen, Dong et al., "A trust management model based on fuzzy reputation for internet of things", Computer Science and Information Systems 8.4: 12071228, Abstract Only, 2011.
Chen, Yingying , "Detecting and Localizing Wireless Spoofing Attacks", Sensor, Mesh and Ad Hoc Communications and Networks, SECON'07. 4th Annual IEEE Communications Society Conference on IEEE, 2007, 10 pages.
Chiba, Jiro , "Experimental Studies of the Losses and Radiations Due to Bends in the Goubau Line", IEEE Transactions on Microwave Theory and Techniques, Feb. 1977, 94-100.
Chiba, Jiro , "On the Equivalent Circuit for the G-Line Above Ground", International Wroclaw Symposium on Electromagnetic Compatibility, 1998, 78-82.
Cimini, Carlos Alberto et al., "Temperature profile of progressive damaged overhead electrical conductors", Journal of Electrical Power & Energy Systems 49: 280-286., 2013.
Costantine, Joseph et al., "The analysis of a reconfigurable antenna with a rotating feed using graph models", Antennas and Wireless Propagation Letters 8: 943-946, 2009.
Covington, Michael J. et al., "Threat implications of the internet of things", Cyber Conflict (CyCon), 2013 5th International Conference on. IEEE., Abstract Only, 2013.
Crane, Robert K. , "Analysis of the effects of water on the ACTS propagation terminal antenna", Antennas and Propagation, IEEE Transactions on 50.7: 954965, Abstract Only, 2002.
De Sabata, Aldo et al., "Universitatea Politehnica", din Timişoara Facultatea de Electronicsăşi Telecomunicaţii., 2012.
Dini, Gianluca et al., "MADAM: A Multilevel Anomaly Detector for Android Malware", MMMACNS. vol. 12, 2012.
Doane, J.L. et al., "Oversized rectangular waveguides with modefree bends and twists for broadband applications", Microwave Journal 32(3), Abstract Only, 1989, 153-160.
Doelitzscher, et al., "ViteraaS: Virtual cluster as a service." Cloud Computing Technology and Science (CloudCom), 2011 IEEE Third International Conference on. IEEE., 2011.
Dooley, Kevin , "Out-of-Band Management", auvik, auvik.com., Apr. 12, 2014.
Dostert, Klaus , "Frequency-hopping spread-spectrum modulation for digital communications over electrical power lines." Selected Areas in Communications, IEEE Journal on 8.4: 700-710., Abstract Only, 1990.
Dragoo, R.E. et al., "Fiber Optic Data Bus for the AN/GYQ21(V)." Harris Corp, U.S. Communications Syst. Div. Chart, Microcopy Resolution Test, 1980.
Dutton, Harry Jr. , "Understanding Optical Communications", International Technical Support Organization, SG24-5230-00., Sep. 1998.
Ehyaie, Danial , "Novel Approaches to the Design of Phased Array Antennas," Diss. The University of Michigan., 2011.
Elmore, Glenn , "Introduction to the Propagating Wave on a Single Conductor", www.corridor.biz, Jul. 27, 2009, 30 pages.
Erickson, Katherine , "Conductive cylindrical surface waveguides." https://www.ideals.illinois.edu/bitstream/handle/2142/30914/Erickson_Katherine.pdf?sequence=1, 2012.

(56) **References Cited**

OTHER PUBLICATIONS

Erickson, Katherine , "Conductive cylindrical surface waveguides", 2012.
Eskelinen, Harri , "DFM (A)—aspects for a horn antenna design," Lappeenranta University of Technology., 2004.
Eskelinen, P. , "A low-cost microwave rotary joint," International Radar Conference, 13-17, p. 1-4., Abstract Only, Oct. 2014, 1 page.
Feng, Taiming et al., "Design of a survivable hybrid wireless-optical broadband-access network", Journal of Optical Communications and Networking 3.5, 2011, 458-464.
Feng, Wei et al., Downlink power allocation for distributed antenna systems in a multi-cell environment. 2009 5th International Conference on Wireless Communications, Networking and Mobile Computing. IEEE, 2009.
Fenye, Bao et al., "Dynamic trust management for internet of things applications", Proceedings of the 2012 international workshop on Selfaware internet of things. ACM, Abstract Only, 2012, 1 page.
Ford, Steven , AT&T's new antenna system will boost cellular coverage at Walt Disney World. Orlando Sentinel, orlandosentinel.com, Mar. 9, 2014.
Freyer, Dan , "Combating the Challenges of Ka-Band Signal Degradation", SatMagazine, satmagzine.com., Sep. 2014.
Friedman, M et al., "Low-loss RF transport over long distances," IEEE Transactions on Microwave Theory and Techniques, Jan. 1, 2001, pp. 341-348.
Friedman, M et al., "Low-Loss RF Transport Over Long Distances", IEEE Transactions on Microwave Theory and Techniques, vol. 49, No. 2, Feb. 2001, 8 pages.
Friedman, M. et al., "Low-Loss RF Transport Over Long Distances", IEEE Transactions on Microwave Theory an Techniques, vol. 49, No. 2, Feb. 2001, 341-348.
Fromm, W. et al., "A new microwave rotary joint," 1958 IRE International Convention Record, 21-25, 6:78-82., Abstract Only, Mar. 1966, 2 pages.
Garcia-Etxarri, Aitzol et al., "A combination of concave/convex surfaces for fieldenhancement optimization: the indented nanocone", Optics express 20.23, 2012, 2520125212.
Ghazisaidi, Navid et al., "Survivability analysis of next-generation passive optical networks and fiber-wireless access networks", Reliability, IEEE Transactions on 60.2, 2011, 479-492.
Goldsmith, P.F. , "Quasi-optical techniques", Proceedings of the IEEE., vol . 80, No. 11, Nov. 1, 1992.
Golrezaei, Negin et al., "FemtoCaching: Wireless Video Content Delivery through Distributed Caching Helpers", INFOCOM, Proceedings IEEE, 2012.
Gomes, Nathan J. et al., "Radio-over-fiber transport for the support of wireless broadband services", Journal of Optical Networking 8.2: 156-178., 2009.
Gonthier, François et al., "Mode coupling in nonuniform fibers: comparison between coupled-mode theory and finite-difference beam-propagation method simulations", JOSA B 8.2: 416421, Abstract Only, 1991, 3 pages.
Gritzalis, Dimitris et al., "The Sphinx enigma in critical VoIP infrastructures: Human or botnet?." Information, Intelligence, Systems and Applications (IISA), 2013 Fourth International Conference, IEEE., 2013.
Haider, Muhammad Kumail et al., Mobility resilience and overhead constrained adaptation in directional 60 GHz WLANs: protocol design and system implementation. Proceedings of the 17th ACM International Symposium on Mobile Ad Hoc Networking and Computing. ACM, 2016., 2016.
Han, Chong et al., "crosslayer communication module for the Internet of Things", Computer Networks 57.3: 622633, Abstract Only, 2013 1 page.
Haroun, Ibrahim et al., "WLANs meet fiber optics—Evaluating 802.11 a WLANs over fiber optics links", RF Des. Mag: 36-39., 2003.
Hassan, Karim , "Fabrication and characterization of thermo-plasmonic routers for telecom applications", Diss. Univ. de Bourgogne., 2014.
Hassan, Maaly A. , "Interference reduction in mobile ad hoc and sensor networks", Journal of Engineering and Computer Innovations vol. 2(7), Sep. 2011, 138-154.
Hassani, Alireza et al., "Porous polymer fibers for low-loss Terahertz guiding." Optics express 16.9: 6340-6351., 2008.
Hautakorpi, Jani et al., "Requirements from Session Initiation Protocol (SIP) Session Border Control (SBC) Deployments." RFC5853, IETF (2010).
Hawrylyshen, A. et al., "SIPPING Working Group J. Hautakorpi, Ed. Internet-Draft G. Camarillo Intended status: Informational Ericsson Expires: Dec. 18, 2008 R. Penfield Acme Packet.", 2008.
Hoss, R.J. et al., "Manufacturing Methods and Technology Program for Ruggedized Tactical Fiber Optic Cable", No. ITT-80-03-078. ITT Electrooptical Products Div Roanoke VA., 1980.
Ippolito, Louis J. , "Propagation effects handbook for satellite systems design. A summary of propagation impairments on 10 to 100 GHz satellite links with techniques for system design", 1989, Abstract Only, 1989, 1 page.
Izumiyama, Hidetaka et al., "Multicast over satellite", Applications and the Internet, (SAINT 2002). Proceedings. Symposium on. IEEE, 2002.
Jackson, Mark , "Timico CTO Hit by Slow FTTC Broadband Speeds After Copper Corrosion", ISP review, ispreview.co.uk, Mar. 5, 2013.
Jaeger, Raymond et al., "Radiation Performance of Germanium Phosphosilicate Optical Fibers." RADC-TR-81-69: Final Technical Report, Galileo Electro-Optical Corp., May 1981.
James, J.R. et al., "Investigations and Comparisons of New Types of Millimetre-Wave Planar Arrays Using Microstrip and Dielectric Structures", Royal Military Coll of Science Shrivenham (England)., 1985.
Jang, Hung-Chin , "Applications of Geometric Algorithms to Reduce Interference in Wireless Mesh Network", Journal on Applications of Graph Theory in Wireless Ad hoc Networks and Sensor Networks (JGRAPH-HOC) vol. 2, No. 1, Abstract Only, Mar. 2010, 1 page.
Jawhar, Imad et al., "A hierarchical and topological classification of linear sensor networks", Wireless Telecommunications Symposium, WTS, IEEE, http://faculty.uaeu.ac.ae/Nader_M/papers/WTS2009.pdf, 2009, 8 pages.
Jee, George et al., "Demonstration of the Technical Viability of PLC Systems on Medium- and Low-Voltage Lines in the United States", Broadband is Power: Internet Access Via Power Line Networks, IEEE Communication Magazine, May 2003, 5 pages.
Jeong, et al., "Study of elliptical polarization requirement of KSTAR 84-GHz ECH system", Journal—Korean Physical Society 49, 2006.
Jin, , "Quasi-optical mode converter for a coaxial cavity gyrotron", Forschungszentrum, 2007.
Jin, Yu et al., "Nevermind, the Problem Is Already Fixed: Proactively Detecting and Troubleshooting Customer DSL Problems", ACM CoNEXT, Philadelphia, USA, Nov.-Dec. 2010, 12 pages.
Kamilaris, et al., "Exploring the Use of DNS as a Search Engine for the Web of Things." Internet of Things (WF-IoT), 2014 IEEE World Forum on. IEEE, 2014.
Kang, , "Chapter 6: Array Antennas," IHS Engineering360, globalspec.com, http://www.globalspec.com/reference/75109/203279/chapter-6-array-antennas., Apr. 22, 2015.
Katkovnik, Vladimir et al., "High-resolution signal processing for a switch antenna array FMCW radar with a single channel receiver", Sensor Array and Multichannel Signal Processing Workshop Proceedings, IEEE., 2002.
Khan, , "Dual polarized dielectric resonator antennas", Chalmers University of Technology, 2010.
Kikuchi, H. et al., "Hybrid transmission mode of Goubau lines" ,J.Inst.Electr.Comm.Engrs., Japan,vol. 43, pp. 39-45., 1960.
Kirkham, H. et al., "Power system applications of fiber optics (Jet Propulsion Lab." JPL Publication 84-28, Electric Energy Systems Division, U.S. DoE, p. 180., 1984.
Koshiba, Masanori et al., "Analytical expression of average power-coupling coefficients for estimating intercore crosstalk in multicore fibers", Photonics Journal, IEEE 4.5, 2012, 1987-1995.
Kroon, Barnard et al., "Steady state RF fingerprinting for identity verification: one class classifier versus customized ensemble." Arti-

(56) **References Cited**

OTHER PUBLICATIONS

ficial Intelligence and Cognitive Science. Springer Berlin Heidelberg, 198206., Abstract Only, 2010, 3 pages.
Kroyer, Thomas , "A Waveguide High Order Mode Reflectometer for the Large Hadron Collider Beam-pipe", Diss. TU Wien., 2003.
Kuhn, Marc et al., "Power Line Enhanced Cooperative Wireless Communications", IEEE Journal on Selected Areas in Communications, vol. 24, No. 7, Jul. 2006, 10 pages.
Kumar, Sailesh , "Survey of Current Network Intrusion Detection Techniques", Washington Univ. in St. Louis, Dec. 2007.
Laforte, J.L. et al., "State-of-the-art on power line de-icing", Atmospheric Research 46, 143-158, 1998.
Lappgroupusa, "Selection of Noumber of Cable Cores With Emphasis on Sizing Parameters", Industrial Cable & Connector Technology News, lappconnect.blogspot.com, http://lappconnect.blogspot.com/2014_10_01_archive.html, Oct. 30, 2014.
Leech, Jamie et al., "Experimental investigation of a low-cost, high performance focal-plane horn array." Terahertz Science and Technology, IEEE Transactions on 2.1: 61-70., 2012.
Li, Xi et al., A FCM-Based peer grouping scheme for node failure recovery in wireless P2P file sharing. 2009 IEEE International Conference on Communications. IEEE, 2009.
Li, Xiang-Yang et al., "Interference-Aware Topology Control for Wireless Sensor Networks", SECON. vol. 5, 2005.
Li, Xiaowei et al., "Integrated plasmonic semi-circular launcher for dielectric-loaded surface plasmonpolariton waveguide", Optics express 19.7: 65416548, 2011.
Li, Xu et al., "Smart community: an internet of things application", Communications Magazine, IEEE 49.11: 68-75, 2011.
Lier, E. et al., "Simple hybrid mode horn feed loaded with a dielectric cone," Electronics Letters 21.13: 563564., 1985.
Lim, Christina et al., "Fiber-wireless networks and subsystem technologies", Lightwave Technology, Journal of 28.4, 390-405, 2010.
Lou, Tiancheng , "Minimizing Average Interference through Topology Control", Algorithms for Sensor Systems, Springer Berlin Heidelberg, 2012, 115-129.
Lucyszyn, S. et al., "Novel RF MEMS Switches", Microwave Conference, APMC, Asia-Pacific. IEEE, 2007.
Lucyszyn, Stepan et al., "RF MEMS for antenna applications", Antennas and Propagation (EuCAP), 7th European Conference on. IEEE, 2013.
Luo, Qi et al., "Circularly polarized antennas", John Wiley & Sons, Book—description only, 2013 1 page.
Mahato, Suvranshu Sekhar , Studies on an Infrared Sensor Based Wireless Mesh Network. Diss., Abstract Only, 2010, 2 pages.
Maier, Martin et al., "The audacity of fiberwireless (FiWi) networks", AccessNets. Springer Berlin Heidelberg, 16-35., 2009.
Marcatili, E.A. et al., "Hollow Metallic and Dielectric Waveguides for Long Distance Optical Transmission and Lasers", Bell System Technical Journal 43(4), Abstract Only, 2 pages, 1964, 1783-1809.
Mcallister, M.W. et al., "Resonant hemispherical dielectric antenna," Electronics Letters 20.16: 657659., Abstract Only, 1984, 1 page.
Meng, H. et al., "A transmission line model for high-frequency power line communication channel", Power System Technology, PowerCon 2002. International Conference on. vol. 2. IEEE, 2002. http:/ /infocom. uniroma 1.it/""enzobac/MengChen02. pdf, 2002.
Menon, S.S. et al., "Propagation characteristics of guided modes in a solid dielectric pyramidal horn," Proceedings of the 2012 International Conference on Communication Systems and Network Technologies. IEEE Computer Society, 2012., Abstract Only, 2012, 2 pages.
Mitchell, John E. , "Integrated Wireless Backhaul Over Optical Access Networks", Journal of Lightwave Technology 32.20, 2014, 3373-3382.
Miyagi, M. , "Bending losses in hollow and dielectric tube leaky waveguides", Applied Optics 20(7), Abstract Only, 2 pages, 1981, 1221-1229.
Moaveni-Nejad, Kousha et al., "Low-Interference Topology Control for Wireless Ad Hoc Networks", Department of Computer Science, Illinois Institute of Technology, Ad Hoc & Sensor Wireless Networks 1.1-2, 2005, 41-64.
Moisan, M. et al., "Plasma sources based on the propagation of electromagnetic surface waves", Journal of Physics D: Applied Physics 24.7: 1025, 1991.
Mokhtarian, Kianoosh et al., "Caching in Video CDNs: Building Strong Lines of Defense", EuroSys, Amsterdam, Netherlands, 2014.
Morse, T.F. , "Research Support for the Laboratory for Lightwave Technology." Brown Univ Providence RI Div of Engineering, 1992.
Mruk, Joseph Rene , "Wideband monolithically integrated frontend subsystems and components", Diss. University of Colorado, 2011.
Nachiketh, P. et al., "Optimizing public-key encryption for wireless clients", Proceedings of the IEEE International Conference on Communications (ICC 2002). No. 1., 2002.
Narayanan, Arvind , "Fingerprinting of RFID Tags and HighTech Stalking." 33 Bits of Entropy, 33bits.org, Oct. 4, 2011.
Nassa, Vinay Kumar , "Wireless Communications: Past, Present and Future", Dronacharya Research Journal: 50. vol. III, Issue-II, Jul.-Dec. 2011.
Nibarger, John P. , "An 84 pixel all-silicon corrugated feedhorn for CMB measurements." Journal of Low Temperature Physics 167.3-4 (2012): 522-527., 2012.
Nicholson, Basil J. , "Microwave Rotary Joints for X-, C-, and Shand", Battelle Memorial Inst Columbus OH, 1965.
Nuvotronics, "PolyStrata—Phased Arrays & Antennas", Nuvotronics, nuvotronics.com http://www.nuvotronics.com/antennas.php, Apr. 26, 2015.
Olver, A. D. , "Microwave horns and feeds," vol. 39. IET, Book—description only, 1994, 1 page.
Olver, A.D. et al., "Dielectric cone loaded horn antennas," Microwaves, Antennas and Propagation, IEE Proceedings H. vol. 135. No. 3. IET., Abstract Only, 1988, 1 page.
Orfanidis, Sophocles J. , "Electromagnetic waves and antennas," Rutgers University., 2002.
Pahlavan, Kaveh et al., "Wireless data communications", Proceedings of the IEEE 82.9: 1398-1430, 1994.
Patel, Shwetak N. et al., "The Design and Evaluation of an End-User-Deployable, Whole House, Contactless Power Consumption Sensor", CHI 2010: Domestic Life, Apr. 2010, 10 pages.
Paul, Sanjoy et al., "The Cache-And-Forward Network Architecture for Efficient Mobile Content Delivery Services in the Future Internet", Innovations in NGN: Future Network and Services, 2008. K-INGN 2008. First ITU-T Kaleidoscope Academic Conference, 2008.
Perkons, Alfred R. et al., "TM surface-wave power combining by a planar active-lens amplifier", Microwave Theory and Techniques, IEEE Transactions on 46.6: 775783, 1998.
Péter, Zsolt et al., "Assessment of the current intensity for preventing ice accretion on overhead conductors", Power Delivery, IEEE Transactions on 22.1: 565-574., 2007.
Petrovsky, Oleg , "The Internet of Things: A Security Overview", w.druva.com, Mar. 31, 2015.
Pham, Tien-Thang et al., "A WDM-PON-compatible system for simultaneous distribution of gigabit baseband and wireless ultrawideband services with flexible bandwidth allocation", Photonics Journal, IEEE 3.1, 2011, 13-19.
Piksa, Petr et al., "Elliptic and hyperbolic dielectric lens antennas in mmwaves", Radioengineering 20.1, 2011, 271.
Plagemann, Thomas et al., "Infrastructures for community networks", Content Delivery Networks. Springer Berlin Heidelberg, 367-388, 2008.
Pohl, , "A dielectric lens-based antenna concept for high-precision industrial radar measurements at 24GHz," Radar Conference (EuRAD), 2012 9th European, IEEE., 2012.
Ponchak, George E. et al., "A New Model for Broadband Waveguide to Microstrip Transition Design", NASA TM-88905, Dec. 1, 1986, 18 pgs.
Pranonsatit, S. et al., "Sectorised horn antenna array using an RF MEMS rotary switch", Asia-Pacific Microwave Conf., APMC., 2010.

(56) **References Cited**

OTHER PUBLICATIONS

Pranonsatit, Suneat et al., "Single-pole eight-throw RF MEMS rotary switch", Microelectromechanical Systems, Journal of 15.6: 1735-1744, 2006.
Prashant, R.R. et al., "Detecting and Identifying the Location of Multiple Spoofing Adversaries in Wireless Network", International Journal of Computer Science and Mobile Applications, vol. 2 Issue. 5, May 2014, 1-6.
Rahim, S. K. A. et al., "Measurement of wet antenna losses on 26 GHz terrestrial microwave link in Malaysia", Wireless Personal Communications 64.2: 225231, 2012.
Rambabu, K. et al., "Compact single-channel rotary joint using ridged waveguide sections for phase adjustment," IEEE Transactions on Microwave Theory and Techniques (Aug. 2003) 51(8):1982-1986., Abstract Only, Aug. 2003, 2 pages.
Rappaport, Theodore S. et al., "Mobile's Millimeter-Wave Make-over", Spectrum.IEEE.Org, Sep. 2014.
Raychaudhuri, Dipankar et al., "Emerging Wireless Technologies and the Future Mobile Internet", Cambridge University Press, Abstract Only, Mar. 2011, 1 page.
Raychem, , "Wire and Cable", Dimensions 2:1., 1996.
Reynet, Olivier et al., "Effect of the magnetic properties of the inclusions on the high-frequency dielectric response of diluted composites." Physical Review B66.9: 094412., 2002.
Rouse, Margaret , "Transport Layer Security (TLS)", TechTarget, searchsecurity.techtarget.com, Jul. 2006.
Roze, Mathieu et al., "Suspended core subwavelength fibers: towards practical designs for low-loss terahertz guidance." Optics express 19.10 (2011): 9127-9138., 2011.
Sagar, Nishant , "Powerline Communications Systems: Overview and Analysis", Thesis, May 2011, 80 pages.
Sagues, Mikel et al., "Multi-tap complex-coefficient incoherent microwave photonic filters based on optical single-sideband modulation and narrow band optical filtering." Optics express 16.1: 295-303., 2008.
Saied, Yosra Ben et al., "Trust management system design for the internet of things: a contextaware and multiservice approach", Computers & Security 39: 351365, Abstract Only, 2013 2 pages.
Salema, Carlos et al., "Solid dielectric horn antennas," Artech House Publishers, 1998.
Salema, Carlos et al., "Solid dielectric horn antennas," Artech House Publishers, 1998, Amazon., Book—description only, 1998.
Sarafi, A. et al., "Hybrid wireless-broadband over power lines: a promising broadband solution in rural areas." Communications Magazine, IEEE 47.11 (2009): 140-147., 2009.
Sarafi, Angeliki M. et al., "Hybrid Wireless-Broadband over Power Lines: A Promising Broadband Solution in Rural Areas", IEEE Communications Magazine, Nov. 2009, 8 pages.
Sarnecki, Joseph et al., "Microcell design principles", Communications Magazine, IEEE 31.4: 76-82, 1993.
Saruhan, Ibrahim Halil , "Detecting and Preventing Rogue Devices on the Network", SANS Institute InfoSec Reading Room, sans.org, Aug. 8, 2007, 1 page.
Scarfone, Karen et al., "Technical Guide to Information Security Testing and Assessment", National Institute of Standards and Technology, csrc.nist.gov, Special Publication, Sep. 2008, 800-115.
Shafai, Lotfollah , "Dielectric Loaded Antennas", John Wiley & Sons, Inc., http://www.researchgate.net/publication/227998803_Dielectric_Loaded_Antennas, Apr. 15, 2005.
Shafi, Mansoor et al., "Advances in Propagation Modeling for Wireless Systems", EURASIP Journal on Wireless Communications and Networking. Hindawi Publishing Corp, 2009, p. 5.
Shimabukuko, F.I. et al., "Attenuation measurement of very low-loss dielectric waveguides by the cavity resonator method in the millimeter/submillimeter wavelength range." No. TR-0086A (2925-06)-1. Aerospace Corp El Segundo CA Electronics Research Lab, 1989.
Shindo, Shuichi et al., "Attenuation measurement of cylindrical dielectric-rod waveguide." Electronics Letters 12.5, 117-118., 1976.
Shumate, Paul W. et al., "Evolution of fiber in the residential loop plant." IEEE Communications Magazine 29.3: 68-74., 1991.
Sievenpiper, D.F. et al., "Two-dimensional beam steering using an electrically tunable impedance surface," in Antennas and Propagation, IEEE Transactions on , vol. 51, No. 10, pp. 2713-2722., Oct. 2003.
Sommerfeld, A. , "On the propagation of electrodynamic waves along a wire", Annals of Physics and Chemistry New Edition, vol. 67, No. 2, 1899, 72 pages.
Strahler, Olivier , "Network Based VPNs", SANS Institute InfoSec Reading Room, sans.org., Aug. 2002.
Strieby, M.E. et al., "Television transmission over wire lines." American Institute of Electrical Engineers, Transactions of the 60.12: 1090-1096., Abstract Only, 1941, 2 pages.
Szabó, Csaba A. , "European Broadband Initiatives with Public Participation", Broadband Services: 255, 2005.
Taboada, John M. et al., "Thermo-optically tuned cascaded polymer waveguide taps." Applied physics letters 75.2: 163-165., 1999.
Templeton, Steven J. et al., "Detecting Spoofed Packets", DARPA Information Survivability Conference and Exposition, vol. 1, IEEE, 2003.
Theoleyr, Fabrice , "Internet of Things and M2M Communications", books.google.com, ISBN13: 9788792982483, Book—description only, Apr. 17, 2013 1 page.
Thornton, John et al., "Modern lens antennas for communications engineering", vol. 39, 2013.
Valladares, Cindy , "20 Critical Security Controls: Control 7—Wireless Device Control", Tripwire—The State of Security, tripwire.com, Mar. 21, 2013.
Vogelgesang, Ralf et al., "Plasmonic nanostructures in aperture-less scanning near-field optical microscopy (aSNOM)", physica status solidi (b) 245.10: 22552260, 2008.
Volat, C. et al., "De-icing/anti-icing techniques for power lines: current methods and future direction", Proceedings of the 11th International Workshop on Atmospheric Icing of Structures, Montreal, Canada., 2005.
Wagter, Herman , "Fiber-to-the-X: the economics of last-mile fiber", ARS Technica, arstechnica.com,, Mar. 31, 2010.
Wake, David et al., "Radio over fiber link design for next generation wireless systems", Lightwave Technology, Journal of28.16: 2456-2464., 2010.
Wang, Jing et al., "The influence of optical fiber bundle parameters on the transmission of laser speckle patterns", Optics express 22.8, 2014, 8908-8918.
Wilkins, George A. , "Fiber Optic Telemetry in Ocean Cable Systems", Chapter in new edition of Handbook of Oceanographic Winch, Wire and Cable Technology, Alan H. Driscoll, Ed.,(to be published by University of Rhode Island)., 1986.
Wolff, Christian , "Phased Array Antenna" Radar Tutorial, web.archive.org, radartutorial.eu, Oct. 21, 2014.
Wu, Xidong et al., "Design and characterization of singleand multiplebeam mmwave circularly polarized substrate lens antennas for wireless communications", Microwave Theory and Techniques, IEEE Transactions on 49.3, 2001, 431-441.
Xi, Liu Xiao , "Security services in SoftLayer", Sep. 21, 2015.
Xia, Cen et al., "Supermodes for optical transmission", Optics express 19.17, 2011, 16653-16664.
Yang, , "Power Line Sensor Networks for Enhancing Power Line Reliability and Utilization", Georgia Institute of Technology, https://smartech.gatech.edu/bitstream/handle/1853/41087/Yang_Yi_201108_phd.pdf, Apr. 26, 2011, 264 pages.
Yang, et al., "Power line sensornet—a new concept for power grid monitoring", IEEE Power Engineering Society General Meeting, Abstract Only, 2006, pp. 8.
Yeh, C. et al., "Ceramic Waveguides." Interplanetary Network Progress Report141.26: 1., 2000.
Yu, Shui et al., "Predicted packet padding for anonymous web browsing against traffic analysis attacks", Information Forensics and Security, IEEE Transactions on 7.4, http://nsp.org.au/syu/papers/tifs12.pdf, 2012, 1381-1393.
Zelby, Leon W. , "Propagation Modes on a Dielectric Coated Wire", J. The Franklin Institute, vol. 274(2), pp. 85-97, 1962.

(56) **References Cited**

OTHER PUBLICATIONS

Zhao, et al., "Energy harvesting for a wireless-monitoring system of overhead high-voltage power lines", IET Generation, Transmission & Distribution 7, IEEE Xplore Abstract, 2013 2 pages.
Zheng, Zhu et al., "Efficient coupling of propagating broadband terahertz radial beams to metal wires", Optics express 21.9: 1064210650, 2013.
Zucker, , "Surface-wave antennas", Antenna engineering handbook 4, 2007.
"Article 34 Amendment filed Apr. 3, 2017", PCT Application No. PCT/US16/28206, dated Apr. 3, 2017, 9 pages.
"International Preliminary Report on Patentability & Written Opinion", PCT/US16/28206, dated May 16, 2017, 23 pages.
"International Search Report & Written Opinion", PCT/US17/36159, dated Aug. 10, 2017, 14 pages.
Akalin, Tahsin et al., "Single-Wire Transmission Lines at Terahertz Frequencies", IEEE Transactions on Microwave Theory and Techniques, vol. 54, No. 6, 2006, 2762-2767.
Wang, Kanglin, "Dispersion of Surface Plasmon Polaritons on Metal Wires in the Terahertz Frequency Range", Physical Review Letters, PRL 96, 157401, 2006, 4 pages.
Rabiei, et al., "On the Performance of OFDM-Based Amplify-and-Forward Relay Networks in the Presence of Phase Noise", IEEE Transactions on Communications, vol. 59, Iss. 5, May 2011, pp. 1458-1466, May 2011, 1458-1466.
"International Preliminary Report on Patentability", dated May 21, 2018, 19 pages.
"International Search Report and Written Opinion", PCT/US2018/015634, dated Jun. 25, 2018, 8 pages.
Rangan, et al., "Millimeter Wave Cellular Wireless Networks: Potentials and Challenges", IEEE, Jan. 2014, pp. 1-17., 17 pages.

* cited by examiner

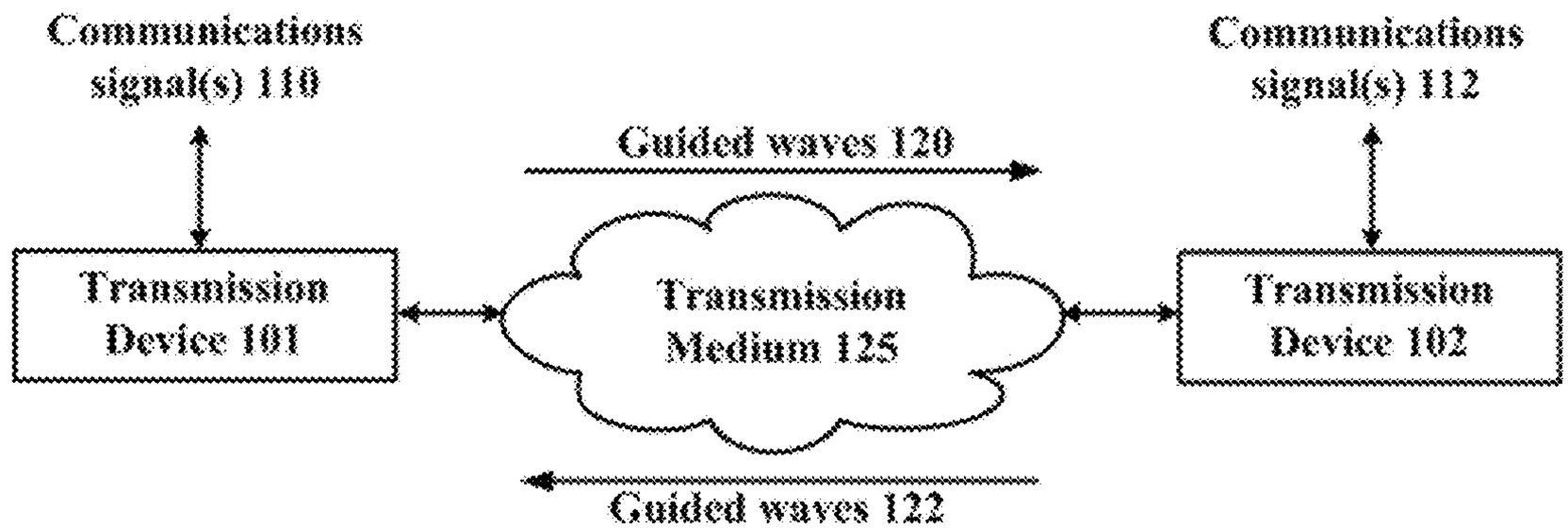

100

FIG. 1

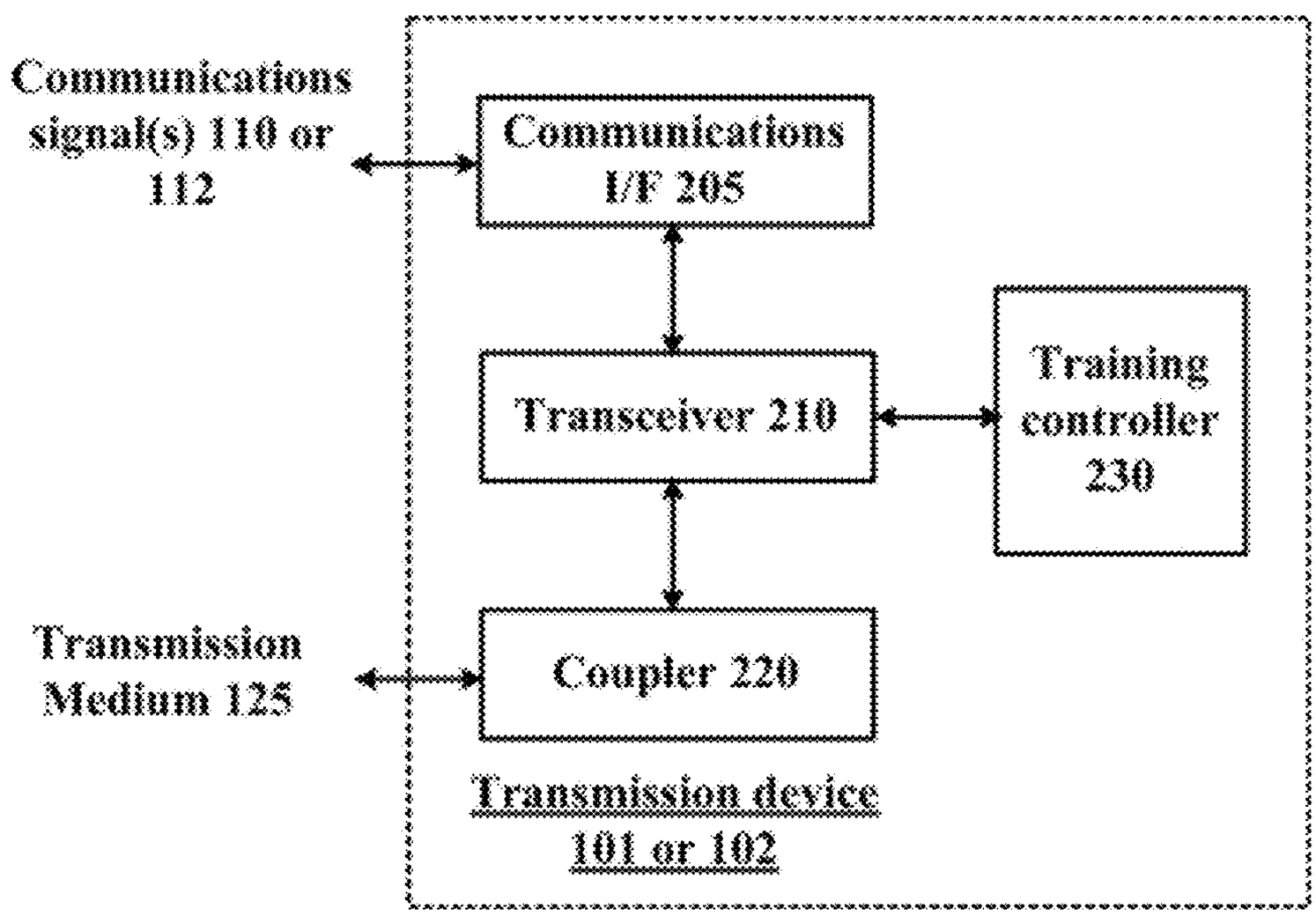

200

FIG. 2

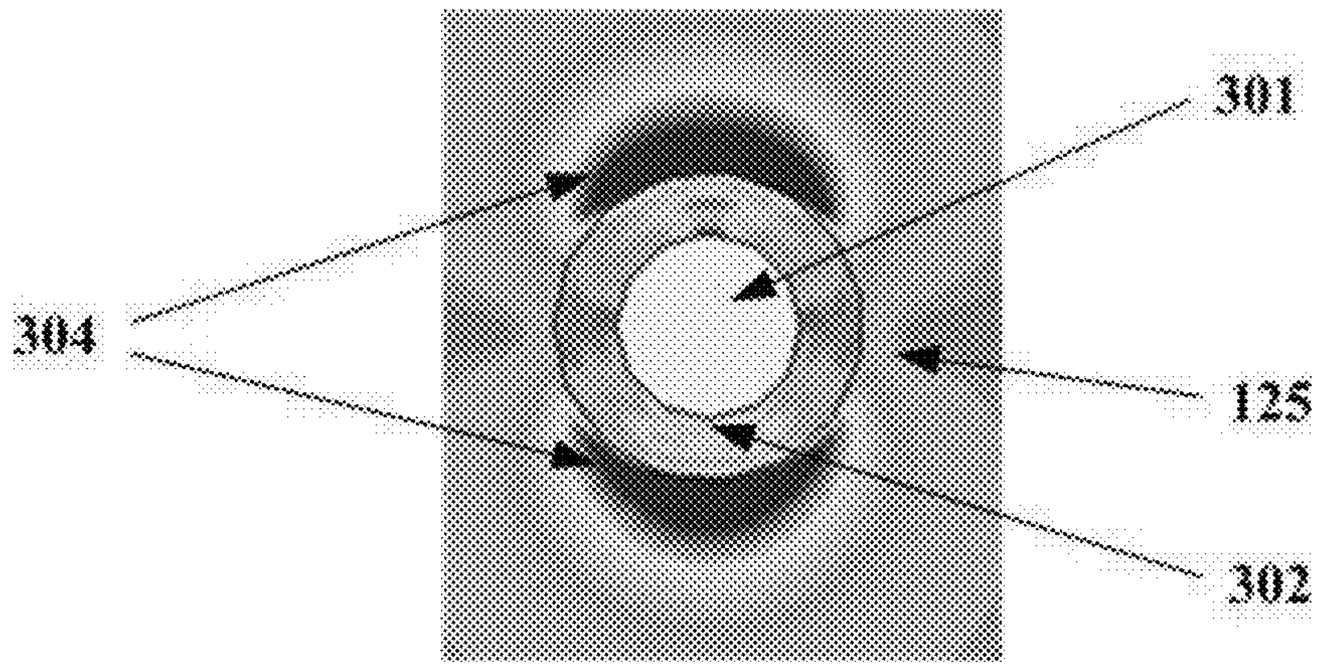

300

FIG. 3

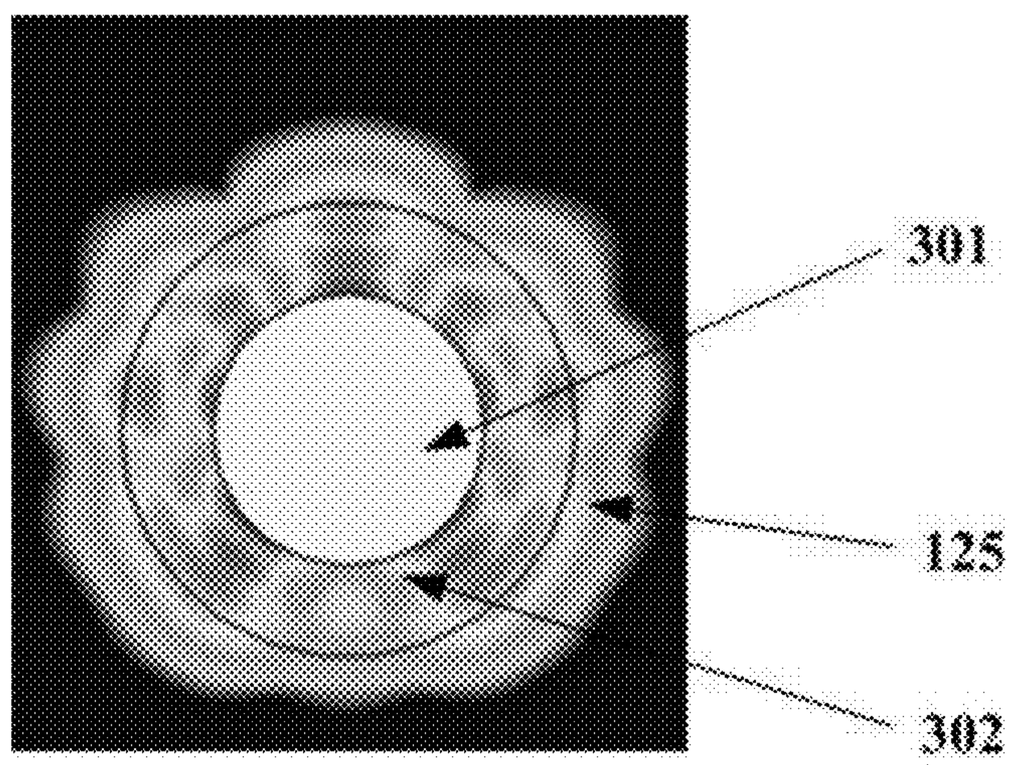

400

FIG. 4

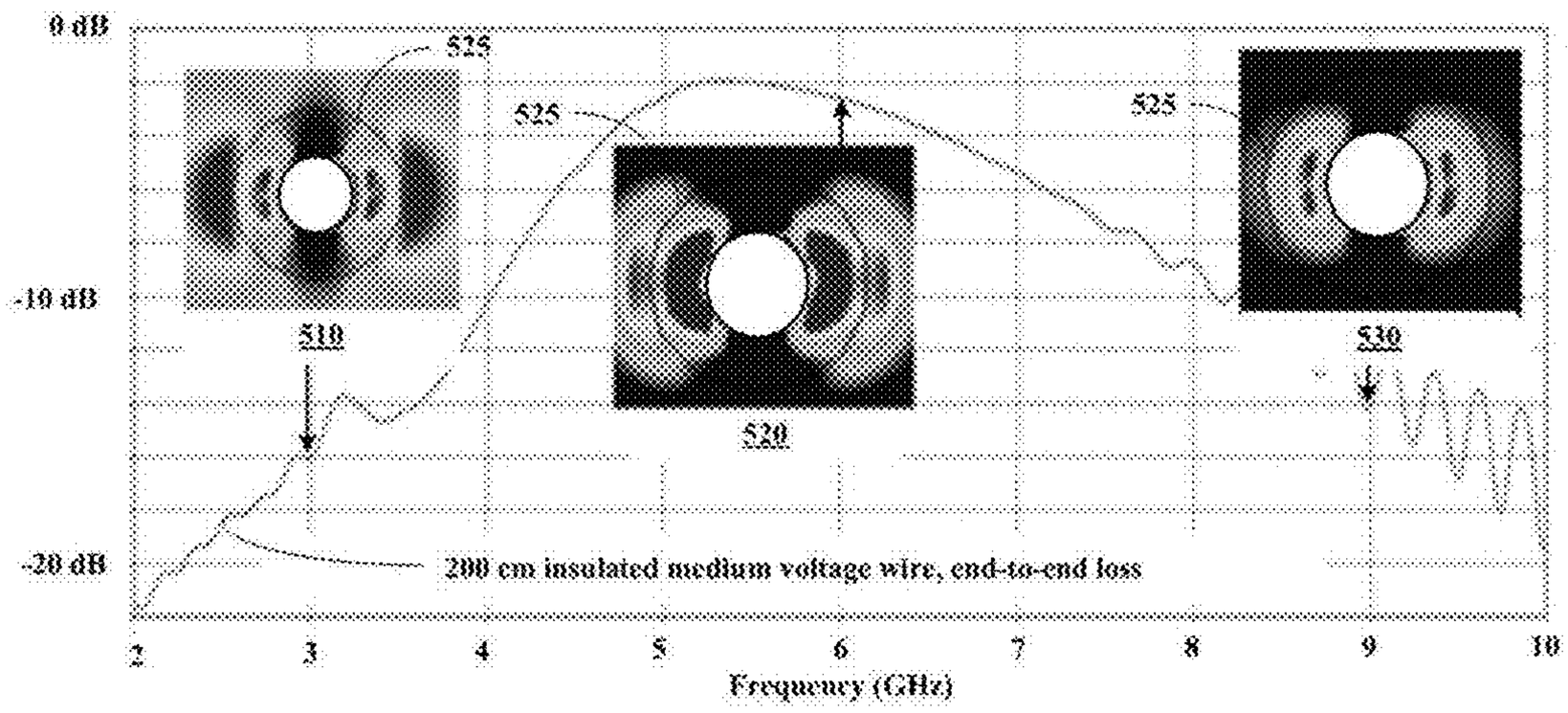

500

FIG. 5A

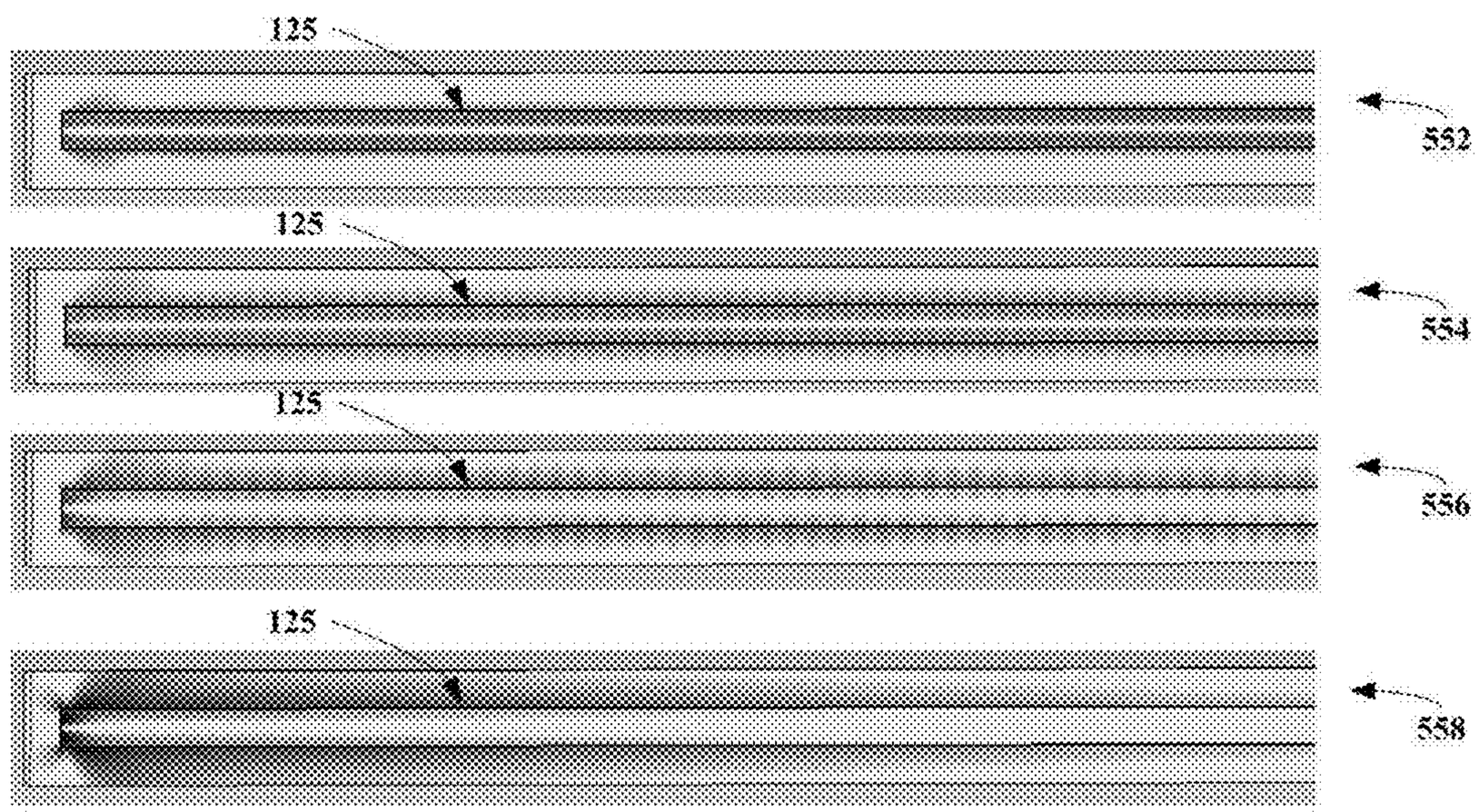

550

FIG. 5B

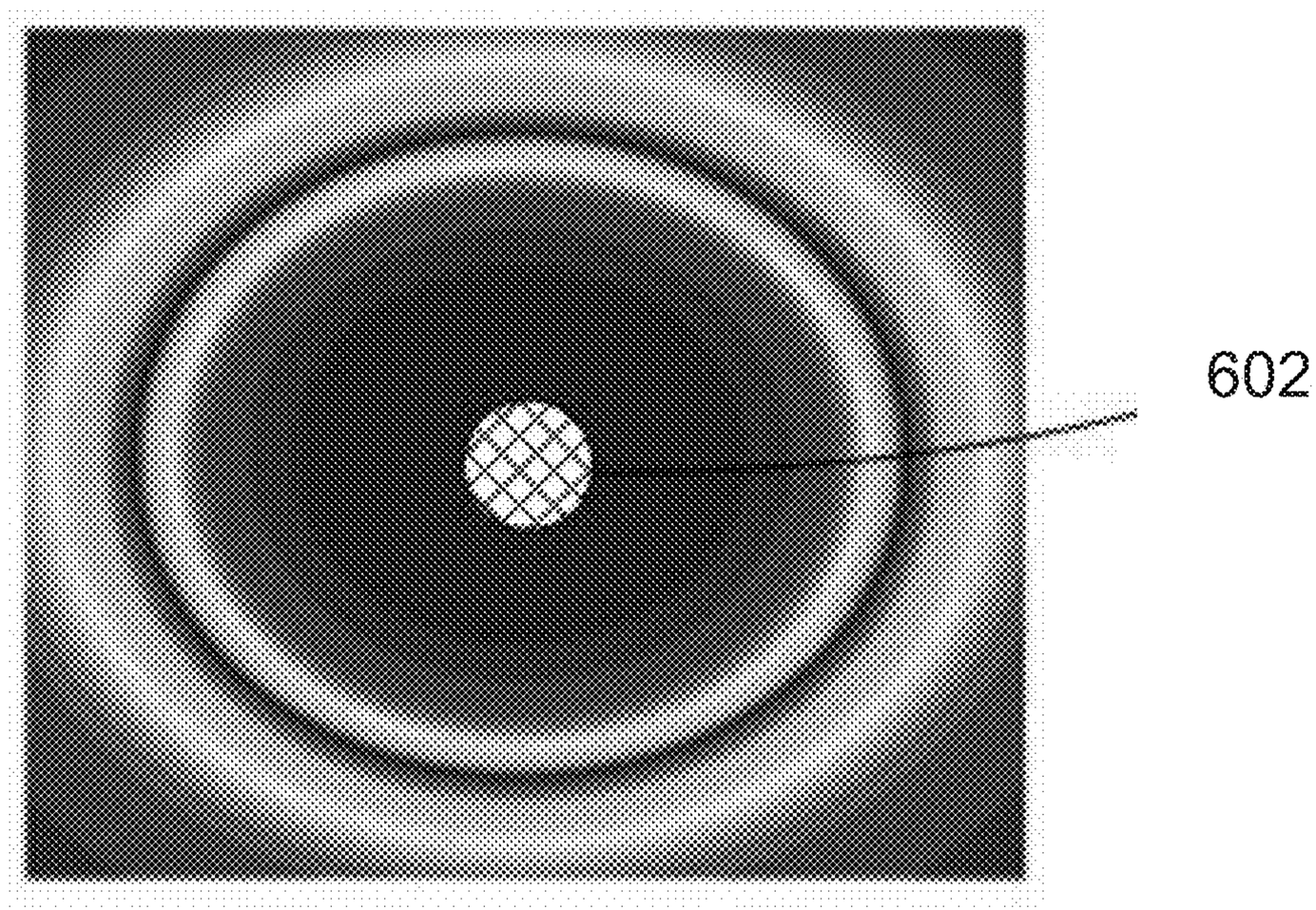

600

FIG. 6

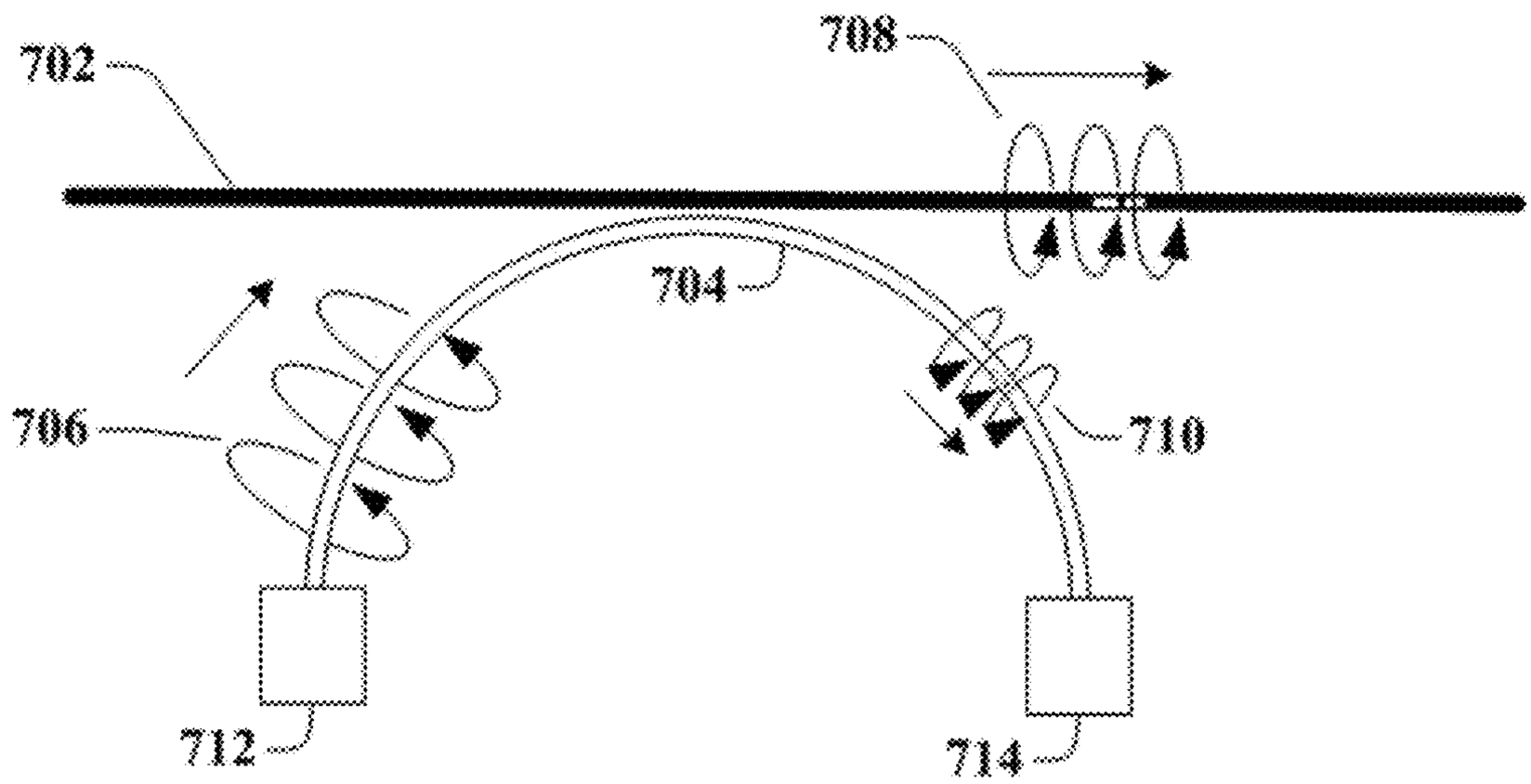

700

FIG. 7

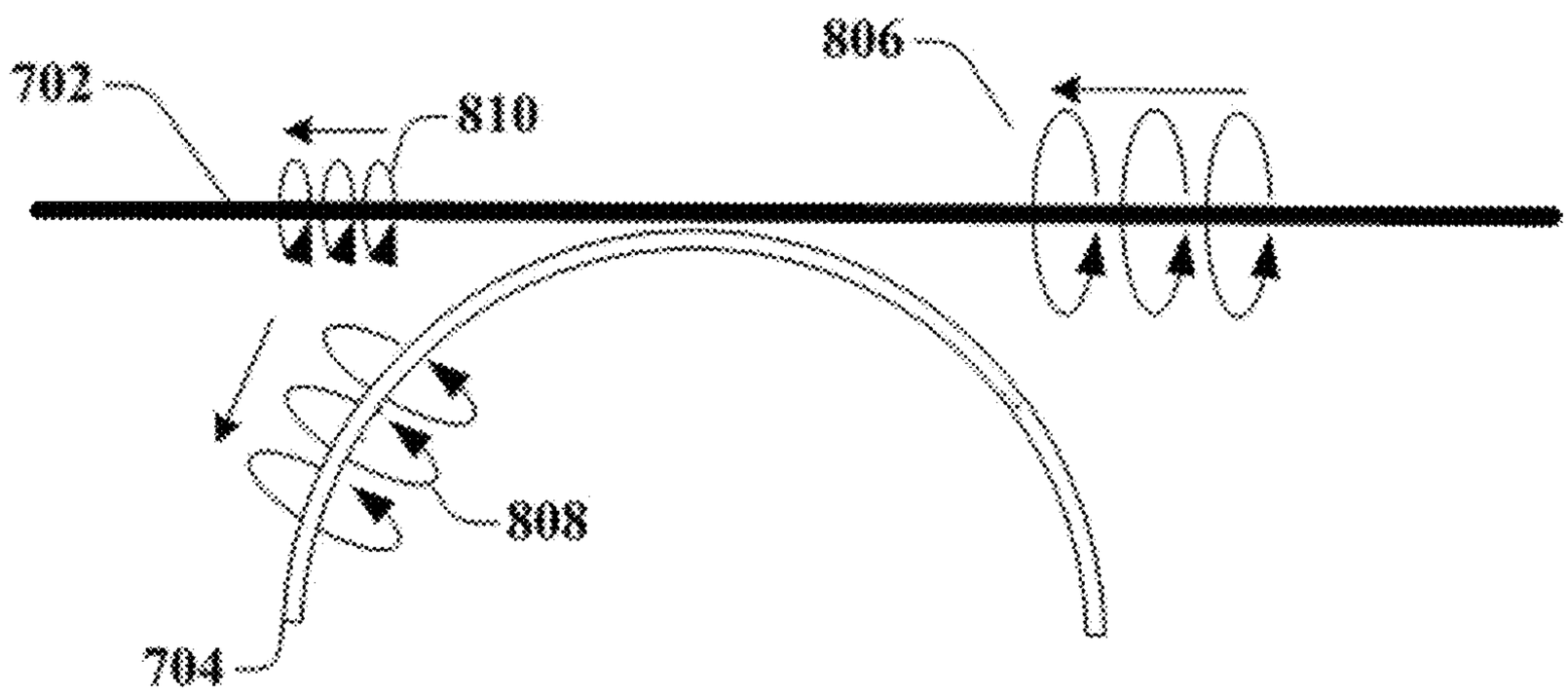

800

FIG. 8

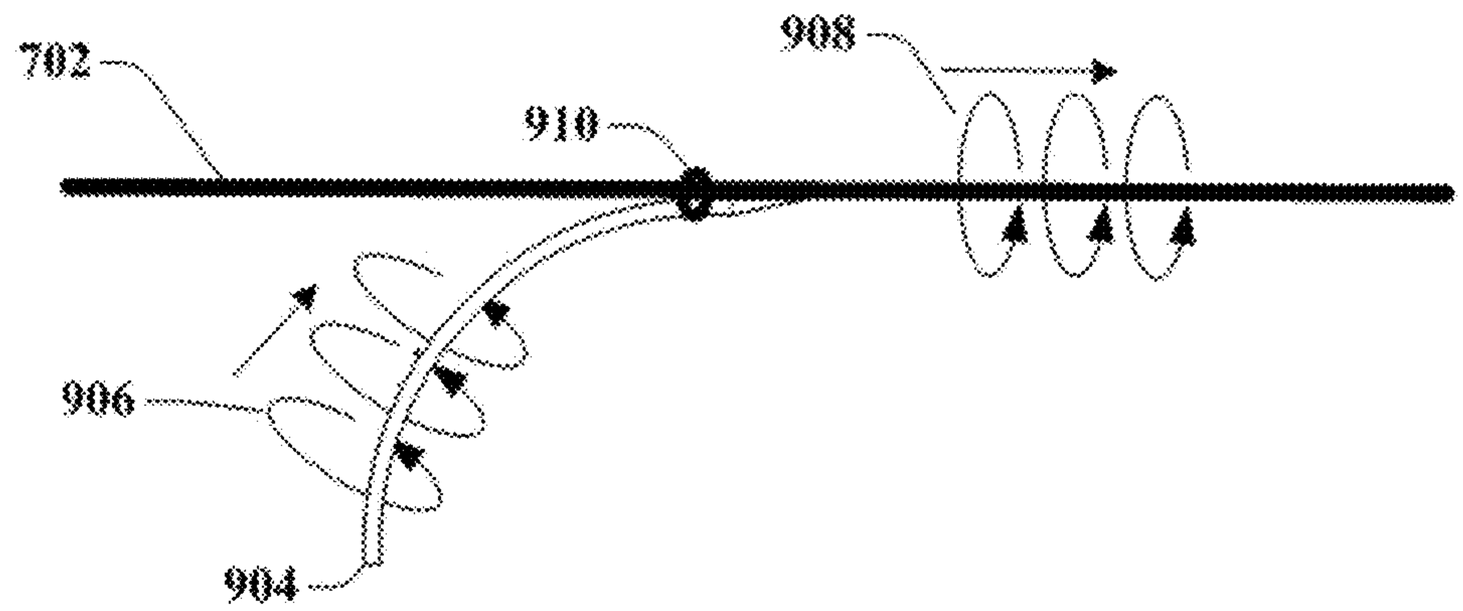

900

FIG. 9A

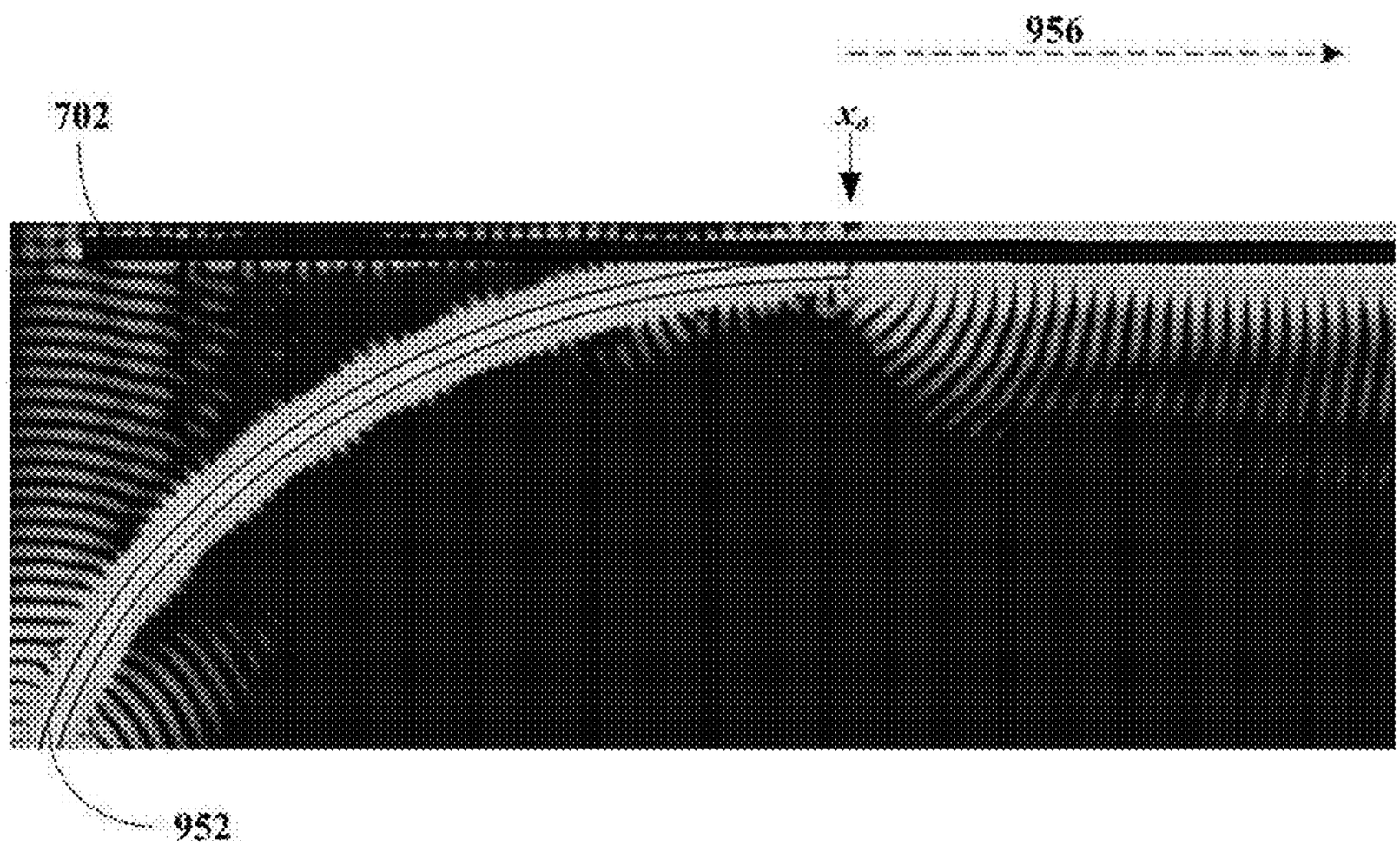

950

FIG. 9B

1000

FIG. 10A

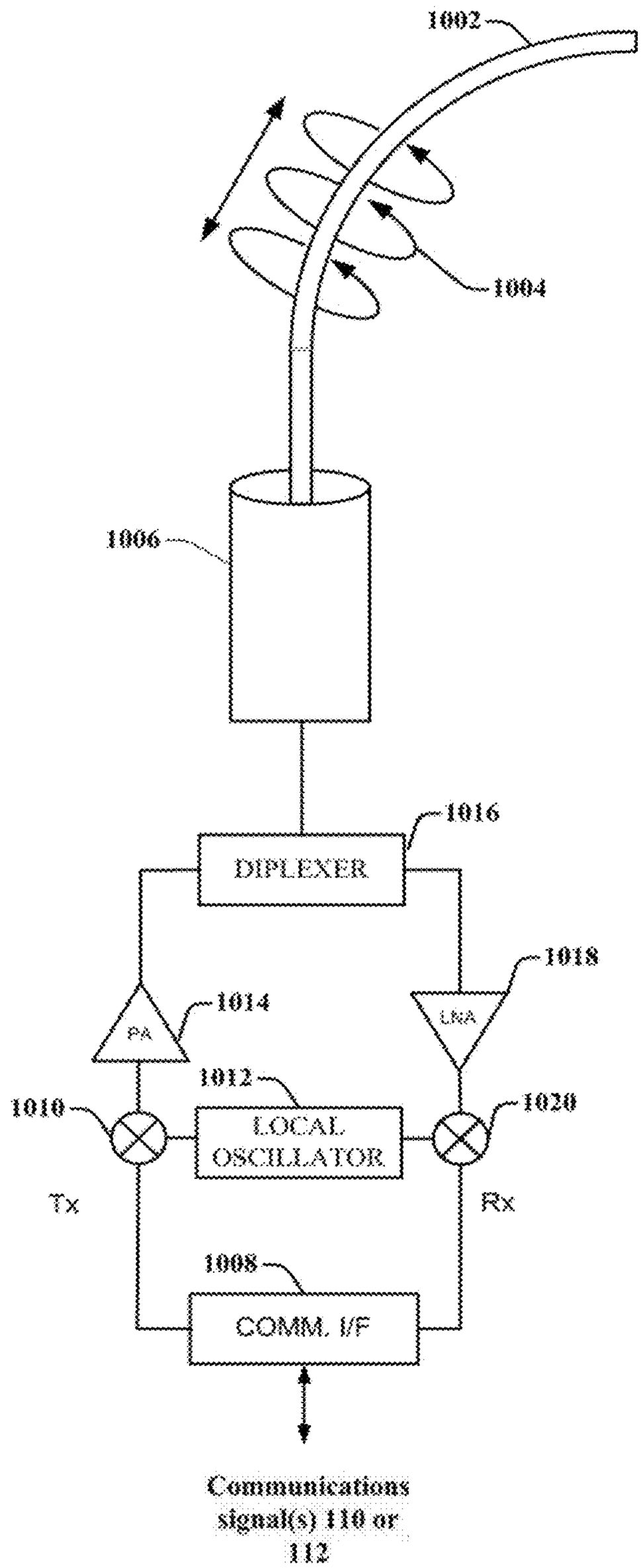
1002
1004
1006
1016
DIPLEXER
1018
1014
PA
LNA
1012
1010
LOCAL OSCILLATOR
1020
Tx
Rx
1008
COMM. I/F
Communications signal(s) 110 or 112

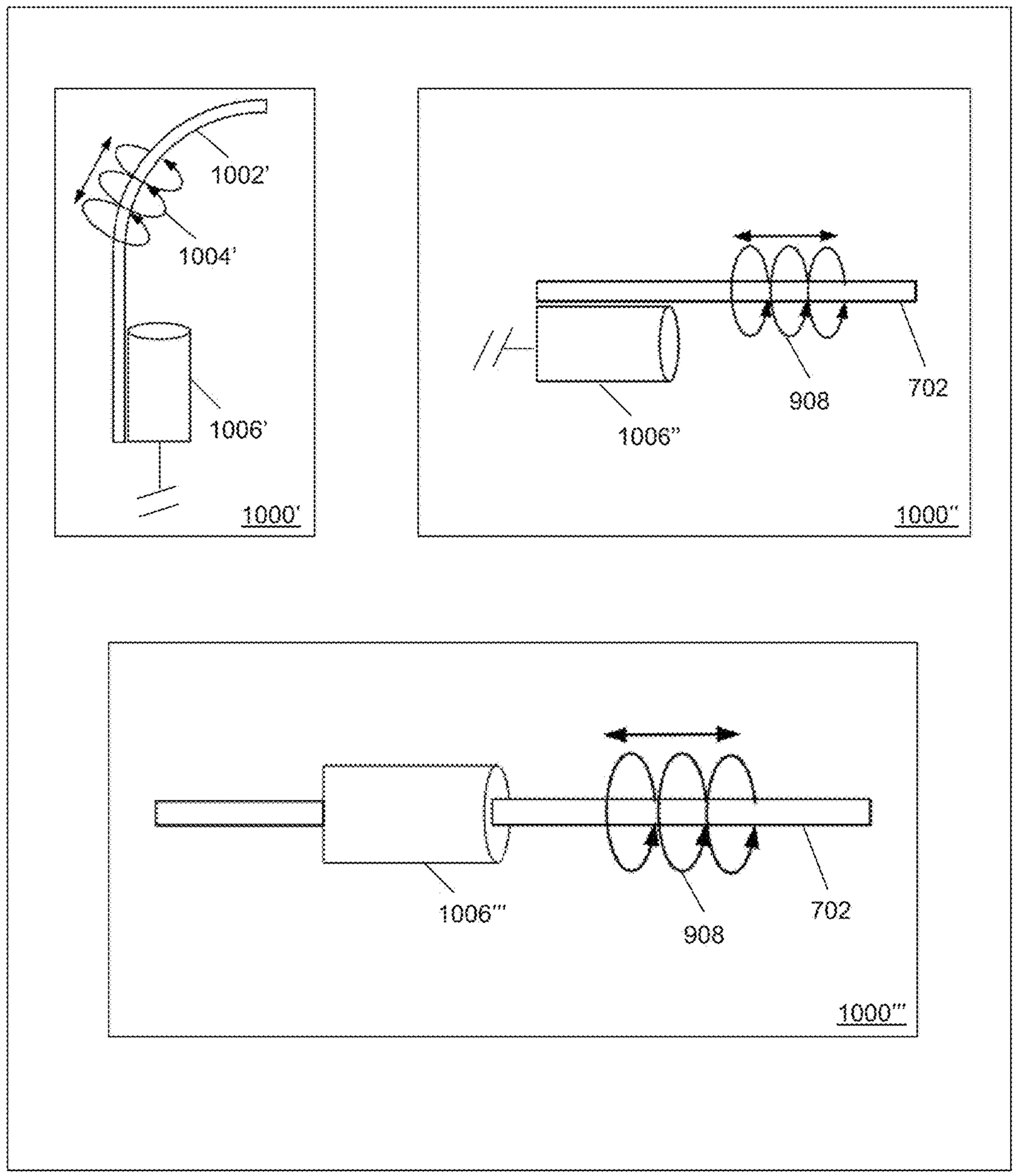

FIG. 10B

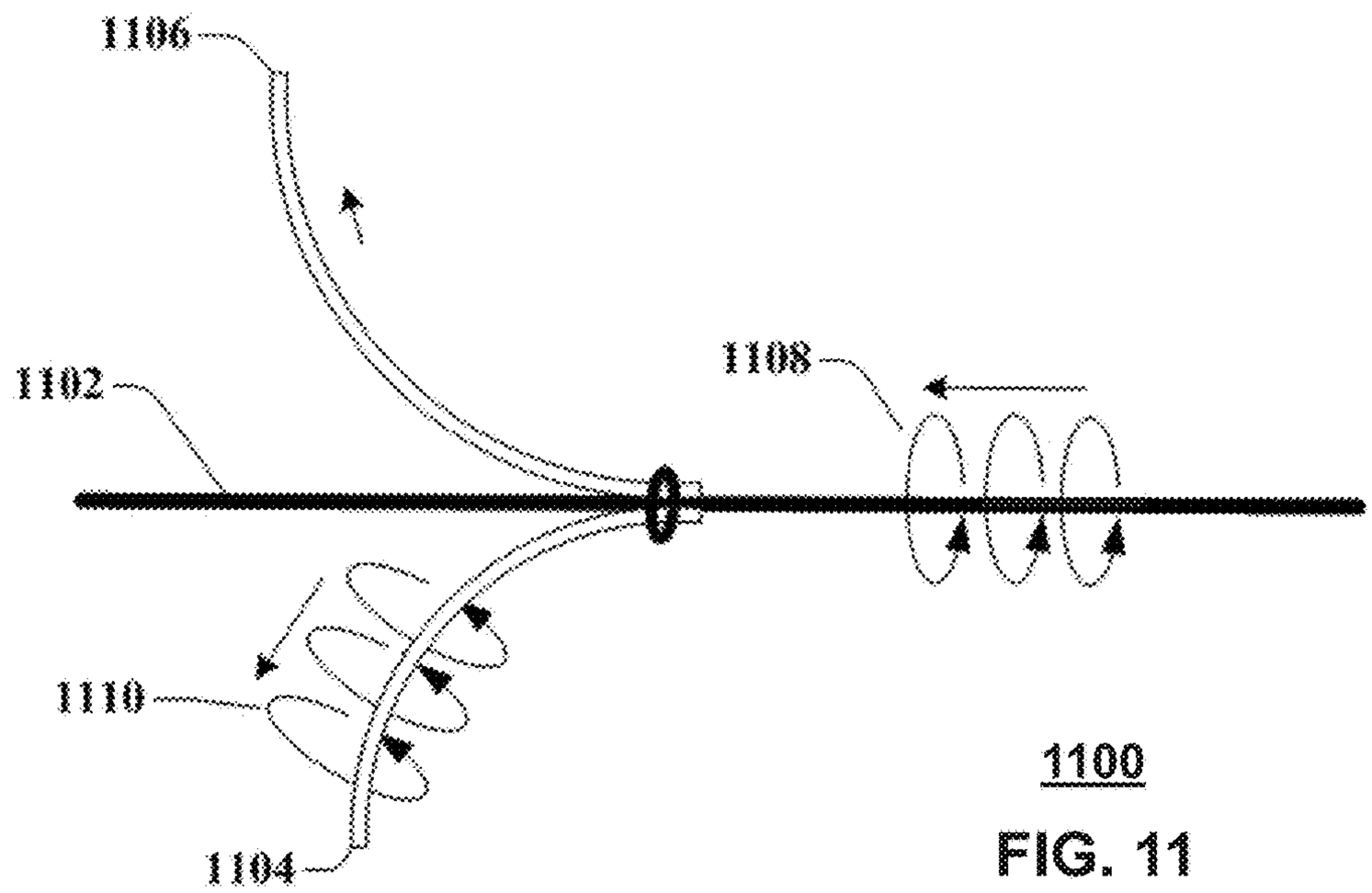

1100

FIG. 11

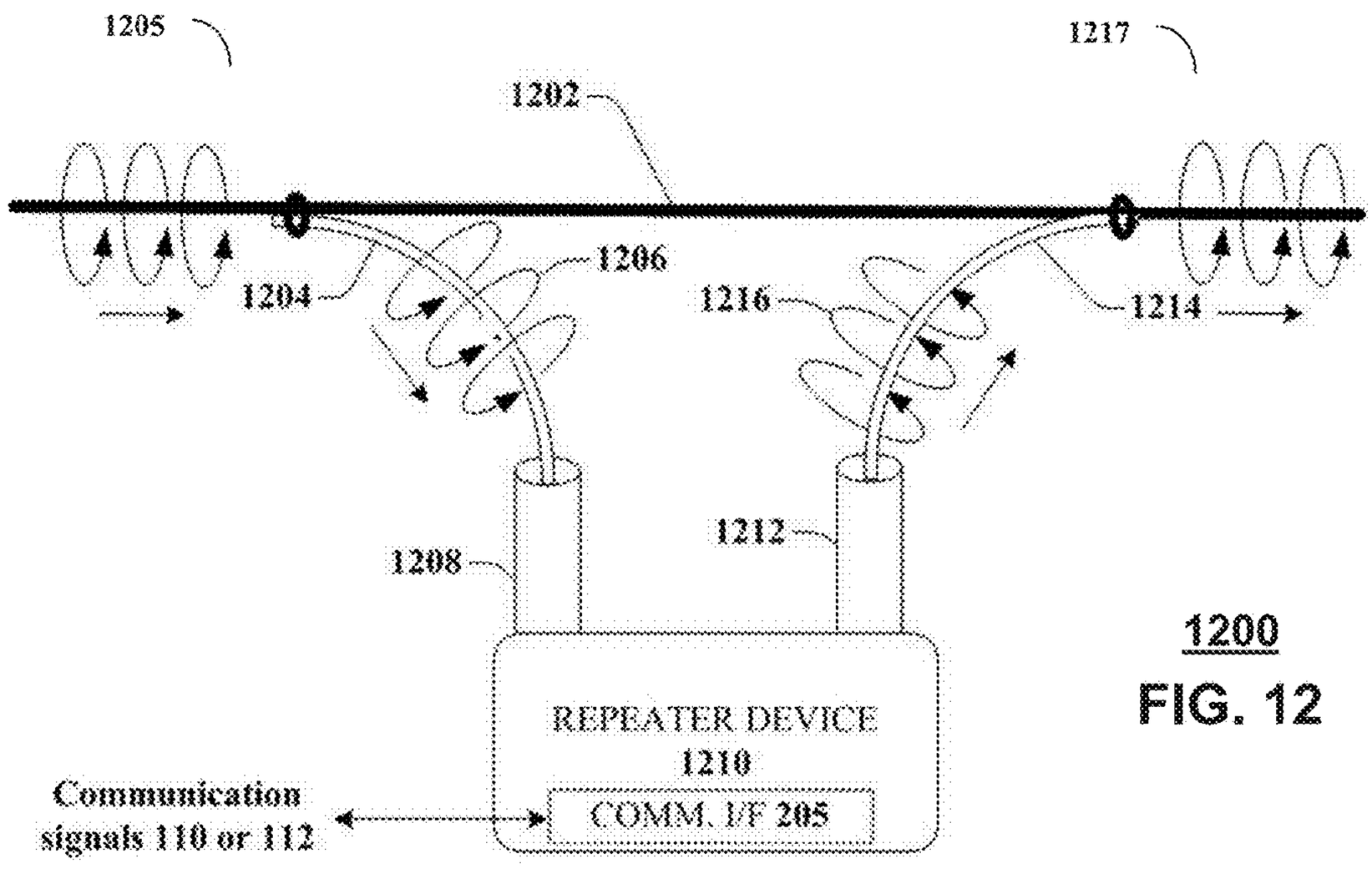

1200

FIG. 12

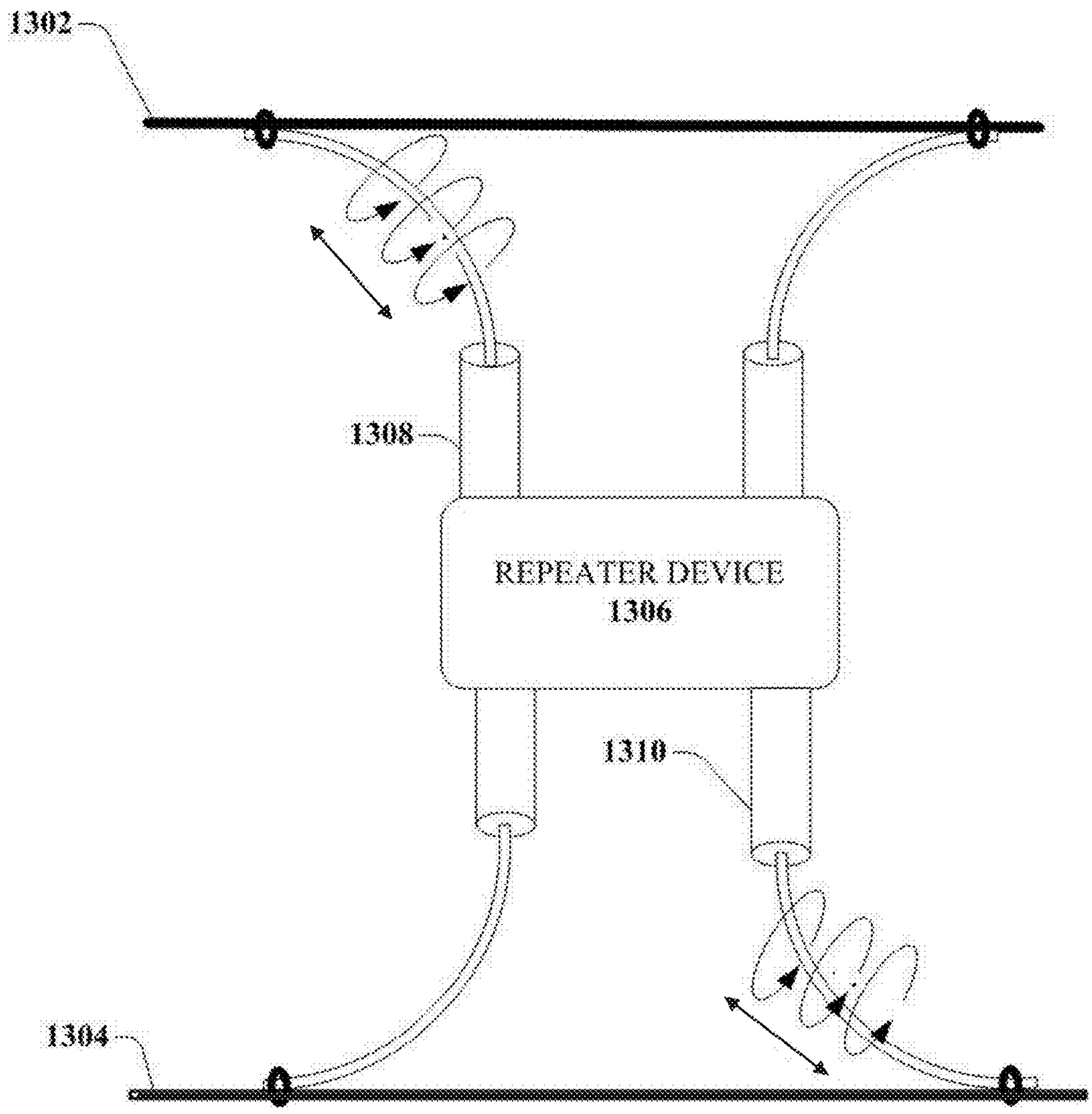

1300

FIG. 13

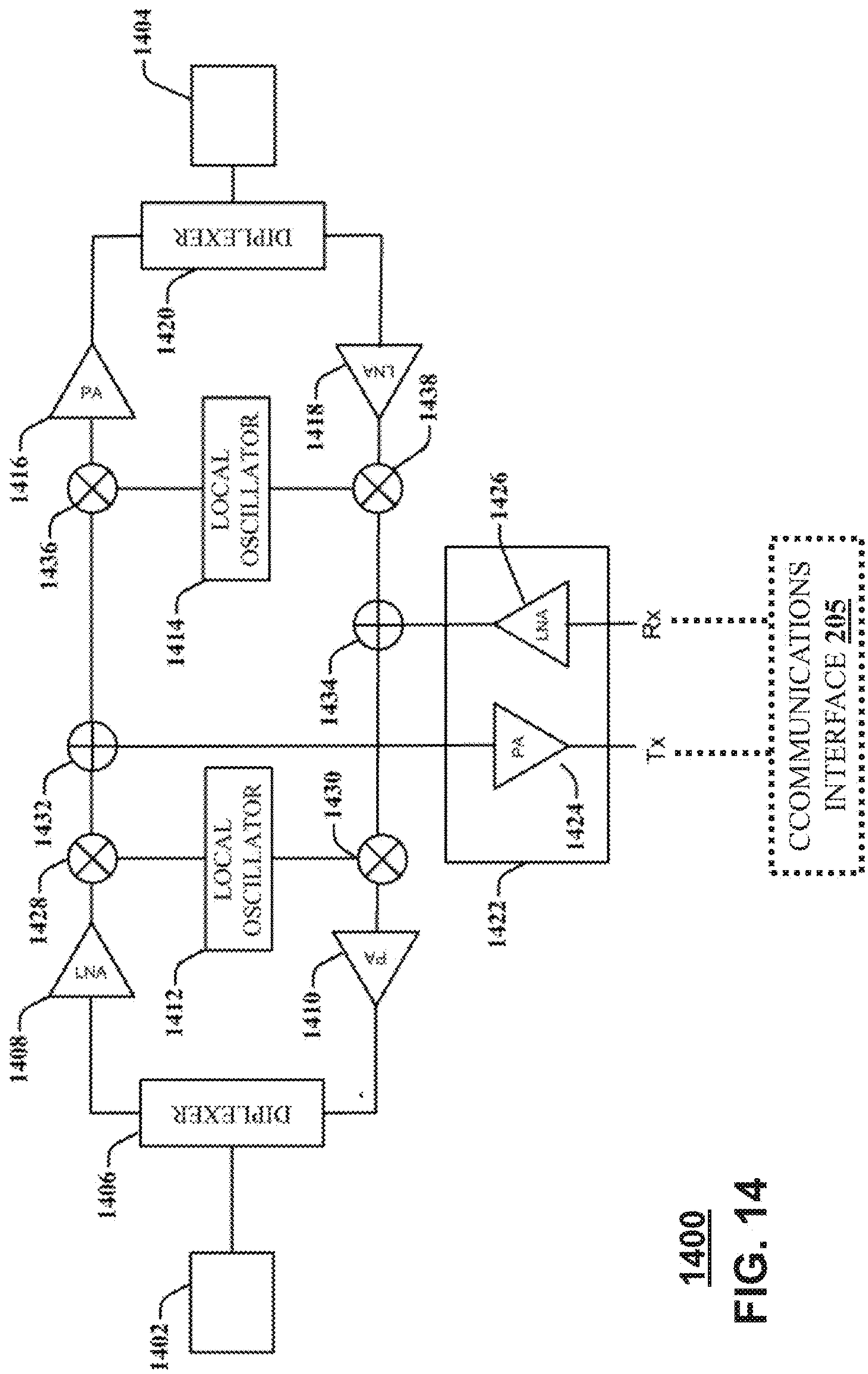
1404
DIPLEXER
1420
PA
1416
1436
LOCAL OSCILLATOR
1414
1418
SN1
1438
1426
LNA
Rx
1434
PA
Tx
1424
1432
1430
LOCAL OSCILLATOR
1412
1428
LNA
1408
1410
PA
1422
DIPLEXER
1406
1402
COMMUNICATIONS INTERFACE 205

1400
FIG. 14

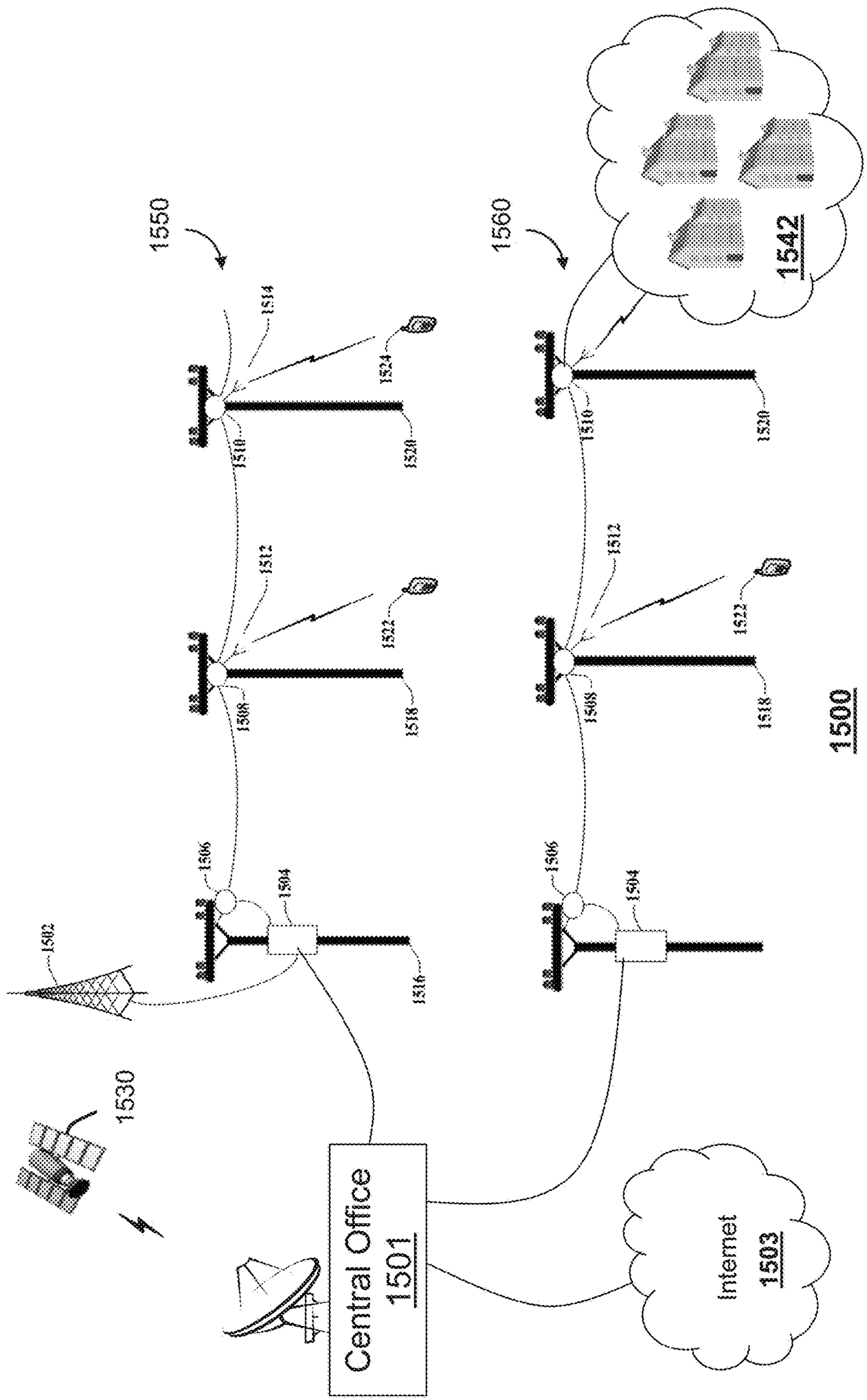
1550
1560
1542
1514
1524
1510
1520
1512
1522
1508
1518
1506
1504
1516
1502
1530
Central Office
1501
Internet
1503

1500
FIG. 15

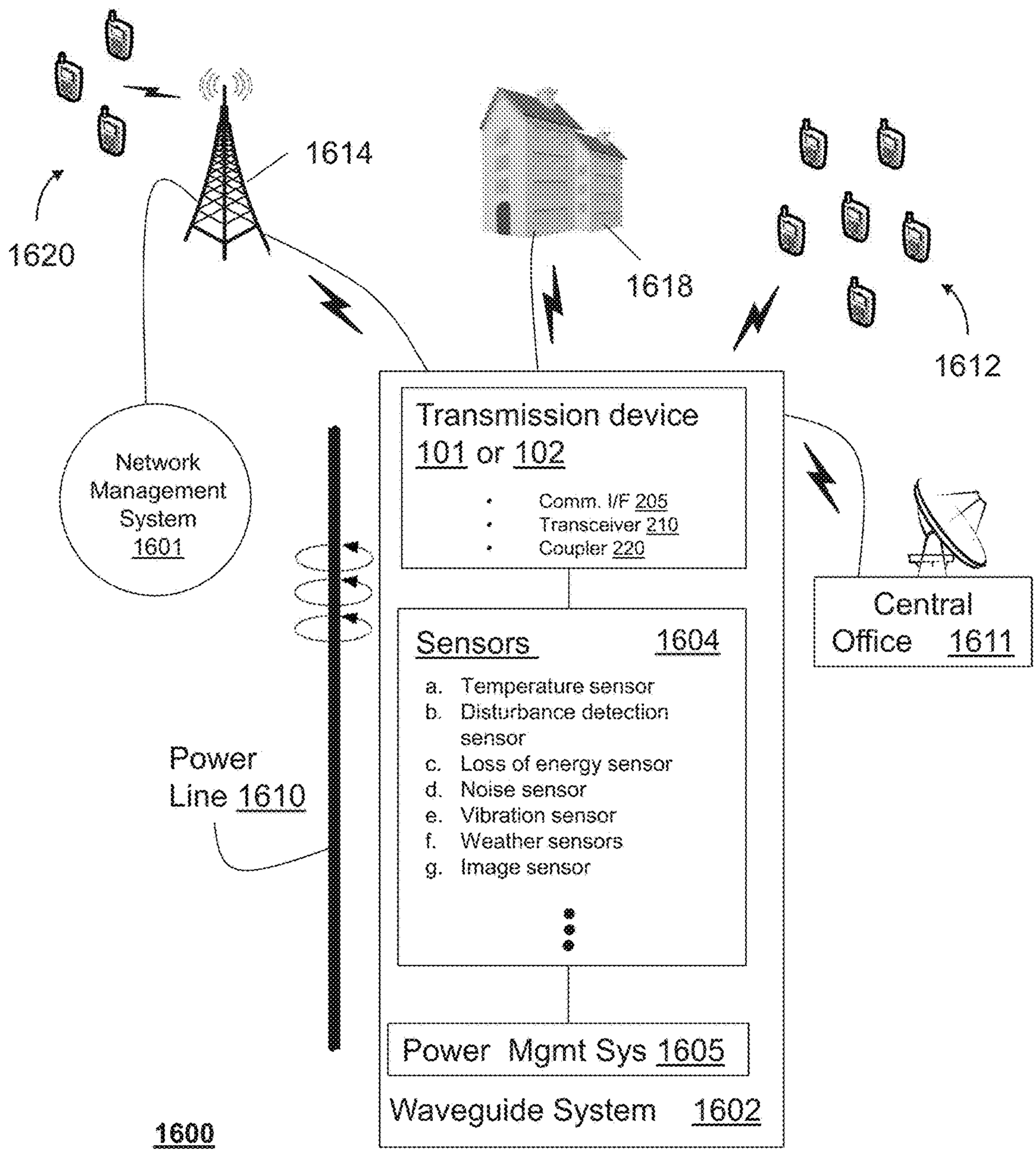
1614
1620
1618
1612
Network Management System 1601
Transmission device 101 or 102
Comm. I/F 205
Transceiver 210
Coupler 220
Central Office 1611
Sensors 1604
a. Temperature sensor
b. Disturbance detection sensor
c. Loss of energy sensor
d. Noise sensor
e. Vibration sensor
f. Weather sensors
g. Image sensor
Power Line 1610
Power Mgmt Sys 1605
Waveguide System 1602
1600

FIG. 16A

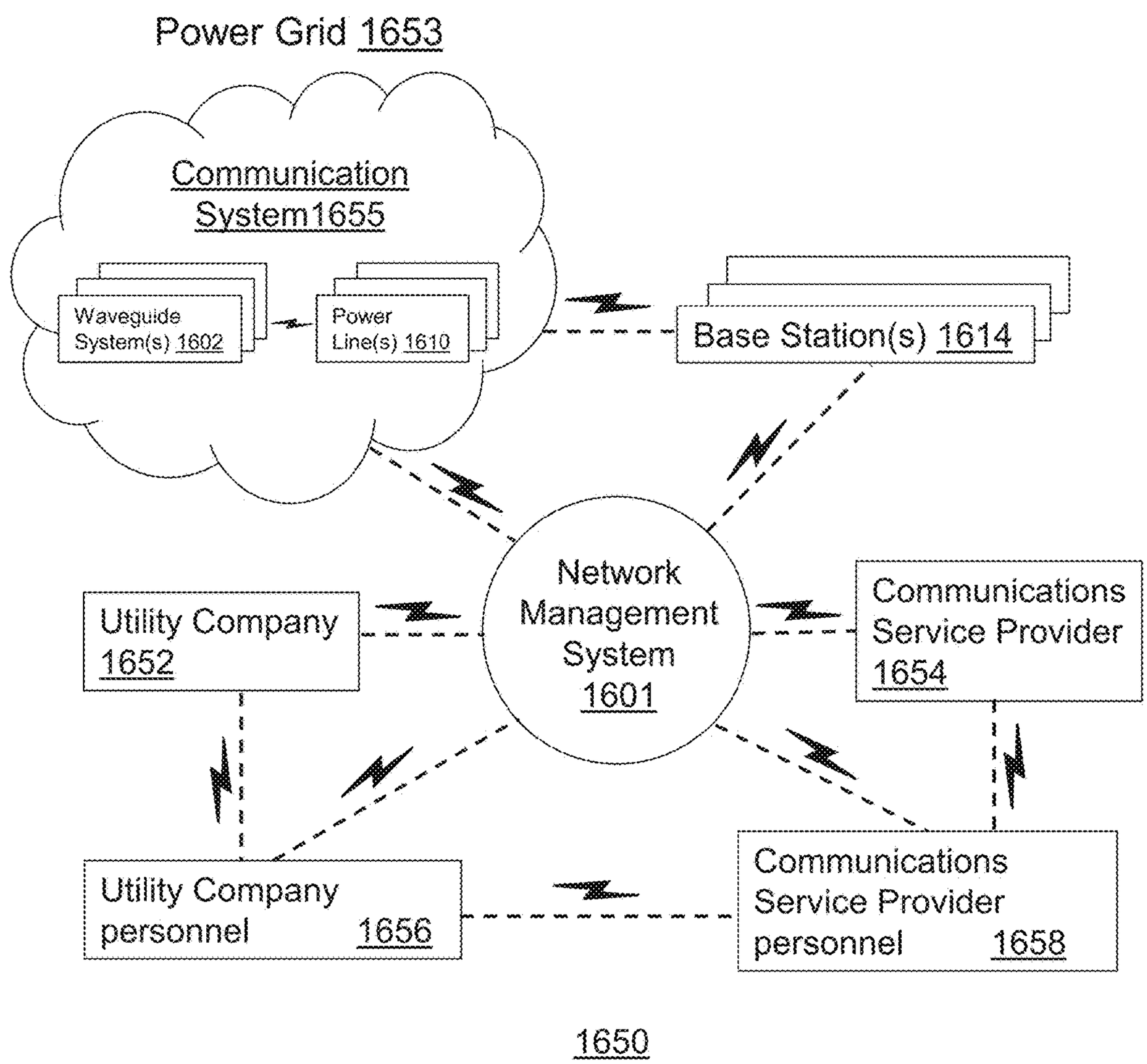
Power Grid 1653
Communication System1655
Waveguide System(s) 1602
Power Line(s) 1610
Base Station(s) 1614
Network Management System 1601
Utility Company 1652
Communications Service Provider 1654
Utility Company personnel 1656
Communications Service Provider personnel 1658
1650

FIG. 16B

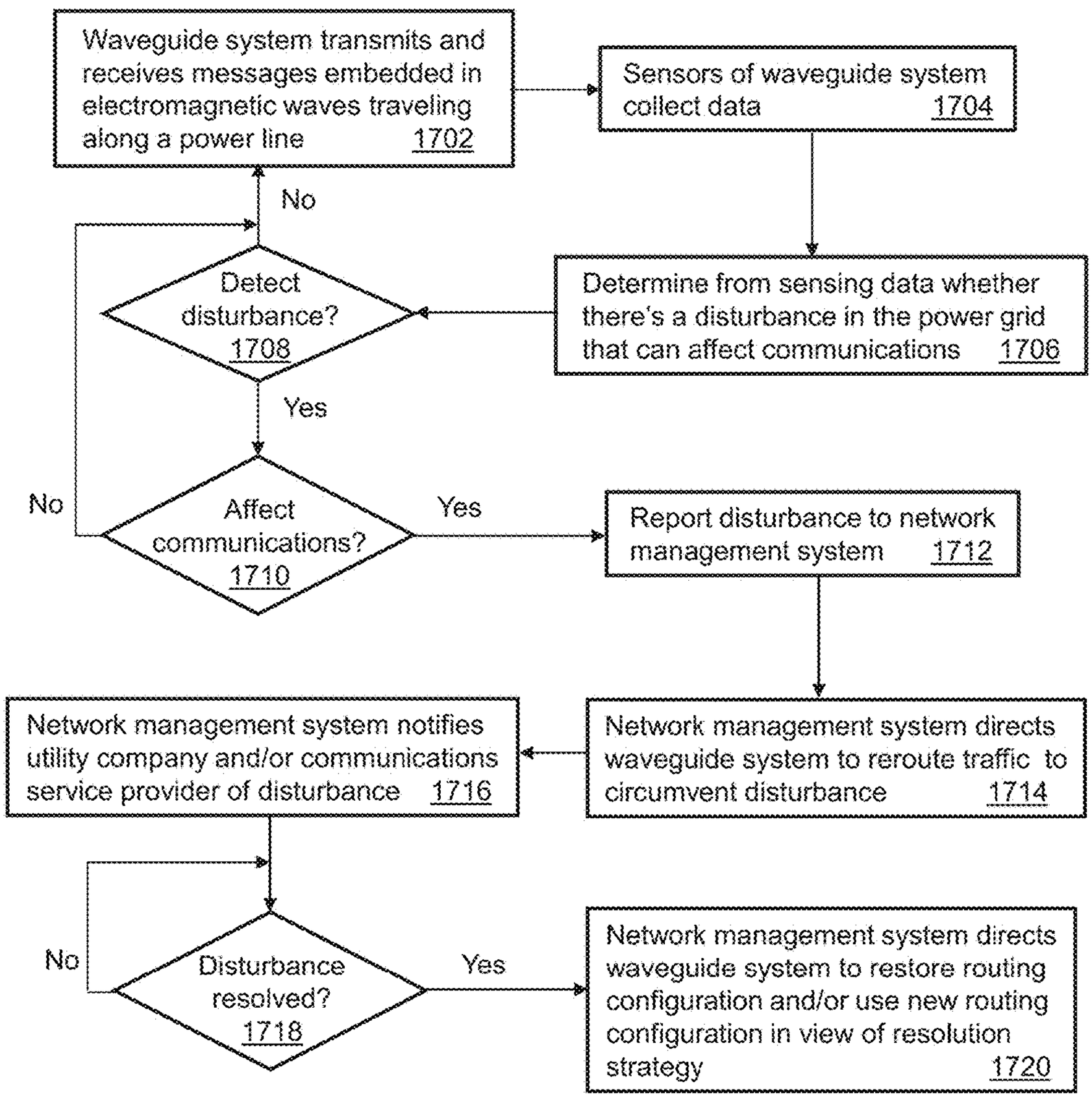
Waveguide system transmits and receives messages embedded in electromagnetic waves traveling along a power line 1702
Sensors of waveguide system collect data 1704
Determine from sensing data whether there's a disturbance in the power grid that can affect communications 1706
Detect disturbance? 1708
No
Yes
Affect communications? 1710
No
Yes
Report disturbance to network management system 1712
Network management system directs waveguide system to reroute traffic to circumvent disturbance 1714
Network management system notifies utility company and/or communications service provider of disturbance 1716
Disturbance resolved? 1718
No
Yes
Network management system directs waveguide system to restore routing configuration and/or use new routing configuration in view of resolution strategy 1720

1700

FIG. 17A

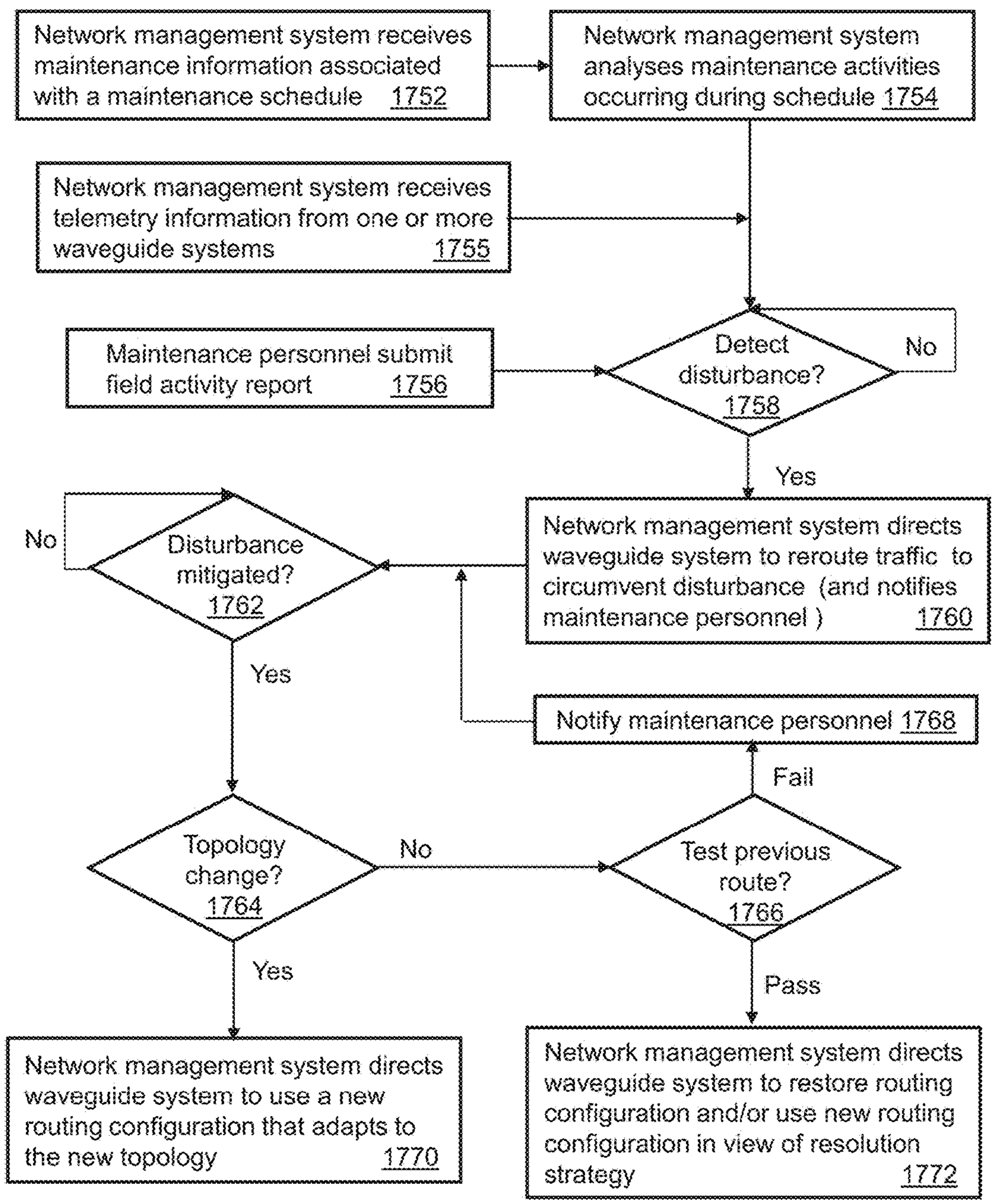
Network management system receives maintenance information associated with a maintenance schedule 1752
Network management system analyses maintenance activities occurring during schedule 1754
Network management system receives telemetry information from one or more waveguide systems 1755
Maintenance personnel submit field activity report 1756
Detect disturbance? 1758
No
Yes
Network management system directs waveguide system to reroute traffic to circumvent disturbance (and notifies maintenance personnel) 1760
No
Disturbance mitigated? 1762
Yes
Notify maintenance personnel 1768
Fail
Topology change? 1764
No
Test previous route? 1766
Yes
Pass
Network management system directs waveguide system to use a new routing configuration that adapts to the new topology 1770
Network management system directs waveguide system to restore routing configuration and/or use new routing configuration in view of resolution strategy 1772

1750

FIG. 17B

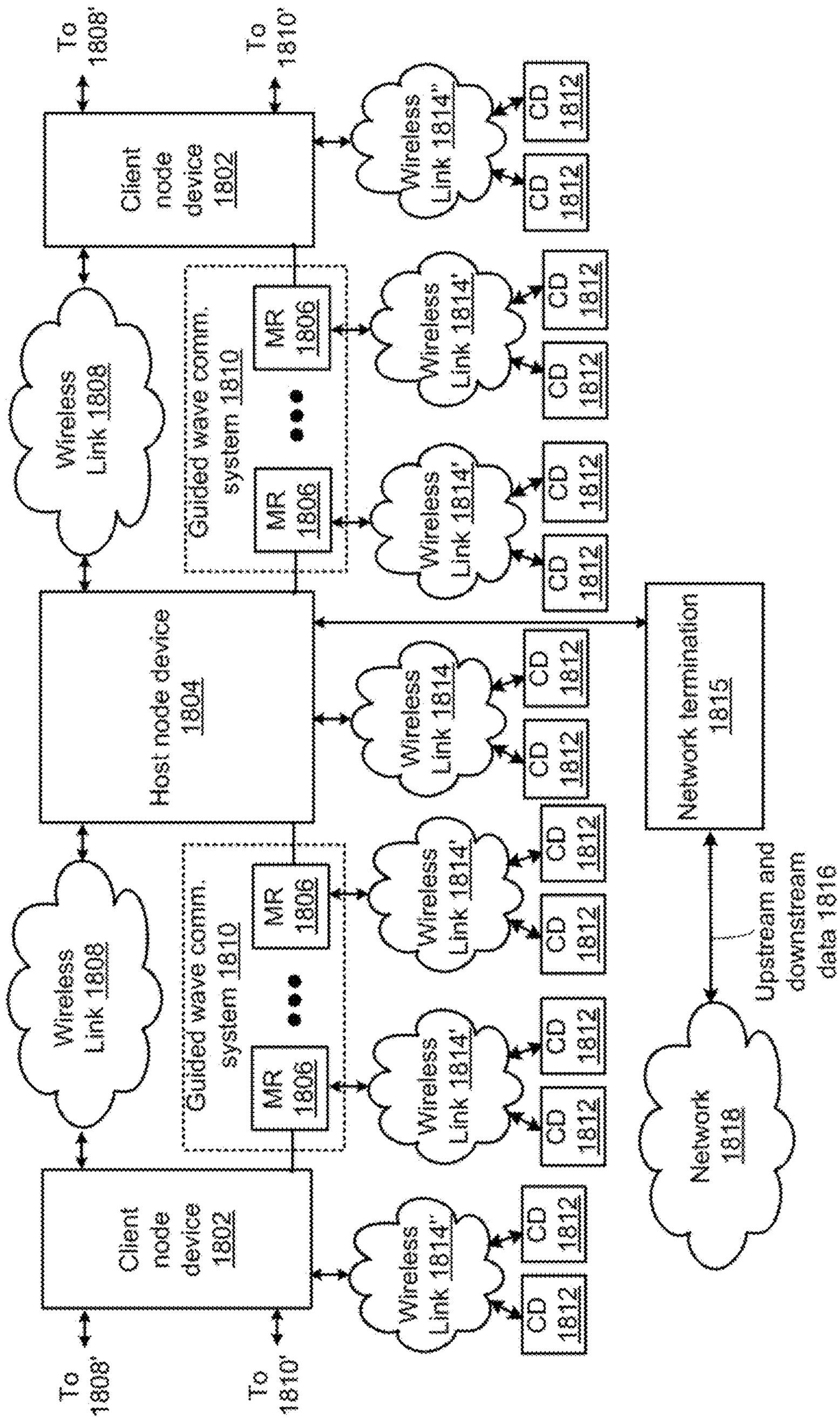
To 1808'
To 1810'
Client node device 1802
Wireless Link 1808
Guided wave comm. system 1810
MR 1806
Wireless Link 1814''
Wireless Link 1814'
Wireless Link 1814
CD 1812
Host node device 1804
Network termination 1815
Upstream and downstream data 1816
Network 1818

FIG. 18A

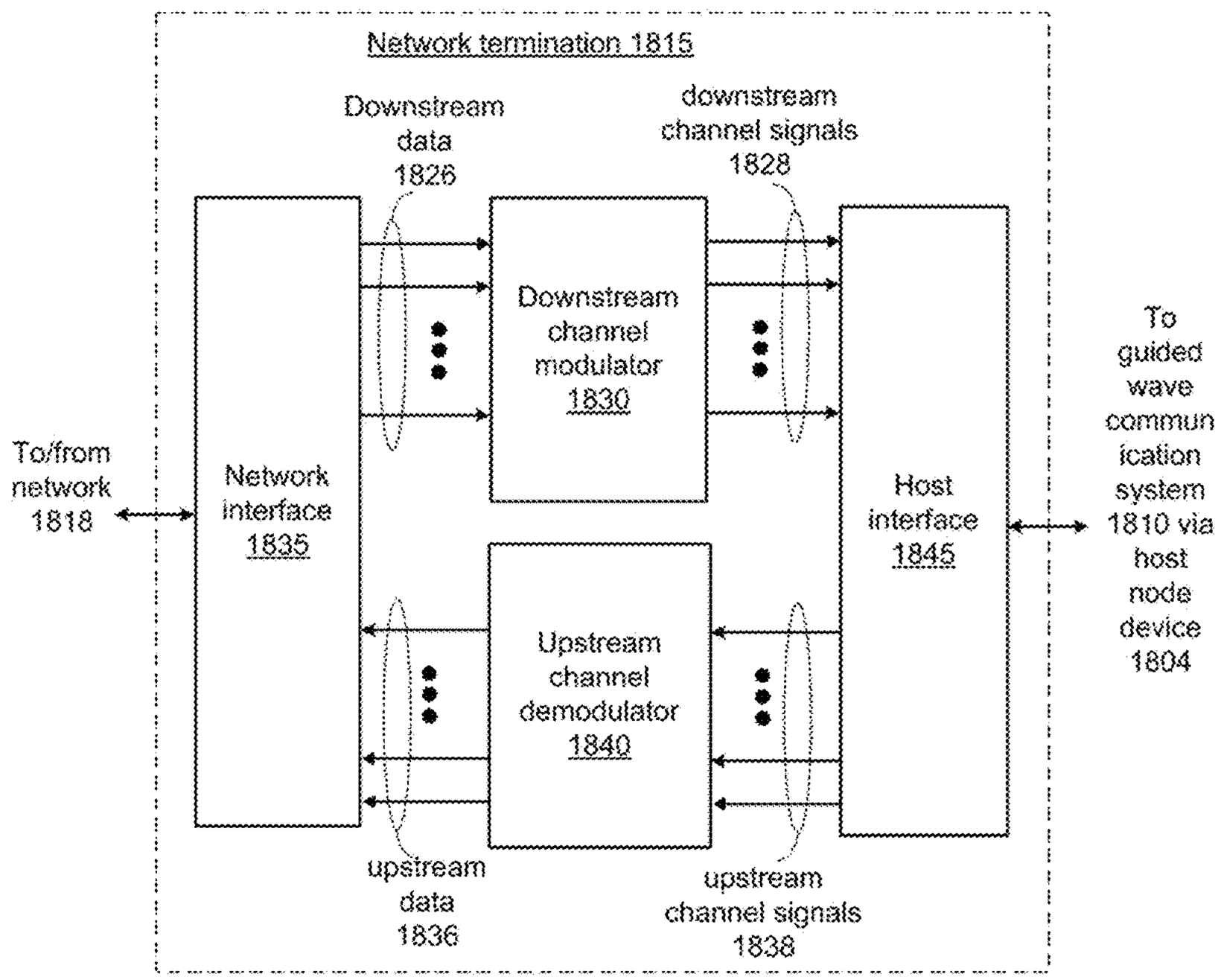
Network termination 1815
Downstream data 1826
downstream channel signals 1828
Downstream channel modulator 1830
To/from network 1818
Network interface 1835
Host interface 1845
To guided wave communication system 1810 via host node device 1804
Upstream channel demodulator 1840
upstream data 1836
upstream channel signals 1838

1820

FIG. 18B

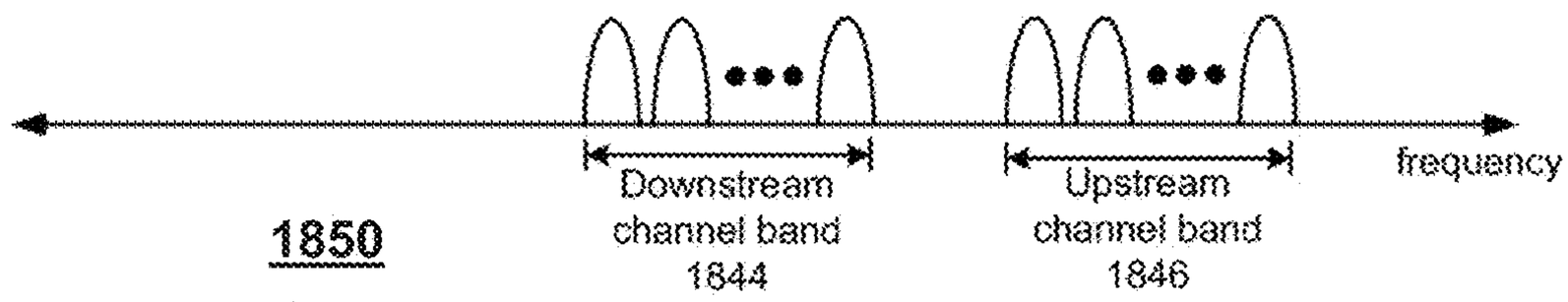

1850

FIG. 18C

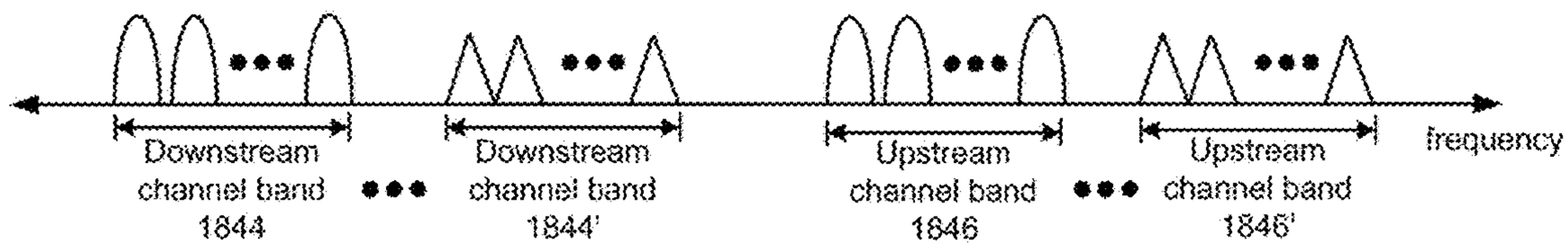

1852

FIG. 18D

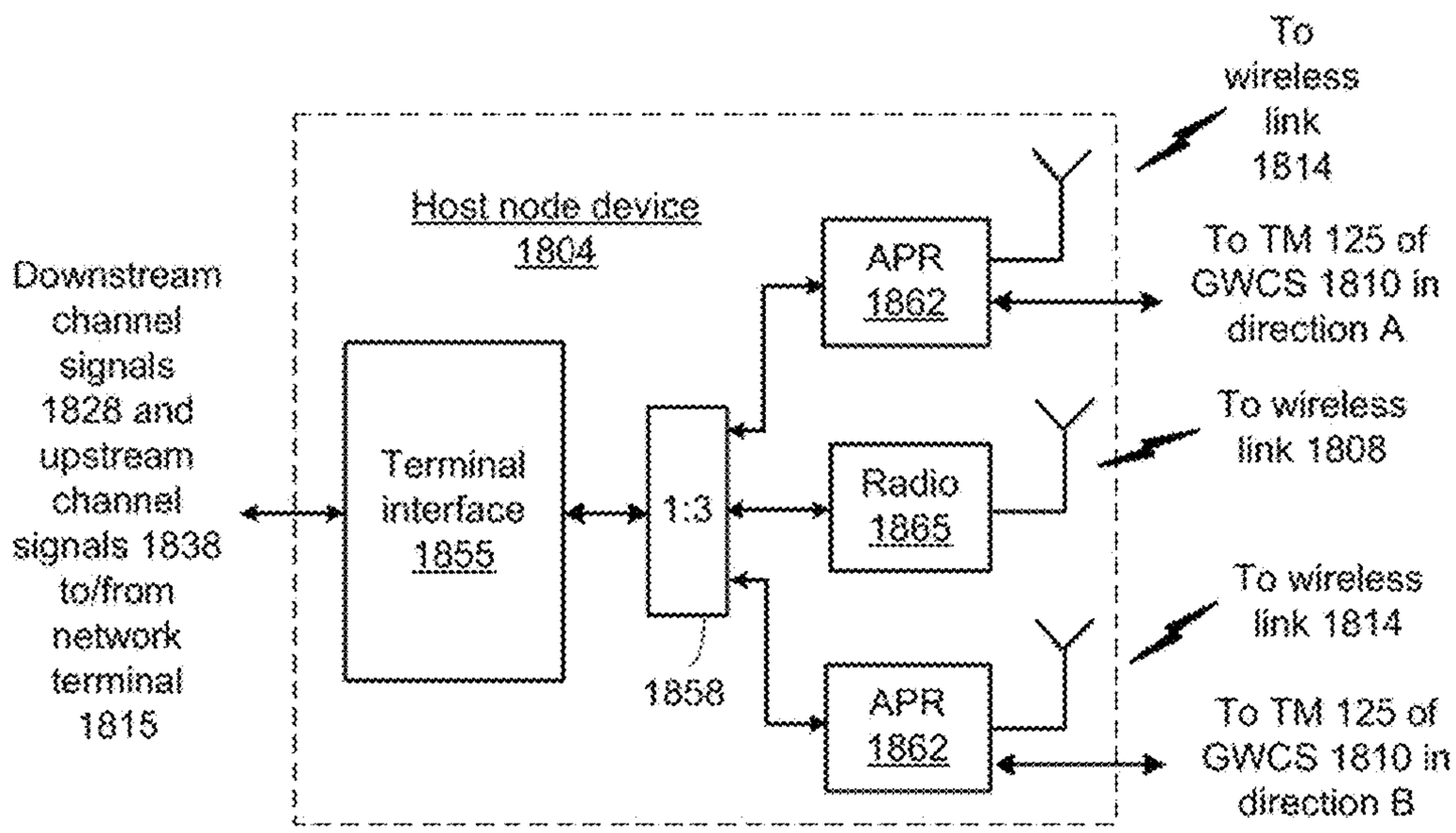

1860

FIG. 18E

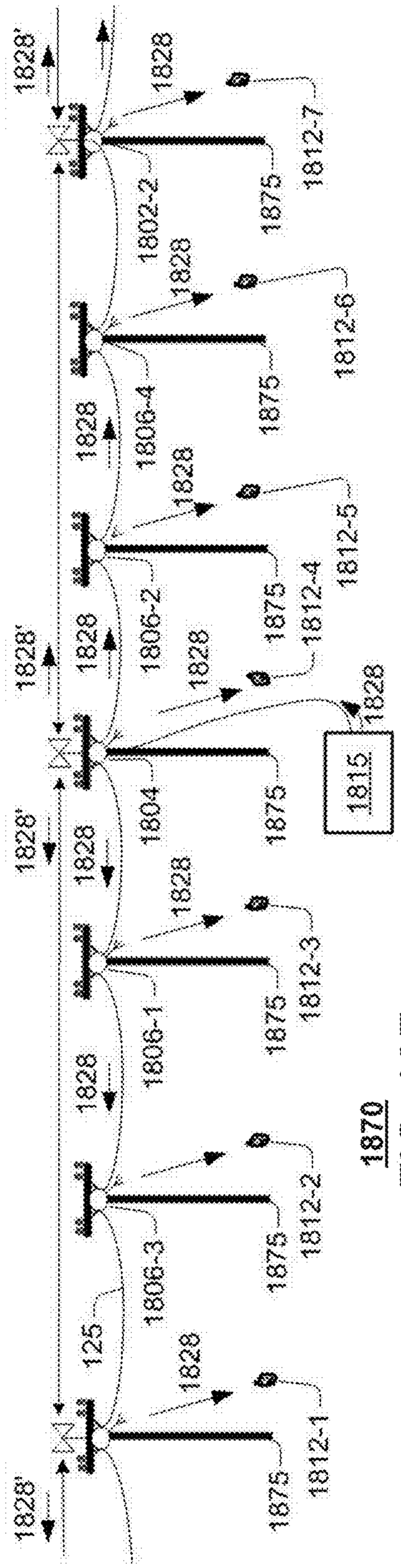

1870 FIG. 18F

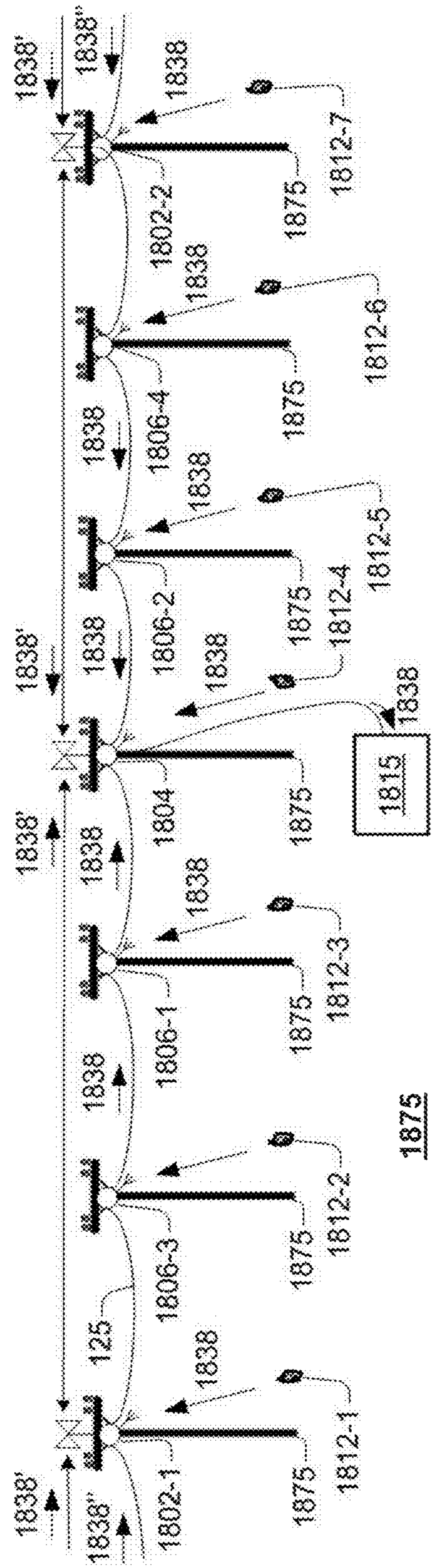

1875 FIG. 18G

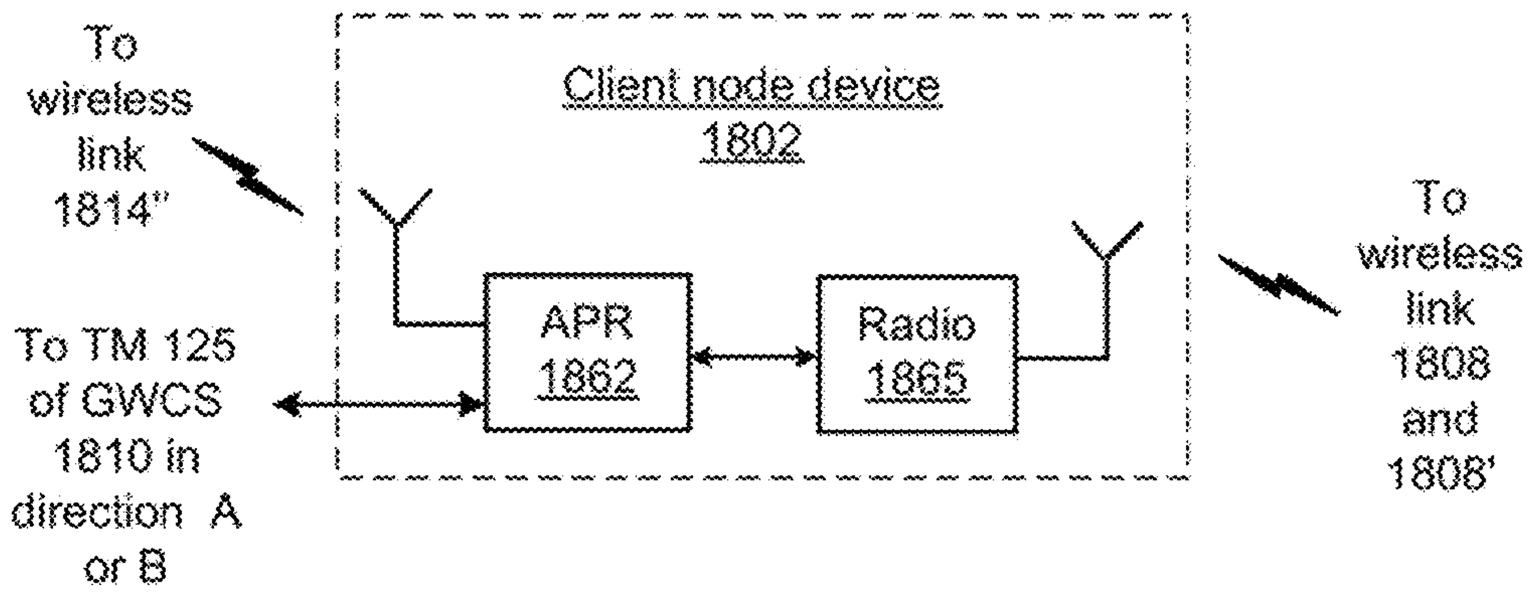

1880

FIG. 18H

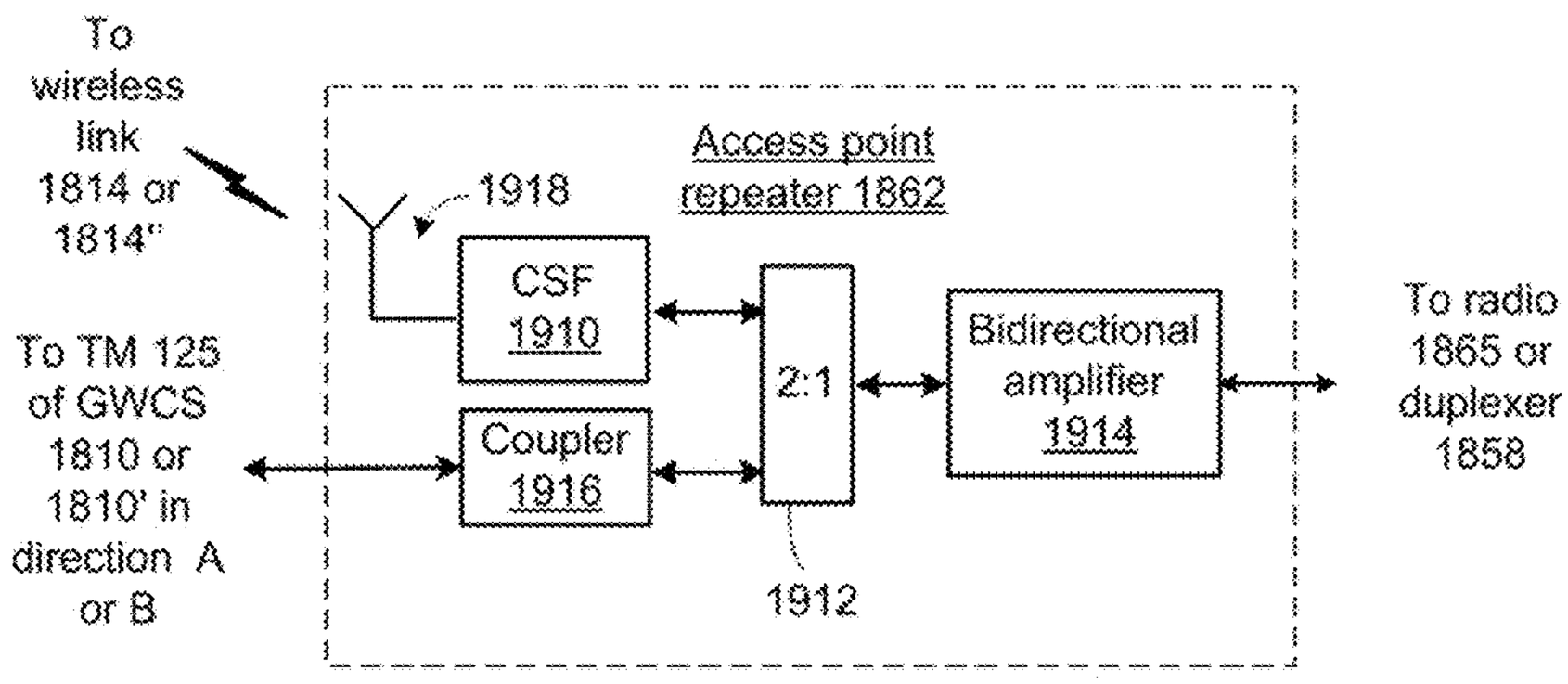

1900

FIG. 19A

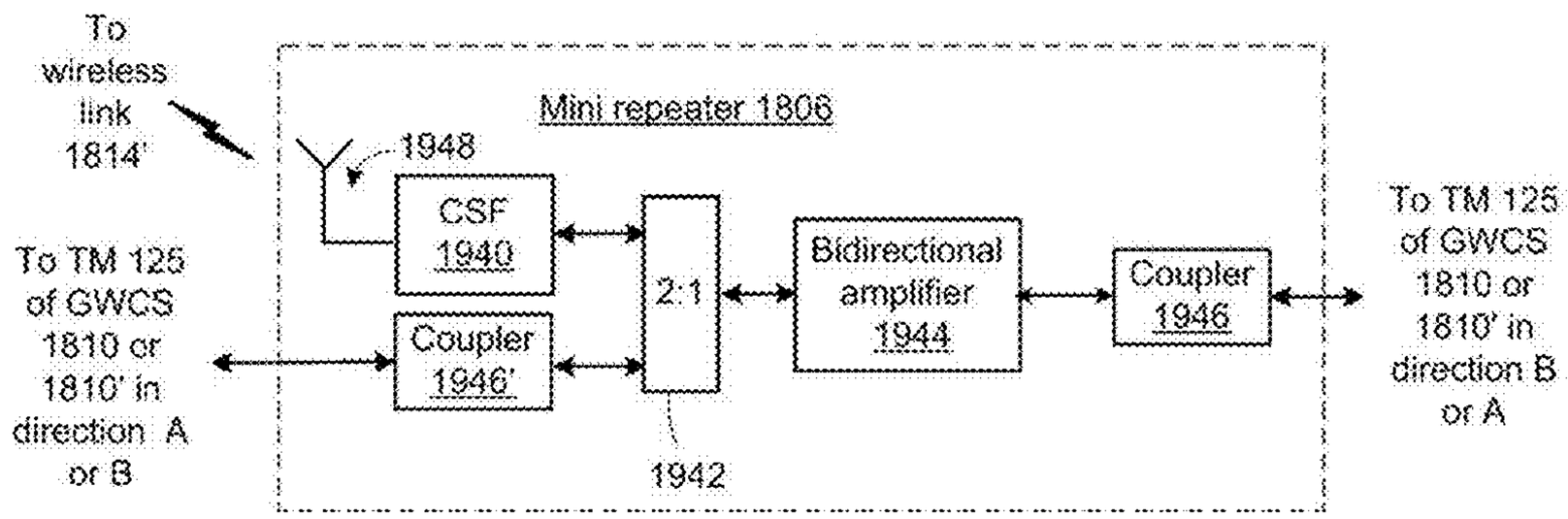

1925

FIG. 19B

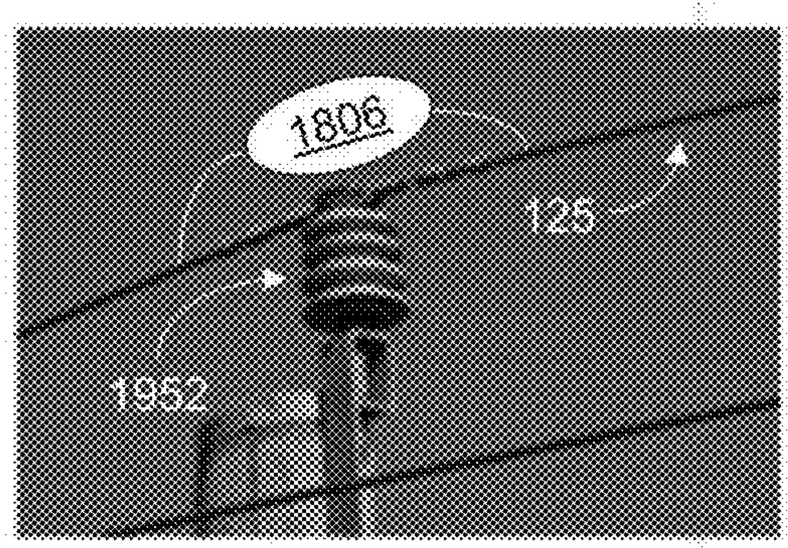

1950

FIG. 19C

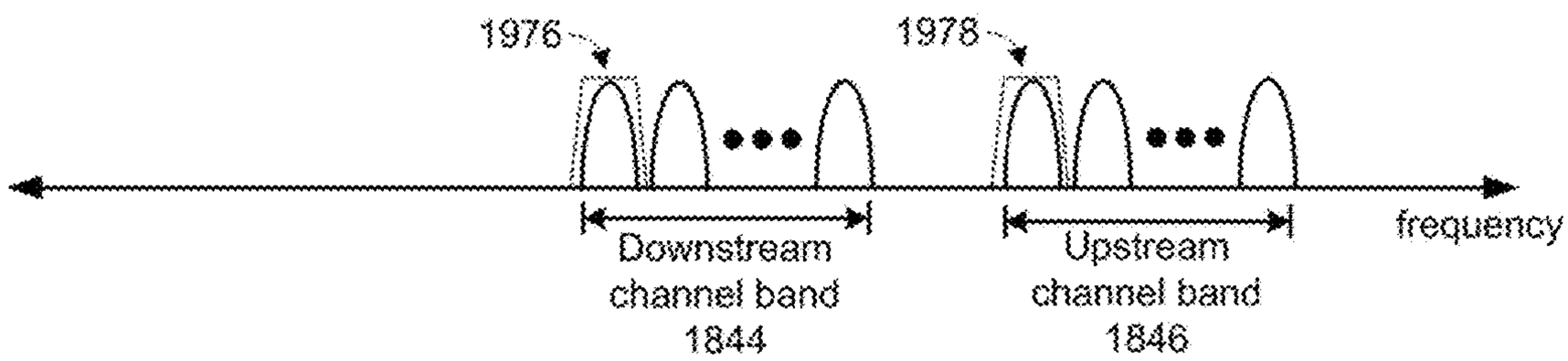

1975

FIG. 19D

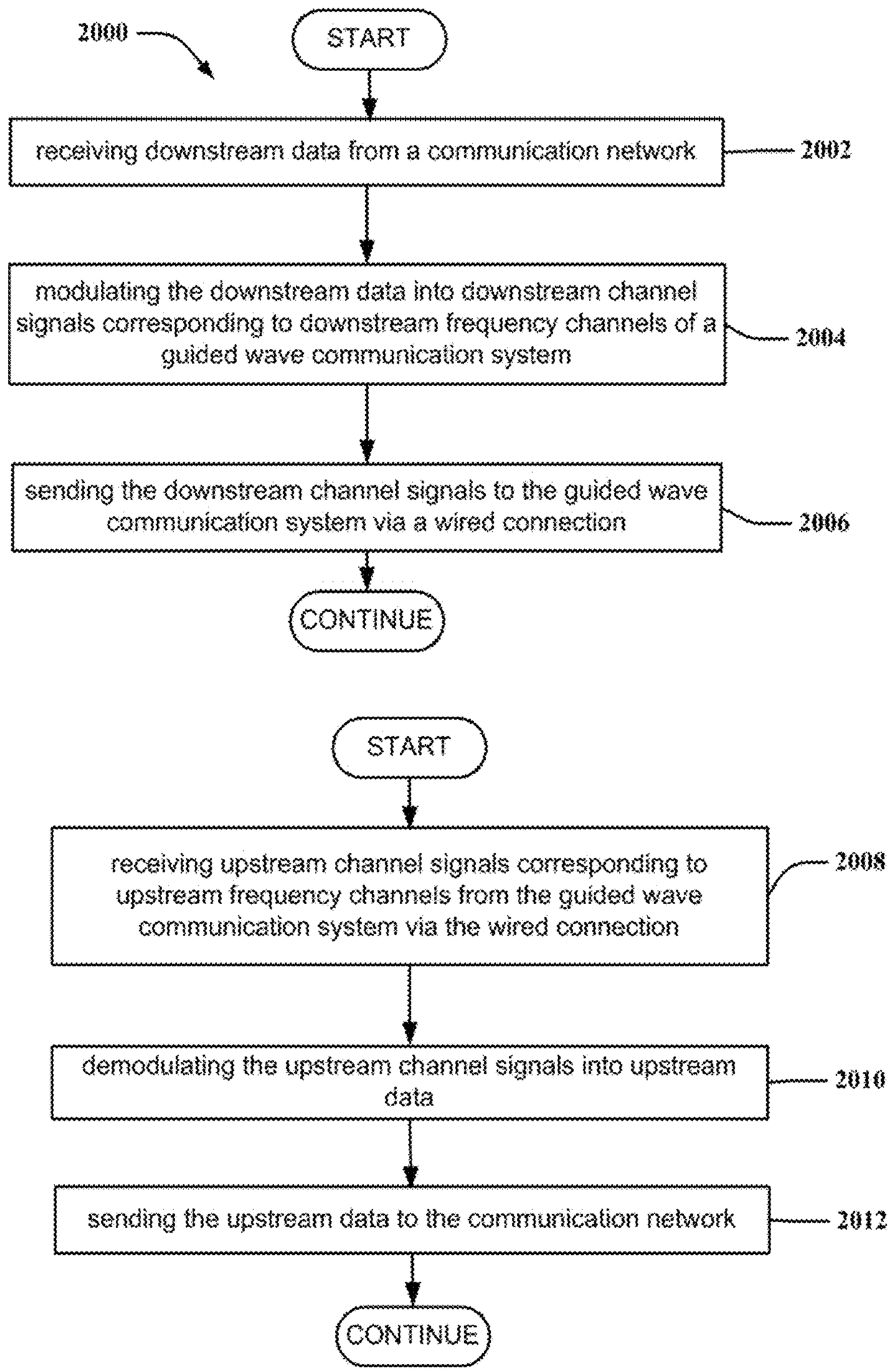
2000
START
receiving downstream data from a communication network
2002
modulating the downstream data into downstream channel signals corresponding to downstream frequency channels of a guided wave communication system
2004
sending the downstream channel signals to the guided wave communication system via a wired connection
2006
CONTINUE
START
receiving upstream channel signals corresponding to upstream frequency channels from the guided wave communication system via the wired connection
2008
demodulating the upstream channel signals into upstream data
2010
sending the upstream data to the communication network
2012
CONTINUE

2000

FIG. 20A

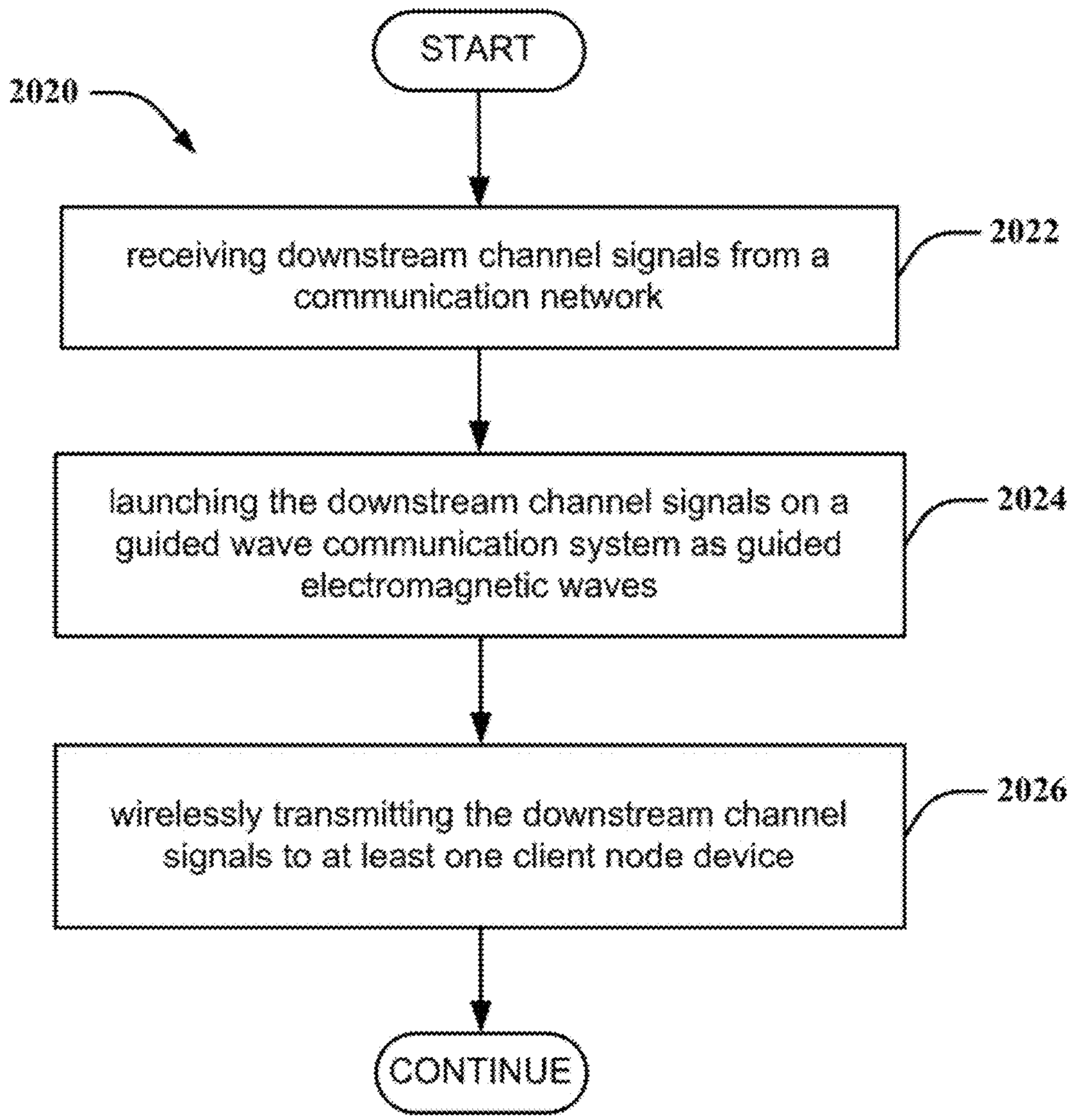
START
2020
receiving downstream channel signals from a communication network
2022
launching the downstream channel signals on a guided wave communication system as guided electromagnetic waves
2024
wirelessly transmitting the downstream channel signals to at least one client node device
2026
CONTINUE

2020

FIG. 20B

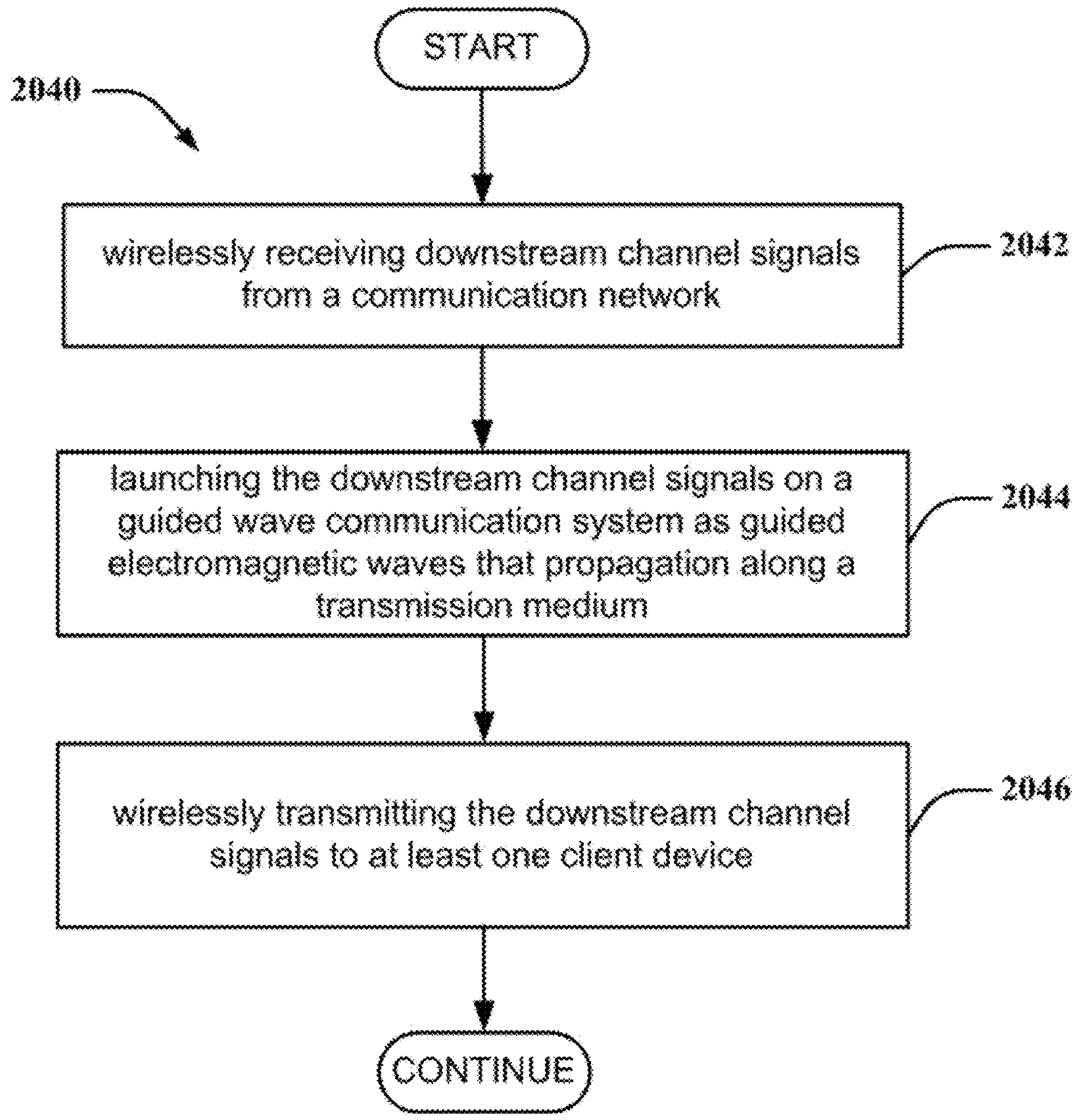
START
2040
wirelessly receiving downstream channel signals from a communication network
2042
launching the downstream channel signals on a guided wave communication system as guided electromagnetic waves that propagation along a transmission medium
2044
wirelessly transmitting the downstream channel signals to at least one client device
2046
CONTINUE

2040

FIG. 20C

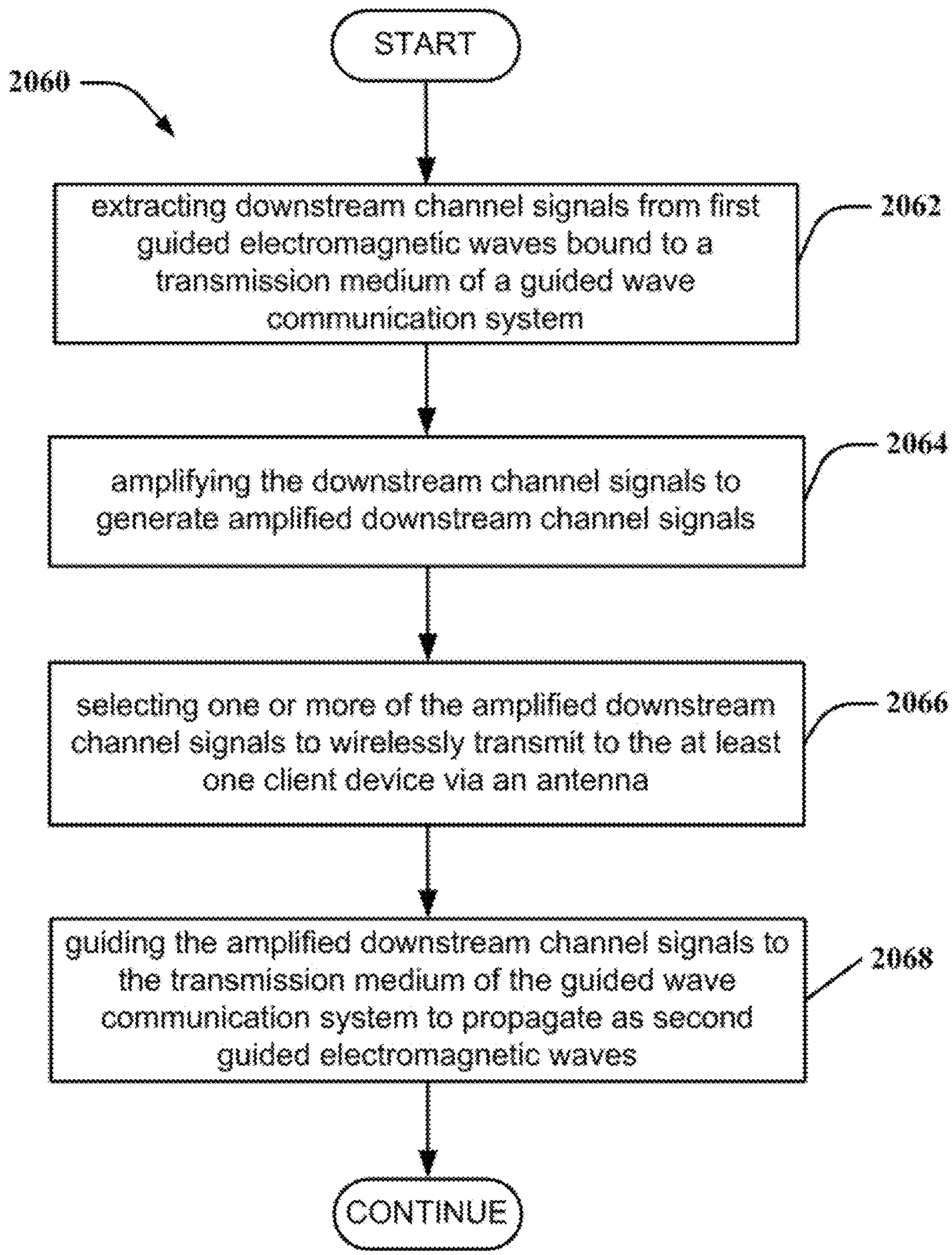
START
2060
extracting downstream channel signals from first guided electromagnetic waves bound to a transmission medium of a guided wave communication system
2062
amplifying the downstream channel signals to generate amplified downstream channel signals
2064
selecting one or more of the amplified downstream channel signals to wirelessly transmit to the at least one client device via an antenna
2066
guiding the amplified downstream channel signals to the transmission medium of the guided wave communication system to propagate as second guided electromagnetic waves
2068
CONTINUE

2060

FIG. 20D

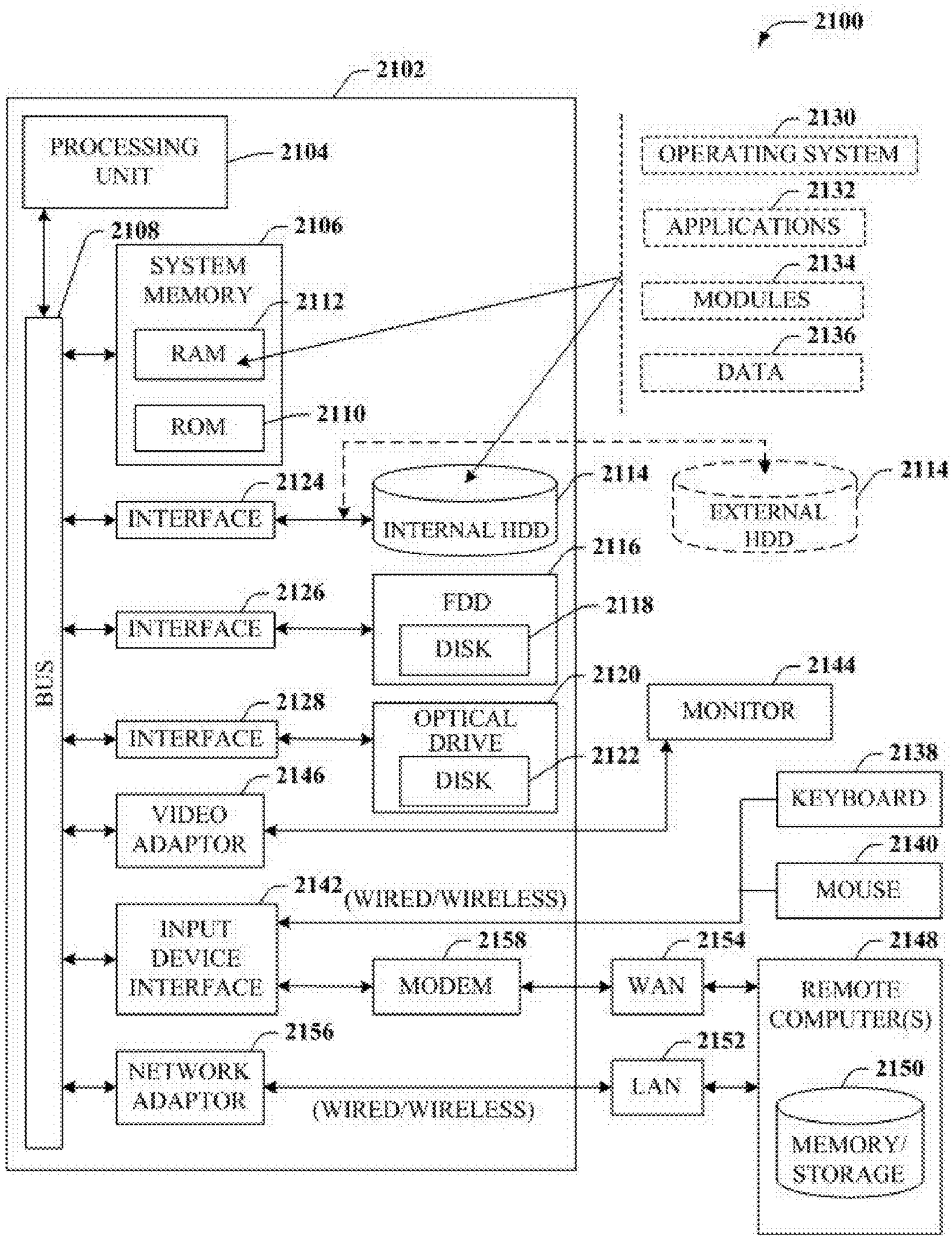
2100
2102
PROCESSING UNIT
2104
2108
2106
SYSTEM MEMORY
2112
RAM
ROM
2110
2130
OPERATING SYSTEM
2132
APPLICATIONS
2134
MODULES
2136
DATA
2124
INTERFACE
INTERNAL HDD
2114
EXTERNAL HDD
2114
2126
INTERFACE
FDD
DISK
2116
2118
BUS
2128
INTERFACE
OPTICAL DRIVE
DISK
2120
2122
2144
MONITOR
2146
VIDEO ADAPTOR
2138
KEYBOARD
2140
MOUSE
2142
(WIRED/WIRELESS)
INPUT DEVICE INTERFACE
2158
MODEM
2154
WAN
2148
REMOTE COMPUTER(S)
2156
NETWORK ADAPTOR
(WIRED/WIRELESS)
2152
LAN
2150
MEMORY/ STORAGE

FIG. 21

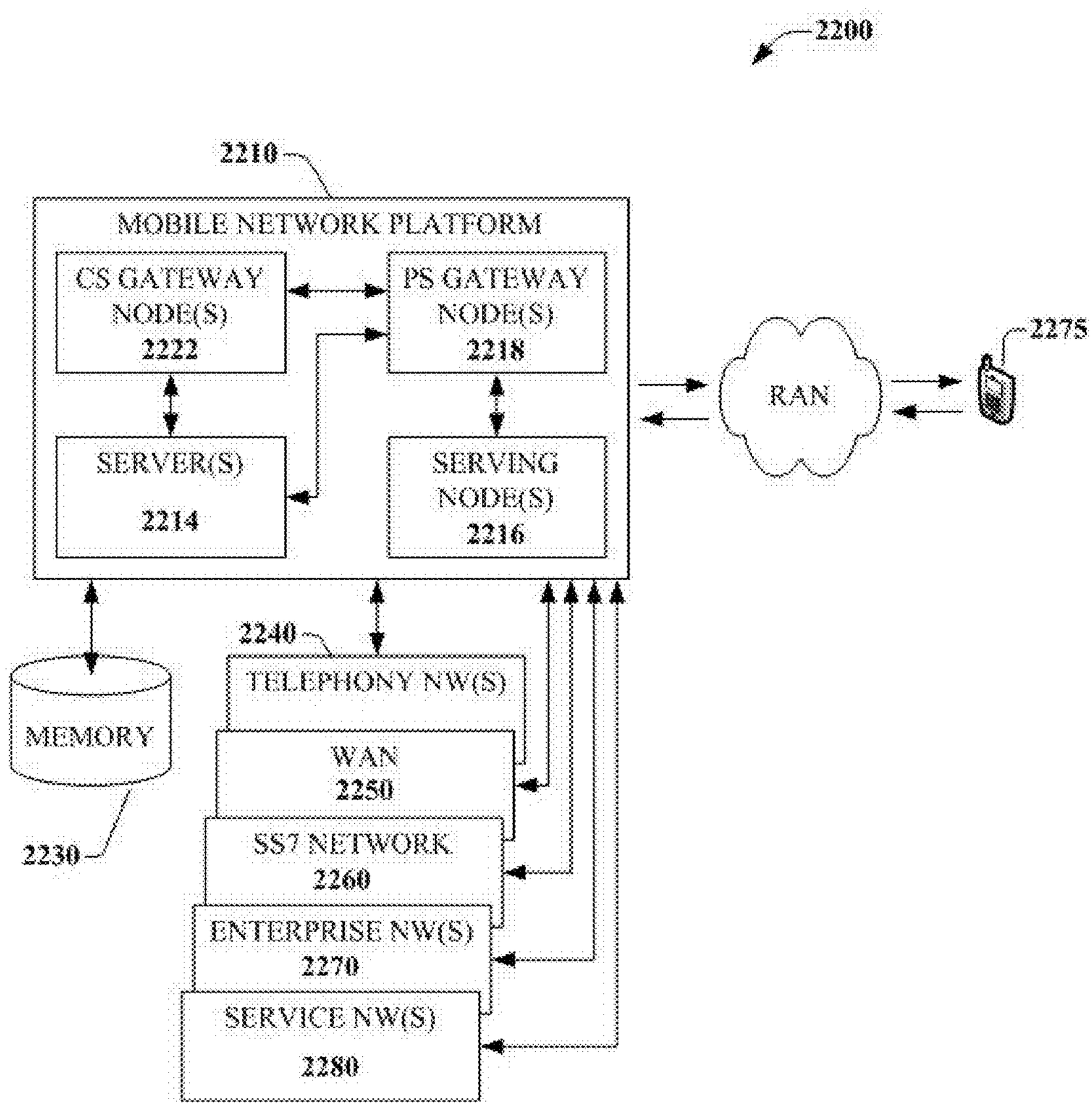
2200
2210
MOBILE NETWORK PLATFORM
CS GATEWAY NODE(S) 2222
PS GATEWAY NODE(S) 2218
SERVER(S) 2214
SERVING NODE(S) 2216
RAN
2275
2240
TELEPHONY NW(S)
MEMORY
WAN 2250
SS7 NETWORK 2260
ENTERPRISE NW(S) 2270
SERVICE NW(S) 2280
2230

FIG. 22

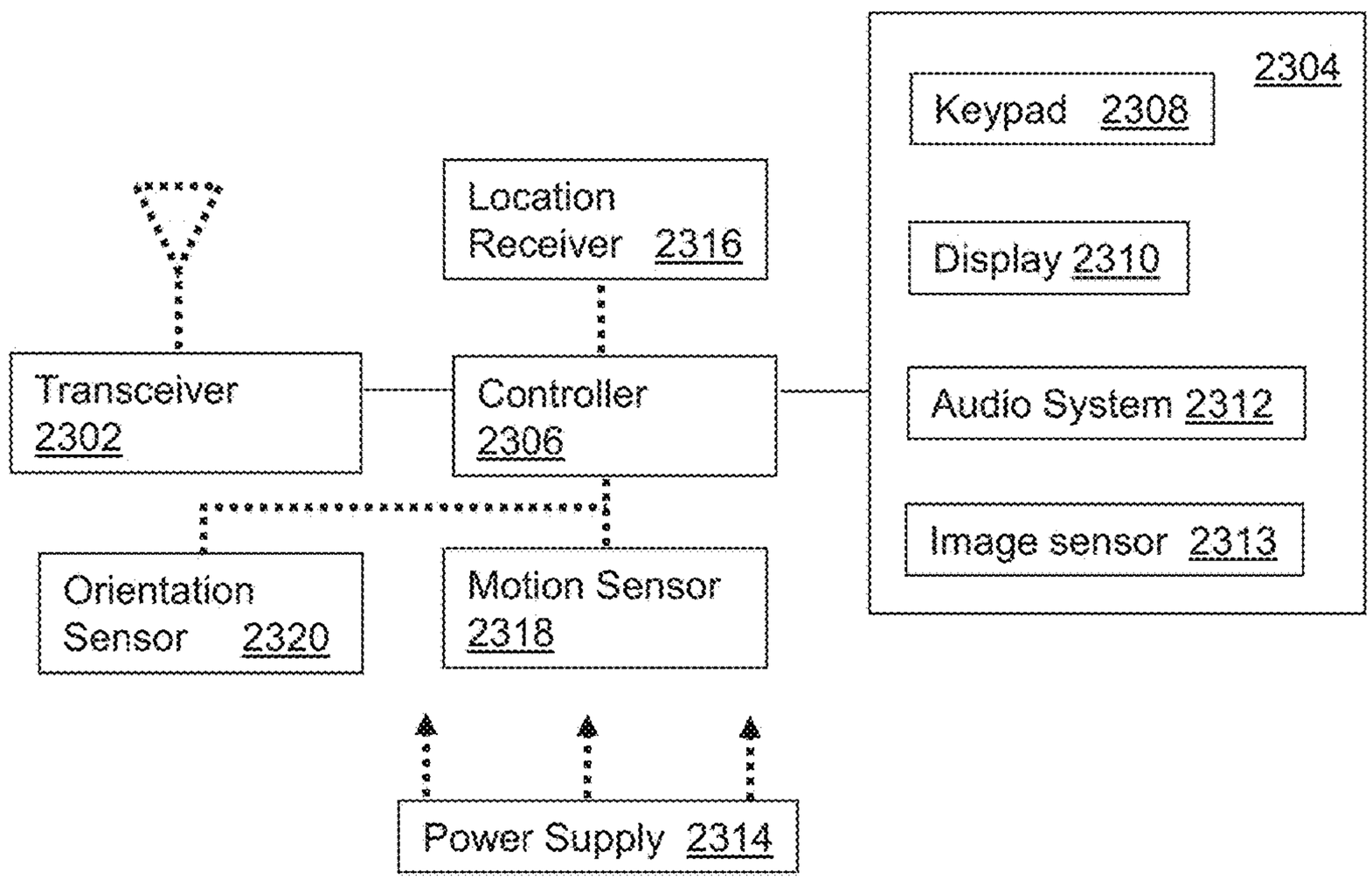
2304
Keypad 2308
Display 2310
Audio System 2312
Image sensor 2313
Location Receiver 2316
Transceiver 2302
Controller 2306
Orientation Sensor 2320
Motion Sensor 2318
Power Supply 2314

2300

FIG. 23

CLIENT NODE DEVICE AND METHODS FOR USE THEREWITH

CROSS-REFERENCE TO RELATED APPLICATIONS

This application is a continuation of and claims priority to U.S. patent application Ser. No. 14/729,178 filed Jun. 3, 2015. The contents of the foregoing are hereby incorporated by reference into this application as if set forth herein in full.

FIELD OF THE DISCLOSURE

The subject disclosure relates to communications via transmission in a communication network at non-optical frequencies.

BACKGROUND

As smart phones and other portable devices increasingly become ubiquitous, and data usage increases, macrocell base station devices and existing wireless infrastructure in turn require higher bandwidth capability in order to address the increased demand. To provide additional mobile bandwidth, small cell deployment is being pursued, with microcells and picocells providing coverage for much smaller areas than traditional macrocells.

In addition, most homes and businesses have grown to rely on broadband data access for services such as voice, video and Internet browsing, etc. Broadband access networks include satellite, 4G or 5G wireless, power line communication, fiber, cable, and telephone networks.

BRIEF DESCRIPTION OF THE DRAWINGS

Reference will now be made to the accompanying drawings, which are not necessarily drawn to scale, and wherein:

FIG. **1** is a block diagram illustrating an example, non-limiting embodiment of a guided-wave communications system in accordance with various aspects described herein.

FIG. **2** is a block diagram illustrating an example, non-limiting embodiment of a transmission device in accordance with various aspects described herein.

FIG. **3** is a graphical diagram illustrating an example, non-limiting embodiment of an electromagnetic field distribution in accordance with various aspects described herein.

FIG. **4** is a graphical diagram illustrating an example, non-limiting embodiment of an electromagnetic field distribution in accordance with various aspects described herein.

FIG. **5**A is a graphical diagram illustrating an example, non-limiting embodiment of a frequency response in accordance with various aspects described herein.

FIG. **5**B is a graphical diagram illustrating example, non-limiting embodiments of a longitudinal cross-section of an insulated wire depicting fields of guided electromagnetic waves at various operating frequencies in accordance with various aspects described herein.

FIG. **6** is a graphical diagram illustrating an example, non-limiting embodiment of an electromagnetic field distribution in accordance with various aspects described herein.

FIG. **7** is a block diagram illustrating an example, non-limiting embodiment of an arc coupler in accordance with various aspects described herein.

FIG. **8** is a block diagram illustrating an example, non-limiting embodiment of an arc coupler in accordance with various aspects described herein.

FIG. **9**A is a block diagram illustrating an example, non-limiting embodiment of a stub coupler in accordance with various aspects described herein.

FIG. **9**B is a diagram illustrating an example, non-limiting embodiment of an electromagnetic distribution in accordance with various aspects described herein.

FIGS. **10**A and **10**B are block diagrams illustrating example, non-limiting embodiments of couplers and transceivers in accordance with various aspects described herein.

FIG. **11** is a block diagram illustrating an example, non-limiting embodiment of a dual stub coupler in accordance with various aspects described herein.

FIG. **12** is a block diagram illustrating an example, non-limiting embodiment of a repeater system in accordance with various aspects described herein.

FIG. **13** illustrates a block diagram illustrating an example, non-limiting embodiment of a bidirectional repeater in accordance with various aspects described herein.

FIG. **14** is a block diagram illustrating an example, non-limiting embodiment of a waveguide system in accordance with various aspects described herein.

FIG. **15** is a block diagram illustrating an example, non-limiting embodiment of a guided-wave communications system in accordance with various aspects described herein.

FIGS. **16**A & **16**B are block diagrams illustrating an example, non-limiting embodiment of a system for managing a power grid communication system in accordance with various aspects described herein.

FIG. **17**A illustrates a flow diagram of an example, non-limiting embodiment of a method for detecting and mitigating disturbances occurring in a communication network of the system of FIGS. **16**A and **16**B.

FIG. **17**B illustrates a flow diagram of an example, non-limiting embodiment of a method for detecting and mitigating disturbances occurring in a communication network of the system of FIGS. **16**A and **16**B.

FIG. **18**A illustrates a block diagram illustrating an example, non-limiting embodiment of a communications system in accordance with various aspects described herein.

FIG. **18**B illustrates a block diagram illustrating an example, non-limiting embodiment of a network termination in accordance with various aspects described herein.

FIG. **18**C illustrates a graphical diagram illustrating an example, non-limiting embodiment of a frequency spectrum in accordance with various aspects described herein.

FIG. **18**D illustrates a graphical diagram illustrating an example, non-limiting embodiment of a frequency spectrum in accordance with various aspects described herein.

FIG. **18**E illustrates a block diagram illustrating an example, non-limiting embodiment of a host node device in accordance with various aspects described herein.

FIG. **18**F illustrates a combination pictorial and block diagram illustrating an example, non-limiting embodiment of downstream data flow in accordance with various aspects described herein.

FIG. **18**G illustrates a combination pictorial and block diagram illustrating an example, non-limiting embodiment of upstream data flow in accordance with various aspects described herein.

FIG. **18**H illustrates a block diagram illustrating an example, non-limiting embodiment of a client node device in accordance with various aspects described herein.

FIG. **19**A illustrates a block diagram illustrating an example, non-limiting embodiment of an access point repeater in accordance with various aspects described herein.

FIG. **19**B illustrates a block diagram illustrating an example, non-limiting embodiment of a mini-repeater in accordance with various aspects described herein.

FIG. **19**C illustrates a combination pictorial and block diagram illustrating an example, non-limiting embodiment of a mini-repeater in accordance with various aspects described herein.

FIG. **19**D illustrates a graphical diagram illustrating an example, non-limiting embodiment of a frequency spectrum in accordance with various aspects described herein.

FIG. **20**A-**20**D illustrate flow diagrams of example, non-limiting embodiments of methods in accordance with various aspects described herein.

FIG. **21** is a block diagram of an example, non-limiting embodiment of a computing environment in accordance with various aspects described herein.

FIG. **22** is a block diagram of an example, non-limiting embodiment of a mobile network platform in accordance with various aspects described herein.

FIG. **23** is a block diagram of an example, non-limiting embodiment of a communication device in accordance with various aspects described herein.

DETAILED DESCRIPTION

One or more embodiments are now described with reference to the drawings, wherein like reference numerals are used to refer to like elements throughout. In the following description, for purposes of explanation, numerous details are set forth in order to provide a thorough understanding of the various embodiments. It is evident, however, that the various embodiments can be practiced without these details (and without applying to any particular networked environment or standard).

In an embodiment, a guided wave communication system is presented for sending and receiving communication signals such as data or other signaling via guided electromagnetic waves. The guided electromagnetic waves include, for example, surface waves or other electromagnetic waves that are bound to or guided by a transmission medium. It will be appreciated that a variety of transmission media can be utilized with guided wave communications without departing from example embodiments. Examples of such transmission media can include one or more of the following, either alone or in one or more combinations: wires, whether insulated or not, and whether single-stranded or multi-stranded; conductors of other shapes or configurations including wire bundles, cables, rods, rails, pipes; non-conductors such as dielectric pipes, rods, rails, or other dielectric members; combinations of conductors and dielectric materials; or other guided wave transmission media.

The inducement of guided electromagnetic waves on a transmission medium can be independent of any electrical potential, charge or current that is injected or otherwise transmitted through the transmission medium as part of an electrical circuit. For example, in the case where the transmission medium is a wire, it is to be appreciated that while a small current in the wire may be formed in response to the propagation of the guided waves along the wire, this can be due to the propagation of the electromagnetic wave along the wire surface, and is not formed in response to electrical potential, charge or current that is injected into the wire as part of an electrical circuit. The electromagnetic waves traveling on the wire therefore do not require a circuit to propagate along the wire surface. The wire therefore is a single wire transmission line that is not part of a circuit. Also, in some embodiments, a wire is not necessary, and the electromagnetic waves can propagate along a single line transmission medium that is not a wire.

More generally, "guided electromagnetic waves" or "guided waves" as described by the subject disclosure are affected by the presence of a physical object that is at least a part of the transmission medium (e.g., a bare wire or other conductor, a dielectric, an insulated wire, a conduit or other hollow element, a bundle of insulated wires that is coated, covered or surrounded by a dielectric or insulator or other wire bundle, or another form of solid, liquid or otherwise non-gaseous transmission medium) so as to be at least partially bound to or guided by the physical object and so as to propagate along a transmission path of the physical object. Such a physical object can operate as at least a part of a transmission medium that guides, by way of an interface of the transmission medium (e.g., an outer surface, inner surface, an interior portion between the outer and the inner surfaces or other boundary between elements of the transmission medium), the propagation of guided electromagnetic waves, which in turn can carry energy, data and/or other signals along the transmission path from a sending device to a receiving device.

Unlike free space propagation of wireless signals such as unguided (or unbounded) electromagnetic waves that decrease in intensity inversely by the square of the distance traveled by the unguided electromagnetic waves, guided electromagnetic waves can propagate along a transmission medium with less loss in magnitude per unit distance than experienced by unguided electromagnetic waves.

Unlike electrical signals, guided electromagnetic waves can propagate from a sending device to a receiving device without requiring a separate electrical return path between the sending device and the receiving device. As a consequence, guided electromagnetic waves can propagate from a sending device to a receiving device along a transmission medium having no conductive components (e.g., a dielectric strip), or via a transmission medium having no more than a single conductor (e.g., a single bare wire or insulated wire). Even if a transmission medium includes one or more conductive components and the guided electromagnetic waves propagating along the transmission medium generate currents that flow in the one or more conductive components in a direction of the guided electromagnetic waves, such guided electromagnetic waves can propagate along the transmission medium from a sending device to a receiving device without requiring a flow of opposing currents on an electrical return path between the sending device and the receiving device.

In a non-limiting illustration, consider electrical systems that transmit and receive electrical signals between sending and receiving devices by way of conductive media. Such systems generally rely on electrically separate forward and return paths. For instance, consider a coaxial cable having a center conductor and a ground shield that are separated by an insulator. Typically, in an electrical system a first terminal of a sending (or receiving) device can be connected to the center conductor, and a second terminal of the sending (or receiving) device can be connected to the ground shield. If the sending device injects an electrical signal in the center conductor via the first terminal, the electrical signal will propagate along the center conductor causing forward cur-

rents in the center conductor, and return currents in the ground shield. The same conditions apply for a two terminal receiving device.

In contrast, consider a guided wave communication system such as described in the subject disclosure, which can utilize different embodiments of a transmission medium (including among others a coaxial cable) for transmitting and receiving guided electromagnetic waves without an electrical return path. In one embodiment, for example, the guided wave communication system of the subject disclosure can be configured to induce guided electromagnetic waves that propagate along an outer surface of a coaxial cable. Although the guided electromagnetic waves will cause forward currents on the ground shield, the guided electromagnetic waves do not require return currents to enable the guided electromagnetic waves to propagate along the outer surface of the coaxial cable. The same can be said of other transmission media used by a guided wave communication system for the transmission and reception of guided electromagnetic waves. For example, guided electromagnetic waves induced by the guided wave communication system on an outer surface of a bare wire, or an insulated wire can propagate along the bare wire or the insulated bare wire without an electrical return path.

Consequently, electrical systems that require two or more conductors for carrying forward and reverse currents on separate conductors to enable the propagation of electrical signals injected by a sending device are distinct from guided wave systems that induce guided electromagnetic waves on an interface of a transmission medium without the need of an electrical return path to enable the propagation of the guided electromagnetic waves along the interface of the transmission medium.

It is further noted that guided electromagnetic waves as described in the subject disclosure can have an electromagnetic field structure that lies primarily or substantially outside of a transmission medium so as to be bound to or guided by the transmission medium and so as to propagate non-trivial distances on or along an outer surface of the transmission medium. In other embodiments, guided electromagnetic waves can have an electromagnetic field structure that lies primarily or substantially inside a transmission medium so as to be bound to or guided by the transmission medium and so as to propagate non-trivial distances within the transmission medium. In other embodiments, guided electromagnetic waves can have an electromagnetic field structure that lies partially inside and partially outside a transmission medium so as to be bound to or guided by the transmission medium and so as to propagate non-trivial distances along the transmission medium. The desired electronic field structure in an embodiment may vary based upon a variety of factors, including the desired transmission distance, the characteristics of the transmission medium itself, and environmental conditions/characteristics outside of the transmission medium (e.g., presence of rain, fog, atmospheric conditions, etc.).

Various embodiments described herein relate to coupling devices, that can be referred to as "waveguide coupling devices", "waveguide couplers" or more simply as "couplers", "coupling devices" or "launchers" for launching and/or extracting guided electromagnetic waves to and from a transmission medium at millimeter-wave frequencies (e.g., 30 to 300 GHz), wherein the wavelength can be small compared to one or more dimensions of the coupling device and/or the transmission medium such as the circumference of a wire or other cross sectional dimension, or lower microwave frequencies such as 300 MHz to 30 GHz. Transmissions can be generated to propagate as waves guided by a coupling device, such as: a strip, arc or other length of dielectric material; a horn, monopole, rod, slot or other antenna; an array of antennas; a magnetic resonant cavity, or other resonant coupler; a coil, a strip line, a waveguide or other coupling device. In operation, the coupling device receives an electromagnetic wave from a transmitter or transmission medium. The electromagnetic field structure of the electromagnetic wave can be carried inside the coupling device, outside the coupling device or some combination thereof. When the coupling device is in close proximity to a transmission medium, at least a portion of an electromagnetic wave couples to or is bound to the transmission medium, and continues to propagate as guided electromagnetic waves. In a reciprocal fashion, a coupling device can extract guided waves from a transmission medium and transfer these electromagnetic waves to a receiver.

According to an example embodiment, a surface wave is a type of guided wave that is guided by a surface of a transmission medium, such as an exterior or outer surface of the wire, or another surface of the wire that is adjacent to or exposed to another type of medium having different properties (e.g., dielectric properties). Indeed, in an example embodiment, a surface of the wire that guides a surface wave can represent a transitional surface between two different types of media. For example, in the case of a bare or uninsulated wire, the surface of the wire can be the outer or exterior conductive surface of the bare or uninsulated wire that is exposed to air or free space. As another example, in the case of insulated wire, the surface of the wire can be the conductive portion of the wire that meets the insulator portion of the wire, or can otherwise be the insulator surface of the wire that is exposed to air or free space, or can otherwise be any material region between the insulator surface of the wire and the conductive portion of the wire that meets the insulator portion of the wire, depending upon the relative differences in the properties (e.g., dielectric properties) of the insulator, air, and/or the conductor and further dependent on the frequency and propagation mode or modes of the guided wave.

According to an example embodiment, the term "about" a wire or other transmission medium used in conjunction with a guided wave can include fundamental guided wave propagation modes such as a guided waves having a circular or substantially circular field distribution, a symmetrical electromagnetic field distribution (e.g., electric field, magnetic field, electromagnetic field, etc.) or other fundamental mode pattern at least partially around a wire or other transmission medium. In addition, when a guided wave propagates "about" a wire or other transmission medium, it can do so according to a guided wave propagation mode that includes not only the fundamental wave propagation modes (e.g., zero order modes), but additionally or alternatively non-fundamental wave propagation modes such as higher-order guided wave modes (e.g., 1st order modes, 2nd order modes, etc.), asymmetrical modes and/or other guided (e.g., surface) waves that have non-circular field distributions around a wire or other transmission medium. As used herein, the term "guided wave mode" refers to a guided wave propagation mode of a transmission medium, coupling device or other system component of a guided wave communication system.

For example, such non-circular field distributions can be unilateral or multi-lateral with one or more axial lobes characterized by relatively higher field strength and/or one or more nulls or null regions characterized by relatively low-field strength, zero-field strength or substantially zero-

field strength. Further, the field distribution can otherwise vary as a function of azimuthal orientation around the wire such that one or more angular regions around the wire have an electric or magnetic field strength (or combination thereof) that is higher than one or more other angular regions of azimuthal orientation, according to an example embodiment. It will be appreciated that the relative orientations or positions of the guided wave higher order modes or asymmetrical modes can vary as the guided wave travels along the wire.

As used herein, the term "millimeter-wave" can refer to electromagnetic waves/signals that fall within the "millimeter-wave frequency band" of 30 GHz to 300 GHz. The term "microwave" can refer to electromagnetic waves/signals that fall within a "microwave frequency band" of 300 MHz to 300 GHz. The term "radio frequency" or "RF" can refer to electromagnetic waves/signals that fall within the "radio frequency band" of 10 kHz to 1 THz. It is appreciated that wireless signals, electrical signals, and guided electromagnetic waves as described in the subject disclosure can be configured to operate at any desirable frequency range, such as, for example, at frequencies within, above or below millimeter-wave and/or microwave frequency bands. In particular, when a coupling device or transmission medium includes a conductive element, the frequency of the guided electromagnetic waves that are carried by the coupling device and/or propagate along the transmission medium can be below the mean collision frequency of the electrons in the conductive element. Further, the frequency of the guided electromagnetic waves that are carried by the coupling device and/or propagate along the transmission medium can be a non-optical frequency, e.g. a radio frequency below the range of optical frequencies that begins at 1 THz.

As used herein, the term "antenna" can refer to a device that is part of a transmitting or receiving system to transmit/radiate or receive wireless signals.

In accordance with one or more embodiments, a network termination includes a network interface configured to receive downstream data from a communication network and to send upstream data to the communication network. A downstream channel modulator modulates the downstream data into downstream channel signals corresponding to downstream frequency channels of a guided wave communication system. A host interface sends the downstream channel signals to the guided wave communication system and to receive upstream channel signals corresponding to upstream frequency channels from the guided wave communication system. An upstream channel demodulator demodulates upstream channel signals into the upstream data.

In accordance with one or more embodiments, a method includes receiving downstream data from a communication network; modulating the downstream data into upstream channel signals corresponding to downstream frequency channels of a guided wave communication system; sending the downstream channel signals to the guided wave communication system via a wired connection; receiving upstream channel signals corresponding to upstream frequency channels from the guided wave communication system via the wired connection; demodulating the upstream channel signals into upstream data; and sending the upstream data to the communication network.

In accordance with one or more embodiments, A network termination includes a downstream channel modulator configured to modulate downstream data into downstream channel signals to convey the downstream data via a guided electromagnetic wave that is bound to a transmission medium of a guided wave communication system. A host interface sends the downstream channel signals to the guided wave communication system and to receive upstream channel signals corresponding to upstream frequency channels from the guided wave communication system. An upstream channel demodulator demodulates upstream channel signals into upstream data.

In accordance with one or more embodiments, A host node device includes at least one access point repeater (APR) configured to communicate via a guided wave communication system. A terminal interface receives downstream channel signals from a communication network. A first channel duplexer transfers the downstream channel signals to the at least one APR. The at least the one APR launches the downstream channel signals on the guided wave communication system as guided electromagnetic waves.

In accordance with one or more embodiments, a method includes receiving downstream channel signals from a communication network; launching the downstream channel signals on a guided wave communication system as guided electromagnetic waves; and wirelessly transmitting the downstream channel signals to at least one client node device.

In accordance with one or more embodiments, a host node device includes a terminal interface configured to receive downstream channel signals from a communication network and send upstream channel signals to the communication network. At least one access point repeater (APR) launches the downstream channel signals as guided electromagnetic waves on a guided wave communication system and to extract a first subset of the upstream channel signals from the guided wave communication system. A radio wirelessly transmits the downstream channel signals to at least one client node device and to wirelessly receive a second subset of the upstream channel signals from the at least one client node device.

In accordance with one or more embodiments, a client node device includes a radio configured to wirelessly receive downstream channel signals from a communication network. An access point repeater (APR) launches the downstream channel signals on a guided wave communication system as guided electromagnetic waves that propagation along a transmission medium and to wirelessly transmit the downstream channel signals to at least one client device.

In accordance with one or more embodiments, a method includes wirelessly receiving downstream channel signals from a communication network; launching the downstream channel signals on a guided wave communication system as guided electromagnetic waves that propagation along a transmission medium; and wirelessly transmitting the downstream channel signals to at least one client device.

In accordance with one or more embodiments, a client node device includes a radio configured to wirelessly receive downstream channel signals from a communication network and to wirelessly transmit first upstream channel signals and second upstream channel signals to the communication network. An access point repeater (APR) launches the downstream channel signals on a guided wave communication system as guided electromagnetic waves that propagation along a transmission medium, to extract the first upstream channel signals from the guided wave communication system, to wirelessly transmit the downstream channel signals to at least one client device and to wirelessly receive the second upstream channel signals from the communication network.

In accordance with one or more embodiments, a repeater device includes a first coupler configured to extract downstream channel signals from first guided electromagnetic waves bound to a transmission medium of a guided wave communication system. An amplifier amplifies the downstream channel signals to generate amplified downstream channel signals. A channel selection filter selects one or more of the amplified downstream channel signals to wirelessly transmit to the at least one client device via an antenna. A second coupler guides the amplified downstream channel signals to the transmission medium of the guided wave communication system to propagate as second guided electromagnetic waves. A channel duplexer transfers the amplified downstream channel signals to the coupler and to the channel selection filter.

In accordance with one or more embodiments, a method includes extracting downstream channel signals from first guided electromagnetic waves bound to a transmission medium of a guided wave communication system; amplifying the downstream channel signals to generate amplified downstream channel signals; selecting one or more of the amplified downstream channel signals to wirelessly transmit to the at least one client device via an antenna; and guiding the amplified downstream channel signals to the transmission medium of the guided wave communication system to propagate as second guided electromagnetic waves.

In accordance with one or more embodiments, a repeater device includes a first coupler configured to extract downstream channel signals from first guided electromagnetic waves bound to a transmission medium of a guided wave communication system. An amplifier amplifies the downstream channel signals to generate amplified downstream channel signals. A channel selection filter selects one or more of the amplified downstream channel signals to wirelessly transmit to the at least one client device via an antenna. A second coupler guides the amplified downstream channel signals to the transmission medium of the guided wave communication system to propagate as second guided electromagnetic waves.

Referring now to FIG. **1**, a block diagram **100** illustrating an example, non-limiting embodiment of a guided wave communications system is shown. In operation, a transmission device **101** receives one or more communication signals **110** from a communication network or other communications device that includes data and generates guided waves **120** to convey the data via the transmission medium **125** to the transmission device **102**. The transmission device **102** receives the guided waves **120** and converts them to communication signals **112** that include the data for transmission to a communications network or other communications device. The guided waves **120** can be modulated to convey data via a modulation technique such as phase shift keying, frequency shift keying, quadrature amplitude modulation, amplitude modulation, multi-carrier modulation such as orthogonal frequency division multiplexing and via multiple access techniques such as frequency division multiplexing, time division multiplexing, code division multiplexing, multiplexing via differing wave propagation modes and via other modulation and access strategies.

The communication network or networks can include a wireless communication network such as a mobile data network, a cellular voice and data network, a wireless local area network (e.g., WiFi or an 802.xx network), a satellite communications network, a personal area network or other wireless network. The communication network or networks can also include a wired communication network such as a telephone network, an Ethernet network, a local area network, a wide area network such as the Internet, a broadband access network, a cable network, a fiber optic network, or other wired network. The communication devices can include a network edge device, bridge device or home gateway, a set-top box, broadband modem, telephone adapter, access point, base station, or other fixed communication device, a mobile communication device such as an automotive gateway or automobile, laptop computer, tablet, smartphone, cellular telephone, or other communication device.

In an example embodiment, the guided wave communication system of diagram **100** can operate in a bi-directional fashion where transmission device **102** receives one or more communication signals **112** from a communication network or device that includes other data and generates guided waves **122** to convey the other data via the transmission medium **125** to the transmission device **101**. In this mode of operation, the transmission device **101** receives the guided waves **122** and converts them to communication signals **110** that include the other data for transmission to a communications network or device. The guided waves **122** can be modulated to convey data via a modulation technique such as phase shift keying, frequency shift keying, quadrature amplitude modulation, amplitude modulation, multi-carrier modulation such as orthogonal frequency division multiplexing and via multiple access techniques such as frequency division multiplexing, time division multiplexing, code division multiplexing, multiplexing via differing wave propagation modes and via other modulation and access strategies.

The transmission medium **125** can include a cable having at least one inner portion surrounded by a dielectric material such as an insulator or other dielectric cover, coating or other dielectric material, the dielectric material having an outer surface and a corresponding circumference. In an example embodiment, the transmission medium **125** operates as a single-wire transmission line to guide the transmission of an electromagnetic wave. When the transmission medium **125** is implemented as a single wire transmission system, it can include a wire. The wire can be insulated or uninsulated, and single-stranded or multi-stranded (e.g., braided). In other embodiments, the transmission medium **125** can contain conductors of other shapes or configurations including wire bundles, cables, rods, rails, pipes. In addition, the transmission medium **125** can include non-conductors such as dielectric pipes, rods, rails, or other dielectric members including cores with or without additional cladding and/or an insulating jacket; combinations of conductors and dielectric materials, conductors without dielectric materials or other guided wave transmission media. It should be noted that the transmission medium **125** can otherwise include any of the transmission media previously discussed.

Further, as previously discussed, the guided waves **120** and **122** can be contrasted with radio transmissions over free space/air or conventional propagation of electrical power or signals through the conductor of a wire via an electrical circuit. In addition to the propagation of guided waves **120** and **122**, the transmission medium **125** may optionally contain one or more wires that propagate electrical power or other communication signals in a conventional manner as a part of one or more electrical circuits.

Referring now to FIG. **2**, a block diagram **200** illustrating an example, non-limiting embodiment of a transmission device is shown. The transmission device **101** or **102** includes a communications interface (I/F) **205**, a transceiver **210** and a coupler **220**.

In an example of operation, the communications interface **205** receives a communication signal **110** or **112** that includes data. In various embodiments, the communications interface **205** can include a wireless interface for receiving a wireless communication signal in accordance with a wireless standard protocol such as LTE or other cellular voice and data protocol, WiFi or an 802.11 protocol, WIMAX protocol, Ultra Wideband protocol, Bluetooth protocol, Zigbee protocol, a direct broadcast satellite (DBS) or other satellite communication protocol or other wireless protocol. In addition or in the alternative, the communications interface **205** includes a wired interface that operates in accordance with an Ethernet protocol, universal serial bus (USB) protocol, a data over cable service interface specification (DOCSIS) protocol, a digital subscriber line (DSL) protocol, a Firewire (IEEE 1394) protocol, or other wired protocol. In additional to standards-based protocols, the communications interface **205** can operate in conjunction with other wired or wireless protocol, including any of the current or planned variations of the standard protocols above, modified for example for operation in conjunction with network that incorporates a guided wave communication system, or a different protocol altogether. In addition, the communications interface **205** can optionally operate in conjunction with a protocol stack that includes multiple protocol layers including a MAC protocol, transport protocol, application protocol, etc.

In an example of operation, the transceiver **210** generates an electromagnetic wave based on the communication signal **110** or **112** to convey the data. The electromagnetic wave has at least one carrier frequency and at least one corresponding wavelength. The carrier frequency can be within a millimeter-wave frequency band of 30 GHz-300 GHz, such as 60 GHz or a carrier frequency in the range of 30-40 GHz or a lower frequency band of 300 MHz-30 GHz in the microwave frequency range such as 26-30 GHz, 11 GHz, 6 GHz or 3 GHz, but it will be appreciated that other carrier frequencies are possible in other embodiments. In one mode of operation, the transceiver **210** merely upconverts the communications signal or signals **110** or **112** for transmission of the electromagnetic signal in the microwave or millimeter-wave band as a guided electromagnetic wave that is guided by or bound to the transmission medium **125**. In another mode of operation, the communications interface **205** either converts the communication signal **110** or **112** to a baseband or near baseband signal or extracts the data from the communication signal **110** or **112** and the transceiver **210** modulates a high-frequency carrier with the data, the baseband or near baseband signal for transmission. It should be appreciated that the transceiver **210** can modulate the data received via the communication signal **110** or **112** to preserve one or more data communication protocols of the communication signal **110** or **112** either by encapsulation in the payload of a different protocol or by simple frequency shifting. In the alternative, the transceiver **210** can otherwise translate the data received via the communication signal **110** or **112** to a protocol that is different from the data communication protocol or protocols of the communication signal **110** or **112**.

In an example of operation, the coupler **220** couples the electromagnetic wave to the transmission medium **125** as a guided electromagnetic wave to convey the communications signal or signals **110** or **112**. While the prior description has focused on the operation of the transceiver **210** as a transmitter, the transceiver **210** can also operate to receive electromagnetic waves that convey other data from the single wire transmission medium via the coupler **220** and to generate communications signals **110** or **112**, via communications interface **205** that includes the other data. Consider embodiments where an additional guided electromagnetic wave conveys other data that also propagates along the transmission medium **125**. The coupler **220** can also couple this additional electromagnetic wave from the transmission medium **125** to the transceiver **210** for reception.

The transmission device **101** or **102** includes an optional training controller **230**. In an example embodiment, the training controller **230** is implemented by a standalone processor or a processor that is shared with one or more other components of the transmission device **101** or **102**. The training controller **230** selects the carrier frequencies, modulation schemes and/or guided wave modes for the guided electromagnetic waves based on feedback data received by the transceiver **210** from at least one remote transmission device coupled to receive the guided electromagnetic wave.

In an example embodiment, a guided electromagnetic wave transmitted by a remote transmission device **101** or **102** conveys data that also propagates along the transmission medium **125**. The data from the remote transmission device **101** or **102** can be generated to include the feedback data. In operation, the coupler **220** also couples the guided electromagnetic wave from the transmission medium **125** and the transceiver receives the electromagnetic wave and processes the electromagnetic wave to extract the feedback data.

In an example embodiment, the training controller **230** operates based on the feedback data to evaluate a plurality of candidate frequencies, modulation schemes and/or transmission modes to select a carrier frequency, modulation scheme and/or transmission mode to enhance performance, such as throughput, signal strength, reduce propagation loss, etc.

Consider the following example: a transmission device **101** begins operation under control of the training controller **230** by sending a plurality of guided waves as test signals such as pilot waves or other test signals at a corresponding plurality of candidate frequencies and/or candidate modes directed to a remote transmission device **102** coupled to the transmission medium **125**. The guided waves can include, in addition or in the alternative, test data. The test data can indicate the particular candidate frequency and/or guide-wave mode of the signal. In an embodiment, the training controller **230** at the remote transmission device **102** receives the test signals and/or test data from any of the guided waves that were properly received and determines the best candidate frequency and/or guided wave mode, a set of acceptable candidate frequencies and/or guided wave modes, or a rank ordering of candidate frequencies and/or guided wave modes. This selection of candidate frequenc(ies) or/and guided-mode(s) are generated by the training controller **230** based on one or more optimizing criteria such as received signal strength, bit error rate, packet error rate, signal to noise ratio, propagation loss, etc. The training controller **230** generates feedback data that indicates the selection of candidate frequenc(ies) or/and guided wave mode(s) and sends the feedback data to the transceiver **210** for transmission to the transmission device **101**. The transmission device **101** and **102** can then communicate data with one another based on the selection of candidate frequenc(ies) or/and guided wave mode(s).

In other embodiments, the guided electromagnetic waves that contain the test signals and/or test data are reflected back, repeated back or otherwise looped back by the remote transmission device **102** to the transmission device **101** for reception and analysis by the training controller **230** of the

transmission device **101** that initiated these waves. For example, the transmission device **101** can send a signal to the remote transmission device **102** to initiate a test mode where a physical reflector is switched on the line, a termination impedance is changed to cause reflections, a loop back mode is switched on to couple electromagnetic waves back to the source transmission device **102**, and/or a repeater mode is enabled to amplify and retransmit the electromagnetic waves back to the source transmission device **102**. The training controller **230** at the source transmission device **102** receives the test signals and/or test data from any of the guided waves that were properly received and determines selection of candidate frequenc(ies) or/and guided wave mode(s).

While the procedure above has been described in a start-up or initialization mode of operation, each transmission device **101** or **102** can send test signals, evaluate candidate frequencies or guided wave modes via non-test such as normal transmissions or otherwise evaluate candidate frequencies or guided wave modes at other times or continuously as well. In an example embodiment, the communication protocol between the transmission devices **101** and **102** can include an on-request or periodic test mode where either full testing or more limited testing of a subset of candidate frequencies and guided wave modes are tested and evaluated. In other modes of operation, the re-entry into such a test mode can be triggered by a degradation of performance due to a disturbance, weather conditions, etc. In an example embodiment, the receiver bandwidth of the transceiver **210** is either sufficiently wide or swept to receive all candidate frequencies or can be selectively adjusted by the training controller **230** to a training mode where the receiver bandwidth of the transceiver **210** is sufficiently wide or swept to receive all candidate frequencies.

Referring now to FIG. **3**, a graphical diagram **300** illustrating an example, non-limiting embodiment of an electromagnetic field distribution is shown. In this embodiment, a transmission medium **125** in air includes an inner conductor **301** and an insulating jacket **302** of dielectric material, as shown in cross section. The diagram **300** includes different gray-scales that represent differing electromagnetic field strengths generated by the propagation of the guided wave having an asymmetrical and non-fundamental guided wave mode.

In particular, the electromagnetic field distribution corresponds to a modal "sweet spot" that enhances guided electromagnetic wave propagation along an insulated transmission medium and reduces end-to-end transmission loss. In this particular mode, electromagnetic waves are guided by the transmission medium **125** to propagate along an outer surface of the transmission medium—in this case, the outer surface of the insulating jacket **302**. Electromagnetic waves are partially embedded in the insulator and partially radiating on the outer surface of the insulator. In this fashion, electromagnetic waves are "lightly" coupled to the insulator so as to enable electromagnetic wave propagation at long distances with low propagation loss.

As shown, the guided wave has a field structure that lies primarily or substantially outside of the transmission medium **125** that serves to guide the electromagnetic waves. The regions inside the conductor **301** have little or no field. Likewise regions inside the insulating jacket **302** have low field strength. The majority of the electromagnetic field strength is distributed in the lobes **304** at the outer surface of the insulating jacket **302** and in close proximity thereof. The presence of an asymmetric guided wave mode is shown by the high electromagnetic field strengths at the top and bottom of the outer surface of the insulating jacket **302** (in the orientation of the diagram)—as opposed to very small field strengths on the other sides of the insulating jacket **302**.

The example shown corresponds to a 38 GHz electromagnetic wave guided by a wire with a diameter of 1.1 cm and a dielectric insulation of thickness of 0.36 cm. Because the electromagnetic wave is guided by the transmission medium **125** and the majority of the field strength is concentrated in the air outside of the insulating jacket **302** within a limited distance of the outer surface, the guided wave can propagate longitudinally down the transmission medium **125** with very low loss. In the example shown, this "limited distance" corresponds to a distance from the outer surface that is less than half the largest cross sectional dimension of the transmission medium **125**. In this case, the largest cross sectional dimension of the wire corresponds to the overall diameter of 1.82 cm, however, this value can vary with the size and shape of the transmission medium **125**. For example, should the transmission medium **125** be of a rectangular shape with a height of 0.3 cm and a width of 0.4 cm, the largest cross sectional dimension would be the diagonal of 0.5 cm and the corresponding limited distance would be 0.25 cm. The dimensions of the area containing the majority of the field strength also vary with the frequency, and in general, increase as carrier frequencies decrease.

It should also be noted that the components of a guided wave communication system, such as couplers and transmission media can have their own cut-off frequencies for each guided wave mode. The cut-off frequency generally sets forth the lowest frequency that a particular guided wave mode is designed to be supported by that particular component. In an example embodiment, the particular asymmetric mode of propagation shown is induced on the transmission medium **125** by an electromagnetic wave having a frequency that falls within a limited range (such as Fc to 2Fc) of the lower cut-off frequency Fc for this particular asymmetric mode. The lower cut-off frequency Fc is particular to the characteristics of transmission medium **125**. For embodiments as shown that include an inner conductor **301** surrounded by an insulating jacket **302**, this cutoff frequency can vary based on the dimensions and properties of the insulating jacket **302** and potentially the dimensions and properties of the inner conductor **301** and can be determined experimentally to have a desired mode pattern. It should be noted however, that similar effects can be found for a hollow dielectric or insulator without an inner conductor. In this case, the cutoff frequency can vary based on the dimensions and properties of the hollow dielectric or insulator.

At frequencies lower than the lower cut-off frequency, the asymmetric mode is difficult to induce in the transmission medium **125** and fails to propagate for all but trivial distances. As the frequency increases above the limited range of frequencies about the cut-off frequency, the asymmetric mode shifts more and more inward of the insulating jacket **302**. At frequencies much larger than the cut-off frequency, the field strength is no longer concentrated outside of the insulating jacket, but primarily inside of the insulating jacket **302**. While the transmission medium **125** provides strong guidance to the electromagnetic wave and propagation is still possible, ranges are more limited by increased losses due to propagation within the insulating jacket **302**—as opposed to the surrounding air.

Referring now to FIG. **4**, a graphical diagram **400** illustrating an example, non-limiting embodiment of an electromagnetic field distribution is shown. In particular, a cross section diagram **400**, similar to FIG. **3** is shown with

common reference numerals used to refer to similar elements. The example shown corresponds to a 60 GHz wave guided by a wire with a diameter of 1.1 cm and a dielectric insulation of thickness of 0.36 cm. Because the frequency of the guided wave is above the limited range of the cut-off frequency of this particular asymmetric mode, much of the field strength has shifted inward of the insulating jacket **302**. In particular, the field strength is concentrated primarily inside of the insulating jacket **302**. While the transmission medium **125** provides strong guidance to the electromagnetic wave and propagation is still possible, ranges are more limited when compared with the embodiment of FIG. **3**, by increased losses due to propagation within the insulating jacket **302**.

Referring now to FIG. **5**A, a graphical diagram illustrating an example, non-limiting embodiment of a frequency response is shown. In particular, diagram **500** presents a graph of end-to-end loss (in dB) as a function of frequency, overlaid with electromagnetic field distributions **510**, **520** and **530** at three points for a 200 cm insulated medium voltage wire. The boundary between the insulator and the surrounding air is represented by reference numeral **525** in each electromagnetic field distribution.

As discussed in conjunction with FIG. **3**, an example of a desired asymmetric mode of propagation shown is induced on the transmission medium **125** by an electromagnetic wave having a frequency that falls within a limited range (such as Fc to **2**Fc) of the lower cut-off frequency Fc of the transmission medium for this particular asymmetric mode. In particular, the electromagnetic field distribution **520** at 6 GHz falls within this modal "sweet spot" that enhances electromagnetic wave propagation along an insulated transmission medium and reduces end-to-end transmission loss. In this particular mode, guided waves are partially embedded in the insulator and partially radiating on the outer surface of the insulator. In this fashion, the electromagnetic waves are "lightly" coupled to the insulator so as to enable guided electromagnetic wave propagation at long distances with low propagation loss.

At lower frequencies represented by the electromagnetic field distribution **510** at 3 GHz, the asymmetric mode radiates more heavily generating higher propagation losses. At higher frequencies represented by the electromagnetic field distribution **530** at 9 GHz, the asymmetric mode shifts more and more inward of the insulating jacket providing too much absorption, again generating higher propagation losses.

Referring now to FIG. **5**B, a graphical diagram **550** illustrating example, non-limiting embodiments of a longitudinal cross-section of a transmission medium **125**, such as an insulated wire, depicting fields of guided electromagnetic waves at various operating frequencies is shown. As shown in diagram **556**, when the guided electromagnetic waves are at approximately the cutoff frequency (f_c) corresponding to the modal "sweet spot", the guided electromagnetic waves are loosely coupled to the insulated wire so that absorption is reduced, and the fields of the guided electromagnetic waves are bound sufficiently to reduce the amount radiated into the environment (e.g., air). Because absorption and radiation of the fields of the guided electromagnetic waves is low, propagation losses are consequently low, enabling the guided electromagnetic waves to propagate for longer distances.

As shown in diagram **554**, propagation losses increase when an operating frequency of the guide electromagnetic waves increases above about two-times the cutoff frequency (f_c)—or as referred to, above the range of the "sweet spot". More of the field strength of the electromagnetic wave is driven inside the insulating layer, increasing propagation losses. At frequencies much higher than the cutoff frequency (f_c) the guided electromagnetic waves are strongly bound to the insulated wire as a result of the fields emitted by the guided electromagnetic waves being concentrated in the insulation layer of the wire, as shown in diagram **552**. This in turn raises propagation losses further due to absorption of the guided electromagnetic waves by the insulation layer. Similarly, propagation losses increase when the operating frequency of the guided electromagnetic waves is substantially below the cutoff frequency (f_c), as shown in diagram **558**. At frequencies much lower than the cutoff frequency (f_c) the guided electromagnetic waves are weakly (or nominally) bound to the insulated wire and thereby tend to radiate into the environment (e.g., air), which in turn, raises propagation losses due to radiation of the guided electromagnetic waves.

Referring now to FIG. **6**, a graphical diagram **600** illustrating an example, non-limiting embodiment of an electromagnetic field distribution is shown. In this embodiment, a transmission medium **602** is a bare wire, as shown in cross section. The diagram **600** includes different gray-scales that represent differing electromagnetic field strengths generated by the propagation of a guided wave having a symmetrical and fundamental guided wave mode at a single carrier frequency.

In this particular mode, electromagnetic waves are guided by the transmission medium **602** to propagate along an outer surface of the transmission medium—in this case, the outer surface of the bare wire. Electromagnetic waves are "lightly" coupled to the wire so as to enable electromagnetic wave propagation at long distances with low propagation loss. As shown, the guided wave has a field structure that lies substantially outside of the transmission medium **602** that serves to guide the electromagnetic waves. The regions inside the conductor **602** have little or no field.

Referring now to FIG. **7**, a block diagram **700** illustrating an example, non-limiting embodiment of an arc coupler is shown. In particular a coupling device is presented for use in a transmission device, such as transmission device **101** or **102** presented in conjunction with FIG. **1**. The coupling device includes an arc coupler **704** coupled to a transmitter circuit **712** and termination or damper **714**. The arc coupler **704** can be made of a dielectric material, or other low-loss insulator (e.g., Teflon, polyethylene, etc.), or made of a conducting (e.g., metallic, non-metallic, etc.) material, or any combination of the foregoing materials. As shown, the arc coupler **704** operates as a waveguide and has a wave **706** propagating as a guided wave about a waveguide surface of the arc coupler **704**. In the embodiment shown, at least a portion of the arc coupler **704** can be placed near a wire **702** or other transmission medium, (such as transmission medium **125**), in order to facilitate coupling between the arc coupler **704** and the wire **702** or other transmission medium, as described herein to launch the guided wave **708** on the wire. The arc coupler **704** can be placed such that a portion of the curved arc coupler **704** is tangential to, and parallel or substantially parallel to the wire **702**. The portion of the arc coupler **704** that is parallel to the wire can be an apex of the curve, or any point where a tangent of the curve is parallel to the wire **702**. When the arc coupler **704** is positioned or placed thusly, the wave **706** travelling along the arc coupler **704** couples, at least in part, to the wire **702**, and propagates as guided wave **708** around or about the wire surface of the wire **702** and longitudinally along the wire **702**. The guided wave **708** can be characterized as a surface wave or other

electromagnetic wave that is guided by or bound to the wire **702** or other transmission medium.

A portion of the wave **706** that does not couple to the wire **702** propagates as a wave **710** along the arc coupler **704**. It will be appreciated that the arc coupler **704** can be configured and arranged in a variety of positions in relation to the wire **702** to achieve a desired level of coupling or non-coupling of the wave **706** to the wire **702**. For example, the curvature and/or length of the arc coupler **704** that is parallel or substantially parallel, as well as its separation distance (which can include zero separation distance in an embodiment), to the wire **702** can be varied without departing from example embodiments. Likewise, the arrangement of arc coupler **704** in relation to the wire **702** may be varied based upon considerations of the respective intrinsic characteristics (e.g., thickness, composition, electromagnetic properties, etc.) of the wire **702** and the arc coupler **704**, as well as the characteristics (e.g., frequency, energy level, etc.) of the waves **706** and **708**.

The guided wave **708** stays parallel or substantially parallel to the wire **702**, even as the wire **702** bends and flexes. Bends in the wire **702** can increase transmission losses, which are also dependent on wire diameters, frequency, and materials. If the dimensions of the arc coupler **704** are chosen for efficient power transfer, most of the power in the wave **706** is transferred to the wire **702**, with little power remaining in wave **710**. It will be appreciated that the guided wave **708** can still be multi-modal in nature (discussed herein), including having modes that are non-fundamental or asymmetric, while traveling along a path that is parallel or substantially parallel to the wire **702**, with or without a fundamental transmission mode. In an embodiment, non-fundamental or asymmetric modes can be utilized to minimize transmission losses and/or obtain increased propagation distances.

It is noted that the term parallel is generally a geometric construct which often is not exactly achievable in real systems. Accordingly, the term parallel as utilized in the subject disclosure represents an approximation rather than an exact configuration when used to describe embodiments disclosed in the subject disclosure. In an embodiment, substantially parallel can include approximations that are within 30 degrees of true parallel in all dimensions.

In an embodiment, the wave **706** can exhibit one or more wave propagation modes. The arc coupler modes can be dependent on the shape and/or design of the coupler **704**. The one or more arc coupler modes of wave **706** can generate, influence, or impact one or more wave propagation modes of the guided wave **708** propagating along wire **702**. It should be particularly noted however that the guided wave modes present in the guided wave **706** may be the same or different from the guided wave modes of the guided wave **708**. In this fashion, one or more guided wave modes of the guided wave **706** may not be transferred to the guided wave **708**, and further one or more guided wave modes of guided wave **708** may not have been present in guided wave **706**. It should also be noted that the cut-off frequency of the arc coupler **704** for a particular guided wave mode may be different than the cutoff frequency of the wire **702** or other transmission medium for that same mode. For example, while the wire **702** or other transmission medium may be operated slightly above its cutoff frequency for a particular guided wave mode, the arc coupler **704** may be operated well above its cut-off frequency for that same mode for low loss, slightly below its cut-off frequency for that same mode to, for example, induce greater coupling and power transfer, or some other point in relation to the arc coupler's cutoff frequency for that mode.

In an embodiment, the wave propagation modes on the wire **702** can be similar to the arc coupler modes since both waves **706** and **708** propagate about the outside of the arc coupler **704** and wire **702** respectively. In some embodiments, as the wave **706** couples to the wire **702**, the modes can change form, or new modes can be created or generated, due to the coupling between the arc coupler **704** and the wire **702**. For example, differences in size, material, and/or impedances of the arc coupler **704** and wire **702** may create additional modes not present in the arc coupler modes and/or suppress some of the arc coupler modes. The wave propagation modes can comprise the fundamental transverse electromagnetic mode (Quasi-TEM_{00}), where only small electric and/or magnetic fields extend in the direction of propagation, and the electric and magnetic fields extend radially outwards while the guided wave propagates along the wire. This guided wave mode can be donut shaped, where few of the electromagnetic fields exist within the arc coupler **704** or wire **702**.

Waves **706** and **708** can comprise a fundamental TEM mode where the fields extend radially outwards, and also comprise other, non-fundamental (e.g., asymmetric, higher-level, etc.) modes. While particular wave propagation modes are discussed above, other wave propagation modes are likewise possible such as transverse electric (TE) and transverse magnetic (TM) modes, based on the frequencies employed, the design of the arc coupler **704**, the dimensions and composition of the wire **702**, as well as its surface characteristics, its insulation if present, the electromagnetic properties of the surrounding environment, etc. It should be noted that, depending on the frequency, the electrical and physical characteristics of the wire **702** and the particular wave propagation modes that are generated, guided wave **708** can travel along the conductive surface of an oxidized uninsulated wire, an unoxidized uninsulated wire, an insulated wire and/or along the insulating surface of an insulated wire.

In an embodiment, a diameter of the arc coupler **704** is smaller than the diameter of the wire **702**. For the millimeter-band wavelength being used, the arc coupler **704** supports a single waveguide mode that makes up wave **706**. This single waveguide mode can change as it couples to the wire **702** as guided wave **708**. If the arc coupler **704** were larger, more than one waveguide mode can be supported, but these additional waveguide modes may not couple to the wire **702** as efficiently, and higher coupling losses can result. However, in some alternative embodiments, the diameter of the arc coupler **704** can be equal to or larger than the diameter of the wire **702**, for example, where higher coupling losses are desirable or when used in conjunction with other techniques to otherwise reduce coupling losses (e.g., impedance matching with tapering, etc.).

In an embodiment, the wavelength of the waves **706** and **708** are comparable in size, or smaller than a circumference of the arc coupler **704** and the wire **702**. In an example, if the wire **702** has a diameter of 0.5 cm, and a corresponding circumference of around 1.5 cm, the wavelength of the transmission is around 1.5 cm or less, corresponding to a frequency of 70 GHz or greater. In another embodiment, a suitable frequency of the transmission and the carrier-wave signal is in the range of 30-100 GHz, perhaps around 30-60 GHz, and around 38 GHz in one example. In an embodiment, when the circumference of the arc coupler **704** and wire **702** is comparable in size to, or greater, than a wave-

length of the transmission, the waves **706** and **708** can exhibit multiple wave propagation modes including fundamental and/or non-fundamental (symmetric and/or asymmetric) modes that propagate over sufficient distances to support various communication systems described herein. The waves **706** and **708** can therefore comprise more than one type of electric and magnetic field configuration. In an embodiment, as the guided wave **708** propagates down the wire **702**, the electrical and magnetic field configurations will remain the same from end to end of the wire **702**. In other embodiments, as the guided wave **708** encounters interference (distortion or obstructions) or loses energy due to transmission losses or scattering, the electric and magnetic field configurations can change as the guided wave **708** propagates down wire **702**.

In an embodiment, the arc coupler **704** can be composed of nylon, Teflon, polyethylene, a polyamide, or other plastics. In other embodiments, other dielectric materials are possible. The wire surface of wire **702** can be metallic with either a bare metallic surface, or can be insulated using plastic, dielectric, insulator or other coating, jacket or sheathing. In an embodiment, a dielectric or otherwise non-conducting/insulated waveguide can be paired with either a bare/metallic wire or insulated wire. In other embodiments, a metallic and/or conductive waveguide can be paired with a bare/metallic wire or insulated wire. In an embodiment, an oxidation layer on the bare metallic surface of the wire **702** (e.g., resulting from exposure of the bare metallic surface to oxygen/air) can also provide insulating or dielectric properties similar to those provided by some insulators or sheathings.

It is noted that the graphical representations of waves **706**, **708** and **710** are presented merely to illustrate the principles that wave **706** induces or otherwise launches a guided wave **708** on a wire **702** that operates, for example, as a single wire transmission line. Wave **710** represents the portion of wave **706** that remains on the arc coupler **704** after the generation of guided wave **708**. The actual electric and magnetic fields generated as a result of such wave propagation may vary depending on the frequencies employed, the particular wave propagation mode or modes, the design of the arc coupler **704**, the dimensions and composition of the wire **702**, as well as its surface characteristics, its optional insulation, the electromagnetic properties of the surrounding environment, etc.

It is noted that arc coupler **704** can include a termination circuit or damper **714** at the end of the arc coupler **704** that can absorb leftover radiation or energy from wave **710**. The termination circuit or damper **714** can prevent and/or minimize the leftover radiation or energy from wave **710** reflecting back toward transmitter circuit **712**. In an embodiment, the termination circuit or damper **714** can include termination resistors, and/or other components that perform impedance matching to attenuate reflection. In some embodiments, if the coupling efficiencies are high enough, and/or wave **710** is sufficiently small, it may not be necessary to use a termination circuit or damper **714**. For the sake of simplicity, these transmitter **712** and termination circuits or dampers **714** may not be depicted in the other figures, but in those embodiments, transmitter and termination circuits or dampers may possibly be used.

Further, while a single arc coupler **704** is presented that generates a single guided wave **708**, multiple arc couplers **704** placed at different points along the wire **702** and/or at different azimuthal orientations about the wire can be employed to generate and receive multiple guided waves **708** at the same or different frequencies, at the same or different phases, at the same or different wave propagation modes.

FIG. **8**, a block diagram **800** illustrating an example, non-limiting embodiment of an arc coupler is shown. In the embodiment shown, at least a portion of the coupler **704** can be placed near a wire **702** or other transmission medium, (such as transmission medium **125**), in order to facilitate coupling between the arc coupler **704** and the wire **702** or other transmission medium, to extract a portion of the guided wave **806** as a guided wave **808** as described herein. The arc coupler **704** can be placed such that a portion of the curved arc coupler **704** is tangential to, and parallel or substantially parallel to the wire **702**. The portion of the arc coupler **704** that is parallel to the wire can be an apex of the curve, or any point where a tangent of the curve is parallel to the wire **702**. When the arc coupler **704** is positioned or placed thusly, the wave **806** travelling along the wire **702** couples, at least in part, to the arc coupler **704**, and propagates as guided wave **808** along the arc coupler **704** to a receiving device (not expressly shown). A portion of the wave **806** that does not couple to the arc coupler propagates as wave **810** along the wire **702** or other transmission medium.

In an embodiment, the wave **806** can exhibit one or more wave propagation modes. The arc coupler modes can be dependent on the shape and/or design of the coupler **704**. The one or more modes of guided wave **806** can generate, influence, or impact one or more guide-wave modes of the guided wave **808** propagating along the arc coupler **704**. It should be particularly noted however that the guided wave modes present in the guided wave **806** may be the same or different from the guided wave modes of the guided wave **808**. In this fashion, one or more guided wave modes of the guided wave **806** may not be transferred to the guided wave **808**, and further one or more guided wave modes of guided wave **808** may not have been present in guided wave **806**.

Referring now to FIG. **9**A, a block diagram **900** illustrating an example, non-limiting embodiment of a stub coupler is shown. In particular a coupling device that includes stub coupler **904** is presented for use in a transmission device, such as transmission device **101** or **102** presented in conjunction with FIG. **1**. The stub coupler **904** can be made of a dielectric material, or other low-loss insulator (e.g., Teflon, polyethylene and etc.), or made of a conducting (e.g., metallic, non-metallic, etc.) material, or any combination of the foregoing materials. As shown, the stub coupler **904** operates as a waveguide and has a wave **906** propagating as a guided wave about a waveguide surface of the stub coupler **904**. In the embodiment shown, at least a portion of the stub coupler **904** can be placed near a wire **702** or other transmission medium, (such as transmission medium **125**), in order to facilitate coupling between the stub coupler **904** and the wire **702** or other transmission medium, as described herein to launch the guided wave **908** on the wire.

In an embodiment, the stub coupler **904** is curved, and an end of the stub coupler **904** can be tied, fastened, or otherwise mechanically coupled to a wire **702**. When the end of the stub coupler **904** is fastened to the wire **702**, the end of the stub coupler **904** is parallel or substantially parallel to the wire **702**. Alternatively, another portion of the dielectric waveguide beyond an end can be fastened or coupled to wire **702** such that the fastened or coupled portion is parallel or substantially parallel to the wire **702**. The fastener **910** can be a nylon cable tie or other type of non-conducting/dielectric material that is either separate from the stub coupler **904** or constructed as an integrated component of

the stub coupler **904**. The stub coupler **904** can be adjacent to the wire **702** without surrounding the wire **702**.

Like the arc coupler **704** described in conjunction with FIG. **7**, when the stub coupler **904** is placed with the end parallel to the wire **702**, the guided wave **906** travelling along the stub coupler **904** couples to the wire **702**, and propagates as guided wave **908** about the wire surface of the wire **702**. In an example embodiment, the guided wave **908** can be characterized as a surface wave or other electromagnetic wave.

It is noted that the graphical representations of waves **906** and **908** are presented merely to illustrate the principles that wave **906** induces or otherwise launches a guided wave **908** on a wire **702** that operates, for example, as a single wire transmission line. The actual electric and magnetic fields generated as a result of such wave propagation may vary depending on one or more of the shape and/or design of the coupler, the relative position of the dielectric waveguide to the wire, the frequencies employed, the design of the stub coupler **904**, the dimensions and composition of the wire **702**, as well as its surface characteristics, its optional insulation, the electromagnetic properties of the surrounding environment, etc.

In an embodiment, an end of stub coupler **904** can taper towards the wire **702** in order to increase coupling efficiencies. Indeed, the tapering of the end of the stub coupler **904** can provide impedance matching to the wire **702** and reduce reflections, according to an example embodiment of the subject disclosure. For example, an end of the stub coupler **904** can be gradually tapered in order to obtain a desired level of coupling between waves **906** and **908** as illustrated in FIG. **9**A.

In an embodiment, the fastener **910** can be placed such that there is a short length of the stub coupler **904** between the fastener **910** and an end of the stub coupler **904**. Maximum coupling efficiencies are realized in this embodiment when the length of the end of the stub coupler **904** that is beyond the fastener **910** is at least several wavelengths long for whatever frequency is being transmitted.

Turning now to FIG. **9**B, a diagram **950** illustrating an example, non-limiting embodiment of an electromagnetic distribution in accordance with various aspects described herein is shown. In particular, an electromagnetic distribution is presented in two dimensions for a transmission device that includes coupler **952**, shown in an example stub coupler constructed of a dielectric material. The coupler **952** couples an electromagnetic wave for propagation as a guided wave along an outer surface of a wire **702** or other transmission medium.

The coupler **952** guides the electromagnetic wave to a junction at x_0 via a symmetrical guided wave mode. While some of the energy of the electromagnetic wave that propagates along the coupler **952** is outside of the coupler **952**, the majority of the energy of this electromagnetic wave is contained within the coupler **952**. The junction at x_0 couples the electromagnetic wave to the wire **702** or other transmission medium at an azimuthal angle corresponding to the bottom of the transmission medium. This coupling induces an electromagnetic wave that is guided to propagate along the outer surface of the wire **702** or other transmission medium via at least one guided wave mode in direction **956**. The majority of the energy of the guided electromagnetic wave is outside or, but in close proximity to the outer surface of the wire **702** or other transmission medium. In the example shown, the junction at x_0 forms an electromagnetic wave that propagates via both a symmetrical mode and at least one asymmetrical surface mode, such as the first order mode presented in conjunction with FIG. **3**, that skims the surface of the wire **702** or other transmission medium.

It is noted that the graphical representations of guided waves are presented merely to illustrate an example of guided wave coupling and propagation. The actual electric and magnetic fields generated as a result of such wave propagation may vary depending on the frequencies employed, the design and/or configuration of the coupler **952**, the dimensions and composition of the wire **702** or other transmission medium, as well as its surface characteristics, its insulation if present, the electromagnetic properties of the surrounding environment, etc.

Turning now to FIG. **10**A, illustrated is a block diagram **1000** of an example, non-limiting embodiment of a coupler and transceiver system in accordance with various aspects described herein. The system is an example of transmission device **101** or **102**. In particular, the communication interface **1008** is an example of communications interface **205**, the stub coupler **1002** is an example of coupler **220**, and the transmitter/receiver device **1006**, diplexer **1016**, power amplifier **1014**, low noise amplifier **1018**, frequency mixers **1010** and **1020** and local oscillator **1012** collectively form an example of transceiver **210**.

In operation, the transmitter/receiver device **1006** launches and receives waves (e.g., guided wave **1004** onto stub coupler **1002**). The guided waves **1004** can be used to transport signals received from and sent to a host device, base station, mobile devices, a building or other device by way of a communications interface **1008**. The communications interface **1008** can be an integral part of system **1000**. Alternatively, the communications interface **1008** can be tethered to system **1000**. The communications interface **1008** can comprise a wireless interface for interfacing to the host device, base station, mobile devices, a building or other device utilizing any of various wireless signaling protocols (e.g., LTE, WiFi, WiMAX, IEEE 802.xx, etc.) including an infrared protocol such as an infrared data association (IrDA) protocol or other line of sight optical protocol. The communications interface **1008** can also comprise a wired interface such as a fiber optic line, coaxial cable, twisted pair, category 5 (CAT-5) cable or other suitable wired or optical mediums for communicating with the host device, base station, mobile devices, a building or other device via a protocol such as an Ethernet protocol, universal serial bus (USB) protocol, a data over cable service interface specification (DOCSIS) protocol, a digital subscriber line (DSL) protocol, a Firewire (IEEE 1394) protocol, or other wired or optical protocol. For embodiments where system **1000** functions as a repeater, the communications interface **1008** may not be necessary.

The output signals (e.g., Tx) of the communications interface **1008** can be combined with a carrier wave (e.g., millimeter-wave carrier wave) generated by a local oscillator **1012** at frequency mixer **1010**. Frequency mixer **1010** can use heterodyning techniques or other frequency shifting techniques to frequency shift the output signals from communications interface **1008**. For example, signals sent to and from the communications interface **1008** can be modulated signals such as orthogonal frequency division multiplexed (OFDM) signals formatted in accordance with a Long-Term Evolution (LTE) wireless protocol or other wireless 3G, 4G, 5G or higher voice and data protocol, a Zigbee, WIMAX, UltraWideband or IEEE 802.11 wireless protocol; a wired protocol such as an Ethernet protocol, universal serial bus (USB) protocol, a data over cable service interface specification (DOCSIS) protocol, a digital subscriber line (DSL) protocol, a Firewire (IEEE 1394) protocol or other wired or

wireless protocol. In an example embodiment, this frequency conversion can be done in the analog domain, and as a result, the frequency shifting can be done without regard to the type of communications protocol used by a base station, mobile devices, or in-building devices. As new communications technologies are developed, the communications interface **1008** can be upgraded (e.g., updated with software, firmware, and/or hardware) or replaced and the frequency shifting and transmission apparatus can remain, simplifying upgrades. The carrier wave can then be sent to a power amplifier ("PA") **1014** and can be transmitted via the transmitter receiver device **1006** via the diplexer **1016**.

Signals received from the transmitter/receiver device **1006** that are directed towards the communications interface **1008** can be separated from other signals via diplexer **1016**. The received signal can then be sent to low noise amplifier ("LNA") **1018** for amplification. A frequency mixer **1020**, with help from local oscillator **1012** can downshift the received signal (which is in the millimeter-wave band or around 38 GHz in some embodiments) to the native frequency. The communications interface **1008** can then receive the transmission at an input port (Rx).

In an embodiment, transmitter/receiver device **1006** can include a cylindrical or non-cylindrical metal (which, for example, can be hollow in an embodiment, but not necessarily drawn to scale) or other conducting or non-conducting waveguide and an end of the stub coupler **1002** can be placed in or in proximity to the waveguide or the transmitter/receiver device **1006** such that when the transmitter/receiver device **1006** generates a transmission, the guided wave couples to stub coupler **1002** and propagates as a guided wave **1004** about the waveguide surface of the stub coupler **1002**. In some embodiments, the guided wave **1004** can propagate in part on the outer surface of the stub coupler **1002** and in part inside the stub coupler **1002**. In other embodiments, the guided wave **1004** can propagate substantially or completely on the outer surface of the stub coupler **1002**. In yet other embodiments, the guided wave **1004** can propagate substantially or completely inside the stub coupler **1002**. In this latter embodiment, the guided wave **1004** can radiate at an end of the stub coupler **1002** (such as the tapered end shown in FIG. **4**) for coupling to a transmission medium such as a wire **702** of FIG. **7**. Similarly, if guided wave **1004** is incoming (coupled to the stub coupler **1002** from a wire **702**), guided wave **1004** then enters the transmitter/receiver device **1006** and couples to the cylindrical waveguide or conducting waveguide. While transmitter/receiver device **1006** is shown to include a separate waveguide—an antenna, cavity resonator, klystron, magnetron, travelling wave tube, or other radiating element can be employed to induce a guided wave on the coupler **1002**, with or without the separate waveguide.

In an embodiment, stub coupler **1002** can be wholly constructed of a dielectric material (or another suitable insulating material), without any metallic or otherwise conducting materials therein. Stub coupler **1002** can be composed of nylon, Teflon, polyethylene, a polyamide, other plastics, or other materials that are non-conducting and suitable for facilitating transmission of electromagnetic waves at least in part on an outer surface of such materials. In another embodiment, stub coupler **1002** can include a core that is conducting/metallic, and have an exterior dielectric surface. Similarly, a transmission medium that couples to the stub coupler **1002** for propagating electromagnetic waves induced by the stub coupler **1002** or for supplying electromagnetic waves to the stub coupler **1002** can, in addition to being a bare or insulated wire, be wholly constructed of a dielectric material (or another suitable insulating material), without any metallic or otherwise conducting materials therein.

It is noted that although FIG. **10**A shows that the opening of transmitter receiver device **1006** is much wider than the stub coupler **1002**, this is not to scale, and that in other embodiments the width of the stub coupler **1002** is comparable or slightly smaller than the opening of the hollow waveguide. It is also not shown, but in an embodiment, an end of the coupler **1002** that is inserted into the transmitter/receiver device **1006** tapers down in order to reduce reflection and increase coupling efficiencies.

Before coupling to the stub coupler **1002**, the one or more waveguide modes of the guided wave generated by the transmitter/receiver device **1006** can couple to the stub coupler **1002** to induce one or more wave propagation modes of the guided wave **1004**. The wave propagation modes of the guided wave **1004** can be different than the hollow metal waveguide modes due to the different characteristics of the hollow metal waveguide and the dielectric waveguide. For instance, wave propagation modes of the guided wave **1004** can comprise the fundamental transverse electromagnetic mode (Quasi-TEM_{00}), where only small electrical and/or magnetic fields extend in the direction of propagation, and the electric and magnetic fields extend radially outwards from the stub coupler **1002** while the guided waves propagate along the stub coupler **1002**. The fundamental transverse electromagnetic mode wave propagation mode may or may not exist inside a waveguide that is hollow. Therefore, the hollow metal waveguide modes that are used by transmitter/receiver device **1006** are waveguide modes that can couple effectively and efficiently to wave propagation modes of stub coupler **1002**.

It will be appreciated that other constructs or combinations of the transmitter/receiver device **1006** and stub coupler **1002** are possible. For example, a stub coupler **1002'** can be placed tangentially or in parallel (with or without a gap) with respect to an outer surface of the hollow metal waveguide of the transmitter/receiver device **1006'** (corresponding circuitry not shown) as depicted by reference **1000'** of FIG. **10**B. In another embodiment, not shown by reference **1000'**, the stub coupler **1002'** can be placed inside the hollow metal waveguide of the transmitter/receiver device **1006'** without an axis of the stub coupler **1002'** being coaxially aligned with an axis of the hollow metal waveguide of the transmitter/receiver device **1006'**. In either of these embodiments, the guided wave generated by the transmitter/receiver device **1006'** can couple to a surface of the stub coupler **1002'** to induce one or more wave propagation modes of the guided wave **1004'** on the stub coupler **1002'** including a fundamental mode (e.g., a symmetric mode) and/or a non-fundamental mode (e.g., asymmetric mode).

In one embodiment, the guided wave **1004'** can propagate in part on the outer surface of the stub coupler **1002'** and in part inside the stub coupler **1002'**. In another embodiment, the guided wave **1004'** can propagate substantially or completely on the outer surface of the stub coupler **1002'**. In yet other embodiments, the guided wave **1004'** can propagate substantially or completely inside the stub coupler **1002'**. In this latter embodiment, the guided wave **1004'** can radiate at an end of the stub coupler **1002'** (such as the tapered end shown in FIG. **9**) for coupling to a transmission medium such as a wire **702** of FIG. **9**.

It will be further appreciated that other constructs the transmitter/receiver device **1006** are possible. For example, a hollow metal waveguide of a transmitter/receiver device **1006"** (corresponding circuitry not shown), depicted in FIG.

10B as reference **1000"**, can be placed tangentially or in parallel (with or without a gap) with respect to an outer surface of a transmission medium such as the wire **702** of FIG. **4** without the use of the stub coupler **1002**. In this embodiment, the guided wave generated by the transmitter/receiver device **1006"** can couple to a surface of the wire **702** to induce one or more wave propagation modes of a guided wave **908** on the wire **702** including a fundamental mode (e.g., a symmetric mode) and/or a non-fundamental mode (e.g., asymmetric mode). In another embodiment, the wire **702** can be positioned inside a hollow metal waveguide of a transmitter/receiver device **1006'"** (corresponding circuitry not shown) so that an axis of the wire **702** is coaxially (or not coaxially) aligned with an axis of the hollow metal waveguide without the use of the stub coupler **1002**—see FIGS. **10**B reference **1000'"**. In this embodiment, the guided wave generated by the transmitter/receiver device **1006'"** can couple to a surface of the wire **702** to induce one or more wave propagation modes of a guided wave **908** on the wire including a fundamental mode (e.g., a symmetric mode) and/or a non-fundamental mode (e.g., asymmetric mode).

In the embodiments of **1000"** and **1000'"**, for a wire **702** having an insulated outer surface, the guided wave **908** can propagate in part on the outer surface of the insulator and in part inside the insulator. In embodiments, the guided wave **908** can propagate substantially or completely on the outer surface of the insulator, or substantially or completely inside the insulator. In the embodiments of **1000"** and **1000'"**, for a wire **702** that is a bare conductor, the guided wave **908** can propagate in part on the outer surface of the conductor and in part inside the conductor. In another embodiment, the guided wave **908** can propagate substantially or completely on the outer surface of the conductor.

Referring now to FIG. **11**, a block diagram **1100** illustrating an example, non-limiting embodiment of a dual stub coupler is shown. In particular, a dual coupler design is presented for use in a transmission device, such as transmission device **101** or **102** presented in conjunction with FIG. **1**. In an embodiment, two or more couplers (such as the stub couplers **1104** and **1106**) can be positioned around a wire **1102** in order to receive guided wave **1108**. In an embodiment, one coupler is enough to receive the guided wave **1108**. In that case, guided wave **1108** couples to coupler **1104** and propagates as guided wave **1110**. If the field structure of the guided wave **1108** oscillates or undulates around the wire **1102** due to the particular guided wave mode(s) or various outside factors, then coupler **1106** can be placed such that guided wave **1108** couples to coupler **1106**. In some embodiments, four or more couplers can be placed around a portion of the wire **1102**, e.g., at 90 degrees or another spacing with respect to each other, in order to receive guided waves that may oscillate or rotate around the wire **1102**, that have been induced at different azimuthal orientations or that have non-fundamental or higher order modes that, for example, have lobes and/or nulls or other asymmetries that are orientation dependent. However, it will be appreciated that there may be less than or more than four couplers placed around a portion of the wire **1102** without departing from example embodiments.

It should be noted that while couplers **1106** and **1104** are illustrated as stub couplers, any other of the coupler designs described herein including arc couplers, antenna or horn couplers, magnetic couplers, etc., could likewise be used. It will also be appreciated that while some example embodiments have presented a plurality of couplers around at least a portion of a wire **1102**, this plurality of couplers can also be considered as part of a single coupler system having multiple coupler subcomponents. For example, two or more couplers can be manufactured as single system that can be installed around a wire in a single installation such that the couplers are either pre-positioned or adjustable relative to each other (either manually or automatically with a controllable mechanism such as a motor or other actuator) in accordance with the single system.

Receivers coupled to couplers **1106** and **1104** can use diversity combining to combine signals received from both couplers **1106** and **1104** in order to maximize the signal quality. In other embodiments, if one or the other of the couplers **1104** and **1106** receive a transmission that is above a predetermined threshold, receivers can use selection diversity when deciding which signal to use. Further, while reception by a plurality of couplers **1106** and **1104** is illustrated, transmission by couplers **1106** and **1104** in the same configuration can likewise take place. In particular, a wide range of multi-input multi-output (MIMO) transmission and reception techniques can be employed for transmissions where a transmission device, such as transmission device **101** or **102** presented in conjunction with FIG. **1** includes multiple transceivers and multiple couplers.

It is noted that the graphical representations of waves **1108** and **1110** are presented merely to illustrate the principles that guided wave **1108** induces or otherwise launches a wave **1110** on a coupler **1104**. The actual electric and magnetic fields generated as a result of such wave propagation may vary depending on the frequencies employed, the design of the coupler **1104**, the dimensions and composition of the wire **1102**, as well as its surface characteristics, its insulation if any, the electromagnetic properties of the surrounding environment, etc.

Referring now to FIG. **12**, a block diagram **1200** illustrating an example, non-limiting embodiment of a repeater system is shown. In particular, a repeater device **1210** is presented for use in a transmission device, such as transmission device **101** or **102** presented in conjunction with FIG. **1**. In this system, two couplers **1204** and **1214** can be placed near a wire **1202** or other transmission medium such that guided waves **1205** propagating along the wire **1202** are extracted by coupler **1204** as wave **1206** (e.g. as a guided wave), and then are boosted or repeated by repeater device **1210** and launched as a wave **1216** (e.g. as a guided wave) onto coupler **1214**. The wave **1216** can then be launched on the wire **1202** and continue to propagate along the wire **1202** as a guided wave **1217**. In an embodiment, the repeater device **1210** can receive at least a portion of the power utilized for boosting or repeating through magnetic coupling with the wire **1202**, for example, when the wire **1202** is a power line or otherwise contains a power-carrying conductor. It should be noted that while couplers **1204** and **1214** are illustrated as stub couplers, any other of the coupler designs described herein including arc couplers, antenna or horn couplers, magnetic couplers, or the like, could likewise be used.

In some embodiments, repeater device **1210** can repeat the transmission associated with wave **1206**, and in other embodiments, repeater device **1210** can include a communications interface **205** that extracts data or other signals from the wave **1206** for supplying such data or signals to another network and/or one or more other devices as communication signals **110** or **112** and/or receiving communication signals **110** or **112** from another network and/or one or more other devices and launch guided wave **1216** having embedded therein the received communication signals **110** or **112**. In a repeater configuration, receiver waveguide **1208** can receive the wave **1206** from the coupler **1204** and

transmitter waveguide **1212** can launch guided wave **1216** onto coupler **1214** as guided wave **1217**. Between receiver waveguide **1208** and transmitter waveguide **1212**, the signal embedded in guided wave **1206** and/or the guided wave **1216** itself can be amplified to correct for signal loss and other inefficiencies associated with guided wave communications or the signal can be received and processed to extract the data contained therein and regenerated for transmission. In an embodiment, the receiver waveguide **1208** can be configured to extract data from the signal, process the data to correct for data errors utilizing for example error correcting codes, and regenerate an updated signal with the corrected data. The transmitter waveguide **1212** can then transmit guided wave **1216** with the updated signal embedded therein. In an embodiment, a signal embedded in guided wave **1206** can be extracted from the transmission and processed for communication with another network and/or one or more other devices via communications interface **205** as communication signals **110** or **112**. Similarly, communication signals **110** or **112** received by the communications interface **205** can be inserted into a transmission of guided wave **1216** that is generated and launched onto coupler **1214** by transmitter waveguide **1212**.

It is noted that although FIG. **12** shows guided wave transmissions **1206** and **1216** entering from the left and exiting to the right respectively, this is merely a simplification and is not intended to be limiting. In other embodiments, receiver waveguide **1208** and transmitter waveguide **1212** can also function as transmitters and receivers respectively, allowing the repeater device **1210** to be bi-directional.

In an embodiment, repeater device **1210** can be placed at locations where there are discontinuities or obstacles on the wire **1202** or other transmission medium. In the case where the wire **1202** is a power line, these obstacles can include transformers, connections, utility poles, and other such power line devices. The repeater device **1210** can help the guided (e.g., surface) waves jump over these obstacles on the line and boost the transmission power at the same time. In other embodiments, a coupler can be used to jump over the obstacle without the use of a repeater device. In that embodiment, both ends of the coupler can be tied or fastened to the wire, thus providing a path for the guided wave to travel without being blocked by the obstacle.

Turning now to FIG. **13**, illustrated is a block diagram **1300** of an example, non-limiting embodiment of a bidirectional repeater in accordance with various aspects described herein. In particular, a bidirectional repeater device **1306** is presented for use in a transmission device, such as transmission device **101** or **102** presented in conjunction with FIG. **1**. It should be noted that while the couplers are illustrated as stub couplers, any other of the coupler designs described herein including arc couplers, antenna or horn couplers, magnetic couplers, or the like, could likewise be used. The bidirectional repeater **1306** can employ diversity paths in the case of when two or more wires or other transmission media are present. Since guided wave transmissions have different transmission efficiencies and coupling efficiencies for transmission medium of different types such as insulated wires, un-insulated wires or other types of transmission media and further, if exposed to the elements, can be affected by weather, and other atmospheric conditions, it can be advantageous to selectively transmit on different transmission media at certain times. In various embodiments, the various transmission media can be designated as a primary, secondary, tertiary, etc. whether or not such designation indicates a preference of one transmission medium over another.

In the embodiment shown, the transmission media include an insulated or uninsulated wire **1302** and an insulated or uninsulated wire **1304** (referred to herein as wires **1302** and **1304**, respectively). The repeater device **1306** uses a receiver coupler **1308** to receive a guided wave traveling along wire **1302** and repeats the transmission using transmitter waveguide **1310** as a guided wave along wire **1304**. In other embodiments, repeater device **1306** can switch from the wire **1304** to the wire **1302**, or can repeat the transmissions along the same paths. Repeater device **1306** can include sensors, or be in communication with sensors (or a network management system **1601** depicted in FIG. **16**A) that indicate conditions that can affect the transmission. Based on the feedback received from the sensors, the repeater device **1306** can make the determination about whether to keep the transmission along the same wire, or transfer the transmission to the other wire.

Turning now to FIG. **14**, illustrated is a block diagram **1400** illustrating an example, non-limiting embodiment of a bidirectional repeater system. In particular, a bidirectional repeater system is presented for use in a transmission device, such as transmission device **101** or **102** presented in conjunction with FIG. **1**. The bidirectional repeater system includes waveguide coupling devices **1402** and **1404** that receive and transmit transmissions from other coupling devices located in a distributed antenna system or backhaul system.

In various embodiments, waveguide coupling device **1402** can receive a transmission from another waveguide coupling device, wherein the transmission has a plurality of subcarriers. Diplexer **1406** can separate the transmission from other transmissions, and direct the transmission to low-noise amplifier ("LNA") **1408**. A frequency mixer **1428**, with help from a local oscillator **1412**, can downshift the transmission (which is in the millimeter-wave band or around 38 GHz in some embodiments) to a lower frequency, such as a cellular band (~1.9 GHz) for a distributed antenna system, a native frequency, or other frequency for a backhaul system. An extractor (or demultiplexer) **1432** can extract the signal on a subcarrier and direct the signal to an output component **1422** for optional amplification, buffering or isolation by power amplifier **1424** for coupling to communications interface **205**. The communications interface **205** can further process the signals received from the power amplifier **1424** or otherwise transmit such signals over a wireless or wired interface to other devices such as a base station, mobile devices, a building, etc. For the signals that are not being extracted at this location, extractor **1432** can redirect them to another frequency mixer **1436**, where the signals are used to modulate a carrier wave generated by local oscillator **1414**. The carrier wave, with its subcarriers, is directed to a power amplifier ("PA") **1416** and is retransmitted by waveguide coupling device **1404** to another system, via diplexer **1420**.

An LNA **1426** can be used to amplify, buffer or isolate signals that are received by the communication interface **205** and then send the signal to a multiplexer **1434** which merges the signal with signals that have been received from waveguide coupling device **1404**. The signals received from coupling device **1404** have been split by diplexer **1420**, and then passed through LNA **1418**, and downshifted in frequency by frequency mixer **1438**. When the signals are combined by multiplexer **1434**, they are upshifted in frequency by frequency mixer **1430**, and then boosted by PA **1410**, and transmitted to another system by waveguide coupling device **1402**. In an embodiment bidirectional repeater system can be merely a repeater without the output

device **1422**. In this embodiment, the multiplexer **1434** would not be utilized and signals from LNA **1418** would be directed to mixer **1430** as previously described. It will be appreciated that in some embodiments, the bidirectional repeater system could also be implemented using two distinct and separate unidirectional repeaters. In an alternative embodiment, a bidirectional repeater system could also be a booster or otherwise perform retransmissions without downshifting and upshifting. Indeed in example embodiment, the retransmissions can be based upon receiving a signal or guided wave and performing some signal or guided wave processing or reshaping, filtering, and/or amplification, prior to retransmission of the signal or guided wave.

Referring now to FIG. **15**, a block diagram **1500** illustrating an example, non-limiting embodiment of a guided wave communications system is shown. This diagram depicts an exemplary environment in which a guided wave communication system, such as the guided wave communication system presented in conjunction with FIG. **1**, can be used.

To provide network connectivity to additional base station devices, a backhaul network that links the communication cells (e.g., macrocells and macrocells) to network devices of a core network correspondingly expands. Similarly, to provide network connectivity to a distributed antenna system, an extended communication system that links base station devices and their distributed antennas is desirable. A guided wave communication system **1500** such as shown in FIG. **15** can be provided to enable alternative, increased or additional network connectivity and a waveguide coupling system can be provided to transmit and/or receive guided wave (e.g., surface wave) communications on a transmission medium such as a wire that operates as a single-wire transmission line (e.g., a utility line), and that can be used as a waveguide and/or that otherwise operates to guide the transmission of an electromagnetic wave.

The guided wave communication system **1500** can comprise a first instance of a distribution system **1550** that includes one or more base station devices (e.g., base station device **1504**) that are communicably coupled to a central office **1501** and/or a macrocell site **1502**. Base station device **1504** can be connected by a wired (e.g., fiber and/or cable), or by a wireless (e.g., microwave wireless) connection to the macrocell site **1502** and the central office **1501**. A second instance of the distribution system **1560** can be used to provide wireless voice and data services to mobile device **1522** and to residential and/or commercial establishments **1542** (herein referred to as establishments **1542**). System **1500** can have additional instances of the distribution systems **1550** and **1560** for providing voice and/or data services to mobile devices **1522-1524** and establishments **1542** as shown in FIG. **15**.

Macrocells such as macrocell site **1502** can have dedicated connections to a mobile network and base station device **1504** or can share and/or otherwise use another connection. Central office **1501** can be used to distribute media content and/or provide internet service provider (ISP) services to mobile devices **1522-1524** and establishments **1542**. The central office **1501** can receive media content from a constellation of satellites **1530** (one of which is shown in FIG. **15**) or other sources of content, and distribute such content to mobile devices **1522-1524** and establishments **1542** via the first and second instances of the distribution system **1550** and **1560**. The central office **1501** can also be communicatively coupled to the Internet **1503** for providing internet data services to mobile devices **1522-1524** and establishments **1542**.

Base station device **1504** can be mounted on, or attached to, utility pole **1516**. In other embodiments, base station device **1504** can be near transformers and/or other locations situated nearby a power line. Base station device **1504** can facilitate connectivity to a mobile network for mobile devices **1522** and **1524**. Antennas **1512** and **1514**, mounted on or near utility poles **1518** and **1520**, respectively, can receive signals from base station device **1504** and transmit those signals to mobile devices **1522** and **1524** over a much wider area than if the antennas **1512** and **1514** were located at or near base station device **1504**.

It is noted that FIG. **15** displays three utility poles, in each instance of the distribution systems **1550** and **1560**, with one base station device, for purposes of simplicity. In other embodiments, utility pole **1516** can have more base station devices, and more utility poles with distributed antennas and/or tethered connections to establishments **1542**.

A transmission device **1506**, such as transmission device **101** or **102** presented in conjunction with FIG. **1**, can transmit a signal from base station device **1504** to antennas **1512** and **1514** via utility or power line(s) that connect the utility poles **1516**, **1518**, and **1520**. To transmit the signal, radio source and/or transmission device **1506** upconverts the signal (e.g., via frequency mixing) from base station device **1504** or otherwise converts the signal from the base station device **1504** to a microwave band signal and the transmission device **1506** launches a microwave band wave that propagates as a guided wave traveling along the utility line or other wire as described in previous embodiments. At utility pole **1518**, another transmission device **1508** receives the guided wave (and optionally can amplify it as needed or desired or operate as a repeater to receive it and regenerate it) and sends it forward as a guided wave on the utility line or other wire. The transmission device **1508** can also extract a signal from the microwave band guided wave and shift it down in frequency or otherwise convert it to its original cellular band frequency (e.g., 1.9 GHz or other defined cellular frequency) or another cellular (or non-cellular) band frequency. An antenna **1512** can wireless transmit the downshifted signal to mobile device **1522**. The process can be repeated by transmission device **1510**, antenna **1514** and mobile device **1524**, as necessary or desirable.

Transmissions from mobile devices **1522** and **1524** can also be received by antennas **1512** and **1514** respectively. The transmission devices **1508** and **1510** can upshift or otherwise convert the cellular band signals to microwave band and transmit the signals as guided wave (e.g., surface wave or other electromagnetic wave) transmissions over the power line(s) to base station device **1504**.

Media content received by the central office **1501** can be supplied to the second instance of the distribution system **1560** via the base station device **1504** for distribution to mobile devices **1522** and establishments **1542**. The transmission device **1510** can be tethered to the establishments **1542** by one or more wired connections or a wireless interface. The one or more wired connections may include without limitation, a power line, a coaxial cable, a fiber cable, a twisted pair cable, a guided wave transmission medium or other suitable wired mediums for distribution of media content and/or for providing internet services. In an example embodiment, the wired connections from the transmission device **1510** can be communicatively coupled to one or more very high bit rate digital subscriber line (VDSL) modems located at one or more corresponding service area interfaces (SAIs—not shown) or pedestals, each SAI or pedestal providing services to a portion of the establishments **1542**. The VDSL modems can be used to selectively

distribute media content and/or provide internet services to gateways (not shown) located in the establishments **1542**. The SAIs or pedestals can also be communicatively coupled to the establishments **1542** over a wired medium such as a power line, a coaxial cable, a fiber cable, a twisted pair cable, a guided wave transmission medium or other suitable wired mediums. In other example embodiments, the transmission device **1510** can be communicatively coupled directly to establishments **1542** without intermediate interfaces such as the SAIs or pedestals.

In another example embodiment, system **1500** can employ diversity paths, where two or more utility lines or other wires are strung between the utility poles **1516**, **1518**, and **1520** (e.g., for example, two or more wires between poles **1516** and **1520**) and redundant transmissions from base station/macrocell site **1502** are transmitted as guided waves down the surface of the utility lines or other wires. The utility lines or other wires can be either insulated or uninsulated, and depending on the environmental conditions that cause transmission losses, the coupling devices can selectively receive signals from the insulated or uninsulated utility lines or other wires. The selection can be based on measurements of the signal-to-noise ratio of the wires, or based on determined weather/environmental conditions (e.g., moisture detectors, weather forecasts, etc.). The use of diversity paths with system **1500** can enable alternate routing capabilities, load balancing, increased load handling, concurrent bi-directional or synchronous communications, spread spectrum communications, etc.

It is noted that the use of the transmission devices **1506**, **1508**, and **1510** in FIG. **15** are by way of example only, and that in other embodiments, other uses are possible. For instance, transmission devices can be used in a backhaul communication system, providing network connectivity to base station devices. Transmission devices **1506**, **1508**, and **1510** can be used in many circumstances where it is desirable to transmit guided wave communications over a wire, whether insulated or not insulated. Transmission devices **1506**, **1508**, and **1510** are improvements over other coupling devices due to no contact or limited physical and/or electrical contact with the wires that may carry high voltages. The transmission device can be located away from the wire (e.g., spaced apart from the wire) and/or located on the wire so long as it is not electrically in contact with the wire, as the dielectric acts as an insulator, allowing for cheap, easy, and/or less complex installation. However, as previously noted conducting or non-dielectric couplers can be employed, for example in configurations where the wires correspond to a telephone network, cable television network, broadband data service, fiber optic communications system or other network employing low voltages or having insulated transmission lines.

It is further noted, that while base station device **1504** and macrocell site **1502** are illustrated in an embodiment, other network configurations are likewise possible. For example, devices such as access points or other wireless gateways can be employed in a similar fashion to extend the reach of other networks such as a wireless local area network, a wireless personal area network or other wireless network that operates in accordance with a communication protocol such as a 802.11 protocol, WIMAX protocol, UltraWideband protocol, Bluetooth protocol, Zigbee protocol or other wireless protocol.

Referring now to FIGS. **16**A & **16**B, block diagrams **1600** and **1650** illustrating example, non-limiting embodiments of a system for managing a power grid communication system are shown. Considering FIG. **16**A, a waveguide system **1602** is presented for use in a guided wave communications system, such as the system presented in conjunction with FIG. **15**. The waveguide system **1602** can comprise sensors **1604**, a power management system **1605**, a transmission device **101** or **102** that includes at least one communication interface **205**, transceiver **210** and coupler **220**.

The waveguide system **1602** can be coupled to a power line **1610** for facilitating guided wave communications in accordance with embodiments described in the subject disclosure. In an example embodiment, the transmission device **101** or **102** includes coupler **220** for inducing electromagnetic waves on a surface of the power line **1610** that longitudinally propagate along the surface of the power line **1610** as described in the subject disclosure. The transmission device **101** or **102** can also serve as a repeater for retransmitting electromagnetic waves on the same power line **1610** or for routing electromagnetic waves between power lines **1610** as shown in FIGS. **12-13**.

The transmission device **101** or **102** includes transceiver **210** configured to, for example, up-convert a signal operating at an original frequency range to electromagnetic waves operating at, exhibiting, or associated with a carrier frequency that propagate along a coupler to induce corresponding guided electromagnetic waves that propagate along a surface of the power line **1610**. A carrier frequency can be represented by a center frequency having upper and lower cutoff frequencies that define the bandwidth of the electromagnetic waves. The power line **1610** can be a wire (e.g., single stranded or multi-stranded) having a conducting surface or insulated surface. The transceiver **210** can also receive signals from the coupler **220** and down-convert the electromagnetic waves operating at a carrier frequency to signals at their original frequency.

Signals received by the communications interface **205** of transmission device **101** or **102** for up-conversion can include without limitation signals supplied by a central office **1611** over a wired or wireless interface of the communications interface **205**, a base station **1614** over a wired or wireless interface of the communications interface **205**, wireless signals transmitted by mobile devices **1620** to the base station **1614** for delivery over the wired or wireless interface of the communications interface **205**, signals supplied by in-building communication devices **1618** over the wired or wireless interface of the communications interface **205**, and/or wireless signals supplied to the communications interface **205** by mobile devices **1612** roaming in a wireless communication range of the communications interface **205**. In embodiments where the waveguide system **1602** functions as a repeater, such as shown in FIGS. **12-13**, the communications interface **205** may or may not be included in the waveguide system **1602**.

The electromagnetic waves propagating along the surface of the power line **1610** can be modulated and formatted to include packets or frames of data that include a data payload and further include networking information (such as header information for identifying one or more destination waveguide systems **1602**). The networking information may be provided by the waveguide system **1602** or an originating device such as the central office **1611**, the base station **1614**, mobile devices **1620**, or in-building devices **1618**, or a combination thereof. Additionally, the modulated electromagnetic waves can include error correction data for mitigating signal disturbances. The networking information and error correction data can be used by a destination waveguide system **1602** for detecting transmissions directed to it, and for down-converting and processing with error correction data transmissions that include voice and/or data signals

directed to recipient communication devices communicatively coupled to the destination waveguide system **1602**.

Referring now to the sensors **1604** of the waveguide system **1602**, the sensors **1604** can comprise one or more of a temperature sensor **1604***a*, a disturbance detection sensor **1604***b*, a loss of energy sensor **1604***c*, a noise sensor **1604***d*, a vibration sensor **1604***e*, an environmental (e.g., weather) sensor **1604***f*, and/or an image sensor **1604***g*. The temperature sensor **1604***a* can be used to measure ambient temperature, a temperature of the transmission device **101** or **102**, a temperature of the power line **1610**, temperature differentials (e.g., compared to a setpoint or baseline, between transmission device **101** or **102** and powerline **1610**, etc.), or any combination thereof. In one embodiment, temperature metrics can be collected and reported periodically to a network management system **1601** by way of the base station **1614**.

The disturbance detection sensor **1604***b* can perform measurements on the power line **1610** to detect disturbances such as signal reflections, which may indicate a presence of a downstream disturbance that may impede the propagation of electromagnetic waves on the power line **1610**. A signal reflection can represent a distortion resulting from, for example, an electromagnetic wave transmitted on the power line **1610** by the transmission device **101** or **102** that reflects in whole or in part back to the transmission device **101** or **102** from a disturbance in the power line **1610** located downstream from the transmission device **101** or **102**.

Signal reflections can be caused by obstructions on the power line **1610**. For example, a tree limb may cause electromagnetic wave reflections when the tree limb is lying on the power line **1610**, or is in close proximity to the power line **1610** which may cause a corona discharge. Other obstructions that can cause electromagnetic wave reflections can include without limitation an object that has been entangled on the power line **1610** (e.g., clothing, a shoe wrapped around a power line **1610** with a shoe string, etc.), a corroded build-up on the power line **1610** or an ice build-up. Power grid components may also impede or obstruct with the propagation of electromagnetic waves on the surface of power lines **1610**. Illustrations of power grid components that may cause signal reflections include without limitation a transformer and a joint for connecting spliced power lines. A sharp angle on the power line **1610** may also cause electromagnetic wave reflections.

The disturbance detection sensor **1604***b* can comprise a circuit to compare magnitudes of electromagnetic wave reflections to magnitudes of original electromagnetic waves transmitted by the transmission device **101** or **102** to determine how much a downstream disturbance in the power line **1610** attenuates transmissions. The disturbance detection sensor **1604***b* can further comprise a spectral analyzer circuit for performing spectral analysis on the reflected waves. The spectral data generated by the spectral analyzer circuit can be compared with spectral profiles via pattern recognition, an expert system, curve fitting, matched filtering or other artificial intelligence, classification or comparison technique to identify a type of disturbance based on, for example, the spectral profile that most closely matches the spectral data. The spectral profiles can be stored in a memory of the disturbance detection sensor **1604***b* or may be remotely accessible by the disturbance detection sensor **1604***b*. The profiles can comprise spectral data that models different disturbances that may be encountered on power lines **1610** to enable the disturbance detection sensor **1604***b* to identify disturbances locally. An identification of the disturbance if known can be reported to the network management system **1601** by way of the base station **1614**. The disturbance detection sensor **1604***b* can also utilize the transmission device **101** or **102** to transmit electromagnetic waves as test signals to determine a roundtrip time for an electromagnetic wave reflection. The round trip time measured by the disturbance detection sensor **1604***b* can be used to calculate a distance traveled by the electromagnetic wave up to a point where the reflection takes place, which enables the disturbance detection sensor **1604***b* to calculate a distance from the transmission device **101** or **102** to the downstream disturbance on the power line **1610**.

The distance calculated can be reported to the network management system **1601** by way of the base station **1614**. In one embodiment, the location of the waveguide system **1602** on the power line **1610** may be known to the network management system **1601**, which the network management system **1601** can use to determine a location of the disturbance on the power line **1610** based on a known topology of the power grid. In another embodiment, the waveguide system **1602** can provide its location to the network management system **1601** to assist in the determination of the location of the disturbance on the power line **1610**. The location of the waveguide system **1602** can be obtained by the waveguide system **1602** from a pre-programmed location of the waveguide system **1602** stored in a memory of the waveguide system **1602**, or the waveguide system **1602** can determine its location using a GPS receiver (not shown) included in the waveguide system **1602**.

The power management system **1605** provides energy to the aforementioned components of the waveguide system **1602**. The power management system **1605** can receive energy from solar cells, or from a transformer (not shown) coupled to the power line **1610**, or by inductive coupling to the power line **1610** or another nearby power line. The power management system **1605** can also include a backup battery and/or a super capacitor or other capacitor circuit for providing the waveguide system **1602** with temporary power. The loss of energy sensor **1604***c* can be used to detect when the waveguide system **1602** has a loss of power condition and/or the occurrence of some other malfunction. For example, the loss of energy sensor **1604***c* can detect when there is a loss of power due to defective solar cells, an obstruction on the solar cells that causes them to malfunction, loss of power on the power line **1610**, and/or when the backup power system malfunctions due to expiration of a backup battery, or a detectable defect in a super capacitor. When a malfunction and/or loss of power occurs, the loss of energy sensor **1604***c* can notify the network management system **1601** by way of the base station **1614**.

The noise sensor **1604***d* can be used to measure noise on the power line **1610** that may adversely affect transmission of electromagnetic waves on the power line **1610**. The noise sensor **1604***d* can sense unexpected electromagnetic interference, noise bursts, or other sources of disturbances that may interrupt reception of modulated electromagnetic waves on a surface of a power line **1610**. A noise burst can be caused by, for example, a corona discharge, or other source of noise. The noise sensor **1604***d* can compare the measured noise to a noise profile obtained by the waveguide system **1602** from an internal database of noise profiles or from a remotely located database that stores noise profiles via pattern recognition, an expert system, curve fitting, matched filtering or other artificial intelligence, classification or comparison technique. From the comparison, the noise sensor **1604***d* may identify a noise source (e.g., corona discharge or otherwise) based on, for example, the noise profile that provides the closest match to the measured noise.

The noise sensor **1604***d* can also detect how noise affects transmissions by measuring transmission metrics such as bit error rate, packet loss rate, jitter, packet retransmission requests, etc. The noise sensor **1604***d* can report to the network management system **1601** by way of the base station **1614** the identity of noise sources, their time of occurrence, and transmission metrics, among other things.

The vibration sensor **1604***e* can include accelerometers and/or gyroscopes to detect 2D or 3D vibrations on the power line **1610**. The vibrations can be compared to vibration profiles that can be stored locally in the waveguide system **1602**, or obtained by the waveguide system **1602** from a remote database via pattern recognition, an expert system, curve fitting, matched filtering or other artificial intelligence, classification or comparison technique. Vibration profiles can be used, for example, to distinguish fallen trees from wind gusts based on, for example, the vibration profile that provides the closest match to the measured vibrations. The results of this analysis can be reported by the vibration sensor **1604***e* to the network management system **1601** by way of the base station **1614**.

The environmental sensor **1604***f* can include a barometer for measuring atmospheric pressure, ambient temperature (which can be provided by the temperature sensor **1604***a*), wind speed, humidity, wind direction, and rainfall, among other things. The environmental sensor **1604***f* can collect raw information and process this information by comparing it to environmental profiles that can be obtained from a memory of the waveguide system **1602** or a remote database to predict weather conditions before they arise via pattern recognition, an expert system, knowledge-based system or other artificial intelligence, classification or other weather modeling and prediction technique. The environmental sensor **1604***f* can report raw data as well as its analysis to the network management system **1601**.

The image sensor **1604***g* can be a digital camera (e.g., a charged coupled device or CCD imager, infrared camera, etc.) for capturing images in a vicinity of the waveguide system **1602**. The image sensor **1604***g* can include an electromechanical mechanism to control movement (e.g., actual position or focal points/zooms) of the camera for inspecting the power line **1610** from multiple perspectives (e.g., top surface, bottom surface, left surface, right surface and so on). Alternatively, the image sensor **1604***g* can be designed such that no electromechanical mechanism is needed in order to obtain the multiple perspectives. The collection and retrieval of imaging data generated by the image sensor **1604***g* can be controlled by the network management system **1601**, or can be autonomously collected and reported by the image sensor **1604***g* to the network management system **1601**.

Other sensors that may be suitable for collecting telemetry information associated with the waveguide system **1602** and/or the power lines **1610** for purposes of detecting, predicting and/or mitigating disturbances that can impede the propagation of electromagnetic wave transmissions on power lines **1610** (or any other form of a transmission medium of electromagnetic waves) may be utilized by the waveguide system **1602**.

Referring now to FIG. **16**B, block diagram **1650** illustrates an example, non-limiting embodiment of a system for managing a power grid **1653** and a communication system **1655** embedded therein or associated therewith in accordance with various aspects described herein. The communication system **1655** comprises a plurality of waveguide systems **1602** coupled to power lines **1610** of the power grid **1653**. At least a portion of the waveguide systems **1602** used in the communication system **1655** can be in direct communication with a base station **1614** and/or the network management system **1601**. Waveguide systems **1602** not directly connected to a base station **1614** or the network management system **1601** can engage in communication sessions with either a base station **1614** or the network management system **1601** by way of other downstream waveguide systems **1602** connected to a base station **1614** or the network management system **1601**.

The network management system **1601** can be communicatively coupled to equipment of a utility company **1652** and equipment of a communications service provider **1654** for providing each entity, status information associated with the power grid **1653** and the communication system **1655**, respectively. The network management system **1601**, the equipment of the utility company **1652**, and the communications service provider **1654** can access communication devices utilized by utility company personnel **1656** and/or communication devices utilized by communications service provider personnel **1658** for purposes of providing status information and/or for directing such personnel in the management of the power grid **1653** and/or communication system **1655**.

FIG. **17**A illustrates a flow diagram of an example, non-limiting embodiment of a method **1700** for detecting and mitigating disturbances occurring in a communication network of the systems of FIGS. **16**A & **16**B. Method **1700** can begin with step **1702** where a waveguide system **1602** transmits and receives messages embedded in, or forming part of, modulated electromagnetic waves or another type of electromagnetic waves traveling along a surface of a power line **1610**. The messages can be voice messages, streaming video, and/or other data/information exchanged between communication devices communicatively coupled to the communication system **1655**. At step **1704** the sensors **1604** of the waveguide system **1602** can collect sensing data. In an embodiment, the sensing data can be collected in step **1704** prior to, during, or after the transmission and/or receipt of messages in step **1702**. At step **1706** the waveguide system **1602** (or the sensors **1604** themselves) can determine from the sensing data an actual or predicted occurrence of a disturbance in the communication system **1655** that can affect communications originating from (e.g., transmitted by) or received by the waveguide system **1602**. The waveguide system **1602** (or the sensors **1604**) can process temperature data, signal reflection data, loss of energy data, noise data, vibration data, environmental data, or any combination thereof to make this determination. The waveguide system **1602** (or the sensors **1604**) may also detect, identify, estimate, or predict the source of the disturbance and/or its location in the communication system **1655**. If a disturbance is neither detected/identified nor predicted/estimated at step **1708**, the waveguide system **1602** can proceed to step **1702** where it continues to transmit and receive messages embedded in, or forming part of, modulated electromagnetic waves traveling along a surface of the power line **1610**.

If at step **1708** a disturbance is detected/identified or predicted/estimated to occur, the waveguide system **1602** proceeds to step **1710** to determine if the disturbance adversely affects (or alternatively, is likely to adversely affect or the extent to which it may adversely affect) transmission or reception of messages in the communication system **1655**. In one embodiment, a duration threshold and a frequency of occurrence threshold can be used at step **1710** to determine when a disturbance adversely affects communications in the communication system **1655**. For illustration purposes only, assume a duration threshold is set to 500 ms,

while a frequency of occurrence threshold is set to 5 disturbances occurring in an observation period of 10 sec. Thus, a disturbance having a duration greater than 500 ms will trigger the duration threshold. Additionally, any disturbance occurring more than 5 times in a 10 sec time interval will trigger the frequency of occurrence threshold.

In one embodiment, a disturbance may be considered to adversely affect signal integrity in the communication systems **1655** when the duration threshold alone is exceeded. In another embodiment, a disturbance may be considered as adversely affecting signal integrity in the communication systems **1655** when both the duration threshold and the frequency of occurrence threshold are exceeded. The latter embodiment is thus more conservative than the former embodiment for classifying disturbances that adversely affect signal integrity in the communication system **1655**. It will be appreciated that many other algorithms and associated parameters and thresholds can be utilized for step **1710** in accordance with example embodiments.

Referring back to method **1700**, if at step **1710** the disturbance detected at step **1708** does not meet the condition for adversely affected communications (e.g., neither exceeds the duration threshold nor the frequency of occurrence threshold), the waveguide system **1602** may proceed to step **1702** and continue processing messages. For instance, if the disturbance detected in step **1708** has a duration of 1 msec with a single occurrence in a 10 sec time period, then neither threshold will be exceeded. Consequently, such a disturbance may be considered as having a nominal effect on signal integrity in the communication system **1655** and thus would not be flagged as a disturbance requiring mitigation. Although not flagged, the occurrence of the disturbance, its time of occurrence, its frequency of occurrence, spectral data, and/or other useful information, may be reported to the network management system **1601** as telemetry data for monitoring purposes.

Referring back to step **1710**, if on the other hand the disturbance satisfies the condition for adversely affected communications (e.g., exceeds either or both thresholds), the waveguide system **1602** can proceed to step **1712** and report the incident to the network management system **1601**. The report can include raw sensing data collected by the sensors **1604**, a description of the disturbance if known by the waveguide system **1602**, a time of occurrence of the disturbance, a frequency of occurrence of the disturbance, a location associated with the disturbance, parameters readings such as bit error rate, packet loss rate, retransmission requests, jitter, latency and so on. If the disturbance is based on a prediction by one or more sensors of the waveguide system **1602**, the report can include a type of disturbance expected, and if predictable, an expected time occurrence of the disturbance, and an expected frequency of occurrence of the predicted disturbance when the prediction is based on historical sensing data collected by the sensors **1604** of the waveguide system **1602**.

At step **1714**, the network management system **1601** can determine a mitigation, circumvention, or correction technique, which may include directing the waveguide system **1602** to reroute traffic to circumvent the disturbance if the location of the disturbance can be determined. In one embodiment, the waveguide coupling device **1402** detecting the disturbance may direct a repeater such as the one shown in FIGS. **13-14** to connect the waveguide system **1602** from a primary power line affected by the disturbance to a secondary power line to enable the waveguide system **1602** to reroute traffic to a different transmission medium and avoid the disturbance. In an embodiment where the waveguide system **1602** is configured as a repeater the waveguide system **1602** can itself perform the rerouting of traffic from the primary power line to the secondary power line. It is further noted that for bidirectional communications (e.g., full or half-duplex communications), the repeater can be configured to reroute traffic from the secondary power line back to the primary power line for processing by the waveguide system **1602**.

In another embodiment, the waveguide system **1602** can redirect traffic by instructing a first repeater situated upstream of the disturbance and a second repeater situated downstream of the disturbance to redirect traffic from a primary power line temporarily to a secondary power line and back to the primary power line in a manner that avoids the disturbance. It is further noted that for bidirectional communications (e.g., full or half-duplex communications), repeaters can be configured to reroute traffic from the secondary power line back to the primary power line.

To avoid interrupting existing communication sessions occurring on a secondary power line, the network management system **1601** may direct the waveguide system **1602** to instruct repeater(s) to utilize unused time slot(s) and/or frequency band(s) of the secondary power line for redirecting data and/or voice traffic away from the primary power line to circumvent the disturbance.

At step **1716**, while traffic is being rerouted to avoid the disturbance, the network management system **1601** can notify equipment of the utility company **1652** and/or equipment of the communications service provider **1654**, which in turn may notify personnel of the utility company **1656** and/or personnel of the communications service provider **1658** of the detected disturbance and its location if known. Field personnel from either party can attend to resolving the disturbance at a determined location of the disturbance. Once the disturbance is removed or otherwise mitigated by personnel of the utility company and/or personnel of the communications service provider, such personnel can notify their respective companies and/or the network management system **1601** utilizing field equipment (e.g., a laptop computer, smartphone, etc.) communicatively coupled to network management system **1601**, and/or equipment of the utility company and/or the communications service provider. The notification can include a description of how the disturbance was mitigated and any changes to the power lines **1610** that may change a topology of the communication system **1655**.

Once the disturbance has been resolved (as determined in decision **1718**), the network management system **1601** can direct the waveguide system **1602** at step **1720** to restore the previous routing configuration used by the waveguide system **1602** or route traffic according to a new routing configuration if the restoration strategy used to mitigate the disturbance resulted in a new network topology of the communication system **1655**. In another embodiment, the waveguide system **1602** can be configured to monitor mitigation of the disturbance by transmitting test signals on the power line **1610** to determine when the disturbance has been removed. Once the waveguide system **1602** detects an absence of the disturbance it can autonomously restore its routing configuration without assistance by the network management system **1601** if it determines the network topology of the communication system **1655** has not changed, or it can utilize a new routing configuration that adapts to a detected new network topology.

FIG. **17**B illustrates a flow diagram of an example, non-limiting embodiment of a method **1750** for detecting and mitigating disturbances occurring in a communication

network of the system of FIGS. **16**A and **16**B. In one embodiment, method **1750** can begin with step **1752** where a network management system **1601** receives from equipment of the utility company **1652** or equipment of the communications service provider **1654** maintenance information associated with a maintenance schedule. The network management system **1601** can at step **1754** identify from the maintenance information, maintenance activities to be performed during the maintenance schedule. From these activities, the network management system **1601** can detect a disturbance resulting from the maintenance (e.g., scheduled replacement of a power line **1610**, scheduled replacement of a waveguide system **1602** on the power line **1610**, scheduled reconfiguration of power lines **1610** in the power grid **1653**, etc.).

In another embodiment, the network management system **1601** can receive at step **1755** telemetry information from one or more waveguide systems **1602**. The telemetry information can include among other things an identity of each waveguide system **1602** submitting the telemetry information, measurements taken by sensors **1604** of each waveguide system **1602**, information relating to predicted, estimated, or actual disturbances detected by the sensors **1604** of each waveguide system **1602**, location information associated with each waveguide system **1602**, an estimated location of a detected disturbance, an identification of the disturbance, and so on. The network management system **1601** can determine from the telemetry information a type of disturbance that may be adverse to operations of the waveguide, transmission of the electromagnetic waves along the wire surface, or both. The network management system **1601** can also use telemetry information from multiple waveguide systems **1602** to isolate and identify the disturbance. Additionally, the network management system **1601** can request telemetry information from waveguide systems **1602** in a vicinity of an affected waveguide system **1602** to triangulate a location of the disturbance and/or validate an identification of the disturbance by receiving similar telemetry information from other waveguide systems **1602**.

In yet another embodiment, the network management system **1601** can receive at step **1756** an unscheduled activity report from maintenance field personnel. Unscheduled maintenance may occur as result of field calls that are unplanned or as a result of unexpected field issues discovered during field calls or scheduled maintenance activities. The activity report can identify changes to a topology configuration of the power grid **1653** resulting from field personnel addressing discovered issues in the communication system **1655** and/or power grid **1653**, changes to one or more waveguide systems **1602** (such as replacement or repair thereof), mitigation of disturbances performed if any, and so on.

At step **1758**, the network management system **1601** can determine from reports received according to steps **1752** through **1756** if a disturbance will occur based on a maintenance schedule, or if a disturbance has occurred or is predicted to occur based on telemetry data, or if a disturbance has occurred due to an unplanned maintenance identified in a field activity report. From any of these reports, the network management system **1601** can determine whether a detected or predicted disturbance requires rerouting of traffic by the affected waveguide systems **1602** or other waveguide systems **1602** of the communication system **1655**.

When a disturbance is detected or predicted at step **1758**, the network management system **1601** can proceed to step **1760** where it can direct one or more waveguide systems **1602** to reroute traffic to circumvent the disturbance. When the disturbance is permanent due to a permanent topology change of the power grid **1653**, the network management system **1601** can proceed to step **1770** and skip steps **1762**, **1764**, **1766**, and **1772**. At step **1770**, the network management system **1601** can direct one or more waveguide systems **1602** to use a new routing configuration that adapts to the new topology. However, when the disturbance has been detected from telemetry information supplied by one or more waveguide systems **1602**, the network management system **1601** can notify maintenance personnel of the utility company **1656** or the communications service provider **1658** of a location of the disturbance, a type of disturbance if known, and related information that may be helpful to such personnel to mitigate the disturbance. When a disturbance is expected due to maintenance activities, the network management system **1601** can direct one or more waveguide systems **1602** to reconfigure traffic routes at a given schedule (consistent with the maintenance schedule) to avoid disturbances caused by the maintenance activities during the maintenance schedule.

Returning back to step **1760** and upon its completion, the process can continue with step **1762**. At step **1762**, the network management system **1601** can monitor when the disturbance(s) have been mitigated by field personnel. Mitigation of a disturbance can be detected at step **1762** by analyzing field reports submitted to the network management system **1601** by field personnel over a communications network (e.g., cellular communication system) utilizing field equipment (e.g., a laptop computer or handheld computer/device). If field personnel have reported that a disturbance has been mitigated, the network management system **1601** can proceed to step **1764** to determine from the field report whether a topology change was required to mitigate the disturbance. A topology change can include rerouting a power line **1610**, reconfiguring a waveguide system **1602** to utilize a different power line **1610**, otherwise utilizing an alternative link to bypass the disturbance and so on. If a topology change has taken place, the network management system **1601** can direct at step **1770** one or more waveguide systems **1602** to use a new routing configuration that adapts to the new topology.

If, however, a topology change has not been reported by field personnel, the network management system **1601** can proceed to step **1766** where it can direct one or more waveguide systems **1602** to send test signals to test a routing configuration that had been used prior to the detected disturbance(s). Test signals can be sent to affected waveguide systems **1602** in a vicinity of the disturbance. The test signals can be used to determine if signal disturbances (e.g., electromagnetic wave reflections) are detected by any of the waveguide systems **1602**. If the test signals confirm that a prior routing configuration is no longer subject to previously detected disturbance(s), then the network management system **1601** can at step **1772** direct the affected waveguide systems **1602** to restore a previous routing configuration. If, however, test signals analyzed by one or more waveguide coupling device **1402** and reported to the network management system **1601** indicate that the disturbance(s) or new disturbance(s) are present, then the network management system **1601** will proceed to step **1768** and report this information to field personnel to further address field issues. The network management system **1601** can in this situation continue to monitor mitigation of the disturbance(s) at step **1762**.

In the aforementioned embodiments, the waveguide systems **1602** can be configured to be self-adapting to changes in the power grid **1653** and/or to mitigation of disturbances.

That is, one or more affected waveguide systems **1602** can be configured to self-monitor mitigation of disturbances and reconfigure traffic routes without requiring instructions to be sent to them by the network management system **1601**. In this embodiment, the one or more waveguide systems **1602** that are self-configurable can inform the network management system **1601** of its routing choices so that the network management system **1601** can maintain a macro-level view of the communication topology of the communication system **1655**.

While for purposes of simplicity of explanation, the respective processes are shown and described as a series of blocks in FIGS. **17**A and **17**B, respectively, it is to be understood and appreciated that the claimed subject matter is not limited by the order of the blocks, as some blocks may occur in different orders and/or concurrently with other blocks from what is depicted and described herein. Moreover, not all illustrated blocks may be required to implement the methods described herein.

Turning now to FIG. **18**A, a block diagram **1800** is shown illustrating an example, non-limiting embodiment of a communications system in accordance with various aspects described herein. In particular, a communication system is shown that includes client node devices **1802**, a host node device **1804**, guided wave communication systems **1810** that include mini-repeaters (MR) **1806**, client devices **1812** and network termination **1815**. The network termination **1815** communicates upstream and downstream data **1816** with a network **1818** such as the Internet, a packet switched telephone network, a voice over Internet protocol (VoIP) network, Internet protocol (IP) based television network, a cable network, a passive or active optical network, a 4G or higher wireless access network, WIMAX network, Ultra-Wideband network, personal area network or other wireless access network, a broadcast satellite network and/or other communications network. The upstream and downstream data **1816** can include voice, data or text communications, audio, video, graphics, and/or other media. The client devices **1812** can include mobile phones, e-readers, tablets, phablets, wireless modems, mobile wireless gateways, home gateway devices, and/or other stationary or mobile computing devices.

In particular, downstream data from the network termination **1815** is sent to the host node device **1804** that transfers the downstream data directly to client devices **1812** in range via wireless link **1814**. The host node device **1804** also couples to one or more guided wave communication systems **1810** to send the downstream data to client devices **1812** via mini-repeaters **1806** via wireless links **1814'** that are further remote from the host node device **1804**. In addition, the host node device **1804** sends the downstream data via wireless links **1808** to one or more client node devices **1802**, that may be beyond the range of the guided wave communication systems **1810**. The client node devices **1802** send the downstream data to client devices **1812** via wireless links **1814"**. The client node devices **1802** repeat the downstream data to additional guided wave communication systems **1810'** and wireless links **1808'** to service client devices **1812** that are further remote, via MRs **1806** and/or additional client node devices that are not expressly shown.

In addition, upstream data received from client devices **1812** via wireless links **1814"** can be transferred back to the network terminal **1815** via client node devices **1802**, wireless links **1808** and host node device **1804**. Upstream data received from client devices **1812** via wireless links **1814'** can be transferred back to the network terminal **1815** via guided wave communication system **1810** and host node device **1804**. Upstream data received from client devices **1812** via wireless links **1814** can be transferred back to the network terminal **1815** via host node device **1804**. Upstream data from client devices **1812** that are more remote can be transferred back to the network terminal **1815** via wireless links **1808'** and/or guided wave communication systems **1810'**, client node devices **1802**, wireless links **1808** and host node device **1804**, etc. It should be noted that communication system shown can separate upstream and downstream data **1816** into multiple upstream and downstream channels and operate a spatial channel reuse scheme to service mobile client devices **1812** in adjacent areas with minimal interference.

In various embodiments, the communication system shown is used in conjunction with a public utility such as an electrical power company distribution system. In this case, the host node device **1804**, client node devices **1802** and/or the mini-repeaters **1806** are supported by utility poles of the distribution system and the guided wave communication systems **1810** can operate via a transmission medium that includes segments of an insulated or bare medium voltage power line and/or other transmission line or supporting wire of the distribution system. In particular, guided wave communication systems **1810** can convey one or more channels of upstream and downstream data **1816** via guided electromagnetic waves that are guided by or bound to the outer surface of the bare or insulated wire.

It should be noted that while the client node devices **1802**, host node devices **1804**, and MRs **1806** have been described as communicating with client devices **1812** via wireless links **1814**, **1814'** and **1814"**, one or more wired links could likewise be employed. In this case, the client devices **1812** can further include personal computers, laptop computers, netbook computers, tablets or other computing devices along with digital subscriber line (DSL) modems, data over coax service interface specification (DOCSIS) modems or other cable modems, telephones, media players, televisions, an optical modem, a set top box or home gateway and/or other access devices.

In various embodiments, the network termination **1815** performs physical layer processing for communication with the client devices **1812**. In this case, the network termination performs the necessary demodulation and extraction of upstream data and modulation and other formatting of downstream data, leaving the host node device **1804**, client node devices **1802** and mini-repeaters **1806** to operate via simple analog signal processing. As used herein analog signal processing includes filtering, switching, duplexing, duplexing, amplification, frequency up and down conversion, and other analog processing that does not require either analog to digital conversion or digital to analog conversion. In accordance with other embodiments, the network terminal operates in conjunction with a Common Public Radio Interface (CPRI) that sends streams of data to the host node device **1804**, client node devices **1802** and mini-repeaters **1806** that operate via simple signal processing that can includes switching, routing or other selection of packets in a packet stream to be received from and sent to multiple destinations and/or other fast processes that operate in a data domain that can be implemented, for example, with low power devices and/or inexpensive hardware.

Further implementation regarding the communication system shown in diagram **1800**, including many optional functions and features, are provided in conjunction with FIGS. **18**B-**18**H, **19**A-**19**D and **20**A-**20**D that follow.

Turning now to FIG. **18**B, a block diagram **1820** is shown illustrating an example, non-limiting embodiment of a network termination **1815** in accordance with various aspects described herein. As discussed in conjunction with FIG. **18**A, the network termination **1815** performs physical layer processing for communication with the client devices **1812**. In this case, the network termination **1815** performs the necessary demodulation and extraction of upstream data and modulation and other formatting of downstream data.

In particular, network termination **1815** includes a network interface **1835** configured to receive downstream data **1826** from a communication network and to send upstream data **1836** to the communication network, such as network **1818**. A downstream channel modulator **1830** is configured to modulate the downstream data **1826** into downstream channel signals **1828** corresponding to downstream frequency channels of a guided wave communication system, such as guided wave communication system **1810**.

A host interface **1845** is configured to send the downstream channel signals **1828** to one or more guided wave communication system **1810** or **1810'** via, for example, host node device **1804**, and/or client node device **1802**. The host interface **1845** also receives upstream channel signals **1838** corresponding to upstream frequency channels from the guided wave communication system **1810** or **1810'**, via, for example, host node device **1804** and/or client node device **1802**. An upstream channel demodulator **1840** is configured to demodulate upstream channel signals **1838** received via the host node device **1804**, into the upstream data **1836**.

In various embodiments, the downstream channel modulator **1830** modulates one or more of the downstream channel signals **1828** to convey the downstream data **1826** via the guided wave communication system **1810** as guided electromagnetic waves, such as guided waves **120** that are bound to a transmission medium **125** discussed in conjunction with FIG. **1**. The upstream channel demodulator **1840** demodulates one or more of the upstream channel signals **1838** conveying upstream data **1836** received via the guided wave communication system **1810** as guided electromagnetic waves, such as guided waves **120** that are bound to a transmission medium **125** discussed in conjunction with FIG. **1**.

In various embodiments, the network interface **1835** can include one or more optical cable interfaces, telephone cable interfaces, coaxial cable interfaces, Ethernet interfaces or other interfaces, either wired or wireless for communicating with the communication network **1818**. The host node interface **1845** can include a fiber optical cable interface for communicating with the host node device **1804**; however other wired or wireless interfaces can likewise be used for this purpose.

In various embodiments, the number of the upstream frequency channels is less than the number of the downstream frequency channels in accordance with an asymmetrical communication system, however the number of the upstream frequency channels can greater than or be equal to the number of the downstream frequency channels in the case where a symmetrical communication system is implemented.

The upstream channel signals and downstream channel signals can be modulated and otherwise formatted in accordance with a DOCSIS 2.0 or higher standard protocol, a WiMAX standard protocol, a 802.11 standard protocol, a 4G or higher wireless voice and data protocol such as an LTE protocol and/or other standard communication protocol. In addition to protocols that conform with current standards, any of these protocols can be modified to operate in conjunction with a communications network as shown. For example, a 802.11 protocol or other protocol can be modified to include additional guidelines and/or a separate data channel to provide collision detection/multiple access over a wider area (e.g. allowing devices that are communicating via a particular frequency channel to hear one another). In various embodiments all of the upstream channel signals **1838** and downstream channel signals **1828** are formatted in accordance with the same communications protocol. In the alternative however, two or more differing protocols can be employed to, for example, be compatible with a wider range of client devices and/or operate in different frequency bands.

When two or more differing protocols are employed, a first subset of the downstream channel signals **1828** can be modulated by the downstream channel modulator **1830** in accordance with a first standard protocol and a second subset of the downstream channel signals **1828** can be modulated in accordance with a second standard protocol that differs from the first standard protocol Likewise a first subset of the upstream channel signals **1838** can be received via the host interface **1845** in accordance with a first standard protocol for demodulation by the upstream channel demodulator **1840** in accordance with the first standard protocol and a second subset of the upstream channel signals **1838** can be received via the host interface **1845** in accordance with a second standard protocol for demodulation by the upstream channel demodulator **1840** in accordance with the second standard protocol that differs from the first standard protocol.

Turning now to FIG. **18**C, a graphical diagram **1850** is shown illustrating an example, non-limiting embodiment of a frequency spectrum in accordance with various aspects described herein. In particular, the downstream channel band **1844** includes a plurality of downstream frequency channels represented by separate spectral symbols. Likewise the upstream channel band **1846** includes a plurality of upstream frequency channels represented by separate spectral symbols. These separate spectral symbols are meant to be placeholders for the frequency allocation of each individual channel signal. The actual spectral response of will vary based on the protocol and modulation employed and further as a function of time.

As previously discussed, the number of the upstream frequency channels can be less than or greater than the number of the downstream frequency channels in accordance with an asymmetrical communication system. In this case, the upstream channel band **1846** can be narrower or wider than the downstream channel band **1844**. In the alternative, the number of the upstream frequency channels can be equal to the number of the downstream frequency channels in the case where a symmetrical communication system is implemented. In this case, the width of the upstream channel band **1846** can be equal to the width of the downstream channel band **1844** and bit stuffing or other data filing techniques can be employed to compensate for variations in upstream traffic.

While the downstream channel band **1844** is shown at a lower frequency than the upstream channel band **1846**, in other embodiments, the downstream channel band **1844** can be at a higher frequency than the upstream channel band **1846**. Further, while the downstream channel band **1844** and upstream channel band **1846** are shown as occupying a single contiguous frequency band, in other embodiments, two or more upstream and/or two or more downstream channel bands can be employed, depending on available spectrum and/or the communication standards employed.

Turning now to FIG. **18**D, a graphical diagram **1852** is shown illustrating an example, non-limiting embodiment of a frequency spectrum in accordance with various aspects described herein. As previously discussed two or more different communication protocols can be employed to communicate upstream and downstream data. In the example shown, the downstream channel band **1844** includes a first plurality of downstream frequency channels represented by separate spectral symbols of a first type representing the use of a first communication protocol. The downstream channel band **1844'** includes a second plurality of downstream frequency channels represented by separate spectral symbols of a second type representing the use of a second communication protocol. Likewise the upstream channel band **1846** includes a first plurality of upstream frequency channels represented by separate spectral symbols of the first type representing the use of the first communication protocol. The upstream channel band **1846'** includes a second plurality of upstream frequency channels represented by separate spectral symbols of the second type representing the use of the second communication protocol.

While the individual channel bandwidth is shown as being roughly the same for channels of the first and second type, it should be noted that upstream and downstream frequency channels may be of differing bandwidths and first frequency channels of the first and second type may be of differing bandwidths, depending on available spectrum and/or the communication standards employed.

Turning now to FIG. **18**E, a block diagram **1860** is shown illustrating an example, non-limiting embodiment of a host node device **1804** in accordance with various aspects described herein. In particular, the host node device **1804** includes a terminal interface **1855**, duplexer/triplexer assembly **1858**, two access point repeaters (APR) **1862** and radio **1865**.

The access point repeaters **1862** couple to a transmission medium **125** to communicate via a guided wave communication system (GWCS) **1810**. The terminal interface **1855** is configured to receive downstream channel signals **1828**, via a network terminal **1815**, from a communications network, such as network **1818**. The duplexer/triplexer assembly **1858** is configured to transfer the downstream channel signals **1828** to the APRs **1862**. The APRs launch the downstream channel signals **1828** on the guided wave communication system **1810** as guided electromagnetic waves. In the example shown the APRs **1862** launch the downstream channel signals **1828** in different directions (designed direction A and direction B) on transmission medium **125** of the guided wave communication system **1810** as guided electromagnetic waves.

Consider example where the transmission medium is a bare or insulated wire. One APR **1862** can launch the downstream channel signals **1828** in one longitudinal direction along the wire while the other APR **1862** launches the downstream channel signals in the opposite longitudinal direction along the wire. In other network configurations where several transmission media **125** converge at the host node device **1804**, three or more APRs **1862** can be included to launch guided waves carrying the downstream channel signals **1828** outward along each transmission medium. In addition to launching guided wave communications, one or more of the APRs **1862** also communicates one or more selected downstream channel signals **1828** to client devices in range of the host node device **1804** via wireless links **1814**.

The duplexer/triplexer assembly **1858** is further configured to transfer the downstream channel signals **1828** to the radio **1865**. The radio **1865** is configured to wirelessly communicate with one or more client node devices **1802** in range of the host node device **1804**. In various embodiments, the radio **1865** is an analog radio that upconverts the downstream channel signals **1828** via mixing or other heterodyne action to generate upconverted downstream channel signals that are communicated to one or more client node devices **1802**. The radio **1865** can include multiple individual antennas for communicating with the client node devices **1802**, a phased antenna array or steerable beam or multi-beam antenna system for communicating with multiple devices at different locations. In an embodiment, the downstream channel signals **1828** are upconverted in a 60 GHz band for line-of-sight communications to a client node device **1802** some distance away. The duplexer/triplexer assembly **1858** can include a duplexer, triplexer, splitter, switch, router and/or other assembly that operates as a "channel duplexer" to provide bi-directional communications over multiple communication paths.

In addition to downstream communications destined for client devices **1812**, host node device **1804** can handle upstream communications originating from client devices **1812** as well. In operation, the APRs **1862** extract upstream channel signals **1838** from the guided wave communication system **1810**, received via mini-repeaters **1806** from wireless links **1814'** and/or client node devices **1802** from wireless links **1814"** or from other devices more remote. Other upstream channel signals **1838** can be received via APRs **1862** via communication over wireless link **1814** and via radio **1865** from client node devices **1802** in direct communication with client devices **1812** via wireless links **1814"** or indirect communication via either guided wave communication systems **1810'** or other client node devices **1802**. In situations where the radio **1865** operates in a higher frequency band, the radio **1865** downconverts upconverted upstream channel signals. The duplexer/triplexer assembly **1858** transfers the upstream channels signals **1838** received by the APRs **1862** and downconverted by the radio **1865** to the terminal interface **1855** to be sent to the network **1818** via network termination **1815**.

Consider an example where the host node device **1804** is used in conjunction with a public utility such as an electrical power company distribution system. In this case, the host node device **1804**, client node devices **1802** and/or the mini-repeaters **1806** can be supported by utility poles, other structures or power lines of the distribution system and the guided wave communication systems **1810** can operate via a transmission medium **125** that includes segments of an insulated or bare medium voltage power line and/or other transmission line or supporting wire of the distribution system.

In a particular example, **2**n mini-repeaters **1806** on 2n utility poles in two directions along the power line from the utility pole that supports the host node device **1804** can each receive and repeat downstream channel signals **1828** in the direction of the client node devices **1802** that can, for example, be supported by the $(n+1)^{st}$ utility pole in each direction from the host node device **1804**. The mini-repeaters **1806** can each communicate one or more selected downstream channel signals with client devices **1812** in range via wireless links **1814'**. In addition, the host node device **1804** transfers the downstream channel signals **1828** directly to client devices **1812** via wireless link **1808**—for wireless communication to client devices **1812** in range of the client node devices **1802** via wireless links **1814"** and further downstream via guided wave communication systems **1810'** and/or wireless link **1808'** to other additional

client node devices **1802** and mini-repeaters **1806** that operate in a similar fashion. The host node device **1804** operates in a reciprocal fashion to receive upstream channel signals **1838** from client devices **1812**, either directly via wireless link **1814**, or indirectly via guided wave communication systems **1810** and **1810'** and mini-repeaters **1806**, client node devices **1802**, wireless links **1814'** and **1814"** and combinations thereof.

Turning now to FIG. **18**F, a combination pictorial and block diagram **1870** is shown illustrating an example, non-limiting embodiment of downstream data flow in accordance with various aspects described herein. It should be noted that the diagram is not shown to scale. In particular, consider again an example where a communication system is implemented in conjunction with a public utility such as an electrical power company distribution system. In this case, the host node device **1804**, client node devices **1802** and mini-repeaters **1806** are supported by utility poles **1875** of the distribution system and the guided wave communication systems **1810** of FIG. **18**A operate via a transmission medium **125** that includes segments of an insulated or bare medium voltage power line that is supported by the utility poles **1875**. Downstream channel signals **1828** from the network termination **1815** are received by the host node device **1804**. The host node device **1804** wirelessly transmits selected channels of the downstream channel signals **1828** to one or more client devices **1812-4** in range of the host node device **1804**. The host node device **1804** also sends the downstream channel signals **1828** to the mini-repeaters **1806-1** and **1806-2** as guided waves bound to the transmission medium **125**. In addition, the host node device **1804** optionally upconverts the downstream channels signals **1828** as downstream channel signals **1828'** and sends the downstream channel signals **1828'** wirelessly to the client node devices **1802-1** and **1802-2**.

The mini-repeaters **1806-1** and **1806-2** communicate selected downstream channel signals **1828** with client devices **1812-3** and **1812-5** that are in range and repeat the downstream channel signals **1828** as guided waves sent to mini-repeaters **1806-3** and **1806-4**. The mini-repeaters **1806-3** and **1806-4** communicate selected downstream channel signals **1828** with client devices **1812-2** and **1812-6** that are in range. The client node devices **1802-1** and **1802-2** operate to repeat downstream channel signals **1828"** as guided waves to mini-repeaters further downstream and wirelessly as downstream channel signals **1828'** to additional client node devices that are also not expressly shown. The client node devices **1802-1** and **1802-2** also operate to communicate selected downstream channel signals **1828** with client devices **1812-1** and **1812-7** that are in range.

It should be noted that downstream channel signals **1828** can flow in other ways as well. Consider the case where the guided wave communication path between host node device **1804** and mini-repeater **1806-1** is impaired by a break or obstruction on the line, equipment failure or environmental conditions. The downstream channel signals **1828** can flow as guided waves from client node device **1802-1** to mini-repeater **1806-3** and to mini-repeater **1806-1** to compensate.

Turning now to FIG. **18**G, a combination pictorial and block diagram **1878** is shown illustrating an example, non-limiting embodiment of upstream data flow in accordance with various aspects described herein. Consider again an example where a communication system is implemented in conjunction with a public utility such as an electrical power company distribution system. In this case, the host node device **1804**, client node devices **1802** and mini-repeaters **1806** are supported by utility poles **1875** of the distribution system and the guided wave communication systems **1810** of FIG. **18**A operate via a transmission medium **125** that includes segments of an insulated or bare medium voltage power line that is supported by the utility poles **1875**. As previously discussed, the host node device **1804** collects upstream channels signals **1838** from various sources for transfer to the network termination **1815**.

In particular, upstream channel signals **1838** in selected channels from client devices **1812-4** are wirelessly communicated to host node device **1804**. Upstream channel signals **1838** in selected channels from client devices **1812-3** and **1812-5** are wirelessly communicated to mini-repeaters **1806-1** and **1806-2** that transfer these upstream channel signals **1838** to the host node device **1804** as guided waves. Upstream channel signals **1838** in selected channels from client devices **1812-2** and **1812-6** are wireless communicated to mini-repeaters **1806-3** and **1806-4** that transfer these upstream channel signals **1838** to the host node device **1804** as guided waves, via mini-repeaters **1806-1** and **1806-2**. Upstream channel signals **1838** in selected channels from client devices **1812-1** and **1812-7** are wirelessly communicated to client node devices **1802-1** and **1802-2** are optionally upconverted and added to other upstream channel signals **1838'** received wirelessly from additional client node devices and other upstream channel signals **1838"** received as guided waves from other mini-repeaters can also be optionally upconverted for wireless transmission to the host node device **1804**.

It should be noted that upstream channel signals **1838** can flow in other ways as well. Consider the case where the guided wave communication path between host node device **1804** and mini-repeater **1806-1** is impaired by a break or obstruction on the line, equipment failure or environmental conditions. The upstream channel signals **1838** from client devices **1812-3** can flow as guided waves from mini-repeater **1806-1** to mini-repeater **1806-3** and to client node device **1802-1** for wireless transfer to host node device **1804**, to compensate.

Turning now to FIG. **18**H, a block diagram **1880** is shown illustrating an example, non-limiting embodiment of a client node device **1802** in accordance with various aspects described herein. The client node device **1802** includes a radio **1865** configured to wirelessly receive downstream channel signals **1828** from a communication network, via for example a host node device **1804** or other client node device **1802**. The access point repeater **1862** is configured to launch the downstream channel signals **1828** on a guided wave communication system **1810** as guided electromagnetic waves that propagation along a transmission medium **125** and to wirelessly transmit one or more selected downstream channel signals **1828** to one or more client devices via wireless link **1814"**.

In various embodiments, the radio **1865** is an analog radio that generates the downstream channel signals **1828** by downconverting RF signals that have a higher carrier frequencies compared with carrier frequencies of the downstream channel signals **1828**. For example, the radio **1865** downconverts upconverted downstream channel signals from a host node device **1804** or other client node device **1802** via mixing or other heterodyne action to generate the downstream channel signals **1828**. The radio **1865** can include multiple individual antennas for communicating with the host node device **1804** and other client node devices **1802**, a phased antenna array or steerable beam or multi-beam antenna system for communicating with multiple devices at different locations. In an embodiment, the downstream channel signals **1828** are downconverted from a 60

GHz band for line-of-sight communications. In addition, radio **1865** can operate as a repeater to receive downstream channel signals **1828** via wireless link **1808** from the host node device **1804** and repeat them on wireless link **1808'** for transmission to other client node devices **1802**.

In addition to downstream communications destined for client devices **1812**, client node device **1802** can handle upstream communications originating from client devices **1812** as well. In operation, the APRs **1862** extract upstream channel signals **1838** from the guided wave communication system **1810**, received via mini-repeaters **1806** of guided wave communication systems **1810** or **1810'**. Other upstream channel signals **1838** can be received via APR **1862** via communication over wireless links **1814"** in direct communication with client devices **1812**. In situations where the radio **1865** operates in a higher frequency band, the radio **1865** upconverts upstream channel signals **1838** received via the APR **1862** for communication via link **1808** to the host node device. In addition, radio **1865** can operate as a repeater to receive upstream channel signals **1838** via wireless link **1808'** from other client node devices **1802** and repeat them on wireless link **1808** for transmission to the host node device **1804**.

Turning now to FIG. **19**A, a block diagram **1900** is shown illustrating an example, non-limiting embodiment of an access point repeater **1862** in accordance with various aspects described herein. As discussed in conjunction with FIGS. **18**E and **18**H, the access point repeater **1862** couples to a transmission medium **125** to communicate upstream channel signals **1838** and downstream channel signals **1828** via a guided wave communication system (GWCS) **1810** to and from either radio **1865** of client node device **1802** or duplexer **1858** of host node device **1804**. In addition, the APR **1862** communicates selected upstream and downstream channels with client devices **1812** via wireless link **1814** or **1814"**.

In the embodiment shown, the APR **1862** includes an amplifier, such as bidirectional amplifier **1914** that amplifies the downstream channel signals **1828** from either radio **1865** (when implemented in a client node device **1802**) or duplexer/triplexer assembly **1858** (when implemented in host node device **1804**) to generate amplified downstream channel signals. The two-way (2:1) duplexer/diplexer **1912** transfers the amplified downstream channel signals **1828** to the coupler **1916** and to the channel selection filter **1910**. The channel selection filter **1910** is configured to select one or more of the amplified downstream channel signals to wirelessly communicate with client devices **1812** in range via an antenna **1918** and wireless link **1814**. In particular, channel selection filter **1910** can be configured to operate different APRs **1862** in accordance with one or more different channels in accordance with the physical location of the host node device **1804** or client node device **1802** and a spatial channel reuse scheme for wireless links **1814** that communicate with client devices **1812** in different locations. In various embodiments, the channel selection filter **1910** includes a filter, such as an analog or digital filter that passes one or more selected frequency channels while filtering-out or attenuating other frequency channels. In the alternative, channel selection filter **1910** can include a packet filter or data filter that passes one or more selected channel streams while filtering or blocking other channel streams. The coupler **1916** guides the amplified downstream channel signals to a transmission medium **125** of the guided wave communication system **1810** or **1810'** to be launched as guided electromagnetic waves.

As previously discussed the APR **1862** is also capable of processing upstream channel signals **1838** in a reciprocal fashion. In this mode of operation, the coupler **1916** extracts guided electromagnetic waves containing upstream channel signals from the transmission medium **125** of the guided wave communication system **1810** or **1810'**. Other upstream channel signals **1838** are received via antenna **1918** and channel selection filter **1910**. The upstream channel signals **1838** from each of these media are combined by the duplexer/diplexer **1912** and amplified by bidirectional amplifier **1914** for transfer to radio **1865** or duplexer/triplexer assembly **1858**, depending on the implementation of the APR **1862**. The duplexer/diplexer **1912** can include a duplexer, diplexer, splitter, switch, router and/or other assembly that operates as a "channel duplexer" to provide bi-directional communications over multiple communication paths.

Turning now to FIG. **19**B, a block diagram **1925** is shown illustrating an example, non-limiting embodiment of a mini-repeater in accordance with various aspects described herein. In particular, a repeater device, such as mini-repeater **1806** includes a coupler **1946** configured to extract downstream channel signals **1828** from guided electromagnetic waves in either direction A or B that are bound to a transmission medium **125** of a guided wave communication system **1810** or **1810'**. An amplifier, such as bidirectional amplifier **1944** amplifies the downstream channel signals **1828** to generate amplified downstream channel signals. The two-way (2:1) channel duplexer **1942** transfers the amplified downstream channel signals **1828** to the coupler **1946** and to the channel selection filter **1940**. The channel selection filter **1940** is configured to select one or more of the amplified downstream channel signals to wirelessly communicate with client devices **1812** in range via an antenna **1948** and wireless link **1814**. In particular, channel selection filter **1940** can be configured to operate different mini-repeaters **1806** in accordance with one or more different channels in accordance with the physical location of mini-repeaters **1806** and a spatial channel reuse scheme for wireless links **1814** that communicate with client devices **1812** in different locations. The coupler **1946'** guides the amplified downstream channel signals to a transmission medium **125** of the guided wave communication system **1810** or **1810'** to be launched as guided electromagnetic waves on the transmission medium **125**.

As previously discussed the mini-repeater **1806** is also capable of processing upstream channel signals **1838** in a reciprocal fashion. In this mode of operation, the coupler **1946'** extracts guided electromagnetic waves containing upstream channel signals from the transmission medium **125** of the guided wave communication system **1810** or **1810'**. Other upstream channel signals **1838** are received via antenna **1948** and channel selection filter **1940**. The upstream channel signals **1838** from each of these media are combined by the two-way channel duplexer **1942** and amplified by bidirectional amplifier **1944** for transfer to coupler **1946** to be launched on guided wave communication system **1810** on either direction A or B.

Turning now to FIG. **19**C, a combination pictorial and block diagram **1950** is shown illustrating an example, non-limiting embodiment of a mini-repeater in accordance with various aspects described herein. In particular, mini-repeater **1806** is shown as bridging an insulator **1952** on a utility pole of electric power utility. As shown the mini-repeater **1806** is coupled to a transmission medium, in this case, a power line on both sides of the insulator **1952**. It should be noted however that other installations of mini-repeater **1806** are

likewise possible. Other electric power utility installations include being supported by other utility structures or by a power line or supporting wire of the system. In addition, mini-repeater **1806** can be supported by other transmission media **125** or supporting structures for other transmission media **125**.

Turning now to FIG. **19**D, a graphical diagram **1975** is shown illustrating an example, non-limiting embodiment of a frequency spectrum in accordance with various aspects described herein. In particular a frequency channel selection is presented as discussed in conjunction with either channel selection filter **1910** or **1940**. As shown, a particular upstream frequency channel **1978** of upstream frequency channel band **1846** and a particular downstream frequency channel **1976** of downstream channel frequency band **1844** is selected to be passed by channel selection filter **1910** or **1940**, with the remaining portions of upstream frequency channel band **1846** and downstream channel frequency band **1844** being filtered out—i.e. attenuated so as to mitigate adverse effects of analog processing of the desired frequency channels that are passed by the channel selection filter **1910** or **1940**. It should be noted that while a single particular upstream frequency channel **1978** and particular downstream frequency channel **1976** are shown as being selected by channel selection filter **1910** or **1940**, two or more upstream and/or downstream frequency channels may be passed in other embodiments.

It should be noted that while the foregoing has focused on the host node device **1804**, client node devices **1802** and mini-repeaters **1810** operating on a single transmission medium such as a single power line, each of these devices can operate to send and receive on two or more communication paths, such as separate segments or branches of transmission media in different directions as part of a more complex transmission network. For example, at a node where first and second power line segments of a public utility branch out, a host node device **1804**, client node device **1802** or mini-repeaters **1810** can include a first coupler to extract and/or launch guided electromagnetic waves along the first power line segment and a second coupler to extract and/or launch guided electromagnetic waves along the second power line segment.

Turning now to FIG. **20**A, flow diagrams **2000** of example, non-limiting embodiment of methods, are shown. In particular, methods are presented for use with one or more functions and features presented in conjunction with FIGS. **1-19**. These methods can be performed separately or contemporaneously. Step **2002** includes receiving downstream data from a communication network. Step **2004** includes modulating the downstream data into upstream channel signals corresponding to downstream frequency channels of a guided wave communication system. Step **2006** includes sending the downstream channel signals to the guided wave communication system via a wired connection. Step **2008** includes receiving upstream channel signals corresponding to upstream frequency channels from the guided wave communication system via the wired connection. Step **2010** includes demodulating the upstream channel signals into upstream data. Step **2012** includes sending the upstream data to the communication network.

In various embodiments, the downstream channel modulator modulates the downstream channel signals to convey the downstream data via a guided electromagnetic wave that is guided by a transmission medium of the guided wave communication system. The transmission medium can include a wire and the guided electromagnetic wave can be bound to an outer surface of the wire.

In various embodiments, a number of the upstream frequency channels is less than, greater than or equal to a number of the downstream frequency channels. A first subset of the upstream channel signals can be demodulated in accordance with a first standard protocol and a second subset of the upstream channel signals can be demodulated in accordance with a second standard protocol that differs from the first standard protocol. Likewise, a first subset of the downstream channel signals can be modulated in accordance with a first standard protocol and a second subset of the downstream channel signals can be modulated in accordance with a second standard protocol that differs from the first standard protocol.

In various embodiments, the host interface couples to a host node device of the guided wave communication system via a fiber optic cable to send the downstream channel signals and receive the upstream channel signals. At least a portion of the upstream channel signals and at least a portion of the downstream channel signals are formatted in accordance with a data over cable system interface specification protocol or a 802.11 protocol.

Turning now to FIG. **20**B, a flow diagram **2020** of an example, non-limiting embodiment of a method, is shown. In particular, a method is presented for use with one or more functions and features presented in conjunction with FIGS. **1-19**. Step **2022** includes receiving downstream channel signals from a communication network. Step **2024** includes launching the downstream channel signals on a guided wave communication system as guided electromagnetic waves. Step **2026** includes wirelessly transmitting the downstream channel signals to at least one client node device.

In various embodiments, wirelessly transmitting the downstream channel signals includes: upconverting the downstream channel signals to generate upconverted downstream channel signals; and transmitting the upconverted downstream channel signals to the at least one client node device. Launching the downstream channel signals on the guided wave communication system as guided electromagnetic waves can include: launching the downstream channel signals on the guided wave communication system as first guided electromagnetic waves in a first direction along a transmission medium; and launching the downstream channel signals on the guided wave communication system as second guided electromagnetic waves in a second direction along the transmission medium.

In various embodiments, the transmission medium includes a wire and launching the downstream channel signals on the guided wave communication system as the first guided electromagnetic waves includes coupling the downstream channel signals to an outer surface of the wire for propagation in the first direction, and launching the downstream channel signals on the guided wave communication system as the second guided electromagnetic waves includes coupling the downstream channel signals to the outer surface of the wire for propagation in the second direction.

The method can further include: amplifying the downstream channel signals to generate amplified downstream channel signals; selectively filtering one or more of the amplified downstream channel signals to generate a subset of the amplified downstream channel signals; and wirelessly transmitting the subset of the amplified downstream channel signals to a plurality of client devices via an antenna. Launching the downstream channel signals on the guided wave communication system as guided electromagnetic waves can include: amplifying the downstream channel signals to generate amplified downstream channel signals;

and coupling the amplified downstream channel signals to an outer surface of a transmission medium for propagation as the guided electromagnetic waves.

The method can also include extracting first upstream channel signals from the guided wave communication system; and sending the first upstream channel signals to the communication network and/or wirelessly receiving second upstream channel signals from the at least one client node device and sending the second upstream channel signals to the communication

Turning now to FIG. **20**C, a flow diagram **2040** of an example, non-limiting embodiment of a method, is shown. In particular, a method is presented for use with one or more functions and features presented in conjunction with FIGS. **1-19**. Step **2042** includes wirelessly receiving downstream channel signals from a communication network. Step **2044** includes launching the downstream channel signals on a guided wave communication system as guided electromagnetic waves that propagation along a transmission medium. Step **2046** includes wirelessly transmitting the downstream channel signals to at least one client device.

In various embodiments, the transmission medium includes a wire and the guided electromagnetic waves are bound to an outer surface of the wire. Wirelessly transmitting the downstream channel signals to at least one client device can include: amplifying the downstream channel signals to generate amplified downstream channel signals; selecting one or more of the amplified downstream channel signals; and wirelessly transmitting the one or more of the amplified downstream channel signals to the at least one client device via an antenna. Launching the downstream channel signals on the guided wave communication system as guided electromagnetic waves that propagation along the transmission medium can include: amplifying the downstream channel signals to generate amplified downstream channel signals; and guiding the amplified downstream channel signals to the transmission medium of the guided wave communication system.

In various embodiments, wirelessly receiving downstream channel signals from the communication network can include: downconverting RF signals that have a higher carrier frequencies compared with carrier frequencies of the downstream channel signals. The method can further include: extracting first upstream channel signals from the guided wave communication system; and wirelessly transmitting the first upstream channel signals to the communication network. The method can further include: wirelessly receiving second upstream channel signals from the at least one client device; and wirelessly transmitting the second upstream channel signals to the communication network. The transmission medium can includes a power line of a public utility.

Turning now to FIG. **20**D, a flow diagram **2060** of an example, non-limiting embodiment of a method, is shown. In particular, a method is presented for use with one or more functions and features presented in conjunction with FIGS. **1-19**. Step **2062** includes extracting downstream channel signals from first guided electromagnetic waves bound to a transmission medium of a guided wave communication system. Step **2064** includes amplifying the downstream channel signals to generate amplified downstream channel signals. Step **2066** includes selecting one or more of the amplified downstream channel signals to wirelessly transmit to the at least one client device via an antenna. Step **2068** includes guiding the amplified downstream channel signals to the transmission medium of the guided wave communication system to propagate as second guided electromagnetic waves.

In various embodiments, the transmission medium includes a wire and the first guided electromagnetic waves and the second guided electromagnetic waves are guided by an outer surface of the wire. At least a portion of the downstream or upstream channel signals can be formatted in accordance with a data over cable system interface specification protocol. At least a portion of the downstream or upstream channel signals can be formatted in accordance with an 802.11 protocol or a fourth generation or higher mobile wireless protocol.

In various embodiments, the method includes wirelessly receiving upstream channel signals from the at least one client device via the antenna; amplifying the upstream channel signals to generate amplified upstream channel signals; and guiding the amplified upstream channel signals to the transmission medium of the guided wave communication system to propagate as third guided electromagnetic waves. The downstream channel signals can correspond to a number of the downstream frequency channels and the upstream channel signals can correspond to a number of the upstream that is less than or equal to the number of the downstream frequency channels. At least a portion of the upstream channel signals can be formatted in accordance with either a data over cable system interface specification protocol, a 802.11 protocol or a fourth generation or higher mobile wireless protocol.

While for purposes of simplicity of explanation, the respective processes are shown and described as a series of blocks in FIGS. **20**A, **20**B, **20**C and **20**D, it is to be understood and appreciated that the claimed subject matter is not limited by the order of the blocks, as some blocks may occur in different orders and/or concurrently with other blocks from what is depicted and described herein. Moreover, not all illustrated blocks may be required to implement the methods described herein.

Referring now to FIG. **21**, there is illustrated a block diagram of a computing environment in accordance with various aspects described herein. In order to provide additional context for various embodiments of the embodiments described herein, FIG. **21** and the following discussion are intended to provide a brief, general description of a suitable computing environment **2100** in which the various embodiments of the subject disclosure can be implemented. While the embodiments have been described above in the general context of computer-executable instructions that can run on one or more computers, those skilled in the art will recognize that the embodiments can be also implemented in combination with other program modules and/or as a combination of hardware and software.

Generally, program modules comprise routines, programs, components, data structures, etc., that perform particular tasks or implement particular abstract data types. Moreover, those skilled in the art will appreciate that the inventive methods can be practiced with other computer system configurations, comprising single-processor or multiprocessor computer systems, minicomputers, mainframe computers, as well as personal computers, hand-held computing devices, microprocessor-based or programmable consumer electronics, and the like, each of which can be operatively coupled to one or more associated devices.

As used herein, a processing circuit includes processor as well as other application specific circuits such as an application specific integrated circuit, digital logic circuit, state machine, programmable gate array or other circuit that

processes input signals or data and that produces output signals or data in response thereto. It should be noted that while any functions and features described herein in association with the operation of a processor could likewise be performed by a processing circuit.

The terms "first," "second," "third," and so forth, as used in the claims, unless otherwise clear by context, is for clarity only and doesn't otherwise indicate or imply any order in time. For instance, "a first determination," "a second determination," and "a third determination," does not indicate or imply that the first determination is to be made before the second determination, or vice versa, etc.

The illustrated embodiments of the embodiments herein can be also practiced in distributed computing environments where certain tasks are performed by remote processing devices that are linked through a communications network. In a distributed computing environment, program modules can be located in both local and remote memory storage devices.

Computing devices typically comprise a variety of media, which can comprise computer-readable storage media and/or communications media, which two terms are used herein differently from one another as follows. Computer-readable storage media can be any available storage media that can be accessed by the computer and comprises both volatile and nonvolatile media, removable and non-removable media. By way of example, and not limitation, computer-readable storage media can be implemented in connection with any method or technology for storage of information such as computer-readable instructions, program modules, structured data or unstructured data.

Computer-readable storage media can comprise, but are not limited to, random access memory (RAM), read only memory (ROM), electrically erasable programmable read only memory (EEPROM), flash memory or other memory technology, compact disk read only memory (CD-ROM), digital versatile disk (DVD) or other optical disk storage, magnetic cassettes, magnetic tape, magnetic disk storage or other magnetic storage devices or other tangible and/or non-transitory media which can be used to store desired information. In this regard, the terms "tangible" or "non-transitory" herein as applied to storage, memory or computer-readable media, are to be understood to exclude only propagating transitory signals per se as modifiers and do not relinquish rights to all standard storage, memory or computer-readable media that are not only propagating transitory signals per se.

Computer-readable storage media can be accessed by one or more local or remote computing devices, e.g., via access requests, queries or other data retrieval protocols, for a variety of operations with respect to the information stored by the medium.

Communications media typically embody computer-readable instructions, data structures, program modules or other structured or unstructured data in a data signal such as a modulated data signal, e.g., a carrier wave or other transport mechanism, and comprises any information delivery or transport media. The term "modulated data signal" or signals refers to a signal that has one or more of its characteristics set or changed in such a manner as to encode information in one or more signals. By way of example, and not limitation, communication media comprise wired media, such as a wired network or direct-wired connection, and wireless media such as acoustic, RF, infrared and other wireless media.

With reference again to FIG. **21**, the example environment **2100** for transmitting and receiving signals via or forming at least part of a base station (e.g., base station devices **1504**, macrocell site **1502**, or base stations **1614**) or central office (e.g., central office **1501** or **1611**). At least a portion of the example environment **2100** can also be used for transmission devices **101** or **102**. The example environment can comprise a computer **2102**, the computer **2102** comprising a processing unit **2104**, a system memory **2106** and a system bus **2108**. The system bus **2108** couples system components including, but not limited to, the system memory **2106** to the processing unit **2104**. The processing unit **2104** can be any of various commercially available processors. Dual microprocessors and other multiprocessor architectures can also be employed as the processing unit **2104**.

The system bus **2108** can be any of several types of bus structure that can further interconnect to a memory bus (with or without a memory controller), a peripheral bus, and a local bus using any of a variety of commercially available bus architectures. The system memory **2106** comprises ROM **2110** and RAM **2112**. A basic input/output system (BIOS) can be stored in a non-volatile memory such as ROM, erasable programmable read only memory (EPROM), EEPROM, which BIOS contains the basic routines that help to transfer information between elements within the computer **2102**, such as during startup. The RAM **2112** can also comprise a high-speed RAM such as static RAM for caching data.

The computer **2102** further comprises an internal hard disk drive (HDD) **2114** (e.g., EIDE, SATA), which internal hard disk drive **2114** can also be configured for external use in a suitable chassis (not shown), a magnetic floppy disk drive (FDD) **2116**, (e.g., to read from or write to a removable diskette **2118**) and an optical disk drive **2120**, (e.g., reading a CD-ROM disk **2122** or, to read from or write to other high capacity optical media such as the DVD). The hard disk drive **2114**, magnetic disk drive **2116** and optical disk drive **2120** can be connected to the system bus **2108** by a hard disk drive interface **2124**, a magnetic disk drive interface **2126** and an optical drive interface **2128**, respectively. The interface **2124** for external drive implementations comprises at least one or both of Universal Serial Bus (USB) and Institute of Electrical and Electronics Engineers (IEEE) 1394 interface technologies. Other external drive connection technologies are within contemplation of the embodiments described herein.

The drives and their associated computer-readable storage media provide nonvolatile storage of data, data structures, computer-executable instructions, and so forth. For the computer **2102**, the drives and storage media accommodate the storage of any data in a suitable digital format. Although the description of computer-readable storage media above refers to a hard disk drive (HDD), a removable magnetic diskette, and a removable optical media such as a CD or DVD, it should be appreciated by those skilled in the art that other types of storage media which are readable by a computer, such as zip drives, magnetic cassettes, flash memory cards, cartridges, and the like, can also be used in the example operating environment, and further, that any such storage media can contain computer-executable instructions for performing the methods described herein.

A number of program modules can be stored in the drives and RAM **2112**, comprising an operating system **2130**, one or more application programs **2132**, other program modules **2134** and program data **2136**. All or portions of the operating system, applications, modules, and/or data can also be cached in the RAM **2112**. The systems and methods described herein can be implemented utilizing various commercially available operating systems or combinations of

operating systems. Examples of application programs **2132** that can be implemented and otherwise executed by processing unit **2104** include the diversity selection determining performed by transmission device **101** or **102**.

A user can enter commands and information into the computer **2102** through one or more wired/wireless input devices, e.g., a keyboard **2138** and a pointing device, such as a mouse **2140**. Other input devices (not shown) can comprise a microphone, an infrared (IR) remote control, a joystick, a game pad, a stylus pen, touch screen or the like. These and other input devices are often connected to the processing unit **2104** through an input device interface **2142** that can be coupled to the system bus **2108**, but can be connected by other interfaces, such as a parallel port, an IEEE 1394 serial port, a game port, a universal serial bus (USB) port, an IR interface, etc.

A monitor **2144** or other type of display device can be also connected to the system bus **2108** via an interface, such as a video adapter **2146**. It will also be appreciated that in alternative embodiments, a monitor **2144** can also be any display device (e.g., another computer having a display, a smart phone, a tablet computer, etc.) for receiving display information associated with computer **2102** via any communication means, including via the Internet and cloud-based networks. In addition to the monitor **2144**, a computer typically comprises other peripheral output devices (not shown), such as speakers, printers, etc.

The computer **2102** can operate in a networked environment using logical connections via wired and/or wireless communications to one or more remote computers, such as a remote computer(s) **2148**. The remote computer(s) **2148** can be a workstation, a server computer, a router, a personal computer, portable computer, microprocessor-based entertainment appliance, a peer device or other common network node, and typically comprises many or all of the elements described relative to the computer **2102**, although, for purposes of brevity, only a memory/storage device **2150** is illustrated. The logical connections depicted comprise wired/wireless connectivity to a local area network (LAN) **2152** and/or larger networks, e.g., a wide area network (WAN) **2154**. Such LAN and WAN networking environments are commonplace in offices and companies, and facilitate enterprise-wide computer networks, such as intranets, all of which can connect to a global communications network, e.g., the Internet.

When used in a LAN networking environment, the computer **2102** can be connected to the local network **2152** through a wired and/or wireless communication network interface or adapter **2156**. The adapter **2156** can facilitate wired or wireless communication to the LAN **2152**, which can also comprise a wireless AP disposed thereon for communicating with the wireless adapter **2156**.

When used in a WAN networking environment, the computer **2102** can comprise a modem **2158** or can be connected to a communications server on the WAN **2154** or has other means for establishing communications over the WAN **2154**, such as by way of the Internet. The modem **2158**, which can be internal or external and a wired or wireless device, can be connected to the system bus **2108** via the input device interface **2142**. In a networked environment, program modules depicted relative to the computer **2102** or portions thereof, can be stored in the remote memory/storage device **2150**. It will be appreciated that the network connections shown are example and other means of establishing a communications link between the computers can be used.

The computer **2102** can be operable to communicate with any wireless devices or entities operatively disposed in wireless communication, e.g., a printer, scanner, desktop and/or portable computer, portable data assistant, communications satellite, any piece of equipment or location associated with a wirelessly detectable tag (e.g., a kiosk, news stand, restroom), and telephone. This can comprise Wireless Fidelity (Wi-Fi) and BLUETOOTH® wireless technologies. Thus, the communication can be a predefined structure as with a conventional network or simply an ad hoc communication between at least two devices.

Wi-Fi can allow connection to the Internet from a couch at home, a bed in a hotel room or a conference room at work, without wires. Wi-Fi is a wireless technology similar to that used in a cell phone that enables such devices, e.g., computers, to send and receive data indoors and out; anywhere within the range of a base station. Wi-Fi networks use radio technologies called IEEE 802.11 (a, b, g, n, ac, ag etc.) to provide secure, reliable, fast wireless connectivity. A Wi-Fi network can be used to connect computers to each other, to the Internet, and to wired networks (which can use IEEE 802.3 or Ethernet). Wi-Fi networks operate in the unlicensed 2.4 and 5 GHz radio bands for example or with products that contain both bands (dual band), so the networks can provide real-world performance similar to the basic 10BaseT wired Ethernet networks used in many offices.

FIG. **22** presents an example embodiment **2200** of a mobile network platform **2210** that can implement and exploit one or more aspects of the disclosed subject matter described herein. In one or more embodiments, the mobile network platform **2210** can generate and receive signals transmitted and received by base stations (e.g., base station devices **1504**, macrocell site **1502**, or base stations **1614**), central office (e.g., central office **1501** or **1611**), or transmission device **101** or **102** associated with the disclosed subject matter. Generally, wireless network platform **2210** can comprise components, e.g., nodes, gateways, interfaces, servers, or disparate platforms, that facilitate both packet-switched (PS) (e.g., internet protocol (IP), frame relay, asynchronous transfer mode (ATM)) and circuit-switched (CS) traffic (e.g., voice and data), as well as control generation for networked wireless telecommunication. As a non-limiting example, wireless network platform **2210** can be included in telecommunications carrier networks, and can be considered carrier-side components as discussed elsewhere herein. Mobile network platform **2210** comprises CS gateway node(s) **2222** which can interface CS traffic received from legacy networks like telephony network(s) **2240** (e.g., public switched telephone network (PSTN), or public land mobile network (PLMN)) or a signaling system #7 (SS7) network **2270**. Circuit switched gateway node(s) **2222** can authorize and authenticate traffic (e.g., voice) arising from such networks. Additionally, CS gateway node(s) **2222** can access mobility, or roaming, data generated through SS7 network **2270**; for instance, mobility data stored in a visited location register (VLR), which can reside in memory **2230**. Moreover, CS gateway node(s) **2222** interfaces CS-based traffic and signaling and PS gateway node(s) **2218**. As an example, in a 3GPP UMTS network, CS gateway node(s) **2222** can be realized at least in part in gateway GPRS support node(s) (GGSN). It should be appreciated that functionality and specific operation of CS gateway node(s) **2222**, PS gateway node(s) **2218**, and serving node(s) **2216**, is provided and dictated by radio technology(ies) utilized by mobile network platform **2210** for telecommunication.

In addition to receiving and processing CS-switched traffic and signaling, PS gateway node(s) **2218** can authorize and authenticate PS-based data sessions with served mobile devices. Data sessions can comprise traffic, or content(s), exchanged with networks external to the wireless network platform **2210**, like wide area network(s) (WANs) **2250**, enterprise network(s) **2270**, and service network(s) **2280**, which can be embodied in local area network(s) (LANs), can also be interfaced with mobile network platform **2210** through PS gateway node(s) **2218**. It is to be noted that WANs **2250** and enterprise network(s) **2260** can embody, at least in part, a service network(s) like IP multimedia subsystem (IMS). Based on radio technology layer(s) available in technology resource(s) **2217**, packet-switched gateway node(s) **2218** can generate packet data protocol contexts when a data session is established; other data structures that facilitate routing of packetized data also can be generated. To that end, in an aspect, PS gateway node(s) **2218** can comprise a tunnel interface (e.g., tunnel termination gateway (TTG) in 3GPP UMTS network(s) (not shown)) which can facilitate packetized communication with disparate wireless network(s), such as Wi-Fi networks.

In embodiment **2200**, wireless network platform **2210** also comprises serving node(s) **2216** that, based upon available radio technology layer(s) within technology resource(s) **2217**, convey the various packetized flows of data streams received through PS gateway node(s) **2218**. It is to be noted that for technology resource(s) **2217** that rely primarily on CS communication, server node(s) can deliver traffic without reliance on PS gateway node(s) **2218**; for example, server node(s) can embody at least in part a mobile switching center. As an example, in a 3GPP UMTS network, serving node(s) **2216** can be embodied in serving GPRS support node(s) (SGSN).

For radio technologies that exploit packetized communication, server(s) **2214** in wireless network platform **2210** can execute numerous applications that can generate multiple disparate packetized data streams or flows, and manage (e.g., schedule, queue, format . . .) such flows. Such application(s) can comprise add-on features to standard services (for example, provisioning, billing, customer support . . .) provided by wireless network platform **2210**. Data streams (e.g., content(s) that are part of a voice call or data session) can be conveyed to PS gateway node(s) **2218** for authorization/authentication and initiation of a data session, and to serving node(s) **2216** for communication thereafter. In addition to application server, server(s) **2214** can comprise utility server(s), a utility server can comprise a provisioning server, an operations and maintenance server, a security server that can implement at least in part a certificate authority and firewalls as well as other security mechanisms, and the like. In an aspect, security server(s) secure communication served through wireless network platform **2210** to ensure network's operation and data integrity in addition to authorization and authentication procedures that CS gateway node(s) **2222** and PS gateway node(s) **2218** can enact. Moreover, provisioning server(s) can provision services from external network(s) like networks operated by a disparate service provider; for instance, WAN **2250** or Global Positioning System (GPS) network(s) (not shown). Provisioning server(s) can also provision coverage through networks associated to wireless network platform **2210** (e.g., deployed and operated by the same service provider), such as the distributed antennas networks shown in FIG. **1**(*s*) that enhance wireless service coverage by providing more network coverage. Repeater devices such as those shown in FIGS. **7**, **8**, and **9** also improve network coverage in order to enhance subscriber service experience by way of UE **2275**.

It is to be noted that server(s) **2214** can comprise one or more processors configured to confer at least in part the functionality of macro network platform **2210**. To that end, the one or more processor can execute code instructions stored in memory **2230**, for example. It is should be appreciated that server(s) **2214** can comprise a content manager **2215**, which operates in substantially the same manner as described hereinbefore.

In example embodiment **2200**, memory **2230** can store information related to operation of wireless network platform **2210**. Other operational information can comprise provisioning information of mobile devices served through wireless platform network **2210**, subscriber databases; application intelligence, pricing schemes, e.g., promotional rates, flat-rate programs, couponing campaigns; technical specification(s) consistent with telecommunication protocols for operation of disparate radio, or wireless, technology layers; and so forth. Memory **2230** can also store information from at least one of telephony network(s) **2240**, WAN **2250**, enterprise network(s) **2270**, or SS7 network **2260**. In an aspect, memory **2230** can be, for example, accessed as part of a data store component or as a remotely connected memory store.

In order to provide a context for the various aspects of the disclosed subject matter, FIG. **22**, and the following discussion, are intended to provide a brief, general description of a suitable environment in which the various aspects of the disclosed subject matter can be implemented. While the subject matter has been described above in the general context of computer-executable instructions of a computer program that runs on a computer and/or computers, those skilled in the art will recognize that the disclosed subject matter also can be implemented in combination with other program modules. Generally, program modules comprise routines, programs, components, data structures, etc. that perform particular tasks and/or implement particular abstract data types.

FIG. **23** depicts an illustrative embodiment of a communication device **2300**. The communication device **2300** can serve as an illustrative embodiment of devices such as mobile devices and in-building devices referred to by the subject disclosure (e.g., in FIGS. **15**, **16**A and **16**B).

The communication device **2300** can comprise a wireline and/or wireless transceiver **2302** (herein transceiver **2302**), a user interface (UI) **2304**, a power supply **2314**, a location receiver **2316**, a motion sensor **2318**, an orientation sensor **2320**, and a controller **2306** for managing operations thereof. The transceiver **2302** can support short-range or long-range wireless access technologies such as Bluetooth®, ZigBee®, WiFi, DECT, or cellular communication technologies, just to mention a few (Bluetooth® and ZigBee® are trademarks registered by the Bluetooth® Special Interest Group and the ZigBee® Alliance, respectively). Cellular technologies can include, for example, CDMA-1X, UMTS/HSDPA, GSM/GPRS, TDMA/EDGE, EV/DO, WiMAX, SDR, LTE, as well as other next generation wireless communication technologies as they arise. The transceiver **2302** can also be adapted to support circuit-switched wireline access technologies (such as PSTN), packet-switched wireline access technologies (such as TCP/IP, VoIP, etc.), and combinations thereof.

The UI **2304** can include a depressible or touch-sensitive keypad **2308** with a navigation mechanism such as a roller ball, a joystick, a mouse, or a navigation disk for manipulating operations of the communication device **2300**. The

keypad **2308** can be an integral part of a housing assembly of the communication device **2300** or an independent device operably coupled thereto by a tethered wireline interface (such as a USB cable) or a wireless interface supporting for example Bluetooth®. The keypad **2308** can represent a numeric keypad commonly used by phones, and/or a QWERTY keypad with alphanumeric keys. The UI **2304** can further include a display **2310** such as monochrome or color LCD (Liquid Crystal Display), OLED (Organic Light Emitting Diode) or other suitable display technology for conveying images to an end user of the communication device **2300**. In an embodiment where the display **2310** is touch-sensitive, a portion or all of the keypad **2308** can be presented by way of the display **2310** with navigation features.

The display **2310** can use touch screen technology to also serve as a user interface for detecting user input. As a touch screen display, the communication device **2300** can be adapted to present a user interface having graphical user interface (GUI) elements that can be selected by a user with a touch of a finger. The touch screen display **2310** can be equipped with capacitive, resistive or other forms of sensing technology to detect how much surface area of a user's finger has been placed on a portion of the touch screen display. This sensing information can be used to control the manipulation of the GUI elements or other functions of the user interface. The display **2310** can be an integral part of the housing assembly of the communication device **2300** or an independent device communicatively coupled thereto by a tethered wireline interface (such as a cable) or a wireless interface.

The UI **2304** can also include an audio system **2312** that utilizes audio technology for conveying low volume audio (such as audio heard in proximity of a human ear) and high volume audio (such as speakerphone for hands free operation). The audio system **2312** can further include a microphone for receiving audible signals of an end user. The audio system **2312** can also be used for voice recognition applications. The UI **2304** can further include an image sensor **2313** such as a charged coupled device (CCD) camera for capturing still or moving images.

The power supply **2314** can utilize common power management technologies such as replaceable and rechargeable batteries, supply regulation technologies, and/or charging system technologies for supplying energy to the components of the communication device **2300** to facilitate long-range or short-range portable communications. Alternatively, or in combination, the charging system can utilize external power sources such as DC power supplied over a physical interface such as a USB port or other suitable tethering technologies.

The location receiver **2316** can utilize location technology such as a global positioning system (GPS) receiver capable of assisted GPS for identifying a location of the communication device **2300** based on signals generated by a constellation of GPS satellites, which can be used for facilitating location services such as navigation. The motion sensor **2318** can utilize motion sensing technology such as an accelerometer, a gyroscope, or other suitable motion sensing technology to detect motion of the communication device **2300** in three-dimensional space. The orientation sensor **2320** can utilize orientation sensing technology such as a magnetometer to detect the orientation of the communication device **2300** (north, south, west, and east, as well as combined orientations in degrees, minutes, or other suitable orientation metrics).

The communication device **2300** can use the transceiver **2302** to also determine a proximity to a cellular, WiFi, Bluetooth®, or other wireless access points by sensing techniques such as utilizing a received signal strength indicator (RSSI) and/or signal time of arrival (TOA) or time of flight (TOF) measurements. The controller **2306** can utilize computing technologies such as a microprocessor, a digital signal processor (DSP), programmable gate arrays, application specific integrated circuits, and/or a video processor with associated storage memory such as Flash, ROM, RAM, SRAM, DRAM or other storage technologies for executing computer instructions, controlling, and processing data supplied by the aforementioned components of the communication device **2300**.

Other components not shown in FIG. **23** can be used in one or more embodiments of the subject disclosure. For instance, the communication device **2300** can include a slot for adding or removing an identity module such as a Subscriber Identity Module (SIM) card or Universal Integrated Circuit Card (UICC). SIM or UICC cards can be used for identifying subscriber services, executing programs, storing subscriber data, and so on.

In the subject specification, terms such as "store," "storage," "data store," data storage," "database," and substantially any other information storage component relevant to operation and functionality of a component, refer to "memory components," or entities embodied in a "memory" or components comprising the memory. It will be appreciated that the memory components described herein can be either volatile memory or nonvolatile memory, or can comprise both volatile and nonvolatile memory, by way of illustration, and not limitation, volatile memory, non-volatile memory, disk storage, and memory storage. Further, nonvolatile memory can be included in read only memory (ROM), programmable ROM (PROM), electrically programmable ROM (EPROM), electrically erasable ROM (EEPROM), or flash memory. Volatile memory can comprise random access memory (RAM), which acts as external cache memory. By way of illustration and not limitation, RAM is available in many forms such as synchronous RAM (SRAM), dynamic RAM (DRAM), synchronous DRAM (SDRAM), double data rate SDRAM (DDR SDRAM), enhanced SDRAM (ESDRAM), Synchlink DRAM (SLDRAM), and direct Rambus RAM (DRRAM). Additionally, the disclosed memory components of systems or methods herein are intended to comprise, without being limited to comprising, these and any other suitable types of memory.

Moreover, it will be noted that the disclosed subject matter can be practiced with other computer system configurations, comprising single-processor or multiprocessor computer systems, mini-computing devices, mainframe computers, as well as personal computers, hand-held computing devices (e.g., PDA, phone, smartphone, watch, tablet computers, netbook computers, etc.), microprocessor-based or programmable consumer or industrial electronics, and the like. The illustrated aspects can also be practiced in distributed computing environments where tasks are performed by remote processing devices that are linked through a communications network; however, some if not all aspects of the subject disclosure can be practiced on stand-alone computers. In a distributed computing environment, program modules can be located in both local and remote memory storage devices.

Some of the embodiments described herein can also employ artificial intelligence (AI) to facilitate automating one or more features described herein. For example, artificial intelligence can be used in optional training controller **230** evaluate and select candidate frequencies, modulation

schemes, MIMO modes, and/or guided wave modes in order to maximize transfer efficiency. The embodiments (e.g., in connection with automatically identifying acquired cell sites that provide a maximum value/benefit after addition to an existing communication network) can employ various AI-based schemes for carrying out various embodiments thereof. Moreover, the classifier can be employed to determine a ranking or priority of the each cell site of the acquired network. A classifier is a function that maps an input attribute vector, x=(x1, x2, x3, x4, . . . , xn), to a confidence that the input belongs to a class, that is, f(x)=confidence (class). Such classification can employ a probabilistic and/or statistical-based analysis (e.g., factoring into the analysis utilities and costs) to prognose or infer an action that a user desires to be automatically performed. A support vector machine (SVM) is an example of a classifier that can be employed. The SVM operates by finding a hypersurface in the space of possible inputs, which the hypersurface attempts to split the triggering criteria from the non-triggering events. Intuitively, this makes the classification correct for testing data that is near, but not identical to training data. Other directed and undirected model classification approaches comprise, e.g., naïve Bayes, Bayesian networks, decision trees, neural networks, fuzzy logic models, and probabilistic classification models providing different patterns of independence can be employed. Classification as used herein also is inclusive of statistical regression that is utilized to develop models of priority.

As will be readily appreciated, one or more of the embodiments can employ classifiers that are explicitly trained (e.g., via a generic training data) as well as implicitly trained (e.g., via observing UE behavior, operator preferences, historical information, receiving extrinsic information). For example, SVMs can be configured via a learning or training phase within a classifier constructor and feature selection module. Thus, the classifier(s) can be used to automatically learn and perform a number of functions, including but not limited to determining according to a predetermined criteria which of the acquired cell sites will benefit a maximum number of subscribers and/or which of the acquired cell sites will add minimum value to the existing communication network coverage, etc.

As used in some contexts in this application, in some embodiments, the terms "component," "system" and the like are intended to refer to, or comprise, a computer-related entity or an entity related to an operational apparatus with one or more specific functionalities, wherein the entity can be either hardware, a combination of hardware and software, software, or software in execution. As an example, a component may be, but is not limited to being, a process running on a processor, a processor, an object, an executable, a thread of execution, computer-executable instructions, a program, and/or a computer. By way of illustration and not limitation, both an application running on a server and the server can be a component. One or more components may reside within a process and/or thread of execution and a component may be localized on one computer and/or distributed between two or more computers. In addition, these components can execute from various computer readable media having various data structures stored thereon. The components may communicate via local and/or remote processes such as in accordance with a signal having one or more data packets (e.g., data from one component interacting with another component in a local system, distributed system, and/or across a network such as the Internet with other systems via the signal). As another example, a component can be an apparatus with specific functionality provided by mechanical parts operated by electric or electronic circuitry, which is operated by a software or firmware application executed by a processor, wherein the processor can be internal or external to the apparatus and executes at least a part of the software or firmware application. As yet another example, a component can be an apparatus that provides specific functionality through electronic components without mechanical parts, the electronic components can comprise a processor therein to execute software or firmware that confers at least in part the functionality of the electronic components. While various components have been illustrated as separate components, it will be appreciated that multiple components can be implemented as a single component, or a single component can be implemented as multiple components, without departing from example embodiments.

Further, the various embodiments can be implemented as a method, apparatus or article of manufacture using standard programming and/or engineering techniques to produce software, firmware, hardware or any combination thereof to control a computer to implement the disclosed subject matter. The term "article of manufacture" as used herein is intended to encompass a computer program accessible from any computer-readable device or computer-readable storage/communications media. For example, computer readable storage media can include, but are not limited to, magnetic storage devices (e.g., hard disk, floppy disk, magnetic strips), optical disks (e.g., compact disk (CD), digital versatile disk (DVD)), smart cards, and flash memory devices (e.g., card, stick, key drive). Of course, those skilled in the art will recognize many modifications can be made to this configuration without departing from the scope or spirit of the various embodiments.

In addition, the words "example" and "exemplary" are used herein to mean serving as an instance or illustration. Any embodiment or design described herein as "example" or "exemplary" is not necessarily to be construed as preferred or advantageous over other embodiments or designs. Rather, use of the word example or exemplary is intended to present concepts in a concrete fashion. As used in this application, the term "or" is intended to mean an inclusive "or" rather than an exclusive "or". That is, unless specified otherwise or clear from context, "X employs A or B" is intended to mean any of the natural inclusive permutations. That is, if X employs A; X employs B; or X employs both A and B, then "X employs A or B" is satisfied under any of the foregoing instances. In addition, the articles "a" and "an" as used in this application and the appended claims should generally be construed to mean "one or more" unless specified otherwise or clear from context to be directed to a singular form.

Moreover, terms such as "user equipment," "mobile station," "mobile," subscriber station," "access terminal," "terminal," "handset," "mobile device" (and/or terms representing similar terminology) can refer to a wireless device utilized by a subscriber or user of a wireless communication service to receive or convey data, control, voice, video, sound, gaming or substantially any data-stream or signaling-stream. The foregoing terms are utilized interchangeably herein and with reference to the related drawings.

Furthermore, the terms "user," "subscriber," "customer," "consumer" and the like are employed interchangeably throughout, unless context warrants particular distinctions among the terms. It should be appreciated that such terms can refer to human entities or automated components supported through artificial intelligence (e.g., a capacity to

make inference based, at least, on complex mathematical formalisms), which can provide simulated vision, sound recognition and so forth.

As employed herein, the term "processor" can refer to substantially any computing processing unit or device comprising, but not limited to comprising, single-core processors; single-processors with software multithread execution capability; multi-core processors; multi-core processors with software multithread execution capability; multi-core processors with hardware multithread technology; parallel platforms; and parallel platforms with distributed shared memory. Additionally, a processor can refer to an integrated circuit, an application specific integrated circuit (ASIC), a digital signal processor (DSP), a field programmable gate array (FPGA), a programmable logic controller (PLC), a complex programmable logic device (CPLD), a discrete gate or transistor logic, discrete hardware components or any combination thereof designed to perform the functions described herein. Processors can exploit nano-scale architectures such as, but not limited to, molecular and quantum-dot based transistors, switches and gates, in order to optimize space usage or enhance performance of user equipment. A processor can also be implemented as a combination of computing processing units.

As used herein, terms such as "data storage," data storage," "database," and substantially any other information storage component relevant to operation and functionality of a component, refer to "memory components," or entities embodied in a "memory" or components comprising the memory. It will be appreciated that the memory components or computer-readable storage media, described herein can be either volatile memory or nonvolatile memory or can include both volatile and nonvolatile memory.

What has been described above includes mere examples of various embodiments. It is, of course, not possible to describe every conceivable combination of components or methodologies for purposes of describing these examples, but one of ordinary skill in the art can recognize that many further combinations and permutations of the present embodiments are possible. Accordingly, the embodiments disclosed and/or claimed herein are intended to embrace all such alterations, modifications and variations that fall within the spirit and scope of the appended claims. Furthermore, to the extent that the term "includes" is used in either the detailed description or the claims, such term is intended to be inclusive in a manner similar to the term "comprising" as "comprising" is interpreted when employed as a transitional word in a claim.

In addition, a flow diagram may include a "start" and/or "continue" indication. The "start" and "continue" indications reflect that the steps presented can optionally be incorporated in or otherwise used in conjunction with other routines. In this context, "start" indicates the beginning of the first step presented and may be preceded by other activities not specifically shown. Further, the "continue" indication reflects that the steps presented may be performed multiple times and/or may be succeeded by other activities not specifically shown. Further, while a flow diagram indicates a particular ordering of steps, other orderings are likewise possible provided that the principles of causality are maintained.

As may also be used herein, the term(s) "operably coupled to", "coupled to", and/or "coupling" includes direct coupling between items and/or indirect coupling between items via one or more intervening items. Such items and intervening items include, but are not limited to, junctions, communication paths, components, circuit elements, circuits, functional blocks, and/or devices. As an example of indirect coupling, a signal conveyed from a first item to a second item may be modified by one or more intervening items by modifying the form, nature or format of information in a signal, while one or more elements of the information in the signal are nevertheless conveyed in a manner than can be recognized by the second item. In a further example of indirect coupling, an action in a first item can cause a reaction on the second item, as a result of actions and/or reactions in one or more intervening items.

Although specific embodiments have been illustrated and described herein, it should be appreciated that any arrangement which achieves the same or similar purpose may be substituted for the embodiments described or shown by the subject disclosure. The subject disclosure is intended to cover any and all adaptations or variations of various embodiments. Combinations of the above embodiments, and other embodiments not specifically described herein, can be used in the subject disclosure. For instance, one or more features from one or more embodiments can be combined with one or more features of one or more other embodiments. In one or more embodiments, features that are positively recited can also be negatively recited and excluded from the embodiment with or without replacement by another structural and/or functional feature. The steps or functions described with respect to the embodiments of the subject disclosure can be performed in any order. The steps or functions described with respect to the embodiments of the subject disclosure can be performed alone or in combination with other steps or functions of the subject disclosure, as well as from other embodiments or from other steps that have not been described in the subject disclosure. Further, more than or less than all of the features described with respect to an embodiment can also be utilized.

What is claimed is:

1. A client node device of a distributed antenna system comprising:

a first wireless receiver configured to wirelessly receive first channel signals from a host node device of the distributed antenna system, the first channel signals including signals from at least two different communication networks and formatted according to at least two corresponding communication protocols;

an amplifier configured to amplify the first channel signals to generate amplified first channel signals;

a first wireless transmitter configured to wirelessly transmit the amplified first channel signals to an other client node device of the distributed antenna system;

a second wireless transmitter configured to wirelessly communicate free space wireless signals to at least one client device via an antenna, based on an analog signal processing of the amplified first channel signals; and

a channel selection filter configured to select two or more of the amplified first channel signals in a corresponding two or more frequency channels to wirelessly communicate with the at least one client device via the second wireless transmitter utilizing the two or more frequency channels, the channel selection filter operating to select the two or more of the amplified first channel signals in the corresponding two or more frequency channels in accordance with a spatial channel reuse scheme that is based on a physical location of the client node device and a plurality of other client node devices of the distributed antenna system operating in different physical locations, the plurality of other client node devices of the distributed antenna system including the other client node device, the two or more of the amplified

first channel signals in the corresponding two or more frequency channels including the signals from the at least two different communication networks and formatted according to the at least two corresponding communication protocols and the channel selection filter operates by passing the two or more of the amplified first channel signals in the corresponding two or more frequency channels while filtering out or attenuating other ones of the amplified first channel signals.

2. The client node device of claim **1**, wherein the second wireless transmitter does not require either an analog to digital conversion or a digital to analog conversion.

3. The client node device of claim **1**, wherein the second wireless transmitter generates the free space wireless signals via one of: a frequency up-conversion of the amplified first channel signals or a frequency down-conversion of the amplified first channel signals.

4. The client node device of claim **1**, wherein the host node device is mounted to a first utility pole, the client node device is mounted to a second utility pole and the other client node device is mounted to a third utility pole.

5. The client node device of claim **4**, wherein the first utility pole, the second utility pole and the third utility pole support a transmission medium of an electric power distribution network.

6. The client node device of claim **1**, wherein the second wireless transmitter includes an analog radio that generates the free space wireless signals communicated to the at least one client device by downconverting radio first channel signals from higher carrier frequencies relative to carrier frequencies of the free space wireless signals.

7. The client node device of claim **1**, further comprising a second wireless receiver configured to receive second channel signals from the other client node device of the distributed antenna system;

wherein the amplifier amplifies the second channel signals to generate amplified second channel signals; and

a third wireless transmitter configured to wirelessly transmit the second channel signals to the host node device of the distributed antenna system.

8. The client node device of claim **7**, further comprising a third wireless receiver configured to wirelessly receive third channel signals from the at least one client device for transmission to the host node device via the distributed antenna system.

9. The client node device of claim **1**, wherein at least a portion of the first channel signals is formatted in accordance with a mobile wireless protocol.

10. The client node device of claim **1** wherein the first wireless transmitter operates in a millimeter wave frequency band.

11. The client node device of claim **1** wherein the second wireless transmitter operates in a microwave frequency band.

12. A method for use in a client node device, the method comprising:

wirelessly receiving first channel signals from a host node device of a distributed antenna system, the first channel signals including signals from at least two different communication networks and formatted in at least two corresponding communication protocols;

amplifying the first channel signals to generate amplified first channel signals;

wirelessly transmitting the amplified first channel signals to an other client node device of the distributed antenna system;

selecting two or more of the amplified first channel signals in a corresponding two or more frequency channels to wirelessly communicate with at least one client device utilizing the two or more frequency channels, the selecting the two or more of the first amplified channel signals in the corresponding two or more frequency channels is in accordance with a spatial channel reuse scheme that is based on a physical location of the client node device and a plurality of other client node devices of the distributed antenna system operating in different physical locations, the plurality of other client node devices of the distributed antenna system including the other client node device, the two or more of the amplified first channel signals in the corresponding two or more frequency channels including the signals from the at least two different communication networks and formatted according to the at least two corresponding communication protocols and the selecting operates by passing the two or more of the amplified first channel signals in the corresponding two or more frequency channels while filtering out or attenuating other ones of the amplified first channel signals; and

wirelessly communicating free space wireless signals, based on an analog signal processing of the amplified first channel signals, to the at least one client device via an antenna.

13. The method of claim **12** wherein the analog signal processing does not require either an analog to digital conversion or a digital to analog conversion.

14. The method of claim **12**, wherein the analog signal processing includes one of: a frequency up-conversion of the amplified first channel signals or a frequency down-conversion of the amplified first channel signals.

15. The method of claim **12**, wherein the host node device is mounted to a first utility pole, the client node device is mounted to a second utility pole and the other client node device is mounted to a third utility pole.

16. The method of claim **15**, wherein the first utility pole, the second utility pole and the third utility pole support a transmission medium of an electric power distribution network.

17. The method of claim **12**, wherein the free space wireless signals communicated to the at least one client device are generated by downconverting radio first channel signals from higher carrier frequencies relative to carrier frequencies of the free space wireless signals.

18. The method of claim **12**, further comprising:

receiving second channel signals from the other client node device of the distributed antenna system;

amplifying the second channel signals to generate amplified second channel signals; and

wirelessly transmitting the second channel signals to the host node device of the distributed antenna system.

19. The method of claim **12**, wherein at least a portion of the first channel signals is formatted in accordance with a mobile wireless protocol.

20. A client node device of a distributed antenna system comprising:

a wireless receiver configured to wirelessly receive channel signals from a host node device of the distributed antenna system, the channel signals including signals from at least two different communication networks and formatted in at least two corresponding communication protocols;

an amplifier configured to amplify the channel signals to generate amplified channel signals;

a first wireless transmitter configured to wirelessly transmit the amplified channel signals to an other client node device of the distributed antenna system;

a second wireless transmitter configured to wirelessly communicate free space wireless signals to at least one client device via an antenna, based on an analog signal processing of the amplified channel signals that includes a frequency conversion, wherein the second wireless transmitter does not require either an analog to digital conversion or a digital to analog conversion; and

a channel selection filter configured to select two or more of the amplified channel signals in a corresponding two or more frequency channels to wirelessly communicate with the at least one client device via the second wireless transmitter utilizing the two or more frequency channels, the channel selection filter operating to select the two or more of the amplified channel signals in the corresponding two or more frequency channels in accordance with a spatial channel reuse scheme based on a physical location of the client node device and a plurality of other client node devices of the distributed antenna system operating in different physical locations, the plurality of other client node devices of the distributed antenna system including the other client node device, the two or more of the amplified channel signals in the corresponding two or more frequency channels including the signals from the at least two different communication networks and formatted according to the at least two corresponding communication protocols and the channel selection filter operates by passing the two or more of the amplified channel signals in the corresponding two or more frequency channels while filtering out or attenuating other ones of the amplified channel signals.

* * * * *