US010439111B2

(12) **United States Patent**
Hung et al.

(10) **Patent No.: US 10,439,111 B2**
(45) **Date of Patent: *Oct. 8, 2019**

(54) **LIGHT EMITTING DEVICE AND MANUFACTURING METHOD THEREOF**

(71) Applicant: **Genesis Photonics Inc.**, Tainan (TW)

(72) Inventors: **Cheng-Wei Hung**, Tainan (TW); **Long-Chi Tu**, Tainan (TW); **Jui-Fu Chang**, Tainan (TW); **Chun-Ming Tseng**, Tainan (TW); **Yun-Chu Chen**, Tainan (TW)

(73) Assignee: **Genesis Photonics Inc.**, Tainan (TW)

(*) Notice: Subject to any disclaimer, the term of this patent is extended or adjusted under 35 U.S.C. 154(b) by 0 days.

This patent is subject to a terminal disclaimer.

(21) Appl. No.: **15/788,757**

(22) Filed: **Oct. 19, 2017**

(65) **Prior Publication Data**

US 2018/0123001 A1 May 3, 2018

Related U.S. Application Data

(63) Continuation-in-part of application No. 15/268,654, filed on Sep. 19, 2016, now Pat. No. 9,997,676, which

(Continued)

(30) **Foreign Application Priority Data**

May 14, 2014 (TW) ..... 103116987 A
Jan. 8, 2016 (TW) ..... 105100499 A
May 5, 2016 (CN) 2016 1 0293182

(51) **Int. Cl.**
H01L 33/50 (2010.01)
H01L 33/48 (2010.01)

(Continued)

(52) **U.S. Cl.**
CPC ***H01L 33/505*** (2013.01); ***H01L 33/486*** (2013.01); ***H01L 33/508*** (2013.01);

(Continued)

(58) **Field of Classification Search**
None
See application file for complete search history.

(56) **References Cited**

U.S. PATENT DOCUMENTS

6,155,699 A 12/2000 Miller et al.
7,045,828 B2 5/2006 Shimizu et al.

(Continued)

FOREIGN PATENT DOCUMENTS

CN 101855735 10/2010
CN 101867003 10/2010

(Continued)

OTHER PUBLICATIONS

"Final Office Action of U.S. Appl. No. 15/657,299," dated Oct. 2, 2018, pp. 1-20.

(Continued)

Primary Examiner — Mounir S Amer
(74) *Attorney, Agent, or Firm* — JCIPRNET

(57) **ABSTRACT**

A light-emitting device including at least one light-emitting unit, a wavelength conversion adhesive layer, and a reflective protecting element is provided. The light-emitting unit has an upper surface and a lower surface opposite to each other. The light-emitting unit includes two electrode pads, and the two electrode pads are located on the lower surface. The wavelength conversion adhesive layer is disposed on the upper surface. The wavelength conversion adhesive layer includes a low-concentration fluorescent layer and a high-concentration fluorescent layer. The high-concentration fluorescent layer is located between the low-concentration fluorescent layer and the light-emitting unit. The width

(Continued)

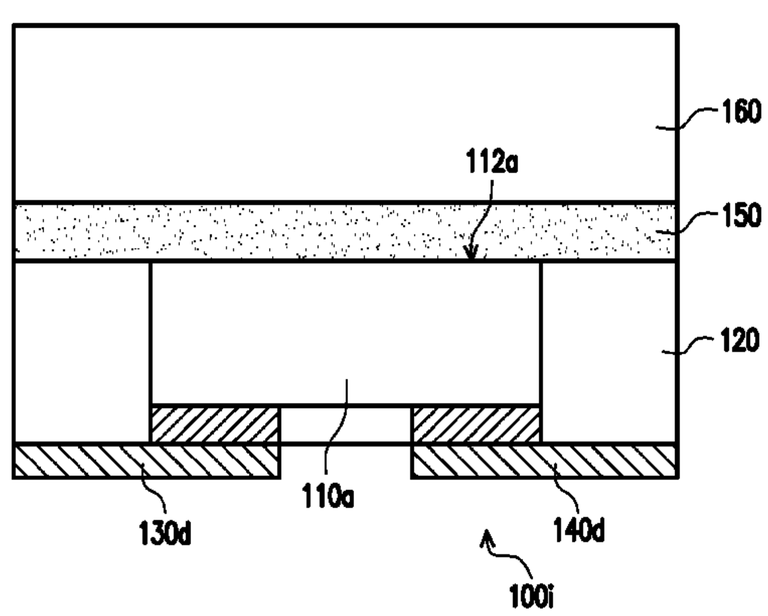

of the high-concentration fluorescent layer is W_H. The width of the low-concentration fluorescent layer is W_L. The width of the light-emitting unit is W_E. The light-emitting device further satisfies the following inequalities: $W_E<W_L$, $W_H<W_L$ and $0.8<W_H/W_E\leq 1.2$. Furthermore, a manufacturing method of the light-emitting device is also provided.

5 Claims, 30 Drawing Sheets

Related U.S. Application Data

is a continuation-in-part of application No. 14/711,798, filed on May 14, 2015, now abandoned.

(60) Provisional application No. 62/157,450, filed on May 5, 2015, provisional application No. 62/220,249, filed on Sep. 18, 2015, provisional application No. 62/236,150, filed on Oct. 2, 2015, provisional application No. 62/245,247, filed on Oct. 22, 2015, provisional application No. 62/262,876, filed on Dec. 3, 2015, provisional application No. 62/410,373, filed on Oct. 19, 2016.

(51) **Int. Cl.**

H01L 33/60	(2010.01)
H01L 33/62	(2010.01)
H01L 33/56	(2010.01)
H01L 33/54	(2010.01)

(52) **U.S. Cl.**

CPC ***H01L 33/56*** (2013.01); ***H01L 33/60*** (2013.01); ***H01L 33/62*** (2013.01); *H01L 33/54* (2013.01); *H01L 2224/18* (2013.01); *H01L 2933/005* (2013.01); *H01L 2933/0041* (2013.01); *H01L 2933/0058* (2013.01); *H01L 2933/0091* (2013.01)

(56) **References Cited**

U.S. PATENT DOCUMENTS

8,350,283	B2	1/2013	Nishiuchi et al.
8,482,016	B2	7/2013	Harada
8,860,061	B2	10/2014	Kotani
9,419,189	B1	8/2016	David et al.
9,490,398	B2	11/2016	Oyamada et al.
9,887,329	B2	2/2018	Yamada
9,922,963	B2	3/2018	Hung et al.
2003/0006509	A1	1/2003	Suzuki et al.
2003/0067070	A1	4/2003	Kwon et al.
2005/0045897	A1	3/2005	Chou et al.
2006/0055309	A1	3/2006	Ono et al.
2006/0169994	A1	8/2006	Tu et al.
2007/0114552	A1	5/2007	Jang et al.
2008/0150119	A1	6/2008	Jang et al.
2009/0242917	A1	10/2009	Inoue et al.
2009/0296389	A1	12/2009	Hsu
2010/0066236	A1	3/2010	Xu et al.
2010/0258419	A1	10/2010	Chung et al.
2010/0258830	A1	10/2010	Ide et al.
2011/0001157	A1	1/2011	McKenzie et al.
2011/0079805	A1	4/2011	Yu et al.
2011/0102883	A1	5/2011	Narendran et al.
2012/0025218	A1	2/2012	Ito et al.
2012/0235126	A1	9/2012	Yamazaki et al.
2012/0236582	A1	9/2012	Waragaya et al.
2012/0261700	A1	10/2012	Ooyabu et al.
2012/0305942	A1	12/2012	Lo et al.
2013/0001605	A1	1/2013	Ishihara et al.
2013/0093313	A1	4/2013	Oyamada
2013/0105978	A1	5/2013	Hung
2013/0121000	A1	5/2013	Lee et al.
2013/0194794	A1	8/2013	Kim
2013/0207141	A1	8/2013	Reiherzer
2013/0207142	A1	8/2013	Reiherzer
2013/0256711	A1	10/2013	Joo et al.
2013/0277093	A1	10/2013	Sun et al.
2013/0313594	A1	11/2013	Han et al.
2014/0009060	A1	1/2014	Kimura et al.
2014/0021493	A1	1/2014	Andrews et al.
2014/0054621	A1	2/2014	Seko
2014/0124812	A1	5/2014	Kuramoto et al.
2014/0131753	A1	5/2014	Ishida et al.
2014/0138725	A1	5/2014	Oyamada
2014/0252389	A1	9/2014	Koizumi et al.
2015/0014720	A1	1/2015	Tien
2015/0102373	A1	4/2015	Lee et al.
2015/0102377	A1	4/2015	Huang et al.
2015/0115300	A1	4/2015	Tomizawa et al.
2015/0179901	A1	6/2015	Ok et al.
2015/0188004	A1	7/2015	Ozeki et al.
2015/0263242	A1	9/2015	Tomizawa et al.
2015/0311405	A1	10/2015	Oyamada et al.
2016/0013373	A1	1/2016	Bhat et al.
2016/0079496	A1	3/2016	Huang et al.
2016/0155900	A1	6/2016	Bono et al.
2016/0155915	A1	6/2016	Ling et al.
2016/0181476	A1	6/2016	Chang et al.
2016/0190406	A1	6/2016	Liu et al.
2016/0035952	A1	10/2016	Yamada et al.

FOREIGN PATENT DOCUMENTS

CN	101878540	11/2010
CN	101978516	2/2011
CN	102132428	7/2011
CN	102222757	10/2011
CN	102263194	11/2011
CN	102290500	12/2011
CN	102347423	2/2012
CN	102468417	5/2012
CN	102637809	8/2012
CN	102738368	10/2012
CN	103022010	4/2013
CN	103050601	4/2013
CN	103137571	6/2013
CN	103187515	7/2013
CN	103531725	1/2014
CN	103534822	1/2014
CN	203774363	8/2014
CN	203910851	10/2014
CN	104253194	12/2014
CN	104347610	2/2015
JP	2012227470	11/2012
TW	201017934	5/2010
TW	201114072	4/2011
TW	201133956	10/2011
TW	201210819	3/2012
TW	201220534	5/2012
TW	201242108	10/2012
TW	201249898	12/2012
TW	M453969	5/2013
TW	201515282	4/2015
TW	201541674	11/2015
WO	2011093454	8/2011

OTHER PUBLICATIONS

"Office Action of U.S. Appl. No. 15/787,811," dated Oct. 18, 2018, pp. 1-49.

"Office Action of U.S. Appl. No. 15/881,802," dated Aug. 10, 2018, pp. 1-23.

"Office Action of U.S. Appl. No. 16/004,445 ," dated Sep. 27, 2018, pp. 1-16.

"Office Action of Taiwan related Application, serial No. 104131083 ," dated Oct. 5, 2018, pp. 1-8.

"Office Action of U.S. Appl. No. 15/073,673", dated Feb. 8, 2018, p. 1-p. 23, in which the listed references were cited.

(56) **References Cited**

OTHER PUBLICATIONS

"Office Action of U.S. Appl. No. 15908779", dated Apr. 4, 2018, p. 1-p. 6, in which the listed references were cited.
"Office Action of Taiwan Related Application, application No. 106135995", dated Jan. 9, 2018, p. 1-p. 9, in which the listed references (foreign patent No. 1-3) were cited.
"Office Action of Taiwan Related Application, application No. 106131096", dated Jan. 16, 2018, p. 1-p. 6, in which the listed references (U.S. application patent No. 1 and foreign patent No. 4-7) were cited.
"Office Action of China Related Application, application No. 201410362787.6", dated Nov. 14, 2017, p. 1-p. 9, in which the listed references (U.S. application patent No. 2-3 and foreign patent No. 8) were cited.
"Office Action of U.S. Appl. No. 15/959,534", dated Jun. 21, 2018, p. 1-p. 30.
"Office Action of China Related Application, Application No. 201510244596.4", dated Apr. 27, 2018, p. 1-p. 11.
"Office Action of U.S. Appl. No. 15/657,299", dated May 16, 2018, p. 1-p. 37.
"Office Action of China Related Application, Application No. 201410362787.6", dated Apr. 20, 2018, p. 1-p. 9.
"Office Action of China Related Application No. 201610089097.7", dated Dec. 4, 2018, pp. 1-8.
"Office Action of China Related Application No. 201610156914.6", dated Nov. 2, 2018, pp. 1-9.
"Office Action of China Related Application No. 201610157140.9", dated Nov. 1, 2018, pp. 1-6.
"Office Action of China Related Application No. 201610157182.2", dated Dec. 3, 2018, pp. 1-11.
"Office Action of China Related Application No. 201610293182.5", dated Jan. 22, 2019, pp. 1-6.
"Office Action of China Related Application No. 2016108300516", dated Mar. 21, 2019, pp. 1-9.
"Office Action of Taiwan Related Application No. 107119063", dated Dec. 6, 2018, pp. 1-3.
"Office Action of U.S. Appl. No. 15/908,779", dated Oct. 30, 2018, pp. 1-15.
"Office Action of U.S. Appl. No. 15/924,461", dated Feb. 15, 2019, pp. 1-12.
"Office Action of U.S. Appl. No. 15/973,552", dated Nov. 29, 2018, pp. 1-12.
"Office Action of U.S. Appl. No. 15/823,480", dated Dec. 31, 2018, pp. 1-9.
"Office Action of Taiwan Related Application No. 105104666" , dated Jun. 28, 2019, pp. 1-6.
"Office Action of Taiwan Related Application No. 107117295" , dated Jun. 11, 2019, pp. 1-5.
"Office Action of Taiwan Related Application No. 105108594" , dated Jun. 18, 2019, pp. 1-4.
"Office Action of U.S. Appl. No. 15/823,480" , dated Apr. 12, 2019, pp. 1-26.

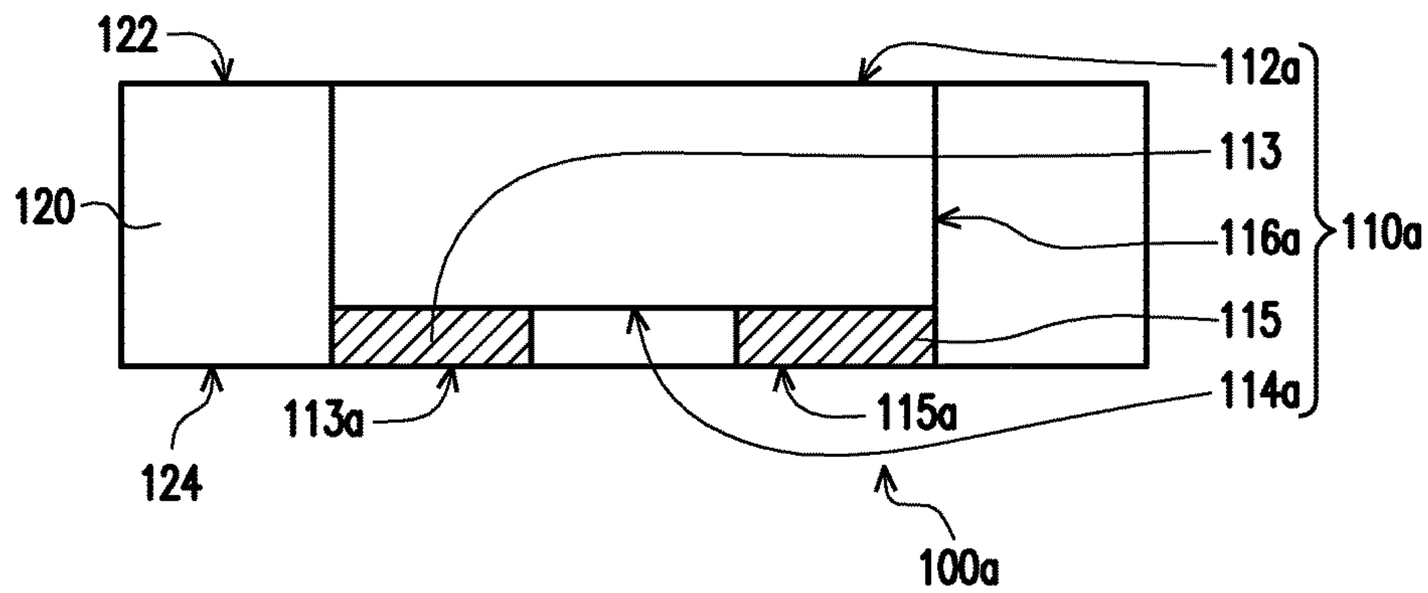
122
112a
113
120
116a
110a
115
114a
113a
115a
124
100a

FIG. 1

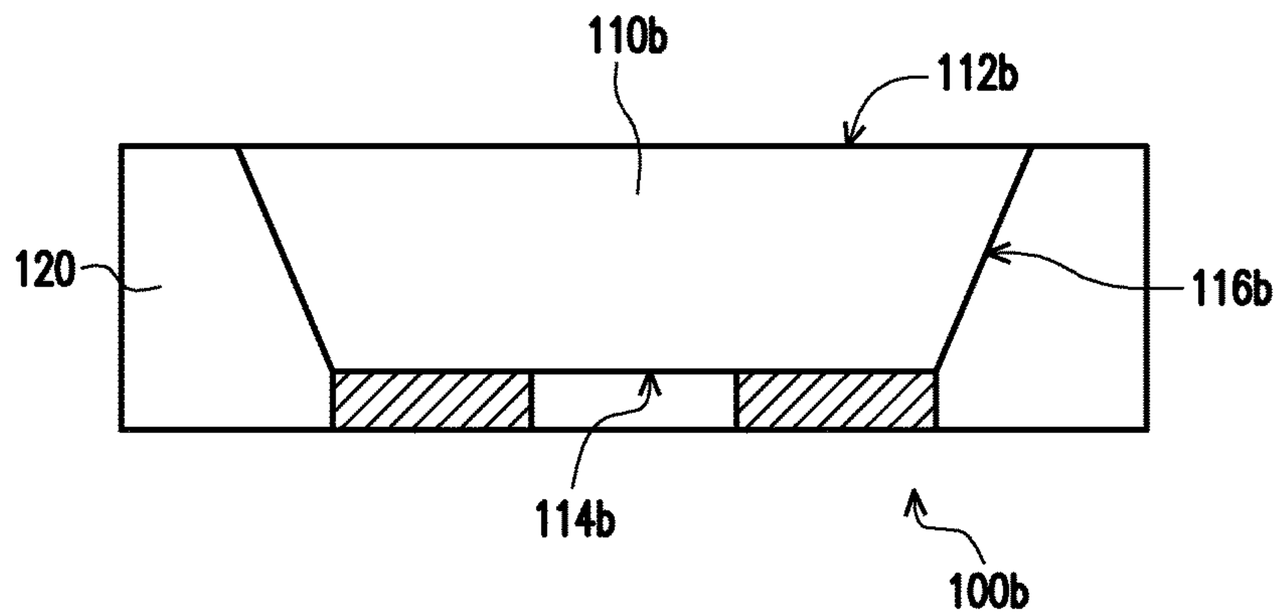
110b
112b
120
116b
114b
100b

FIG. 2

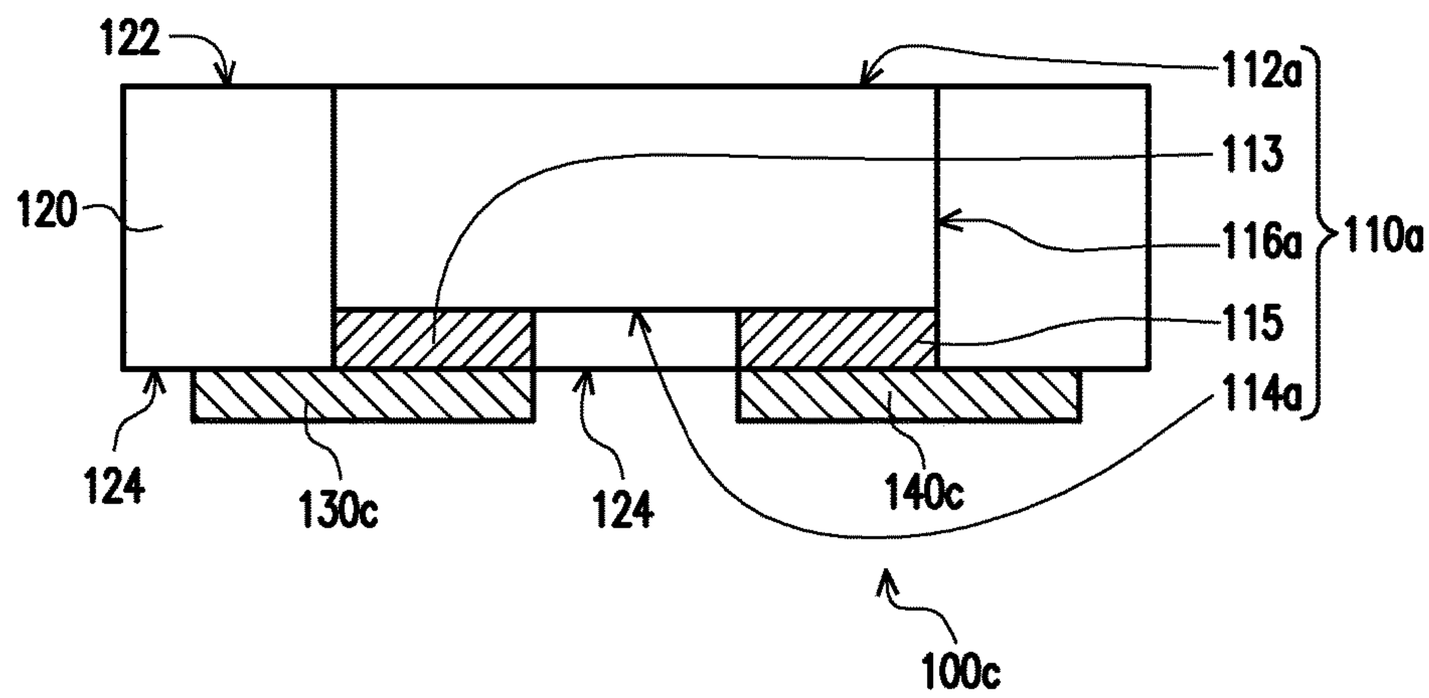
122
112a
113
120
116a
110a
115
114a
124
130c
124
140c
100c

FIG. 3

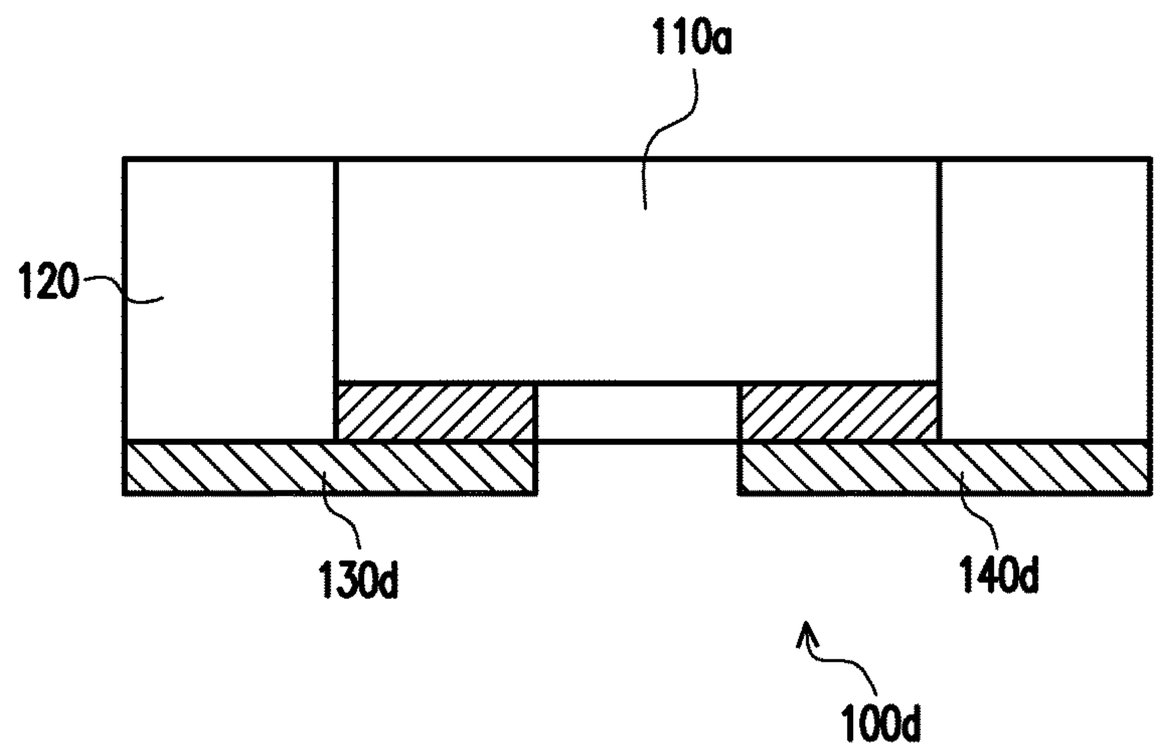
110a
120
130d
140d
100d

FIG. 4

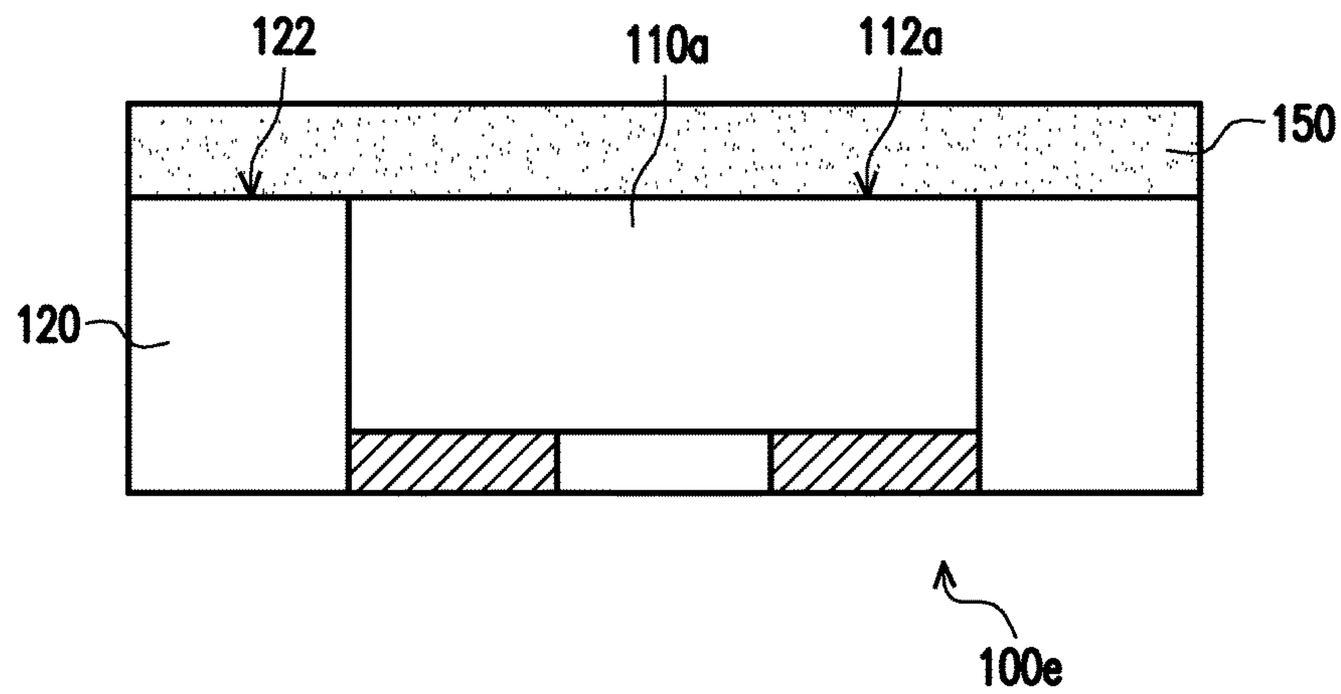
122
110a
112a
150
120
100e

FIG. 5

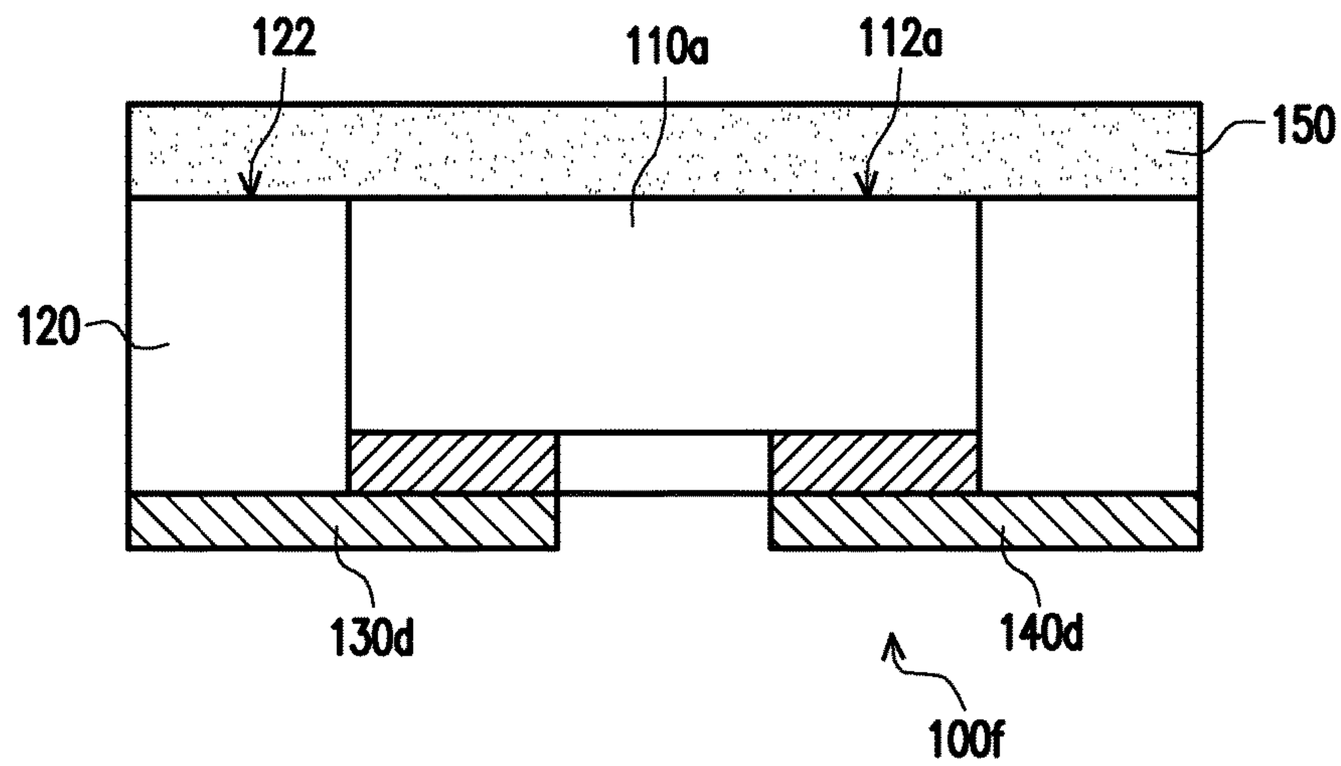
122
110a
112a
150
120
130d
140d
100f

FIG. 6

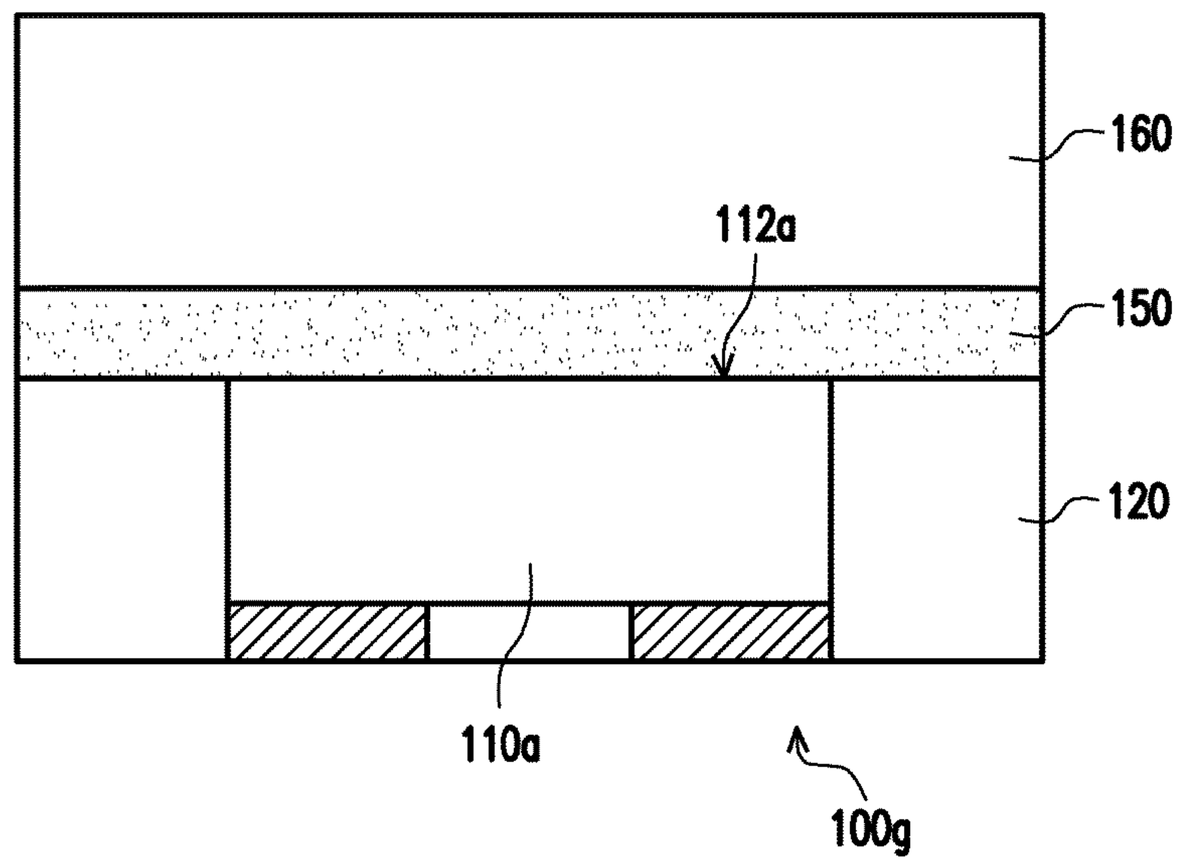

FIG. 7

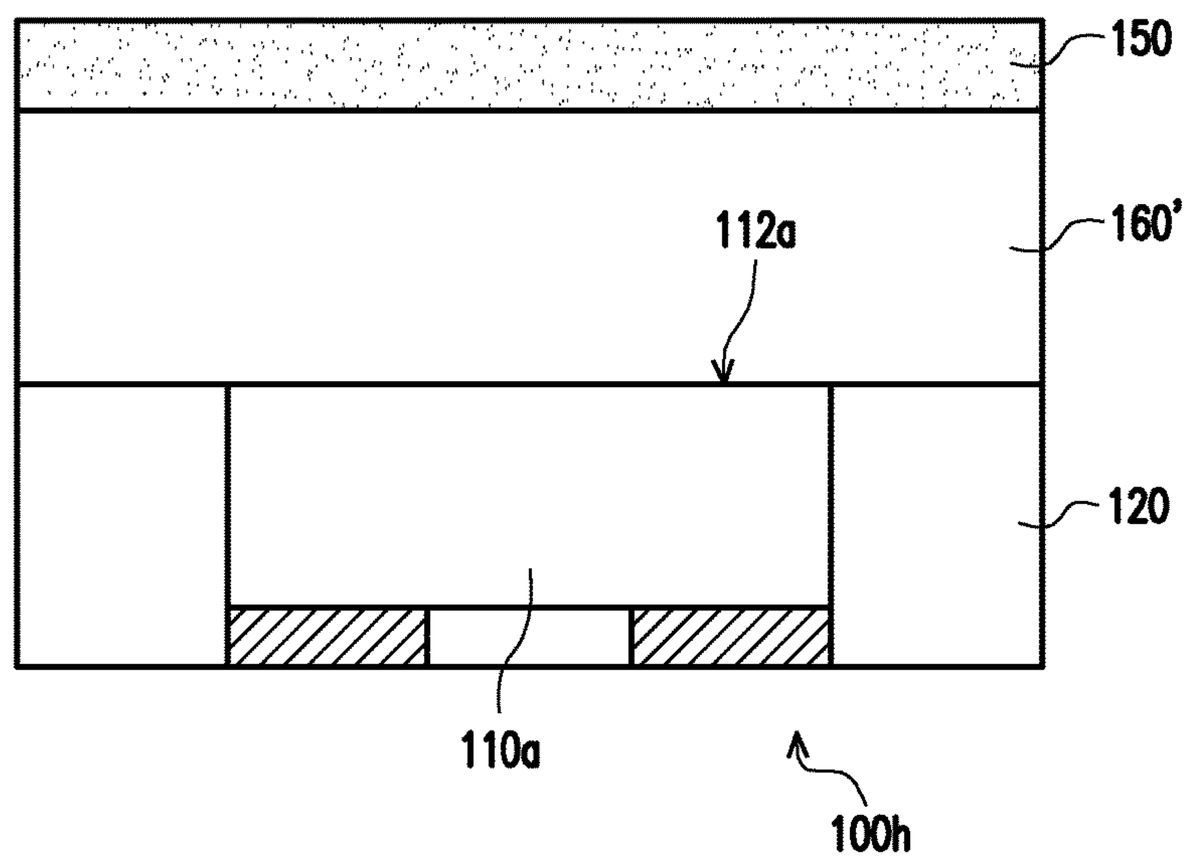

FIG. 8

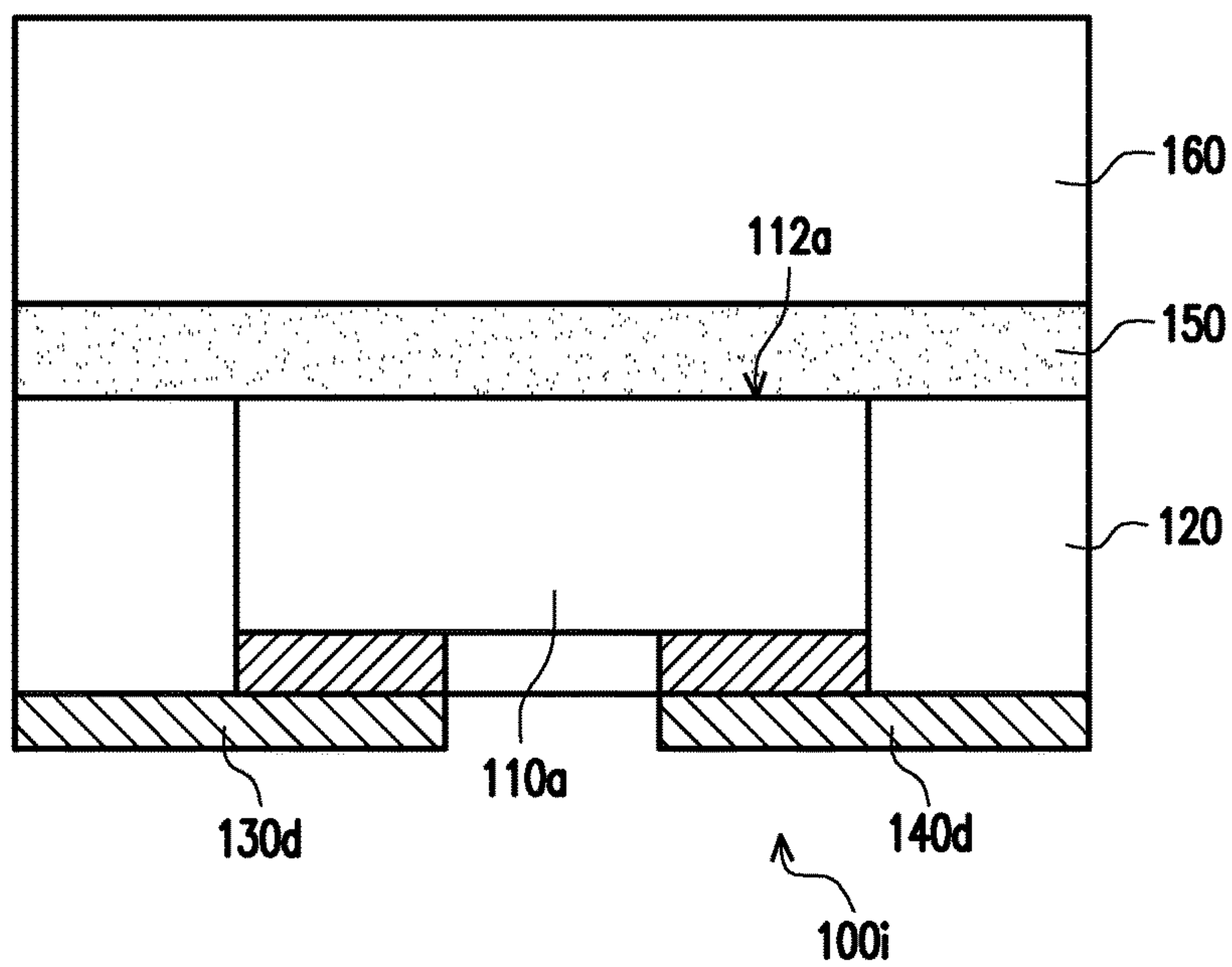

FIG. 9

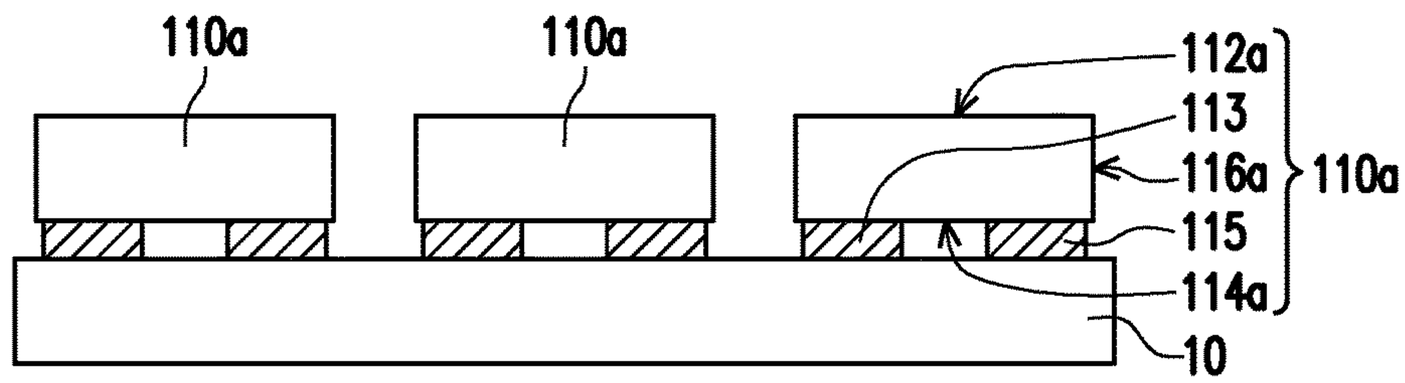

FIG. 10A

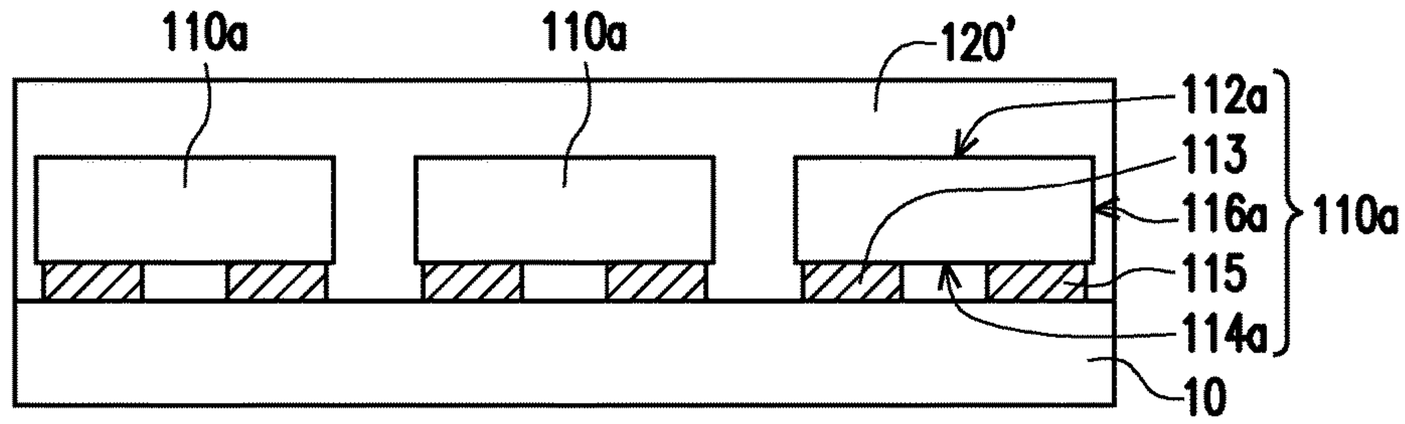

FIG. 10B

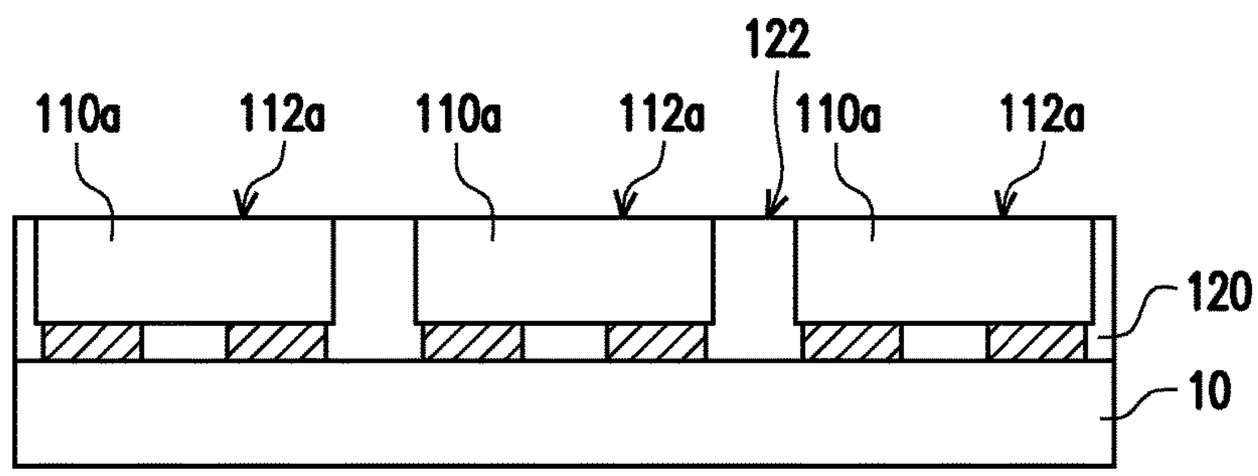

FIG. 10C

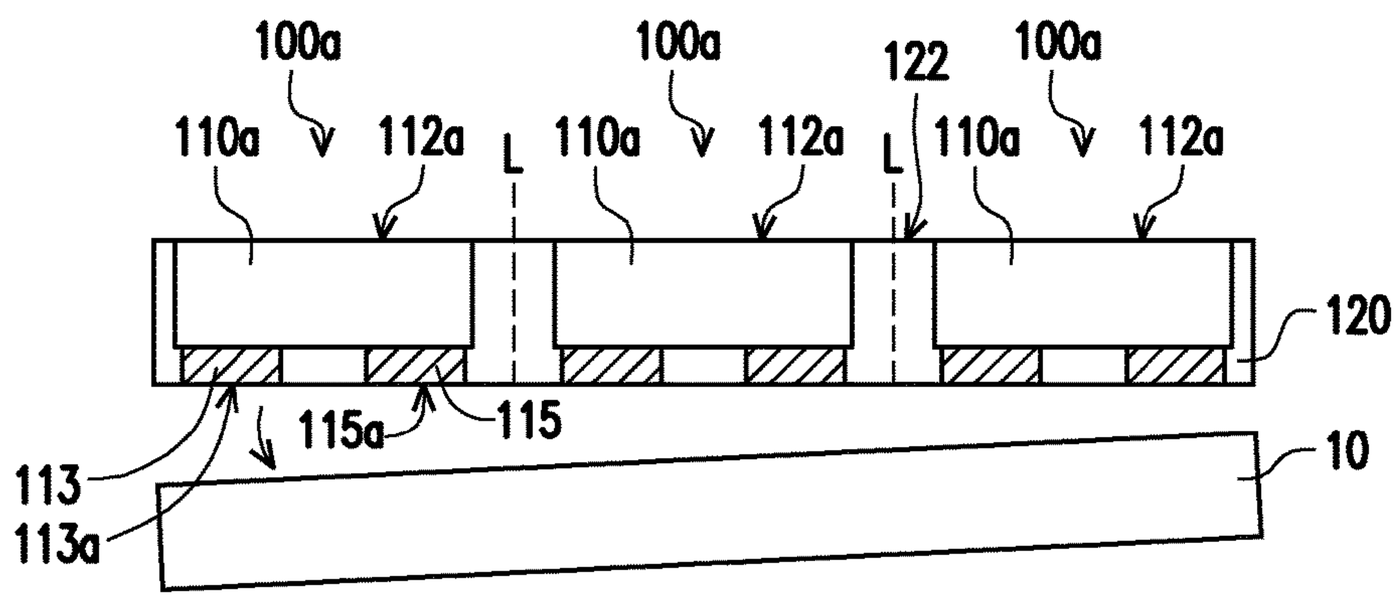

FIG. 10D

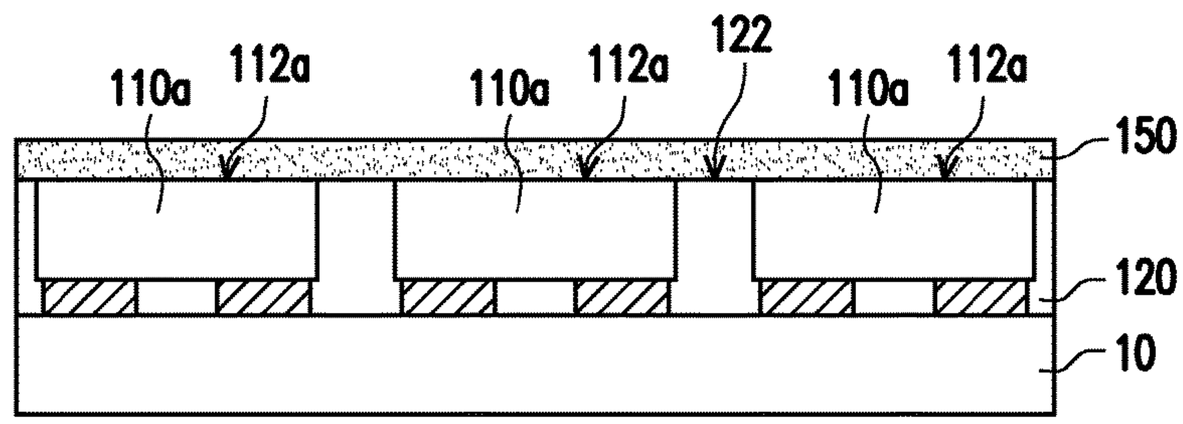

FIG. 11A

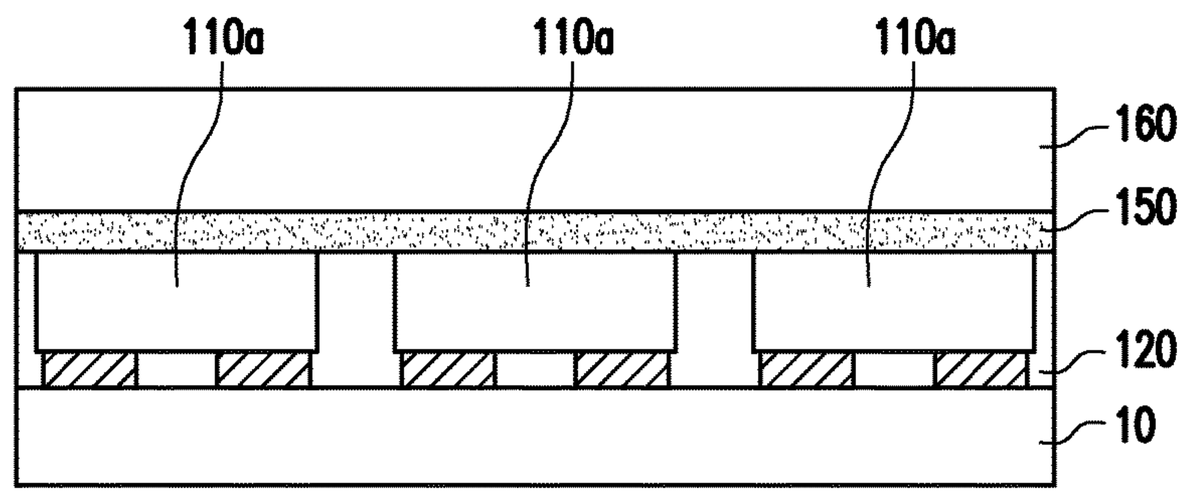

FIG. 11B

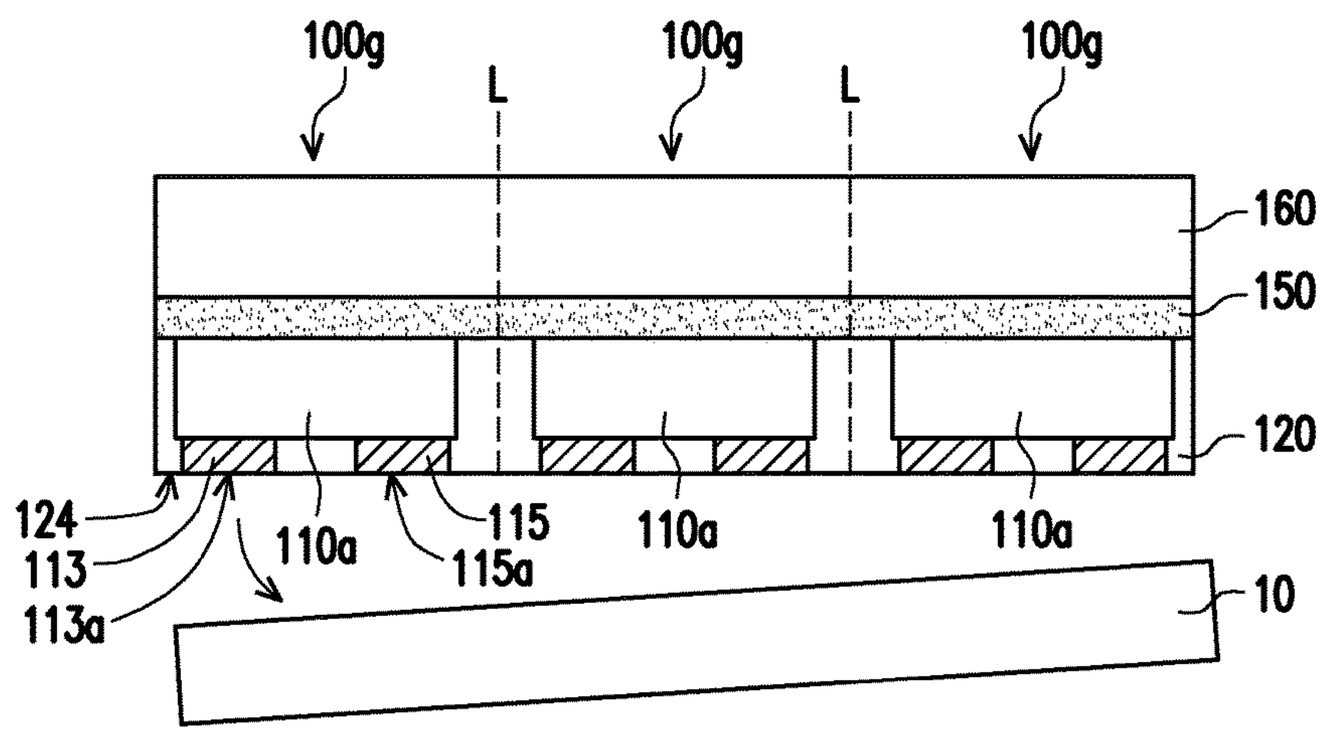

FIG. 11C

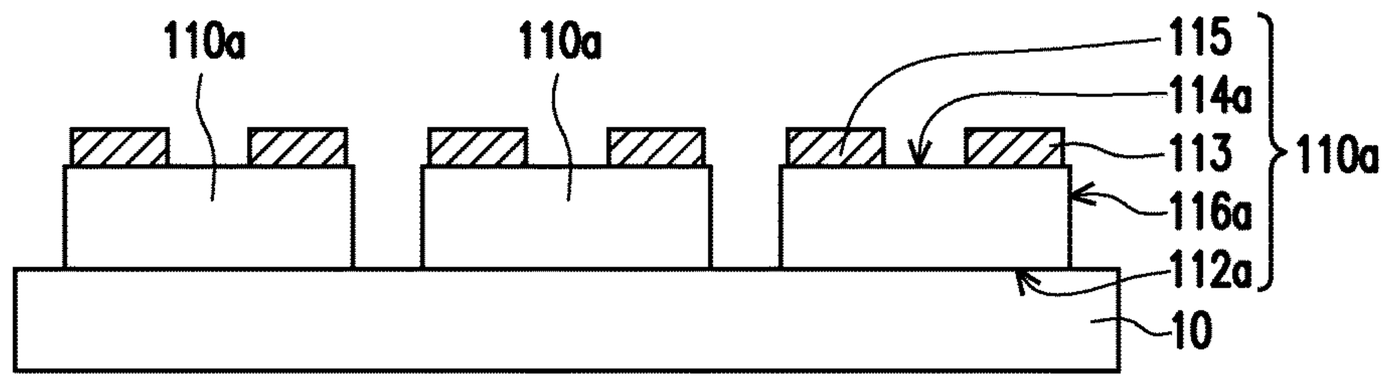

FIG. 12A

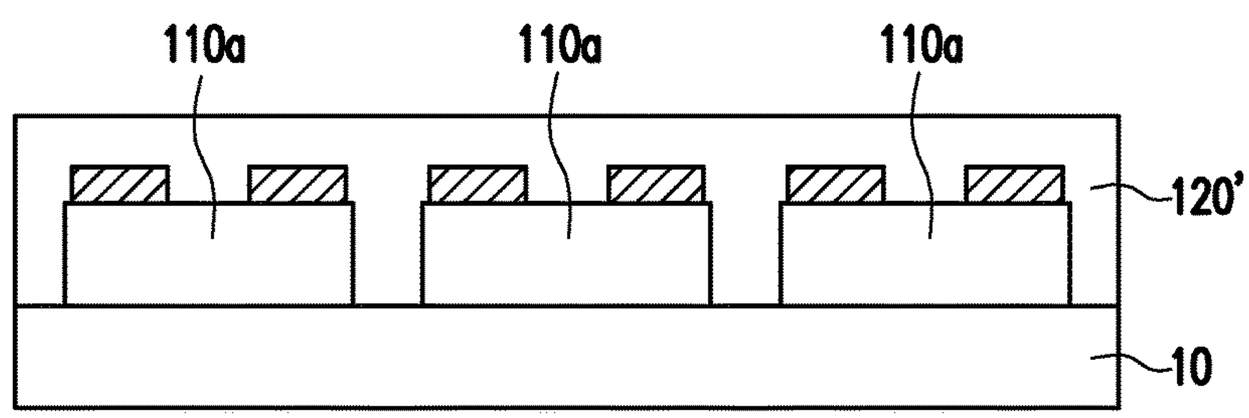

FIG. 12B

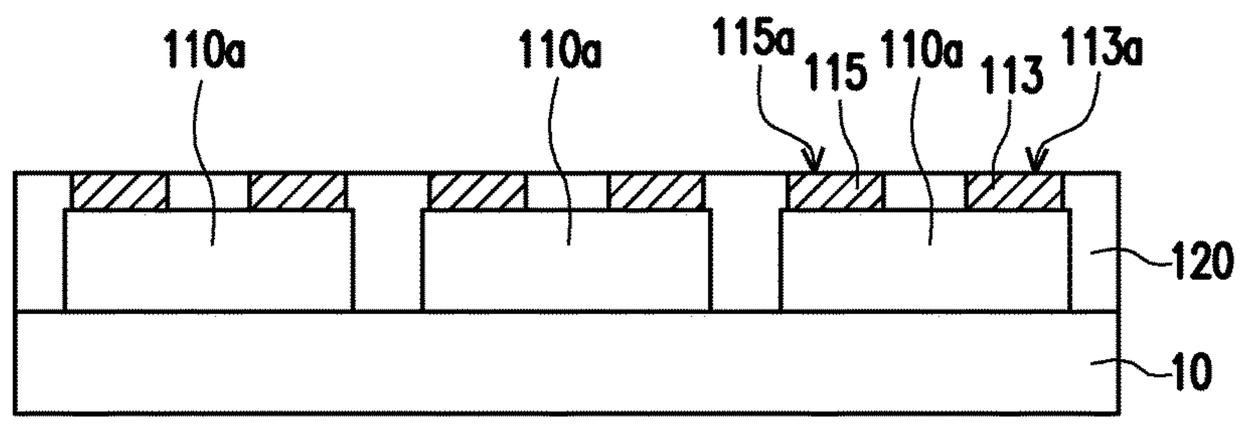

FIG. 12C

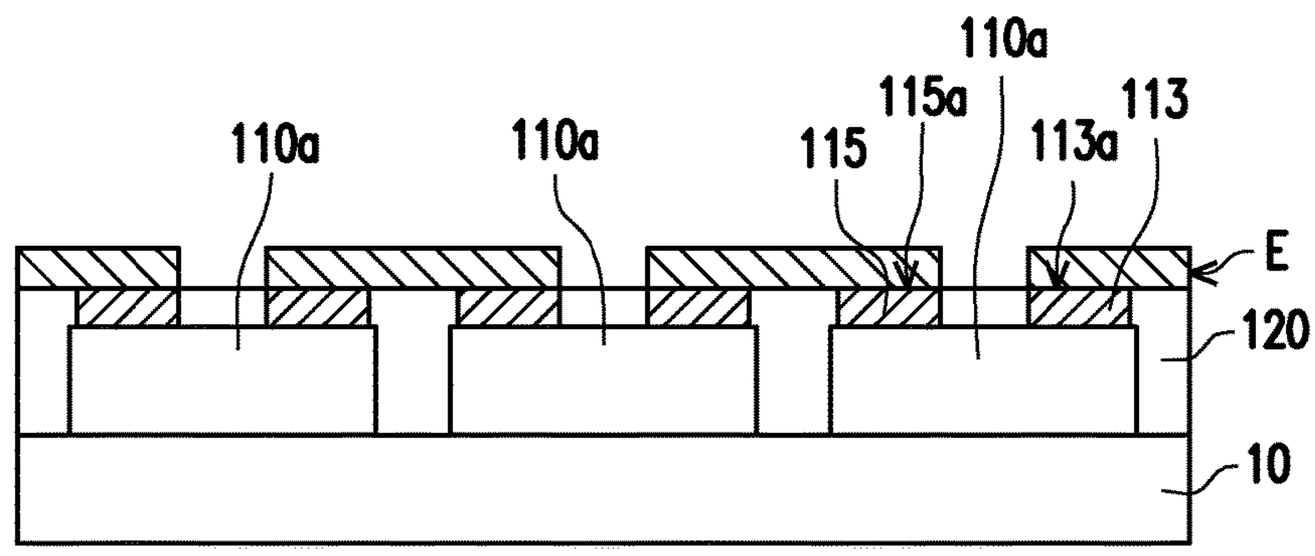

FIG. 12D

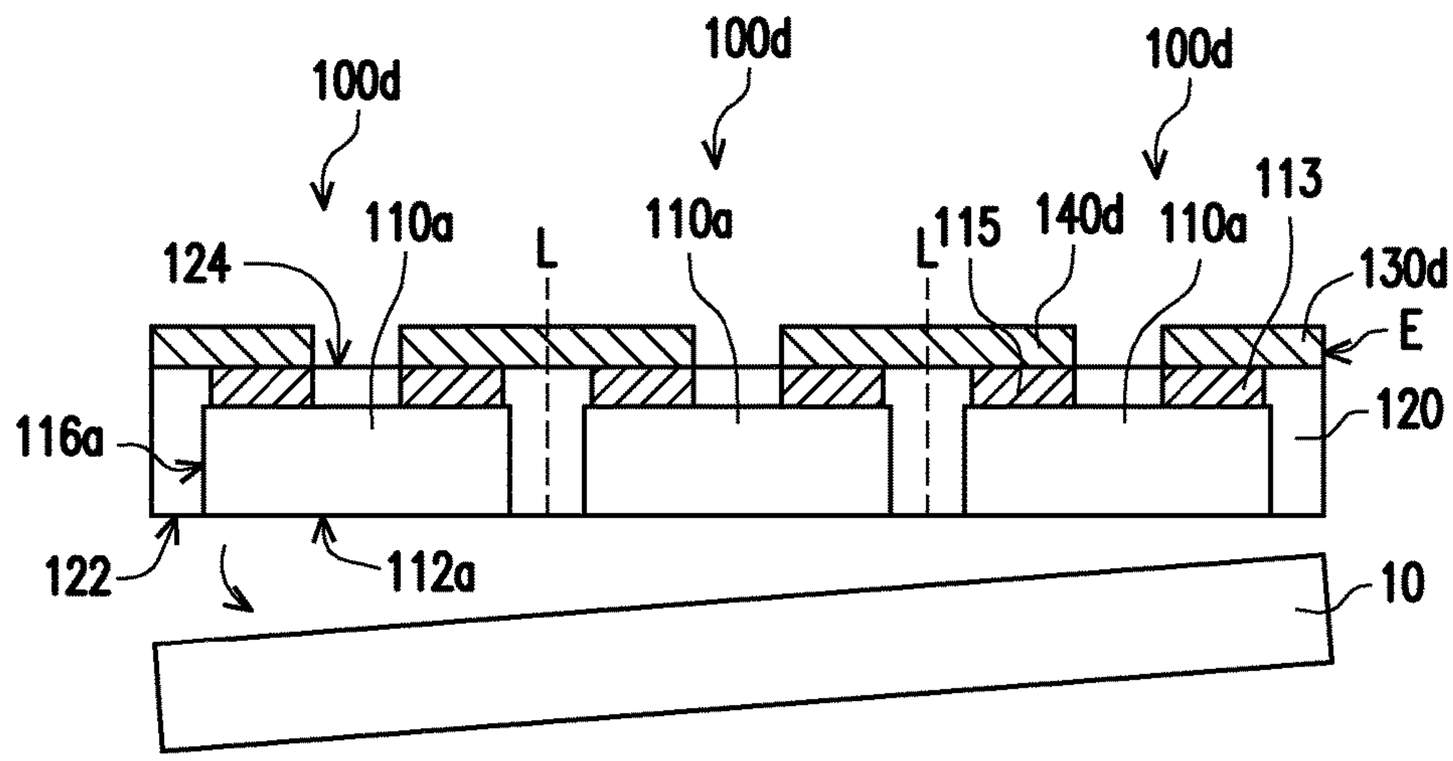

FIG. 12E

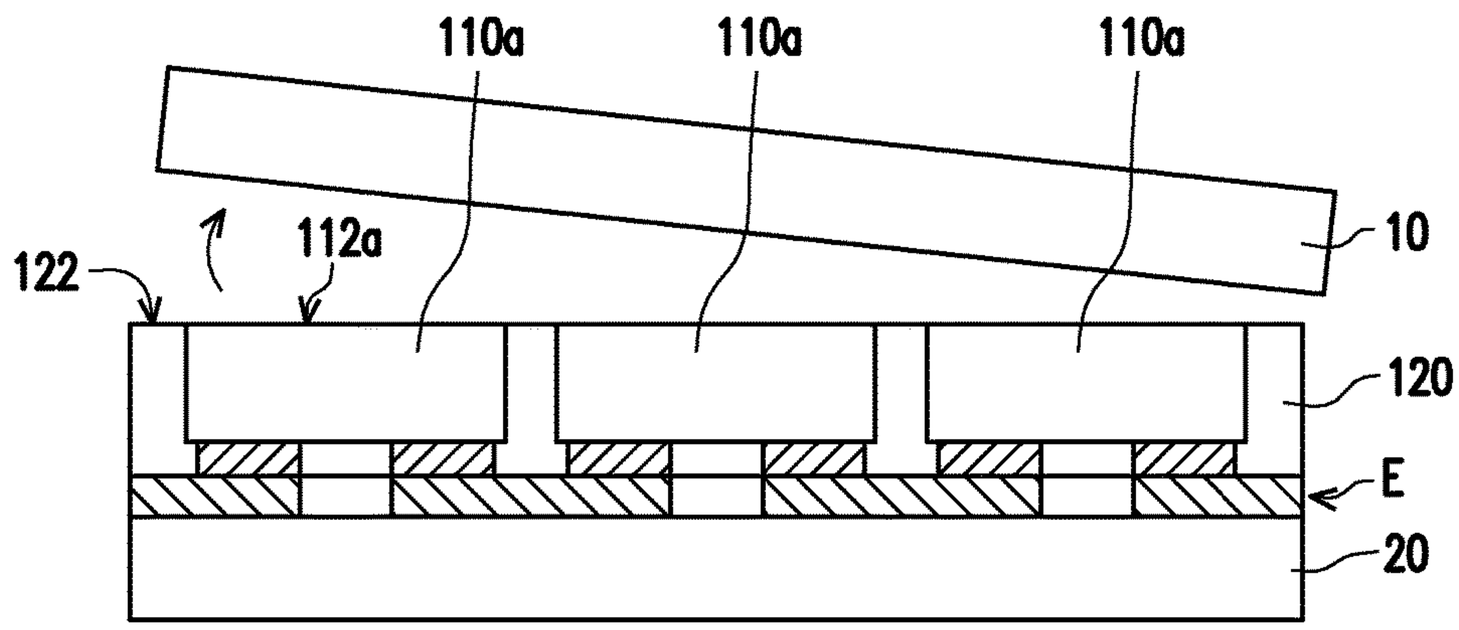

FIG. 13A

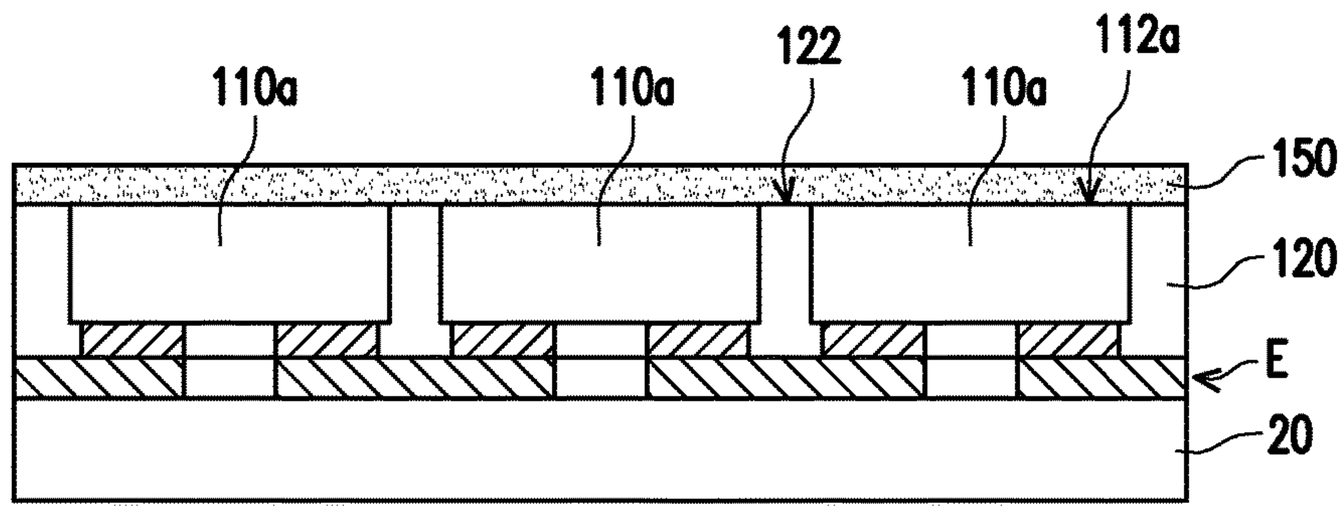

FIG. 13B

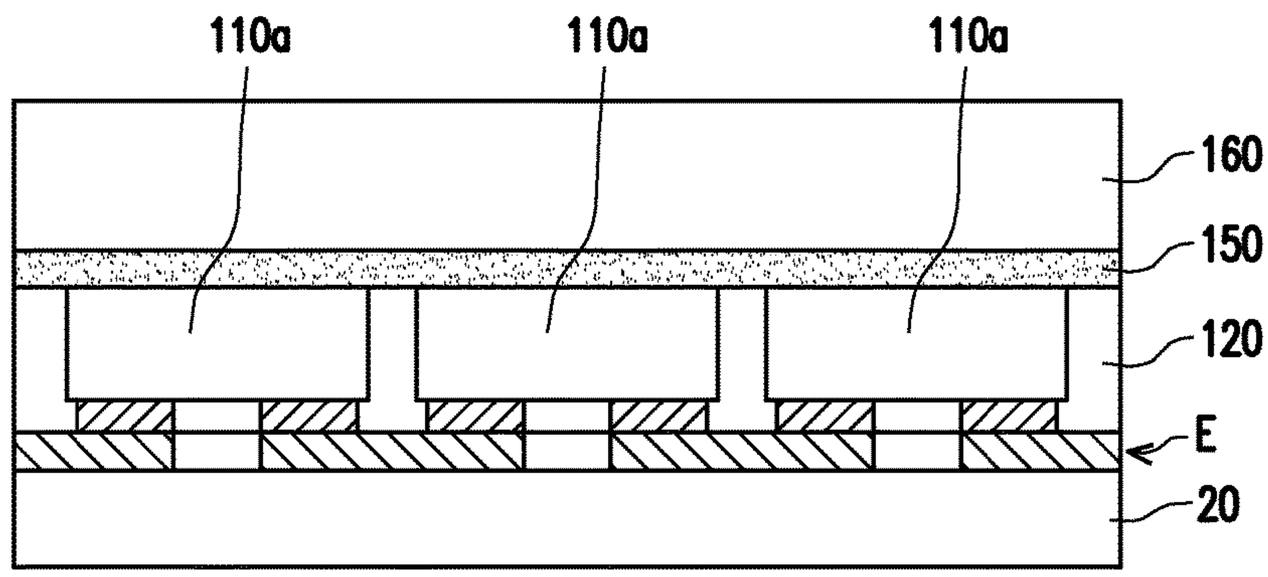

FIG. 13C

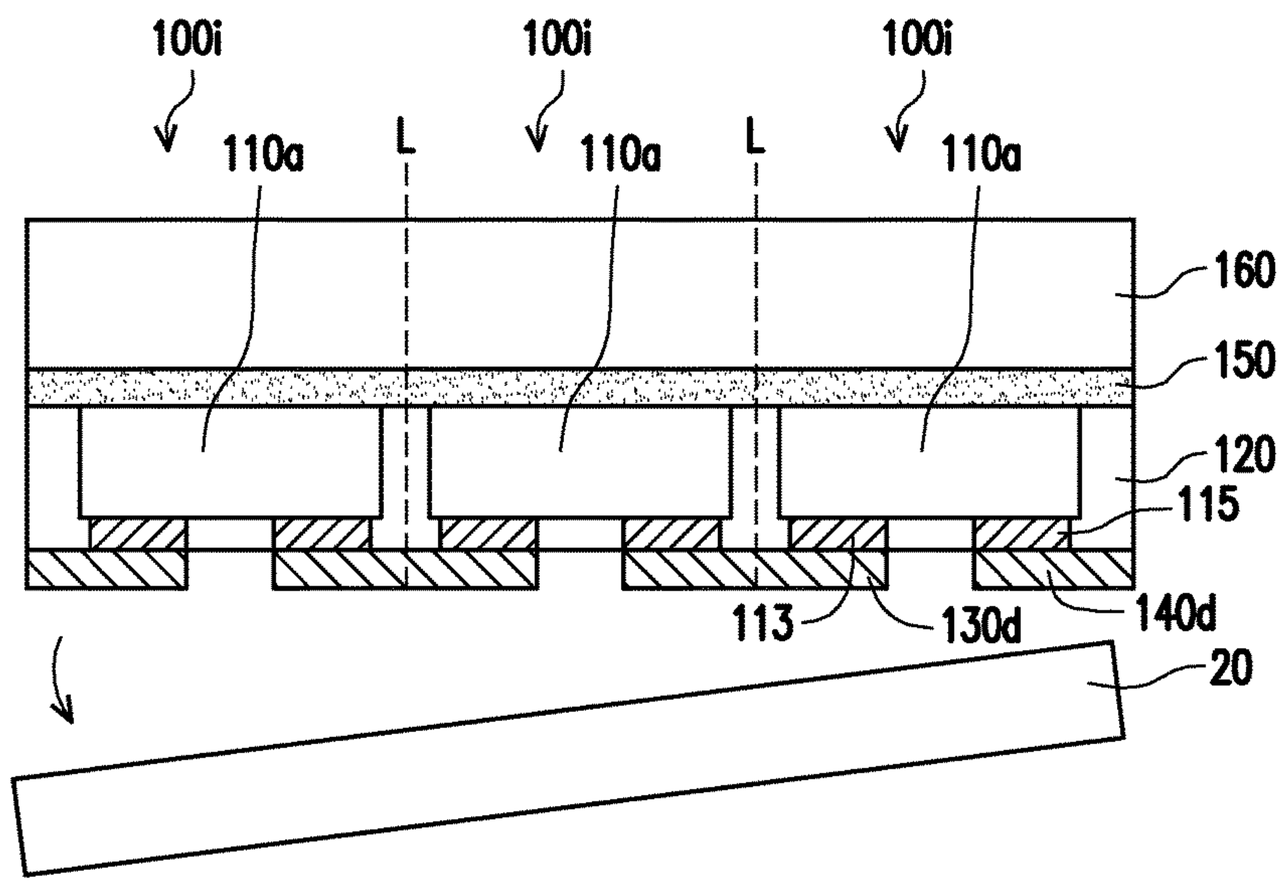

FIG. 13D

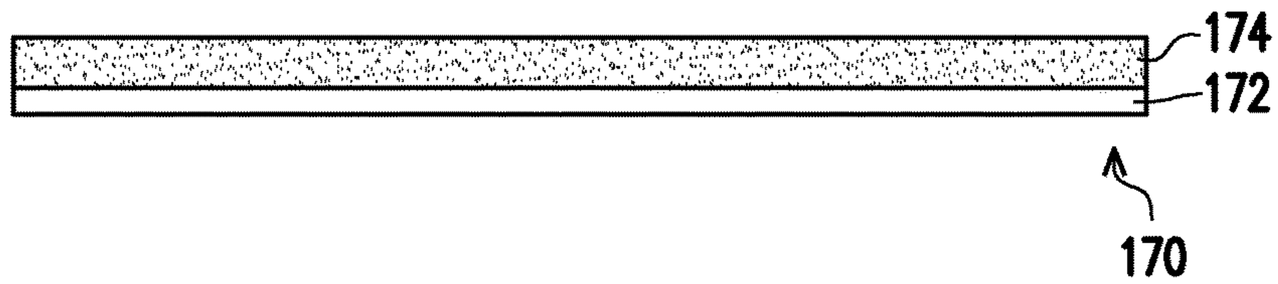

FIG. 14A

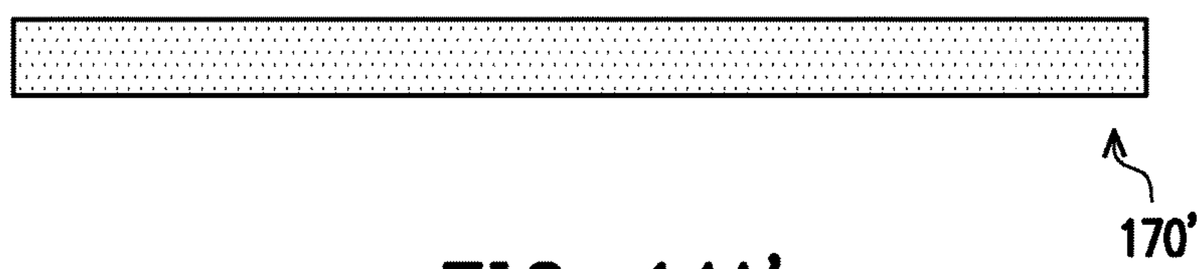

FIG. 14A'

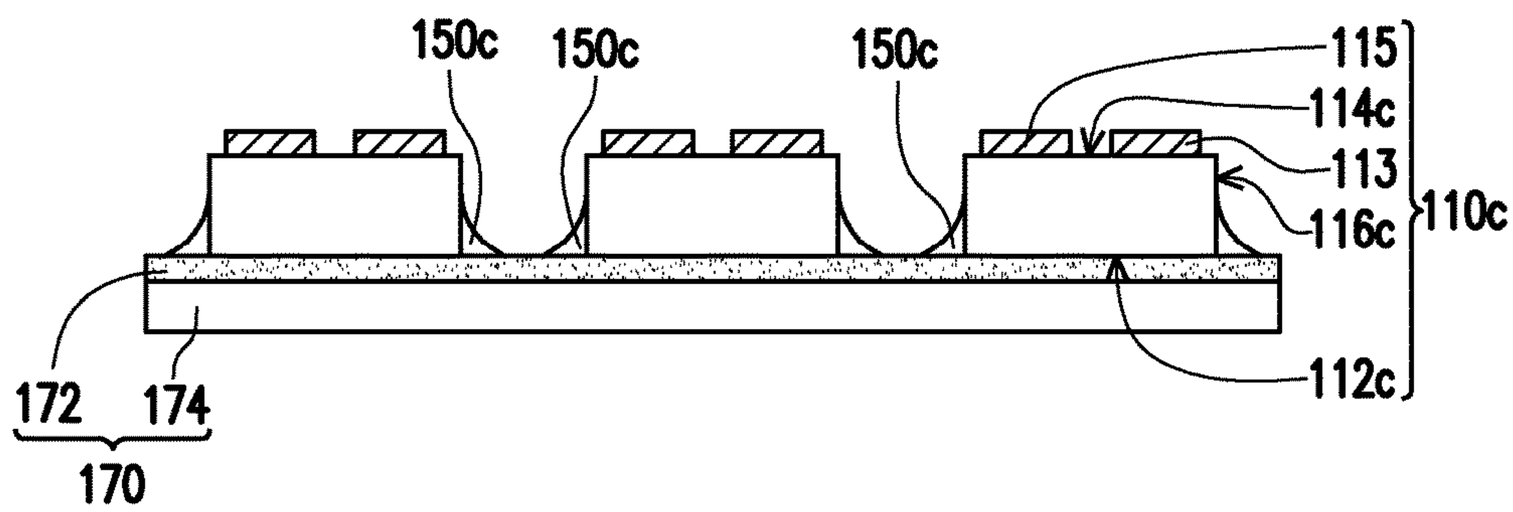

FIG. 14B

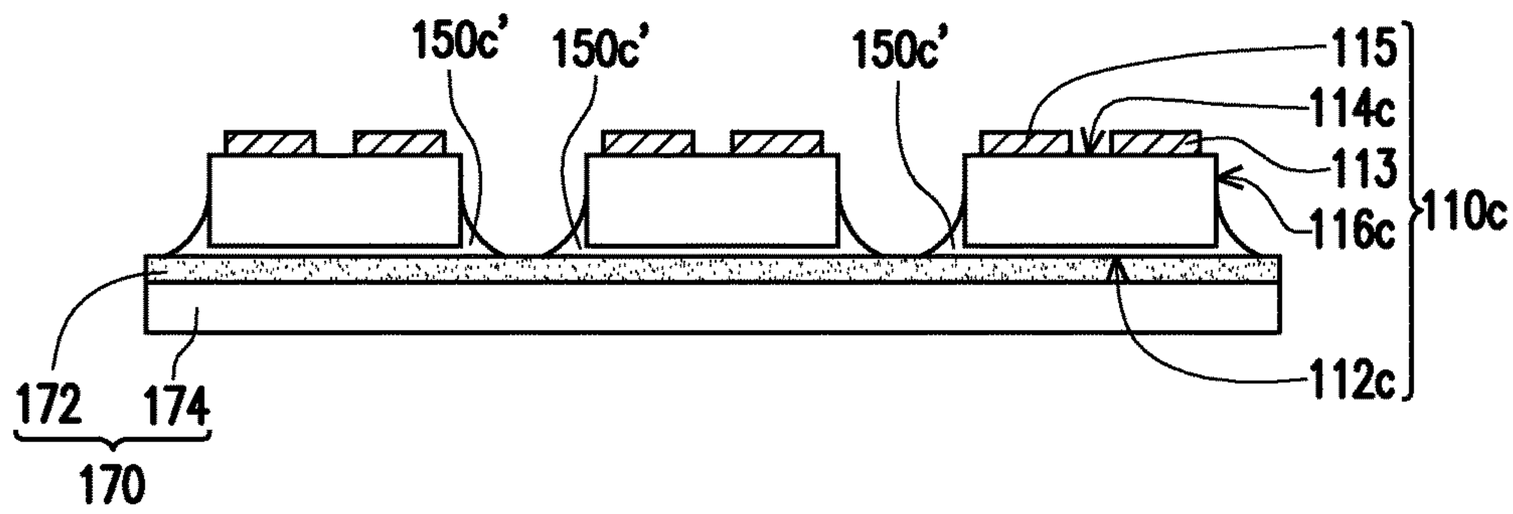

FIG. 14B'

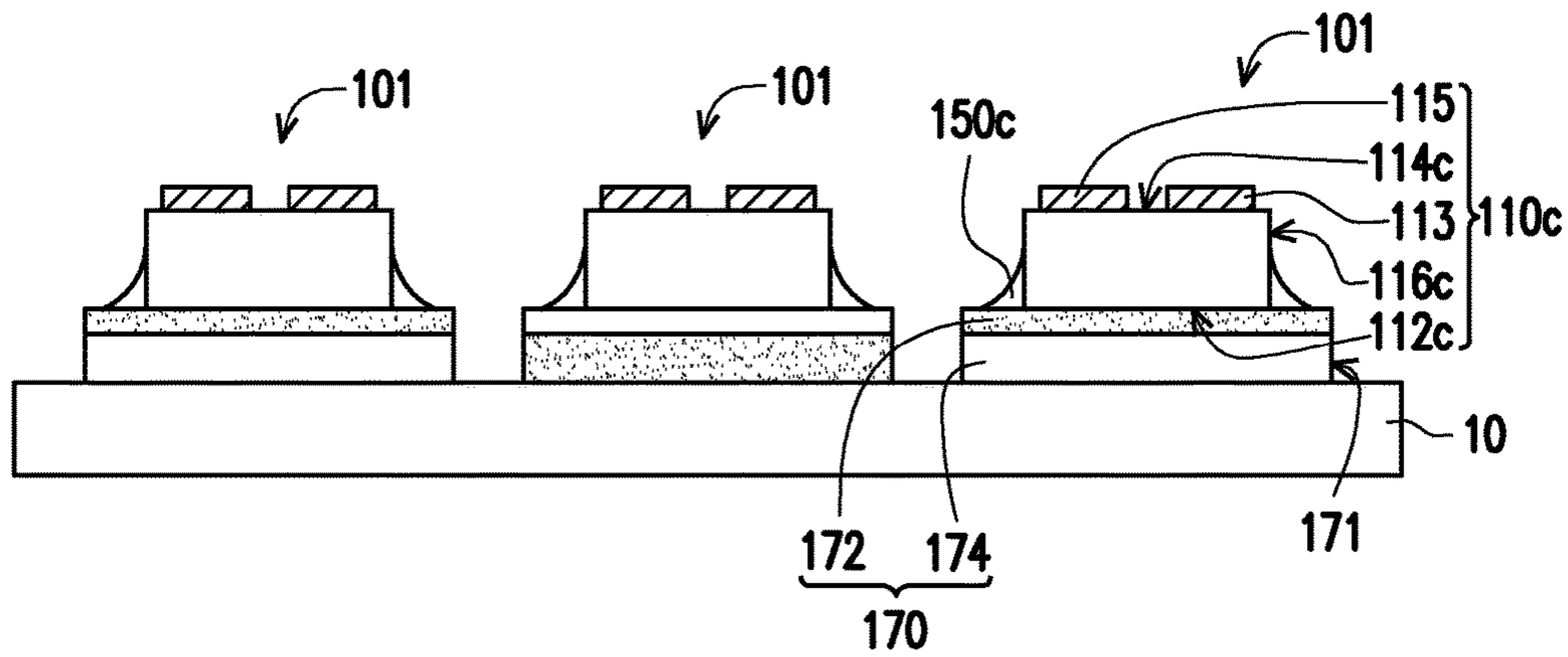

FIG. 14C

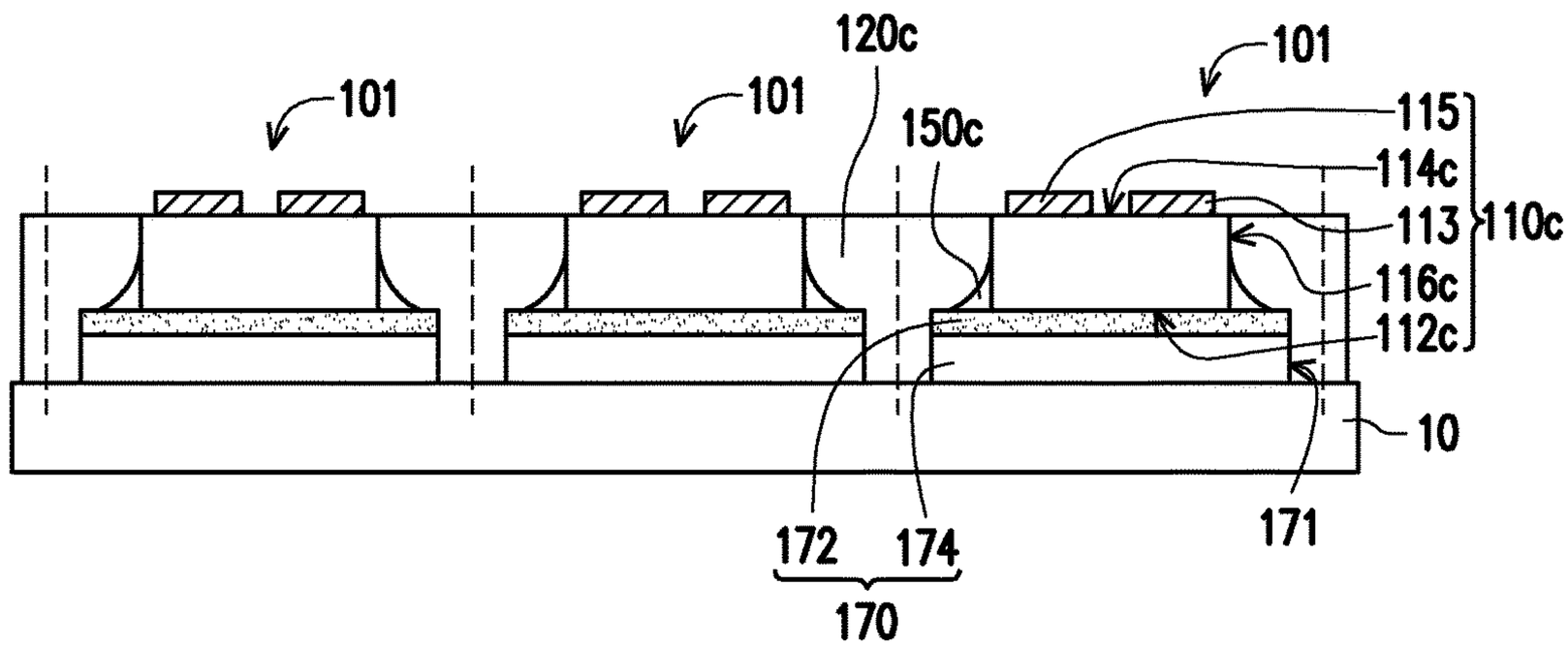

FIG. 14D

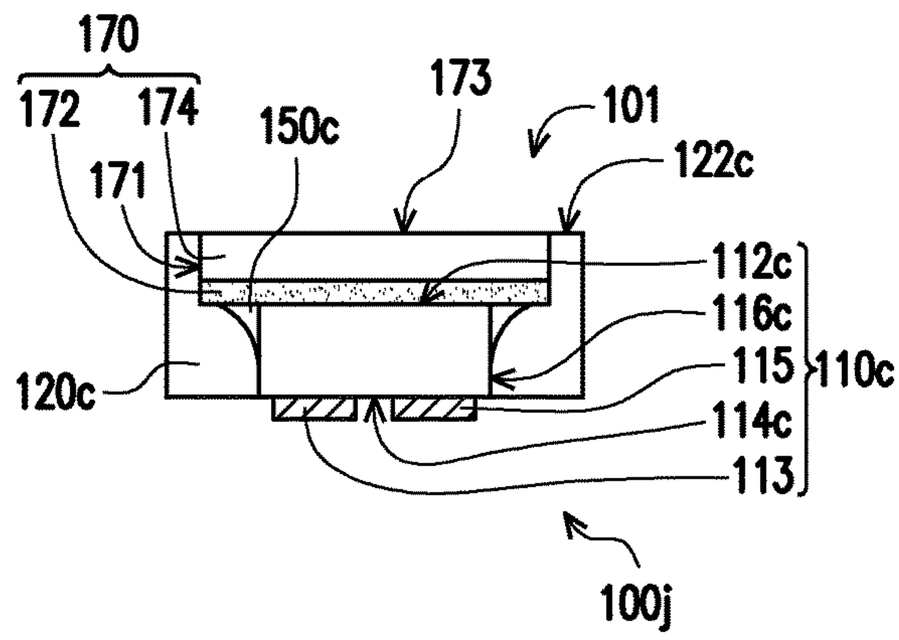

FIG. 14E

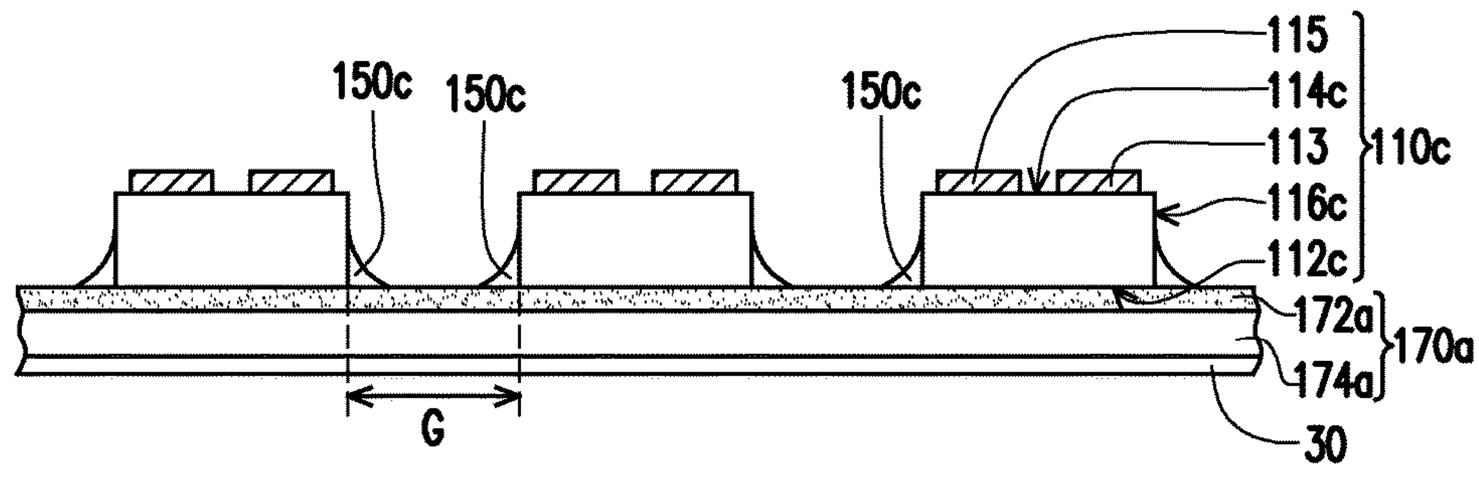

FIG. 15A

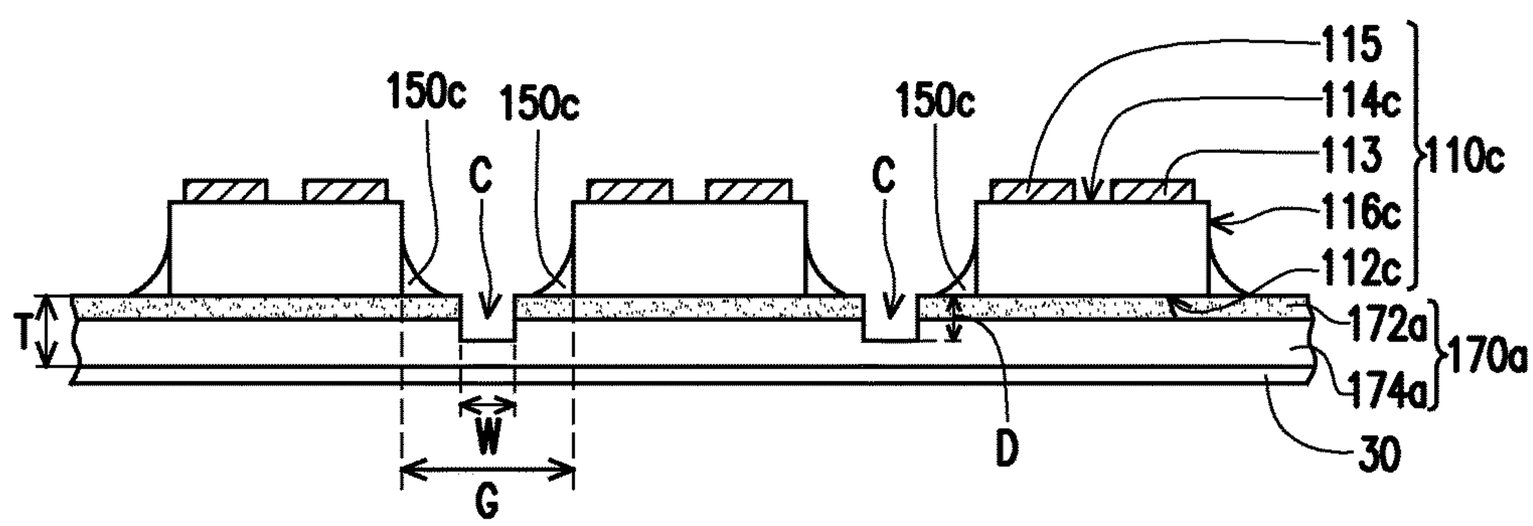

FIG. 15B

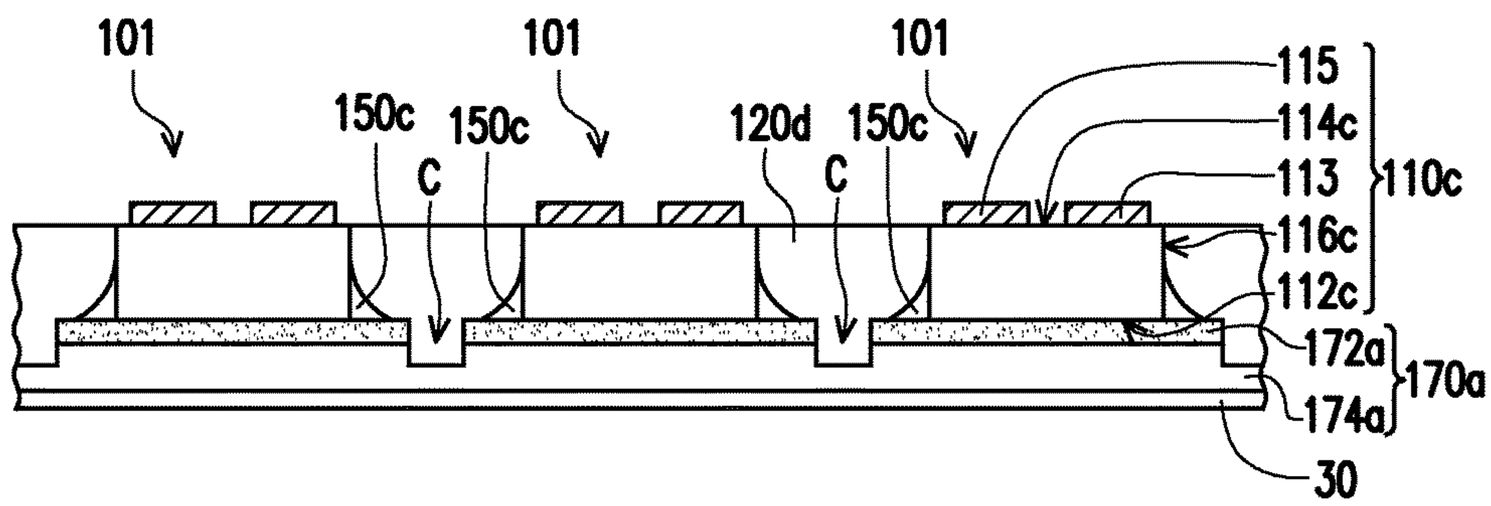

FIG. 15C

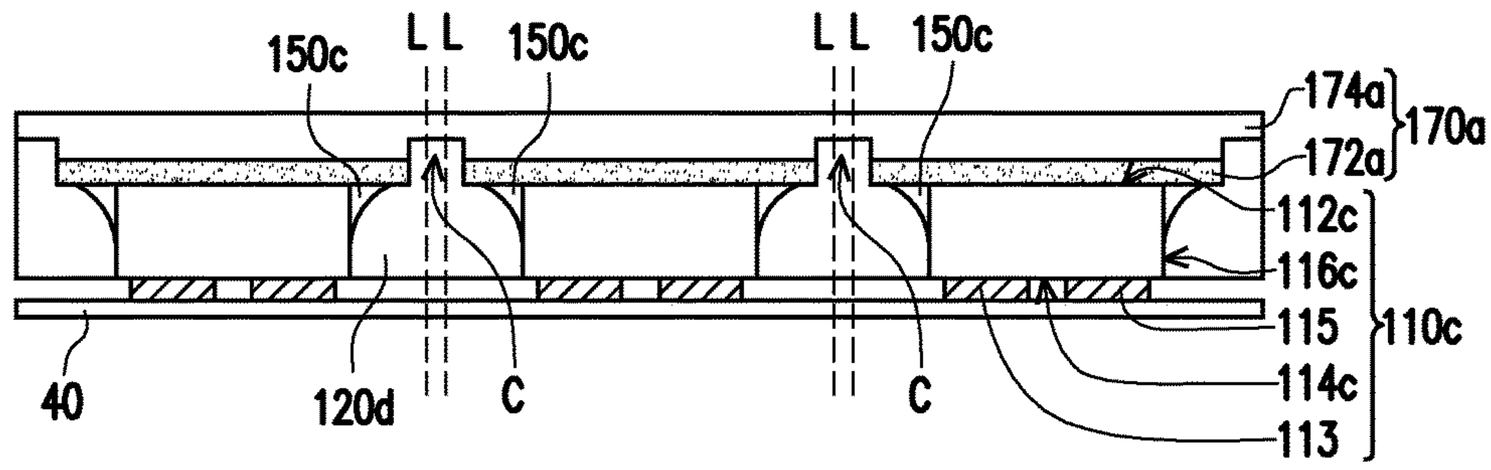

FIG. 15D

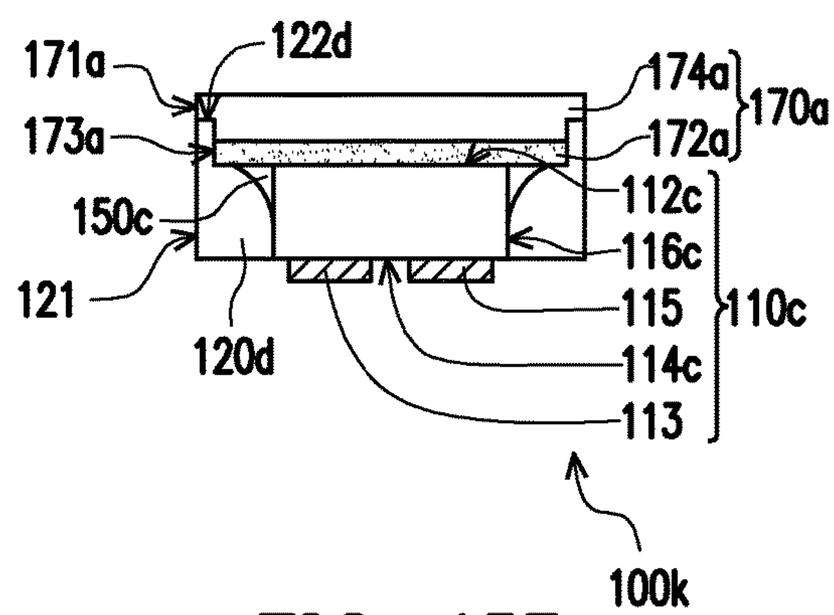

FIG. 15E

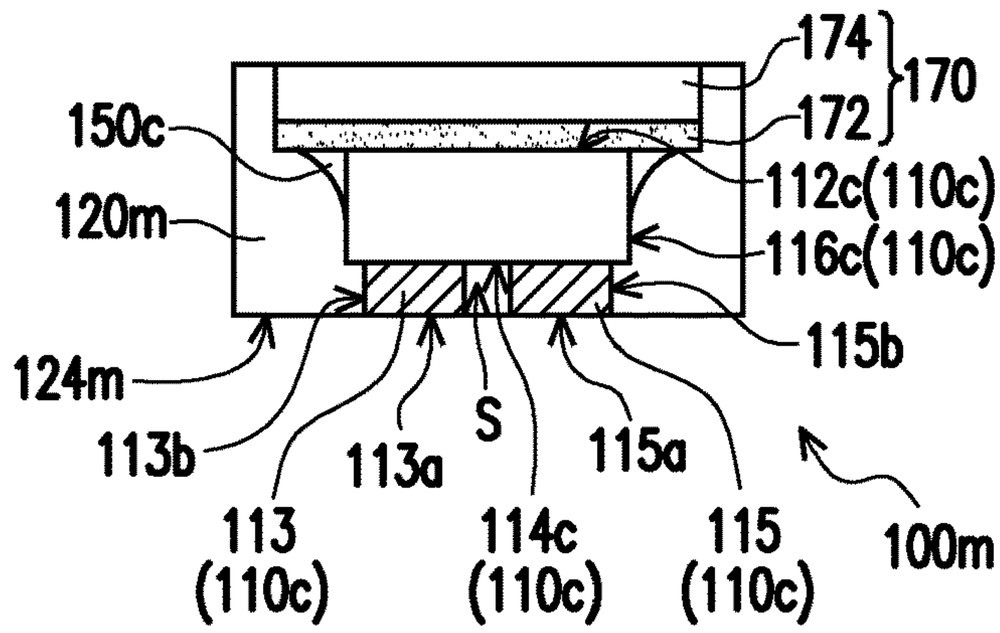

FIG. 16A

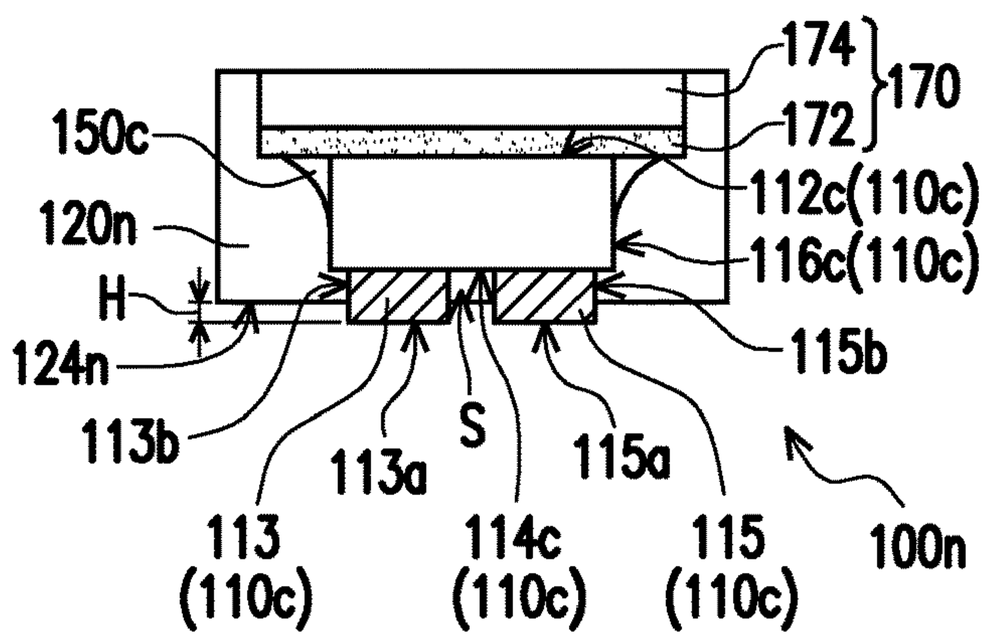

FIG. 16B

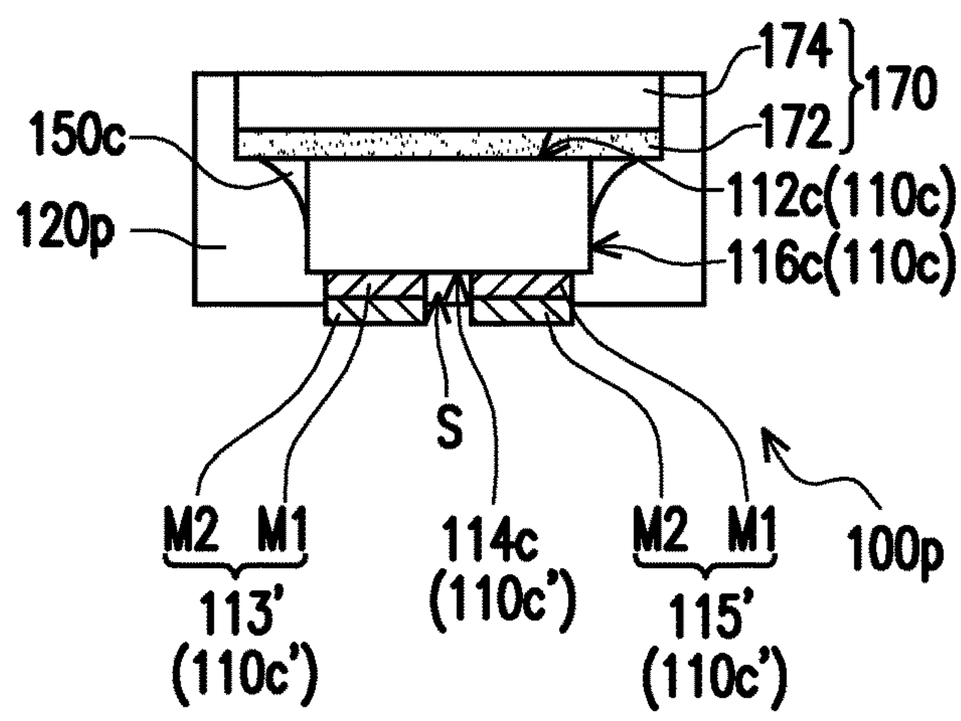

FIG. 16C

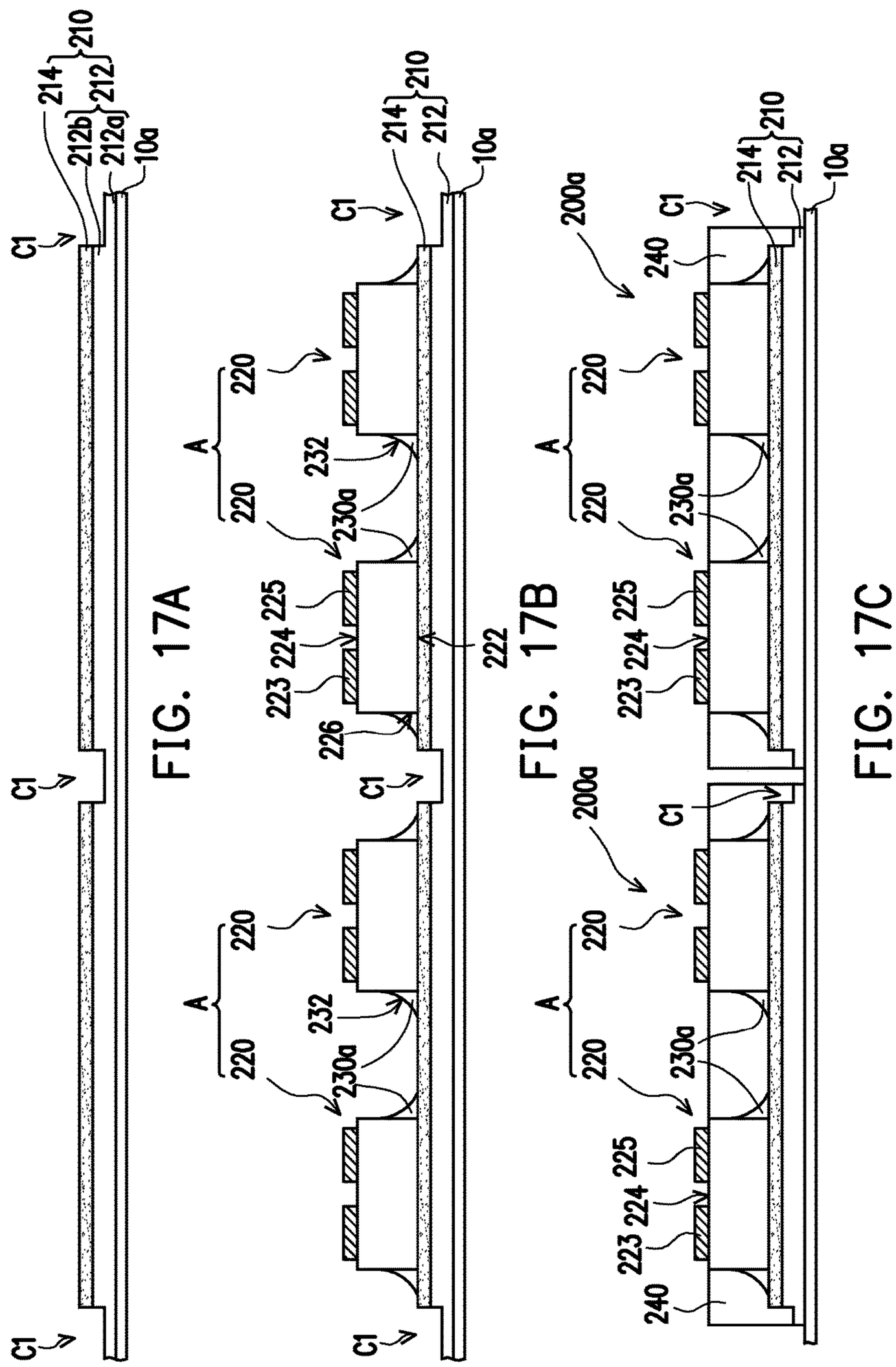

FIG. 17A

FIG. 17B

FIG. 17C

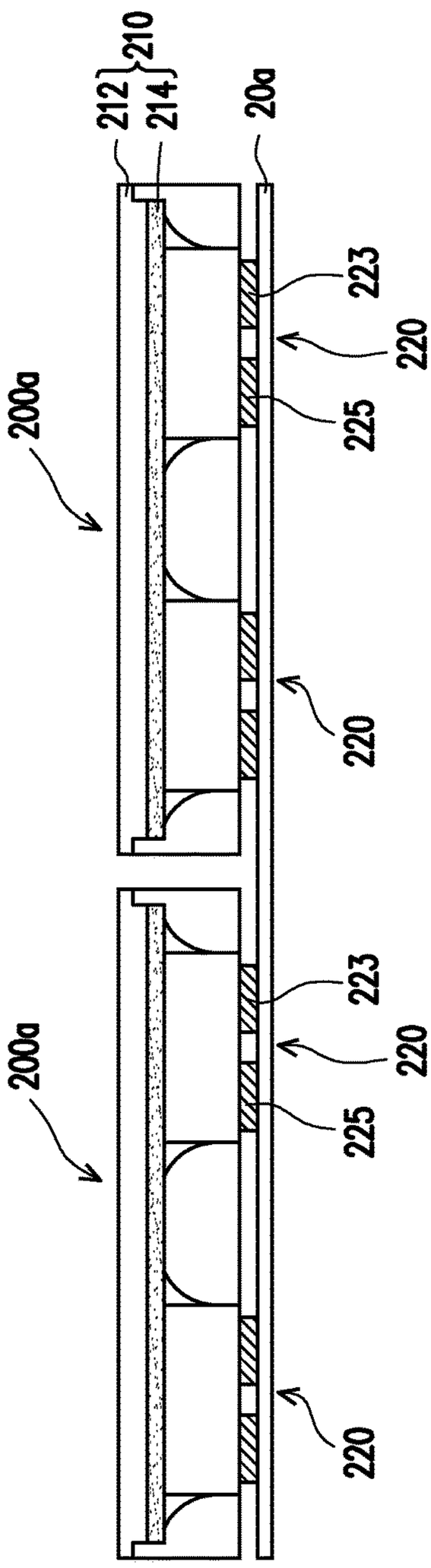

FIG. 17D

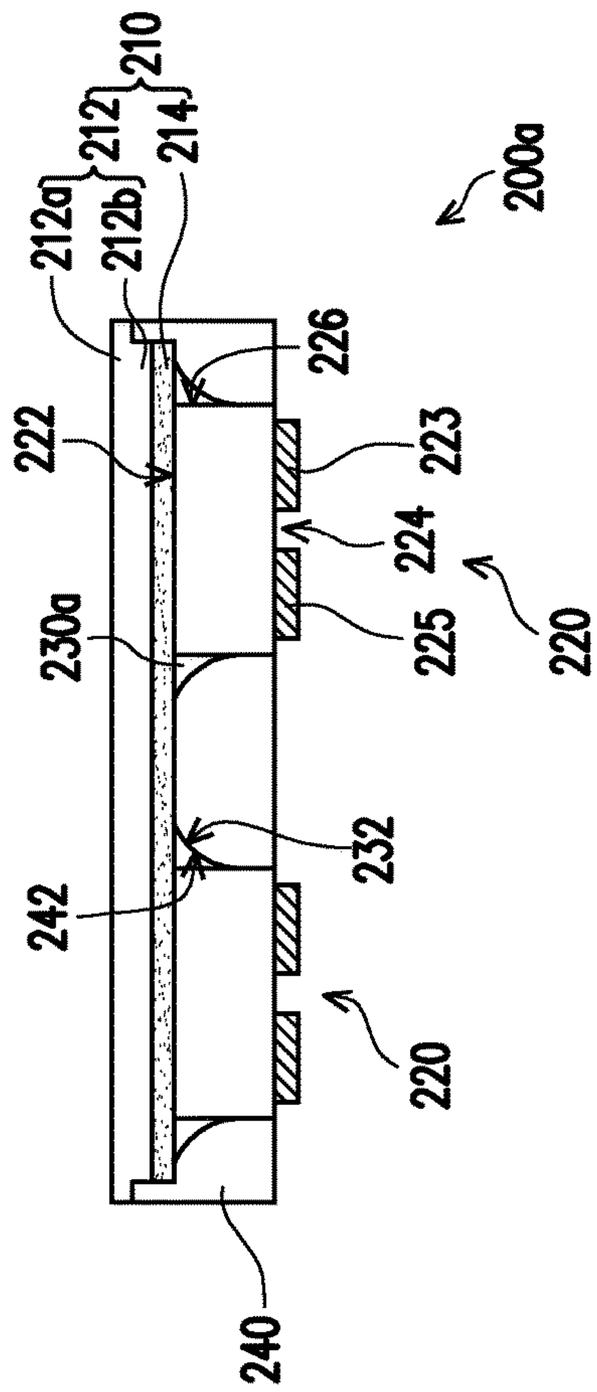

FIG. 17E

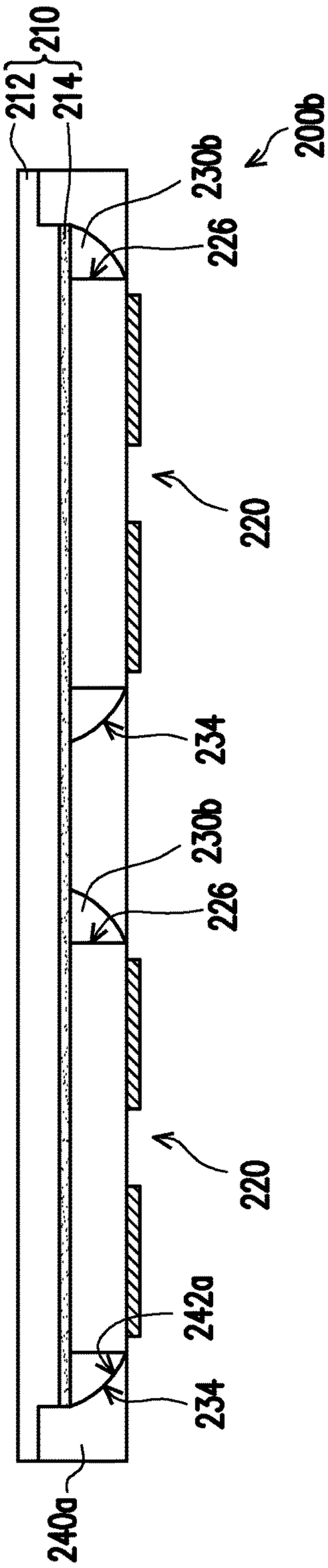

FIG. 18A

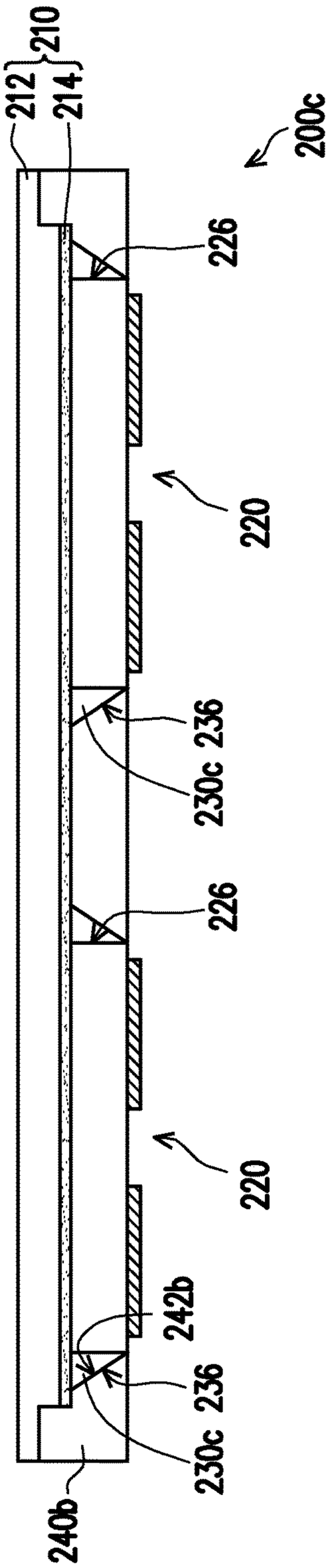

FIG. 18B

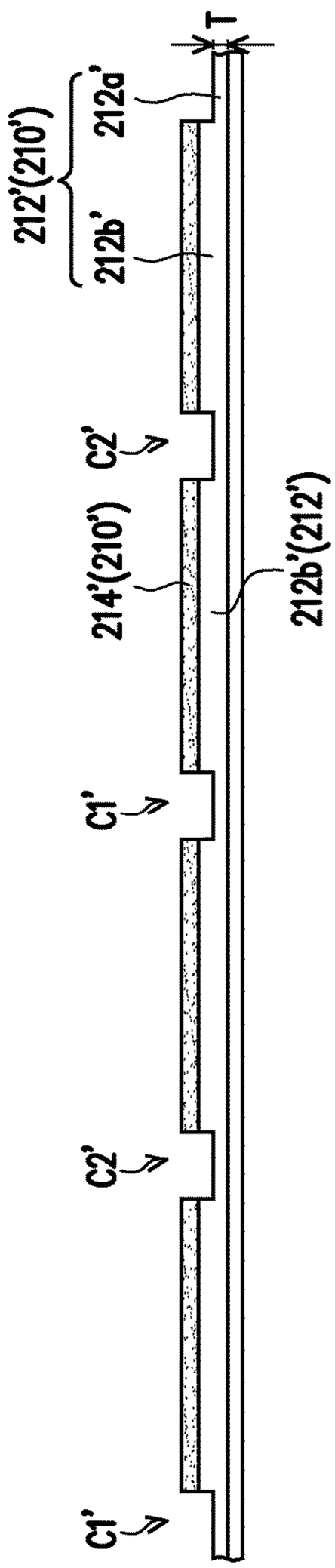

FIG. 19A

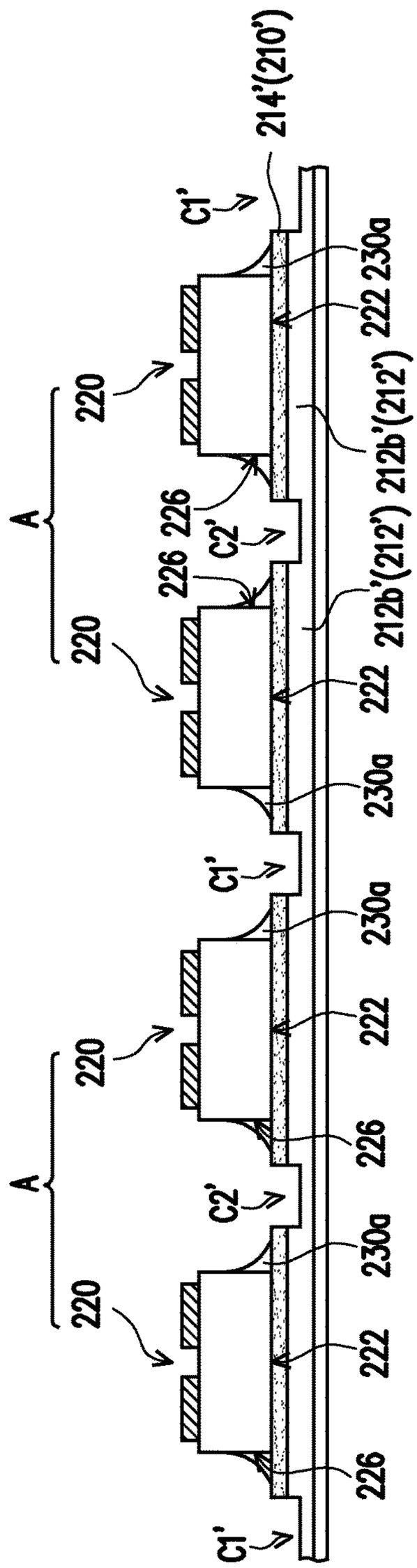

FIG. 19B

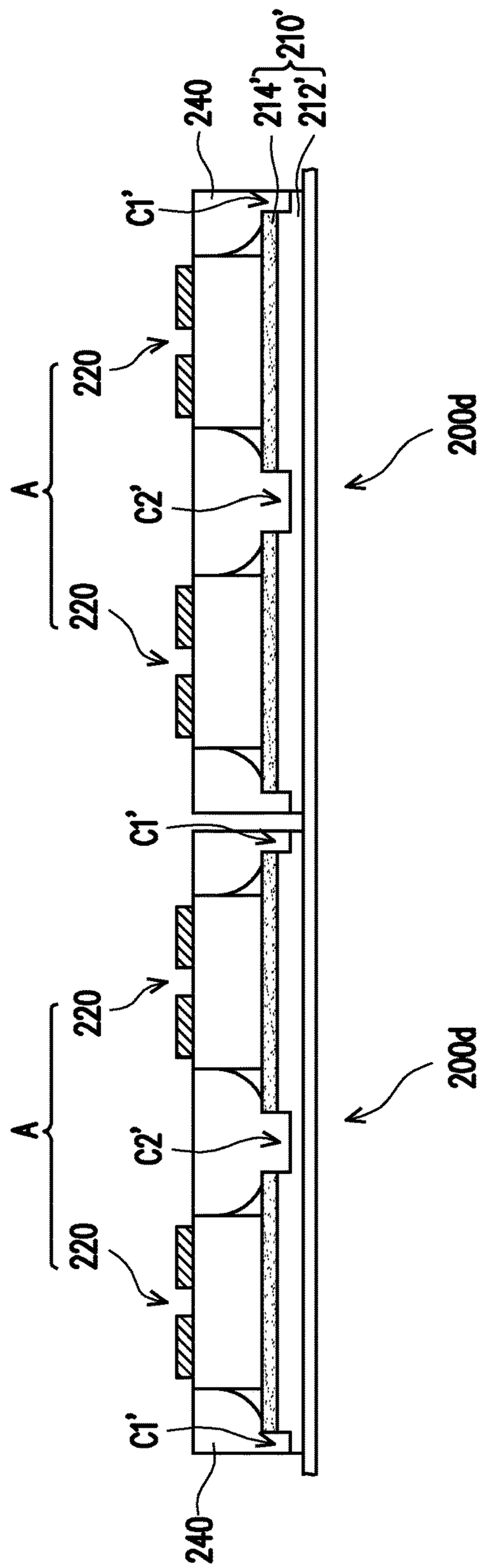

FIG. 19C

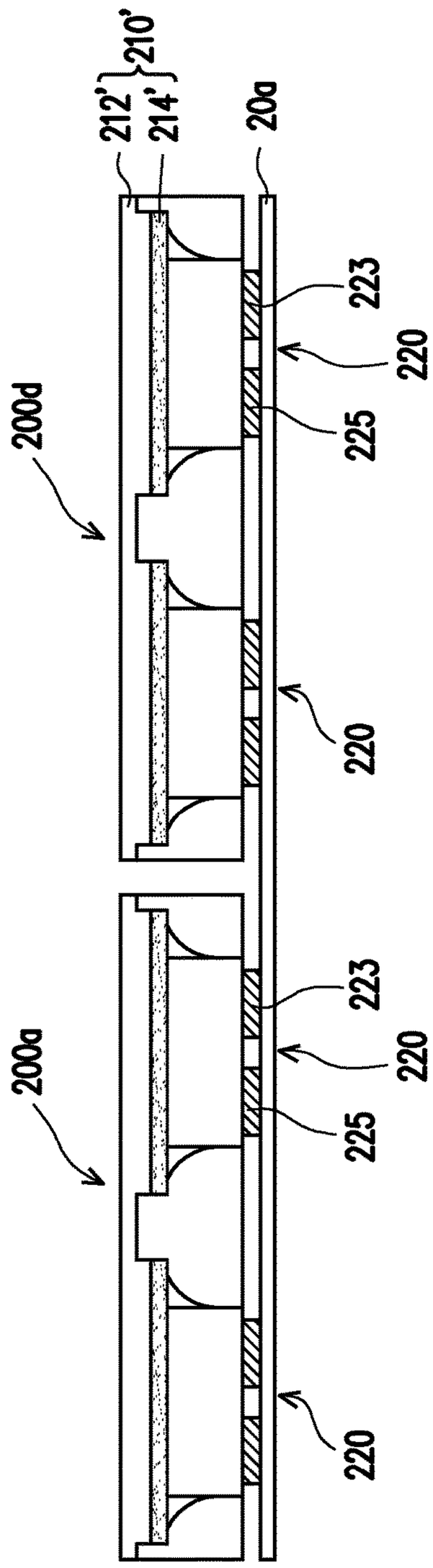

FIG. 19D

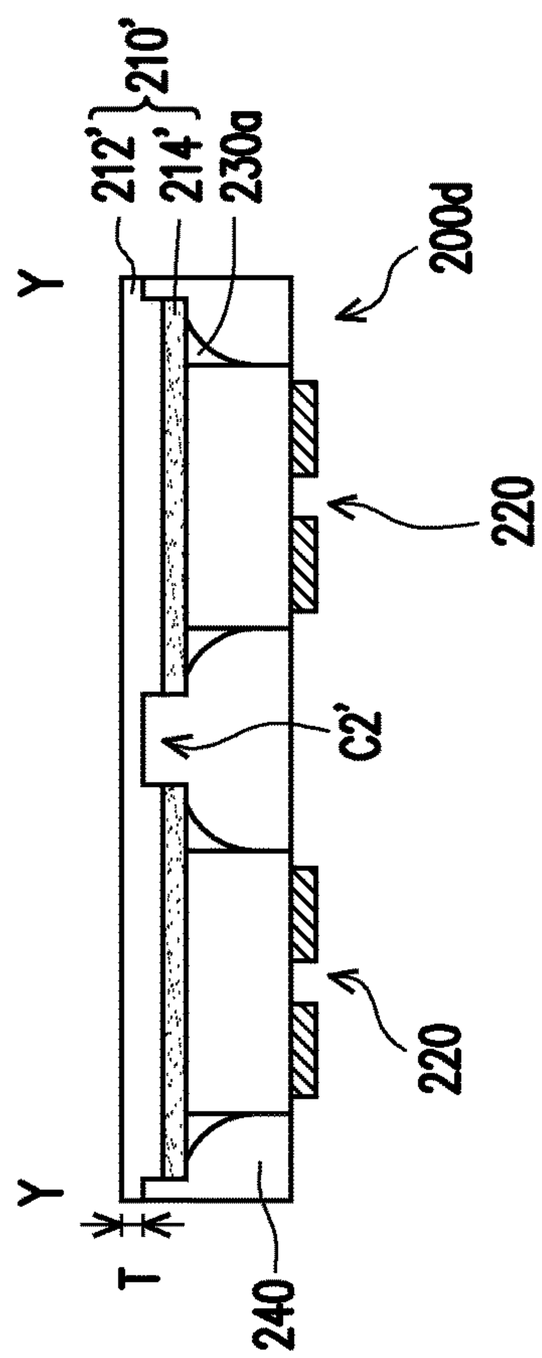

FIG. 19E

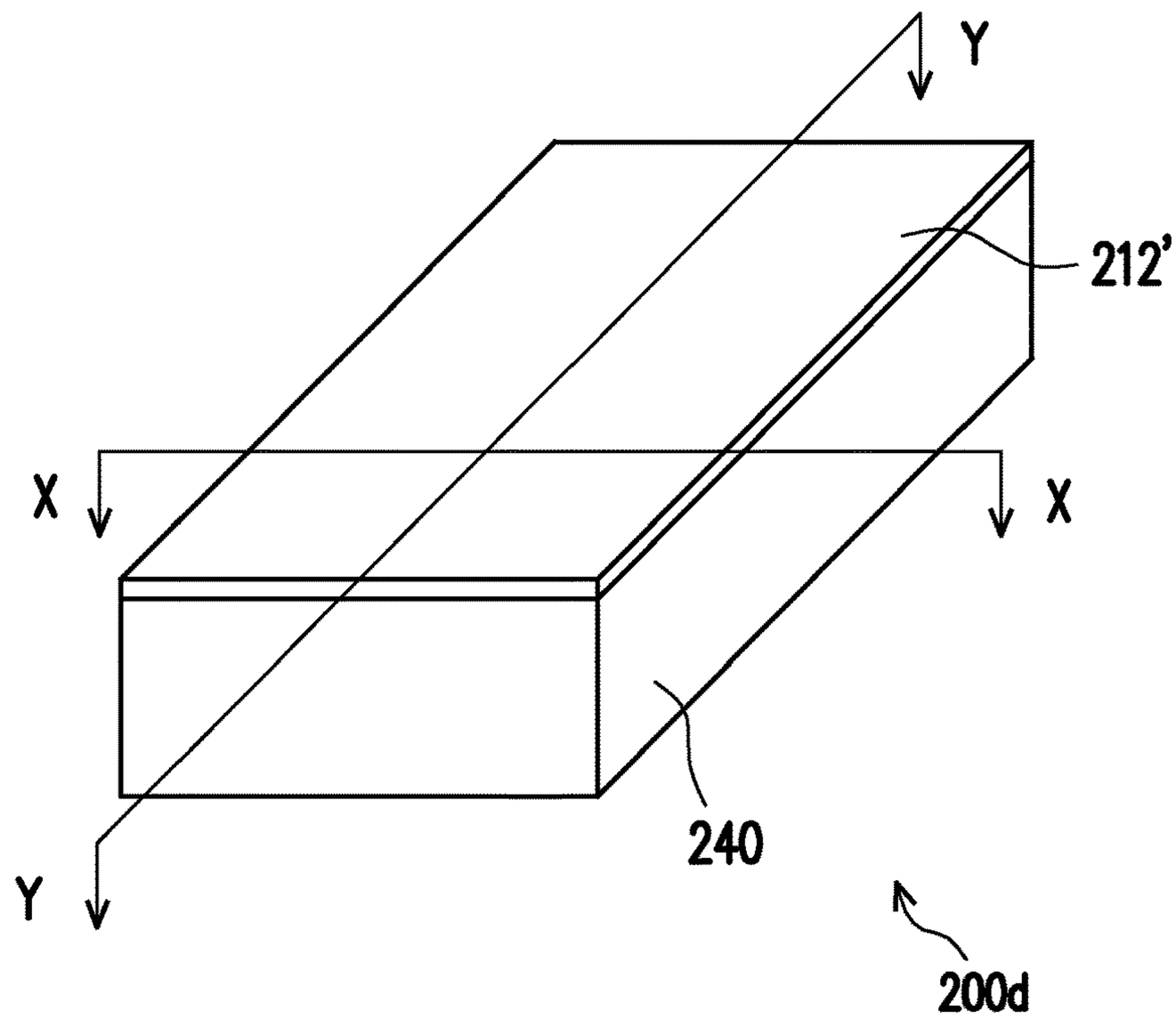

FIG. 20A

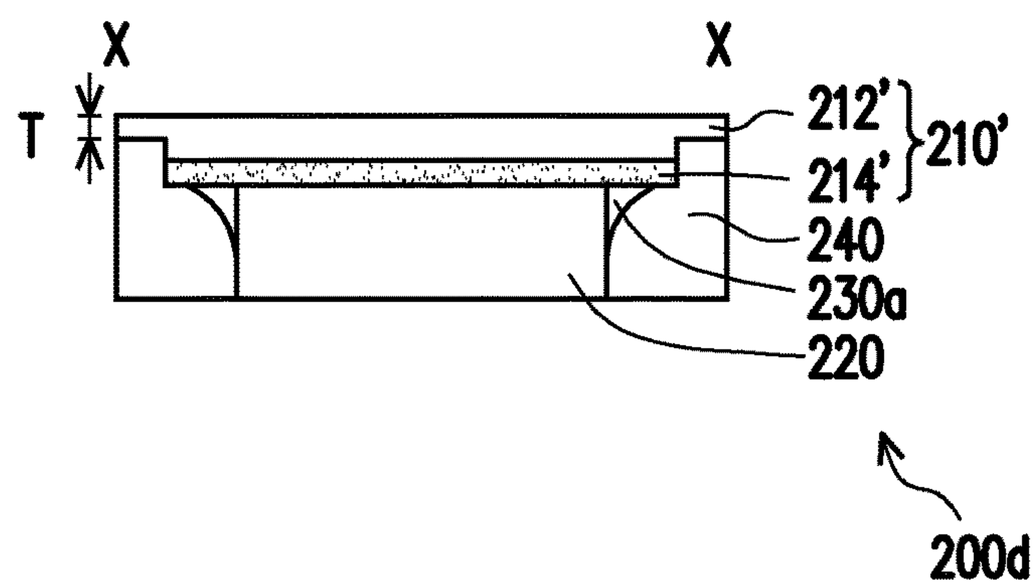

FIG. 20B

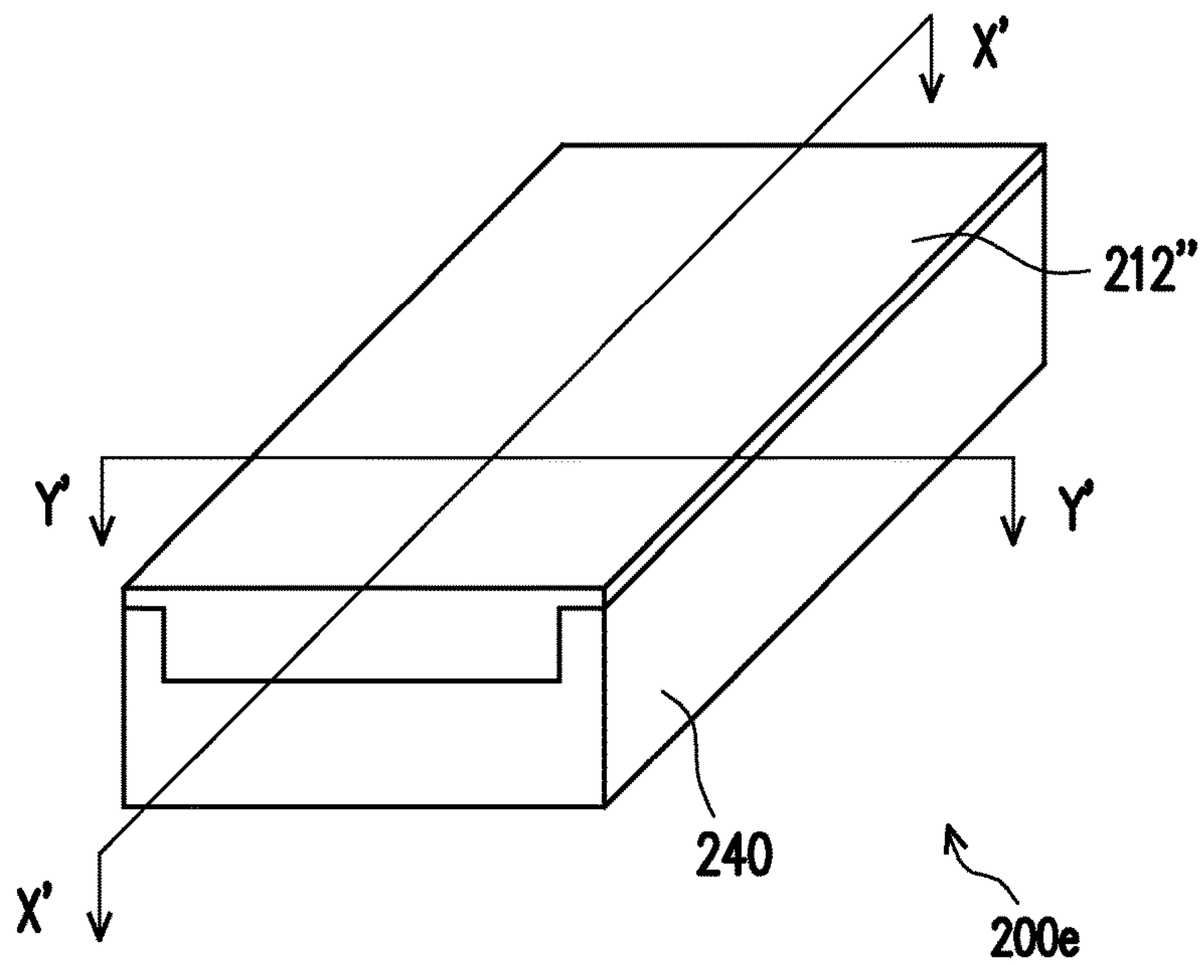

FIG. 21A

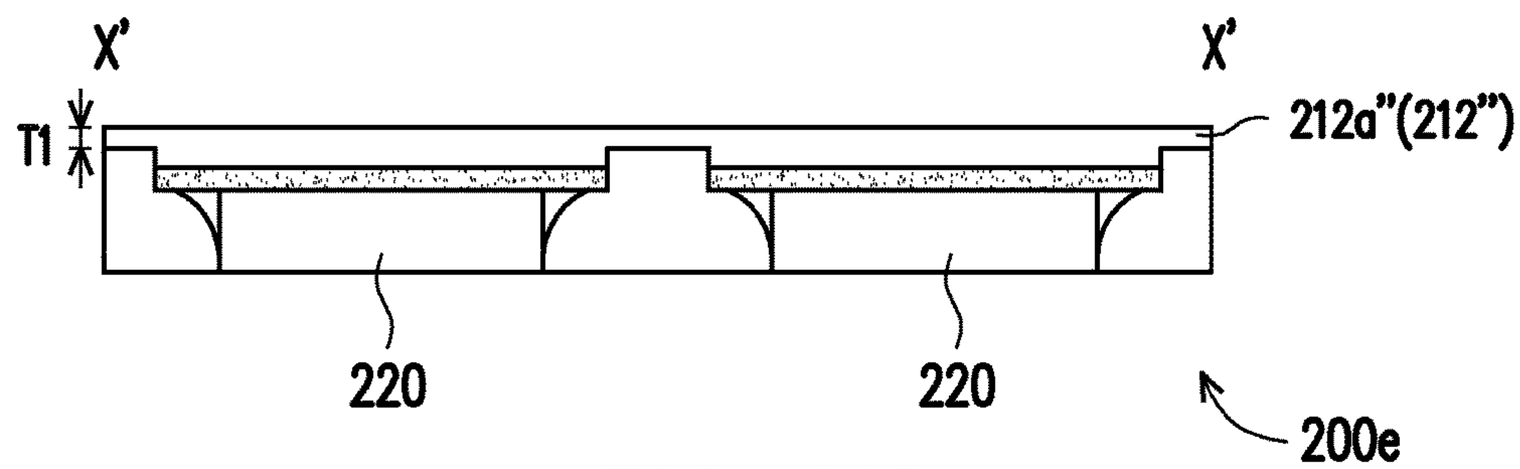

FIG. 21B

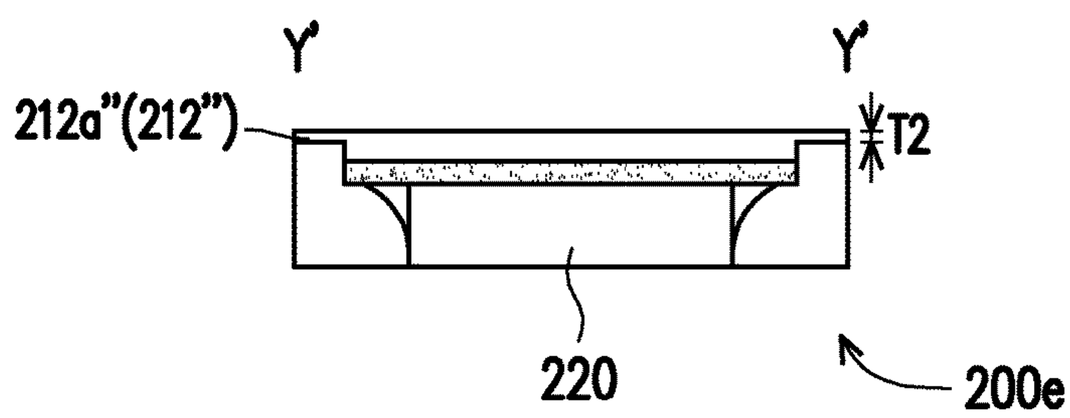

FIG. 21C

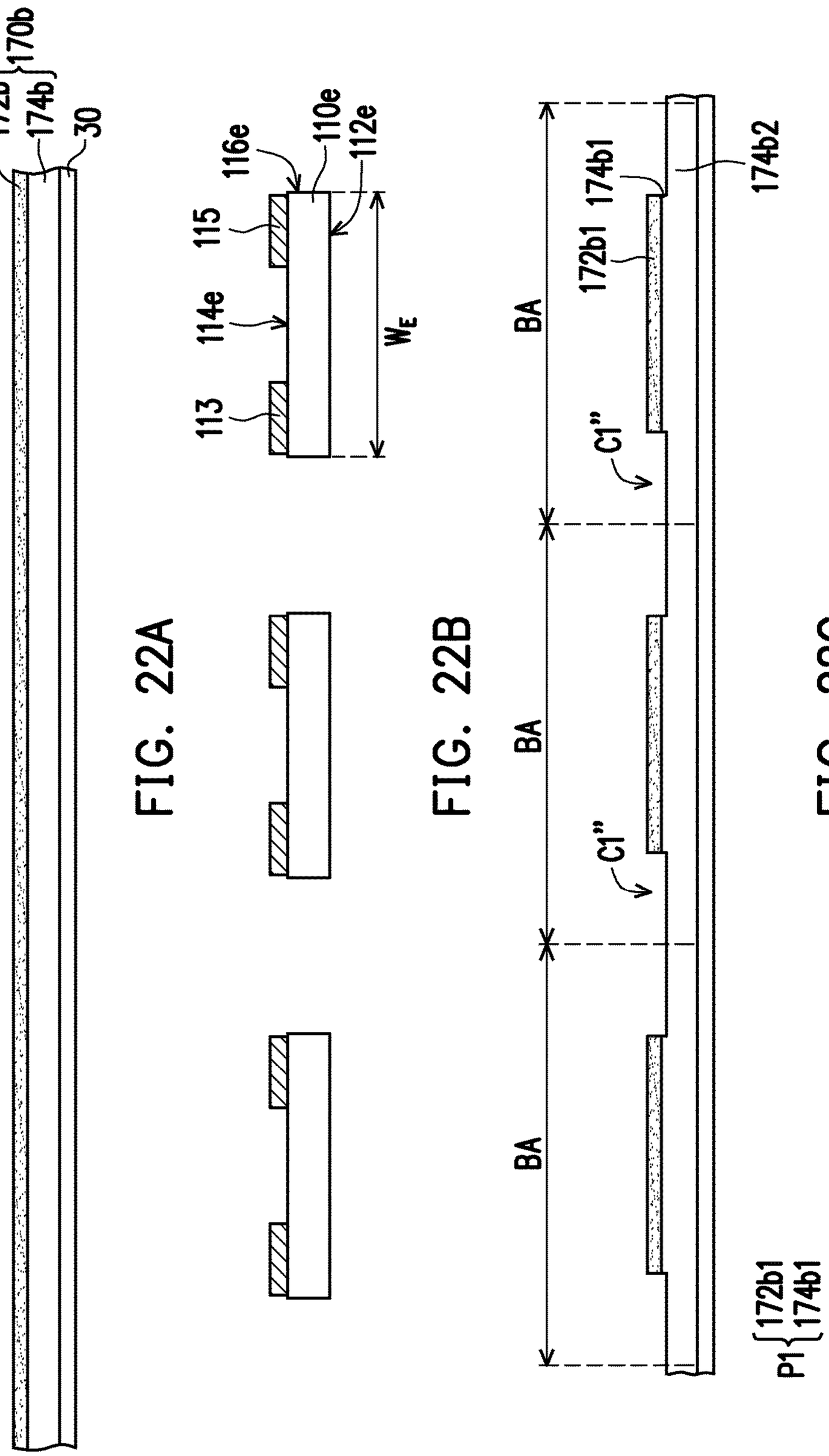

FIG. 22A

FIG. 22B

FIG. 22C

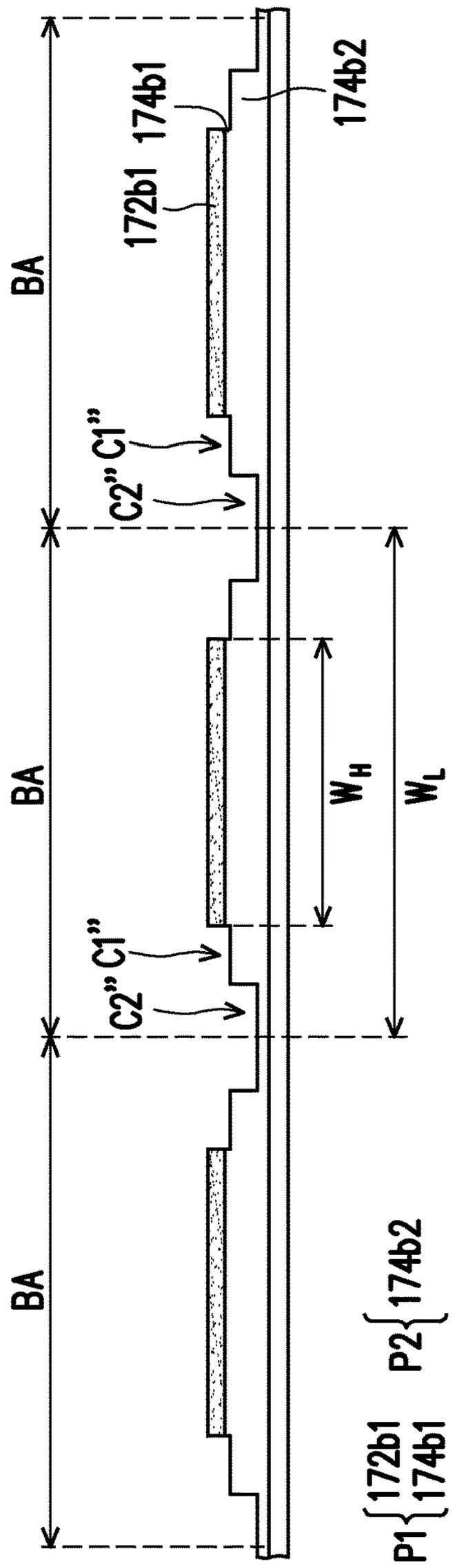

FIG. 22D

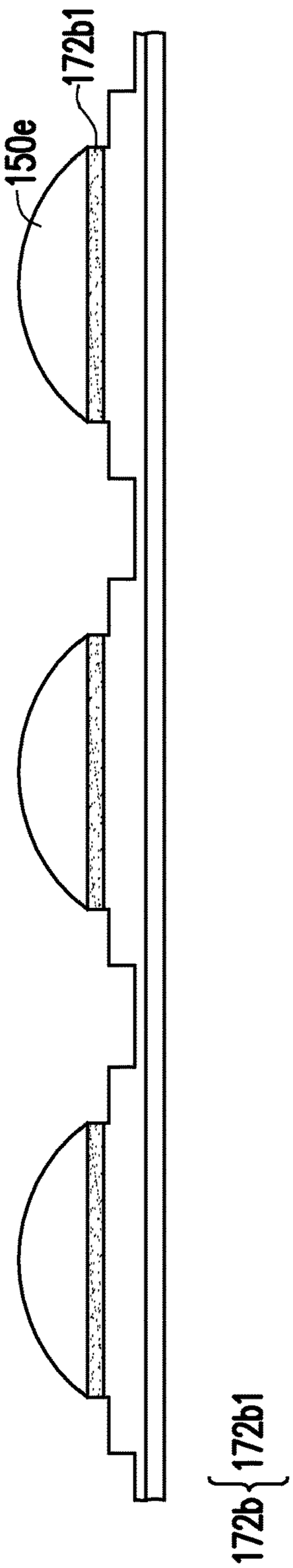

FIG. 22E

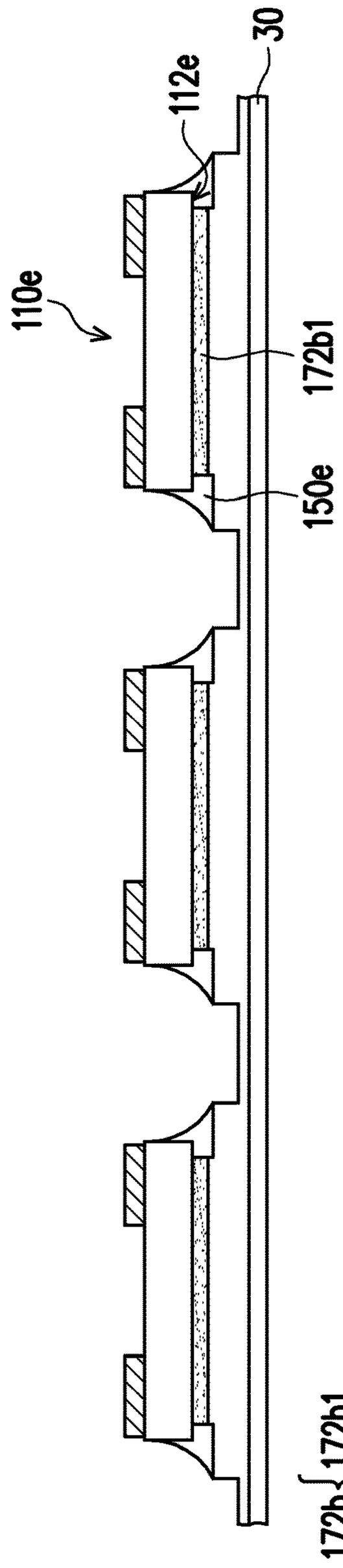

FIG. 22F

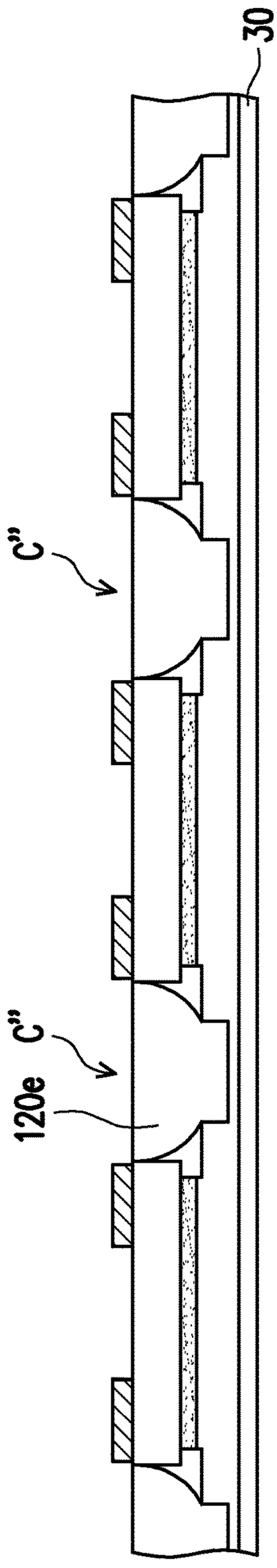

FIG. 22G

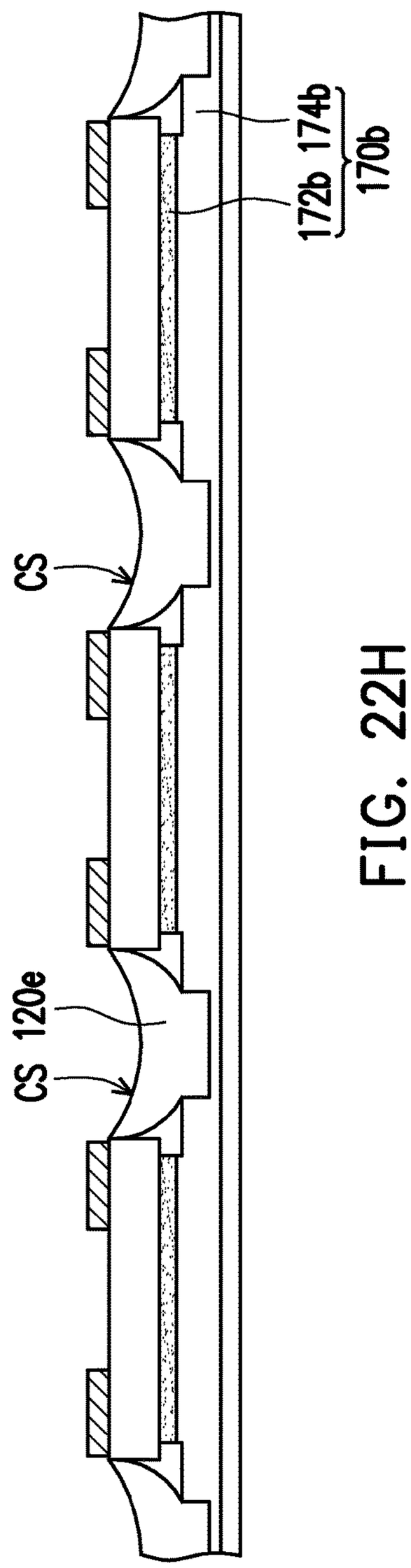

FIG. 22H

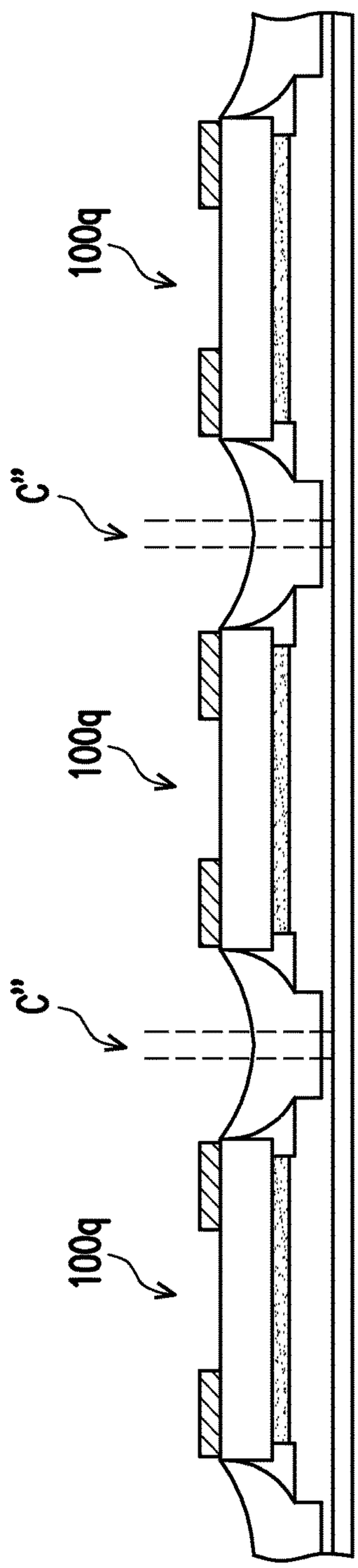

FIG. 22I

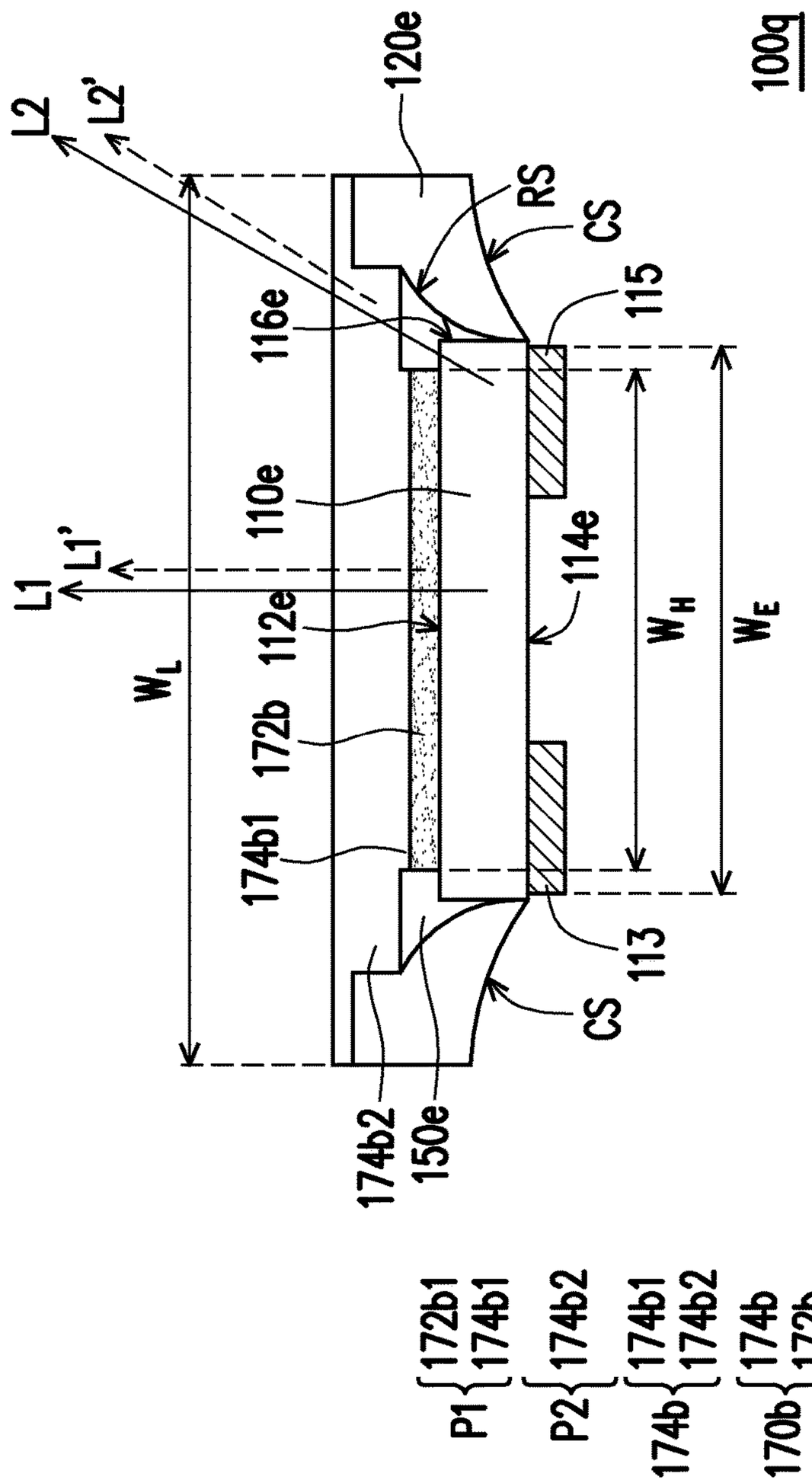
100q
L2
L2'
120e
RS
CS
115
116e
110e
L1
L1'
114e
112e
W_L
W_H
W_E
172b
174b1
113
CS
174b2
150e
P1
172b1
174b1
P2
174b2
174b
174b1
174b2
170b
174b
172b

FIG. 22J

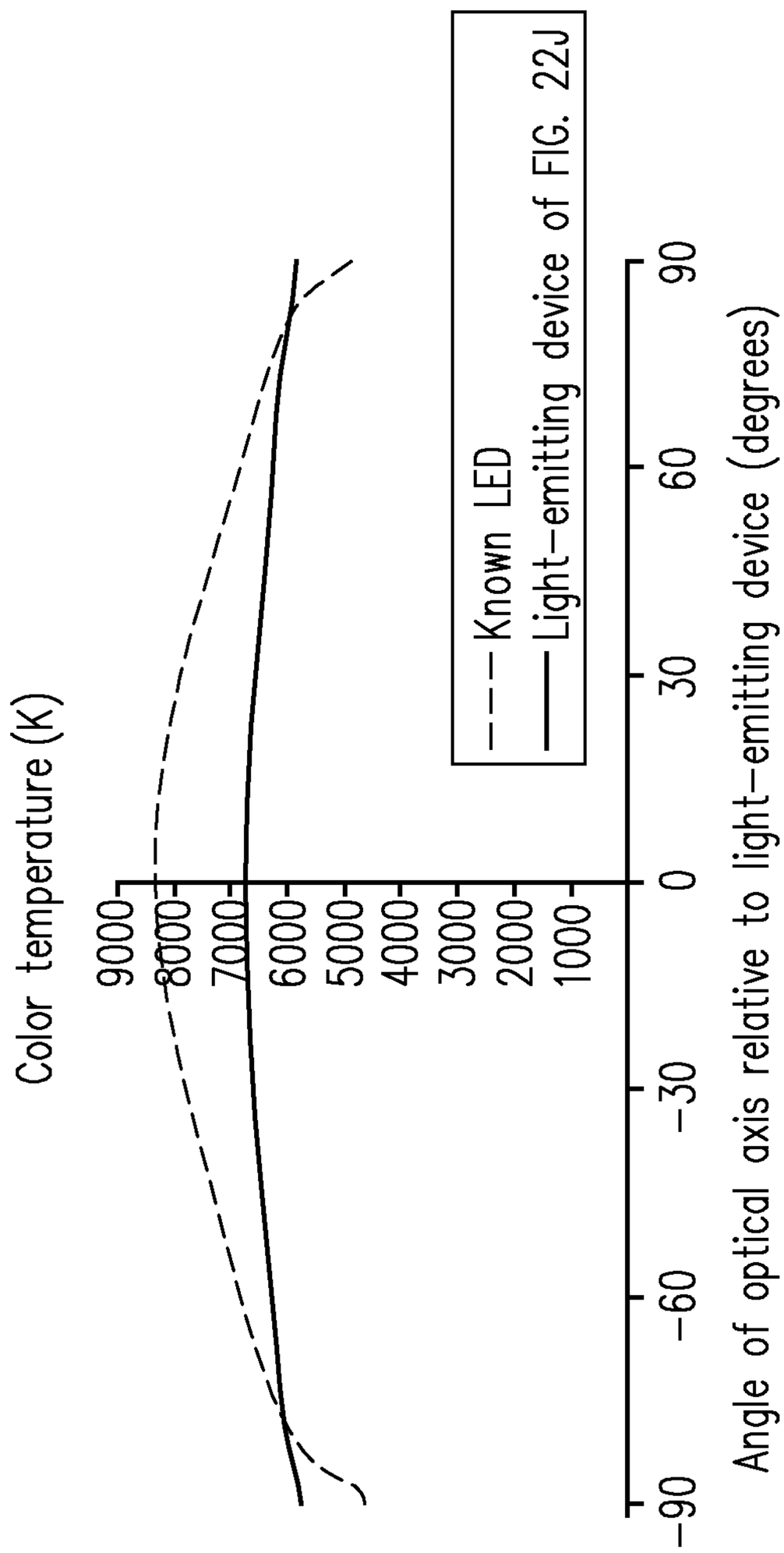
Color temperature (K)
9000
8000
7000
6000
5000
4000
3000
2000
1000
Known LED
Light-emitting device of FIG. 22J
-90
-60
-30
0
30
60
90
Angle of optical axis relative to light-emitting device (degrees)

FIG. 23

LIGHT EMITTING DEVICE AND MANUFACTURING METHOD THEREOF

CROSS-REFERENCE TO RELATED APPLICATION

This application is a continuation-in-part application of and claims the priority benefit of U.S. application Ser. No. 15/268,654, filed on Sep. 19, 2016, now pending. This prior U.S. application Ser. No. 15/268,654 is a continuation-in-part application of and claims the priority benefit of U.S. application Ser. No. 14/711,798, filed on May 14, 2015, now pending, which claims the priority benefits of Taiwan application serial no. 103116987, filed on May 14, 2014 and U.S. provisional application Ser. No. 62/157,450, filed on May 5, 2015. This prior U.S. application Ser. No. 15/268,654 also claims the priority benefits of U.S. provisional application Ser. No. 62/220,249, filed on Sep. 18, 2015, U.S. provisional application Ser. No. 62/236,150, filed on Oct. 2, 2015, Taiwan application serial no. 105100499, filed on Jan. 8, 2016, U.S. provisional application Ser. No. 62/245,247, filed on Oct. 22, 2015, U.S. provisional application Ser. No. 62/262,876, filed on Dec. 3, 2015 and China application serial no. 201610293182.5, filed on May 5, 2016. This application also claims the priority benefit of U.S. provisional application Ser. No. 62/410,373, filed on Oct. 19, 2016. The entirety of each of the above-mentioned patent applications is hereby incorporated by reference herein and made a part of this specification.

BACKGROUND OF THE INVENTION

Field of the Invention

The invention relates to a light-emitting device and a manufacturing method thereof, and more particularly, to a light-emitting device for which an LED is used as the light source and a manufacturing method thereof.

Description of Related Art

In a regular white LED structure, a layer of yellow phosphor is covered on a blue LED chip. The mechanism with which the white LED structure emits white light includes emitting blue light via a blue LED chip, wherein a portion of the blue light passes through the yellow phosphor on top and is converted into yellow light, and the yellow light is combined with blue light from other portions to achieve the effect of white light emission. Since the blue light emitted by the blue LED chip has a higher degree of directivity, blue light deviated from the optical axis at a greater angle is weaker, and blue light closer to the optical axis is stronger. Therefore, when blue light is irradiated on fluorescent powder at different intensities, the color temperature of white light correspondingly emitted closer to the optical axis is higher (i.e., blue ratio is high) and the color temperature of white light correspondingly emitted farther from the optical axis is lower (i.e., blue light ratio is low). The phenomenon is also referred to as yellow circle phenomenon, and the color temperature of the light from the white LED structure is not uniform as a result.

SUMMARY OF THE INVENTION

The invention provides a light-emitting device having a uniform light color temperature.

The invention provides a manufacturing method of the light-emitting device. The color temperature of light emitted from the resulting light-emitting device is uniform.

An embodiment of the invention provides a light-emitting device including at least one light-emitting unit, a wavelength conversion adhesive layer, and a reflective protecting element. The light-emitting unit has an upper surface and a lower surface opposite to each other. The light-emitting unit includes two electrode pads, and the two electrode pads are located on the lower surface of the light-emitting unit. The wavelength conversion adhesive layer is disposed on the upper surface of the light-emitting unit. The wavelength conversion adhesive layer includes a low-concentration fluorescent adhesive layer and a high-concentration fluorescent adhesive layer, and the high-concentration fluorescent adhesive layer is located between the low-concentration fluorescent adhesive layer and the light-emitting unit. The reflective protecting element covers the light-emitting unit and a portion of the wavelength conversion adhesive layer and at least exposes the two electrode pads of the light-emitting unit and the low-concentration fluorescent layer. The width of the high-concentration fluorescent layer is W_H. The width of the low-concentration fluorescent layer is W_L. The width of the light-emitting unit is W_E. The light-emitting device further satisfies the following inequalities: $W_E<W_L$, $W_H<W_L$ and $0.8<W_H/W_E\leq 1.2$.

In an embodiment of the invention, the wavelength conversion adhesive layer further includes a first mesa portion and a plurality of second mesa portions. The first mesa portion includes the high-concentration fluorescent adhesive layer and a first portion of the low-concentration fluorescent adhesive layer, each of the second mesa portions includes a second portion of the low-concentration fluorescent adhesive layer, and the first portion of the low-concentration fluorescent adhesive layer is connected to the second portion of the low-concentration fluorescent adhesive layer.

In an embodiment of the invention, the reflective protecting element has a concave surface, and the concave surface is recessed toward the wavelength conversion adhesive layer.

In an embodiment of the invention, the light-emitting device further includes a translucent adhesive layer. The light-emitting unit further includes a side surface connected to the upper surface and the lower surface. The translucent adhesive layer is disposed on the low-concentration fluorescent adhesive layer and extended to the side surface of the light-emitting unit.

In an embodiment of the invention, the reflective protecting element covers the wavelength conversion adhesive layer and exposes a portion of the side of the wavelength conversion adhesive layer.

In an embodiment of the invention, the reflective protecting element has a reflective surface, and the reflective surface is in contact with the light-emitting unit.

In an embodiment of the invention, the first side of the reflective surface is in contact with the light-emitting unit, and the second side of the reflective surface is extended toward the wavelength conversion adhesive layer and away from the light-emitting unit.

In an embodiment of the invention, the reflective surface is a curved surface.

An embodiment of the invention provides a manufacturing method of a light-emitting device including forming a wavelength conversion adhesive layer, wherein the wavelength conversion adhesive layer includes a low-concentration fluorescent adhesive layer and a high-concentration fluorescent adhesive layer. A plurality of light-emitting units is provided. A plurality of trenches is formed in the wavelength conversion adhesive layer to define a plurality of bonding regions between the trenches. In the bonding

regions, the width of the high-concentration fluorescent adhesive layer is W_H, the width of the low-concentration fluorescent adhesive layer is W_L, the width of the light-emitting unit is W_E, and the step further satisfies the following inequalities: $W_E<W_L$, $W_H<W_L$, and $0.8<W_H/W_E\leq 1.2$. The light-emitting units are respectively bonded to the high-concentration fluorescent adhesive layers in the bonding regions. A reflective protecting element is formed on the wavelength conversion adhesive layer and between the light-emitting units to completely fill the trenches, wherein the reflective protecting element exposes the electrode pads of the light-emitting units. A cutting process is performed along the trenches to form a plurality of light-emitting devices.

In an embodiment of the invention, the step of forming the trenches in the wavelength conversion adhesive layer further includes removing a portion of the high-concentration fluorescent adhesive layer and a portion of the low-concentration fluorescent adhesive layer to form a plurality of first sub-trenches. The first sub-trenches respectively form a plurality of first mesa portions in the bonding regions, wherein each of the first mesa portions further includes a first portion of the high-concentration fluorescent adhesive layer and a first portion of the low-concentration fluorescent adhesive layer. A portion of the low-concentration fluorescent adhesive layer is removed to form a plurality of second sub-trenches in the first sub-trenches, and the second sub-trenches respectively form a plurality of second mesa portions in the bonding regions, wherein each of the second mesa portions further includes a second portion of the low-concentration fluorescent adhesive layer, and the first portion of the low-concentration fluorescent adhesive layer is connected to the second portion of the low-concentration fluorescent adhesive layer. A trench includes a first sub-trench and a second sub-trench.

In an embodiment of the invention, before the step of respectively bonding the light-emitting units to the high-concentration fluorescent adhesive layers in the bonding regions, a plurality of translucent adhesive layers is respectively formed on the high-concentration fluorescent adhesive layers in the bonding regions.

In an embodiment of the invention, in the step of respectively bonding the light-emitting units to the high-concentration fluorescent adhesive layers in the bonding regions, the light-emitting units are respectively bonded to the high-concentration fluorescent adhesive layers via the translucent adhesive layers.

In an embodiment of the invention, after the step of forming the reflective protecting element on the wavelength conversion adhesive layer and between the light-emitting units to completely fill the trenches, the reflective protecting element is left to stand to form a concave surface recessed toward the wavelength conversion adhesive layer in the reflective protecting element, and the reflective protecting element is cured.

Based on the above, in the light-emitting device of an embodiment of the invention, the width of the high-concentration fluorescent adhesive layer is W_H, the width of the low-concentration fluorescent adhesive layer is W_L, and the width of the light-emitting unit is W_E. The light-emitting device further satisfies the following inequalities: $W_E<W_L$, $W_H<W_L$ and $0.8<W_H/W_E\leq 1.2$. By satisfying the inequality design above, the color temperature of the color light emitted by the light-emitting device of an embodiment of the invention is more consistent at different angles. Since one of the steps of the manufacturing method of the light-emitting device of an embodiment of the invention satisfies the above inequalities, the color temperature of the color light emitted by the light-emitting device made by the manufacturing method is more consistent at different angles.

In order to make the aforementioned features and advantages of the disclosure more comprehensible, embodiments accompanied with figures are described in detail below.

BRIEF DESCRIPTION OF THE DRAWINGS

The accompanying drawings are included to provide a further understanding of the invention, and are incorporated in and constitute a part of this specification. The drawings illustrate embodiments of the invention and, together with the description, serve to explain the principles of the invention.

FIG. **1** shows a schematic of a light-emitting device of an embodiment of the invention.

FIG. **2** shows a schematic of a light-emitting device of another embodiment of the invention.

FIG. **3** shows a schematic of a light-emitting device of another embodiment of the invention.

FIG. **4** shows a schematic of a light-emitting device of another embodiment of the invention.

FIG. **5** shows a schematic of a light-emitting device of another embodiment of the invention.

FIG. **6** shows a schematic of a light-emitting device of another embodiment of the invention.

FIG. **7** shows a schematic of a light-emitting device of another embodiment of the invention.

FIG. **8** shows a schematic of a light-emitting device of another embodiment of the invention.

FIG. **9** shows a schematic of a light-emitting device of another embodiment of the invention.

FIG. **10**A to FIG. **10**D show cross sections of a manufacturing method of a light-emitting device of an embodiment of the invention.

FIG. **11**A to FIG. **11**C show cross sections of some of the steps of a manufacturing method of a light-emitting device of another embodiment of the invention.

FIG. **12**A to FIG. **12**E show cross sections of a manufacturing method of a light-emitting device of another embodiment of the invention.

FIG. **13**A to FIG. **13**D show cross sections of some of the steps of a manufacturing method of a light-emitting device of another embodiment of the invention.

FIG. **14**A to FIG. **14**E show cross sections of a manufacturing method of a light-emitting device of another embodiment of the invention.

FIG. **15**A to FIG. **15**E show cross sections of a manufacturing method of a light-emitting device of another embodiment of the invention.

FIG. **16**A to FIG. **16**C show cross sections of a light-emitting device of a plurality of embodiments of the invention.

FIG. **17**A to FIG. **17**E show cross sections of a manufacturing method of a light-emitting device of an embodiment of the invention.

FIG. **18**A and FIG. **18**B show cross sections of two light-emitting devices of two embodiments of the invention.

FIG. **19**A to FIG. **19**E show cross sections of a manufacturing method of a light-emitting device of another embodiment of the invention.

FIG. **20**A shows a 3D view of the light-emitting device of FIG. **19**E.

FIG. **20**B shows a cross section along line X-X of FIG. **20**A.

FIG. **21**A shows a 3D view of a light-emitting device of another embodiment of the invention.

FIG. **21**B and FIG. **21**C respectively show cross sections along line X'-X' and line Y'-Y' of FIG. **21**A.

FIG. **22**A to FIG. **22**J show cross sections of a manufacturing method of a light-emitting device of another embodiment of the invention.

FIG. **23** shows a comparison chart of color temperature of the light-emitting device of the embodiment of FIG. **22**J and a known light-emitting device measured at different angles.

DESCRIPTION OF THE EMBODIMENTS

FIG. **1** shows a schematic of a light-emitting device of an embodiment of the invention. Referring first to FIG. **1**, in the present embodiment, a light-emitting device **100***a* includes a light-emitting unit **110***a* and a reflective protecting element **120**. The light-emitting unit **110***a* has an upper surface **112***a* and a lower surface **114***a* opposite to each other, a side surface **116***a* connected to the upper surface **112***a* and the lower surface **114***a*, and a first electrode pad **113** and a second electrode pad **115** located on the lower surface **114***a* and separated from each other. The reflective protecting element **120** covers the side surface **116***a* of the light-emitting unit **110***a* and exposes at least a portion of the upper surface **112***a* and at least a portion of a first bottom surface **113***a* of the first electrode pad **113** and at least a portion of a second bottom surface **115***a* of the second electrode pad **115**.

More specifically, in the present embodiment, as shown in FIG. **1**, the upper surface **112***a* of the light-emitting unit **110***a* is aligned with a top surface **122** of the reflective protecting element **120**, a bottom surface **124** of the reflective protecting element **120** is aligned with the first bottom surface **113***a* of the first electrode pad **113** and the second bottom surface **115***a* of the second electrode pad **115**, and the reflective protecting element **120** can cover or expose the lower surface **114***a* of the light-emitting unit **110***a* located between the first electrode pad **113** and the second electrode pad **115**. In the present embodiment, the side surface **116***a* of the light-emitting unit **110***a* is perpendicular to the upper surface **112***a* and the lower surface **114***a*, but is not limited thereto, and the light-emitting unit **110***a* is, for instance, a light-emitting diode (LED), and the emission wavelength of the LED is (including but not limited to) between 315 nm and 780 nm, and the LED includes, but is not limited to, UV, blue, green, yellow, orange, or red LED.

The reflectivity of the reflective protecting element **120** is at least greater than 90%. In other words, the reflective protecting element **120** of the present embodiment has the property of high reflectivity, wherein the material of the reflective protecting element **120** includes a polymer material doped with a highly reflective particle, and the highly reflective particle is, but not limited to, for instance, titanium dioxide (TiO_2) powder, and the highly reflective particle is, but not limited to, for instance, epoxy resin or silicone resin. Moreover, the material of the first electrode pad **113** and the second electrode pad **115** of the light-emitting unit **110***a* of the present embodiment is a metal material or metal alloy such as gold, aluminum, tin, silver, bismuth, indium, or a combination thereof, but is not limited thereto.

In the present embodiment, the reflective protecting element **120** covers the side surface **116***a* of the light-emitting unit **110***a* and exposes the first bottom surface **113***a* of the first electrode pad **113** and the second bottom surface **115***a* of the second electrode **115** of the light-emitting unit **110***a*. The light-emitting device **100***a* does not need a known bearing bracket to support and fix the light-emitting unit **110***a* and can effectively reduce package thickness and manufacturing cost. At the same time, the positive optical efficiency of the light-emitting unit **110***a* can also be increased via the reflective protecting element **120** having high reflectivity.

It should be mentioned here that, the following embodiments adopt the reference numerals of the embodiments above and a portion of the contents thereof, wherein the same reference numerals are adopted to represent the same or similar elements. Descriptions of the same technical content are as provided in the embodiments above and are not repeated in the following embodiments.

FIG. **2** shows a schematic of a light-emitting device of another embodiment of the invention. Referring to both FIG. **1** and FIG. **2**, the main differences between a light-emitting device **100***b* of the present embodiment and the light-emitting device **100***a* in FIG. **1** are that a side surface **116***b* of the light-emitting unit **110***b* of the present embodiment is not perpendicular to an upper surface **112***b* and a lower surface **114***b*, the surface area of the upper surface **112***b* is greater than the surface area of the lower surface **114***b* of the light-emitting unit **100***b* in the present embodiment, and the angle between the side surface **116***b* and the lower surface **114***b* is, for instance, between 95 degrees and 150 degrees. The contour defined by the upper surface **112***b*, the side surface **116***b*, and the lower surface **114***b* of the light-emitting unit **110***b* of the present embodiment is an inverted trapezoid, and therefore lateral emission of the light-emitting unit **110***b* can be reduced, and the reflective protecting element **120** having high reflectivity can further effectively increase the positive optical efficiency of the light-emitting unit **110***b*.

FIG. **3** shows a schematic of a light-emitting device of another embodiment of the invention. Referring to both FIG. **1** and FIG. **3**, the main difference between a light-emitting device **100***c* of the present embodiment and the light-emitting device **100***a* in FIG. **1** is that the light-emitting device **100***c* of the present embodiment further includes a first extension electrode **130***c* and a second extension electrode **140***c*. The first extension electrode **130***c* is disposed on the bottom surface **124** of the reflective protecting element **120** and electrically connected to the first electrode pad **113**. The second extension electrode **140***c* is disposed on the bottom surface **124** of the reflective protecting element **120** and electrically connected to the second electrode pad **115**. The first extension electrode **130***c* and the second extension electrode **140***c* are separated from each other and cover at least a portion of the bottom surface **124** of the reflective protecting element **120**.

As shown in FIG. **3**, the first extension electrode **130***c* and the second extension electrode **140***c* of the present embodiment are completely overlapped with the first electrode pad **113** and the second electrode pad **115** and extended toward the edges of the reflective protecting element **120**. Of course, in other embodiments not shown, the first extension electrode **130***c* and the second extension electrode **140***c* can also be partially overlapped with the first electrode pad **113** and the second electrode pad **115**, and any configuration satisfying the condition that the first extension electrode **130***c* and the second extension electrode **140***c* are electrically connected to the first electrode pad **113** and the second electrode pad **115** is within the scope of the present embodiment. Moreover, the first extension electrode **130***c* and the second extension electrode **140***c* of the present embodiment expose a portion of the bottom surface **124** of the reflective protecting element **120**.

In the present embodiment, the material of the first extension electrode **130***c* and the second extension electrode **140***c* can be respectively the same or different from that of the first electrode pad **113** and the second electrode pad **115** of the light-emitting unit **110***a*. When the material of the first extension electrode **130***c* and the second extension electrode **140***c* is respectively the same as that of the first electrode pad **113** and the second electrode pad **115** of the light-emitting unit **110***a*, the first extension electrode **130***c* and the first electrode pad **113** can be seamlessly connected to form an integrally molded structure, and the second extension electrode **140***c* and the second electrode pad **115** can be seamlessly connected to form an integrally molded structure. When the material of the first extension electrode **130***c* and the second extension electrode **140***c* is respectively different from that of the first electrode pad **113** and the second electrode pad **115** of the light-emitting unit **110***a*, the material of the first extension electrode **130***c* and the second extension electrode **140***c* can be, for instance, silver, gold, bismuth, tin, indium, or an alloy of the above.

Since the light-emitting device **100***c* of the present embodiment has the first extension electrode **130***c* and the second extension electrode **140***c* respectively electrically connected to the first electrode pad **113** and the second electrode pad **115** of the light-emitting unit **110***a*, the electrode contact area of the light-emitting device **100***c* can be effectively increased to facilitate the subsequent assembly of the light-emitting device **100***c* with other external circuits to effectively increase alignment accuracy and assembly efficiency. For instance, the area of the first extension electrode **130***c* is greater than the area of the first electrode pad **113**, and the area of the second extension electrode **140***c* is greater than the area of the second electrode pad **115**.

FIG. **4** shows a schematic of a light-emitting device of another embodiment of the invention. Referring to both FIG. **3** and FIG. **4**, the main difference between a light-emitting device **100***d* of the present embodiment and the light-emitting device **100***c* in FIG. **3** is that the edges of a first extension electrode **130***d* and the edges of a second extension electrode **140***d* of the present embodiment are aligned with the edges of the reflective protecting element **120**.

FIG. **5** shows a schematic of a light-emitting device of another embodiment of the invention. Referring to both FIG. **1** and FIG. **5**, the main difference between a light-emitting device **100***e* of the present embodiment and the light-emitting device **100***a* in FIG. **1** is that the light-emitting device **100***e* of the present embodiment further includes a packaging adhesive layer **150**, wherein the packaging adhesive layer **150** is disposed on the upper surface **112***a* of the light-emitting unit **110***a* to increase light extraction rate and improve light pattern. The packaging adhesive layer **150** can also be extended to at least a portion of the upper surface **122** of the reflective protecting element **120**, and the edges of the packaging adhesive layer **150** can also be aligned with the edges of the reflective protecting element **120**. Moreover, at least one wavelength conversion material can also be doped inside the packaging adhesive layer **150**, and the wavelength conversion material is used for converting the wavelength of at least a portion of the light emitted by the light-emitting unit **110***a* into other wavelengths, and the wavelength conversion material includes a fluorescent material, phosphorescent material, dye, quantum dot material, or a combination thereof, wherein the particle size of the wavelength conversion material is, for instance, between 3 microns and 50 microns. Moreover, an oxide having high scattering power can also be doped inside the packaging adhesive layer **150**, such as titanium dioxide (TiO_2) or silicon dioxide (SiO_2) to increase optical efficiency.

In an embodiment of the invention, the light-emitting unit includes, but is not limited to, a UV, blue, green, yellow, orange, or red light-emitting unit, and the wavelength conversion material includes, but is not limited to, a red, orange, orange-yellow, yellow, yellow-green, or green wavelength conversion material or a combination thereof for converting a portion or all of the wavelength of the light emitted by the light-emitting unit. After light from the wavelength conversion and light without wavelength conversion are mixed, the light-emitting device emits light in a specific range of the dominant wavelength, and the light color thereof includes, but not limited to, for instance, red, orange, orange-yellow, amber, yellow, yellow-green, or green, or white light having a specific relative color temperature is emitted, and the range of the relative color temperature is, for instance, between 2500 K and 7000 K, but is not limited thereto.

FIG. **6** shows a schematic of a light-emitting device of another embodiment of the invention. Referring to both FIG. **6** and FIG. **4**, the main difference between a light-emitting device **100***f* of the present embodiment and the light-emitting device **100***d* in FIG. **4** is that the light-emitting device **100***f* of the present embodiment further includes a packaging adhesive layer **150**, wherein the packaging adhesive layer **150** is disposed on the upper surface **112***a* of the light-emitting unit **110***a* to increase light extraction rate and improve light pattern. The packaging adhesive layer **150** can also be extended to at least a portion of the upper surface **122** of the reflective protecting element **120**, and the edges of the packaging adhesive layer **150** can also be aligned with the edges of the reflective protecting element **120**. Moreover, at least one wavelength conversion material can also be doped inside the packaging adhesive layer **150**, the wavelength conversion material is used for converting the wavelength of at least a portion of the light emitted by the light-emitting unit **110***a* into other wavelengths, and the wavelength conversion material includes a fluorescent material, phosphorescent material, dye, quantum dot material, or a combination thereof, wherein the particle size of the wavelength conversion material is, for instance, between 3 microns and 50 microns. Moreover, an oxide having high scattering power can also be doped inside the packaging adhesive layer **150**, such as titanium dioxide (TiO_2) or silicon dioxide (SiO_2) to increase optical efficiency.

It should be mentioned that, in the embodiments of FIG. **4** and FIG. **6**, the edges of the first extension electrode **130***d* and the edges of the second extension electrode **140***d* are aligned with the edges of the reflective protecting element **120**. This design not only can expand the contact area of the electrode, but in the manufacturing process, the reflective protecting element **120** can package a plurality of light-emitting units **110***a* separated from one another at the same time, and then a patterned metal layer is formed to respectively form the first extension electrode **130***d* and the second extension electrode **140***d*, and then cutting is performed such that the edges of the first extension electrode **130***d* and the edges of the second extension electrode **140***d* of each of the light-emitting devices **100***f* are aligned with the edges of the reflective protecting element **120** to effectively reduce process time.

FIG. **7** shows a schematic of a light-emitting device of another embodiment of the invention. Referring to both FIG. **7** and FIG. **5**, the main difference between a light-emitting device **100***g* of the present embodiment and the light-emitting device **100***e* in FIG. **5** is that the light-emitting device **100***g* of the present embodiment further includes a

translucent layer **160** disposed on the packaging adhesive layer **150**, wherein the light transmittance of the translucent layer **160** is, for instance, greater than 50%. In the present embodiment, the material of the translucent layer **160** is, for instance, glass, ceramic, resin, acrylic, or silicone, and the object thereof is to guide the light generated by the light-emitting unit **110***a* to the outside to effectively increase luminous flux and light extraction rate of the light-emitting device **100***g*, and the light-emitting unit **110***a* can also be effectively protected to block outside water vapor and oxygen.

FIG. **8** shows a schematic of a light-emitting device of another embodiment of the invention. Referring to both FIG. **8** and FIG. **7**, the main difference between a light-emitting device **100***h* of the present embodiment and the light-emitting device **100***g* in FIG. **7** is that a translucent layer **160'** of the light-emitting device **100***h* of the present embodiment is disposed between the upper surface **110***a* of the light-emitting unit **110***a* and the packaging adhesive layer **150**.

FIG. **9** shows a schematic of a light-emitting device of another embodiment of the invention. Referring to both FIG. **9** and FIG. **6**, the main difference between a light-emitting device **100***i* of the present embodiment and the light-emitting device **100***f* in FIG. **6** is that the light-emitting device **100***i* of the present embodiment further includes a translucent layer **160** disposed on the packaging adhesive layer **150**, wherein the light transmittance of the translucent layer **160** is, for instance, greater than 50%. In the present embodiment, the material of the translucent layer **160** is, for instance, glass, ceramic, resin, acrylic, or silicone, and the object thereof is to guide the light generated by the light-emitting unit **110***a* to the outside to effectively increase the luminous flux and light extraction rate of the light-emitting device **100***i*, and the light-emitting unit **110***a* can also be effectively protected to block outside water vapor and oxygen.

In the following, the light-emitting devices **100***a*, **100***g*, **100***d*, and **100***i* in FIG. **1**, FIG. **7**, FIG. **4**, and FIG. **9** are exemplified, and the manufacturing method of the light-emitting device of the invention is described in detail respectively with FIG. **10**A to FIG. **10**D, FIG. **11**A to FIG. **11**C, FIG. **12**A to FIG. **12**E, and FIG. **13**A to FIG. **13**D.

FIG. **10**A to FIG. **10**D show cross sections of a manufacturing method of a light-emitting device of an embodiment of the invention. First, referring to FIG. **10**A, a plurality of light-emitting units **110***a* is disposed on a substrate **10**, wherein each of the light-emitting units **110***a* has an upper surface **112***a* and a lower surface **114***a* opposite to each other, a side surface **116***a* connected to the upper surface **112***a* and the lower surface **114***a*, and a first electrode pad **113** and a second electrode pad **115** located on the lower surface **114***a* and separated from each other. The first electrode pad **113** and the second electrode pad **115** of each of the light-emitting units **110***a* are disposed on the substrate **10**. In other words, the light-emitting surface of the light-emitting unit **110***a*, i.e., the upper surface **112***a*, is relatively far from the substrate **10**. In the embodiment, the material of the substrate **10** is, for instance, stainless steel, ceramic, or other non-conductive materials. The light-emitting unit **110***a* is, for instance, an LED, and the emission wavelength of the LED is (including but not limited to) between 315 nm and 780 nm, and the LED includes, but is not limited to, UV, blue, green, yellow, orange, or red LED.

Next, referring to FIG. **10**B, a reflective protecting element **120'** is formed on the substrate **10**, wherein the reflective protecting element **120'** covers each of the light-emitting units **110***a*. In other words, the reflective protecting element **120'** completely and directly covers the upper surface **112***a*, the lower surface **114***a*, and the side surface **116***a* of the light-emitting unit **110***a* and completely fills the gap between the first electrode pad **113** and the second electrode pad **115**. Here, the reflectivity of the reflective protecting element **120'** is at least greater than 90%. In other words, the reflective protecting element **120'** of the present embodiment can have the property of high reflectivity, wherein the material of the reflective protecting element **120'** includes a polymer material doped with a highly reflective particle, and the highly reflective particle is, but not limited to, for instance, titanium dioxide (TiO_2) powder, and the highly reflective particle is, but not limited to, for instance, epoxy resin or silicone resin.

Next, referring to FIG. **10**C, a portion of the reflective protecting element **120'** is removed to form the reflective protecting element **120**, wherein the reflective protecting element **120** exposes at least a portion of the upper surface **112***a* of each of the light-emitting units **110***a*. At this point, the upper surface **112***a* of each of the light-emitting units **110***a* may be aligned with the top surface **122** of the reflective protecting element **120**. At this point, the method of removing a portion of the reflective protecting element **120'** includes, for instance, a polishing method.

Next, referring to FIG. **10**D, a cutting process is performed to cut the reflective protecting element **120** along a cutting line L to form a plurality of light-emitting devices **100***a* separated from one another, wherein each of the light-emitting devices **100***a* respectively has at least one light-emitting unit **110***a* and a reflective protecting element **120**, and the reflective protecting element **120** covers the side surface **116***a* of the light-emitting unit **110***a* and exposes at least a portion of the upper surface **112***a* thereof.

Lastly, referring further to FIG. **10**D, the substrate **10** is removed to expose the bottom surface **124** of the reflective protecting element **120** of each of the light-emitting devices **100***a* and expose at least a portion of the first bottom surface **113***a* of the first electrode pad **113** and at least a portion of the second bottom surface **115***a* of the second electrode pad **115** of each of the light-emitting devices **100***a*.

FIG. **11**A to FIG. **11**C show cross sections of some of the steps of a manufacturing method of a light-emitting device of another embodiment of the invention. The main difference between the manufacturing method of the light-emitting device of the present embodiment and the manufacturing method of the light-emitting device in FIG. **10**A to FIG. **10**D is that, between the steps of FIG. **10**C and FIG. **10**D, that is, after a portion of the reflective protecting element **120'** is removed and before the cutting process is performed, referring to FIG. **11**A, the packaging adhesive layer **150** is formed on the light-emitting unit **110***a* and the reflective protecting element **120** to increase light extraction rate and improve light pattern. Here, the packaging adhesive layer **150** covers the upper surface **112***a* of the light-emitting unit **110***a* and the top surface **122** of the reflective protecting element **120**, and at least one wavelength conversion material can also be doped inside the packaging adhesive layer **150**. The description of the wavelength conversion material is as provided in the embodiments above. Moreover, an oxide having high scattering power can also be doped inside the packaging adhesive layer **150**, such as titanium dioxide (TiO_2) or silicon dioxide (SiO_2) to increase optical efficiency.

Next, referring to FIG. **11**B, a translucent layer **160** is formed on the light-emitting unit **110***a* and the reflective protecting element **120**, wherein the translucent layer **160** is located on the packaging adhesive layer **150** and covers the

packaging adhesive layer **150**. For instance, the light transmittance of the translucent layer **160** is greater than 50%. In the present embodiment, the material of the translucent layer **160** is, for instance, glass, ceramic, resin, acrylic, or silicone, and the object thereof is to guide the light generated by the light-emitting unit **110***a* to the outside to effectively increase the luminous flux and light extraction rate of the subsequent light-emitting unit packaging structure **100***g*, and the light-emitting unit **110***a* can also be effectively protected to block outside water vapor and oxygen.

Next, referring to FIG. **11**C, a cutting process is performed to cut the translucent layer **160**, the packaging adhesive layer **150**, and the reflective protecting element **120** along the cutting line L to form a plurality of light-emitting devices **100***g* separated from one another. Lastly, referring further to FIG. **11**C, the substrate **10** is removed to expose the bottom surface **124** of the reflective protecting element **120** of each of the light-emitting devices **100***g*, wherein the bottom surface **124** of the reflective protecting element **120** of each of the light-emitting devices **100***g* exposes at least a portion of the first bottom surface **113***a* of the first electrode pad **113** and at least a portion of the second bottom surface **115***a* of the second electrode pad **115**. In another embodiment of the invention, the substrate **10** can also be removed first before a cutting process is performed.

FIG. **12**A to FIG. **12**E show cross sections of a manufacturing method of a light-emitting device of another embodiment of the invention. Referring first to FIG. **12**A, the main difference between the manufacturing method of the light-emitting device of the present embodiment and the manufacturing method of the light-emitting device in FIG. **10**A to FIG. **10**D is that, referring to FIG. **12**A, the light-emitting unit **110***a* of the present embodiment is not in contact with the substrate **10** via the first electrode pad **113** and the second electrode pad **115**, but is in contact with the substrate **10** via the upper surface **112***a* thereof.

Next, referring to FIG. **12**B, a reflective protecting element **120'** is formed on the substrate, wherein the reflective protecting element covers each of the light-emitting units **110***a*.

Next, referring to FIG. **12**C, a portion of the reflective protecting element **120'** is removed to form the reflective protecting element **120**, wherein the reflective protecting element **120** exposes at least a portion of the first bottom surface **113***a* of the first electrode pad **113** and at least a portion of the second bottom surface **115***a* of the second electrode pad **115** of each of the light-emitting units **110***a*.

Next, referring to FIG. **12**D, a patterned metal layer is formed as an extension electrode layer E located on the first bottom surface **113***a* of the first electrode pad **113** and on the second bottom surface **115***a* of the second electrode pad **115** of each of the light-emitting unit **110***a*. Here, the method of forming the patterned metal layer includes, for instance, evaporation, sputtering, electroplating, or electroless plating and photomask etching.

Next, referring to FIG. **12**E, a cutting process is performed to cut the extension electrode layer E and the reflective protecting element **120** along a cutting line to form a plurality of light-emitting devices **100***d* separated from one another. Each of the light-emitting devices **100***d* respectively has at least one light-emitting unit **110***a*, a reflective protecting element **120** at least covering the side surface **116***a* of the light-emitting unit **110***a*, a first extension electrode **130***d* directly in contact with the first electrode pad **113**, and a second extension electrode **140** directly in contact with the second electrode pad **115**. The first extension electrode **130***d* and the second extension electrode **140***d* are separated from each other and expose at least a portion of the bottom surface **124** of the reflective protecting element **120**. At this point, the area of the first extension electrode **130***d* can be greater than the area of the first electrode pad **113**, and the area of the second extension electrode **140***d* can be greater than the area of the second electrode pad **115**. The edges of the first extension electrode **130***d* and the edges of the second extension electrode **140***d* are aligned with the edges of the reflective protecting element **120**.

Lastly, referring further to FIG. **12**E, the substrate **12** is removed to expose the top surface **122** of the reflective protecting element **120** of each of the light-emitting devices **100***d* and the upper surface **112***a* of the light-emitting unit **110***a*, wherein the top surface **122** of the reflective protecting element **120** of each of the light-emitting devices **100***g* is aligned with the upper surface **112***a* of the light-emitting unit **110***a*. In another embodiment of the invention, the substrate **10** can also be removed first before a cutting process is performed.

FIG. **13**A to FIG. **13**D show cross sections of some of the steps of a manufacturing method of a light-emitting device of another embodiment of the invention. The main difference between the manufacturing method of the light-emitting device of the present embodiment and the manufacturing method of the light-emitting device in FIG. **12**A to FIG. **12**E is that, between the steps of FIG. **12**D and FIG. **12**E, that is, after the extension electrode layer E is formed and before the cutting process is performed, referring to FIG. **13**A, another substrate **20** is provided and disposed on the extension electrode layer E. Here, the material of the other substrate **20** is, for instance, stainless steel, ceramic, or other non-conductive materials. Next, referring further to FIG. **13**A, the substrate **10** is removed after the other substrate **20** is provided to expose the top surface **122** of the reflective protecting element **120** and the upper surface **112***a* of the light-emitting unit **110***a*, wherein the upper surface **112***a* of each of the light-emitting units **110***a* is aligned with the top surface **122** of the reflective protecting element **120**.

Next, referring to FIG. **13**B, the packaging adhesive layer **150** is formed on the light-emitting unit **110***a* and the reflective protecting element **120** to increase light extraction rate and improve light pattern. Here, the packaging adhesive layer **150** covers the upper surface **112***a* of the light-emitting unit **110***a* and the top surface **122** of the reflective protecting element **120**, and at least one wavelength conversion material can also be doped inside the packaging adhesive layer **150**. The description of the wavelength conversion material is as provided in the embodiments above. Moreover, an oxide having high scattering power can also be doped inside the packaging adhesive layer **150**, such as titanium dioxide (TiO_2) or silicon dioxide (SiO_2) to increase optical efficiency.

Next, referring to FIG. **13**C, a translucent layer **160** is formed on the light-emitting unit **110***a* and the reflective protecting element **120**, wherein the translucent layer **160** is located on the packaging adhesive layer **150** and covers the packaging adhesive layer **150**. For instance, the light transmittance of the translucent layer **160** is greater than 50%. Here, the material of the translucent layer **160** is, for instance, glass, ceramic, resin, acrylic, or silicone, and the object thereof is to guide the light generated by the light-emitting unit **110***a* to the outside to effectively increase luminous flux and light extraction rate of the subsequent light-emitting device **100***i*, and the light-emitting unit **110***a* can also be effectively protected to prevent impact from outside water vapor and oxygen.

Next, referring to FIG. **13**D, a cutting process is performed to cut the translucent layer **160**, the packaging adhesive layer **150**, the reflective protecting element **120**, and the extension electrode layer E along the cutting line L to form a plurality of light-emitting devices **100***i* separated from one another. Lastly, referring further to FIG. **13**D, the other substrate **20** is removed to expose the first extension electrode **130***d* and the second extension electrode **140***d* of each of the light-emitting devices **100***i*. In another embodiment of the invention, the substrate **20** can also be removed first before a cutting process is performed.

FIG. **14**A to FIG. **14**E show cross sections of a manufacturing method of a light-emitting device of another embodiment of the invention. Referring first to FIG. **14**A, a wavelength conversion adhesive layer **170** is provided, wherein the wavelength conversion adhesive layer **170** includes a low-concentration fluorescent adhesive layer **174** and a high-concentration fluorescent adhesive layer **172** located on the low-concentration fluorescent adhesive layer **174**. Here, the steps of forming the wavelength conversion adhesive layer **170** include, for instance, first mixing a dopant and a colloid (i.e., evenly mixing a liquid or molten colloid with a wavelength conversion material, and the wavelength conversion material is, for instance, fluorescent powder, but is not limited thereto) to form the wavelength conversion adhesive layer **170**. Next, the wavelength conversion adhesive layer **170** is left to stand for a period of time, such as 24 hours, to precipitate to form the high-concentration fluorescent adhesive layer **172** and the low-concentration fluorescent adhesive layer **174** separated into upper and lower layers. In other words, the wavelength conversion layer **170** of the present embodiment is exemplified by two adhesive layers. Of course, in other embodiments, referring to FIG. **14**A', a wavelength conversion adhesive layer **170'** is provided as a single adhesive layer, which is still within the scope of the invention.

Next, referring to FIG. **14**B, a plurality of light-emitting units **110***c* arranged at intervals is disposed on the wavelength conversion adhesive layer **170**, wherein each of the light-emitting units **110***c* has an upper surface **112***c* and a lower surface **114***c* opposite to each other, a side surface **116***c* connected to the upper surface **112***c* and the lower surface **114***c*, and a first electrode pad **113** and a second electrode pad **115** located on the lower surface **114***c* and separated from each other, and the upper surface **112***c* of the light-emitting unit **110***c* is located on the high-concentration fluorescent adhesive layer **172** of the wavelength conversion adhesive layer **170**. Next, a plurality of translucent adhesive layers **150***c* for which the material contains a transparent colloid is formed on the wavelength conversion adhesive layer **170** and extended to the side surface **116***c* of the light-emitting unit **110***c*, wherein the translucent adhesive layer **150***c* does not completely cover the side surface **116***c* of the light-emitting unit **110***c*, but is as shown in FIG. **14**B in which the translucent adhesive layer **150***c* has a curvature inclined surface, and the thickness of the translucent adhesive layer **150***c* is greater toward the upper surface **112***c* of the light-emitting unit **110***c*, i.e., closer to the wavelength conversion adhesive layer **170**. Here, the object of the translucent adhesive layer **150***c* is to fix the position of the light-emitting unit **110***c*.

It should be mentioned that, in other embodiments, referring to FIG. **14**B', before the light-emitting units **110***c* arranged at intervals are disposed on the wavelength conversion adhesive layer **170**, an uncured translucent adhesive layer **150***c*' for which the material contains a translucent adhesive layer can also be formed on the wavelength conversion adhesive layer **170**. After the light-emitting units **110***c* are disposed on the wavelength conversion adhesive layer **170** at intervals, the translucent adhesive layer **150***c*' can be extended and disposed between the light-emitting unit **110***c* and the high-concentration fluorescent adhesive layer **172**.

Next, referring to both the FIG. **14**B and FIG. **14**C, after the translucent adhesive layer **150***c*' is cured, a first cutting process is performed to cut the wavelength conversion adhesive layer **170** to form a plurality of units **101** separated from one another, wherein each of the units **101** respectively has at least one light-emitting unit **110***c* and a wavelength conversion adhesive layer **170** disposed on the upper surface **112***c* of the light-emitting units **110***c*, and edges **171** at two sides of the wavelength conversion adhesive layer **170** of each of the units **101** are extended outside the side surface **116***c* of the light-emitting units **110***c*. Next, referring further to FIG. **14**C, the units **101** arranged at intervals are disposed on a substrate **10**. In the present embodiment, the material of the substrate **10** is, for instance, stainless steel, ceramic, or other non-conductive materials, and is not particularly limited.

Next, referring to FIG. **14**D, a reflective protecting element **120***c* is formed on the substrate **10** to cover the side surface **116***c* of the light-emitting units **110***c* of each of the units **101** and the edges **171** of the wavelength conversion adhesive layer **170**. Here, the forming method of the reflective protecting element **120***c* is, for instance, dispensing, wherein the reflective protecting element **120***c* directly covers the translucent adhesive layer **150***c* and is extended along the translucent adhesive layer **150***c* to cover the edges **171** of the wavelength conversion adhesive layer **170**. The orthographic projections of the first electrode pad **113** and the second electrode pad **115** of the light-emitting units **110***c* on the substrate **10** are not overlapped with the orthographic projection of the reflective protecting element **120***c* on the substrate **10**. Here, the reflective protecting element **120***c* is, for instance, a white adhesive layer.

Lastly, referring to both FIG. **14**D and FIG. **14**E, a second cutting process is performed to cut the reflective protecting element **120***c* and remove the substrate **10** to form a plurality of light-emitting devices **100***j* separated from one another. Each of the light-emitting devices **100***j* respectively has at least one light-emitting unit **101** and a reflective protecting element **120***c* covering the side surface **116***c* of the light-emitting unit **110***c* and the edges **171** of the wavelength conversion adhesive layer **170**. After the substrate **10** is removed, a top surface **122***c* of the reflective protecting element **120***c* of each of the light-emitting devices **100***j* and a top surface **173** of the wavelength conversion adhesive layer **170** are exposed. In another embodiment of the invention, the substrate **10** can also be removed first before a cutting process is performed. At this point, the manufacture of the light-emitting devices **100***j* is complete.

In terms of structure, referring further to FIG. **14**E, the light-emitting device **100***j* of the present embodiment includes a light-emitting unit **110***c*, a reflective protecting element **120***c*, a translucent adhesive layer **150***c*, and a wavelength conversion adhesive layer **170**. The wavelength conversion adhesive layer **170** is disposed on the upper surface **112***c* of the light-emitting unit **110***c*, wherein the wavelength conversion adhesive layer **170** includes a low-concentration fluorescent adhesive layer **174** and a high-concentration fluorescent adhesive layer **172**, and the high-concentration fluorescent adhesive layer **172** is located between the low-concentration fluorescent adhesive layer **174** and the light-emitting unit **110***c*, and the edges **171** of

the wavelength conversion adhesive layer **170** are extended outside the side surface **116***c* of the light-emitting unit **110***c*. Here, the low-concentration fluorescent adhesive layer **174** can be used as a transparent protective layer to increase the number of water vapor transmission paths to effectively block water vapor. The translucent adhesive layer **150***c* is disposed between the side surface **116***c* of the light-emitting unit **110***c* and the reflective protecting element **120***c* to fix the position of the light-emitting unit **110***c*. The reflective protecting element **120***c* of the present embodiment further covers the edges **171** of the wavelength conversion adhesive layer **170** along the translucent adhesive layer **150***c* covering the side surface **116***c* of the light-emitting unit **110***c*, and therefore the light-emitting device **100***j* of the present embodiment does not need a known bearing bracket to support and fix the light-emitting unit **110***c*, such that package thickness and manufacturing cost can be effectively reduced. At the same time, the positive optical efficiency of the light-emitting unit **110***c* can also be effectively increased via the reflective protecting element **120***c* having high reflectivity. Here, the top surface **122***c* of the reflective protecting element **120***c* is embodied as aligned with the top surface **173** of the wavelength conversion adhesive layer **170**.

FIG. **15**A to FIG. **15**E show cross sections of a manufacturing method of a light-emitting device of another embodiment of the invention. Referring first to FIG. **15**A, a first release film **30** is provided, and then a wavelength conversion adhesive layer **170***a* is provided on the first release film **30**. The wavelength conversion adhesive layer **170***a* can be a single adhesive layer or a plurality of adhesive layers, and in the present embodiment, the wavelength conversion adhesive layer **170***a* includes a low-concentration fluorescent adhesive layer **174***a* and a high-concentration fluorescent adhesive layer **172***a* located on the low-concentration fluorescent adhesive layer **174***a*. Here, the steps of forming the wavelength conversion adhesive layer **170***a* include, for instance, first forming the wavelength conversion adhesive layer **170***a* in the manner of mixing a dopant and a colloid, and then leaving the wavelength conversion adhesive layer **170***a* to stand for a period of time, such as 24 hours, to form the low-concentration fluorescent adhesive layer **172***a* and the high-concentration fluorescent adhesive layer **174***a* separated from each other. Here, the first release film **30** is, for instance, a double-sided adhesive film.

Next, referring further to FIG. **15**A, a plurality of light-emitting units **110***c* arranged at intervals is disposed on the wavelength conversion adhesive layer **170**A, wherein each of the light-emitting units **110***c* has an upper surface **112***c* and a lower surface **114***c* opposite to each other, a side surface **116***c* connected to the upper surface **112***c* and the lower surface **114***c*, and a first electrode pad **113** and a second electrode pad **115** located on the lower surface **114***c* and separated from each other, and the upper surface **112***c* of the light-emitting unit **110***c* is located on the high-concentration fluorescent adhesive layer **172***a* of the wavelength conversion adhesive layer **170***a*. Here, two adjacent light-emitting units **110***c* have a gap G, and the gap G is, for instance, 700 microns. Next, a plurality of translucent adhesive layers **150***c* is respectively formed on the side surface **116***c* of the light-emitting unit **110***c*, wherein the translucent adhesive layer **150***c* does not completely cover the side surface **116***c* of the light-emitting unit **110***c*, but is as shown in FIG. **15**B in which the translucent adhesive layer **150***c* has a curvature inclined surface, and the thickness of the translucent adhesive layer **150***c* is greater toward the upper surface **112***c* of the light-emitting unit **110***c*. Here, the object of the translucent adhesive layer **150***c* is to fix the position of the light-emitting unit **110***c*.

Next, referring to FIG. **15**B, a first cutting process is performed to cut the high-concentration fluorescent adhesive layer **172***a* and a portion of the low-concentration fluorescent adhesive layer **174***a* to form a plurality of trenches C. As shown in FIG. **15**B, in the first cutting process, the wavelength conversion adhesive layer **170***a* is not completely cut off and only the high-concentration fluorescent adhesive layer **172** is cut off and a portion of the low-concentration fluorescent adhesive layer **174***a* is cut. Here, a width W of the trenches C is, for instance, 400 microns, and a depth D of the trenches C is, for instance, half of a thickness T of the wavelength conversion adhesive layer **170***a*. The thickness T of the wavelength conversion adhesive layer **170***a* is, for instance, 140 microns, and the depth D of the trenches C is, for instance, 70 microns. At this point, the position of the trenches C and the position of the packaging adhesive layer **150***c* do not interfere with each other.

Next, referring to FIG. **15**C, a reflective protecting element **120***d* is formed on the low-concentration fluorescent adhesive layer **174***a* to cover the side surface **116***c* of the light-emitting unit **110***c*, wherein the reflective protecting element **120***d* completely fills the trenches C and exposes the first electrode pad **113** and the second electrode pad **115** of the light-emitting unit **110***c*. Here, the reflective protecting element **120***d* is, for instance, a white adhesive layer.

Lastly, referring to both FIG. **15**D and FIG. **15**E, the first release film **30** is removed and a second release film **40** is provided such that the first electrode pad **113** and the second electrode pad **115** of the light-emitting unit **110***c* are in contact with the second release film **40**. Here, the second release film **40** is, for instance, a UV adhesive or double-sided adhesive. Next, a second cutting process is performed to cut the reflective protecting element **120***d* and the low-concentration fluorescent adhesive layer **174***a* along the extending direction of the trenches C (i.e., the extending direction of the cutting line L in FIG. **15**D) to form a plurality of light-emitting devices **100***k* separated from one another. Each of the light-emitting devices **100***k* respectively has at least one light-emitting unit **110**, a wavelength conversion adhesive layer **170***a* disposed on the upper surface **112***c* of the light-emitting unit **110***c*, and a reflective protecting element **120***d* covering the side surface **116***c* of the light-emitting unit **110***c*. In the present embodiment, the wavelength conversion adhesive layer **170***a* contains the high-concentration fluorescent adhesive layer **172***a* and the low-concentration fluorescent adhesive layer **174***a*. Here, edges **171***a* of the low-concentration fluorescent adhesive layer **174***a* of the wavelength conversion adhesive layer **170***a* are aligned with edges **121** of the reflective protecting element **120***d*, and the reflective protecting element **120***d* further covers edges **173***a* of the high-concentration fluorescent adhesive layer **172***a*. The second release film **40** is removed to complete the manufacture of the light-emitting device **100***k*.

In terms of structure, referring further to FIG. **15**E, the light-emitting device **100***k* of the present embodiment includes a light-emitting unit **110***c*, a reflective protecting element **120***d*, a translucent adhesive layer **150***c*, and a wavelength conversion adhesive layer **170***a*. The wavelength conversion adhesive layer **170***a* is disposed on the upper surface **112***c* of the light-emitting unit **110***c*, wherein the wavelength conversion adhesive layer **170***a* includes a low-concentration fluorescent adhesive layer **174***a* and a high-concentration fluorescent adhesive layer **172***a*, the

high-concentration fluorescent adhesive layer **172***a* is located between the low-concentration fluorescent adhesive layer **174***a* and the light-emitting unit **110***c*, and the edges **171***a* of the wavelength conversion adhesive layer **170***a* are extended outside the side surface **116***c* of the light-emitting unit **110***c*. Here, the low-concentration fluorescent adhesive layer **174** can be used as a transparent protective layer to increase the number of water vapor transmission paths to effectively block water vapor. The translucent adhesive layer **150***c* is disposed between the side surface **116***c* of the light-emitting unit **110***c* and the reflective protecting element **120***d* to fix the position of the light-emitting unit **110***c*. The reflective protecting element **120***d* of the present embodiment further covers the two edges **173***a* of the high-concentration fluorescent adhesive layer **172***a* of the wavelength conversion adhesive layer **170***a* along the translucent adhesive layer **150***c* covering the side surface **116***c* of the light-emitting unit **110***c*, and therefore the light-emitting device **100***k* of the present embodiment does not need a known bearing bracket to support and fix the light-emitting unit **110***c*, such that package thickness and manufacturing cost can be effectively reduced. At the same time, the positive optical efficiency of the light-emitting unit **110***c* can also be effectively increased via the reflective protecting element **120***d* having high reflectivity. Moreover, the low-concentration fluorescent adhesive layer **174***a* of the wavelength conversion adhesive layer **170***a* of the present embodiment covers a top surface **122***d* of the reflective protecting element **120***d*. In other words, the edges **173***a* of the high-concentration fluorescent adhesive layer **172***a* and the edges **171***a* of the low-concentration fluorescent adhesive layer **174***a* of the wavelength conversion adhesive layer **170***a* of the present embodiment are not aligned.

In other embodiments, referring to FIG. **16**A, a light-emitting device **100***m* of the present embodiment is similar to the light-emitting device **100***j* in FIG. **14**E, and the difference is that, a reflective protecting element **120***m* of the present embodiment completely fills a gap S between the first electrode pad **113** and the second electrode pad **114** and completely covers a first side surface **113***b* of the first electrode pad **113** and a second side surface **115***b* of the second electrode pad **115**, and a bottom surface **124***m* of the reflective protecting element **120***m* is aligned with the first bottom surface **113***a* of the first electrode pad **113** and the second bottom surface **115***a* of the second electrode pad **115**. As a result, light leakage to the bottom of the light-emitting device **100***m* can be prevented. Moreover, the reflective protecting element **120***m* completely covers the two edges of the wavelength conversion adhesive layer **170***a*. Moreover, since the coverage of the reflective protecting element **120***m* is good and the reflective protecting element **120***m* has better structural strength, the light-emitting device **100***m* of the present embodiment does not need a known bearing bracket to support and fix the light-emitting unit **110***c*, such that package thickness and manufacturing cost can be effectively reduced.

Alternatively, referring to FIG. **16**B, a light-emitting device **100***n* of the present embodiment is similar to the light-emitting device **100***k* in FIG. **16**A, and the difference is that, a reflective protecting element **120***n* of the present embodiment is filled in the gap S between the first electrode pad **113** and the second electrode pad **114** but does not completely fill the gap S, and the reflective protecting element **120***n* only covers a portion of the first side surface **113***b* of the first electrode pad **113** and a portion of the second side surface **115***b* of the second electrode pad **115**. In other words, a height difference H exists between a bottom surface **124***n* of the reflective protecting element **120***n* and the first bottom surface **113***a* of the first electrode pad **113** and the second bottom surface **115***a* of the second electrode pad **115**. Alternatively, referring to FIG. **16**C, a light-emitting device **100***p* of the present embodiment is similar to the light-emitting device **100***n* in FIG. **16**B, and the difference is that, a first electrode pad **113'** and a second electrode pad **115'** in the present embodiment are embodied as a plurality of metal layers, such as formed by a first metal layer M**1** and a second metal layer M**2**, but are not limited thereto. A reflective protecting element **120***p* completely covers the side surface of the first metal layer M**1** of the first electrode pad **113'** and the second electrode pad **115** but does not completely cover the side surface of the second metal layer M**2** of the first electrode pad **113'** and the second electrode pad **115'**. In short, the first electrode pads **113** and **113'** and the second electrode pads **115** and **115'** of the light-emitting units **110***c* and **110***c'* of the light-emitting devices **100***m*, **100***n*, and **100***p* can be a single metal layer or a plurality of metal layers and are not particularly limited.

FIG. **17**A to FIG. **17**E show cross sections of a manufacturing method of a light-emitting device of an embodiment of the invention. Regarding the manufacturing method of the light-emitting device of the present embodiment, first, referring to FIG. **17**A, a wavelength conversion adhesive layer **210** is provided. The wavelength conversion adhesive layer **210** can be a single adhesive layer or a plurality of adhesive layers, and the wavelength conversion adhesive layer **210** in the present embodiment includes a low-concentration fluorescent adhesive layer **212** and a high-concentration fluorescent adhesive layer **214** located on the low-concentration fluorescent adhesive layer **212**. Here, the steps of forming the wavelength conversion adhesive layer **210** include, for instance, first laying a wavelength conversion adhesive material layer (not shown) formed by evenly mixing a fluorescent power (not shown) and silicone (not shown) in the manner of mixing a dopant and a colloid on a release film (not shown), and then leaving the wavelength conversion adhesive material layer to stand for a period of time, such as 24 hours, and a wavelength conversion adhesive layer **210** having a low-concentration fluorescent adhesive layer **212** and a high-concentration fluorescent adhesive layer **214** separated from each other is formed due to the density difference between the fluorescent powder and the silicone, wherein the high-concentration fluorescent adhesive layer **214** is precipitated below the low-concentration fluorescent adhesive layer **212**, the high-concentration fluorescent adhesive layer **214** is, for instance, yellow, the low-concentration fluorescent adhesive layer **212** is, for instance, transparent, the thickness of the low-concentration fluorescent adhesive layer **212** is preferably greater than the thickness of the high-concentration fluorescent adhesive layer **214**, and in an embodiment, the ratio of the thicknesses can be between 1 and 200, but is not limited thereto.

Next, referring further to FIG. **17**A, a double-sided adhesive film **10***a* is provided. The low-concentration fluorescent adhesive layer **212** of the wavelength conversion adhesive layer **210** is disposed on the double-sided adhesive film **10***a* to fix the position of the wavelength conversion adhesive layer **210** via the double-sided adhesive film **10***a*. Next, a first cutting process is performed to cut from the high-concentration fluorescent adhesive layer **214** to a portion of the low-concentration fluorescent adhesive layer **212** to form a plurality of trenches C**1**. Here, the depth of each of the trenches C**1** is at least half of the thickness of the wavelength conversion adhesive layer **210**. For instance, if the thickness of the wavelength conversion adhesive layer **210** is 240

microns, then the depth of the trenches C**1** is, for instance, 200 microns. At this point, the trenches C**1** can divide the low-concentration fluorescent adhesive layer **212** of the wavelength conversion adhesive layer **210** into a mesa portion **212***a* and a protruding portion **212***b* located on the mesa portion **212***a*, and the high-concentration fluorescent adhesive layer **214** is located on the protruding portion **212***b*.

Next, referring to FIG. **17**B, a plurality of light-emitting units **220** arranged at intervals is disposed on the wavelength conversion adhesive layer **210**, wherein each of the light-emitting units **220** has an upper surface **222** and a lower surface **224** opposite to each other, a side surface **226** connected to the upper surface **222** and the lower surface **224**, and a first electrode pad **223** and a second electrode pad **225** located on the lower surface **224** and separated from each other. The upper surface **222** of the light-emitting unit **220** is located on the high-concentration fluorescent adhesive layer **214** of the wavelength conversion adhesive layer **210** to increase light extraction rate and improve light type. The trenches C**1** divide the light-emitting unit **220** into a plurality of units A, and each of the units A in the present embodiment at least includes two light-emitting units **220** (FIG. **17**B schematically shows two light-emitting units **220**). Each of the light-emitting units **220** is, for instance, an LED chip having an emission wavelength between 315 nm and 780 nm, and the LED chip includes, but is not limited to, a UV, blue, green, yellow, orange, or red LED chip.

Next, referring further to FIG. **17**B, a translucent adhesive layer **230***a* is formed on the wavelength conversion adhesive layer **210** and extended and disposed on the side surface **226** of the light-emitting unit **220**. As shown in FIG. **17**B, the thickness of the translucent adhesive layer **230***a* is gradually increased from the lower surface **224** toward the upper surface **222** of each of the light-emitting units **220**, and the translucent adhesive layer **230***a* has a concave surface **232** relative to the side surface **226** of the light-emitting unit **220**, but is not limited thereto. Here, the object of the translucent adhesive layer **230***a* is to fix the position of the light-emitting units **220**, and since the translucent adhesive layer **230***a* is a translucent material and has an index of refraction greater than 1, the light extraction effect of the side of the chip can also be increased.

Next referring to FIG. **17**C, a reflective protecting element **240** is formed between the light-emitting units **220** and completely fills the trenches C**1**, wherein the reflective protecting element **240** is formed on the wavelength conversion adhesive layer **210** and covers each of the units A and completely fills the trenches C**1**. The reflective protecting element **240** exposes the lower surface **224**, the first electrode pad **223**, and the second electrode pad **225** of each of the light-emitting units **220**. Here, the index of refraction of the reflective protecting element **240** is at least greater than 90%, and the reflective protecting element **240** is, for instance, a white adhesive layer. The forming method of the reflective protecting element **240** is, for instance, dispensing, wherein the reflective protecting element **240** directly covers the translucent adhesive layer **230***a* and is extended to cover the edges of the high-concentration fluorescent adhesive layer **214** along the translucent adhesive layer **230***a* and completely fills the trenches C**1**. At this point, the orthographic projections of the first electrode pad **223** and the second electrode pad **225** of the light-emitting units **220** on the double-sided adhesive film **10***a* are not overlapped with the orthographic projection of the reflective protecting element **240** on the double-sided adhesive film **10***a*.

Next, referring further to FIG. **17**C, a second cutting process is performed from the reflective protecting element **240** along the trenches C**1** through the low-concentration fluorescent adhesive layer **212** to form a plurality of light-emitting devices **200***a* separated from one another. At this point, as shown in FIG. **17**C, the wavelength conversion adhesive layer **210** in contact with two light-emitting units **220** in each of the units A is continuous. That is, the light-emitting units **220** have the same light-emitting surface, and therefore the light emitted by the light-emitting units **220** can be guided by the transparent low-concentration fluorescent adhesive layer **212** such that the light-emitting devices **200***a* of the present embodiment have better luminance uniformity.

Next, referring to both FIG. **17**C and FIG. **17**D, after a second cutting process is performed, a film-turning process is needed. First, a UV adhesive film **20***a* is provided on the first electrode pad **223** and the second electrode pad **225** of the light-emitting units **220** to first fix the relative positions of the light-emitting devices **200***a*. Next, the double-sided adhesive film **10***a* is removed to expose the low-concentration fluorescent adhesive layer **212** of the wavelength conversion adhesive layer **210**. Lastly, referring to FIG. **17**E, the UV adhesive film **20***a* is removed to expose the first electrode pad **223** and the second electrode pad **225** of the light-emitting units **220**. At this point, the manufacture of the light-emitting devices **200***a* is complete. It should be mentioned that, for ease of explanation, FIG. **17**E only schematically shows one light-emitting device **200***a*.

In terms of structure, referring further to FIG. **17**E, the light-emitting device **200***a* includes a plurality of light-emitting units **220** (FIG. **17**E schematically shows two light-emitting units **220**), a wavelength conversion adhesive layer **210**, and a reflective protecting element **240**. Each of the light-emitting units **220** has an upper surface **222** and a lower surface **224** opposite to each other, a side surface **226** connected to the upper surface **222** and the lower surface **224**, and a first electrode pad **223** and a second electrode pad **225** located on the lower surface **224** and separated from each other. The wavelength conversion adhesive layer **210** is disposed on the upper surface **222** of the light-emitting unit **220**, and the wavelength conversion adhesive layer **210** includes a low-concentration fluorescent adhesive layer **212** and a high-concentration fluorescent adhesive layer **214**. The low-concentration fluorescent adhesive layer **212** has a mesa portion **212***a* and a protruding portion **212***b* located on the mesa portion **212***a*. The high-concentration fluorescent adhesive layer **214** is disposed between the upper surface **222** and the protruding portion **212***b*, wherein the high-concentration fluorescent adhesive layer **214** covers the protruding portion **212***b* and is in contact with the upper surface **222** of the light-emitting unit **220**. The light-emitting units **220** are arranged at intervals and expose a portion of the wavelength conversion adhesive layer **210**. The reflective protecting element **240** covers the side surface **226** of each of the light-emitting units **220** and covers the wavelength conversion adhesive layer **210** exposed by the light-emitting units **220**. The reflective protecting element **240** exposes the lower surface **224**, the first electrode pad **223**, and the second electrode pad **225** of each of the light-emitting units **220**. The edges of the reflective protecting element **240** are aligned with the edges of the mesa portion **212***a* of the low-concentration fluorescent adhesive layer **212**.

The light-emitting units **220** in the light-emitting device **200***a* of the present embodiment are only in contact with one wavelength conversion adhesive layer **210**, i.e., the light-emitting units **220** have the same luminous surface, and the edges of the low-concentration fluorescent adhesive layer

212 are aligned with the edges of the reflective protecting element 240. Therefore, the light emitted by the light-emitting units 220 is guided by the low-concentration fluorescent adhesive layer 212 such that the light-emitting device 200*a* of the present embodiment can have a greater luminous area and better luminance uniformity. Moreover, the reflective protecting element 240 covers the side surface 226 of the light-emitting units 220, and the reflective protecting element 240 exposes the first electrode pad 223 and the second electrode pad 225 of the light-emitting units 220. Therefore, the light-emitting device 200*a* of the present embodiment does not need a known bearing bracket to support and fix the light-emitting units 220, such that package thickness and manufacturing cost can be effectively reduced. At the same time, the positive optical efficiency of the light-emitting units 220 can also be effectively increased.

It should be mentioned that, in the present embodiment, the structural type of the translucent adhesive layer 230*a* is not limited, even though the translucent adhesive layer 230*a* shown in FIG. 17E is embodied as having a concave surface 232 relative to the side surface 226 of the light-emitting units 220. In other words, the reflective protecting element 240 further contains a reflective surface 242 in contact with the light-emitting units 220, and the reflecting surface 242 is embodied as a curved surface. However, in other embodiments, referring to FIG. 18A, a light-emitting device 200*b* of the present embodiment is similar to the light-emitting device 200*a* in FIG. 17E, and the difference is that, a translucent adhesive layer 230*b* has a convex surface 234 relative to the side surface 226 of each of the light-emitting units 220 to effectively increase the lateral emission of the light-emitting units 220. Moreover, with the configuration of the wavelength conversion adhesive layer 210, the emission area of the light-emitting device 200*b* can also be increased. In other words, a reflective surface 242*a* of the reflective protecting element 240*a* is embodied as a curved surface. Alternatively, referring to FIG. 18B, a light-emitting device 200*c* of the present embodiment is similar to the light-emitting device 200*a* in FIG. 17E, and the difference is that, a translucent adhesive layer 230*c* has an inclined surface 236 relative to the side surface 226 of each of the light-emitting units 220. In other words, a reflective surface 242*b* of a reflective protecting element 240*b* is embodied as a flat surface.

It should be mentioned here that, the following embodiments adopt the reference numerals of the embodiments above and a portion of the contents thereof, wherein the same reference numerals are adopted to represent the same or similar elements. Descriptions of the same technical content are as provided in the embodiments above and are not repeated in the following embodiments.

FIG. 19A to FIG. 19E show cross sections of a manufacturing method of a light-emitting device of another embodiment of the invention. The main difference between the manufacturing method of a light-emitting device 200*d* of the present embodiment and the manufacturing method of the light-emitting device 200*a* in FIG. 17A to FIG. 17E is that, referring to FIG. 19A, during the first cutting process, a plurality of second trenches C2' cut from a high-concentration fluorescent adhesive layer 214' to a portion of a low-concentration fluorescent adhesive layer 212' is further formed. As shown in FIG. 19A, the positions of the trenches C1' and the second trenches C2' are alternately arranged, wherein the depth of each of the trenches C1' is at least half of the thickness of the wavelength conversion adhesive layer 210', and the depth of each of the second trenches C2' is the same as the depth of each of the trenches C1'. For instance, the thickness of the wavelength conversion adhesive layer 210' is 240 microns and the depth of the trenches C1' and the depth of the second trenches C2' are, for instance, 200 microns, but are not limited thereto. At this point, a mesa portion 212*a*' of the low-concentration fluorescent adhesive layer 212' has a thickness T, and preferably, the thickness T is, for instance, between 20 microns and 50 microns. The second trenches C2' divide the protruding portion of the low-concentration fluorescent adhesive layer 212' in the wavelength conversion adhesive layer 210' into two protruding sub-portions 212*b*', and the high-concentration fluorescent adhesive layer 214' is located on the protruding sub-portions 212*b*'.

Next, referring to FIG. 19B, the light-emitting units 220 arranged at intervals are disposed on the wavelength conversion adhesive layer 210', wherein the second trenches C2' are located between two light-emitting units 220 of each of the light-emitting units A, the light-emitting units 220 are respectively disposed on the protruding sub-portions 212*b*', and the upper surface 222 of the light-emitting units 220 is in direct contact with the high-concentration fluorescent adhesive layer 214'. Preferably, the ratio of the length of each of the protruding sub-portions 212*b*' and the length of the corresponding light-emitting unit 220 is greater than 1 and less than 1.35. In other words, the edges of the protruding sub-portions 212*b*' of the low-concentration fluorescent adhesive layer 212' are outside the edges of the light-emitting units 220, and the edges of the high-concentration fluorescent adhesive layer 214' are also extended outside the edges of the light-emitting units 220 to effectively increase the luminous area of the light-emitting units 220. Next, a translucent adhesive layer 230*a* is respectively formed on the side surface 226 of the light-emitting units 220, wherein the translucent adhesive layer 226 is only disposed on the side surface 226 of the light-emitting units 220 and extended onto the high-concentration fluorescent adhesive layer 214' of the wavelength conversion adhesive layer 210' and is not extended and disposed on the low-concentration fluorescent adhesive layer 212'.

Next, similar to the steps of FIG. 17C, FIG. 17D, and FIG. 17E, referring first to FIG. 19C, a reflective protecting element 240 is formed on the wavelength conversion adhesive layer 210' to cover each of the units A and completely fill the trenches C1' and the second trenches C2'. Next, a second cutting process is performed from the reflective protecting element 240 along the trenches C1' through the low-concentration fluorescent adhesive layer 212' to form a plurality of light-emitting devices 200*d* separated from one another. Next, referring to both FIG. 19C and FIG. 19D, after a second cutting process is performed, a film-turning process is needed. First, a UV adhesive film 20*a* is provided on the first electrode pad 223 and the second electrode pad 225 of the light-emitting units 220 to first fix the relative positions of the light-emitting devices 200*a*. Next, the double-sided adhesive film 10*a* is removed to expose the low-concentration fluorescent adhesive layer 212' of the wavelength conversion adhesive layer 210'. Lastly, referring to FIG. 19E, the UV adhesive film 20*a* is removed to expose the first electrode pad 223 and the second electrode pad 225 of the light-emitting units 220. At this point, the manufacture of the light-emitting devices 200*d* is complete. It should be mentioned that, for ease of explanation, FIG. 19E only schematically shows one light-emitting device 200*d*.

Referring to all of FIG. 19E, FIG. 20A, and FIG. 20B, it should be mentioned that, FIG. 19E shows a cross section along line Y-Y in FIG. 20A. The light-emitting device 200*d* of the present embodiment is similar to the light-emitting

device **200***a* in FIG. **17**E, and the difference is that, the wavelength conversion adhesive layer **210'** exposed between two light-emitting units **220** further has the second trenches C**2'**, wherein the second trenches C**2'** are extended from the high-concentration fluorescent adhesive layer **214'** to a portion of the low-concentration fluorescent adhesive layer **212'**. In other words, two light-emitting units **220** are disposed on one continuous wavelength conversion adhesive layer **210'**, and therefore the light-emitting units **220** have the same light-emitting surface, and the edges of the low-concentration fluorescent adhesive layer **212'** are aligned with the edges of the reflective protecting element **240**. Therefore, the light emitted by the light-emitting units **220** is guided by the low-concentration fluorescent adhesive layer **212'** such that the light-emitting device **200***d* of the present embodiment can have a greater luminous area and better luminance uniformity.

In particular, during the first cutting process, the depths cut along line X-X and line Y-Y in FIG. **20**A are substantially the same. In other words, referring to FIG. **20**B, in the cross section of line X-X, the mesa portion **212***a*' of the low-concentration fluorescent adhesive layer **212'** has a thickness T, and referring to FIG. **19**E, in the cross section of line Y-Y, the mesa portion **212***a*' of the low-concentration fluorescent adhesive layer **212'** also has the thickness T. Preferably, the thickness T is, for instance, between 20 microns and 50 microns.

Of course, in other embodiments, during the first cutting process, when cutting in different directions, the mesa portion **212***a*' of the low-concentration fluorescent adhesive layer **212'** can also have a different thickness. FIG. **21**A shows a 3D view of a light-emitting device of another embodiment of the invention. FIG. **21**B and FIG. **21**C respectively show cross sections along line X'-X' and line Y'-Y' of FIG. **21**A. Referring to all of FIG. **21**A, FIG. **21**B, and FIG. **21**C, during the first cutting process, the depths cut along line X'-X' and line Y'-Y' in FIG. **21**A are different, such that the wavelength conversion adhesive layer **210'** further includes a first exposed side portion and a second exposed side portion not covered by the reflective protecting element **240**. The first exposed side portion and the second exposed side portion are not parallel, and the thickness of the wavelength conversion adhesive layer **210'** at the first exposed side portion is different from the thickness of the wavelength conversion adhesive layer **210'** at the second exposed side portion. Specifically, a mesa portion **212***a*" of a low-concentration fluorescent adhesive layer **212"** has a first thickness T**1** along line X'-X', the mesa portion **212***a*" of the low-concentration fluorescent adhesive layer **212"** has a second thickness T**2** along line Y'-Y', and the first thickness T**1** is different from the second thickness T**2**. Preferably, the first thickness T**1** is, for instance, between 50 microns and 200 microns, and the second thickness T**2** is, for instance, between 20 microns and 50 microns.

Since the mesa portion **212***a*" of the low-concentration fluorescent adhesive layer **212"** of the present embodiment respectively has the first thickness T**1** and the second thickness T**2** different from each other along line X'-X' and line Y'-Y', the occurrence of reduced brightness caused by dark bands between two adjacent light-emitting units **220** can be effectively reduced to increase the luminance uniformity of the light-emitting device **200***e*. Moreover, it should be mentioned that, using line Y'-Y' as an example, when the thickness T**2** of the mesa portion **212***a*" of a low-concentration fluorescent adhesive layer **212'"** is increased from, for instance, 0.04 mm to 0.2 mm, the light-emitting angle of the light-emitting units **220** can also be increased from the original 120 degrees to 130 degrees, i.e., the light-emitting angle of the light-emitting units **220** can be increased by 10 degrees. In short, the thickness of the mesa portion **212***a*" of the low-concentration fluorescent adhesive layer **212'"** is positively correlated to the light-emitting angle of the light-emitting units **220**.

FIG. **22**A to FIG. **22**J show cross sections of a manufacturing method of a light-emitting device of another embodiment of the invention. FIG. **23** shows a comparison chart of color temperature of the light-emitting device of the embodiment of FIG. **22**J and a known LED structure measured at different angles.

Referring to FIG. **22**A, a first release film **30** is provided. The first release film **30** is, for instance, a double-sided adhesive film. Next, a wavelength conversion adhesive layer **170***b* is provided on the first release film **30**. The wavelength conversion adhesive layer **170***b* can be a single adhesive layer or a plurality of adhesive layers, and in the present embodiment, the wavelength conversion adhesive layer **170***b* includes a low-concentration fluorescent adhesive layer **174***b* and a high-concentration fluorescent adhesive layer **172***b* located on the low-concentration fluorescent adhesive layer **174***b*. Here, the steps of forming the wavelength conversion adhesive layer **170***b* include, for instance, first forming the wavelength conversion adhesive layer **170***b* in the manner of mixing a dopant and a colloid, and then leaving the wavelength conversion adhesive layer **170***b* to stand for a period of time, such as 24 hours, to form the low-concentration fluorescent adhesive layer **174***b* and the high-concentration fluorescent adhesive layer **172***b* separated from each other. Moreover, the wavelength conversion adhesive layer **170***b* is heated and baked to cure and mold the low-concentration fluorescent adhesive layer **174***b* and the high-concentration fluorescent adhesive layer **172***b*.

Referring to FIG. **22**B, a plurality of light-emitting units **110***e* (three in this case, but not limited thereto) is provided, wherein each of the light-emitting units **110***e* has an upper surface **112***e* and a lower surface **114***e* opposite to each other, a side surface **116***e* connected to the upper surface **112***e* and the lower surface **114***e*, and a first electrode pad **113** and a second electrode pad **115** located on the lower surface **114***e* and separated from each other. The width of each of the light-emitting units **110***e* is W_E. The light-emitting units **110***e* are, for instance, LED structures.

Referring to FIG. **22**C and FIG. **22**D, a plurality of trenches C" is formed in the wavelength conversion adhesive layer **170***b* to define a plurality of bonding regions BA between the trenches C". Referring first to FIG. **22**C, first, a portion of the high-concentration fluorescent adhesive layer **172***b* and a portion of the low-concentration fluorescent adhesive layer **174***b* in the wavelength conversion adhesive layer **170***b* are removed to form a plurality of first sub-trenches C**1"**. The first sub-trenches C**1"** respectively form a plurality of first mesa portions P**1** in the bonding regions BA. Each of the first mesa portions P**1** further includes a first portion **172***b***1** of the high-concentration fluorescent adhesive layer **172***b* and a first portion **174***b***1** of the low-concentration fluorescent adhesive layer **174***b*. The first portion **172***b***1** of the high-concentration fluorescent adhesive layer **172***b* is disposed on the first portion **174***b* of the low-concentration fluorescent adhesive layer **174***b*. Next, referring to FIG. **22**D, a portion of the low-concentration fluorescent adhesive layer **174***b* is removed to form a plurality of second sub-trenches C**2"** in the first sub-trenches C**1"**. The second sub-trenches C**2"** respectively form a plurality of second mesa portions P**2** in the bonding regions BA. Each of the second mesa portions P**2** further includes a

second portion **174b2** of the low-concentration fluorescent adhesive layer **174**, and the first portion **174b1** of the low-concentration fluorescent adhesive layer **174b** and the second portion **174b2** of the low-concentration fluorescent adhesive layer **174b** are connected to each other. A trench C' includes a first sub-trench C**1**" and a second sub-trench C**2**". In the bonding regions BA, the width of the high-concentration fluorescent adhesive layer **172b1** is W_H, the width of the low-concentration fluorescent adhesive layer **174b** is W_L, the width of the light-emitting units **110e** is W_E, and the step further satisfies the following inequalities: $W_E<W_L$, $W_H<W_L$, and $0.8<W_H/W_E\leq 1.2$.

Referring to FIG. **22**E, a plurality of translucent adhesive layers **150e** is respectively formed on the high-concentration fluorescent adhesive layers **172b** in the bonding regions BA. The translucent adhesive layer **150e** is, for instance, silicone.

Referring to FIG. **22**F, the upper surfaces **112e** of the light-emitting units **110e** are respectively bonded to the high-concentration fluorescent adhesive layers **172b** in the bonding regions BA via the translucent adhesive layers **150e**. Due to the capillarity phenomenon, the translucent adhesive layer **150e** has a curvature inclined surface, and the thickness of the translucent adhesive layer **150e** is greater toward the upper surface **112e** of the light-emitting units **110e**. Here, the object of the translucent adhesive layer **150e** is to fix the position of the light-emitting units **110e**.

Referring to FIG. **22**G, a reflective protecting element **120e** is formed on the wavelength conversion adhesive layer **170b** and between the light-emitting units **110e** to completely fill the trenches C". The reflective protecting element **120e** exposes the electrode pads **113** and **115** of the light-emitting units **110e**. Here, the reflective protecting element **120e** is, for instance, a white adhesive layer.

Referring to FIG. **22**H, the reflective protecting element **120e** is left to stand such that the reflective protecting element **120e** forms a concave surface CS toward the wavelength conversion adhesive layer **170b**. Next, the reflective protecting element **120e** is cured to fix the shape of the reflective protecting element **120e**.

Lastly, referring to both FIG. **22**I and FIG. **22**J, a cutting process is performed to cut the reflective protecting element **120e** and the low-concentration fluorescent adhesive layer **174b** along the extending direction of the trenches C" to form a plurality of light-emitting devices **100q** separated from one another. Moreover, the first release layer **30** is removed. At this point, the manufacture of the light-emitting devices **100q** is complete.

Referring further to FIG. **22**J, in terms of structure, the light-emitting device **100q** of the present embodiment includes a light-emitting unit **110e**, a reflective protecting element **120e**, a transparent adhesive layer **150e**, and a wavelength conversion adhesive layer **170b**. The configuration relationship between each element is described in detail below.

The wavelength conversion adhesive layer **170b** is disposed on the upper surface **112e** of the light-emitting unit **110e**. The wavelength conversion adhesive layer **170b** includes a low-concentration fluorescent adhesive layer **174b** and a high-concentration fluorescent adhesive layer **172b**, and the high-concentration fluorescent adhesive layer **172b** is located between the low-concentration fluorescent adhesive layer **174b** and the light-emitting unit **110e**. More specifically, the wavelength conversion adhesive layer **170b** further includes a first mesa portion P**1** and a plurality of second mesa portions P**2**. The second mesa portions P**2** are located at two opposite sides of the first mesa portion P**1**. The first mesa portion P**1** includes a first portion **174b1** of the high-concentration fluorescent adhesive layer **172b** and the low-concentration fluorescent adhesive layer **174b**. The second mesa portion P**2** includes a second portion **174b2** of the low-concentration fluorescent adhesive layer **174b**. The first portion **174b1** of the low-concentration fluorescent adhesive layer **174b** and the second portion **174b2** of the low-concentration fluorescent adhesive layer **174b** are connected to each other.

The reflective protecting element **120e** covers the light-emitting unit **110e** and a portion of the wavelength conversion adhesive layer **170b** and at least exposes the two electrode pads **113** and **115** of the light-emitting unit **110e** and the low-concentration fluorescent layer **174b**. The reflective protecting element **120e** has a reflective surface RS, and the reflective surface RS is in contact with the light-emitting unit **110e**. More specifically, the reflective surface RS is a curved surface, and the first side of the reflective surface RS is in contact with the light-emitting unit **110e**, and the second side of the reflective surface RS is extended toward the wavelength conversion adhesive layer **170b** and away from the light-emitting unit **110e**. The reflective protecting element **120e** has a concave surface CS. The concave surface CS is recessed toward the wavelength conversion adhesive layer **170b** and faces the outside. When the light-emitting device **100q** of the present embodiment is connected to an external substrate (such as the backplane, printed circuit board, or other types of substrates in a display panel), since the surface of the reflective protecting element **120e** exposed to the outside is a concave surface CS, a gap between the light-emitting device **100q** and an external substrate caused by a protrusion of the reflective protecting element **120e** can be prevented. The generation of the gap causes unsatisfactory bonding between the electrode pads **113** and **115** of the light-emitting unit **110e** and the external substrate.

The transparent adhesive layer **150e** is disposed on the low-concentration fluorescent adhesive layer **174b** and extended to the side surface **116e** of the light-emitting unit **110e**. The translucent adhesive layer **150e** covers the side surface **116e** of the light-emitting unit **110e**, the high-concentration fluorescent adhesive layer **172b**, and a portion of the low-concentration fluorescent adhesive layer **174b**.

Referring to FIG. **22**J and FIG. **23**, in the light-emitting device **100q** of the present embodiment, the width of the high-concentration fluorescent adhesive layer **172b** is W_H, the width of the low-concentration fluorescent adhesive layer **174b** is W_L, and the width of the light-emitting unit **110e** is W_E. The light-emitting device **100q** further satisfies the following inequalities: $W_E<W_L$, $W_H<W_L$ and $0.8<W_H/W_E\leq 1.2$. The light-emitting device **100q** of the present embodiment satisfies the inequality design above, and therefore a beam L**1** (greater beam intensity) correspondingly emitted by the light-emitting unit **110e** adjacent to the optical axis passes through the high-concentration fluorescent adhesive layer **172b** and the low-concentration fluorescent adhesive layer **174b** adjacent to the optical axis in order, and a beam L**2** correspondingly emitted by the light-emitting unit **110e** away from the optical axis (weaker beam intensity) passes through the translucent adhesive layer **150e** and the low-concentration fluorescent adhesive layer **174b** away from the optical axis. Therefore, the light intensity of a conversion beam L**1**' excited by the beam L**1** of the high-concentration fluorescent adhesive layer **172b** and the low-concentration fluorescent adhesive layer **174b** adjacent to the optical axis is greater than the light intensity of a conversion beam L**2**' excited by the beam L**2** of the low-concentration fluorescent adhesive layer **174b** away from the

optical axis. The light intensity ratio between the beam L**1** and the conversion beam L**1**' and the light intensity ratio between the beam L**2** and the conversion beam L**2**' are more consistent. As shown in FIG. **23**, in comparison to the color light emitted by a known LED structure, the color temperature of the color light emitted by the light-emitting device **100***q* of the present embodiment at different angles is more consistent.

It should be mentioned that, in the light-emitting device **100***q* of the present embodiment, the color temperature of the color light emitted by the light-emitting device **100***q* at different angles can be further adjusted by adjusting variables such as the thickness and width of the high-concentration fluorescent adhesive layer **172***b***2** and the low-concentration fluorescent adhesive layer **174***b* in the wavelength conversion adhesive layer **170***b* at different positions.

Based on the above, in the light-emitting device of an embodiment of the invention, the width of the high-concentration fluorescent adhesive layer is W_H, the width of the low-concentration fluorescent adhesive layer is W_L, and the width of the light-emitting unit is W_E. The light-emitting device further satisfies the following inequalities: $W_E<W_L$, $W_H<W_L$ and $0.8<W_H/W_E\leq 1.2$. By satisfying the inequality design above, the optical path of the beam (greater beam intensity) correspondingly emitted by the light-emitting unit adjacent to the optical axis passes through the fluorescent adhesive layer having a greater concentration in the light-emitting device, and the optical path of the beam (weaker beam intensity) correspondingly emitted by the light-emitting unit away from the optical axis passes through the fluorescent adhesive layer having a smaller concentration in the light-emitting device. Therefore, the color temperature of the color light emitted by the light-emitting device of an embodiment of the invention at different angles is more consistent. Since one of the steps of the manufacturing method of the light-emitting device of an embodiment of the invention satisfies the above inequalities, the color temperature of the color light emitted by the light-emitting device made by the manufacturing method is more consistent at different angles.

Although the invention has been described with reference to the above embodiments, it will be apparent to one of ordinary skill in the art that modifications to the described embodiments may be made without departing from the spirit of the invention. Accordingly, the scope of the invention is defined by the attached claims not by the above detailed descriptions.

What is claimed is:

1. A manufacturing method of a light-emitting device, comprising:

forming a wavelength conversion adhesive layer, wherein the wavelength conversion adhesive layer comprises a low-concentration fluorescent layer and a high-concentration fluorescent layer;

providing a plurality of light-emitting units;

forming a plurality of trenches in the wavelength conversion adhesive layer to define a plurality of bonding regions between the trenches, wherein in the bonding regions, a width of the high-concentration fluorescent adhesive layer is W_H, a width of the low-concentration fluorescent adhesive layer is W_L, a width of the light-emitting unit is WE, and the step further satisfies the following inequalities: $W_E<W_L$, $W_H<W_L$, and $0.8<W_H/W_E\leq 1.2$;

respectively bonding the light-emitting units to the high-concentration fluorescent adhesive layers in the bonding regions;

forming a reflective protecting element on the wavelength conversion adhesive layer and between the light-emitting units to completely fill the trenches, wherein the reflective protecting element exposes the electrode pads of the light-emitting units; and

performing a cutting process along the trenches to form a plurality of light-emitting devices.

2. The manufacturing method of the light-emitting device of claim **1**, wherein in the step of forming the trenches in the wavelength conversion adhesive layer further comprises:

removing a portion of the high-concentration fluorescent adhesive layer and a portion of the low-concentration fluorescent adhesive layer to form a plurality of first sub-trenches, wherein the first sub-trenches respectively form a plurality of first mesa portions in the bonding regions, and each of the first mesa portions further comprises a first portion of the high-concentration fluorescent adhesive layer and a first portion of the low-concentration fluorescent adhesive layer; and

removing a portion of the low-concentration fluorescent adhesive layer to form a plurality of second sub-trenches in the first sub-trenches, wherein the second sub-trenches respectively form a plurality of second mesa portions in the bonding regions, each of the second mesa portions further comprises a second portion of the low-concentration fluorescent adhesive layer, and the first portion of the low-concentration fluorescent adhesive layer and the second portion of the low-concentration fluorescent adhesive layer are connected to each other,

wherein the trench comprises the first sub-trench and the second sub-trench.

3. The manufacturing method of the light-emitting device of claim **1**, further comprising, before the step of respectively bonding the light-emitting units to the high-concentration fluorescent adhesive layers in the bonding regions:

respectively forming a plurality of translucent adhesive layers on the high-concentration fluorescent adhesive layers in the bonding regions.

4. The manufacturing method of the light-emitting device of claim **3**, wherein in the step of respectively bonding the light-emitting units to the high-concentration fluorescent adhesive layers in the bonding regions, the light-emitting units are respectively bonded to the high-concentration fluorescent adhesive layers via the translucent adhesive layers.

5. The manufacturing method of the light-emitting device of claim **1**, further comprising, after the step of forming the reflective protecting element on the wavelength conversion adhesive layer and between the light-emitting units to completely fill the trenches:

leaving the reflective protecting element to stand such that the reflective protecting element forms a concave surface recessed toward the wavelength conversion adhesive layer; and

curing the reflective protecting element.

* * * * *