US 20190309561A1

(19) United States

(12) Patent Application Publication

Hall et al.

(10) Pub. No.: US 2019/0309561 A1

(43) Pub. Date: Oct. 10, 2019

(54) **AUTOMATED WINDOW WITH SENSORS**

(71) Applicants: **David R. Hall**, Provo, UT (US); **Jerome Miles**, Spanish Fork, UT (US); **Emily Brimhall**, Alpine, UT (US); **Seth J. Myer**, Eagle Mt., UT (US)

(72) Inventors: **David R. Hall**, Provo, UT (US); **Jerome Miles**, Spanish Fork, UT (US); **Emily Brimhall**, Alpine, UT (US); **Seth J. Myer**, Eagle Mt., UT (US)

(21) Appl. No.: **15/946,000**

(22) Filed: **Apr. 5, 2018**

Publication Classification

(51) **Int. Cl.**

E05F 15/70	(2006.01)
E05F 15/635	(2006.01)
E05F 15/71	(2006.01)
E05F 15/72	(2006.01)
E05F 15/79	(2006.01)
E05F 15/40	(2006.01)
F16H 19/04	(2006.01)
E05F 15/77	(2006.01)

(52) **U.S. Cl.**

CPC ***E05F 15/70*** (2015.01); *F16H 19/06* (2013.01); ***E05F 15/71*** (2015.01); ***E05F 15/72*** (2015.01); ***E05F 15/79*** (2015.01); ***E05F 15/40*** (2015.01); ***F16H 19/04*** (2013.01); ***E05F 15/77*** (2015.01); *E05Y 2201/434* (2013.01); *E05Y 2201/652* (2013.01); *E05Y 2201/656* (2013.01); *E05Y 2201/716* (2013.01); *E05Y 2201/722* (2013.01); *E05Y 2400/32* (2013.01); *E05Y 2400/42* (2013.01); *E05Y 2400/44* (2013.01); *E05Y 2400/614* (2013.01); *E05Y 2400/66* (2013.01); *E05Y 2400/814* (2013.01); *E05Y 2400/82* (2013.01); *E05Y 2400/85* (2013.01); *E05Y 2900/148* (2013.01); *E05Y 2900/132* (2013.01); ***E05F 15/635*** (2015.01)

(57) **ABSTRACT**

An automated window mechanism is disclosed. The automated window mechanism includes an electrically powered actuator configured to move a slidable window between a closed position and an open position, a power source, and two or more sensors. The sensors generate signals related to a different environmental condition. The mechanism also includes a controller adapted to receive signals from the two or more sensors and operate the actuator to move the slidable window to an open or closed position as appropriate.

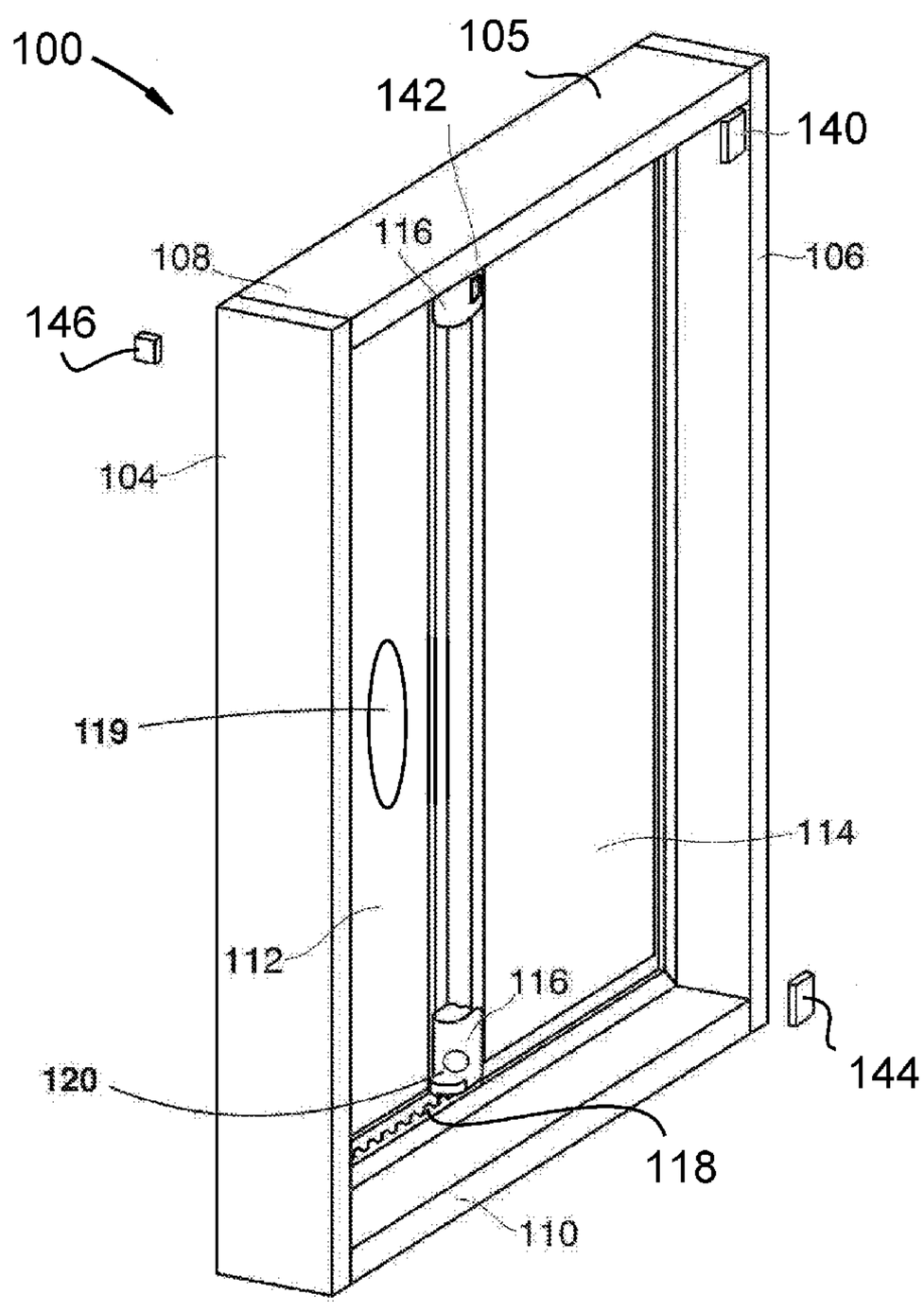

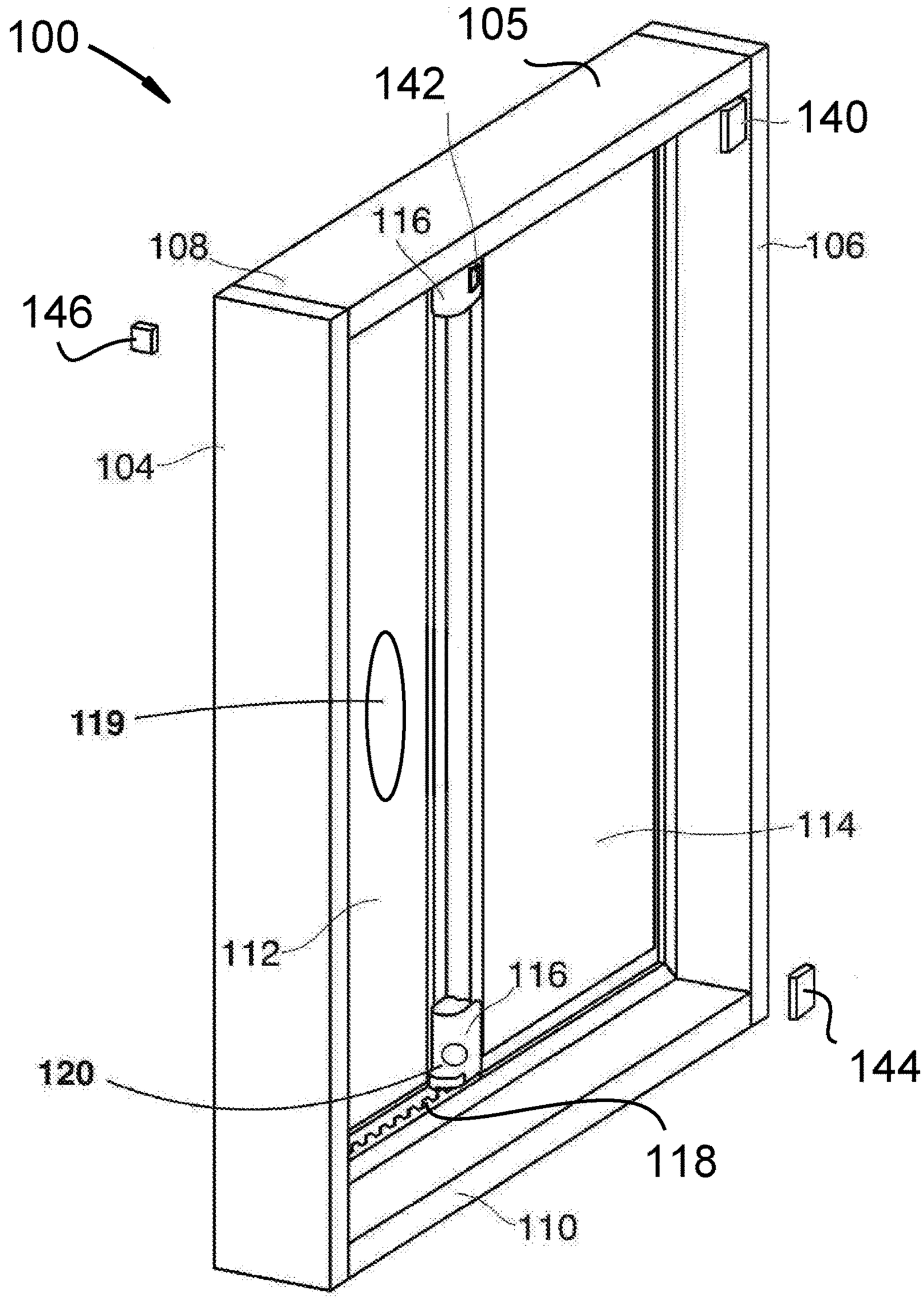
100
105
142
140
116
108
106
146
104
119
114
112
116
144
120
118
110

FIG. 1A

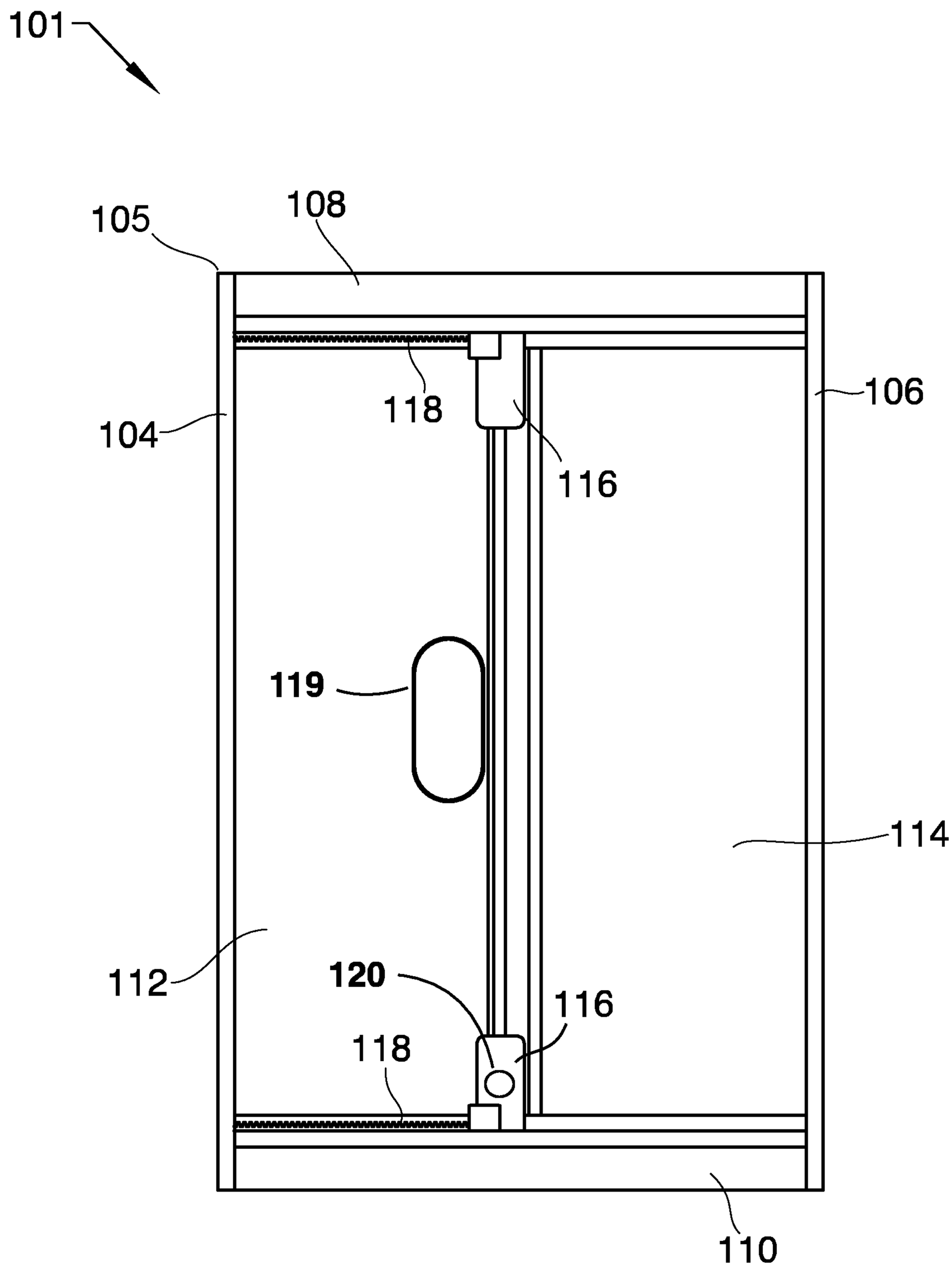

FIG. 1B

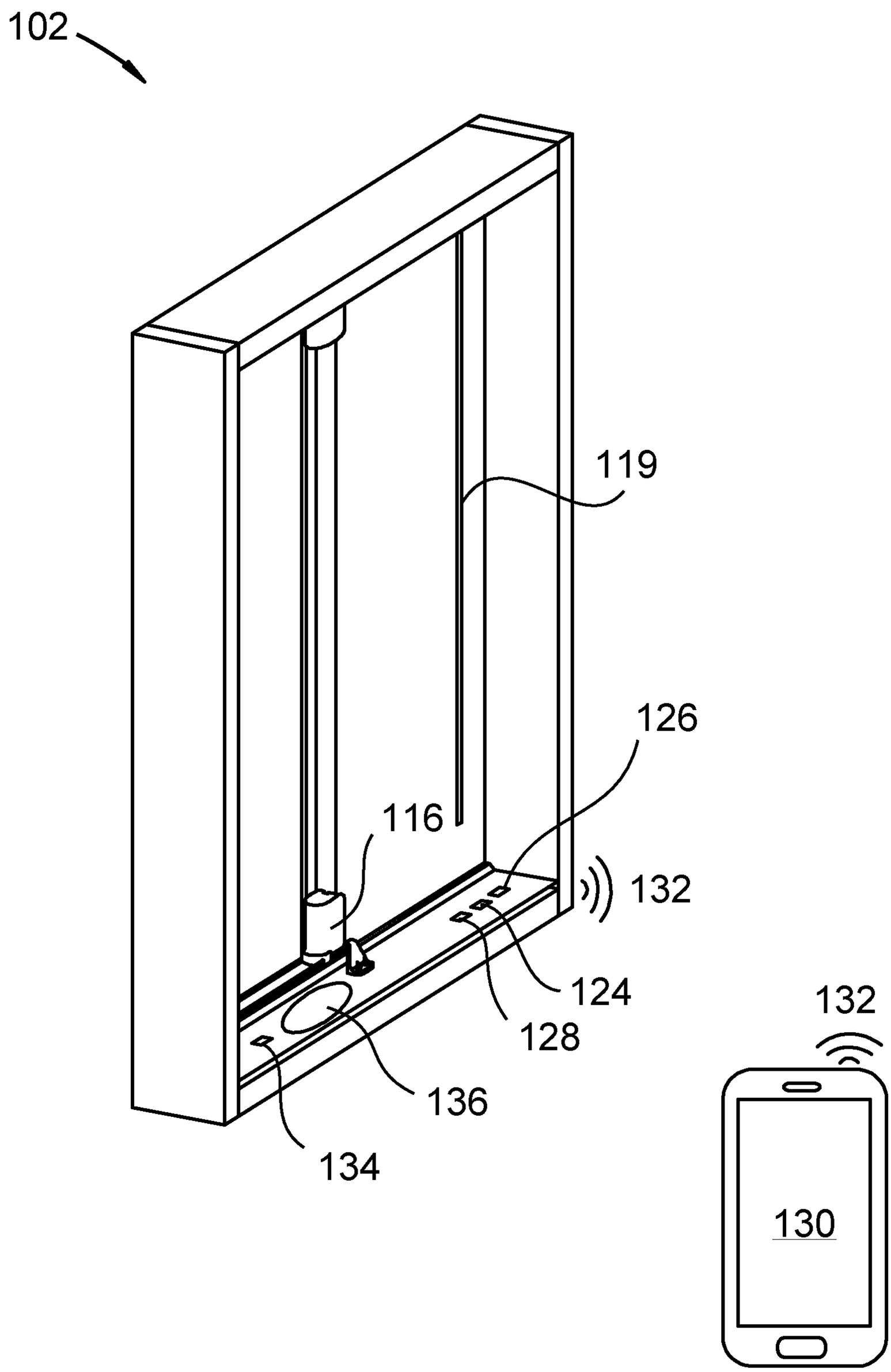

FIG. 1C

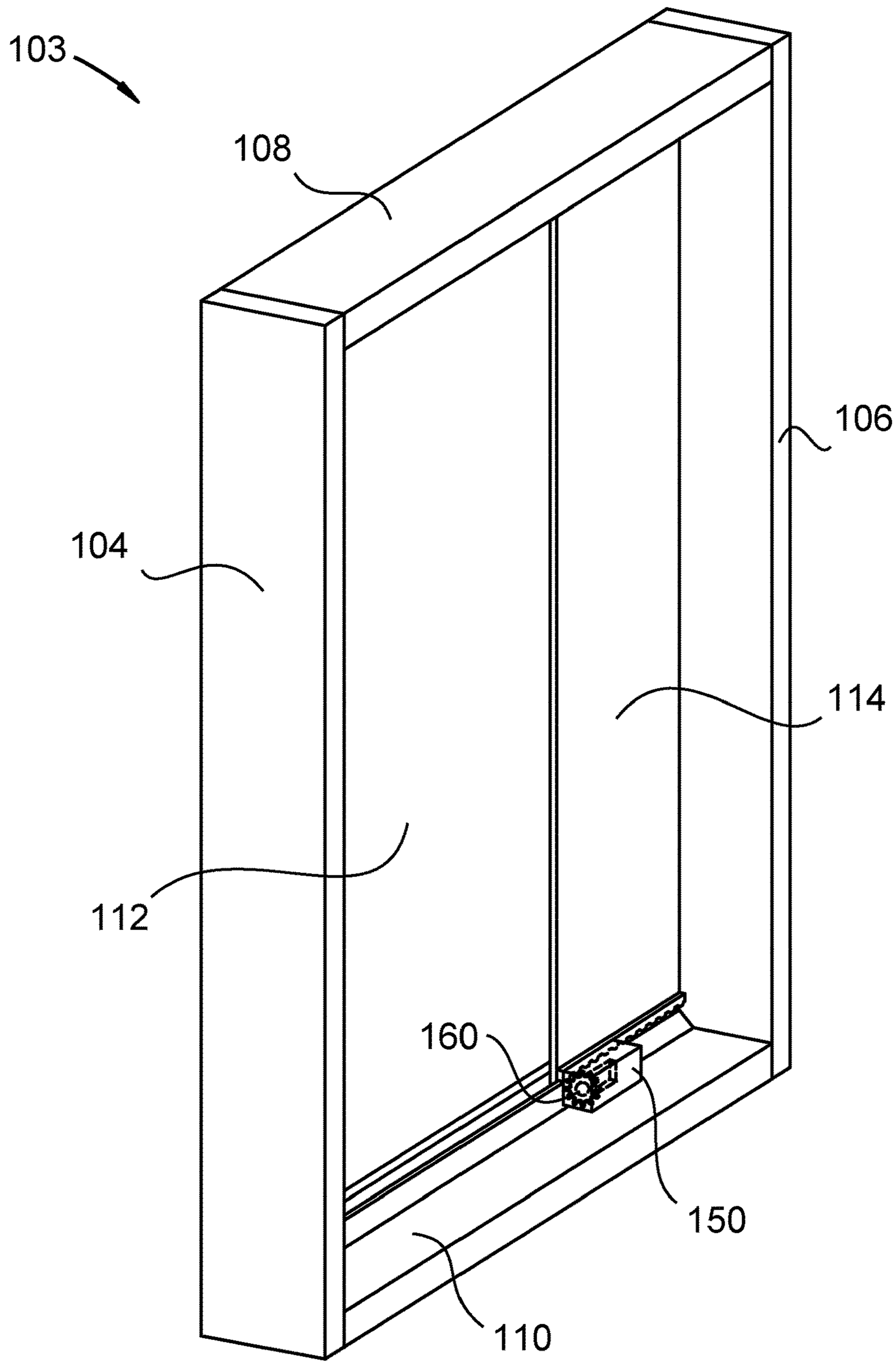

FIG. 1D

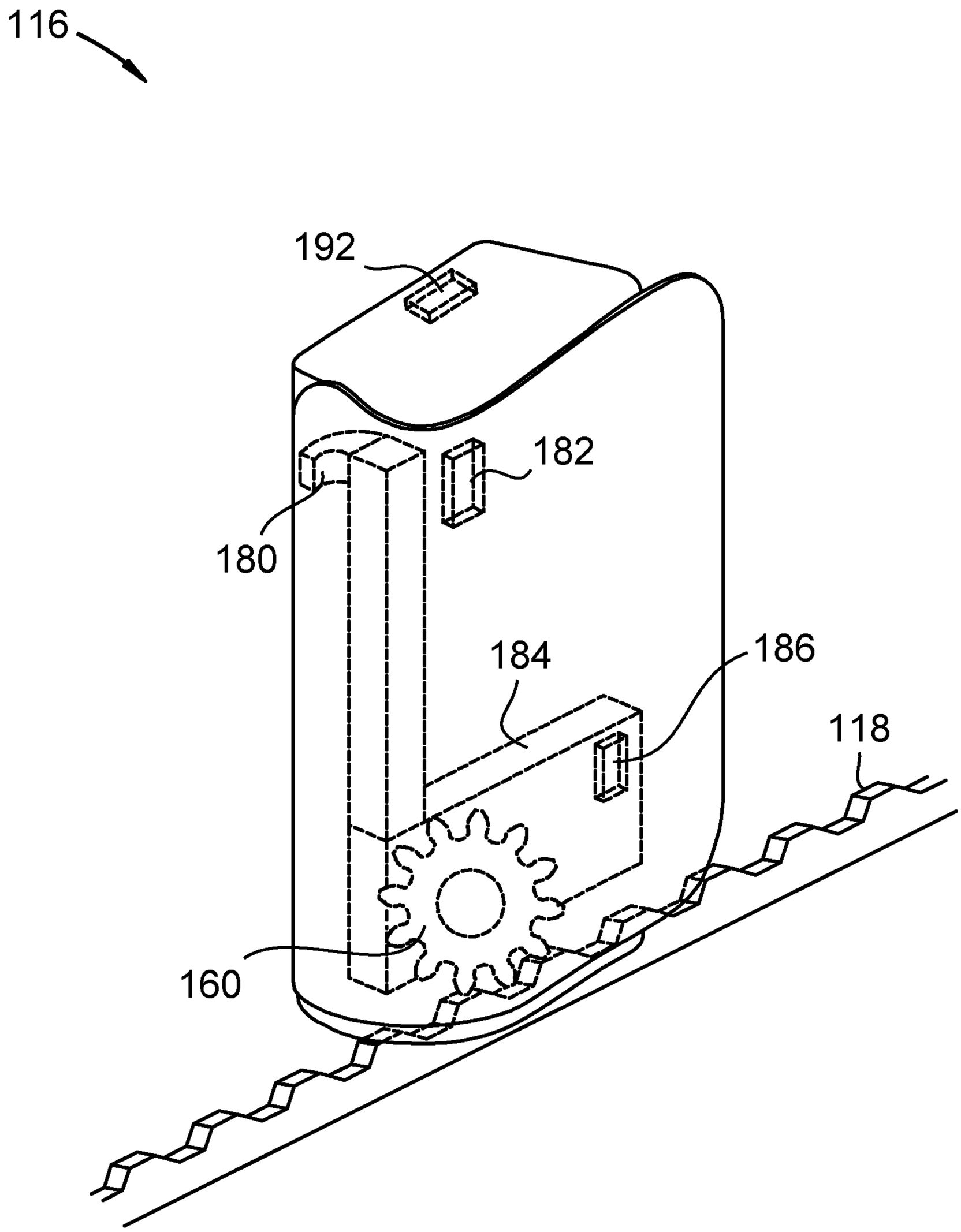

FIG. 1E

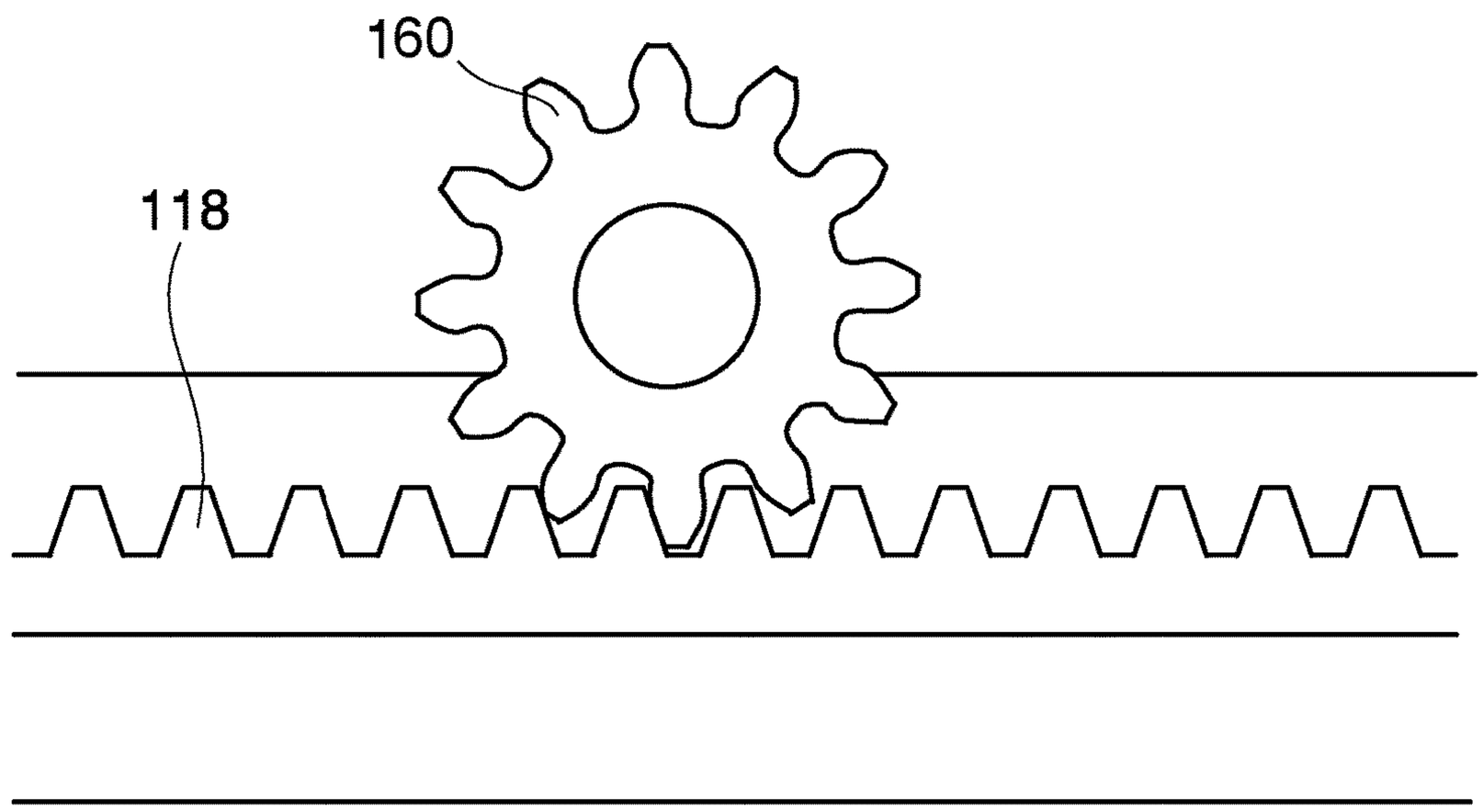

FIG. 1F

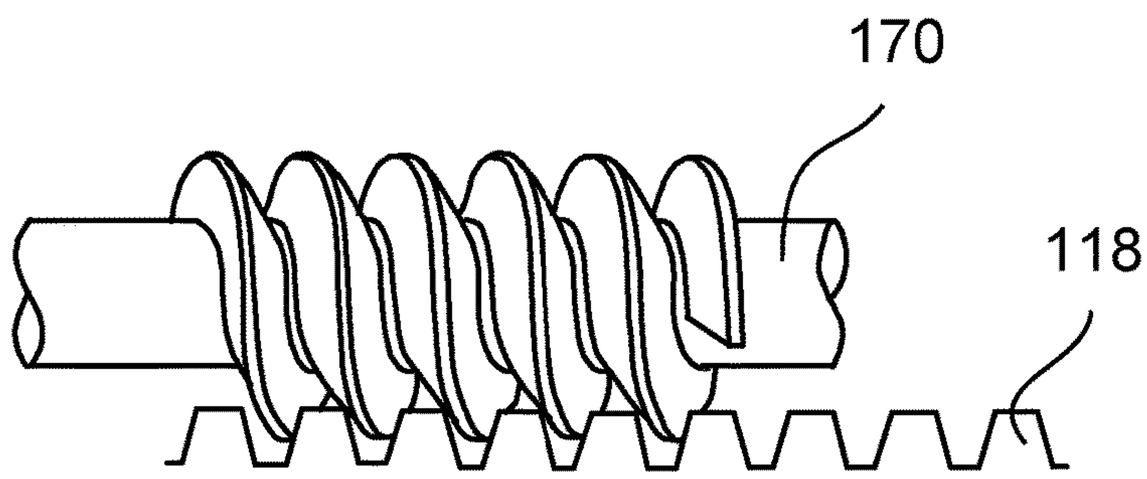

FIG. 1G

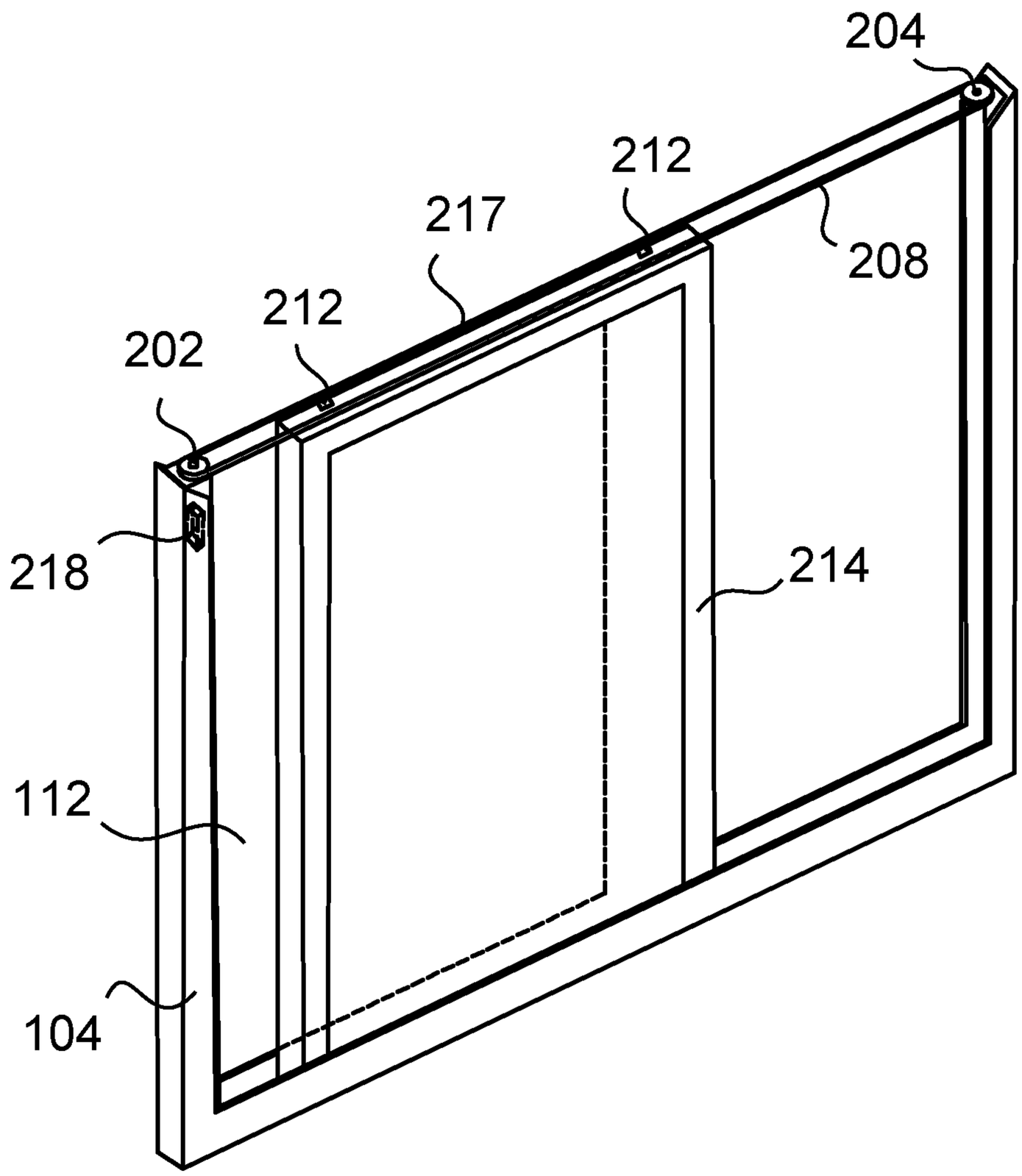

FIG. 2A

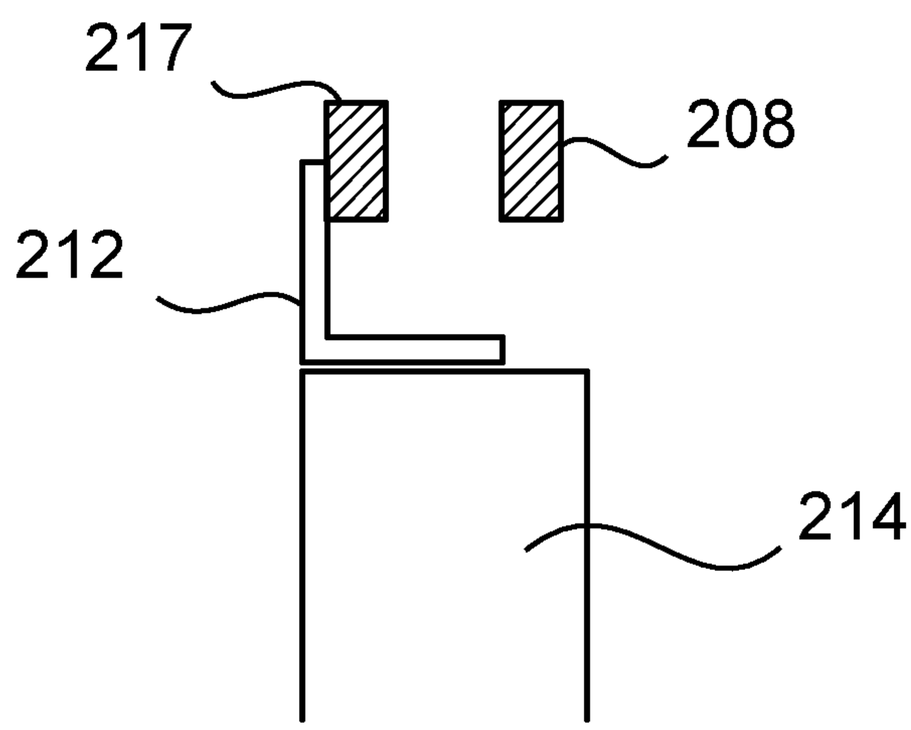

FIG. 2B

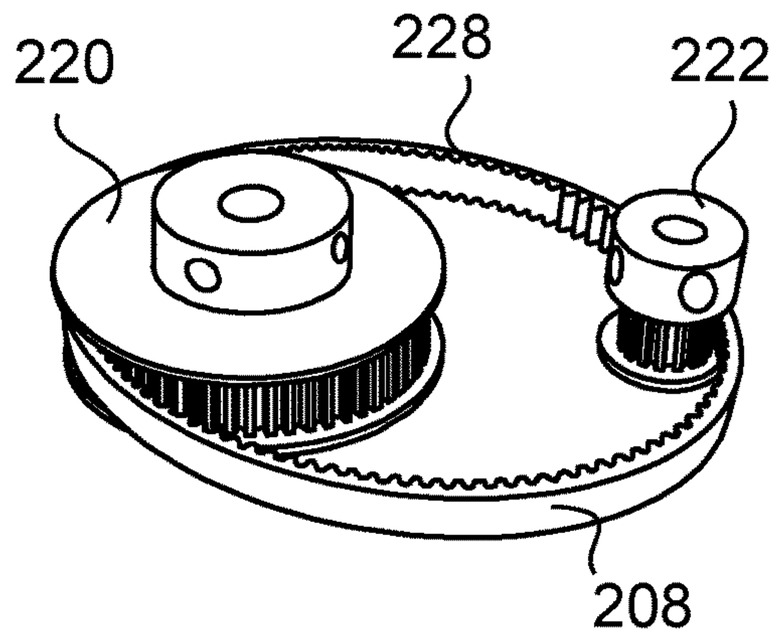

FIG. 2C

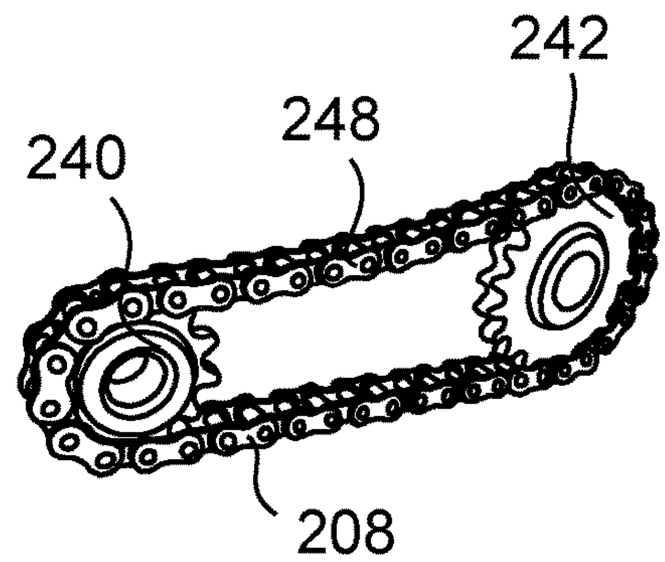

FIG. 2D

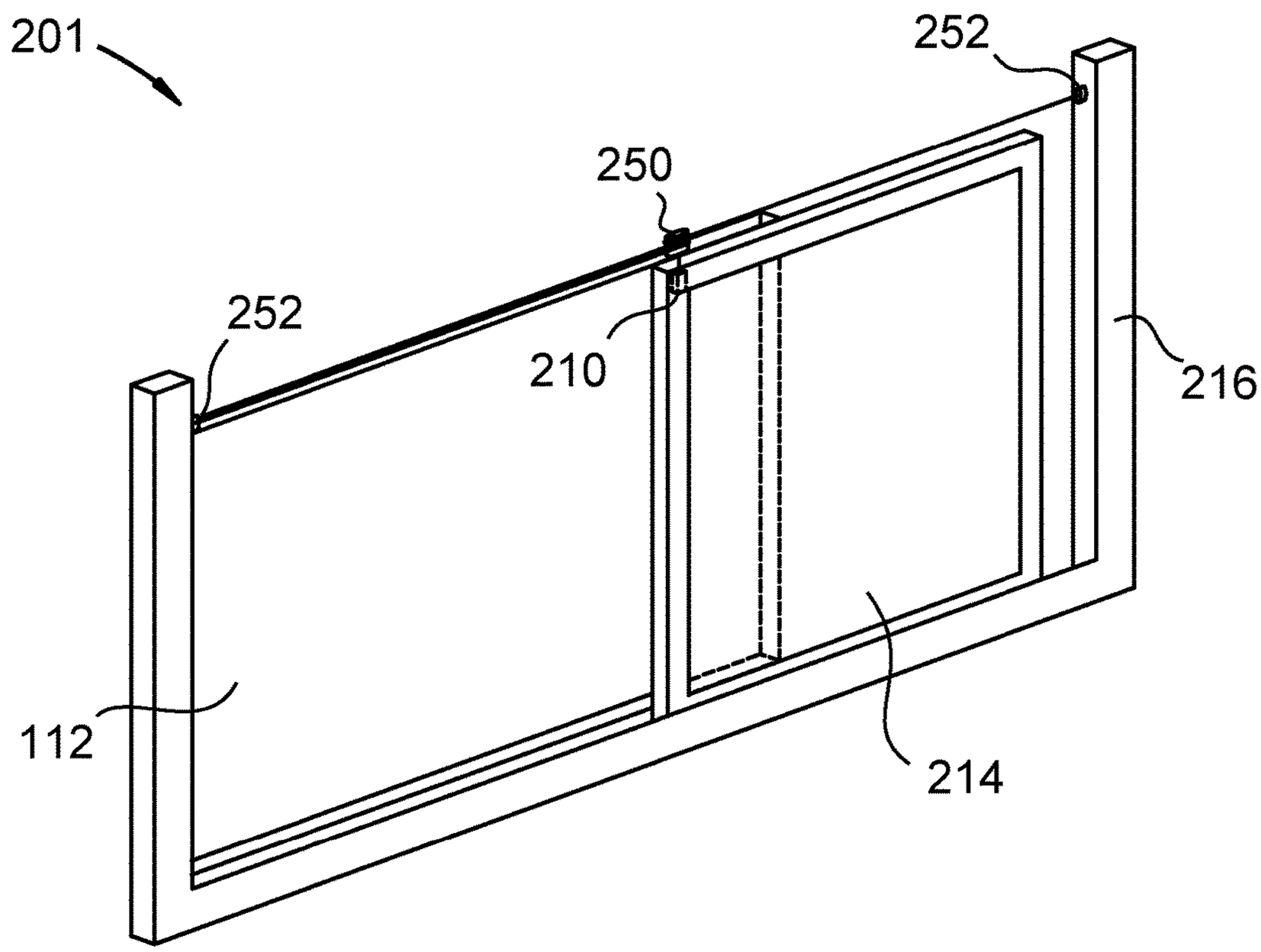

FIG. 2E

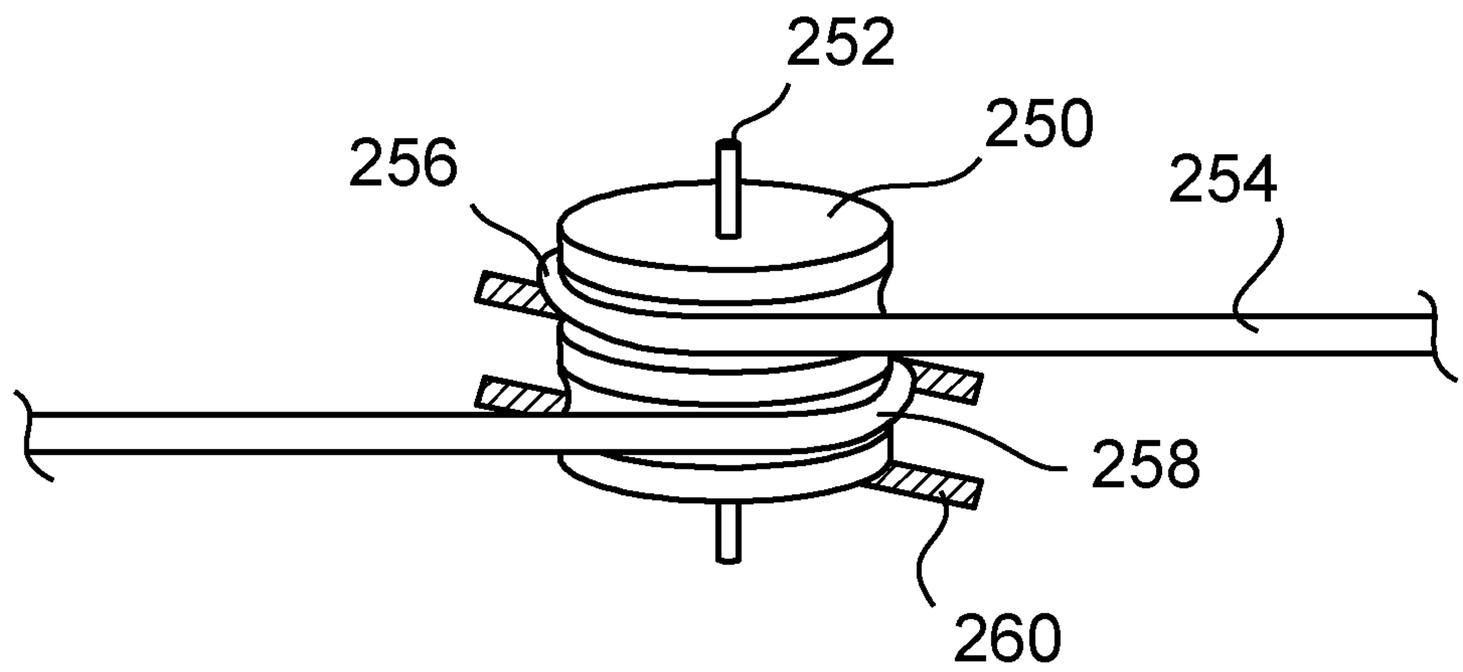

FIG. 2F

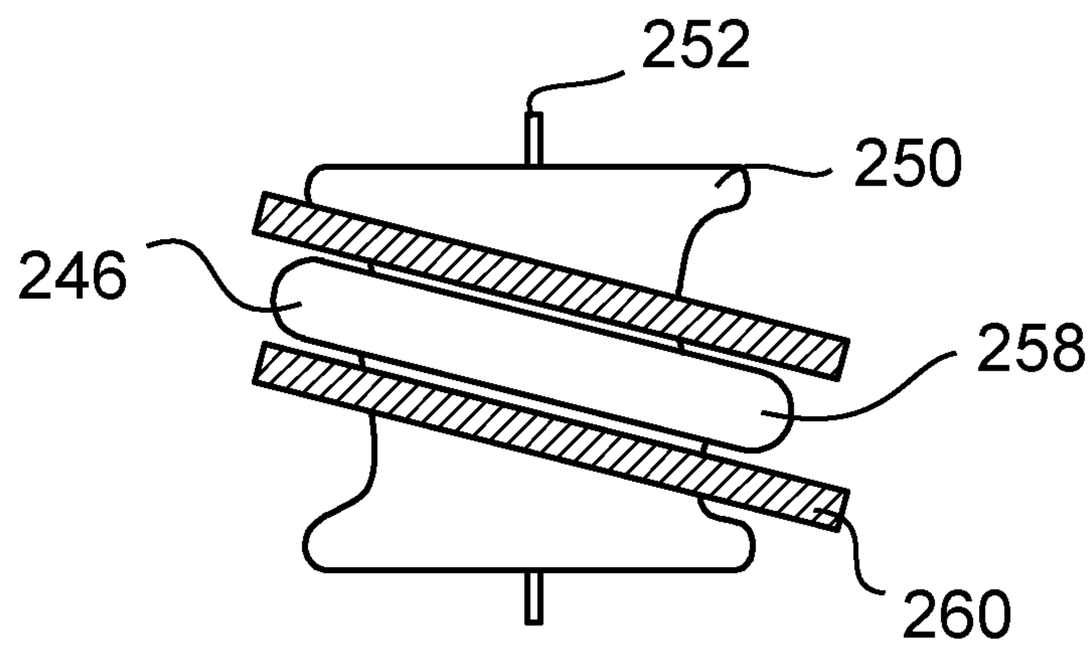

FIG. 2G

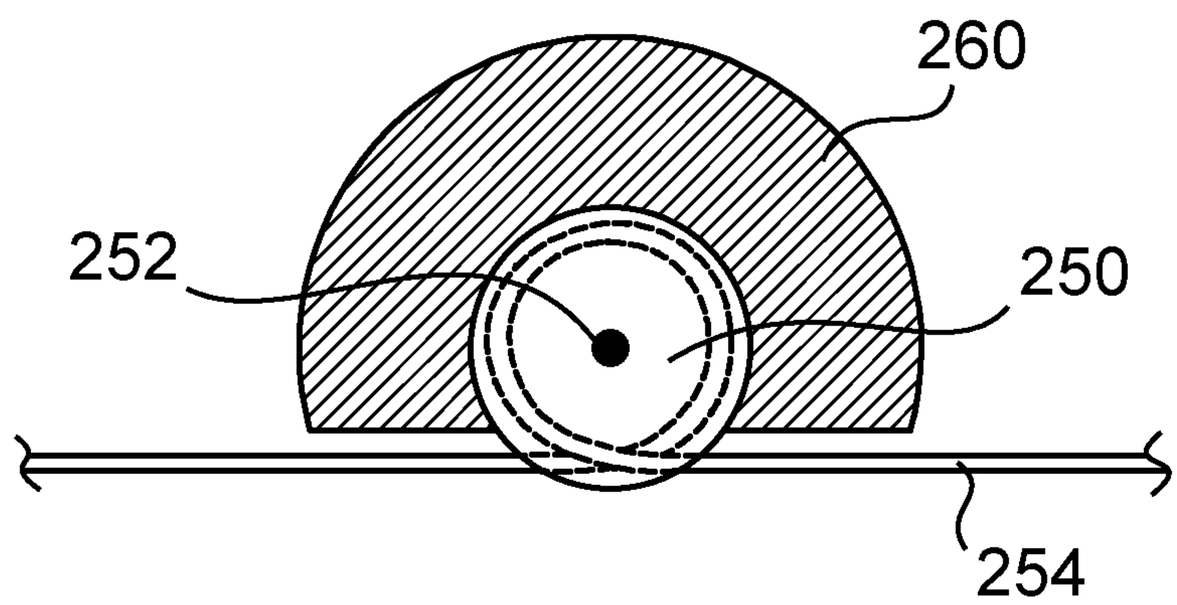

FIG. 2H

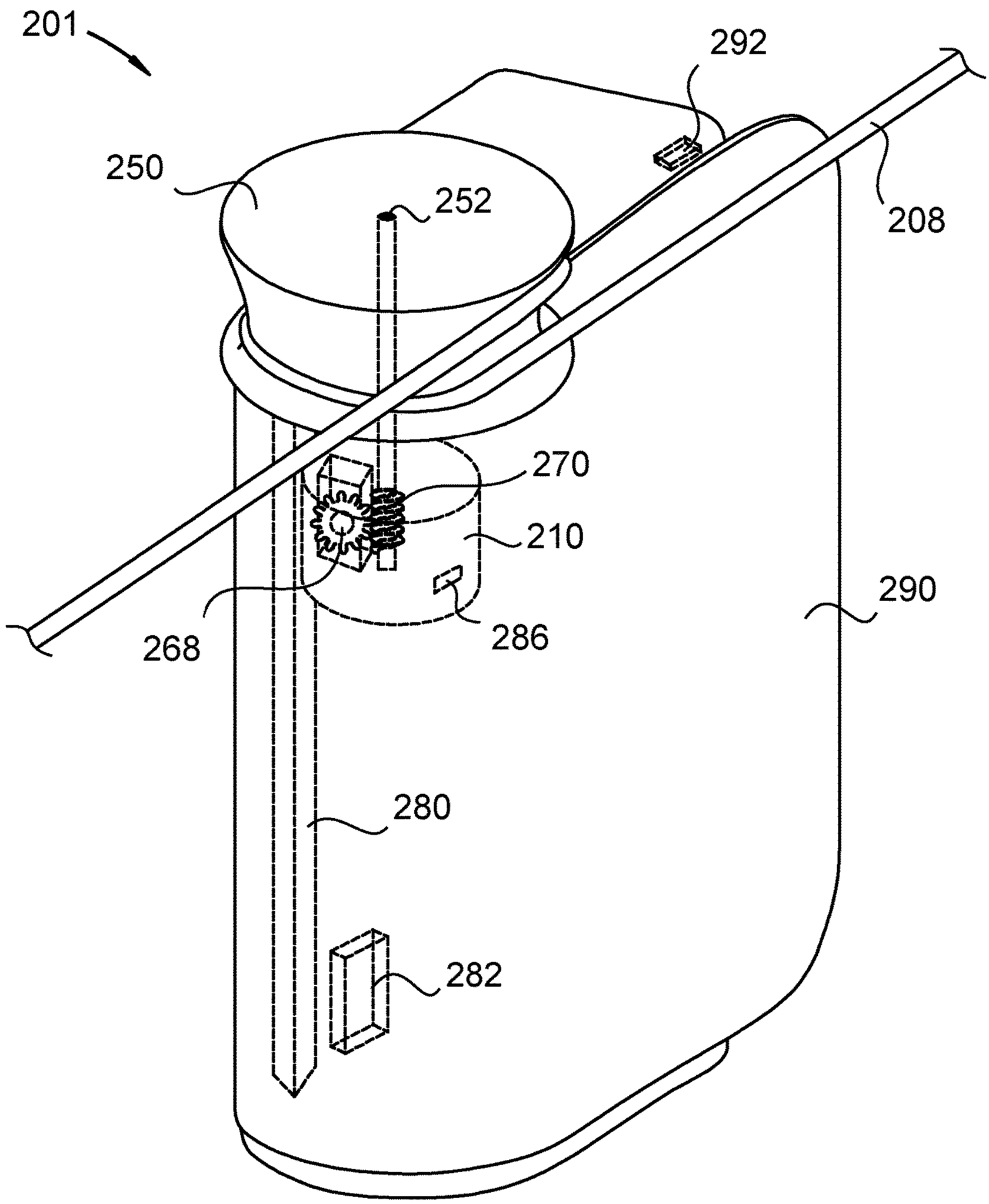

FIG. 2I

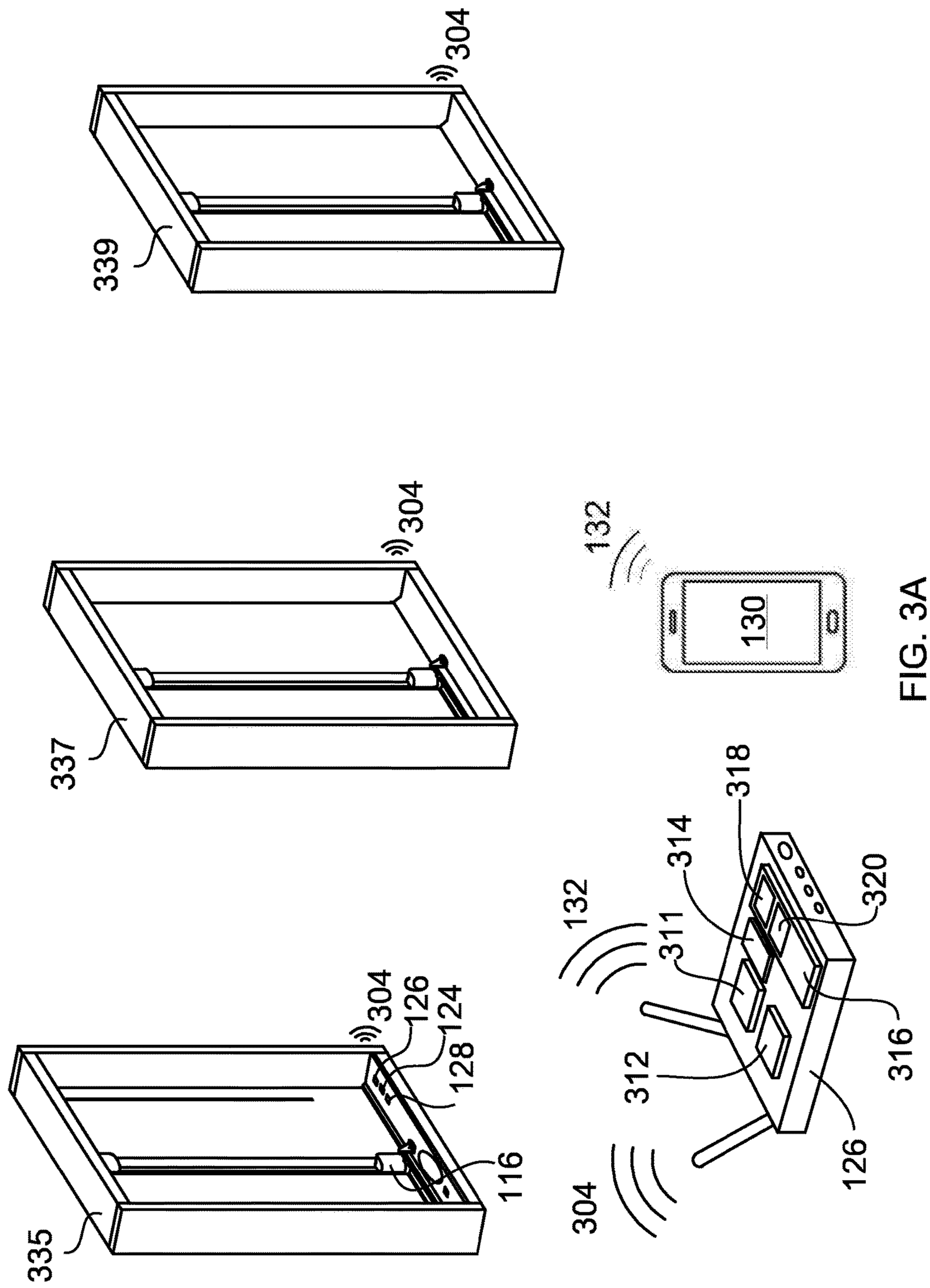
339
304
337
304
132
130
335
304
126
124
128
116
304
132
311
314
318
320
312
316
126

FIG. 3A

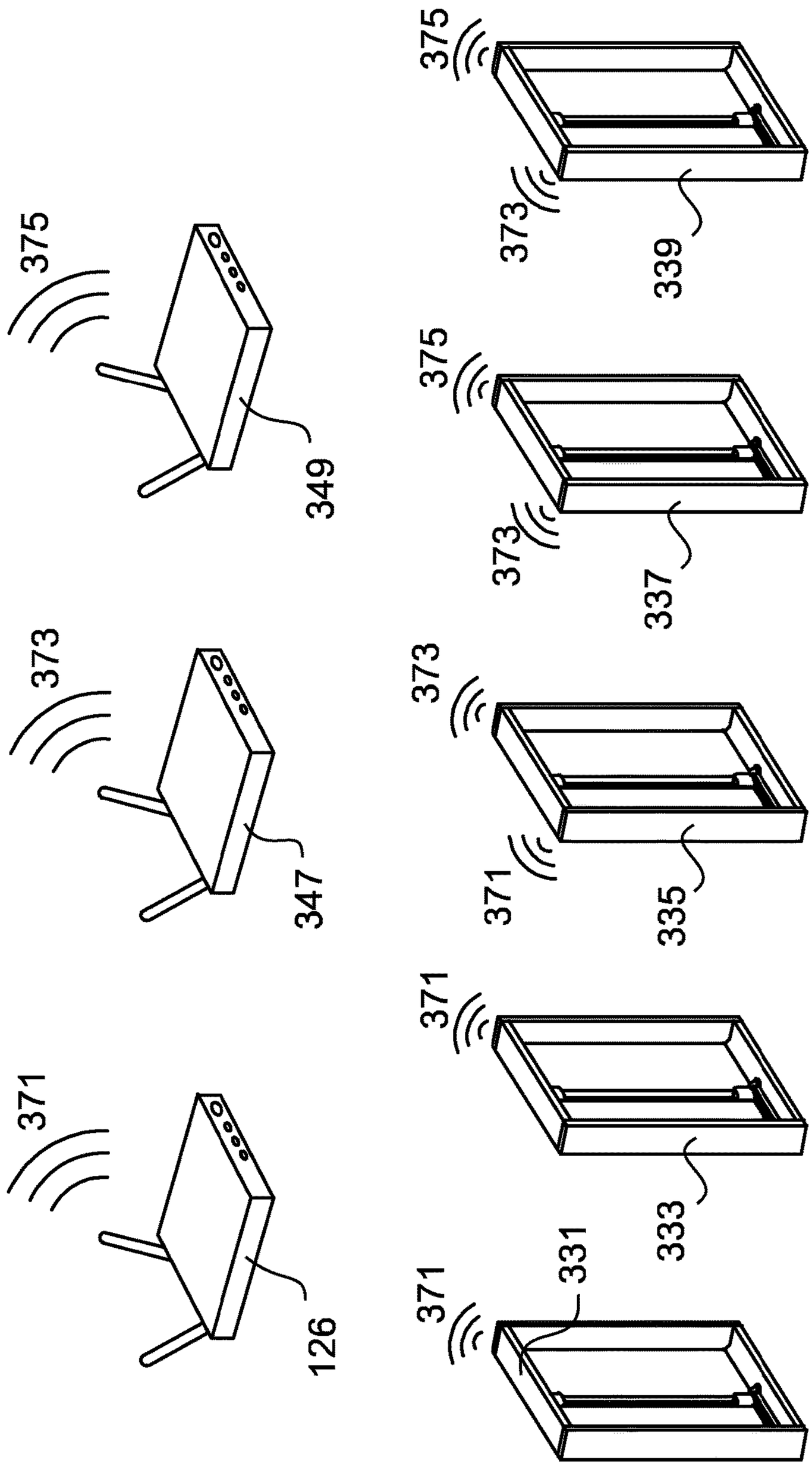
375
373
339
375
373
337
375
349
373
347
373
371
335
371
333
371
331
371
126

FIG. 3B

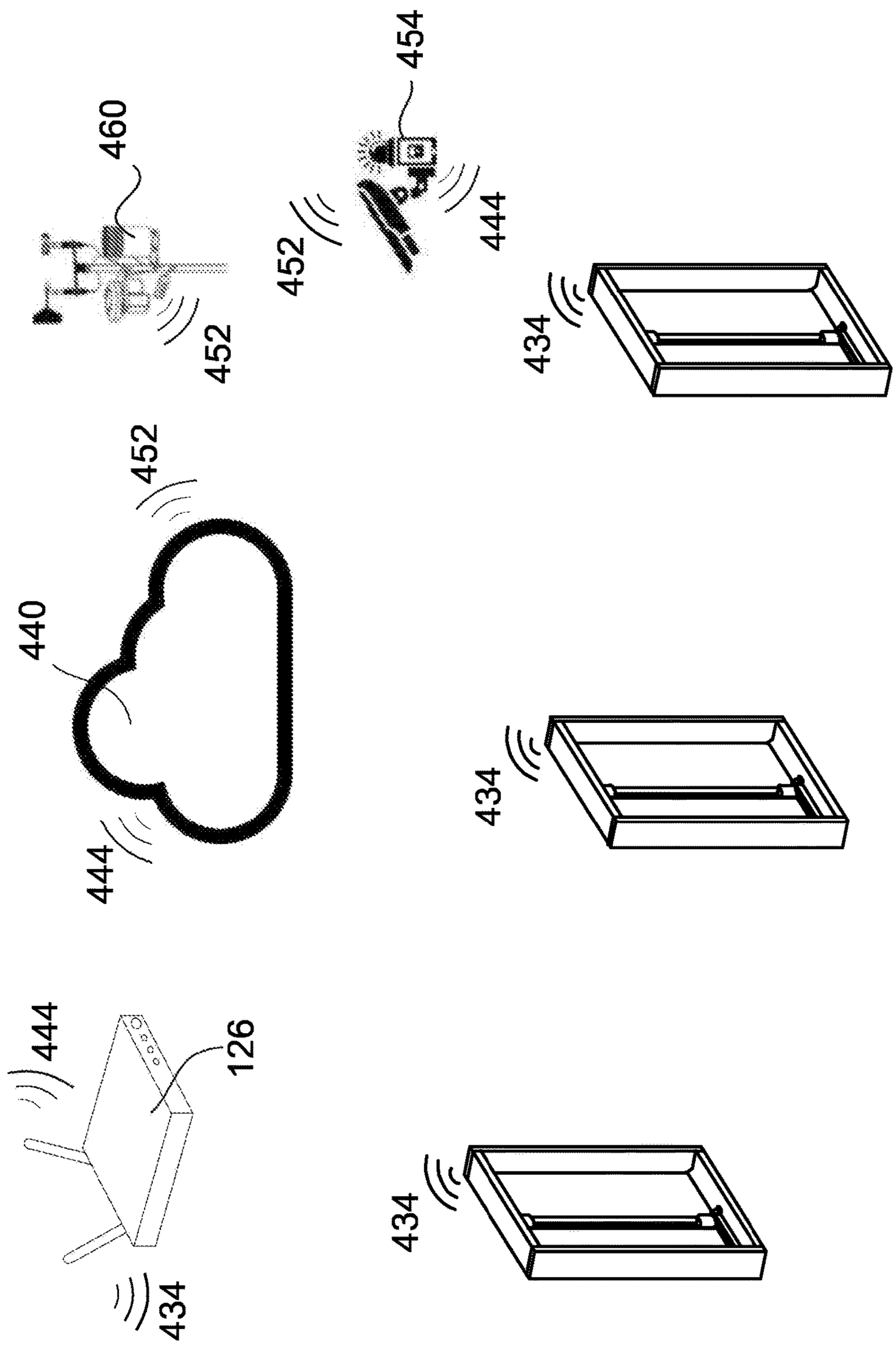

FIG. 4

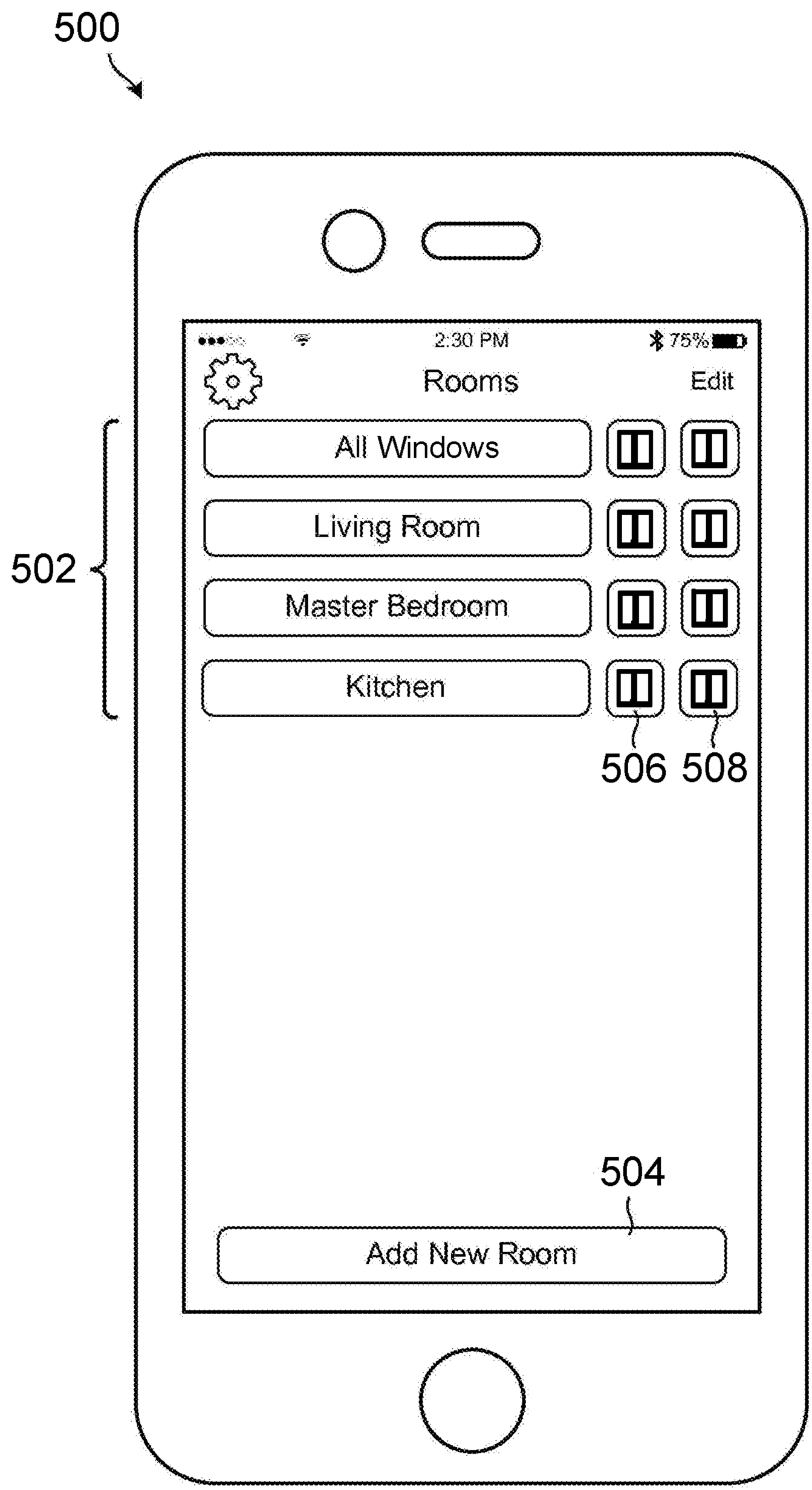
500
2:30 PM
75%
Rooms
Edit
All Windows
Living Room
Master Bedroom
Kitchen
502
506
508
504
Add New Room

FIG. 5

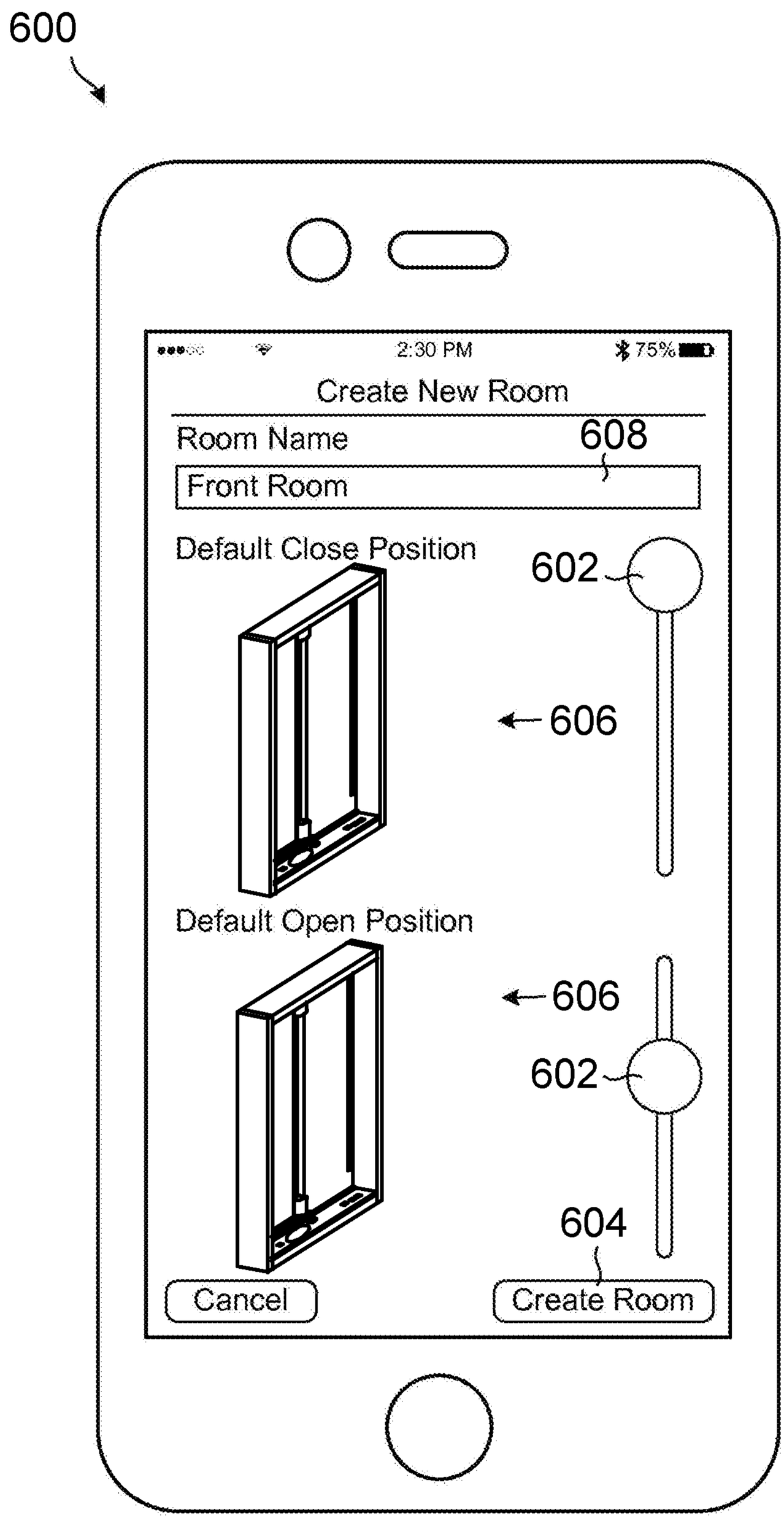
600
2:30 PM
75%
Create New Room
Room Name
608
Front Room
Default Close Position
602
606
Default Open Position
606
602
604
Cancel
Create Room

FIG. 6

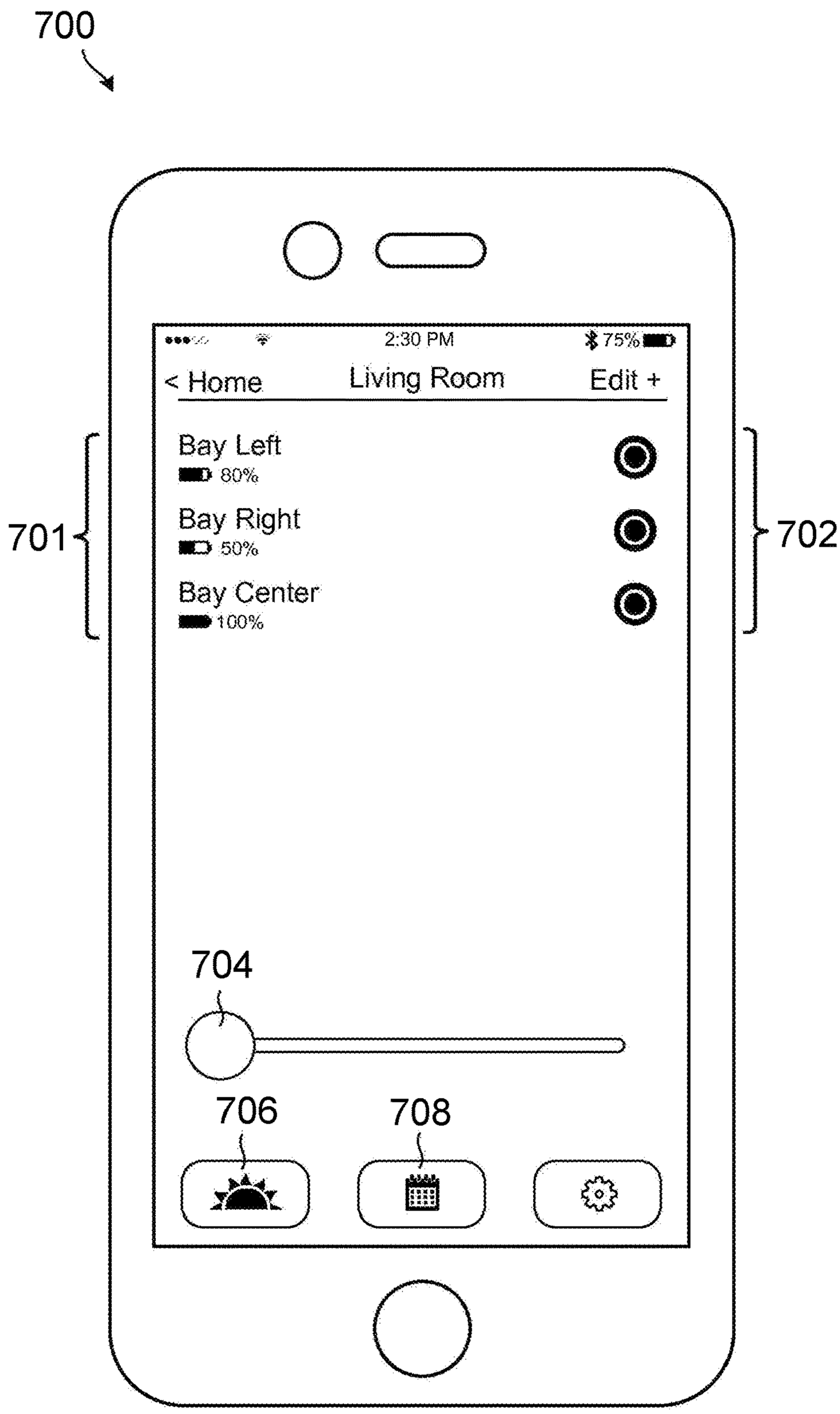
700
2:30 PM
75%
< Home
Living Room
Edit +
Bay Left
80%
Bay Right
50%
Bay Center
100%
701
702
704
706
708

FIG. 7

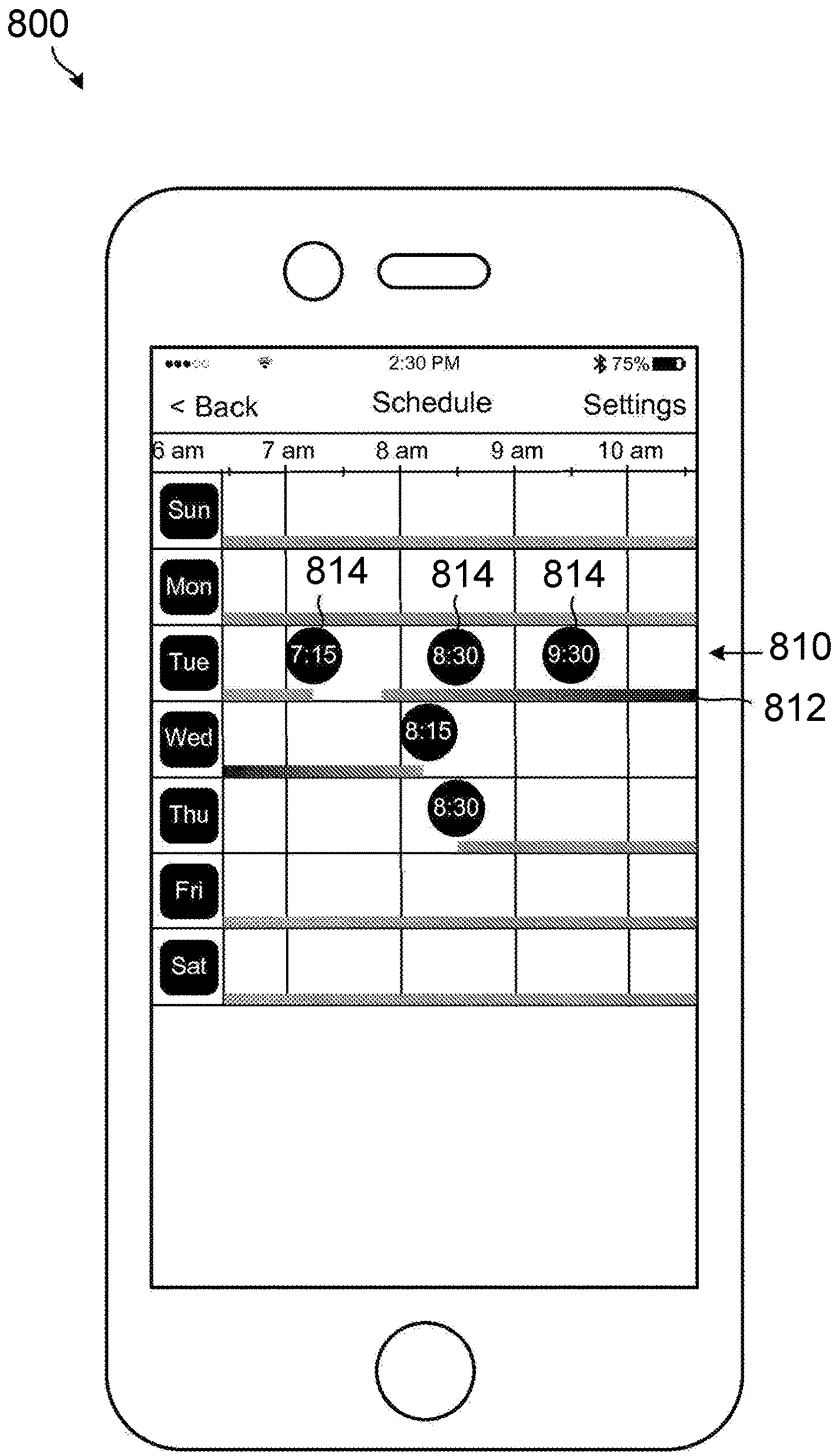
800
2:30 PM
75%
< Back
Schedule
Settings
6 am
7 am
8 am
9 am
10 am
Sun
Mon
Tue
Wed
Thu
Fri
Sat
814
814
814
7:15
8:30
9:30
8:15
8:30
810
812

FIG. 8

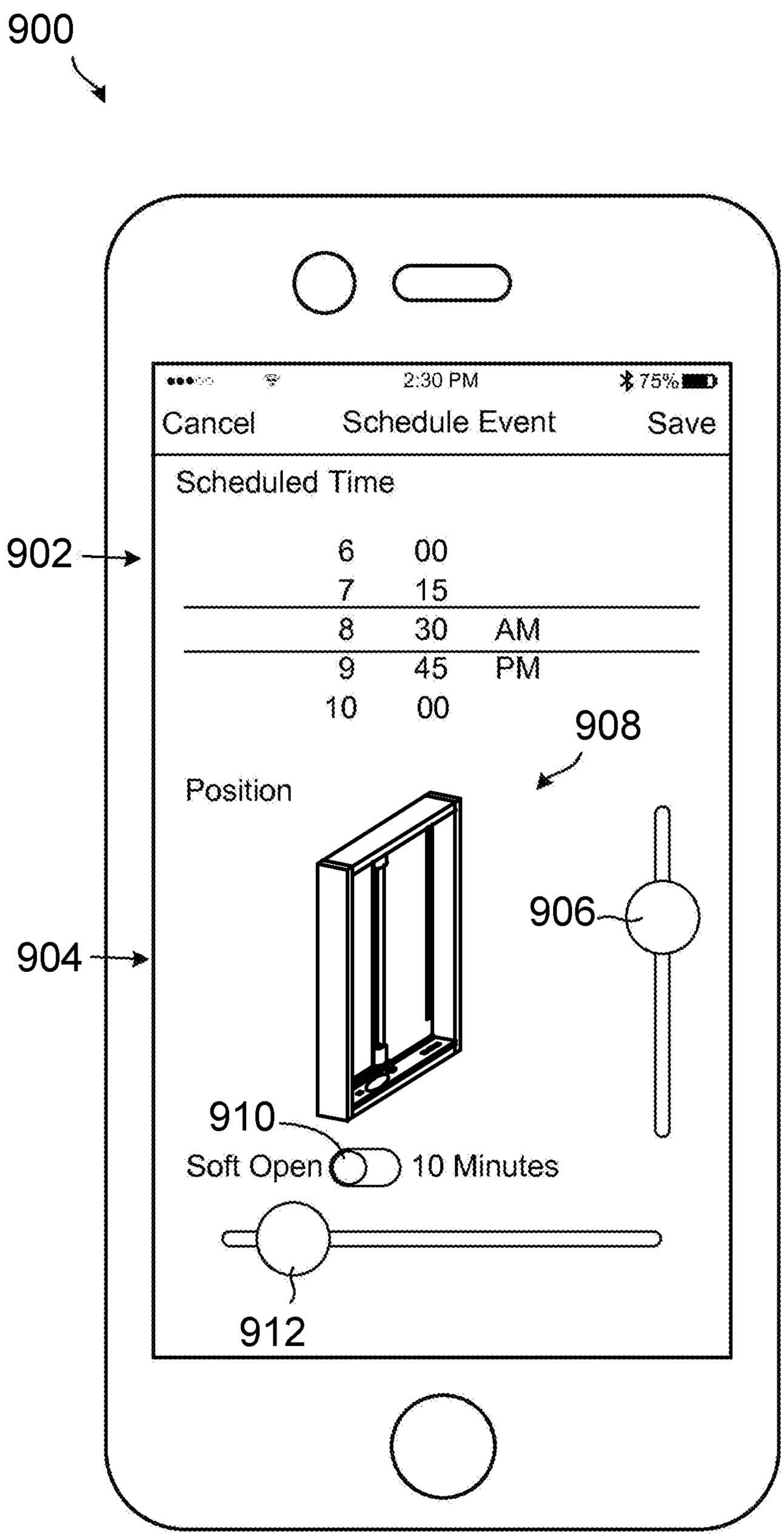
900
2:30 PM
75%
Cancel
Schedule Event
Save
Scheduled Time
902
6 00
7 15
8 30 AM
9 45 PM
10 00
908
Position
906
904
910
Soft Open
10 Minutes
912

FIG. 9

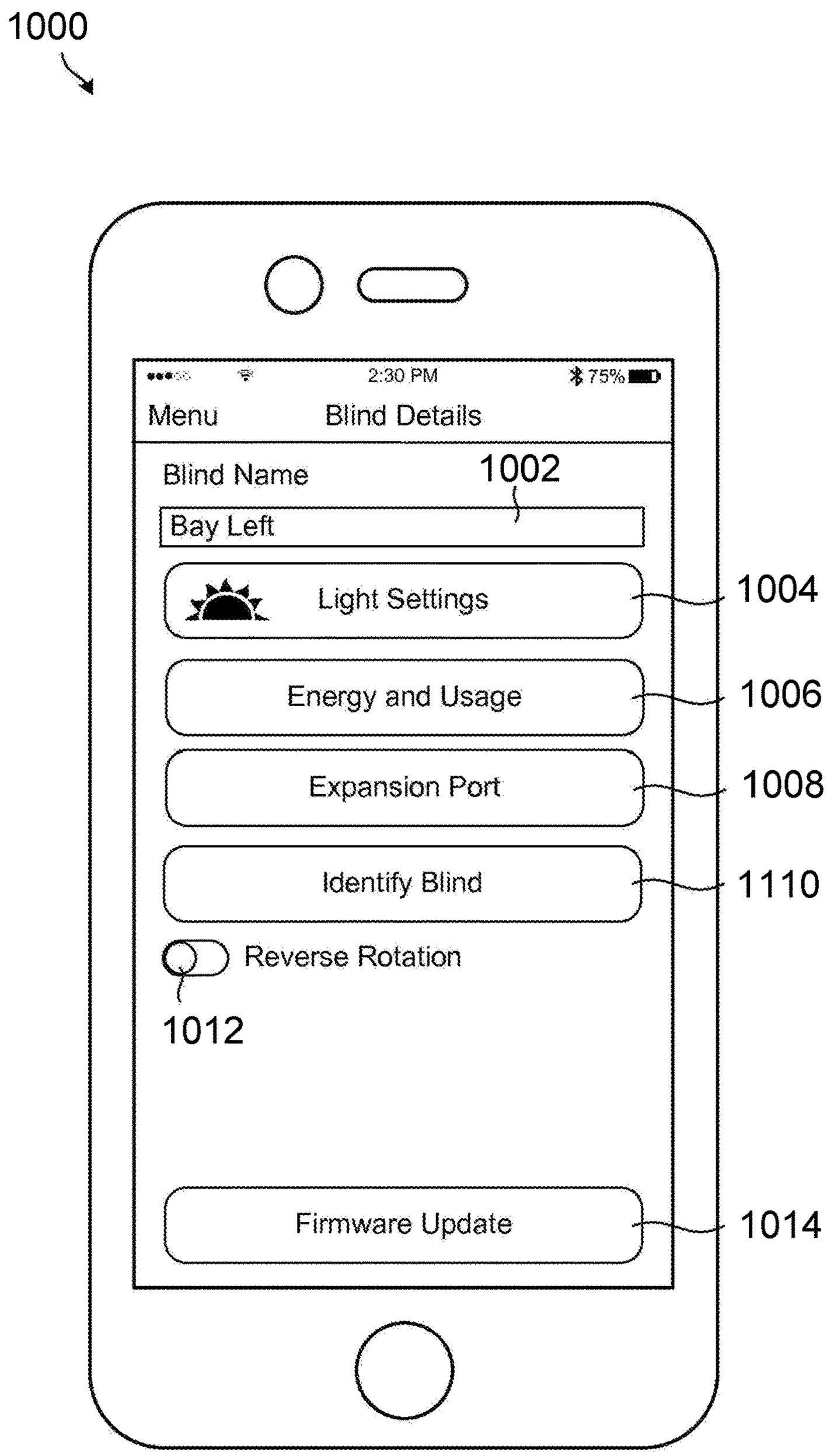
1000
2:30 PM
75%
Menu
Blind Details
Blind Name
1002
Bay Left
Light Settings
1004
Energy and Usage
1006
Expansion Port
1008
Identify Blind
1110
Reverse Rotation
1012
Firmware Update
1014

FIG. 10

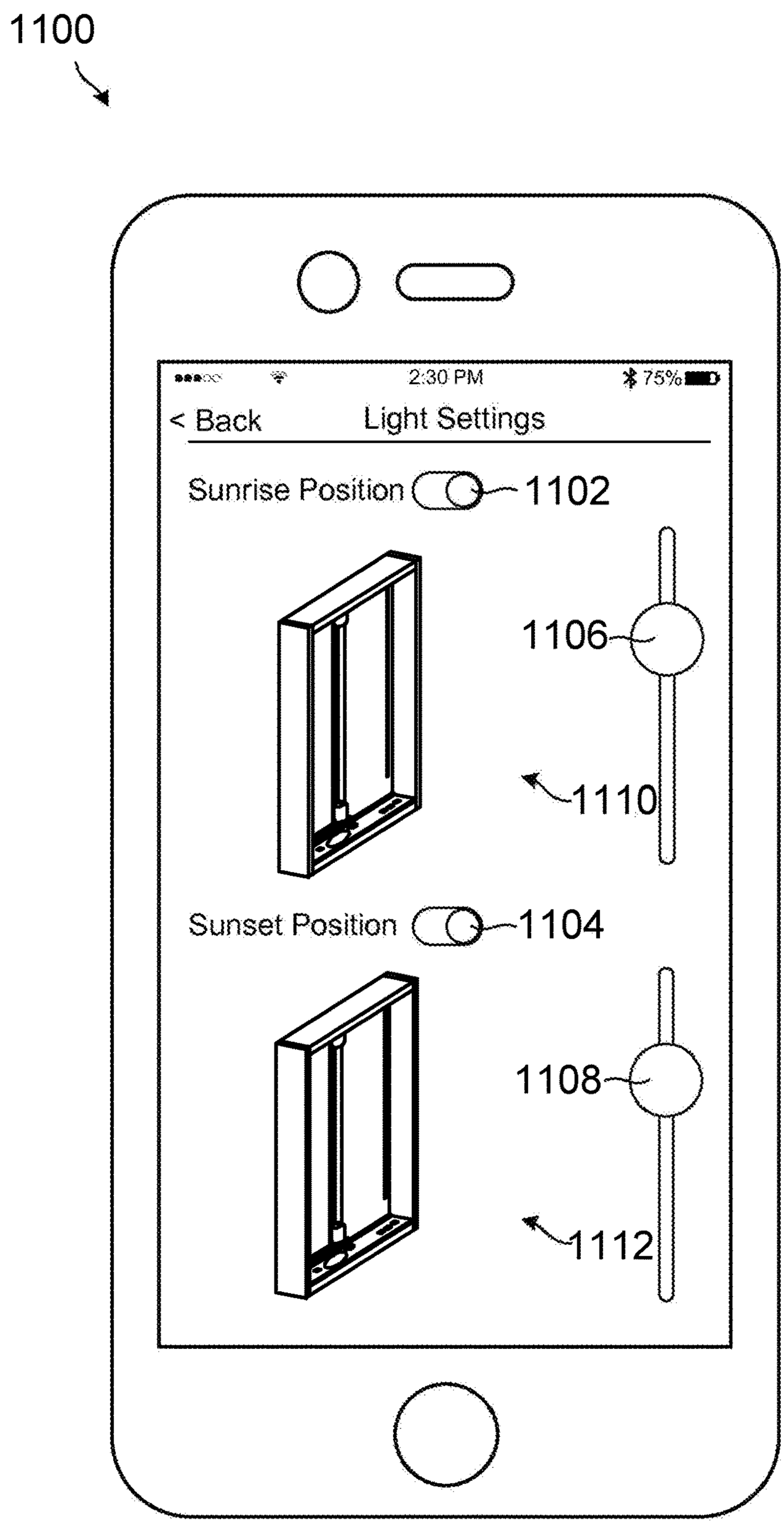
1100
2:30 PM
75%
< Back
Light Settings
Sunrise Position
1102
1106
1110
Sunset Position
1104
1108
1112

FIG. 11

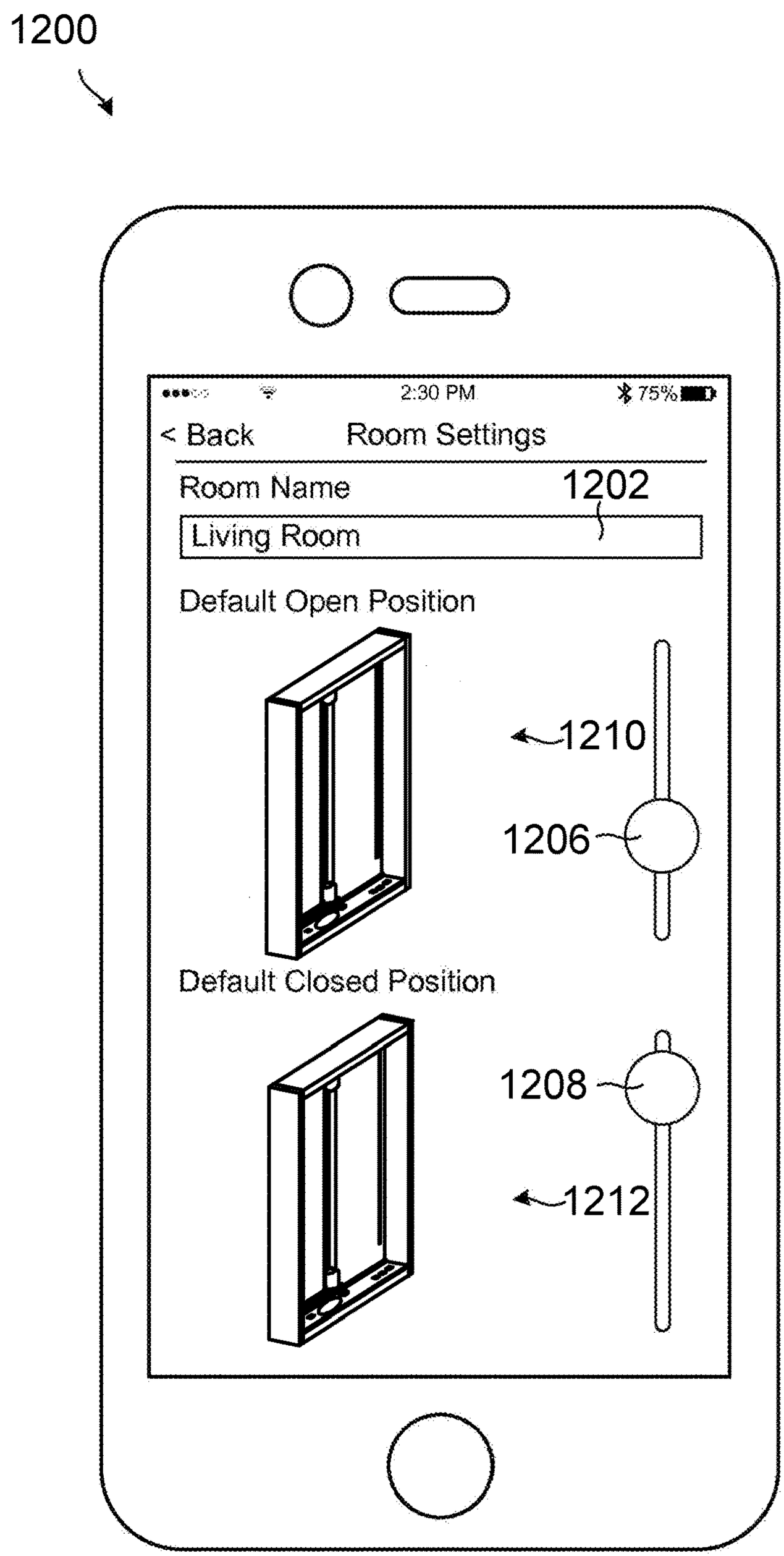
1200
2:30 PM
75%
< Back
Room Settings
Room Name
1202
Living Room
Default Open Position
1210
1206
Default Closed Position
1208
1212

FIG. 12

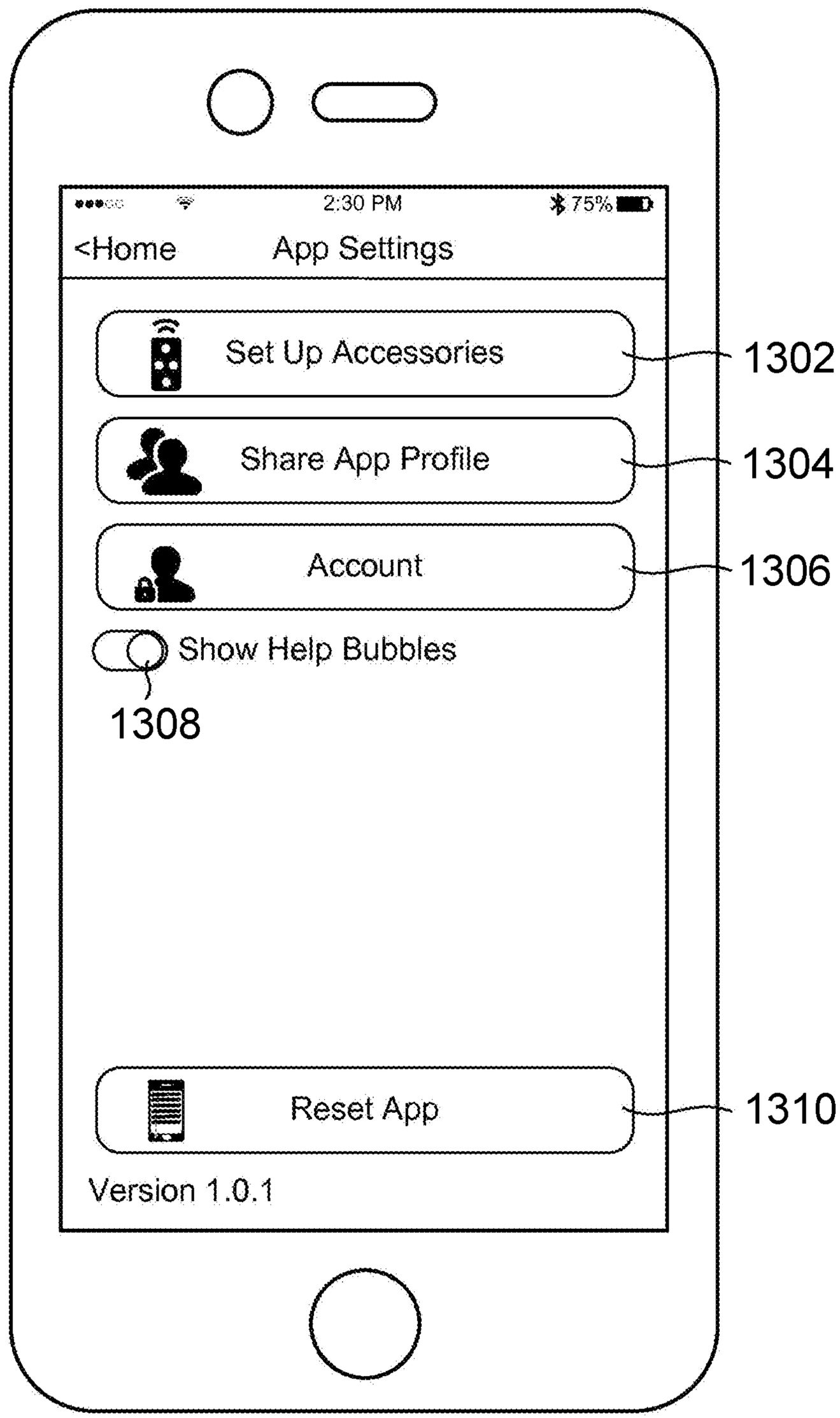
1300
2:30 PM
75%
<Home
App Settings
Set Up Accessories
1302
Share App Profile
1304
Account
1306
Show Help Bubbles
1308
Reset App
1310
Version 1.0.1

FIG. 13

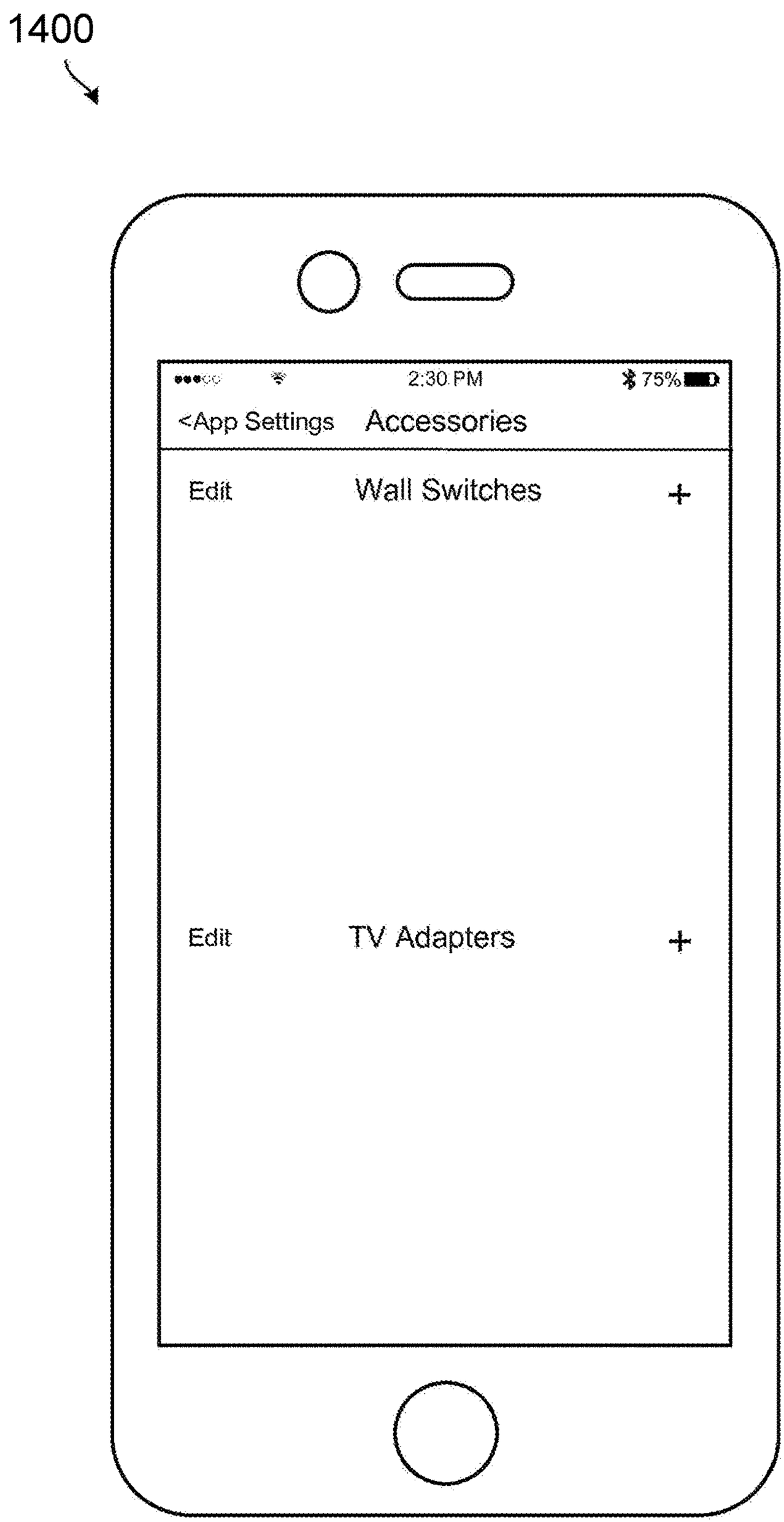
1400
2:30 PM
75%
<App Settings
Accessories
Edit
Wall Switches
+
Edit
TV Adapters
+

FIG. 14

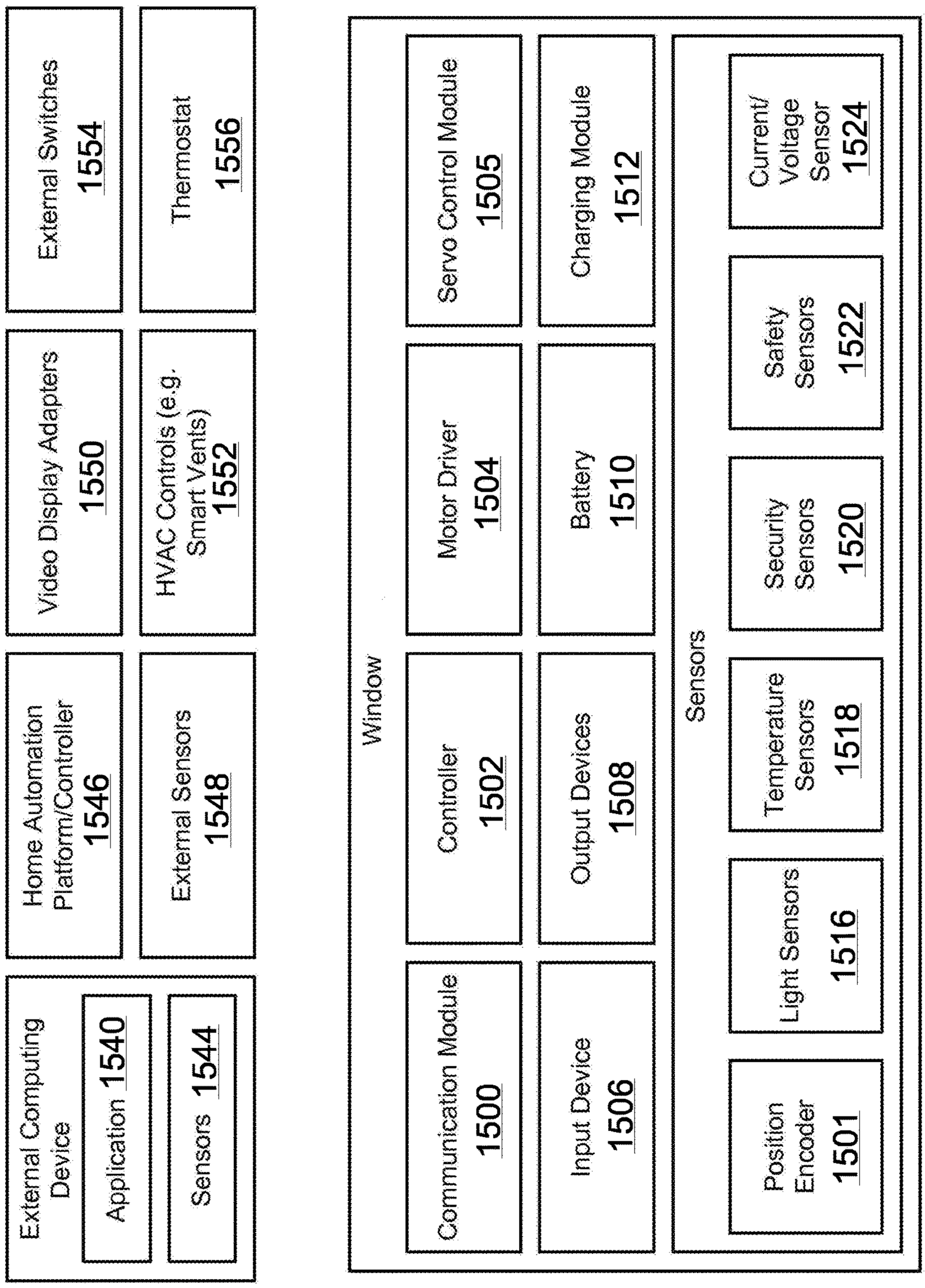
External Computing Device
Application 1540
Sensors 1544
Home Automation Platform/Controller 1546
External Sensors 1548
Video Display Adapters 1550
HVAC Controls (e.g. Smart Vents) 1552
External Switches 1554
Thermostat 1556
Window
Communication Module 1500
Input Device 1506
Controller 1502
Output Devices 1508
Motor Driver 1504
Battery 1510
Servo Control Module 1505
Charging Module 1512
Sensors
Position Encoder 1501
Light Sensors 1516
Temperature Sensors 1518
Security Sensors 1520
Safety Sensors 1522
Current/ Voltage Sensor 1524

FIG. 15

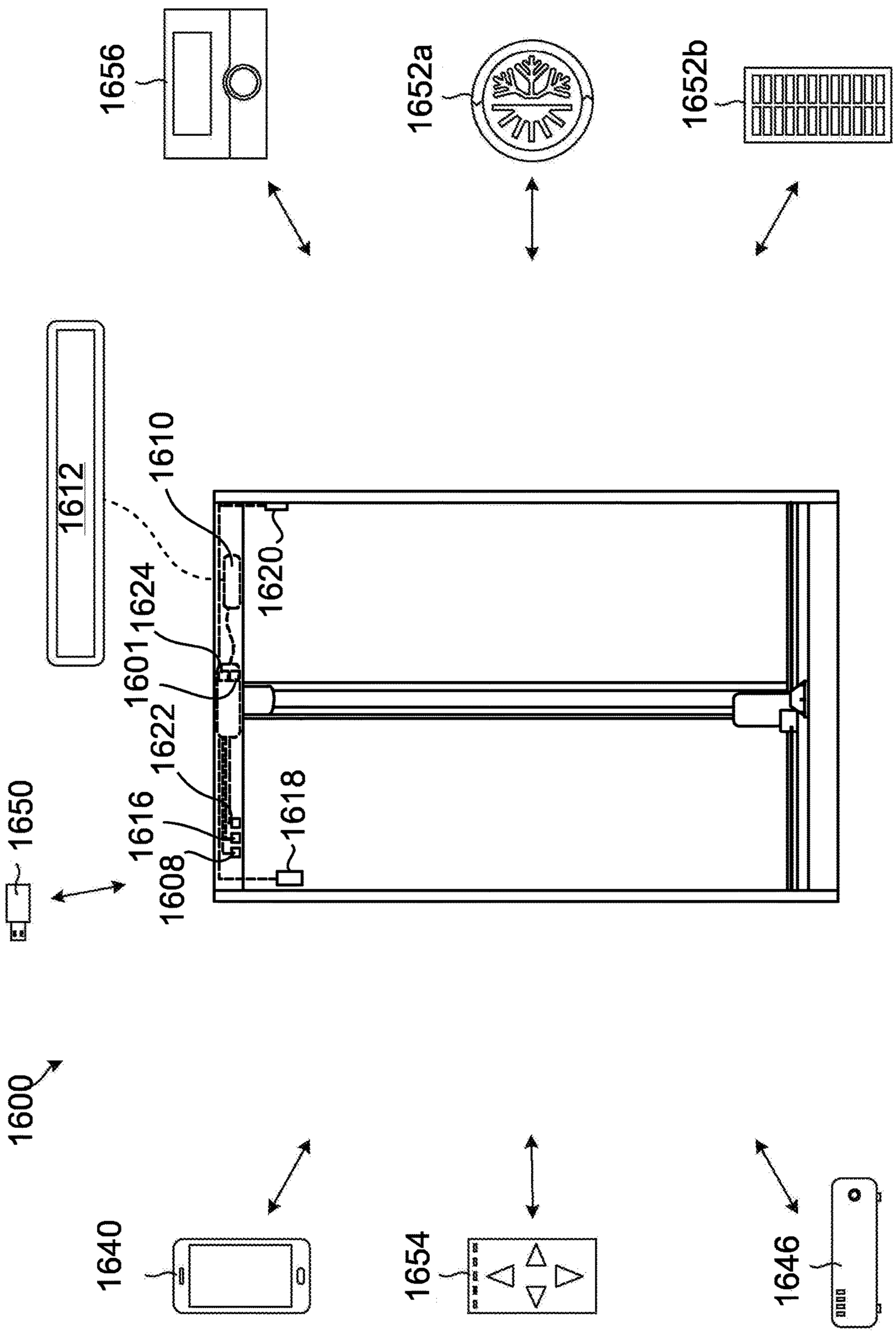
1600
1640
1654
1646
1650
1608
1616
1622
1601
1624
1610
1612
1618
1620
1656
1652a
1652b

FIG. 16

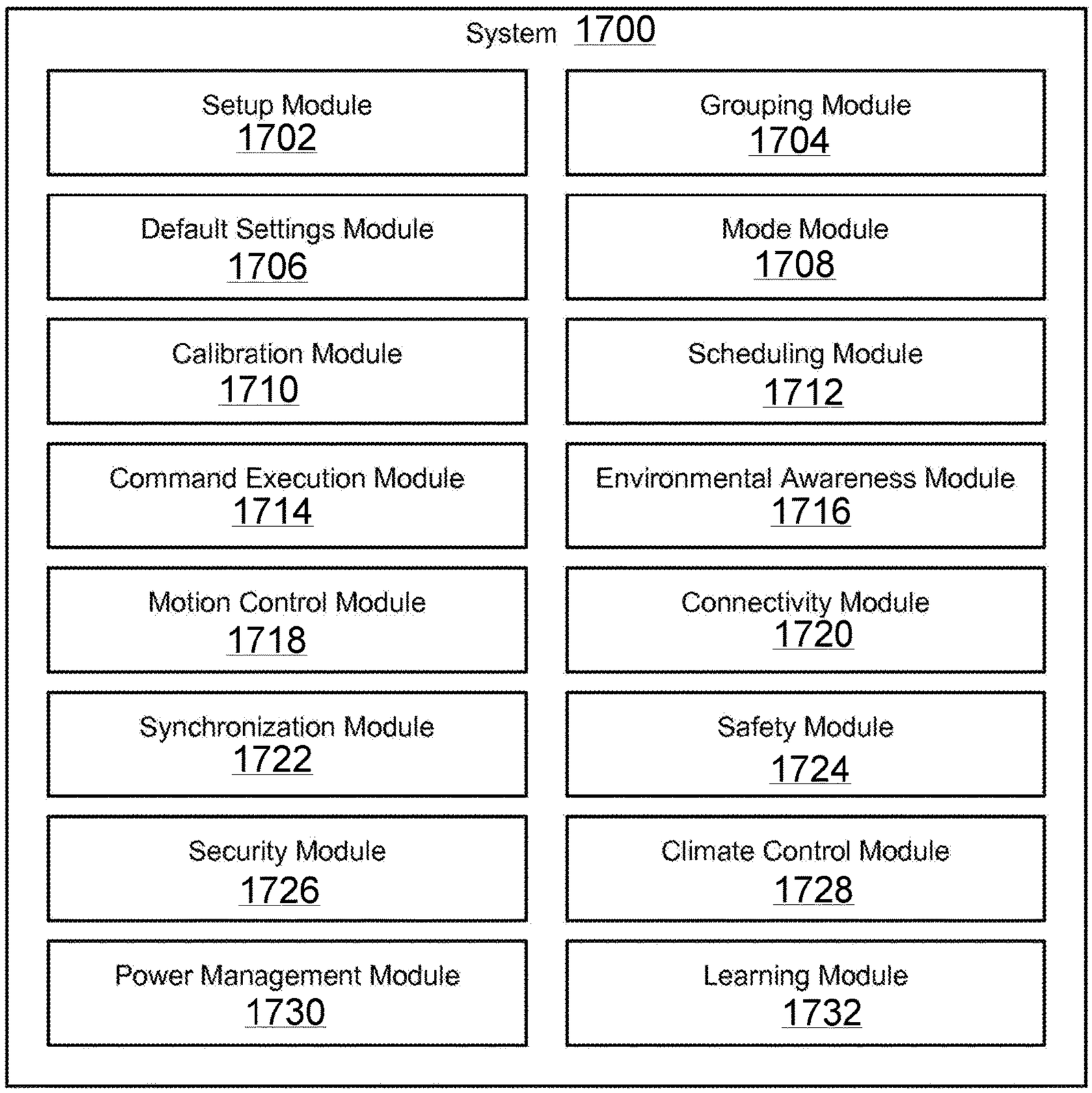
System 1700
Setup Module 1702
Grouping Module 1704
Default Settings Module 1706
Mode Module 1708
Calibration Module 1710
Scheduling Module 1712
Command Execution Module 1714
Environmental Awareness Module 1716
Motion Control Module 1718
Connectivity Module 1720
Synchronization Module 1722
Safety Module 1724
Security Module 1726
Climate Control Module 1728
Power Management Module 1730
Learning Module 1732

FIG. 17

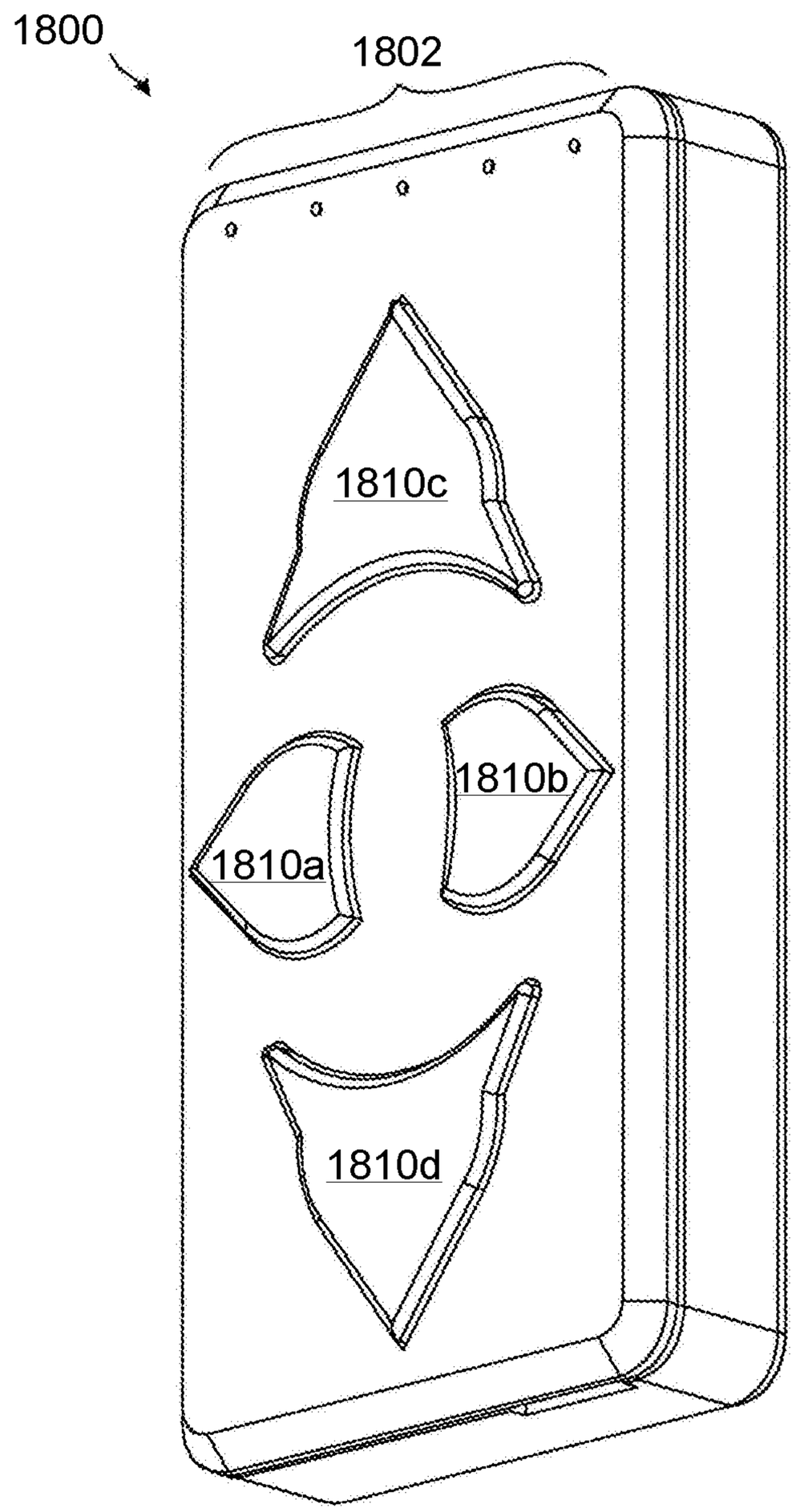

FIG. 18

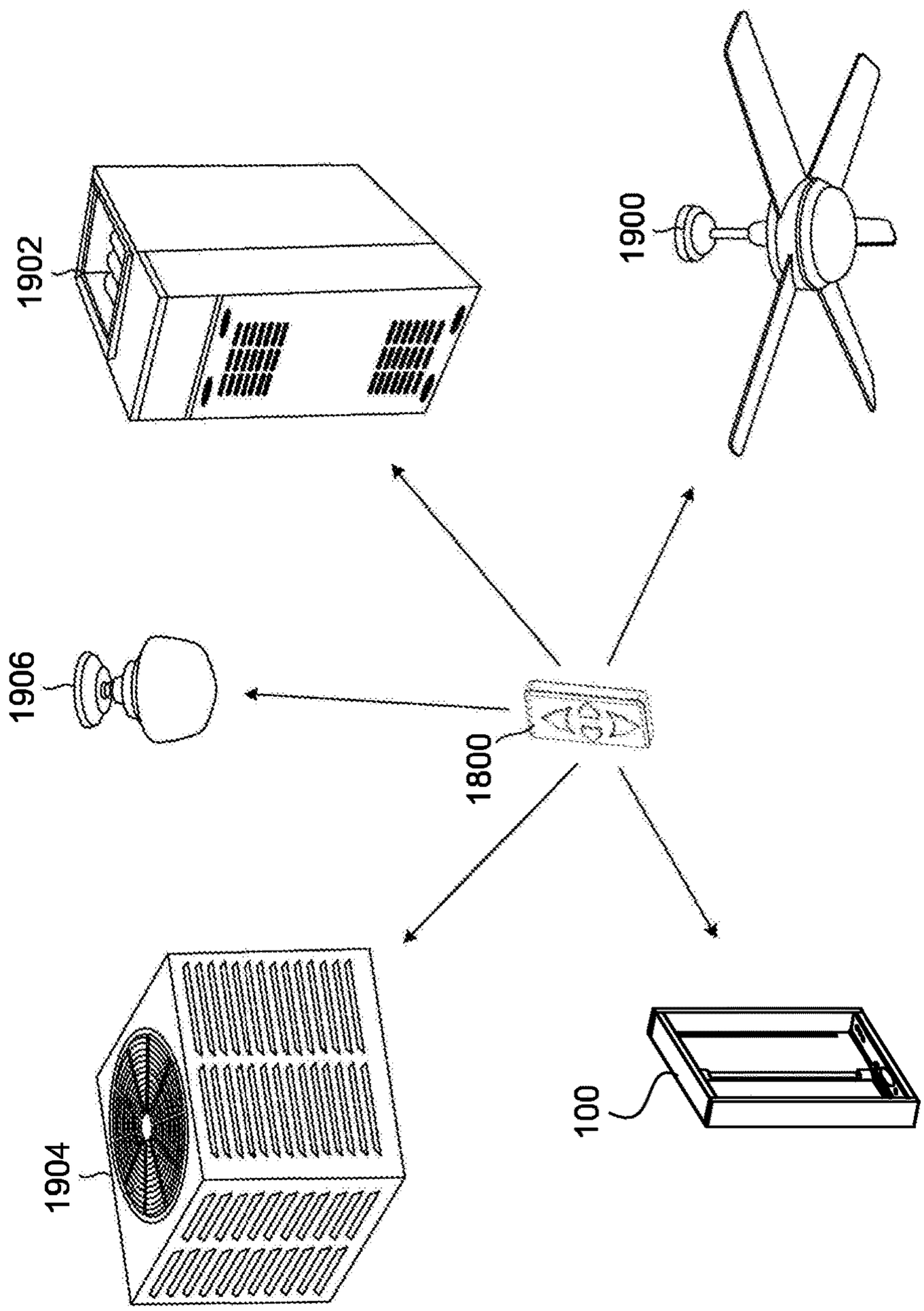

FIG. 19

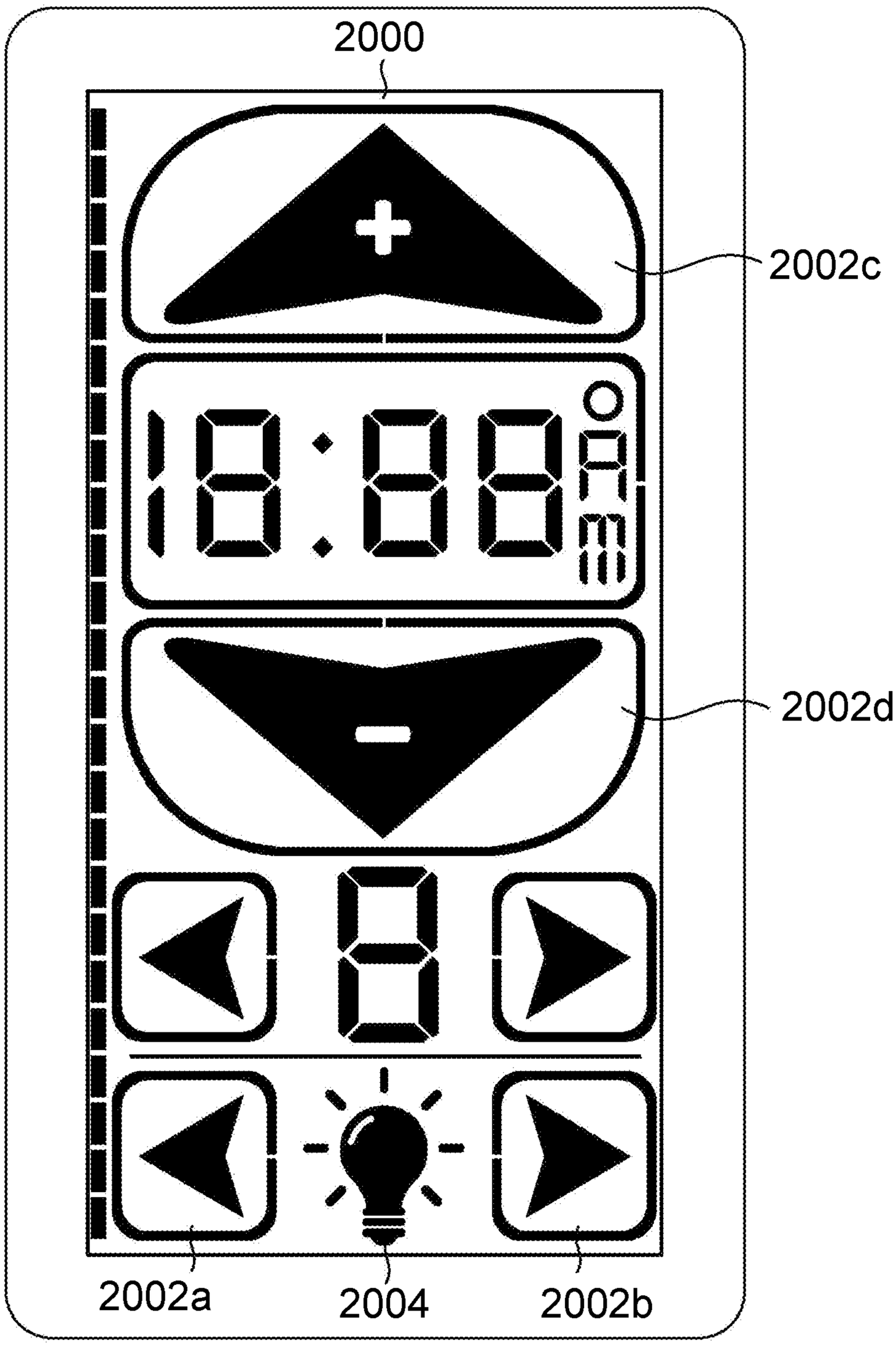

FIG. 20

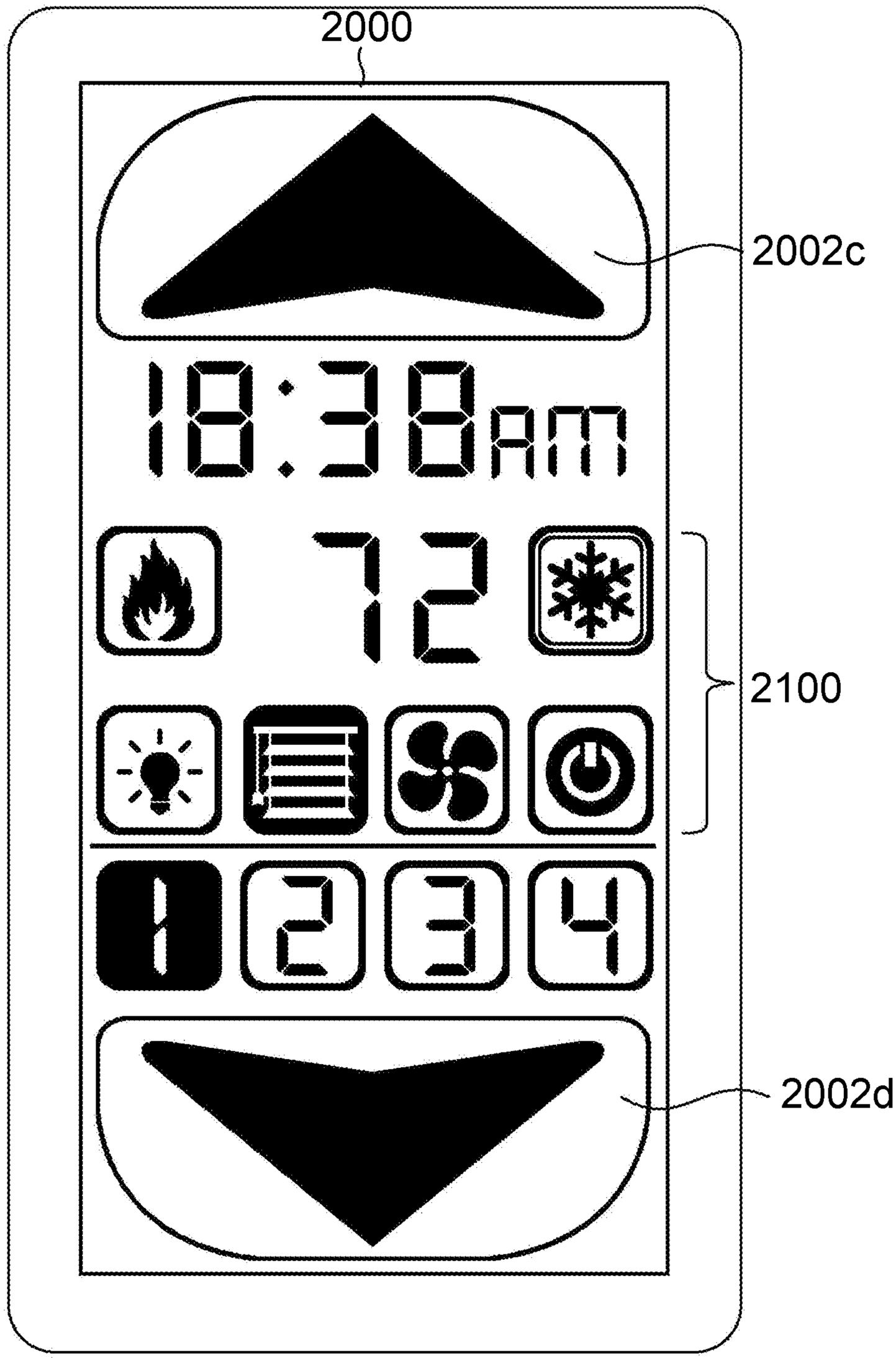

FIG. 21

AUTOMATED WINDOW WITH SENSORS

FIELD OF THE INVENTION

[0001] The devices, systems, and methods described herein relate generally to the Internet of Things. More particularly, the devices, systems, and methods described herein relate to smart home devices.

BACKGROUND

[0002] Home automation, also known as home monitoring, home control, smart home, connected home, or the like, is becoming more and more prevalent. This increase is due in large part to modern-day advances in software and electronics, coalescence around a number of home automation protocols, and larger numbers of manufacturers willing to build smart devices using these protocols. Home automation may be as simple as automating a few devices in a relatively small home or space, or as complicated as automating an entire residence or building including hundreds or even thousands of smart devices. The number and type of smart devices that are available has dramatically increased as more and more manufacturers, including various major technology players, are getting involved in this space. Some of the most popular home automation devices currently utilized include lights, window coverings, thermostats, audio and video systems, door locks, security systems, and the like.

[0003] Many improvements and developments have been made in the field of Smart Home devices. However, many devices, especially existing devices in a residence or business (such as windows, window coverings and doors, for example), simply were not designed or configured to be smart.

[0004] Traditionally, windows and doors are opened and closed manually for ventilation, energy or security or safety needs. For example, a window or door may be closed and locked while the owners are away from home to protect the home from entry by an intruder. A window or door may be opened in order to vent noxious gases from the interior of the home to the outside. When the inside of the house is hot, a door or window may be opened to allow cooler outside air to enter the house.

[0005] Outfitting a home with smart devices can be a difficult decision for a home or business owner. Many times, the home or business owner already owns a large number of conventional non-smart devices. Replacing these devices can be expensive and/or wasteful. For example, a home or business owner may have already made a substantial investment in manually-operated windows. Replacing the windows with automated versions of the same can be prohibitively expensive in addition to requiring significant amounts of labor. Retrofitting the windows can also be problematic in that multiple different designs and sizes of windows may exist and retrofit solutions may be limited in terms of the designs and sizes they can work with. Retrofitting the windows may also require significant modifications to the windows to make the retrofit solution function properly. In certain cases, retrofitting windows may require removing the windows and cutting or otherwise modifying various components thereof.

[0006] In order to automate motorized windows, it may be difficult to extend control wiring to each of the locations, especially in existing buildings or retrofit applications. User control, both at the motorized windows and from remote locations is needed.

[0007] Another challenge with automating motorized windows is the power required to motorize the system. Motorized windows do not normally have power outlets near the mounting location. Batteries may be included in the motorized window system, however over a period of time these batteries will run out of power and will need to be replaced. An option to overcome this challenge is to provide solar panels to charge the batteries. Depending on the power requirements of the system, the size and location of the solar panel may need to be large in order to keep the batteries charged. It may not be desirable in many applications to have large or obtrusive solar panels.

[0008] For systems with multiple motorized windows, a simple wireless network may be implemented to control either a single motorized window or a group of motorized windows. However, there are many cases where a simple wireless network may not have the needed range to reach every motorized window in the system. More powerful wireless technologies may be implemented that increase the range, however these technologies require more power.

[0009] In view of the foregoing, what is needed is a system to automate motorized windows. Ability to wirelessly control the motorized windows, both locally (in the building) and from remote locations via the cloud is also needed. Ideally, such a system will enable different types and sizes of existing motorized windows to be automated. Such apparatus and methods will also ideally enable retrofitting motorized windows while minimizing modifications thereto. Yet further needed are methods that take advantage of the special placement of motorized windows within a home or building.

[0010] Other features needed for automated windows include sensors at or near the windows to allow control of the windows according to local or remote conditions to be realized by passing sensor data to a controller. Temperature both inside and outside the building, along with weather data and other conditions may influence how and when the windows are opened and closed.

[0011] Along with using sensor data to determine window control, calibration of the motors and actuators in the system may be carried out by monitoring the current, voltage and other electrical signals in the system.

[0012] User control at the motorized windows and at remote locations is also needed. Specifically, apparatus and methods are needed to enable motorized windows to provide features and functions not normally associated with motorized windows but capitalize on their placement between the interior and exterior of the building, near entryways, or other openings. Another main need is to provide a system that has low power consumption, thus reducing the electrical load on the battery. Lower power consumption extends the life of the batteries and reduces the size of charging systems such as solar panels. A way to provide communication and control of a group of motorized windows consuming a minimal amount of power is needed.

SUMMARY

[0013] In one aspect, the invention is directed to an automated window mechanism that includes an electrically powered actuator configured to move a slidable window between a closed position and an open position and a power

source, providing power to the actuator. Two or more sensors are configured to generate signals related to a different environmental condition. A controller is adapted to receive the signals from the two or more sensors and operate the actuator to move the slidable window to an open or closed position as appropriate.

[0014] The controller may include one or more communication systems, including Bluetooth communication chips, Internet Wi-Fi transceivers, network transceivers, a wireless mesh network device such as Z-Wave network transceiver, or a combination thereof. The one or more communication systems may communicate with at least one of an external remote controller and a cloud-based network. The one or more communication systems may receive instructions from the external remote controller, generate signals instructing the first motor to rotate in a direction, receive signals from the first motor regarding a status of the first motor, and generate a signal informing the external remote controller of the status of the first motor.

[0015] The device may include a power line or batteries, preferably rechargeable batteries, that power the motor. The device may also have a solar panel adapted to charge the batteries. The sensors may consist of at least one of carbon monoxide; carbon dioxide; smoke; fire; humidity; moisture; dust; pollen; environmental; motion; electromagnetic; electrochemical; electric current; electric potential; magnetic; radio; air flow; accelerometers; pressure; electro-acoustic; camera; electro-optical; photoelectric; electrostatic; thermoelectric; radio-acoustic; air quality; motion; attempted movement of the slidable segment; intrusion; sunlight and noise; and combinations thereof. The controller may receive signals from the two or more sensors and operate the first motor to move the slidable frame to an open or closed position as appropriate without input from a user.

[0016] The slidable segment may be slidably mounted by being between tracks on the first horizontal member of the frame and a second horizontal member of the frame, the tracks allowing the slidable frame to freely move side to side.

[0017] The frame may also have a latching device that mates to a latching receiver attached to the slidable segment, wherein mating prevents movement of the slidable segment. The latching receiver may also include a communication device that generates a signal when the latching device is mated and transmits that signal to the controller, which generates a control signal that deactivates the motor. The latching device may also have a release mechanism configured to automatically release the first gear from the first gear track, thereby allowing the slidable frame to be moved to an open position by the user, in response to an emergency condition as detected by at least one of the one or more sensors.

[0018] The controller may also receive and process information from online sources or to communicate with a user as appropriate. This communication may be via a user's smart device running an app. The controller and smart device running an app may be configured to provide user control of the slidable frame, give notice to the user when the slidable frame has been automatically moved in response to a signal from at least one of the one or sensors and warn the user in response to a signal from at least one of the one or more sensors.

[0019] The slidable segment may be slidably mounted by being between tracks on a first horizontal member of the frame and a second horizontal member of the frame, the tracks allowing the slidable frame to freely move side to side. The frame may also have a latching device that mates to a latching receiver attached to the slidable segment, wherein mating prevents movement of the slidable segment. The latching receiver may also include a communication device that generates a signal when the latching device is mated and transmits that signal to the controller which generates a control signal that is sent to the motor, wherein the control signal deactivates the motor. The first and second linear directions may be either horizontal or vertical.

[0020] The first motor may be mounted on the slidable segment; and the first gear track mounted to the first stationary member of the frame.

[0021] The communication systems may communicate with an external remote controller, and the communication systems receive instructions from the external remote controller, generate signals instructing the first motor to rotate in a direction, receive signals from the first motor regarding a status of the first motor, and generate a signal informing the external remote controller of the status of the first motor.

[0022] The motor assembly may include a transmission that drives the one or more gears, wherein the transmission locks the slidable segment to at least one gear track when the transmission is not driven by the motor.

[0023] The invention may also include a kit for retrofitting an existing window in order to motorize and automate it. Existing hardware on the window may be either removed or adapted to accept the motor, gears and track to enable the automation. The gear track may be affixed to the slidable window by a peel-and-stick adhesive.

[0024] The invention may include a frame and a slidable segment that is slidably mounted within the frame with a first motor coupled to a first vertical member of the frame and a first pulley wheel affixed to and driven by the first motor. There may also be a second pulley wheel attached to a second vertical member of the frame along with a first linear flexible material, wherein the first linear flexible material forms a continuous belt that wraps around the first pulley wheel and the second pulley wheel, and wherein the first linear flexible material is attached in at least one location to a top horizontal member of the slidable segment. When the motor drives the first pulley wheel in a first direction, it may cause the first pulley wheel to pull on the linear flexible material such that the slidable segment slides towards the first vertical member. Driving the first pulley wheel in a second direction may cause the first pulley wheel to pull on the linear flexible material such that the slidable segment slides towards the second vertical member. The first and second directions may be vertical or horizontal. The invention may also include a power source, providing power to the motors.

[0025] A second motor may be coupled to the slidable segment, a second pulley wheel affixed to and driven by the second motor, and a second linear flexible material. A first end of the second linear flexible material may be affixed to the first vertical member of the frame and a second end of the second linear flexible material may be affixed to the second vertical member of the frame. The second linear flexible material may wrap around the second pulley wheel at least once.

[0026] The first motor may be coupled to a bottom portion of the slidable segment and the second motor may be attached to a top portion of the slidable segment. The frame

may also include a fixed segment offset from the slidable segment such that the slidable segment can slide past the fixed segment.

[0027] The first motor may also include a transmission that drives the first pulley wheel. The transmission may prevent the first pulley wheel from rotating when the transmission is not driven by the motor such that the transmission may lock the slidable segment in place when the transmission is not driven by the motor. The transmission may include a worm gear, the worm gear preventing the first pulley wheel from rotating when the transmission is not driven by the motor. The slidable segment may be slidably mounted by being between tracks on a top horizontal member of the frame and a bottom horizontal member of the frame, the tracks allowing the slidable frame to freely move side to side.

[0028] The invention may also include a third motor coupled to the slidable segment, a third pulley wheel affixed to and driven by the third motor, and a third linear flexible material. A first end of the third linear flexible material may be affixed to the first vertical member of the frame and a second end of the third linear flexible material may be affixed to the second vertical member of the frame. The second linear flexible material may wrap around the third pulley wheel at least once.

[0029] The preferred battery type is rechargeable, and there may also be a solar panel for charging the batteries.

[0030] The latching receiver may include a communication device that generates a signal when the latching device is mated and transmit that signal to the motor. The controller may then deactivate the motor. The first pulley wheel and second pulley wheel may further also have gear teeth along the outer diameter of the wheel. The first and second linear flexible material may include one or more of a wire; a belt; a chain; a belt with teeth; or combinations thereof.

[0031] The invention may also include a release mechanism configured to automatically release the first pulley wheel from the first slidable segment, thereby allowing the slidable segment to be moved to an open position by the user, in response to an emergency condition as detected by at least one of the two or more sensors.

[0032] The first motor may be coupled to a first vertical member of the slidable segment, wherein there is no second pulley wheel, and one end of the flexible material may be attached to the first vertical member of the frame, wrap around the first pulley wheel, and be attached to the second vertical member of the frame.

[0033] The invention may further include an automated window mechanism with an electrically powered actuator configured to move a window between a closed position and an open position. The mechanism may include a power source, providing power to the actuator; a current sensor, configured to sense the current between the power source and the actuator when the actuator is moving the window; a processor configured to determine, from information provided by the current sensor, a first endpoint when the window is in the closed position and a second endpoint when the window is in the open position for the window; and a controller configured to store the first and second endpoints, and thereafter use the endpoints to control the actuator to stop in either the first or the second endpoint when desired by a user.

[0034] The actuator may consist of an electric motor in combination with a gear. The controller may use the number of turns of the motor between the endpoints to determine when to stop the actuator at either endpoint. The current sensor, processor and controller may also be configured to detect blockage of window movement and automatically stop the actuator in order to prevent harm to the mechanism or the user. The user may program the controller to stop at intermediate points between the first and second endpoints. The mechanism may initially be set in an installation mode, with the endpoints automatically determined.

[0035] The user may select a calibration mode for the mechanism, wherein the endpoints are re-determined. The mechanism may further be configured to automatically enter a calibration mode in response to the mechanism being disengaged and reengaged.

[0036] The invention may further include a non-volatile memory for storing data, the data including stored settings and calendar data, wherein the stored settings include factory preset data; a performance sensor that provides performance data, wherein the performance sensor senses at least one of electrical performance and mechanical performance of the actuator.

[0037] The processor may determine a first set of operating parameters associated with the actuator based on the performance data and at least one of the factory data and first remote data from a remote sensor; determine a control command for operating the actuator based on the first set of operating parameters; determine a second set of operating parameters associated with the actuator based on the performance data and at least one of the factory data and second remote data from the remote sensor; determine that a difference between the second set of operating parameters and the first set of operating parameters exceeds a threshold; modify the control command based on the determined difference; and transmit the modified control command to the controller.

[0038] The processor may store the first set of operating parameters in the non-volatile memory as baseline data; store the control command in the non-volatile memory; store the second set of operating parameters in the non-volatile memory; and store the modified control command in the non-volatile memory. The processor may also receive performance data from the performance sensor; receive remote data from the remote sensor, wherein the remote sensor is included in a remote device that is located in a separate location than the actuation device.

[0039] The performance sensor may provide performance data, and the performance sensor may monitor a set of baseline performance parameters associated with the actuator during a first time period, and the performance sensor may monitor a set of real time performance parameters associated with the actuator during a second time period.

[0040] The processor may also store the baseline performance parameters in the non-volatile memory as performance base data; store the real time performance parameters in the non-volatile memory as real time data; and determine that a performance difference between the baseline performance parameters and the real time data exceeds a threshold, wherein the determined difference includes the performance difference. The processor may further identify an anomaly in the expected mechanical or electrical behavior of the actuator based on the determined performance difference; transmit a trouble signal to another device; wherein the trouble signal includes data describing one or more defining characteristics of the anomaly. A modified control command may

compensate for the anomaly. The modified control command may cause the controller to send at least one modified signal to the actuator that causes the actuator to at least one of speed up, slow down, or stop in order to compensate for the anomaly.

[0041] The performance sensor may include at least one of an electrical sensor; mechanical sensor; transducer; electromagnetic; electrochemical; electric current; electric potential; magnetic; radio; accelerometer; pressure; electro-acoustic; electro-optical; photoelectric; electrostatic; thermoelectric; radio-acoustic; electrical resistance; mechanical resistance; position resolver, optical encoder, capacitive encoder, Hall-effect device, incremental encoder, absolute encoder, absolute transducer of position, capacitive encoder, PIR, pyroelectric, magnetic field, vibration, motor speed, frequency, rotation, torque, ultrasonic, temperature, velocity; position; angle; displacement; or combinations thereof.

[0042] The invention may include a network device that communicates to a plurality of actuation devices within an actuation system. The network device may also include a wireless transmitter and wireless transceiver and have a connection to each network device of the one or more actuated devices. The connection may include a wired or wireless interface such as Bluetooth, WIFI, mesh network or similar wireless protocol.

[0043] The processor may receive user data from one or more user input devices. The input devices may include a user interface for receiving the user input from a user, and may include a mobile device capable of wirelessly transmitting and receiving a signal. The mobile device may have a connection to the actuation device; and may be a cell phone, satellite phone, smartphone, personal digital assistant, tablet computer, laptop computer, remote control device, mobile transmitter, a mobile internet device or a combination of one or more of the same.

[0044] The performance sensor may be at or adjacent to the actuator; and may convert sensor data to an electrical signal. The performance sensors may include at least one of: electromagnetic; electrochemical; electric current; electric potential; magnetic; radio; air flow; accelerometers; pressure; electro-acoustic; electro-optical; photoelectric; electrostatic; thermoelectric; radio-acoustic; environmental; moisture; humidity; fluid velocity; position; angle; displacement; or combinations thereof.

[0045] The remote data may be transmitted from a remote system located in a separate part of a room, building, or outside of a building. The remote system may include at least one of a weather station, security system, wireless remote sensor device, fire alarm system, HVAC system, building control system, manufacturing control system, monitoring system; control system, or combinations thereof, wherein the remote sensors convert sensor data to an electrical signal. The remote sensors may include at least one of: electromagnetic, electrochemical, electric current, electric potential, magnetic; radio, air flow, accelerometers, pressure, electro-acoustic, electro-optical, photoelectric; electrostatic, thermoelectric, radio-acoustic, environmental, moisture, humidity, fluid velocity, position, angle, displacement, or combinations thereof.

[0046] The processor may communicate with a cloud-based network and mirror the stored settings and calendar data with the cloud based network by sending and receiving system data to and from the cloud-based network. The system data may include all data in the non-volatile memory.

[0047] The remote data may include weather data, and the remote data from the remote sensors and remote systems. This data may be relayed to the actuation device via the cloud-based network.

[0048] The processor may determine a remote command based on at least one of the remote data, the stored settings, calendar data, and as directed by predefined user settings, or combinations thereof. The processor may transmit the remote command to the controller. The processor may further monitor usage data of the actuator and provide the usage data to a disparate device.

[0049] The actuator may include one or more of electric motors, gearboxes and one or more mechanical means of incrementally opening, closing, tilting, turning, twisting, sliding, pushing, pulling, and rotating one or more components of the actuated device.

[0050] The automated window mechanism may also include an electrically powered actuator configured to move a slidable window between a closed position and an open position; a power source, providing power to the actuator; two or more sensors, each configured to generate signals related to a different environmental condition; and a controller adapted to receive the signals from the one or more sensors and operate the actuator to move the slidable window to an open or closed position as appropriate.

[0051] The smart device may wirelessly communicate to the controller, and the smart device running an app may also receive and process information from online sources.

[0052] The one or more communication systems may receive instructions from the external remote controller, generate signals instructing the first motor to rotate in a direction, receive signals from the first motor regarding a status of the first motor, and generate a signal informing the external remote controller of the status of the first motor.

[0053] The automated window mechanism may include a network device connecting the automated window mechanism to one or more additional automated window mechanisms forming a system of networked mechanisms.

[0054] The user's smart device may be connected to each network device of the one or more automated window mechanisms; the connection may include a wired or wireless interface; and the wireless interface may include Bluetooth, WIFI, mesh network or similar wireless protocol. The wireless interface may be a wireless Bluetooth mesh connecting the one or more motorized windows and may enable the automated window machanisms to be fully functional and able to operate all system functions based on stored settings and sensor data from the two or inure sensors without input from the user or the cloud-based network.

[0055] The stored settings may include factory presets, calendars, charts, user input data, sensor data and scheduled data. The two or more sensors may include at least one of a remote sensor and a local sensor. The local sensor may be in close proximity to the automated window mechanism, within two feet of it. The remote sensor may be located outside the building or at location more than two feet from the automated window mechanism.

[0056] Real-time data including weather data, and sensor data from the remote sensors and remote systems may be relayed via a cloud-based network to the system. The real-time data may modify and update the calendars, the charts and the scheduled data. The real-time data may also

be used to control the system as directed by predefined user settings and the stored settings.

[0057] Each automated window mechanism within the system may be fully autonomous and operational without any connection to other automated window mechanisms in the system.

[0058] Sensor data from all automated window mechanisms within the system of networked mechanisms may be reported to the controller of each automated window mechanism in the system.

[0059] The invention may also include an automated window system. The automated window system may include one or more motorized windows. Each motorized window may include one or more actuators. The automated window system may also include a controller controlling the one or more actuators; non-volatile memory for data storage; data including stored settings and system data; one or more user input devices receiving user input data; a network device communicating to all the motorized windows in the automated window system; one or more sensors including local sensors at each motorized window and a remote sensor; and a processor The processor may receive sensor data from the one or more sensors; receive remote data from a cloud based network; determine a control command based on the sensor data, the stored settings, and the remote data. The processor may transmit the control command to the controller.

[0060] The processor may receive a user input from the one or more user input devices which may include a mobile device with a user interface for receiving the user input from a user. The processor may determine the control command based on the sensor data, the stored settings, the remote data, and the user input; and store system data and user input data in the non-volatile memory. The processor may mirror the stored settings with the cloud-based network by sending and receiving data to and from the cloud-based network. The processor may also receive command signals from the cloud-based network; transmit the sensor data to the cloud-based network; and transmit system data to the cloud-based network.

[0061] The one or more actuators may include one or more of electric motors, gearboxes and one or more mechanical means of incrementally opening, closing, tilting, turning, twisting, sliding pushing, pulling, and rotating one or more components of the one or more motorized windows.

[0062] The mobile device may have a wired or wireless connection to each network device of the one or more motorized windows; and the wireless connection may include Bluetooth, WIFI, mesh network or similar wireless protocol. The one or more motorized windows may be connected via the wireless Bluetooth mesh; and the automated window system may be fully functional and able to operate all system functions based on the stored settings and sensor data without input from the user or the cloud-based network.

[0063] Each network device and each mobile device within the mesh network may broadcast global data to all network devices within the network. The global data may include data applicable to all network or mobile devices within the mesh network, and may be organized in one or more data groups, each data group including data specific to each individual network or mobile device. Monitoring and control of each individual network or mobile device may only respond to only the specific data associated with that individual network or mobile device.

[0064] The user settings changed by a user on one mobile device of the one or more mobile devices during a time period when the one mobile device is out of range of the wireless interface may be stored in internal non-volatile memory of the one mobile device for upload to the system once the user is within range of either the cloud-based network or the network device.

[0065] Primary control of the individual network device may be based on local control by the controller of the individual network device. Secondary control may be from the cloud-based network. Direct user control supersedes both the primary control and the secondary control.

[0066] The system may be controlled by or via the cloud-based network. The processor may create a passkey based on the one or more user inputs. The passkey may restrict levels of permission for a specific user to allow only control actions and only settings changes specified by a master user. The stored settings may further include factory presets, calendars, charts and scheduled data informing the processor.

[0067] Real-time data including weather data, and sensor data from the remote sensors and remote systems may be relayed via the cloud-based network to the system. The real-time data may modify and update the calendars, the charts and the scheduled data. The real-time data may also be used to control the system as directed by predefined user settings and the stored settings.

[0068] In order to reduce the energy required to provide power to a wireless automated motorized window system, a wireless hub-based system may be implemented which reduces the power requirements. There are two power levels required for this system, the hubs have the higher bandwidth and extended wireless range that service the lower powered low-bandwidth devices at the motorized windows. The hubs may be separate from the motorized windows or may be incorporated at the motorized window. Most of the motorized windows in this system do not require high powered hubs since they are using a low power, low bandwidth wireless system. In some embodiments, the motor includes one or more communication systems. These may include Bluetooth communication chips, Internet Wi-Fi transceivers, network transceivers, a Z-Wave network transceiver, or a combination thereof. In some embodiments, the one or more communication systems communicate with an external remote controller. In some embodiments, the one or more communication systems receive instructions from the external remote controller, generate signals instructing the motor to rotate in a direction, receive signals from the motor regarding a status of the first motor, and generate a signal informing the external remote controller of the status of the motor. In some embodiments the external remote controller communicates with or is connected to a home automation service, such as those devices and systems offered by Nest Labs (it will be obvious that there are many options for home automation, any of which will perform similar functions to those from Nest Labs) is used only as an example). In some embodiments the one or more communications systems communicate with the home automation device. The home automation device is capable of measuring many conditions that are present in a home. These include internal and external temperatures, carbon monoxide levels, carbon dioxide levels, the presence of smoke, and many other conditions. In some embodiments the sliding window motor and the home automation device are configured to open the window when carbon monoxide is detected. In some

embodiments the sliding window motor and the home automation device are configured such that the home automation device can determine whether opening or closing the window will cool the home.

[0069] In some embodiments, the motor includes one or more communication systems. These may include Bluetooth communication chips, Internet Wi-Fi transceivers, network transceivers, a Z-Wave network transceiver, or a combination thereof. In some embodiments, the one or more communication systems communicate with a smart device such as a smartphone or tablet. In some embodiments, the one or more communication systems receive instructions from the smart device, generate signals instructing the motor to rotate in a direction, receive signals from the motor regarding a status of the first motor, and generate a signal informing the smart device of the status of the motor.

[0070] In a first embodiment of the invention, a system for controlling a motorized window in accordance with the invention may include a mobile device which has an application installed on the mobile device. The application receives a user command and sends the user command to a first hub. The first hub may include a local area network (LAN) interface; a personal area network (PAN) interface; a gateway, wherein the gateway converts LAN protocol to PAN protocol; a server including a processor and non-volatile memory. The processor may be configured to: receive the user command from the mobile device via the LAN interface; determine that the user command is a real time control; and send the user command to the motorized window via the PAN interface. The system may also include a motorized window which includes: a PAN interface; an actuator; and a server which includes a processor and non-volatile memory. The motorized window processor may be configured to: receive the user command from the first hub via the PAN interface; and actuate the motorized window based on the user command. The PAN and LAN interfaces may utilize wired ethernet.

[0071] In a second embodiment of the invention, a system in accordance with the invention may include at least one subordinate hub. The subordinate hub may include a local area network (LAN) interface; a personal area network (PAN) interface; a gateway, wherein the gateway converts LAN protocol to PAN protocol; and a server including a processor and non-volatile memory. The processor may receive the user command from the mobile device via the LAN interface; determine that the user command is a real time control; and send the user command to the motorized window via the PAN interface. The first hub processor may assign control of a specific motorized window to a specific subordinate hub.

[0072] In a third embodiment of the invention, the assignment of which motorized windows are assigned to which hubs may be determined by the received signal strength indicator (RSSI) of each motorized window's PAN interface. The hub which receives the strongest RSSI from a specific motorized window when compared to the other hubs, may be assigned to that specific motorized window.

[0073] In a fourth embodiment of the invention, a first connected subordinate hub in accordance with the invention may become a new first hub upon failure of an original first hub. After the failure of the original first hub, the assigned control may be managed by the new first hub.

[0074] In a fifth embodiment of the invention, the motorized window non-volatile memory may store data in the form of factory settings and user settings specific to the motorized window.

[0075] In a sixth embodiment of the invention, a system in accordance with the invention, the motorized window may also include one or more sensors that produce sensor data.

[0076] In a seventh embodiment of the invention, the system in accordance with the invention may include a cloud-based network. The factory settings, the user settings and the sensor data may be stored in the non-volatile memory of the cloud-based network. The cloud-based network processor may also: determine a cloud control command based on the user command, the sensor data, the factory settings, and the user settings; and transmit the cloud control command to the first hub.

[0077] In an eighth embodiment of the invention, the sensors in accordance with the invention may convert sensor data to an electrical signal. The sensors may include at least one of: electromagnetic; electrochemical; electric current; electric potential; magnetic; radio; air flow; accelerometers; pressure; electro-acoustic; electro-optical; photoelectric; electrostatic; thermoelectric; radio-acoustic; environmental; moisture; humidity; fluid velocity; position; angle; displacement; or combinations thereof.

[0078] In a ninth embodiment of the invention, an actuator in accordance with the invention may include one or more of electric motors, gearboxes and one or more mechanical means of incrementally opening, closing, tilting, turning, twisting, sliding pushing, pulling, and rotating one or more components of the motorized window.

[0079] In a tenth embodiment of the invention, the PAN interface in accordance with the invention may include Bluetooth, Bluetooth mesh or similar wireless protocol. The LAN interface in accordance with the invention may include WIFI or similar high speed, high bandwidth wireless protocol. The LAN or PAN interface may be wired.

[0080] In an eleventh embodiment of the invention, user settings in accordance with the invention may include calendars, charts and scheduled data. Real time data including weather data, and sensor data from remote sensors and remote systems may be relayed via the cloud-based network to the system; and the real-time data may modify and update the calendars, the charts and the scheduled data. In accordance with the invention, the remote systems may include at least one of weather stations, security systems, fire alarm systems, remote monitoring systems, control systems, or combinations thereof. The real time data may be used to control the system as directed by the user settings and the factory settings.

[0081] In a twelfth embodiment of the invention, the mobile device in accordance with the invention may include a cell phone, satellite phone, smartphone, personal digital assistant, tablet computer, laptop computer, remote control device, mobile transmitter, a mobile internet device or combinations thereof.

[0082] In a thirteenth embodiment of the invention, the motorized window in accordance with the invention may include one or more of: sliding windows; hinged windows; windows or shutters with partially or fully opaque material, windows with clear glass or combinations thereof. In another embodiment, the system may further include one or more batteries and one or more solar photovoltaic panels.

[0083] In a fourteenth embodiment of the invention, an apparatus in accordance with the invention may include an actuator configured to electromechanically operate a motorized window. A controller, incorporated into the motorized window, may be provided to control the actuator. A temperature sensor may communicate with the controller and monitor temperature proximate a window associated with the motorized window. The temperature sensor may monitor the temperature of the window, temperature external to the window, temperature internal to the window, temperature within a headrail of the motorized window, or the like. The controller may further be configured to relay at least one of commands and information to an HVAC controller to regulate room temperature in accordance with the monitored temperature.

[0084] In a fifteenth embodiment of the invention, a system in accordance with the invention may include motorized windows. Each motorized window may include: user input devices; actuators; a controller; a processor; non-volatile memory for data storage; stored settings in the non-volatile memory; a network device; wireless transmitters and receivers; and sensors. An embodiment may further include a mobile device with a user interface for receiving user inputs from a user. The system may also include a cloud-based network which stores user inputs, obtaining user inputs from the user input devices. An embodiment may further include sensors that transmit sensor data to the processor, non-volatile memory and the cloud-based network. The processor may inform the controller based on the user inputs, the sensor data and the stored settings; and the controller may then control the operation of the motorized windows by actuating at least one actuator.

[0085] In a sixteenth embodiment of the invention, the cloud-based network in accordance with the invention may include mirrored settings which mirror the stored settings in the non-volatile memory. The cloud-based network may further include processor functions, the processor informing the controllers of the motorized windows.

[0086] In a seventeenth embodiment of the invention, a system in accordance with the invention may include mobile devices that have a connection to each network device of the motorized windows. The connection may include a wired or wireless interface; and the wireless interface may include at least one of Bluetooth, WIFI, mesh network or similar wireless protocol or combinations thereof. The motorized windows may be connected via the wireless mesh and the window covering system may also be fully functional and able to operate all system functions based on the stored settings and sensor data without input from the user or the cloud-based network.

[0087] In a eighteenth embodiment of the invention may include a broadcasting system in accordance with the invention, wherein each network device within the mesh network broadcasts global data to all network devices within the network. The global data may include data applicable to all network devices within the mesh network. The global data may be organized in one or more data groups, each data group including data specific to each individual network device. Monitoring and control of each individual network device responds to only the specific data associated with that individual network device.

[0088] In a nineteenth embodiment of the invention, a system in accordance with the invention may include provisions for retaining changes to user settings for a mobile device that is out of range of the wireless interface to the system. The user settings changed by a user of a mobile device during a time period when the mobile device is out of range of the wireless interface may be stored in internal non-volatile memory of the mobile device for upload to the system once the user is within range of either the cloud-based network or the network device.

[0089] In a twentieth embodiment of the invention, a hierarchical system in accordance with the invention may include primary control of the individual network device based on local control by the controller of the individual network device. Secondary control may be from the cloud-based network and direct user control may supersede both the primary control and the secondary control. The system may be controlled by or via the cloud-based network as directed by the user. This setting may be selected by the user and stored in non-volatile memory under user settings for operation of the system in absence of any other system control direction.

[0090] In an twenty-first embodiment of the invention, an access control system in accordance with the invention may include passkeys for multiple users. The processor may create a passkey based on the first or master user inputs. The passkey may restrict levels of permission for a specific user to allow only control actions and only settings changes specified by the master user. The master user may define access restrictions for other system users based on permission levels defined by the master user.

[0091] In a twenty-second embodiment of the invention, a system in accordance with the invention may include stored settings that include factory presets, calendars, charts and scheduled data informing the processor. The real-time data may include weather data, and sensor data from remote sensors and remote systems that are relayed via the cloud-based network to the system. The real-time data may modify and update the calendars, charts and scheduled data. The real-time data may be used to control the system as directed by predefined user settings and stored settings.

[0092] In a twenty-third embodiment of the invention, the motorized windows in accordance with the invention may include at least one of: windows, louvers, doors or combinations thereof.

[0093] In a twenty-fourth embodiment of the invention, a system in accordance with the invention may include full autonomy of individual motorized windows within the system. Each motorized window within the system may be fully autonomous and operational without any connection to other motorized windows in the system.

[0094] In a twenty-fifth embodiment of the invention, a system in accordance with the invention may include a video display adapter, such as a USB or HDMI dongle, configured to generate a signal when a video display (e.g., a television, projector, etc.) is turned on or off. A controller may receive the signal and automatically actuate a motorized window in response to the signal. In certain embodiments, the motorized window may receive the signal directly from the video display adapter without requiring any intervening electronic devices.

[0095] In a twenty-sixth embodiment of the invention, an apparatus in accordance with the invention may include a gearbox assembly configured to electromechanically operate a motorized window. A controller, incorporated into the motorized window, may be provided to control the gearbox assembly. A security device, such as a camera, motion

sensor, audio sensor, proximity sensor, impact sensor, or the like, may communicate with the controller and is configured to monitor security at a window associated with the motorized window. Such a security sensor may, for example, monitor opening and/or closing of the window, breaking of the window, or the like. In certain embodiments, operation of the motorized window is triggered in response to conditions sensed by the security device.

[0096] In a twenty-seventh embodiment of the invention, the cloud-based network in accordance with the invention may include mirrored settings which mirror the stored settings in the non-volatile memory. The cloud-based network may further include processor functions, the processor informing the controllers of the motorized windows.

[0097] In a twenty-eighth embodiment of the invention, an apparatus in accordance with the invention may include a motor and a gearbox coupled to the motor and configured to actuate a motorized window. The gearbox may include an internal wall enclosing gears of the gearbox, and an external wall enclosing the internal wall and creating a cavity between the internal wall and the external wall. The external wall may be configured to support an output shaft extending from the internal wall.

[0098] In a twenty-ninth embodiment of the invention, an apparatus in accordance with the invention may include a motor and a gearbox coupled to the motor and including an output shaft configured to actuate a motorized window. A position encoder, directly driven by the output shaft, may he configured to measure at least one of an angular position and a number of rotations of the output shaft. The angular position and number of rotations may be used to calculate an angular position of worm drives, gears and/or an amount a motorized window is opened or closed.

[0099] In a thirtieth embodiment of the invention, the wired network interface may utilize ethernet protocol.

BRIEF DESCRIPTION OF THE DRAWINGS

[0100] In order that the advantages of the described devices, systems, and methods will be readily understood, a more particular description of the described devices, systems, and methods briefly described above will be rendered by reference to specific embodiments illustrated in the appended drawings. Understanding that these drawings depict only typical embodiments of the described devices, systems, and methods and are not therefore to be considered limiting of its scope, the devices, systems, and methods will be described and explained with additional specificity and detail through use of the accompanying drawings, in which:

[0101] FIG. **1**A shows an isometric top-left view of a motorized sliding segment in a frame;

[0102] FIG. **1**B shows a front isometric view of the frame of FIG. **1**A;

[0103] FIG. **1**C shows an isometric top-left view of a motorized sliding segment in a frame with a mobile device for user interface;

[0104] FIG. **1**D shows an isometric top-left view of a motorized sliding segment in a frame with gear track mounted to slidable segment;

[0105] FIG. **1**E shows an isometric view of one of the motor assemblies of FIG. **1**A;

[0106] FIG. **1**F is an illustration of a gear interfacing with a gear track;

[0107] FIG. **1**G is an illustration of a worm gear interfacing with a gear track;

[0108] FIG. **2**A shows an isometric view of one of the motor/pulley assemblies;

[0109] FIG. **2**B shows a sectional view of the pulley belt;

[0110] FIG. **2**C shows a belt with teeth interfacing with pulley wheels with teeth;

[0111] FIG. **2**D shows a chain interfacing with pulley wheels with gear teeth;

[0112] FIG. **2**E shows an isometric view of one of the motor/pulley assemblies;

[0113] FIG. **2**F is an illustration of a front view of a pulley wheel with guide tracks;

[0114] FIG. **2**G shows a back view a back view of FIG. **2**F;

[0115] FIG. **2**H shows an overhead view of FIG. **2**F;

[0116] FIG. **2**I shows an isometric view of one of the motor assemblies of FIG. **2**A;

[0117] FIG. **3**A is an illustration showing an embodiment of three motorized windows, a first hub, and a mobile device wirelessly connected in accordance with the invention;

[0118] FIG. **3**B is an illustration showing an embodiment of five motorized windows, and three hubs in accordance with the invention;

[0119] FIG. **4** is an illustration showing an embodiment of three motorized windows, a first hub, the cloud, a security system and a cell phone tower in accordance with the invention;

[0120] FIG. **5** shows a graphical user interface for setting up and automating motorized windows in different rooms or spaces;

[0121] FIG. **6** shows a graphical user interface for creating a new room and establishing a default closed and open position for motorized windows associated with the new room;

[0122] FIG. **7** shows a graphical user interface for monitoring a battery charge level for motorized windows in a room;

[0123] FIG. **8** shows a graphical user interface for displaying a schedule associated with a motorized window;

[0124] FIG. **9** shows a graphical user interface for scheduling an event associated with a motorized window;

[0125] FIG. **10** shows a graphical user interface for setting up and changing settings associated with a motorized window;

[0126] FIG. **11** shows a graphical user interface for adjusting light settings associated with a motorized window;

[0127] FIG. **12** shows a graphical user interface for adjusting room settings for motorized windows in a room;

[0128] FIG. **13** shows a graphical user interface for establishing settings associated with an application;

[0129] FIG. **14** shows a graphical user interface for adding or editing accessories associated with a room or motorized window;

[0130] FIG. **15** is a high-level system view showing various components internal to an external to an automated motorized window in accordance with the invention;

[0131] FIG. **16** is a high-level view of the system of FIG. **15**, particularly showing possible physical locations of various components described in association with FIG. **15**;

[0132] FIG. **17** is a high-level view showing various modules providing different functionality in the system of FIG. **15**;

[0133] FIG. **18** is a perspective view of one embodiment of a specialized wall switch in accordance with the invention;

[0134] FIG. **19** is a high-level view showing various components that may be controlled by the specialized wall switch discussed in association with FIG. **18**;

[0135] FIG. **20** shows one embodiment of a touchscreen providing functionality similar to the specialized wall switch illustrated in FIG. **18**; and

[0136] FIG. **21** shows another embodiment of a touchscreen providing functionality similar to the specialized wall switch illustrated in FIG. **18**.

DETAILED DESCRIPTION

[0137] It will be readily understood that the components of the described devices, systems, and methods, as generally described and illustrated in the Figures herein, could be arranged and designed in a wide variety of different configurations. Thus, the following more detailed description of the embodiments of the described devices, systems, and methods, as represented in the Figures, is not intended to limit the scope of the described devices, systems, and methods, as claimed, but is merely representative of certain examples of presently contemplated embodiments in accordance with the described devices, systems, and methods. The presently described embodiments will be best understood by reference to the drawings, wherein like parts are designated by like numerals throughout. Throughout this specification references to "automated window" and "motorized window" are similar terms describing a window that has been motorized and automated. Every window referenced in this specification has both of these features (being automated and motorized). A window may be controlled by an actuator via a remote control device per the stated claims in this description when a motor or actuator is coupled with some form of automation via a controller.

[0138] Automatic opening and closing of sliding windows and sliding doors generally requires planning ahead and use of frames that are designed specifically for automatic sliding doors and automatic sliding windows. However, when automation of an existing installation is desired, a complete replacement of the existing frame is costly and requires more construction skill than the typical homeowner possesses. The devices, systems, and methods disclosed herein disclosed provide solutions to this issue. A motor installed on the sliding segment of the door or window is coupled by a gear to a gear track (as in a rack and pinion). The gear track is attached to one of the horizontal members of the frame. Rotation of the gear walks the gear along the gear track, causing the sliding segment to move from closed to open and back again. This solution is cost effective and requires minimal construction skill.

[0139] Referring now to the Figures, FIGS. **1**A shows an isometric top-left view **100** of a motorized sliding segment **114** mounted slidably in a frame **105** that may be used in the described devices, systems, and methods. Sensor **140** is located on the frame near the sliding segment. Sensor **142** is inside or adjacent to the motor and controller. Sensor **144** may be inside the room on a wall or may be located elsewhere in the building. Sensor **146** is located on the outside the building.

[0140] The frame **105** may be a window frame, louver frame, or a door frame. The frame includes a fixed segment **112**, top horizontal member **108**, bottom horizontal member **110**, left vertical member **104**, and right vertical member **106**. The track for the sliding segment **114** is offset from the fixed segment **112** so that the sliding segment can open and close. It is appreciated that before the addition of any motor assemblies **116**, the sliding segment **114** is manually operated (the sliding segment **114** and frame **105** may be "dumb" or non-smart devices).

[0141] Motor assemblies **116** are affixed to the top and/or bottom of the left side of the sliding segment **114**. Although two motor assemblies **116** are shown in FIG. **1**, any number of motor assemblies **116** may be used, including just one motor on either the top or bottom of the sliding segment **114**, the fixed segment **112**, or the frame **105**. While the left side is identified, it is appreciated that a motor assembly **116** may be affixed to any location on the sliding segment **114** without departing from the scope of the present systems, devices, and methods. Motor assemblies **116** may contain a motor, and one or more: gears; gearbox; transmission; worm drive; or combinations thereof, as described in various embodiments described in these drawings and specifications. Gear tracks **118** are affixed to the top and bottom horizontal members **108** and **110**. The gears mesh with the teeth of the gear tracks **118**. The motors turn the gears in a first direction, causing the gears to walk along the gear tracks **118**, causing the slidable segment **114** to slide towards this vertical member. Rotation in the opposite direction walks the gears the other direction, pulling the slidable segment the other direction. In the present instance, the motor assemblies **116** are mirror images of one another, and so the motors turn opposite each other to walk the same direction. In other words, the motors are antiparallel to each other. In the present embodiment gear tracks **118** are designed to retrofit already installed windows, in this embodiment the tracks are designed to be applied directly to the horizontal members of the frame. There are a variety of methods for applying the gear tracks that include but are not limited to; adhesive applied to the side of the track without gear teeth, (a peel and stick option), fastening devices such as nails or screws, or slide on track that rests on the horizontal member with the teeth on one side and the other side being smooth. In another embodiment the gear track is molded into the horizontal member. In the current embodiment gear track **118** is depicted as being within the channel the slideable segment runs in, it should be noted that in another embodiment gear track **118** may be on the side of the horizontal member, thus facing into the room. In one embodiment the motors are powered by batteries, in certain embodiments they are rechargeable batteries, and are powered by solar cells **119**. The solar cells **119** are oriented so that the photovoltaic portion is facing outside. In one embodiment the motor assembly includes a temperature sensor **144**, for monitoring the temperature of the room.

[0142] FIG. **1**B shows a front isometric view of the frame of FIG. **1**A. In some embodiments, the motor assembly **116** includes a transmission (not shown). The transmission may include one or more gears that convert rotational speed to rotational torque for driving the gear that meshes with the teeth of the gear track. In some cases, the transmission is configured such that the transmission can only be driven by the motor of the motor assembly **116** (cannot be driven by the gear, for example). For instance, the transmission may include a worm gear that may be driven by the motor to drive the gear, but that locks the gear in place when the motor is not spinning (the gear cannot be used to turn the worm gear, for example). Thus, the transmission locks the slidable segment **114** in place in whatever position the slidable segment **114** is in. In contrast to typical locking mechanisms

that only lock a slidable segment when the slidable segment is in a closed position, the transmission locks the gear in place in the teeth of the gear track in whatever place in the gear track that the gear is at. The slidable segment **114** may be locked in place when the slidable segment **114** is closed as with typical locking mechanisms but could also lock the slidable segment **114** in place when the slidable segment **114** is any degree of partly open or even fully opened. This feature may allow for the slidable segment **114** to be partly opened, while still providing security that the slidable segment **114** cannot be opened further or closed outside of an authorized user's control (when the motor is driven, for example). The transmission lock adds an element of home security to the window, a typical window frame will not lock in a partially open position, the transmission lock allows the window to be partially open, without the possibility of opening further. The ability to open a window, thus allowing air to flow in or out, while eliminating the possibility of opening the window further is feature many people are looking for. It can allow fresh air in without endangering the occupants or opening their possessions to theft. The transmission lock is at least as strong as the latch lock that is a part of sliding windows, in this way the transmission lock adds better safety with more options.

[0143] While some embodiments do not have coordinated motors **116** there are advantages to coordinated motors **116**. In those embodiments with two motors **116**, the top and the bottom of the window or door open together. In this way there is no tilting or canting of the slidable segment. With one motor **116** the top and bottom may not slide at the same rate, this can lead to tilting or canting of the slidable segment, if the slidable segment tilts or cants, the segment may bind, or get stuck, this can lead to damage to the motor assembly or the gear track, or even damage to the window. This effect becomes more pronounced the larger the window or door. While larger windows or doors have a greater tendency to tilt and bind, the effect is not exclusive to a large window or door, therefore coordinated motors on the top and bottom are preferred.

[0144] It will be noted that while the drawings depict a window that opens and closes in a horizontal orientation, the motor is capable of functioning with a window that slides in a vertical orientation. In the vertical orientation the motor or motors will be affixed to the side vertical members instead of the upper and lower horizontal members. The gear track will also be attached to the side vertical members. In the vertical orientation coordinating the motors becomes especially important so the sliding segment will raise and lower. When the motor or motors are not coordinated there is a greater chance of the sliding segment tilting or canting and binding up so the sliding segment will stick and no longer move. The motor connected to a vertically oriented sliding window will retain all the characteristics of the motor connected to a horizontally sliding window.

[0145] FIG. **1**B shows a view **101** of a motorized sliding segment **114** mounted slidably in a frame **108** that may be used in the described devices, systems, and methods. FIG. **1**B shows a front isometric view of the frame of FIG. **1**A. The frame **105** may be a window frame or a door frame. The frame **105** includes a fixed segment **112**, top horizontal member **108**, bottom horizontal member **110**, left vertical member **104**, and right vertical member **106**. The track for the sliding segment **114** is offset from the fixed segment **112** so that the sliding segment can open and close.

[0146] Motor assembly **116** is affixed to the bottom of the left side of the sliding segment **114**. Motor assembly **116** contains a motor and a gear, as described in FIG. **2**. A gear track **118** is affixed to the bottom horizontal member **110**. The gear meshes with the teeth of the gear track **118**. The motor turns the gear in a first direction, causing the gear to walk along the gear track **118**, causing the slidable segment **114** to slide towards this vertical member. Rotation in the opposite direction walks the gear the other direction, pulling the slidable segment the other direction.

[0147] In some embodiments, the motor assembly **116** includes a transmission (not shown). The transmission may include one or more gears that convert rotational speed to rotational torque for driving the gear that meshes with the teeth of the gear track. In some cases, the transmission is configured such that the transmission can only be driven by the motor of the motor assembly **116** (cannot be driven by the gear, for example). For instance, the transmission may include a worm gear that may be driven by the motor to drive the gear, but that locks the gear in place when the motor is not spinning (the gear cannot be used to turn the worm gear, for example). Thus, the transmission locks the slidable segment **114** in place in whatever position the slidable segment **114** is in. So in contrast to typical locking mechanisms that only lock a slidable segment when the slidable segment is in a closed position, the transmission locks the gear in place in the teeth of the gear track in whatever place in the gear track that the gear is at. So the slidable segment **114** may be locked in place when the slidable segment **114** is closed as with typical locking mechanisms but could also lock the slidable segment **114** in place when the slidable segment **114** is any degree of partly open or even fully opened. This feature may allow for the slidable segment **114** to be partly opened, while still providing security that the slidable segment **114** cannot be opened further or closed outside of an authorized user's control (when the motor is driven, for example). The transmission lock adds an element of home security to the window, a typical window frame will not lock in a partially open position, the transmission lock allows the window to be partially open, without the possibility of opening further. The ability to open a window, thus allowing air to flow in or out, while eliminating the possibility of opening the window further is feature many people are looking for. It can allow fresh air in without endangering the occupants or opening their possessions to theft.

[0148] In some embodiments the sliding window motor includes a portable fan that fits between the slidable portion **114** of the window and the window screen. The fan may be turned on to increase the amount of cool air pulled into the room when the sliding window motor opens the window. In some embodiments the portable fan is configured to automatically turn on when the sliding window motor opens the window.

[0149] In some embodiments, the motor has and is powered by one or more batteries. In other embodiments, the motor has and is powered by power lines. In some embodiments the motor is powered by solar power. The motor may be connected to

[0150] In some embodiments, the slidable segment is slidably mounted by being between tracks on a top horizontal member of the frame and a bottom horizontal member of the frame, the tracks allowing the slidable frame to freely move side to side.

[0151] In some embodiments, the frame has a latching device that mates to a latching receiver attached to the slidable segment, wherein mating prevents movement of the slidable segment. In some embodiments, the latching receiver comprises a communication device that generates a signal when the latching device is mated and transmits that signal to the motor, wherein the signal deactivates the motor.

[0152] In some embodiments, the first gear track is attached to the horizontal member of the frame by adhesive, screws, nails, or a combination thereof. In some embodiments, the first motor assembly is mounted to the slidable segment by adhesive, screws, nails, or a combination thereof.

[0153] In some embodiments, the first gear track is attached in the track that the slidable segment slides in. In other embodiments, the first gear track is attached adjacent to the track that the slidable segment slides on.

[0154] In certain embodiments, the device interfaces with one or more other systems including security systems, safety systems and energy systems. Sensors inform the controller regarding conditions that may influence the operation of the device. For example, an entry sensor that senses an intrusion notifies the controller that in turn alerts a security system. The entry sensor may include a window or door switch, or a glass breaking sensor. The controller may further notify the home owner via the cloud-based network that there has been an intrusion.

[0155] In another embodiment, the security system may inform the controller to close and lock all of the windows and doors when the home owner is away on vacation. Information and user settings selected by the home owner inform the controller regarding how the device is to operate while on vacation.

[0156] In an embodiment, the controller sends control signals to the device to operate in such a way to assure the safety of occupants in the building. For example, CO detectors or smoke detectors may open windows upon detection of noxious gases. Ventilation fans at or near the window opening may also be turned on to actively promote the ventilation of these gases. Louvers or vents may also be opened to further ventilate the space. Other safety embodiments include closing all windows when air quality alerts indicate that exterior air is not healthy (red zone). This info may be relayed to the controller via the cloud-based network or from sensors. In an embodiment, the controller may close all windows, doors, louvers and shutters when high winds are in the area. This info may be determined by exterior sensors or weather reports via the cloud-based network.

[0157] In an energy embodiment, the controller may tie in with the building HVAC system in order to allow the HVAC system to open windows or louvers to let in cool air when the interior space is too hot. This allows the HVAC system to operate in an economizer mode when outdoor air temperature is cool so that the air conditioner does not have to be operated. This saves energy. Temperature sensors inside the building and outside of the building inform the controller. The fan of the HVAC system may be activated to draw air in through the open window (creating a negative air pressure within the building).

[0158] In certain embodiments, the opening and closing of windows is coordinated with a motorized window system. In the case of a motorized window system that is also automated, the blinds or motorized window may be opened when the window is opened. Air flow through the window opening may be reduced if the motorized window remains is partially closed. User selected schedules of operation may be coordinated between the motorized window operation and window opening device to assure maximum energy savings, and to coordinate the operation of each of these systems. For example, a west facing window during the Summer may need to remain closed and the motorized windows are also closed in the late afternoon to keep heat from entering the interior of the building on the west side. However, the exterior temperature on the east side of the building may be cooler than the interior of the building. In this case, the east windows and associated window coverings may be opened to allow the cool air from the east to enter the building.

[0159] In an embodiment, exterior humidity or moisture sensors may inform the controller that rain or a water from sprinkler system is near a window opening. The controller may then close windows that are open that may be impacted by the water intrusion. Weather reports from an online service may also inform the controller to enable this operation.

[0160] In another embodiment, sensors may be located inside or outside of the building at locations near the window, door or louver opening or far away. These sensors may inform the controller regarding conditions that impact the operation of the device. For example, temperatures at or near the window may be different than the outdoor temperature or the temperature in other parts of the building. Decisions regarding the opening and closing of a window may depend on not only the temperature at the window, but also other locations inside and outside of the building as explained in the west facing window example above.

[0161] The present invention may be embodied in other specific forms without departing from its spirit or essential characteristics. The described embodiments are to be considered in all respects only as illustrative and not restrictive. The scope of the invention is, therefore, indicated by the appended claims rather than by the foregoing description. All changes which come within the meaning and range of equivalency of the claims are to be embraced within their scope.

[0162] It will be readily understood that the components of the present invention, as generally described and illustrated in the Figures herein, may be arranged and designed in a wide variety of different configurations. Thus, the following more detailed description of the embodiments of the invention, as represented in the Figures, is not intended to limit the scope of the invention, as claimed, but is merely representative of certain examples of presently contemplated embodiments in accordance with the invention. The presently described embodiments will be best understood by reference to the drawings, wherein like parts are designated by like numerals throughout. Throughout this specification references to "automated window" and "motorized window" are similar terms describing a window that has been motorized and automated. Every window referenced in this specification has both of these features (being automated and motorized). A window may be controlled by an actuator via a remote control device per the stated claims in this description is one with both some form of motor or actuator coupled with some form of automation via a controller. Other references to "actuator", "motor" and "motor assembly" are also referring to various embodiments of the same device. In some cases, the actuator includes a gearbox, transmission and worm drive for example. This device may be referred to

simply as a "motor" or "motor assembly". In other cases, the device may comprise only a motor with no transmission for example.

[0163] Referring to FIG. **1**C, a perspective view showing one embodiment of a motorized window and a mobile device in accordance with the invention is shown. The motorized window **102** is shown containing various components. In the illustrated embodiment, the motorized window **102** includes a controller configured to automatically open or close the motorized window **102**. Examples of a user input device is shown as a mobile device **130**.

[0164] FIG. **1**C further illustrates system components as follows: A battery enclosure **136** for one or more batteries, actuator **116** which may include motors for opening and closing the window **102**, processor **124**, PAN interface **128**, sensor **134**, and solar photovoltaic panel **119**. In this example embodiment, the motorized window further includes a first hub **126**.

[0165] Mobile device **130**, as shown in FIG. **1**C, transmits and receives LAN wireless signal **132** from the first hub **126**, allowing wireless control by a user of the system. The first hub **126** converts the LAN protocol to PAN protocol and communicates the signal to the PAN interface **128**. The first hub may be either mounted inside the motorized window as shown or may be mounted in a separate location if required to serve multiple motorized windows.

[0166] The preferred embodiment for the PAN is Bluetooth communication which is present in most mobile devices such as cell phones, laptops or mobile computer tablets. The mobile device **130** may use either the PAN interface or the LAN interface to communicate to the motorized window **102**. The preferred embodiment for the LAN is WIFI or similar high bandwidth, long range protocol. Depending on the distance between groups of motorized windows that are to be connected together on the network, hubs are provided to extend the connection to groups of motorized windows that are out of range of the PAN. Multiple hubs may be employed as required to extend the network to more than one group of PAN connected motorized windows.

[0167] The first time a user sets up the system, the processor will identify the user as a master user. The system will be pre-set from the factory with factory settings defining the general operation of the motorized window. Any changes to the factory settings may be saved by the master user, including permission settings for other users. The master user may allow other users to access all or only selected control of specific system settings or controls as defined by the master user. The master user may be prompted to fully open and fully close the window in order to establish end points or stop points to identify closed and open positions.

[0168] Processor **124** receives inputs from sensor **134**, and from other sensors either at the motorized window **102**, or sensors at other locations. The factory preset settings along with user settings direct the operation of the system. These settings are stored in the non-volatile memory for data storage, the non-volatile memory device or module being mounted to the same circuit board as the processor **124**. As inputs are received from sensors, weather data, and other real-time data, the processor **124** consults the settings in non-volatile memory to determine what action, if any, to take. Calendars and schedules are also consulted prior to sending commands to a controller. Once the processor has determined that an action should be taken, appropriate command signals are sent to the appropriate actuator **116** as required.

[0169] PAN interface **128** connects each motorized window to other motorized windows in the system. The PAN interface **128** also connects the system to a building local network with connection to the internet for access to a cloud network.

[0170] For retrofit applications, the motorized window **102** may be retrofitted with an actuator **116** in accordance with the invention, various components of the motorized window **102** may be removed or replaced. The actuator **116** may be configured to engage and rotate a window opening mechanism of the motorized window **102** in order to tilt open the window.

[0171] FIG. **1**D shows an isometric top-left view of a motorized sliding segment in a frame with gear track mounted to slidable segment. In this embodiment, the fixed motor assembly **150** is mounted to the fixed window frame, and gear **160** engages with gear track **118**. Although one fixed motor assembly **150** is shown in FIG. **1**D, any number of fixed motor assemblies **150** may be used, including motors on the top horizontal member **108**. In instances where the sliding segment **114** slides up and down, motor assemblies **150** may be mounted on either left vertical member **104** or right vertical member **106**. While the bottom of the frame is identified, it is appreciated that a motor assembly **116** may be affixed to any location on the frame without departing from the scope of the present systems, devices, and methods. Motor assemblies **150** may contain a motor, and one or more: gears; gearbox; transmission; worm drive; or combinations thereof, as described in various embodiments described in these drawings and specifications. Gear tracks **118** may be affixed to the top and bottom horizontal members **108** and **110**. The gears mesh with the teeth of the gear tracks **118**. The motors turn the gears in a first direction, causing the gears to walk along the gear tracks **118**, causing the slidable segment **114** to slide towards this vertical member. Rotation in the opposite direction walks the gears the other direction, pulling the slidable segment the other direction.

[0172] Referring to FIG. **1**E, FIG. **1**E shows a cutaway cross-sectional isometric view of one of the motor assemblies **116**. The latching receiver **180** comprises a communication device **182** that generates a signal when the latching device **182** is mated and transmits that signal to the controller which generates a control signal that is sent to the motor gear box **184**. In some embodiments, a control signal may deactivate the motor release mechanism which then automatically releases gear **160** from gear track **118**, thereby allowing the slidable segment to be moved to an open position. This may be in response to an emergency condition as detected by at least one of the one or more sensors. The frame may also have a latching device that mates to a latching receiver **180** attached to the slidable segment, wherein mating prevents movement of the slidable segment. Release clasp **190** may allow a user to pull on the clasp to release, in response to an emergency condition which may then deactivate the motor release mechanism which then automatically releases gear **160** from gear track **118**, thereby allowing the slidable segment to be moved to an open position. Sensor **192** and performance sensor **186** may send signals to the processor and controller.

[0173] Referring to FIG. **1**F, FIG. **1**F is an illustration of gear **160** interfacing with a gear track **118**.

[0174] Referring to FIG. **1**G, FIG. **1**G is an illustration of worm gear **170** interfacing with a gear track **118**.

[0175] Referring to FIG. **2**A, FIG. **2**A shows an isometric view of one of the motor/pulley assemblies. In this embodiment, the motor assembly **218** is mounted inside left vertical member **104**. The drive shaft from motor assembly is attached to first pulley wheel **202**. Second pulley wheel **204** freely rotates to a shaft mounted to right vertical member **106**. Belt **208** is a continuous belt that wraps around the first pulley wheel and the second pulley wheel. The belt **208** is attached in two places by "L" shaped brackets **212** to a top horizontal member of the slidable segment **214**; Belt section **217** is attached to slidable segment **214** and moves with it. Motor assembly **116** drives the first pulley wheel **202** in a first direction causing the first pulley wheel to pull on the belt such that the slidable segment slides towards the first vertical member. Driving the first pulley wheel **202** in a second direction causes the first pulley wheel to pull on the belt such that the slidable segment slides towards the second vertical member.

[0176] Referring to FIG. **2**B, FIG. **2**B shows a sectional view of the pulley belt and top of slidable segment **214**. Belt **208** moves freely above the slidable segment **214** as shown. Belt section **217** is attached to "L" bracket **212** to the top of slidable segment **214**, enabling the belt to move slidable segment **214** in either direction when the motor is in operation.

[0177] Referring to FIG. **2**C, FIG. **2**C shows a belt **208** with teeth **228** interfacing with left pulley wheel **220** and right pulley wheel **222**. In this example embodiment, both pulley wheels have teeth, and the belt **208** has teeth that interface with the pulley wheel teeth preventing the belt from slipping.

[0178] Referring to FIG. **2**D, FIG. **2**D shows a chain **208** with chain links **248** interfacing with left pulley wheel **240** and right pulley wheel **242**. In this example embodiment, both pulley wheels have gear teeth, and the chain **208** interfaces with the gears, preventing the belt from slipping.

[0179] Referring to FIG. **2**E, FIG. **2**E shows an isometric view of the motor/pulley assemblies. In this embodiment, the motor assembly **116** is mounted inside the frame of slidable segment **214**. The drive shaft from motor assembly is attached to third pulley wheel **250**. One end of belt **254** is attached to left vertical member **104**, wraps around third pulley wheel **250**, and the other end of belt **254** is attached **252** to right vertical member **106**. In this example embodiment, the motor moves together with the slidable segment **214**. Motor assembly **116** drives the third pulley wheel **250** in a first direction causing the first pulley wheel to pull on the belt such that the slidable segment slides towards the first vertical member. Driving the third pulley wheel **250** in a second direction causes the third pulley wheel **250** to pull on the belt **254** such that the slidable segment **214** slides towards the second vertical member.

[0180] Referring to FIG. **2**F, FIG. **2**F is an illustration of a front view of a pulley wheel with guide tracks. Third pulley wheel **250** is driven by motor or drive system attached to shaft **252**, driving belt **254** in one of two directions. Guide track **260** guides the belt **254** from a top position **256** as it enters the pulley wheel, belt **254** then wraps around third pulley wheel **250** and exits the pulley wheel at a lower position **258**.

[0181] Referring to FIG. **2**G, FIG. **2**G shows a back view a back view of FIG. **2**F, illustrating how guide track **260** guides the belt from a top position **256** to a lower position **258** on the pulley wheel.

[0182] Referring to FIG. **2**H, FIG. **2**H shows an overhead view of FIG. **2**F.

[0183] Referring to FIG. **2**I, FIG. **2**I shows a cutaway cross-sectional isometric view of one of the motor assemblies **116**. The latching receiver **280** comprises a communication device **282** that generates a signal when the latching device **280** is mated and transmits that signal to the controller which generates a control signal that is sent to the motor gear box **210**. In some embodiments, a control signal may deactivate the motor release mechanism which then automatically releases gear **268** from pulley shaft **270**, thereby allowing the slidable segment to be moved to an open position. This may be in response to an emergency condition as detected by at least one of the one or more sensors. The frame may also have a latching device that mates to a latching receiver **180** attached to the slidable segment, wherein mating prevents movement of the slidable segment. Release clasp **290** may allow a user to pull on the clasp to release, in response to an emergency condition which may then deactivate the motor release mechanism which then automatically releases gear **268** from pulley shaft **270**, thereby allowing the slidable segment to be moved to an open position. Sensor **292** and performance sensor **286** may send signals to the processor and controller.

[0184] Referring to FIG. **3**A, Mobile device **130** communicates to the LAN interface **311** in first hub **126** via wireless signal **132**. User commands are relayed to the LAN from an app on the mobile device. The gateway **314** converts the LAN protocol messages to PAN protocol messages and relays the user command via the hub PAN interface **312** to the motorized window PAN interface **128**. First hub server **316** comprises a processor **318** and non-volatile memory **320**.

[0185] FIG. **3**A further shows the communication between three motorized windows via PAN wireless signals **304**. Motorized window **335** receives PAN wireless signals **304** from first hub **126** and relays command to processor **124** which sends a control signal to actuator **116**. User commands from the mobile device **130** for motorized window **337** and motorized window **339** are relayed via the PAN wireless signals **304** from the first hub **126** to the specified motorized window identified in the user command. For example, a user command to motorized window **339** is sent from mobile device **130** via LAN wireless signal **132** to first hub **126**, where the signal is converted to a PAN wireless signal **304** that is transmitted to motorized window **339** for control of that specific motorized window. A signal may also be passed through from one motorized window to another over the PAN. For example, a user command specific to motorized window **339** may be transmitted first to motorized window **335**. Upon determination that the user command does not apply to motorized window **335**, the user command may be forwarded to motorized window **339** via the PAN Bluetooth mesh network as a pass-through command.

[0186] Referring to FIG. **3**B, an example of five motorized windows, and three hubs is illustrated. In this example embodiment, first hub **126** transmits and receives wireless signal **371** to motorized windows **331** and **333**. Control of these two motorized windows is directed by the user commands relayed from first hub **126**. Motorized windows **331**

and **333** are in closest proximity to first hub **126** and have the strongest received signal strength indication (RSSI) compared to other hubs in the vicinity.

[0187] Motorized window **335** receives both wireless signal **371** from first hub **126** and wireless signal **373** from first subordinate hub **307**. In this example the RSSI for wireless signal **371** to motorized window **335** is stronger than wireless signal **373**, so the assignment for control is made to first hub **126**. So long as first hub **126** is active and functional, all user commands and control commands to motorized window **335** are sent from first hub **126** via wireless signal **371**. In the case where the first hub **126** may become disabled or no longer functional, the first subordinate hub **347** will take over the control of motorized window **335** and relay commands via wireless signal **373**. In this example, the first subordinate hub **347** becomes the first hub, taking the place of the disabled hub.

[0188] FIG. **3**B further illustrates how the local area network (LAN) and personal area network (PAN) interface with each other. First hub **126**, first subordinate hub **347** and second subordinate hub **349** are all on the same LAN. Wireless signals **371**, **373** and **375** are on the same LAN. The preferred embodiment of the LAN comprises a WIFI, high bandwidth, long range signal. The preferred LAN network comprises a mesh network which allows new hubs to be added to the system. The mesh network also allows for subordinate hubs to continue operation of the network in the case where one of the hubs becomes disabled or nonfunctional.

[0189] The five motorized windows **331**, **333**, **335**, **337** and **339** communicate via the PAN to each other and to a hub PAN interface via one of the hubs shown. Motorized windows **337** and **339** are within range of both first subordinate hub **347** and second subordinate hub **349**. In this example, wireless signal **373** is stronger for motorized window **337**, so it is controlled via first subordinate hub **307**. Wireless signal **375** is stronger for motorized window **339**, so it is controlled by second subordinate hub **349**.

[0190] Referring to FIG. **4**, an example of three motorized windows, the cloud network, a weather station, a security system and a first hub **126** is illustrated. In this example embodiment, the three windows illustrated are connected via Bluetooth mesh wireless signal **434**. Wireless signal **452** connects the security system **454** to the cloud network **440** which communicates security system data to the system. The security system **454** may also communicate security system data directly to the system via wireless signal **444** to first hub **126**. The security system data is used by the processor to determine what actions are to be taken in response to motion sensors, cameras or other security devices. The security system **454** may alert the system to close the windows or activate other security related actions based on user defined or factory settings. Weather station **460** may relay weather related data to the system via wireless signal **452** to the cloud network **440**. This data may be passed on to the first hub **126** via wireless signal **444**.

[0191] Referring generally to FIGS. **5** through **21**, in certain embodiments in accordance with the invention, an application may be provided that allows a user to program the automated window to operate in a desired manner. For example, a user may want the automated window to open a motorized window **100** at a specified time of day and close the motorized window **100** at another time of day. The application may also assist the user in programming multiple motorized windows **100**. For example, a user's home or business may contain multiple motorized windows **100** and it may be inefficient and time-consuming to individually program the automated windows, particularly in cases where the user wants the automated windows to behave in a similar manner. In certain embodiments, the application may assist the user in programming multiple automated windows as a group.

[0192] In certain embodiments, the application is configured to execute on a user's mobile device, such as a tablet or smart phone. FIGS. **5** through **14** show various exemplary graphical user interface (GUI) pages associated with an application configured to execute on a mobile device. Nevertheless, in other embodiments, the application may be configured to execute on a desktop computer, workstation, laptop, or other suitable computing device.

[0193] Referring to FIG. **5**, one embodiment of a GUI page **500** for setting up and automating motorized windows **100** in various rooms of a home or business is illustrated. When automating a home or business, multiple motorized windows **100** may be retrofitted with an automated window in accordance with the invention. In many cases, individual rooms in the home or business may contain multiple motorized windows **100**. In certain cases, a user may want all motorized windows **100** in a home or business, or all motorized windows **100** in a particular room of a home or business, to be programmed in the same or a similar manner. Similarly, when using manual controls to operate the motorized windows **100**, the user may wish to operate all motorized windows **100** in a home or business, or in a room of the home or business, as a group as opposed to individually.

[0194] FIG. **5** shows one embodiment of a Rooms page **500** that enables a user to establish rooms in a home or business, as well as operate all motorized windows **100** in the home or business, or in a room of the home or business, as a group. In the illustrated embodiment, buttons **502** are provided to represent the home or business, as well as each room that has been established in the home or business. Selecting a button **502** may enable a user to configure the home or business, or a room in the home or business, such as by adding motorized windows **100** to the home, business, or particular room. For example, selecting the "All Windows" button **502** may allow the user to configure all motorized windows **100** associated with the home or business. Similarly, selecting the "Living Room" button **502** may allow the user to configure motorized windows **100** in the user's living room. An "Add New Room" button **504** may enable a user to add a new room to the list **502**.

[0195] As shown, various manual controls are provided on the "Rooms" page **500**. For example, an open button **506** may cause all windows in a home or business, or a particular room in the home or business, to open. Similarly, a close button **508** may cause all windows in the home or business, or the particular room in the home or business, to close. The buttons **506**, **508** may be configured to operate in different ways. For example, pressing and holding the button **506**, **508** may cause slats of the motorized windows **100** to tilt until the buttons **506**, **508** are released. In another example, pressing and holding the button **506**, **508** may cause a material in the window to increase the darkness or opacity until the buttons **506**, **508** are released. This would allow various intermediate positions or states to be achieved. By contrast, single or double clicking a button **506**, **508** may cause the slats of the motorized windows **100** to open or

close completely without having to hold down the corresponding buttons **506**, **508**. This is simply an example of possible operation and is not intended to be limiting.

[0196] Referring to FIG. **6**, one embodiment of a Create New Room page **600** is illustrated. Such a page **600** may be displayed upon selecting the Add New Room button **604** discussed in association with FIG. **6**. As shown, the "Create New Room" page **600** enables a user to designate a room name (e.g., "Front Room") in a field **608**, as well as designate a default open and closed position for motorized windows **100** associated with the room. As shown in FIG. **6**, slider buttons **602** are provided to enable the user to establish the open and closed positions for the motorized windows **100**. In certain embodiments, motorized window depictions **606** adjacent to the buttons **602** are animated in response to movement of the slider buttons **602**. That is, as the slider buttons **602** are moved up or down, the motorized window depictions **606** appear to open and/or close to reflect the actual position of the slats or state of opacity. Once a room is named and the default open and closed positions are established, a "Create Room" button **604** may be selected to create the room. This will, in turn, cause the room to be added to the list **602** illustrated in FIG. **5**.

[0197] Referring to FIG. **7**, one embodiment of a page **700** for configuring a room is illustrated. Such a page, for example, may be displayed in response to selecting one of the buttons **502** illustrated in FIG. **5**. This page **700** may enable a user to add, delete, modify, or monitor motorized windows **100** associated with a particular room or space. In the illustrated example, the room Living Room includes three motorized windows **100**, namely "Bay Left, Bay Right," and "Bay Center." Indicators are provided to show a battery charge level associated with each of the motorized windows **100**. As further shown, each of the motorized windows **100** includes a button/indicator **702**. In certain embodiments, the outer ring may indicate whether the motorized window **100** is online and connected whereas the inner circle may enable a user to select the motorized window **100** so that it can be controlled and/or configured. For example, upon selecting one or more motorized windows **100** in the list, a slider button **704** may enable the motorized windows **100** to be manually opened or closed by moving the slider button **704**.

[0198] Various different buttons for configuring the motorized windows **100** are shown at the bottom of the page **700**. For example, a button **706** may be selected to configure a motorized window **100** or a group of motorized windows **100** to operate in accordance with sensed lighting conditions. For example, a user may want a motorized window **100** or a group of motorized windows **100** to open at sunrise and/or close at sunset. Selecting the button **706** may open up a page that enables the user to configure the motorized windows **100** in such a manner. One embodiment of such a page is illustrated in FIG. **11**.

[0199] Similarly, a button **708** may be selected to configure a motorized window **100** or a group of motorized windows **100** to operate in accordance with a defined schedule. For example, a user may want a motorized window **100** or a group of motorized windows **100** to open and/or close at designated times. In certain embodiments, different open/close times may be established for different days of the week. Selecting the button **708** may open up a page that enables the user to configure the motorized windows **100** to operate in accordance with the established schedule. One embodiment of such a page is illustrated in FIG. **8**.

[0200] Referring to FIG. **8**, one embodiment of a page **800** for establishing a schedule for a motorized window **100** or a group of motorized windows **100** is illustrated. In the illustrated embodiment, a time line **810** is provided for each day of the week. A user may establish different types of events **814** on the time line **810**. For example, a user may wish to establish an open event **814** at a designated time and a close event **814** at a different designated time. For example, as shown in the illustrated embodiment, an open event **814** is established at 7:15 AM and a close event **814** is established at 9:30 AM. In certain embodiments, events **814** may also be established for states other than open/close states. For example, a user may want a motorized window **100** or a group of motorized windows **100** to be fifty percent (or some other percentage) open at a designed time. In the illustrated embodiment, a partial open event **814** is established at 8:30 AM.

[0201] In certain embodiments, each time line **810** may have a status bar **812** associated therewith. This status bar **812** may show a status of a motorized window **100** or a group of motorized windows **100** during different time periods. For example, the color white on the status bar **812** may indicate that a motorized window **100** or group of motorized windows **100** is open over the indicated time period. Similarly, the color black may indicate that the motorized window **100** or group of motorized windows **100** is closed during the indicated time period. Shades of grey may indicate a state of partial openness, the degree of which may be indicated by the shade.

[0202] In certain embodiments, a gradual change in color along the status bar **812** may indicate that a motorized window **100** or group of motorized windows **100** is gradually opening or closing over the indicated time period. For example, as can be observed in FIG. **8**, a motorized window **100** or group of motorized windows **100** is partially open until 7:15 AM, at which time they completely open. The motorized window **100** or group of motorized windows **100** then gradually close until they reach a designated state of partial openness at **8**:**15**AM. The motorized window **100** or group of motorized windows **100** gradually continue to close until they are completely closed at or around 9:30 AM and thereafter. In certain embodiments, an event **814** may indicate when an operation (open, close, etc.) begins. In other embodiments, an event **814** may indicate when an operation ends. In yet other embodiments, an operation may be centered with respect to an event **814** such that the operation may begin before the designated event time and end after the designated event time.

[0203] In certain embodiments, creating an event **814** may be as easy as selecting an area on a time line **810** where an event **814** is desired to be placed. A page or menu may appear that allows the user to establish details or settings for the event **814**. Similarly, selecting or manipulating an already existing event **814** may allow details or settings associated with the event **814** to be changed. In certain embodiments, a time or day associated with an event **814** may be changed by simply selecting and dragging the event **814** to a desired time or day on the page **800**. Other techniques for creating, modifying, or deleting events **814** may be used and are within the scope of the invention.

[0204] Referring to FIG. **9**, one embodiment of a page **900** for creating or modifying an event **814** is illustrated. In this embodiment, a time-selection feature **902** enables a user to specify a desired time for an event **814**. Similarly, a position-selection feature **904** enables a user to specify a desired position for a motorized window **100** or group of motorized windows **100** for an event **814**. This position-selection feature **904** may, in certain embodiments, enable a user to select an open state, closed state, or an intermediate state associated with the event **814**. In certain embodiments, a slider button **906** is provided to enable the user to designate the position of the motorized window **100** or group of motorized windows **100**. A motorized window graphic **908** adjacent to the button **906** may be animated in response to movement of the slider button **906** to show a position of the motorized window **100** or group of motorized windows **100**.

[0205] In certain embodiments, the page **900** may also enable a user to designate how fast a motorized window **100** or group of motorized windows **100** opens or closes in association with a particular event **814**. For example, a user may want a motorized window **100** or group of motorized windows **100** to open or close over a designated period of time (e.g., 10 minutes, 30 minutes, an hour, etc.) instead of opening or closing in an abrupt manner. This may provide a more aesthetically pleasing way to operate the motorized windows **100** and/or enable motorized windows **100** to operate gradually to mirror or reflect the gradual movement of the sun. This may also maximize the amount of sunlight that is allowed to enter a room while at the same time preventing direct sunlight and associated damage on furniture, rugs, or other objects, even as the angle of incidence of the sun changes throughout the day. In certain embodiments, a button **910** (e.g., a soft close button **910**) may be provided to enable this feature. Similarly, in certain embodiments, a slider button **912** (or other feature such as an input field) may be provided to enable a user to establish how long it takes for a motorized window **100** or group of motorized windows **100** to transition between states.

[0206] Referring to FIG. **10**, one embodiment of a page **1000** for establishing various details for a motorized window **100** is illustrated. As shown, the page **1000** includes a field **1002** for designating or changing a name of a motorized window **100**. In certain embodiments, descriptive names may be chosen to assist a user in differentiating motorized windows **100** from one another. A button **1004** may be selected to configure a motorized window **100** to operate in accordance with sensed lighting conditions, such as by opening in response to sunrise and closing in response to sunset. One embodiment of a page for configuring a motorized window **100** in this manner will be discussed in association with FIG. **11**.

[0207] A button **1006** may be configured to display information regarding energy and usage associated with a motorized window **100**. For example, selecting the button **1006** may enable a user to view a battery charge level, an estimated time that a battery charge will be depleted, usage patterns or particular instances of operation of the motorized window **100**, or the like.

[0208] A button **1008** may enable a user to configure expansion ports or devices connected to expansion ports of the motorized window **100**. For example, in certain embodiments, sensors such as temperature sensors, security sensors, or the like, may be connected to various expansions ports of a motorized window **100** to allow the motorized window **100** to provide additional features and functions. The button **1008** may present a screen or page that allows these expansion ports or devices to be configured.

[0209] An identify blind button **1110** may assist a user in identifying the motorized window **100** identified in the field **1002**. For example, selecting the button **1010** may cause the motorized window **100** to physically move or perform some other function to allow the user to determine which physical motorized window **100** corresponds to the motorized window **100** identified in the application. This may be helpful in situations where a room, home, or business contains multiple motorized windows **100** and the user is unsure which physical motorized windows **100** correspond to the blind names listed in the application.

[0210] A reverse rotation button **1012** may enable functions of an automated window to be reversed. For example, if the opacity in a window is normally drawn from the top to the bottom of the window, or if shades are drawn from the top to the bottom, the reverse rotation button **1012** may reverse the operation to start the opacity from the bottom of the window. In some cases, it may be desirable (for privacy) to have the bottom portion of the window opaque while the upper portion of the window is still clear, letting natural light from the exterior enter into the interior of the building space.

[0211] A firmware update button **1014** may enable a user to update firmware on the motorized gearbox assembly **102**. One benefit of the motorized gearbox assembly **102** compared to conventional motorized window automation systems is the smart technology built into the motorized gearbox assembly **102**. Instead of simply receiving and executing commands, the motorized gearbox assembly **102** may have processing capability that allows it to provide additional functionality. For example, in certain embodiments, the motorized gearbox assembly **102** may interface with security sensors for use in a security system, or temperature or humidity sensors for use in a climate-control or HVAC system. The firmware update button **1014** may enable updated firmware to be loaded (e.g., wirelessly loaded) onto the automated window to either improve existing functionality or expand the functionality of the automated window.

[0212] Referring to FIG. **11**, one embodiment of a page **1100** for establishing light settings for a motorized window **100** or a group of motorized windows **100** is illustrated. Such a page **1100** may be displayed in response to selecting the button **706** discussed in association with FIG. **7** or selecting the button **1004** discussed in association with FIG. **10**. The page **1100** may enable a motorized window **100** or a group of motorized windows **100** to be configured to operate in accordance with sensed lighting conditions. When working with a group of motorized windows **100**, the group may, in certain embodiments, be configured to operate from a single light sensor (possibly a light sensor in single motorized window **100** or an external light sensor) in order to substantially synchronize the motorized windows **100**. In other embodiments, each motorized window **100** in the group may operate in accordance with sensed lighting conditions from its own light sensor.

[0213] As shown in FIG. **11**, in certain embodiments, the page **1100** may include a button **1102** to configure a motorized window **100** or group of motorized windows **100** to automatically open at sunrise. In certain embodiments, a slider button **1106** may be provided to set the motorized window position at sunrise. This may allow the motorized

window **100** or group of motorized windows **100** to be completely or partially opened at sunrise. A motorized window graphic **1110** adjacent to the button **1106** may visually open or close in response to movement of the slider button **1106** to show a position of the motorized window **100** and/or group of motorized windows **100**.

[0214] Similarly, a button **1104** may be provided to configure a motorized window **100** or group of motorized windows **100** to automatically close at sunset. A slider button **1108** may, in certain embodiments, be provided to set a desired motorized window position at sunset. This may allow the motorized window **100** or group of motorized windows **100** to be completely or partially closed at sunset. A motorized window graphic **1112** adjacent to the button **1108** may visually open or close in response to movement of the slider button **1108** to show a position of the motorized window **100** and/or group of motorized windows **100**. In other embodiments, the slider may control slats or opacity features of the window. For example, sliding the slider up may either raise the opacity to a certain point, creating opaqueness on the lower section of the window, and leaving the top portion of the window clear. In another example, the slider may change the intensity of the opaqueness, causing it to get more or less opaque as the slider is drawn up or down.

[0215] Referring to FIG. **12**, one embodiment of a page **1200** for establishing settings associated with a living room **1202** is illustrated. Such a page **1200** may be displayed, for example, in response to selecting the button **502** discussed in association with FIG. **5**. The page **1200** may also, in certain embodiments, be displayed in response to selecting the add new room button **504** discussed in association with FIG. **5**. As shown, the page **1200** includes a field **1202** to create or edit a room name associated with a particular room or space. The page **1200** also allows default open and closed positions to be established for motorized windows **100** associated with a room. In the illustrated example, slider buttons **1206**, **1208** are provided to establish the default open and closed positions. Similarly, window graphics **1210**, **1212** may be provided to visually represent the default open and closed positions. When an open or close button **506**, **508** is selected for a room, as previously discussed in association with FIG. **5**, the motorized windows **100** in the room may be opened or closed in accordance with the default positions.

[0216] Referring to FIG. **13**, one embodiment of an app settings page **1300** is illustrated. In the illustrated embodiment, the page **1300** includes a set up accessories button **1302**, "share app profile" button **1104**, "account button" **1306**, "show help bubbles" **1308**, and "reset app" button **1310**. These buttons are provided by way of example and are not intended to be limiting.

[0217] A "setup accessories" button **1302** may be provided to set up accessories related to a motorized window **100** or a group of motorized windows **100**. Such accessories may include, for example, a wall switch configured to control motorized windows **100**, a USB or HDMI dongle configured to control motorized windows **100**, a temperature sensor connected to a motorized window **100**, a security sensor connected to a motorized window **100**, or the like. A page **1300** for setting up such accessories will be discussed in association with FIG. **14**.

[0218] A "share app profile" button **1104** may enable settings established on a first device (e.g., smart phone, tablet, laptop, etc.) to be mirrored to a second device (e.g., smartphone, tablet, laptop, etc.). For example, if a large number of motorized windows **100** have been set up, named, and configured on a first device, the "share app profile" button **1104** may allow these settings to be mirrored to a second device without having to once again set up, name, and configure the motorized windows **100**.

[0219] An account button **1306** may be used to establish a username, password, user preferences, and other account-related information associated with a user. In certain embodiments, a "show help bubbles" button **1308** may cause the application to display help information for screens, buttons, or other features or functionality in the application. These help bubbles may be displayed, for example, when a user touches, hovers over, or otherwise selects different screens, buttons, or features in the application. A reset app button **1310** may enable a user to reset the application. In certain embodiments, this may erase motorized window and other configuration information in the application, thereby allowing the user to start anew.

[0220] Referring to FIG. **14**, one embodiment of a page **1400** for managing accessories related to a motorized window **100** or a group of motorized windows **100** is illustrated. In this example, the page **1400** shows a list of wall switches and TV adapters. In certain embodiments, a motorized window **100** or group of motorized windows **100** may be controlled (e.g., wirelessly controlled) by a wall switch, such as a specialized wall switch. One embodiment of such a specialized wall switch will be discussed in association with FIG. **18**. Such a wall switch may, in certain cases, be used in place of or in addition to the manual controls provided by the application. As shown, the page **1400** may enable new wall switches to be added to the system as well as editing of existing wall switches.

[0221] Similarly, the page **1400** allows TV adapters to be added to the system or existing TV adapters to be edited. In certain embodiments, a motorized window **100** or a group of motorized windows **100** may be controlled by a video display adapter, such as a USB or HDMI dongle plugged into a USB or HMDI port of a video display. Such a video display adapter may be configured to generate a signal when a video display (e.g., a television, projector, etc.) is turned on or off. That is, the motorized window **100** or group of motorized windows **100** may automatically open or close in response to receiving the signal. This may allow a room or space to be automatically darkened when a television, projector, or other media device is turned on, and automatically lightened when the television, projector, or other media device is turned off. As shown, the page **1400** may enable new TV adapters to be added to the system as well as editing of existing TV adapters.

[0222] Referring to FIGS. **15** and **16**, a high-level system view showing various components internal to and external to a motorized window **100** is illustrated. Various of the components (e.g., controller **1502**, communication module **1500**, motor driver **1504**, etc.) shown inside the motorized window **100** may be implemented within the motorized window, such as on a circuit board or within a housing of the actuator or controller, although this is not necessary in all embodiments. Other components (e.g., battery **1510**) may be implemented outside of the motorized window but within the automated window or actuator body. Yet other components (light sensors **1516**, temperature sensors **1518**, security sensors **1520**, solar cell **1512** etc.) may be implemented outside of the motorized window **100**. For example, a

temperature sensor **1518** or security sensor **1522** may be mounted to a window and connected to the controller **1502** (using, for example, wires routed through the frame of the motorized window). Nevertheless, the location and placement of the components illustrated in FIG. **15** may vary in different embodiments and is not intended to be limiting.

[0223] As shown, an automated motorized window **100** outfitted with an automated window in accordance with the invention may include one or more of the following: a communication module **1500**, controller **1502**, motor driver **1504**, servo control module **1505**, input device(s) **1506**, output device(s) **1508**, battery **1510**, and charging module **1512**. The motorized window **100** may also include one or more sensors **1514**, such as a position encoder **1501**, light sensor **1516**, temperature sensor **1518**, security sensor **1520**, safety sensor **1522**, and current/voltage sensor **1524**. The manner in which the various components of the motorized window **100** are used will be discussed in more detail hereafter.

[0224] A communication module **1500** may enable wireless communication between the motorized window **100** and external devices. In one embodiment, the communication module **1500** includes a Bluetooth chip that allows the motorized window **100** to communicate with an external computing device **1540**, wall switch **1554**, video display adapter **1550**, home automation controller **1546**, or the like, using Bluetooth signals. In other embodiments, the communication module **1500** enables communication using other communication protocols, such as WIFI, Z-Wave, Zigbee, or the like. In certain embodiments, a bridge may be used to enable translation and compatibility between different communication protocols.

[0225] The communication module **1500** may also, in certain embodiments, act as a repeater to repeat signals to other devices. This may allow the communication module **1500** (and associated motorized window **100**) to form part of a mesh network of interconnected devices. In some cases, a motorized window **100** may originate signals that are used to control other devices, For example, a temperature sensor **1518** connected to a motorized window **100** may measure temperature at or near a window. The measured temperature may be transmitted to a thermostat **1556** or other device to make adjustments to an HVAC system. Additionally, or alternatively, commands may be sent directly to an HVAC system to make adjustments thereto. Thus, in certain embodiments, the communication module **1500** may originate signals that are used to control devices external to the motorized window **100**.

[0226] A controller **1502** may be configured to control the motorized window **100** and perform other functions, such as gathering information at or near the motorized window **100**, controlling devices external to the motorized window **100**, receive and execute commands from devices external to the motorized window **100**, and the like. As can be appreciated by those of skill in the art, the controller **1502** may be programmable and may include a processor and non-volatile memory to store and execute program code. As was discussed in association with FIGS. **5** through **15**, the controller **1502** may be programmed to operate a motorized window **100** in accordance with a designated schedule or in response to sensed lighting conditions. Once programmed, the controller **1502** may operate the motorized window **100** on its own without requiring commands from external devices. The controller **1502** may also be configured to receive commands (e.g., open or close commands) from an external device such as a smartphone and operate the motorized window **100** accordingly. Thus, presence of the controller **1502** may enable the automated motorized window **100** to independently operate on its own (without centralized control) or operate in response to commands from a centralized controller external to the motorized window **100**.

[0227] Control signals generated by the controller **1502** may be sent to a motor driver **1504** in order to operate a motor or actuator. In certain embodiments, these control signals may be converted to modulated control signals using a suitable modulation technique (e.g., pulse-width modulation, or PWM). The modulated control signals may be sent to a motor driver to operate a motor or actuator, which may in turn adjust the angular position of the motorized window slats. In certain embodiments, a servo control module **1505** may provide feedback to the controller **1502** regarding the angular position of the slats (using the position encoder **1501**) relative to a desired angular position so that the operation of the motor **400** can be adjusted accordingly. This may reduce error between a desired angular position and an actual angular position of the slats.

[0228] The motorized window **100** may also include various input devices **1506** and output devices **1508**. Input devices **1506** may include, for example, various sensors **1514** for gathering data in and around the motorized window **100**. An input device **1506** may also, in certain embodiments, include an audio sensor for receiving voice commands or other audible signals, such as voice commands to open or close a motorized window **100** or group of motorized windows **100**. In certain embodiments, a manual input device may function as an interface for a user to control the window. Other types of input devices **1506** are possible and within the scope of the invention. Input devices **1506** may be incorporated into the motorized window **100**, a solar panel attached to the motorized window **100**, or the like.

[0229] Output devices **1508** may include, for example, LEDs, alarms, speakers, or devices to provide feedback to a user. Such output devices **1508** may, for example, indicate when a battery level for a motorized window **100** is low; when motion has been detected by a motorized window **100** (in embodiments where a motion sensor **1524** is incorporated into the motorized window **100**); when connectivity is enabled, disabled, or lost between the motorized window **100** and other devices; when the motorized window **100** has experienced an error or other fault condition; when the motorized window **100** has detected smoke, carbon monoxide, or other gases (in the event a smoke or gas detector **1522** is incorporated into the motorized window **100**); when a security event is detected by the motorized window **100**, or the like. Such output devices **1508** may, in certain embodiments, be incorporated into the motorized window **100**, a solar panel attached to the motorized window **100**, or the like.

[0230] The motorized window **100** may also include a battery **1510** to power the motorized window **100**. In certain embodiments, the battery **1510** is housed within the motorized window **100**, external to the actuator enclosure. The battery **1510** may be rechargeable. Alternatively, or additionally, the battery **1510** is recharged by a solar panel **106** attached to the motorized window **100**. For example, a solar panel **106** may be attached to the window frame or the window glass. In other embodiments, solar panels may be incorporated into or attached to the outer assembly of a

motorized window **100**. In certain embodiments, a charging module **1512** may boost low voltage from a solar panel to a higher voltage needed to charge the battery **1510** and/or operate various components within the motorized gearbox assembly **102**.

[0231] As shown, the motorized window **100** may include various types of sensors **1514**. Some of these sensors **1514** may be related to operation of the motorized window **100**. Other sensors **1514** may take advantage of the motorized window's special placement within a home or building, namely on or near windows or other openings. The proximity of motorized windows **100** to windows and other openings make it possible for smart motorized windows **100** to provide a wide variety of features and functions not normally associated with motorized windows **100**.

[0232] As previously mentioned, a position encoder **1501** may be used to track the number of rotations and/or angular position of the output shaft of the motor or actuator. The number of rotations and angular position of the output shaft may be translated into an angular position of a motor or actuator after the motorized window **100** has been calibrated. Various techniques for calibrating a motorized window **100** will be discussed in association with FIG. **17**.

[0233] A light sensor **1516** may sense light levels at or around a motorized window **100**. Various types of light sensors **1516**, including photovoltaic cells, cameras, photo diodes, proximity light sensor, or the like, may be used depending on the application. In an embodiment, the solar panel **106** may be used as a light sensor. In certain embodiments, a light sensor **1516** may sense light external to a window. This may allow a motorized window **100** to open or close or increase and decrease opacity in response to lighting conditions outside a building. For example, a motorized window **100** may be configured to open at sunrise and close at sunset. Alternatively, or additionally, a motorized window **100** may be configured to open (either fully or partially) when conditions are overcast, thereby letting more light into a room or space, and close (either fully or partially) in response to detecting full sunlight, thereby letting less light into a room or space. In certain embodiments, a light sensor **1516** may be used to determine a total amount of light energy entering a room or space through a window. This information may be used to adjust a motorized window **100** or motorized window **100** or adjust HVAC system parameters. In another embodiment, the window may be closed upon detection of water or moisture from an environmental sensor.

[0234] A light sensor **1516** may also be configured to sense light levels internal to a window, such as within a room or interior space. This may allow a motorized window **100** to be adjusted based on interior light levels. For example, a motorized window **100** may be opened in response to lower levels of interior light and closed in response to higher levels of interior light. In certain embodiments, various algorithms may be used to adjust motorized windows **100** in response to both exterior and interior light levels, as opposed to just one or the other. Thus, in certain embodiments light sensors **1516** may be provided to sense both exterior and interior light levels.

[0235] In certain embodiments, the opening and closing of motorized windows **100** maybe coordinated with the turning on or off of lights in a room or space. For example, if lights in a room are turned off, motorized windows **100** may be opened to compensate for the reduced amount of light. This allows natural light to replace artificial light and creates opportunities for conserving energy. In certain embodiments, lights may be automatically turned off and motorized windows **100** may be automatically opened to replace artificial light with natural light when conditions allow. In such embodiments, the motorized windows **100** and interior lighting may be controlled by a home automation platform or other controller to provide desired amounts of light in a room or space while simultaneously conserving energy.

[0236] A temperature sensor **1518** may be used to sense temperature at or around a window associated with the motorized window **100**. In certain embodiments, the temperature sensor **1518** is configured to sense a temperature external to a window. For example, an infrared thermometer may be used to infer the temperature external to a window by detecting thermal radiation emitted from objects outside the window. In other embodiments, the temperature sensor **1518** is configured to sense a temperature internal to the window. In yet other embodiments, the temperature sensor **1518** is configured to sense a temperature of the window itself

[0237] In certain embodiments, a motorized window **100** may be adjusted based on a temperature sensed by the temperature sensor **1518**. For example, if an interior temperature of a room is deemed to be too low, the motorized window **100** may open to let in additional sunlight and warm the room. Similarly, if the interior temperature of the room is deemed to be too high, the motorized window **100** may close to reduce an amount of sunlight entering the room.

[0238] The motorized window **100** may also use the temperature sensor **1518** to anticipate changes in temperature. For example, if an exterior temperature or temperature of a window decreases (indicating it is getting colder outside), the motorized window **100** may be configured to open the windows and cool a room in an effort to mitigate anticipated warming of the room. Similarly, if an exterior temperature or temperature of a window increases (indicating it is getting warmer outside), the motorized window **100** may be configured to close the windows in an effort to mitigate anticipated warming of the room.

[0239] In addition to adjusting the motorized window **100** itself, temperature measured at or near the motorized window **100** may be used adjust an HVAC system. The instant inventors have found that measuring temperature at or near a window may be more effective than measuring temperature inside a room (as performed by most thermostats) since windows are located at the boundaries of a room. Temperature changes at these boundaries tend to lead temperature changes in other parts of the room at least partly because windows tend to provide lesser levels of insulation compared to walls and other parts of the room. Thus, temperature readings gathered by a motorized window **100** in accordance with the invention may be used as part of a climate control system to adjust various HVAC system parameters. In certain embodiments, a motorized window **100** in accordance with the invention may actually replace a traditional thermostat used in homes or other establishments. That is, a motorized window **100** in accordance with the invention may monitor temperature at or near a window and, in response, relay at least one of commands and information to an HVAC controller to regulate room temperature in accordance with the monitored temperature. This may, in certain embodiments, eliminate the need for a conventional thermostat, or improve the function of conventional thermostats

by providing improved temperature readings from boundaries (e.g., windows) in a room.

[0240] Due to the placement of motorized windows **100** at or near windows, a motorized window **100** in accordance with the invention may also advantageously include security sensors **3720** to monitor security at or near a window. In one embodiment, the security sensor **1520** is a proximity sensor configured to detect opening and/or closing of a window or door. In another embodiment, the security sensor **1520** is an impact sensor configured to detect impacts on and/or breakage of a window. For example, an accelerometer may act as an impact sensor to detect an extent of force on a window. Different alerts or notifications may be sent to a user or other entity depending on the extent of the impact. For example, touching a window may trigger a low priority alert or notification. Larger forces (causing a window to break, for example) may trigger higher priority alerts or notifications. In some embodiments, high priority alerts may be configured to trigger gathering of camera footage at or near a window.

[0241] In another embodiment, the security sensor **1520** is a camera configured to gather video or still shots at or around a window. In certain embodiments, an LED or other lighting may be provided for recording video or still shots in low lighting conditions. The video or still shots may be streamed wirelessly to a centralized security system or stored on the motorized gearbox assembly **102** for later retrieval. In other embodiments, the security sensor **1520** is a motion sensor configured to detect motion at or around a window. In yet other embodiments, the security sensor **1520** is an audio sensor configured to collect audio at or around a window. By incorporating security sensors **1520** into motorized windows **100**, security may be monitored at each window. In certain embodiments, information from the security sensors **1520** is relayed to a centralized security system. In other embodiments, a motorized window **100** in accordance with the invention may be configured to act as a centralized security system by gathering information from security sensors **1520** located at various motorized windows **100**. Such a centralized security system may, in certain embodiments, send notifications to a user, smart device, security company, law enforcement office, or the like, when breaches of security are detected.

[0242] Various security sensors **1520** may be configured to work together in certain embodiments. For example, a motion sensor **1520** may, upon sensing motion, trigger operation of a camera **1520**, microphone **1520**, or other data gathering sensor **1520**. In other embodiments, a motion sensor **1520** may trigger illumination of an LED or other output device, thereby warning a potential intruder that he or she has been detected. This may provide a deterrent effect. In other embodiments, a motion sensor **1520** may trigger operation of a motorized window **100**. For example, if a motion sensor **1520** detects that an intruder is approaching a window, the motion sensor **1520** may trigger closing of the motorized window **100** to obstruct the view through the window. Thus, security sensors **1520** may, in certain embodiments, trigger automatic operation of a motorized window **100** or a group of motorized windows **100**.

[0243] To further increase security, a motorized window **100** in accordance with the invention may be password protected to prevent unauthorized access or control. Multiple failed password attempts may instigate a lockout from the motorized window **100**. In certain embodiments, a manual unlock may be accomplished by physically manipulating the motorized window itself. For example, the motorized window **100** may be unlocked by manually tugging on a pull cord **110** or performing some other manual adjustment or reset of the motorized window **100**.

[0244] The sensors may also, in certain embodiments, include safety sensors **1522** such as smoke detectors, carbon monoxide sensors, or the like. Outfitting motorized windows **100** with such sensors may provide a large number of sensors at prime locations throughout a home or business, while at the same time eliminating or reducing the need to equip a home or business with separate independent sensors. In certain embodiments, alerts or notifications may be sent to a user or first responder when smoke, carbon monoxide, or other critical substances or gases have been detected.

[0245] A current/voltage sensor **1524** may be provided to sense current or voltage associated with the motors or actuators. In certain embodiments, this information may be used to ensure that a motor or actuator is not overloaded. The current/voltage may also be used to calibrate the motorized window **100**. For example, when the motorized window **100** is fully closed (i.e., have reached their maximum position), the current of the motor or actuator may spike in response to their non-movement. This spike in current may indicate that a maximum position has been reached. The position of the window may be recorded at this point (using the position encoder **1501**) to remember the maximum position. The motorized window **100** may then be moved in the opposite direction until they stop (i.e., reach their minimum or fully open position). The current of the motor or actuator may again spike in response to the non-movement of the window. This spike may indicate that a minimum position has been reached. The minimum position may be recorded. In this way, the current/voltage sensor **1524** may be used in conjunction with the position encoder **1501** to learn the range of motion and stopping points of the motorized window. In certain embodiments, this calibration technique may be performed when the automated window is initially powered up or installed. Once the calibration is performed, the motorized window may, through various calculations, move the window to any desired position between the stopping points. As will be explained in more detail hereafter, the current/voltage sensor **1524** may, along with the position encoder **1501**, be used to estimate a size of a motorized window **100**. Knowing the size of the motorized window **100** may be used to prevent over-torqueing of the motorized window mechanisms.

[0246] As further shown in FIG. **15**, a motorized window **100** may, in certain embodiments, interface with devices external to the motorized window **100**. For example, the motorized window **100** may communicate with an external computing device **1540**, such as a smart phone, tablet, laptop, desktop computer, or the like. The external computing device **1540** may, in certain embodiments, execute an application **1542** for setting up, managing, and controlling the automated motorized window **100**. One example of such an application **1542** was discussed in association with FIGS. **5** through **14**.

[0247] In certain embodiments, sensors **1544** embedded within the external computing device **3740** may be used to configure the motorized window **100**. An automated motorized window **100** in accordance with the invention may also, in certain embodiments, interface with a home automation platform/controller **1546**. Although an automated motorized

window **100** in accordance with the invention may be programmed to operate on its own, the motorized window **100** may also be configured to work with various home automation systems using their native protocols or using a bridge that translates the native protocols into the motorized window's native protocol. For example, an automated motorized window **100** may be controlled by and communicate with a centralized home automation system or controller using Z-Wave, Zigbee, Insteon, or other home automation protocols.

[0248] An automated motorized window **100** in accordance with the invention may also be configured to interface with external sensors **1548**. Although various sensors (as previously discussed) may be located in the motorized window **100** or in close proximity to the motorized window **100**, other sensors **1548** may be located external to the motorized window **100** and, in some cases, be far removed from the motorized window **100**. For example, a temperature sensor located in one part of a building may be used to trigger operation of motorized windows **100** in other parts of the building. In other cases, readings from multiple sensors **1548** located throughout a building may be used to influence operation of a motorized window **100** or a group of motorized windows **100**. In certain cases, data may be gathered from external sensors **1548** and wirelessly communicated to a motorized window **100** or group of motorized windows **100**.

[0249] In certain embodiments, an automated motorized window **100** in accordance with the invention may interface with one or more video display adapters **1550** (e.g., TV adapters **1550**). In certain embodiments, a video display adapter **1550** may be embodied as a USB or HDMI dongle plugged into a USB or HMDI port of a video display. The instant inventors have found that, with most video displays (e.g., televisions), a USB or HMDI port of the video display becomes live (i.e., energized) when the video display is turned on. This same USB or HMDI port goes dead when the video display is turned off Using this knowledge, a video display adapter **1550** in accordance with the invention may be designed that generates a signal when the video display is turned on. This signal may cause a motorized window **100** or group of motorized windows **100** to close when the video display is turned on (thereby darkening a room or space) and open when the video display is turned off (thereby lightening the room or space). Such a system may provide simple, inexpensive, automated motorized window control for home theaters, entertainment rooms, or other spaces. In certain embodiments, a video display adapter **1550** such as that described above may also be used to control devices other than motorized windows **100** or coverings **100**, such as lighting, fans, audio/visual equipment, switches, or the like.

[0250] An automated motorized window **100** in accordance with the invention may also interface with various HVAC controls **1552**. For example, as previously mentioned, in certain embodiments a motorized window **100** in accordance with the invention may measure temperature at or near a window and relay this temperature to a thermostat **1556**, which may in turn adjust various HVAC parameters. In other cases, the motorized window **100** may actually function as a thermostat by directly adjusting HVAC parameters. Thus, the motorized window **100** may, in certain embodiments, replace a conventional thermostat. In doing so, the motorized window **100** may rely on its own temperature sensor **1518** and/or temperature sensors from other motorized windows **100** or devices in making determinations with regard to adjusting HVAC parameters.

[0251] Adjusting HVAC parameters may include, for example, switching heating or cooling devices **1552** on or off, regulating a flow of air or heat transfer fluid, or adjusting other features of an HVAC device. Adjusting HVAC parameters may also include automatically adjusting smart vents **1552** or smart windows **1552** that regulate air flow into a room or space. This may provide more targeted heating and/or cooling of a room or area, as opposed to adjusting the heating and/or cooling of an entire building. In certain cases, smart windows **1552** may be opened if favorable temperatures are detected external to a home or business, and these temperatures can bring an interior temperature closer to a desired interior temperature. This may conserve energy and reduce utilization of conventional heating and cooling systems.

[0252] As previously mentioned, a motorized window **100** or group of motorized windows **100** in accordance with the invention may also be controlled (e.g., wirelessly controlled) by external switches **1554**, such as a remote control or the specialized wall switch discussed in association with FIG. **40**. These switches **1554** may provide additional mechanisms for controlling a motorized window **100** or group of motorized windows **100**. In certain cases, a wall switch **1554** or remote control **1554** may provide a faster and more convenient way to control a motorized window **100** or group of motorized windows **100** than an application **1554**. In certain embodiments, an external switch **1554** in accordance with the invention may provide functionality to control devices other than motorized windows **100**, as will be discussed in more detail hereafter. FIG. **16** is a high-level view of the system of FIG. **15**, particularly showing possible physical locations of various components described in association with FIG. **15**.

[0253] Referring to FIG. **17**, various modules included in a system **1700** in accordance with the invention are illustrated. These modules may be embodied in hardware, software, firmware, or a combination thereof. The modules are illustrated to show functionality that may be provided by the disclosed system **1700** as opposed to the locations where such functionality is implemented. For example, the functionality of some modules may be implemented entirely or mostly in an automated window in accordance with the invention. Other functionality may be implemented in an application **1542** executing on an external computer device **1540**, such as a smart phone or tablet. Other functionality may be implemented in a home automation controller **1546**. Yet other functionality may be distributed between one or more of a motorized gearbox assembly **102**, external computing devices **1540**, home automation controller **1546**, and other devices. Thus, the location where the modules are implemented may vary in different embodiments

[0254] Once outfitted with an automated window in accordance with the invention, a setup module **1702** may allow a motorized window **100** to be set up. Setting up the motorized window **100** may include, for example, detecting the automated motorized window **100** (with an external computing device **1540**), pairing the automated motorized window **100** with the external computing device **1540** (when using Bluetooth, for example), naming the automated motorized window **100**, assigning the automated motorized window **100** to a room, space, or group of motorized windows **100**, establishing default open and/or closed position for the motorized

window **100**, setting up a schedule or manner of operation for the motorized window **100**, and the like. In certain embodiments, the setup module **1702** may use one or more of the other modules illustrated in FIG. **17** to perform these tasks.

[0255] A setup module **1702** may, in certain embodiments, enable automated motorized windows **100** to be ordered for a room or space. For example, the setup module **1702** may enable a user to input measurements for motorized windows **100** in a room or space. In certain embodiments, the setup module **1702** may also allow the user to assign names to the motorized windows **100** according to their location in the room or space. These names may be printed on the motorized windows **100** at a manufacturing plant so that the motorized windows **100** arrive at the user s home or business pre-labeled. This will ideally help the user quickly identify where the motorized windows **100** are to be installed.

[0256] A grouping module **1704** may enable multiple motorized windows **100** to be set up and controlled as a group. In certain embodiments, this may be accomplished by configuring one motorized window **100** in the group to act as a master and the other motorized windows **100** in the group to act as slaves of the master. The group of motorized windows **100** may, in certain embodiments, be configured to operate from a single schedule or sensors on a single motorized window **100**, external computing device **1540**, or home automation controller **1546**, thereby ensuring the motorized windows **100** in the group are synchronized. In such an embodiment, the group of motorized windows **100** may operate in response to a command or commands from the master motorized window **100**, external computing device **1540**, or home automation controller **1546**. In certain embodiments, separate commands are sent to each motorized window **100** belonging to a group to cause them to act in a synchronized manner. In other embodiments, a single command that is addressed to multiple motorized windows **100** is sent. Each motorized window **100** may receive the command and either execute or discard the command based on whether the command is addressed to the motorized window **100**.

[0257] In other embodiments, the group of motorized windows **100** may each operate from an identical schedule programmed into each motorized window **100**, or from individual sensors in each motorized window **100** that are configured in the same way. As previously mentioned, an application **1542** in accordance with the invention may, in certain embodiments, provide buttons or options that allow motorized windows **100** to be grouped, as well as provide buttons or options that allow the motorized windows **100** to be controlled or programmed as a group as opposed to individually. The grouping module **1704** may also allow groups to be modified, such as by renaming a group, adding motorized windows **100** to a group, naming motorized windows **100** within a group, removing motorized windows **100** from a group, and the like.

[0258] A default settings module **1706** may allow various default settings to be established for a motorized window **100** or a group of motorized windows **100**. For example, a default open and/or closed position may be established for a motorized window **100** or group of motorized windows **100**. When, a motorized window **100** is opened, such as by selecting an open button in an application **1542** or other device, the motorized window **100** may stop at the default open position. Similarly, when a motorized window **100** is closed, such as by selecting a close button in the application **1542** or other device, the motorized window **100** may stop at the default closed position. Other default settings are possible and within the scope of the invention.

[0259] A mode module **1708** may enable a user to establish and select from various modes for a motorized window **100** or group of motorized windows **100**. Such modes may change the behavior of a motorized window **100** or group of motorized windows **100**. For example, a user may establish an "at home" mode and an "away" mode that causes the user's motorized windows **100** to behave differently based on whether the user is at home or away from home. For example, the user's motorized windows **100** may be configured to open or close at different times or in response to different conditions based on whether the user is at home or away. An "away" mode in particular May, in certain embodiments, be configured to make a home or business appear to be occupied, such as by moving motorized windows **100** periodically. Other motorized windows **100** may remain closed to prevent viewing of valuable items within the home or business. The user may manually set the mode, or the mode may be set automatically in response to different conditions (e.g., detecting activity or inactivity in a home using a motion sensor, detecting the presence or absence of a smart device, tag, or other device carried by an occupant, for example).

[0260] A calibration module **1710** may be configured to calibrate an automated window in accordance with the invention. For example, when an automated window is initially installed into an opening or frame, the automated window may slide the window in both directions to determine the range of motion. That is, the motor or actuator may move the window in a first direction until the window reaches a first stopping point, and then tilt the slats in the opposite direction until the slats reach a second stopping point. Because the window may not have a hard stop in either direction, in certain embodiments the window is slid until the current of the motor reaches a specified threshold (or until the position encoder **1501** detects that movement has substantially stopped) and then moved in the opposite direction until the current of the motor reaches the specified threshold (or until the position encoder **1501** detects that movement has substantially stopped). Alternatively, or additionally, the slats may be tilted until the angular velocity of the slats falls below a specified threshold and then tilted in the opposite direction until the angular velocity of the slats falls below the specified threshold. In this way, the calibration module **1710** may determine the limits of angular travel. Once these limits are determined using the position encoder **1500**, the slats may be tilted to any intermediate angle between the limits using a simple calculation, and/or the motor or actuator may be able to determine a current position of the window.

[0261] In certain embodiments, the calibration module **3910** may also be configured to determine a size of the motorized window **100**, fully open and fully closed stopping points, or weight. This may be important to properly calibrate the motorized window **100** and ensure that an actuator of the motorized window **100** is not over-torqued. For example, a larger motorized window **100** may require more force to operate the motorized window **100** and a smaller motorized window **100** may require less force to operate the motorized window **100**, due to the weight of their respective structure. Calculating the size of the motorized window **100**

may ensure that a proper amount of power (and thus force) is applied to the actuator. In certain embodiments, the calibration module **3910** may calculate the weight by examining an amount of current drawn by the motor **400** (as measured by the current sensor **1524**) in relation to an amount angular movement or speed of the actuator (as measured by the position encoder **1501**). The more current that is drawn for a given angular distance or speed, the larger the size of the motorized window **100**.

[0262] A scheduling module **1712** may be configured to schedule operation of a motorized window **100** or group of motorized windows **100**. Various different techniques may be used to schedule operation of a motorized window **100**. In certain embodiments, a user may designate open/close times as discussed in association with FIG. **8**. In other cases, a schedule may be automatically determined based on a time of year and/or location or orientation of a motorized window **100**. For example, a user may schedule a motorized window **100** to open at sunrise and close at sunset. The scheduling module **1712** may reference a database or utilize an algorithm to determine sunrise and sunset times for the motorized window **100** based on the motorized window's location and the time of year and schedule opening and closing time accordingly. These opening and closing times may be adjusted throughout the year as the position of the sun changes.

[0263] In other cases, the scheduling module **1712** may consider the orientation of a motorized window **100**. Based on the motorized window's orientation and the incidence of the sun on the motorized window **100** at different times of day, the opening and closing times may be adjusted. The opening and closing times may be adjusted based on the changing incidence of the sun on the motorized window **100** over time. In certain embodiments, each motorized window **100** may keep track of a current date and time using an internal clock or by referencing an external clock so that the position of the sun for the date and time can be determined.

[0264] A command execution module **1714** may enable a motorized window **100** to respond to commands in additional to following a schedule or operating in response to sensed lighting conditions. For example, a user may wish to manually open and close a motorized window **100** or a group of motorized windows **100** by selecting buttons or options in an application **1542**, or using a specialized wall switch **1554**. For example, a motorized window **100** or a group of motorized windows **100** may open in response to receiving an open command and close in response to receiving a close command. A stop command may cause the motorized window **100** or group of motorized windows **100** to stop at their current angular position. Other commands are possible and within the scope of the invention.

[0265] An environmental awareness module **1716** may allow a motorized window **100** or group of motorized windows **100** to operate in response to environmental conditions. For example, a motorized window **100** or group of motorized windows **100** may be configured to open or close in response to changing lighting conditions, changing temperature conditions, detected motion, detected noise, detected security situations, detected safety situations, or the like. These conditions may be conditions inside a building, outside a building, or a combination thereof. The environmental awareness module **1716** may require sensors, placed at suitable locations, to detect environmental conditions that may trigger operation of the motorized windows **100**.

[0266] A motion control module **1718** may be configured to control the motion of a motorized window **100**. As previously mentioned, functionality may be provided to designate how fast a motorized window **100** or group of motorized windows **100** opens or closes in association with a particular event. As an example, a user may want a motorized window **100** or group of motorized windows **100** to open or close over a specified period of time (e.g., 10 minutes, 30 minutes, an hour, etc.) instead of opening or closing in an abrupt manner. In other cases, the motorized windows **100** may move gradually to mirror movement of the sun. In some cases, this may make movement of the motorized windows **100** undetectable to the naked eye. The motion control module **3918** may enable this functionality. The motion control module **1718** may provide this functionality by performing slight incremental angular movements (possibly invisible to the eye) of the slats over a specified period of time. Alternatively, or additionally, the motion control module **1718** may simply adjust the speed of the motor **400**. In certain embodiments, this may be accomplished using pulse-wide modulation (PWM) or other techniques to adjust the speed of the motor **400**.

[0267] A connectivity module **1720** may be used to provide connectivity between a motorized window **100** and other devices. This may include providing connectivity between a motorized window **100** and an external computing device **1540**, a home automation platform/controller **1546**, external sensors **1548**, video display adapters **1550**, HVAC controls **1552**, external switches **1554**, thermostats **1556**, or other motorized windows **100**. Any suitable communication protocol may be used. In certain embodiments, the connectivity module **1720** allows devices to act as repeaters of a signal, thereby allowing the devices to form a mesh network of interconnected devices.

[0268] A synchronization module **1722** may enable a motorized window **100** to be synchronized with an external computing device **1540**, such as a smart phone or tablet. For example, the synchronization module **1722** may enable a motorized window **100** to synchronize its date and time with the date and time of the external computing device **1540**. The synchronization module **1722** may also enable the motorized window **100** to synchronize itself with various sensors **1544** of the external computing device **1540**.

[0269] In certain embodiments, additional information, such as the size and dimensions (e.g., height, width) of the window may be input to the external computing device **1540** by the user to further define the position and orientation of the window. Once the position and orientation of a window are known, a motorized window **100** may be programmed to operate (e.g., open/close) based on the position and orientation of the window in relation to the position and orientation of the sun. The position and orientation of the window may also be used to determine how and when sunlight will be incident on a solar panel used to power a motorized window **100** or charge a battery **1510**.

[0270] In certain embodiments, the operation of a motorized window **100** or group of motorized windows **100** may be synchronized with a calendar, timer, or alarm clock of an external computing device **1540**. For example, an alarm clock associated with an external computing device **1540** may cause a motorized window **100** or group of motorized windows **100** to open and thereby allow sunlight to enter a room or space. Similarly, a calendar event or expiration of

a timer may cause a motorized window **100** or group of motorized windows **100** to open or close.

[0271] A safety module **1724** in accordance with the invention may be configured to provide various safety features at or near a motorized window **100**. For example, as previously explained, a motorized window **100** in accordance with the invention may be equipped with safety sensors **1522** such as smoke detectors, carbon monoxide sensors, or the like. In certain embodiments, the safety module **1724** may monitor these safety sensors **1522** and generate notifications or set off alarms when a hazardous or safety-related condition is detected.

[0272] A security module **1726** may be configured to monitor security at or near a motorized window **100**. As previously mentioned, one or more security sensors **1520** may be incorporated into or located proximate a smart motorized window **100** in accordance with the invention. Using the security sensors **1520**, the security module **1726** may detect events such as, opening or closing of a window, impacts on a window, breakage of a window, motion near a window, sound near a window, or the like. When a security related event or condition is detected, the security module **1726** may generate a notification, set off an alarm, or the like. In certain embodiments, the security module **1726** is configured to monitor security conditions at multiple windows, thereby providing comprehensive security throughout a home or business.

[0273] A climate control module **1728** may be configured to monitor and adjust the climate within a room or space. As previously mentioned, a motorized window **100** in accordance with the invention may be equipped with temperature sensors **1518**, humidity sensors, or the like. These sensors may be used to monitor the climate internal to or external to a room or space. Using these sensors, the climate control module **1728** may monitor the climate and make adjustments where needed. In certain embodiments, the climate control module **1728** sends information to a thermostat **1556** so that the thermostat **1556** can adjust HVAC parameters (heating, cooling, humidity, air circulation, etc.) accordingly. In other embodiments, the climate control module **1728** adjusts the HVAC parameters directly.

[0274] A power management module **1730** may be configured to manage power required by a motorized window **100** in accordance with the invention. As previously mentioned, the motorized window **100** may be powered by a battery **1510**. In certain embodiments, this battery **1510** is charged by a solar panel **106**. The solar panel **106** may be accompanied by a charging module **1512** to boost a low voltage of the solar panel (in reduced lighting conditions) to a higher voltage needed to charge the battery and/or operate components of the motorized gearbox assembly **102**. In other embodiments, the battery **1510** is charged through a charging port.

[0275] In certain embodiments, the power management module **1730** may track power levels and/or usage trends of a motorized window **100** or group of motorized windows **100** and make or suggest adjustments to more efficiently utilize power. For example, the power management module **1730** may adjust or suggest adjusting a number of scheduled openings/closings to extend battery life. In certain embodiments, the power management module **1730** may put a motorized window **100** (or selected components of a motorized window **100**) into a sleep or lower power mode when the motorized window **100** and/or any attached components (e.g., sensors) are not in use. Various events (detected motion, security events, safety-related events, etc.) may wake up a motorized window **100** or selected components of a motorized window **100**. A motorized window **100** may also wake up when communications are received from external devices, such as an external computing device **1540**, home automation controller **1546**, video display adapter **1550**, external switch **1554**, other motorized windows **100**, or the like. In some embodiments, the power management module **1730** may provide the usage trends of an actuation device **100** to another device (e.g., a hub and/or a cloud-based server) for long term storage and complex analytics (for determining smart trends, anticipating needs based on other events, and the like).

[0276] A learning module **1732** may be configured to learn a user's tendencies and operate a motorized window **100** or group of motorized windows **100** in accordance with those tendencies. For example, the learning module **1732** may observe that a user opens or closes a motorized window **100** at specific times of the day or in response to certain lighting conditions. This observation may take place continually or over a specified period of time. The learning module **1732** may then program the motorized window **100** or instruct the motorized window **100** to open or close at the observed times or in accordance with some algorithm designed to implement user preferences. In another example, the learning module **1732** may observe that the user opens or closes certain motorized windows **100** at the same time or proximate in time and then program the motorized windows **100** to open and close together as a group at the observed time. In yet other cases, the learning module **1732** may observe an angle that slats are adjusted to and adjust the slats accordingly. In certain embodiments, the learning module **1732** may observe opacity settings. Other types of learning are possible and within the scope of the invention.

[0277] Referring to FIG. **18**, one embodiment of a specialized wall switch **1554** in accordance with the invention is illustrated. The specialized wall switches **1554** may be battery powered or connected to a building's electrical system. The specialized wall switch **1554** enables large number of different devices (e.g., motorized windows **100** or groups of motorized windows **100**, lights, fans, heating systems, cooling systems, etc.) to be controlled (e.g., wirelessly controlled) with a single switch **1554**, without requiring separate controls for each device or system. As shown the specialized wall switch **1554** includes a set of directional buttons **1810***a-d* for selecting a device or system to control, as well as adjusting an amount associated with the device or system. A first pair of directional buttons **1810***a,* **1810***b* enables a user to select a current function for the specialized wall switch **1554**. A set of indicators **1802** (e.g., colored LEDs **1802**, LEDs **1802** with accompanying pictures or icons, etc.) may be provided to indicate the current function of the specialized wall switch **1554**. A second pair of directional buttons **1810**c, **1810**d enables the user to increase or decrease an amount associated with the current function. The first and second pairs of directional buttons **1810***a-d* may be oriented substantially perpendicular to one another. Similarly, the buttons **1810***a-d* may be embodied as separate buttons **1810***a-d,* as illustrated, or be embodied as one or more rocker or rocker-like switches, a directional pad, a control pad, a joystick, touchscreen with virtual directional buttons, or the like. For the purposes of the disclosure and

claims, each of these embodiments will be collectively referred to as a directional switching device.

[0278] For example, referring to FIG. **19**, while continuing to refer generally to FIG. **18**, the illustrated specialized wall switch **1554** may be configured to control five different devices or systems, such as a motorized window **100** or group of motorized windows **100**, a fan **1900**, a heating system **1902** such as a furnace, a cooling system **1904**, and lights **1906**. These functions are presented by way of example and not limitation. Other types and numbers of functions are possible and within the scope of the invention.

[0279] A center indicator **1802** may be white and illuminate when lights **1906** are the current function. When lights **1906** are the current function, the buttons **1810***c*, **1810***d* may increase or decrease the intensity of the lights **1906** or turn the lights **1906** on or off. A first indicator **4002** right of center may be blue and illuminate when a cooling system **1904** is the current function. When the cooling system **1904** is the current function, the buttons **1810***c*, **1810***d* may turn a desired temperature up or down or, in other embodiments, turn the cooling system **4104** on or off. A first indicator **1802** left of center may be red and illuminate when a heating system **1902** is the current function. When the heating system **1902** is the current function, the buttons **1810***c*, **1810***d* may turn the desired temperature up or down or, in other embodiments, turn the heating system **1902** on or off

[0280] A second indicator **1802** right of center may be green and illuminate when a ceiling fan **1900** (or other air circulation device **1900**) is the current function. When the fan **1900** is the current function, the buttons **1810***c*, **1810***d* may adjust the speed of the fan **1900** up or down. A second indicator **1802** left of center may be yellow and illuminate when a motorized window **100** or group of motorized windows **100** is the current function. When a motorized window **100** or group of motorized windows **100** is the current function, the buttons **1810**c, **1810***d* may adjust the tilt of the slats of the motorized window **100** or group of motorized windows **100** or, alternatively, cause the motorized window **100** or group of motorized windows **100** to open or close.

[0281] Referring to FIG. **20**, in certain embodiments the specialized wall switches **1554** illustrated in FIG. **20** may be embodied as a touchscreen **2000** providing virtual directional controls similar to the physical controls shown of FIG. **18**. As shown the touchscreen **2000** includes a set of virtual directional buttons **2002***a-d* for selecting a device or system to control, as well as adjusting an amount associated with the device or system. A first pair of virtual directional buttons **2002***a*, **2002***b* enables a user to select a current function for the touchscreen **2000**. An indicator icon **2004** may be provided to indicate the current function of the touchscreen **2000**. A second pair of virtual directional buttons **2002***c*, **2002***d* enables the user to increase or decrease an amount associated with the current function.

[0282] FIG. **21** shows an embodiment similar to that of FIG. **20** except that the virtual directional buttons **2002***a*, **2002***b* are replaced by virtual buttons **2100** or icons **2100** enabling a user to directly select a current function. In the embodiment shown in FIG. **43**, the virtual button **2100** or icon **2100** representing the current function is bolded or has its colors inverted.

[0283] Although particular reference has been made herein to motorized windows **100** and actuators, various features and functions of the disclosed embodiments of the invention may equally apply to other associated systems such as automated shutters, curtains, shades, etc. The disclosed features and functions may also be applicable to other related systems. For example, different features and functions disclosed herein may be used to automatically raise and lower the slats of motorized windows, along with adjusting the tilt of the slats. Thus, where applicable, the disclosed features and functions may be used with other systems.

[0284] The apparatus and methods disclosed herein may be embodied in other specific forms without departing from their spirit or essential characteristics. The described embodiments are to be considered in all respects only as illustrative and not restrictive. The scope of the invention is, therefore, indicated by the appended claims rather than by the foregoing description. All changes which come within the meaning and range of equivalency of the claims are to be embraced within their scope.

1. An automated window mechanism comprising:
- an electrically powered actuator configured to move a slidable window between a closed position and an open position;
- a power source, providing power to the actuator;
- two or more sensors, each configured to generate signals related to a different environmental condition; and
- a controller adapted to receive the signals from the two or more sensors and operate the actuator to move the slidable window to an open or closed position as appropriate.

2. The invention of claim **1**, wherein the signal generated by the one or more sensors relates to at least one of the following: radon levels; carbon monoxide levels; carbon dioxide levels; smoke; fire; humidity levels; moisture; dust; pollen; air quality; motion; attempted movement of the slidable window; intrusion; light and noise.

3. The invention of claim **1**, further comprising a second motor mounted on the slidable segment, a second gear driven by the second motor, a second gear track mounted to a second stationary member of the frame, wherein teeth of the second gear align with teeth of the second gear track, and wherein the second motor is controlled by the controller.

4. The invention of claim **1**, wherein the controller is also adapted to receive and process information from online sources.

5. The invention of claim **1**, wherein the controller is also adapted to communicate with a user as appropriate.

6. The invention of claim **1**, wherein the controller is adapted to communicate with a user's smart device running an app.

7. The invention of claim **6**, wherein the smart device wirelessly communicates to the controller.

8. The invention of claim **6**, wherein the controller and smart device running an app are configured to provide user control of the slidable frame, notice to the user when the slidable frame has been automatically moved in response to a signal from at least one of the one or sensors, and warnings to the user in response to a signal from at least one of the one or more sensors.

9. The invention of claim **6**, wherein the controller and/or smart device running an app are/is also configured to receive and process information from online sources.

10. The invention of claim **1**, wherein the controller comprises one or more communication systems comprising Bluetooth communication chips, Internet Wi-Fi transceivers,

network transceivers, wireless mesh network transceiver, or a combination thereof, and wherein the one or more communication systems communicate with at least one of an external remote controller and a cloud-based network.

11. The invention of claim **10**, wherein the one or more communication systems receive instructions from the external remote controller, generate signals instructing the first motor to rotate in a direction, receive signals from the first motor regarding a status of the first motor, and generate a signal informing the external remote controller of the status of the first motor.

12. The invention of claim **6**, wherein the automated window mechanism further comprises a network device connecting the automated window mechanism to one or more additional automated window mechanisms forming a system of networked mechanisms.

13. The invention of claim **12**, wherein the user's smart device has a connection to each network device of the one or more automated window mechanisms; wherein the connection comprises a wired or wireless interface; and wherein the wireless interface comprises Bluetooth, WIFI, mesh network or similar wireless protocol.

14. The invention of claim **13**, wherein the wireless interface comprises wireless Bluetooth mesh; wherein the one or more motorized windows are connected via the wireless Bluetooth mesh; and wherein the automated window system is fully functional and able to operate all system functions based on stored settings and sensor data from the two or more sensors without input from the user or the cloud-based network.

15. The invention of claim **14**, wherein the stored settings comprise factory presets, calendars, charts, user input data, sensor data and scheduled data.

16. The invention of claim **15**, wherein the two or more sensors comprise at least one of a remote sensor and a local sensor; wherein the local sensor is at or within two feet of the automated window mechanism; and wherein the remote sensor is at location outside the building or location more than two feet from the automated window mechanism.

17. The invention of claim **16**, wherein real-time data comprising weather data, and sensor data from the remote sensors and remote systems is relayed via a cloud-based network to the system; and wherein the real-time data modifies and updates the calendars, the charts and the scheduled data.

18. The invention of claim **17**, wherein the real-time data is used to control the system as directed by predefined user settings and the stored settings.

19. The invention of claim **12**, wherein each automated window mechanism within the system is fully autonomous and operational without any connection to other automated window mechanisms in the system.

20. The invention of claim **12**, wherein sensor data from all automated window mechanisms within the system of networked mechanisms is reported to the controller of each automated window mechanism in the system.

21. The invention of claim **1**, further comprising:

a frame and a slidable segment that is slidably mounted within the frame;

a first motor mounted either on the slidable segment or to a first stationary member of the frame;

a controller that controls the operation of the first motor;

a first gear driven by the first motor;

a first gear track mounted either on the slidable segment or to the first stationary member of the frame; wherein teeth of the first gear mesh with teeth of the first gear track;

wherein rotating the first gear in a first rotational direction moves the slidable segment in a first linear direction as the first gear walks along the first gear track; and

wherein rotating the first gear in a second rotational direction moves the slidable segment in a second linear direction as the first gear walks along the first gear track.

* * * * *