US010444330B2

(12) **United States Patent**
Stann et al.

(10) **Patent No.: US 10,444,330 B2**
(45) **Date of Patent: Oct. 15, 2019**

(54) **LADAR RECEIVER WITH ENHANCED SIGNAL TO NOISE RATIO AND METHOD**

(71) Applicant: **U.S. Army Research Laboratory ATTN: RDRL-LOC-I**, Adelphi, MD (US)

(72) Inventors: **Barry Lee Stann**, Edgewater, MD (US); **Mark Michael Giza**, Kensington, MD (US)

(73) Assignee: **The United States of America as represented by the Secretary of the Army**, Washington, DC (US)

(*) Notice: Subject to any disclaimer, the term of this patent is extended or adjusted under 35 U.S.C. 154(b) by 354 days.

(21) Appl. No.: **15/340,307**

(22) Filed: **Nov. 1, 2016**

(65) **Prior Publication Data**

US 2018/0364332 A1 Dec. 20, 2018

(51) **Int. Cl.**

G01S 7/48	(2006.01)
G01S 7/481	(2006.01)
G01S 17/89	(2006.01)
G01S 7/486	(2006.01)
G01S 7/489	(2006.01)

(Continued)

(52) **U.S. Cl.**

CPC ***G01S 7/4816*** (2013.01); ***G01S 7/489*** (2013.01); ***G01S 7/4817*** (2013.01); ***G01S 7/4818*** (2013.01); ***G01S 7/4863*** (2013.01); ***G01S 17/10*** (2013.01); ***G01S 17/42*** (2013.01); ***G01S 17/89*** (2013.01)

(58) **Field of Classification Search**

None

See application file for complete search history.

(56) **References Cited**

U.S. PATENT DOCUMENTS

5,638,163 A * 6/1997 Nourrcier, Jr. G01S 7/497 356/5.01

8,081,301 B2 * 12/2011 Stann G01C 3/08 356/4.01

(Continued)

OTHER PUBLICATIONS

Stann, B. L. et. al., "Brass Board Development of a MEMS-scanned LADAR Sensor for Small Ground Robots," Proc. SPIE Laser Radar Technology and Applications XVI, vol. 8037, (2011).

(Continued)

Primary Examiner — Hovhannes Baghdasaryan

(74) *Attorney, Agent, or Firm* — Eric Brett Compton

(57) **ABSTRACT**

A laser receiver comprising a sensor; a first amplifier operatively connected to the sensor comprising a first gate, a first source and a first drain; a first subcircuit operatively connected between the first drain and the first gate comprising a first resistor, a first inductor and a decoupling capacitor configured to allow the first amplifier bias to be established by the at least one first biasing resistor; the impedance of the first gate being sufficient such that only a small proportion of the current from the sensor passes into the first gate; an inductor connecting the first gate to the at least one biasing resistor with high impedance at the receiver operating frequency; a second amplifier comprising a second gate operatively connected to the first drain; and an output configured to be operatively connected to a processing unit and a display unit configured to displaying output and method thereof.

20 Claims, 14 Drawing Sheets

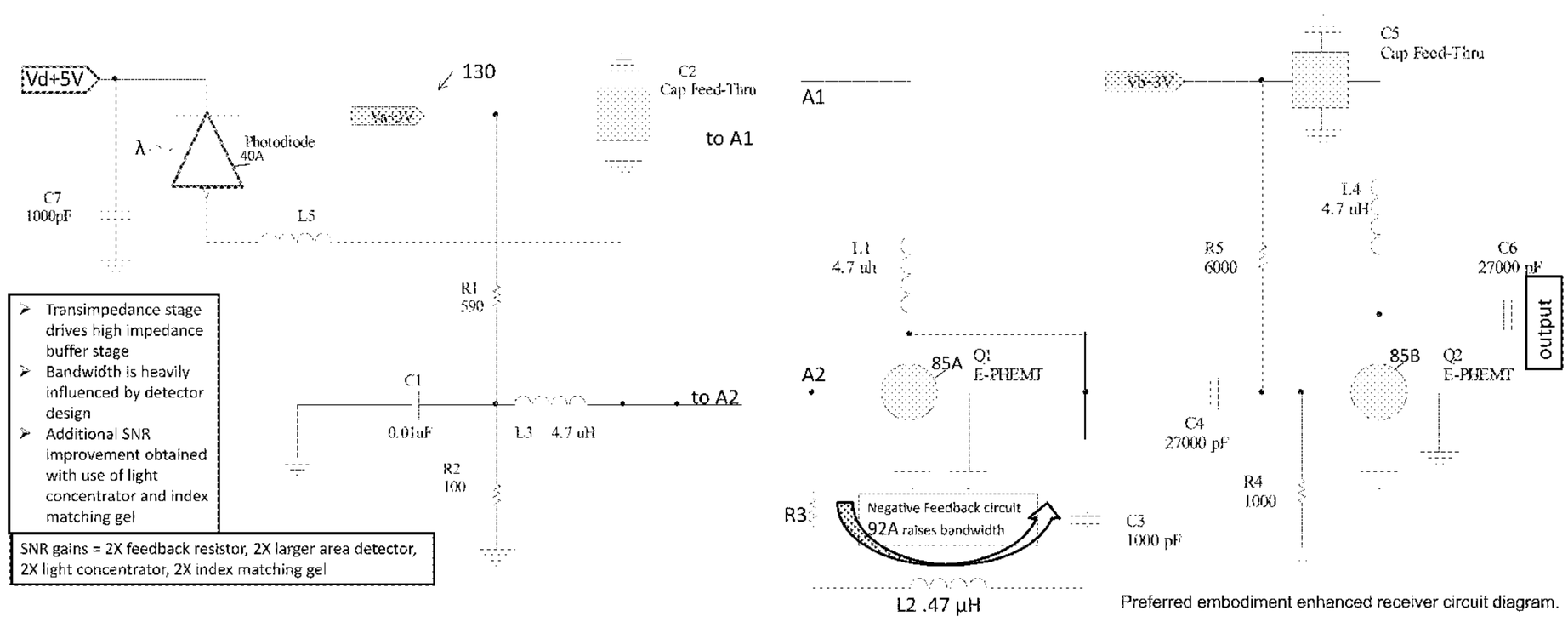

Preferred embodiment enhanced receiver circuit diagram.

(51) **Int. Cl.**
G01S 17/10 (2006.01)
G01S 17/42 (2006.01)

(56) **References Cited**

U.S. PATENT DOCUMENTS

2014/0350836 A1* 11/2014 Stettner G01S 17/023
701/301
2015/0177383 A1* 6/2015 Ruff G01S 17/89
356/4.01
2016/0003946 A1* 1/2016 Gilliland G01S 17/10
356/5.01
2017/0005574 A1* 1/2017 Wyland H02M 3/156

OTHER PUBLICATIONS

Stann, B. L. et. al., "Integration and Demonstration of MEMS-scanned LADAR for Robotic Navigation," Proc. SPIE Unmanned Systems Technology XVI, vol. 9084, (2014).

Wijewamasuriya, P.S. et.al., "Advances in large area Hg1—xCdxTe Photovoltaic Detectors for Remote Sensing Applications," Journal of Electronic Materials, vol. 31, No. 7, 2002.

Holloway, H.,"IV-VI Semiconductor Lateral-collection Photodiodes," J. Appl. Phys. 49, 4264 (1978).

Stann, B.L., Dammann, J.F., Giza, M.M. , "Progress on MEMS-scanned Ladar," InSPIE Defense+ Security May 13, 2016 (pp. 98320L-98320L). International Society for Optics and Photonics; Conference vol. 9832 doi:10.1117/12.2223728.

Stann, B.L., et al. "Low-cost, Compact Ladar Sensor for Small Ground Robots," Proceedings of the SPIE, The International Society for Optical Engineering, vol. 7323, 73230X (2009) Publication Date: May 2009.

Stann, B.L., Dammann, J.F., Giza, M.M., Jian, P.S., Lawler, W.B., Nguyen, H.M. and Sadler, L.C., "MEMS-scanned Ladar Sensor for Small Ground Robots," In SPIE Defense, Security, and Sensing (pp. 76841E-76841E). Apr. 2010, International Society for Optics and Photonics.

* cited by examiner

FIG. 1 Prior art MEMS Ladar Block Diagram and Mirror

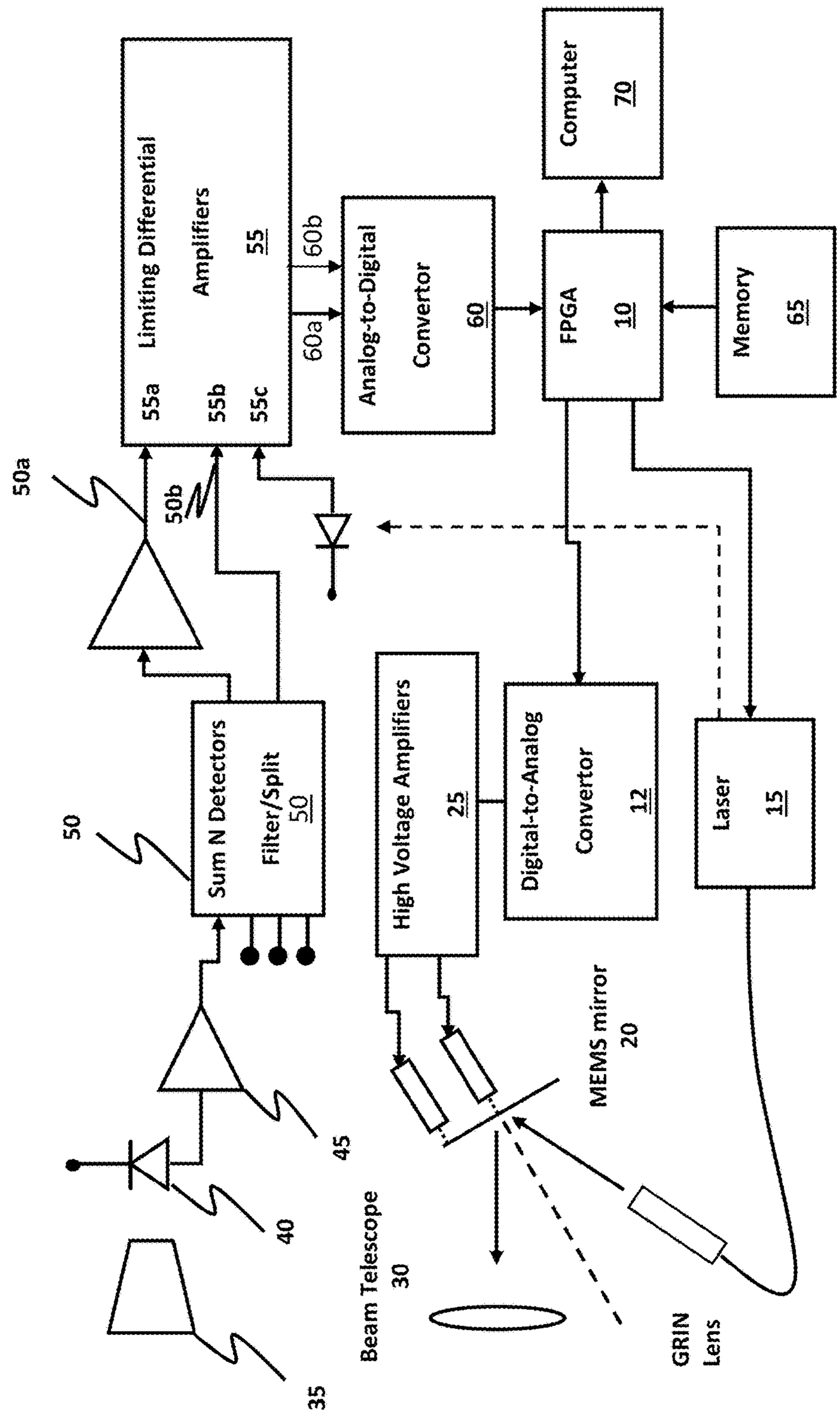

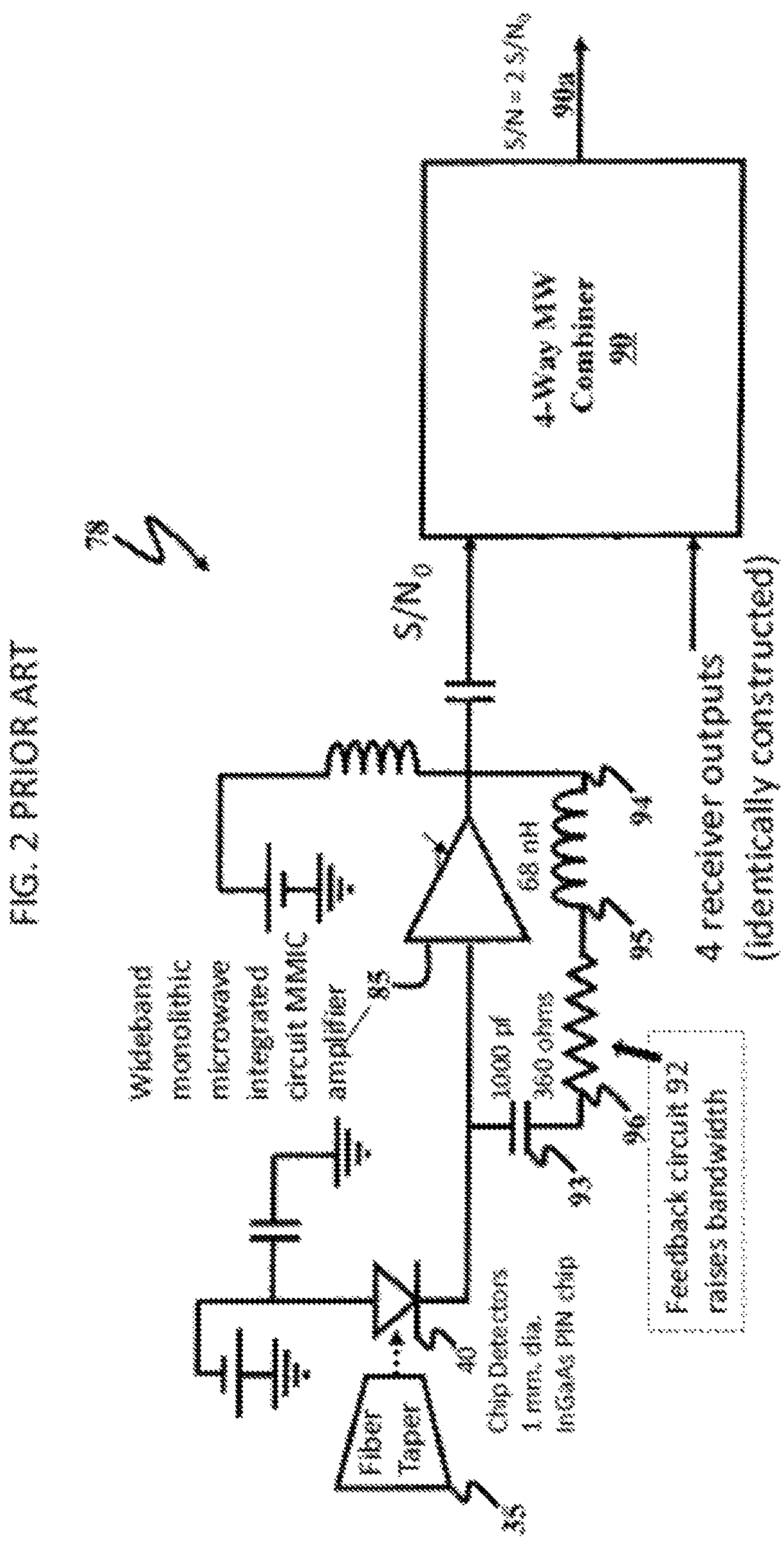

FIG. 2 PRIOR ART

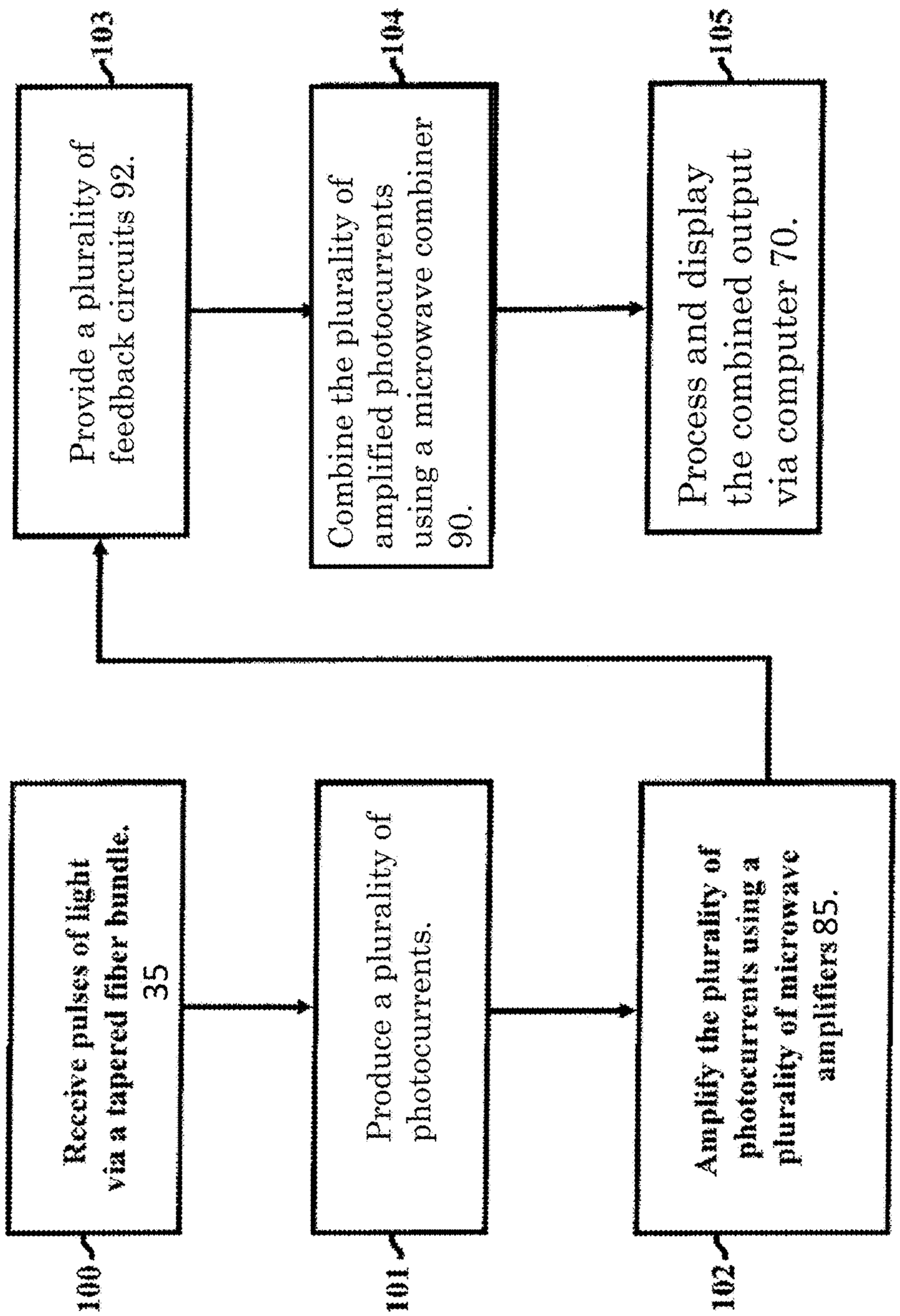
FIG. 3
100
Receive pulses of light via a tapered fiber bundle. 35
101
Produce a plurality of photocurrents.
102
Amplify the plurality of photocurrents using a plurality of microwave amplifiers 85.
103
Provide a plurality of feedback circuits 92.
104
Combine the plurality of amplified photocurrents using a microwave combiner 90.
105
Process and display the combined output via computer 70.

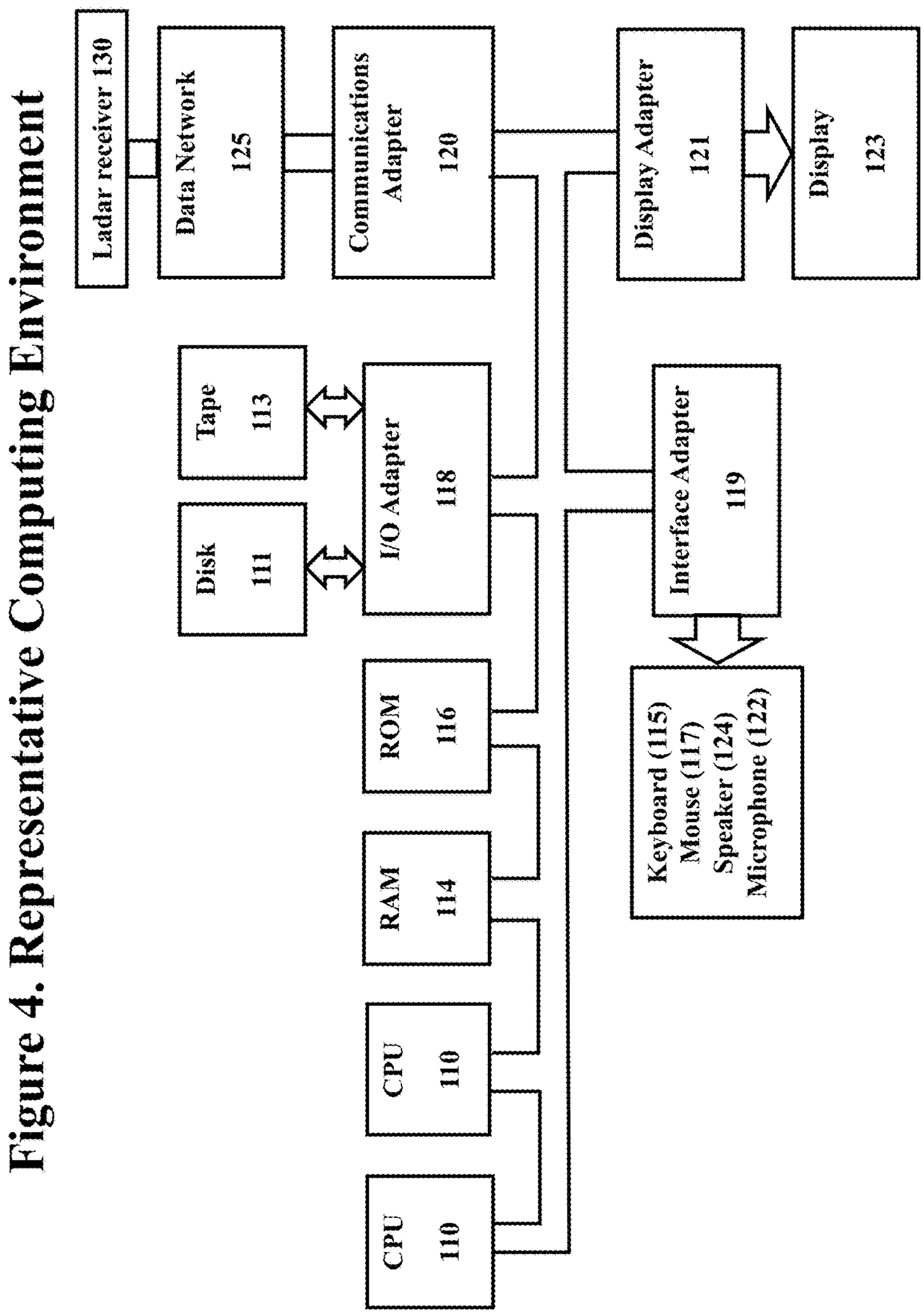

Figure 4. Representative Computing Environment

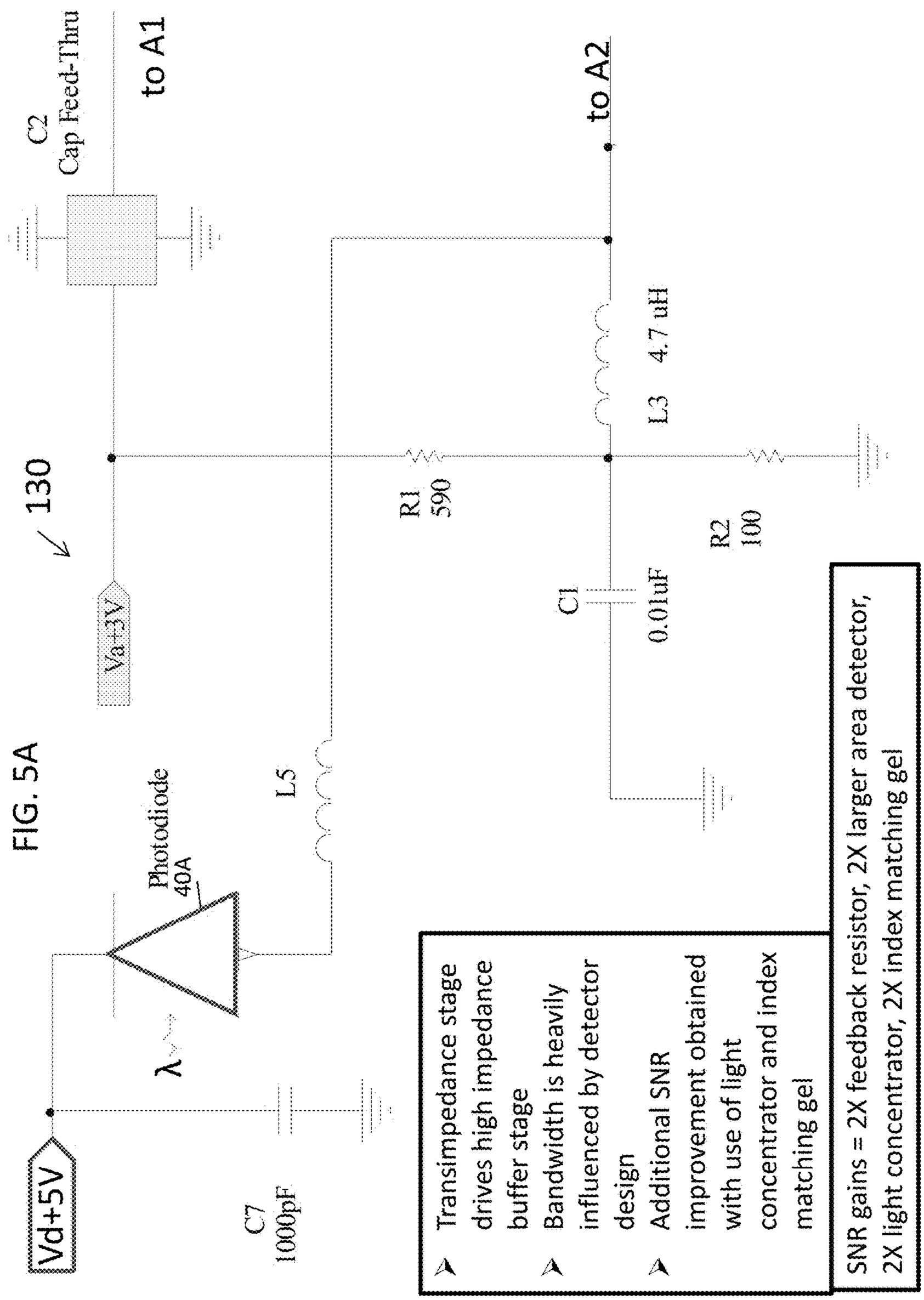
FIG. 5A
130
Vd+5V
Va+3V
C2
Cap Feed-Thru
to A1
to A2
Photodiode
40A
λ
L5
C7
1000pF
R1
590
C1
0.01uF
L3
4.7 uH
R2
100
Transimpedance stage drives high impedance buffer stage
Bandwidth is heavily influenced by detector design
Additional SNR improvement obtained with use of light concentrator and index matching gel
SNR gains = 2X feedback resistor, 2X larger area detector, 2X light concentrator, 2X index matching gel

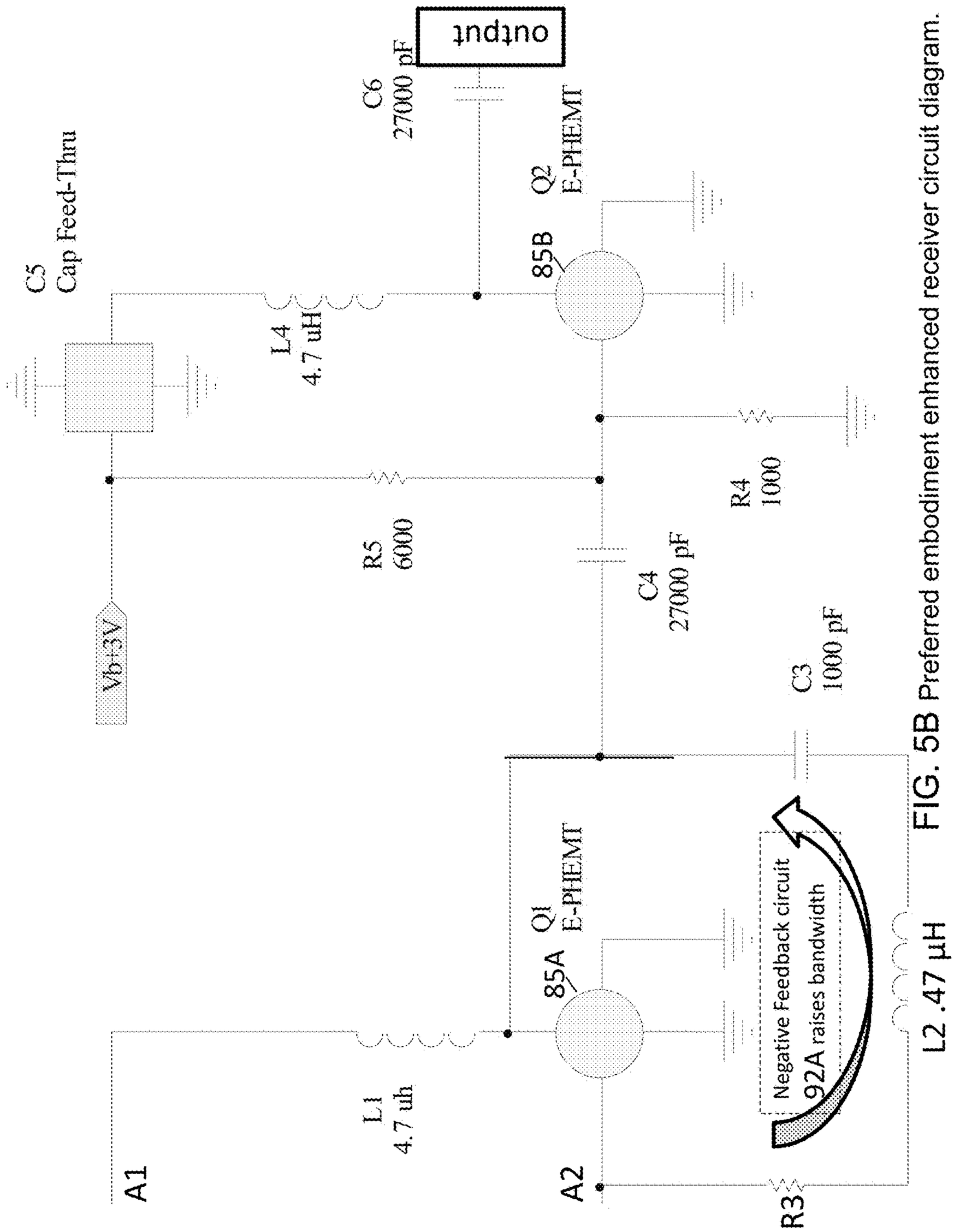

FIG. 5B Preferred embodiment enhanced receiver circuit diagram.

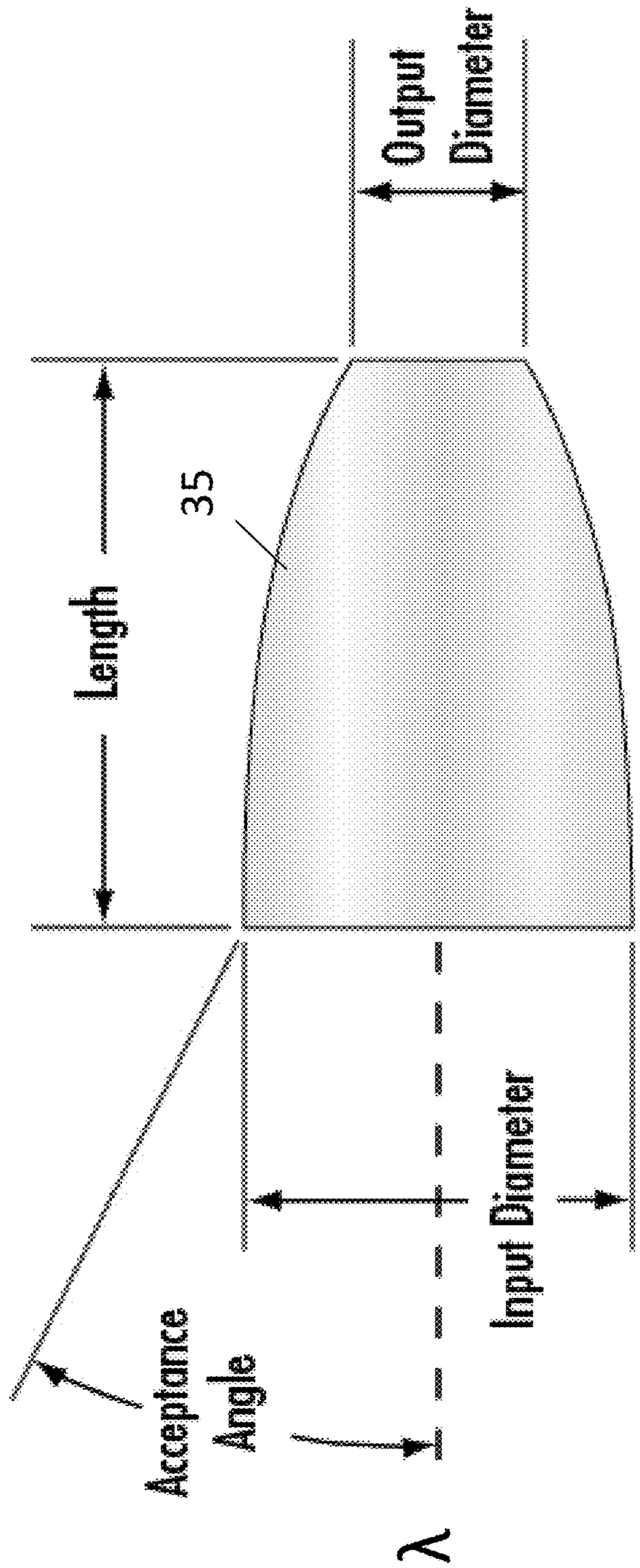

FIG. 6 Example of Preferred embodiment light concentrator

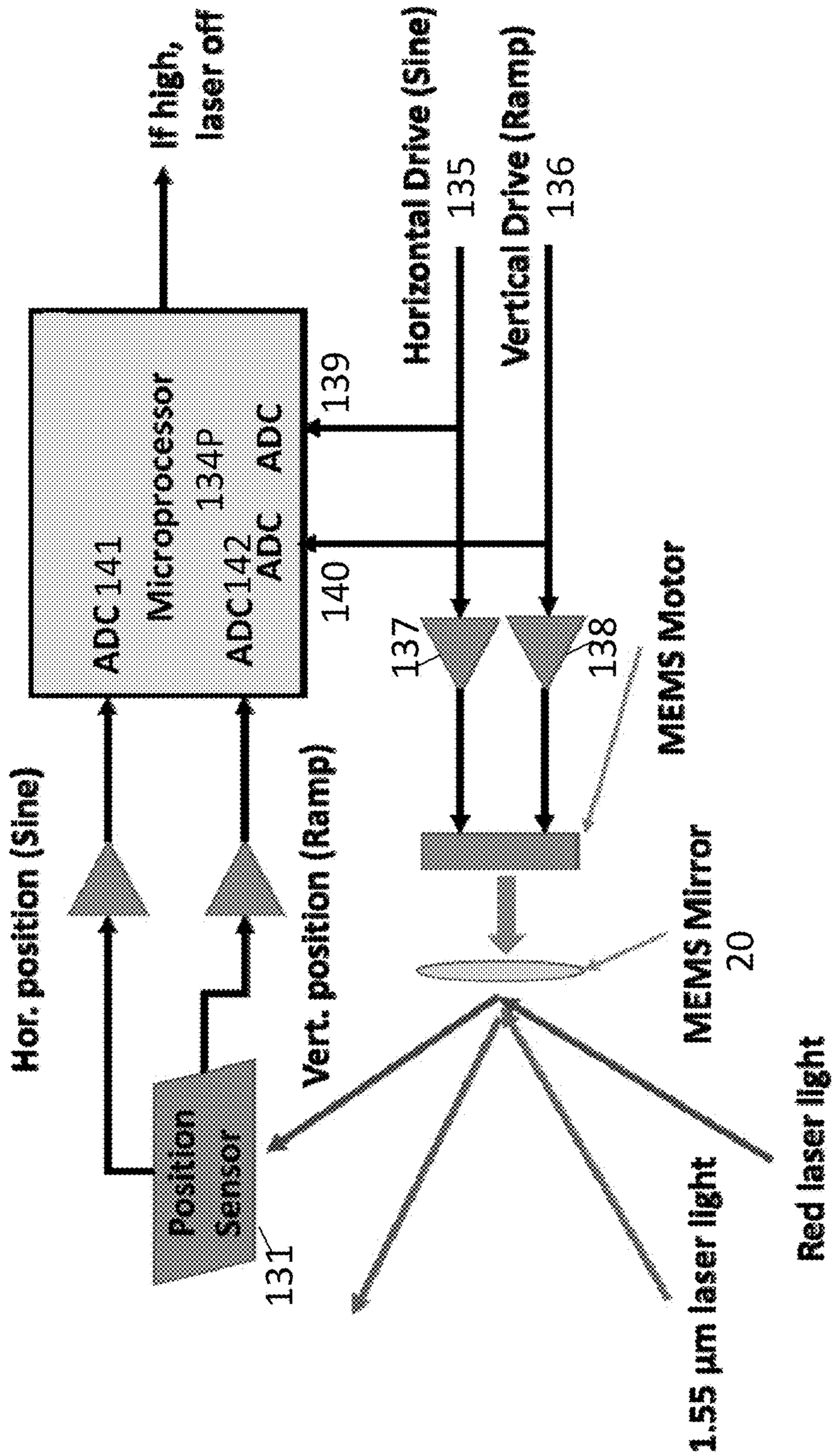

FIG. 7 Block diagram- eye-safety system.

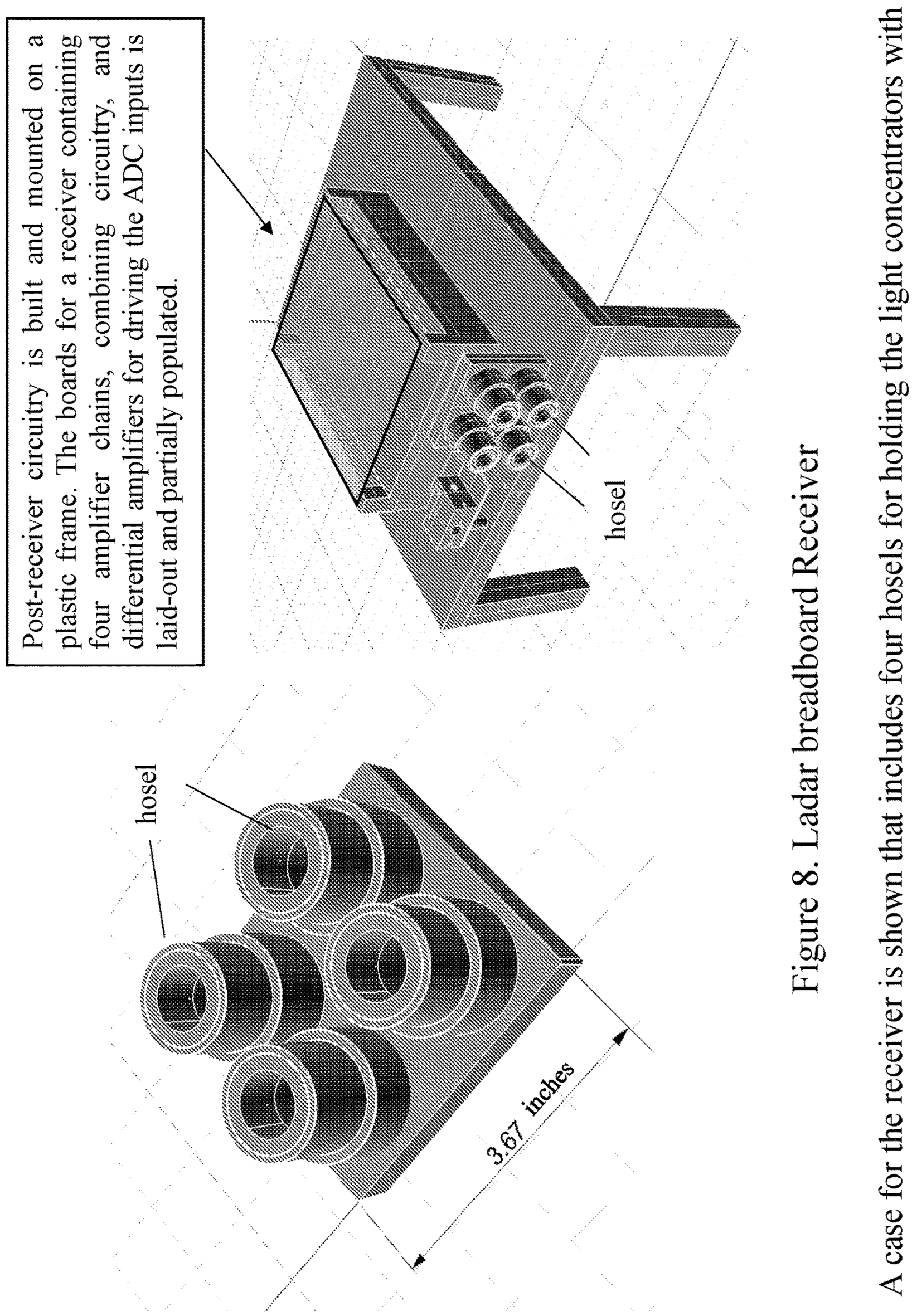

Figure 8. Ladar breadboard Receiver

A case for the receiver is shown that includes four hosels for holding the light concentrators with a mechanism for allowing the introduction of the index matching gel.

FIG. 9 Detector

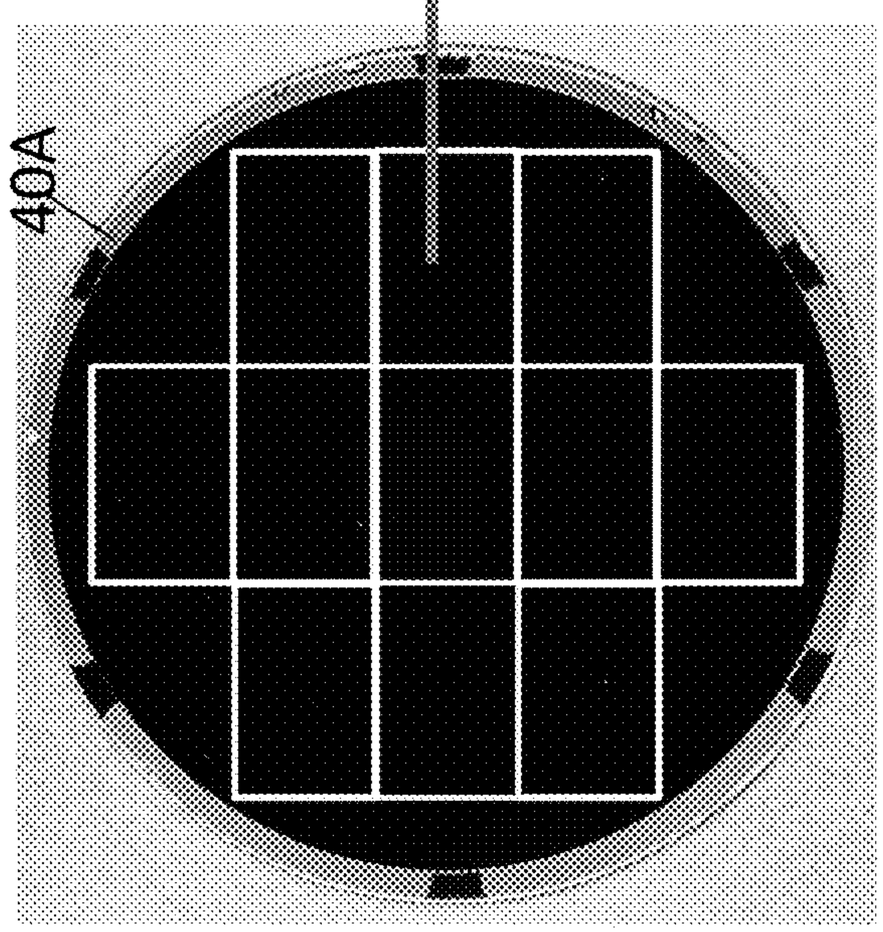

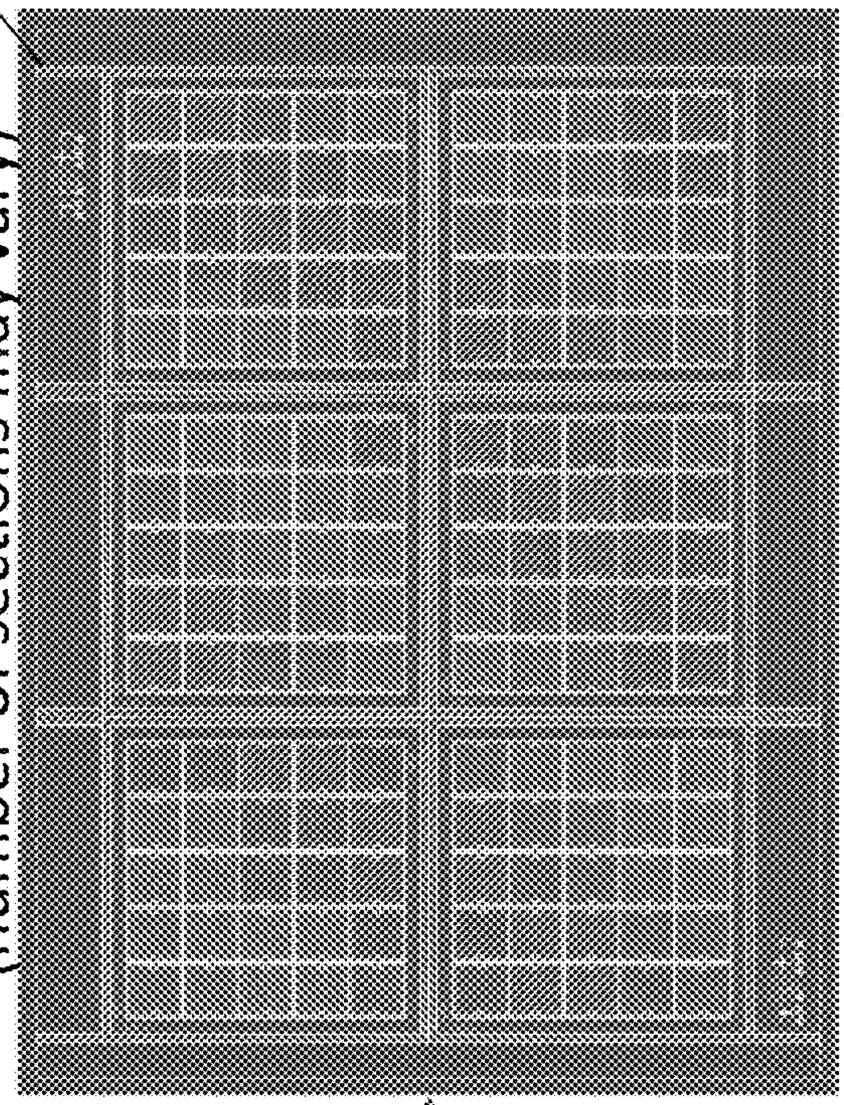

- Expected Performance:
  - Capacitance: < 12 pF / mm^2
  - Responsivity: > 0.8 A / W
  - Bandwidth: > 250 MHz

FIG. 10 Large-area, Low-capacitance Detector 80A

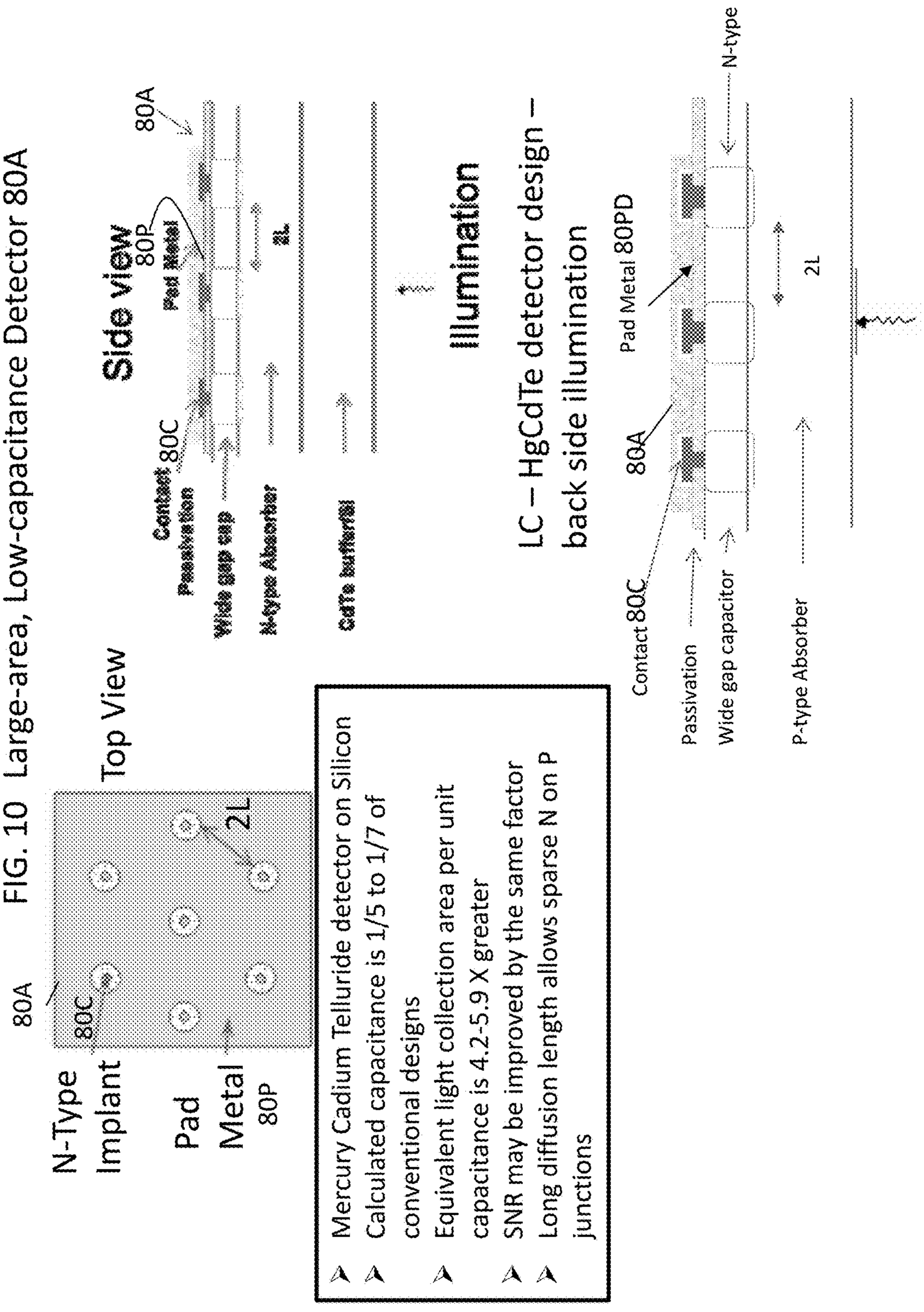

- Mercury Cadium Telluride detector on Silicon
- Calculated capacitance is 1/5 to 1/7 of conventional designs
- Equivalent light collection area per unit capacitance is 4.2-5.9 X greater
- SNR may be improved by the same factor
- Long diffusion length allows sparse N on P junctions

FIG. 11 Ladar for UAV Application - Drone

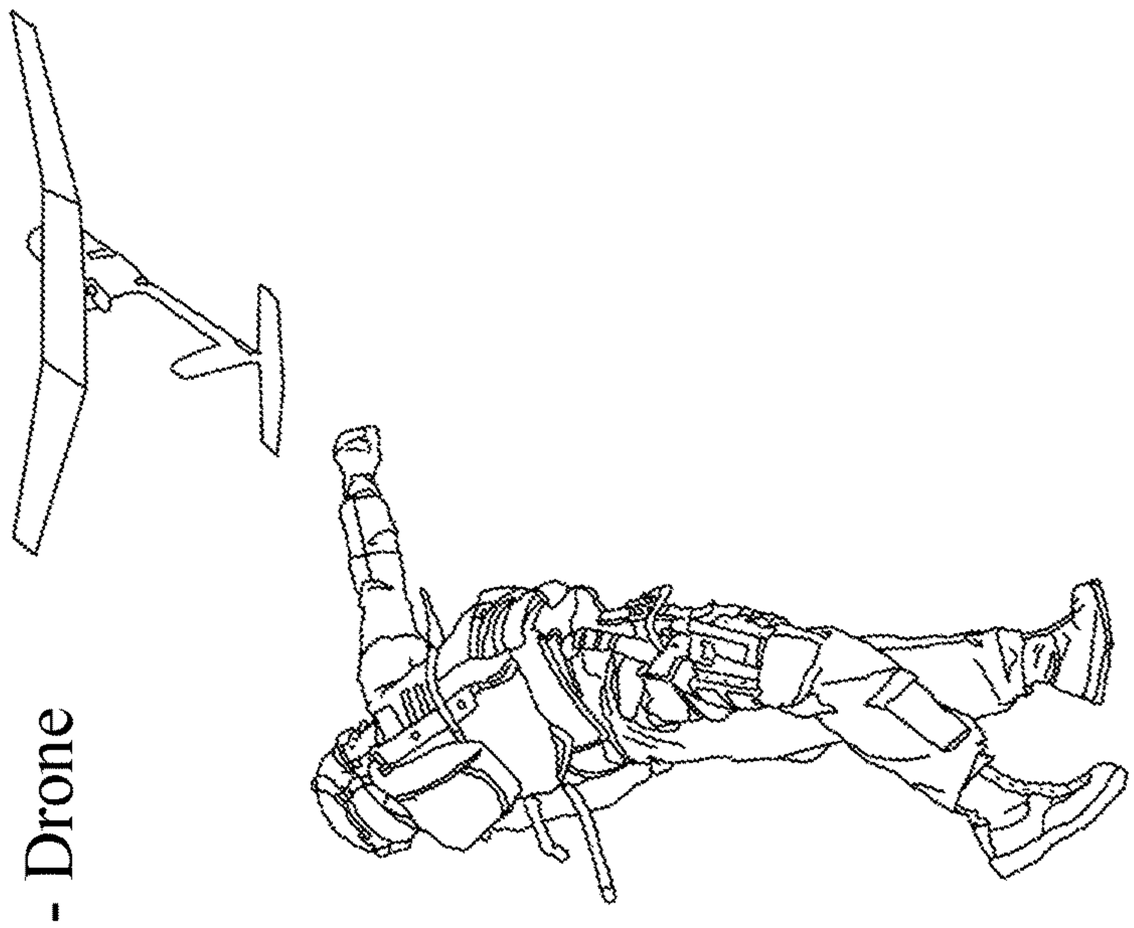

Preferred embodiment has detection of 20% reflectivity targets to 160 m and 30 cm pixel size at ground

Preferred embodiment may be used for flight tests on helicopter or other surrogate

Collects imagery from multiple aspect angles, register, and with foliage penetration

Receiver uses four commercial InGaAs detectors. Utilizes GRIN lens and mirror chain with 2.5 W laser

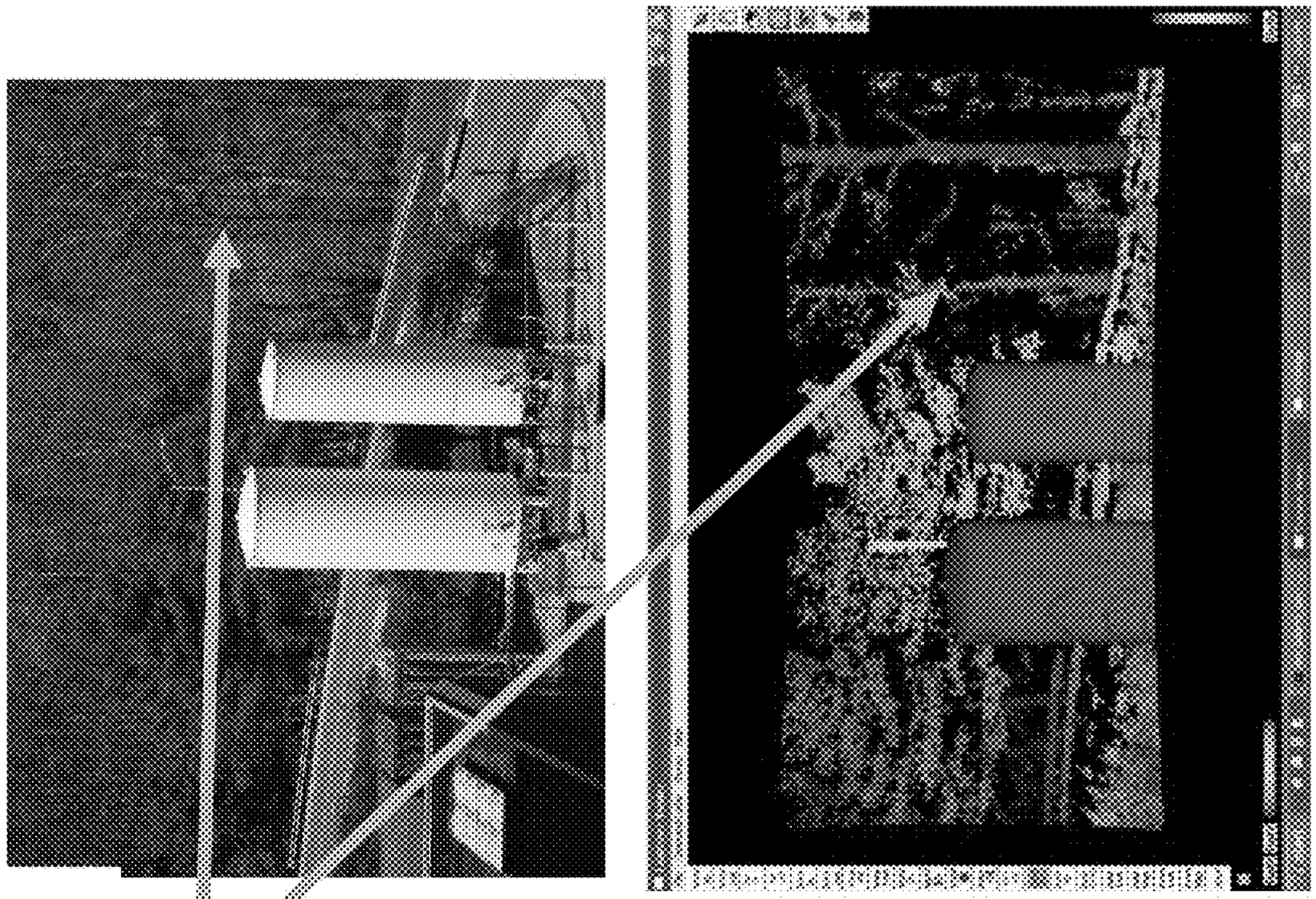

FIG. 12 Night Visibility of LADAR showing object at 105 meters

Response obtained using non-optimum InGaAs detectors

Correlation kernel not fitted to pulse response

Only 3 out of 4 receiver channels working

Laser set at 4 kW peak

Targets visible to 135 m (range swath shifted out)

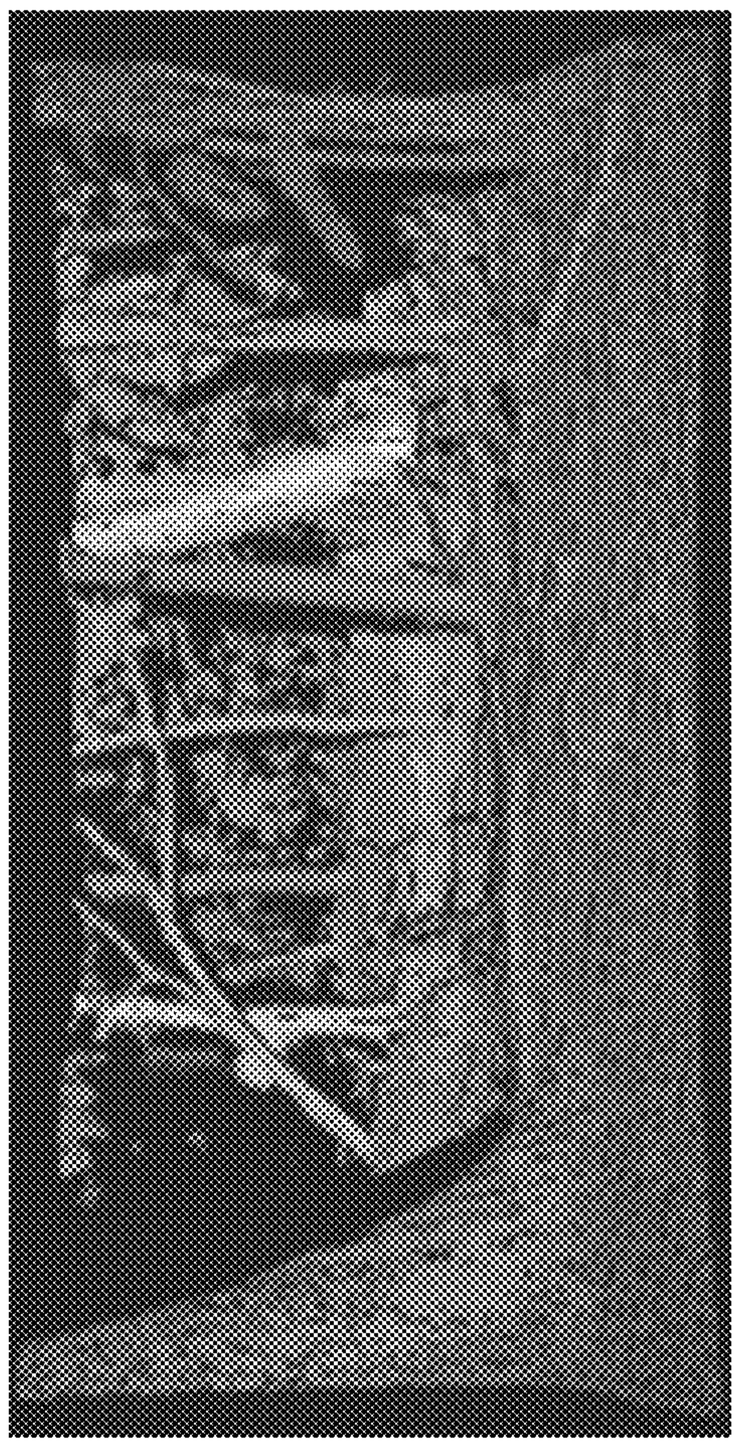

FIG. 13A Sample ladar imagery (Direct view left)

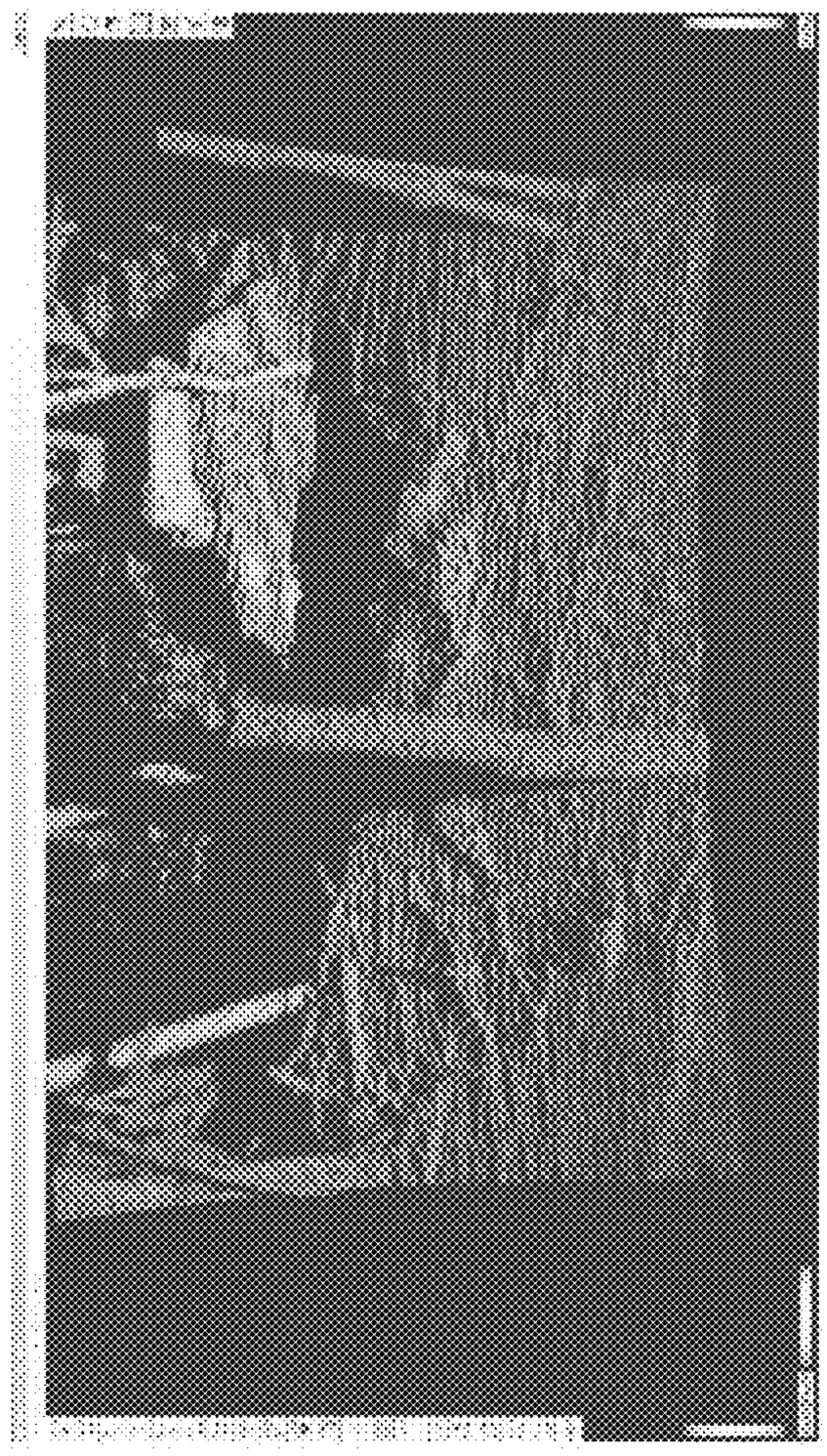

FIG. 13B Sample ladar imagery-elevated viewpoint.

LADAR RECEIVER WITH ENHANCED SIGNAL TO NOISE RATIO AND METHOD

GOVERNMENT INTEREST

The embodiments herein may be manufactured, used, and/or licensed by or for the United States Government without the payment of royalties thereon.

BACKGROUND OF THE INVENTION

The present invention relates to a LADAR transmitting and receiving apparatus, and, more particularly, to a compact LADAR receiving apparatus with enhanced signal-to-noise performance and bandwidth.

According to Wikipedia, Lidar (Light Detection And Ranging or Light Imaging, Detection, And Ranging) measures distance by illuminating a target with a laser light. Lidar may be used for a variety of purposes including high-resolution maps (including airborne laser swath mapping (ALSM)) and laser altimetry. Lidar is alternately referred to as laser scanning or 3D scanning; with terrestrial, airborne and mobile applications. Laser Detection And Ranging (LADAR) is an optical remote sensing technology that measures properties of scattered light to find range and/or other information of a distant target. LADAR may be used in a variety of contexts for elastic backscatter light detection and ranging (LIDAR) systems. Although the acronym LADAR is usually associated with the detection of hard targets and the acronym LIDAR is usually associated with the detection of aerosol targets, there has been no real standard on their use and both acronyms may be used interchangeably to describe the same laser ranging system. Accordingly, as used herein, the terminology LIDAR means LADAR and vice versa.

LADAR systems typically operate in the ultraviolet, visible, or near infrared spectrums, which gives a compact LADAR the ability to image a target at a high spatial resolution and allows LADAR systems to be made more physically compact.

As reported in U.S. Pat. No. 8,081,301, in order for a LADAR system target to reflect a transmitted electromagnetic wave, an object needs to produce a conductive or dielectric discontinuity from its surroundings. At radar frequencies, a metallic object produces a conductive discontinuity and a significant specular reflection. However, non-metallic objects, such as rain and rocks produce weaker dielectric reflections, and some materials may produce no detectable reflection at all, meaning some objects or features are effectively invisible at radar frequencies. Lasers provide one solution to this problem regarding non-metallic detection. The beam power densities and coherency of lasers are excellent. Moreover, the wavelengths are much smaller than can be achieved with radio systems, and range from about 10 μm to around 250 nm. At such wavelengths, the waves are reflected very well from small objects such as molecules and atoms. This type of reflection is called diffuse "backscattering." Both diffuse and specular reflection may be used for different LADAR applications.

Some prior art LADAR systems have transmitter and receiver functions that rely on a co-axial or mono-static optical system that comprises a complex assembly of beam splitters, polarizers, and steering mirrors that is very difficult to align, prone to losing alignment, subject to narcissus, and requiring excessive space for a compact LADAR system. As reported in U.S. Pat. No. 8,081,301, compact LADAR systems have generally been flawed by one or more factors

including, low pixelization, insufficient range or range resolution, image artifacts, no daylight operation, large size, high power consumption, and high cost. Prior art systems may use a wide bandwidth photo detector/amplifier system with a small detector, and a low shunt capacitance, leading to a low signal-to-noise ratio or small field-of-view.

SUMMARY

A preferred embodiment of the present invention, inter alia, determines range to a target by measuring the time-of-flight of a light pulse from a laser to the target and return. Optionally, a two-axis MEMS mirror may be used to direct the light pulse to a point in a scene and establish the angular direction to a pixel. The preferred embodiment receiver looks over the entire region scanned by the laser and produces a voltage proportional to the amount of laser light reflected from the scene. The output of the preferred embodiment receiver may be sampled by an analog-to-digital convertor. The net result may be a data file containing a range and a horizontal and vertical angle that identifies the position of every image voxel in the scene and its amplitude. This data may be displayed on a computer using standard and stereo techniques to render a three-dimensional image of the scene.

A preferred embodiment of the present invention comprises a laser receiver comprising:

at least one of a tapered fiber bundle or light concentrator operative to receive light;

a sensor operatively connected to the tapered fiber bundle or light concentrator, the sensor comprising a photosensitive region and outputting a photocurrent;

a first amplifier configured to amplify the photocurrent operatively connected to the sensor; the first amplifier comprising a first gate, a first source and a first drain, the operative connection between the sensor and the gate being configured to minimize inductance; the first gate being operatively biased by at least one first biasing resistor;

a first subcircuit operatively connected between the first drain and the first gate; the first subcircuit comprising, in series:

a first resistor, a first inductor and a decoupling capacitor; the first resistor effecting the photocurrent gain of the amplifier; the first inductor effecting the bandwidth; and the decoupling capacitor being configured to allow the first amplifier bias to be established by the at least one first biasing resistor;

the impedance of the first gate being high enough such that only a small proportion of the current from the sensor passes into the first gate and through the first amplifier while a significantly larger portion passes through the first subcircuit;

an inductor connecting the gate to the at least one biasing resistor with high impedance at the receiver operating frequency;

a second amplifier comprising a second gate with a gate impedance greater than 200 ohms operatively connected to the first drain; at least one second biasing resistor connected to the second gate with high impedance for the purpose of decreasing the load impedance on the first amplifier and thus increasing the voltage gain of the first amplifier; and thus enabling an increase in the value of the first resistor that in-turn improves the signal-to-noise of the amplifier; the first and second amplifiers having a combined bandwidth sufficient to pass a modulated photocurrent at a frequency up to 500 MHz; the second amplifier comprising an output configured to be operatively connected to a processing unit and

a display unit displaying output from the processing unit in the form of pixels, the display being of sufficient quality to display an image of a target at 1000 meters;

whereby the receiver is configured to receive light reflected from a target illuminated by a laser configured to emit light at an intensity safe for human eyes and wherein a target is discernible in a range from 0.3 to 1000 meters.

Optionally, the received light may be of a predetermined frequency and modulation format. The first subcircuit may be a negative feedback circuit. Optionally, the sensor may comprise a large area photosensitive region with a diameter ranging from 1 mm to 10 mm which outputs a photocurrent. The capacitance of the photodetector may be between 10 pF and 400 pF and the first amplifier may be an enhancement mode psuedomorphic high electron mobility transistor. Optionally, the inductance between the sensor and the gate may be minimized by making the distance between the photodetector and first gate approximately less than 1 cm. The inductance between the sensor and the gate may be in the range of 0.1 nH to 10. nH. The first resistor may be in the range of 20 to 2000 ohms and the first inductor may be in the range of 50 nH to 2000 nH such that the impedance of the bypass circuit causes the signal to noise ratio, amplifier gain, and bandwidth to be optimal for a particular lasar application. Optionally, the receiver may be used to operate a robot and the receiver may operate on battery power providing current in the range of 5 mA to 2000 mA in order to minimize the power consumption on the robot. The receiver may be sized so as to fit in an area of less than or equal to 3 cm by 3 cm by 0.5 cm. Optionally, the receiver comprises a plurality of subreceivers and the output of each of the plurality of subreceivers is substantially redundant and each output is connected to a combining circuit that is operatively connected to a processing unit.

A preferred method of the present invention comprises:

a sensor, a first amplifier operatively connected to the sensor; the first amplifier comprising a first gate, a first source and a first drain, the operative connection between the sensor and the first gate being configured to minimize inductance; the first gate being operatively biased by at least one first biasing resistor;

a first subcircuit operatively connected between the first drain and the first gate; the first subcircuit comprising, in series; a first resistor, a first inductor and a decoupling capacitor; the first resistor effecting the photocurrent gain of the amplifier; the first inductor effecting the bandwidth; and the decoupling capacitor being configured to allow the first amplifier bias to be established by the at least one first biasing resistor;

the impedance of the first gate being high enough such that only a small proportion of the current from the sensor passes into the first gate and through the first amplifier while a significantly larger portion passes through the first subcircuit;

an inductor connecting the gate to the at least one biasing resistor with high impedance at the receiver operating frequency;

a second amplifier comprising a second gate with a gate impedance greater than 200 ohms operatively connected to the first drain; at least one second biasing resistor connected to the second gate with high impedance for the purpose of decreasing the load impedance on the first amplifier and thus increasing the voltage gain of the first amplifier; and thus enabling an increase in the value of the first resistor that in-turn improves the signal-to-noise of the amplifier; the first and second amplifiers having a combined bandwidth sufficient to pass a modulated photocurrent at a frequency up to 500 MHz; the second amplifier comprising an output configured to be operatively connected to a processing unit and a display unit displaying output from the processing unit in the form of pixels, the display being of sufficient quality to display an image of a target at 1000 meters; the method comprising receiving light reflected from a target in a range from 0.3 to 1000 meters; processing and displaying the output.

These and other embodiments will be described in further detail below with respect to the following figures.

BRIEF DESCRIPTION OF THE DRAWINGS

FIG. **1** is a schematic block diagram of a prior art MEMS ladar and mirror.

FIG. **2** is a schematic of a prior art MEMS-scanned ladar receiver.

FIG. **3** shows the processing steps relevant to a MEMS-scanned ladar.

FIG. **4** is a block diagram of an example of the computing environment for the preferred embodiment MEMS-scanned ladar data capture system.

FIG. **5**A is a schematic illustration (Part I) of a hardware configuration of a preferred embodiment of the invention herein.

FIG. **5**B is a schematic illustration (Part II) of a hardware configuration of a preferred embodiment of the invention herein.

FIG. **6** is an illustration depicting a light concentrator for use with a preferred embodiment of the present invention.

FIG. **7** is a block diagram illustration of an eye safety system which may be used in association with an alternate preferred embodiment of the present invention.

FIG. **8** is an illustration showing the hosels associated with light concentrators which may be used with a preferred embodiment of the present invention.

FIG. **9** is an illustration showing alternate photodetector for use in a preferred embodiment of the present invention. Shown to the left is a three-inch diameter HgCdTe/Si wafer. As shown to the right, each block of the detector **40**A comprises a 5×5 arrays of 1×1 mm detectors connected with wire bonds.

FIG. **10** is an illustration showing a detector using mercury cadmium telluride (MCT) on silicon.

FIG. **11** is an illustration showing an application of the present invention relating to an unmanned aerial vehicle (UAV) drone.

FIG. **12** is an illustration showing the visibility believed to be obtainable using a preferred embodiment of the present invention.

FIG. **13**A is an illustration showing an example of ladar imagery.

FIG. **13**B is an illustration showing another example of ladar imagery

A more complete appreciation of the invention will be readily obtained by reference to the following Description of the Preferred Embodiments and the accompanying drawings in which like numerals in different figures represent the same structures or elements. The representations in each of the figures are diagrammatic and no attempt is made to indicate actual scales or precise ratios. Proportional relationships are shown as approximates.

DETAILED DESCRIPTION OF THE PREFERRED EMBODIMENTS

The embodiments of the invention and the various features and advantageous details thereof are explained more

fully with reference to the non-limiting embodiments that are illustrated in the accompanying drawings and detailed in the following description. It should be noted that the features illustrated in the drawings are not necessarily drawn to scale. Descriptions of well-known components and processing techniques are omitted so as to not unnecessarily obscure the embodiments of the invention. The examples used herein are intended merely to facilitate an understanding of ways in which the embodiments of the invention may be practiced and to further enable those of skill in the art to practice the embodiments of the invention. Accordingly, the examples should not be construed as limiting the scope of the embodiments of the invention. Rather, these embodiments are provided so that this disclosure will be thorough and complete, and will fully convey the scope of the invention to those skilled in the art. In the drawings, the dimensions of objects and regions may be exaggerated for clarity. Like numbers refer to like elements throughout. As used herein the term "and/or" includes any and all combinations of one or more of the associated listed items.

The terminology used herein is for the purpose of describing particular embodiments only and is not intended to limit the full scope of the invention. As used herein, the singular forms "a", "an" and "the" are intended to include the plural forms as well, unless the context clearly indicates otherwise. It will be further understood that the terms "comprises" and/or "comprising," when used in this specification, specify the presence of stated features, integers, steps, operations, elements, and/or components, but do not preclude the presence or addition of one or more other features, integers, steps, operations, elements, components, and/or groups thereof.

It will be understood that, although the terms first, second, etc. may be used herein to describe various ranges, elements, components, regions, layers and/or sections, these elements, components, regions, layers and/or sections should not be limited by these terms. For example, when referring first and second ranges, these terms are only used to distinguish one range from another range. Thus, a first element, component, region, layer or section discussed below could be termed a second element, component, region, layer or section without departing from the teachings of the present invention.

Furthermore, relative terms, such as "lower" or "bottom" and "upper" or "top," may be used herein to describe one element's relationship to other elements as illustrated in the Figures. It will be understood that relative terms are intended to encompass different orientations of the device in addition to the orientation depicted in the Figures. For example, if the device in the Figures is turned over, elements described as being on the "lower" side of other elements would then be oriented on "upper" sides of the other elements. The exemplary term "lower", can therefore, encompass both an orientation of "lower" and "upper," depending of the particular orientation of the figure. Similarly, if the device in one of the figures is turned over, elements described as "below" or "beneath" other elements would then be oriented "above" the other elements. The exemplary terms "below" or "beneath" can, therefore, encompass both an orientation of above and below. Furthermore, the term "outer" may be used to refer to a surface and/or layer that is farthest away from a substrate.

As may be used herein, the terms "substantially" and "approximately" provide an industry-accepted tolerance for its corresponding term and/or relativity between items. Such an industry-accepted tolerance ranges from less than one percent to ten percent and corresponds to, but is not limited to, component values, angles, et cetera. Such relativity between items ranges between less than one percent to ten percent. As may be used herein, the term "substantially negligible" means there is little relative difference, the little difference ranging between less than one percent to ten percent.

As may be used herein, the term "significantly" means of a size and/or effect that is large or important enough to be noticed or have an important effect.

As used herein the terminology "substantially all" means for the most part; essentially all.

This description and the accompanying drawings that illustrate inventive aspects and embodiments should not be taken as limiting—the claims define the protected invention. Various changes may be made without departing from the spirit and scope of this description and the claims. In some instances, well-known structures and techniques have not been shown or described in detail in order not to obscure the invention. Additionally, the drawings are not to scale. Relative sizes of components are for illustrative purposes only and do not reflect the actual sizes that may occur in any actual embodiment of the invention. Like numbers in two or more figures represent the same or similar elements. Elements and their associated aspects that are described in detail with reference to one embodiment may, whenever practical, be included in other embodiments in which they are not specifically shown or described. For example, if an element is described in detail with reference to one embodiment and is not described with reference to a second embodiment, the element may nevertheless be claimed as included in the second embodiment.

Embodiments of the present invention are described herein with reference to cross-section illustrations that are schematic illustrations of idealized embodiments of the present invention. As such, variations from the shapes of the elements in the illustrations are to be expected. Thus, embodiments of the present invention should not be construed as limited to the particular shapes of regions illustrated herein but are to include deviations in shapes. Thus, the layers or regions illustrated in the figures are schematic in nature and their shapes are not intended to illustrate the precise shape of a layer or region of a device and are not intended to limit the scope of the present invention.

Unless otherwise defined, all terms (including technical and scientific terms) used herein have the same meaning as commonly understood by one of ordinary skill in the art to which this invention belongs. It will be further understood that terms, such as those defined in commonly used dictionaries, should be interpreted as having a meaning that is consistent with their meaning in the context of the relevant art and will not be interpreted in an idealized or overly formal sense unless expressly so defined herein.

The present invention is directed to a novel approach to the design of a photocurrent receiver required in compact, low-power, and low-cost laser radar (ladar).

The receiver circuit design is an improvement in terms of signal-to-noise ratio and bandwidth over a design described in a prior patent "Ladar Transmitting and Receiving System and Method," U.S. Pat. No. 8,081,301.

The ability of a laser radar to detect targets at a specified range and field-of-view (FOV) is directly related to the amount of light captured by its receiver front-end optics and following photodiode. In applications where the FOV is large, then the photodiode size must be also large. At the same time the receiver bandwidth comprised of the photodiode and following amplifier must be sufficiently wide to pass a short duration pulse that may have a bandwidth in the range of 200-300 MHz. When a large area photodiode is

connected directly to a conventional microwave amplifier with an input impedance of 50 ohms, the photodiode capacitance is large enough that the circuit bandwidth (i.e. receiver) is well below the requirement to pass the detected light pulse. The present invention is directed to a laser radar receiver comprised of an amplifier circuit and large area photodiode that provides improved bandwidth and signal-to-noise (SNR) performance over the prior design described in U.S. Pat. No. 8,081,301

The problem of designing a low-cost laser radar around a wide FOV receiver using a large area photodiode has not been pursued because designers realized that standard methods of photocurrent amplification could not attain the bandwidth and SNR needed to pass a short pulse and detect the pulse at useful ranges. The present invention largely solves that problem.

Breadboard models of the receiver using various detector sizes and amplifier circuit parameters have been built and extensively tested. This work verified that the receiver SNR is improved 4-5 fold over the SNR obtained with the receiver design described in U.S. Pat. No. 8,081,301 for equal bandwidths. More SNR may be gained through more judicious circuit board layout in the future. This SNR improvement is important because it extends the range of ladar two-fold.

The present invention is useable in compact, low-power, and low-cost laser radars that may find use in autonomous small ground robots and some large ground vehicles. Other system applications include surveillance from small UAVs at short ranges and smart munitions. Laser radars with the receiver invention could find extensive use in autonomous automobiles, architectural engineering and design mensuration, and machine control. In the future, the receiver should find use in other variants of the MEMs-scanned ladar described in U.S. Pat. No. 8,081,301. These ladars may serve in military applications such as small ground robots, large ground vehicles, and other small UAVs and commercial applications including autonomous automobiles, architectural mensuration and design, and machine control.

FIG. **1** illustrates a schematic diagram of LADAR transceiver wherein a trigger signal from field-programmable gate array (FPGA) **10** commands laser **15** (e.g., an Erbium fiber laser) to emit a short pulses of light (e.g., 2-3 ns pulses, at 200 kHz). These pulses of light are collimated using a GRIN lens, for example, and then directed to the surface of mirror **20** (e.g., may be embodied as a small microelectromechanical system (MEMS) mirror). In addition, analog voltages from high voltage amplifier (HV Amp) **25** control the pointing direction of mirror **20**. As the pulses of light are reflected from mirror **20**, they are subsequently fed into telescope **30** to amplify the reflected angle. Light backscattered upon hitting a target is collected on the large face of fiber bundle **35**, which may be tapered. Tapering of the fiber bundle **35** effectively increases the diameter of photo detector **40** and thereby increases the signal-to-noise ratio. Other means to increase light impinging on the photo detector such as light concentrators or lenses may also be used. Photocurrent from photo detector **40** is fed into amplifier **45**, which may be embodied as a monolithic 50 ohm microwave amplifier. The outputs of additional fiber taper/detector/amplifier chains may be fed into a summer **50** with additional filtering and splitting functions to improve the ladar signal-to-noise ratio. The output of the summer **50** after the filtering is fed into power divider that splits the signal into low gain channel **50***a* and high gain channel **50***b*. In radio frequency (RF) interface board **55**, both low gain channel **50***a* and high gain channel **50***b* are adjusted in amplitude and limited in amplitude to produce output channels **60***a* and **60***b*. In addition, inputs to RF interface board **55** are summed with a photocurrent from an undelayed sample of the original transmitted light signal, shown as T-zero **55***c* in FIG. **1**. T-zero **55***c* pulse of the transmitted signal is optionally used as a reference to determine target range. Output channels **60***a* and **60***b* are subsequently fed into analog-to-digital converter (ADC) **60**, shown in FIG. **1** as a two channel 8-bit ADC, via input channels **60***a* and **60***b*. ADC **60** optionally samples input channels **60***a* and **60***b* at a 1.5 giga-samples-per-second 45 (GSPS) rate for example. This sampled data is fed to field programmable gate array **10**, which stores the sampling data as a function of time from ADC **60** in memory **65**.

Memory **65** is optionally a first-in first-out register (FIFO), and starts storing analog-to-digital converter (ADC) **60** sampling data upon transmission of the laser **15** pulse. In addition to storing sampling data from ADC **60**, field programmable gate array (FPGA) **10** determines the range to the pixel, and formats the data for acquisition by computer **70** for display. FPGA **10** also controls the pointing direction of mirror **20** (e.g., via digital-to-analog converter (DAC) **12**) and directs the laser **15** to emit a pulse.

To increase the receiver capture area for a given size of photo detector **40**, a tapered fiber bundle **35** may be used to magnify the apparent size of a photo detector (e.g., a 1 mm diameter photo detector can theoretically increase its effective diameter to 3.1 mm at the front of a tapered fiber bundle **35**, when the tapered fiber bundle **35** has a magnification ratio equal to 3.1:1). The theoretical maximal effect of magnifying tapered fiber bundle **35** is often not reached if photo detector **40** is a commercially packaged photo detector since the packaging of the commercial photo detectors typically cannot couple the output of tapered fiber bundle **35** directly against the detector surface of photo detector **40** to capture all of the light. In addition, the capacitance of photo detector **40** may limit the output bandwidth of amplifier **45** (e.g., a photo detector with a 1 mm diameter detecting surface may limit bandwidth to about 85 MHz when fed directly into a 50 ohm microwave amplifier). This issue is addressed via an R-L-C circuit **75** (shown in FIG. **2**) between photo detector **40** and amplifier **45** output to extend the bandwidth with a tolerable level of pulse distortion and stretching.

FIG. **2** shows an amplifier scheme in the prior art that solved the bandwidth problem identified in the previous paragraph. As shown in FIG. **2**, photo detector **40** may include a PIN InGaAs photo detector, which is preferable to an avalanche photodetector. The principal for extending the bandwidth is based on a feedback circuit comprised of an inductor **94**, capacitor **93** and resistor **96**.

Recent advances in Erbium fiber lasers have allowed Erbium fiber lasers to be manufactured as physically smaller units, and at a lower cost, than what was previously available. The electrical and optical parameters of these new Erbium fiber lasers are identical to the previous fiber laser technology except that the peak power has been reduced, e.g., the peak power of a low-cost Erbium fiber laser may be one-fourth of the peak power of a current fiber laser. FIG. **2** shows receiver **78** that compensates for a loss in signal power when using a laser with reduced peak power, according to the embodiments described herein. Similar to FIG. **1**, FIG. **2** includes fiber bundle **35** to enhance the optical capture area. FIG. **2**, however, uses a plurality of chip detectors **40** instead of a single photo detector. For example, since each PIN chip detector **40** may be only 1 mm square, four PIN chip detectors **40** may be coupled to the output of

fiber bundle **35**. FIG. **2** illustrates a single PIN chip detector **40**. The output of each PIN chip detector **40** is fed into a separate e microwave amplifier **85**. The output of each microwave amplifier **85** is fed into an n-way microwave combiner **90**. Microwave combiner **90** yields target signal **90***a* that has an improved signal-to-noise ratio compared to the individual output of any of microwave amplifier **85**.

Although FIG. **2** uses a four-way microwave combiner **90**, to match the number of PIN chip detectors **40** and microwave amplifiers **85** combinations (only one of which is shown in FIG. **2**), the embodiments described herein are not limited to a four-way microwave combiner and those skilled in the art could readily increase or decrease the number of inputs to microwave combiner **90** to match increases or decreases in the number of PIN chip detectors **40** and microwave amplifiers **85** combinations used.

The circuit shown in FIG. **2** also includes feedback circuit **92** positioned as a feedback loop for the output of microwave amplifier **85** to raise the overall bandwidth. In feedback circuit **92**, capacitor **93** comprises a large capacitor used to decouple DC signal **94** at amplifier **85** output from the input. Inductor **95** cuts-off the feedback path at high frequencies, where the phase shifts in amplifier **85** may cause conditions for oscillations and if chosen correctly increases the circuit bandwidth. In addition, resistor **96** is effectively the actual feedback element over the bandwidth of interest. To further achieve stable (e.g., non-oscillating) performance, amplifier **85** may include a wide band monolithic microwave integrated circuit (MMIC) amplifier (e.g., to provide gain up to 7 GHz).

FIG. **3** illustrates a flow diagram according to an embodiment herein. In step **100**, the method of FIG. **3** describes receiving pulses of light pulses of light via a tapered fiber bundle (e.g., tapered fiber bundle **35**), although this is optional. Step **101** describes producing a plurality of photocurrents (e.g., as produced from photo detector **40**, **40**A or **40**B). Step **102** describes amplifying the plurality of photocurrents using a plurality of microwave amplifiers (e.g., microwave amplifiers **45**). Next, at step **103**, the method of FIG. **3** provides a plurality of feedback circuits (e.g., feedback circuit **92** or **92**A). Step **104** describes combining the plurality of amplified photocurrents using a microwave combiner (e.g., microwave combiner **90**). In step **105**, the method of FIG. **4** describes processing and displaying the combined output (e.g., via computer **70** or other processor).

The techniques provided by the embodiments herein may be implemented on integrated circuit chips (not shown) with supporting computer code.

The embodiments herein can comprise hardware and software elements. The embodiments that are implemented in software include but are not limited to, firmware, resident software, microcode, etc. In addition, the hardware elements described herein may be simulated in software. For example, computer models of analog hardware elements described herein (e.g., lasers, microwave amplifiers, resistors, capacitors, and inductors) may be used in conjunction with emulators for discrete hardware elements described herein (e.g., FPGA emulators) to simulate operational parameters for the software elements of the embodiments described herein. Furthermore, the embodiments herein can take the form of a computer program product accessible from a computer-usable or computer-readable medium providing program code for use by or in connection with a computer or any instruction execution system. For the purposes of this description, a computer-usable or computer readable medium can be any apparatus that can comprise, store, communicate, propagate, or transport the program for use by or in connection with the instruction execution system, apparatus, or device. The medium can be an electronic, magnetic, optical, electromagnetic, infrared, or semiconductor system (or apparatus or device) or a propagation medium. Examples of a computer readable mediuminclude a semiconductor or solid state memory, magnetic tape (as represented by **113** in FIG. **4**), thumb drive, a removable computer diskette, a random access memory (RAM), a read-only memory (ROM), a rigid magnetic disk (as represented by **111** in FIG. **4**), and an optical disk. Examples of optical disks include compact disk-read only memory (CDROM), compact disk-read/write (CD-R/W) and DVD. A data processing system suitable for storing and/or executing program code will include at least one processor coupled directly or indirectly to memory elements through a system bus. The memory elements can include local memory employed during actual execution of the program code, bulk storage, and cache memories which provide temporary storage of at least some program code in order to reduce the number of times code must be retrieved from bulk storage during execution.

Input/output (I/O) devices (including but not limited to keyboards, displays, pointing devices, etc.) can be coupled to the system either directly or through intervening I/O controllers.

Network adapters may also be coupled to the system to enable the data processing system to become coupled to other data processing systems or remote printers or storage devices through intervening private or public networks. Modems, cable modem and Ethernet cards are just a few of the currently available types of network adapters.

A representative hardware environment for practicing a preferred embodiment of the present invention is depicted schematically in FIG. **4**. This schematic drawing illustrates a hardware configuration of an information handling/computer system similar to that described in the '301 Patent, that may be used in conjunction with the embodiments herein. The system comprises at least one processor or central processing unit (CPU) **110**. The CPUs **110** are interconnected via system bus **112** to various devices such as a random access memory (RAM) **114**, read-only memory (ROM) **116**, and an input/output (I/O) adapter **118**. The I/O adapter **118** can connect to peripheral devices, such as disk units **111** and tape drives **113**, or other program storage devices that are readable by the system. The system can read the inventive instructions on the program storage devices and follow these instructions to execute the methodology of the embodiments herein. The system further includes a user interface adapter **119** that connects a keyboard **115**, mouse **117**, speaker **124**, microphone **122**, and/or other user interface devices such as a touch screen device (not shown) to the bus **112** to gather user input. Additionally, a communication adapter **120** connects the bus **112** to a data processing network **125**, and a display adapter **121** connects the bus **112** to a display device **123** which may be embodied as an output device such as a monitor, printer, or transmitter, for example

Optionally, a field programmable gate array (FPGA) may be utilized to run a code that controls the basic functions of the LADAR and does some pre-processing of the image data before display. A trigger signal from the FPGA may be used to command a laser to emit a short pulse of light at a rate of 200 kHz into, for example, a single mode fiber. The laser size is 9×7×1.5 cm LWH), the pulse is 2-3 ns long with an energy of 2 μJ, and the power consumption is 10 W.

The preferred embodiment may comprise a micro-electro-mechanical system (MEMS) mirror **20** coupled to a low-cost pulsed erbium fiber laser. The preferred embodiment may

utilize, for example, a 5-6 Hz frame rate, an image size of 256 (h)×128 (v) pixels, a 42°×21° field of regard, 35 m range, optional eye-safe operation, and 40 cm range resolution with provisions for super-resolution. The preferred embodiment may be used in conjunction with ground robots and unmanned aerial vehicle (UAV) applications. The data acquisition system has the ability to capture range data from three return pulses in a pixel (that is first, last, and largest return), and information such as elapsed time, operating parameters, and data from an inertial navigation system. Optionally, the preferred embodiment may comprise additional performance subsystems to obtain eye-safety certification. To meet the enhanced range requirement for the UAV application, receiver circuit of the preferred embodiment improves the signal-to-noise (SNR) several-fold over the prior art designs. A low-capacitance large area detector may be utilized to enable even further improvement in receiver SNR. The range capability is contemplated and estimated to be 160 m. Optionally, the preferred embodiment ladar may be integrated with a color camera and inertial navigation system to build a data collection package to determine imaging performance for a small UAV.

The laser output fiber may be connected to the input fiber of a gradient index (GRIN) collimator to produce a light beam narrow enough to fit within the diameter of the MEMS mirror. Collimator **35**A (as shown in FIG. **6**) may, for example, have a beam diameter 0.4-0.5 mm and the divergence of 2 milliradians (mr). The collimator may be, for example, 3 mm in diameter and 13 mm long; which allows reduction in the size of the transmitter assembly.

The collimated light is directed onto the face of the MEMS mirror. The mirror is 1.2 mm in diameter and can be scanned in two axes up to +/−6 degrees or equivalently 12 degrees peak-to-peak. The overall MEMS chip size may be 4.5 mm square. The scan rate may be approximately 700 lines per second which is sufficient to form 256×128 pixel images at a 5-6 Hz rate. The mirror is steered by drive voltages generated from a digital representation of the scan pattern stored in a memory. These digital numbers are mapped to analog voltages with a digital-to analog convertor and amplified with a high voltage operational amplifier.

To increase the amount of scan angle the reflected laser beam is passed from the mirror into a beam telescope. Using the designer's model for the GRIN lens and an optical modeling code (Zemax), a lens combination for the beam telescope may be utilized that scans a beam +/−30° with +/−12° scan of an input beam. Small diameter lenses may be utilized to reduce the completed size of the transmitter subassembly. The first element in the beam telescope is a 12.7 mm diameter convex doublet with a focal length of 25 mm and the second is a 12.7 mm double concave lens with a focal length of −9.7 mm. The output beam divergence is approximately 4 mr which roughly matches the desired pixel format.

Light reflected from the image scene is detected with a receiver aperture that has a field-of-view encompassing the entire scanning range of the transmitter. This is a classic bi-static ladar architecture which significantly eliminates numerous optical components and requires no precision alignment as compared to the mono-static architecture which shares a common transmit and receive aperture. The bi-static architecture also allows the receiver aperture to be made larger than the MEMS mirror which is the limiting aperture size for the mono-static architecture. Larger receiver apertures allow for higher signal-to-noise and therefore increased LADAR range capability for a given laser power.

A fiber bundle may be used instead of the traditional lens approach because for large field of views (FOVs (45°-60°), a lens will yield only small amounts of optical gain (1.4 for example for a 45° FOV) whereas the fiber bundle with an input to output diameter ratio of three provides gains of 4-5. To further increase the amount of captured light the receiver uses a large area photodetector. Unfortunately large photodetectors present large capacitive loads to the input circuit of the following amplifier that limit its bandwidth to less than what is required to pass a 2-3 ns pulse. The key to achieving the necessary bandwidth is a feedback circuit **92** (comprised of a series resistor, capacitor, and inductor) connected between the input and the output of a low noise monolithic microwave integrated circuit (MMIC). The capacitor is used to simply block the difference in the DC levels between the amplifier input and output. The inductor opens the feedback path at high frequencies, where phase shift in the amplifier is sufficient to cause instability, and the resistor acts as the feedback element at the frequencies of interest. This receiver technique provides better signal-to-noise ratio (SNR) than the standard techniques using a small photodetector with a high gain transimpedance amplifier. Because the output diameter of the fiber taper is large, a two-fold improvement in SNR follows from placing four photodetectors behind the taper output and combining the outputs of four detector/amplifiers. The receiver design uses four 1.5 mm diameter PIN InGaAs photodetectors and provides sufficient SNR to detect average reflectivity targets to about 35-40 m in range.

The output from the combiner is followed by a lowpass filter stage to further increase SNR (refer back to FIG. **1**). The filter output is separated into a low and a high gain channel where the purpose is to accommodate the large range of return signal levels caused by a combination of the scene reflectivity and space loss between near and far range targets. The output of each gain channel is a limiting differential amplifier to prevent large return signals from damaging the following analog-to-digital convertor.

The differential amplifiers respectively feed two analog-to-digital convertors (ADC) on the ADC/FPGA board. The ADCs may for example be a National Semiconductor chip (ADC08D15000) which is dual channel and samples at a rate of 1.5 giga-samples per second (GSPS) to 8-bit resolution. Because the laser pulse signals recovered by the receiver are unipolar, the differential output amplifiers on the receiver are biased with an offset current to enable sampling of the signals to the full 8-bit resolution available.

The output of the ADC is continuously clocked into the FPGA Double Data Rate (DDR) input registers. The data acquisition starts when the FPGA fires the laser and waits a predetermined latency period to begin to clock the DDR output into the input first-in-first-out (FIFO) register, which is 500 samples deep. The 500 samples, taken 0.667 ns apart, allow targets to be acquired up to 50 meters. After the FIFO is filled, it is then read-out and the samples are tagged with the output of a 9-bit range counter, which was started when the laser fired. The low gain channel is multiplied by a factor to approximate the difference in RF gain between the two channels. The two channels are combined into a single 14-bit wide channel for further processing. This combined channel is a correlated against a kernel with 5 coefficients that represent the shape of the transmitted laser pulse. This "matched filter" facilitates the recovery of signals in noise. The output of the correlator is then passed through a threshold circuit to detect the largest target returns. Given that multiple returns from a single transmitted laser pulse for a pixel is possible, one of three pulse types is selected for further processing: the first return received after a laser pulse

is transmitted, the last return, or the highest amplitude return. All three return types may be processed but use of one of three is permissible. The selected return is then fed to an interpolation circuit to increase the LADAR range accuracy. The interpolator works by fitting the signal return to a parabola that has a similar shape and then finding the range value corresponding to the maximum of the fitted curve. The result is a range word that is represented with 13 bits instead of 9.

The field programmable gate array (FPGA) also controls the movement of the MEMS mirror. The code to set the mirror position uses a mirror scan memory map that contains the vertical and horizontal scan positions for the mirror as well as embedded code needed by the digital-to-analog convertor (DAC). The DAC converts the digital data to an analog signal needed to drive the mirror. Also embedded are the image synchronization signals H-sync and V-sync needed by the FPGA processor. H-sync and V-sync are the familiar horizontal and vertical signals. For horizontal image lines, the mirror is scanned in a serpentine pattern using a cosine wave. This technique eliminates ringing in the mirror movement that would be caused by the strong, high frequency transient in the flyback of a raster scan. The left and right edges of the scan are blanked where the mirror is moving very slowly at the turnaround. Display software linearizes the horizontal pixel data by compensating for the sinusoidal motion of the mirror and reverses every other line to correct for the serpentine motion. For the preferred embodiment vertical scan, a linear sawtooth wave may be utilized where during the slowly-changing portion of the sawtooth the vertical position of the mirror is incremented by one line during each horizontal blanking period. A short flyback portion of the vertical scan is blanked. The H-sync encoding denotes the first pixel in a line, while V-sync is encoded in the first pixel of each frame. To prevent miss-registration of the image data, a frame count and a delimiter is added to the data fed from the FPGA to the Ethernet board. The range and amplitude words are then sent to an output FIFO, which buffers the data between the 187.5-MHz input data rate with the 2 z input rate of the Ethernet board.

The MEMS-scanned LADAR enclosure dimensions may be approximately 7.1" wide by 6.5" deep by 3.1" high; and total unit power consumption is about 20 W.

Recovery of Multiple Returns

The preferred embodiment LADAR has the capability to simultaneously process multiple target returns per pixel. Up to three target returns, if present, are characterized as the first return to arrive, the last return to arrive, and the largest amplitude return to arrive for a given pixel. This added capability will allow foliage penetration and increase the ability to see wires and other small objects.

The LADAR can also support a complete inertial system that includes a triaxal gyroscope, a triaxal accelerometer, and a triaxal magnetometer. This capability will allow multiple image frames to be 'stitched' together when the LADAR is mounted in a moving platform.

Optionally, a 512 word header can be added to the output data stream that will hold various system parameters such as laser power, time, frame number etc. This will aid in archival purposes

DETAILED DESCRIPTION OF ENHANCED RECEIVER

The systems depicted in FIGS. **1** and **2** are representative of those in U.S. Pat. No. 8,081,301 wherein a fiber optic taper is placed in the light path before the detector (photodiode **40** in FIG. **1**) to increase the amount of detected light by a factor roughly related to the diameter of the input face to the output face of the fiber taper. Other non-imaging optical devices such as light concentrators are suitable for this purpose that perform similarly. Depending on the required ladar field-of-view, short focal length lenses are also suitable to increase the amount of light impinging on the photodiode. Light emitted from the output of the preceding optical device is converted into a photo-current by the photodiode.

To raise the signal-to-noise of the receiver to meet ladar range requirements for a given laser power, the receiver uses a large area photodiode to collect as much light as possible at the output of the leading optical device to yield a higher photocurrent. For the class of ladars where high range resolution is required, the bandwidth of the photo-current can range up to several hundred MHz. Achieving this bandwidth is difficult for large area photodiodes because they have large parallel capacitances that in concert with the amplifier input impedance, create a circuit that sharply attenuates the photocurrent signal. For instance a 3 mm diameter InGaAs PIN photodiode has a capacitance of 200 pF. This detector when fed directly into an amplifier with a 50 ohm input impedance forms a circuit that will have a bandwidth of only 16 MHz.

The photocurrent may be fed directly into the gate of transistor **85**A. Two resistors R**1**, R**2** in series from the 3V to ground and the middle goes to the gate of transistor **85**A. These two resistors form a "bias network," i.e. a combination of resistors used for biasing transistor **85**A. The bias resistors can be used to set a voltage at the gate of transistor **85**A to control the bias current of the transistor. To extend the receiver bandwidth to capture short light pulses (3 ns for example), a negative feedback or bypass circuit is utilized (similar to that in U.S. Pat. No. 8,081,301, herein incorporated by reference). The original and the new photocurrent amplifiers are both negative feedback designs. In the circuit described in the '301 patent an MIMIC amplifier was utilized with a 50 ohm input resistance. In the simplest sense a 160 ohm resistor is connected between the input and the output of the amplifier. For the operating frequencies of the application 160 ohms in the feedback was possible. An analysis of the circuit reveals that the impedance presented at the input of the amplifier by the feedback resistor is roughly the resistance divided by the amplifier gain. The amplifier gain is a bit more than 10 so the presented impedance is 16 ohms or less. This means that the photocurrent mostly flows through the feedback resistor, that is $I_{amp}=V_{in}/50$ versus $I_{feedback}=V_{in}/16$. For the new photocurrent design of the preferred embodiment shown in FIGS. **6**A, **6**B, the input resistance of the E-PHEMT is very high with respect to 50 ohms and thus almost all of the photocurrent is drawn through the feedback resistor. R**3**.

Because of the feedback connection, a small output voltage change is returned back to the amplifier input through the resistor R**3**. A positive change in the output in the circuit results in a positive change at the input where the output signal is fed back. A change at the input will produce a negative change in the output voltage. Because the initially assumed change produces opposite results when propagated through the feedback loop, a signal that opposes and tends to cancel the originally assumed change correlates to negative feedback.

Note that in place of the MMIC amplifier (used in the '301 Patent), an Enhancement mode Pseudomorphic High Electron Mobility Transistor (E-PHEMT) **85**A may be used with the associated negative feedback or bypass circuit **92**A

comprised of R3, L2, and C3 connected between the transistor gate and the source. The E-PHEMT transistors have more gain than the MMIC amplifier which enables the use of a larger feedback resistor (R3) for the same bandwidth. The values of the resistor R3 and inductor L2 operate to control or determine the amplifier's (85A) photocurrent gain and bandwidth. Preferably the gate impedance is high enough such that only a small proportion of the current from the sensor/photodiode 40A passes into the gate and through the amplifier 85A while a significantly larger portion passes through the bypass circuit 92A. The decoupling capacitor (e.g. C3) is configured to allow the bias of amplifier/transistor 85A to be established by the at least one biasing resistor, such as resistors R1 and R2. A large value for resistor R3 improves the noise performance of the photocurrent amplifier by reducing the Johnson noise from the resistor. E-PHEMTs also have a higher input impedance (2-4 pF capacitor versus 50 ohms for the MMIC) that causes almost all of the photocurrent to flow through the bypass or negative feedback circuit 92A. This contributes to raising the feasible value of the feedback resistor R3 and thus reducing noise. Additionally, the noise figure of the E-PHEMT is also lower.

Significant increase in SNR is achievable by reducing the inductance, L5 to the lowest value possible. This can be done with careful layout of the receiver circuit board. The best approach is achieved when the photodiode is glued to a pad on the board and the anode is wire bonded to the Q1 gate of transistor 85A. Another method is to mount the photodiode in a leadless chip carrier which is then soldered to the lead on the board running to the E-PHEMT gate. The amplifier (transistor 85A) bandwidth may be extended by with judicious choice of the inductance, L2; which may be determined using circuit modelling codes such as SPICE.

Additional SNR is achieved through another means which is unique to this photocurrent amplifier. A second transistor/amplifier 85B, which also may be for example an E-PHEMT, is used as a buffer between 85A and following receiver circuitry thereby decoupling transistor/amplifier 85A from devices using standard 50 ohm input impedances. Resistors R4, R5 can be used to set a voltage at the gate of transistor 85B such that when the supply voltage is 3V (as shown in FIG. 4B) one can use two resistors R4, R5 in series from the 3V to ground and the middle goes to the gate of transistor 85B. The two resistors R4, R5 are called "bias resistors" since they "bias" the gate. These two resistors form a "bias network' i.e. a combination of resistors used for biasing a transistor. By biasing transistor/amplifier 85B with high value resistors, R4 and R5, a high load impedance is presented to transistor/amplifier 85A that effectively allows the amplifier to have more voltage gain relative to when it is loaded with 50 ohms. This increase in gain allows the use of a larger feedback resistor (R3) for the same bandwidth thereby improving the SNR.

The preferred embodiment enhanced receiver circuit is amenable to techniques to improve the overall ladar receiver SNR by combining the outputs of several detector/amplifier circuits. As another approach, the inputs of multiple amplifiers circuits can be connected to one large photodiode. The outputs of transistors/amplifiers 85A, 85B can then be summed to raise the overall SNR of the ladar receiver. The present invention is a clear improvement in terms of SNR relative to U.S. Pat. No. 8,081,301 "Ladar Architecture" disclosure. With the prior design, the ladar could image to only about 30 m. Breadboards of the enhanced receiver where the SNR is at least a factor of four greater than the prior art show that imaging in excess of 50 m is possible.

Imaging capability to 160 meters is attainable. FIG. 6 is an illustration of a tapered light concentrator. A light concentrator is used as a low-cost alternative to fiber taper. The optical gain was found to exceed the gain of the fiber taper by a factor of two. Additional gain is achieved by using an index matching fluid between the output of the concentrator and the detector. Tests of a preferred embodiment receiver including the concentrator and index matching fluid against a 0.6 reflectivity a target at 10 m with a 1 kW laser pulse yielded a SNR equal to 448. When this result is extrapolated to a 20% target using four combined receivers and a 5 kW laser pulse, the range for a SNR of 5 is 173 m.

Eye-Safety System

Referring now to FIG. 7, an eye-safety system was designed and installed in the three brassboard MEMS-scanned LADARS to eliminate the requirement for the user to wear protective eye-wear. The purpose of the system was to shut-down the laser output if the scan function failed to prevent exposing anyone in the area to an ocular hazard arising from the non-scanned laser beam. For the MEMS-scanned LADAR, the safety system is required to shut-down the laser within 39 ms after scanning ceased for the present laser power.

A simplified block diagram of the preferred embodiment's optional eye safety system is shown in FIG. 7. In the FIG. 7 embodiment, the sinewave horizontal drive 135 and ramp vertical drive 136 for the MEMS mirror 20 is fed into their respective high voltage amplifiers 137, 138 and two ADC channels 138, 139 in the microprocessor 134. Light from a low-power red laser impinges on the MEMS mirror 20 and is reflected onto a silicon position sensing detector (PSD) 131. Current output from the position detector is converted into a voltages proportional to the X and Y positions of the red laser beam on the detector face and fed into ADCs 141, 142 in a microprocessor 134.

The decision to shut-down the laser is performed by code on the microprocessor. The ADCs sample the four input voltages at 4 kHz and load the data into four arrays that are 85 samples long. For the sinewave drive 135 and the PSD sinewave (132), the maximum and minimum of these two arrays are found over the first 20 samples of the respective data arrays. If the difference between the maximum and minimum is above 50 percent of the nominal value, the laser is permitted to continue operation. Both sinewaves are large signals with very little noise thus the standard deviation of the voltage differences are also very small and the probability of false alarm, that is shutting-down the laser unwarrantedly is very low. For the drive ramp, the situation becomes more complex because the change in signal voltage is small over the measurement array. A technique that provides low false alarm depends on computing the ramp slope using a least squares fit over the first half and second half of the data array. If the slope in both regions is below a set level, a command is sent to shut-down the laser. To prevent false alarms when the sampled region includes the ramp flyback, the absolute value of the slope calculated using the beginning and end of the half array is taken as the slope. The PSD ramp turned-out to be the most difficult signal because some of the sinewave signal has cross-coupled into it. In this case the slope using the least squares fit is computed over the full length of the data array. This done for two successive data arrays and if the slope is below a set value for both computations, a shut-down signal is sent. As with the drive ramp, the absolute value of the slope using the beginning and end values of the sampled file is computed to inhibit false alarms when the ramp flyback is present.

In testing the eye-safety system, if both horizontal and vertical drive signals are lost, laser shut-down occurred in about 20 ms. If the 150 V supply to the amplifiers **136**, **137** driving the mirror scan failed, shut-down occurred also in about 20 ms. If the horizontal drive **135** to the mirror failed, shut-down occurred in 20 ms and if the vertical drive **136** failed, shut-down occurred in about 60 ms. This system was installed in the three brassboard LADARS.

FIG. **8** is an illustration showing an exemplary **4** hosel design for the light concentrators **35**A. Shown in FIG. **8** is a portion of a case for a preferred embodiment receiver that includes four hosels for holding the light concentrators with a mechanism for allowing the introduction of the index matching gel (Shown). The scale (see ruler) in the figure is 6".

Large-Area and Low-Capacitance Detector

To further improve the SNR of the MEMS-scanned LADAR, shown in FIG. **9** is a large area low-capacitance detector or photodiode **40**A used in conjunction with any of the preferred embodiments of the present invention. To the right in FIG. **9** are 5×5 arrays of 1×1 mm detectors. The 1×1 mm detectors may be connected with wirebonds. Regarding performance characteristics, obtainable with the preferred embodiment, capacitance is less than <12 pF/mm2; responsivity >0.8 A/W; and bandwidth: >250 MHz.

Calculations show that such a design is possible where the capacitance per unit area may be ⅕-⅐th the capacitance of the InGaAs detectors now used. Thus for the same capacitance, detectors with 5-7 times the light collection area are feasible that will provide the same bandwidth when coupled to the existing amplifier design. A rough calculation of the responsivity of these detectors (0.8 A/W) is slightly lower than for the InGaAs detectors (0.95 A/W). This reduces the photocurrent from the light collection area, but still leaves a significant SNR improvement of 4.2-5.9 times the value for an equivalent capacitance InGaAs detector. This SNR increase maps to a 2-2.4 fold improvement in ladar range for the same SNR at the maximum range.

A detector **80**A using Mercury Cadmium Telluride (MCT) on Silicon is illustrated in FIG. **10**. The architecture is based on the N+-on P double layer planar heterostructure (See FIG. **10**, right). The technique to reduce detector capacitance is to have small N+-regions in the P-type absorber in a sparse arrangement as in FIG. **10**, left. This significantly reduces the junction capacitance relative to a standard photodiode design where the junction covers the entire detector area. Because the mobility of the minority carriers is high, the diffusion length or collection length, L is also high. L, however, places a limit on the maximum distance between the small junctions or lateral collection diodes to maintain good responsivity at the frequencies needed to capture the laser light pulse. Fortunately, L is large enough that the density of the lateral collection diodes is low enough to achieve the estimates for detector capacitance previously mentioned. A laid-out a mask for an array of 1 mm diameter detectors with the lateral collection diodes falling on a face-centered hexagonal close packed grid that in-turn are tied together at the metal level.

A preferred embodiment of the present invention is directed to MEMS-scanned LADAR capable of performing ground surveillance from a small UAV. For example, a preferred embodiment LADAR may have the size, weight and power (SWAP) of 7"×6.5"×3.1"; 1.4 lbs (exclusive of enclosure) and 22 Watts which is suitable for unmanned aerial vehicle applications. The rate at which the LADAR forms pixels is sufficient to collect high fidelity imagery of the ground.

The LADAR package of the present invention may comprise a color camera and inertial navigation system. Software will be written to fuse the ladar data with the camera imagery and display the result in near real-time.

The preferred embodiment LADAR is capable of use in conjunction with small UAVs flying at low altitudes with powerful capabilities. Because the ladar is capable of collecting considerable redundant imagery foliage penetration is possible. Since the UAV flies at altitudes between 100 to 200 meters above ground level (AGL), ground image resolution of 30 cm is likely achievable. The system will be relatively low-cost thus it can be owned and operated by small units. The real-time, high angular resolution and foliage penetration capabilities of the ladar/camera system will supply the user with high-quality imagery for mission planning, real-time mission observation, organizational systems placement, threat or security activity and location, and surveillance of area/object detection and identification.

The ability of the preferred embodiment LADAR to capture the first, last, and largest return is likely to produce higher quality imagery and more information when working in highly cluttered environments. The INS information simultaneously collected in close proximity to the LADAR transmitter allows a user to stitch together multiple overlapping or contiguous images to improve penetration of foliage, eliminate shadows, and form registered large area images. Circuitry added to detect scan failure and shut-down the laser was utilized to obtain Class **1** certification from the US Army Public Health Command on the basis that laser emissions from the MEMS-scanned LADAR are not considered a significant risk for injury during normal use. The preferred embodiment enhanced receiver design improves the SNR of the ladar receiver 4-5× that can be traded for reduced laser power for existing short-range applications or more range for new applications such as for UAVs. Research to build a low-capacitance, large-area detector will have further impact on reducing laser power or extending range without the use of high power lasers if the design proves feasible. Features of the present invention include multiple pulse detection, INS, eye-safety, and enhanced receiver provides support to recover quality imagery from complex and cluttered scenes.

As used herein, MEMS means Micro-electromechanical systems, According to Wikipedia:

> Microelectromechanical systems (MEMS also written as micro-electro-mechanical, MicroElectroMechanical or microelectronic and microelectromechanical systems and the related micromechatronics) is the technology of microscopic devices, particularly those with moving parts. It merges at the nano-scale into nanoelectromechanical systems (NEMS) and nanotechnology. MEMS are also referred to as micromachines in Japan, or micro systems technology (MST) in Europe. MEMS are made up of components between 1 and 100 micrometers in size (i.e. 0.001 to 0.1 mm), and MEMS devices generally range in size from 20 micrometers to a millimeter (i.e. 0.02 to 1.0 mm). They usually consist of a central unit that processes data (the microprocessor) and several components that interact with the surroundings such as microsensors . . . . At these size scales, the standard constructs of classical physics are not always useful. Because of the large surface area to volume ratio of MEMS, surface effects such as electrostatics and wetting dominate over volume effects such as inertia or thermal mass . . . .

As used herein the term "target" means background, area of interest, zone of interest, location of motion, field of endeavor or the like.

As used herein, the terminology "photocurrent" means an electric current induced by the action of light; a stream of electrons produced by photoelectric or photovoltaic effects.

As used herein, the terminology "circuit" means a path between two or more points along which an electrical current can be carried.

As used herein, the term "subcircuit" means a distinct portion of an electrical circuit; a circuit within another circuit.

As used herein, the terminology "negative feedback" means a process by which a portion of an outputted signal, which may be either a voltage or a current, is used as an input. Negative feedback is opposite in value or phase ("anti-phase") to the input signal.

As used herein, the terminology "high [point or element] impedance" means that a point in a circuit (a node) allows a relatively small amount of current through, per unit of applied voltage at that point.

As used herein, the term "optimal" means most desirable or satisfactory result for an application or applications under specific conditions; resulting in the most favorable, reasonable conditions for operation of the system or device.

The foregoing description of the specific embodiments will so fully reveal the general nature of the embodiments herein that others can, by applying current knowledge, readily modify and/or adapt for various applications such specific embodiments without departing from the generic concept, and, therefore, such adaptations and modifications should and are intended to be comprehended within the meaning and range of equivalents of the disclosed embodiments. It is to be understood that the phraseology or terminology employed herein is for the purpose of description and not of limitation. Therefore, while the embodiments herein have been described in terms of preferred embodiments, those skilled in the art will recognize that the embodiments herein can be practiced with modification within the spirit and scope of the claims.

The invention claimed is:

1. A laser receiver comprising:

a sensor comprising a photosensitive region and outputting a photocurrent;

a first amplifier configured to amplify the photocurrent operatively connected to the sensor; the first amplifier comprising a first gate, a first source and a first drain, the operative connection between the sensor and the first gate being configured to minimize inductance; the first gate being operatively biased by at least one first biasing resistor;

a first subcircuit operatively connected between the first drain and the first gate; the first subcircuit comprising, in series; a first resistor, a first inductor and a decoupling capacitor; the first resistor effecting the photocurrent gain of the amplifier; the first inductor effecting the bandwidth; and the decoupling capacitor being configured to allow the first amplifier bias to be established by the at least one first biasing resistor;

the impedance of the first gate being high enough such that only a small proportion of the current from the sensor passes into the first gate and through the first amplifier while a significantly larger portion passes through the first subcircuit;

an inductor connecting the first gate to the at least one biasing resistor with impedance at the receiver operating frequency;

a second amplifier comprising a second gate with a gate impedance greater than 200 ohms operatively connected to the first drain; at least one second biasing resistor connected to the second gate with impedance configured to decrease the load impedance on the first amplifier and thus increasing the voltage gain of the first amplifier; and thus enabling an increase in the value of the first resistor that in-turn improves the signal-to-noise of the amplifier; the first and second amplifiers having a combined bandwidth sufficient to pass a modulated photocurrent at a frequency up to 500 MHz; the second amplifier comprising an output configured to be operatively connected to a processing unit and a display unit displaying output from the processing unit in the form of pixels, the display being of sufficient quality to display an image of a target at 1000 meters;

whereby the receiver is configured to receive light reflected from a target illuminated by a laser configured to emit light at an intensity safe for human eyes and wherein a target is discernible in a range from 0.3 to 1000 meters.

2. The receiver of claim **1** wherein the receiver comprises at least one of a tapered fiber bundle or light concentrator operative to receive light operatively connected to sensor; and wherein the receiver is configured to receive light of a predetermined frequency and modulation format reflected from a target illuminated by a laser; and wherein the first subcircuit is a negative feedback circuit.

3. The receiver of claim **1** wherein the sensor comprises a large area photosensitive region with a diameter ranging from 1 mm to 10 mm and outputs a photocurrent and wherein the first resistor and the first inductor operatively effect the photocurrent gain and bandwidth of the first amplifier.

4. The receiver of claim **1** wherein the capacitance of the photodetector is between 10 pF and 400 pF and wherein the first amplifier is an enhancement mode psuedomorphic high electron mobility transistor.

5. The receiver of claim **1** wherein the inductance between the sensor and the first gate is minimized by making the distance between the photodetector and first gate approximately less than 1 cm.

6. The receiver of claim **1** wherein the inductance between the sensor and the first gate is in the range of 0.1 nH to 10. nH.

7. The receiver of claim **1** wherein the first resistor is in the range of 20 to 2000 ohms and the first inductor is in the range of 50 nH to 2000 nH such that the impedance of the bypass circuit causes the signal to noise ratio, amplifier gain, and bandwidth to be optimal for the receiver application.

8. The receiver of claim **1** wherein the receiver is used to operate a robot and wherein the receiver operates on battery power providing current in the range of 5 mA to 2000 mA in order to minimize the power consumption on the robot.

9. The receiver of claim **1** wherein the receiver is sized so as to fit in an area of less than or equal to 3 cm by 3 cm by 0.5 cm.

10. The receiver of claim **1** wherein the receiver comprises a plurality of subreceivers and wherein the output of each of the plurality of subreceivers is substantially redundant and each output is connected to a combining circuit that is operatively connected to the processing unit.

11. The receiver of claim **1** operatively connected in a circuit to at least one other receiver, the at least one other receiver comprising

a second light concentrator;

a second sensor operatively connected to the second light concentrator, wherein the second sensor comprises a photosensitive region and outputs a photocurrent;

a third amplifier configured to amplify the photocurrent; the third amplifier comprising a third gate, third source and third drain, the connection between the sensor and the third gate configured to minimize inductance; the third gate being operatively biased by at least one third biasing resistor so as to create a high third gate impedance;

a second sub circuit operatively connected between the third drain and third gate; the second subcircuit comprising in series:

a third resistor, a third inductor and a third decoupling capacitor; the third resistor, third inductor, and third gate impedance being high enough such that only a small proportion of the current from the sensor passes into the third gate and through the third amplifier while a significantly larger portion passes through the second bypass circuit; the third decoupling capacitor being configured to allow the first amplifier bias to be established by the at least one first biasing resistor; an inductor connecting the third gate to the at least one biasing resistor with impedance at the receiver operating frequency;

a fourth amplifier comprising a fourth gate with a high gate impedance operatively connected to the by-pass circuit; at least one fourth biasing resistor connected to the fourth gate with impedance configured to unload the third amplifier and thus increasing the voltage gain of the third amplifier and the signal-to-noise ratio; the third and fourth amplifiers having a combined bandwidth sufficient to pass the modulated photocurrent; the fourth amplifier comprising an output configured to be operatively connected in parallel with the output of the second amplifier to the processing unit and the display unit displaying output from the processing unit in the form of pixels, the display being of sufficient quality to display an image of a target at 1000 meters;

whereby each of the plurality of receivers operates in parallel with the at least one other receiver and wherein the output of each of the plurality of receivers is substantially redundant and each output is connected to a combining circuit that is operatively connected to the processing unit.

12. The receiver of claim **1**, wherein the receiver has the capability to simultaneously process multiple target returns per pixel.

13. The receiver of claim **11** wherein each pixel of the display represents a point in the area surrounding the target and wherein the light from the laser reflected from the target area comprises the first return to arrive at the receiver for a given pixel, the last return to arrive for a given pixel, and the largest amplitude return to arrive for a given pixel; and wherein the processing unit operates to select one or more of the returns which allows foliage penetration and increases the ability to see wires and other small objects.

14. The receiver of claim **1** wherein the receiver is operated in tandem with an inertial system that comprises one of a triaxal gyroscope, a triaxal accelerometer, and a triaxal magnetometer.

15. The receiver of claim **1** wherein the processing unit operates to join together multiple image frames when the receiver is mounted in a moving platform.

16. The receiver of claim **1** configured for target applications such as three dimensional scene recording and surveillance, crime scenes, architectural structures, agricultural subjects, troop placement, and autonomous machines, self-driving automobiles, manufacturing robots, battery powered unmanned aerial vehicles or robots.

17. The receiver of claim **1** wherein the receiver has the capability to simultaneously process multiple target returns per pixel characterized as the first return to arrive, the last return to arrive, and the largest amplitude return to arrive for a given pixel.

18. The receiver of claim **1** further comprising a microwave combiner combining the photocurrent from each of the amplifiers to a combined output.

19. A laser receiver comprising:

a sensor comprising a photosensitive region and outputting a photocurrent;

a first amplifier configured to amplify the photocurrent operatively connected to the sensor; the first amplifier comprising a first gate, a first source and a first drain, the operative connection between the sensor and the first gate being configured to minimize inductance; the first gate being operatively biased by at least one first biasing resistor;

a first subcircuit operatively connected between the first drain and the first gate; the first subcircuit comprising, in series; a first resistor, a first inductor and a decoupling capacitor; the first resistor effecting the photocurrent gain of the amplifier; the first inductor effecting the bandwidth; and the decoupling capacitor being configured to allow the first amplifier bias to be established by the at least one first biasing resistor;

the impedance of the first gate being high enough such that only a small proportion of the current from the sensor passes into the first gate and through the first amplifier while a significantly larger portion passes through the first subcircuit;

an inductor connecting the first gate to the at least one biasing resistor with impedance at the receiver operating frequency;

a second amplifier comprising a second gate with a gate impedance greater than 200 ohms operatively connected to the first drain; at least one second biasing resistor connected to the second gate with impedance configured to decrease the load impedance on the first amplifier and thus increasing the voltage gain of the first amplifier; and thus enabling an increase in the value of the first resistor that in-turn improves the signal-to-noise of the amplifier; the first and second amplifiers having a combined bandwidth sufficient to pass a modulated photocurrent at a frequency up to 500 MHz; the second amplifier comprising an output configured to be operatively connected to a processing unit and a display unit displaying output from the processing unit in the form of pixels, the display being of sufficient quality to display an image of a target at 1000 meters;

whereby the receiver is configured to receive light reflected from a target illuminated by a laser configured to emit light at an intensity safe for human eyes and wherein a target is discernible in a range from 0.3 to 1000 meters.

20. A method for operating a laser receiver comprising:

a sensor, a first amplifier operatively connected to the sensor; the first amplifier comprising a first gate, a first source and a first drain, the operative connection between the sensor and the first gate being configured to minimize inductance; the first gate being operatively biased by at least one first biasing resistor;

a first subcircuit operatively connected between the first drain and the first gate; the first subcircuit comprising, in series; a first resistor, a first inductor and a decoupling capacitor; the first resistor effecting the photocurrent gain of the amplifier; the first inductor effecting the bandwidth; and the decoupling capacitor being configured to allow the first amplifier bias to be established by the at least one first biasing resistor;

the impedance of the first gate being high enough such that only a small proportion of the current from the sensor passes into the first gate and through the first amplifier while a significantly larger portion passes through the first subcircuit;

an inductor connecting the first gate to the at least one biasing resistor with impedance at the receiver operating frequency;

a second amplifier comprising a second gate with a gate impedance greater than 200 ohms operatively connected to the first drain; at least one second biasing resistor connected to the second gate with impedance configured to decrease the load impedance on the first amplifier and thus increasing the voltage gain of the first amplifier; and thus enabling an increase in the value of the first resistor that in-turn improves the signal-to-noise of the amplifier; the first and second amplifiers having a combined bandwidth sufficient to pass a modulated photocurrent at a frequency up to 500 MHz; the second amplifier comprising an output configured to be operatively connected to a processing unit and a display unit displaying output from the processing unit in the form of pixels, the display being of sufficient quality to display an image of a target at 1000 meters; the method comprising receiving light reflected from a target in a range from 0.3 to 1000 meters; processing and displaying the output.

* * * * *