US010446948B2

(12) **United States Patent**
Szeto et al.

(10) **Patent No.: US 10,446,948 B2**
(45) **Date of Patent: Oct. 15, 2019**

(54) **CONNECTORS WITH MOVABLE MAGNETIC COMPONENTS AND METHOD OF CONNECTING DEVICES**

(71) Applicant: **NANOPORT TECHNOLOGY INC.**, Markham (CA)

(72) Inventors: **Timothy Jing Yin Szeto**, Markham (CA); **Jeremy Zhi-Qiao Chan**, Markham (CA)

(73) Assignee: **NANOPORT TECHNOLOGY INC.**, Markham (CA)

(*) Notice: Subject to any disclaimer, the term of this patent is extended or adjusted under 35 U.S.C. 154(b) by 350 days.

(21) Appl. No.: **15/520,072**

(22) PCT Filed: **Oct. 20, 2015**

(86) PCT No.: **PCT/CA2015/000545**

§ 371 (c)(1),
(2) Date: **Apr. 18, 2017**

(87) PCT Pub. No.: **WO2016/061662**

PCT Pub. Date: **Apr. 28, 2016**

(65) **Prior Publication Data**

US 2018/0337467 A1 Nov. 22, 2018

Related U.S. Application Data

(60) Provisional application No. 62/140,119, filed on Mar. 30, 2015, provisional application No. 62/065,969, filed on Oct. 20, 2014.

(51) **Int. Cl.**

H01R 27/00 (2006.01)
H01R 9/05 (2006.01)
(Continued)

(52) **U.S. Cl.**

CPC ***H01R 9/05*** (2013.01); ***G06F 1/16*** (2013.01); ***G06F 1/1616*** (2013.01);
(Continued)

(58) **Field of Classification Search**

CPC H01R 9/05; H01R 43/16; H01R 13/6205; H01R 11/30; H01R 13/629; G06F 1/1683;
(Continued)

(56) **References Cited**

U.S. PATENT DOCUMENTS

5,829,987 A 11/1998 Fritsch et al.
7,311,526 B2 * 12/2007 Rohrbach H01R 13/6205 439/39
(Continued)

FOREIGN PATENT DOCUMENTS

CN 101408781 A 4/2009
CN 101409029 A 4/2009
(Continued)

Primary Examiner — Jean F Duverne
(74) *Attorney, Agent, or Firm* — Reno Lessard; Norton Rose Fulbright Canada LLP

(57) **ABSTRACT**

A connector for an electronic device has a housing with a peripheral surface and guides defining first and second paths. The second path extends from a first location proximate the peripheral surface to a second location farther from the peripheral surface and closer to the first path. A magnetic contact assembly in the housing is magnetically movable along the first path between a first position for joining the connector in data communication with an adjacent connector, and a second position withdrawn from the peripheral surface. A magnet in the housing and is movable by attraction to an adjacent connector along the second path, to magnetically hold the connector to an adjacent connector. The guides are configured so that the magnet and the
(Continued)

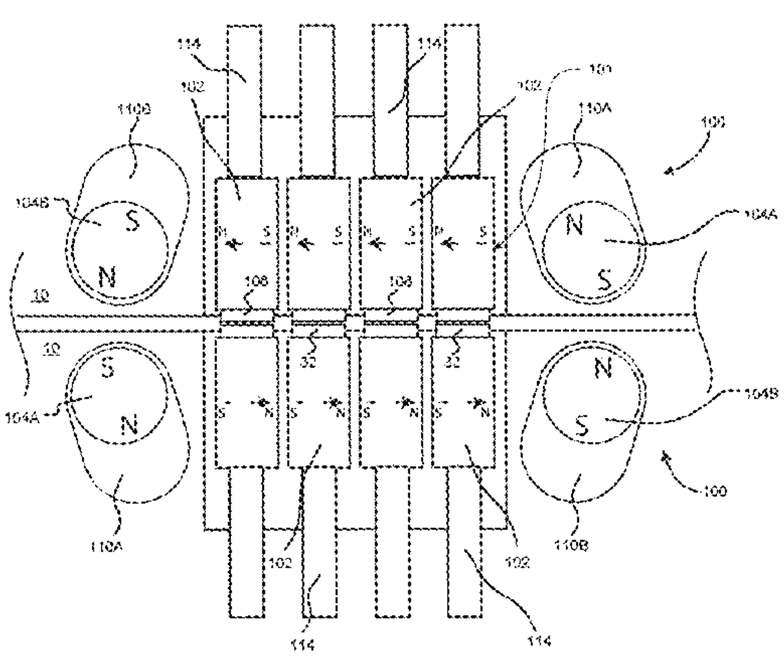

magnetic contact assembly magnetically bias one another inwardly along the first and second paths.

17 Claims, 59 Drawing Sheets

(51) **Int. Cl.**

H01R 13/62	(2006.01)
H01R 43/16	(2006.01)
G06F 1/16	(2006.01)
H01R 11/30	(2006.01)
H04M 1/02	(2006.01)

(52) **U.S. Cl.**
CPC ***G06F 1/1626*** (2013.01); ***G06F 1/1681*** (2013.01); ***G06F 1/1683*** (2013.01); ***H01R 11/30*** (2013.01); ***H01R 13/6205*** (2013.01); ***H01R 43/16*** (2013.01); ***H04M 1/022*** (2013.01); *H04M 2250/16* (2013.01)

(58) **Field of Classification Search**
CPC G06F 1/1681; G06F 1/1626; G06F 1/1616; G06F 1/16; H04M 1/022; G02B 6/3886
USPC 439/217
See application file for complete search history.

(56) **References Cited**

U.S. PATENT DOCUMENTS

9,791,634	B2 *	10/2017	DiFonzo	G02B 6/3886
10,014,624	B2 *	7/2018	Chun	H01R 13/6205
10,050,378	B2 *	8/2018	Szeto	H01R 11/30
10,177,491	B2 *	1/2019	Davies	H01R 13/629

FOREIGN PATENT DOCUMENTS

CN	202455400	U	12/2011
CN	203086539	U	1/2013
JP	H08267974	A	10/1996
JP	2003504815	A	2/2003

* cited by examiner

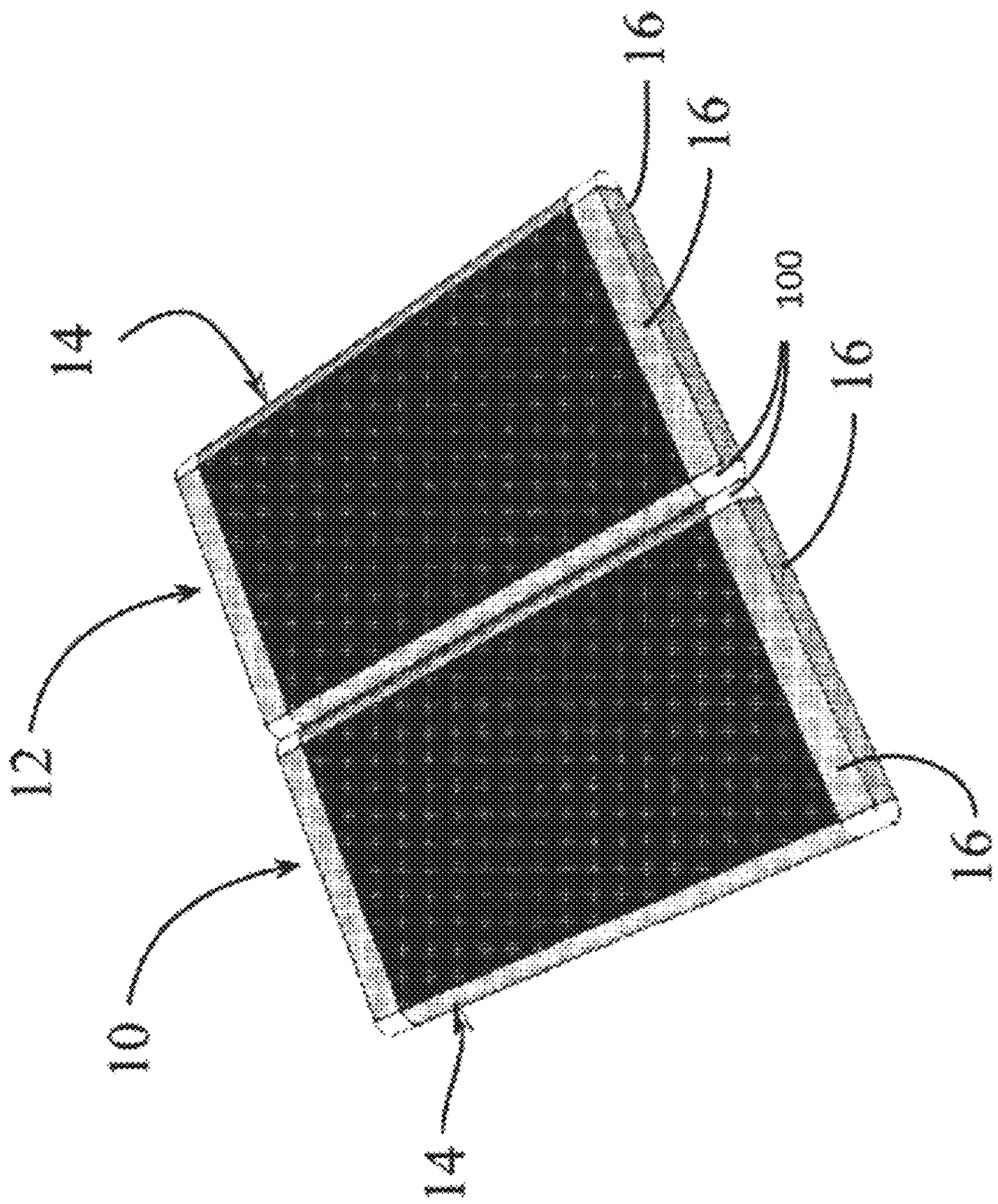

FIG. 1A

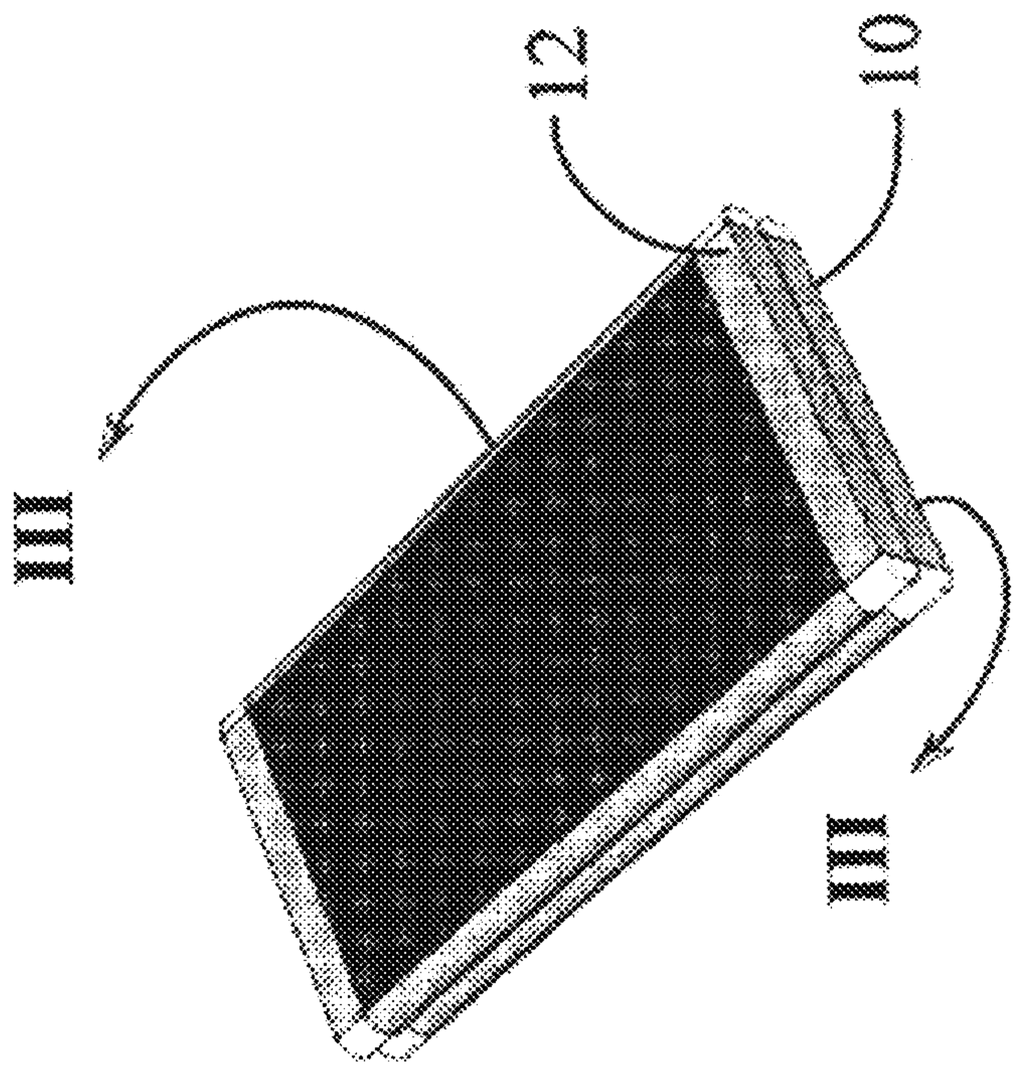

FIG. 1B

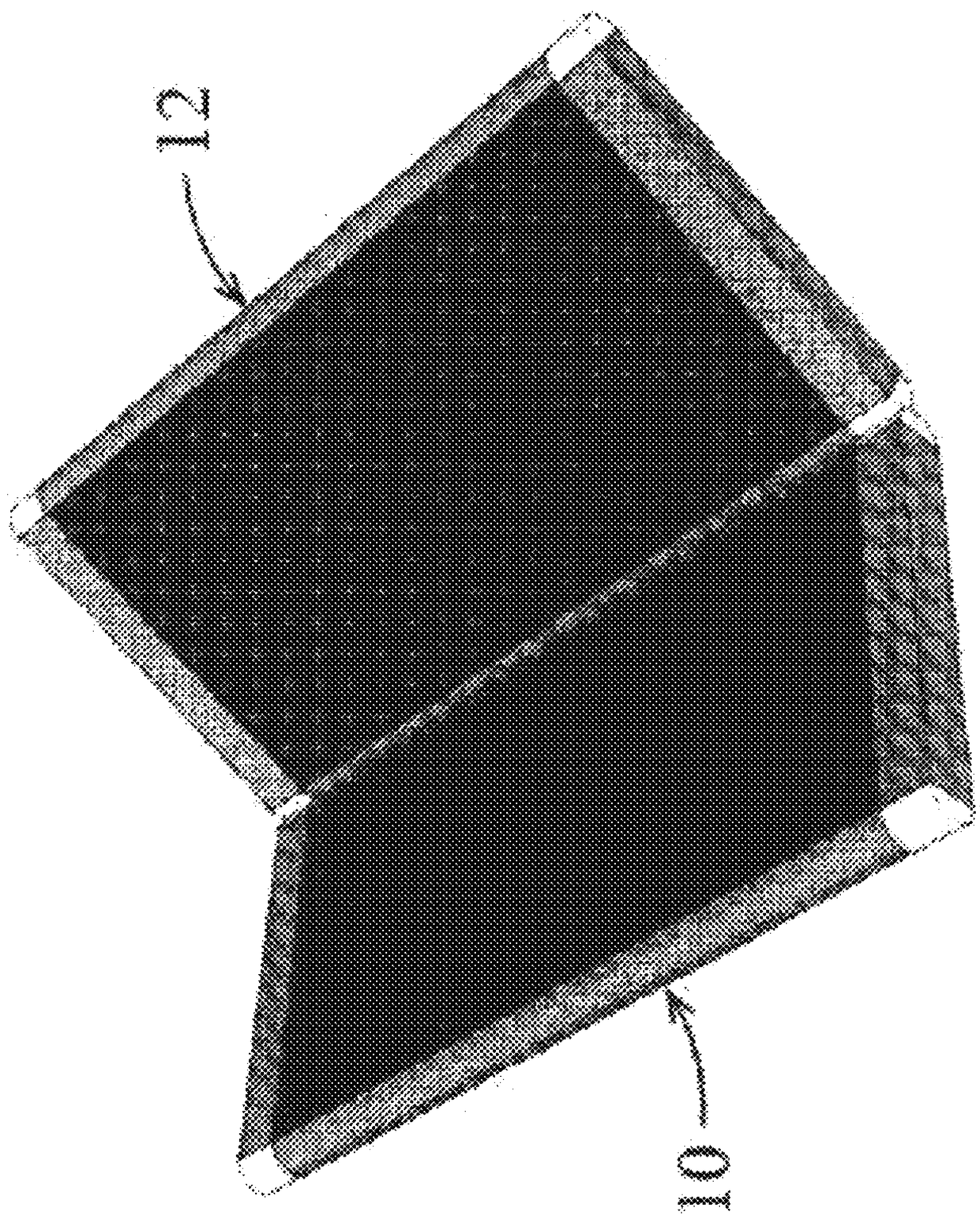

FIG. 1C

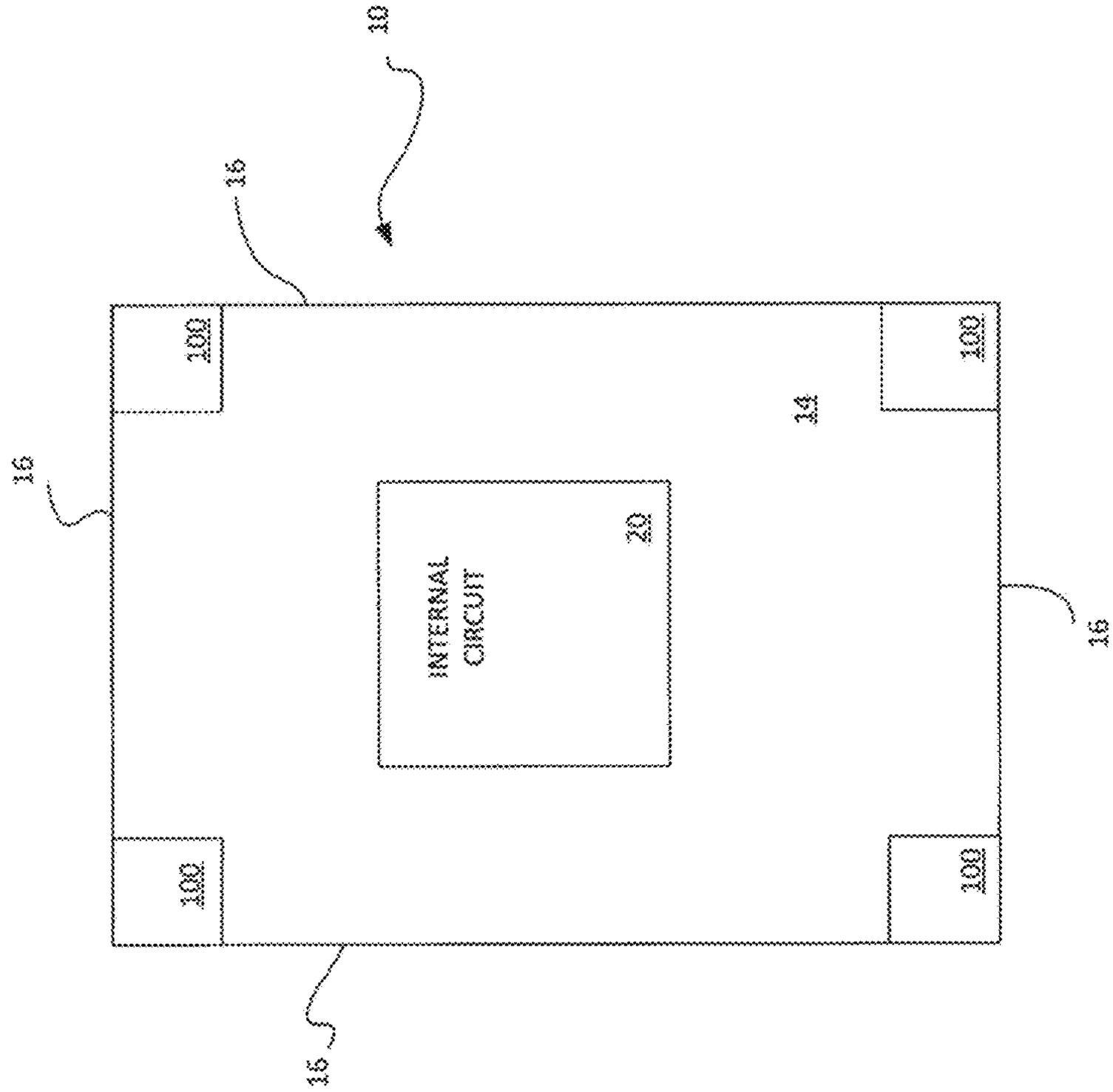

FIG. 2A

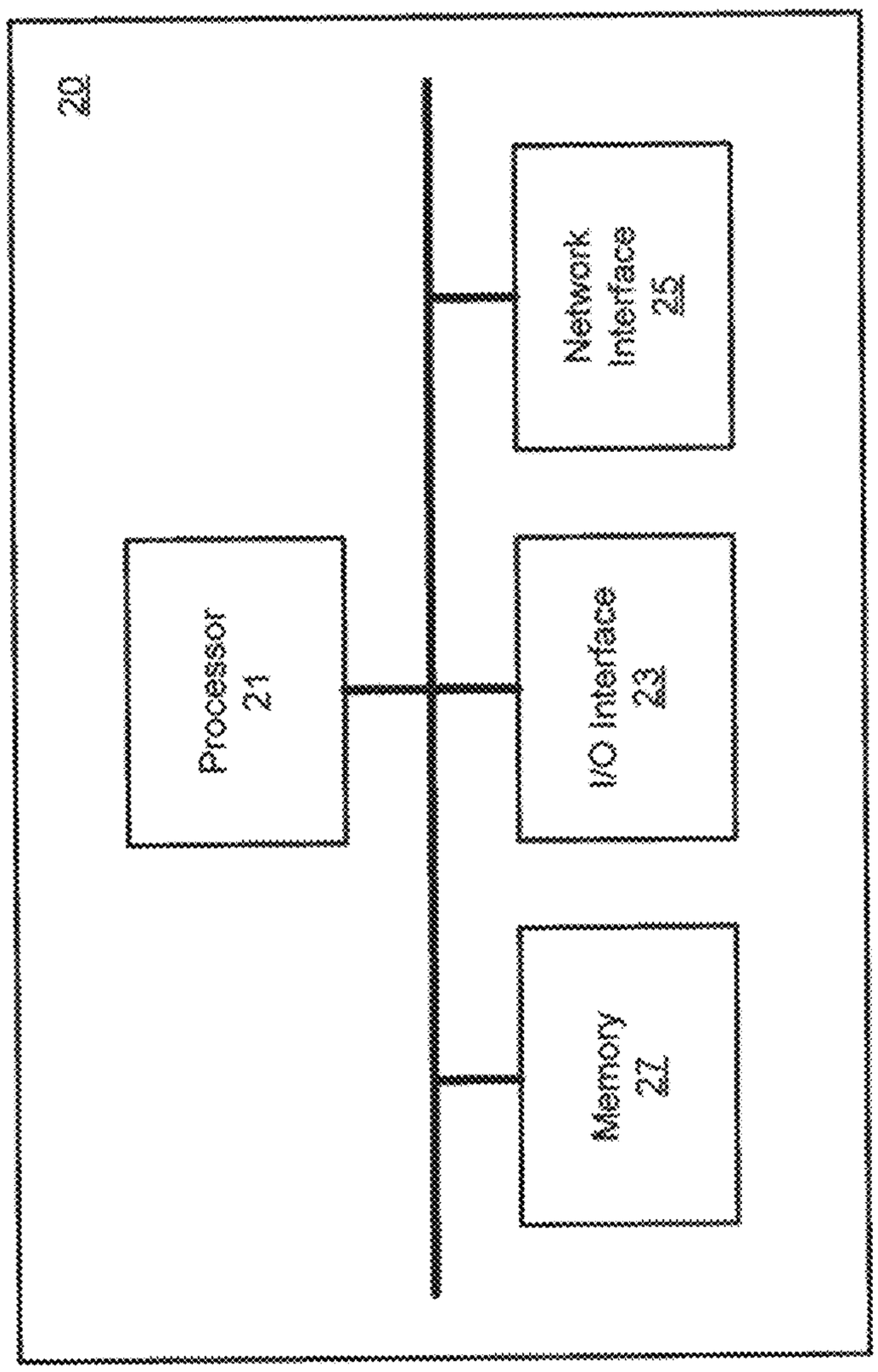
20
Processor
21
Network
Interface
25
I/O Interface
23
Memory
27

FIG. 2B

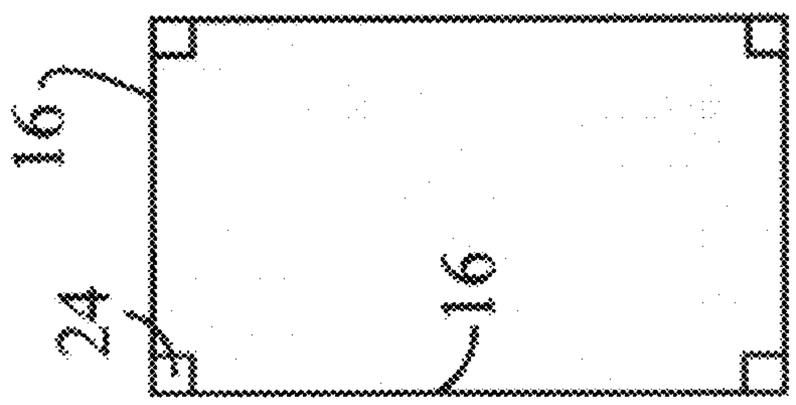

FIG. 2E

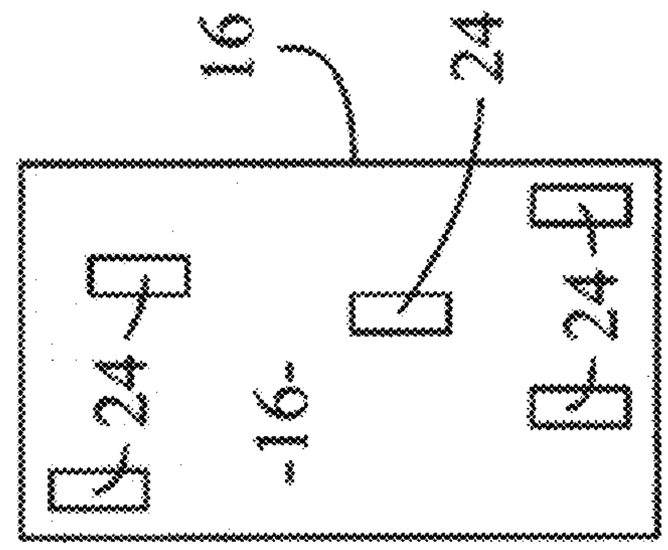

FIG. 2H

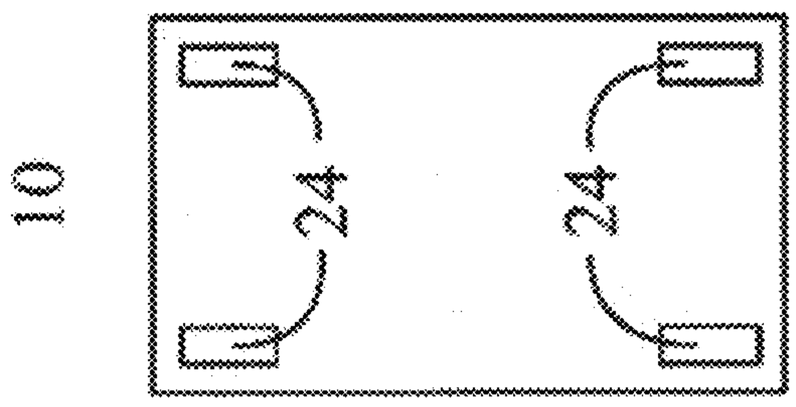

FIG. 2D

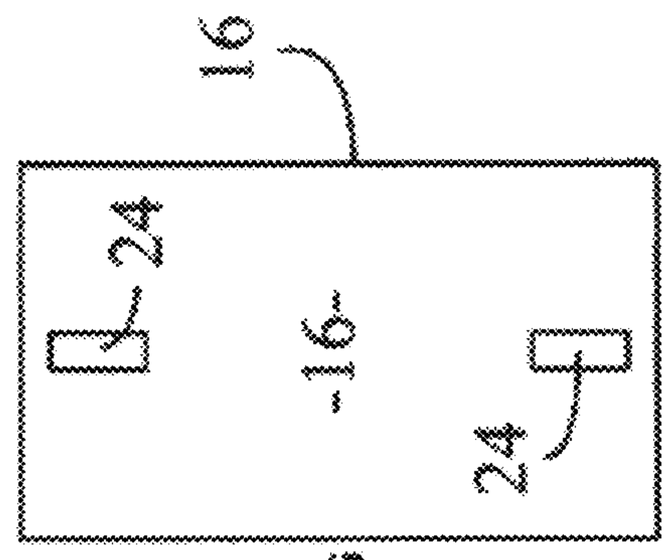

FIG. 2G

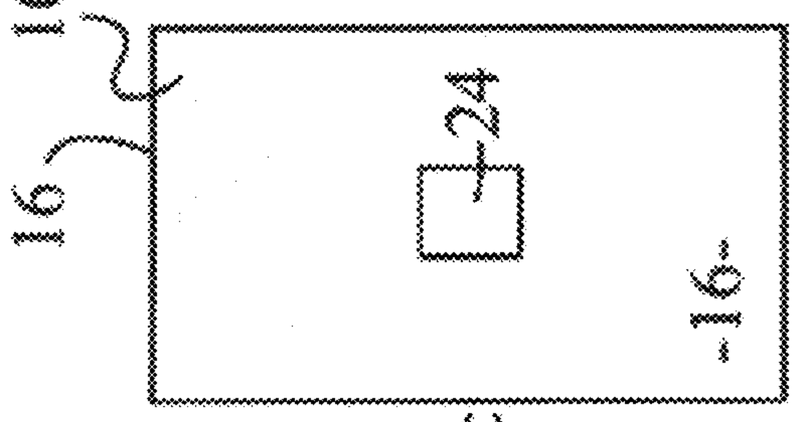

FIG. 2C

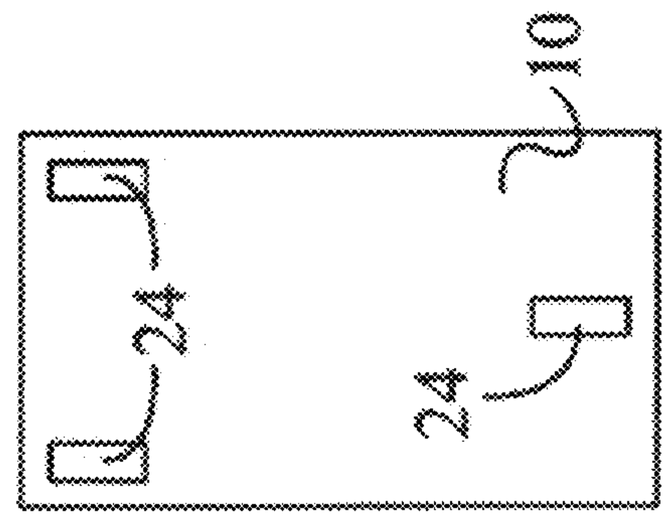

FIG. 2F

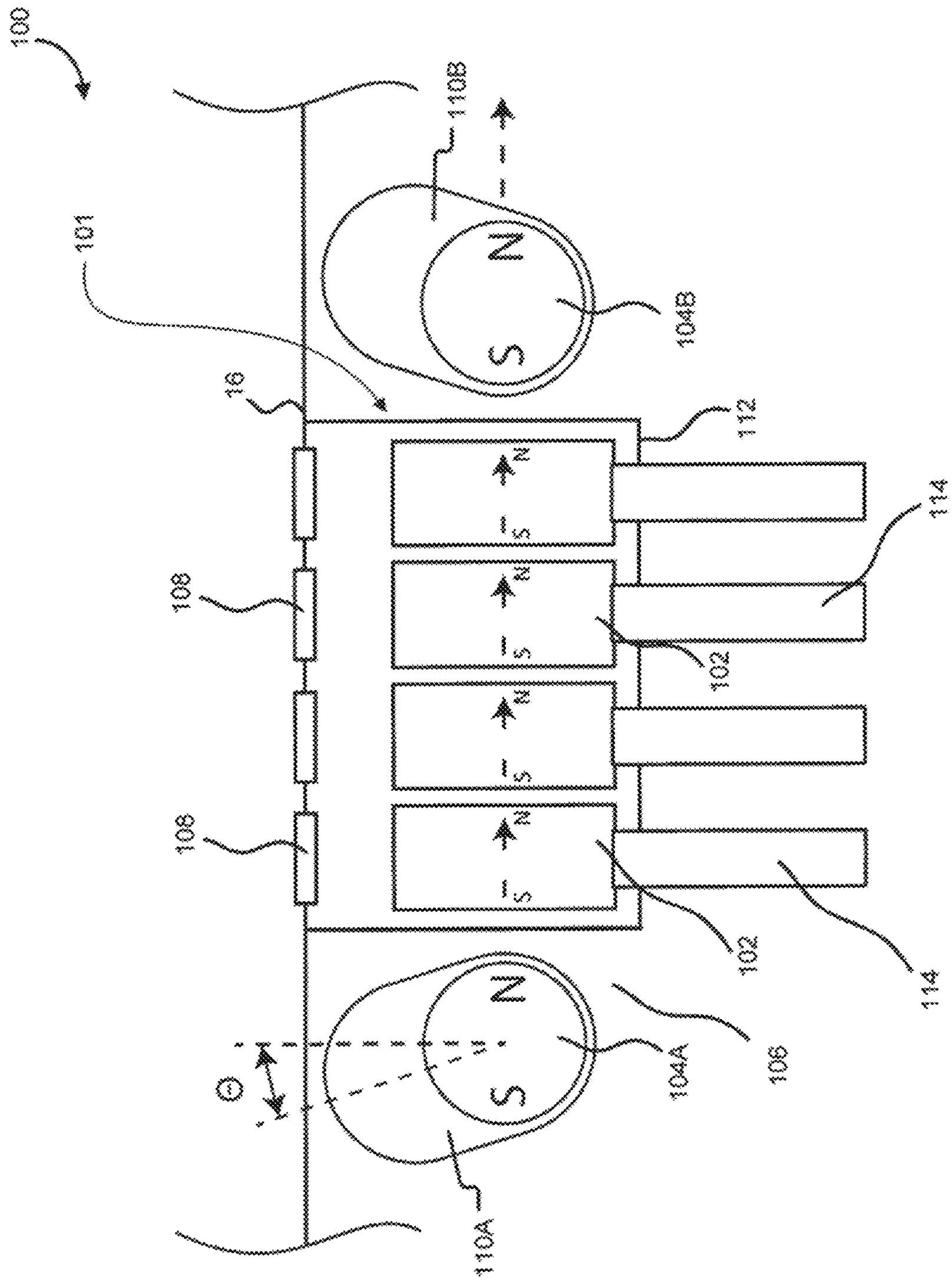
100
101
110B
104B
N
S
16
112
114
108
102
108
102
114
N
S
N
S
N
S
N
S
θ
110A
104A
108

FIG. 3A

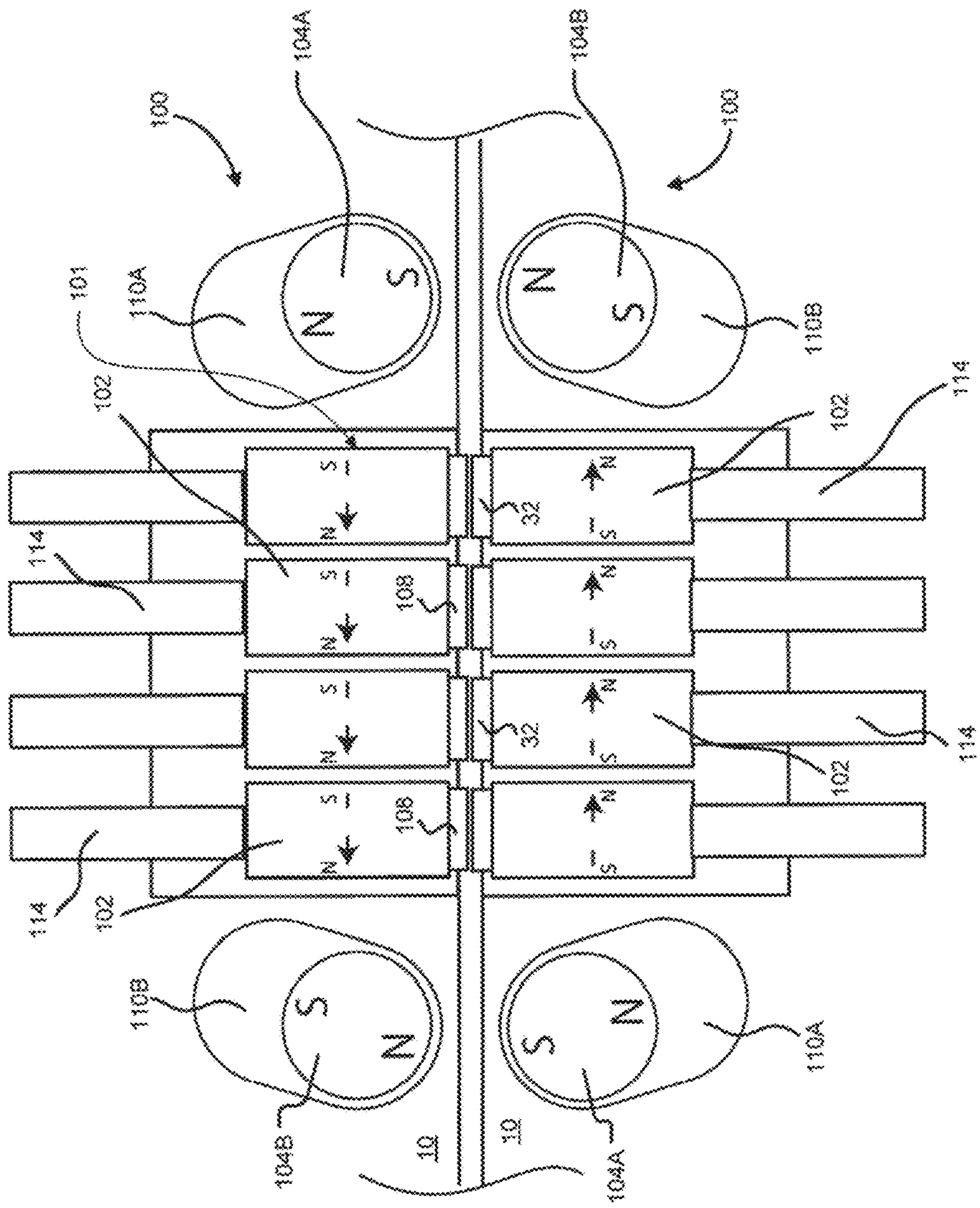

FIG. 3B

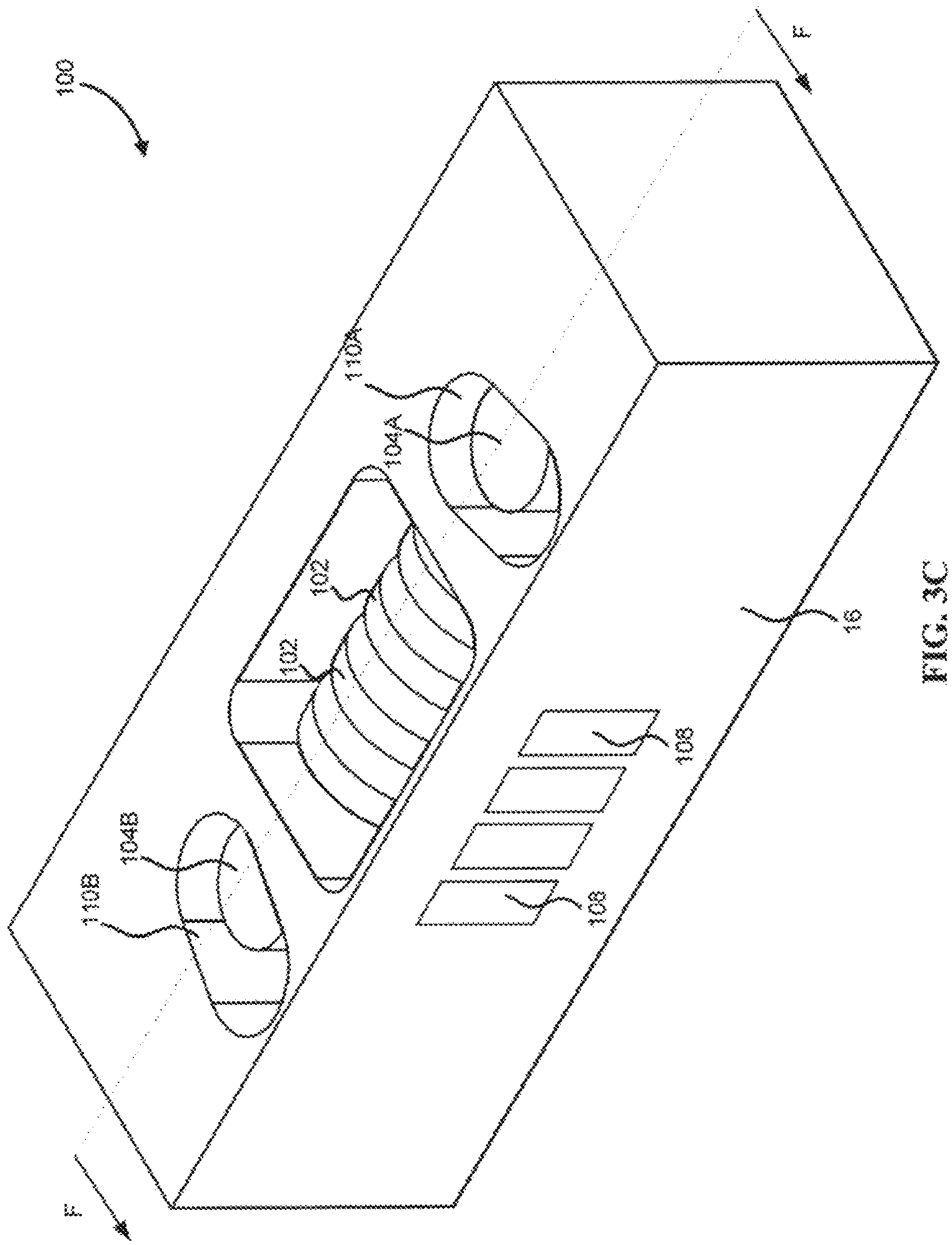

FIG. 3C

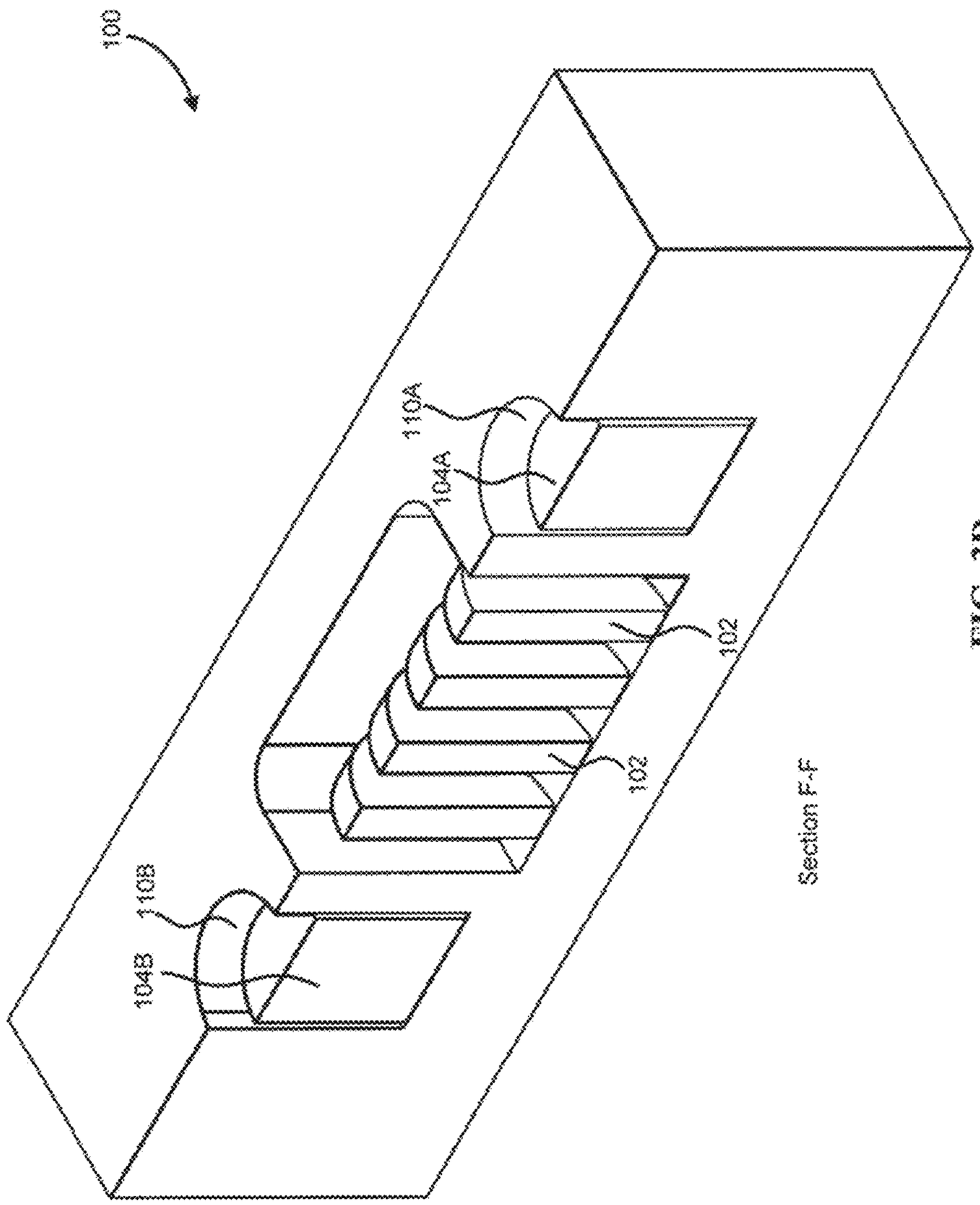

FIG. 3D

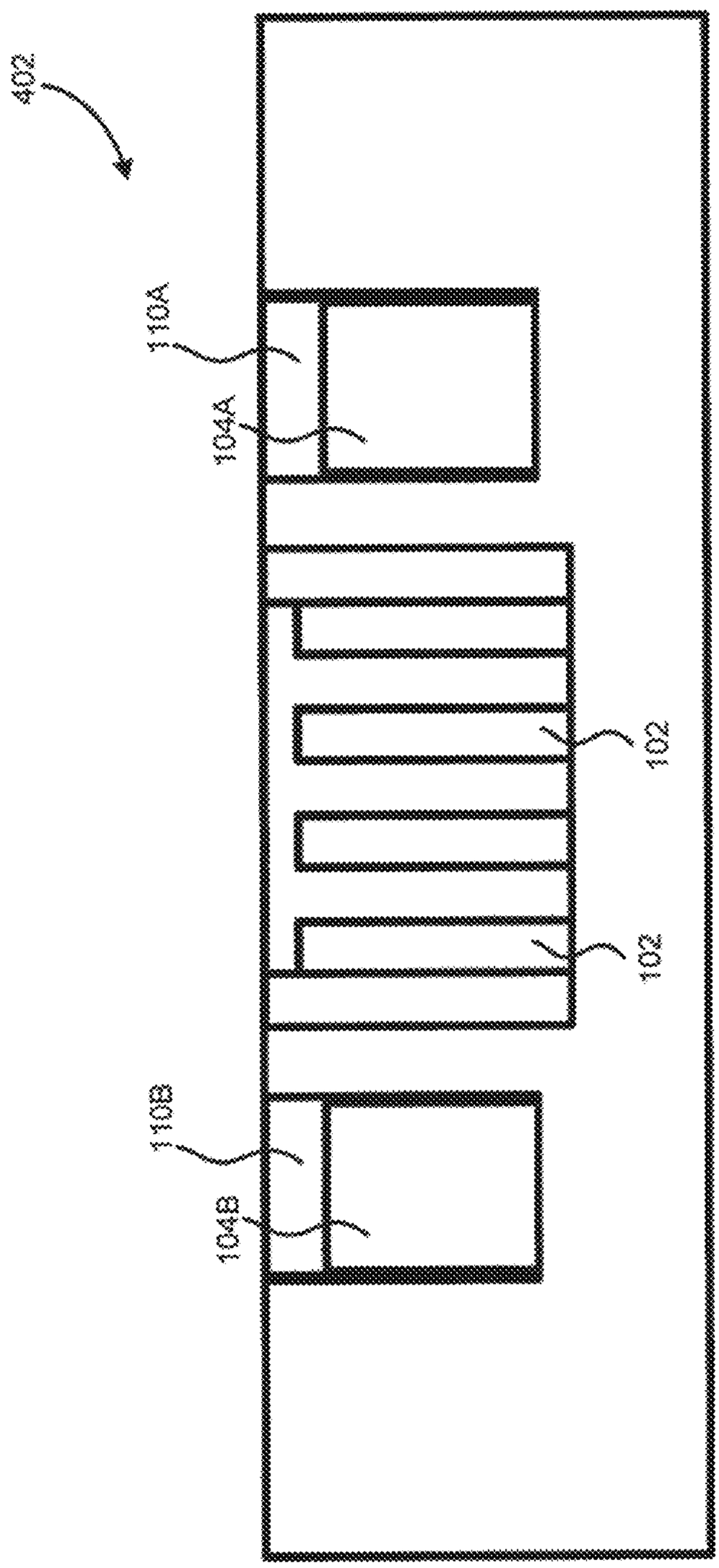

Section F-F

FIG. 3E

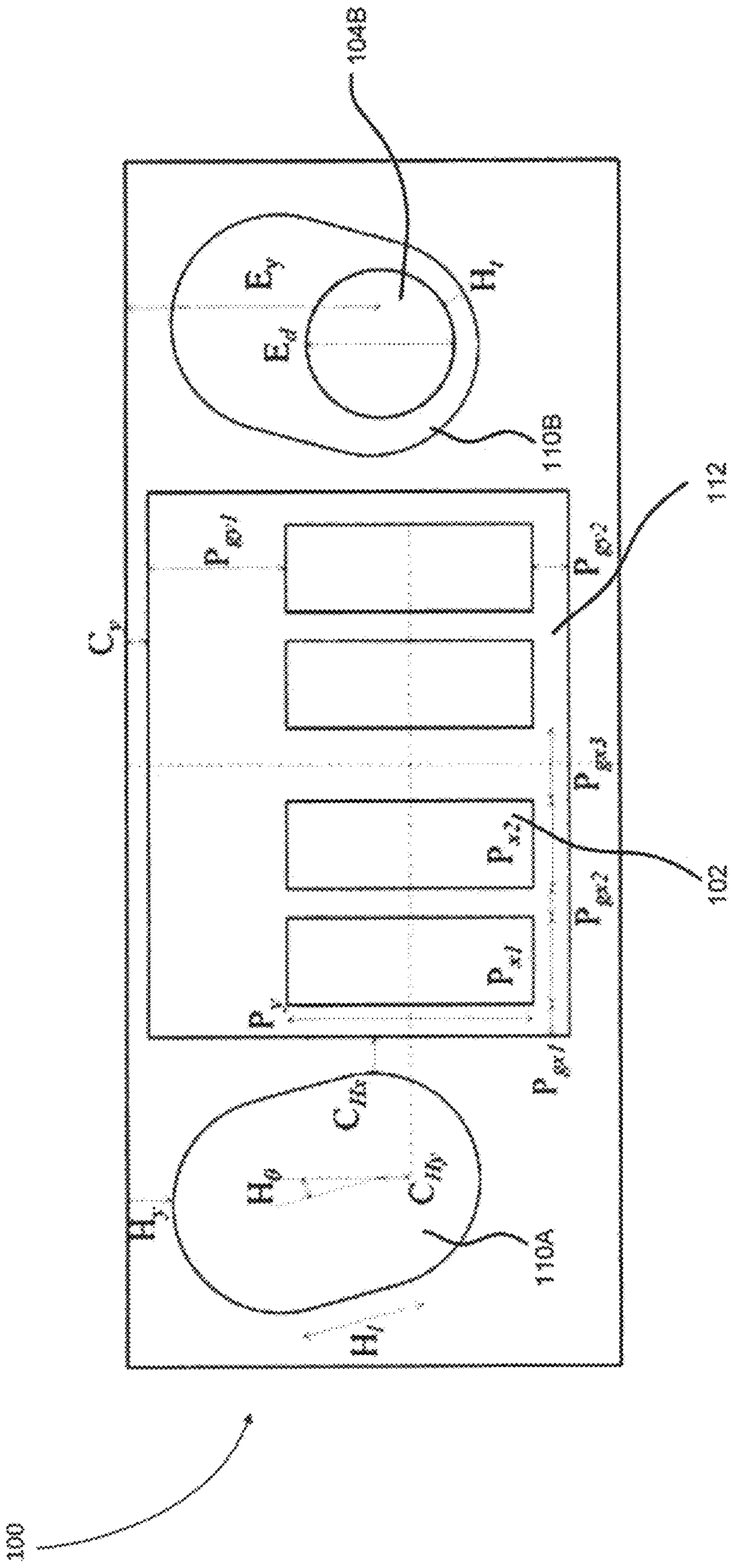

FIG. 3F

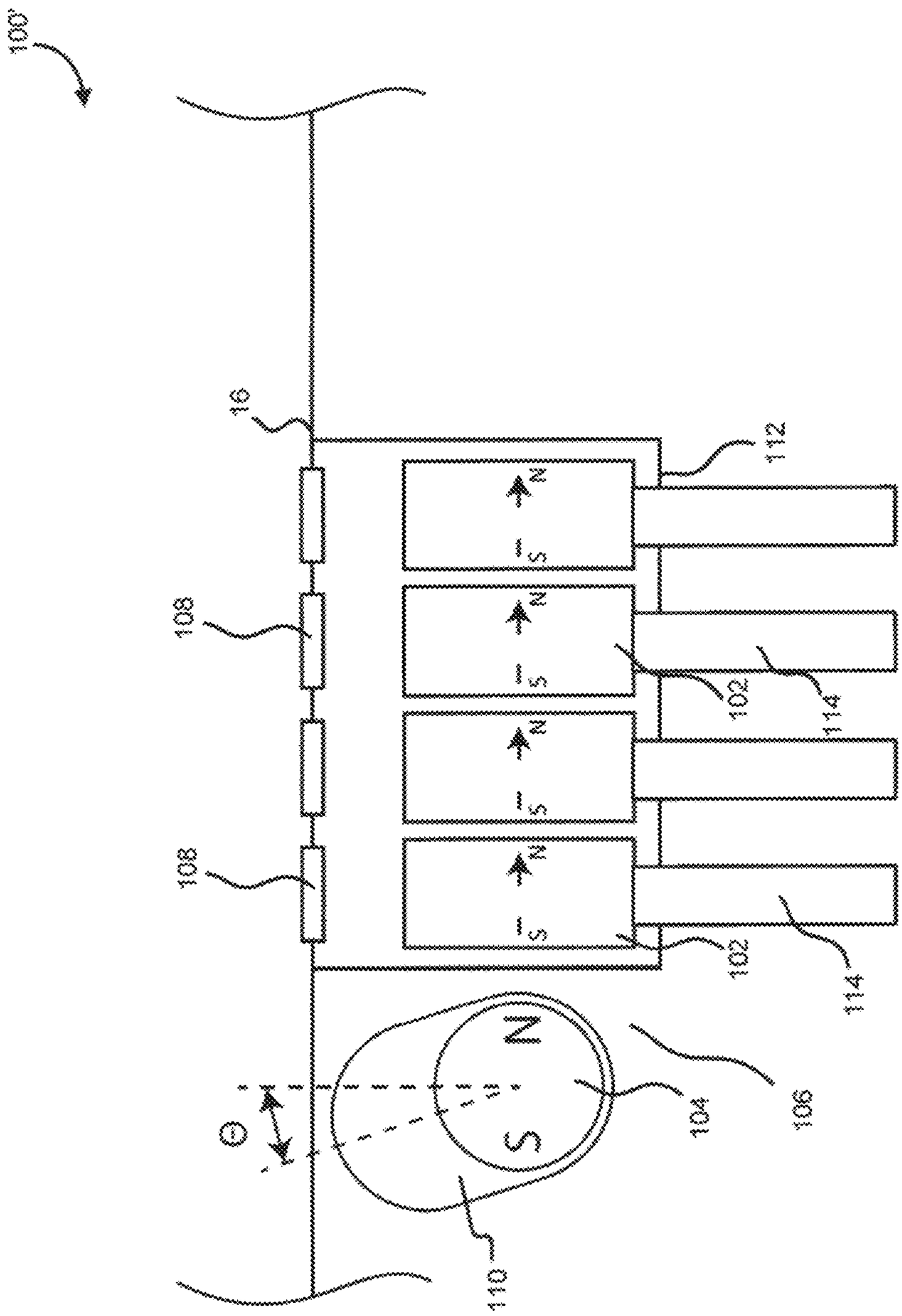

FIG. 4A

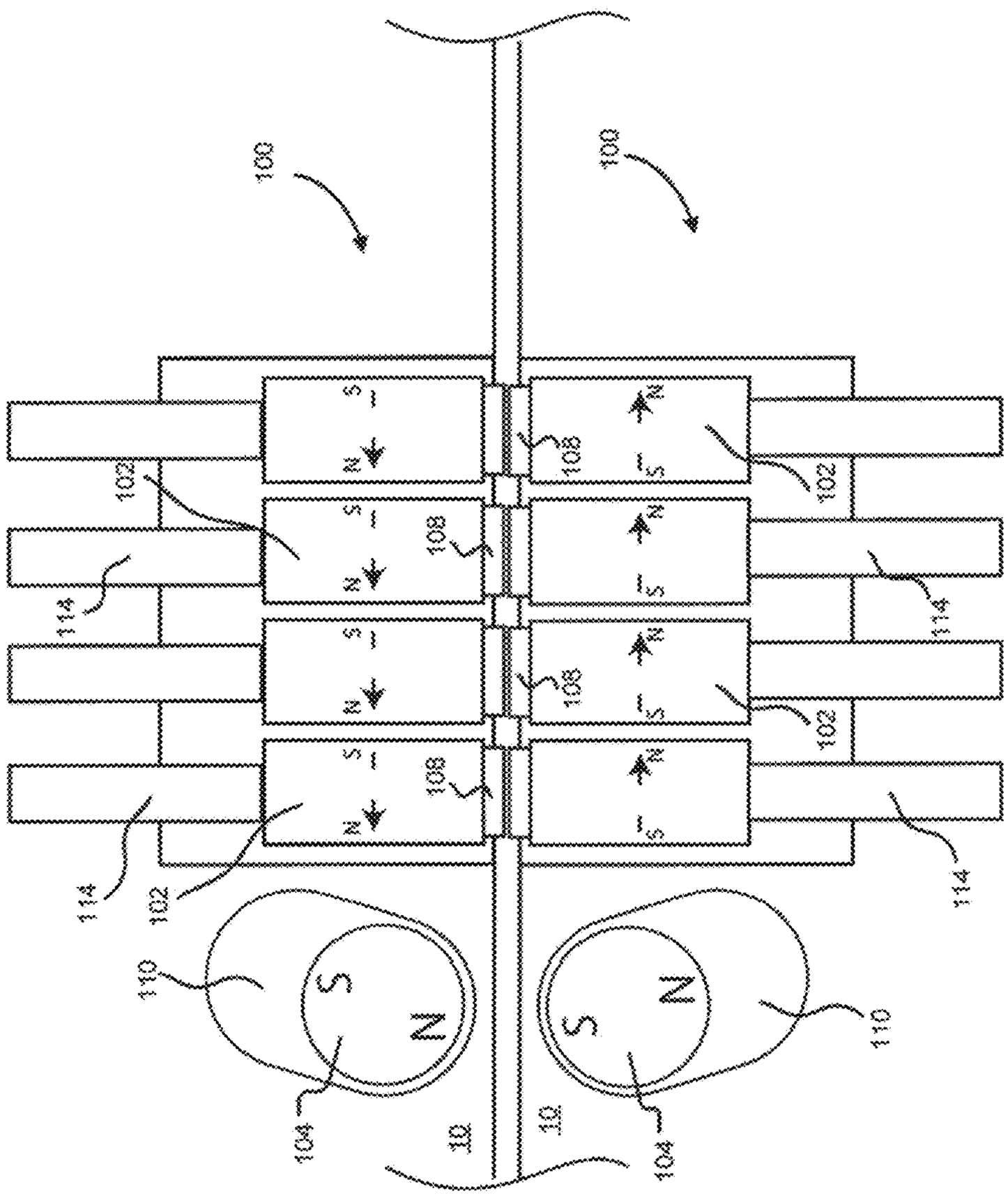

FIG. 4B

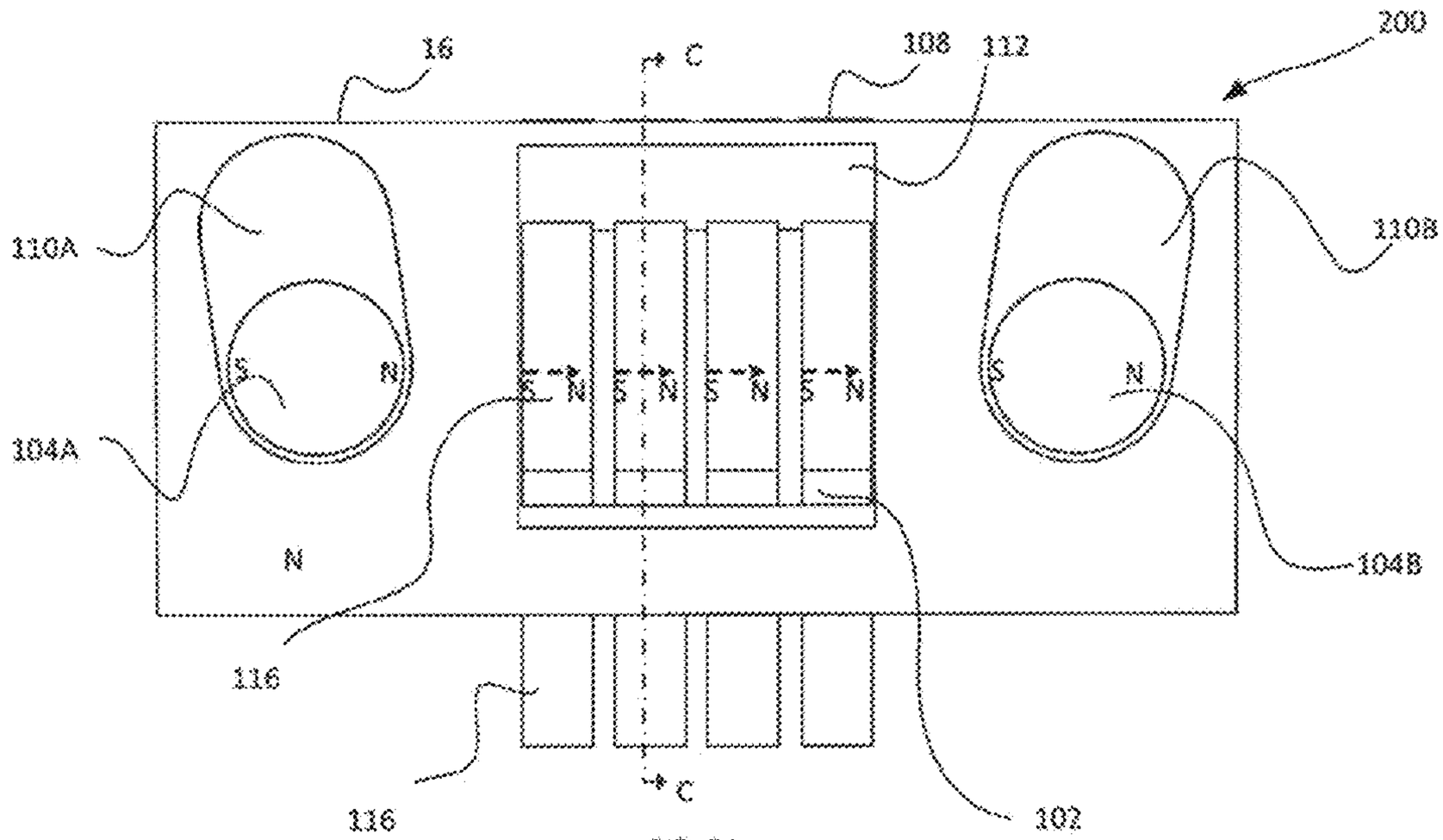

FIG. 5A

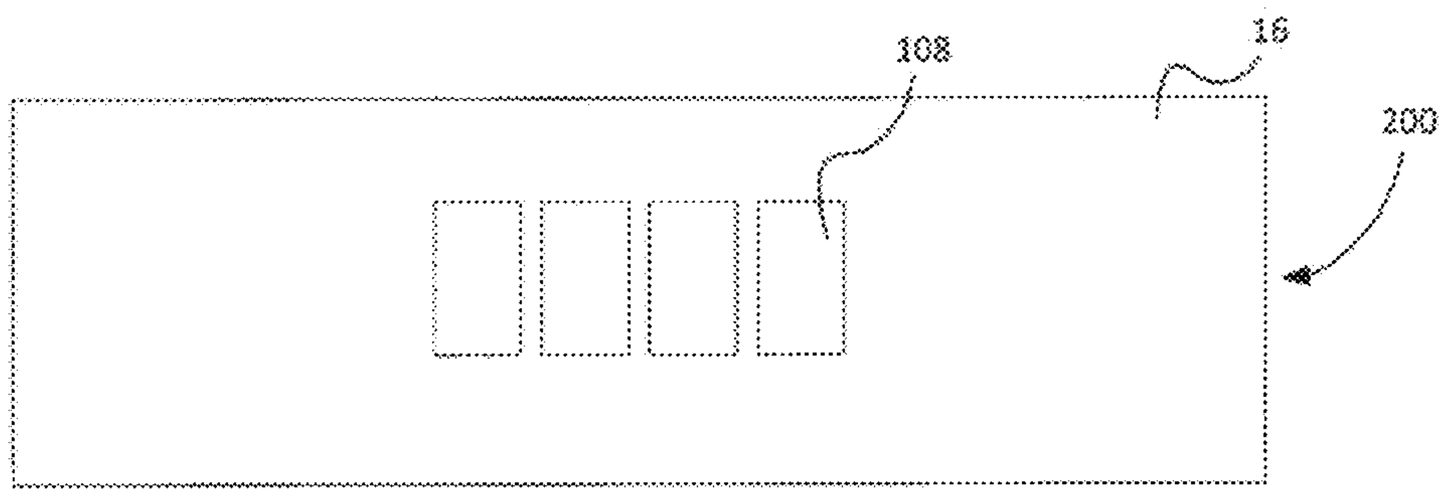

FIG. 5B

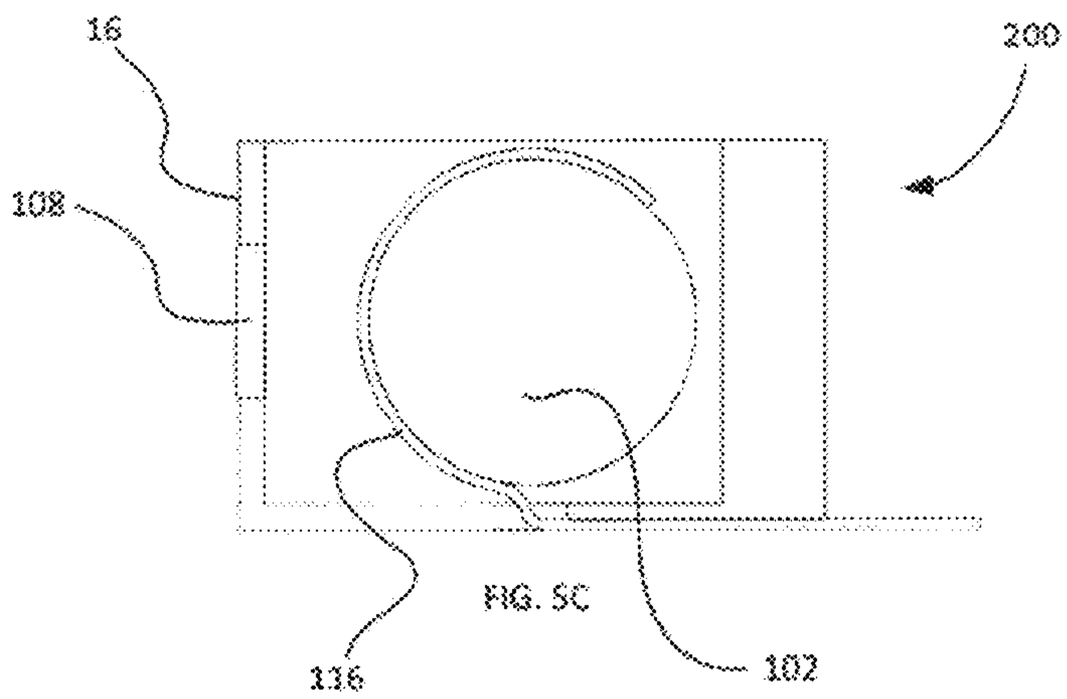

FIG. 5C

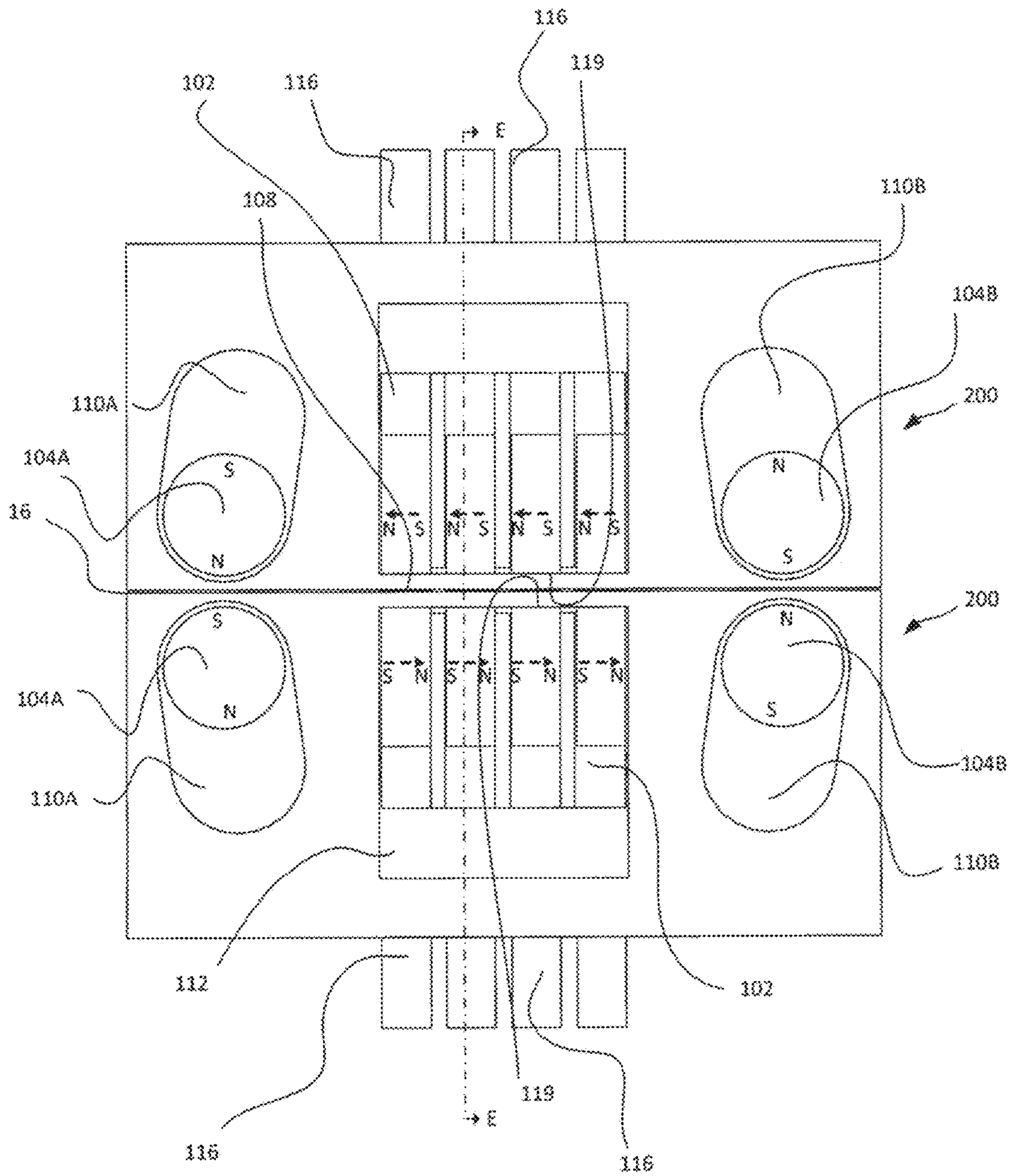
116
119
102
116
E
108
1108
104B
110A
200
104A
S
N
16
N
S
N
S
N
S
N
S
N
S
200
S
N
S
N
S
N
S
N
N
S
104A
N
S
104B
110A
110B
112
102
116
119
E
116

FIG. 5D

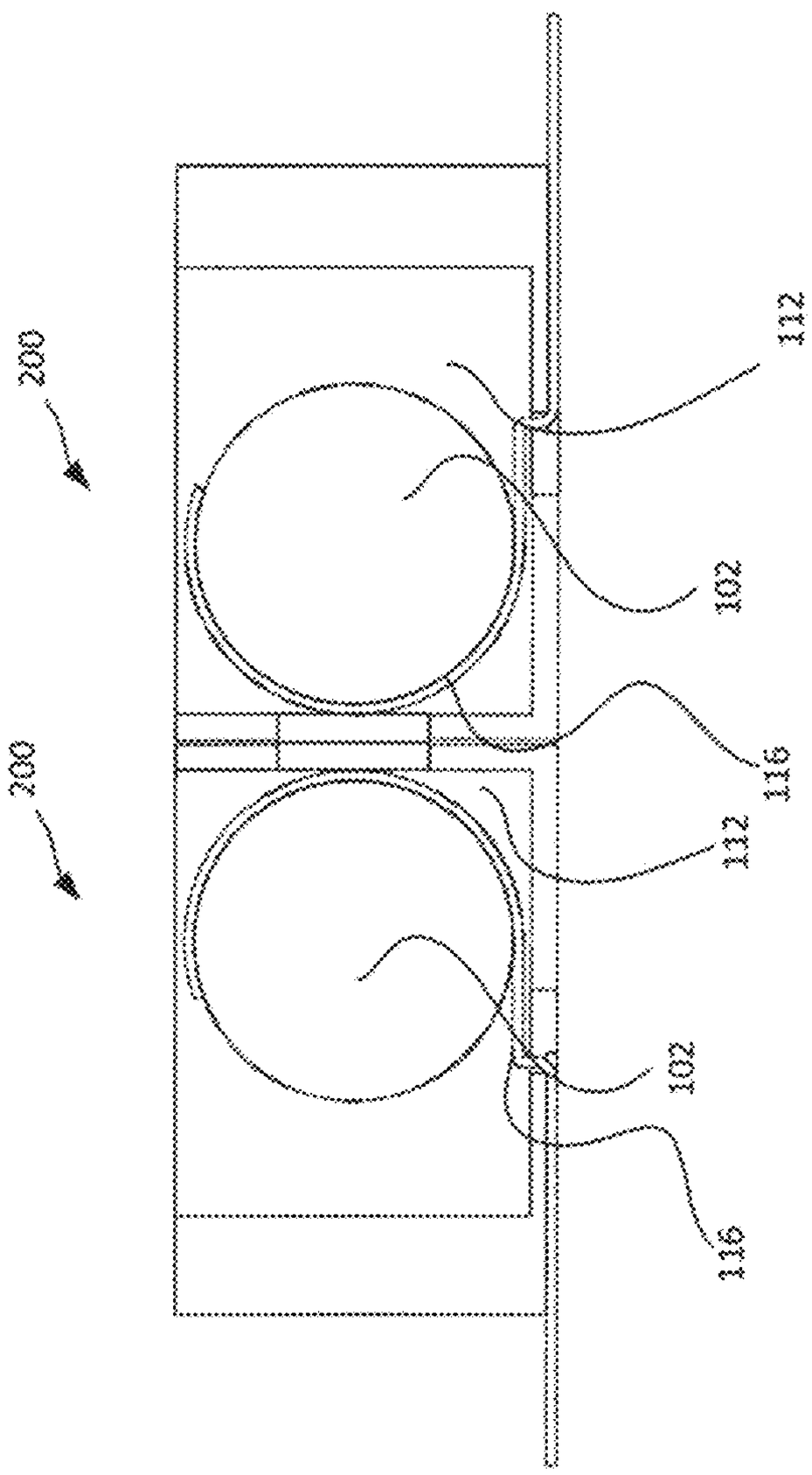

FIG. 5E

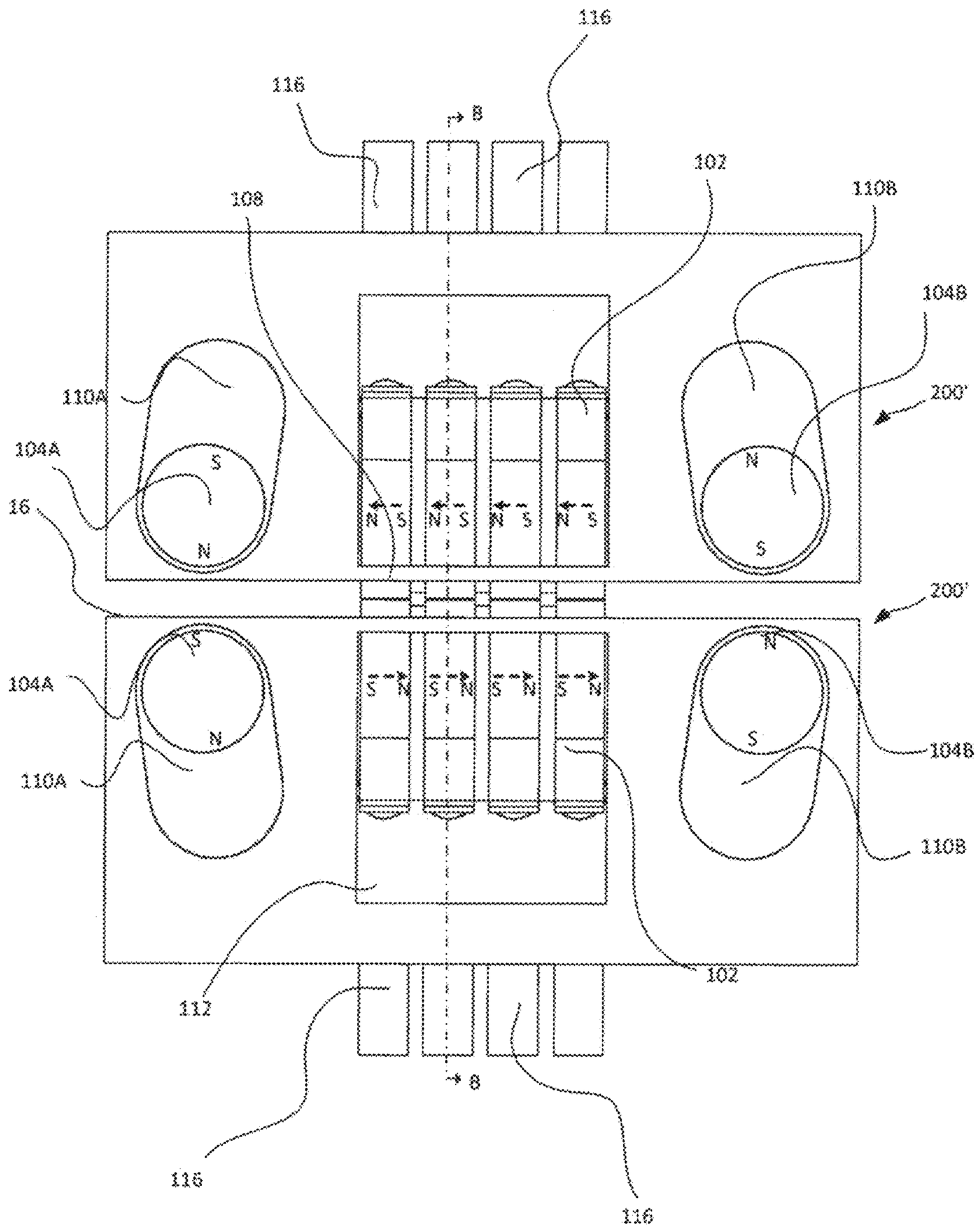
116
116
B
102
108
1108
104B
110A
200'
104A
S
N
16
N
S
N
S
N
S
N
S
N
S
200'
S
N
S
N
S
N
S
N
N
S
104A
N
S
104B
110A
110B
112
102
B
116
116

FIG. 6A

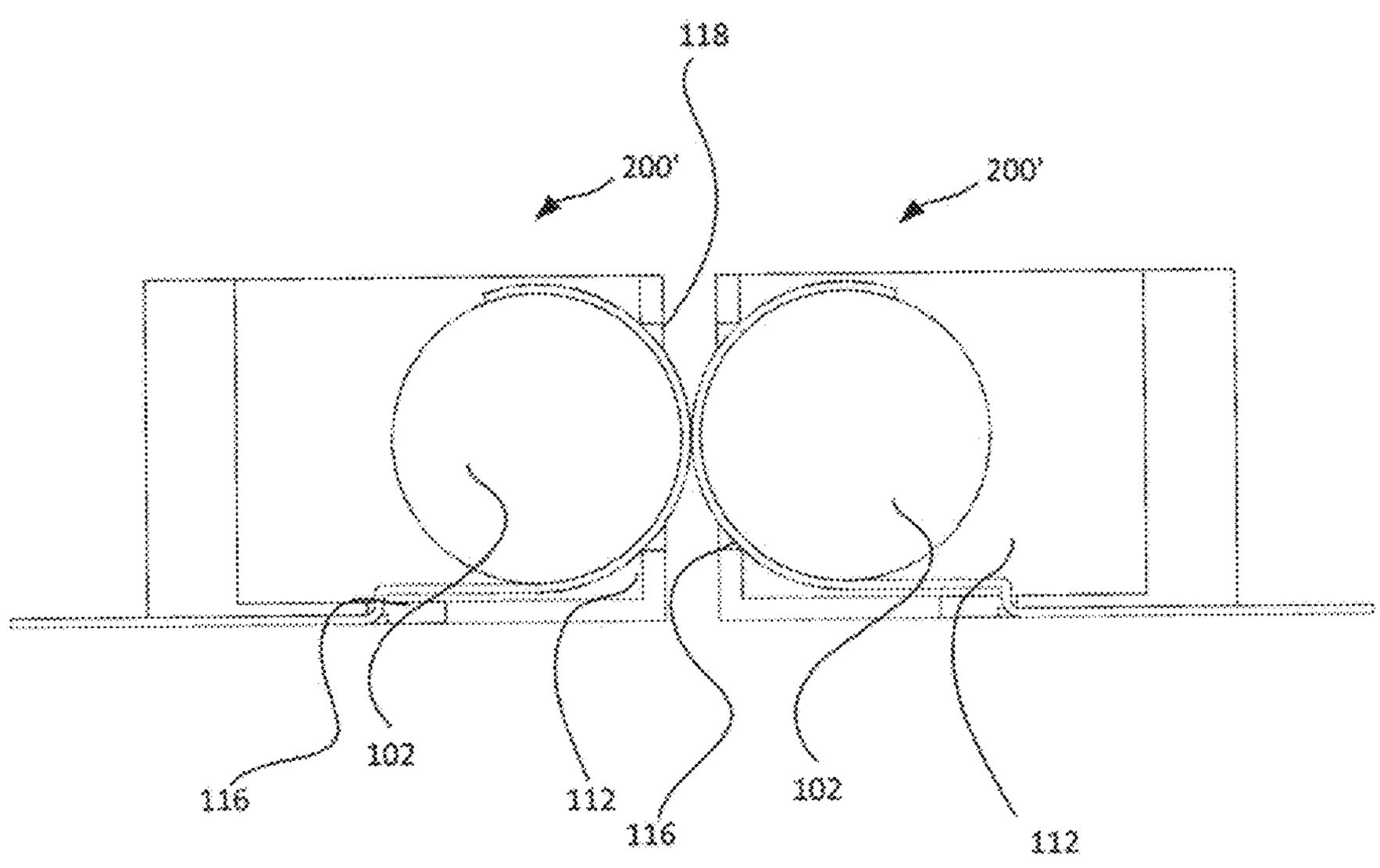

FIG. 6B

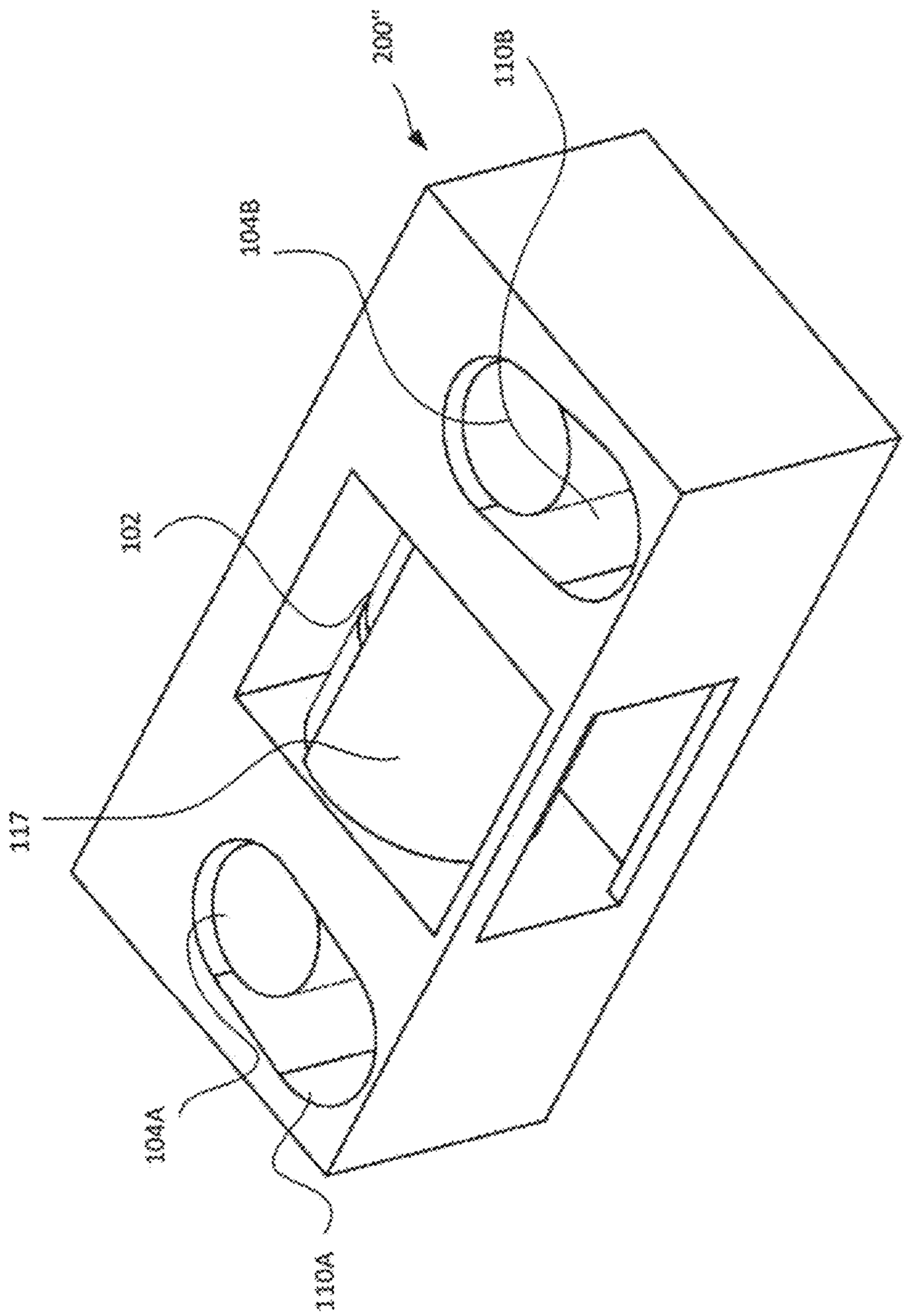

FIG. 6C

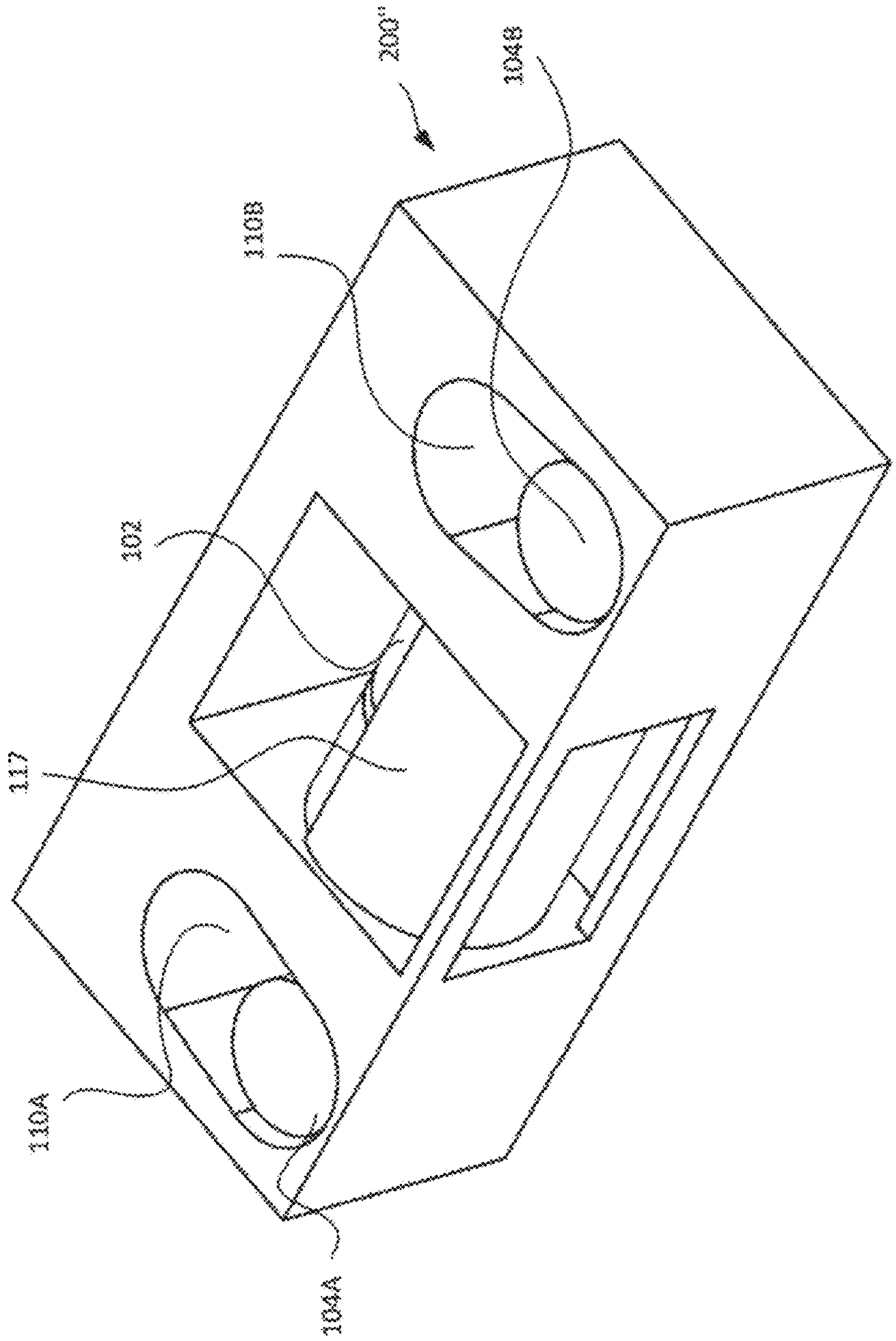

FIG. 6D

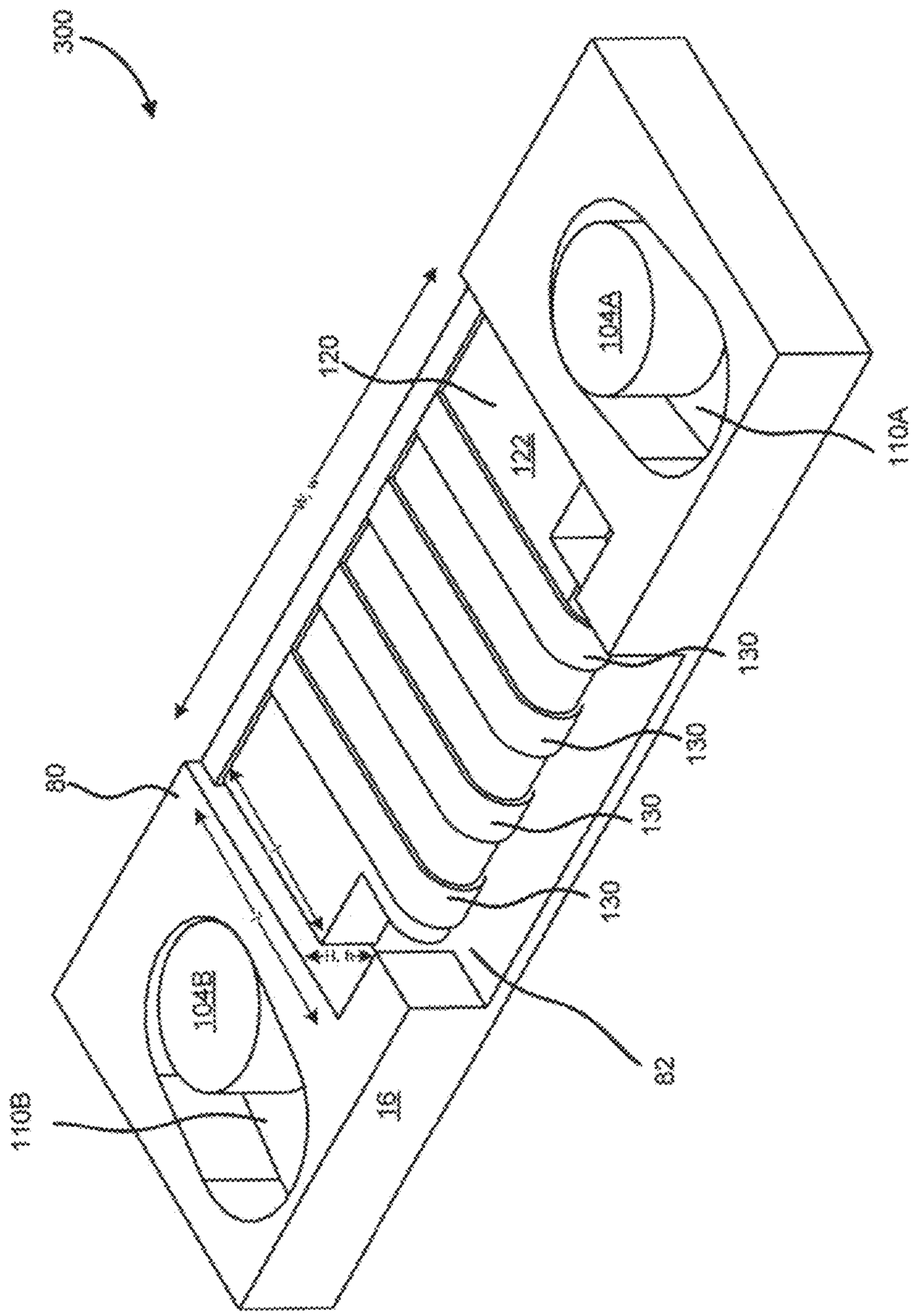

FIG. 7A

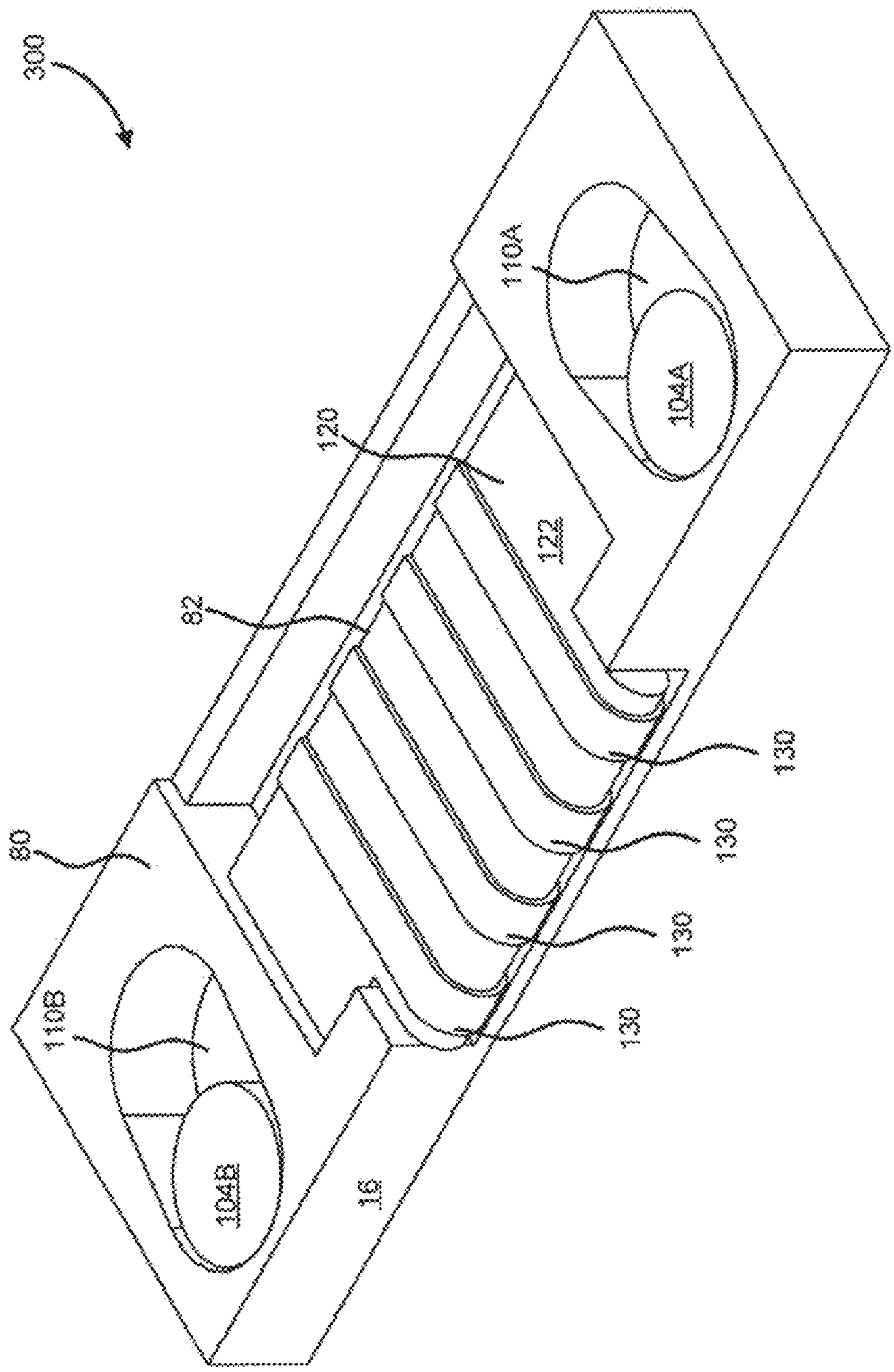

FIG. 7B

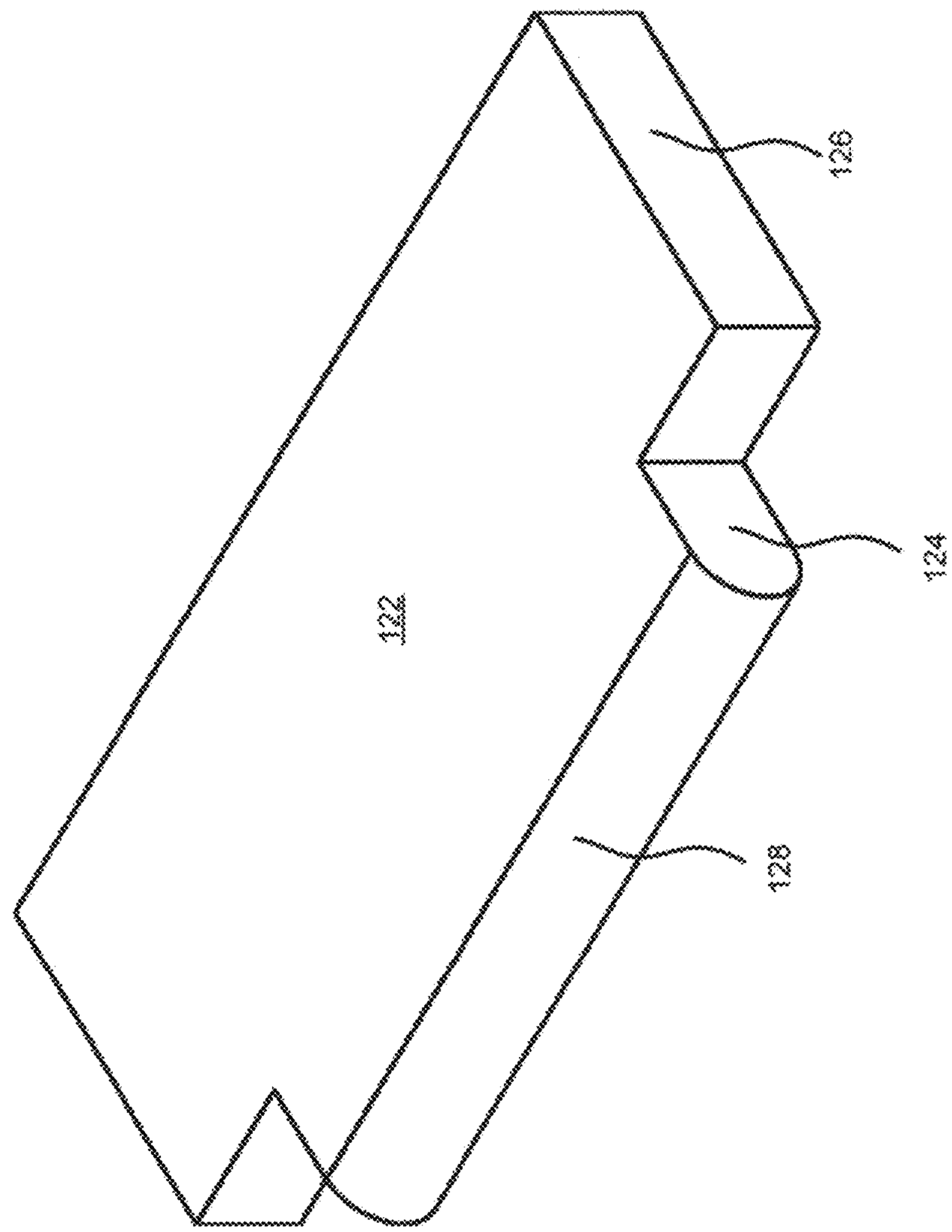

FIG. 8A

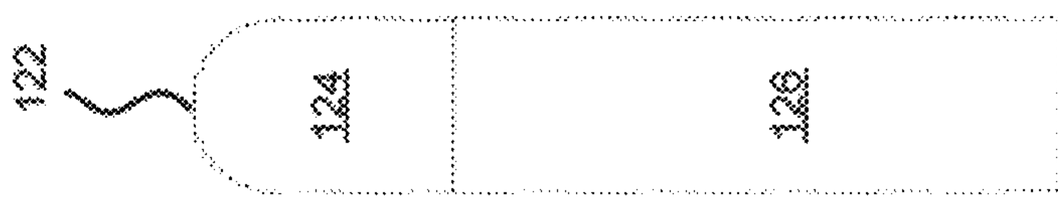

FIG. 8C

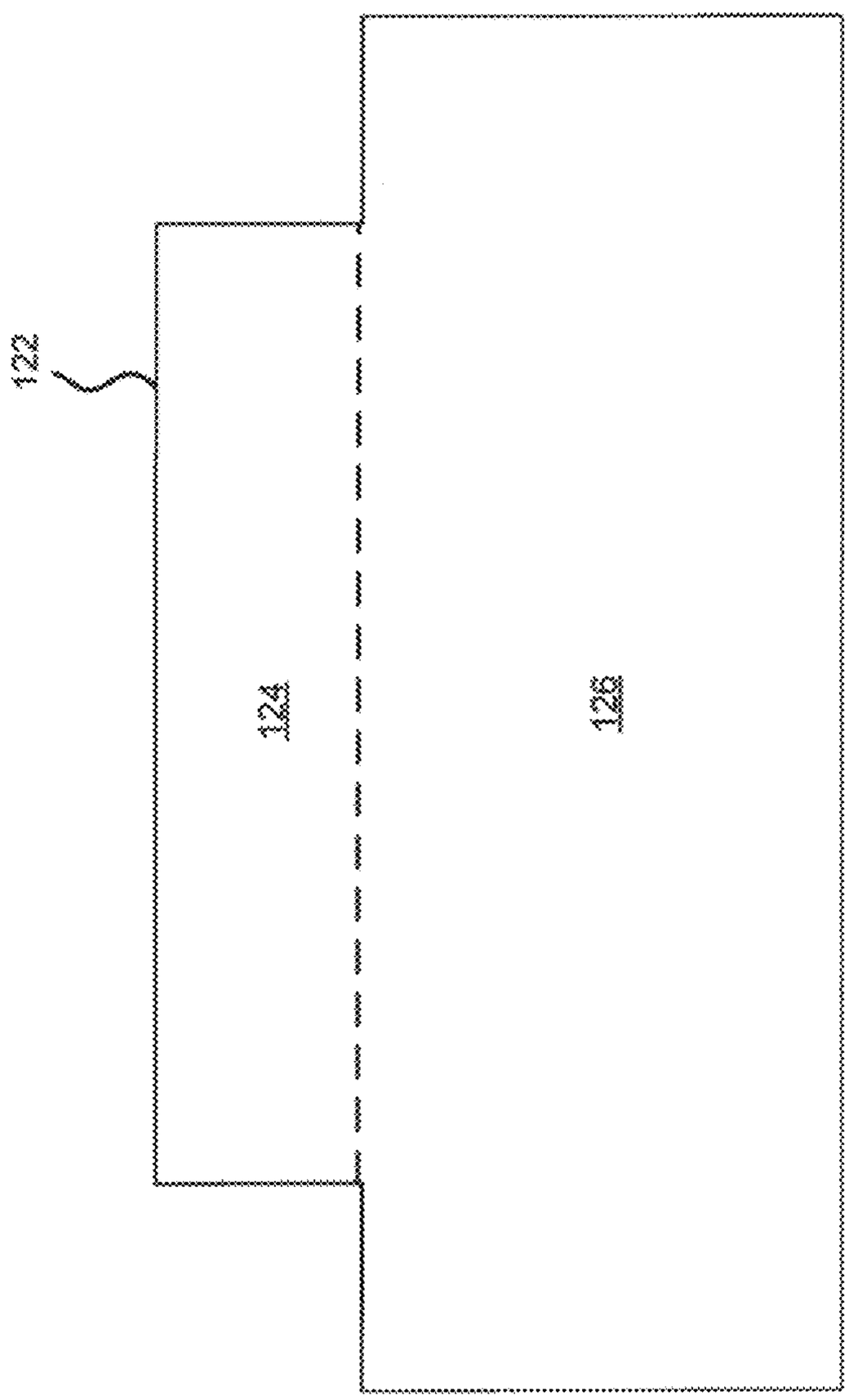

FIG. 8B

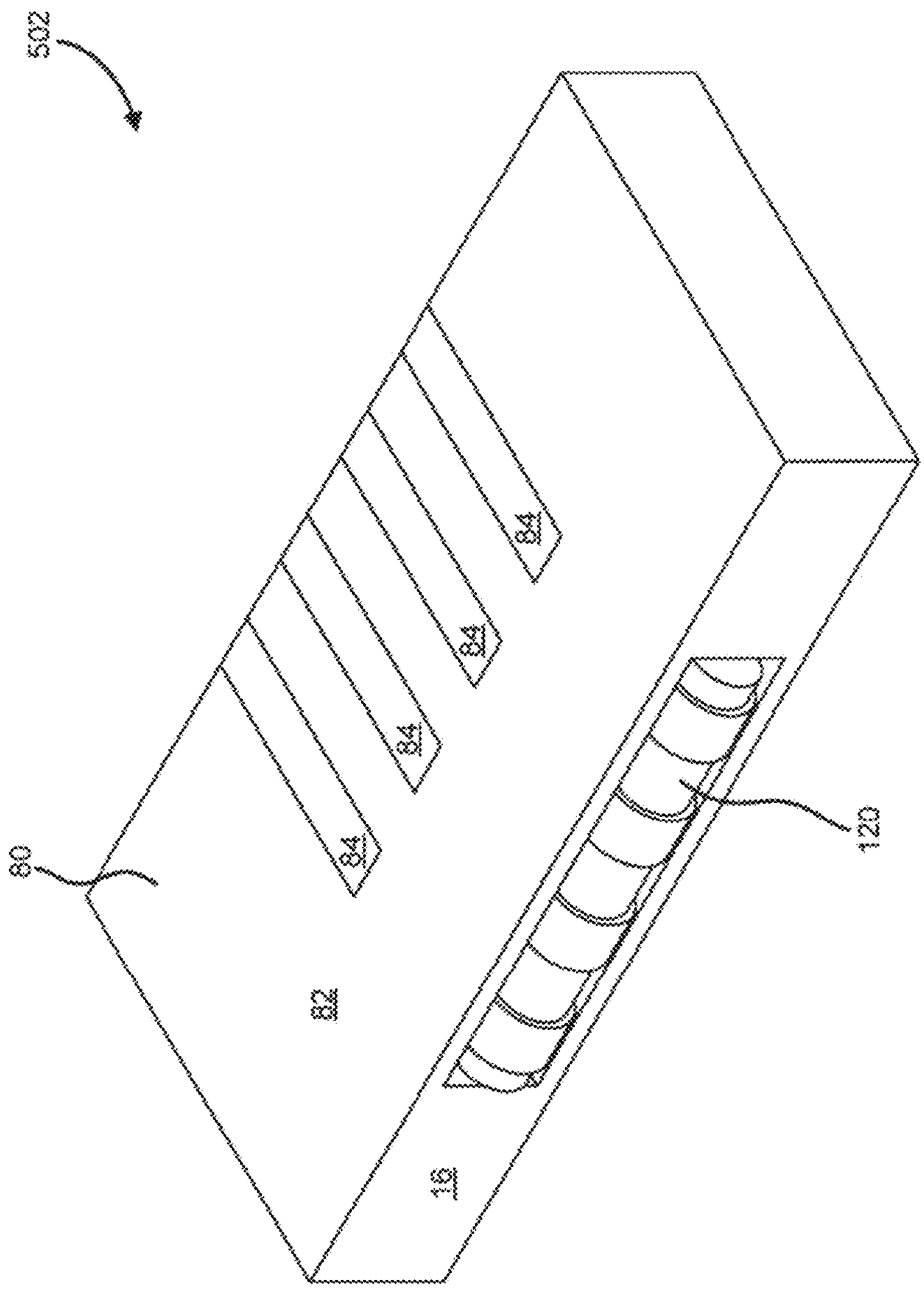

FIG. 9A

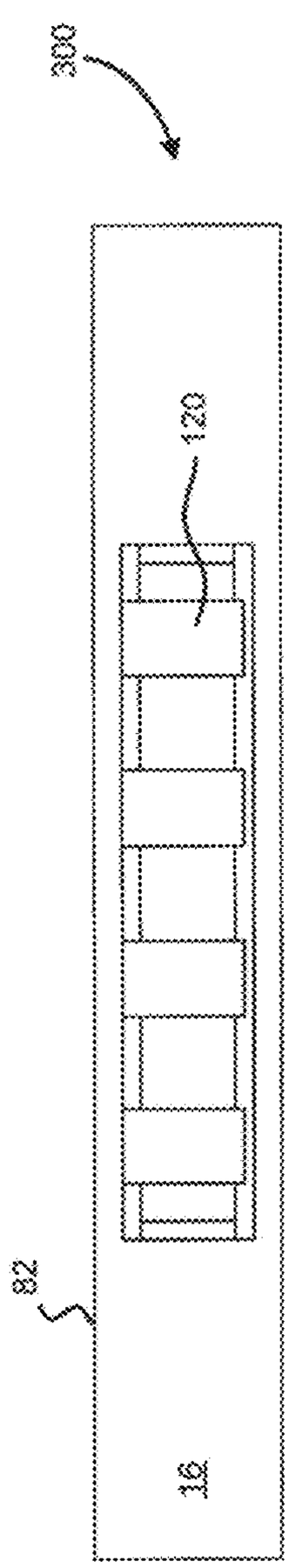

FIG. 9B

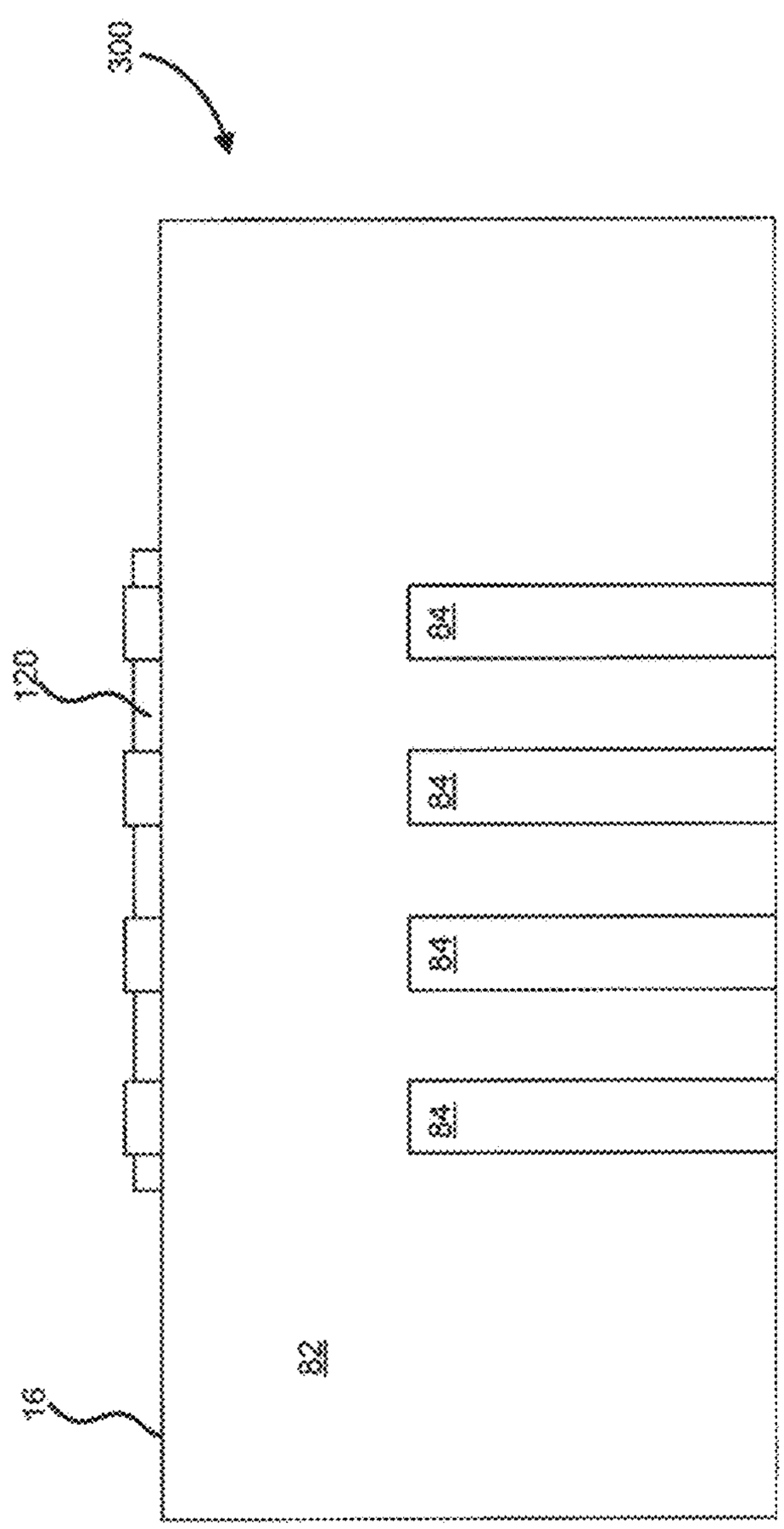

FIG. 9C

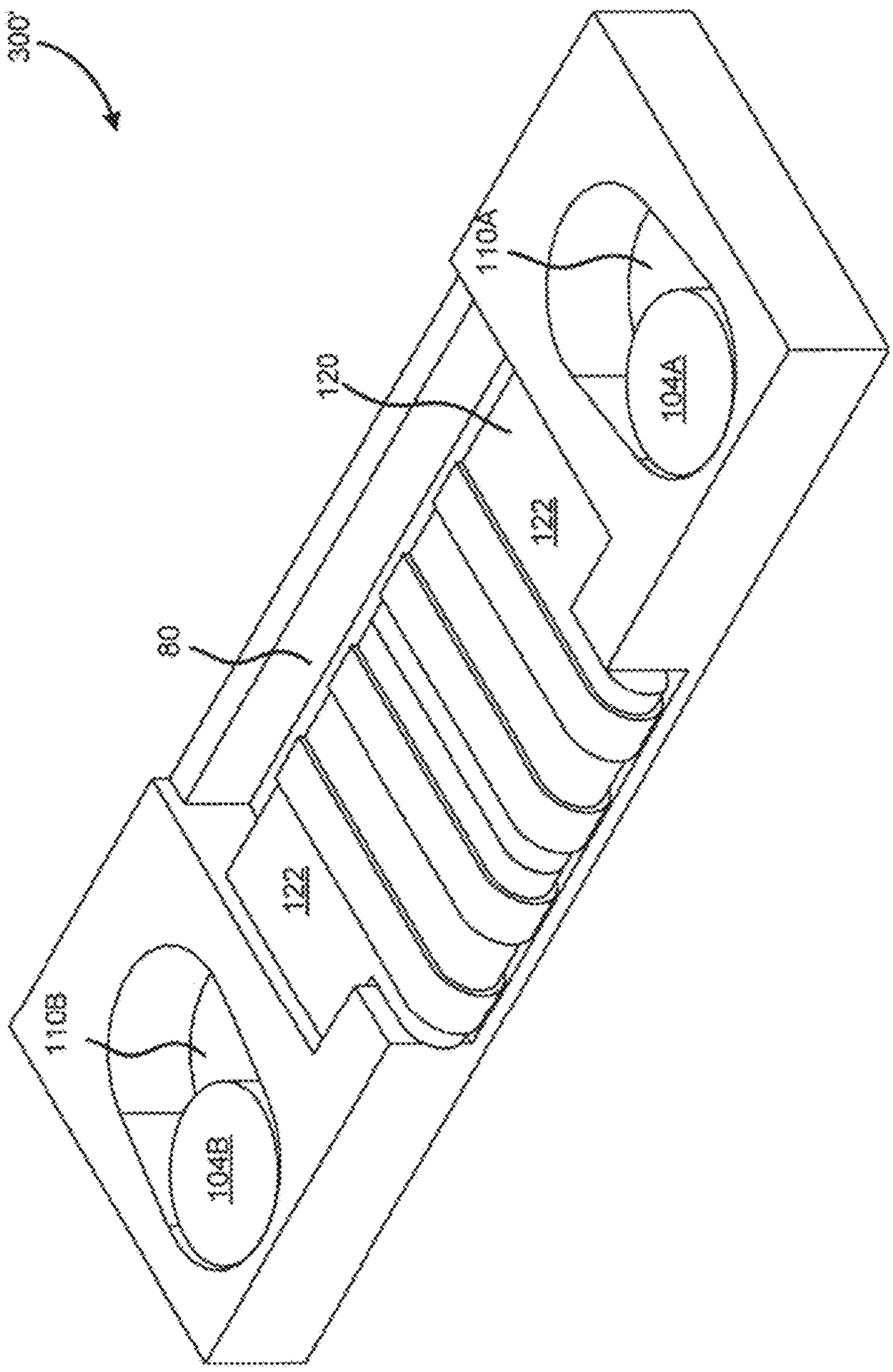

FIG. 10A

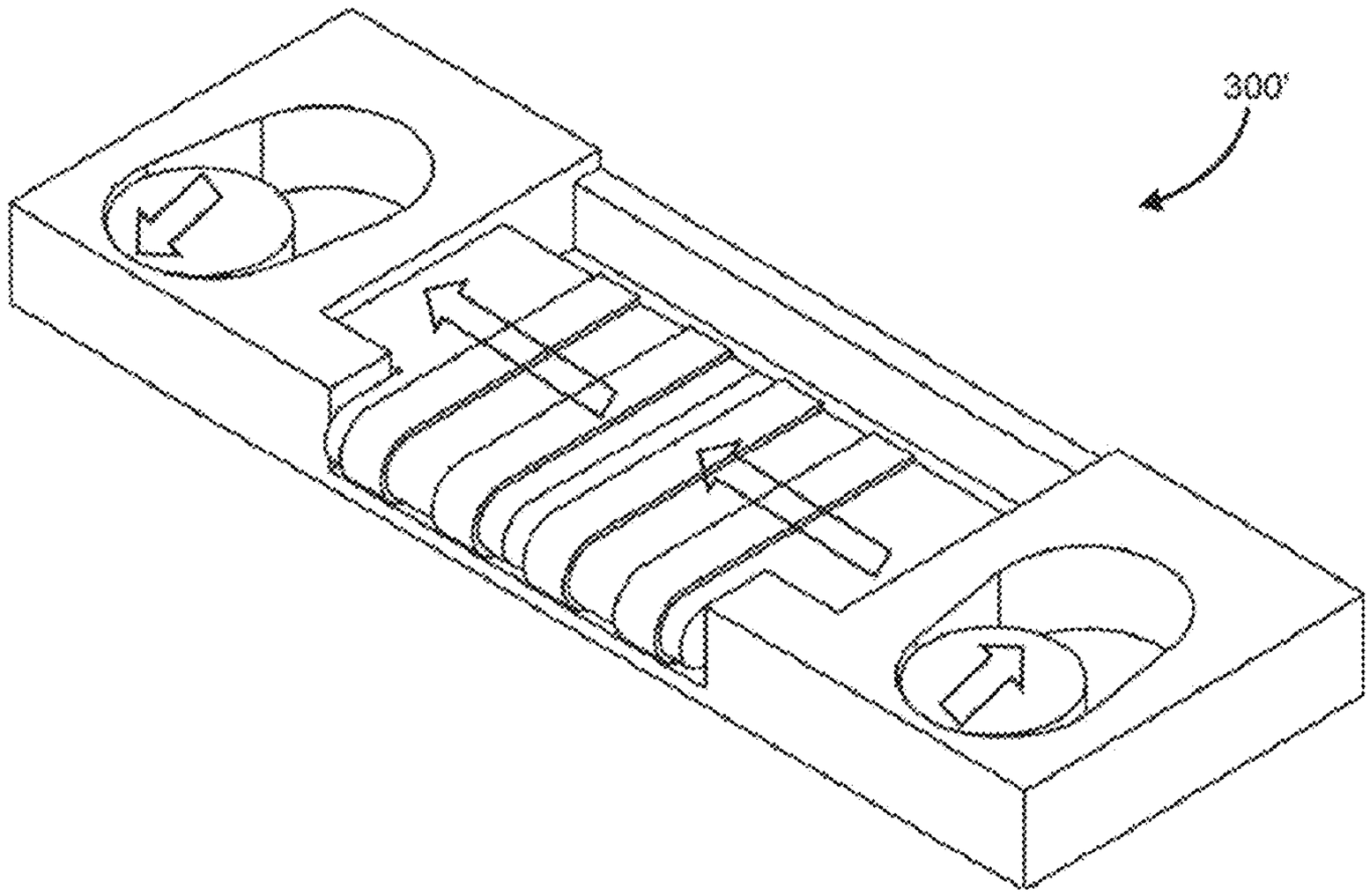

FIG. 10B

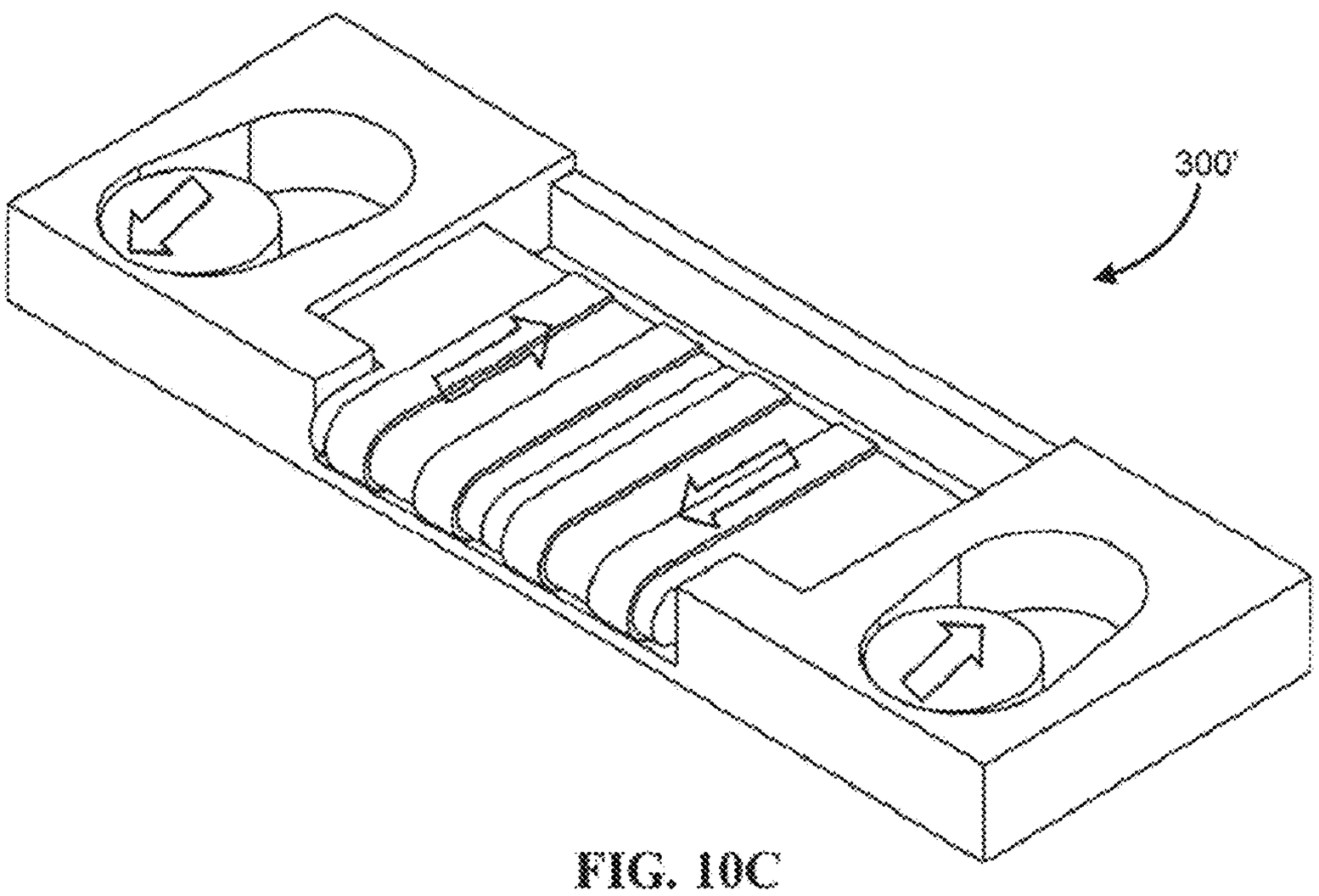

FIG. 10C

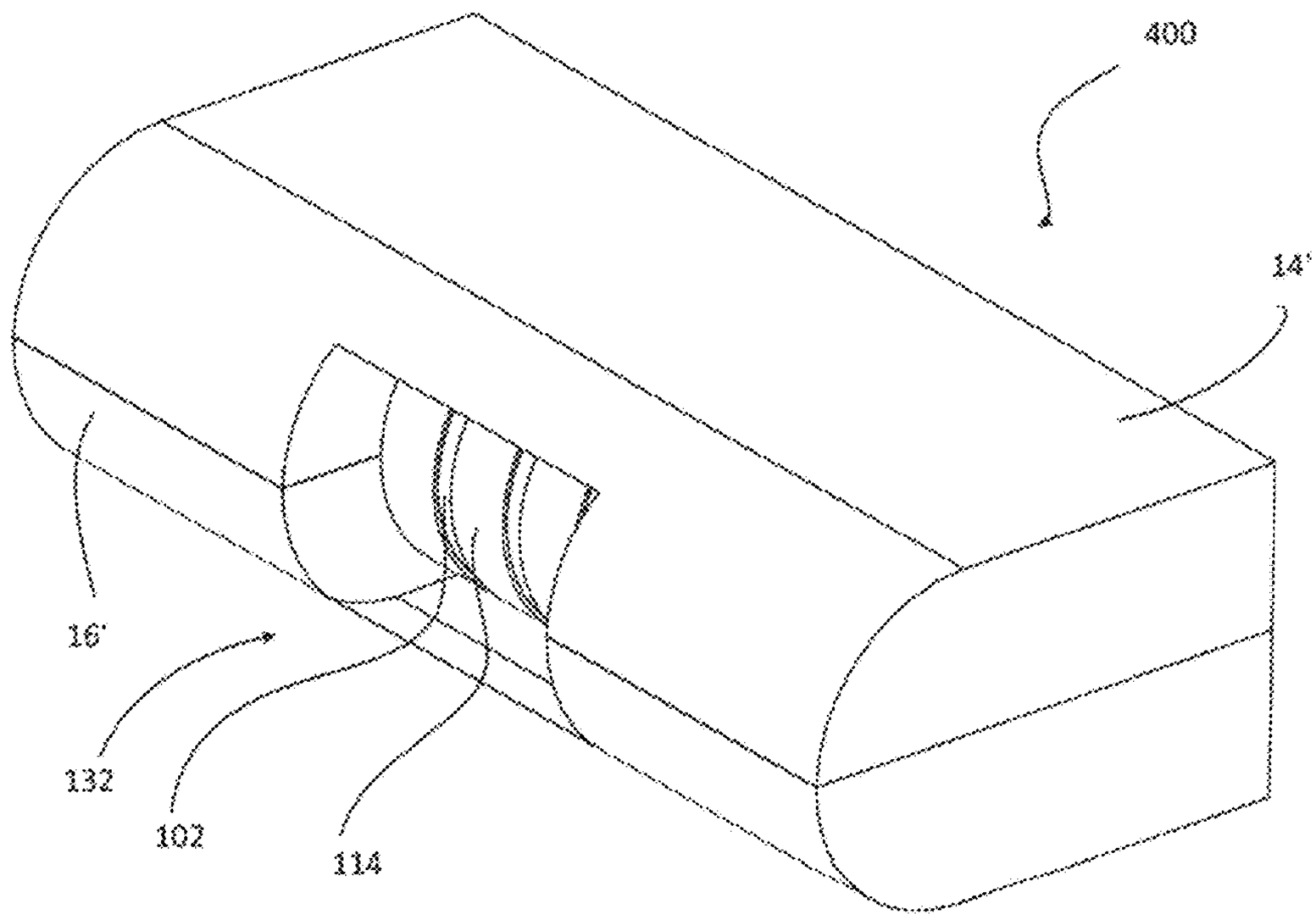

FIG. 11A

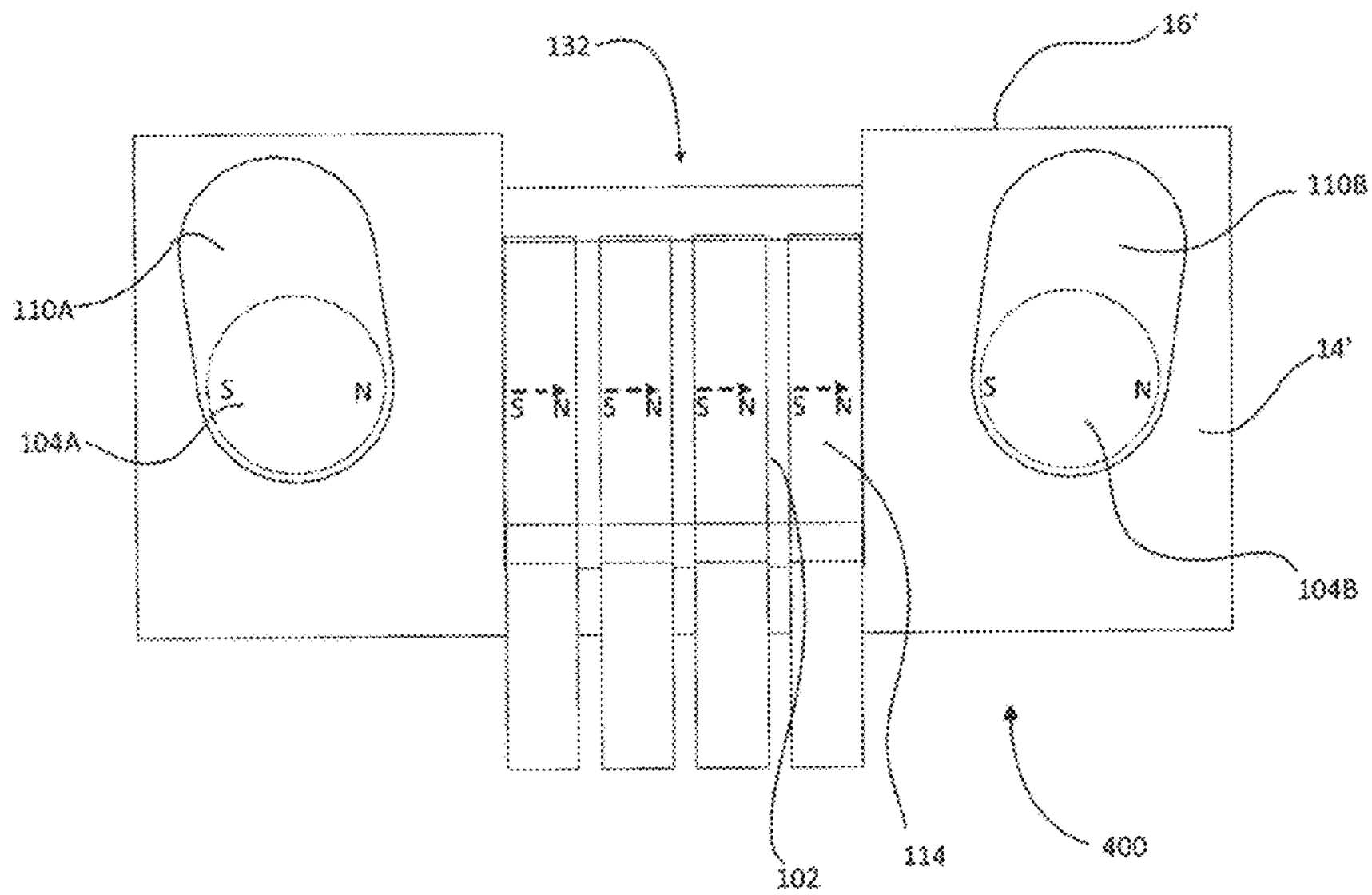

FIG. 11B

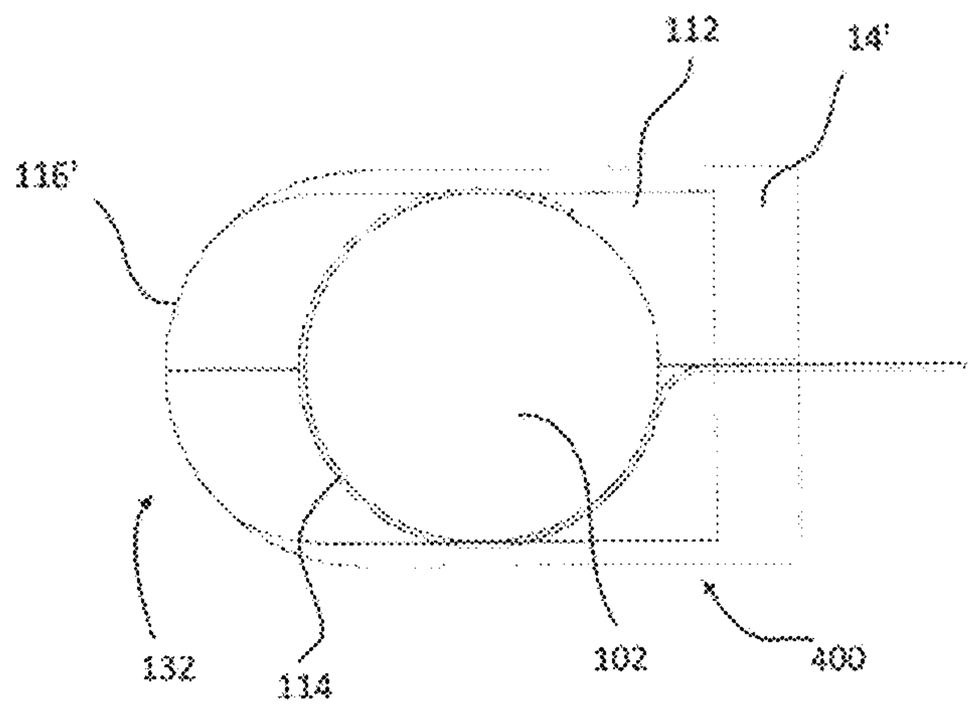

FIG. 11C

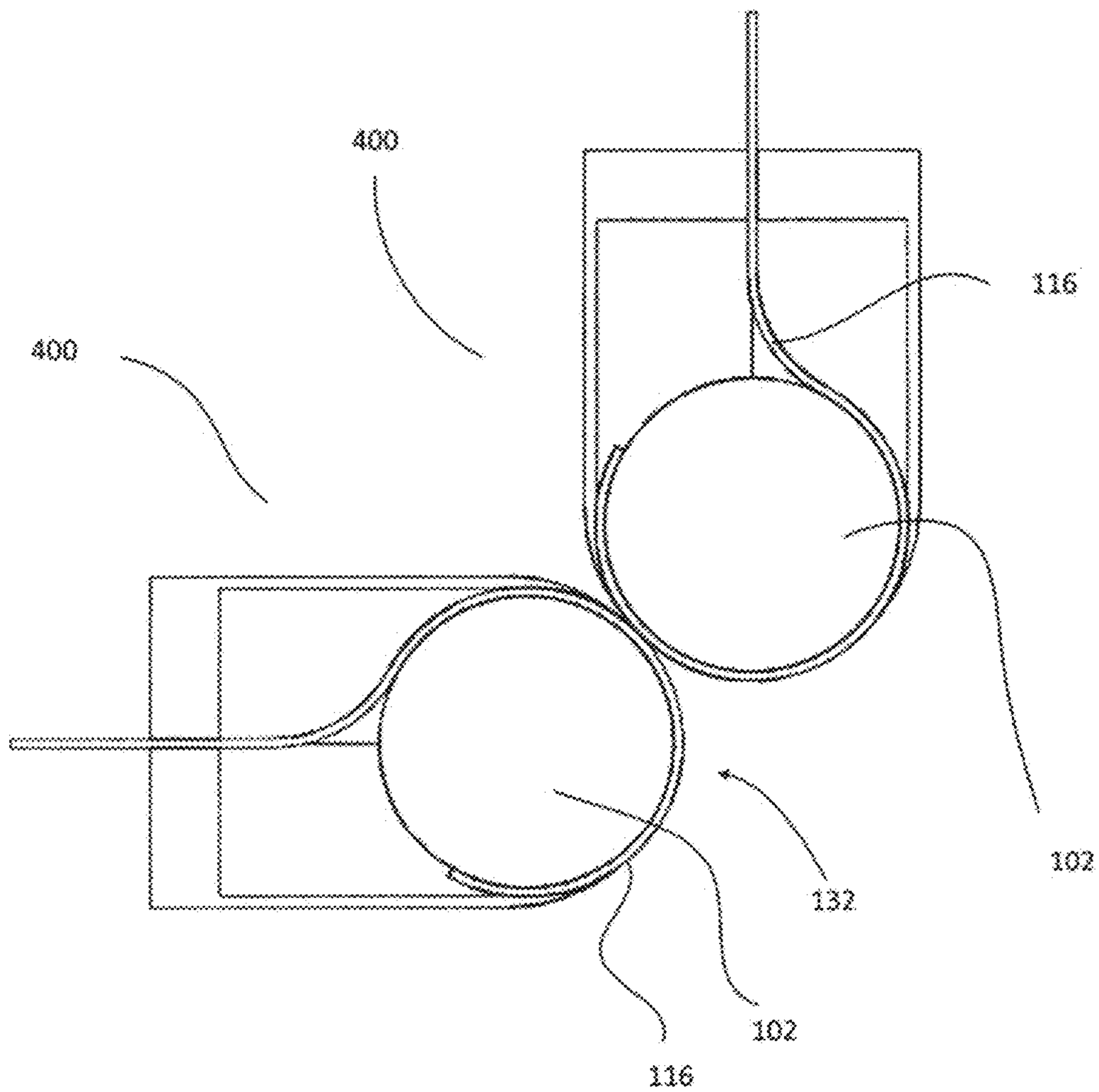

FIG. 11D

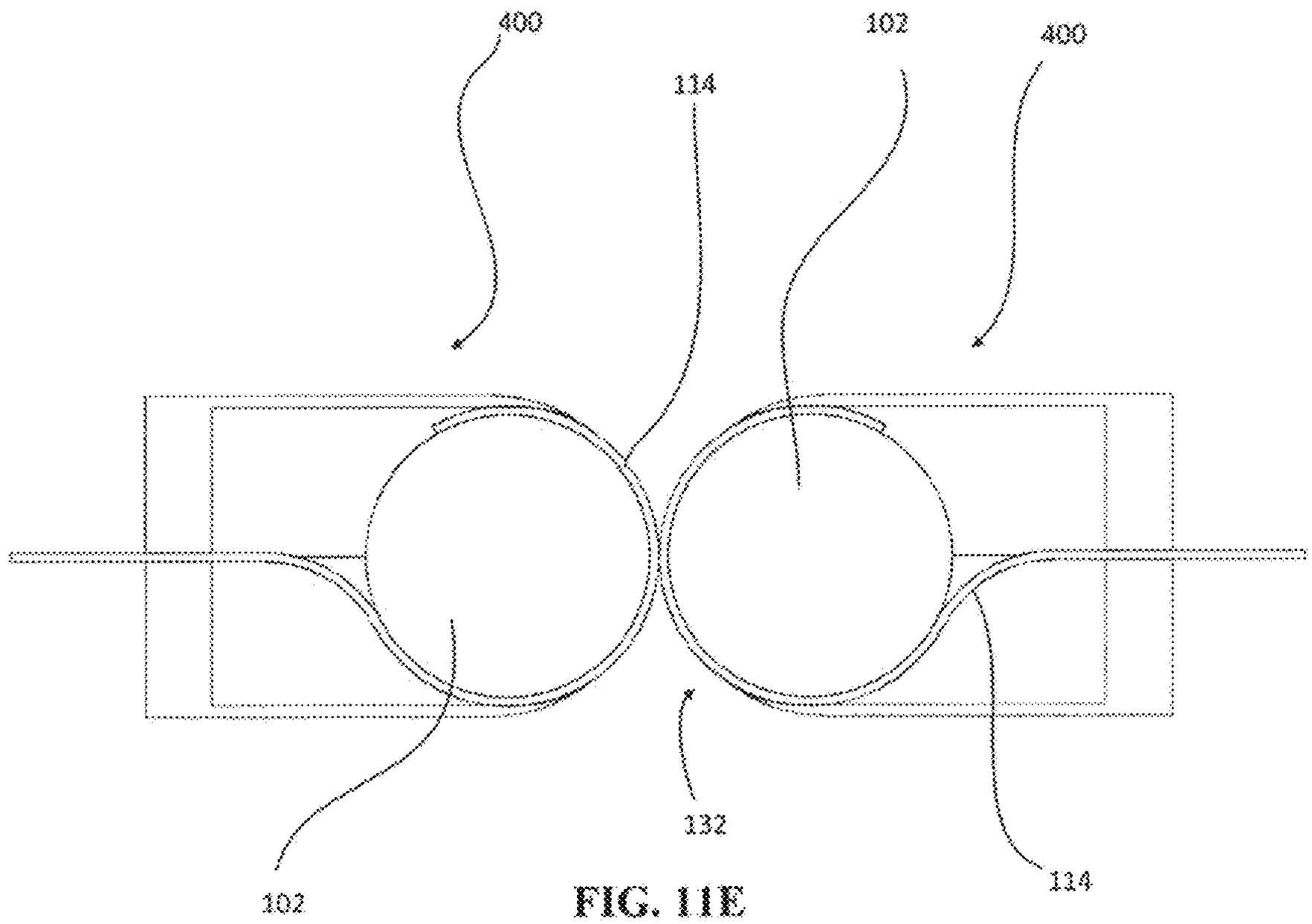

FIG. 11E

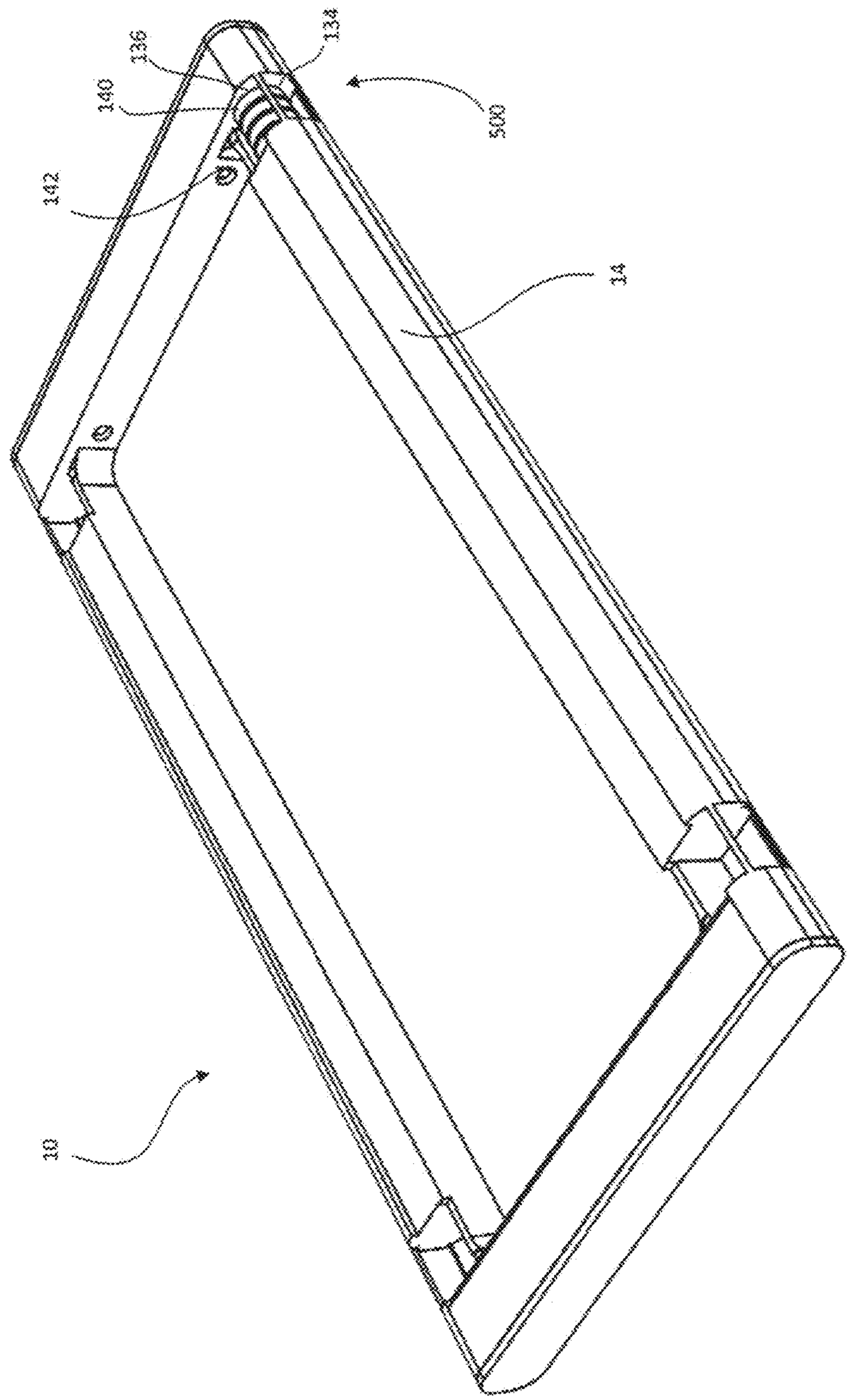

FIG. 12A

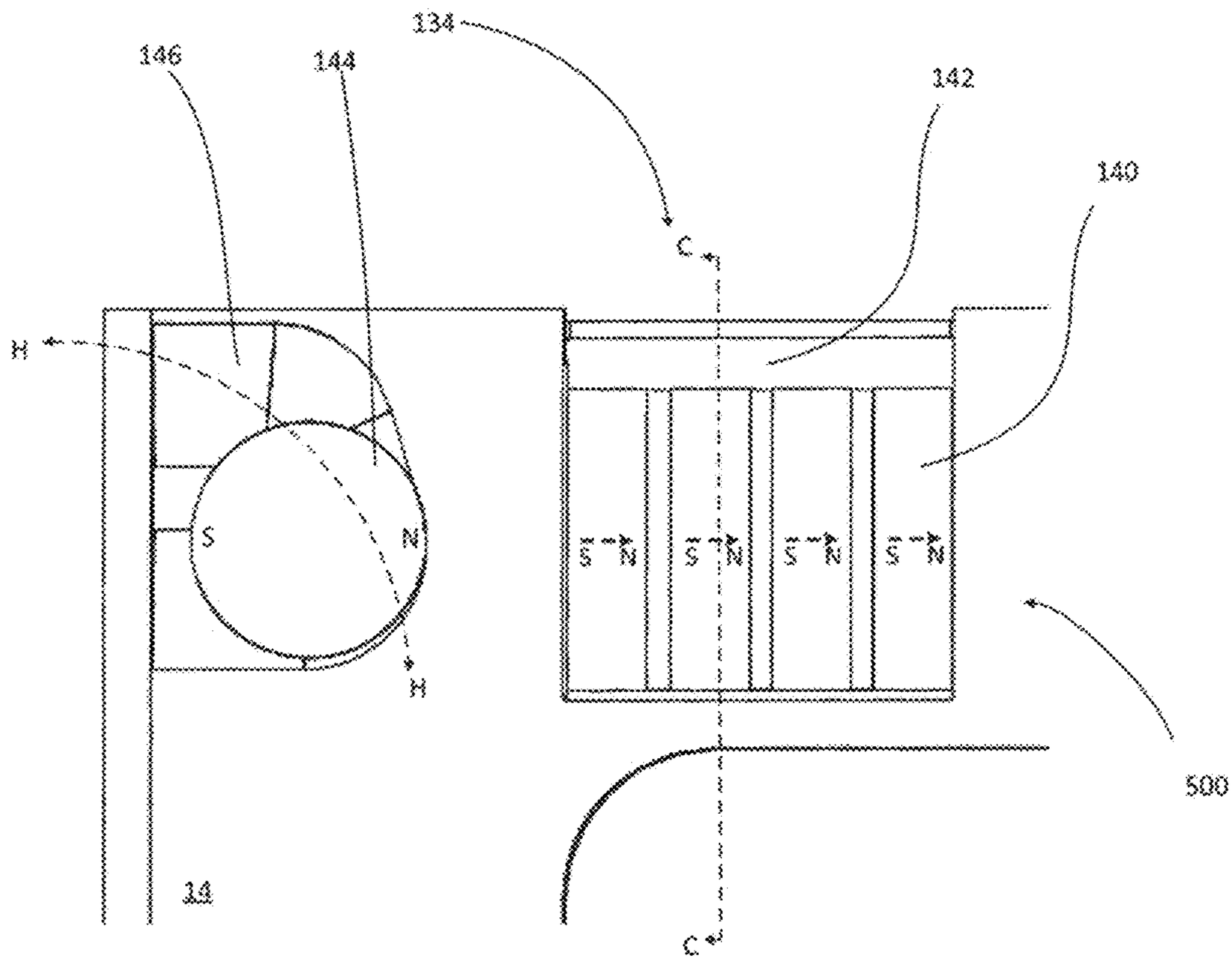

FIG. 12B

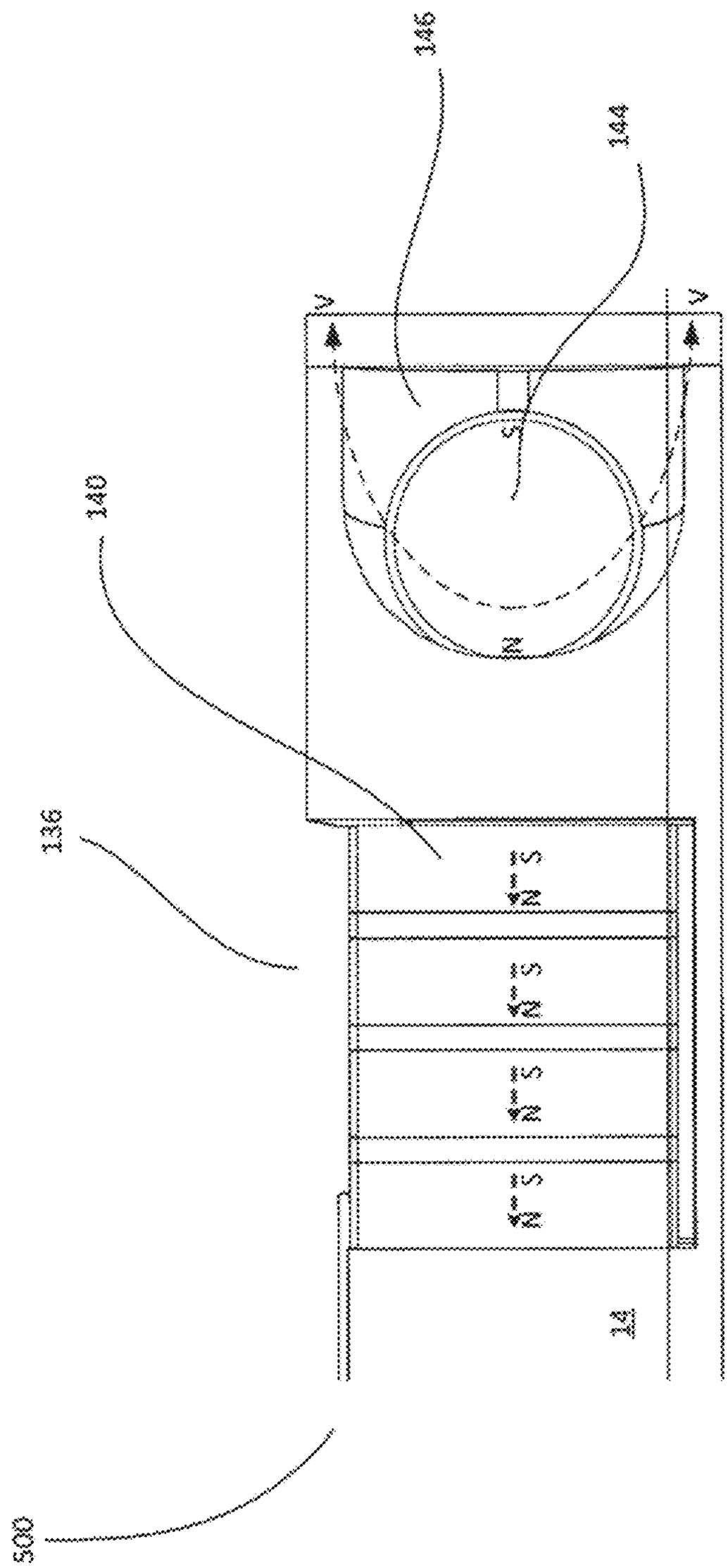

FIG. 12C

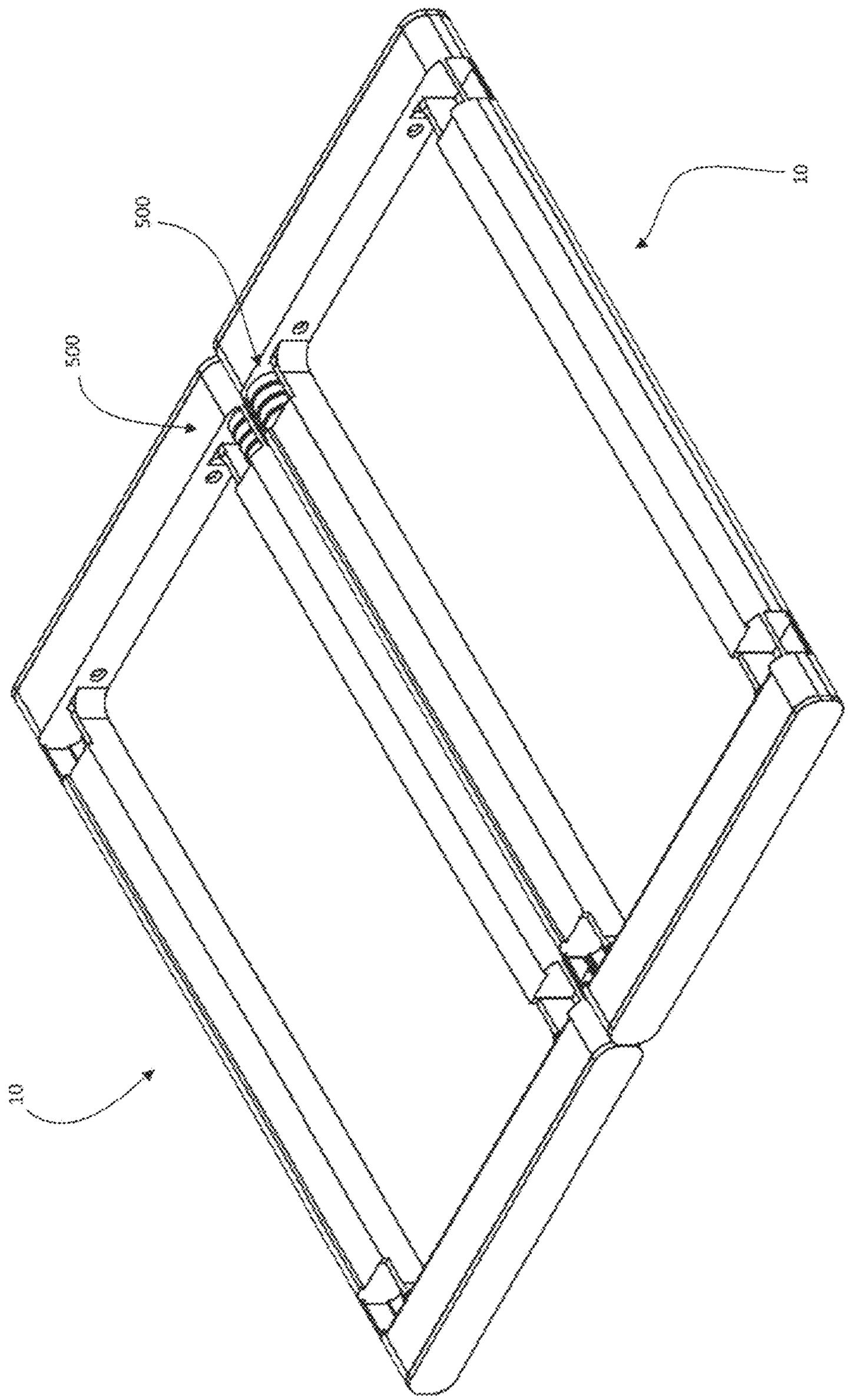

FIG. 13A

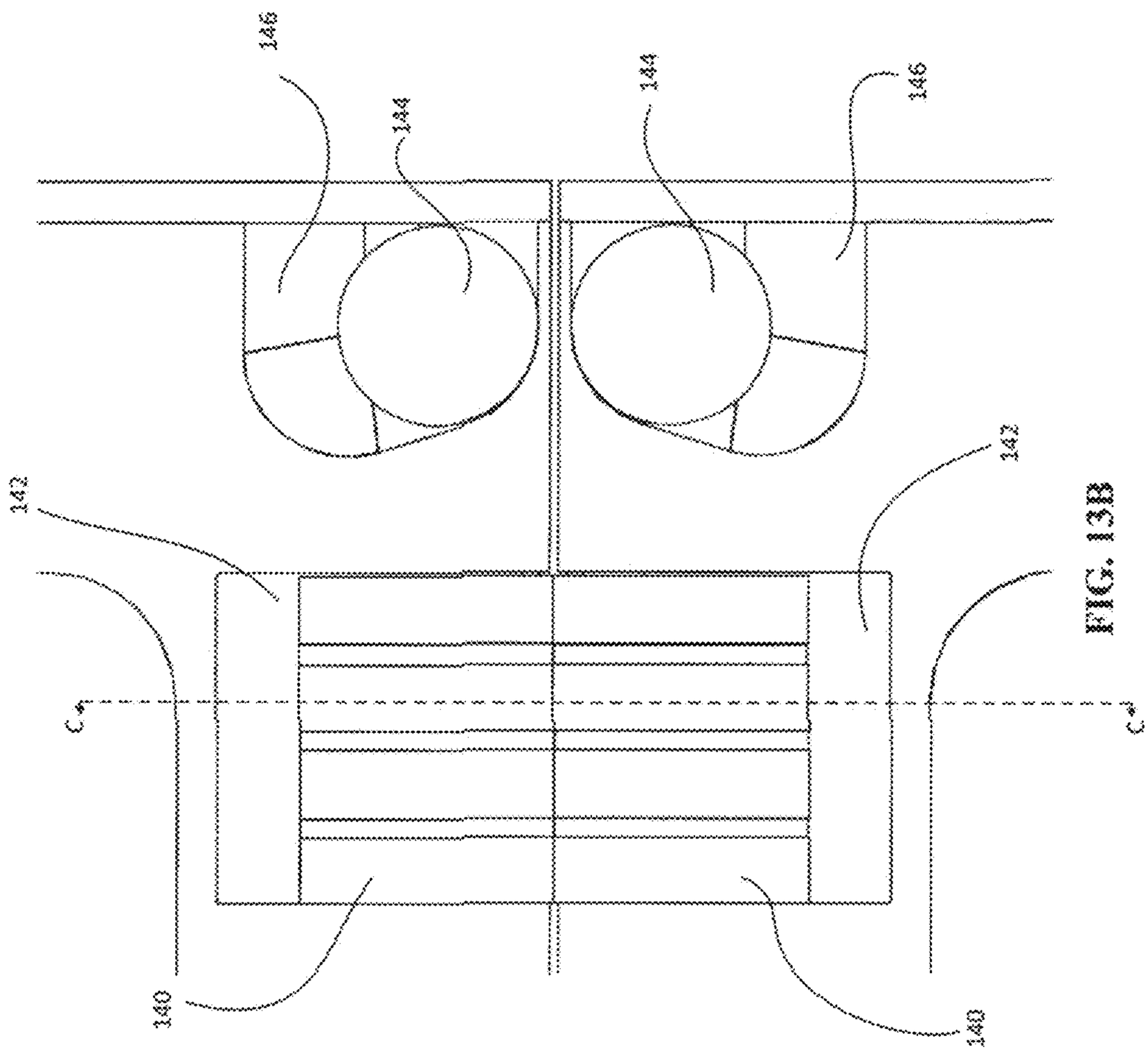

FIG. 13B

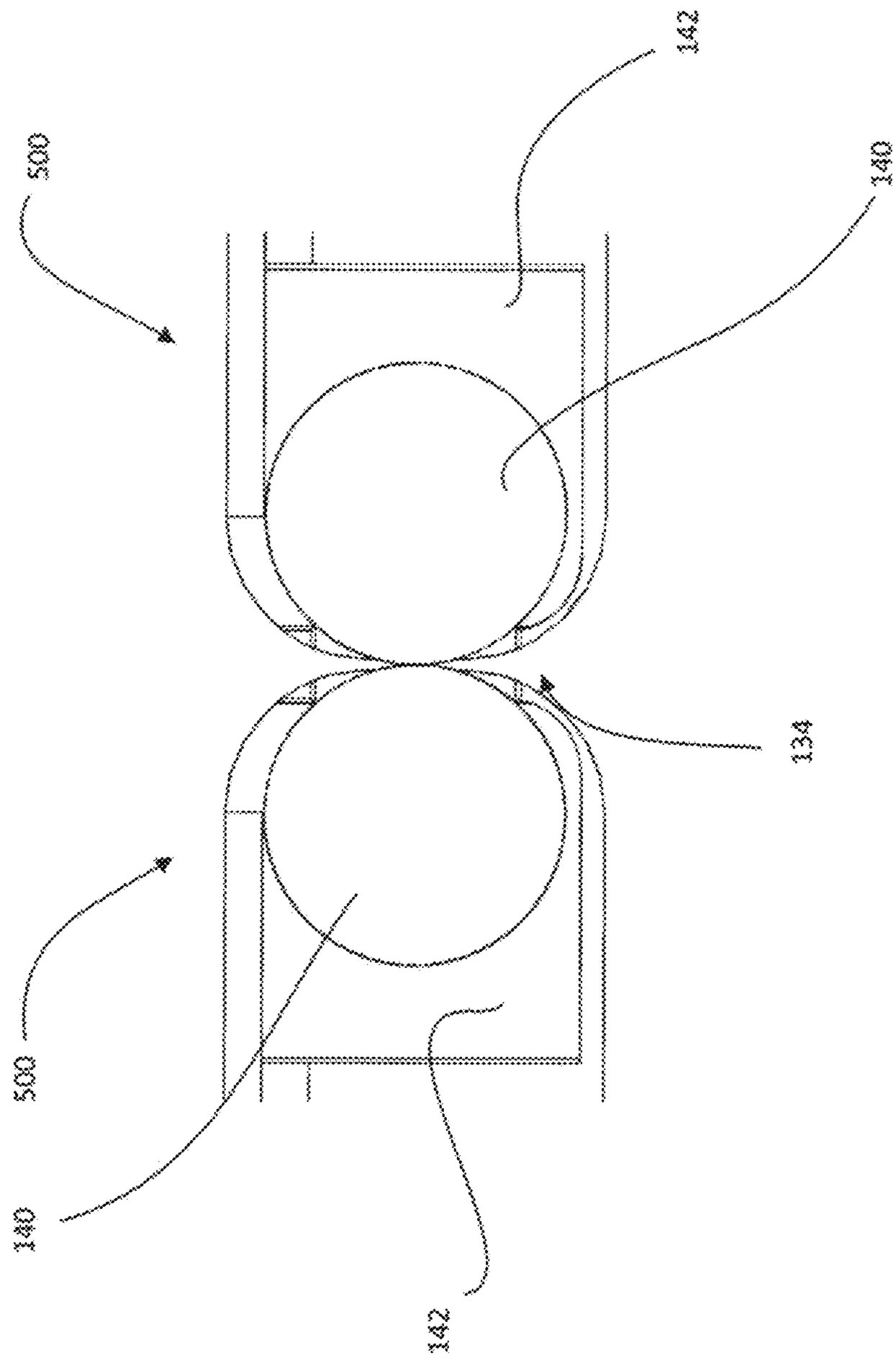

FIG. 13C

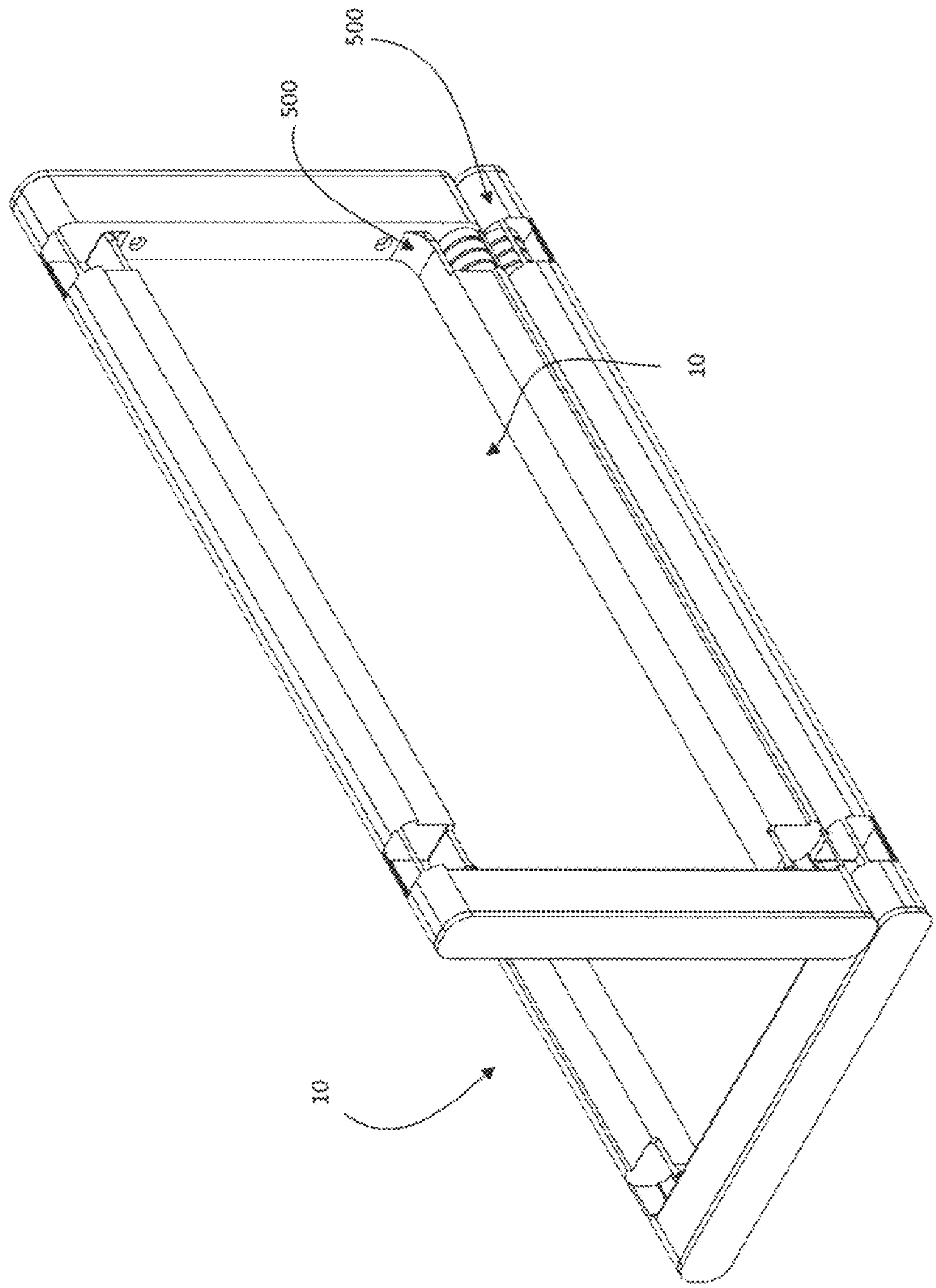

FIG. 14A

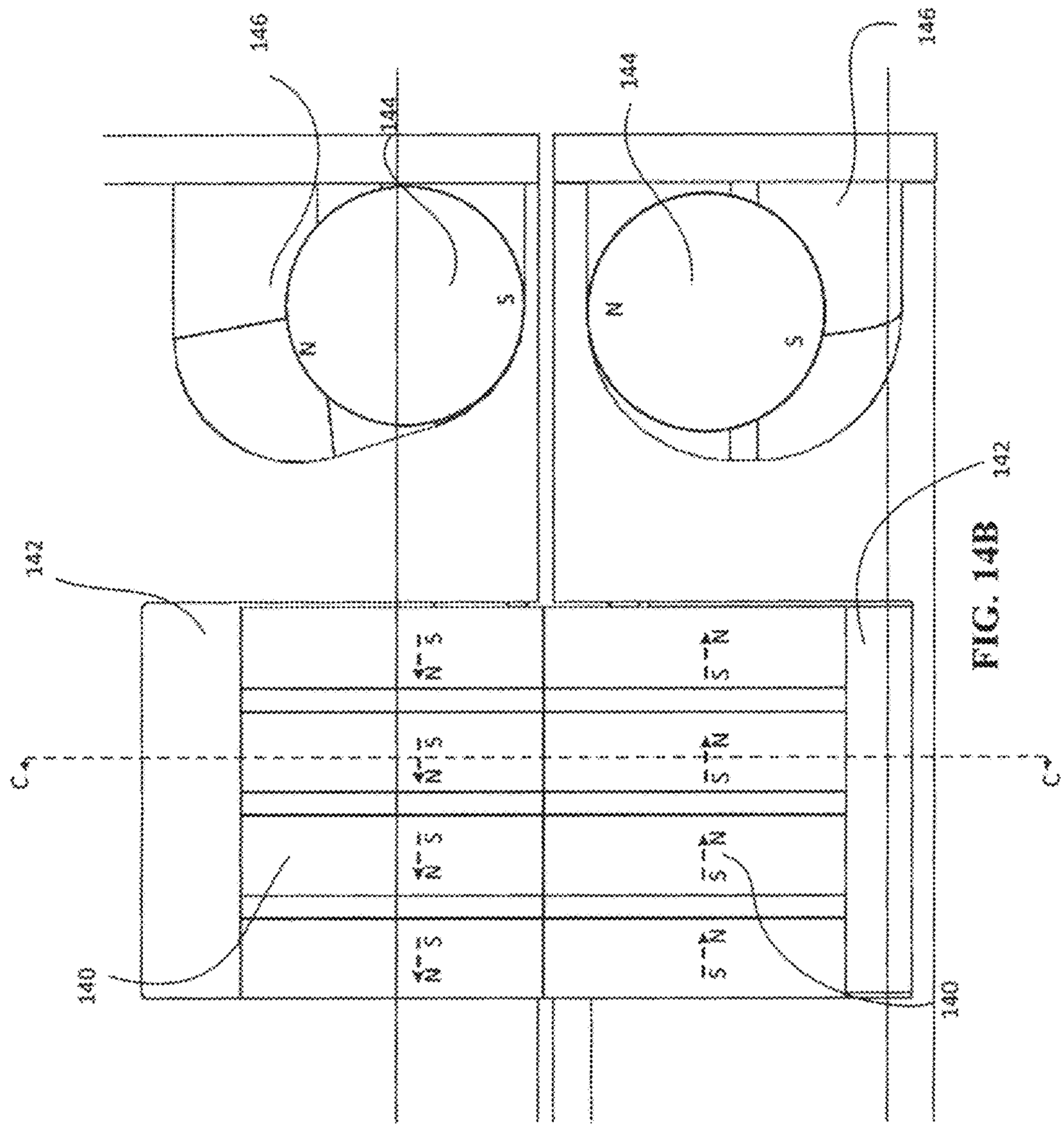

FIG. 14B

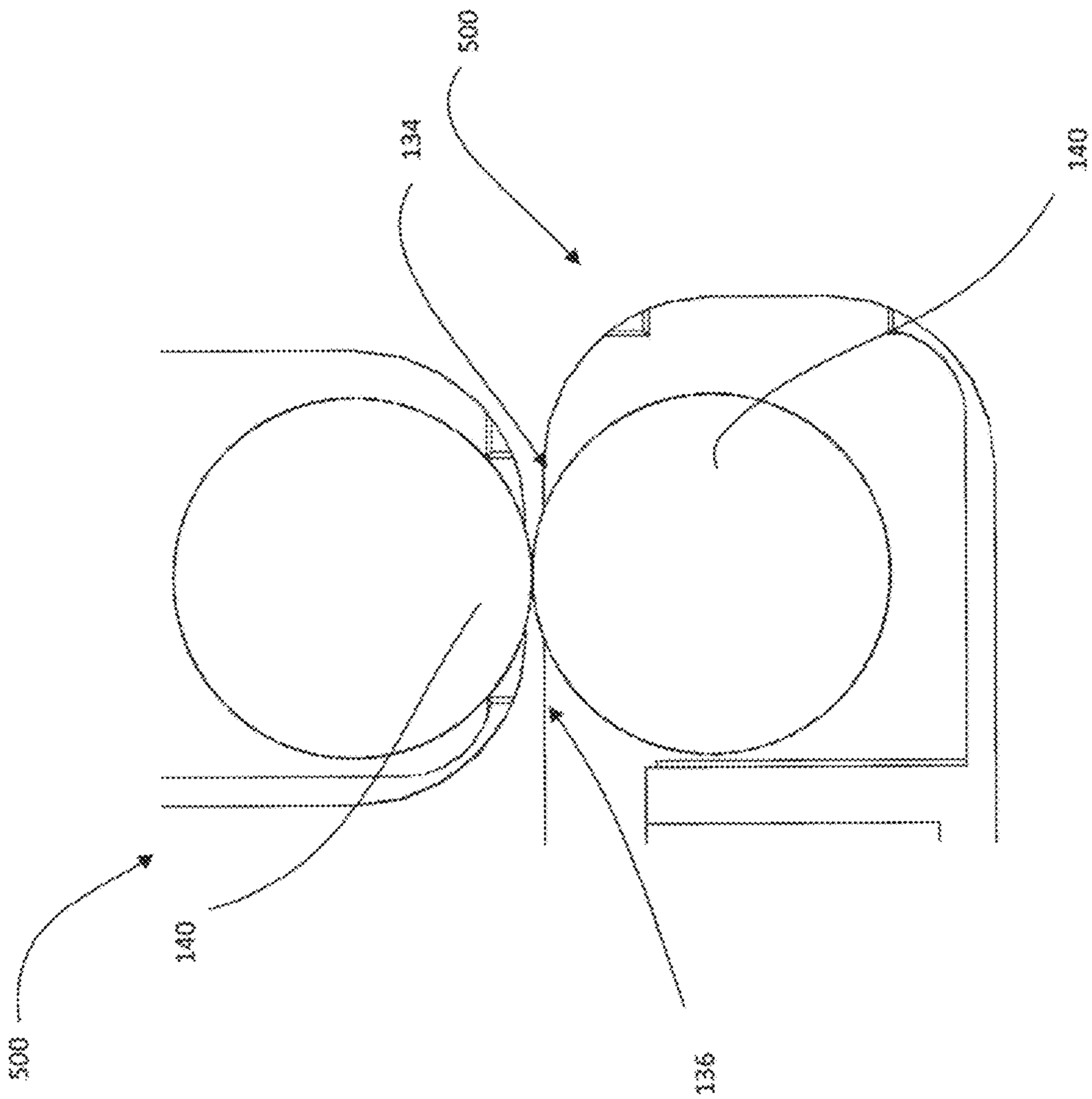

FIG. 14C

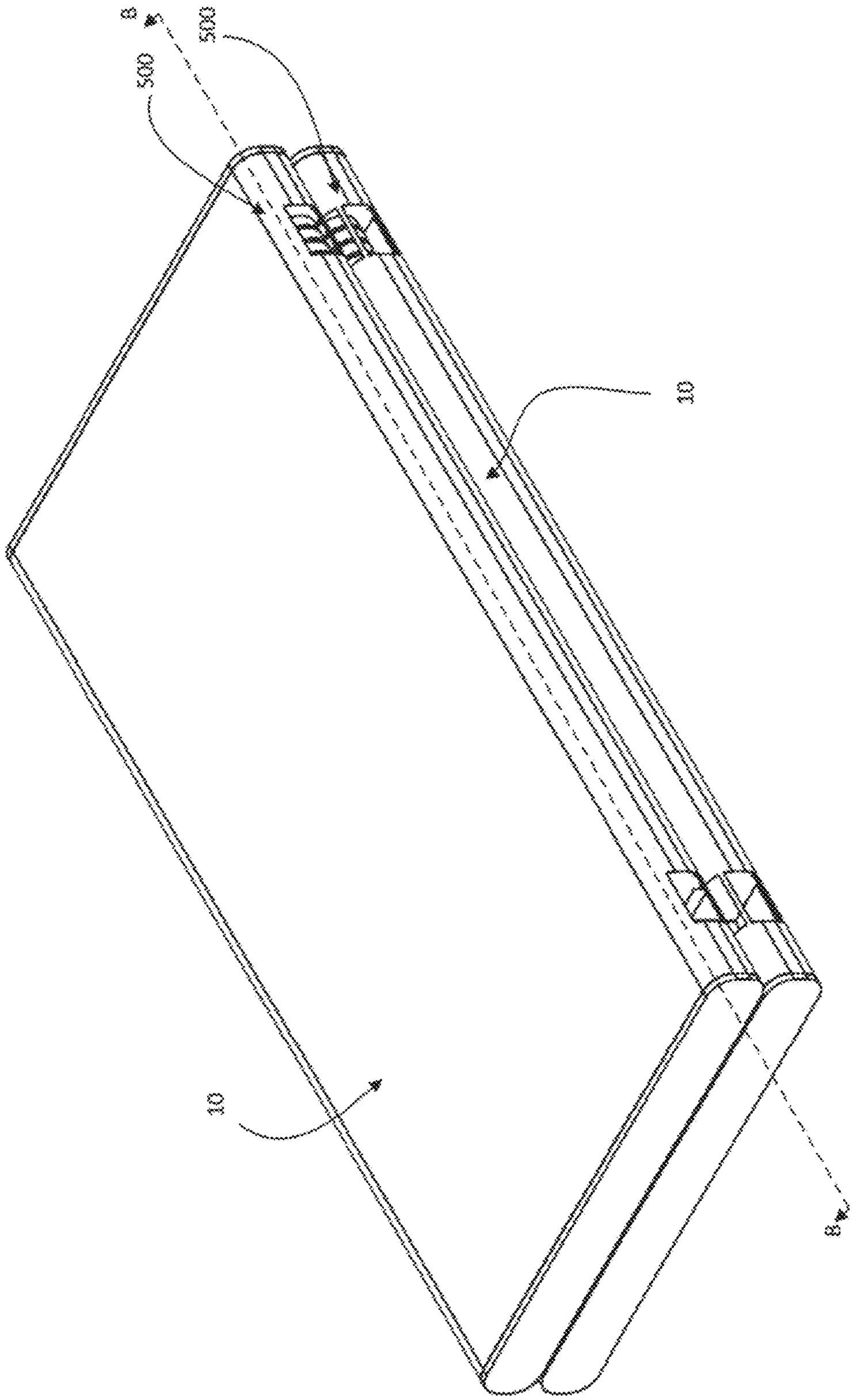

FIG. 15A

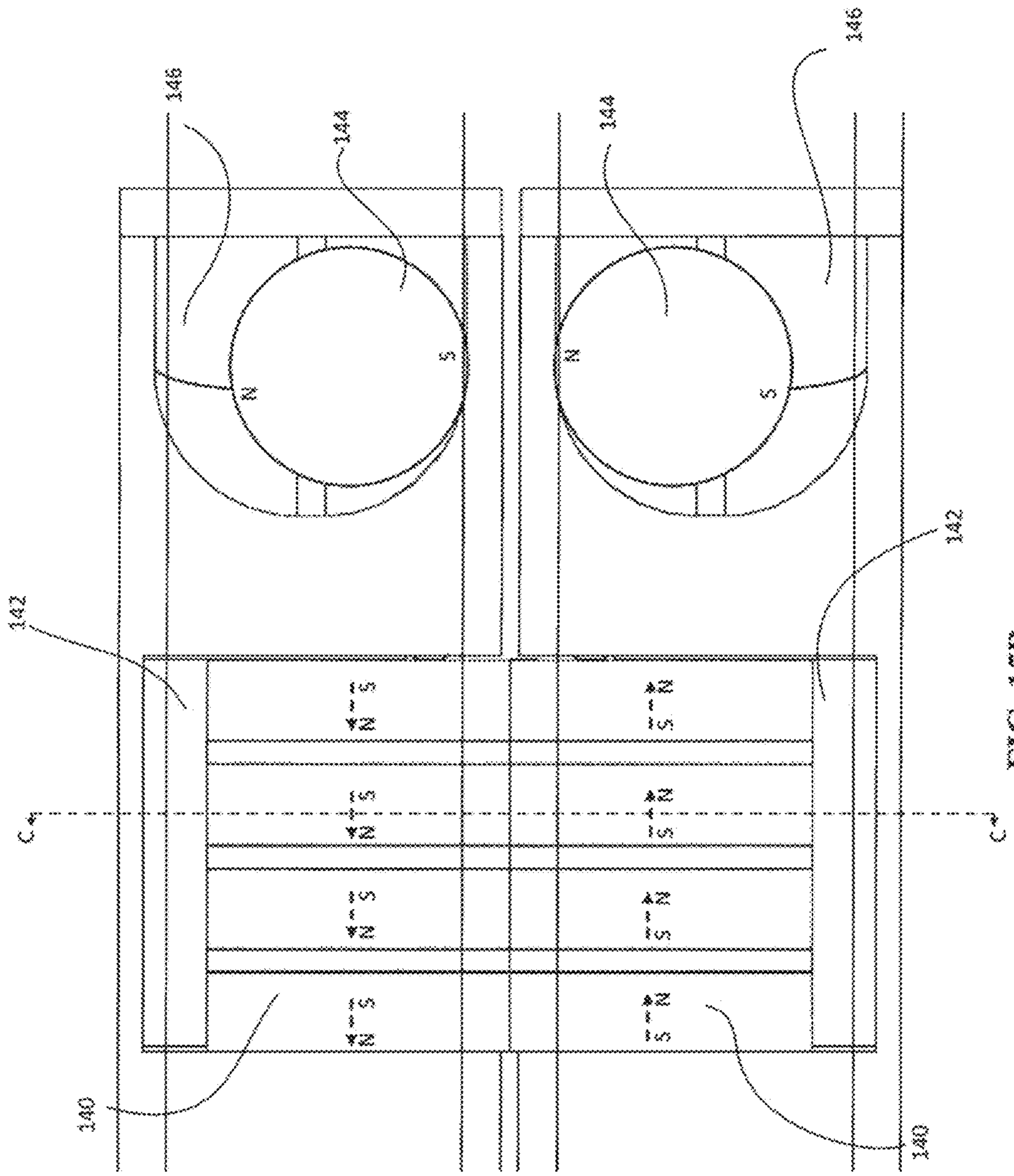

FIG. 15B

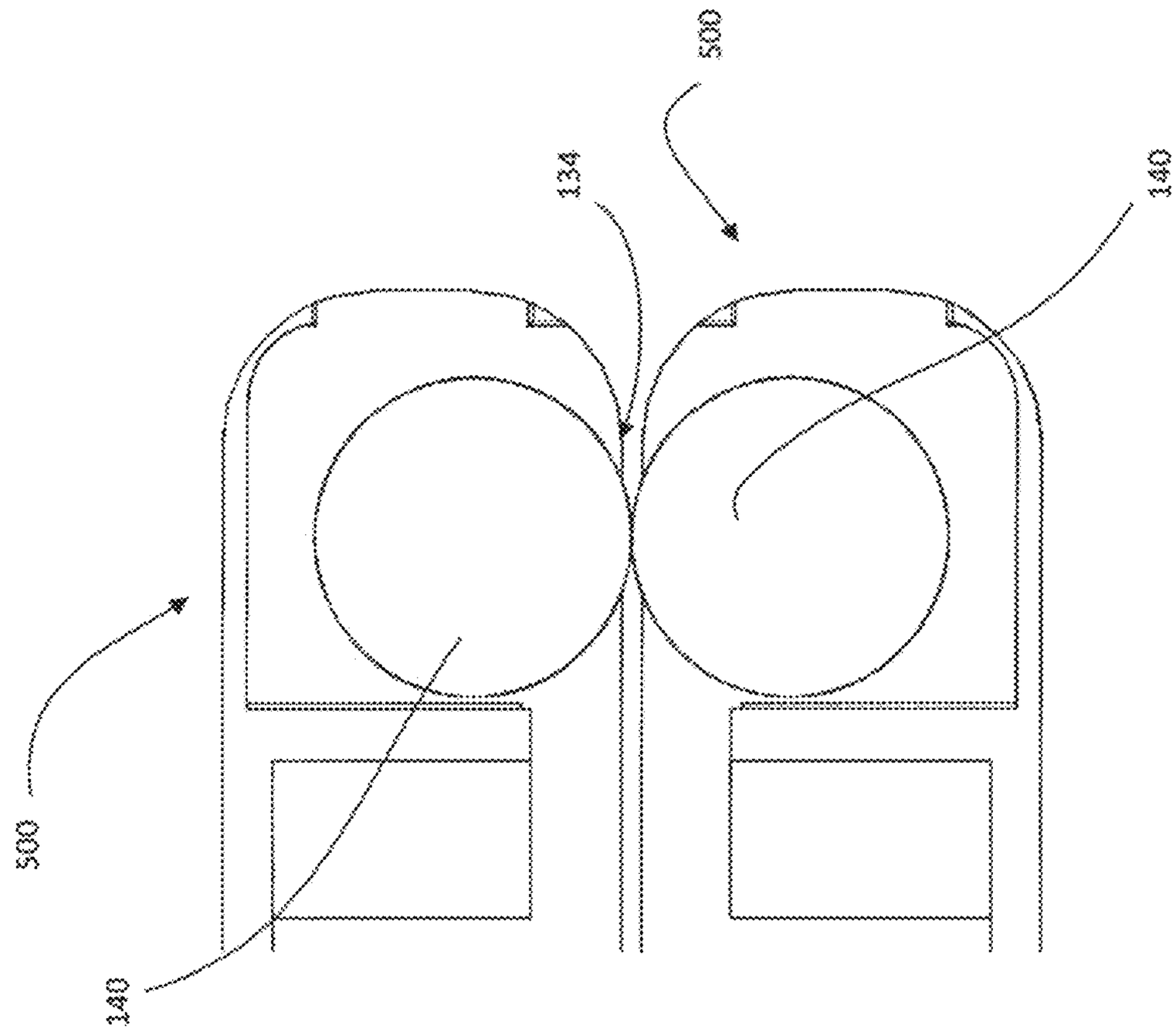

FIG. 15C

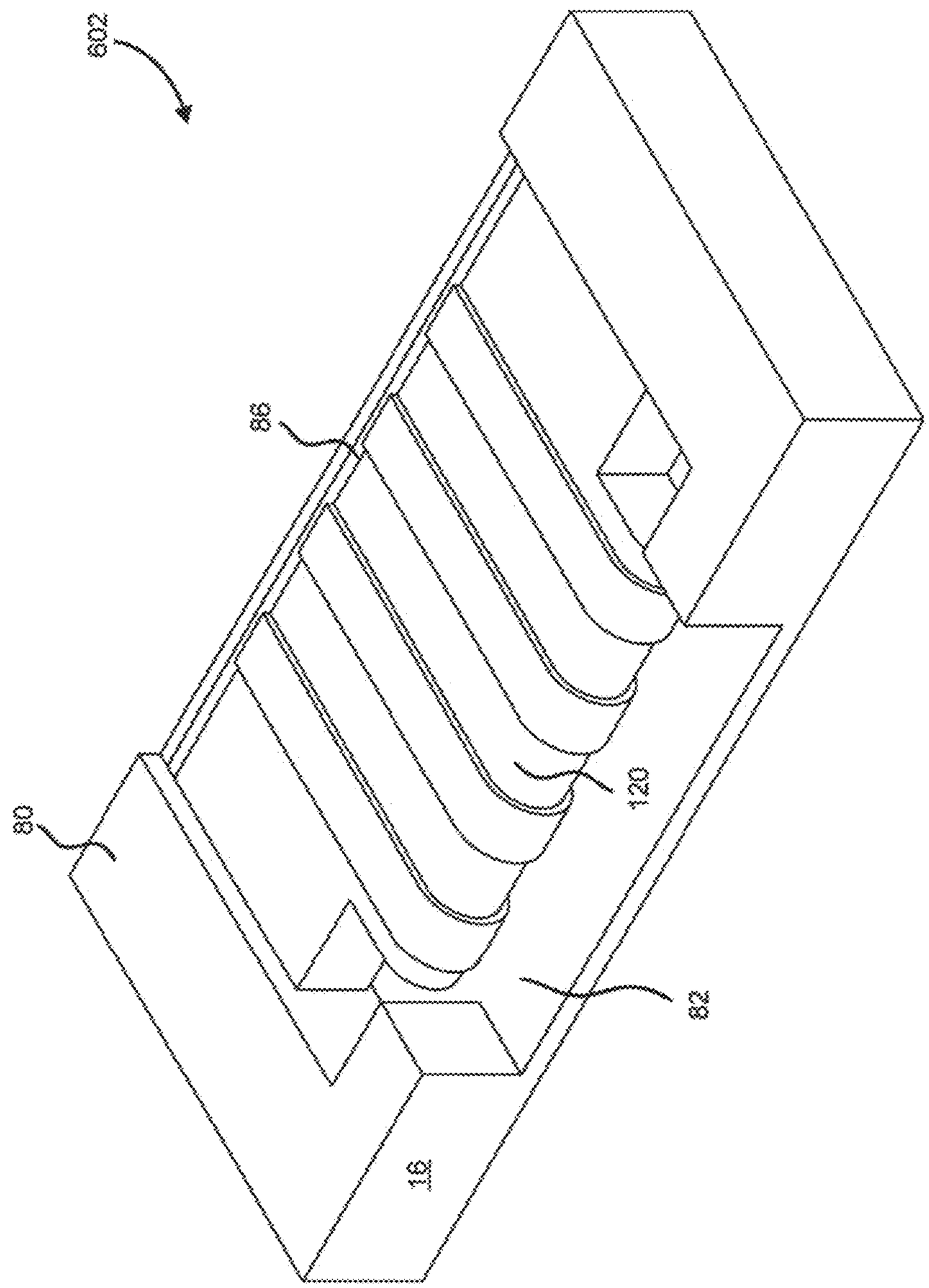

FIG. 16A

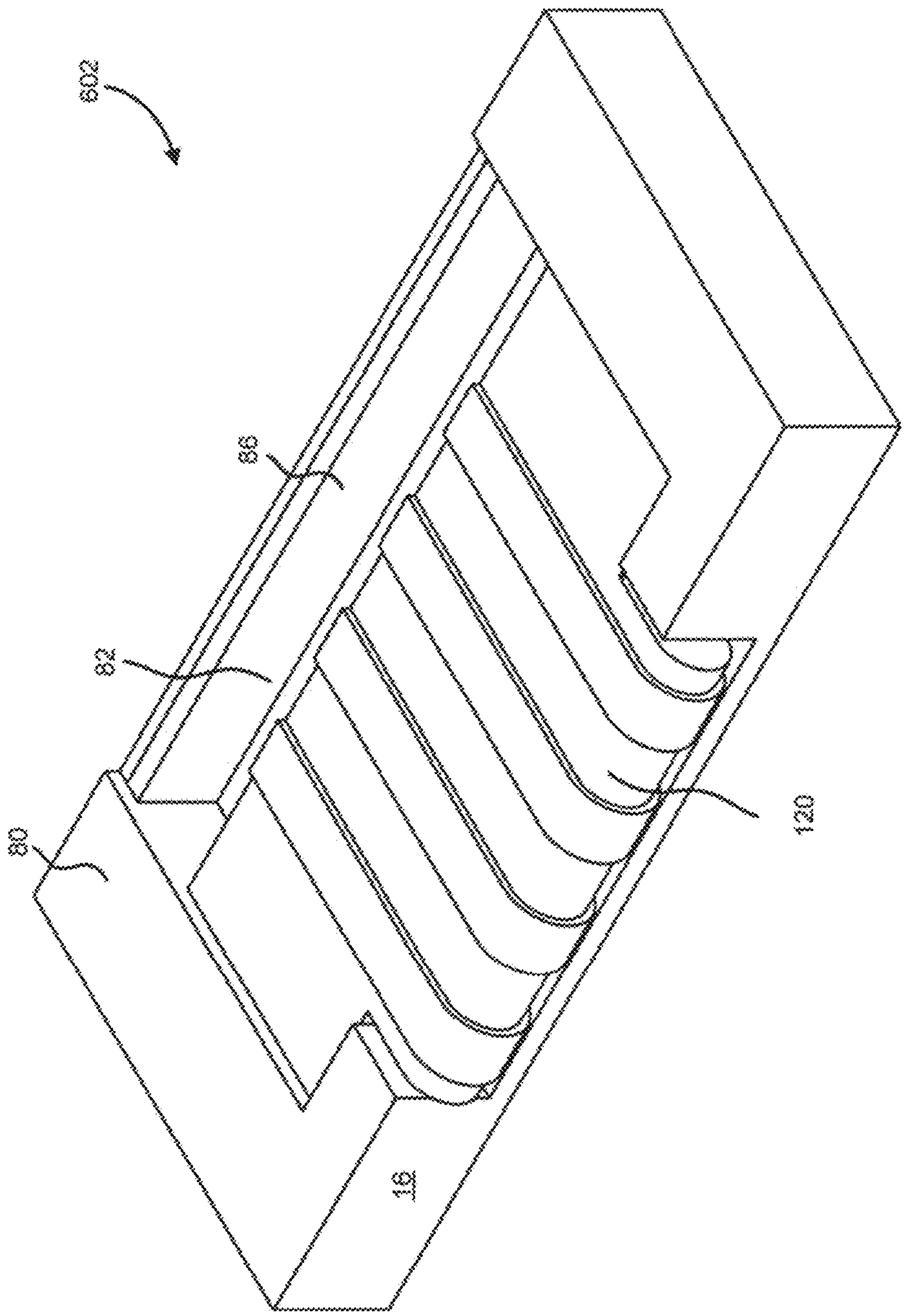

FIG. 16B

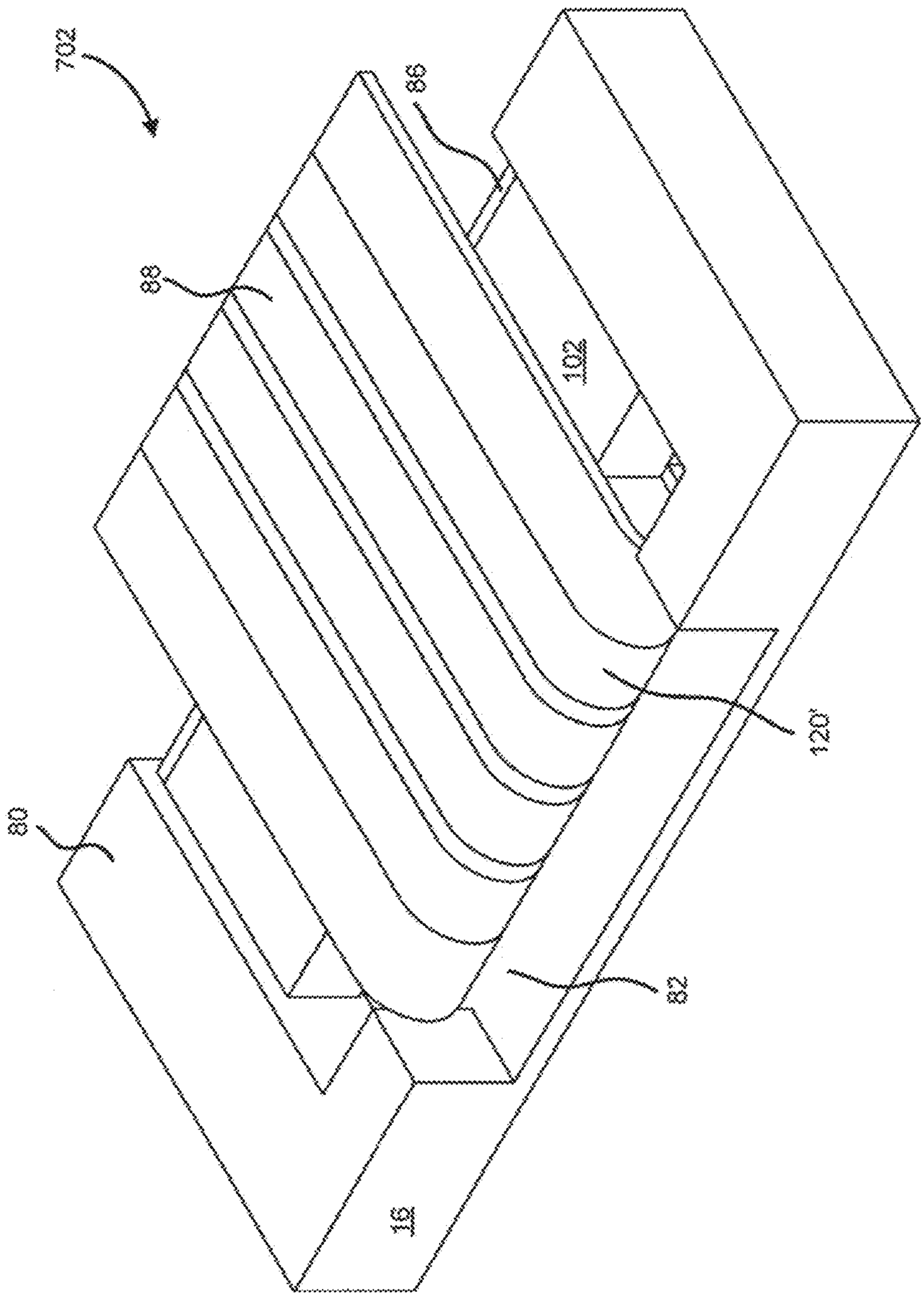

FIG. 17A

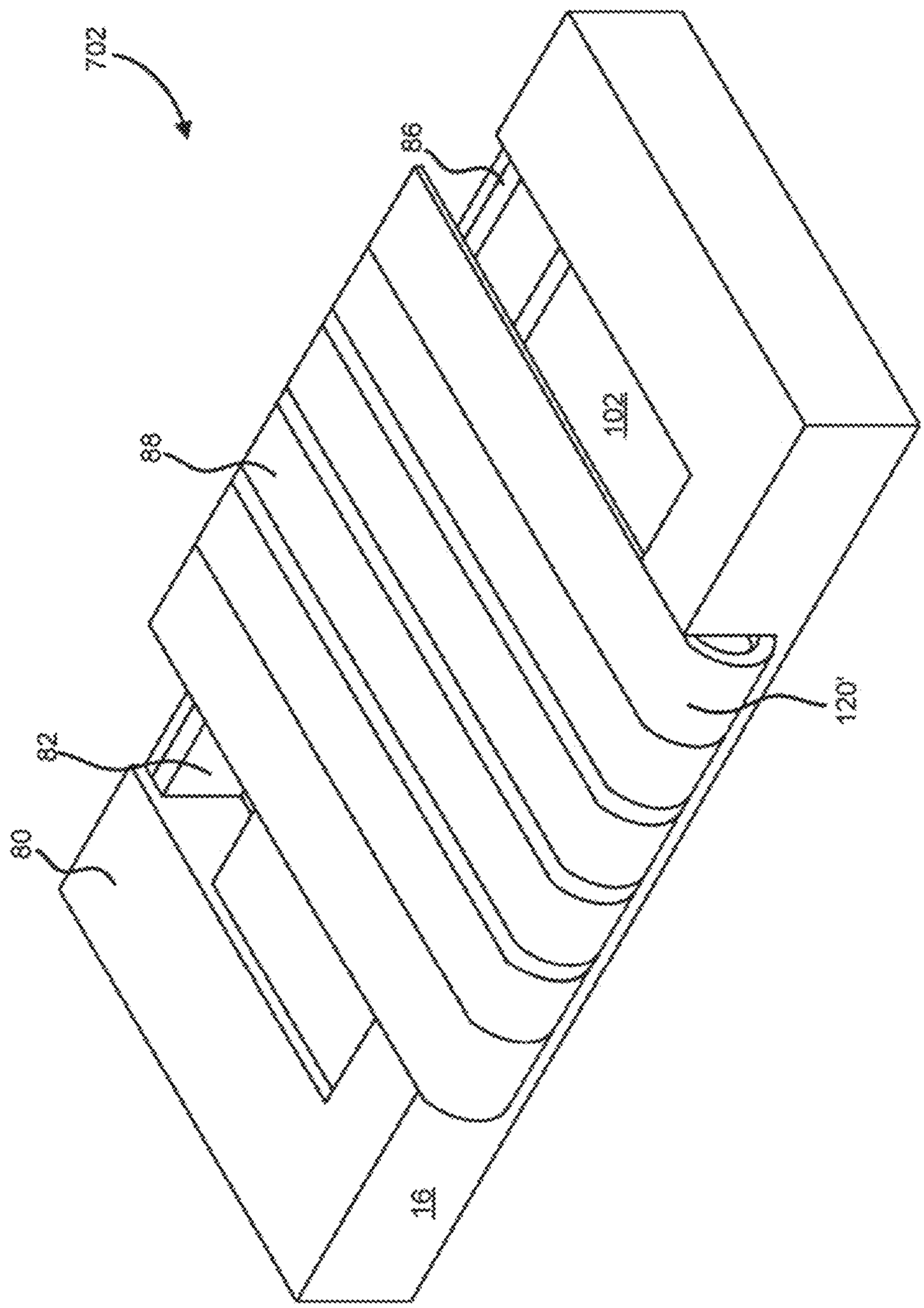

FIG. 17B

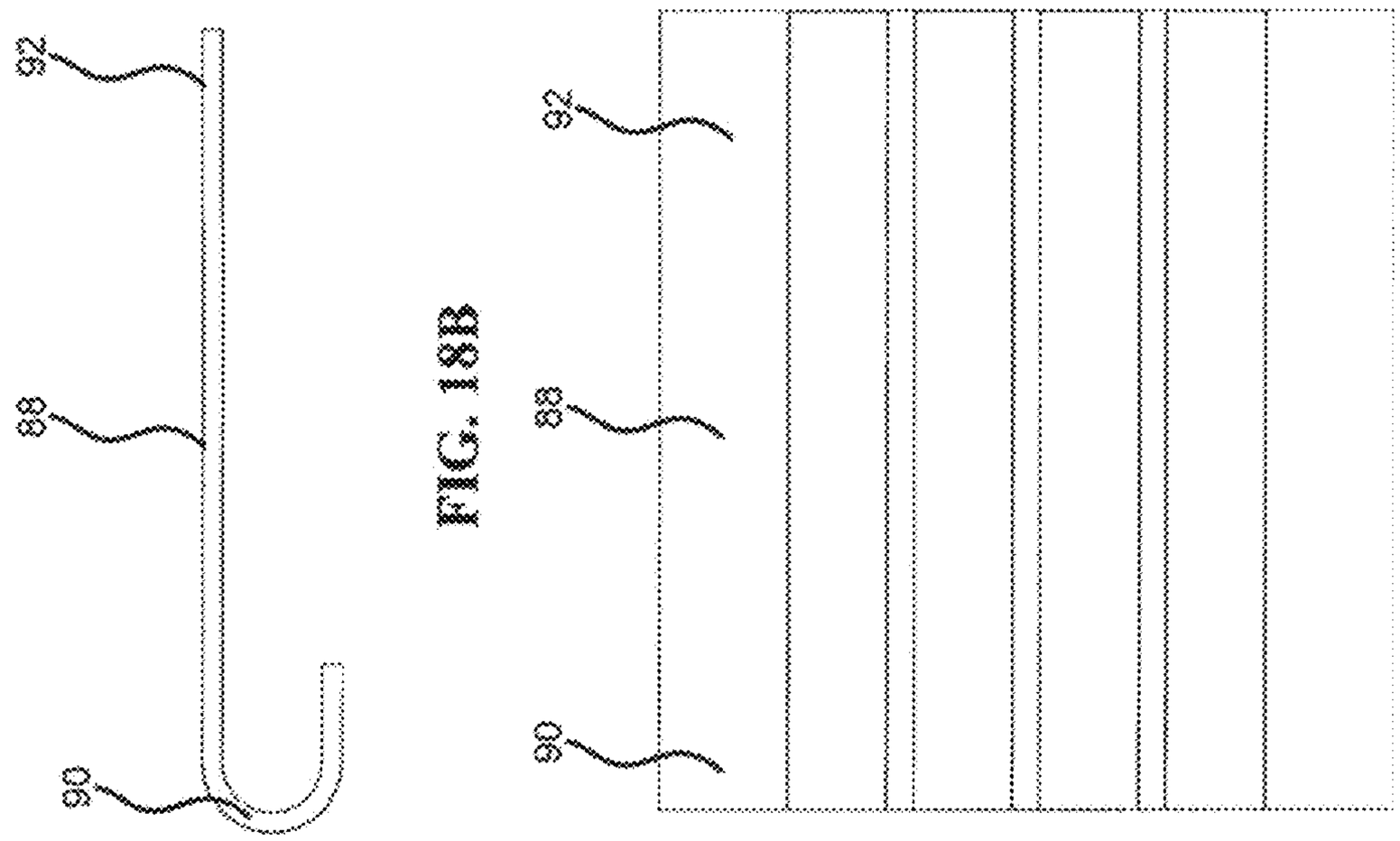

FIG. 18B

FIG. 18C

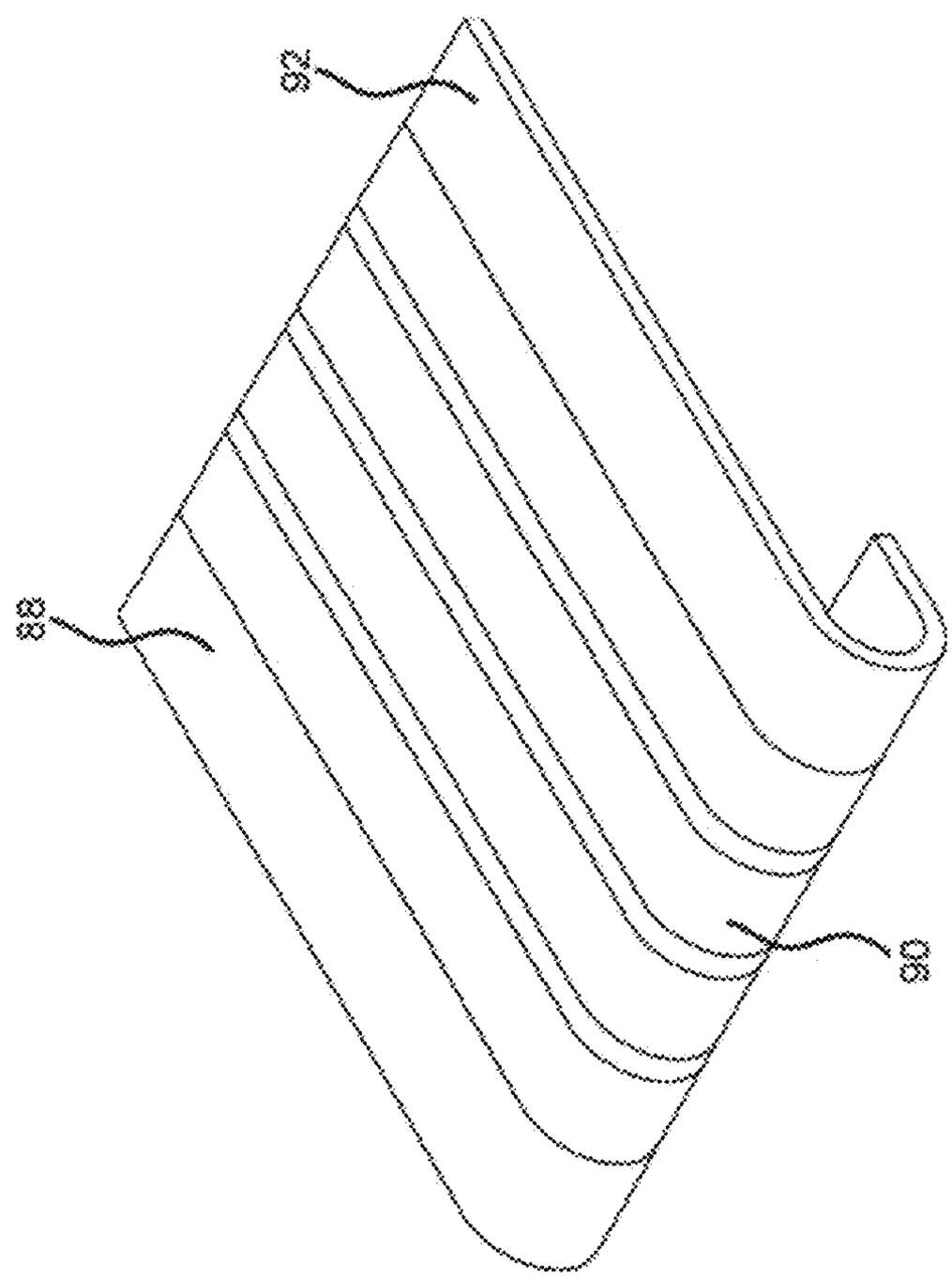

FIG. 18A

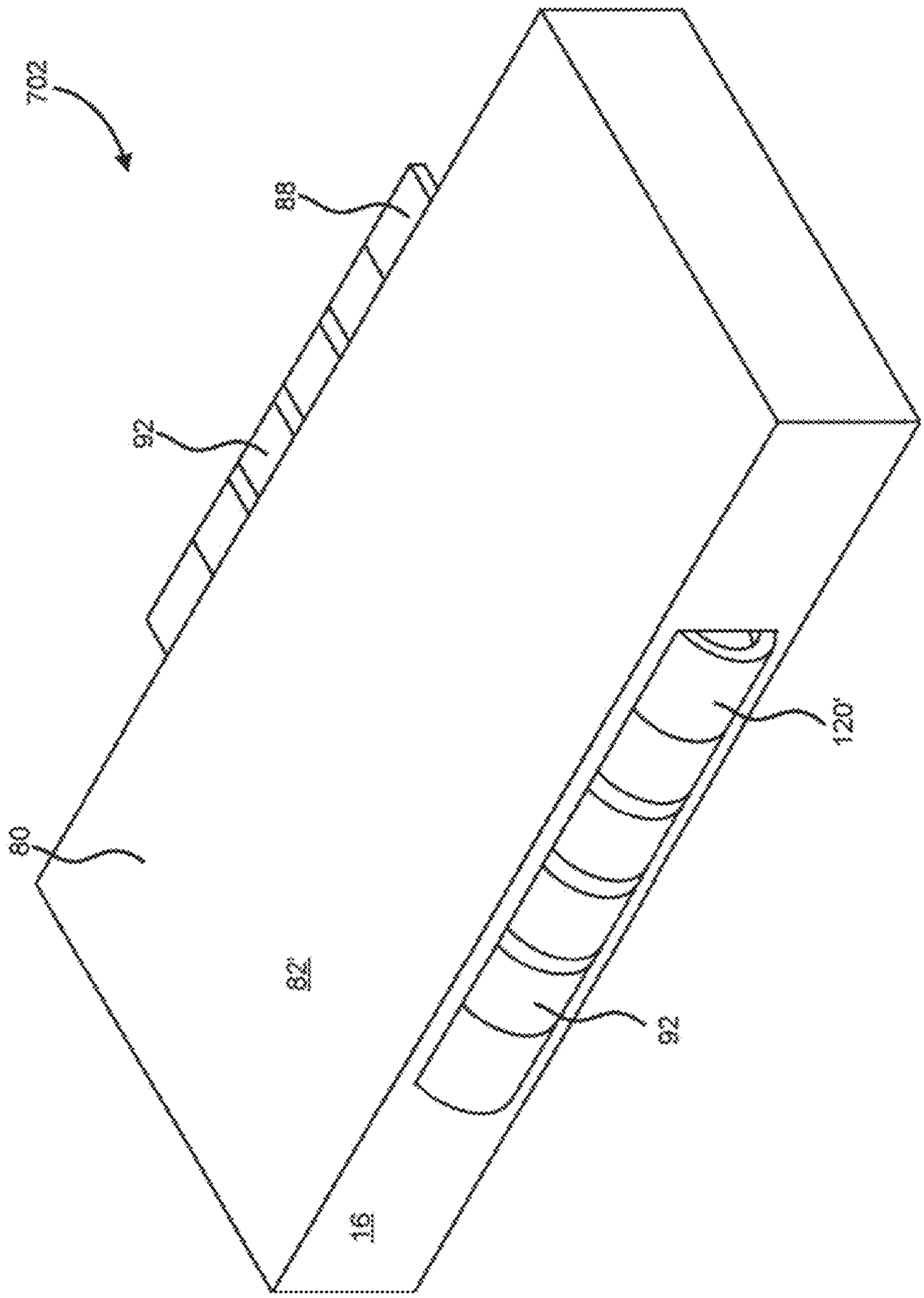

FIG. 19A

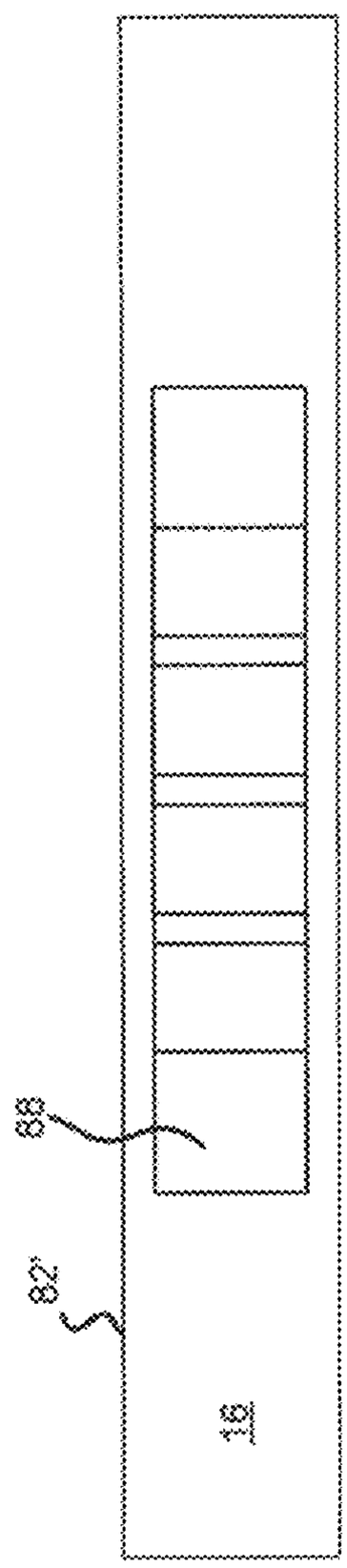

FIG. 19B

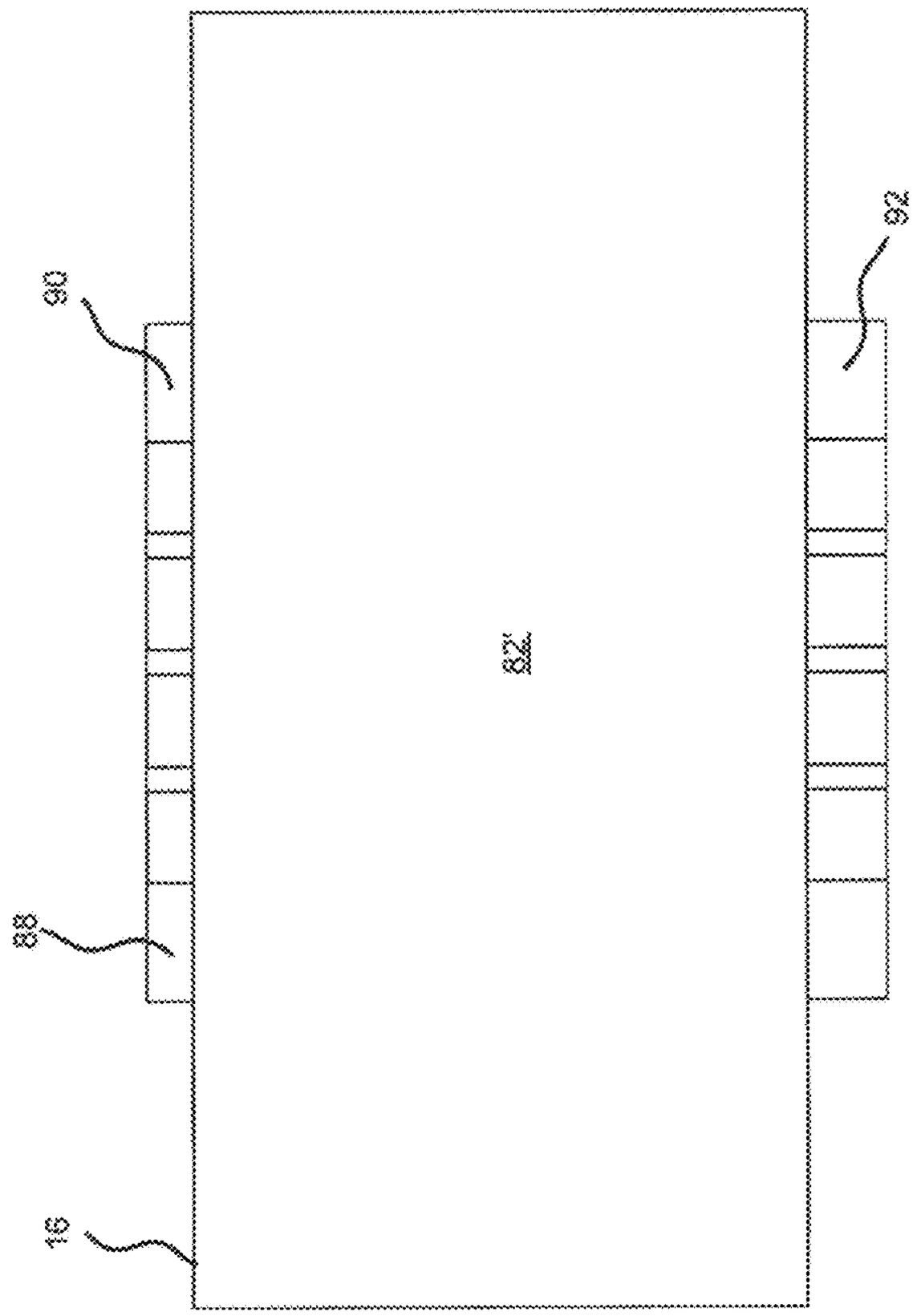

FIG. 19C

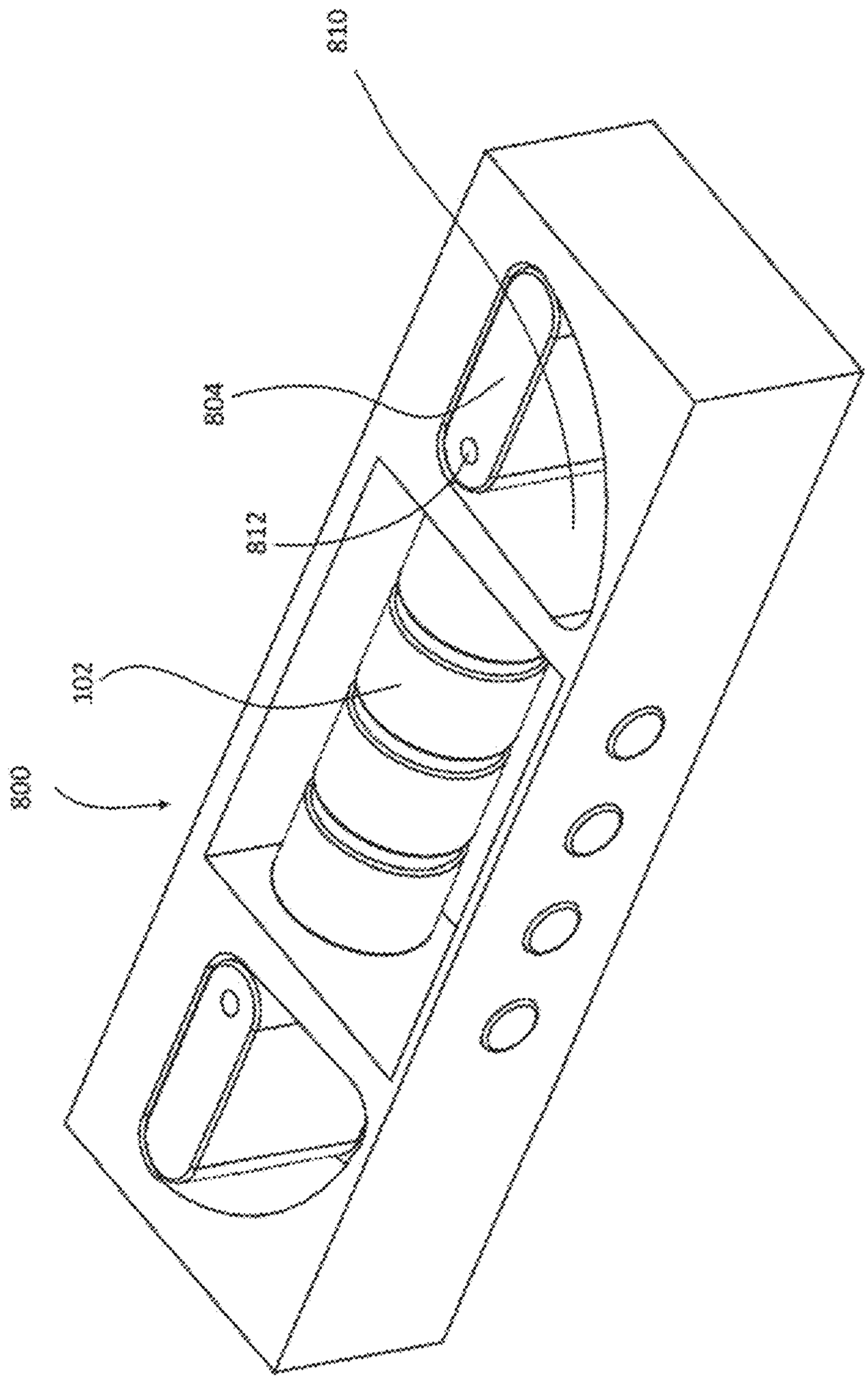

FIG. 20A

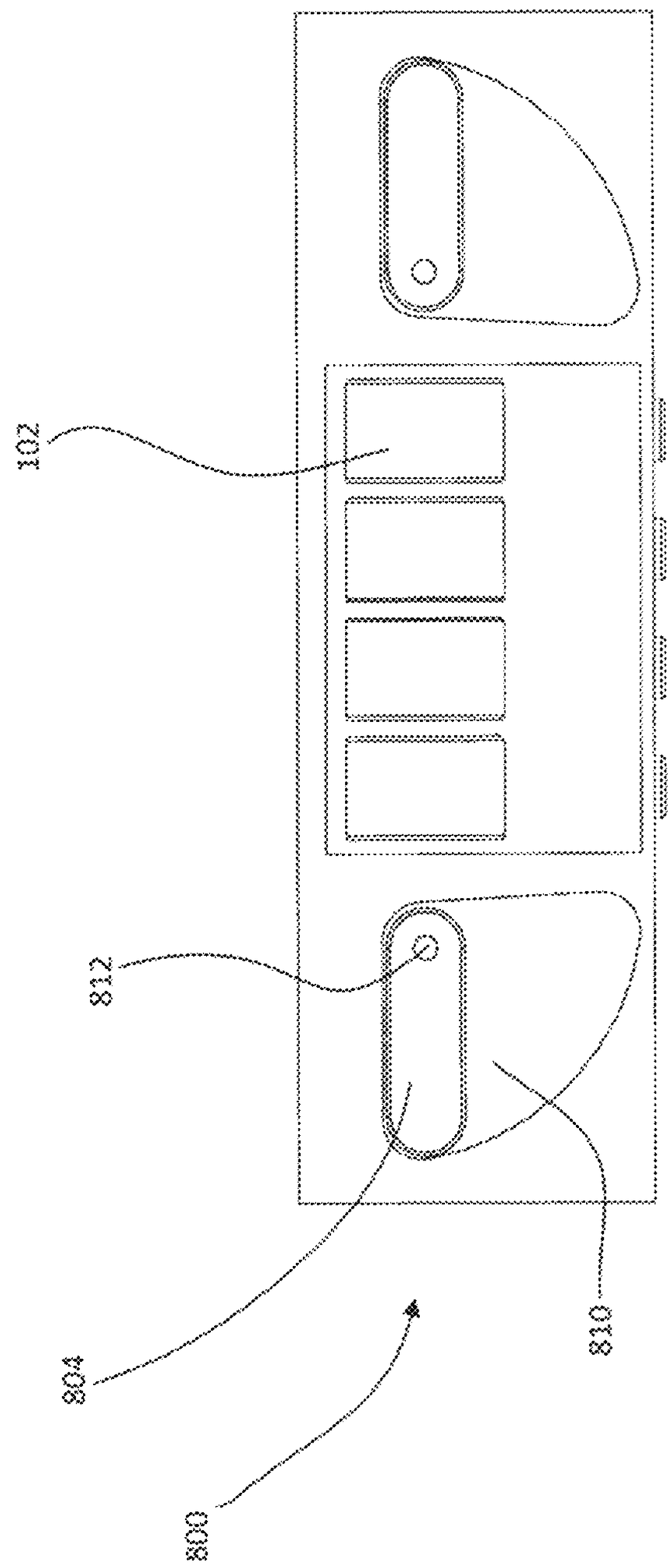

FIG. 20B

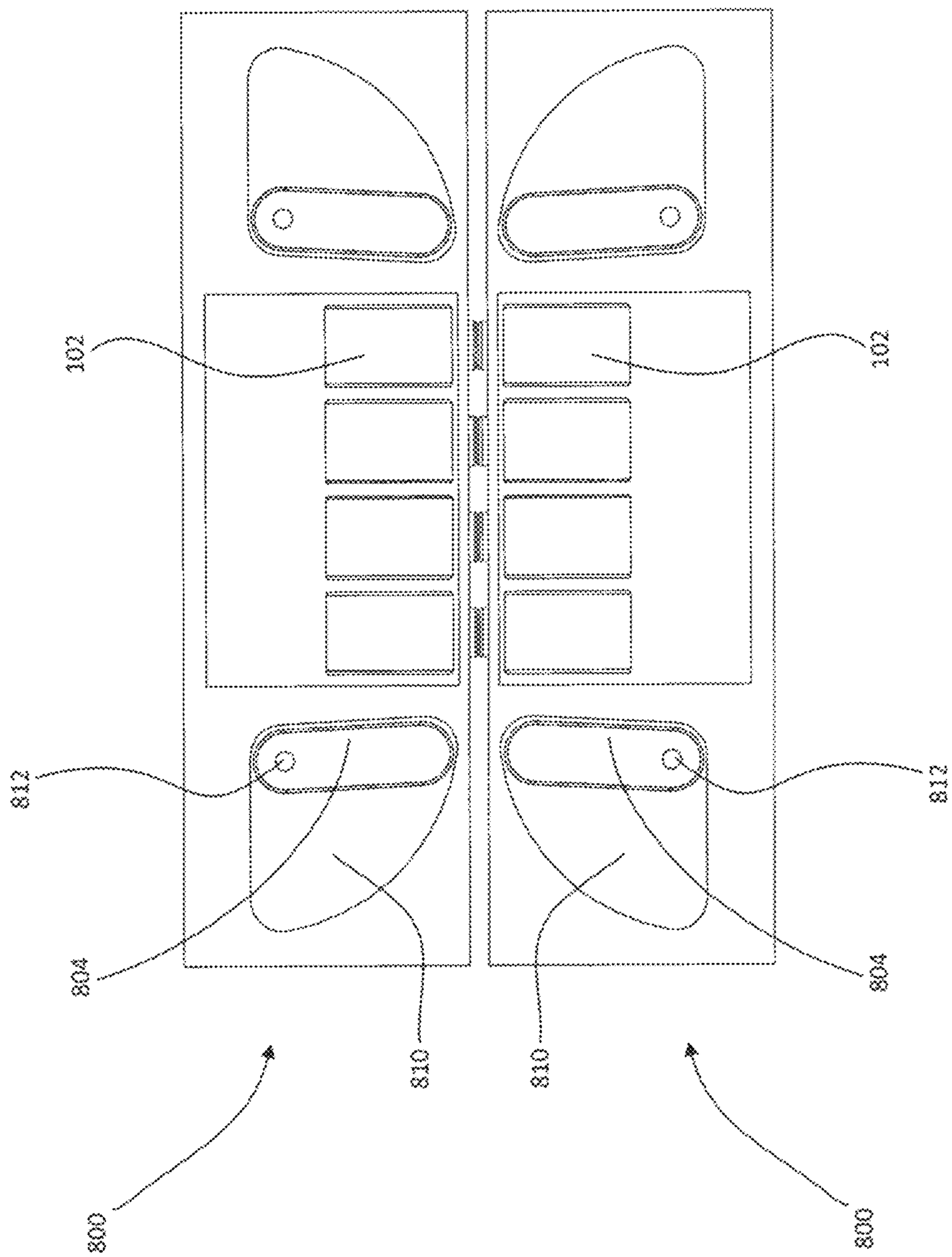

FIG. 20C

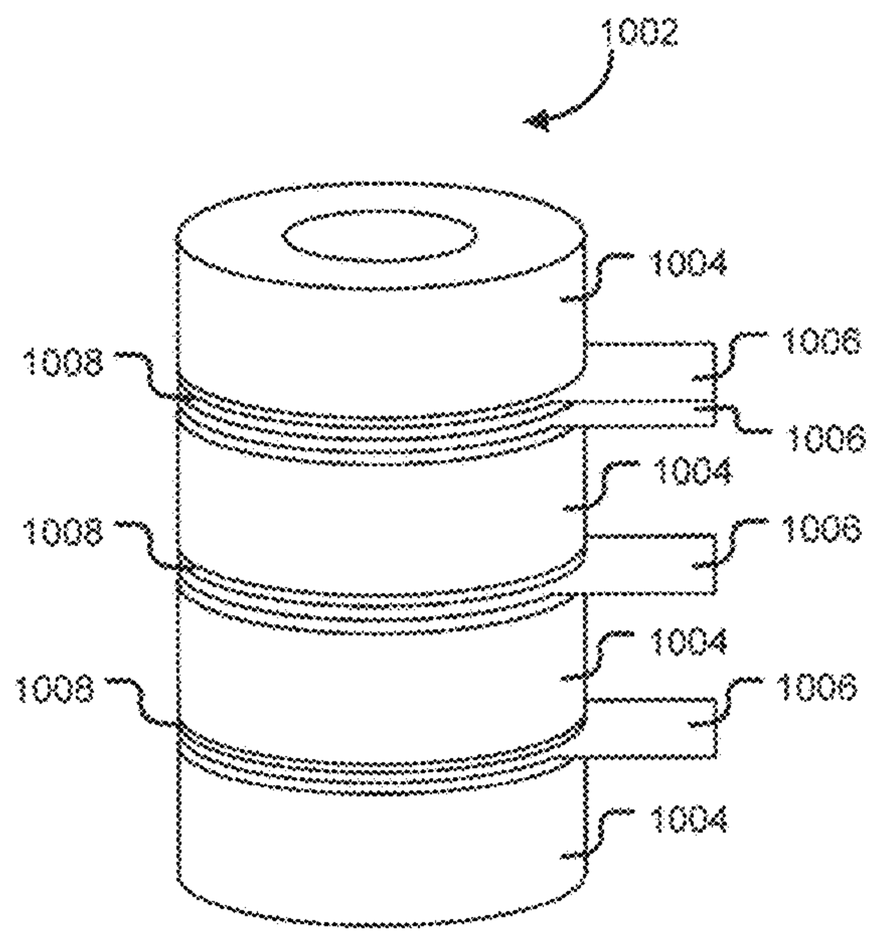

FIG. 21A

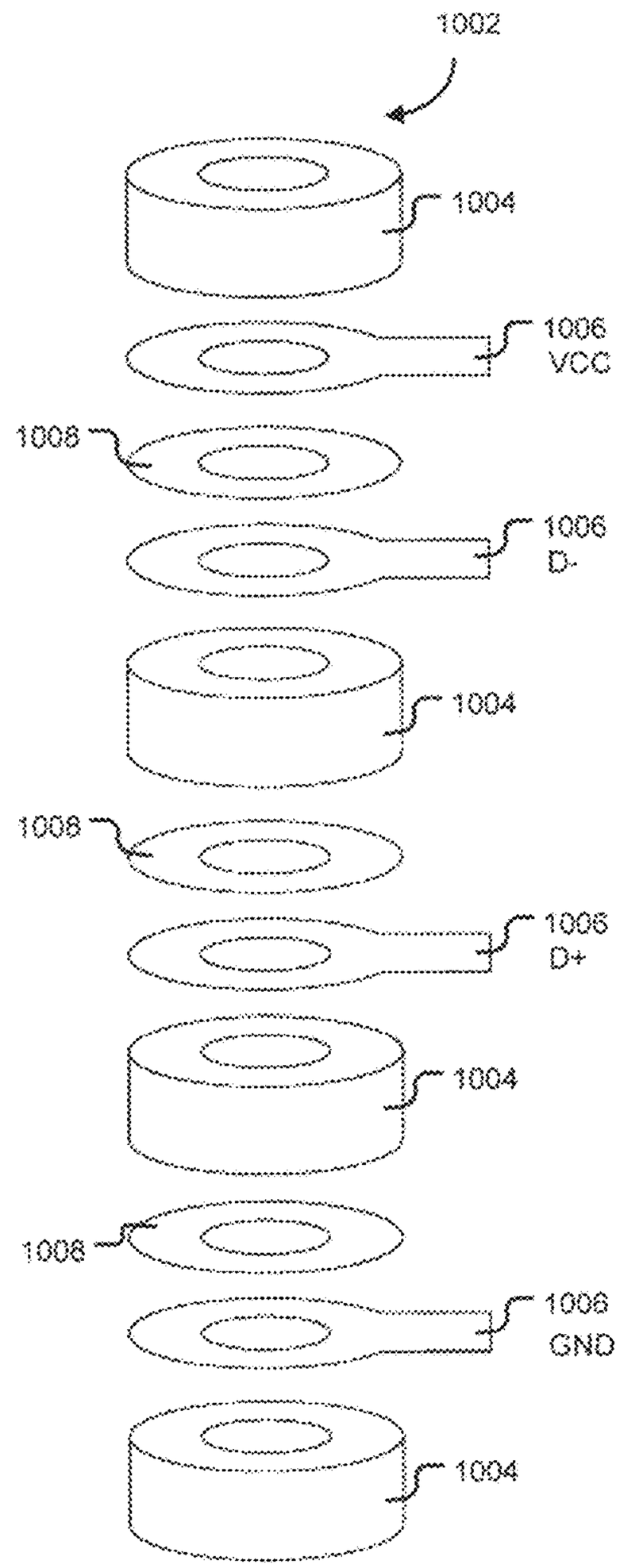

FIG. 21B

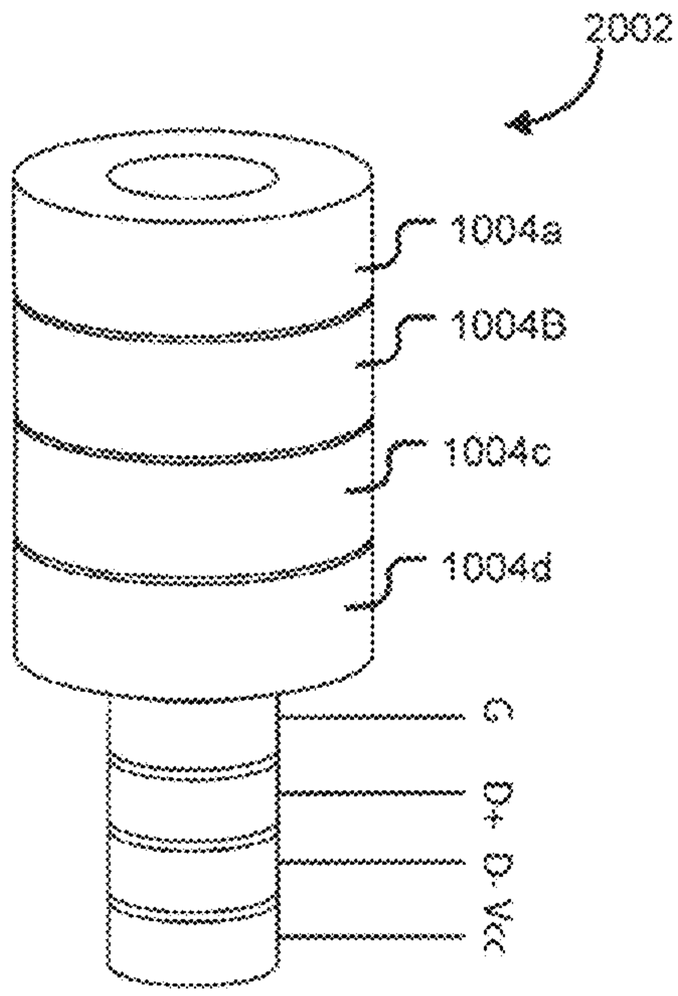

FIG. 22A

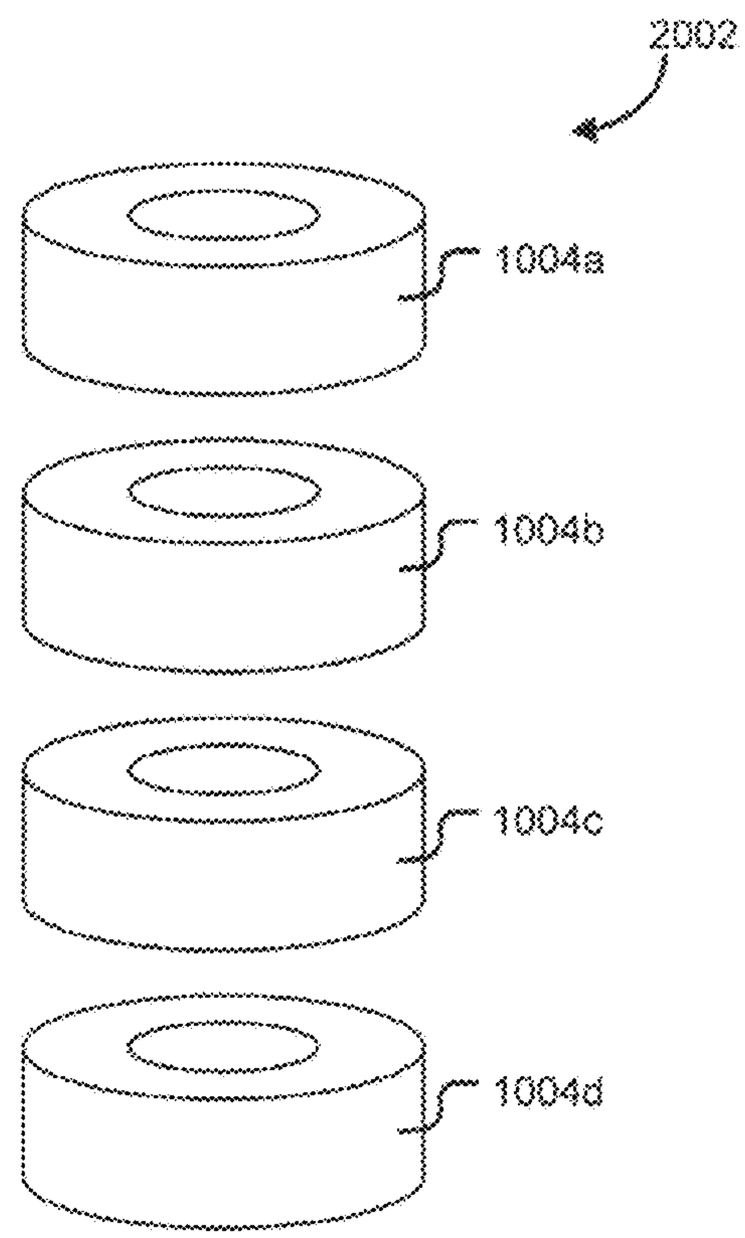

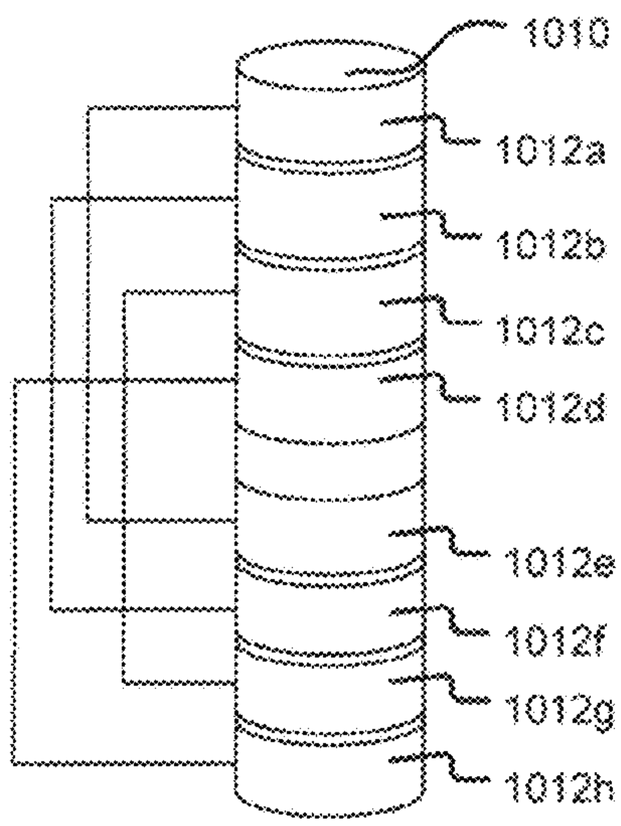

FIG. 22C

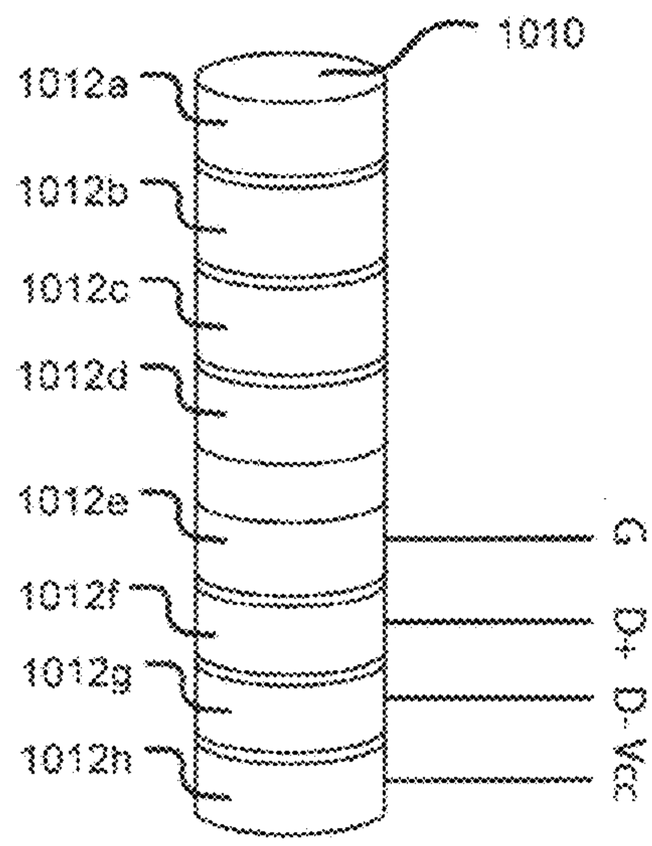

FIG. 22B

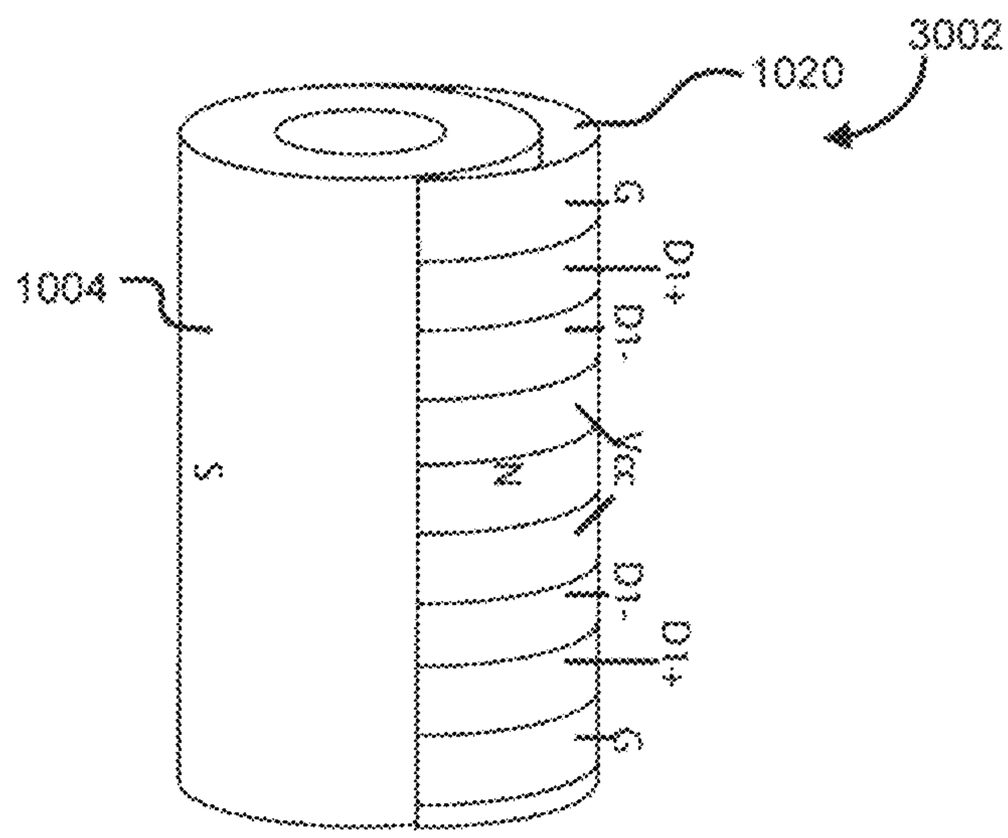

FIG. 23A

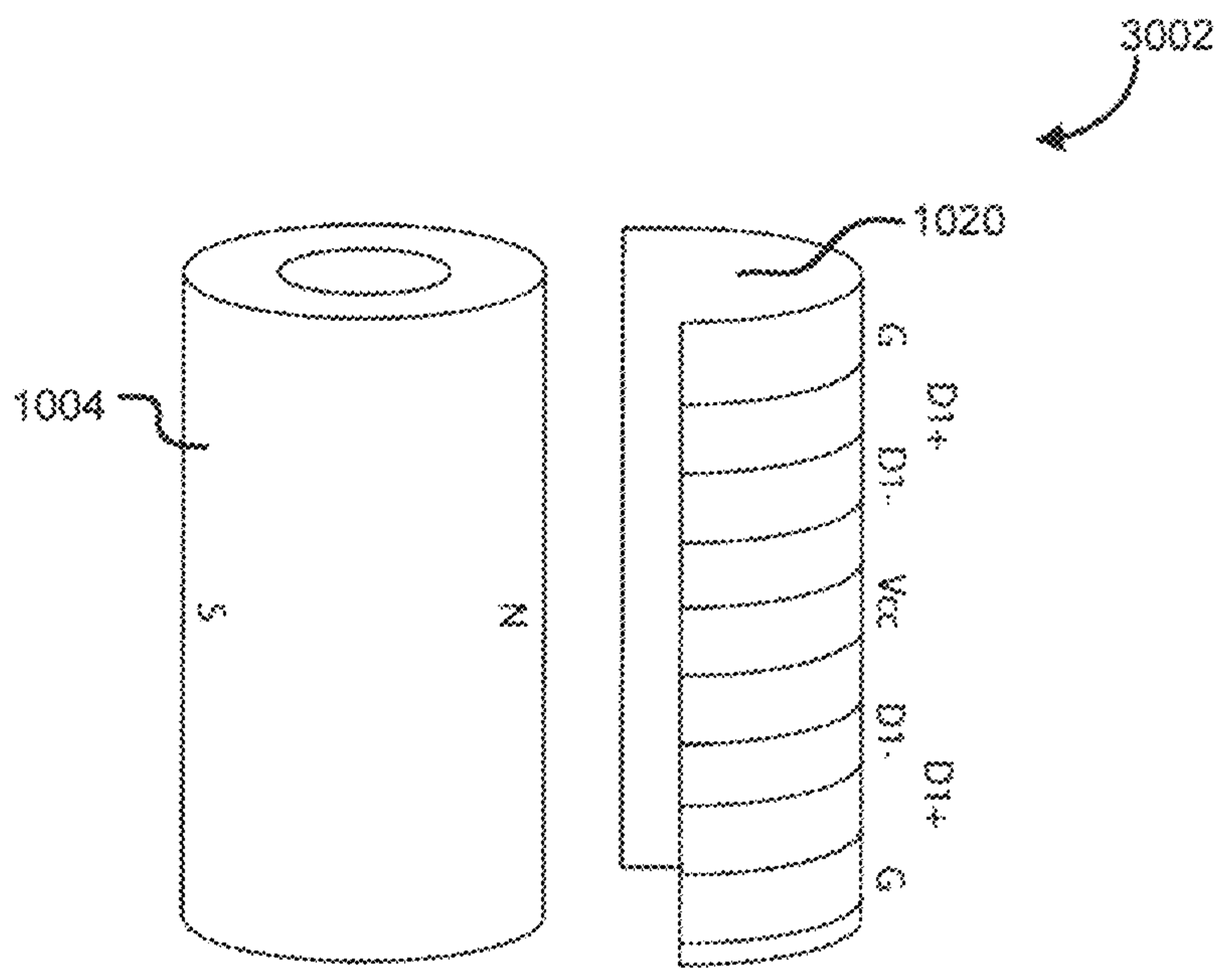

FIG. 23B

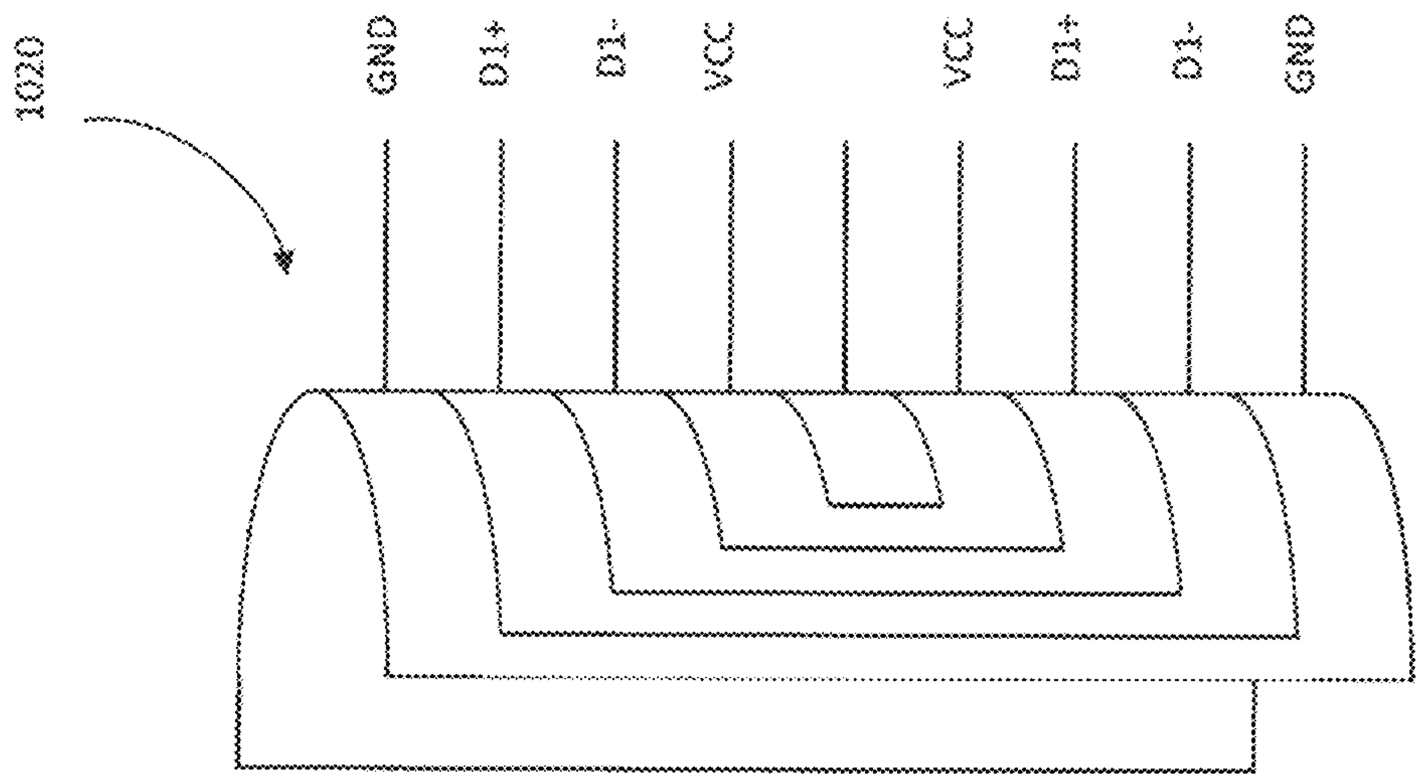

FIG. 24B

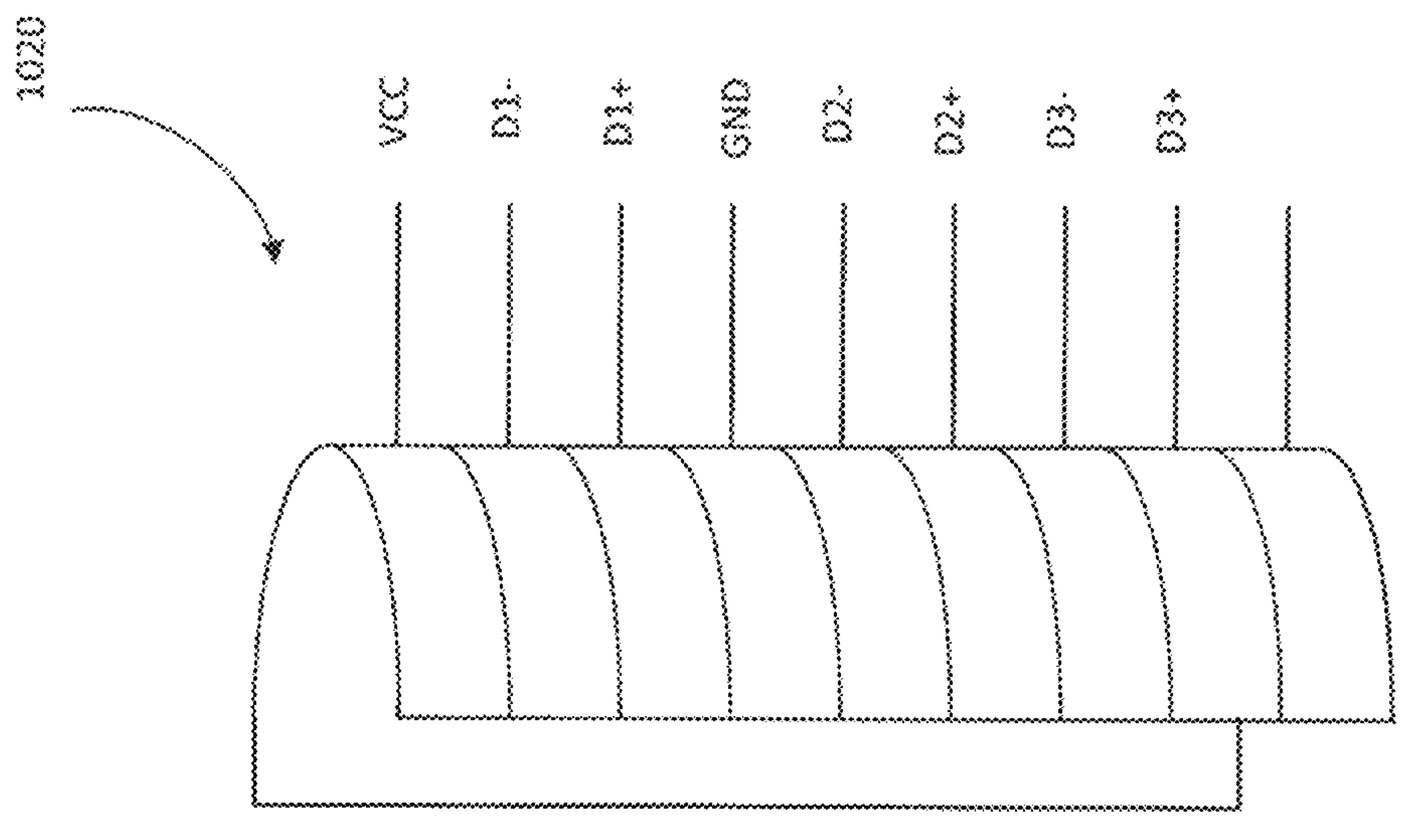

FIG. 24A

CONNECTORS WITH MOVABLE MAGNETIC COMPONENTS AND METHOD OF CONNECTING DEVICES

CROSS-REFERENCE TO RELATED APPLICATIONS

This application claims priority from U.S. provisional patent application No. 62/065,969, filed Oct. 20, 2014 and U.S. provisional patent application No. 62/140,119, filed Mar. 30, 2015 both of which are incorporated herein by reference in their entirety.

FIELD

This disclosure relates to magnetic connectors for connecting devices to one another.

BACKGROUND

Mobile electronic devices (e.g. mobile phones, tablet computers, laptop computers, or the like) are usually provided with a plurality of connection options which allow the devices to communicate with one another electronically, or to supply energy to the internal battery to recharge the battery, or to add functionality to the device, such as connecting a peripheral device (e.g., keyboard, mouse, speakers, or the like).

Connection of devices mechanically and/or electrically integrates the multiple devices to provide complementary functions. To establish such connections it is necessary to orientate the devices relative to one another and to facilitate mechanical and/or electrical communication between the devices, e.g., by way of a contacts, ports, sockets, and other interfaces, which may be collectively referred to as connectors. The relative orientation of the devices is obtained through mechanical connections. It is desirable for these mechanical connections to be robust, simple to use, and aesthetically pleasing.

Electrical communication between the devices is typically provided either through wires or through wireless communications. Wires or cables are cumbersome to carry and increase the physicality of the devices. Provision must also be made on the device to permit connection of the cables to the device, which again presents aesthetic challenges to the design of the device. Wireless connections are less secure, with the possibility of eavesdropping on communications, require more energy and therefore consume more power from the battery and are subject to interference from external sources.

Therefore, it is desired to provide an improved connector that obviates or mitigates some or all of the above disadvantages.

SUMMARY

An example connector for an electronic device, comprises: a housing having a peripheral surface; first and second guides defining first and second paths, respectively, within the housing; a magnetic contact assembly received in the housing, the contact assembly magnetically movable along the first path between a first, extended position for joining the connector in data communication with an adjacent connector, and a second position withdrawn from the peripheral surface; a magnet received in the housing, and movable by attraction to an adjacent connector along the second path, from a retracted position to an extended position closer to the peripheral surface and farther from the first path for magnetically holding the connector to the adjacent connector; the second channel configured so that the magnet and the magnetic contact assembly magnetically bias one another along the paths to the retracted position and the second position, respectively.

A method of connecting electronic devices, comprises: positioning a connector of a first device adjacent a connector of a second device; magnetically drawing a magnet of the first device toward the second device to magnetically hold the first and second devices together, thereby overcoming a magnetic bias between the magnet and a contact assembly of the first device; and magnetically drawing the contact assembly toward the second device to form a data connection.

BRIEF DESCRIPTION OF THE DRAWINGS

Embodiments of the invention will now be described by way of example only with reference to the accompanying drawings in which:

FIGS. **1**A, **1**B, and **1**C are perspective views of a pair of electronic devices, in three respective configurations;

FIGS. **2**A, **2**B are schematic views showing components of an electronic device;

FIGS. **2**C, **2**D, **2**E, **2**F, **2**G and **2**H are schematic views showing locations of connectors on an electronic device;

FIG. **3**A is a top view of a connector with biasing side magnets; and

FIG. **3**B is a schematic view of two connectors of FIG. **3**A when engaged;

FIG. **3**C is a perspective view of the connector of FIG. **3**A;

FIG. **3**D is a perspective cross-sectional view of the connector of FIG. **3**A;

FIG. **3**E is a side cross-sectional view of the connector of FIG. **3**A;

FIG. **3**F is a top view of the connector of **3**A, showing example dimensions;

FIG. **4**A is a top view of another connector with a biasing side magnet; and

FIG. **4**B is a schematic view of two connectors of FIG. **4**A when engaged;

FIGS. **5**A, **5**B and **5**C are top, front and side cross-sectional views, respectively, of another connector;

FIGS. **5**D and **5**E are top and side cross-sectional views, respectively, of two connectors of FIG. **5**A when engaged;

FIG. **6**A is a top view of two connectors when engaged;

FIG. **6**B is a side view of the connectors of FIG. **6**A;

FIGS. **6**C and **6**D are perspective views of another connector;

FIGS. **7**A and **7**B are perspective views of another connector, when disengaged and engaged, respectively;

FIGS. **8**A, **8**B and **8**C are perspective, top and side views, respectively, of a magnet of the connector of FIG. **7**A;

FIGS. **9**A, **9**B and **9**C are perspective, front and top views, respectively, of another connector;

FIGS. **10**A, **10**B and **10**C are perspective views of another connector;

FIGS. **11**A, **11**B and **11**C are perspective, top and side cross-sectional views of another connector;

FIGS. **11**D and **11**E are side cross-sectional views of two connectors of FIG. **11**A when engaged in two different orientations;

FIG. **12**A is a perspective view of a device including another connector;

FIGS. **12**B and **12**C are top and side cross-sectional views, respectively, of the connector of FIG. **12**A;

FIG. **13**A is a perspective view of two devices including connectors of FIG. **12**A, engaged in a first orientation;

FIGS. **13**B and **13**C are cross-sectional views of the connectors of FIG. **13**A;

FIG. **14**A is a perspective view of two devices including connectors of FIG. **12**A, engaged in a second orientation;

FIGS. **14**B and **14**C are cross-sectional views of the connectors of FIG. **14**A;

FIG. **15**A is a perspective view of two devices including connectors of FIG. **12**A, engaged in a third orientation;

FIGS. **15**B and **15**C are cross-sectional views of the connectors of FIG. **15**A;

FIGS. **16**A and **16**B are perspective views of another connector, in disengaged and engaged states, respectively;

FIGS. **17**A and **17**B are perspective views of another connector, in disengaged and engaged states, respectively;

FIGS. **18**A, **18**B and **18**C are perspective, side and top views, respectively, of a component of the connector of FIG. **17**A;

FIGS. **19**A, **19**B and **19**C are perspective, front and top views, respectively, of another connector;

FIG. **20**A is a perspective view of another connector in a disengaged state;

FIG. **20**B is a top view of the connector of FIG. **20**A;

FIG. **20**C is a top view of two connectors of FIG. **20**A in an engaged state;

FIG. **21**A is side view of a connector assembly;

FIG. **21**B is an exploded side view of the connector assembly of FIG. **21**A;

FIG. **22**A is a side view of a connector assembly;

FIG. **22**B is an exploded side view of the connector assembly of FIG. **22**A;

FIG. **22**C is a schematic view of a plug of the connector of FIG. **22**A;

FIG. **23**A is a side view of a connector assembly;

FIG. **23**B is an exploded side view of the connector assembly of FIG. **23**A; and

FIGS. **24**A and **24**B are views of a sleeve of the connector assembly of FIG. **23**A.

DETAILED DESCRIPTION

Referring now to FIGS. **1**A, **1**B and **1**C, a pair of electronic devices **10**, **12** each include a housing **14** defined by contiguous external surfaces **16**. The devices **10**, **12** may be any electronic devices that interface with one another and provide complementary functions. As depicted, each device is a smartphone. In other embodiments, one device may be smartphone and the other an accessory, such as a speaker. As further examples, one of the devices may be a smartphone and the other a viewing screen, or both may be viewing screens, or one may be a screen and the other a keyboard; one device may be a touchscreen enabled device and the other a router to communicate to the Internet, or one may be a camera and the other a smart phone to store images from the camera. These examples are non-limiting and it will be apparent that many mutually complementary devices exist that benefit from interconnection and interoperation.

As shown in FIG. **1**A, the devices **10**, **12** may be arranged side by side with a pair of surfaces **16**, e.g. lateral surfaces, juxtaposed, typically when in use, or, as shown in FIG. **1**B, in a stacked configuration with a different pair of surfaces, e.g. front and back surfaces, juxtaposed for storage or for alternative functions.

Devices **10**, **12** include connectors **100** at each corner of their respective housings. As will be described in further detail below, each connector may include one or more magnets movably mounted within the respective device housing **14**. Such magnets may be made from rare earth materials, such as Neodymium-Iron-Boron (NdFeB), Samarium-cobalt, as are generally available. Such magnets may also be made from iron, nickel or other suitable alloys. Alternatively or additionally, each connector may include one or more members susceptible to movement by magnetic fields, e.g. metallic or ferromagnetic members. Indicators may be incorporated into the housing **14** to provide an indication of the state of the connectors **100** (e.g., the location or orientation of a magnet). The indicators may be conveniently made from a magnetically transparent material, such as aluminum or copper that also enhances the aesthetics of the casing.

Devices **10**, **12** may be used in a variety of positions. For example, two devices may be placed side-by-side, with lateral surfaces **16** abutting, as shown in FIG. **1**A. Devices may also be placed on top of one another, so that a top or bottom surface of one device abuts a top or bottom surface of another device as shown in FIG. **1**B. In some embodiments, devices may be placed side-by-side and pivoted relative to one another, as shown in FIG. **1**C. In each of the depicted orientations, respective connectors **100** of the two devices are positioned proximate one another. Other orientations are possible, as will be apparent.

With the devices **10**, **12** in the position of FIG. **1**A, a connector **100** of one device **10** is positioned adjacent a connector **100** of the other device **12**. In this position, the magnets of the connectors **100** are adjacent one another. So positioned, the magnets of the adjacent connectors **100** may interact to magnetically or electrically engage one another. For example, one or more of magnets may slide or rotate so that that the respective north and south poles of adjacent magnets are aligned. As further detailed below, in some embodiments, once the magnets are engaged, an electrical connection may be formed for providing data and/or power paths. In some embodiments, the electrical connection may be formed through contacts disposed on housings **14**, the contacts being in electrical communication with respective magnets. In another embodiment, the magnets may protrude through respective housing such that they contact each other directly. In other embodiments, electrical connections may be formed through leads carried by the magnets, rather than the magnets themselves.

A significant magnetic force is applied between the components to retain the components in the desired configuration. The magnets of connectors **100** are mounted such that they are free to move under the magnetic forces present from an adjacent magnet and thereby provide the requisite magnetic field strength to retain the components in that configuration.

FIG. **2**A depicts a schematic view of device **10** in greater detail. As noted, device **10** is a smartphone. However, the disclosure herein is applicable to other types of electronic devices, such as a tablet computers, laptop computers, desktop computers, workstations, servers, portable computers, personal digital assistants, interactive televisions, video display terminals, gaming consoles, electronic reading devices, any other portable electronic device, or a combination of these. Device **10** may be integrated with a household appliance (e.g., a fridge, oven, washing machine, stereo, exercise bike, alarm clock, or the like), or a vehicle (e.g., on a vehicle dashboard).

Device **10** has a housing **14** defining front and rear surfaces and peripheral surfaces **16**. Device **10** includes at least one internal circuit **20** which provides certain functions of device **10**. for example, as depicted in FIG. **2**B, internal circuit **20** may include a processor **21**, an input/output (I/O) interface **23**, a network interface such as a Wi-Fi or cellular radio **25**, memory **27**, and a power delivery circuit (not shown) for receiving power from an external input and converting or conditioning it for delivery to other components of device **10**. Components of internal circuit **20** may be formed on a single semiconductor die such as a system-on-chip, or as a plurality of components formed on separate semiconductor chips, mounted to a printed circuit board.

Processor **21** may be any type of processor, such as, for example, any type of general-purpose microprocessor or microcontroller (e.g., an ARM™, Intel™ x86, PowerPC™ processor or the like), a digital signal processing (DSP) processor, an integrated circuit, a programmable read-only memory (PROM), or any combination thereof.

Memory **27** may include a suitable combination of any type of electronic memory that is located either internally or externally such as, for example, random-access memory (RAM), read-only memory (ROM), compact disc read-only memory (CDROM), electro-optical memory, magneto-optical memory, erasable programmable read-only memory (EPROM), and electrically-erasable programmable read-only memory (EEPROM), or the like.

I/O interface **23** enables device **10** to communicate through connectors **100**, e.g., to interconnect with other devices **10**. I/O interface **23** also enables device **10** to interconnect with various input and output peripheral devices. As such, device **10** may include one or more input devices, such as a keyboard, mouse, camera, touch screen and a microphone, and may also include one or more output devices such as a display screen and a speaker.

Network interface **25** enables device **10** to communicate with other devices (e.g., other devices **10**) by way of a network.

Device **10** may be adapted to operate in concert with one or more interconnected devices **10**. In particular, device **10** may store software code in memory **27** and execute that software code at processor **21** to adapt it to operate in concert with one or more interconnected devices **10**. The software code may be implemented in a high level procedural or object oriented programming or scripting language, or a combination thereof. The software code may also be implemented in assembly or machine language.

As noted, device **10** also includes a plurality of connectors **100** for connecting device **10** to external devices. Each connector **100** may be capable of connecting device **10** with, for example, smartphones, speakers, power supplies input/output peripherals or the like. Connectors **100** may be connected to one or more components of internal circuit **20** for data or power transmission. In some embodiments, connectors **100** may for example provide universal serial bus (USB) connections to external devices. Device **10** may act as a host or client device using such connections.

For enhanced flexibility, it will be appreciated that a connector **100** at each corner of the housing **14**, as depicted in FIG. **2**A, is preferred. However, in different devices, it may not be necessary to provide a connector in each corner, but rather distribute the connectors about the housing at convenient locations. FIGS. **2**C-**2**H illustrate, non-exhaustively, a variety of possible locations. Thus, connectors **24** may be located centrally, as shown in FIG. **2**C, inset from each corner as shown in FIG. **2**D or at the corners as described above and shown in FIG. **2**E. It is also possible to arrange the connectors so that only a preferred orientation is available, for example by arranging the connectors at the apexes of a triangle as shown in FIG. **2**F, or only selected areas of the housing **14** as shown in FIG. **2**H. A flexible orientation can be provided by arranging the connectors along a major axis of the housing **14** as shown in FIG. **2**G so that the connection is attained in either of two positions.

As noted above, in some embodiments, the magnets may be utilized to connect the devices both mechanically and electrically.

An example connector **100** is shown in top view in FIG. **3**A, with a top housing surface omitted for purposes of illustration. This example arrangement includes a magnetic contact assembly **101** with four magnets **102** (which may be referred to as "core magnets"), received a connector housing **106** and movable in a path defined by a guide, such as a channel **112**. Connector **100** further includes two side magnets **104**A and **104**B disposed within connector housing **106**. Housing **106** may be formed from suitable materials that are insulating and may be readily shaped, such as, e.g., polybutylene terephthalate (PBT), polyethylene terephthalate (PET), or the like. Housing **106** may be integral with device housing **14** or may be a separate component received within housing **14**. Some embodiments described herein include a discrete connector housing (e.g. housing **106**). In other embodiments, the connector housing is integral with the device housing (e.g. housing **14**). It should be understood that these possibilities are interchangeable. Accordingly, references to a device housing (e.g. housing **14** could be replaced with a discrete connector housing (e.g. housing **106**) and vice-versa. A plurality of external electrical terminals **108** are disposed on the surface **16** of housing **106** for contacting corresponding contacts of another connector in electrical communication. External electrical terminals **108** may be formed from any suitable electrically conductive (e.g., metallic) material.

A plurality of leads **114** are electrically connected to magnets **102**. Each internal contact corresponds to an external terminal **108** and is electrically connected to one or more components of internal circuit **20** (FIG. **2**A). For example, one or more leads **114** may be connected to I/O interface **25** for data communication and one or more leads **114** may be connected to a power delivery circuit for power transmission. Magnetic contact assembly **101** includes magnets **102** and leads **114** and may also include insulating elements (not shown), for example, nylon spacers, between magnets **102** to electrically insulate magnets **102** from one another. Thus, leads **114** and magnets **102** may carry different signals.

Magnetic contact assembly **101** is contained in a channel **112** formed in housing **106**. Channel **112** acts as a guide. Magnetic contact assembly is slidable along a path defined by channel **112** between a withdrawn position in which magnets **102** are spaced inwardly from surface **16**, as shown in FIG. **3**A, and an extended position, in which magnets **102** abut terminals **108** to form an electrical connection between terminals **108** and the respective leads **114**.

As shown in FIG. **3**A, magnets **102** share a common orientation, namely, an orientation that provides a north-south alignment parallel to surface **16**, indicated in FIG. **3**A by arrows marked S-N. In such orientation, the north pole of one magnet **102** is adjacent the south pole of an adjacent magnet **102**. Further, in such orientation, each magnet **102** presents both north and south poles to a terminal **108**.

Side magnets **104**A and **104**B are disposed in channels **110**A and **110**B, respectively. Channels **110**A and **110**B are formed in housing **106** of connector **100** on right and left sides of core magnets **102**, respectively. Channels **110**A and

110B act as guides and define paths which extend inwardly away from surface 16 and converge towards one another and toward channel 112. As shown, channel 110A is oriented at an angle θ away from the normal line of surface 16 while channel 110B is oriented at an opposite angle. Each of channels 110A and 110B has a first end proximate surface 16 and a second end farther away from surface 16 and closer to channel 112 and thus, magnetic contact assembly 101. Each of channels 110A and 110B is formed such that each of magnets 104A and 104B may slideably move along a path defined by its respective channel between an extended position at the first end and a withdrawn position at the second end, i.e., to be closer or farther from surface 16.

Further, channels 110A and 110B and side magnets 104A and 104B are shaped such that each side magnet may rotate within its respective channel. In particular, each of magnets 104A and 104B may rotate between a first orientation in which the magnets are oriented with a north-south alignment parallel to surface 16 and a second orientation in which the magnets are oriented with a north-south alignment diagonal relative to surface 16.

In the depicted embodiment, each of side magnets 104A and 104B has a cylindrical shape, and the channels 110A and 110B are formed to allow each side magnet to rotate about its cylindrical axis. In other embodiments, each of side magnets 104A and 104B may have a different shape allowing each to rotate between the noted first and second orientations. For example, each of side magnets 104A and 104B may have a spherical shape, a hemispherical shape, an ovoid shape, etc.

FIG. 3A shows side magnets 104A and 104B each positioned at the second end of the respective channel 110A or 110B, retracted from surface 16. Magnetic contact assembly 101 is also in a position retracted from surface 16 (and terminals 108). Magnets 102, 104A and 104B assume the depicted positions when the connector 402 is not engaged with a complementary connector 402, which may be referred to as a "resting" state, a "retracted", or a "disengaged" state of the connector 402.

Magnets 102, 104A and 104B are drawn towards the depicted positions as a result of mutual attraction between magnets 102, 104A and 104B. In particular, mutual attraction between magnets 102, 104A, and 104B causes side magnets 104A and 104B to move along a respective channel 110A or 110B towards magnets 102 and towards one another. As side magnets 110A and 110B move towards magnets 102, the angle of the channel causes the side magnets to move away from surface 16. The mutual attraction between magnets 102, 104A, and 104B also draws magnets 102 away from surface 16. Further, this mutual attraction causes side magnets 104A and 104B to rotate such that they have the same north-south alignment as magnets 102, i.e., parallel to surface 16.

In this way, mutual attraction between magnets 102 of magnetic contact assembly 101 and side magnets 104A and 104B biases each of the magnets towards a retracted position away from surface 16. Conveniently, no mechanical biasing (e.g., by way of a spring) is required. With magnets 102, 104A, 104B in their retracted positions, connector 100 is in a disengaged state and terminals 108 are not electrically connected to the internal connectors or to the internal device circuit. Further, when connector 100 is in the "disengaged" state and magnets 102, 104A, and 104B are retracted from surface 16 magnetic flux at surface 16 may be significantly reduced.

Conversely, connector 100 may be drawn into an engaged state, in which magnets 102, 104A, 104B are in their respective extended positions, by an adjacent connector.

FIG. 3B shows two connectors 100 having the arrangement depicted in FIG. 3A. As shown, the two connectors 100 are engaged, such that each connector 100 is in an "engaged" state. When in this state, terminals 108 and corresponding magnets 102 of the two connectors 100 may form electrical connections between two devices 10 for power or data transmission. In one specific example, each pair of corresponding magnets 102 of the two connectors 100 may form a connection for a particular USB pin/wire, e.g., VCC, D−, D+, GND. As a result, a USB connection may be provided. In other embodiments, connector 100 may have a fewer or greater number of magnets 102 to provide for a greater number of pins/wires. Connections other than USB (e.g., Firewire) may be provided.

As shown, in the engaged state, side magnets 104A and 104B are positioned in their extended positions at the first end of a respective channel 110A or 110B, proximate surface 16. Side magnets 104A and 104B of a first device 10 are drawn to the first end, by sliding movement along a respective channel 110A or 110B, as a result of attraction between the side magnets 104A and 104B and corresponding side magnets 104A and 104B of a second device 10. So, when the connectors 100 of the two devices 10 are engaged, side magnet 104A of the first device 10 is aligned with and magnetically coupled with side magnet 104B of the second device 10. Similarly, side magnet 104B of the first device 10 is aligned with and magnetically coupled with side magnet 104A of the second device 10.

As side magnets 104A and 104B are drawn towards surface 16 along a respective channel 110A or 110B, the angle of the channel causes side magnets 104A and 104B to each move away from core magnets 102. Further, as side magnets 104A and 104B in the first device move along a respective channel 110A or 110B, mutual attraction between the side magnets 104A and 104B and the corresponding side magnets 104A and 104B in the second device causes each of the side magnets to rotate within its respective channel towards the second orientation noted above, in which the poles of magnets 104A, 104B are oriented diagonally to surface 16. Consequently, in each device 10, mutual attraction between magnets 102, 104A, and 104B decreases, and the bias of magnets 24 towards a retracted position is reduced. While magnets 104A, 104B are aligned with magnets 102 (as in the disengaged position), magnetic attraction between magnets 102, 104A, 104B may be sufficiently strong that an adjacent magnet 102 of another connector cannot cause magnet 102 to move outwardly. However, rotation of side magnets 104A, 104B due to the presence of an adjacent magnet 104A, 104B reduces magnetic attraction between magnets 102, 104A, 104B. Thus, such rotation releases magnets 102 from the inwardly-biased disengaged position; once magnets 104A, 104B are rotated toward their diagonal orientations, magnet 102 can be drawn outwardly toward the engaged position by an adjacent magnet 102 of another connector.

In each device 10, movement of side magnets 104A and 104B towards surface 16 draws magnets 102 towards the surface by magnetic attraction. Further, as magnets 102 of the first device move towards the surface, they become drawn by the corresponding magnets 102 in the second device 10, and vice versa. In this way, magnets 24, 104A and 104B of each device 10 collectively move towards the engaged positions shown in FIG. 3B.

As noted, when the connectors **100** are engaged, each side magnet **104**A and **104**B may have a north-south alignment that is diagonal relative to surface **16**. The attraction between a side magnet **104**A/**104**B of a device **10** and a complementary side magnet **1046**/**104**A of an engaged device **10** tends to cause each side magnet to rotate towards an orientation perpendicular to surface **16**. Meanwhile, the attraction between a side magnet **104**A/**104**B and core magnets **102** in the same device tends to cause each side magnet to rotate towards an orientation parallel to surface **16**. As a result, when the connectors **100** are engaged, each side magnet **104**A and **104**B maintains a diagonal orientation. Thus, when engaged, magnets **104**A, **104**B pull devices **10** toward one another and magnetically hold the devices together.

Each of channels **110**A and **110**B may be oriented at an angle θ (FIG. **3**A) between 0 degrees and 90 degrees. In some embodiments, the angle θ may be between 0 degrees and 20 degrees. As will be appreciated, a larger angle θ causes side magnets **104**A and **104**B to move farther away from magnets **102** when a connector **100** transitions from a resting state to an engaged state.

Magnets **102**, **104**A, **104**B and channels **112**, **110**A, **110**B may be configured to ensure that, when two connectors **100** are placed in abutment as depicted in FIG. **3**B, attraction between magnets **102**, **104**A or **104**B of one connector **100** and the corresponding magnets **102**, **104**A, **104**B of the other connector **100** is sufficient to overcome the magnetic attraction between magnets **102**, **104**A, **104**B of a single connector biasing the connector to the disengaged state. In other words, the configuration of magnets **102**, **104**A, **104**B and channels **112**, **110**A, **110**B is such that two connectors **100** can overcome the magnetic bias toward the disengaged state to draw one another into the engaged state. For example, magnets **104**A **104**B may be at least twice as far from one another as they are from device edge **16**. Suitable sizes, orientations and spacing of channels **112**, **110**A, **110**B depends on the strengths of magnets **102**, **104**A, **104**B and will be apparent to skilled persons based on the present disclosure. In an example, magnets **102**, **104**A, **104**B are neodymium-iron-boron (NdFeB) magnets. FIG. **3**F depicts an example connector **100**, annotated with references to identify example dimensions. Corresponding example values of those dimensions are listed in table 1.

TABLE 1

Ed	Ht	Hy	Hθ	Ey	Hi	Px1	Px2	Py	Pgx1	Pgx2	Pgx3	Pgy1	Pgy2	Cy	CHx	CHy
5	0.2	0.25	11	2.95	3.62	1.5	1.5	1.5	1.59	1.6	1.6	2	0.5	0.5	1.6	0

FIG. **3**C is a perspective view of a portion of device **10** including a connector **100** shown in FIG. **3**A. For the sake of illustration, the top surface of this portion is shown as being cut away to reveal magnets **102**, channels **110**A/**110**B, and side magnets **104**A/**104**B within. As shown in FIG. **3**C, the connector **100** is in a disengaged state with magnets **102** and magnets **104**A/**104**B in their respective withdrawn positions retracted from surface **16**.

As shown in FIG. **3**C, each magnet **24** has a disk shape. However, in other embodiments, each magnet **102** may have a different shape. Further, there may be a fewer or greater number of magnets **102**. The arrangement of magnets **102** shown in FIG. **3**C may be replaced with another arrangement of magnets, as described herein. Similarly, although four terminals **108** are shown, there may be a fewer or greater number of terminals. Though the connector of FIG. **3**C has one magnet **102** corresponding to each terminal **108**, some embodiments may have more than one terminal per magnet.

FIG. **3**D is a perspective cross-sectional view of the connector **100** of FIG. **3**C, taken along line F-F. FIG. **3**E is a side cross-sectional view of the connector **100** of FIG. **3**C, taken along line F-F. As best seen in FIGS. **3**D and **3**E, channel **110**A/**110**B has a shape complementary to cylindrical side magnet **104**A/**104**B, allowing magnets **104**A/**104**B to slide and rotate within respective channels **110**A/**110**B in manners described herein.

In some embodiments, magnets **102** may be replaced with passive magnetic materials. For example, magnets **102** may be replaced with ferrous elements or other magnetizable elements. In such embodiments, movement of side magnets **104**A, **104**B to their engaged positions may magnetically draw contact assembly **101** to its engaged position.

In some embodiments, connectors may have only one side magnet. For example, FIG. **4**A depicts a top view of one such connector **100'**, which is identical to connector **100** except that it has only a single side magnet **104**, received in a channel **110**. FIG. **4**B depicts a top view of two connectors **100'** in an engaged state. Top housing surfaces are omitted in FIGS. **4**A-**4**B for purposes of illustration

In some embodiments, the magnetic contact assembly may include leads on the outward-facing side of magnets **102**.

For example, FIGS. **5**A-**5**B depict top and front views, respectively of a connector **200**, with a top housing surface omitted in FIG. **5**A for purposes of illustration. FIG. **5**C depicts a side cross-sectional view of connector **200** along line C-C shown in FIG. **5**A. Connector **200** is generally identical to connector **100** except as otherwise described, and like components are identified with like reference characters.

As is best shown in FIGS. **5**A, **5**C, connector **200** has a magnetic contact assembly **201** including leads **116**. Each lead **116** is connected to internal circuit **20** of device **10**. In an example, each lead **116** may correspond to a particular USB pin (e.g., VCC, D−, D+, GND) such that connector **200** may provide a USB connection.

Leads **116** are wrapped around magnets **102** such that portions of leads **116** are positioned on the outer side of magnets **102**, facing contacts **108**. Leads **116** may be electrically insulated from magnets **102**, for example, by an insulative sleeve or coating applied to one or both of leads **116** and magnets **102**. In such embodiments, insulation between magnets **102** may be omitted. Alternatively, leads **116** may electrically contact magnets **102**, in which case magnets **102** may be insulated from one another to isolate signals on different leads **116**.

Leads **116** may be formed from a ferrous material and of sufficient conductivity to allow for high speed data transfer. Their thickness may be sufficiently low to allow for high flexibility.

Leads **116** may magnetically adhere to the adjacent core magnets **102**. Leads **116** may, for example, be coiled around magnets **102** and held against magnets **102** by magnetic attraction. As magnets **102** move, the coiled leads **116** may change in shape slightly. For example, when magnets **102**

move inwardly, the coil may tighten as magnetic attraction holds leads **116** tightly to magnets **102**. Conversely, when magnet **102** moves outwardly, the coil may stretch.

FIGS. **5**D, **5**E depict top and side cross-sectional views, respectively, of a pair of connectors **200** in their engaged states, the latter taken at line E-E of FIG. **5**D. Top housing surfaces are omitted in FIG. **5**D for purposes of illustration. As is best shown in FIG. **5**E, in the engaged state, magnets **102** urge leads **116** outwardly against contacts **108**. Thus, an electrical connection may be formed through lead **116** and an associated contact **108** of one connector **200**, and a corresponding lead **116** and contact **108** of another connector. As noted, the electrical connection may be used for power or data transmission.

In some embodiments, contacts **108** may be omitted, such that magnets **102** or leads **116** protrude from housing **14** in the engaged state. FIGS. **6**A and **6**B show two connectors **200'** exemplary of such an embodiment, the latter view taken along line B-B of FIG. **6**A in top and side cross-section views, respectively, the latter taken at line B-B of FIG. **6**A. Top housing surfaces are omitted in FIG. **6**A for purposes of illustration. Connectors **200'** are identical to connectors **200** except as otherwise described and like components are indicated with like numerals.

As best shown in FIG. **6**B, Connectors **200'** lack contacts **108**. Instead, connectors **200'** have openings **118** through which magnets **102**, leads **116** protrude in the engaged state. Thus, in the engaged state, electrical connections are directly formed between leads **116** of the two connectors **200'**.

In some embodiments, leads **116** may be bonded to core magnets **102**, for example, using adhesives. Leads **116** may be bonded to a flexible substrate, constraining and insulating the individual traces. For example, FIGS. **6**C-**6**D depict perspective views, of connectors **200"** in disengaged and engaged states, respectively, in which leads **116** are incorporated in a conventional flat flexible cable (FFC) **117**, which may be bonded to magnets **102**. Bonding of leads **116** to a substrate may allow for tighter pitch between leads **116**, relative to individually attaching leads **116** to magnets **102**.

In other embodiments, magnets **102** of two connectors may directly contact one another, rather than leads **116**, an electrical connection may be formed between magnets **102**.

In each of connectors **100**, **200**, **200'**, magnets **102** are disc-shaped. In other embodiments, magnets may be provided in different shapes. For example, magnets **102** may be replaced with bar magnets. In addition, in each of connectors **200**, **200'**, each magnet **102** is associated with one lead **116**. In other embodiments, magnets **102** may be associated with multiple leads. For example, magnets **102** may be replaced with a single bar magnet, which may be associated with any number of leads.

As depicted, magnets **102** are oriented with their poles aligned generally parallel to peripheral surface **16**. Likewise, magnets **102** present to one another contacting surfaces **119** (FIG. **5**D) that are generally parallel to the north-south alignment of the magnets. In such an arrangement, attractive magnetic forces between opposing magnets **102** may be greatest at the edges of the contacting faces. In other words, magnetic flux may be greatest proximate the edges. Accordingly, in an example, two leads may be associated with each magnet **102**, each lead being aligned proximate an edge of the contacting surface **119** of the magnet **102**, in the vicinity of the maximum magnetic attractive force. Such a configuration may promote strong electrical connection between corresponding leads.

In other embodiments, magnets **102** may be oriented with their north-south poles generally perpendicular to surface **16** and to the contacting surfaces magnets **102** present to one another.

FIGS. **7**A and **7**B each is a perspective view of a connector **300**, with top housing surfaces omitted for purposes of illustration. In particular, FIG. **7**A depicts connector **300** in a disengaged (retracted or resting) state and FIG. **7**B depicts connector **300** in an engaged (extended) state. In some embodiments, the shaping of components within connector **300** allows connector **300** to be formed to be substantially thinner (e.g., having a lower profile) than connector **100**.

Unlike connector **200** which includes four core magnets **102** disposed within a housing, connector **300** includes a magnetic contact assembly **120** with a single magnet **122**. FIGS. **8**A-**8**C depict perspective, top elevation and side elevation views, respectively, of magnet **122**.

Assembly **120** is disposed within a connector housing **80**. As detailed below, assembly **120** may move (e.g., slide) within housing **80** as connector **300** transitions between its disengaged and engaged states. In FIGS. **7**A and **7**B, the top surface of housing **80** is not shown, for clarity of illustration.

Assembly **120** includes a single magnet **122**. As best seen in FIGS. **8**A, **8**B, and **8**C, magnet **122** is T-shaped, and includes a crossbar portion **126** and a stem portion **124**. Crossbar portion **126** is substantially rectangular in shape. Stem portion **124** has approximately the same height as crossbar portion **126**, but is smaller in width and length. Stem portion **124** has a rounded end **128**, in the shape of a semi-cylinder. During operation, end **128** of stem portion **124** may **124** from an opening in surface **16** of housing **80** (FIG. **7**B). In this way, stem portion **124** may engage another connector (e.g., another connector **300**) to form magnetic and electrical connections therewith, or to form a connection with a metal surface.

The rounded shape of end **128** allows two connected connectors to be rotated relative to one another without interrupting the mechanical or electrical connections therebetween. This rounded shape also provides points of contact between two connected connectors along a single line, thereby localizing contact forces to this line.

Assembly **120** also includes a plurality of conductive wires **130**. Each wire **130** may carry a separate electrical signal (data or power). In one specific example, each wire **130** may correspond to a particular USB pin (e.g., VCC, D−, D+, GND) such that connector **300** may provide a USB connection.

The plurality of conductive wires **130** are electrically isolated. As shown, the wires are spaced from one another. Further, to prevent conduction through magnet **122**, each wire **130** may include an insulating backing material. Alternatively or additionally, magnet **122** may be coated with an insulating material such as enamel, plastic, or the like.

In the depicted embodiment, assembly **120** includes four wires **130**. However, in other embodiments, assembly **120** may include a fewer or greater number of wires **130**. Further, connections other than USB (e.g., Firewire) may be provided.

In the depicted embodiment, each wire **130** extends over the coated surface of magnet **122** along the length of assembly **120** and wraps around rounded end **128**. In this way, the part of wire **130** extending over end **128** may contact parts (e.g., wires/pins) of another connector for establishing electrical connections therewith.

In another embodiment, channels may be formed on the surface of magnet **122**, and wires **130** may be received in and

may extend along these channels. The channels may have a depth corresponding to the thickness of wires **130**. Accordingly, when wires **130** are received in the channels, the top surface of the wires **130** may be flush with the top surface of magnet **122**. This allows, for example, electrical connection between wires **130** and contacts pressed to the top surface of magnet **122**. Conveniently, providing these channels may allow the overall height of assembly **120** to be reduced in some embodiments.

Referring now to FIGS. **7**A and **7**B, housing **80** may be formed from suitable materials that are insulating and may be readily shaped, such as PBT, PET, or the like. Housing **80** includes a cavity **82** having a height (H) and width (W) sized to correspond to the height (h) and width (w) of assembly **120**. Cavity **82** has a length (L) greater than the length (l) of assembly **120**. Accordingly, assembly **120** may move within cavity **82** along length (L) between a first position in which assembly **120** is adjacent a back wall of housing **80** (when connector **300** is in its disengaged state), and a second position in which assembly **120** is adjacent a front wall of housing **80** when connector **300** is in its engaged state. In the second position, stem portion **124** extends through an opening in the front wall (e.g., to connect with another connector, a metal surface, etc.).

Connector **300** also includes two side magnets **104**A and **104**B disposed, respectively, in channels **110**A and **110**B. Magnets **104**A/**104**B and channels **110**A/**110**B are provided in connector **300** to be substantially similar to the same components in connectors **100**,**200**. Further, magnets **104**A and **104**B interact with assembly **120** in connector **300** in substantially the same manner that magnets **104**A and **104**B interact with core magnets **102** in connectors **100**, **200**.

So, channels **110**A and **110**B are formed in connector **300** on right and left sides of assembly **120**, respectively. Channel **110**A is oriented at an angle θ (see FIG. **3**A for angle θ) away from the normal line of surface **16** while channel **110**B is oriented at an opposite angle. Each of channels **110**A and **110**B has a first end proximate surface **16** and a second end farther away from surface **16**. Each of channels **110**A and **110**B is formed such that magnets **104**A and **104**B may slideably move within its respective channel between the first end and the second end, i.e., to be closer or farther from surface **16**.

Further, channels **110**A and **110**B and side magnets **104**A and **104**B are shaped such that each side magnet may rotate within its respective channel. In one example, assembly **120** may have a magnetic orientation as shown for magnets **102** in FIG. **3**A, namely, with a north-south alignment parallel to surface **16** and north being in the direction of channel **110**B. In this example, each of magnets **104**A and **104**B may rotate between a first orientation in which the magnets are oriented with a north-south alignment parallel to surface **16** (e.g., as shown in FIG. **3**A) and a second orientation in which the magnets are oriented with a north-south alignment diagonal relative to surface **16** (e.g., as shown in FIG. **3**B).

In the depicted embodiment, each of side magnets **104**A and **104**B has a cylindrical shape, and channels **110**A and **110**B are formed to allow each of side magnets **104**A and **104**B to rotate about its cylindrical axis. In other embodiments, each of side magnets **104**A and **104**B may have a different shape allowing each to rotate between the noted first and second orientations. For example, each of side magnets **104**A and **104**B may have a spherical shape, a hemispherical shape, an ovoid shape, etc.

FIG. **7**A shows side magnets **104**A and **104**B each positioned at the second end of the respective channel **110**A or **110**B, retracted from surface **16**. Assembly **120** is also in a position retracted from surface **16** and adjacent a back wall of housing **80**. Assembly **120** and side magnets **104**A and **104**B assume the depicted positions when the connector **300** is in its disengaged state.

Assembly **120** and side magnets **104**A and **104**B are drawn towards the depicted positions as a result of mutual attraction between assembly **120** and magnets **104**A and **104**B. In particular, mutual attraction between assembly **120** and side magnets **104**A and **104**B causes side magnets **104**A and **104**B to move along a respective channel **110**A or **110**B towards assembly **120**. As side magnets **104**A and **104**B move towards assembly **120**, the angle of their respective channels **110**A and **110**B causes the side magnets to move away from surface **16**. The mutual attraction between assembly **120** and side magnets **104**A and **104**B also draws assembly **120** away from surface **16**. Further, this mutual attraction causes side magnets **104**A and **104**B to rotate such that they have the same north-south alignment as assembly **120**, i.e., parallel to surface **16**.

In this way, mutual attraction between assembly **120** and side magnets **104**A and **104**B biases them towards a retracted position away from surface **16**. Conveniently, no mechanical biasing (e.g., by way of a spring) is required. Further, when connector **300** is in its disengaged state and assembly **120** and magnets **104**A and **104**B are retracted from surface **16**, magnetic flux at surface **16** may be significantly reduced.

FIG. **7**B shows connector **300** with side magnets **104**A and **104**B each positioned at the first end of the respective channel **110**A or **110**B, i.e., proximate surface **16**. At the same time, assembly **120** is a position proximate surface **16** such that stem portion **124** extends past surface **16**. Assembly **120** and side magnets **104**A and **104**B assume the depicted positions when the connector **300** is in its engaged state.

Side magnets **104**A and **104**B of the connector **300** (which may referred to the first connector **300**) are drawn to the first end of the respective channel **110**A or **110**B by sliding movement along a respective channel **110**A or **110**B, as a result of attraction between the side magnets **104**A and **104**B and corresponding side magnets **104**A and **104**B of a second connector **300** (not shown).

As side magnets **104**A and **104**B are drawn towards surface **16** along a respective channel **110**A or **110**B, the angle of the channel causes side magnets **104**A and **104**B to each move away from assembly **120**. Further, as side magnets **104**A and **104**B in the first connector **300** move along a respective channel **110**A or **110**B, mutual attraction between the side magnets **104**A and **104**B in the first connector **300** and the corresponding side magnets **104**A and **104**B in the second connector **300** causes each of the side magnets to rotate within its respective channel towards the second orientation noted above. Consequently, in each connector **300**, mutual attraction between assembly **120** and side magnets **104**A, and **104**B decreases, and biasing towards a retracted position is reduced.

In each connector **300**, movement of side magnets **104**A and **104**B towards surface **16** draws assembly **120** towards surface **16** Further, as the assembly **120** of the first connector **300** moves towards surface **16**, it becomes drawn by the assembly **120** of the second connector **300**, and vice versa. In this way, assemblies **120**, and side magnets **104**A and **104**B of the first and second connectors **300** collectively move towards the engaged positions shown in FIG. **49**B.

When the two connectors **300** are engaged, side magnet **104**A of the first connector **300** is aligned with and magnetically coupled with side magnet **104**B of a second con-

nector **300** (in substantially the same manner as shown in FIG. **3**B for connectors **100**). Similarly, side magnet **104**B of the first connector **300** is aligned with and magnetically coupled with side magnet **104**A of the second connector **300**.

When two connectors **300** are engaged, each side magnet **104**A and **104**B may have a north-south alignment that is diagonal relative to surface **16** (e.g., as shown in FIG. **3**B for connectors **100**).

Each of channels **110**A and **110**B may be oriented at an angle θ (e.g., as shown in FIG. **3**A) between 0 degrees and 90 degrees. In some embodiments, the angle θ may be between 0 degrees and 20 degrees. As will be appreciated, a larger angle θ causes side magnets **104**A and **104**B to move farther away from assembly **120** when a connector **300** transitions from a resting state to an engaged state.

FIGS. **9**A, **9**B, and **9**C are, respectively, a perspective view, a front view, and a top view of connector **300** with a top surface **82** of housing **80** shown. As depicted, top surface **82** includes a plurality of electrical contacts **84**, each in electrical communication with a corresponding wire **130** of assembly **120**. Electrical contacts **84** allow electrical signals carried by wires **130** to be provided to internal circuitry of a device in which connector **300** is disposed. For example, electrical contacts **84** may serve as solder points for connection of electrical wiring (not shown).

In FIGS. **9**A, **9**B, and **9**C, connector **300** is shown to be in its engaged state such that assembly **120** extends out of housing **80** (as best seen in FIG. **9**C).

In the embodiment of FIGS. **7**A and **7**B, assembly **120** is formed from a single core magnet **122**. However, in other embodiments, assembly **120** may be formed from multiple core magnets **122**. For example, FIG. **10**A shows a connector **300'** having an assembly **120** formed from two core magnets **122**. The core magnets **24** may have the same magnetic orientation (e.g., as shown in FIG. **10**B) or different magnetic orientations (e.g., as shown in FIG. **10**C). Top housing surfaces are omitted in FIGS. **10**A-**10**C for purposes of illustration.

As depicted in FIGS. **3**A-**10**B, device **10** has a flat peripheral surface **16**. In other embodiments, the device may have curved surfaces. For example, FIGS. **11**A-**11**C depict perspective, top and side cross-sectional views, respectively of a connector **400**, the latter taken at line C-C shown in FIG. **11**B. For purposes of illustration, the top housing surface is omitted from FIG. **11**B.

Connector **400** is formed in device housing **14'**, which has a curved side surface **16'**. Side surface **16'** has a window **132** at the end of channel **112**. Connector **400** is otherwise identical to connector **200** described above, and like components are identified with like numerals.

FIGS. **11**A-**11**C depict connector **400** in a disengaged state, with magnets **102**, **104**A, **104**B withdrawn. In the engaged state of connector **400**, magnets **102** and leads **116** protrude through window **132** and cooperate with peripheral surface **16'** to define a curved surface for interfacing with another connector **400**. Once two connectors **400** are brought into abutment and engage one another, they may form a joint that can be pivoted around surface **16'**. For example, FIG. **11**D shows a side cross sectional view of two connectors engaging one another and positioned at approximately a 90 degree angle to one another. Leads **116** are urged into contact with one another by magnets **102**, forming an electrical connection for data or power transmission. FIG. **11**E shows connectors **400** engaging one another at approximately a 180 degree angle. Since magnets **102** and leads **116** define a curved contact surface, connectors **400** may be pivoted between the positions of FIGS. **11**D and **11**E without breaking the electrical connection.

Connectors **100**, **200**, **300**, **400** have magnets **102**, **104**, **104**A, **104**B mounted in channels to move generally in a single plane. In particular, magnets **102**, **104**, **104**A, **104**B generally move in a plane parallel to the front and rear surfaces of the respective device **10**.

In some embodiments, magnets may be mounted such that they are movable in two different planes, which may be approximately orthogonal to one another. For example, FIG. **12**A depicts a perspective view of a device **10** with a connector **500** with magnets operable to slide laterally (toward a side of the device) and to slide forward and backward (toward the device's front or back surfaces).

Connector **500** includes a plurality of core magnets **140**, similar to core magnets **102**, mounted in a channel **142**. Channel **142** leads to a first window **134** in a lateral surface of device **10** and a second window **140** in a front surface of device **10**.

FIG. **12**B depicts an enlarged top cross-sectional view of connector **500** in its disengaged state. As noted, connector **500** includes a plurality of core magnets **140** slidably received in a channel **142**. As depicted, core magnets **140** are disk magnets, however, as will be apparent, other suitable types of magnets may be used.

Connector **500** further includes a side magnet **144**. Side magnet **144** is spherical. Side magnet **144** is slidably and rotatably received in a channel **146**. Channel **146** extends from the interior of housing **14** toward side, top, front and back edges of the housing to define a three-dimensional envelope within which magnet **144** is movable. In particular, magnet **144** is movable between a first position, shown in FIG. **12**B, in which magnet **144** is withdrawn relative to each of the side, top, front and back surfaces of housing **14**; a second position (FIG. **13**B) in which magnet **144** is extended toward a lateral surface of housing **14** to switch connector **500** to an engaged state, and a third position (FIG. **14**B) in which magnet **144** is extended toward a front or back surface of housing **14** to switch connector **500** to an engaged state. Channel **146** defines a first path between the first and second positions, identified by the arrows marked H-H in FIG. **12**B, and a second path between the first and third positions, identified by the arrows marked V-V in FIG. **12**C.

The first position of magnet **144** (FIG. **12**B) is the point in channel **146** closest to core magnets **140**. Accordingly, in the absence of another connector, magnetic attraction between magnet **144** and magnets **140** biases magnet **144** to the first position. Magnetic attraction likewise biases magnets **140** to a withdrawn position within channel **142** substantially as described above with reference to connectors **100**, **200**, **300**, **400**. Magnetic attraction between magnet **144** and magnets **140** may also cause magnet **144** to rotate into alignment with magnets **140**. As depicted, the north-south alignment of magnets **140** is parallel to the lateral surface of housing **14**. Accordingly, magnet **144** is rotated so that its north-south poles are parallel to the lateral surface of housing **14**.

As depicted in FIG. **13**A, two devices **10** may be placed side-by-side so that connectors **500** abut one another on lateral sides of the devices **10**. FIG. **13**B shows a top sectional view of two connectors **500** in such a condition FIG. **13**C shows a side cross-sectional view of the connectors **500** taken along line C-C in FIG. **13**B.

In a manner similar to that described above with reference to connector **100**, magnets **144** of adjacent connectors **500** magnetically attract one another sufficiently to overcome the bias between each magnet **144** and its respective core

magnets **140**. Magnets **144** are pulled toward one another and toward lateral surface **16** of housing **14**. As a result of such attraction, magnets **144** move along path H-H (FIG. **12**B) to the second position, depicted in FIG. **13**B. Magnets **144** may also rotate to present opposite poles to one another. Meanwhile, continued attraction between magnets **140** and magnets **144** may hold magnets **144** in an orientation with north-south poles diagonal to lateral surface **16**.

As described above with reference to connector **100**, as side magnet **144** is pulled toward lateral surface **16** and rotated, its biasing effect on magnets **140** is reduced. Accordingly, magnets **140** of the two connectors **500** attract one another and cause one another to move toward extended (engaged) positions. In the engaged position, magnets **102** may protrude through window **134** of housing **14**.

As depicted in FIG. **14**A, two devices **10** may be placed in a T configuration so that connectors **500** abut one another, with a top or bottom surface of one device abutting a lateral surface of another device. FIG. **14**B shows a top sectional view of two connectors **500** in such a condition. FIG. **14**C shows a side cross-sectional view of the connectors **500** taken along line C-C in FIG. **14**B.

Magnets **144** of adjacent connectors **500** magnetically attract one another sufficiently to overcome the bias between each magnet **144** and its respective core magnets **140**. Magnets **144** are pulled toward one another. In particular, one magnet **144** is pulled toward lateral surface **16** of its device housing **14** and moves along path H-H (FIG. **12**B) to the second position. A magnet **144** of the other device is pulled toward a front or back surface of its device housing **14** and moves along path V-V (FIG. **12**C) Magnets **144** may also rotate to present opposite poles to one another. As will be apparent, during movement between the first and third positions, magnets **144** may rotate partly about each of a plurality of axes. Continued attraction between magnets **144** and magnets **140** may hold magnets **144** in an orientation with north-south poles diagonal to the front or back surface of the device housing **14**.

As described above with reference to connector **100**, as side magnet **144** is pulled toward lateral surface **16** and rotated, its biasing effect on magnets **140** is reduced. Accordingly, magnets **140** of the two connectors **500** attract one another and cause one another to move toward extended (engaged) positions. In the engaged position, magnets **140** of one device may protrude through window **134** of that device's housing **14**, while magnets **140** of the other device may protrude through window **136** of the other device's housing **14**.

As depicted in FIG. **15**A, two devices **10** may be placed atop one another so that connectors **500** abut one another, with a top or bottom surface of one device abutting a top or bottom surface of another device. FIG. **15**B shows a side sectional view of two connectors **500** in such a condition, taken along line B-B in FIG. **15**A. FIG. **15**C shows a side cross-sectional view of the connectors **500** taken along line C-C in FIG. **15**B.

Magnets **144** of adjacent connectors **500** magnetically attract one another sufficiently to overcome the bias between each magnet **144** and its respective core magnets **140**. Magnets **144** are pulled toward one another. In particular, each magnet **144** is pulled toward a front or rear surface of its device housing **14** and moves along path V-V (FIG. **12**B) to the third position. Magnets **144** may also rotate to present opposite poles to one another. As will be apparent, during movement between the first and third positions, magnets **144** may rotate partly about each of a plurality of axes. Continued attraction between magnets **144** and magnets **140** may hold magnets **144** in an orientation with north-south poles diagonal to lateral the front or back surface of the device housing **14**.

As described above with reference to connector **100**, as side magnet **144** is pulled toward lateral surface **16** and rotated, its biasing effect on magnets **140** is reduced. Accordingly, magnets **140** of the two connectors **500** attract one another and cause one another to move toward extended (engaged) positions. In the engaged position, magnets **140** of each device may protrude through window **136** of that device's housing **14**

In an example, channels **146** may be configured so that, in the first (disengaged) position, the minimum distance between magnets **144** and magnets **140** is approximately 2.9 mm; in the second position (FIG. **13**B), the minimum distance between magnets **144** and the lateral surface of housing **14** is about 0.3 mm; and in the third position (FIG. **15**B), the minimum distance between magnets **144** and the front or rear surface of housing **14** is about 0.7 mm.

FIGS. **16**A and **16**B each is a perspective view of a connector **602**, with top surfaces omitted for purposes of illustration. Connector **602** omits channels **110**A/**110**B and side magnets **104**A/**104**B of connector **300**, and includes a ferrous stop **86** disposed along a rear wall of housing **80** in cavity **82**. Connector **602** is otherwise substantially similar to connector **300**. In FIGS. **16**A and **16**B, the top surface of housing **80** is not shown, for clarity of illustration.

Attraction between assembly **120** and ferrous block **86** biases assembly **120** to a retracted position within connector **602** (FIG. **16**A). However, when connector **602** is brought into engagement with a corresponding connector **602**, attraction between the two connectors **602** overcomes the biasing force provided by ferrous stop **86** and causes assembly **120** to move along the length of cavity **82** towards surface **16**. So, assembly **120** moves to an extended position within connector **602** (FIG. **16**B) such that connector **602** transitions to an engaged state, and forms magnetic and electrical connections with the corresponding connector. When the connectors are disconnected, attraction between assembly **120** and ferrous block **86** moves assembly **120** back to its retracted position.

In an embodiment, ferrous block **86** may be formed from high-iron content carbon steel. However, ferrous block **86** may be formed from other magnetizable materials. In an embodiment, ferrous block **86** may be replaced with a biasing magnet disposed along the rear wall of housing **80** in cavity **82**. As will be appreciated, this biasing magnet is selected to attract assembly **120** more weakly than a corresponding connector to which connector **602** may connect.

FIGS. **17**A and **17**B each is a perspective view of a connector **702**. Connector **702** omits assembly **120**, and includes an assembly **120'**. Connector **702** is otherwise substantially similar to connector **602**. In FIGS. **17**A and **17**B, the top surface of housing **80** is not shown, for clarity of illustration.

Assembly **120'** differs from assembly **120** in that electrical wires **130** are omitted. Instead, assembly **120'** includes a sleeve **88** that covers at least a part of magnet **122** including rounded end **128**. Assembly **120'** is otherwise substantially similar to assembly **122**.

As best seen in FIGS. **18**A, **18**B, and **18**C, sleeve **88** includes a first end **90** that wraps around rounded end **128** of magnet **122**, and a second end **92** that extends towards the interior of housing **80**.

The outer surface of sleeve **88** (at least at end **90**) presents an array of contacts for forming electrical connections with another connector. In a specific example, each of these

contacts may form a connection for a particular USB pin/wire, e.g., VCC, D−, D+, GND. As a result, a USB connection may be provided. In other embodiments, the sleeve may allow for a fewer or greater number of electrical connections. Connections other than USB (e.g., Firewire) may be provided. In embodiments in which sleeve **88** provides insulation between the contacts and magnet **122**, further insulation is not required. For example, magnet **122** need not be coated with an insulating material.

In an embodiment, sleeve **88** may be a conventional flexible flat cable (FFC).

Sleeve **88** is attached to magnet **122** (e.g., by way of adhesive) such that sleeve **88** and magnet **122** move together, e.g., when connector **702** transitions between an engaged state and a disengaged state. Like assembly **120**, assembly **120'** is biased to a retracted position, and moves to an extended position when connector **702** is brought into engagement with a complementary connector. When connector **702** is in a disengaged state (FIG. **17**A), sleeve **88** is pulled within housing **80**. However, when connector **702** is in an engaged state (FIG. **17**B), at least end **90** of sleeve **88** extends through an opening in the front wall of housing **80** (e.g., to connect with another connector, a metal surface, etc.).

FIGS. **19**A, **19**B, and **19**C are, respectively, a perspective view, a front view, and a top view of connector **702** with a top surface **82'** of housing **80** shown. In the depicted embodiment, top surface **82'** does not include electrical contacts **84**. Instead, internal circuitry of a device in which connector **702** is disposed may be connected directly to end **92** of sleeve **88**.

In FIGS. **19**A, **19**B, and **19**C, connector **702** is shown to be in its engaged state such that sleeve **88** of assembly **120** extends out of housing **80** (as best seen in FIG. **19**C).

In another embodiment, connector **300** may be modified to include assembly **120'** instead of assembly **120**.

As described above, side magnets **104**, **104**A, **104**B are slidably and rotatably mounted in channels **110**, **110**A, **110**B. In other embodiments, side magnets may be configured to rotate around around a pivot.

For example, FIGS. **20**A-**20**B depict perspective and top views, respectively, of a connector **800** with pivoting side magnets **804**. Connector **800** is generally similar to connector **100** and have core magnets **102** mounted slidably in a channel **112**, substantially identical to those of connector **100** described above. For the sake of illustration, top surfaces are omitted in FIG. **20**B.

Magnets **804** are generally bar-shaped. Each magnet **804** is mounted proximate one of its ends to a pivot **812**. Magnets **804** and pivots **812** are received in a channel **810**. Magnet **804** is free to rotate about pivot **812**. As will be apparent, pivots **812** and channels **810** cooperate to guide movement of magnets **804**. As will be apparent, the shape of channel **810** defines the range of rotation of magnet **804**.

FIGS. **20**A-**20**B depict connector **800** in the disengaged state and FIG. **20**C depicts connectors **800** in the engaged state. Magnets **804**, **102** bias one another to the disengaged state. As depicted, in the disengaged state, magnets **804** are rotated such that they are generally parallel to the edge of the connector. In this orientation, magnets **804** may be magnetically aligned with magnets **102** and magnetic attraction between magnets **804**, **102** may bias magnets **102** inwardly. When connector **800** is positioned adjacent another connector, attraction between side magnets **804** of the two connectors overcomes the bias between magnets **804**, **102** and causes the magnets **804** to rotate towards one another as depicted in FIG. **20**C. In the engaged position, the magnetic poles of magnets **804** may be oriented diagonally to the edge of connector **800**. As described above, rotation of magnets **804** may reduce the inward biasing of magnets **102**, which may in turn allow magnets **102** to draw one another into contact.

Other types of guides are possible. For example, magnets may be mounted to pins received in slots within the housing. Alternatively, the housing may define a single guide wall rather than a channel.

In some embodiments, core magnets **102**/**140** may be replaced with contact assemblies. FIG. **21**A is a top perspective view of an example contact assembly **102** and FIG. **21**B is an exploded view of the same connector. As shown, contact assembly **1002** is formed from an interleaved stack of cylindrical magnets **1004**, round conductive pads **1006**, and round insulative pads **108**. Contact assembly **1002** is cylindrical in shape.

Each magnet **1004** is substantially similar to a magnet **102** described above. Each magnet **1004** may attract and attach to a corresponding magnets (i.e., with an opposing polarity) on a connector of another device to establish electrical connections between the devices through the magnets.

Each conductive pads **1006** is formed from a thin layer of electrically conductive material, and is stacked in electrical communication with an associated magnet **1004**. Each conductive pad **1006** includes a tab or pin that may be connected to a pin of an internal I/O interface of device **10** (FIG. **2**B), to facilitate signal transmission between contact assembly **1002** and the internal I/O interface.

Each insulative pad **1008** is formed from a thin layer of electrically insulative material, and is stacked to provide electrical insulation between certain adjacent pairs of magnets **1004** and conductive pads **1006**, as shown.

Collectively, the stack of magnets **1004**, pads **1006**, and pads **1008** allow a signal bus to be established through contact assembly **1002**. This signal bus may conform to a conventional signaling standard such as the Universal Serial Bus (USB) protocol. So, each conductive pad **1006** and associated magnet **1004** may carry a signal corresponding to a particular USB pin/wire, namely, VCC, D−, D+, GND. Thus, each contact assembly **1002** may carry signals in a manner similar to a conventional 4-pin USB connector. This allows device **100** to communicate through contact assembly **1002** using the USB protocol.

In other embodiments, contact assembly **1002** may be modified to include a stack having a greater or fewer number of magnets **1004**, pads **1006**, and pads **1008**. For example, a greater number of magnets **1004**, pads **1006**, and pads **1008** may be included to increase bus width and thereby increase data throughput on the bus.

FIGS. **22**A, **22**B, and **22**C show a contact assembly **2002**, according to another example embodiment, that may be used in place of contact assembly **1002**. Each contact assembly **2002** is adapted to mate with another contact assembly **2002** on another device. When mated, connectors **2002** allow two devices to connect both mechanically and electrically. Contact assembly **2002** is cylindrical in shape.

FIG. **22**A is a top perspective view of contact assembly **2002** including a stack of magnets **1004***a*, **1004***b*, **1004***c*, **1004***d* (collectively referred to as magnets **1004**) and an elongate plug **1010** extending from a bottom end of the stack. Each magnet **1004** in the stack includes a hole extending therethrough such that a channel is formed through the stack for receiving plug **1010**.

FIG. **22**B is an exploded view of the contact assembly **2002** revealing the entire length of plug **1010** including its

constituent segments **1012***a* through **1012***h*. FIG. **22**C shows the interconnections between segments **1012***a* through **1012***h* of plug **1010**.

In some embodiments, plug **1010** may be similar to a multi-connection phone plug (e.g., TRS plug) or bantam-type plug. As shown, plug **1010** includes a plurality of electrically isolated segments **1012***a* through **1012***h*, each presenting an outer contact surface formed from a conductive material. The segments **1012***a* through **1012***h* may each form a separate electrical connection

As before, each magnet **1004** of contact assembly **2002** attracts and attach to a corresponding magnet on another contact assembly **1002** of another device to establish electrical connections between the devices through the magnets.

When a top end of plug **1010** (including segments **1012***a* through **1012***d*) is received within an interior channel defined by stacked magnets **1004**; segment **1012***a* is in electrical communication with associated magnet **1004***a*; segment **1012***b* is in electrical communication with associated magnet **1004***b*; segment **1012***c* is in electrical communication with associated magnet **1004***c*; and segment **1012***d* is in electrical communication with associated magnet **1004***d*. Meanwhile, the bottom end of plug **1010** (including segments **1012***e* through **1012***h*) may extend into device **100** allowing segments **1012***e* through **1012***h* to interconnect with pins of an internal I/O interface of device **100** (FIG. **38**).

At the same time, as shown in FIG. **22**C, segment **1012***a* is electrically connected to segment **1012***e*; segment **1012***b* is electrically connected to segment **1012***f*; segment **1012***c* is electrically connected to segment **1012***g*; and segment **1012***d* is electrically connected to segment **1012***h*. In this way, each magnet **1004** may be connected to a pin of an internal I/O interface of device **100** through plug **1010**.

Collectively, magnets **1004** and plug **1010** allow a signal bus to be established through contact assembly **2002**. As before, this signal bus may conform to the USB protocol, and each magnet **1004** and interconnected segments of plug **1010** may carry a particular USB signal (VCC, D−, D+, GND), as shown in FIG. **22**B.

FIGS. **23**A and **23**B show a contact assembly **3002**, according to another example embodiment, that may also be used in place of contact assembly **1002**. Each contact assembly **3002** is adapted to mate with another contact assembly **3002** of another device. When mated, connectors **302** allow two devices to connect both mechanically and electrically. Contact assembly **3002** is cylindrical in shape.

As shown, contact assembly **3002** includes a sleeve **1020** that wraps at least partly around the vertical face of cylindrical magnet **1004**. The outer surface of sleeve **1020** presents an array of contacts for carrying signals. When magnet **1004** of contact assembly **3002** attracts and attach to corresponding magnet on a connector of another device, the contacts on sleeve **1020** form electrical connections with corresponding contacts on the connector of the other device.

Sleeve **1020** may be flexible. In an embodiment, sleeve **1020** may be a conventional flexible flat cable (FFC).

Sleeve **1020** may include a coating formed from Teflon or similar material. Such a coating my protect sleeve **1020** from wear and tear during operation. Such a coating may also smoothen rotations of a devices relative to one another about a vertical axis of contact assembly **3002**.

At least one end of sleeve **1020** is insertable into an interior of a device such as device **10**, for electrical connection with internal components of the device. In some embodiments, sleeve **1020** may wrap substantially or wholly around the vertical face of cylindrical magnet **1004**. When sleeve **1020** is wrapped substantially or wholly around the vertical face of magnet **1004**, the free ends of sleeve **1020** may unite, and press together to form a single flat cable that is insertable into a device such as device **10**.

So, as will be appreciated by those of ordinary skill in the art, the length of sleeve **1020** may be adjusted, to wrap along a desired portion of the vertical face of magnet **1004**, and to extend a desired distance into the interior of a device.

In some embodiments, contact assembly **3002** may include a thin shim interposed between sleeve **1020** and magnet **1004** when sleeve **1020** is wrapped around magnet **1004**. The shim spans at least the portion of sleeve **1020** expected to contact another device (e.g., by way of a complementary connector on that device). In an embodiment, the shim may be a thin hollow cylinder that sheathes magnet **1004**. The shim may be formed of brass. However, the shim could also be formed of another suitable material that is sufficiently malleable to be wrapped around portions of magnet **1004**, and is sufficiently rigid to maintain its shape during operation. (e.g., as contact assembly **3002** comes into contact with other connectors). For example, the shim could also be formed of copper. In yet other embodiments, the shim could be formed of another metal, a carbon-based material, a plastic, or a composite material. In operation, the shim serves to spread out mechanical forces over the surface of magnet **1004**, and minimizes point loads on magnet **1004**. The shim also smoothens rotations of a device **100** relative to an interconnected device about a vertical axis of contact assembly **3002**.

In some embodiments, the shim may be integral to sleeve **1020**, and may, for example, be provided as a backing or substrate of sleeve **1020**. In such embodiments, the shim may serve as a ground plane for sleeve **1020** (e.g., when the shim is formed of copper), and thereby facilitates signal transmission through sleeve **1020**. The shim may also provide electromagnetic shielding.

Collectively, the contacts on sleeve **1020** allow a signal bus to be established through contact assembly **3002**. As before, this signal bus may conform to the USB protocol, and each may be assigned to carry a USB signal (VCC, D−, D+, GND), as shown in FIGS. **23**A and **23**B.

In one arrangement, each contact on sleeve **1020** may be used to carry a particular USB signal (i.e., one of VCC, D1−, D1+, GND, D2−, D2+, D3−, D3+), as shown in FIG. **24**A. In this arrangement, three data channels may be provided, namely, D1, D2 and D3.

In another arrangement, the contacts on sleeve **1020** may be paired, and each pair of contacts may be electrically connected and used to carry a particular USB signal (i.e., one of VCC, D−, D+, GND), as shown in FIG. **24**B. Further, the USB signals may be assigned to the contacts in a vertically symmetrical order. This redundancy of contacts and vertically symmetry allows contact assembly **3002** to be agnostic to its vertical orientation. In other words, contact assembly **3002** may be mated to another contact assembly **3002** to establish electrical and mechanical connections, regardless of their respective vertical orientations.

Of course, contact assemblies **1002** and **2002** may also be modified to have a similar redundancy and vertical symmetry of contacts (i.e., magnets **1004**), to thereby provide connectors that are agnostic to their vertical orientation.

The cylindrically shaped connectors described herein (e.g., contact assemblies **1002**, **2002**, **3002**, and **300**) allow device **100** to be rotated about a vertical axis of the connector when connected to another device by way of that connector. This allows the orientation of device **100** to be adjusted relative to connected devices, without interrupting

the mechanical or electrical connections therebetween. Embodiments of the cylindrically shaped connectors described herein (e.g., contact assemblies **1002**, **2002**, and **3002**) may be genderless, and may mate with a like cylindrically shaped connectors.

In other embodiments, the cylindrically shaped connectors described herein may be modified to adhere to a protocol/connector pin-out format other than USB or to adhere to a custom protocol/connector pin-out format.

In some embodiments, magnet **1004** (FIGS. **23**A and **23**B) of contact assembly **3002** may be replaced by a stack of cylindrical magnets **2004**.

More than two devices may be interconnected. For example, the number of devices that be interconnected may be limited by total current draw of the devices, and the ability of particular protocols to uniquely identify interconnected devices. Various combinations of disparate devices may be interconnected. Moreover, in some embodiments, multiple connections could be formed between two devices. For example, in the case of devices with connectors at each corner, devices may be placed side-by-side, with two pairs of corners abutting one another. Connectors at each pair of corners may form connections. By way of example, multiple connections may be used for multiple data lanes, increasing data bandwidth between devices, or one connector could be used for data transmission and one for power transmission.

Although the disclosure has been described and illustrated with respect to exemplary arrangements and embodiments with a certain degree of particularity, it is noted that the description and illustrations have been made by way of example only. Numerous changes in the details of construction and combination and arrangement of parts and steps may be made.

What is claimed is:

1. A connector for an electronic device, comprising:

a housing having a peripheral surface;

a longitudinal cavity defining a longitudinal path within said housing, said longitudinal path extending between a first extremity withdrawn from said peripheral surface and an opposite second extremity; and

a magnetic assembly received in said longitudinal cavity of said housing, said magnetic assembly being longitudinally movable from a retracted position at said first extremity to an extended position at said second extremity, a magnetic bias magnetically biasing said magnetic assembly toward said first extremity of said longitudinal path, the magnetic assembly being movable to the second extremity against said magnetic bias, upon a complementary connector of an adjacent electronic device magnetically attracting said magnetic assembly.

2. The connector of claim **1** further comprising a block towards which said magnetic assembly is magnetically biased.

3. The connector of claim **2** wherein said magnetic assembly and said block bias said magnetic assembly into said retracted position within said connector such that when said connector is brought into engagement with said complementary connector, magnetic attraction between said connectors overcomes said magnetic bias provided by said block and causes said magnetic assembly to move along said longitudinal path toward said peripheral surface of said housing, said magnetic assembly thereby moving to said extended position within said connector, and such that when said connectors are disconnected from one another, said magnetic bias between the magnetic assembly and said block moves said magnetic assembly back to said retracted position.

4. The connector of claim **2** wherein said block is a ferrous block.

5. The connector of claim **2** wherein said block is a biasing magnet disposed at a rear wall of said housing in said longitudinal cavity.

6. The connector of claim **2** wherein said block is a stop at a rear wall of said housing in said longitudinal cavity.

7. The connector of claim **2** wherein said block is spaced apart from said second extremity of said longitudinal path.

8. The connector of claim **7** wherein said block is longitudinally spaced-apart from said second extremity of said longitudinal path.

9. The connector of claim **1** wherein said second extremity of said longitudinal path protrudes from said peripheral surface.

10. The connector of claim **9** wherein said magnetic assembly has a portion protruding from said peripheral surface of said housing in said extended position, said protruding portion having a rounded end in the shape of a semi-cylinder being rotatable relative to said complementary connector of said adjacent connector.

11. The connector of claim **1** wherein said magnetic assembly is T-shaped, has a crossbar portion and a stem portion, a portion of said peripheral surface of said housing mechanically preventing said crossbar portion from longitudinally moving farther than a predetermined position along said longitudinal path when said magnetic assembly is moved toward said second extremity of said longitudinal path.

12. The connector of claim **1** wherein said magnetic assembly comprises a plurality of core magnets.

13. An electronic device comprising the connector of claim **1**.

14. A method of connecting first and second electronic devices, said first electronic device having a connector having a magnetic assembly being longitudinally movable along a longitudinal path extending between a first extremity withdrawn in said first electronic device and a second extremity, the method comprising:

the magnetic assembly being magnetically biased towards the second extremity;

positioning the connector of said first electronic device adjacent a connector of said second electronic device, the connector of said second electronic device magnetically moving said magnetic assembly along said longitudinal path toward said second extremity against said magnetic bias; the first and second electronic device being magnetically attracted to one another thereafter.

15. The method of claim **14** further comprising removing first second electronic device from said second electronic device; and, said magnetic bias magnetically drawing said magnetic assembly back to said first extremity of said longitudinal path subsequently to said removal.

16. The method of claim **14** further comprising a portion of said first electronic device mechanically preventing said magnetic assembly from longitudinally moving farther than a predetermined position along said longitudinal path when said magnetic assembly is moved toward said second extremity of said longitudinal path.

17. The method of claim **14**, further wherein the magnetic bias between the magnetic assembly and the second extrem-

ity is exerted between the magnetic assembly and a block positioned beyond the second extremity.

* * * * *