US 20190314690A1

(19) United States

(12) Patent Application Publication

(10) Pub. No.: US 2019/0314690 A1

(43) Pub. Date: Oct. 17, 2019

Schweigert et al.

(54) **GOLF CLUB HEADS AND METHODS TO MANUFACTURE GOLF CLUB HEADS**

(71) Applicant: **Parsons Xtreme Golf, LLC**, Scottsdale, AZ (US)

(72) Inventors: **Bradley D. Schweigert**, Anthem, AZ (US); **Michael R. Nicolette**, Scottsdale, AZ (US)

(21) Appl. No.: **16/422,661**

(22) Filed: **May 24, 2019**

Related U.S. Application Data

(63) Continuation-in-part of application No. 16/372,009, filed on Apr. 1, 2019, which is a continuation of application No. 15/875,416, filed on Jan. 19, 2018, now Pat. No. 10,293,220, which is a continuation of application No. 15/446,842, filed on Mar. 1, 2017, now Pat. No. 9,895,582, which is a continuation of application No. 15/377,120, filed on Dec. 13, 2016, now Pat. No. 9,802,087, which is a continuation of application No. 14/939,849, filed on Nov. 12, 2015, now Pat. No. 9,555,295, which is a continuation of application No. 14/615,606, filed on Feb. 6, 2015, now Pat. No. 9,199,140, Continuation-in-part of application No. 16/290,610, filed on Mar. 1, 2019, which is a continuation of application No. 15/875,496, filed on Jan. 19, 2018, now Pat. No. 10,252,123, which is a continuation of application No. 15/457,627, filed on Mar. 13, 2017, now Pat. No. 9,895,583, which is a continuation of application No. 15/189,806, filed on Jun. 22, 2016, now Pat. No. 9,636,554, which is a continuation of application No. 14/667,546, filed on Mar. 24, 2015, now Pat. No. 9,399,158, which is a continuation-in-part of application No. 14/615,606, filed on Feb. 6, 2015, now Pat. No. 9,199,140, Continuation-in-part of application No. 16/375,553, filed on Apr. 4, 2019, which is a continuation of application No. 15/967,117, filed on Apr. 30, 2018, now Pat. No. 10,293,221, which is a continuation of application No. 15/457,618, filed on Mar. 13, 2017, now Pat. No. 9,987,526, which is a continuation of application No. 15/163,393, filed on May 24, 2016, now Pat. No. 9,662,547, which is a continuation of application No. 14/667,541, filed on Mar. 24, 2015, now Pat. No. 9,352,197, Continuation-in-part of application No. 16/035,268, filed on Jul. 13, 2018, which is a continuation of application No. 15/725,900, filed on Oct. 5, 2017, now Pat. No. 10,052,532, which is a continuation of application No. 15/445,253, filed on Feb. 28, 2017, now Pat. No. 9,795,843, which is a continuation of application No. 15/227,281, filed on Aug. 3, 2016, now Pat. No. 9,782,643, Continuation-in-part of application No. 16/198,128, filed on Nov. 21, 2018, which is a continuation of application No. 15/583,756, filed on May 1, 2017, now Pat. No. 10,143,899, which is a con-

(Continued)

Publication Classification

(51) **Int. Cl.**

A63B 53/04 (2006.01)

A63B 60/02 (2006.01)

(52) **U.S. Cl.**

CPC ***A63B 53/0466*** (2013.01); ***A63B 60/02*** (2015.10); ***A63B 53/04*** (2013.01); *A63B 2053/0412* (2013.01); *A63B 2053/0491* (2013.01); *A63B 2053/0408* (2013.01); *A63B 2053/0433* (2013.01)

(57) **ABSTRACT**

Embodiments of golf club heads and methods to manufacture golf club heads are generally described herein. In one example, a golf club head may include a body portion having a front portion, a rear portion, a toe portion, a heel portion, a top portion, and a bottom portion. The front portion may include a front pocket defined by an interior wall. A face portion may be positioned in the front pocket. The material of the face portion may have a substantially higher yield strength than the material of the interior wall. Other examples and embodiments may be described and claimed.

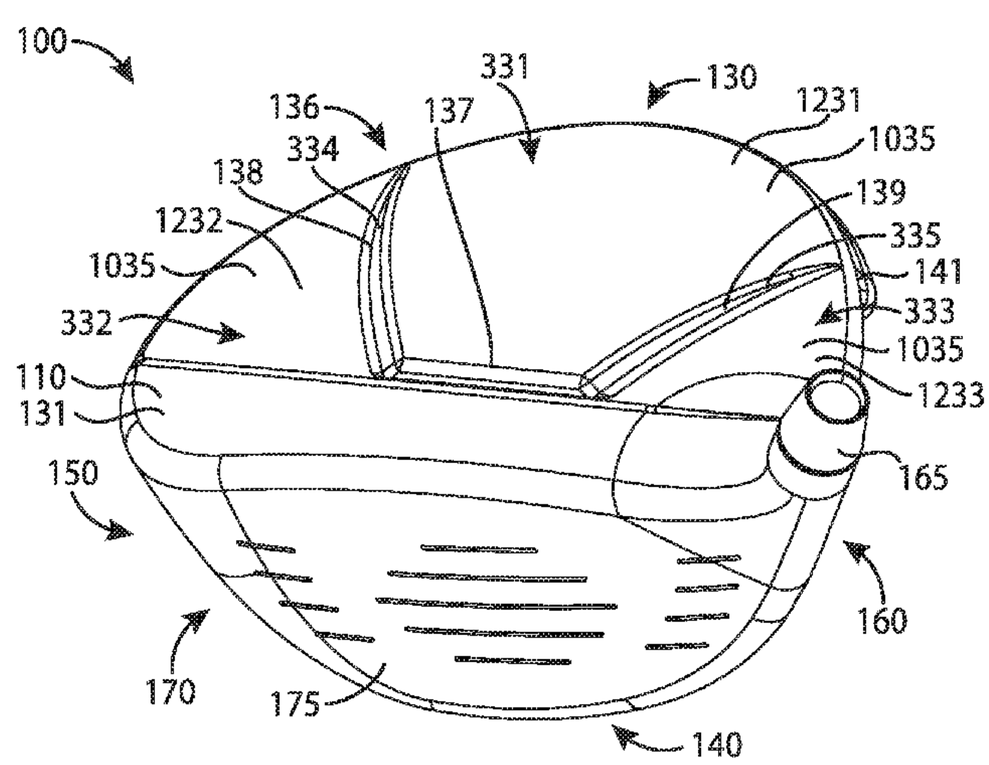

Related U.S. Application Data

tinuation of application No. 15/271,574, filed on Sep. 21, 2016, now Pat. No. 9,669,270, Continuation-in-part of application No. 16/129,526, filed on Sep. 12, 2018, which is a continuation of application No. 15/808,552, filed on Nov. 9, 2017, now Pat. No. 10,099,093, which is a continuation of application No. 15/492,711, filed on Apr. 20, 2017, now Pat. No. 9,821,201, Continuation-in-part of application No. 15/994,860, filed on May 31, 2018, which is a continuation of application No. 15/807,201, filed on Nov. 8, 2017, now Pat. No. 10,010,770, which is a continuation of application No. 15/463,306, filed on Mar. 20, 2017, now Pat. No. 9,821,200, which is a continuation of application No. 15/249,857, filed on Aug. 29, 2016, now Pat. No. 9,630,070, Continuation-in-part of application No. 16/222,580, filed on Dec. 17, 2018, which is a continuation of application No. 15/831,148, filed on Dec. 4, 2017, now Pat. No. 10,195,501, which is a continuation of application No. 15/453,701, filed on Mar. 8, 2017, now Pat. No. 9,833,667, Continuation-in-part of application No. 15/967,098, filed on Apr. 30, 2018, which is a continuation of application No. 15/687,273, filed on Aug. 25, 2017, now Pat. No. 9,981,160, Continuation-in-part of application No. 16/265,686, filed on Feb. 1, 2019, which is a continuation of application No. 15/910,747, filed on Mar. 2, 2018, now Pat. No. 10,232,234, which is a continuation of application No. 15/477,972, filed on Apr. 3, 2017, now Pat. No. 9,914,029, which is a continuation of application No. 15/406,408, filed on Jan. 13, 2017, now Pat. No. 9,861,867, Continuation-in-part of application No. 15/981,094, filed on May 16, 2018, now Pat. No. 10,384,102, which is a continuation of application No. 15/724,035, filed on Oct. 3, 2017, now Pat. No. 9,999,814, which is a continuation of application No. 15/440,968, filed on Feb. 23, 2017, now Pat. No. 9,795,842, Continuation-in-part of application No. 15/970,665, filed on May 3, 2018, which is a continuation of application No. 15/667,343, filed on Aug. 2, 2017, now Pat. No. 10,213,659, Continuation-in-part of application No. 16/030,403, filed on Jul. 9, 2018, Continuation-in-part of application No. 16/179,406, filed on Nov. 2, 2018, Continuation-in-part of application No. 16/419,639, filed on May 22, 2019, which is a continuation of application No. 16/234,169, filed on Dec. 27, 2018, now Pat. No. 10,376,754, Continuation-in-part of application No. 16/418,691, filed on May 21, 2019, which is a continuation of application No. 15/803,157, filed on Nov. 3, 2017, now Pat. No. 10,335,645, which is a continuation of application No. 15/290,859, filed on Oct. 11, 2016, now Pat. No. 9,814,945, which is a continuation of application No. 15/040,892, filed on Feb. 10, 2016, now Pat. No. 9,550,096.

(60) Provisional application No. 62/042,155, filed on Aug. 26, 2014, provisional application No. 62/048,693, filed on Sep. 10, 2014, provisional application No. 62/101,543, filed on Jan. 9, 2015, provisional application No. 62/105,123, filed on Jan. 19, 2015, provisional application No. 62/109,510, filed on Jan. 29, 2015, provisional application No. 62/281,639, filed on Jan. 21, 2016, provisional application No. 62/296,506, filed on Feb. 17, 2016, provisional application No. 62/301,756, filed on Mar. 1, 2016, provisional application No. 62/362,491, filed on Jul. 14, 2016, provisional application No. 62/291,793, filed on Feb. 5, 2016, provisional application No. 62/329,662, filed on Apr. 29, 2016, provisional application No. 62/337,184, filed on May 16, 2016, provisional application No. 62/361,988, filed on Jul. 13, 2016, provisional application No. 62/356,539, filed on Jun. 30, 2016, provisional application No. 62/360,802, filed on Jul. 11, 2016, provisional application No. 62/380,727, filed on Aug. 29, 2016, provisional application No. 62/406,856, filed on Oct. 11, 2016, provisional application No. 62/412,389, filed on Oct. 25, 2016, provisional application No. 62/419,242, filed on Nov. 8, 2016, provisional application No. 62/444,671, filed on Jan. 10, 2017, provisional application No. 62/445,878, filed on Jan. 13, 2017, provisional application No. 62/512,275, filed on May 30, 2017, provisional application No. 62/530,734, filed on Jul. 10, 2017, provisional application No. 62/624,294, filed on Jan. 31, 2018, provisional application No. 62/581,456, filed on Nov. 3, 2017, provisional application No. 62/662,112, filed on Apr. 24, 2018, provisional application No. 62/734,176, filed on Sep. 20, 2018, provisional application No. 62/734,922, filed on Sep. 21, 2018, provisional application No. 62/740,355, filed on Oct. 2, 2018, provisional application No. 62/745,113, filed on Oct. 12, 2018, provisional application No. 62/751,456, filed on Oct. 26, 2018, provisional application No. 62/772,669, filed on Nov. 29, 2018, provisional application No. 62/621,948, filed on Jan. 25, 2018, provisional application No. 62/655,437, filed on Apr. 10, 2018, provisional application No. 62/115,024, filed on Feb. 11, 2015, provisional application No. 62/120,760, filed on Feb. 25, 2015, provisional application No. 62/138,918, filed on Mar. 26, 2015, provisional application No. 62/184,757, filed on Jun. 25, 2015, provisional application No. 62/194,135, filed on Jul. 17, 2015, provisional application No. 62/195,211, filed on Jul. 21, 2015, provisional application No. 62/676,860, filed on May 25, 2018, provisional application No. 62/786,371, filed on Dec. 29, 2018, provisional application No. 62/820,728, filed on Mar. 19, 2019, provisional application No. 62/850,292, filed on May 20, 2019, provisional application No. 62/816,418, filed on Mar. 11, 2019, provisional application No. 62/837,592, filed on Apr. 23, 2019.

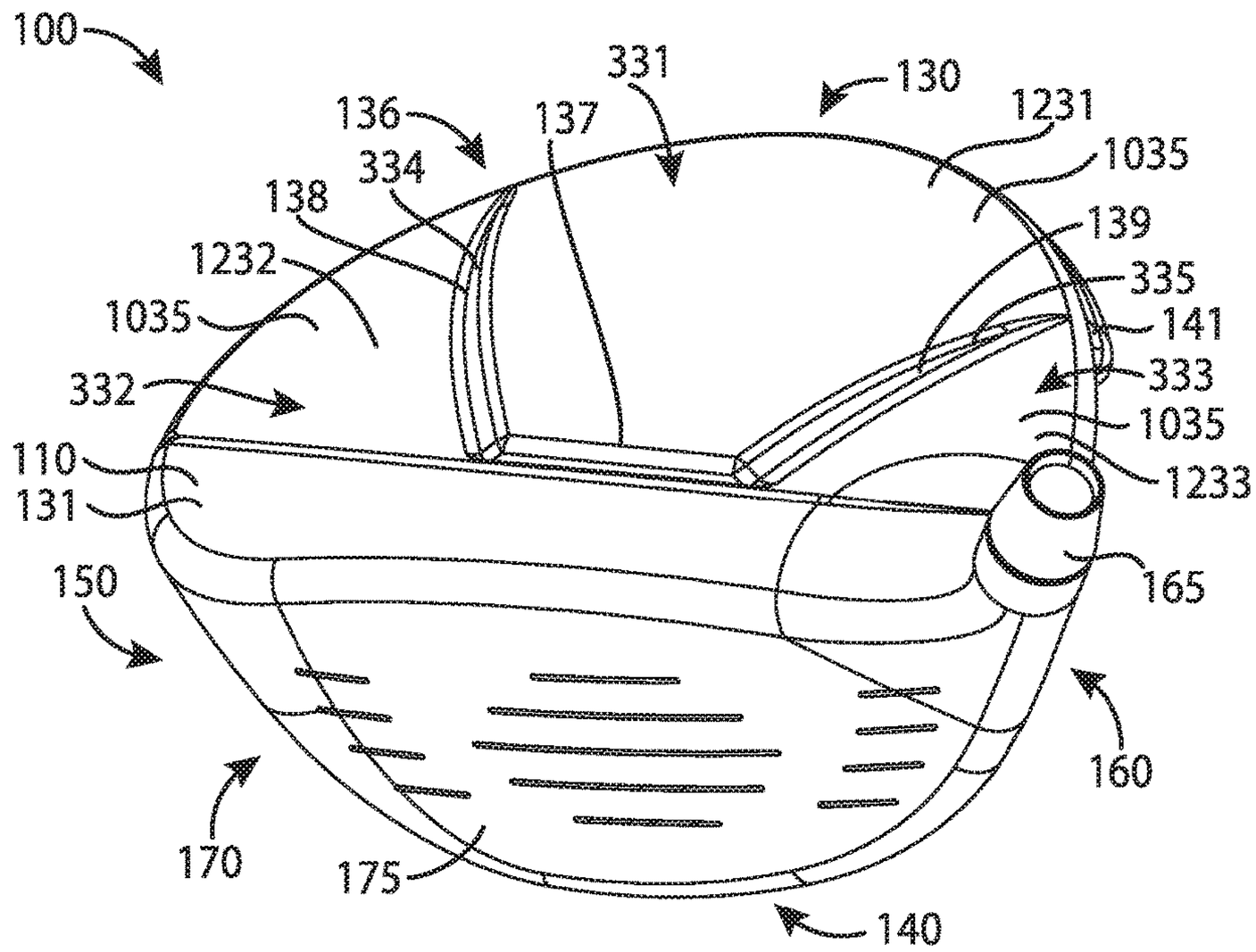
100
331
130
136
137
1231
334
1035
138
139
1232
335
1035
141
333
332
1035
110
1233
131
165
150
160
170
175
140

FIG. 1

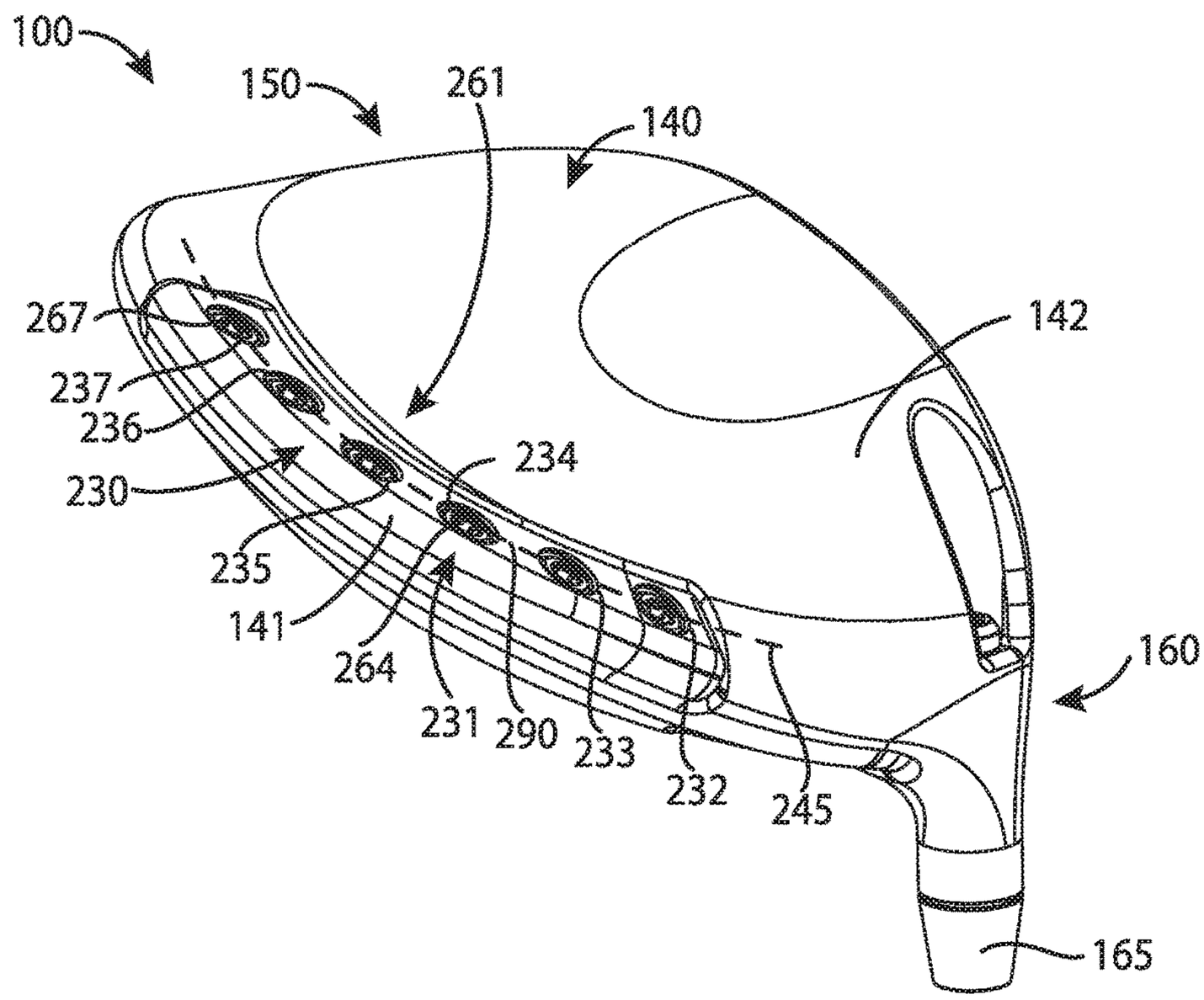
100
150
261
140
267
142
237
236
234
230
235
141
264
160
231
290
233
232
245
165

FIG. 2

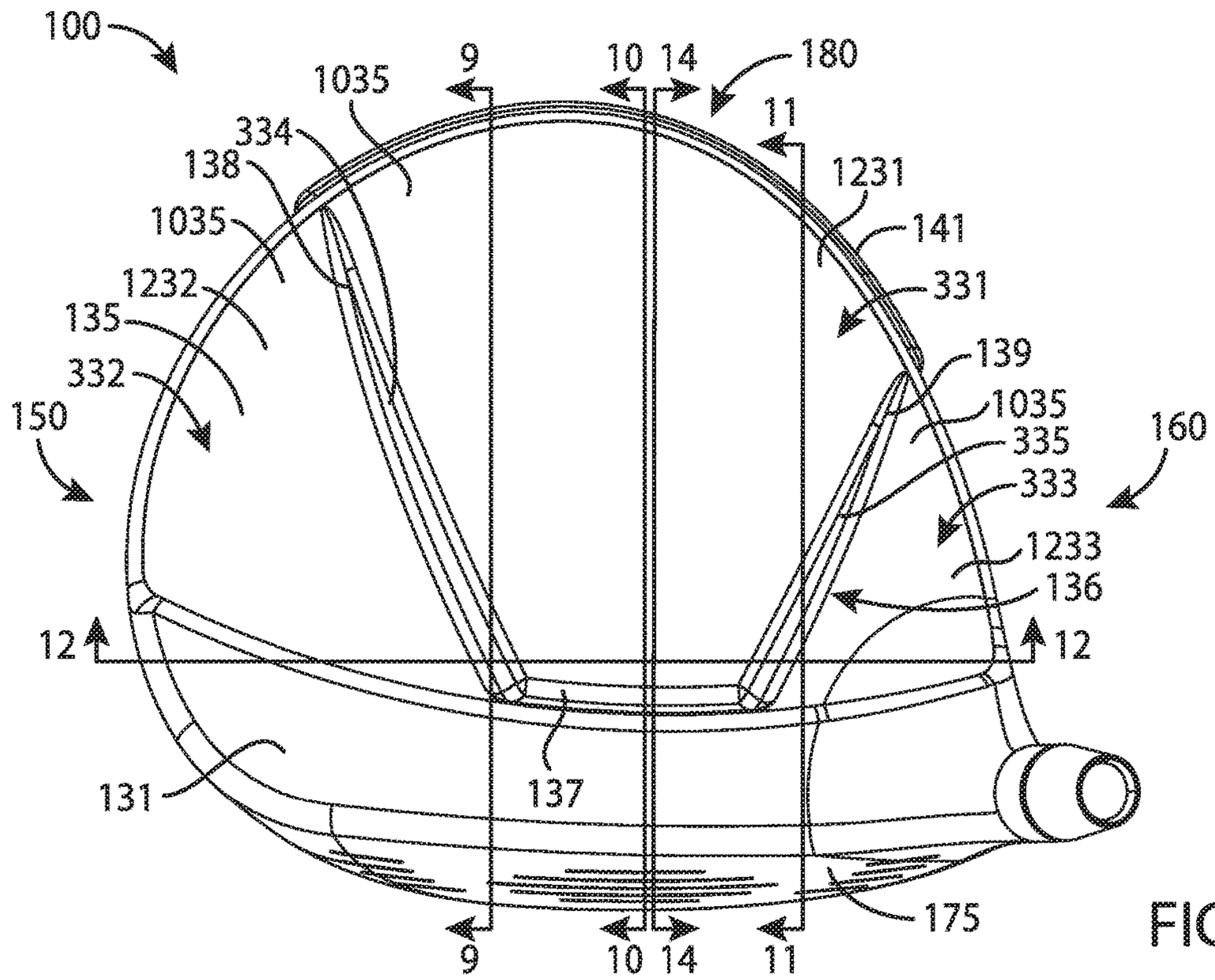
100
9
10 14
180
1035
11
334
138
1231
1035
141
1232
331
135
139
332
1035
150
335
160
333
1233
136
12
12
137
131
175
9
10 14
11

FIG. 3

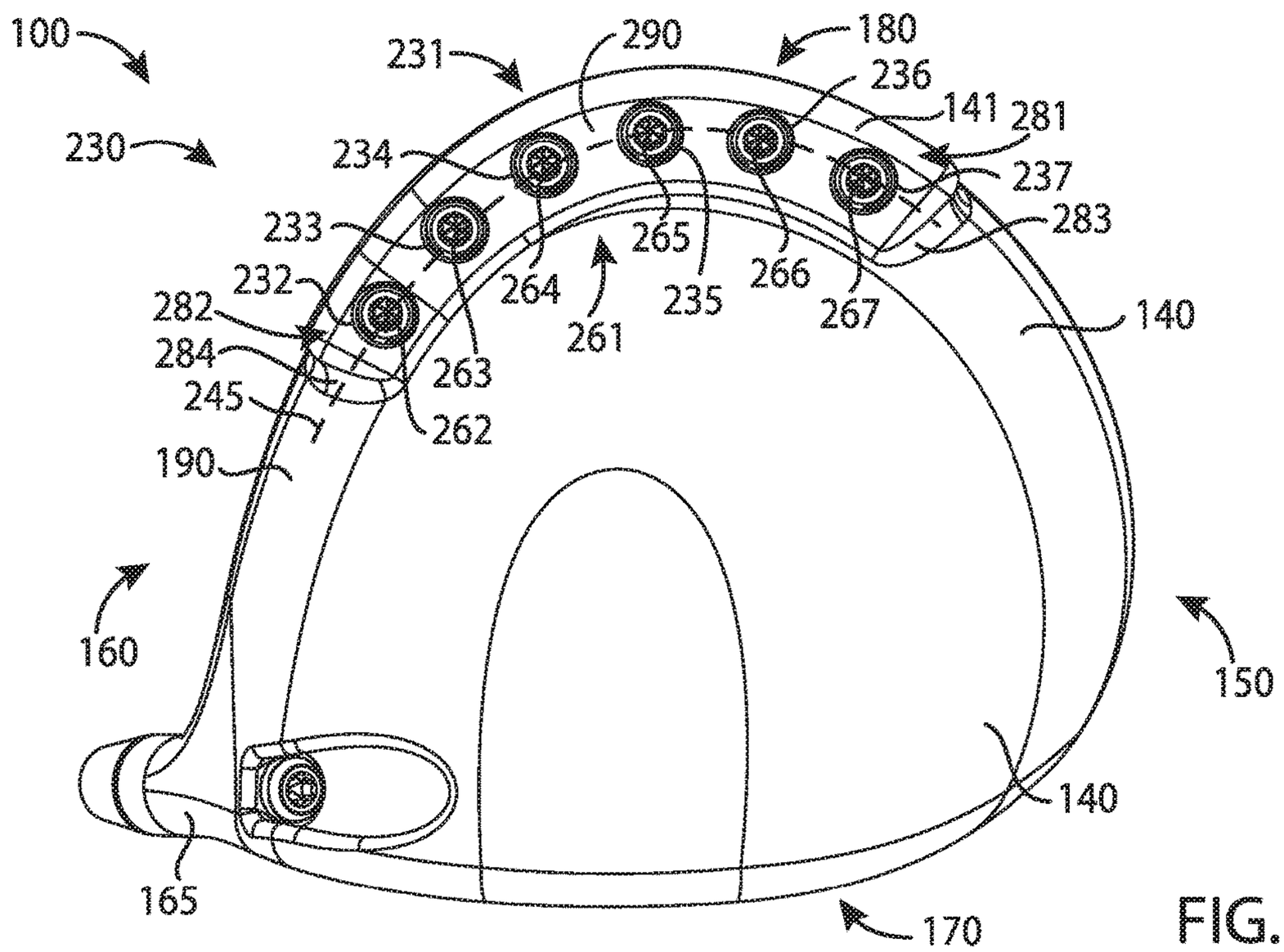
100
231
290
180
236
230
141
281
234
237
233
283
265
232
264
235
266
282
261
267
140
284
263
245
262
190
160
150
140
165
170

FIG. 4

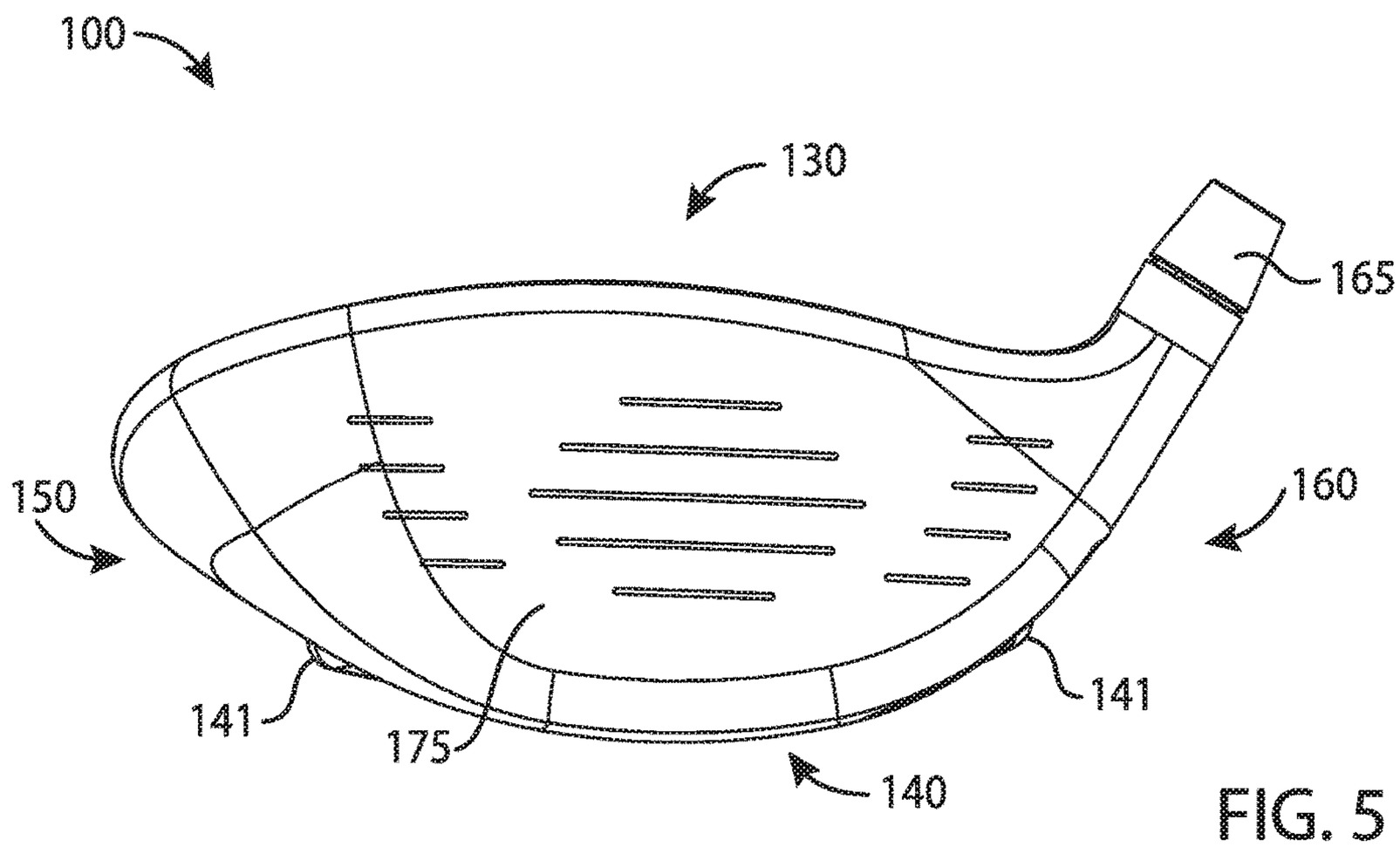
100
130
165
150
160
141
175
141
140

FIG. 5

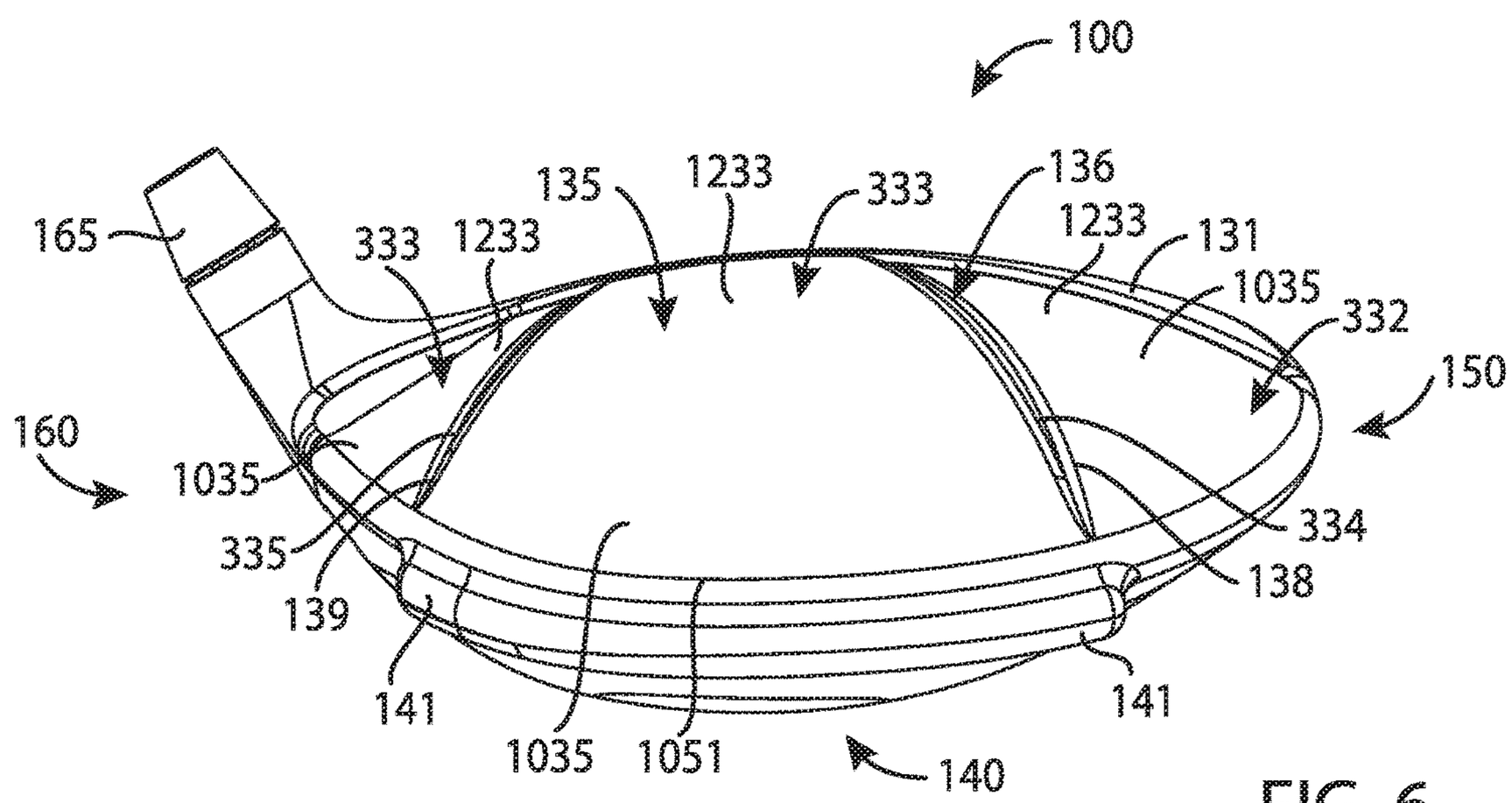
100
165
333
1233
135
1233
333
136
1233
131
1035
332
150
160
1035
335
139
141
1035
1051
140
141
138
334

FIG. 6

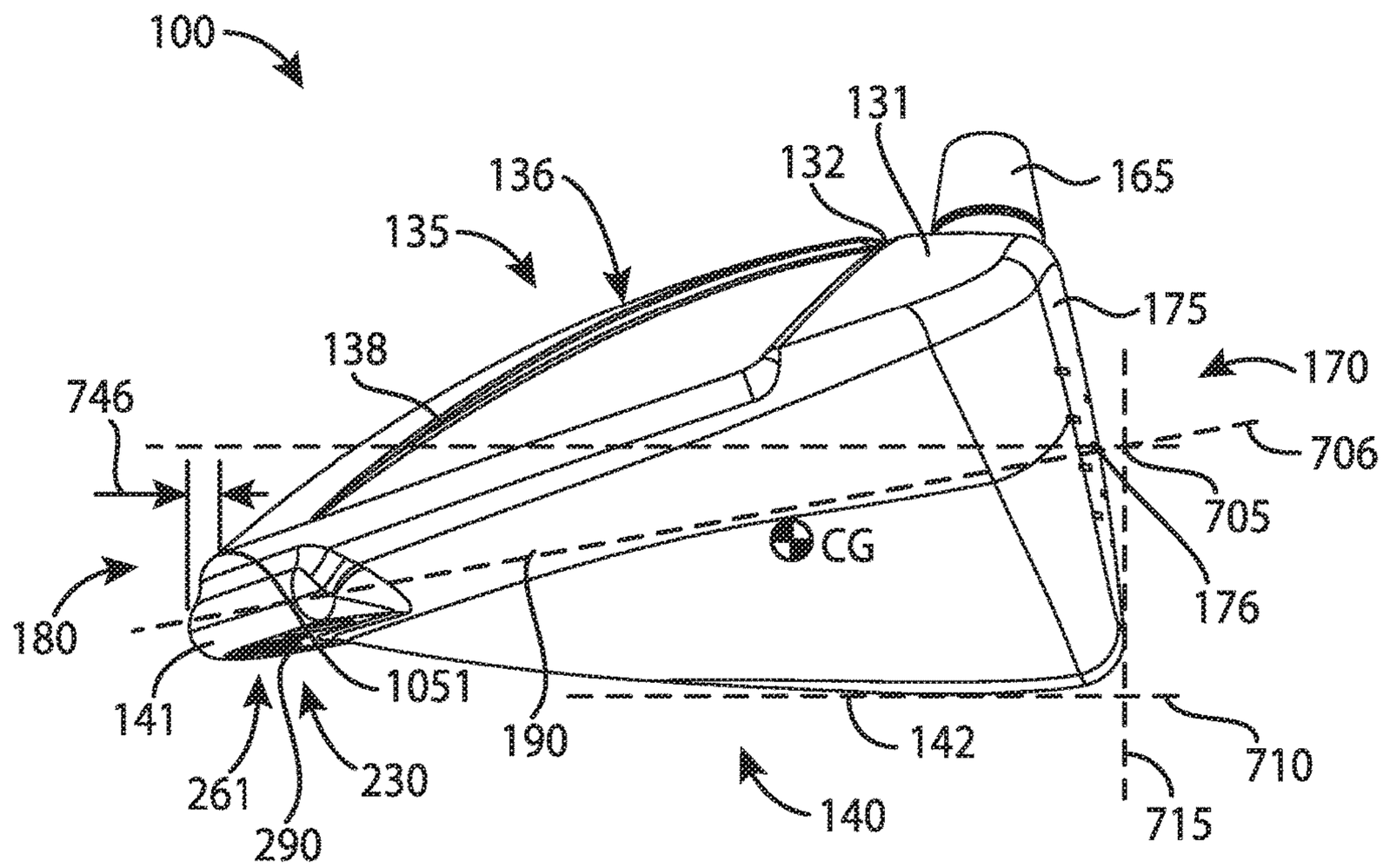
100
131
132
165
136
135
175
138
170
746
706
705
CG
176
180
1051
141
190
142
710
261
230
715
140
290

FIG. 7

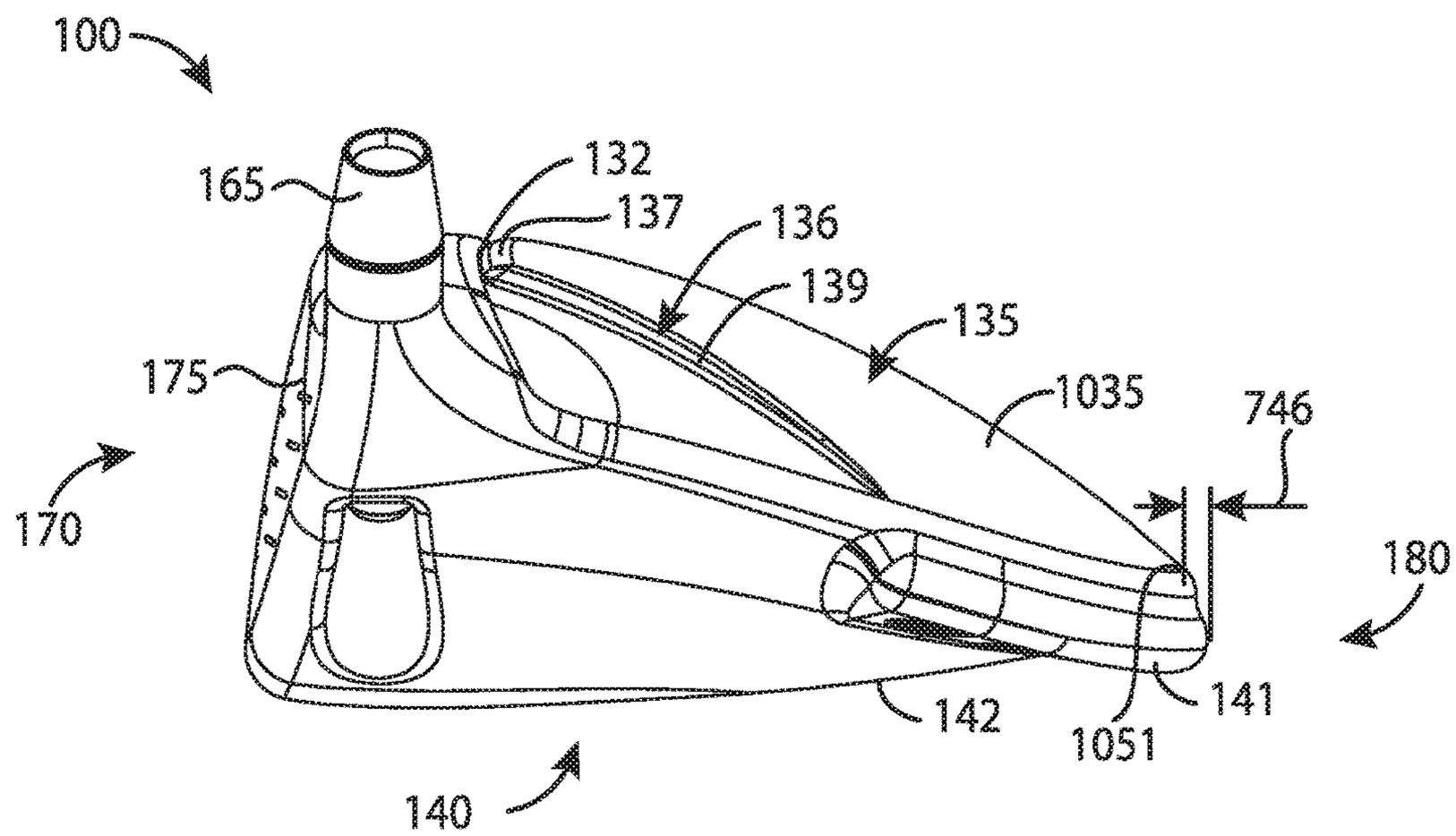
100
165
132
137
136
139
135
175
1035
746
170
180
142
1051
141
140

FIG. 8

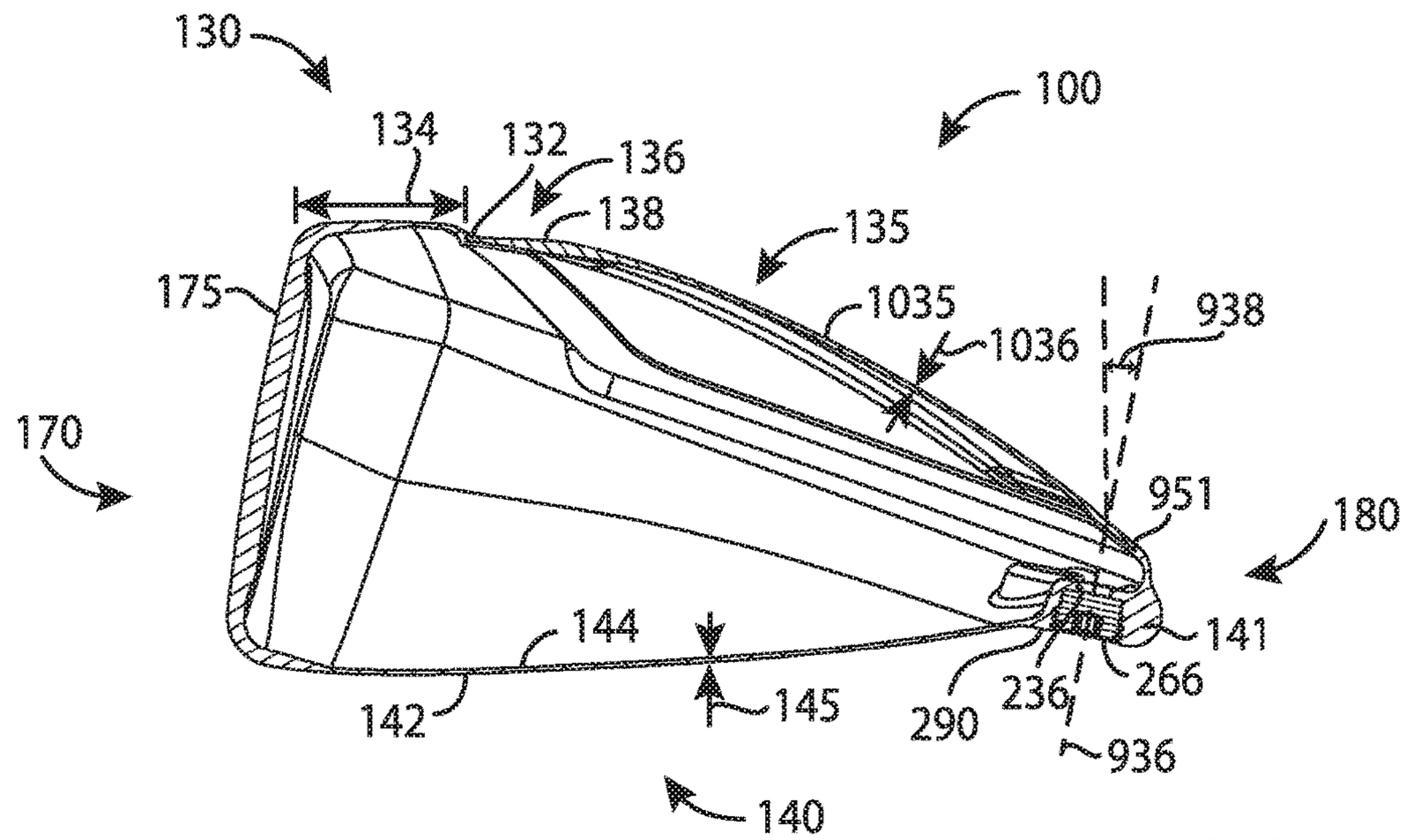
130
100
134
132
136
138
135
175
1035
1036
938
170
951
180
144
141
142
145
290
236
266
936
140

FIG. 9

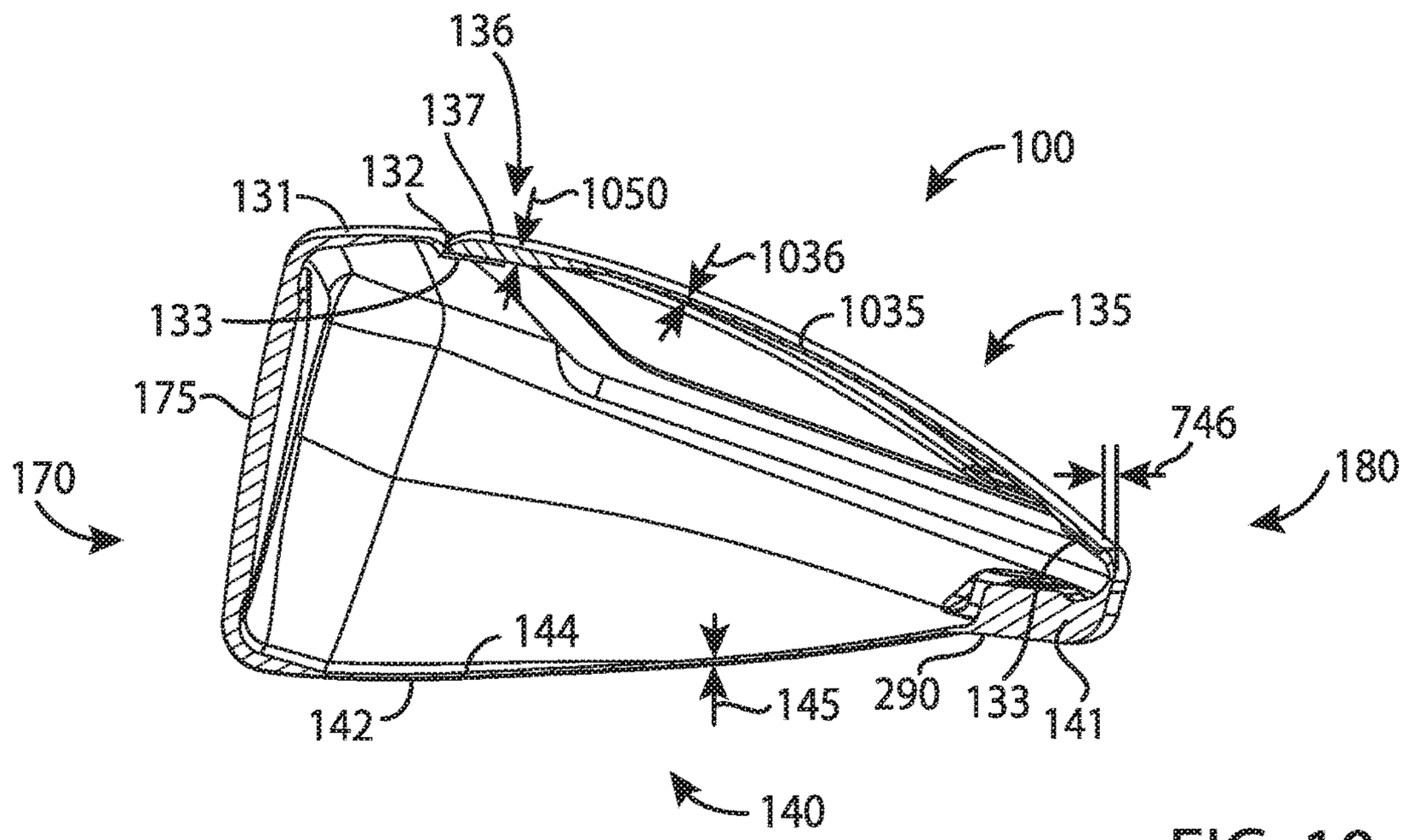
136
137
100
132
131
1050
1036
133
1035
135
175
746
170
180
144
142
145
290
133
141
140

FIG. 10

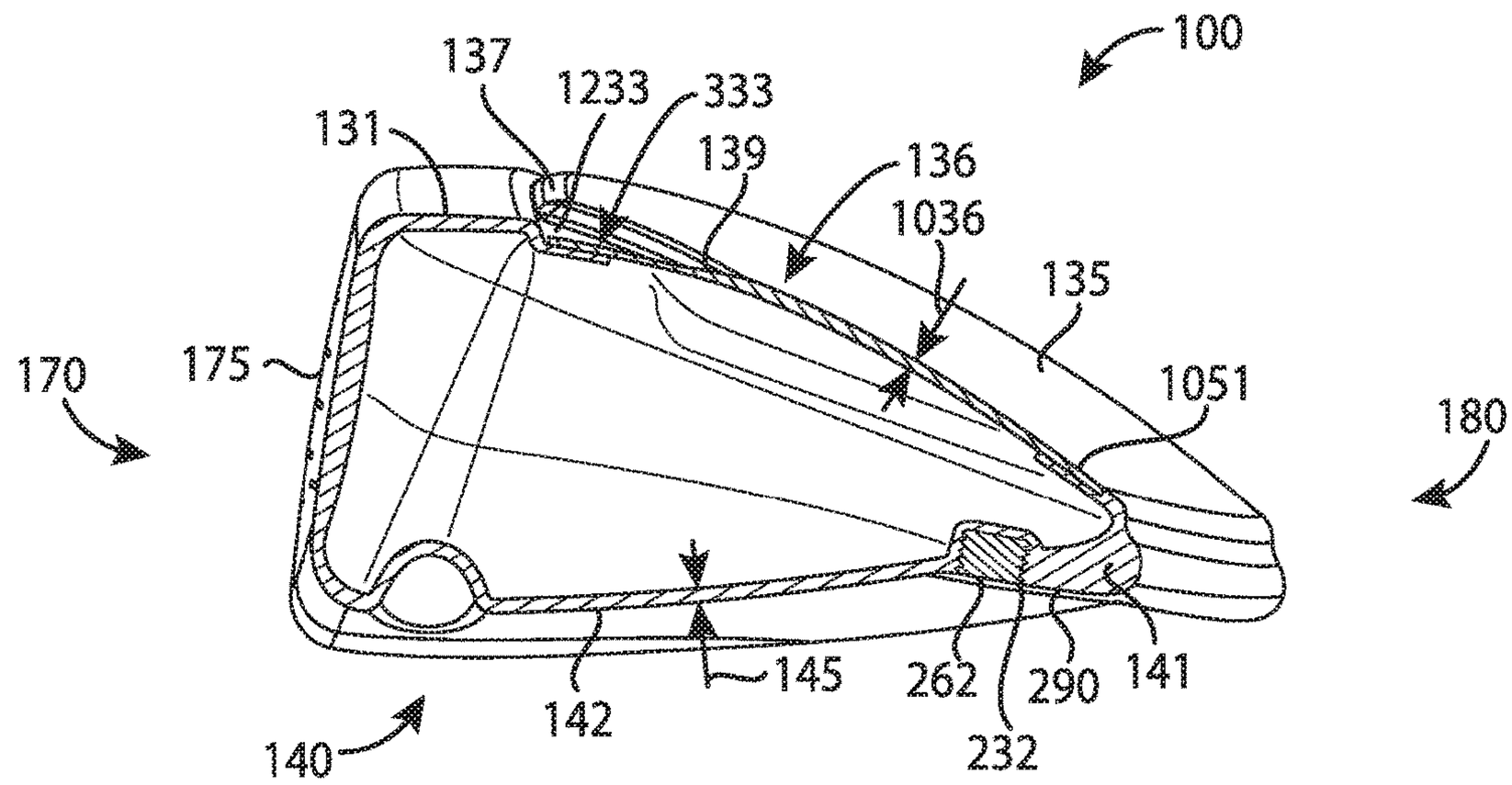
100
137
1233
333
131
139
136
1036
135
170
175
1051
180
145
262
290
141
142
140
232

FIG. 11

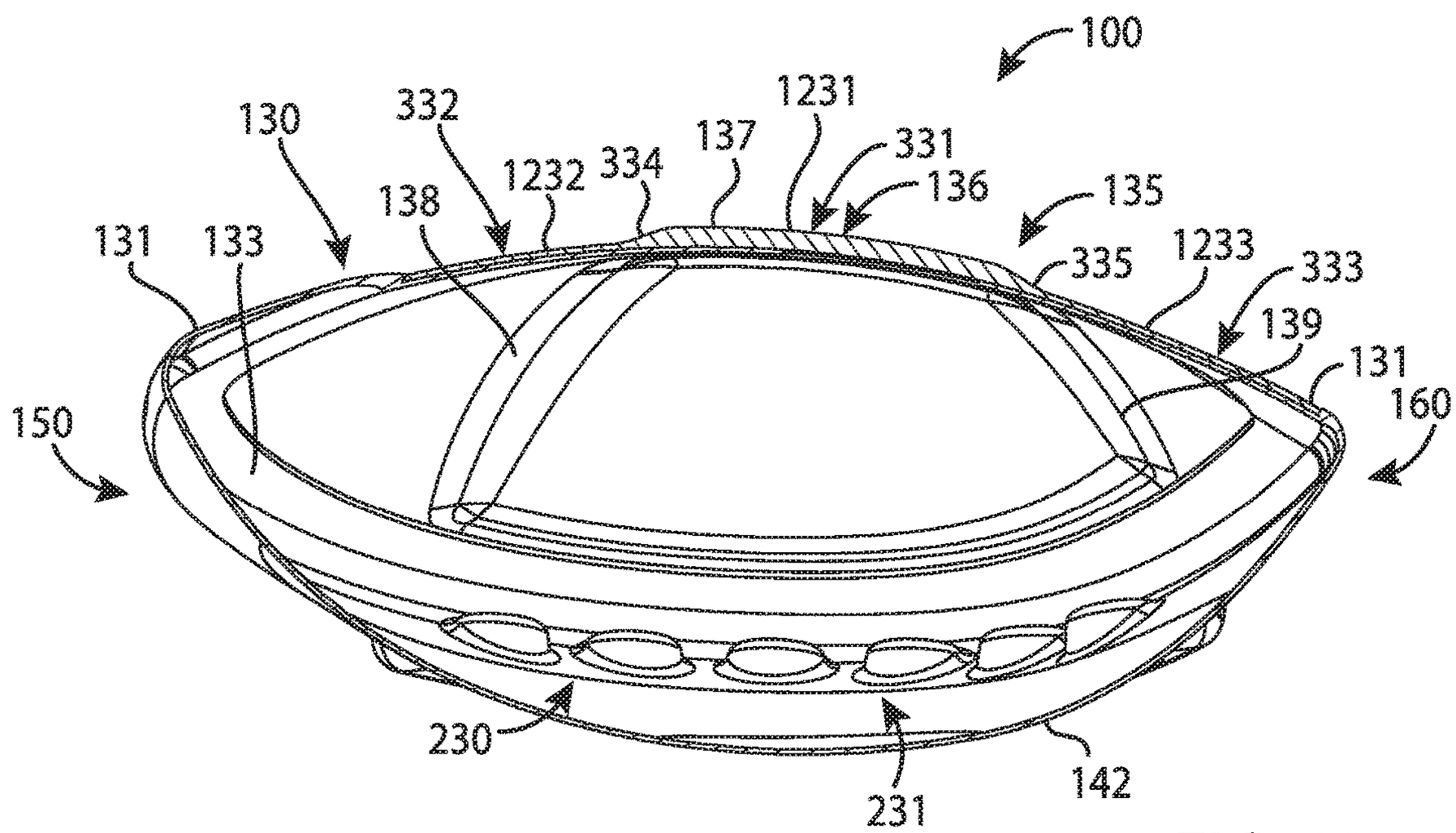
100
1231
332
130
137
331
1232
334
136
135
138
131
133
335
1233
333
139
131
160
150
230
231
142

FIG. 12

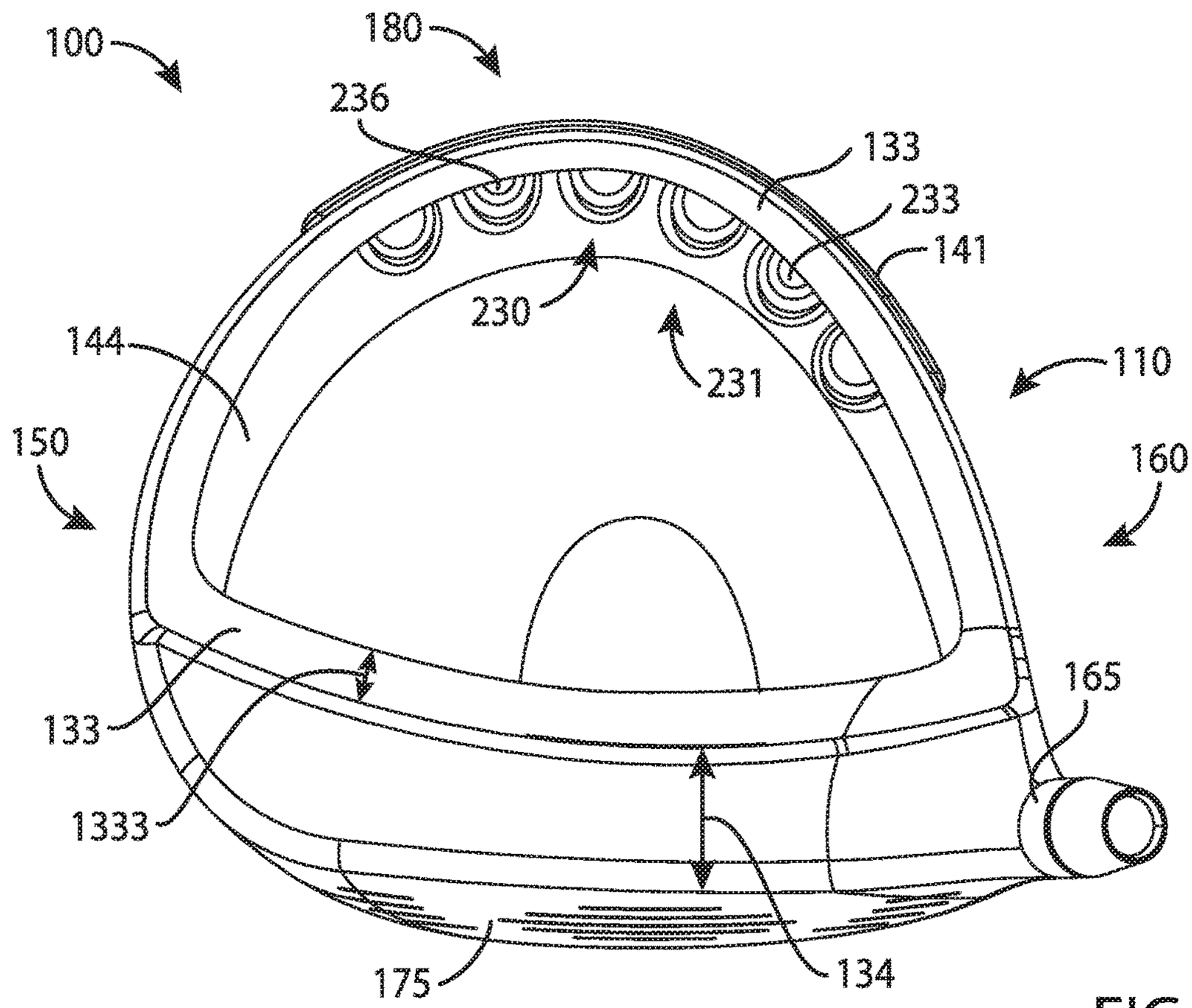
100
180
236
133
233
141
230
231
144
110
150
160
165
133
1333
175
134

FIG. 13

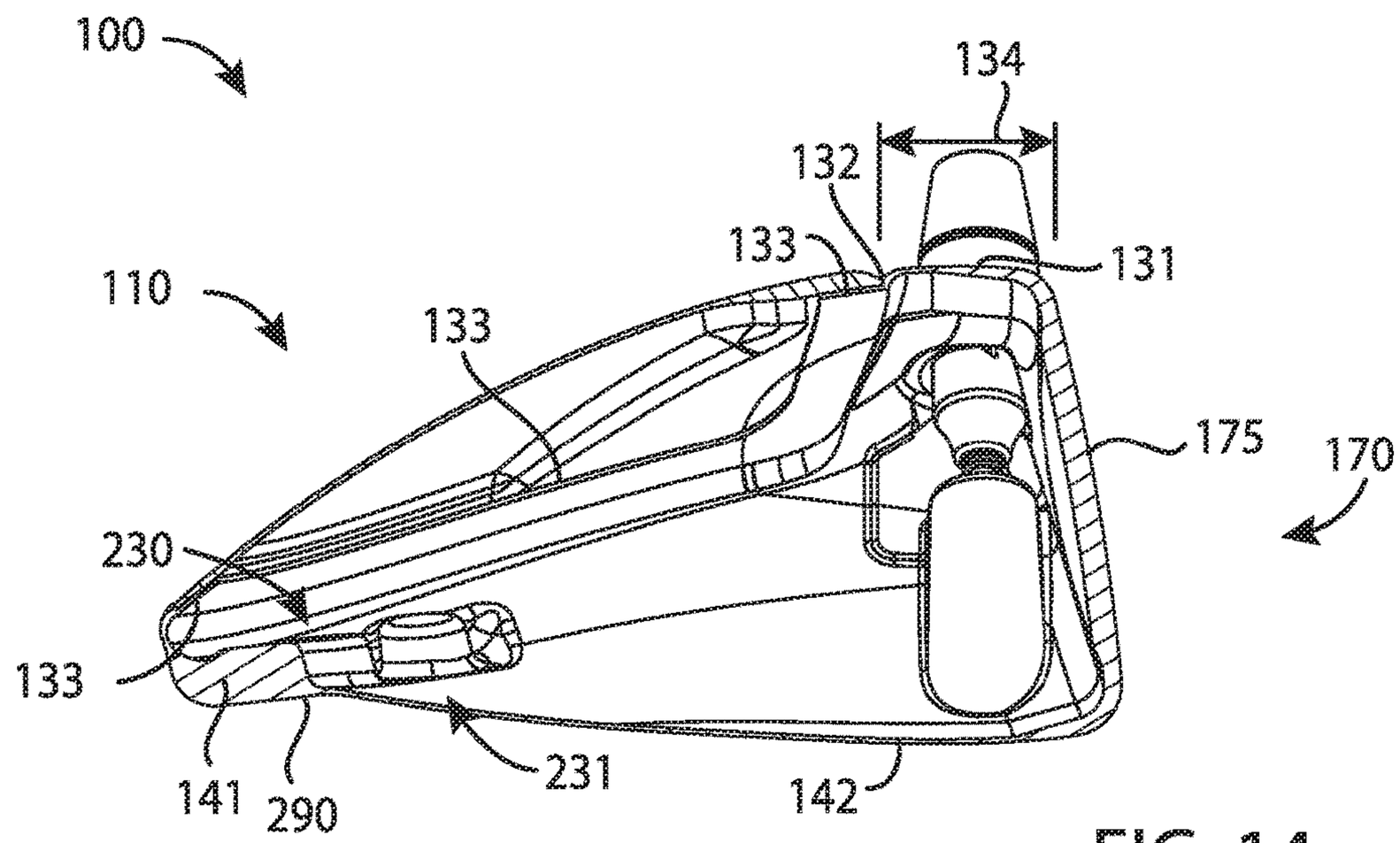
100
134
132
133
131
110
133
175
170
230
133
141
290
231
142

FIG. 14

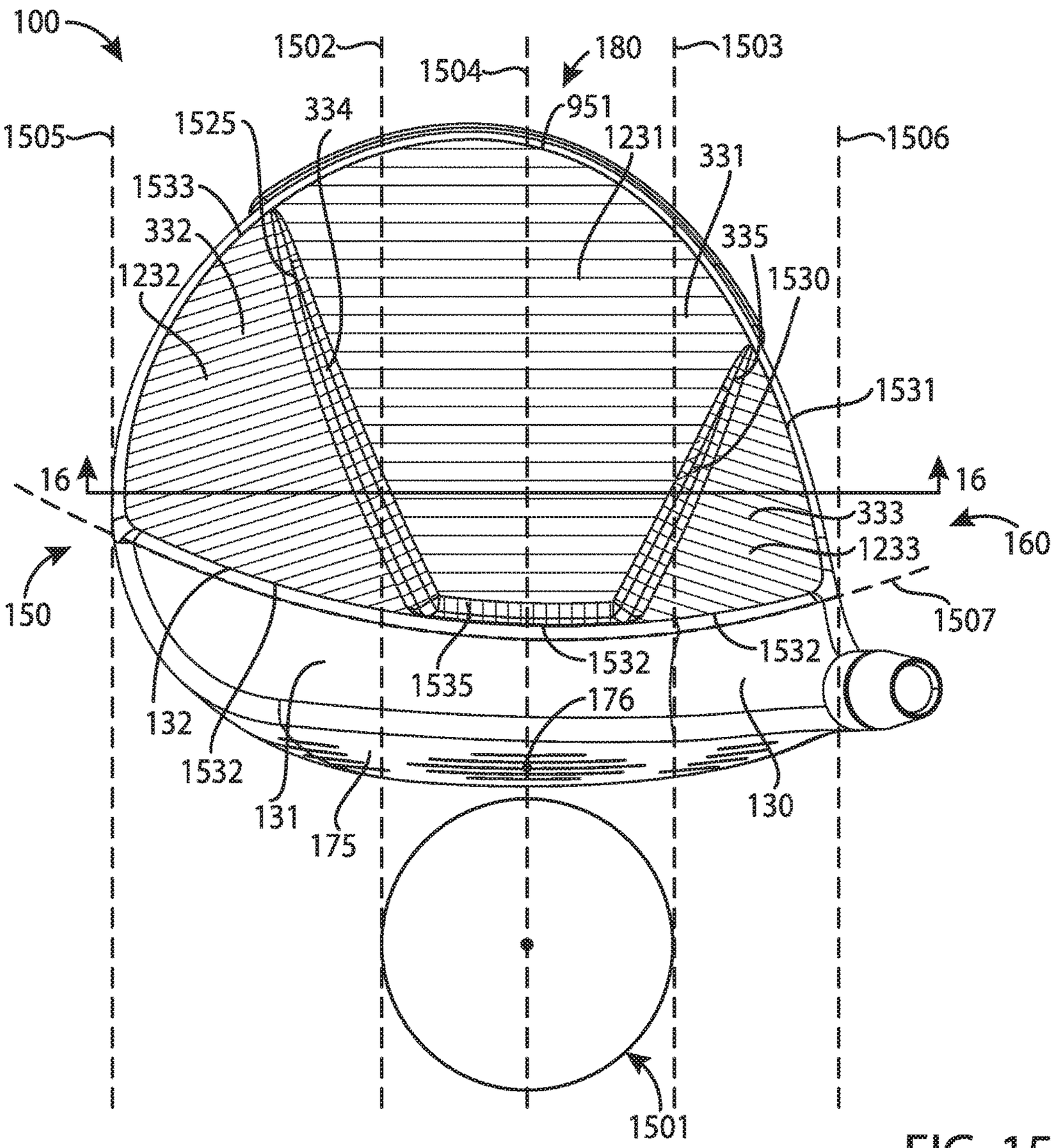
100
1502
1504
180
1503
1505
1525
334
951
1231
331
1506
1533
332
335
1232
1530
1531
16
16
333
160
1233
150
1507
1532
1532
1535
176
132
1532
131
175
130
1501

FIG. 15

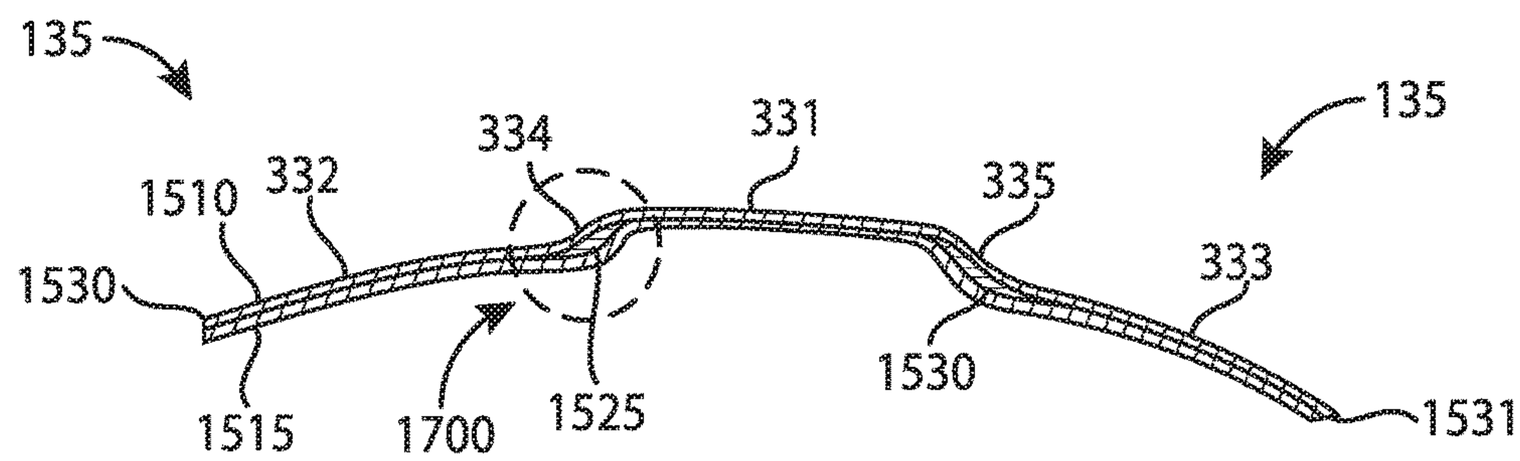
135
135
334
331
1510
332
335
1530
333
1530
1515
1700
1525
1531

FIG. 16

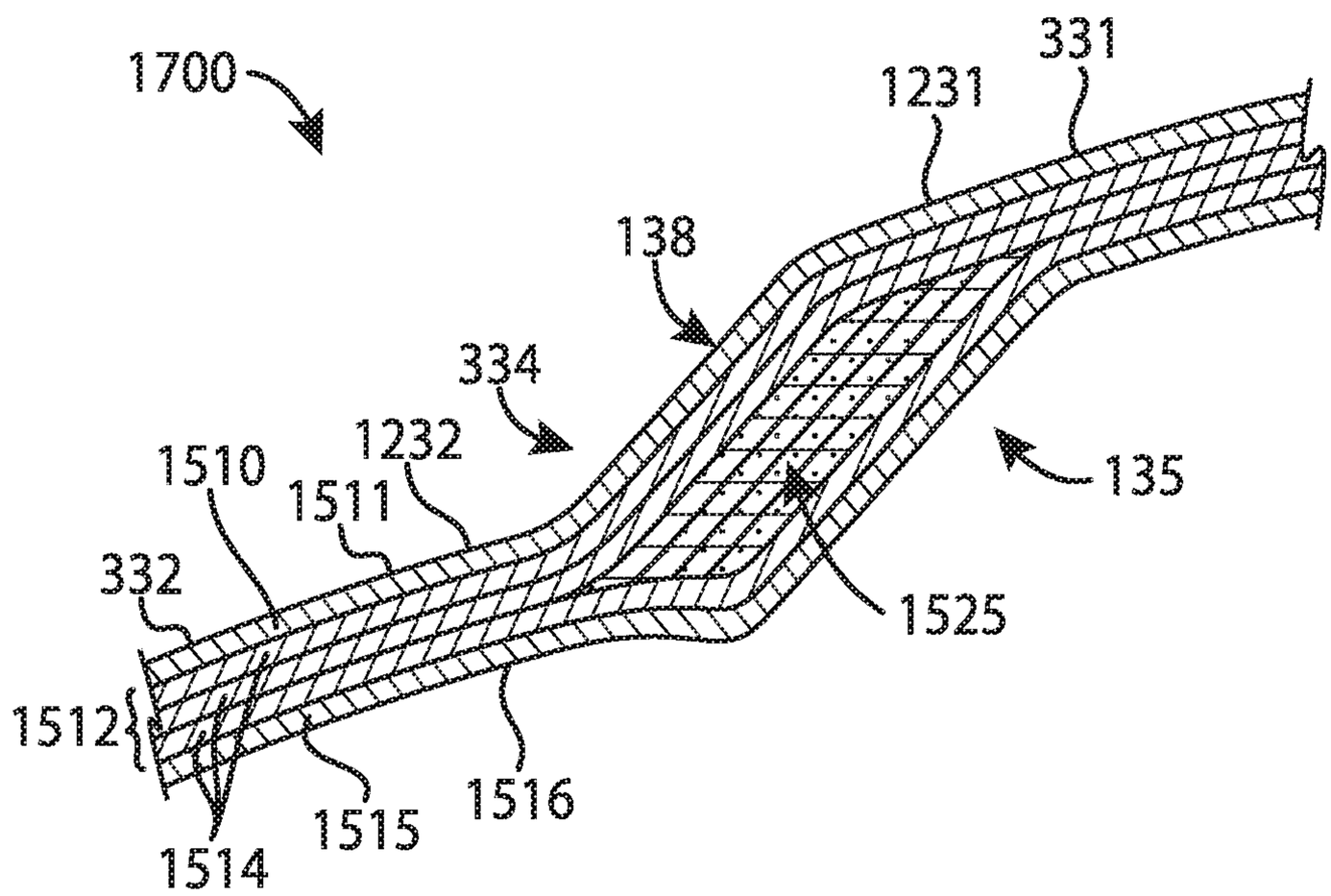
1700
331
1231
138
334
1232
1510
1511
135
332
1525
1512
1516
1515
1514

FIG. 17

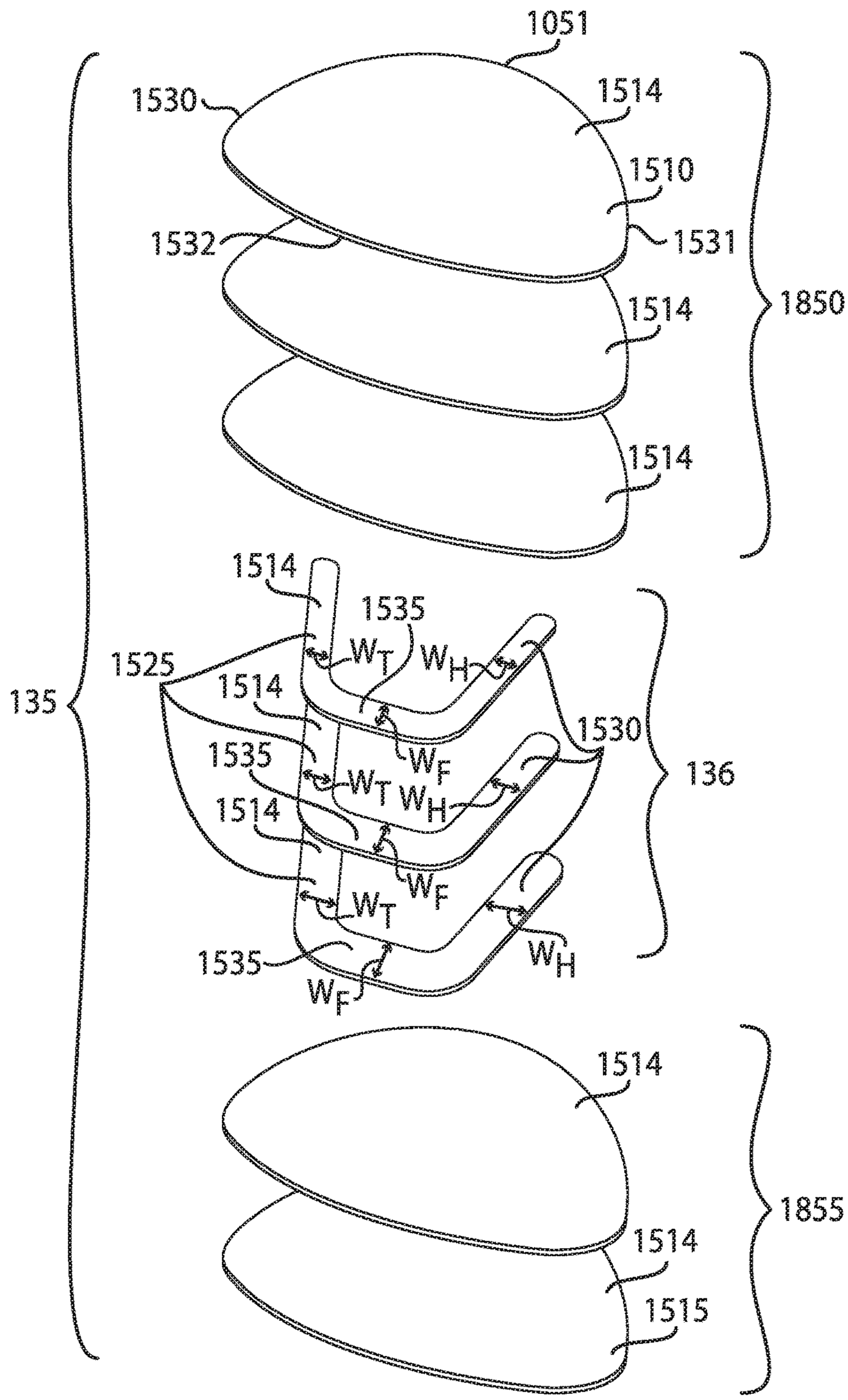
1051
1530
1514
1510
1532
1531
1514
1850
1514
1514
1535
1525
W_T
W_H
1514
135
1530
1535
W_F
136
W_T
W_H
1514
W_F
W_T
1535
W_H
W_F
1514
1855
1514
1515

FIG. 18

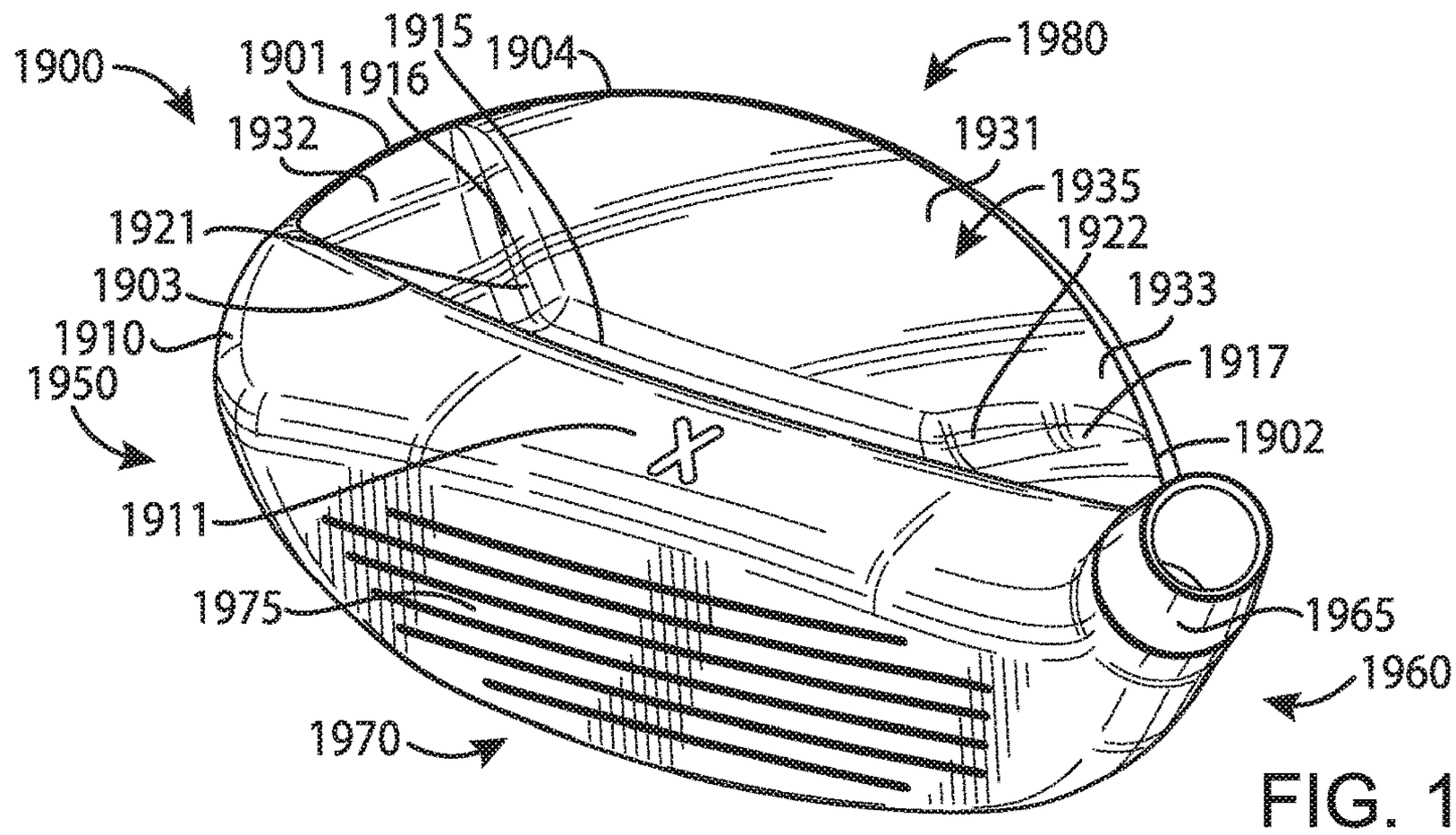
1900
1901
1915
1916
1904
1980
1932
1931
1935
1921
1922
1903
1933
1910
1917
1950
1902
1911
1975
1965
1960
1970

FIG. 19

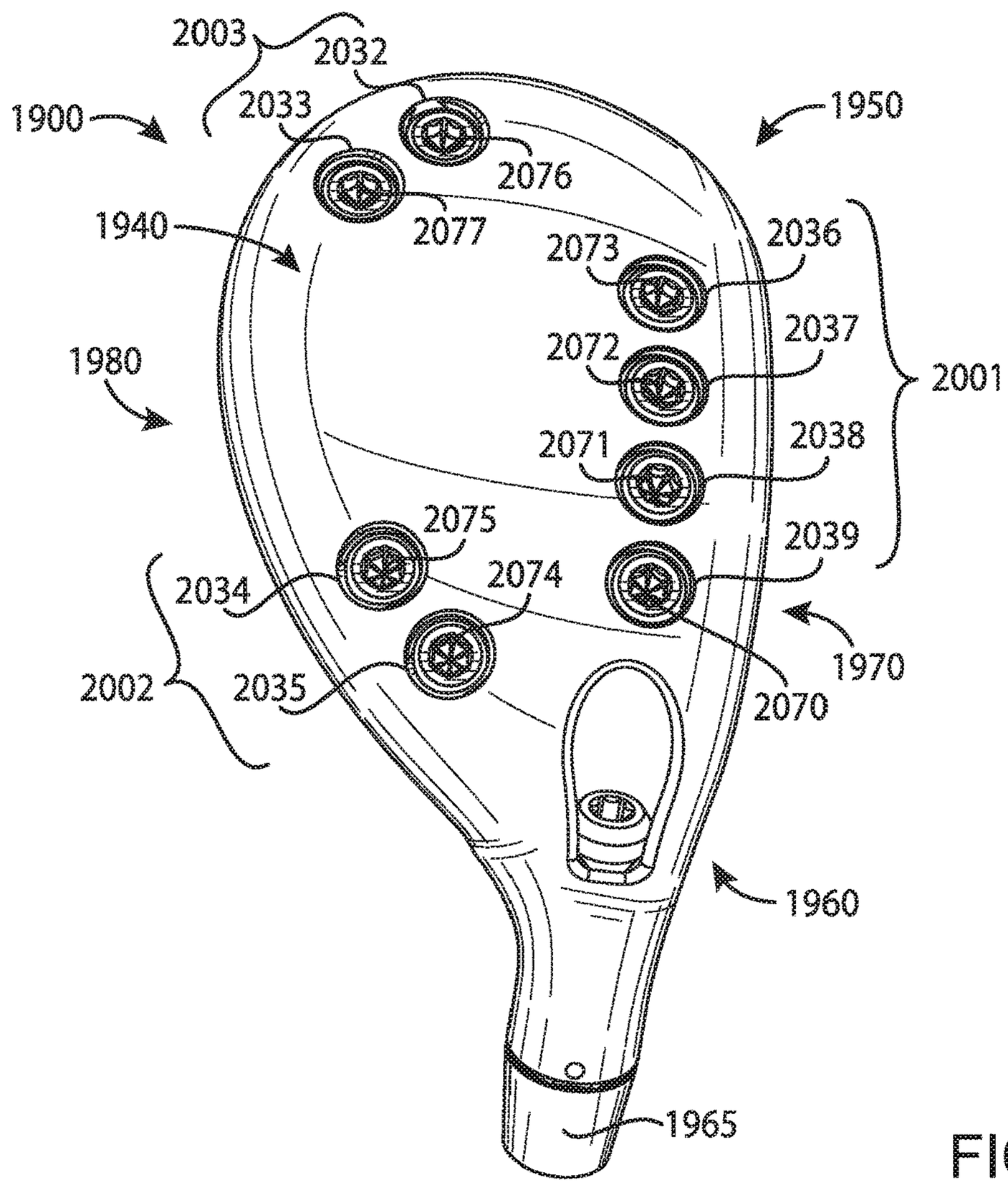
2003
2032
2033
1900
1950
2076
2077
1940
2036
2073
2037
2072
1980
2001
2038
2071
2075
2039
2034
2074
1970
2002
2035
2070
1960
1965

FIG. 20

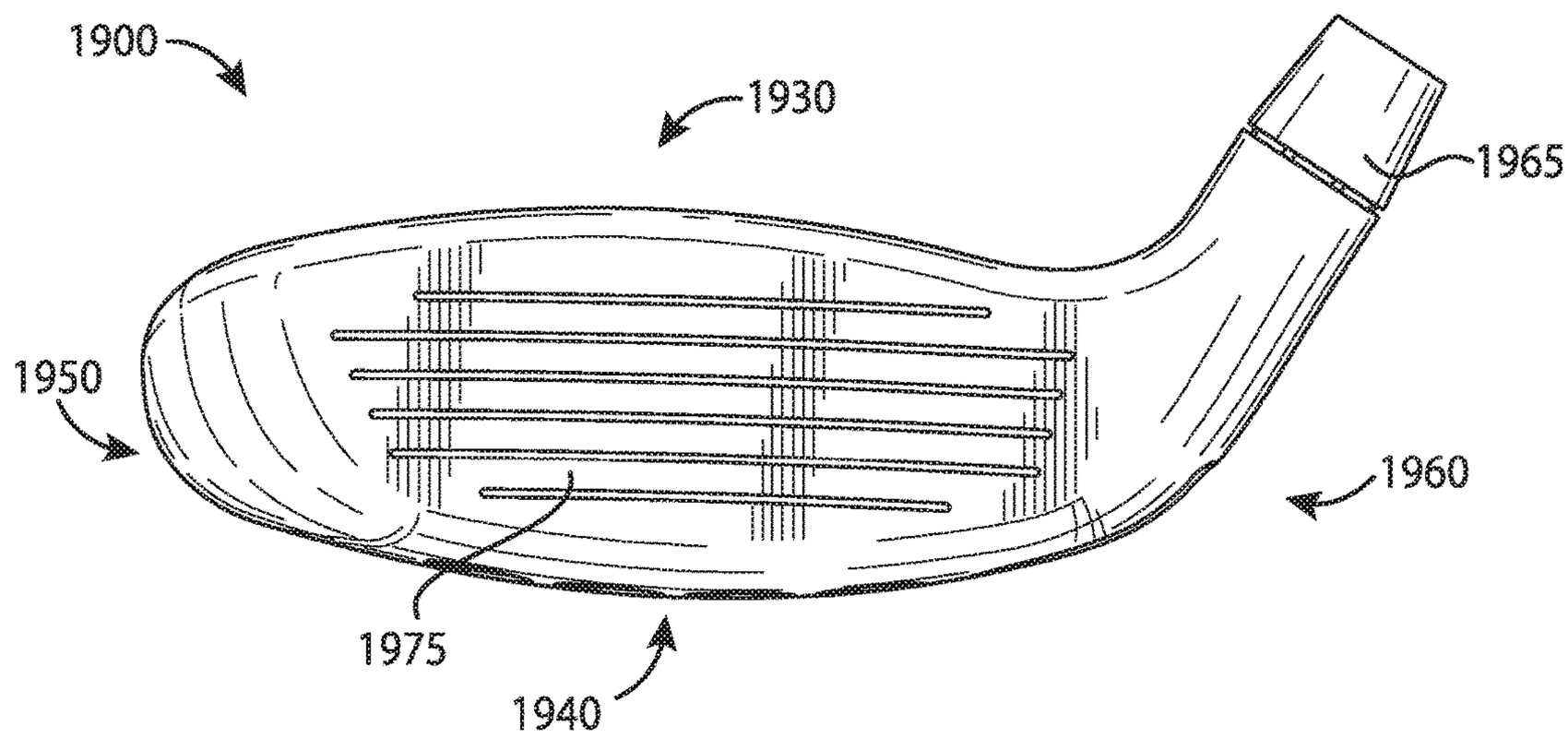
1900
1930
1965
1950
1960
1975
1940

FIG. 21

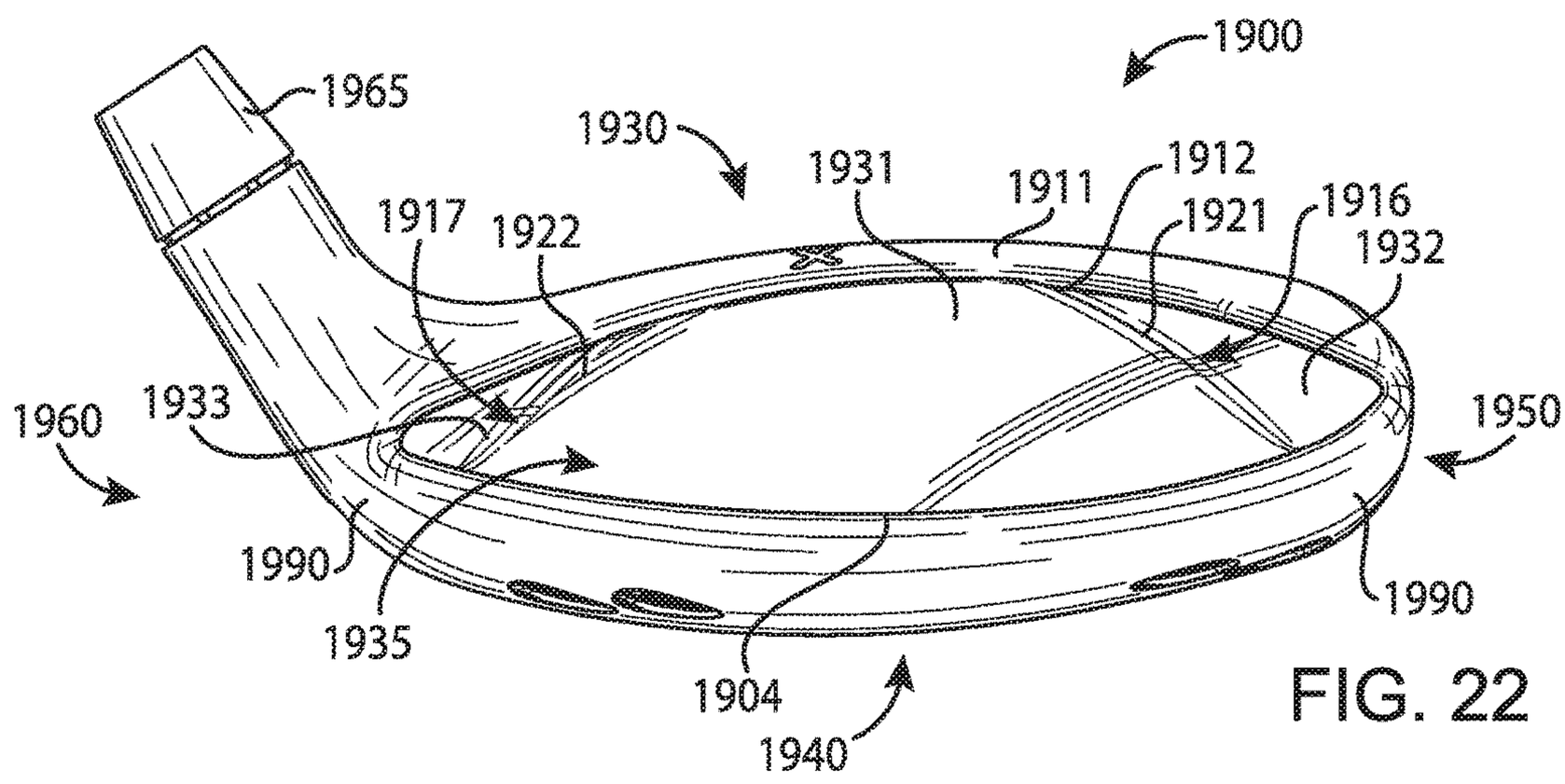
1900
1965
1930
1931
1911
1912
1921
1916
1932
1917
1922
1960
1933
1950
1990
1935
1904
1940
1990

FIG. 22

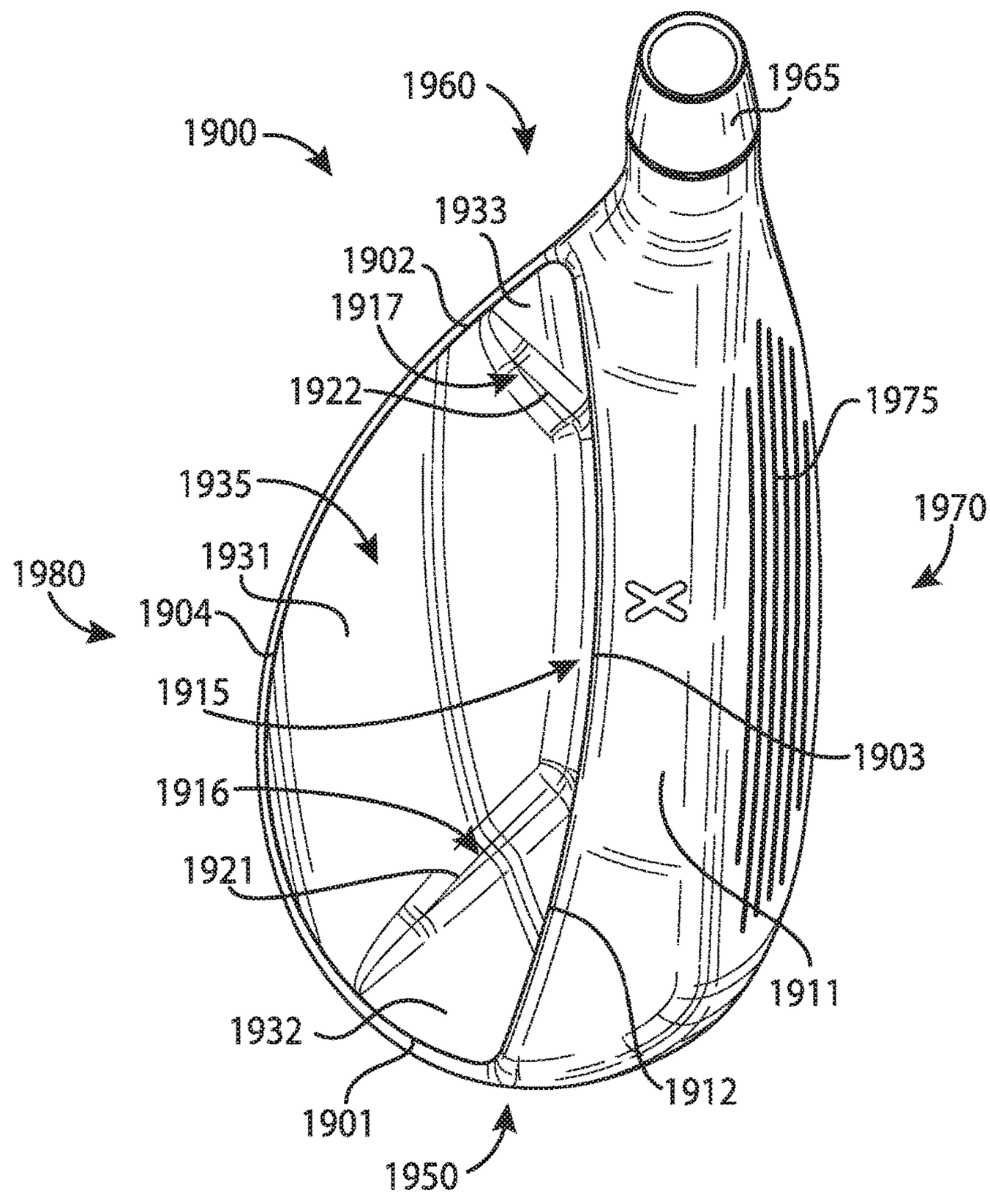
1960
1965
1900
1933
1902
1917
1922
1975
1935
1970
1931
1980
1904
1915
1903
1916
1921
1911
1932
1912
1901
1950

FIG. 23

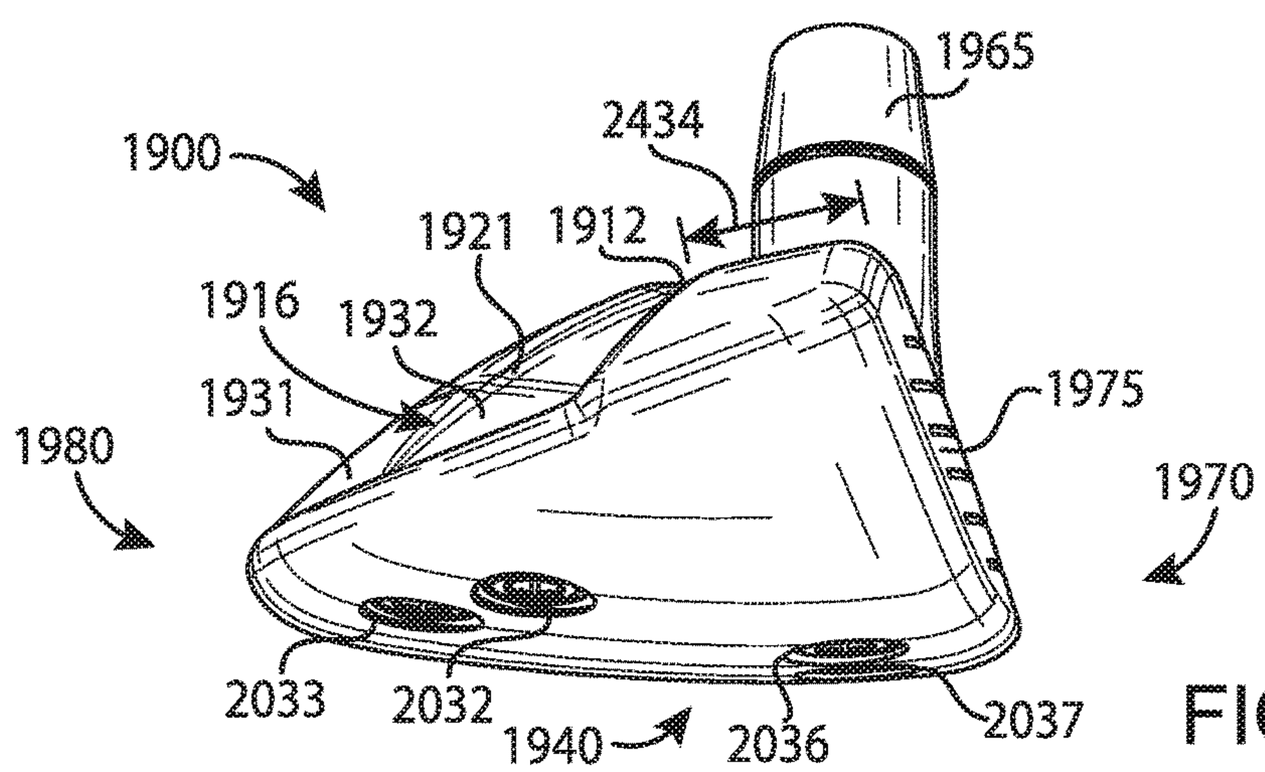
1965
2434
1900
1921
1912
1916
1932
1931
1975
1980
1970
2033
2032
1940
2036
2037

FIG. 24

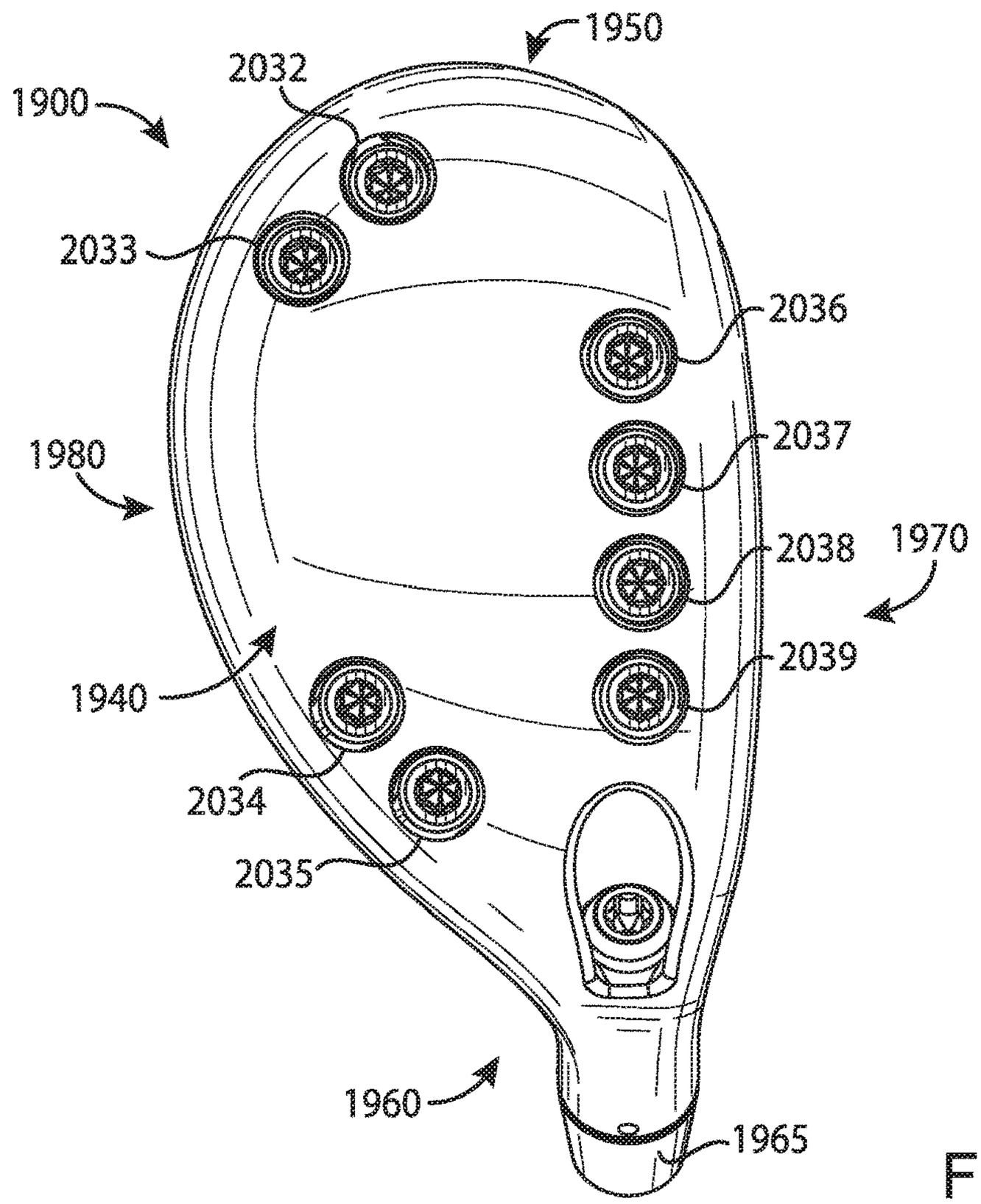
1950
2032
1900
2033
2036
2037
1980
2038
1970
2039
1940
2034
2035
1960
1965

FIG. 25

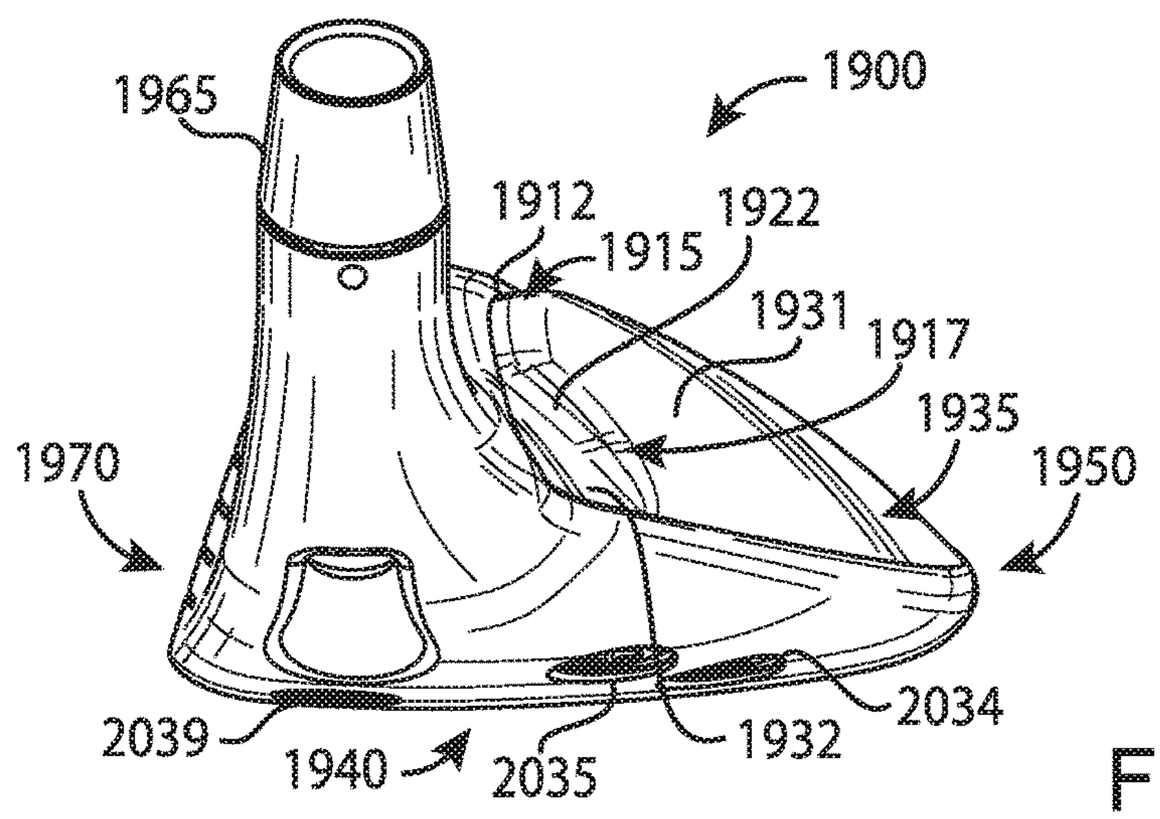
1965
1900
1912
1922
1915
1931
1917
1935
1970
1950
2039
1940
2035
1932
2034

FIG. 26

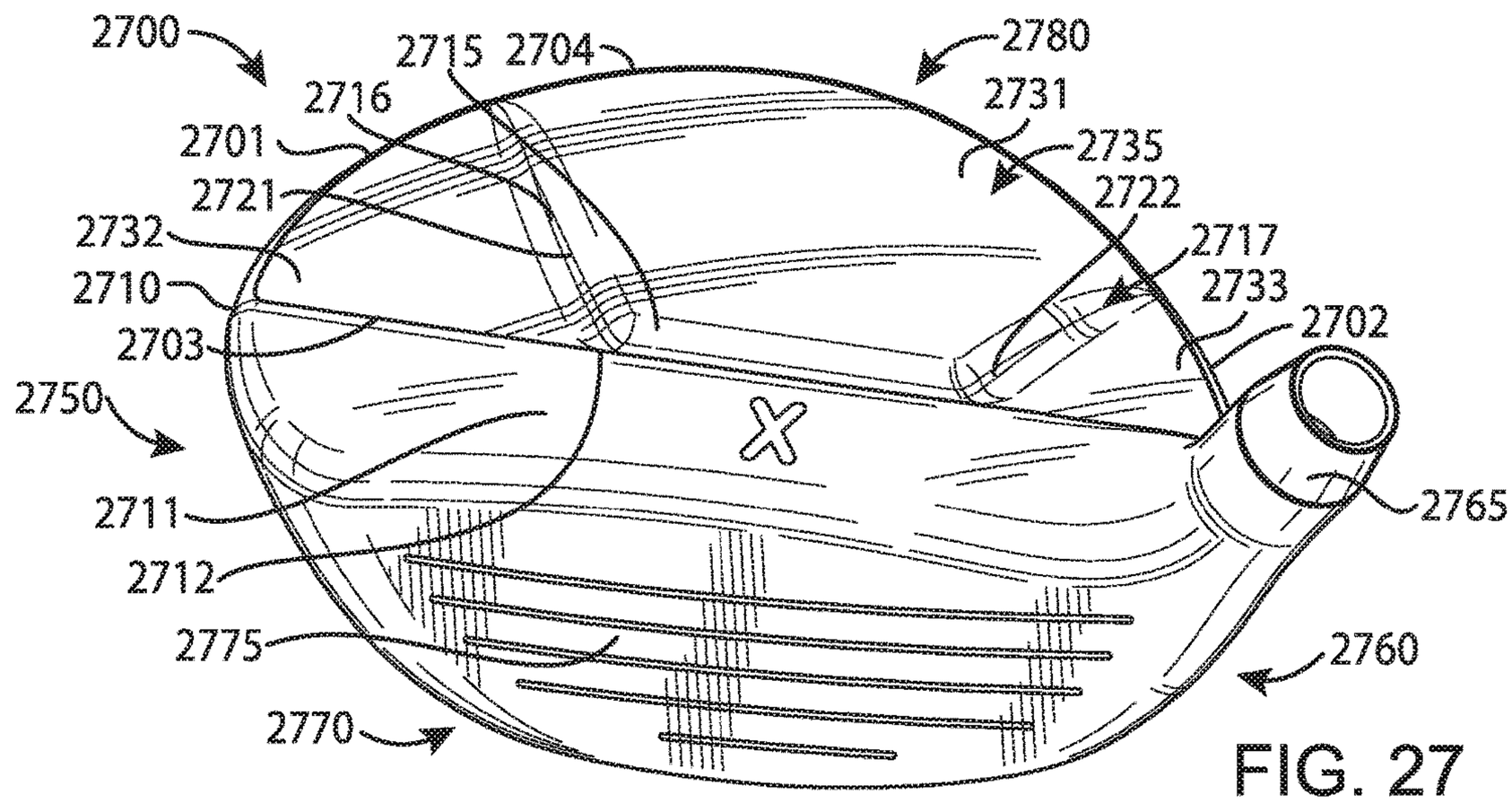
2700
2715
2704
2780
2716
2731
2701
2735
2721
2722
2732
2717
2710
2733
2703
2702
2750
2711
2765
2712
2775
2760
2770

FIG. 27

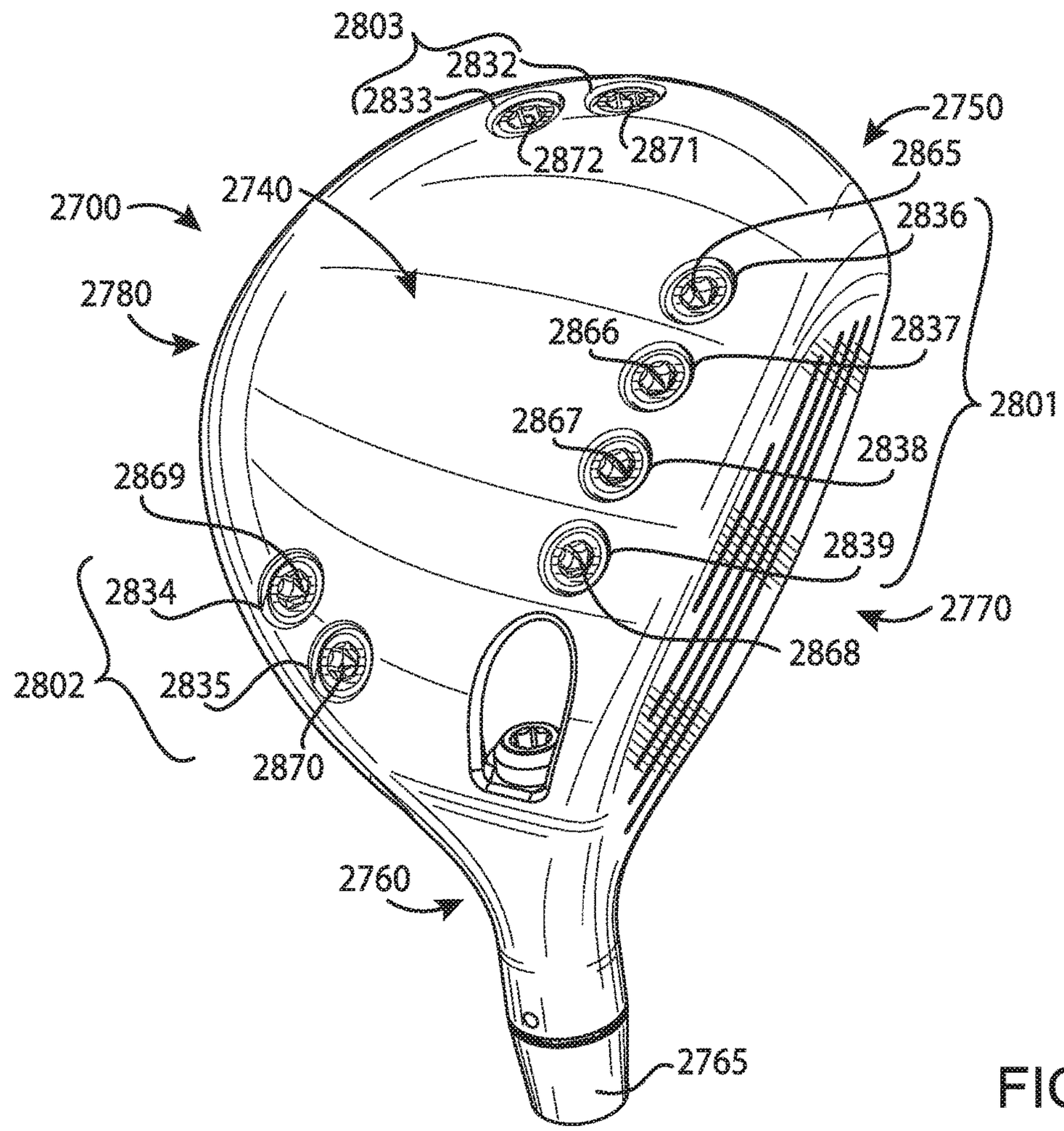
2803
2832
2833
2750
2872
2871
2865
2740
2700
2836
2780
2866
2837
2867
2801
2838
2869
2839
2834
2770
2868
2802
2835
2870
2760
2765

FIG. 28

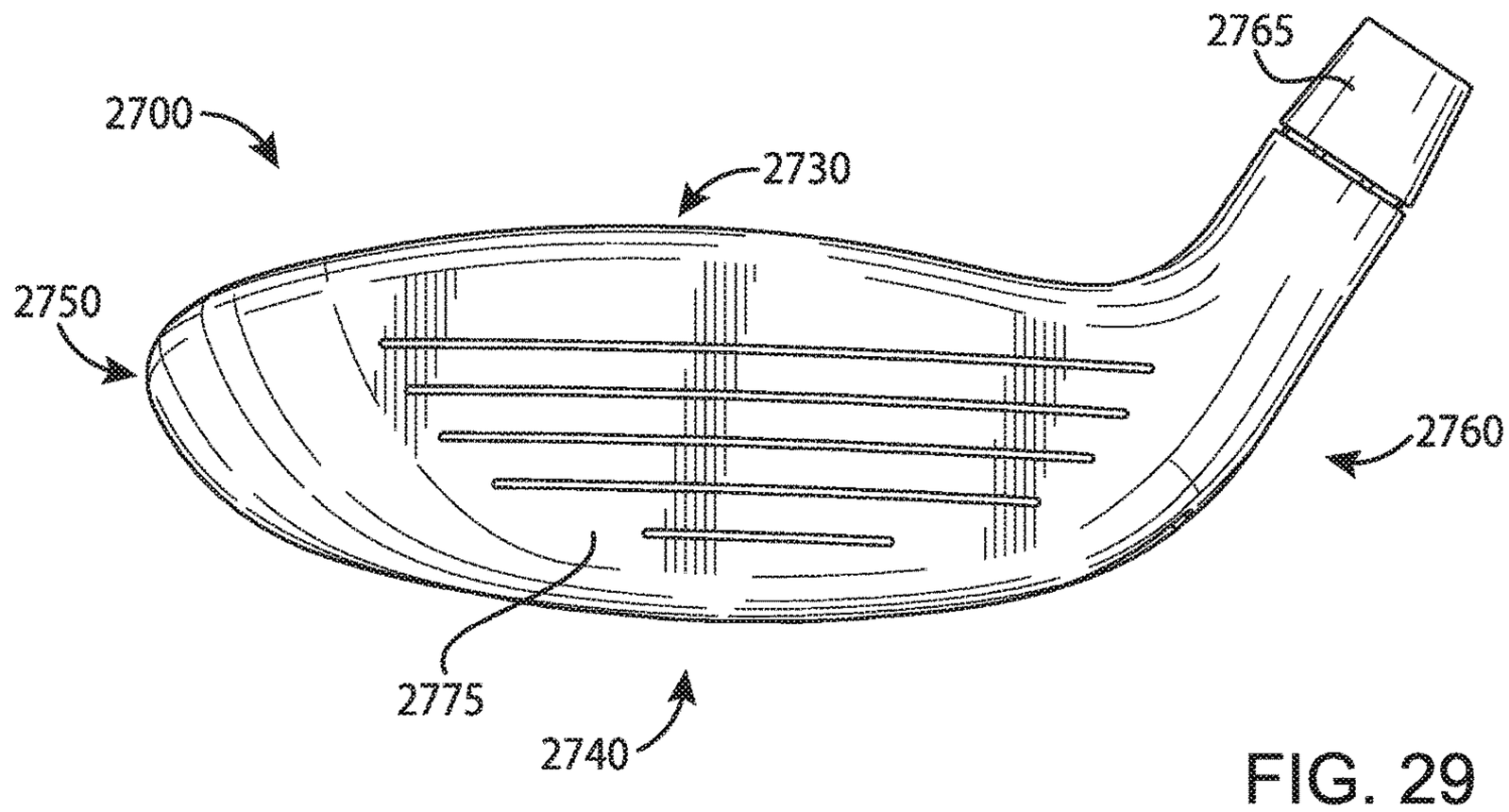
2765
2700
2730
2750
2760
2775
2740

FIG. 29

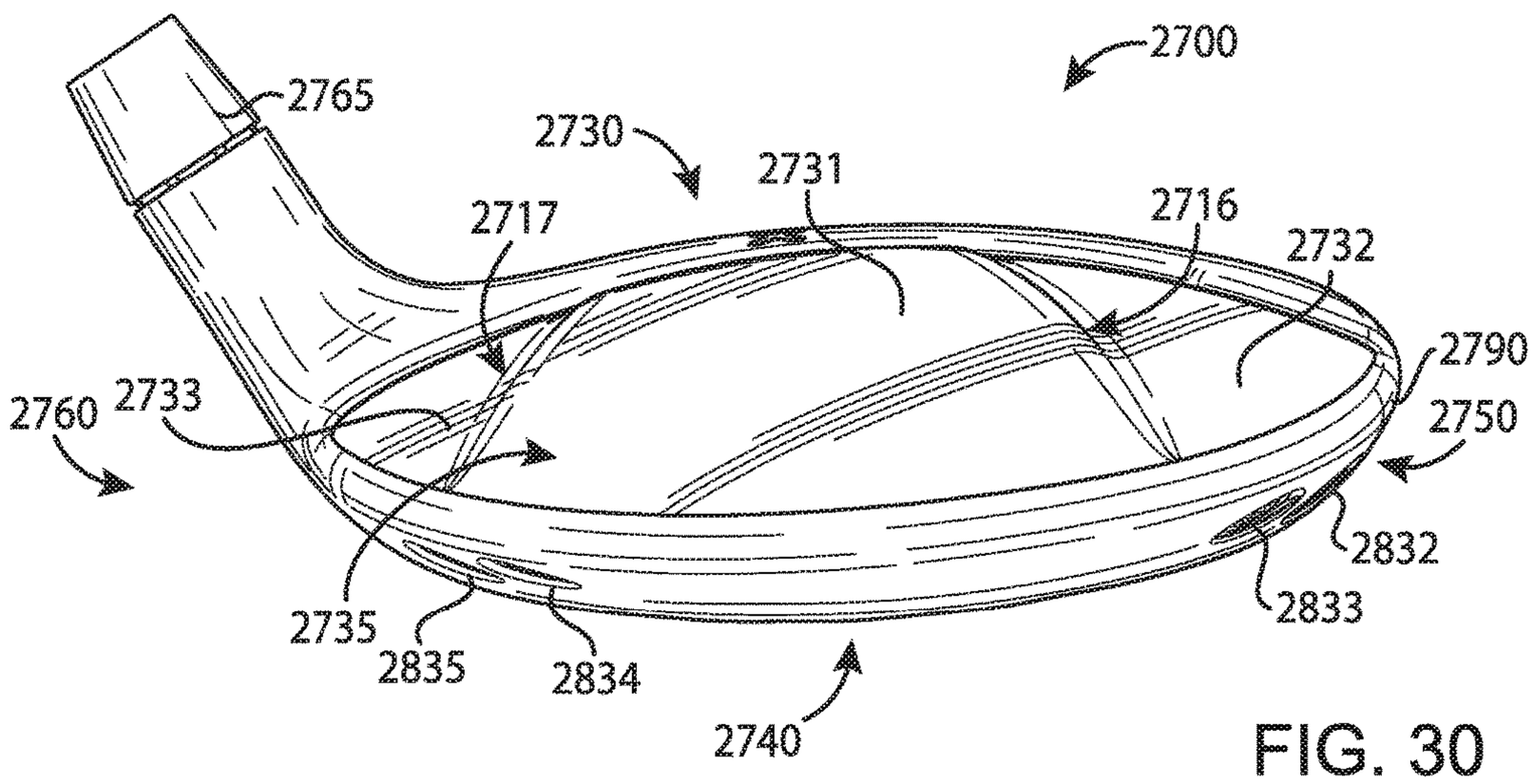
2700
2765
2730
2731
2717
2716
2732
2790
2760
2733
2750
2832
2833
2735
2835
2834
2740

FIG. 30

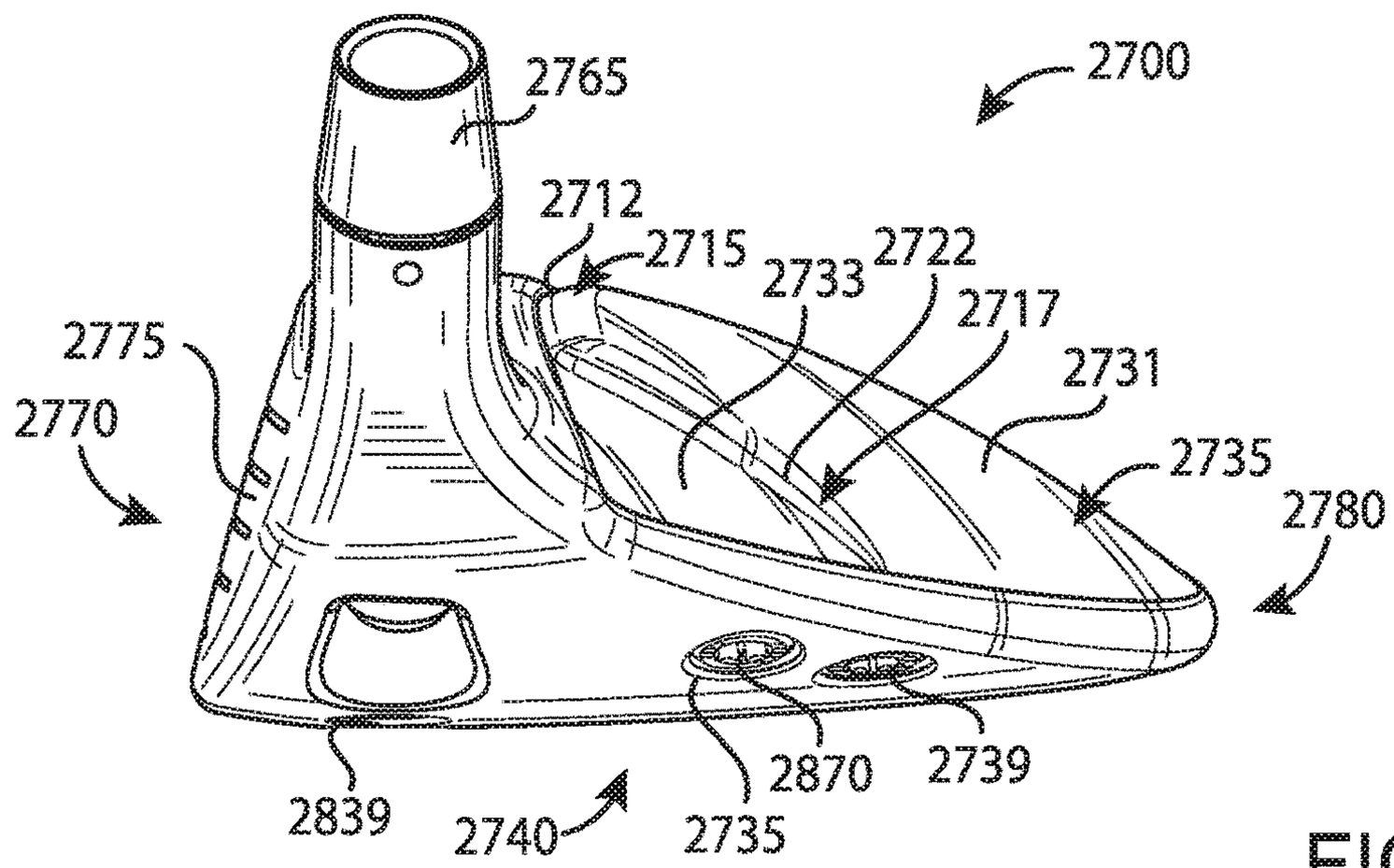
2765
2700
2712
2715
2733
2722
2717
2731
2775
2770
2735
2780
2870
2739
2839
2740
2735

FIG. 31

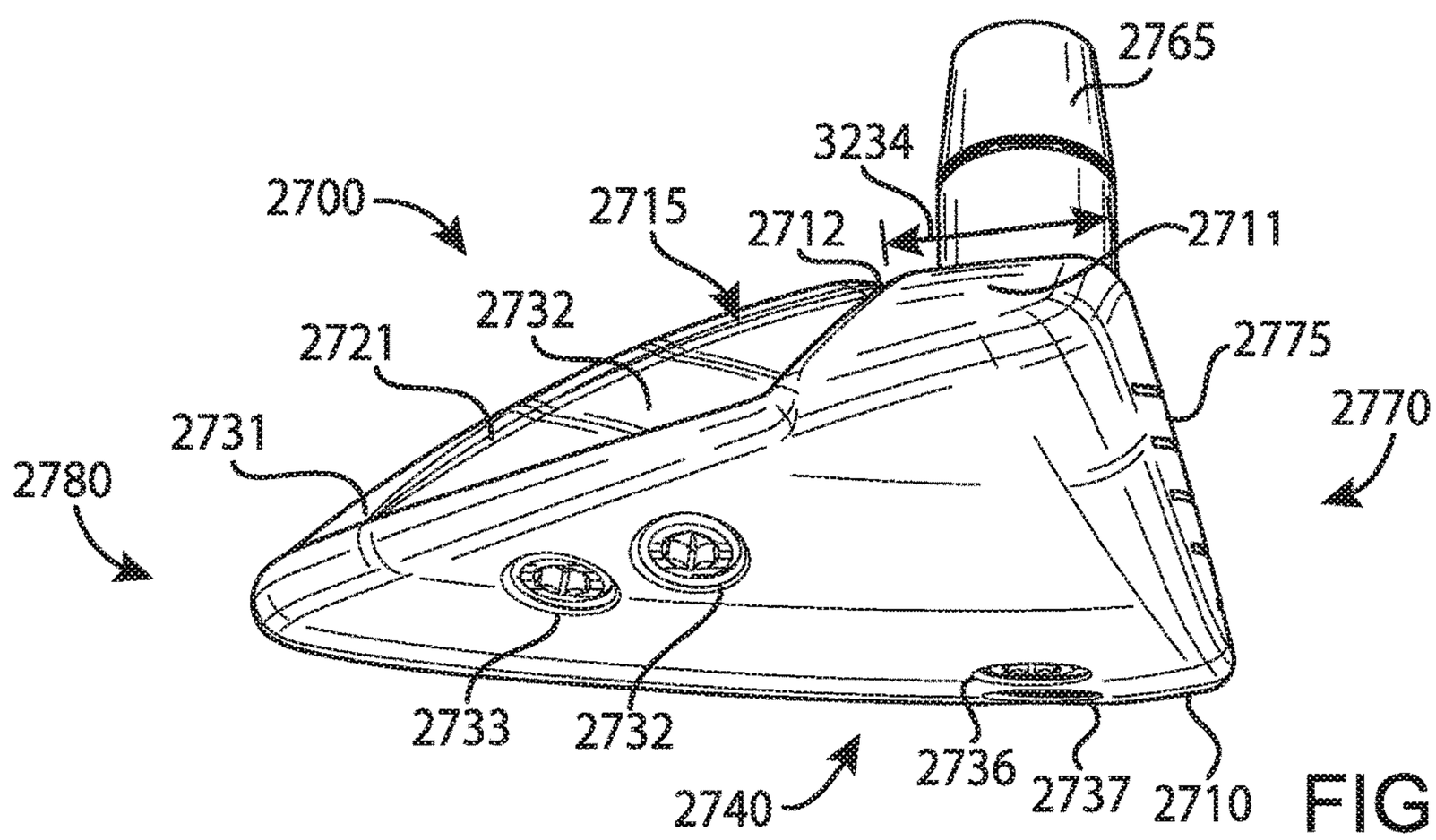
2765
3234
2700
2715
2712
2711
2732
2721
2775
2731
2770
2780
2733
2732
2736
2737
2710
2740

FIG. 32

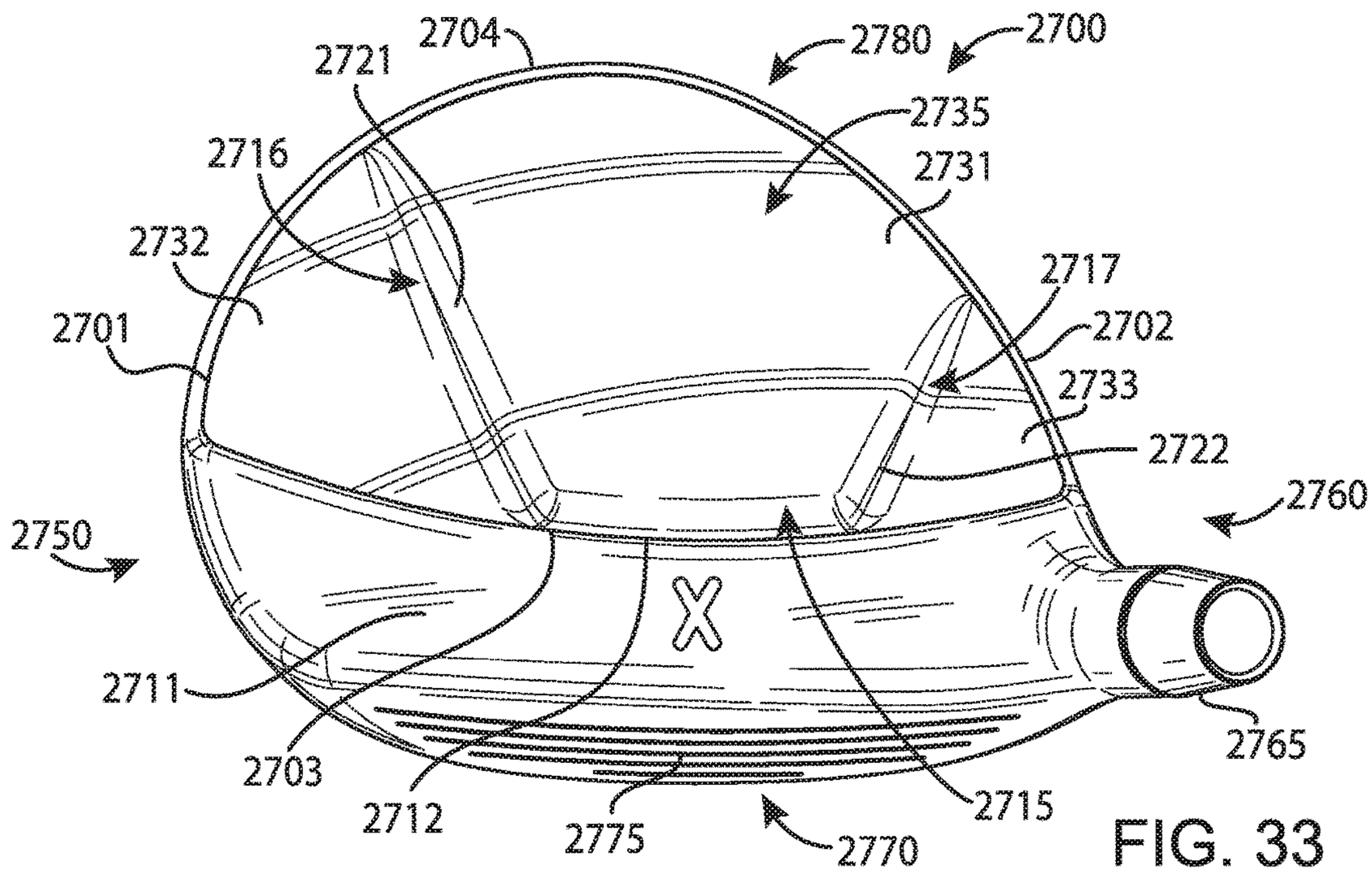
2704
2780
2700
2721
2735
2716
2731
2732
2717
2701
2702
2733
2722
2760
2750
2711
2703
2712
2775
2770
2715
2765

FIG. 33

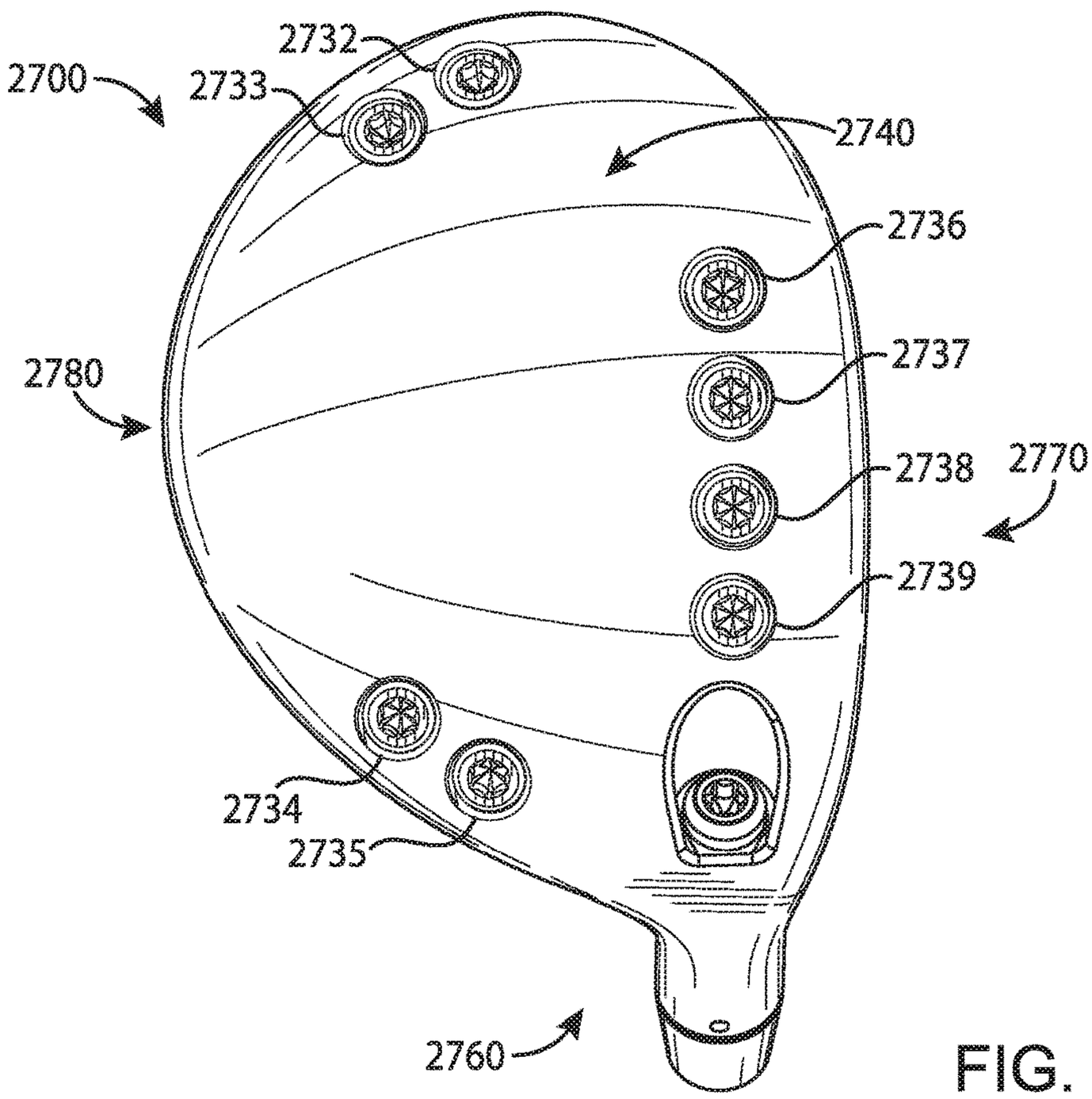
2732
2700
2733
2740
2736
2780
2737
2738
2770
2739
2734
2735
2760

FIG. 34

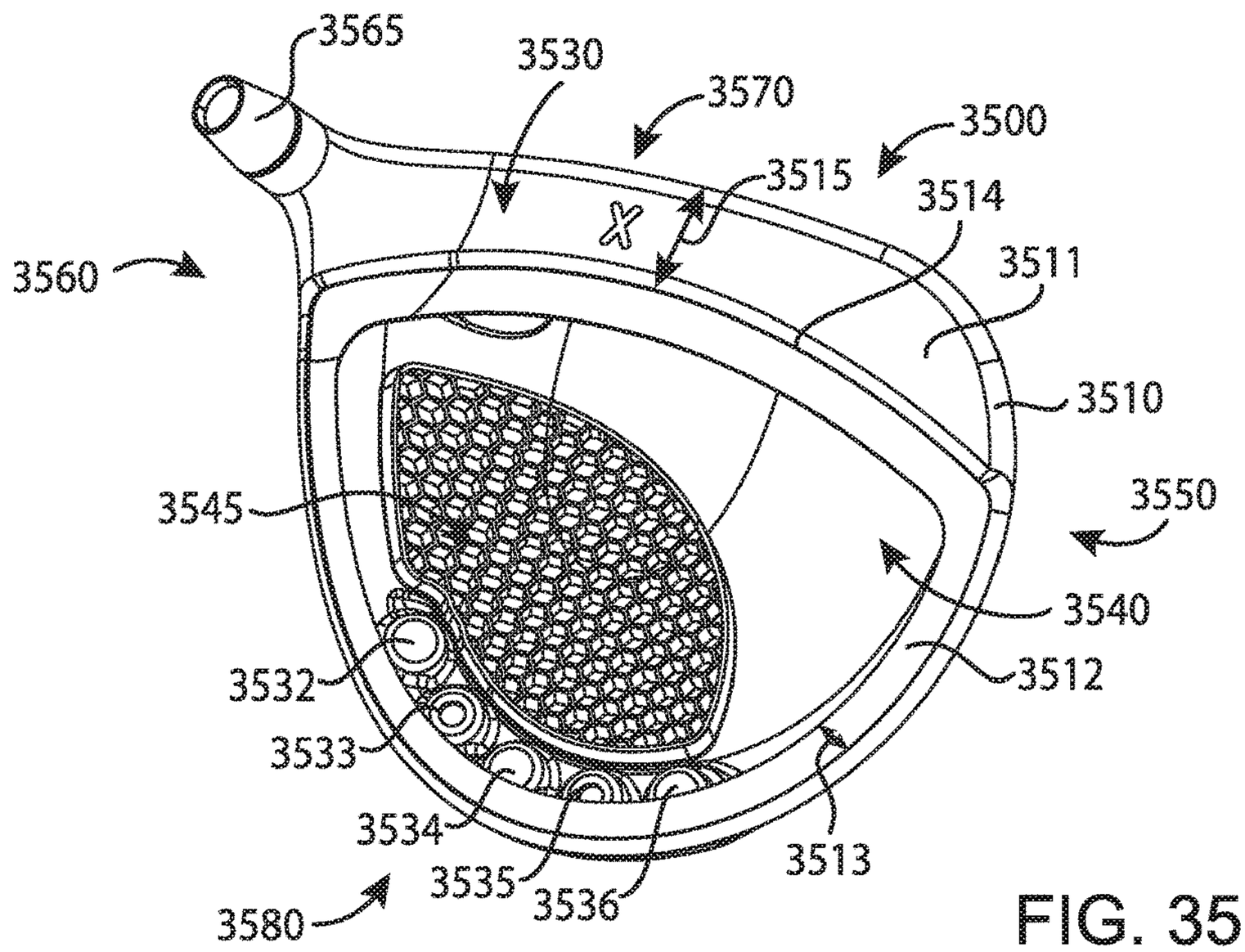
3565
3530
3570
3500
3515
3514
3560
3511
3510
3545
3550
3540
3532
3512
3533
3534
3513
3535
3536
3580

FIG. 35

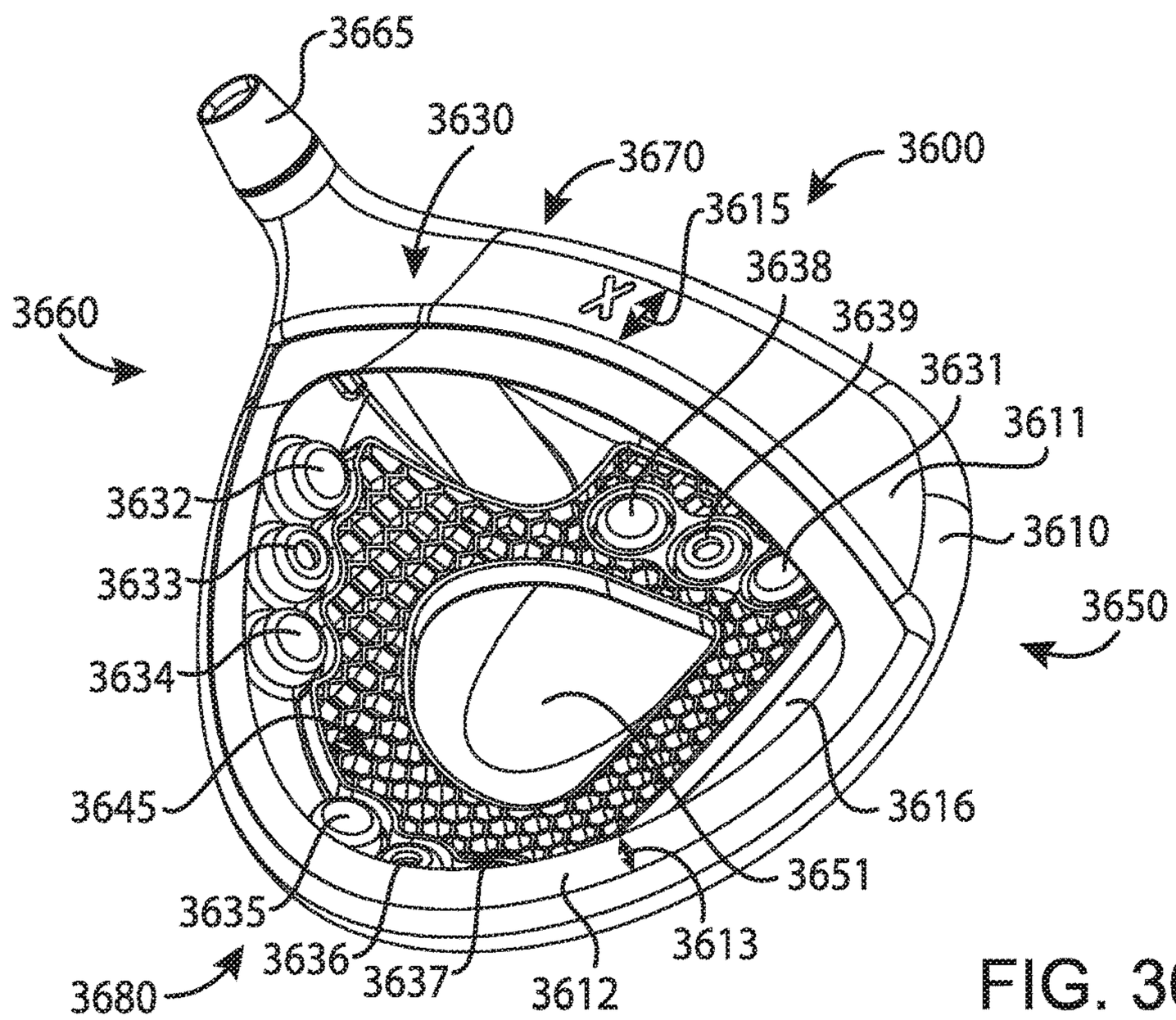
3665
3630
3670
3600
3615
3638
3660
3639
3631
3611
3632
3610
3633
3650
3634
3645
3616
3651
3635
3613
3636
3637
3612
3680

FIG. 36

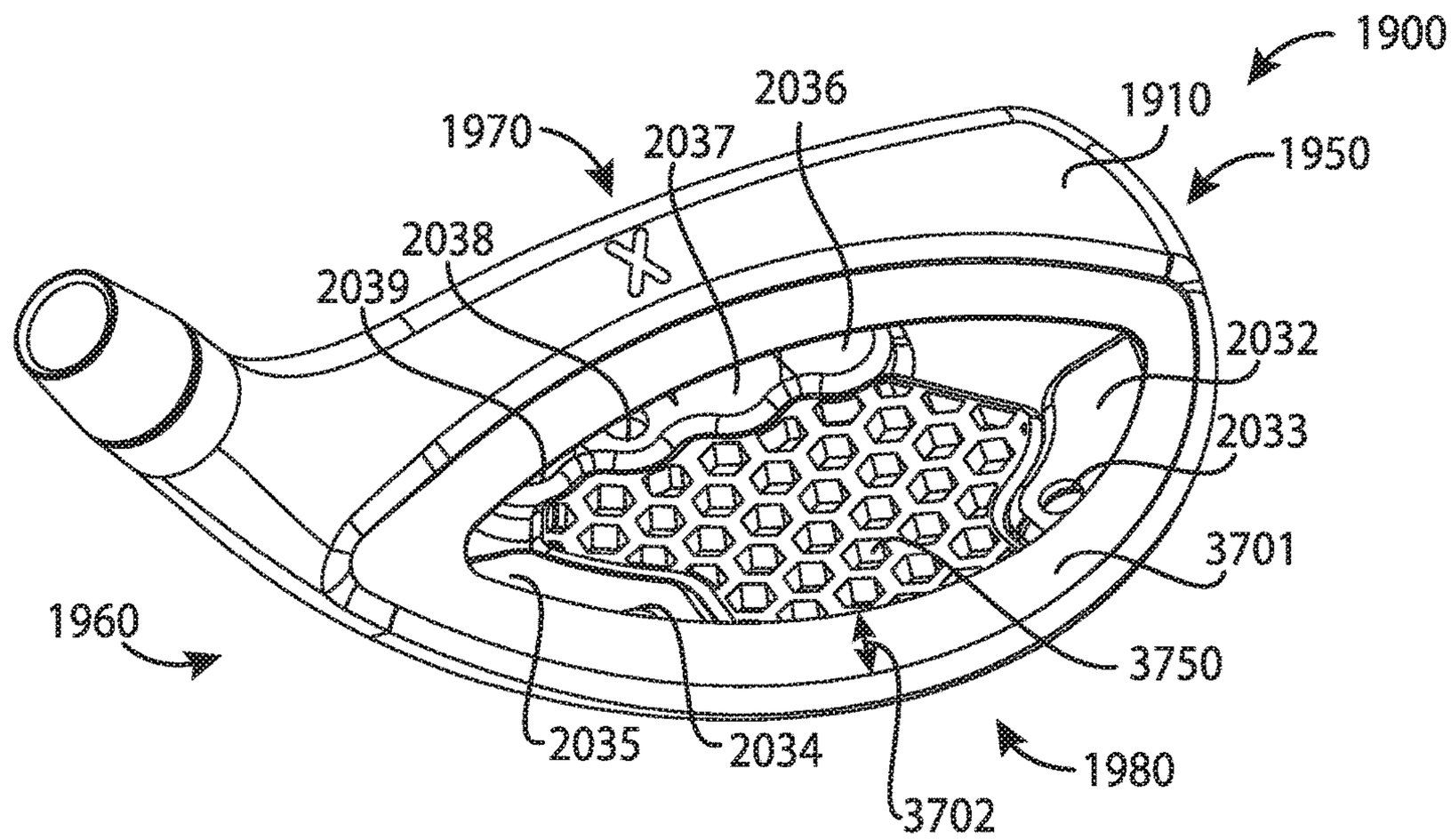
1900
2036
1910
1970
2037
1950
2038
2039
2032
2033
3701
1960
3750
2035
2034
1980
3702

FIG. 37

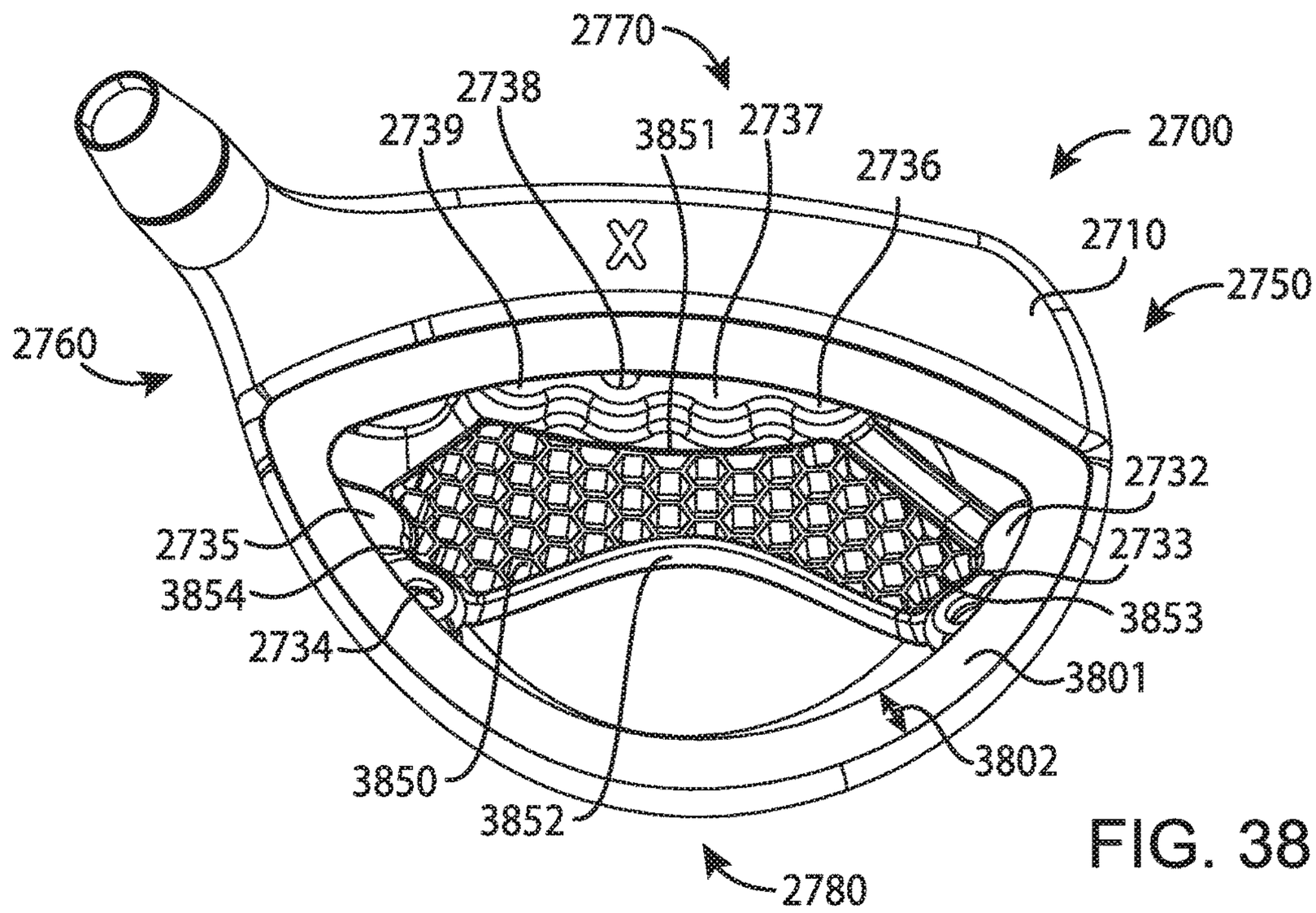
2770
2738
2739
3851
2737
2700
2736
2710
2750
2760
2732
2735
2733
3854
3853
2734
3801
3850
3802
3852
2780

FIG. 38

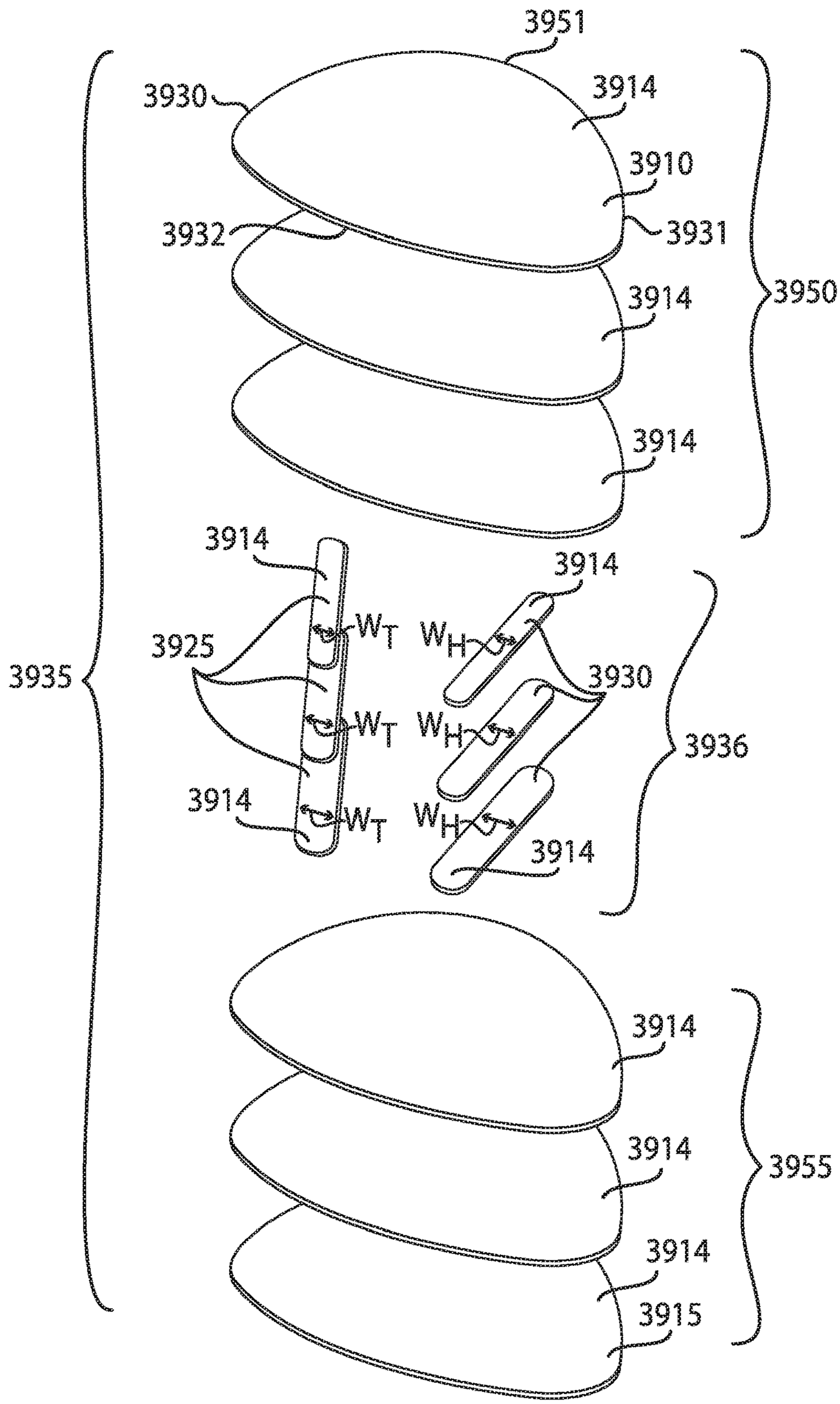
3951
3930
3914
3910
3932
3931
3914
3950
3914
3914
3914
3925
W_T
W_H
3930
3935
W_T
W_H
3936
3914
W_T
W_H
3914
3914
3914
3955
3914
3915

FIG. 39

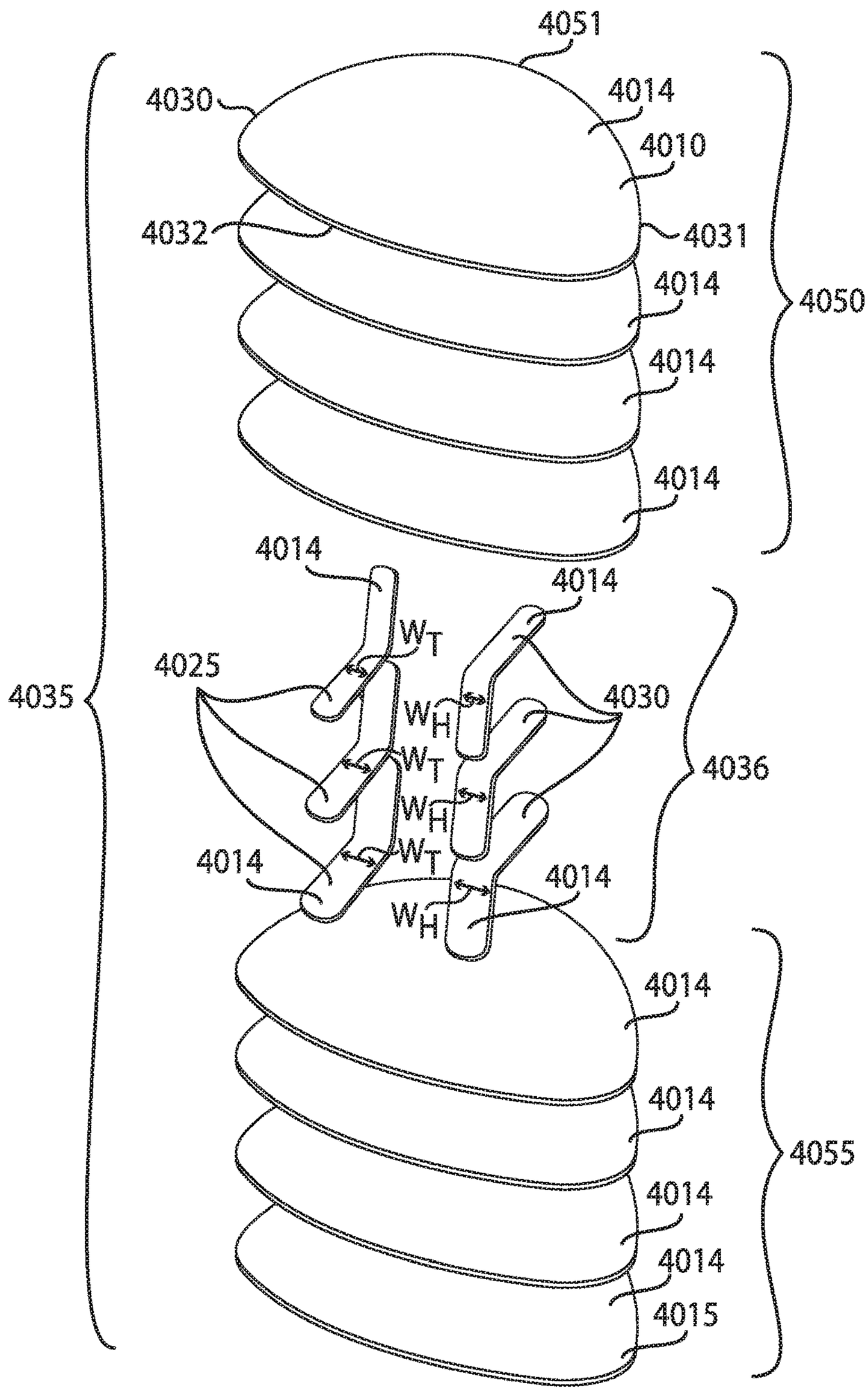
4051
4030
4014
4010
4032
4031
4014
4050
4014
4014
4014
4014
4025
W_T
4030
W_H
W_T
4036
W_H
4014
W_T
4014
W_H
4014
4014
4035
4014
4055
4014
4014
4015

FIG. 40

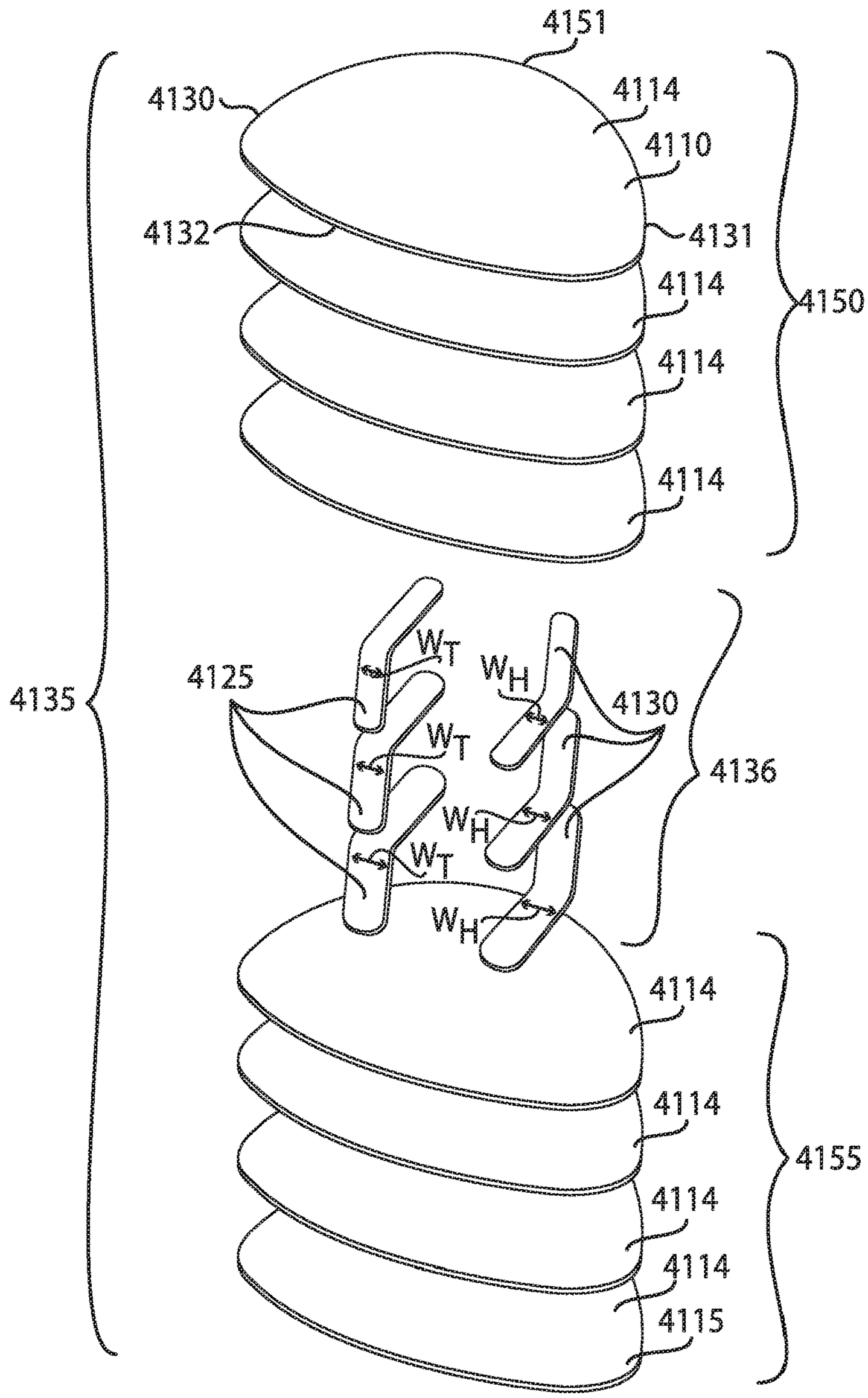
4151
4130
4114
4110
4132
4131
4114
4150
4114
4114
4135
4125
W_T
W_H
4130
W_T
4136
W_H
W_T
W_H
4114
4114
4155
4114
4114
4115

FIG. 41

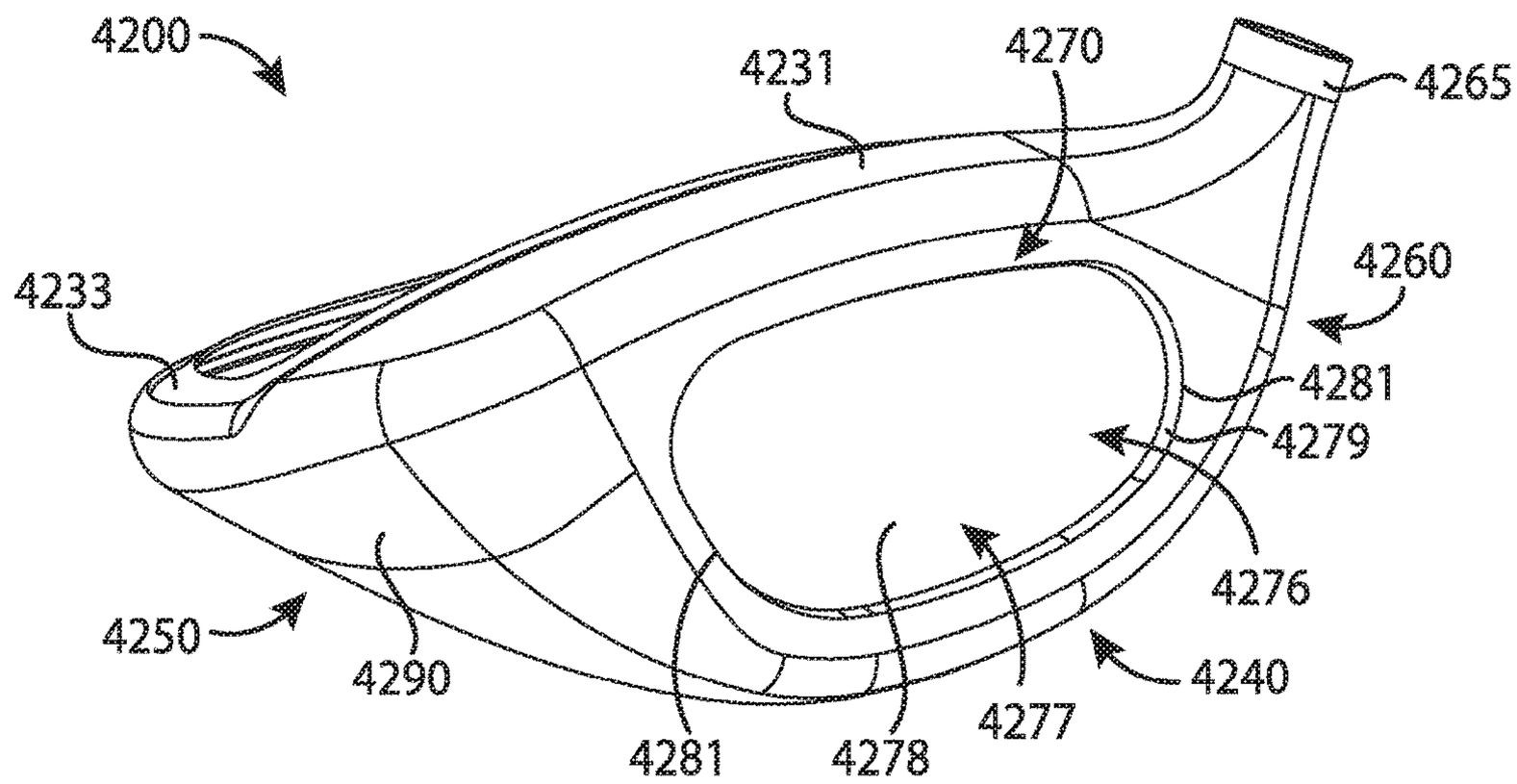
4200
4231
4270
4265
4260
4233
4281
4279
4276
4250
4290
4240
4281
4278
4277

FIG. 42

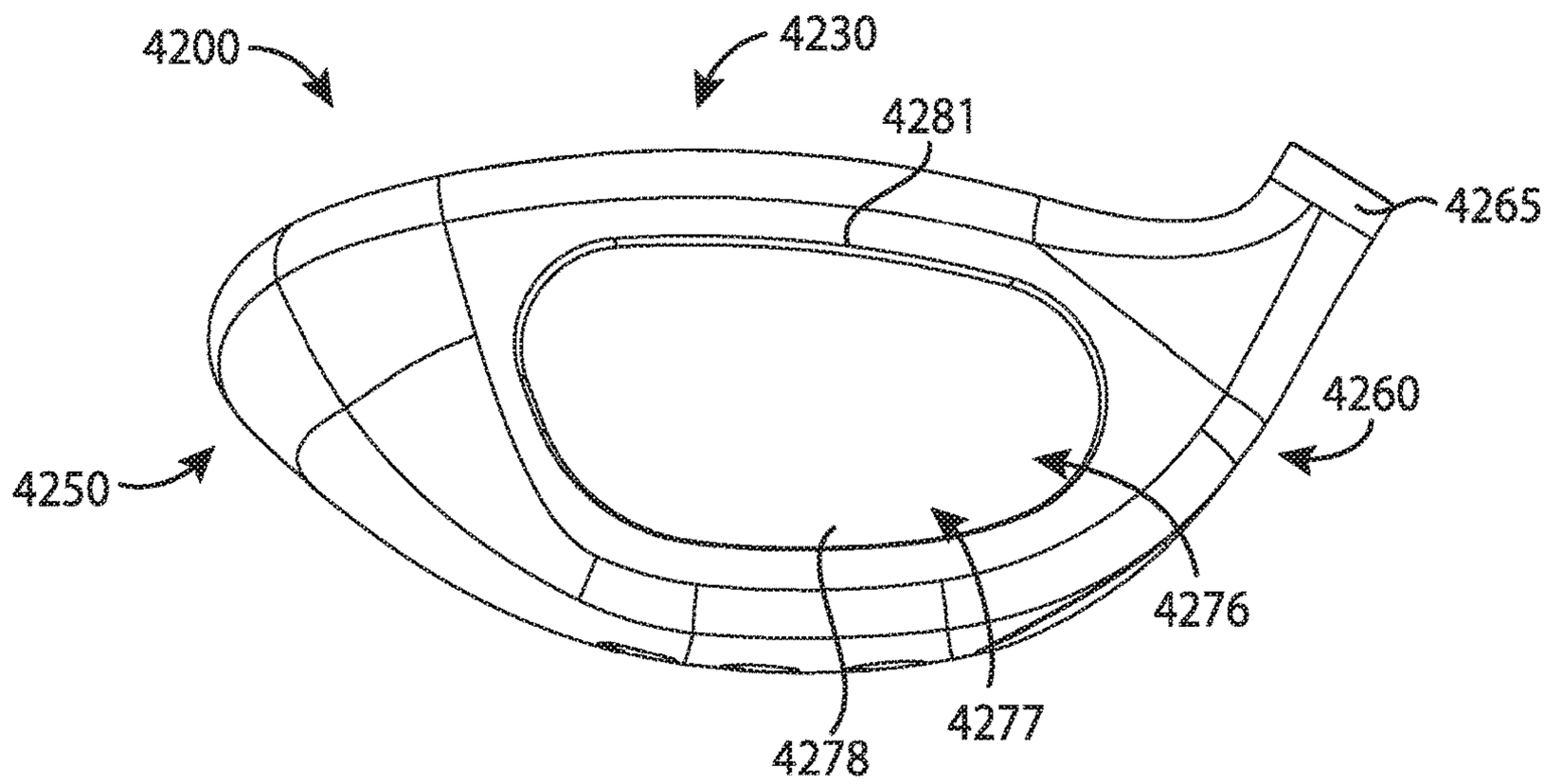
4200
4230
4281
4265
4260
4250
4276
4278
4277

FIG. 43

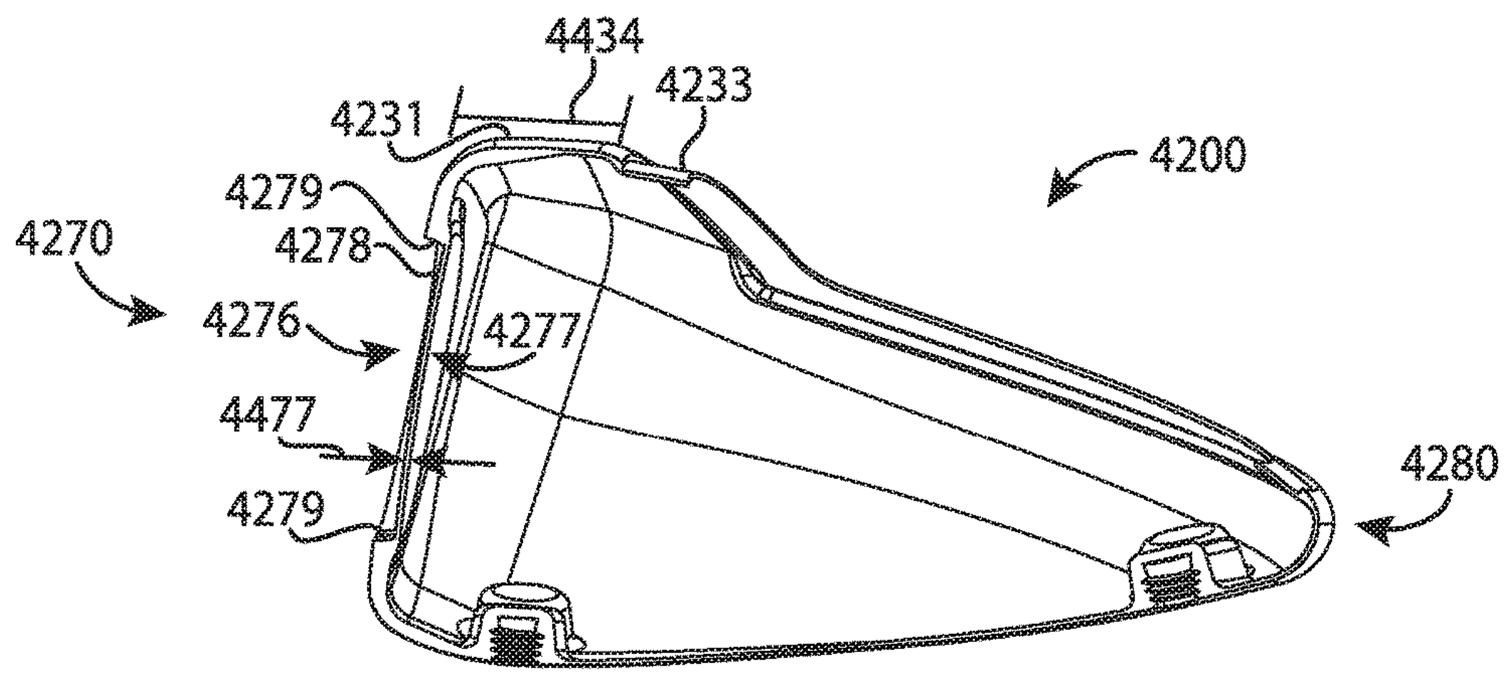
4434
4233
4231
4200
4279
4278
4270
4276
4277
4477
4280
4279

FIG. 44

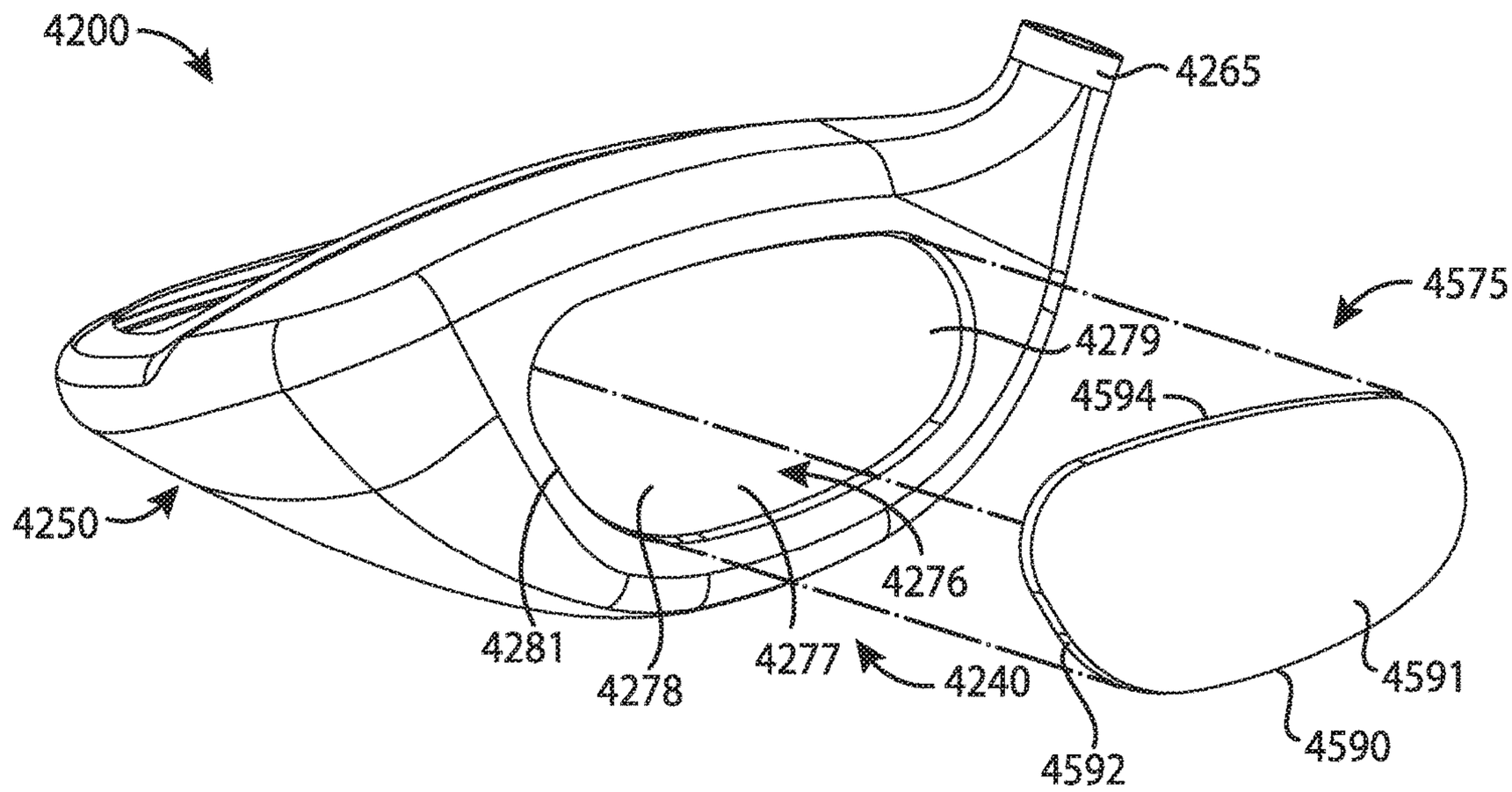
4200
4265
4575
4279
4594
4250
4276
4281
4278
4277
4240
4591
4592
4590

FIG. 45

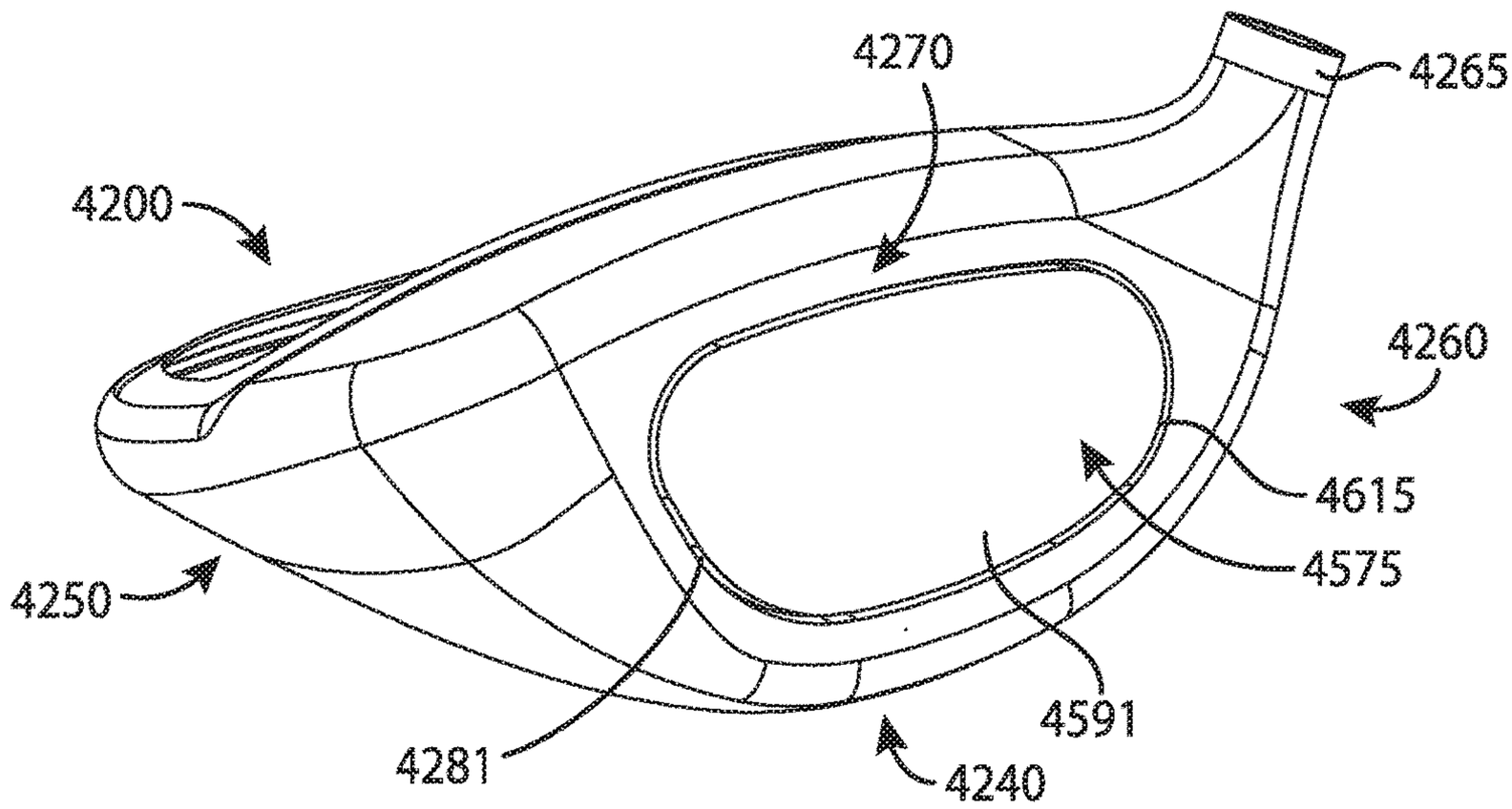
4270
4265
4200
4260
4615
4575
4250
4591
4281
4240

FIG. 46

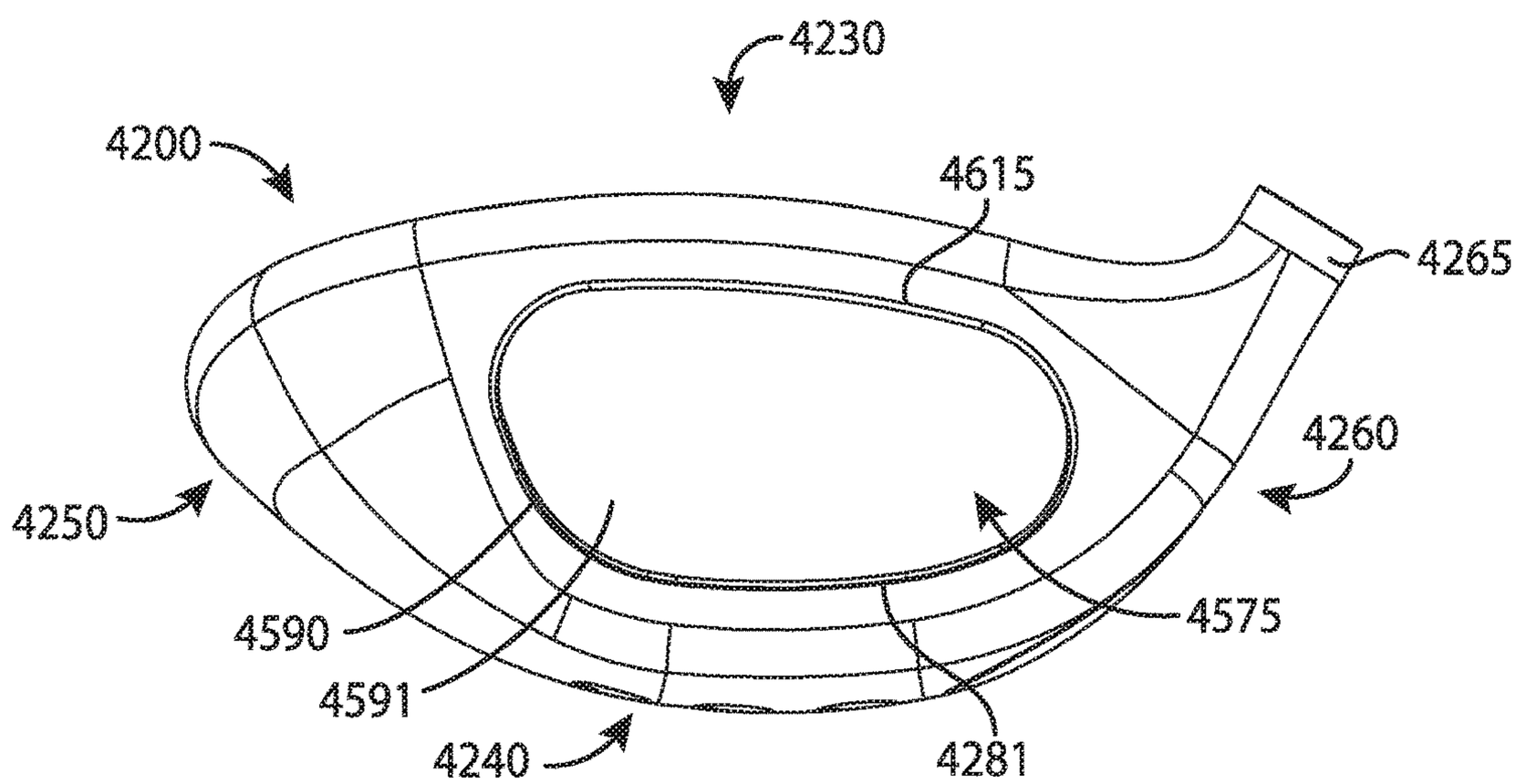
4230
4200
4615
4265
4260
4250
4575
4590
4591
4240
4281

FIG. 47

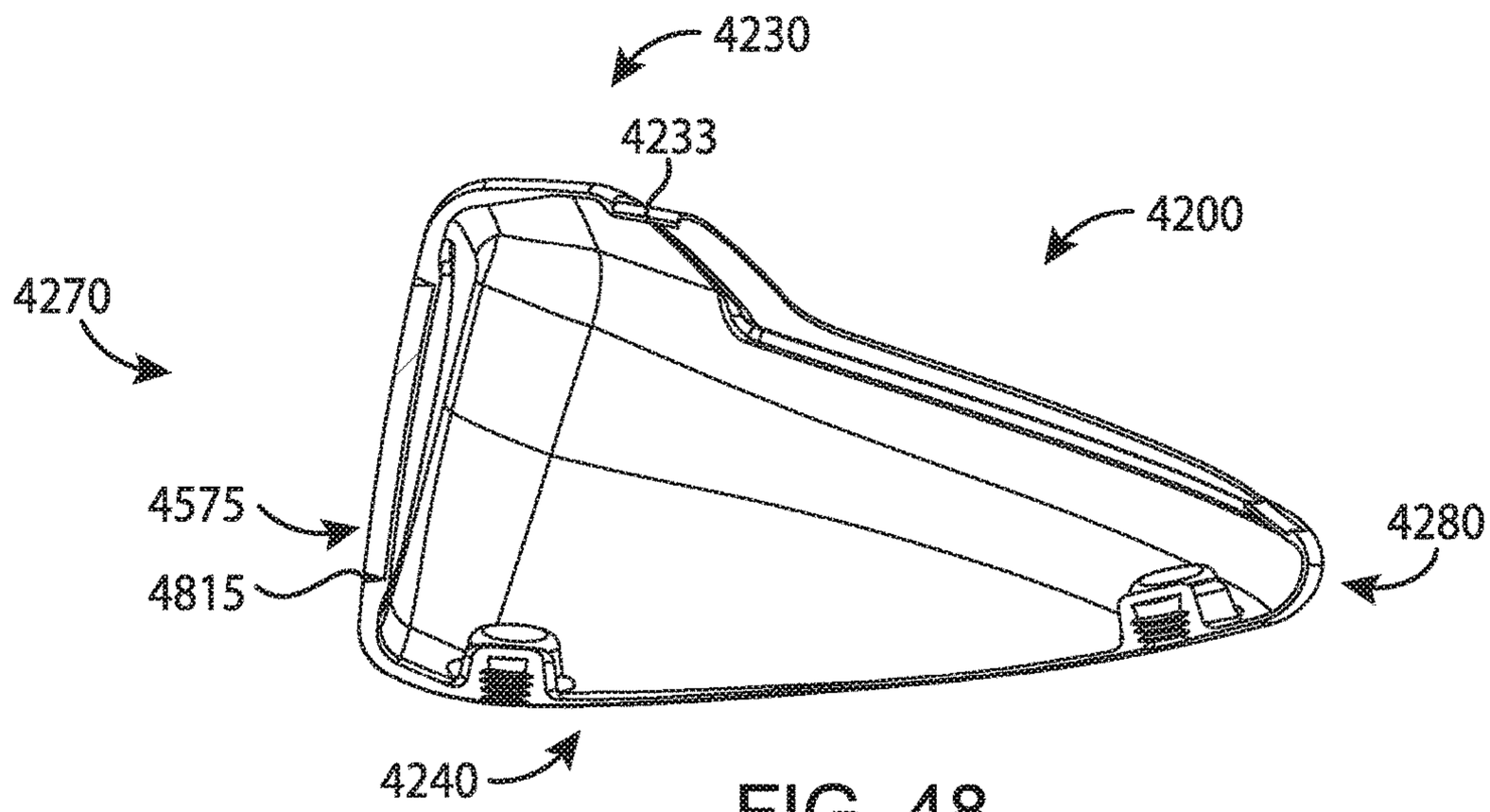
4230
4233
4200
4270
4575
4815
4280
4240

FIG. 48

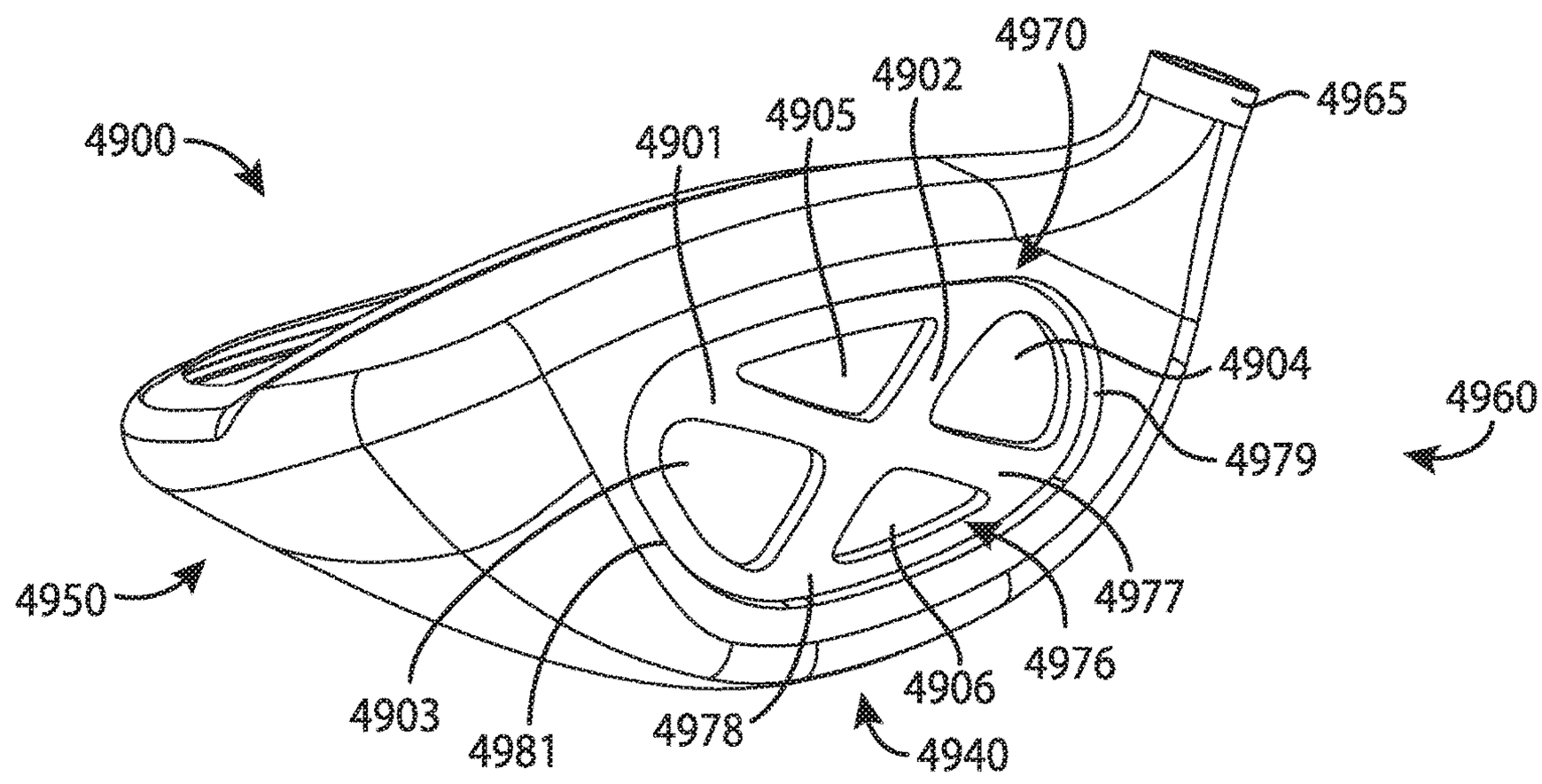
4970
4902
4965
4900
4901
4905
4904
4960
4979
4950
4977
4976
4906
4903
4981
4978
4940

FIG. 49

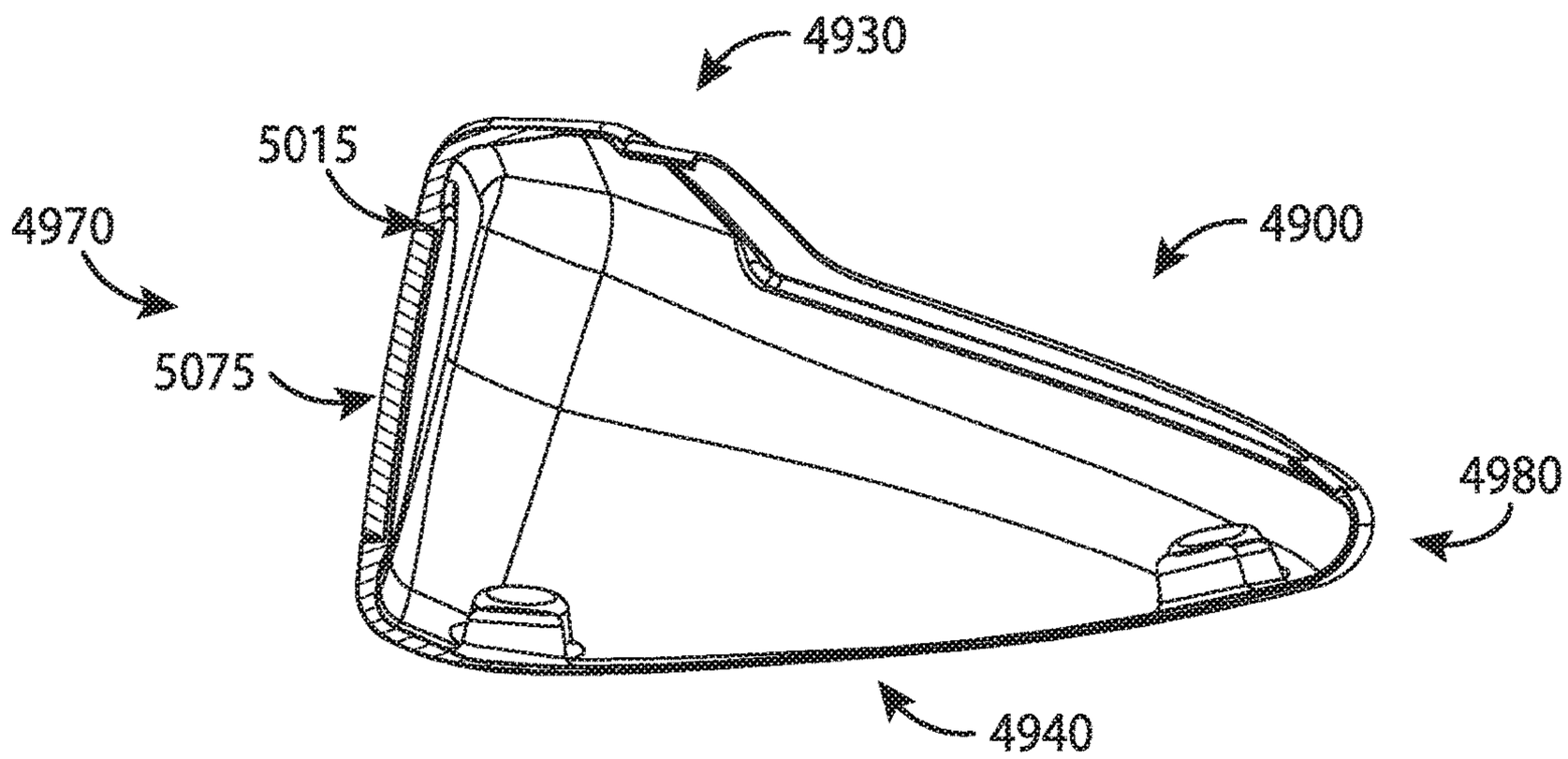
4930
5015
4970
4900
5075
4980
4940

FIG. 50

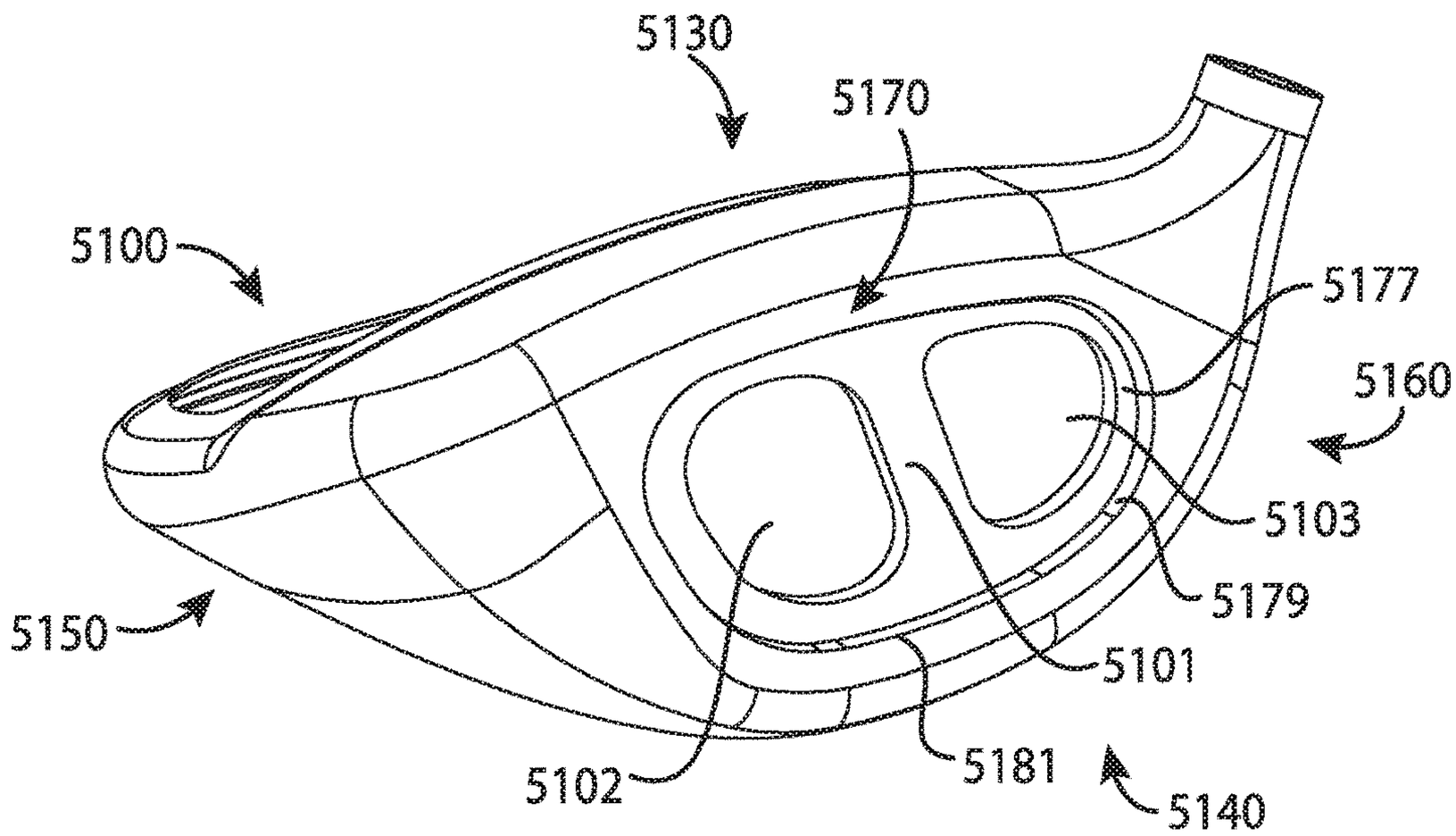
5130
5170
5100
5177
5160
5103
5179
5150
5101
5181
5102
5140

FIG. 51

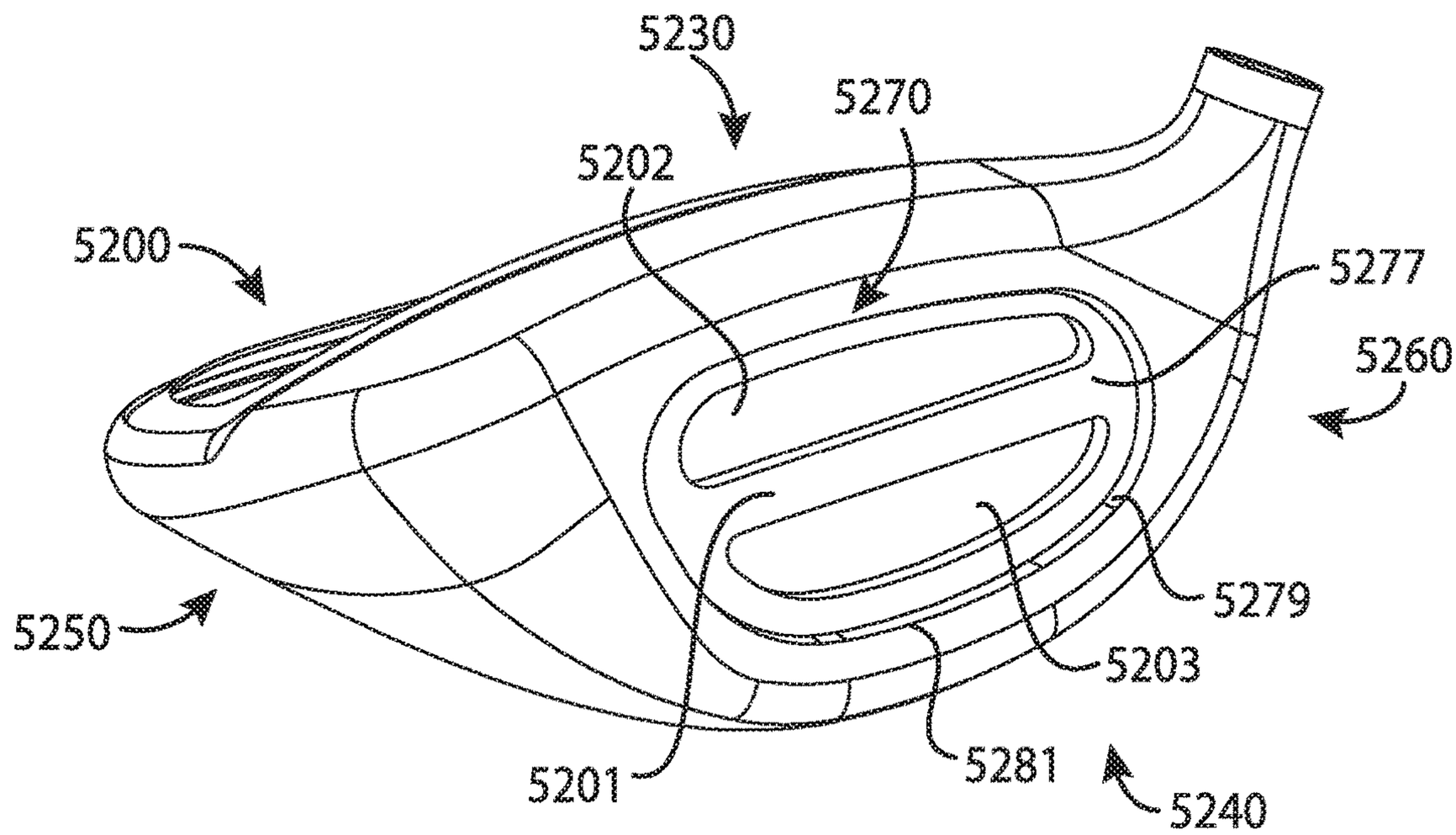
5230
5270
5202
5200
5277
5260
5250
5279
5203
5281
5201
5240

FIG. 52

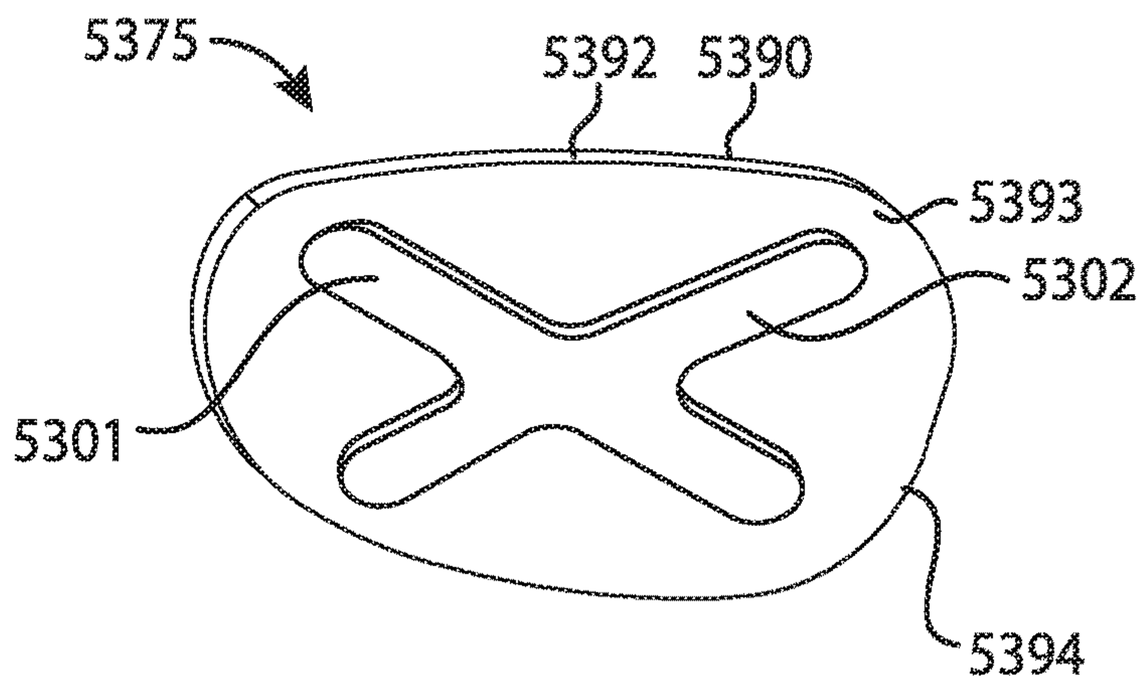
5375
5392
5390
5393
5302
5301
5394

FIG. 53

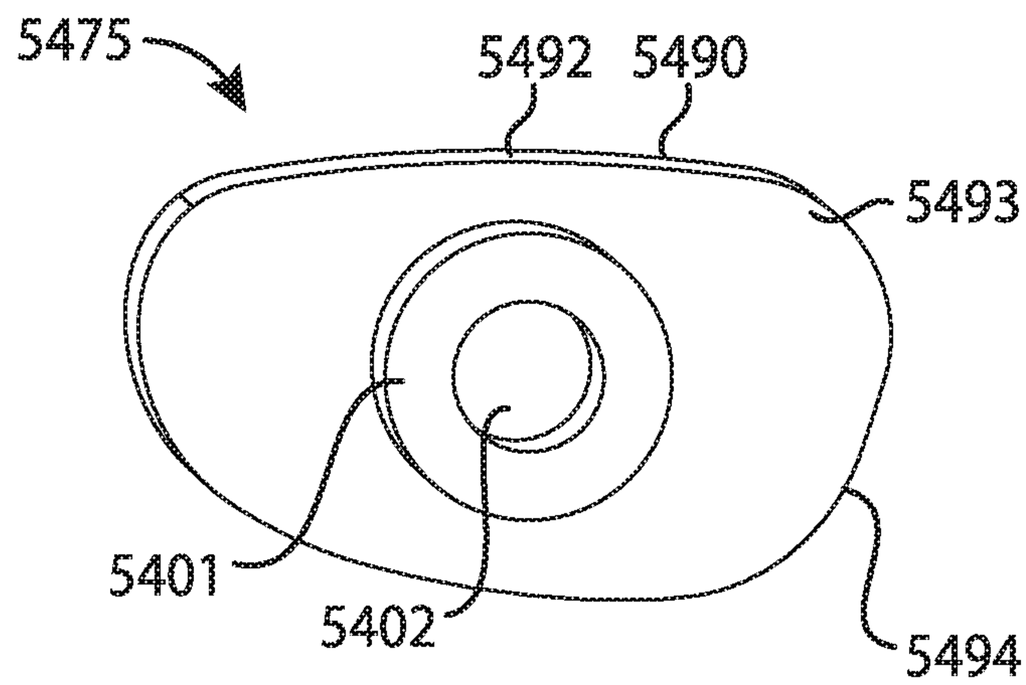
5475
5492
5490
5493
5401
5402
5494

FIG. 54

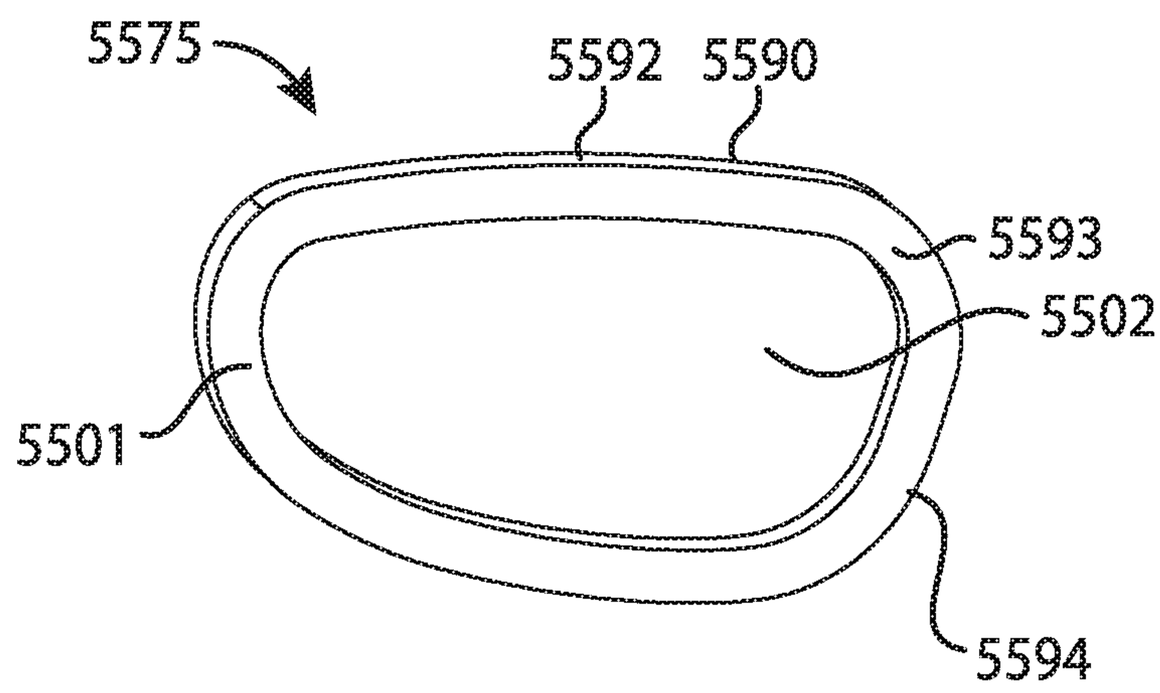
5575
5592
5590
5593
5502
5501
5594

FIG. 55

GOLF CLUB HEADS AND METHODS TO MANUFACTURE GOLF CLUB HEADS

CROSS REFERENCE

[0001] This application is a continuation-in-part of application Ser. No. 16/372,009, filed Apr. 1, 2019, which is a continuation of application Ser. No. 15/875,416, filed Jan. 19, 2018, now U.S. Pat. No. 10,293,220, which is a continuation of application Ser. No. 15/446,842, filed Mar. 1, 2017, now U.S. Pat. No. 9,895,582, which is a continuation of application Ser. No. 15/377,120, filed Dec. 13, 2016, now U.S. Pat. No. 9,802,087, which is a continuation of application Ser. No. 14/939,849, filed Nov. 12, 2015, now U.S. Pat. No. 9,555,295, which is a continuation of application Ser. No. 14/615,606, filed Feb. 6, 2015, now U.S. Pat. No. 9,199,140.

[0002] This application is a continuation-in-part of application Ser. No. 16/290,610, filed Mar. 1, 2019, which is a continuation of application Ser. No. 15/875,496, filed Jan. 19, 2018, now U.S. Pat. No. 10,252,123, which is a continuation of application Ser. No. 15/457,627, filed Mar. 13, 2017, now U.S. Pat. No. 9,895,583, which is a continuation of application Ser. No. 15/189,806, filed Jun. 22, 2016, now U.S. Pat. No. 9,636,554, which is a continuation of application Ser. No. 14/667,546, filed Mar. 24, 2015, now U.S. Pat. No. 9,399,158, which is a continuation-in-part of application Ser. No. 14/615,606, filed Feb. 6, 2015, now U.S. Pat. No. 9,199,140, which claims the benefit of U.S. Provisional Application No. 62/042,155, filed Aug. 26, 2014, U.S. Provisional Application No. 62/048,693, filed Sep. 10, 2014, U.S. Provisional Application No. 62/101,543, filed Jan. 9, 2015, U.S. Provisional Application No. 62/105,123, filed Jan. 19, 2015, and U.S. Provisional Application No. 62/109,510, filed Jan. 29, 2015.

[0003] This application is a continuation-in-part of application Ser. No. 16/375,553, filed Apr. 4, 2019, which is a continuation of application Ser. No. 15/967,117, filed Apr. 30, 2018, now U.S. Pat. No. 10,293,221, which is a continuation application Ser. No. 15/457,618, filed Mar. 13, 2017, now U.S. Pat. No. 9,987,526, which is a continuation of application Ser. No. 15/163,393, filed May 24, 2016, now U.S. Pat. No. 9,662,547, which is a continuation of application Ser. No. 14/667,541, filed Mar. 24, 2015, now U.S. Pat. No. 9,352,197.

[0004] This application is a continuation-in-part of application Ser. No. 16/035,268, filed Jul. 13, 2018, which is a continuation of application Ser. No. 15/725,900, filed Oct. 5, 2017, now U.S. Pat. No. 10,052,532, which is a continuation of application Ser. No. 15/445,253, filed Feb. 28, 2017, now U.S. Pat. No. 9,795,843, which is a continuation of application Ser. No. 15/227,281, filed Aug. 3, 2016, now U.S. Pat. No. 9,782,643, which claims the benefit of U.S. Provisional Application No. 62/281,639, filed Jan. 21, 2016, U.S. Provisional Application No. 62/296,506, filed Feb. 17, 2016, U.S. Provisional Application No. 62/301,756, filed Mar. 1, 2016, and U.S. Provisional Application No. 62/362,491, filed Jul. 14, 2016.

[0005] This application is a continuation-in-part of application Ser. No. 16/198,128, filed Nov. 21, 2018, which is a continuation of application Ser. No. 15/583,756, filed May 1, 2017, now U.S. Pat. No. 10,143,899, which is a continuation of application Ser. No. 15/271,574, filed Sep. 21, 2016, now U.S. Pat. No. 9,669,270, which claims the benefit of U.S. Provisional Application No. 62/291,793, filed Feb. 5, 2016.

[0006] This application is a continuation-in-part of application Ser. No. 16/129,526, filed Sep. 12, 2018, which is a continuation of application Ser. No. 15/808,552, filed Nov. 9, 2017, now U.S. Pat. No. 10,099,093, which is a continuation of application Ser. No. 15/492,711, filed Apr. 20, 2017, now U.S. Pat. No. 9,821,201, which claims the benefit of U.S. Provisional Application No. 62/329,662, filed Apr. 29, 2016.

[0007] This application is a continuation-in-part of application Ser. No. 15/994,860, filed May 31, 2018, which is a continuation of application Ser. No. 15/807,201, filed Nov. 8, 2017, now U.S. Pat. No. 10,010,770, which is a continuation of application Ser. No. 15/463,306, filed Mar. 20, 2017, now U.S. Pat. No. 9,821,200, which is a continuation of application Ser. No. 15/249,857, filed Aug. 29, 2016, now U.S. Pat. No. 9,630,070, which claims the benefit of U.S. Provisional Application No. 62/337,184, filed May 16, 2016, and U.S. Provisional Application No. 62/361,988, filed Jul. 13, 2016.

[0008] This application is a continuation-in-part of application Ser. No. 16/222,580, filed Dec. 17, 2018, which is a continuation of application Ser. No. 15/831,148, filed Dec. 4, 2017, now U.S. Pat. No. 10,195,101, which is a continuation of application Ser. No. 15/453,701, filed Mar. 8, 2017, now U.S. Pat. No. 9,833,667, which claims the benefit of U.S. Provisional Application No. 62/356,539, filed Jun. 30, 2016, and U.S. Provisional Application No. 62/360,802, filed Jul. 11, 2016.

[0009] This application is a continuation-in-part of application Ser. No. 15/967,098, filed Apr. 30, 2018, which is a continuation of application Ser. No. 15/687,273, filed Aug. 25, 2017, now U.S. Pat. No. 9,981,160, which claims the benefit of U.S. Provisional Application No. 62/380,727, filed Aug. 29, 2016.

[0010] This application is a continuation-in-part of application Ser. No. 16/265,686, Feb. 1, 2019, which is a continuation of application Ser. No. 15/910,747, filed Mar. 2, 2018, now U.S. Pat. No. 10,232,234, which is a continuation of application Ser. No. 15/477,972, filed Apr. 3, 2017, now U.S. Pat. No. 9,914,029, which is a continuation of application Ser. No. 15/406,408, filed Jan. 13, 2017, now U.S. Pat. No. 9,861,867, which claims the benefit of U.S. Provisional Application No. 62/406,856, filed Oct. 11, 2016, U.S. Provisional Application No. 62/412,389, filed Oct. 25, 2016, and U.S. Provisional Application No. 62/419,242, filed Nov. 8, 2016.

[0011] This application is a continuation-in-part of application Ser. No. 15/981,094, filed May 16, 2018, which is a continuation of application Ser. No. 15/724,035, filed Oct. 3, 2017, now U.S. Pat. No. 9,999,814 which is a continuation of application Ser. No. 15/440,968, filed Feb. 23, 2017, now U.S. Pat. No. 9,795,842, which claims the benefit of U.S. Provisional Application No. 62/444,671, filed Jan. 10, 2017, and U.S. Provisional Application No. 62/445,878, filed Jan. 13, 2017.

[0012] This application is a continuation-in-part of application Ser. No. 15/970,665, filed May 3, 2018, which is a continuation of application Ser. No. 15/667,343, filed Aug. 2, 2017, now U.S. Pat. No. 10,213,659, which claims the benefit of U.S. Provisional Application No. 62/512,275, filed May 30, 2017.

[0013] This application is a continuation-in-part of application Ser. No. 16/030,403, filed Jul. 9, 2018, which claims the benefit of U.S. Provisional Application No. 62/530,734, filed Jul. 10, 2017, and U.S. Provisional Application No. 62/624,294, filed Jan. 31, 2018.

[0014] This application is a continuation-in-part of application Ser. No. 16/179,406, filed Nov. 2, 2018, which claims the benefit of U.S. Provisional Application No. 62/581,456, filed Nov. 3, 2018.

[0015] This application is a continuation-in-part of application Ser. No. 16/419,639, filed May 22, 2019, which is a continuation of application Ser. No. 16/234,169, filed Dec. 27, 2018, which claims the benefit of U.S. Provisional Application No. 62/662,112, filed Apr. 24, 2018, U.S. Provisional Application No. 62/734,176, filed Sep. 20, 2018, U.S. Provisional Application No. 62/734,922, filed Sep. 21, 2018, U.S. Provisional Application No. 62/740,355, filed Oct. 2, 2018, U.S. Provisional Application No. 62/745,113, filed Oct. 12, 2018, U.S. Provisional Application No. 62/751,456, filed Oct. 26, 2018, U.S. Provisional Application No. 62/772,669, filed Nov. 29, 2018, U.S. Provisional Application No. 62/621,948, filed Jan. 25, 2018, and U.S. Provisional Application No. 62/655,437, filed Apr. 10, 2018.

[0016] This application claims the benefit of U.S. Provisional Application No. 62/676,860, filed May 25, 2018, U.S. Provisional Application No. 62/786,371, filed Dec. 29, 2018, U.S. Provisional Application No. 62/820,728, filed Mar. 19, 2019, U.S. Provisional Application No. 62/850,292, filed May 20, 2019, U.S. Provisional Application No. 62/816,418, filed Mar. 11, 2019, and U.S. Provisional Application No. 62/837,592, filed Apr. 23, 2019.

[0017] This application is a continuation-in-part of application Ser. No. 16/418,691, filed May 21, 2019, which is a continuation of application Ser. No. 15/803,157, filed Nov. 3, 2017, which is a continuation of application Ser. No. 15/290,859, filed Oct. 11, 2016, now U.S. Pat. No. 9,814,945, which is a continuation of application Ser. No. 15/040,892, filed Feb. 10, 2016, now U.S. Pat. No. 9,550,096, which claims the benefit of U.S. Provisional Application No. 62/115,024, filed Feb. 11, 2015, U.S. Provisional Application No. 62/120,760, filed Feb. 25, 2015, U.S. Provisional Application No. 62/138,918, filed Mar. 26, 2015, U.S. Provisional Application No. 62/184,757, filed Jun. 25, 2015, U.S. Provisional No. 62/194,135, filed Jul. 17, 2015, and U.S. Provisional Application No. 62/195,211, filed Jul. 21, 2015.

[0018] The disclosures of the above applications are incorporated by reference.

COPYRIGHT AUTHORIZATION

[0019] The present disclosure may be subject to copyright protection. The copyright owner has no objection to the facsimile reproduction by anyone of the present disclosure and its related documents, as they appear in the Patent and Trademark Office patent files or records, but otherwise reserves all applicable copyrights.

FIELD

[0020] The present disclosure generally relates to sports equipment and, more particularly, to golf club heads and methods to manufacture golf club heads.

BACKGROUND

[0021] In golf, various factors may affect the distance and direction that a golf ball may travel. In particular, the center of gravity (CG) and/or the moment of inertia (MOI) of a golf club head may affect the launch angle, the spin rate, and the direction of the golf ball at impact. Such factors may vary significantly based the type of golf swing.

BRIEF DESCRIPTION OF THE DRAWINGS

[0022] FIG. **1** depicts a top perspective view of an example golf club head according to an embodiment of the apparatus, methods, and articles of manufacture described herein.

[0023] FIG. **2** depicts a bottom perspective view of the example golf club head of FIG. **1**.

[0024] FIG. **3** depicts a top view of the example golf club head of FIG. **1**.

[0025] FIG. **4** depicts a bottom view of the example golf club head of FIG. **1**.

[0026] FIG. **5** depicts a front view of the example golf club head of FIG. **1**.

[0027] FIG. **6** depicts a rear view of the example golf club head of FIG. **1**.

[0028] FIG. **7** depicts a toe view of the example golf club head of FIG. **1**.

[0029] FIG. **8** depicts a heel view of the example golf club head of FIG. **1**.

[0030] FIG. **9** depicts a cross-sectional view of the example golf club head of FIG. **1** taken at section line **9-9** of FIG. **3**.

[0031] FIG. **10** depicts a cross-sectional view of the example golf club head of FIG. **1** taken at section line **10-10** of FIG. **3**.

[0032] FIG. **11** depicts a cross-sectional view of the example golf club head of FIG. **1** taken at section line **11-11** of FIG. **3**.

[0033] FIG. **12** depicts a cross-sectional view of the example golf club head of FIG. **1** taken at section line **12-12** of FIG. **3**.

[0034] FIG. **13** depicts a top view of the example golf club head of FIG. **1** excluding the crown portion.

[0035] FIG. **14** depicts a cross-sectional view of the example golf club head of FIG. **1** taken at section line **14-14** of FIG. **3**.

[0036] FIG. **15** depicts a top view of the example golf club head of FIG. **1** with a golf ball proximate to the face portion.

[0037] FIG. **16** depicts a cross-sectional view of an example crown portion of the example golf club head of FIG. **1** taken at section line **16-16** of FIG. **15**.

[0038] FIG. **17** depicts an enlarged view of a portion of the example crown portion of FIG. **16**.

[0039] FIG. **18** depicts an exploded view of an example crown portion for the example golf club head of FIG. **1**.

[0040] FIG. **19** depicts a top perspective view of an example golf club head according to an embodiment of the apparatus, methods, and articles of manufacture described herein.

[0041] FIG. **20** depicts a bottom perspective view of the example golf club head of FIG. **19**.

[0042] FIG. **21** depicts a front view of the example golf club head of FIG. **19**.

[0043] FIG. **22** depicts a rear view of the example golf club head of FIG. **19**.

[0044] FIG. **23** depicts a top view of the example golf club head of FIG. **19**.

[0045] FIG. **24** depicts a toe view of the example golf club head of FIG. **19**.

[0046] FIG. **25** depicts a bottom view of the example golf club head of FIG. **19**.

[0047] FIG. **26** depicts a heel view of the example golf club head of FIG. **19**.

[0048] FIG. **27** depicts a top perspective view of an example golf club head according to an embodiment of the apparatus, methods, and articles of manufacture described herein.

[0049] FIG. **28** depicts a bottom perspective view of the example golf club head of FIG. **27**.

[0050] FIG. **29** depicts a front view of the example golf club head of FIG. **27**.

[0051] FIG. **30** depicts a rear view of the example golf club head of FIG. **27**.

[0052] FIG. **31** depicts a heel view of the example golf club head of FIG. **27**.

[0053] FIG. **32** depicts a toe view of the example golf club head of FIG. **27**.

[0054] FIG. **33** depicts a top view of the example golf club head of FIG. **27**.

[0055] FIG. **34** depicts a bottom view of the example golf club head of FIG. **27**.

[0056] FIG. **35** depicts a top perspective view of an example golf club head prior to attachment of a crown portion and according to an embodiment of the apparatus, methods, and articles of manufacture described herein.

[0057] FIG. **36** depicts a top perspective view of an example golf club head prior to attachment of a crown portion and according to an embodiment of the apparatus, methods, and articles of manufacture described herein.

[0058] FIG. **37** depicts a rear perspective view of the example golf club head of FIG. **19** prior to attachment of a crown portion.

[0059] FIG. **38** depicts a rear perspective view of the example golf club head of FIG. **27** prior to attachment of a crown portion.

[0060] FIG. **39** depicts an exploded view of an example crown portion for an example golf club head.

[0061] FIG. **40** depicts an exploded view of an example crown portion for an example golf club head.

[0062] FIG. **41** depicts an exploded view of an example crown portion for an example golf club head.

[0063] FIG. **42** depicts a front perspective view of an example golf club head according to an embodiment of the apparatus, methods, and articles of manufacture described herein.

[0064] FIG. **43** depicts a front view of the example golf club head of FIG. **42**.

[0065] FIG. **44** depicts a side cross-sectional view of the example golf club head of FIG. **42**.

[0066] FIG. **45** depicts an exploded view of the example golf club head of FIG. **42** with a face portion.

[0067] FIG. **46** depicts a front perspective view of the example golf club head of FIG. **42** after installation of a face portion but prior to joining the face portion to the golf club head.

[0068] FIG. **47** depicts a front view of the example golf club head of FIG. **42** after installation of a face portion but prior to joining the face portion to the golf club head.

[0069] FIG. **48** depicts a side cross-sectional view of the example golf club head of FIG. **42** after joining a face portion to the golf club head.

[0070] FIG. **49** depicts a front perspective view of an example golf club head according to an embodiment of the apparatus, methods, and articles of manufacture described herein.

[0071] FIG. **50** depicts a side cross-sectional view of the example golf club head of FIG. **49** after joining a face portion to the golf club head.

[0072] FIG. **51** depicts a front perspective view of an example golf club head according to an embodiment of the apparatus, methods, and articles of manufacture described herein.

[0073] FIG. **52** depicts a front perspective view of an example golf club head according to an embodiment of the apparatus, methods, and articles of manufacture described herein.

[0074] FIG. **53** depicts a rear perspective view of an example face portion for any of the golf club head embodiments described herein.

[0075] FIG. **54** depicts a rear perspective view of an example face portion for any of the golf club head embodiments described herein.

[0076] FIG. **55** depicts a rear perspective view of an example face portion for any of the golf club head embodiments described herein.

[0077] For simplicity and clarity of illustration, the drawing figures illustrate the general manner of construction, and descriptions and details of well-known features and techniques may be omitted to avoid unnecessarily obscuring the present disclosure. Additionally, elements in the drawing figures are not necessarily drawn to scale. For example, the dimensions of some of the elements in the figures may be exaggerated relative to other elements to help improve understanding of embodiments of the present disclosure.

DESCRIPTION

[0078] In general, golf club heads and methods to manufacture golf club heads are described herein. The apparatus, methods, and articles of manufacture described herein are not limited in this regard. In the example of FIGS. **1-14**, a golf club head **100** may include a body portion **110** with a top portion **130**, a crown portion **135**, a bottom portion **140**, a toe portion **150**, a heel portion **160**, a front portion **170**, and a rear portion **180**. The bottom portion **140** may include a skirt portion **190** defined as a side portion of the golf club head **100** between the top portion **130** and the bottom portion **140** excluding the front portion **170** and extending across a periphery of the golf club head **100** from the toe portion **150**, around the rear portion **180**, and to the heel portion **160**. Alternatively, the golf club head **100** may not include the skirt portion **190**. The front portion **170** may include a face portion **175** to engage a golf ball (e.g., one generally shown as **1501** in FIG. **15**). The face portion **175** may be integral to the body portion **110** or may be a separate face portion that is coupled (e.g., welded) to the front portion **170** to enclose an opening in the front portion **170**. The body portion **110** may also include a hosel portion **165** configured to receive a shaft portion (not shown). The hosel portion **165** may be similar in many respects to any of the hosel portions described herein. The hosel portion **165** may include an interchangeable hosel sleeve. Alternatively, the body portion **110** may include a bore instead of the hosel portion **165**. The

body portion **110** may be made partially or entirely of an aluminum-based material, a magnesium-type material, a steel-based material, a titanium-based material, any combination thereof, or any other suitable material. In another example the body portion **110** may be made partially or entirely of a non-metal material such as a ceramic material, a composite material, any combination thereof, or any other suitable material. The apparatus, methods, and articles of manufacture described herein are not limited in this regard.

[0079] The golf club head **100** may have a club head volume greater than or equal to 300 cubic centimeters (cm^3 or cc). In one example, the golf club head **100** may be about 460 cc. Alternatively, the golf club head **100** may have a club head volume less than or equal to 300 cc. In particular, the golf club head **100** may have a club head volume between 100 cc and 200 cc. The club head volume of the golf club head **100** may be determined by using the weighted water displacement method (i.e., Archimedes Principle). For example, procedures defined by golf standard organizations and/or governing bodies such as the United States Golf Association (USGA) and/or the Royal and Ancient Golf Club of St. Andrews (R&A) may be used for measuring the club head volume of the golf club head **100**. Although FIG. **1** may depict a particular type of club head (e.g., a driver-type club head), the apparatus, methods, and articles of manufacture described herein may be applicable to other types of club head (e.g., a fairway wood-type club head, a hybrid-type club head, an iron-type club head, a putter-type club head, etc.). The apparatus, methods, and articles of manufacture described herein are not limited in this regard.

[0080] The top portion **130** may include a forward portion **131** extending a distance **134** between the front portion **170** and the crown portion **135**, as shown in FIG. **9**. In one example, the forward portion **131** may extend a distance **134** of at least 12 mm in a front-to-rear direction. In another example, the forward portion **131** may extend a distance **134** of at least 16 mm in a front-to-rear direction. In yet another example, the forward portion **131** may extend a distance **134** of at least 20 mm in a front-to-rear direction. In still another example, the forward portion **131** may extend a distance **134** of between and including 12 mm and 20 mm in a front-to-rear direction. While the above examples may describe particular distances, the apparatus, methods, and articles of manufacture described herein may include a forward portion extending a distance less than 12 mm in a front-to-rear direction. The forward portion **131** may enhance structural integrity of the golf club head **100** and resist rearward deflection of the front portion **170** during impact with a golf ball. The forward portion **131** may transfer an impact force to the crown portion **135** during an impact with a golf ball. The forward portion **131** may distribute an impact force along a surface of the crown portion that abuts a junction **132** formed between the crown portion **135** and the forward portion **131** of the top portion **130**. The apparatus, methods, and articles of manufacture described herein are not limited in this regard.

[0081] The crown portion **135** may be a separate piece that may be attached to the top portion **130**. The crown portion **135** may enclose an opening in the top portion **130**. As illustrated in FIG. **13**, for example, the top portion **130** of the golf club head **100** may include the opening prior to installation of the crown portion **135**. The crown portion **135** may be constructed from one or more materials, and those materials may be the same or different from the material of the body portion **110**. In one example, the crown portion **135** may be at least partially constructed from a composite material such as a fiber-based composite material. The crown portion **135** may be attached to a shoulder portion **133** of the top portion **130**. The shoulder portion **133** may extend along all or a portion of the opening in the top portion **130**. The shoulder portion **133** may support the crown portion **135**. In one example, the shoulder portion **133** may extend a distance **1333** of at least 2 mm inward toward the opening in the top portion **130**. In another example, the shoulder portion **133** may extend a distance **1333** of at least 6 mm. In yet another example, the shoulder portion **133** may extend a distance **1333** of at least 8 mm. In still another example, the shoulder portion **133** may extend a distance **1333** of between and including 2 mm and 8 mm. While the above examples may describe particular distances, the apparatus, methods, and articles of manufacture described herein may include a shoulder portion **133** that extends a distance **1333** less than 2 mm inward toward the opening in the top portion **130**. The shoulder portion **133** may be a continuous portion encircling the opening in the top portion **130**. Alternately, the shoulder portion **133** may include one or more discrete shoulder portions arranged to support the crown portion **135**. In another example, the shoulder portion **133** may include a plurality of tabs arranged to support the crown portion **135**. In still another example, the shoulder portion **133** may be omitted, and the crown portion **135** may be adhered to an outer surface of the top portion **130** or to an inner surface of the top portion **130**. In yet another example, the shoulder portion **133** may be omitted, and the crown portion **135** may include a protrusion extending from a bottom surface of the crown portion **135** that provides an interference fit with a perimeter edge of the opening. The apparatus, methods, and articles of manufacture described herein are not limited in this regard.

[0082] The crown portion **135** may include one or more thin portions, one generally shown as **1035**. The thin portion **1035** may reduce the weight of the crown portion **135**, which may lower the CG of the golf club head **100**. In one example, the thin portion **1035** may have a thickness **1036** of less than 1.0 mm. In another example, the thin portion **1035** may have a thickness **1036** of less than 0.75 mm. In yet another example, the thin portion **1035** may have a thickness **1036** of less than 0.65 mm. While the above examples may describe particular thicknesses, the apparatus, methods, and articles of manufacture described herein may include one or more thin portions **1035** having a thickness greater than or equal to 1.0 mm. One or more thin portions **1035** may extend from one or more relatively thicker crown stiffening regions, one generally shown as **136**. In one example, the thin portion **1035** may form at least 50% of an exterior surface area of the crown portion **135**. In another example, the thin portion **1035** may form at least 75% of an exterior surface area of the crown portion **135**. In yet another example, the thin portion **1035** may form at least 85% of the exterior surface area of the crown portion **135**. In still yet another example, the thin portions **1035** may form at least 95% of the exterior surface area of the crown portion **135**. While the above examples may describe particular percentages of the crown portion **135**, the apparatus, methods, and articles of manufacture may include one or more thin portions **1035** forming less than 75% of the exterior surface area of the crown portion **135**. The apparatus, methods, and articles of manufacture described herein are not limited in this regard.

[0083] The crown stiffening portion **136** may enhance stiffness of the crown portion **135**. The crown stiffening portion **136** may compensate for the presence of one or more relatively less stiff regions elsewhere in the crown portion **135**. The crown stiffening portion **136** may enhance overall stiffness of the golf club head **100**. The crown stiffening portion **136** may limit deflection of the face portion **175** and/or forward portion **131** of the top portion **130** toward the rear portion **180** in response to the face portion **175** impacting a golf ball. The crown stiffening portion **136** may limit physical compression of the crown portion **135** in a front-to-rear direction in response to the face portion **175** impacting a golf ball, which may reduce risk of cracking or delaminating the crown portion **135** in examples where the crown portion **135** is constructed of two or more layers of composite material. The crown stiffening portion **136** may be part of a raised portion. The crown stiffening portion **136** may be part of a contoured portion. The crown stiffening portion **136** may serve as a visual alignment aid for a golfer aligning a golf shot. The crown stiffening portion **136** may improve acoustic response of the golf club head **100** in response to the face portion **175** impacting a golf ball. The crown stiffening portion **136** may have a thickness greater than a thin portion **135**. The crown stiffening portion **136** may have a thickness greater than an average thickness of the crown portion **135**. The crown stiffening portion **136** may be integral to the crown portion **135**. The crown stiffening portion **136** may be or one or more separate portions adhered or fastened to an inner surface of the crown portion **135** to provide structural reinforcement. The crown stiffening portion **136** may be or one or more separate portions adhered or fastened to an outer surface of the crown portion **135** to provide structural reinforcement. The apparatus, methods, and articles of manufacture described herein are not limited in this regard.

[0084] As mentioned above, the crown portion **135** may include one or more crown stiffening portions, generally shown in one example as a first crown stiffening portion **137**, a second crown stiffening portion **138**, and a third crown stiffening portion **139** in FIG. **1**. The first crown stiffening portion **137** may be located adjacent to the forward portion **131** of the top portion **130**. The first crown stiffening portion **137** may extend along the junction **132** formed between the crown portion **135** and the forward portion **131** of the top portion **130**. The first crown stiffening portion **137** may abut the junction **132**. The first crown stiffening portion **137** may have a surface that matches a contour of the forward portion proximate the junction **132**. The first crown stiffening portion **137** may have a thickness greater than an average thickness of the crown portion **135**. In one example, the first crown stiffening portion **137** may have a thickness of greater than 2 mm. In another example, the first crown stiffening portion **137** may have a thickness of greater than or equal to 2.2 mm. In still another example, the first crown stiffening portion **137** may have a thickness of greater than or equal to 2.4 mm. While the above examples may describe particular thickness, the apparatus, methods, and articles of manufacture described herein may include the first crown stiffening portion **137** with a thickness of less than or equal to 2 mm. The first crown stiffening portion **137** may include two or more plies of fiber-based composite material **1514** (e.g., such as three, four, five, six, seven, eight, or nine plies of fiber-based composite material **1514**). In one example, the first crown stiffening portion **137** may have a length of at least 1.25 cm in a heel-to-toe direction. In another example, the first crown stiffening portion **137** may have a length of at least 2 cm in a heel-to-toe direction. In yet another example, the first crown stiffening portion **137** may have a length of at least 3 cm in a heel-to-toe direction. In still yet another example, the first crown stiffening portion **137** may have a length of at least 4 cm in a heel-to-toe direction. In another example, the first crown stiffening portion **137** may have a length of between and including 4 and 4.5 cm in a heel-to-toe direction. While the above examples may describe particular lengths, the apparatus, methods, and articles of manufacture describe herein may include the first crown stiffening portion **137** having a length of less than 3 cm. The first crown stiffening portion **137** may reduce aerodynamic drag of the golf club head **100**. The apparatus, methods, and articles of manufacture described herein are not limited in this regard.

[0085] The second crown stiffening portion **138** may extend from the first crown stiffening portion **137** toward the rear portion **180**. The second crown stiffening portion **138** may extend from the first crown stiffening portion **137** toward the rear portion **180** and toward the toe portion **150**. The second crown stiffening portion **138** may extend from a toe-side end of the first crown stiffening portion **137** to a rear perimeter of the crown portion **135**. The second crown stiffening portion **138** may extend from the first crown stiffening portion **137** toward a toe-side portion **281** of a protruding portion **141** on the bottom portion **140**. The second crown stiffening portion **138** may extend from the first crown stiffening portion **137** toward a toe-side perimeter portion **283** of a protruding portion **141** on the bottom portion **140**. The second crown stiffening portion **138** may extend from the first crown stiffening portion **137** toward a weight port **237** on the bottom portion **140**. The second crown stiffening portion **138** may extend from the first crown stiffening portion **137** toward a weight port **237** on the bottom portion **140**, where the weight port is closer to the toe portion **150** than other weight ports on the bottom portion. The second crown stiffening portion **138** may taper in a front-to-rear direction.

[0086] The second crown stiffening portion **138** may serve as a support structure between the forward portion **131** and the rear portion **180**. The second crown stiffening portion **138** may oppose rearward deflection of the forward portion **131** in response to the face portion **175** impacting a golf ball. The second crown stiffening portion **138** may have a thickness greater than an average thickness of the crown portion **135**. The second crown stiffening portion **138** may have a thickness of greater than 2 mm. The second crown stiffening portion **138** may have a thickness of greater than or equal to 2.2 mm. While the above examples may describe particular thicknesses, the apparatus, methods, and articles of manufacture described herein may include the second crown stiffening portion **138** with a thickness of less than or equal to 2 mm. The second crown stiffening portion **138** may include two or more plies of fiber-based composite material **1514** (e.g., such as three, four, five, six, seven, eight, or nine plies of fiber-based composite material **1514**). In one example, the second crown stiffening portion **138** may have a length of at least 2 cm. In another example, the second crown stiffening portion **138** may have a length of at least 4 cm. While the above examples may describe particular lengths, the apparatus, methods, and articles of manufacture describe herein may include a second crown stiffening

portion **138** having a length less than 2 cm. The second crown stiffening portion **138** may reduce aerodynamic drag of the golf club head. The apparatus, methods, and articles of manufacture described herein are not limited in this regard.

[0087] The third crown stiffening portion **139** may extend from the first crown stiffening portion **137** toward the rear portion **180**. The third crown stiffening portion **139** may extend from the first crown stiffening portion **137** toward the rear portion **180** and toward the heel portion **160**. The third crown stiffening portion **139** may extend from a heel-side end of the first crown stiffening portion **137** to a rear perimeter of the crown portion **135**. The third crown stiffening portion **139** may extend from the first crown stiffening portion **137** toward a heel-side portion **282** of the protruding portion **141** on the bottom portion **140**. The third crown stiffening portion **139** may extend from the first crown stiffening portion **137** toward a heel-side perimeter portion **284** of the protruding portion **141** on the bottom portion **140**. The third crown stiffening portion **139** may extend from the first crown stiffening portion **137** toward a weight port **232** on the bottom portion **140**. The third crown stiffening portion **139** may extend from the first crown stiffening portion **137** toward a weight port **232** on the bottom portion **140**, where the weight port **232** is closer to the heel portion **160** than other weight ports on the bottom portion. The third crown stiffening portion **139** may taper in a front-to-rear direction.

[0088] The third crown stiffening portion **139** may serve as a support structure between the forward portion **131** and the rear portion **180**. The third crown stiffening portion **139** may oppose rearward deflection of the forward portion **131** in response to the face portion **175** impacting a golf ball. The third crown stiffening portion **139** may have a thickness greater than an average thickness of the crown portion **135**. The third crown stiffening portion **139** may have a thickness of greater than 2 mm. The third crown stiffening portion **139** may have a thickness of greater than or equal to 2.2 mm. While the above examples may describe particular thicknesses, the apparatus, methods, and articles of manufacture described herein may include the third crown stiffening portion **139** with a thickness of less than or equal to 2 mm. The third crown stiffening portion **139** may include two or more plies of fiber-based composite material **1514** (e.g., such as three, four, five, six, seven, eight, or nine plies of fiber-based composite material **1514**). The third crown stiffening portion **139** may have a length of at least 2 cm. The third crown stiffening portion **139** may have a length of at least 4 cm. The third crown stiffening portion **139** may reduce aerodynamic drag of the golf club head. While the above example may describe a particular number of crown stiffening portions, the apparatus, methods, and articles of manufacture described herein may include more or fewer crown stiffening portions. The apparatus, methods, and articles of manufacture described herein are not limited in this regard.

[0089] The crown portion **135** may include a central crown portion **331**, a toe-side crown portion **332**, and a heel-side crown portion **333**. The central crown portion **331** may be a raised central crown portion. The raised central crown portion **331** may be located between the heel-side crown portion **333** and the toe-side crown portion **332**. The raised central crown portion **331** may have a maximum height greater than a maximum height of the toe-side crown portion **332**. The raised central crown portion **331** may have a maximum height greater than a maximum height of the heel-side crown portion **333**. The raised central crown portion **331** may serve as a visual alignment aid. The raised central crown portion **331** may improve aerodynamic performance of the golf club head **100**. The raised central crown portion **331** may stiffen the crown portion **135** and reduce deflection (e.g. bulging) of the crown portion **135** in response to the face portion **175** impacting a golf ball. Reducing bulging of the crown portion **135** may be desirable to reduce shear stress on a joint (e.g. an adhesive bond) between the crown portion **135** and the top portion **130** of the golf club head. The apparatus, methods, and articles of manufacture described herein are not limited in this regard.

[0090] The central crown portion **331** may include a thin portion **1035**. The toe-side crown portion **332** may include a thin portion **1035**. The heel-side crown portion **333** may include a thin portion **1035**. Thin portions **1035** may be desirable to reduce overall mass of the crown portion **135**, which may lower the CG of the golf club head **100**. The apparatus, methods, and articles of manufacture described herein are not limited in this regard.

[0091] The crown portion **135** may include a plurality of contoured surfaces. The plurality of contoured surfaces may reduce aerodynamic drag of the golf club head **100**. The plurality of contoured surfaces may enhance structural integrity of the golf club head **100**. An outer surface of the central crown portion **331** may be elevated above an outer surface of the toe-side crown portion **332**. The outer surface of the central crown portion **331** may be elevated above an outer surface of the heel-side crown portion **333**. The crown portion **135** may include a first contoured transition region **334** located between the central crown portion **331** and the toe-side crown portion **332**. The crown portion **135** may include a second contoured transition region **335** located between the central crown portion **331** and the heel-side crown portion **333**. The location of the first contoured transition region **334** may coincide with the location of the second crown stiffening portion **138**. The location of the second contoured transition region **335** may coincide with the location of the third crown stiffening portion **139**. Together, the central crown portion **331**, toe-side crown portion **332**, heel-side crown portion **333**, first contoured transition region **334**, and second contoured transition region **335** may form a multi-level crown portion **135**. Together, the central crown portion **331**, toe-side crown portion **332**, heel-side crown portion **333**, first contoured transition region **334**, and second contoured transition region **335** may form a multi-thickness crown portion **135**. Together, the central crown portion **331**, toe-side crown portion **332**, heel-side crown portion **333**, first contoured transition region **334**, and second contoured transition region **335** may form a multi-thickness and multi-level crown portion **135**. The apparatus, methods, and articles of manufacture described herein are not limited in this regard.

[0092] FIG. **12** depicts a cross-sectional view of the example golf club head of FIG. **1** taken at section line **12-12** of FIG. **3**. The outer surface **1231** of the central crown portion **331** may be elevated above an outer surface of the toe-side crown portion **332**. In one example, the outer surface **1231** of the central crown portion **331** may be elevated above an outer surface of the toe-side crown portion **332** by a height of greater than or equal to 0.5 mm. In another example, the outer surface **1231** of the central

crown portion **331** may be elevated above an outer surface of the toe-side crown portion **332** by a height of greater than or equal to 1.0 mm. In yet another example, the outer surface **1231** of the central crown portion **331** may be elevated above an outer surface of the toe-side crown portion **332** by a height of greater than or equal to 2.0 mm. The outer surface **1231** of the central crown portion **331** may be elevated above an outer surface **1233** of the heel-side crown portion **333**. In one example, the outer surface **1231** of the central crown portion **331** may be elevated above an outer surface **1233** of the heel-side crown portion **333** by a height of greater than or equal to 0.5 mm. In another example, the outer surface **1231** of the central crown portion **331** may be elevated above an outer surface **1233** of the heel-side crown portion **333** by a height of greater than or equal to 1.0 mm. In yet another example, the outer surface **1231** of the central crown portion **331** may be elevated above an outer surface **1233** of the heel-side crown portion **333** by a height of greater than or equal to 2.0 mm. While the above examples may describe particular heights, the apparatus, methods, and articles of manufacture described herein may include outer surfaces with a difference in height of less than 0.5 mm. The apparatus, methods, and articles of manufacture described herein are not limited in this regard.

[0093] As shown in FIG. **11**, the outer surface **1233** of the heel-side crown portion **333** may be recessed below the forward portion **131** proximate to the junction **132**. Likewise, the outer surface **1232** of the toe-side crown portion **332** may be recessed below the forward portion **131** proximate the junction **132**. In one example, the outer surface **1233** of the heel-side crown portion **333** may be recessed below the forward portion **131** proximate to the junction **132** by a distance of greater than or equal to 0.5 mm. In another example, the outer surface **1233** of the heel-side crown portion **333** may be recessed below the forward portion **131** proximate to the junction **132** by a distance of greater than or equal to 1.0 mm. In yet another example, the outer surface **1232** of the toe-side crown portion **332** may be recessed below the forward portion **131** proximate the junction **132** by a distance of greater than or equal to 0.5 mm. The outer surface **1232** of the toe-side crown portion **332** may be recessed below the forward portion **131** proximate the junction **132** by a distance of greater than or equal to 1.0 mm. While the above examples may describe particular distances, the apparatus, methods, and articles of manufacture described herein may include outer surfaces recessed by distances of less than 0.5 mm. The apparatus, methods, and articles of manufacture described herein are not limited in this regard.

[0094] The central crown portion **331** may be bounded by the first contoured transition region **334**, the second contoured transition region **335**, rear perimeter **951** of the crown portion **135**, and the front perimeter **1532** of the crown portion **135**. The central crown portion **331** may be bounded by the first crown stiffening portion **137**, the second crown stiffening portion **138**, the third crown stiffening portion **139**, and a rear perimeter **951** of the crown portion **135**. A front portion of the central crown portion **331** may have a symmetrical shape relative to a central vertical plane (e.g., one generally shown as **1504**) that intersects the geometric center **176** (e.g., at or proximate to a "sweet spot" of the golf club head **100**) on the face portion **175** and is normal to a front vertical plane **715**. A front portion of the central crown portion **331** may have a nonsymmetrical shape relative to the central vertical plane **1504** that intersects the geometric center **176** on the face portion **175** and is normal to the front vertical plane **715**. In one example, the second crown stiffening portion **138** and third crown stiffening portion **139** may diverge in a front-to-rear direction, as shown in FIG. **15**. The central crown portion **331** may have an irregular polygon-like shape (e.g., a quadrilateral-like shape). The distance between the second and third crown stiffening portions **138** and **139** at or proximate to the front portion **170** may be less than the distance between the second and third crown stiffening portions **138** and **139** at or proximate to the rear portion **180**. In another example, the second crown stiffening portion **138** and third crown stiffening portion **139** may converge in a front-to-rear direction. A distance between the second and third crown stiffening portions **138** and **139** at or proximate to the front portion **170** may be greater than a distance between the second and third crown stiffening portions **138** and **139** at or proximate to the rear portion **180**. In yet another example, the second crown stiffening portion **138** and third crown stiffening portion **139** may converge and then diverge in a front-to-rear direction (see, e.g., FIG. **40**). In another example, the second crown stiffening portion **138** and third crown stiffening portion **139** may diverge and then converge in a front-to-rear direction (see, e.g., FIG. **41**). In still another example, the second crown stiffening portion **138** and third crown stiffening portion **139** may be substantially parallel in a front-to-rear direction. The distance between the second crown stiffening portion **138** and third crown stiffening portion **139** at or proximate to the front portion **170** may be equal or substantially the same as the distance between the second and third crown stiffening portions **138** and **139** at or proximate to the rear portion **180**. The apparatus, methods, and articles of manufacture described herein are not limited in this regard.

[0095] In one example, as shown in FIG. **1**, the central crown portion **331** may be raised relative to the toe-side crown portion **332** and the heel-side crown portion **333**. In another example, the central crown portion **331** may be depressed relative to the toe-side crown portion **332** and the heel-side crown portion **333**. Variations in relative heights of the central crown portion **332**, toe-side crown portion **332**, and heel-side crown portion **333** may improve aerodynamic performance by reducing a drag coefficient associated with the golf club head **100**. Variations in relative heights of the central crown portion **332**, toe-side crown portion **332**, and heel-side crown portion **333** may provide a visual alignment aid. Variations in relative heights of the central crown portion **332**, toe-side crown portion **332**, and heel-side crown portion **333**, together with contoured transition regions with integral ribs, may enhance structural integrity of the crown portion **135**. The apparatus, methods, and articles of manufacture described herein are not limited in this regard.

[0096] The total surface area of the crown portion **135** may include surface areas of the central crown portion **331**, toe-side crown portion **332**, heel-side crown portion **333**, first contoured transition region **334**, and second contoured transition region **335**. In one example, the surface area of the central crown portion **331** may be at least 10% of the total surface area of the crown portion **135**. In another example, the surface area of the central crown portion **331** may be at least 20% of the total surface area of the crown portion **135**. In yet another example, the surface area of the central crown portion **331** may be at least 30% of the total surface area of

the crown portion **135**. In still yet another example, the surface area of the central crown portion **331** may be at least 40% of the total surface area of the crown portion **135**. In still yet another example, the surface area of the central crown portion **331** may be at least 50% of the surface area of the crown portion **135**. In another example, the surface area of the central crown portion **331** may be at least 60% of the total surface area of the crown portion **135**. In still yet another example, the surface area of the central crown portion **331** may be at least 70% of the total surface area of the crown portion **135**. In still yet another example, the surface area of the central crown portion **331** may be at least 80% of the total surface area of the crown portion **135**. In still yet another example, the surface area of the central crown portion **331** may be at least 90% of the total surface area of the crown portion **135**. The apparatus, methods, and articles of manufacture described herein are not limited in this regard.

[0097] The toe-side crown portion **332** may be bounded by the first contoured transition region **334**, a toe-side perimeter **1533** of the crown portion **135**, and a front perimeter **1532** of the crown portion **135**. In one example, the surface area of the toe-side crown portion **332** may be at least 5% of the total surface area of the crown portion **135**. In another example, the surface area of the toe-side crown portion **332** may be at least 10% of the total surface area of the crown portion **135**. In yet another example, the surface area of the toe-side crown portion **332** may be at least 15% of the total surface area of the crown portion **135**. In still yet another example, the surface area of the toe-side crown portion **332** may be at least 20% of the surface area of the crown portion **135**. In still yet another example, the surface area of the toe-side crown portion **332** may be at least 25% of the total surface area of the crown portion **135**. In still yet another example, the surface area of the toe-side crown portion **332** may be at least 30% of the total surface area of the crown portion **135**. In still yet another example, the surface area of the toe-side crown portion **332** may be at least 35% of the total surface area of the crown portion **135**. In still yet another example, the surface area of the toe-side crown portion **332** may be at least 40% of the total surface area of the crown portion **135**. The apparatus, methods, and articles of manufacture described herein are not limited in this regard.

[0098] The heel-side crown portion **333** may be bounded by the second contoured transition region **335**, a heel-side perimeter **1531** of the crown portion **135**, and a front perimeter **1532** of the crown portion **135**. In one example, the surface area of the heel-side crown portion **333** may be at least 5% of the total surface area of the crown portion **135**. In another example, the surface area of the heel-side crown portion **333** may be at least 10% of the total surface area of the crown portion **135**. In yet another example, the surface area of the heel-side crown portion **333** may be at least 15% of the total surface area of the crown portion **135**. In still yet another example, the surface area of the heel-side crown portion **333** may be at least 20% of the total surface area of the crown portion **135**. In still yet another example, the surface area of the heel-side crown portion **333** may be at least 25% of the total surface area of the crown portion **135**. In still yet another example, the surface area of the heel-side crown portion **333** may be at least 30% of the total surface area of the crown portion **135**. The apparatus, methods, and articles of manufacture described herein are not limited in this regard.

[0099] In one example, the central crown portion **331** may have an outer surface area **1231** that is greater than or equal to 40% of a total outer surface area of the crown portion, the toe-side crown portion **332** may have an outer surface area **1232** that is less than or equal to 30% of the total outer surface area of the crown portion, and the heel-side crown portion **333** may have an outer surface area **1233** that is less than or equal to 15% of the total outer surface area of the crown portion. In another example, the central crown portion **331** may have an outer surface area **1231** that is greater than or equal to 50% of a total outer surface area of the crown portion, the toe-side crown portion **332** may have an outer surface area **1232** that is greater than or equal to 15% of the total outer surface area of the crown portion, and the heel-side crown portion **333** may have an outer surface area **1233** that is greater than or equal to 5% of the total outer surface area of the crown portion. In still another example, the central crown portion **331** may have an outer surface area **1231** that is greater than or equal to 40% of a total outer surface area of the crown portion, the toe-side crown portion **332** may have an outer surface area **1232** that is greater than or equal to 10% of the total outer surface area of the crown portion, and the heel-side crown portion **333** may have an outer surface area **1233** that is greater than or equal to 5% of the total outer surface area of the crown portion. The apparatus, methods, and articles of manufacture described herein are not limited in this regard.

[0100] FIG. **15** depicts a top view of the example golf club head **100** of FIG. **1** with a golf ball **1501** proximate to the face portion **175**. The golf ball **1501** may be aligned with a geometric center **176** of the face portion **175**. The golf ball **1501** may have a diameter of about 1.68 inches. A central vertical plane **1504** bisects the golf ball **1501** and the golf club head **100**. A toe-side plane **1505** bounds a toe side of the golf club head **100**. A heel-side plane **1506** bounds a heel side of the golf club head **100**. A toe-side golf ball perimeter plane **1502** bounds a toe-side of the golf ball **1501**. A heel-side golf ball perimeter plane **1503** bounds a toe-side of the golf ball **1501**. The crown portion **135** may include a perimeter that includes the toe-side perimeter **1533**, the heel-side perimeter **1531**, the front perimeter **1532**, and the rear perimeter **951**. The apparatus, methods, and articles of manufacture described herein are not limited in this regard.

[0101] FIG. **16** depicts a cross-sectional view of the crown portion **135** of the example golf club head **100** of FIG. **15** taken at section line **16-16**. The crown portion **135** may include two or more layers of composite material. The crown portion **135** may include an outer layer of composite material **1510** and an inner layer of composite material **1515**. The crown portion **135** may include a plurality of integral ribs. Each integral rib may include a plurality of layers of composite material. The integral ribs (e.g., generally shown as **1525**, and **1530**) may be disposed between the inner layer of composite material **1515** and outer layer **1510** of composite material. The integral ribs **1525** and **1530** may form the crown stiffening portion **136**. The apparatus, methods, and articles of manufacture described herein are not limited in this regard.

[0102] A toe-side integral rib **1525** may extend from the front perimeter **1532** of the crown portion **135** to the rear perimeter **951** of the crown portion. The toe-side integral rib

1525 may include a plurality of layers of composite material **1514**, as shown in FIG. **17**. The toe-side integral rib **1525** may include two or more layers of composite material **1514** disposed between the inner layer **1515** and the outer layer **1510** of the crown portion **135**. The toe-side integral rib **1525** may extend rearward from the forward portion **131**. The toe-side integral rib **1525** may extend rearward from a starting location between the central vertical plane **1504** and the toe-side golf ball plane **1502** and terminate at an ending location between the toe-side plane **1505** and the toe-side golf ball plane **1502**. The apparatus, methods, and articles of manufacture described herein are not limited in this regard.

[0103] A thickness of the toe-side integral rib **1525** may be equal to a thickness of the plurality of layers of composite material **1514** forming the toe-side integral rib **1525** and located between the inner layer **1515** and outer layer **1510** of the crown portion **135**. In one example, the toe-side integral rib **1525** may have a maximum thickness between and including 1.0 mm and 2.0 mm. In another example, the toe-side integral rib **1525** may have a maximum thickness greater than or equal to 1.0 mm. In another example, the toe-side integral rib **1525** may have a maximum thickness greater than or equal to 2.0 mm. In yet another example, the toe-side integral rib **1525** may have a maximum thickness greater than or equal to 2.2 mm. The apparatus, methods, and articles of manufacture described herein are not limited in this regard.

[0104] FIG. **17** depicts an enlarged view of a region **1700** of the crown portion **135** depicted in FIG. **16**. The crown portion **135** may include a plurality of layers of composite material **1514**. The crown portion **135** may include an outer layer of composite material **1510** and an inner layer of composite material **1515**. In one example, the inner layer of composite material **1515** may include a glass fiber composite material, and the outer layer of composite material **1510** may include a carbon fiber composite material. In another example, the inner layer of composite material **1515** may include a carbon fiber composite material, and the outer layer of composite material **1510** may include a glass fiber composite material. In yet another example, the inner layer of composite material **1515** may include a glass fiber composite material, and the outer layer of composite material **1510** may include a glass fiber composite material. In still another example, the inner layer of composite material **1515** may include a carbon fiber composite material, and the outer layer of composite material **1510** may include a carbon fiber composite material. The apparatus, methods, and articles of manufacture described herein are not limited in this regard.

[0105] The crown portion **135** may include a stack of composite layers forming an integral rib **1525**. The integral rib **1525** may be positioned between the outer layer of composite material **1510** and the inner layer of composite material **1515**. The crown portion **135** may include one or more layers of composite material **1514** arranged in parallel or substantially parallel planes. The crown portion **135** may include one or more layers of composite material **1514** that are arranged in nonparallel planes. For example, as shown in FIG. **17**, the crown portion **135** may include an integral rib **1525** having a stack of composite layers arranged in planes that are nonparallel to planes associated with certain layers of composite material in the crown portion **135**. Nonparallel arrangements of layers within the crown portion **135** may enhance structural integrity of the crown portion **135**. In one example, shown in FIG. **17**, four layers of the integral rib **1525** may contact a composite layer **1514** that is adjacent to the integral rib **1525**. In another example, two or more layers of the integral rib **1525** may contact a composite layer **1514** adjacent to the integral rib **1525**. The compressive strength of the crown portion **135**, determined along a front-to-rear axis, may be enhanced by having layers of composite material **1514** that are arranged in nonparallel planes (i.e., nonuniform orientations). The tensile strength of the crown portion **135**, determined along a front-to-rear axis, may be enhanced by having layers of composite material **1514** that are arranged in nonparallel planes (i.e., nonuniform orientations). The apparatus, methods, and articles of manufacture described herein are not limited in this regard.

[0106] The integral ribs (e.g., generally shown as **1525**, **1530**, and **1535**) may provide embedded structural supports within the crown portion **135**. Each integral rib may be located in a crown stiffening region adjacent to one or more thin portions **1035**. The crown portion **135** may have contoured transition regions (e.g., generally shown as **334**, and **335**) between the thin portions **1035** and the thicker crown stiffening portions where the integral ribs **1525** and **1530** reside. Contoured transition regions **334** and **335** may prevent or mitigate unwanted stress concentrations within the crown portion **135** by avoiding distinct edges between thin portions **1035** and adjacent thicker portions (e.g., such as **137**, **138**, or **139**). Stress concentrations may be undesirable as they may result in cracking or delaminating of layers of the crown portion **135** during use of the golf club head **100**. For example, in an alternative embodiment having non-integral ribs attached to either an inner or outer surface of the crown portion, a distinct edge may exist at a junction formed between a non-integral rib and a surface of the crown portion **135**, and that edge may introduce an unwanted stress concentration. After numerous ball strikes, presence of the stress concentration may result in cracking or delaminating of layers of the crown portion **135** proximate to the non-integral rib. This physical deterioration of the crown portion **135** may negatively impact performance of the golf club head **100**. For instance, as the crown portion **135** physically deteriorates, shot-to-shot variability may increase. Shot-to-shot variability may be unacceptable to an individual who requires consistent performance from the golf club head **100**. Physical deterioration of the crown portion **135** may also negatively affect appearance of the golf club head **100**. For the sake of long-term durability, consistency, and appearance, it is therefore desirable to have a crown portion **135** with contoured transition regions between the thin portions **1035** and the thicker portions containing integral ribs **1525** and **1530**. The apparatus, methods, and articles of manufacture described herein are not limited in this regard.

[0107] The crown portion **135** may include a plurality of composite layers **1512** positioned between the inner structural layer **1515** and the outer structural layer **1510**. The term "structural layer" as used herein may describe any suitable layer or layers having any suitable shape or shapes (e.g. flat, curved, or complexly curved) and any suitable dimension or dimensions that appreciably increases the structural integrity of the crown portion **135**. Together, the plurality of composite layers **1512** and the inner and outer structural layers (e.g., generally shown as **1510** and **1515**) may form a crown portion **135** that, when coupled to the body portion **110** to enclose the opening in the top portion **130**, may improve the ability of the golf club head **100** to withstand torsional or compressive forces imparted during impact with a golf ball,

which may improve performance or reduce mishits. The apparatus, methods, and articles of manufacture described herein are not limited in this regard.

[0108] The plurality of composite layers **1512** may include a plurality of layers of composite materials in a stacked arrangement. A layer of composite material **1514** may include a layer of fabric combined with an amount of resin. The fabric may be constructed from graphite fiber (commonly referred to as "carbon fiber"), glass fiber, aramid fiber, carbon nanotubes, or any other suitable high-performance fiber, combination of fibers, or material. In some examples, the fabric may be a hybrid of two or more types of fibers, such as a hybrid fabric made of carbon fibers and aramid fibers. Examples of aramid fibers include KEVLAR, TWARON, NOMEX, NEW STAR, TECHNORA, and TEUINCONEX fibers. The fabric may be constructed as a woven, knitted, stitched, or nonwoven (e.g. uni-directional) fabric. Examples of suitable woven fabrics include Style 1625 Bi-directional E-Glass (Item No. 1094), Twill Weave Carbon Fiber Fabric (Item No. 1069), and KEVLAR Plain Weave Fabric (Item No. 2469), all available from Fibre Glast Developments Corporation of Brookville, Ohio.

[0109] In some instances, resin may be applied to the fabric during a lamination process, either by hand or through an infusion process. In other instances, the fabric may be pre-impregnated with resin. These fabrics are commonly referred to as "prepreg" fabrics. Prepreg fabrics may require cold storage to ensure the resin does not cure prematurely. During manufacturing, heating the crown portion **135** (e.g. in an oven or autoclave) may be required to fully cure (i.e. polymerize) the resin such that the crown portion **135** takes on desirable structural attributes as the resin hardens. The apparatus, methods, and articles of manufacture described herein are not limited in this regard.

[0110] In some examples, the resin may be a thermosetting resin, such as an epoxy resin, vinyl-ester resin, polyester resin, or other suitable resin. Resin selection may be based, at least in part, on fabric compatibility and the characteristics of the composite layers. Epoxy resins are suitable since they may be used to form a strong, lightweight composite crown portion **135** that is dimensionally stable. A suitable epoxy resin is System 2000 Epoxy Resin (Item No. 2000-A) available from Fibre Glast Developments Corporation.

[0111] The epoxy resin may be mixed with a suitable epoxy hardener, such as 2020 Epoxy Hardener (Item No. 2020-A), 2060 Epoxy Hardener (Item No. 2060-A), or 2120 Epoxy Hardener (Item No. 2120-A) from Fibre Glast Developments Corporation. Selection of an epoxy hardener may be based, at least in part, on desired pot life and working time, which may be dictated by the size and complexity of the composite crown portion **135** being manufactured. Epoxy hardener selection may also be based on desired cure temperature and cure time. An epoxy hardener may be selected that is compatible with the chosen manufacturing temperature and time. The apparatus, methods, and articles of manufacture described herein are not limited in this regard.

[0112] The crown portion **135** may be formed by any suitable process, such as a wet layup process where liquid resin is distributed over a fabric made of fibers to wet out the fabric. The liquid resin may be distributed by hand, by a resin infusion process, or by any other suitable process. The wet layup process may utilize a peel ply layer or mold release agent to prevent the composite crown portion **135** from adhering to a vacuum bag film during a vacuum bagging process. An example of a suitable peel ply layer is Peel Ply Release Fabric (Catalog No. VB-P56150), available from U.S. Composites, Inc. of West Palm Beach, Fla.

[0113] During the layup process, fabric may be trimmed to an appropriate size and then laid into a mold. Resin may then be applied to the surface of the fabric using a suitable tool, such as a roller or brush. Through a lamination process, the resin may be forced into the fabric to impregnate the fabric with resin. When prepreg fabrics are used in the layup, the step of applying resin may be omitted, since the fabric already contains a suitable amount of resin to facilitate the lamination process. A peel ply layer may be inserted between the prepreg fabric and the vacuum bag film to prevent the composite carbon crown **135** from adhering to the vacuum bag film. The apparatus, methods, and articles of manufacture described herein are not limited in this regard.

[0114] FIG. **18** shows an exploded view of layers of an example crown portion **135** prior to execution of a manufacturing process that yields the contoured crown portion **135** shown in FIG. **1**. The crown portion **135** may include an upper plurality of composite layers **1850**, a lower plurality of composite layers **1855**, and a crown stiffening portion **136** disposed between the upper and lower pluralities of composite layers. The presence of the crown stiffening portion **136** may allow lightweight thin portions **1035** to be utilized adjacent to the crown stiffening portion **136**, as shown in FIG. **1**. Together, the crown stiffening portion **136** and adjacent thin portions **1035** may yield a crown portion **135** that is lighter and/or stiffer than a crown portion having a uniform thickness. A thin portion **1035** may be any region in the crown portion **135** that does not include a crown stiffening portion **136**. The crown stiffening portion **136** may include a plurality of layers of composite material arranged in a stacked configuration. Each layer of composite material **1514** may include a layer of fabric combined with resin. The fabric may be constructed from carbon fiber, glass fiber, aramid fiber, carbon nanotubes, or any other suitable high-performance fiber, combination of fibers, or material. In some examples, the fabric may be a hybrid of two or more types of fibers, such as a hybrid fabric made of carbon fibers and aramid fibers. The fabric may be constructed as a woven, knitted, stitched, or uni-directional fabric. The apparatus, methods, and articles of manufacture described herein are not limited in this regard.

[0115] During manufacturing of the crown portion **135**, a plurality of composite layers **1514**, such as those depicted in FIG. **18**, may be laid in a contoured mold. Pressure may be applied to the layers **1514** to encourage bonding of adjacent layers to form the contoured composite crown portion **135**. Heat may be applied to the layers to encourage bonding of adjacent layers to form the crown portion **135**. Pressing the composite layers **1514** against contoured surfaces of the mold may produce a raised central crown portion **331** and contoured transition regions (e.g., generally shown as **334**, and **335**) adjacent to the raised central crown portion, as shown in FIG. **1**. To ensure smooth transition regions adjacent to the raised central crown portion **331**, each subsequent composite layer in the stack of composite layers forming the crown stiffening portion **136** may become gradually wider (e.g. in descending order in the stack) to yield smooth transition regions **334** and **335** in the manufactured crown portion **135**. In the example shown in FIG. **18**, each composite layer of the crown stiffening portion **136**

may have a front width (wF), a heel-side width (wH), and a toe-side width (wT). In one example, a composite layer **1514** in the crown stiffening portion **136** may have a width (wF, wH, or wT) that is at least 1% greater than an adjacent composite layer **1514** in the crown stiffening portion **136**. In another example, a composite layer **1514** in the crown stiffening portion **136** may have a width (wF, wH, or wT) that is at least 5% greater than an adjacent composite layer **1514** in the crown stiffening portion **136**. In yet another example, a composite layer **1514** in the crown stiffening portion **136** may have a width (wF, wH, or wT) that is at least 10% greater than an adjacent composite layer **1514** in the crown stiffening portion **136**. In still another example, a composite layer **1514** in the crown stiffening portion **136** may have a width (wF, wH, or wT) that is at least 15% greater than an adjacent composite layer **1514** in the crown stiffening portion **136**. In yet another example, a composite layer **1514** in the crown stiffening portion **136** may have a width (wF, wH, or wT) that is at least 30% greater than an adjacent composite layer **1514** in the crown stiffening portion **136**. While the above examples may describe particular percentages, the composite layer **1514** in the crown stiffening portion **136** may have a width less than 1% of an adjacent composite layer **1514** in the crown stiffening portion **136**. The apparatus, methods, and articles of manufacture described herein are not limited in this regard.

[0116] The inner structural layer **1515** may include a layer of fabric combined with resin. The fabric may be constructed from carbon fiber, glass fiber, aramid fiber, carbon nanotubes, or any other suitable high-performance fiber, combination of fibers, or material. In some examples, the fabric may be a hybrid of two or more types of fibers, such as a hybrid fabric made of carbon fibers and aramid fibers. The fabric may be constructed as a woven, knitted, stitched, or uni-directional fabric. In one example, the inner structural layer **1515** may include a layer of glass fiber fabric impregnated with epoxy resin. The apparatus, methods, and articles of manufacture described herein are not limited in this regard.

[0117] The outer structural layer **1510** may include a layer of fabric combined with resin. The fabric may be constructed from carbon fiber, glass fiber, aramid fiber, carbon nanotubes, or any other suitable high-performance fiber, combination of fibers, or material. In some examples, the fabric may be a hybrid of two or more types of fibers, such as a hybrid fabric made of carbon fibers and aramid fibers. The fabric may be constructed as a woven, knitted, stitched, or uni-directional fabric. In one example, the outer structural layer **1510** may include a woven layer of KEVLAR fiber fabric impregnated with epoxy resin. The apparatus, methods, and articles of manufacture described herein are not limited in this regard.

[0118] The plurality of composite layers **1512** may include a plurality of layers of composite materials arranged in a stacked configuration. In one example, the plurality of composite layers **1512** may include two or more layers of prepreg uni-directional fabric. In another example, the plurality of composite layers **1512** may include three or more layers of prepreg uni-directional fabric. In still another example, the plurality of composite layers **1512** may include four or more layers of prepreg uni-directional fabric where four layers are arranged in a 0/90/0/90 configuration to increase tensile strength along two perpendicular axes. In another example, the plurality of composite layers **1512** may include two or more layers of prepreg uni-directional fabric where two layers are arranged in a 0/90 configuration to increase tensile strength along two perpendicular axes. The apparatus, methods, and articles of manufacture described herein are not limited in this regard.

[0119] An outer surface **1511** of the crown portion **135** may have an anti-glare finish. An outer surface of the crown portion **135** may have a medium or low gloss appearance to reduce the amount of light reflected upward at an individual's eyes when aligning the golf club head **100** with a golf ball and performing a golf shot. A relative gloss value may be determined by projecting a beam of light at a fixed intensity and angle onto the outer surface **1511** of the crown portion **135** and measuring the amount of light reflected at an equal but opposite angle upward at the individual. On a measurement scale, a specular reflectance of 0 gloss units (GU) may be associated with a perfectly matte surface, and a specular reflectance of 100 GU may be associated with a highly polished black glass material. Providing a crown portion **135** with a relatively low specular reflectance may be desirable to reduce distraction perceived by the individual of the golf club head **100**, which may reduce mishits and thereby improve performance. In one example, an outer surface **1511** of the crown portion **135** may have a specular reflectance of less than 55 GU. In another example, the outer surface **1511** of the crown portion **135** may have a specular reflectance of less than 40 GU. In yet another example, the outer surface **1511** of the crown portion **135** may have a specular reflectance of less than 25 GU. In still another example, the outer surface **1511** of the crown portion **135** may have a specular reflectance of less than 10 GU. While the above examples may describe particular specular reflectance, the apparatus, methods, and article of manufacture may include the outer surface **1511** of the crown portion **135** with a specular reflectance greater than or equal to 55 GU. The apparatus, methods, and articles of manufacture described herein are not limited in this regard.

[0120] In some examples, the outer surface **1511** of the crown portion **135** may include an antireflective coating. In one example, the antireflective coating may have a specular reflectance of less than 55 GU. In another example, the antireflective coating may have a specular reflectance of less than 40 GU. In yet another example, the antireflective coating may have a specular reflectance of less than 25 GU. In still another example, the antireflective coating may have a specular reflectance of less than 10 GU. The apparatus, methods, and articles of manufacture described herein are not limited in this regard.

[0121] To encourage the inner structural layer **1515** to adhere to an adjacent internal composite layer **1514** during the manufacturing process, it may be necessary to insert a resin or film adhesive layer between the inner structural layer **1515** and the adjacent composite layer. To encourage the outer structural layer **1510** to adhere to an adjacent internal composite layer **1514** during the manufacturing process, it may be necessary to insert a resin or film adhesive layer between the outer structural layer **1510** and the adjacent composite layer. The resin or film adhesive may be an epoxy, epoxy foam, liquid resin, or any suitable film adhesive available from Collano AG, located in Germany. In one example, the crown portion **135** may include a first film adhesive layer between an inner structural layer **1515** and an adjacent composite layer **1514**. The first film adhesive layer may adhere the outer structural layer **1510** to the top surface

of the adjacent composite layer **1514** in the upper plurality of composite layers **1850**. The crown portion **135** may include a second film adhesive film layer between the inner structural layer **1515** and an adjacent composite layer **1514**. The second film adhesive layer may adhere the inner structural layer **1515** to a bottom surface of the adjacent composite layer **1514** in the lower plurality of composite layers **1855**. The apparatus, methods, and articles of manufacture described herein are not limited in this regard.

[0122] FIG. **17** shows an enlarged view of a portion **1700** of the cross-sectional view shown in FIG. **16**. The crown portion **135** may include an integral rib **1525** disposed between the inner layer **1515** and the outer layer **1510**. The integral rib **1525** may include a plurality of layers of composite material **1512**. The integral rib **1525** may include two or more layers of composite material. The integral rib **1525** may include two or more layers of carbon fiber composite material. The integral rib **1525** may include three or more layers of composite material. The integral rib **1525** may include four or more layers of composite material. The integral rib **1525** may include five or more layers of composite material. The integral rib **1525** may include six or more layers of composite material. The integral rib **1525** may include seven or more layers of composite material. The integral rib **1525** may include eight or more layers of composite material. The apparatus, methods, and articles of manufacture described herein are not limited in this regard.

[0123] The integral rib may be a toe-side integral rib **1525**. The toe-side integral rib **1525** may extend from a front perimeter **1532** of the crown portion **135** to a rear perimeter **951** of the crown portion **135**. The toe-side integral rib **1525** may include a plurality of layers of composite material **1514**. The toe-side integral rib **1525** may include two or more layers of composite material disposed between the inner layer **1515** and the outer layer **1510** of the crown portion **135**. The toe-side integral rib **1525** may extend rearward from the forward portion **131**. The toe-side integral rib **1525** may extend rearward from a starting location between the central plane **1501** and the toe-side golf ball plane **1502** and terminate at an ending location between the toe-side plane **1505** and the toe-side golf ball plane **1502**. In one example, the toe-side integral rib **1525** may have a maximum thickness greater than or equal to 2 mm. In another example, the toe-side integral rib **1525** may have a maximum thickness greater than or equal to 2.1 mm. In yet another example, the toe-side integral rib **1525** may have a maximum thickness greater than or equal to 2.4 mm. While the above examples may describe particular thicknesses, the apparatus, methods, and article of manufacture described herein may include the toe-side integral rib **1525** with a maximum thickness of less than 2 mm. The apparatus, methods, and articles of manufacture described herein are not limited in this regard.

[0124] The crown portion **135** may include a heel-side integral rib **1530**. The heel-side integral rib **1530** may extend from a front perimeter **1532** of the crown portion **135** to a rear perimeter **951** of the crown portion. The heel-side integral rib **1530** may include a plurality of layers of composite material **1514**. The heel-side integral rib **1530** may include two or more layers of composite material disposed between the inner layer **1515** and the outer layer **1510** of the crown portion. The heel-side integral rib **1530** may extend rearward from the forward portion **131**. The heel-side integral rib **1530** may extend rearward from a starting location between the central plane **1501** and the heel-side golf ball plane **1503** and terminate at an ending location between the heel-side plane **1506** and the heel-side golf ball plane **1503**. In one example, the heel-side integral rib **1530** may have a maximum thickness greater than or equal to 2.0 mm. In another example, the heel-side integral rib **1530** may have a maximum thickness greater than or equal to 2.1 mm. In yet another example, the heel-side integral rib **1530** may have a maximum thickness greater than or equal to 2.4 mm. While the above examples may describe particular thicknesses, the apparatus, methods, and article of manufacture described herein may include the heel-side integral rib **1530** with a maximum thickness of less than 2 mm. The apparatus, methods, and articles of manufacture described herein are not limited in this regard.

[0125] The crown portion **135** may include a central integral rib **1535**. The central integral rib **1535** may extend along the front perimeter **1532** of the crown portion **135**. The central integral rib **1535** may extend from the toe-side integral rib **1525** to the heel-side integral rib **1530**. The central integral rib **1535** may extend from a forward-most end of the toe-side integral rib **1525** to a forward-most end of the heel-side integral rib **1530**. The central integral rib may extend a distance of at least 3 centimeters beside the junction **132** formed between the front perimeter **1532** of the crown portion **135** and the forward portion **131** of the top portion **130**. The central integral rib **1535** may include a plurality of layers of composite material **1514**. The central integral rib **1535** may include two or more layers of composite material disposed between the inner layer **1515** and the outer layer **1510** of the crown portion **135**. The central integral rib **1535** may be located between the toe-side golf ball plane **1502** and the heel-side golf ball plane **1503**. In one example, the central integral rib **1535** may have a maximum thickness greater than or equal to 2.0 mm. In another example, the central integral rib **1535** may have a maximum thickness greater than or equal to 2.1 mm. In yet another example, the central integral rib **1535** may have a maximum thickness greater than or equal to 2.4 mm. While the above examples may describe particular thicknesses, the apparatus, methods, and article of manufacture described herein may include the central integral rib **1535** with a maximum thickness of less than 2 mm. The apparatus, methods, and articles of manufacture described herein are not limited in this regard.

[0126] The integral ribs (e.g., generally shown as **1525**, **1530**, and **1535**) may enhance the flexural strength of the crown portion **135**. The integral ribs **1525**, **1530**, and **1535** may enhance the compressive strength of the crown portion **135**. The integral ribs **1525**, **1530**, and **1535** may reduce outward deflection (e.g., bulging) of the crown portion **135** in response to an impact force transferred from the body portion **110** to the crown portion **135** during impact with a golf ball. The integral ribs **1525**, **1530**, and **1535** may reduce deflection of the crown portion **135** inward toward in the interior cavity of the golf club head **100** in response to a downward force applied to an outer surface of the crown portion **135**. Inward deflection of the crown portion **135** may be easier to accurately measure in a test environment than outward deflection. In certain instances, resistance to inward deflection may correlate to resistance to outward deflection. Inward deflection may be measured by applying a downward force to an outer surface of the crown portion and measuring physical deflection of the crown portion with a suitable measuring device. In one example, when a down-

ward force of 200 pound-force (lbf) is applied to the central crown portion **331**, the central crown portion **331** may deflect less than 0.025 inch. In another example, when a downward force of 200 lbf is applied to the central crown portion **331**, the central crown portion **331** may deflect less than 0.015 inch. In another example, when a downward force of 200 lbf is applied to the central crown portion **331**, the central crown portion **331** may deflect less than 0.012 inch. The apparatus, methods, and articles of manufacture described herein are not limited in this regard.

[0127] Certain rules or regulations imposed by the USGA or other governing bodies may limit a spring-like effect of certain designs, materials, or constructions of golf club heads. To ensure a club head conforms with the certain rules and regulations, it may therefore be desirable to minimize spring-like effects of certain aspects of the club head. For instance, it may be desirable to minimize a spring-like effect of the crown portion **135** by reinforcing the crown portion to minimize deflection during use. The integral ribs (e.g., **1525**, **1530**, and **1535**) may allow the crown portion **135** to resist deflection better than a similar lightweight crown portion that lacks integral ribs. In one example, the crown portion **135** with integral ribs may deflect inward about 0.012 inch whereas a crown portion without integral ribs may deflect about 0.020 inch in response to applying a downward force of 200 lbf to the respective crown portions. In another example, the crown portion **135** with integral ribs (e.g., **2715**, **2716**, and **2717**) of a fairway wood-type golf club head **2700** may deflect inward about 0.007 inch whereas a crown portion without integral ribs of a similar golf club head may deflect about 0.013 inch in response to applying a downward force of 200 lbf to the respective crown portions. In yet another example, the crown portion **1935** with integral ribs (e.g., **1915**, **1916**, and **1917**) of a hybrid-type golf club head **1900** may deflect about 0.005 inch whereas the crown portion without integral ribs of a similar golf club head may deflect about 0.009 inch in response to applying a downward force of 200 lbf to the respective crown portions. The apparatus, methods, and articles of manufacture described herein are not limited in this regard.

[0128] In the example of FIG. **18**, the crown portion **135** may include a central integral rib **1535**, a toe-side integral rib **1525**, and a heel-side integral rib **1530**. The toe-side integral rib **1525** and the heel-side integral rib **1530** may diverge in a front-to-rear direction along the crown portion **135**. In another example, as shown in FIG. **39**, a toe-side integral rib **3925** and a heel-side integral rib **3930** may diverge in a front-to-rear direction along a crown portion **3930**. In yet another example, a toe-side integral rib **4025** and a heel-side integral rib **4030** may converge and then diverge in a front-to-rear direction along a crown portion **4035**, as shown in FIG. **40**. In still another example, a toe-side integral rib **4125** and heel-side integral rib **4130** may diverge and then converge in a front-to-rear direction along a crown portion **4135**, as shown in FIG. **41**. In another example, the toe-side integral rib and heel-side integral rib may be substantially parallel in a front-to-rear direction along a crown portion. Although shown with substantially straight portions, the toe-side integral rib **1525** may include one or more curved portions along its length. Similarly, the heel-side integral rib **1530** may include one or more curved portions along its length. The apparatus, methods, and articles of manufacture described herein are not limited in this regard.

[0129] FIG. **39** shows an exploded view of layers **3914** of an example crown portion **3935** prior to executing a manufacturing process that yields a contoured crown portion. In one example, the crown portion **3935** may replace the crown portion **135** in the golf club head **100** of FIG. **1**. The crown portion **3935** may include an upper plurality of composite layers **3950**, a lower plurality of composite layers **3955**, and a crown stiffening portion **3936** between the upper and lower pluralities of composite layers. The presence of the crown stiffening portion **3936** may allow for lightweight thin portions to be utilized adjacent to the crown stiffening portion **3936**, which together may provide a crown portion **3935** that is lighter and/or stiffer than a crown portion having uniform thickness. A thin portion **1035** may be any region in the crown portion **3935** that does not include a crown stiffening portion **3936**. The crown stiffening portion **3936** may include a toe-side integral rib **3925** and a heel-side integral rib **3930**. The apparatus, methods, and articles of manufacture described herein are not limited in this regard.

[0130] The toe-side integral rib **3925** may be disposed between the inner layer **3915** and the outer layer **3910**. The toe-side integral rib **3925** may be disposed between the upper plurality of composite layers **3950** and the lower plurality of composite layers **3955**. The toe-side integral rib **3925** may include one or more layers of composite material **3914**. The toe-side integral rib **3925** may include two or more layers of composite material **3914**. The toe-side integral rib **3925** may extend from a front portion of the crown portion to a rear portion of the crown portion **3935**. The toe-side integral rib **3925** may extend from a location at or proximate to a front perimeter **3932** of the crown portion **3935** to a location at or proximate to a rear perimeter **3951** of the crown portion **3935**. The toe-side integral rib **3925** may extend from a location at or proximate to a front perimeter **3932** of the crown portion **3935** toward a toe-side perimeter **3933** of the crown portion **3935**. The apparatus, methods, and articles of manufacture described herein are not limited in this regard.

[0131] The heel-side integral rib **3930** may be disposed between the inner layer **3915** and the outer layer **3910**. The heel-side integral rib **3930** may be disposed between the upper plurality of composite layers **3950** and the lower plurality of composite layers **3955**. The heel-side integral rib **3930** may include one or more layers of composite material **3914**. The heel-side integral rib **3930** may include two or more layers of composite material **3914**. The heel-side integral rib **3930** may extend from a front portion of the crown portion **3935** to a rear portion of the crown portion **3935**. The heel-side integral rib **3930** may extend from a location at or proximate to a front perimeter **3932** of the crown portion **3935** to a location at or proximate to a rear perimeter **3951** of the crown portion **3935**. The heel-side integral rib **3930** may extend from a location at or proximate to a front perimeter **3932** of the crown portion **3935** toward a heel-side perimeter **3931** of the crown portion **3935**. The apparatus, methods, and articles of manufacture described herein are not limited in this regard.

[0132] The toe-side integral rib **3925** and the heel-side integral rib **3930** may diverge in a front-to-rear direction in the crown portion **3935**. The upper plurality of composite layers **3950** may be similar to the upper plurality of composite layers **1850** described herein. The lower plurality of composite layers **3955** may be similar to the lower plurality of composite layers **1855** described herein. The outer layer

3910 may be similar to the outer layer **1810** described herein. The inner layer **3915** may be similar to the inner layer **1815** described herein. The crown portion **3935** may be incorporated into any of the golf club heads described herein (e.g. **100**). The apparatus, methods, and articles of manufacture described herein are not limited in this regard.

[0133] During manufacturing of the crown portion **3935**, a plurality of composite layers **3914**, such as those depicted in FIG. **39**, may be laid in a contoured mold. Pressure may be applied to the composite layers **3914** to encourage bonding of adjacent layers to form a contoured composite crown portion **3935**. Heat may be applied to the layers **3914** to encourage bonding of adjacent layers to form the crown portion **3935**. Pressing the composite layers **3914** against contoured surfaces of the mold may produce a raised central crown portion and contoured transition regions adjacent to the raised central crown portion. To ensure smooth transition regions adjacent to the raised central crown portion, each subsequent composite layer in the stack of composite layers forming the crown stiffening portion **3936** may become gradually wider (in descending order in the stack) to yield smooth transition regions in the manufactured crown portion **3935**. In the example shown in FIG. **39**, each composite layer of the toe-side integral rib **3925** may have a toe-side width (wT). Each composite layer of the heel-side integral rib **3930** may have a heel-side width (wH). In one example, a composite layer **3914** in the integral rib **3925** or **3930** may have a width (e.g. wH or wT) that is at least 1% greater than an adjacent composite layer **3914** in the integral rib **3925** or **3930**. In another example, a composite layer **3914** in the integral rib **3925** or **3930** may have a width (e.g. wH or wT) that is at least 5% greater than an adjacent composite layer **3914** in the integral rib **3925** or **3930**. In still another example, a composite layer **3914** in the integral rib **3925** or **3930** may have a width (e.g. wH or wT) that is at least 10% greater than a width of an adjacent composite layer **3914** in the integral rib **3925** or **3930**. In yet another example, a composite layer **3914** in the integral rib **3925** or **3930** may have a width (wH or wT) that is at least 15% greater than an adjacent composite layer **3914** in the integral rib **3925** or **3930**. In still yet another example, the composite layer **3914** in the integral rib **3925** or **3930** may have a width (wH or wT) that is at least 30% greater than an adjacent composite layer **3914** in the integral rib **3925** or **3930**. The apparatus, methods, and articles of manufacture described herein are not limited in this regard.

[0134] FIG. **40** shows an exploded view of layers of an example crown portion **4035** prior to execution of a manufacturing process that yields a contoured crown portion. In one example, the crown portion **4035** may replace the crown portion **135** in the golf club head **100** of FIG. **1**. The crown portion **4035** may include an upper plurality of composite layers **4050**, a lower plurality of composite layers **4055**, and a crown stiffening portion **4036** between the upper and lower pluralities of composite layers. The presence of the crown stiffening portion **4036** may allow for lightweight thin portions to be utilized adjacent to the crown stiffening portion **4036**, which together may provide a crown portion **4035** that is lighter and/or stiffer than a crown portion with uniform thickness. A thin portion may be any region in the crown portion **4035** that does not include a crown stiffening portion **4036**. The crown stiffening portion **4036** may include a toe-side integral rib **4025** and a heel-side integral rib **4030**. The apparatus, methods, and articles of manufacture described herein are not limited in this regard.

[0135] The toe-side integral rib **4025** may be disposed between the inner layer **4015** and the outer layer **4010**. The toe-side integral rib **4025** may be disposed between the upper plurality of composite layers **4050** and the lower plurality of composite layers **4055**. The toe-side integral rib **4025** may include one or more layers of composite material **4014**. The toe-side integral rib **4025** may include two or more layers of composite material **4014**. The toe-side integral rib **4025** may extend from a front portion of the crown portion **4035** to a rear portion of the crown portion **4035**. The toe-side integral rib **4025** may extend from a location at or proximate to a front perimeter **4032** of the crown portion **4035** to a location at or proximate to a rear perimeter **4051** of the crown portion **4035**. The toe-side integral rib **4025** may extend from a location at or proximate to a front perimeter **4032** of the crown portion **4035** toward a toe-side perimeter **4033** of the crown portion **4035**. The apparatus, methods, and articles of manufacture described herein are not limited in this regard.

[0136] The heel-side integral rib **4030** may be disposed between the inner layer **4015** and the outer layer **4010**. The heel-side integral rib **4030** may be disposed between the upper plurality of composite layers **4050** and the lower plurality of composite layers **4055**. The heel-side integral rib **4030** may include one or more layers of composite material **4014**. The heel-side integral rib **4030** may include two or more layers of composite material **4014**. The heel-side integral rib **4030** may extend from a front portion of the crown portion **4035** to a rear portion of the crown portion **4035**. The heel-side integral rib **4030** may extend from a location at or proximate to a front perimeter **4032** of the crown portion **4035** to a location at or proximate to a rear perimeter **4051** of the crown portion **4035**. The heel-side integral rib **4030** may extend from a location at or proximate to a front perimeter **4032** of the crown portion **4035** toward a heel-side perimeter **4031** of the crown portion **4035**. The apparatus, methods, and articles of manufacture described herein are not limited in this regard.

[0137] The toe-side integral rib **4025** and the heel-side integral rib **4030** may converge and then diverge in a front-to-rear direction in the crown portion **4035**. The toe-side integral rib **4025** may have a converging front portion and a diverging rear portion. The heel-side integral rib **4030** may have a converging front portion and a diverging rear portion. The upper plurality of composite layers **4050** may be similar to the upper plurality of composite layers **1850** described herein. The lower plurality of composite layers **4055** may be similar to the lower plurality of composite layers **1855** described herein. The outer layer **4010** may be similar to the outer layer **1810** described herein. The inner layer **4015** may be similar to the inner layer **1815** described herein. The crown portion **4035** may be incorporated into any of the golf club heads described herein (e.g. **100**). The apparatus, methods, and articles of manufacture described herein are not limited in this regard.

[0138] During manufacturing of the crown portion **4035**, a plurality of composite layers **4014**, such as those depicted in FIG. **40**, may be laid in a contoured mold. Pressure may be applied to the composite layers **4014** to encourage bonding of adjacent layers to form a contoured composite crown portion **4035**. Heat may be applied to the layers **4014** to encourage bonding of adjacent layers to form the crown

portion **4035**. Pressing the composite layers **4014** against contoured surfaces of the mold may produce a raised central crown portion and contoured transition regions adjacent to the raised central crown portion. To ensure smooth transition regions adjacent to the raised central crown portion, each subsequent composite layer in the stack of composite layers forming the crown stiffening portion **4036** may become gradually wider (in descending order in the stack) to yield smooth transition regions in the manufactured crown portion **4035**. In the example shown in FIG. **40**, each composite layer of the toe-side integral rib **4025** may have a toe-side width (wT). Each composite layer of the heel-side integral rib **4030** may have a heel-side width (wH). In one example, a composite layer **4014** in the integral rib **4025** or **4030** may have a width (e.g. wH or wT) that is at least 1% greater than an adjacent composite layer **4014** in the integral rib **4025** or **4030**. In another example, a composite layer **4014** in the integral rib **4025** or **4030** may have a width (e.g. wH or wT) that is at least 5% greater than an adjacent composite layer **4014** in the integral rib **4025** or **4030**. In still another example, a composite layer **4014** in the integral rib **4025** or **4030** may have a width (e.g. wH or wT) that is at least 10% greater than a width of an adjacent composite layer **4014** in the integral rib **4025** or **4030**. In yet another example, a composite layer **4014** in the integral rib **4025** or **4030** may have a width (wH or wT) that is at least 15% greater than an adjacent composite layer **3914** in the integral rib **4025** or **4030**. In still yet another example, the composite layer **3914** in the integral rib **4025** or **4030** may have a width (wH or wT) that is at least 30% greater than an adjacent composite layer **3914** in the integral rib **4025** or **4030**. The apparatus, methods, and articles of manufacture described herein are not limited in this regard.

[0139] FIG. **41** shows an exploded view of layers of an example crown portion **4135** prior to execution of a manufacturing process that yields a contoured crown portion. In one example, the crown portion **4135** may replace the crown portion **135** in the golf club head **100** of FIG. **1**. The crown portion **4135** may include an upper plurality of composite layers **4150**, a lower plurality of composite layers **4155**, and a crown stiffening portion **4136** between the upper and lower pluralities of composite layers. The presence of the crown stiffening portion **4136** may allow for lightweight thin portions to be utilized adjacent to the crown stiffening portion **4136**, which together may provide a crown portion **4135** that is lighter and/or stiffer than a crown portion with uniform thickness (e.g. **4835**). A thin portion may be any region in the crown portion **4135** that does not include a crown stiffening portion **4136**. The crown stiffening portion **4136** may include a toe-side integral rib **4125** and a heel-side integral rib **4130**. The apparatus, methods, and articles of manufacture described herein are not limited in this regard.

[0140] The toe-side integral rib **4125** may be disposed between the inner layer **4115** and the outer layer **4110**. The toe-side integral rib **4125** may be disposed between the upper plurality of composite layers **4150** and the lower plurality of composite layers **4155**. The toe-side integral rib **4125** may include one or more layers of composite material **4114**. The toe-side integral rib **4125** may include two or more layers of composite material **4114**. The toe-side integral rib **4125** may extend from a front portion of the crown portion **4135** to a rear portion of the crown portion. The toe-side integral rib **4125** may extend from a location at or proximate to a front perimeter **4132** of the crown portion **4135** to a location at or proximate to a rear perimeter **4151** of the crown portion **4135**. The toe-side integral rib **4125** may extend from a location at or proximate to a front perimeter **4132** of the crown portion **4135** toward a toe-side perimeter **4133** of the crown portion **4135**. The apparatus, methods, and articles of manufacture described herein are not limited in this regard.

[0141] The heel-side integral rib **4130** may be disposed between the inner layer **4115** and the outer layer **4110**. The heel-side integral rib **4130** may be disposed between the upper plurality of composite layers **4150** and the lower plurality of composite layers **4155**. The heel-side integral rib **4130** may include one or more layers of composite material **4114**. The heel-side integral rib **4130** may include two or more layers of composite material **4114**. The heel-side integral rib **4130** may extend from a front portion of the crown portion **4135** to a rear portion of the crown portion. The heel-side integral rib **4130** may extend from a location at or proximate to a front perimeter **4132** of the crown portion **4135** to a location at or proximate to a rear perimeter **4151** of the crown portion **4135**. The heel-side integral rib **4130** may extend from a location at or proximate to a front perimeter **4132** of the crown portion **4135** toward a heel-side perimeter **4131** of the crown portion **4135**. The apparatus, methods, and articles of manufacture described herein are not limited in this regard.

[0142] The toe-side integral rib **4125** and the heel-side integral rib **4130** may diverge and then converge in a front-to-rear direction in the crown portion **4135**. The toe-side integral rib **4125** may have a diverging front portion and a converging rear portion. The heel-side integral rib **4130** may have a diverging front portion and a converging rear portion. The upper plurality of composite layers **4150** may be similar to the upper plurality of composite layers **1850** described herein. The lower plurality of composite layers **4155** may be similar to the lower plurality of composite layers **1855** described herein. The outer layer **4110** may be similar to the outer layer **1810** described herein. The inner layer **4115** may be similar to the inner layer **1815** described herein. The crown portion **4135** may be incorporated into any of the golf club heads described herein. The apparatus, methods, and articles of manufacture described herein are not limited in this regard.

[0143] During manufacturing of the crown portion **4135**, a plurality of composite layers **4114**, such as those depicted in FIG. **41**, may be laid in a contoured mold. Pressure may be applied to the composite layers **4114** to encourage bonding of adjacent layers to form a contoured composite crown portion **4135**. Heat may be applied to the layers **4114** to encourage bonding of adjacent layers to form the crown portion **4035**. Pressing the composite layers **4114** against contoured surfaces of the mold may produce a raised central crown portion and contoured transition regions adjacent to the raised central crown portion. To ensure smooth transition regions adjacent to the raised central crown portion, each subsequent composite layer in the stack of composite layers forming the crown stiffening portion **4136** may become gradually wider (in descending order in the stack) to yield smooth transition regions in the manufactured crown portion **4135**. In the example shown in FIG. **41**, each composite layer of the toe-side integral rib **4125** may have a toe-side width (wT). Each composite layer of the heel-side integral rib **4130** may have a heel-side width (wH). In one example, a composite layer **4114** in the integral rib (e.g. **4125**, **4130**)

may have a width (e.g. wH or wT) that is at least 1% greater than an adjacent composite layer **4114** in the integral rib. In another example, a composite layer **4114** in the integral rib **4125** or **4130** may have a width (e.g. wH or wT) that is at least 5% greater than an adjacent composite layer **4114** in the integral rib **4125** or **4130**. In still another example, a composite layer **4114** in the integral rib **4125** or **4130** may have a width (e.g. wH or wT) that is at least 10% greater than a width of an adjacent composite layer **4114** in the integral rib **4125** or **4130**. In yet another example, a composite layer **4114** in the integral rib **4125** or **4130** may have a width (wH or wT) that is at least 15% greater than an adjacent composite layer **1514** in the integral rib **4125** or **4130**. In still yet another example, the composite layer **4114** in the integral rib **4125** or **4130** may have a width (wH or wT) that is at least 30% greater than an adjacent composite layer **4114** in the integral rib **4125** or **4130**. The apparatus, methods, and articles of manufacture described herein are not limited in this regard.

[0144] The body portion **110** may include a protruding portion **141**, as show for example in FIG. **2**. The protruding portion **141** may serve to lower the CG of the golf club head **100**. The protruding portion **141** may serve to shift the CG rearward from the face portion **175** toward the rear portion **180**. The protruding portion **141** may have an arcuate shape that follows a contour of the rear portion **180** of the body portion **110**. The protruding portion **141** may extend from the skirt portion **190**. The protruding portion **141** may extend from the bottom portion **140**. The protruding portion **141** may extend from the rear portion **180**. The protruding portion **141** may extend from the bottom portion **140** and the skirt portion **190**. The protruding portion **141** may extend from the rear portion **180** and the bottom portion **140**. The protruding portion **141** may extend from the rear portion **180** and the skirt portion **190**. The protruding portion **141** may extend from the bottom portion **140**, the skirt portion **190**, and the rear portion **180**. The apparatus, methods, and articles of manufacture described herein are not limited in this regard.

[0145] The protruding portion **141** may extend a distance **746** beyond a rear perimeter **951** of the crown portion **135**, as shown in FIG. **7**. In one example, the protruding portion **141** may extend rearward beyond a rear perimeter **951** of the crown portion **135** a distance of at least 2 mm. In another example, the protruding portion **141** may extend rearward beyond a rear perimeter **951** of the crown portion **135** a distance of at least 3 mm. In yet another example, the protruding portion **141** may extend rearward beyond a rear perimeter **951** of the crown portion **135** a distance of at least 5 mm. The protruding portion **141** may be located within a rear half of the golf club head **100**. The protruding portion **141** may extend from the toe portion **150** to the heel portion **160**. The apparatus, methods, and articles of manufacture described herein are not limited in this regard.

[0146] The protruding portion **141** may include a toe-side portion **281** proximate the toe portion **150**. The toe-side portion **281** of the protruding portion **141** may include a toe-side perimeter portion **283** extending from the protruding portion **141** to the bottom portion **140**. The protruding portion **141** may include a heel-side portion **282** proximate the heel portion **160**. The heel-side portion **282** of the protruding portion **141** may include a heel-side perimeter portion **284** extending from the protruding portion **141** to the bottom portion **140**. The apparatus, methods, and articles of manufacture described herein are not limited in this regard.

[0147] The neutral axis **706** of the golf club head **100** may intersect the protruding portion **141**, as shown in FIG. **7**. A portion of the protruding portion **141** may be located above the neutral axis **706**. A portion of the protruding portion **141** may be located below the neutral axis **706**. The protruding portion **141** may be concave relative to the front plane **715**. The protruding portion **141** may be concave relative to the front portion **170**. The protruding portion **141** may be concave relative to the face portion **175**. The protruding portion **141** may conform to a contour of the rear portion **180**. The protruding portion **141** may have a bottom surface **290** that defines a first plane that is parallel to a second plane, where the second plane includes the neutral axis **706** and is normal to the central vertical plane **1504**. The protruding portion **141** may be located within a rear third of the golf club head **100**. The protruding portion **141** may be located below a horizontal mid-plane **705** of the golf club head **100**. The horizontal mid-plane **705** may be parallel to and vertically offset from a ground plane **710** and may intersect the geometric center **176** of the face portion **175**. The geometric center **176** may correspond to a midpoint of the face portion **175**. The apparatus, methods, and articles of manufacture described herein are not limited in this regard.

[0148] Due to the location and mass of the protruding portion **141**, the golf club head **100** may have a CG that is relatively low compared to other golf club heads. The low CG height may generate relatively low ball spin, which may be desirable to some individuals. In one example, the CG may be located along or proximate to a neutral axis **706** of the golf club head **100**. In another example, the CG may be located below the neutral axis **706**, as shown in FIG. **7**. The CG may be located below and within 0.2 inch of the neutral axis **706**. The CG may be located between and including about 0.1 inch and about 0.2 inch below the neutral axis **706**. The CG may be located at least 0.1 inch below the neutral axis **706**. The CG may be located at least 0.15 inch below the neutral axis **706**. The apparatus, methods, and articles of manufacture described herein are not limited in this regard.

[0149] The protruding portion **141** may include one or more weight port regions. Each weight port region may include one or more weight ports. In one example, the protruding portion **141** may include a weight port region **230**. The weight port region **230** may be formed in the bottom surface **290** of the protruding portion. The weight port region **230** may include a set of weight ports **231** (e.g., generally shown as weight ports **232**, **233**, **234**, **235**, **236**, and **237**). At least one of the weight ports may be formed in the toe-side portion **281** of the protruding portion **141**. Two or more of the weight ports may be formed in the toe-side portion **281** of the protruding portion **141**. At least one of the weight ports may be formed in the heel-side portion **282** of the protruding portion. Two or more one of the weight ports may be formed in the heel-side portion **282** of the protruding portion. Three or more of the weight ports may be formed in the heel-side portion **282** of the protruding portion. The weight ports **231** may be arranged along an arc **245**. The arc **245** may follow a contour of the rear portion **180**. The arc **245** may be concave relative to the front vertical plane **715**. The weight port region **230** may extend more than 50% of a maximum toe-to-heel club head distance. The apparatus, methods, and articles of manufacture described herein are not limited in this regard.

[0150] The golf club head **100** may include a plurality of weight portions, shown as a set of weight portions **261** (generally shown as weight portions **262**, **263**, **264**, **265**, **266**, and **267**). One or more weight ports of the set of weight ports **231** may receive a weight portion. Each of the weight portions may be associated with a mass. In one example, the weight portions may be made of a tungsten-based material. In another example, the weight portions may be made of an aluminum-based material. In still another example, one or more weight ports of the set of weight ports **231** may not include a weight portion. The apparatus, methods, and articles of manufacture described herein are not limited in this regard.

[0151] As shown in FIG. **13**, one or more of the weight ports (e.g. **233**, **236**) may include an opening that accesses an interior volume of the golf club head **100**, which may facilitate adding a filler material to the interior volume of the golf club head **100**. In one example, the interior volume of the golf club head **100** may be fully filled with filler material. In another example, the interior volume of the golf club head **100** may be partially filled with filler material. In yet another example, the interior volume of the golf club head may not be filled with filler material. The apparatus, methods, and articles of manufacture described herein are not limited in this regard.

[0152] The filler material may be an elastic polymer or elastomer material (e.g., a viscoelastic urethane polymer material such as Sorbothane® material manufactured by Sorbothane, Inc., Kent, Ohio), a thermoplastic elastomer material (TPE), a thermoplastic polyurethane material (TPU), and/or other suitable types of materials to absorb shock, isolate vibration, and/or dampen noise. In another example, the filler material may be a high density ethylene copolymer ionomer, a fatty acid modified ethylene copolymer ionomer, a highly amorphous ethylene copolymer ionomer, an ionomer of ethylene acid acrylate terpolymer, an ethylene copolymer comprising a magnesium ionomer, an injection moldable ethylene copolymer that may be used in conventional injection molding equipment to create various shapes, an ethylene copolymer that can be used in conventional extrusion equipment to create various shapes, and/or an ethylene copolymer having high compression and low resilience similar to thermoset polybutadiene rubbers. For example, the ethylene copolymer may include any of the ethylene copolymers associated with DuPont™ High-Performance Resin (HPF) family of materials (e.g., DuPont™ HPF AD1172, DuPont™ HPF AD1035, DuPont® HPF 1000 and DuPont™ HPF 2000), which are manufactured by E.I. du Pont de Nemours and Company of Wilmington, Del. The DuPont™ HPF family of ethylene copolymers are injection moldable and may be used with conventional injection molding equipment and molds, provide low compression, and provide high resilience. The apparatus, methods, and articles of manufacture described herein are not limited in this regard.

[0153] The characteristics (e.g., density, shape, volume, size, color, dimensions, depth, diameter, materials of construction, mass, method of formation, etc.) and/or any other properties of each weight portion of the plurality of weight portions and each weight port of the plurality of weight ports may be similar in any respect to any weight portion and weight port, respectively, of any of the golf club heads described herein. In one example, the weight ports and the weight portions of the golf club head of FIGS. **1-14** may have greater dimensions (e.g., length, width, diameter, depth, etc.) than any of the weight ports and/or weight portions, respectively, described herein. The apparatus, methods, and articles of manufacture described herein are not limited in this regard.

[0154] The set of weight portions **261** (e.g., generally shown as weight portions **262**, **263**, **264**, **265**, **266**, and **267**) may have similar or different masses. By using weight portions having similar or different masses in each of the weight ports, the overall mass in the weight port region **230** and/or the mass distribution in the weight port region **230** may be adjusted to generally optimize and/or adjust the swing weight, center of gravity, moment of inertia, and/or an overall feel of the golf club head **100** for an individual using the golf club head **100**. In one example, the set of weight portions **261** may collectively have a mass of at least 8 grams. In another example, the set of weight portions **261** may collectively have a mass of at least 12 grams. In yet another example, the set of weight portions **261** may collectively have a mass of between and including 8 grams and 13 grams. In still yet another example, the set of weight portions **261** may collectively have a mass of between and including 12 grams and 16 grams. In still yet another example, the set of weight portions **261** may collectively have a mass of between and including 15 grams and 19 grams. In still yet another example, the set of weight portions **261** may collectively have a mass of between and including 18 grams and 22 grams. While the above examples may describe particular masses, the apparatus, methods, and articles of manufacture described herein may include the set of weight portions **261** to have an aggregate mass of less than 8 grams or an aggregate mass of greater than 19 grams. Further, the protruding portion **141**, in combination with the set of weight portions **261**, may have a mass of at least 15 grams. In another example, the protruding portion **141**, in combination with the set of weight portions **261**, may have a mass of at least 18 grams. In yet another example, the protruding portion **141**, in combination with the set of weight portions **261**, may have a mass of at least 24 grams. While the above examples may describe particular masses, the apparatus, methods, and articles of manufacture described herein may include the protruding portion **141** in combination with the set of weight portions **261** to have an aggregate mass of less than 15 grams. The apparatus, methods, and articles of manufacture described herein are not limited in this regard.

[0155] One or more of the weight ports **231** may have an axis that is tilted rearward of vertical. As shown by way of example in FIG. **9**, the weight port **236** may have an axis **936** that is tilted rearward of vertical by an angle **938**. This rearward tilted orientation of the weight port **236**, relative to the front plane **715**, may allow the weight portion **266** to be positioned lower than if the weight port **236** were perpendicular to the bottom portion **140**. The rearward tilted orientation of the weight port **236** may lower the CG of the golf club head **100**. The rearward tilted orientation of the weight port **236** may shift the CG of the golf club head **100** rearward. In one example, the angle **938** may be at least 5 degrees. In another example, the angle **938** may be at least 10 degrees. In yet another example, the angle **938** may be at least 15 degrees. While the above examples may describe particular angles, the apparatus, methods, and article of manufacture may include the weight port **236** having a rearward tilted orientation of less than 5 degrees. The

apparatus, methods, and articles of manufacture described herein are not limited in this regard.

[0156] The outer surface **142** and/or the inner surface **144** of the bottom portion **140** may include one or more inner support portions (not shown) and/or one or more outer support portion (not shown). The bottom portion **140** may have a thickness **145** of less than 1 mm. The bottom portion **140** may have a thickness **145** of less than 0.7 mm. The bottom portion **140** may have a thickness **145** of less than 0.6 mm. The apparatus, methods, and articles of manufacture described herein are not limited in this regard.

[0157] Certain regions of the interior of the body portion **110** of the golf club head **100** may include an elastic polymer material or an elastomer material, which may be referred to herein as the filler material. The filler material may dampen vibration, dampen noise, lower the center of gravity and/or provide a better feel and sound in response to the golf club head **100** striking a golf ball. The golf club head **100**, may have one or more interior regions that may include a filler material as described herein. In one example, the filler material may be injected into the body portion **110** from one or more of the weight ports (e.g., generally shown as weight ports **232**, **233**, **234**, **235**, **236**, and **237**) as described herein. The apparatus, methods, and articles of manufacture described herein are not limited in this regard.

[0158] Although the crown portion **135** is depicted in conjunction with a driver-type golf club head in certain figures, it is not limited in this regard. The crown portion **135** may be resized for use in hybrid-type golf clubs as shown, for example, in FIGS. **19-26** and fairway wood-type golf clubs as shown, for example, in FIGS. **27-34**. Any of the golf club heads described herein may include a crown portion with a crown stiffening portion as described herein. Any of the golf club heads described herein may include a crown portion with one or more integral ribs as described herein. Any of the golf club heads described herein may include a crown portion with a toe-side crown portion and a heel-side crown portion as described herein. Any of the golf club heads described herein may include a crown portion with a central crown portion, toe-side crown portion, and heel-side crown portion as described herein. Any of the golf club heads described herein may include a crown portion with one or more contoured transition regions as described herein. Any of the golf club heads described herein may include a multi-level crown portion as described herein. Any of the golf club heads described herein may include a raised central crown portion as described herein. Any of the golf club heads described herein may include a crown portion with multi-layer composite construction as described herein. The apparatus, methods, and articles of manufacture described herein are not limited in this regard.

[0159] In the example of FIGS. **19-26** and **37**, the hybrid-type golf club head **1900** may include a body portion **1910** with a top portion **1930**, a crown portion **1935**, a bottom portion **1940**, a toe portion **1950**, a heel portion **1960**, a front portion **1970**, and a rear portion **1980**. The bottom portion **1940** may include a skirt portion **1990** defined as a side portion of the golf club head **1900** between the top portion **1930** and the bottom portion **1940** excluding the front portion **1970** and extending across a periphery of the golf club head **1900** from the toe portion **1950**, around the rear portion **1980**, and to the heel portion **1960**. Alternatively, the golf club head **1900** may not include the skirt portion **1990**. The front portion **1970** may include a face portion **1975** to engage a golf ball (not shown). The face portion **1975** may be either integral to the body portion **1910** or a separate face portion that is coupled (e.g. welded) to the front portion **1970** to enclose an opening in the front portion **1970**. The body portion **1910** may also include a hosel portion **1965** configured to receive a shaft portion. The hosel portion **1965** may be similar in many respects to any of the hosel portions described herein. The hosel portion **1965** may include an interchangeable hosel sleeve. Alternatively, the body portion **1910** may include a bore instead of the hosel portion **1965**. The body portion **1910** may be made partially or entirely from any of the materials described herein. Further, the golf club head **1900** may be any type of golf club head having a club head volume similar to the club head volume of any of the golf club heads described herein. The apparatus, methods, and articles of manufacture described herein are not limited in this regard.

[0160] The top portion **1930** may include a forward portion **1911** extending between the front portion **1970** and the crown portion **1935**. In one example, the forward portion **1911** may extend a distance **2434** of at least 12 mm in a front-to-rear direction. In another example, the forward portion **1911** may extend a distance **2434** of at least 16 mm in a front-to-rear direction. In yet another example, the forward portion **1911** may extend a distance **2434** of at least 20 mm in a front-to-rear direction. While the above examples may describe particular distances, the apparatus, methods, and articles of manufacture described herein may include a forward portion extending a distance less than 12 mm in a front-to-rear direction. The forward portion **1911** may enhance structural integrity of the golf club head **1900** and resist rearward deflection of the front portion **1970** during impact with a golf ball. The apparatus, methods, and articles of manufacture described herein are not limited in this regard.

[0161] The crown portion **1935** may include a central crown portion **1931**. The crown portion **1935** may include a toe-side crown portion **1932**. The crown portion **1935** may include a heel-side crown portion **1933**. A first contoured transition region **1921** may separate the central crown portion **1931** and the toe-side crown portion **1932**. A second contoured transition region **1922** may separate the central crown portion **1931** and the heel-side crown portion **1933**. The crown portion **1935** may include a central integral rib **1915**, a toe-side integral rib **1916**, and a heel-side integral rib **1917**. The central integral rib **1915** may be disposed within the crown portion **1935** proximate to a front perimeter **1903** of the crown portion. The toe-side integral rib **1916** may be disposed within the crown portion **1935** proximate to the first contoured transition region **1921**. The heel-side integral rib **1917** may be disposed within the crown portion **1935** proximate to the second contoured transition region **1922**. The toe-side crown portion **1932** may be bounded by a front perimeter **1903** of the crown portion **1935**, a toe-side perimeter **1901** of the crown portion, and the first contoured transition region **1921**. The heel-side crown portion **1933** may be bounded by the front perimeter **1903**, a heel-side perimeter **1902** of the crown portion, and the second contoured transition region **1922**. The central crown portion **1931** may extend between the first contoured transition region **1921** and the second contoured transition region **1922**. The central crown portion **2731** may be bounded by a rear perimeter **1904** of the crown portion. In one example, the central crown portion **1931** may have a surface area

greater than 2 square inches. In another example, the central crown portion **1931** may have a surface area between and including 2 and 4 square inches. In yet another example, the central crown portion **1931** may have a surface area between and including 2.2 and 3.5 square inches. In still another example, the central crown portion **1931** may have a surface area between and including 2.5 and 3.2 square inches. In one example, the toe-side crown portion **1932** may have a surface area between and including 0.2 and 1.5 square inches. In another example, the toe-side crown portion **1932** may have a surface area between and including 0.2 and 1.2 square inches. In yet another example, the toe-side crown portion **1932** may have a surface area between and including 0.3 and 0.8 square inches. In still another example, the toe-side crown portion **1932** may have a surface area between and including 0.4 and 0.5 square inches. While the above examples may describe particular surface areas, the apparatus, methods, and articles of manufacture described herein may include the toe-side crown portion **1932** having a surface area greater than 4 square inches. The apparatus, methods, and articles of manufacture described herein are not limited in this regard.

[0162] In the example in FIG. **37**, the hybrid-type golf club head **1900** is shown prior to attachment of the crown portion **1935**. The crown portion **1935** may be attached to a shoulder portion **3701** of the top portion **1930**. The shoulder portion **3701** may extend along all or a portion of the opening in the top portion **1930**. The shoulder portion **3701** may support the crown portion **1935**. In one example, the shoulder portion **3701** may extend a distance **3702** of at least 2 mm inward toward the opening in the top portion **1930**. In another example, the shoulder portion **3701** may extend a distance **3702** of at least 6 mm. In yet another example, the shoulder portion **3701** may extend a distance **3702** of at least 8 mm. In still another example, the shoulder portion **3701** may extend a distance **3702** of between and including 2 mm and 8 mm. While the above examples may describe particular distances, the apparatus, methods, and articles of manufacture described herein may include a shoulder portion **3701** that extends a distance **3702** less than 2 mm inward toward the opening in the top portion **1930**. The shoulder portion **3701** may be a continuous portion encircling the opening in the top portion **1930**. Alternately, the shoulder portion **3701** may include one or more discrete shoulder portions arranged to support the crown portion **1935**. In another example, the shoulder portion **3701** may include a plurality of tabs arranged to support the crown portion **1935**. In still another example, the shoulder portion **3701** may be omitted, and the crown portion **1935** may be adhered to an outer surface of the top portion **1930** or to an inner surface of the top portion **1930**. In yet another example, the shoulder portion **3701** may be omitted, and the crown portion **1935** may include a protrusion extending from a bottom surface of the crown portion **1935** that provides an interference fit with a perimeter edge of the opening. The apparatus, methods, and articles of manufacture described herein are not limited in this regard.

[0163] As shown in FIG. **37**, an insert **3750** may be provided within an interior region of the golf club head **1900**. The insert **3750** may dampen vibrations within the golf club head **1900** resulting from impact with a golf ball, which may improve sound or feel perceived by an individual. The insert **3750** may be an elastic polymer or elastomer material (e.g., a viscoelastic urethane polymer material such as Sorbothane® material manufactured by Sorbothane, Inc., Kent, Ohio), a thermoplastic elastomer material (TPE), a thermoplastic polyurethane material (TPU), and/or other suitable types of materials to absorb shock, isolate vibration, and/or dampen noise. In another example, the insert **3750** may be a high density ethylene copolymer ionomer, a fatty acid modified ethylene copolymer ionomer, a highly amorphous ethylene copolymer ionomer, an ionomer of ethylene acid acrylate terpolymer, an ethylene copolymer comprising a magnesium ionomer, an injection moldable ethylene copolymer that may be used in conventional injection molding equipment to create various shapes, an ethylene copolymer that can be used in conventional extrusion equipment to create various shapes, and/or an ethylene copolymer having high compression and low resilience similar to thermoset polybutadiene rubbers. For example, the ethylene copolymer may include any of the ethylene copolymers associated with DuPont™ High-Performance Resin (HPF) family of materials (e.g., DuPont™ HPF AD1172, DuPont™ HPF AD1035, DuPont® HPF 1000 and DuPont™ HPF 2000), which are manufactured by E.I. du Pont de Nemours and Company of Wilmington, Del. The DuPont™ HPF family of ethylene copolymers are injection moldable and may be used with conventional injection molding equipment and molds, provide low compression, and provide high resilience. The apparatus, methods, and articles of manufacture described herein are not limited in this regard.

[0164] The insert **3750** may be bonded, attached and/or connected to the golf club head **1900** by a bonding portion (not shown) to improve adhesion and/or mitigate delamination between the body portion of the golf club head **1900** and the insert **3750**. In one example, the insert **3750** may be bonded, attached and/or connected to an interior surface of the bottom portion **1940**. The bonding portion may be a bonding agent, an epoxy, a combination of bonding agents, a bonding structure or attachment device, a combination of bonding structures and/or attachment devices, and/or a combination of one or more bonding agents, one or more bonding structures and/or one or more attachment devices. In one example, the bonding portion may be low-viscosity, organic, solvent-based solutions and/or dispersions of polymers and other reactive chemicals such as MEGUM™, ROBOND™, and/or THIXON™ materials manufactured by the Dow Chemical Company, Auburn Hills, Mich. In another example, the bonding portion may be LOCTITE® materials manufactured by Henkel Corporation, Rocky Hill, Conn. The apparatus, methods, and articles of manufacture are not limited in this regard.

[0165] The golf club head **1900** may include a set of weight ports (e.g. **2032-2039**) located in a bottom portion **1940** of the golf club head **1900**. Each weight port may contain a weight portion (e.g. **2070-2077**). The set of weight ports may include a first plurality of weight ports **2001**, a second plurality of weight ports **2002**, and a third plurality of weight ports **2003**. The first set of weight ports **2001** may be located closer to the front portion **1970** than the rear portion **1980**. The second set of weight ports **2002** may be located closer to the heel portion **1960** than the toe portion **1950**. The second set of weight ports **2002** may be located closer to the rear portion **1980** than the front portion **1970**. The second set of weight ports **2002** may be located closer to the rear portion **1980** than the first set of weight ports **2001**. The second set of weight ports **2002** may have at least

one weight port that is closer to the toe portion **1950** than any weight port of the first set of weight ports **2001**. The third set of weight portions **2003** may be located closer to the toe portion **1950** than the heel portion **1960**. The third set of weight ports **2003** may be located closer to the rear portion **1980** than the front portion **1970**. The third set of weight ports **2003** may be located closer to the rear portion **1980** than the first set of weight ports **2001**. The third set of weight ports **2003** may have a weight port that is closer to the heel portion **1960** than any weight port of the first set of weight ports **2001**. The first set of weight ports **2001** may include one or more weight portions having a mass greater than or equal to about 3.5 grams. The first set of weight ports **2001** may include one or more weight portions having a mass greater than or equal to about 4 grams. The second set of weight ports **2002** may include one or more weight portions having a mass greater than or equal to about 0.5 gram. The second set of weight ports **2002** may include one or more weight portions having a mass greater than or equal to about 0.75 gram. The third set of weight ports **2003** may include one or more weight portions having a mass greater than or equal to about 0.5 gram. The third set of weight ports **2003** may include one or more weight portions having a mass greater than or equal to about 0.75 gram. The second set of weight ports **2002** and third set of weight ports **2003** may collectively have an equal number of weight ports as the first set of weight ports **2001**. The apparatus, methods, and articles of manufacture are not limited in this regard.

[0166] As shown in FIG. **37**, the insert **3750** may extend from the first set of weight ports **2001** toward the rear portion **1980** of the golf club head **1900**. The insert **3750** may extend from the first set of weight ports **2001** to the rear portion **1980** of the golf club head **1900**. The insert **3750** may extend between the second set of weight ports **2002** and the third set of weight ports **2003**. The insert **3750** may extend between the first set of weight ports **2001**, the second set of weight ports **2002**, and the third set of weight ports **2003**. The insert **3750** may include a plurality of hexagonal holes that extend through or partially through the thickness of the insert **3750**. The hexagonal holes may be arranged on the insert **3750** to define a pattern similar to a honeycomb pattern. The apparatus, methods, and articles of manufacture described herein are not limited in this regard.

[0167] In the example of FIGS. **27-34** and **38**, the fairway wood-type golf club head **2700** may include a body portion **2710** with a top portion **2730**, a crown portion **2735**, a bottom portion **2740**, a toe portion **2750**, a heel portion **2760**, a front portion **2770**, and a rear portion **2780**. The bottom portion **2740** may include a skirt portion **2790** defined as a side portion of the golf club head **2700** between the top portion **2730** and the bottom portion **2740** excluding the front portion **2770** and extending across a periphery of the golf club head **2700** from the toe portion **2750**, around the rear portion **2780**, and to the heel portion **2760**. Alternatively, the golf club head **2700** may not include the skirt portion **2790**. The front portion **2770** may include a face portion **2775** to engage a golf ball (not shown). The face portion **2775** may be either integral to the body portion **2710** or a separate face portion that is coupled (e.g., welded) to the front portion **2770** to enclose an opening in the front portion **2770**. The body portion **2710** may also include a hosel portion **2765** configured to receive a shaft portion. The hosel portion **2765** may be similar in many respects to any of the hosel portions described herein. The hosel portion **2765** may include an interchangeable hosel sleeve. Alternatively, the body portion **2710** may include a bore instead of the hosel portion **2765**. The body portion **2710** may be made partially or entirely from any of the materials described herein. Further, the golf club head **2700** may be any type of golf club head having a club head volume similar to the club head volume of any of the golf club heads described herein. The apparatus, methods, and articles of manufacture are not limited in this regard.

[0168] The top portion **2730** may include a forward portion **2711** extending between the front portion **2770** and the crown portion **2735**. In one example, the forward portion **2711** may extend a distance **3234** of at least 12 mm in a front-to-rear direction. In another example, the forward portion **1911** may extend a distance **3234** of at least 16 mm in a front-to-rear direction. In yet another example, the forward portion **2711** may extend a distance **3234** of at least 20 mm in a front-to-rear direction. While the above examples may describe particular distances, the apparatus, methods, and articles of manufacture described herein may include a forward portion extending a distance less than 12 mm in a front-to-rear direction. The forward portion **2711** may enhance structural integrity of the golf club head **2700** and resist rearward deflection of the front portion **2770** during impact with a golf ball. The apparatus, methods, and articles of manufacture described herein are not limited in this regard.

[0169] The crown portion **2735** may include a central crown portion **2731**. The crown portion **2735** may include a toe-side crown portion **2732**. The crown portion **2735** may include a heel-side crown portion **2733**. A first contoured transition region **2721** may separate the central crown portion **2731** and the toe-side crown portion **2732**. A second contoured transition region **2722** may separate the central crown portion **2731** and the heel-side crown portion **2733**. The crown portion **2735** may include a central integral rib **2715**. The crown portion **2735** may include a toe-side integral rib **2716**. The crown portion **2735** may include a heel-side integral rib **2717**. The central integral rib **2715** may be disposed within the crown portion **2735** proximate to a front perimeter **2703** of the crown portion. The toe-side integral rib **2716** may be disposed within the crown portion **2735** proximate to the first contoured transition region **2721**. The heel-side integral rib **2717** may be disposed within the crown portion **2735** proximate to the second contoured transition region **2722**. The apparatus, methods, and articles of manufacture are not limited in this regard.

[0170] The central crown portion **2731** may extend between the first contoured transition region **2721** and the second contoured transition region **2722**. The central crown portion **2731** may be bounded by a rear perimeter **2704** of the crown portion **2735**. The central crown portion **2731** may be bounded by the front perimeter **2703** of the crown portion **2735**. The central crown portion **2731** may be raised relative to the toe-side crown portion **2732**. The central crown portion **2731** may be raised relative to the heel-side crown portion **2733**. In one example, the central crown portion **2731** may have a surface area greater than 3 square inches. In another example, the central crown portion **2731** may have a surface area between and including 2.5 and 6 square inches. In yet another example, the central crown portion **2731** may have a surface area between and including 3.0 and 4.5 square inches. In still another example, the central crown portion **2731** may have a surface area between

and including 3.2 and 4.2 square inches. The apparatus, methods, and articles of manufacture are not limited in this regard.

[0171] The toe-side crown portion **2732** may be bounded by a front perimeter **2703** of the crown portion **2735**. The toe-side crown portion **2732** may be bounded by a toe-side perimeter **2701** of the crown portion **2735**. The toe-side crown portion **2732** may be bounded by the first contoured transition region **2721**. In one example, the toe-side crown portion **2732** may have a surface area between and including 0.4 and 2.3 square inches. In another example, the toe-side crown portion **2732** may have a surface area between and including 0.8 and 1.5 square inches. In yet another example, the toe-side crown portion **2732** may have a surface area between and including 1.0 and 1.4 square inches. In still another example, the toe-side crown portion **2732** may have a surface area between and including 1.1 and 1.3 square inches. While the above examples may describe particular surface areas, the apparatus, methods, and articles of manufacture described herein may include the toe-side crown portion **2732** having a surface area greater than 2.3 square inches. The apparatus, methods, and articles of manufacture are not limited in this regard.

[0172] The heel-side crown portion **2733** may be bounded by the front perimeter **2703** of the crown portion **2735**. The heel-side crown portion **2733** may be bounded by a heel-side perimeter **2702** of the crown portion **2735**. The heel-side crown portion **2733** may be bounded by the second contoured transition region **2722**. In one example, the heel-side crown portion **2733** may have a surface area less than 2 square inches. In another example, the heel-side crown portion **2733** may have a surface area between and including 0.2 and 1 square inches. In yet another example, the heel-side crown portion **2733** may have a surface area between and including 0.2 and 0.8 square inches. In still another example, the heel-side crown portion **2733** may have a surface area between and including 0.3 and 0.6 square inches. While the above examples may describe particular surface areas, the apparatus, methods, and articles of manufacture described herein may include the heel-side crown portion **2733** having a surface area greater than 2 square inches. The apparatus, methods, and articles of manufacture described herein are not limited in this regard.

[0173] As shown in FIG. **38**, an insert **3850** may be provided within an interior region of the golf club head **2700**. The insert **38750** may dampen vibrations within the golf club head **2700** resulting from impact with a golf ball, which may improve sound or feel perceived by an individual. The insert **3850** may be an elastic polymer or elastomer material (e.g., a viscoelastic urethane polymer material such as Sorbothane® material manufactured by Sorbothane, Inc., Kent, Ohio), a thermoplastic elastomer material (TPE), a thermoplastic polyurethane material (TPU), and/or other suitable types of materials to absorb shock, isolate vibration, and/or dampen noise. In another example, the insert **3850** may be a high density ethylene copolymer ionomer, a fatty acid modified ethylene copolymer ionomer, a highly amorphous ethylene copolymer ionomer, an ionomer of ethylene acid acrylate terpolymer, an ethylene copolymer comprising a magnesium ionomer, an injection moldable ethylene copolymer that may be used in conventional injection molding equipment to create various shapes, an ethylene copolymer that can be used in conventional extrusion equipment to create various shapes, and/or an ethylene copolymer having high compression and low resilience similar to thermoset polybutadiene rubbers. For example, the ethylene copolymer may include any of the ethylene copolymers associated with DuPont™ High-Performance Resin (HPF) family of materials (e.g., DuPont™ HPF AD1172, DuPont™ HPF AD1035, DuPont® HPF 1000 and DuPont™ HPF 2000), which are manufactured by E.I. du Pont de Nemours and Company of Wilmington, Del. The DuPont™ HPF family of ethylene copolymers are injection moldable and may be used with conventional injection molding equipment and molds, provide low compression, and provide high resilience. The apparatus, methods, and articles of manufacture described herein are not limited in this regard.

[0174] The insert **3850** may be bonded, attached and/or connected to the golf club head **2700** by a bonding portion (not shown) to improve adhesion and/or mitigate delamination between the body portion of the golf club head **2700** and the insert **3850**. In one example, the insert **3850** may be bonded, attached and/or connected to an interior surface of the bottom portion **2740**. The bonding portion may be a bonding agent, an epoxy, a combination of bonding agents, a bonding structure or attachment device, a combination of bonding structures and/or attachment devices, and/or a combination of one or more bonding agents, one or more bonding structures and/or one or more attachment devices. In one example, the bonding portion may be low-viscosity, organic, solvent-based solutions and/or dispersions of polymers and other reactive chemicals such as MEGUM™, ROBOND™, and/or THIXON™ materials manufactured by the Dow Chemical Company, Auburn Hills, Mich. In another example, the bonding portion may be LOCTITE® materials manufactured by Henkel Corporation, Rocky Hill, Conn. The apparatus, methods, and articles of manufacture are not limited in this regard.

[0175] The golf club head **2700** may include a set of weight ports (e.g. **2832-2839**) located in a bottom portion **2740** of the golf club head **2700**. The set of weight ports may include a first plurality of weight ports **2801**. The set of weight ports may include a second plurality of weight ports **2802**. The set of weight ports may include a third plurality of weight ports **2803**. Each weight port of the set of weight ports may contain a weight portion (e.g. **2865-2872**). The first set of weight ports **2801** may be located closer to the front portion **2770** than the rear portion **2780**. The second set of weight ports **2802** may be located closer to the heel portion **2760** than the toe portion **2750**. The second set of weight ports **2802** may be located closer to the rear portion **2780** than the front portion **2770**. At least one weight port of the second set of weight ports **2802** may be located closer to the heel portion **2760** than any of the weight ports of the first set of weight ports **2801**. The second set of weight ports **2802** may be located closer to the heel portion **2760** than any of the weight ports of the first set of weight ports **2801**. The third set of weight portions **2803** may be located closer to the toe portion **2750** than the heel portion **2760**. The third set of weight ports **2803** may be located closer to the rear portion **2780** than the front portion **2770**. At least one weight port of the third set of weight ports **2803** may be located closer to the toe portion **2750** than any of the weight ports of the first set of weight ports **2801**. The third set of weight ports **2803** may be located closer to the toe portion **2750** than any of the

weight ports of the first set of weight ports **2801**. The apparatus, methods, and articles of manufacture are not limited in this regard.

[0176] The first set of weight ports **2801** may include one or more weight portions having a mass greater than or equal to about 3.5 grams. The first set of weight ports **2801** may include one or more weight portions having a mass greater than or equal to about 4 grams. The second set of weight ports **2802** may include one or more weight portions having a mass greater than or equal to about 0.5 gram. The second set of weight ports **2802** may include one or more weight portions having a mass greater than or equal to about 0.75 gram. The third set of weight ports **2803** may include one or more weight portions having a mass greater than or equal to about 0.5 gram. The third set of weight ports **2803** may include one or more weight portions having a mass greater than or equal to about 0.75 gram. The apparatus, methods, and articles of manufacture are not limited in this regard.

[0177] As shown in FIG. **38**, for example, the insert **3850** may extend from the first set of weight ports **2801** toward the rear portion **2780** of the golf club head **2700**. The insert **3850** may extend between the second set of weight ports **2802** and the third set of weight ports **2803**. The insert **3850** may have a front surface **3851** that abuts the first set of weight ports **2801**. The insert **3850** may have a heel-side surface **3854** that abuts the second set of weight ports **2802**. The insert **3850** may have a toe-side surface **3853** that abuts the third set of weight ports **2803**. The insert **3850** may have a rear surface **3852** that extends between the second set of weight ports **2802** and the third set of weight ports **2803**. The rear surface **3852** of the insert **3850** may be concave relative to the rear portion **2780** of the golf club head **2700**. The insert **3850** may extend to the first set of weight ports **2801**, the second set of weight ports **2802**, and the third set of weight ports **28703**. The insert **3850** may include a plurality of hexagonal holes that extend through or partially through the thickness of the insert **3850**. The plurality of hexagonal holes may be arranged on the insert **3850** to define a pattern similar to a honeycomb pattern. The apparatus, methods, and articles of manufacture described herein are not limited in this regard.

[0178] In the example of FIG. **35**, a golf club head **3500** is shown prior to attachment of a crown portion to a body portion **3510**. The body portion **3510** may include a top portion **3530**, a bottom portion **3540**, a toe portion **3550**, a heel portion **3560**, a front portion **3570**, and a rear portion **3580**. The bottom portion **3540** may include a skirt portion defined as a side portion of the golf club head **3500** between the top portion **3530** and the bottom portion **3540** excluding the front portion **3570** and extending across a periphery of the golf club head **3500** from the toe portion **3550**, around the rear portion **3580**, and to the heel portion **3560**. Alternatively, the golf club head **3500** may not include the skirt portion. The front portion **3570** may include a face portion to engage a golf ball. The face portion may be integral to the body portion **3510** or may be a separate face portion that is coupled (e.g., welded) to the front portion **3570** to enclose an opening in the front portion **3570**. The body portion **3510** may also include a hosel portion **3565** configured to receive a shaft portion (not shown). The hosel portion **3565** may be similar in many respects to any of the hosel portions described herein. The hosel portion **3565** may include an interchangeable hosel sleeve. Alternatively, the body portion **3510** may include a bore instead of the hosel portion **3565**. The body portion **3510** may be made partially or entirely from any of the materials described herein. Further, the golf club head **3500** may be any type of golf club head having a club head volume similar to the club head volume of any of the golf club heads described herein. In one example, the golf club head may have a club head volume less than 460 cubic centimeters. In another example, the golf club head may have a club head volume greater than 460 cubic centimeters. In still another example, the golf club head may have a club head volume greater than 500 cubic centimeters. The apparatus, methods, and articles of manufacture described herein are not limited in this regard.

[0179] The top portion **3530** may include a forward portion **3511**. In one example, the forward portion **3511** may extend a distance **3515** of at least 12 mm in a front-to-rear direction. In another example, the forward portion **3511** may extend a distance **3515** of at least 16 mm in a front-to-rear direction. In yet another example, the forward portion **3511** may extend a distance **3515** of at least 20 mm in a front-to-rear direction. While the above examples may describe particular distances, the apparatus, methods, and articles of manufacture described herein may include a forward portion extending a distance less than 12 mm in a front-to-rear direction. The forward portion **3511** may enhance structural integrity of the golf club head **3500** and resist rearward deflection of the front portion **3570** during impact with a golf ball. The apparatus, methods, and articles of manufacture described herein are not limited in this regard.

[0180] The golf club head **3500** can include a crown portion similar to any of the crown portions described herein (e.g. **135**, **3935**, **4035**, **4135**). The crown portion may include one or more integral ribs. The crown portion may include one or more thin portions. The crown portion may include one or more crown stiffening regions. The crown portion may be a separate piece that may be attached to the top portion **3530**. The crown portion may enclose a top opening in the top portion **3530**. The crown portion may be constructed from one or more materials, and those materials may be the same or different from the material of the body portion **3510**. In one example, the crown portion may be at least partially constructed from a composite material such as a fiber-based composite material. The crown portion may be attached to a shoulder portion **3512** of the top portion **3530**. The apparatus, methods, and articles of manufacture described herein are not limited in this regard.

[0181] The shoulder portion **3512** may extend along the top opening in the top portion. The shoulder portion **3512** may support the crown portion. In one example, the shoulder portion **3512** that may extend a distance **3513** of at least 2 mm inward toward the top opening in the top portion **3530**. In another example, the shoulder portion **3512** may extend a distance **3513** of at least 6 mm. In yet another example, the shoulder portion **3512** may extend a distance **3513** of at least 8 mm. While the above examples may describe particular distances, the apparatus, methods, and articles of manufacture described herein may include a shoulder portion **3512** may extend a distance less than 2 mm inward toward the opening in the top portion **3530**. The shoulder portion **3512** may be a continuous portion encircling the top opening in the top portion **3530**. Alternately, the shoulder portion **3512** may include one or more discrete shoulder portions arranged to support the crown portion. In another example, the shoulder portion **3512** may include a plurality of tabs arranged to support the crown portion. In still another

example, the shoulder portion **3512** may be omitted, and the crown portion may be adhered to an outer surface of the top portion **3530**. In yet another example, the shoulder portion **3512** may be omitted, and the crown portion may include a protrusion extending from a bottom surface of the crown portion that provides an interference fit with a perimeter edge of the opening. The apparatus, methods, and articles of manufacture described herein are not limited in this regard.

[0182] The golf club head **3500** may include a set of weight ports (e.g. **3532-3536**) in the bottom portion **3540**. The weight ports may be located proximate to the rear portion. The weight ports may be arranged in a row extending from the toe portion **3550** to the heel portion **3560**. The row may be an arc that is concave relative to the front portion **3570**. The row may be an arc that follows a contour of the rear portion **3580**. Each weight port may be adapted to receive a weight portion. One or more of the weight ports (e.g. **3532-3536**) may include an opening suitable for introducing a filler to the interior volume of the golf club head **3500**. The filler may be similar to any of the filler materials described herein. The apparatus, methods, and articles of manufacture described herein are not limited in this regard. The apparatus, methods, and articles of manufacture described herein are not limited in this regard.

[0183] The golf club head **3500** may include an insert **3545** that is similar in material to any of the inserts described herein. As shown in FIG. **35**, the insert **3545** may be located on an inner surface of the bottom portion **3540** of the golf club head **3500**. The insert **3545** may extend from a set of weight ports (e.g. **3532-3536**) in the bottom portion **3540** toward the front portion **3570**. The insert **3545** may be adjacent to one or more of the weight ports. The insert **3545** may contact one or more of the weight ports. The insert **3545** may dampen vibrations from one or more of the weight ports. The insert **3545** may dampen vibrations from the bottom portion **3540**. The apparatus, methods, and articles of manufacture described herein are not limited in this regard.

[0184] In the example of FIG. **36**, a golf club head **3600** is shown prior to attachment of a crown portion to a body portion **3610**. The body portion **3610** may include a top portion **3630**, a bottom portion **3640**, a toe portion **3650**, a heel portion **3660**, a front portion **3670**, and a rear portion **3680**. The bottom portion **3640** may include a skirt portion defined as a side portion of the golf club head **3600** between the top portion **3630** and the bottom portion **3640** excluding the front portion **3570** and extending across a periphery of the golf club head **3600** from the toe portion **3650**, around the rear portion **3680**, and to the heel portion **3660**. Alternatively, the golf club head **3600** may not include the skirt portion. The front portion **3670** may include a face portion to engage a golf ball. The face portion may be integral to the body portion **3610** or may be a separate face portion that is coupled (e.g., welded) to the front portion **3670** to enclose an opening in the front portion **3570**. The body portion **3610** may also include a hosel portion **3665** configured to receive a shaft portion (not shown). The hosel portion **3665** may be similar in many respects to any of the hosel portions described herein. The hosel portion **3665** may include an interchangeable hosel sleeve. Alternatively, the body portion **3610** may include a bore instead of the hosel portion **3665**. The body portion **3610** may be made partially or entirely from any of the materials described herein. Further, the golf club head **3600** may be any type of golf club head having a club head volume similar to the club head volume of any of the golf club heads described herein. In one example, the golf club head may have a club head volume less than 460 cubic centimeters. In another example, the golf club head may have a club head volume greater than 460 cubic centimeters. In still another example, the golf club head may have a club head volume greater than 500 cubic centimeters. The apparatus, methods, and articles of manufacture described herein are not limited in this regard.

[0185] The top portion **3630** may include a forward portion **3611**. In one example, the forward portion **3611** may extend a distance **3615** of at least 12 mm in a front-to-rear direction. In another example, the forward portion **3611** may extend a distance **3615** of at least 16 mm in a front-to-rear direction. In yet another example, the forward portion **3611** may extend a distance **3615** of at least 20 mm in a front-to-rear direction. While the above examples may describe particular distances, the apparatus, methods, and articles of manufacture described herein may include a forward portion extending a distance less than 12 mm in a front-to-rear direction. The forward portion **3611** may enhance structural integrity of the golf club head **3600** and resist rearward deflection of the front portion **3670** during impact with a golf ball. The apparatus, methods, and articles of manufacture described herein are not limited in this regard.

[0186] The golf club head **3600** can include a crown portion similar to any of the crown portions described herein (e.g. **135**, **3935**, **4035**, **4135**). The crown portion may include one or more integral ribs. The crown portion may include one or more thin portions. The crown portion may include one or more crown stiffening regions. The crown portion may be a separate piece that may be attached to the top portion **3630**. The crown portion may enclose a top opening in the top portion **3630**. The crown portion may be constructed from one or more materials, and those materials may be the same or different from the material of the body portion **3610**. In one example, the crown portion may be at least partially constructed from a composite material such as a fiber-based composite material. The crown portion may be attached to a shoulder portion **3612** of the top portion **3630**. The apparatus, methods, and articles of manufacture described herein are not limited in this regard.

[0187] The shoulder portion **3612** may extend along the top opening in the top portion. The shoulder portion **3612** may support the crown portion. In one example, the shoulder portion **3612** that may extend a distance **3613** of at least 2 mm inward toward the top opening in the top portion **3630**. In another example, the shoulder portion **3612** may extend a distance **3613** of at least 6 mm. In yet another example, the shoulder portion **3612** may extend a distance **3613** of at least 8 mm. While the above examples may describe particular distances, the apparatus, methods, and articles of manufacture described herein may include a shoulder portion **3612** may extend a distance less than 2 mm inward toward the opening in the top portion **3630**. The shoulder portion **3612** may be a continuous portion encircling the top opening in the top portion **3630**. Alternately, the shoulder portion **3512** may include one or more discrete shoulder portions arranged to support the crown portion. In another example, the shoulder portion **3612** may include a plurality of tabs arranged to support the crown portion. In still another example, the shoulder portion **3612** may be omitted, and the crown portion may be adhered to an outer surface of the top portion **3630**. In yet another example, the shoulder portion **3612** may be omitted, and the crown portion may include a

protrusion extending from a bottom surface of the crown portion that provides an interference fit with a perimeter edge of the opening. The apparatus, methods, and articles of manufacture described herein are not limited in this regard.

[0188] The golf club head **3600** may include a set of weight ports (e.g. **3631-3639**) in the bottom portion **3640**. Each weight port may be adapted to receive a weight portion. The set of weight ports may include a first set of weight ports (e.g. **3631**, **3638**, **3639**). The set of weight ports may include a second set of weight ports (e.g. **3632-3634**). The set of weight ports may include a third set of weight ports (e.g. **3635-3637**). The first set of weight ports may be arranged in a row extending from the toe portion **3650** to the heel portion **3660**. The first set of weight ports may be located closer to the front portion **3670** than the rear portion **3680**. The first set of weight ports may include at least two weight ports. The first set of weight ports may include three or more weight ports. The second set of weight ports may be located closer to the heel portion **3660** than the toe portion **3650**. The second set of weight ports may be located closer to the rear portion **3680** than the front portion **3670**. The second set of weight ports may include at least two weight ports. The second set of weight ports may include three or more weight ports. The third set of weight ports may be located closer to the toe portion **3650** than the heel portion **3660**. The third set of weight ports may be located closer to the rear portion **3680** than the front portion **3670**. The third set of weight ports may include at least two weight ports. The third set of weight ports may include three or more weight ports. The apparatus, methods, and articles of manufacture described herein are not limited in this regard.

[0189] One or more of the weight ports (e.g. **3631-3639**) may include an opening suitable for introducing a filler material to the interior volume of the golf club head **3600**. The filler material may be similar to any of the filler materials described herein. The apparatus, methods, and articles of manufacture described herein are not limited in this regard.

[0190] The golf club head **3600** may include an insert **3645** that is similar in material to any of the inserts described herein. The insert **3645** may be provided within an interior region of the golf club head **3600**. As shown in FIG. **36**, the insert **3645** may be located adjacent to an inner surface of the bottom portion **3640** of the golf club head **3500**. The insert **3645** may dampen vibrations within the golf club head **3600** resulting from impact with a golf ball, which may improve sound or feel perceived by an individual. The insert **3645** may be adjacent to one or more of the weight ports (e.g. **3631-3639**). The insert **3645** may surround one or more of the weight ports (e.g. **3631-3639**). The insert **3645** may surround the first set of weight ports. The insert **3645** may abut the second set of weight ports. The insert **3645** may abut the third set of weight ports. The insert **3645** may extend from the first set of weight ports to the second set of weight ports. The insert **3645** may extend from the first set of weight ports to the third set of weight ports. The insert may extend from the second set of weight ports to the third set of weight ports. The apparatus, methods, and articles of manufacture described herein are not limited in this regard.

[0191] The insert **3645** may include a central opening **3651**. The central opening **3651** may improve weight distribution of the insert **3645** within the golf club head **3600**. The size and location of the central opening **3651** in the insert **36450** may increase MOI of the golf club head **3600** by reducing weight in a central sole region of the golf club head **3600**. The central opening **3651** may have an area that is greater than or equal to about 10% of a total interior surface area **3616** of the bottom portion of the golf club head. The central opening **3651** may have an area that is greater than or equal to about 15% of a total interior surface area **3616** of the bottom portion of the golf club head. The central opening **3651** may have an area that is greater than or equal to about 20% of a total interior surface area **3616** of the bottom portion of the golf club head. The central opening **3651** may have an area that is greater than or equal to about 25% of a total interior surface area **3616** of a sole portion of the golf club head. The apparatus, methods, and articles of manufacture described herein are not limited in this regard.

[0192] Certain regions of the interior of the body portion may include an elastic polymer material or an elastomer material similar to any of the golf club heads described herein. The filler material may dampen vibration, dampen noise, lower the center of gravity and/or provide a better feel and sound for the golf club head when striking a golf ball (not shown). The golf club head may have one or more interior regions that may include a filler material as described herein. In one example, the filler material may be injected into the body portion from one or more of the weight ports as described herein. The apparatus, methods, and articles of manufacture described herein are not limited in this regard.

[0193] In the examples described herein, the face portion (e.g. **175**, **1975**, **2775**) may be a separate portion that is installed in an opening in the front portion (e.g. **170**, **1970**, **2770**) and joined to the golf club head (e.g. **100**, **1900**, **2700**) to enclose the opening. Alternately, the face portion (e.g. **175**, **1975**, **2775**) may be an integral part of the golf club head (e.g. **100**, **1900**, **2700**), such as part of a common casting. In yet another example, shown in FIGS. **42-48**, a front portion **4270** of a golf club head **4200** may include a front pocket **4276** configured to receive a separate face portion **4275**. The apparatus, methods, and articles of manufacture described herein are not limited in this regard.

[0194] In the example of FIGS. **42-48**, a golf club head **4200** may include a body portion **4210** having a top portion **4230**, a crown portion (not shown), a bottom portion **4240**, a toe portion **4250**, a heel portion **4260**, a front portion **4270**, and a rear portion **4280**. The example of FIG. **42** is shown prior to installation of a crown portion and a face portion. The example of FIGS. **42-48** could be fitted with any of the crown portions disclosed herein, such as the crown portion **135** shown in FIG. **1**. The bottom portion **4240** may include a skirt portion **4290** defined as a side portion of the golf club head **4200** between the top portion **4230** and the bottom portion **4240** excluding the front portion **4270** and extending across a periphery of the golf club head **4200** from the toe portion **4250**, around the rear portion **4280**, and to the heel portion **4260**. Alternatively, the golf club head **4200** may not include the skirt portion **4290**. The body portion **4210** may also include a hosel portion **4265** configured to receive a shaft portion (not shown). The hosel portion **4265** may be similar in many respects to any of the hosel portions described herein. The hosel portion **4265** may include an interchangeable hosel sleeve. Alternatively, the body portion **4210** may include a bore instead of the hosel portion **4265**. The body portion **4210** may be made partially or entirely of an aluminum-based material, a magnesium-type material, a

steel-based material, a titanium-based material, any combination thereof, or any other suitable material. In another example the body portion **4210** may be made partially or entirely of a non-metal material such as a ceramic material, a composite material, any combination thereof, or any other suitable material. The apparatus, methods, and articles of manufacture described herein are not limited in this regard.

[0195] The golf club head **4200** may have a club head volume greater than or equal to 300 cubic centimeters (cm3 or cc). In one example, the golf club head **4200** may be about 460 cc. Alternatively, the golf club head **4200** may have a club head volume less than or equal to 300 cc. In particular, the golf club head **4200** may have a club head volume between 100 cc and 200 cc. The club head volume of the golf club head **4200** may be determined by using the weighted water displacement method (i.e., Archimedes Principle). For example, procedures defined by golf standard organizations and/or governing bodies such as the United States Golf Association (USGA) and/or the Royal and Ancient Golf Club of St. Andrews (R&A) may be used for measuring the club head volume of the golf club head **4200**. Although FIG. **42** may depict a particular type of club head (e.g., a driver-type club head), the apparatus, methods, and articles of manufacture described herein may be applicable to other types of club head (e.g., a fairway wood-type club head, a hybrid-type club head, an iron-type club head, a putter-type club head, etc.). The apparatus, methods, and articles of manufacture described herein are not limited in this regard.

[0196] The golf club head **4200** of FIGS. **42-48** may include any of the features of the various golf club heads described herein. The golf club head **4200** may include a polymer insert on an inner surface of the bottom portion **4240** similar to the insert **3665** in FIG. **36**. The golf club head **4200** may include a protruding portion similar to the protruding portion **141** in FIGS. **1-15**. The golf club head **4200** may include a weight port region similar to the weight port region **230** in FIGS. **1-15**. The golf club head **4200** may include a plurality of weight portions similar to the set of weight portions **261** (generally shown as weight portions **262**, **263**, **264**, **265**, **266**, and **267**) in FIGS. **1-15**. The golf club head **4200** may include a crown portion similar to any of the crown portions (e.g. **135**, **1835**, **3935**, **4035**, **4135**) described herein. The golf club head **4200** may be fitted with any of the face portions (e.g. **4575**, **5375**, **5475**, **5575**) described herein. The apparatus, methods, and articles of manufacture described herein are not limited in this regard.

[0197] The top portion **4230** may include a forward portion **4231** extending a distance **4434** between the front portion **4270** and a shoulder portion **4233**, as shown in FIG. **44**. The shoulder portion **4233** may be configured to receive and support the crown portion (e.g. **135**). In one example, the forward portion **4231** may extend a distance **4434** of at least 12 mm in a front-to-rear direction. In another example, the forward portion **4231** may extend a distance **4434** of at least 16 mm in a front-to-rear direction. In yet another example, the forward portion **4231** may extend a distance **4434** of at least 20 mm in a front-to-rear direction. In still another example, the forward portion **4231** may extend a distance **4434** of between and including 12 mm and 20 mm in a front-to-rear direction. While the above examples may describe particular distances, the apparatus, methods, and articles of manufacture described herein may include a forward portion **4231** extending a distance **4434** less than 12 mm in a front-to-rear direction. The forward portion **4231** may enhance structural integrity of the golf club head **4200** and resist rearward deflection of the front portion **4270** during impact with a golf ball. The forward portion **4231** may transfer an impact force to the crown portion during an impact with a golf ball. The apparatus, methods, and articles of manufacture described herein are not limited in this regard.

[0198] The front portion **4270** may include a face portion **4575** to engage a golf ball (e.g., one generally shown as **1501** in FIG. **15**). The face portion **4575** may be a separate face portion that is coupled (e.g., welded) to the front portion **4270** to enclose a front pocket **4276** in the front portion **4270**. FIGS. **42-44** show the golf club head **4200** prior to installation of the face portion **4576**. FIG. **45** shows an exploded view of the golf club head **4200** with the face portion **4576**. FIGS. **46** and **47** show the golf club head **4200** with the face portion **4576** installed in the front pocket **4276** but prior to joining (e.g. welding, pressing, brazing, bonding, or fastening) the face portion **4576** within the front pocket **4276**. FIG. **48** shows a cross-sectional view of the golf club head after joining the face portion **4575** within the front pocket **4276**. The front pocket **4276** may serve as an assembly aid that allows the face portion **4275** to be accurately positioned relative to the front portion **4270** during a joining process, such as a welding process where the face portion **4575** is welded to the front portion **4270**. By accurately positioning the face portion **4575** relative to the front portion **4270** during the joining process, time and expense associated with subsequent finishing processes, such as sanding or polishing processes that may be required to yield a smooth front surface, may be reduced. Also, variability between manufactured golf club heads may be reduced for improved consistency of performance. An interior wall **4277** of the front pocket **4276** may reinforce and support the face portion **4575** during impact with a golf ball. The interior wall **4277** may improve structural rigidity of the golf club head **4200**. The interior wall **4277** of the front pocket **4276**, in combination with the face portion **4575**, provides a dual-wall construction that may improve durability of the golf club head **4200** by reinforcing the face portion **4575**. The front pocket **4276**, in combination with the face portion **4575**, may improve the performance of the golf club head **4200** by producing higher ball speeds. The apparatus, methods, and articles of manufacture described herein are not limited in this regard.

[0199] The front pocket **4276** may be defined by an interior surface **4278** and a perimeter surface **4279**. An outer perimeter edge **4281** may circumscribe the front pocket **4276** proximate an outer surface of the front portion **4270**. The interior surface **4278** of the front pocket **4276** may be a surface of the interior wall **4277**. The interior wall **4277** may extend in a heel-to-toe direction. The interior wall **4277** may have a thickness extending in a front-to-rear direction. In one example, the interior wall **4277** may have a thickness **4477** of between and including 0.020 inch and 0.030 inch. In another example, the interior wall **4277** may have a thickness **4477** of between and including 0.015 inch and 0.025 inch. In yet another example, the interior wall **4277** may have a thickness **4477** of between and including 0.025 inch and 0.035 inch. In still another example, the interior wall **4277** may have a thickness **4477** of less than 0.030 inch. In still yet another example, the interior wall **4277** may have

a thickness **4477** of greater than 0.020 inch. The apparatus, methods, and articles of manufacture described herein are not limited in this regard.

[0200] The interior wall **4277** of the front pocket **4276** may be made partially or entirely of an aluminum-based material, a magnesium-type material, a steel-based material, a titanium-based material, any combination thereof, or any other suitable material. In another example, the interior wall **4277** of the front pocket **4276** may be made partially or entirely of a non-metal material such as a ceramic material, a composite material, any combination thereof, or any other suitable material. The material of the interior wall **4277** of the front pocket **4276** may have a density of at least 4 grams per cubic centimeter. The material of the interior wall **4277** of the front pocket **4276** may have a density of at least 4.5 grams per cubic centimeter. The material of the interior wall **4277** may be a cast material. The material of the interior wall **4277** may be a cast titanium material. The material of the body portion **4210** may be a cast titanium material. The material of the interior wall **4277** of the front pocket **4276** may the same material as a body portion **4210** of the golf club head. The material of the interior wall **4277** of the front pocket **4276** may be a different material than the body portion **4210** of the golf club head **4200**. The apparatus, methods, and articles of manufacture described herein are not limited in this regard.

[0201] The interior wall **4277** of the front pocket **4276** may be a continuous wall within the front pocket and may not include any openings, as shown in FIGS. **42-45**. Alternately, the interior wall may include one or more openings, as shown in FIGS. **49**, **51**, and **52**. The one or more openings described herein may improve performance of the golf club head by removing weight from the interior wall and thereby lowering the CG and/or increasing the MOI of the golf club head. A golf club head **4200** having a front pocket **4276** with an interior wall **4277** may be more durable than a golf club head that lacks an interior wall and instead has a thru-hole in a front portion to receive a separate face portion. A golf club head **4200** having a front pocket **4276** with an interior wall **4277** may be easier to join a separate face portion **4575** to than a golf club head that lacks an interior wall and instead has a thru-hole in a front portion to receive a separate face portion. The apparatus, methods, and articles of manufacture described herein are not limited in this regard.

[0202] The face portion **4575** may include a front surface **4591**, a rear surface **4593**, an outer perimeter edge **4590**, an inner perimeter edge **4594**, and a perimeter surface **4592**. The perimeter surface **4592** may extend between the outer perimeter edge **4590** and the inner perimeter edge **4594**. In one example, the face portion **4575** may have a thickness between and including 0.080 and 0.120. In another example, the face portion **4575** may have a thickness between and including 0.090 and 0.110 inch. In still another example, the face portion **4575** may have a thickness between and including 0.095 and 0.105 inch. In yet another example, the face portion **4575** may have a thickness of less than 0.115 inch. The apparatus, methods, and articles of manufacture described herein are not limited in this regard.

[0203] A gap **4615** may exist between the outer perimeter edge **4590** of the face portion **4575** and the outer perimeter edge **4281** of the front pocket **4276**. In one example, the gap may be a V-shaped gap to enhance weld penetration. During manufacturing, the gap **4615** may be entirely or partially filled with weld material **4815** during a welding process in which the face portion **4575** is joined to the front portion **4270**. A sanding or polishing process may follow in which excess weld material is removed to produce a smooth surface across the front portion **4270** of the golf club head **4200**. The apparatus, methods, and articles of manufacture described herein are not limited in this regard.

[0204] The face portion **4575** may be made partially or entirely of an aluminum-based material, a magnesium-type material, a steel-based material, a titanium-based material, any combination thereof, or any other suitable material. In another example, face portion **4575** may be made partially or entirely of a non-metal material such as a ceramic material, a composite material, any combination thereof, or any other suitable material. The material of the face portion **4575** may have a density of at least 4 grams per cubic centimeter. The material of the face portion **4575** may have a density of at least 4.5 grams per cubic centimeter. The material of the face portion **4575** may have a higher density than the material of the interior wall **4277** of the front pocket **4276**. The material of the face portion **4575** may be a forged material. The material of the face portion **4575** may be a forged titanium material. The material of the face portion **4575** may have a higher yield strength than the material of the interior wall **4277** of the front pocket **4276**. In one example, the material of the face portion **4575** may have a yield strength that is at least 40% higher than the material of the interior wall **4277** of the front pocket **4276**. In another example, the material of the face portion **4575** may have a yield strength that is at least 45% higher than the material of the interior wall **4277** of the front pocket **4276**. In yet another example, the material of the face portion **4575** may have a yield strength that is at least 50% higher than the material of the interior wall **4277** of the front pocket **4276**. The apparatus, methods, and articles of manufacture described herein are not limited in this regard.

[0205] In the example of FIG. **49**, a golf club head **4900** may include a body portion **4910** having a top portion **4930**, a crown portion (not shown), a bottom portion **4940**, a toe portion **4950**, a heel portion **4960**, a front portion **4970**, and a rear portion **4980**. The example of FIG. **49** is shown prior to installation of a crown portion and a face portion. The example of FIG. **49** could be fitted with any of the crown portions disclosed herein, such as the crown portion **135** shown in FIG. **1**. The bottom portion **4940** may include a skirt portion **4990** defined as a side portion of the golf club head **4900** between the top portion **4930** and the bottom portion **4940** excluding the front portion **4970** and extending across a periphery of the golf club head **4900** from the toe portion **4950**, around the rear portion **4980**, and to the heel portion **4960**. Alternatively, the golf club head **4900** may not include the skirt portion **4990**. The body portion **4910** may also include a hosel portion **4965** configured to receive a shaft portion (not shown). The hosel portion **4965** may be similar in many respects to any of the hosel portions described herein. The hosel portion **4965** may include an interchangeable hosel sleeve. Alternatively, the body portion **4910** may include a bore instead of the hosel portion **4965**. The body portion **4910** may be made partially or entirely of an aluminum-based material, a magnesium-type material, a steel-based material, a titanium-based material, any combination thereof, or any other suitable material. In another example the body portion **4910** may be made partially or entirely of a non-metal material such as a ceramic material, a composite material, any combination thereof, or any other

suitable material. The apparatus, methods, and articles of manufacture described herein are not limited in this regard.

[0206] The golf club head **4900** may include a front pocket **4976** formed in the front portion **4970**. As shown in FIG. **49**, an interior wall **4977** of the front pocket may include a plurality of openings resulting in an X-shaped interior wall portion. The interior wall **4977** may include a first interior wall portion **4901** extending diagonally across the front pocket **4976** and intersecting with a second interior wall portion **4902** extending diagonally across the front pocket **4976**. The interior wall **4977** may include a first opening **4903** on a toe side of the front pocket **4976**. The interior wall **4977** may include a second opening **4904** on a heel side of the front pocket **4976**. The interior wall **4977** may include a third opening **4905** above a center point of the front pocket **4976**. The interior wall **4977** may include a fourth opening **4906** below a center point of the front pocket **4976**. The apparatus, methods, and articles of manufacture described herein are not limited in this regard.

[0207] The golf club head **4900** of FIG. **49** may include any of the features of the various golf club heads described herein. The golf club head **4900** may include a polymer insert on an inner surface of the bottom portion **4940** similar to the insert **3665** in FIG. **36**. The golf club head **4900** may include a protruding portion similar to the protruding portion **141** in FIGS. **1-15**. The golf club head **4900** may include a weight port region similar to the weight port region **230** in FIGS. **1-15**. The golf club head **4900** may include a plurality of weight portions similar to the set of weight portions **261** (generally shown as weight portions **262**, **263**, **264**, **265**, **266**, and **267**) in FIGS. **1-15**. The golf club head **4900** may include a crown portion similar to any of the crown portions (e.g. **135**, **1835**, **3935**, **4035**, **4135**) described herein. The golf club head **4900** may be fitted with any of the face portions (e.g. **4575**, **5375**, **5475**, **5575**) described herein. The apparatus, methods, and articles of manufacture described herein are not limited in this regard.

[0208] In the example of FIG. **51**, a golf club head **5100** may include a body portion **5110** having a top portion **5130**, a crown portion (not shown), a bottom portion **5140**, a toe portion **5150**, a heel portion **5160**, a front portion **5170**, and a rear portion **5180**. The example of FIG. **51** is shown prior to installation of a crown portion and a face portion. The example of FIG. **51** could be fitted with any of the crown portions disclosed herein, such as the crown portion **135** shown in FIG. **1**. The bottom portion **5140** may include a skirt portion **5190** defined as a side portion of the golf club head **5100** between the top portion **5130** and the bottom portion **5140** excluding the front portion **5170** and extending across a periphery of the golf club head **5100** from the toe portion **5150**, around the rear portion **5180**, and to the heel portion **5160**. Alternatively, the golf club head **5100** may not include the skirt portion **5190**. The body portion **5110** may also include a hosel portion **5165** configured to receive a shaft portion (not shown). The hosel portion **5165** may be similar in many respects to any of the hosel portions described herein. The hosel portion **5165** may include an interchangeable hosel sleeve. Alternatively, the body portion **5110** may include a bore instead of the hosel portion **5165**. The body portion **5110** may be made partially or entirely of an aluminum-based material, a magnesium-type material, a steel-based material, a titanium-based material, any combination thereof, or any other suitable material. In another example the body portion **5110** may be made partially or entirely of a non-metal material such as a ceramic material, a composite material, any combination thereof, or any other suitable material. The apparatus, methods, and articles of manufacture described herein are not limited in this regard.

[0209] The golf club head **5100** may include a front pocket formed in the front portion **5170**. As shown in FIG. **51**, an interior wall **5177** may include a plurality of openings resulting in a vertical interior wall portion **5101**. The interior wall **5177** may include a first opening **5102** on a toe side of the front pocket **5176**. The interior wall **5177** may include a second opening **5103** on a heel side of the front pocket **5176**. The apparatus, methods, and articles of manufacture described herein are not limited in this regard.

[0210] The golf club head **5100** of FIG. **51** may include any of the features of the various golf club heads described herein. The golf club head **5100** may include a polymer insert on an inner surface of the bottom portion **5140** similar to the insert **3665** in FIG. **36**. The golf club head **5100** may include a protruding portion similar to the protruding portion **141** in FIGS. **1-15**. The golf club head **5100** may include a weight port region similar to the weight port region **230** in FIGS. **1-15**. The golf club head **5100** may include a plurality of weight portions similar to the set of weight portions **261** (generally shown as weight portions **262**, **263**, **264**, **265**, **266**, and **267**) in FIGS. **1-15**. The golf club head **5100** may include a crown portion similar to any of the crown portions (e.g. **135**, **1835**, **3935**, **4035**, **4135**) described herein. The golf club head **5100** may be fitted with any of the face portions (e.g. **4575**, **5375**, **5475**, **5575**) described herein. The apparatus, methods, and articles of manufacture described herein are not limited in this regard.

[0211] In the example of FIG. **52**, a golf club head **5200** may include a body portion **5210** having a top portion **5230**, a crown portion (not shown), a bottom portion **5240**, a toe portion **5250**, a heel portion **5260**, a front portion **5270**, and a rear portion **5280**. The example of FIG. **52** is shown prior to installation of a crown portion and a face portion. The example of FIG. **52** could be fitted with any of the crown portions disclosed herein, such as the crown portion **135** shown in FIG. **1**. The bottom portion **5240** may include a skirt portion **5290** defined as a side portion of the golf club head **5200** between the top portion **5230** and the bottom portion **5240** excluding the front portion **5270** and extending across a periphery of the golf club head **5200** from the toe portion **5250**, around the rear portion **5280**, and to the heel portion **5260**. Alternatively, the golf club head **5200** may not include the skirt portion **5290**. The body portion **5210** may also include a hosel portion **5265** configured to receive a shaft portion (not shown). The hosel portion **5265** may be similar in many respects to any of the hosel portions described herein. The hosel portion **5265** may include an interchangeable hosel sleeve. Alternatively, the body portion **5210** may include a bore instead of the hosel portion **5265**. The body portion **5210** may be made partially or entirely of an aluminum-based material, a magnesium-type material, a steel-based material, a titanium-based material, any combination thereof, or any other suitable material. In another example the body portion **5210** may be made partially or entirely of a non-metal material such as a ceramic material, a composite material, any combination thereof, or any other suitable material. The apparatus, methods, and articles of manufacture described herein are not limited in this regard.

[0212] The golf club head **5200** may include a front pocket formed in the front portion **5270**. As shown in FIG. **52**, an

interior wall **5277** may include a plurality of openings resulting in a horizontal interior wall portion **5201**. The interior wall **5277** may include a first opening **5202** above a center point of the front pocket **5276**. The interior wall **5277** may include a second opening **5203** below a center point of the front pocket **5276**. The apparatus, methods, and articles of manufacture described herein are not limited in this regard.

[0213] The golf club head **5200** of FIG. **52** may include any of the features of the various golf club heads described herein. The golf club head **5200** may include a polymer insert on an inner surface of the bottom portion **5240** similar to the insert **3665** in FIG. **36**. The golf club head **5200** may include a protruding portion similar to the protruding portion **141** in FIGS. **1-15**. The golf club head **5200** may include a weight port region similar to the weight port region **230** in FIGS. **1-15**. The golf club head **5200** may include a plurality of weight portions similar to the set of weight portions **261** (generally shown as weight portions **262**, **263**, **264**, **265**, **266**, and **267**) in FIGS. **1-15**. The golf club head **5200** may include a crown portion similar to any of the crown portions (e.g. **135**, **1835**, **3935**, **4035**, **4135**) described herein. The golf club head **5200** may be fitted with any of the face portions (e.g. **4575**, **5375**, **5475**, **5575**) described herein. The apparatus, methods, and articles of manufacture described herein are not limited in this regard.

[0214] The front surface **4591** and the rear surface **4593** of the face portion **4575** may be substantially flat, as shown in FIGS. **45-48**. The face portion **4575** may have a substantially uniform thickness. In other examples, the rear surface of the face portion may have one or more protrusions or recesses to enhance performance. For example, a face portion **5375** may have an X-shaped protrusion on a rear surface **5393**, as shown in FIG. **53**. The X-shaped protrusion may include a first protrusion **5301** extending from the rear surface **5393** and intersecting with a second protrusion **5302** extending from the rear surface **5393**. The face portion **5375** may include a front perimeter edge **5390**, a rear perimeter edge **5394**, and a perimeter surface **5392** extending between the front perimeter edge **5390** and the rear perimeter edge **5394**. In another example, a face portion **5475** may have a cylindrical protrusion **5401** extending from a rear surface **5493**, as shown in FIG. **54**. A cylindrical recess **5402** may be provided within the cylindrical protrusion **5401**. The face portion **5475** may include a front perimeter edge **5490**, a rear perimeter edge **5494**, and a perimeter surface **5492** extending between the front perimeter edge **5490** and the rear perimeter edge **5494**. In yet another example, a rear surface **5593** may include a recess **5502**, as shown in FIG. **55**. The face portion may include an annular protrusion **5501**. The face portion **5575** may include a front perimeter edge **5590**, a rear perimeter edge **5594**, and a perimeter surface **5592** extending between the front perimeter edge **5590** and the rear perimeter edge **5594**. The protrusions and recesses described herein may improve performance of the face portion. The protrusions and recesses described herein may reduce weight of the face portion. The apparatus, methods, and articles of manufacture described herein are not limited in this regard.

[0215] The entire rear surface **4593** of the face portion **4575** may contact the interior wall **4277** of the front pocket **4276**, as shown in FIG. **48**. In another example, only a portion of the rear surface **4593** of the face portion **4575** may contact the interior wall **4277** of the front pocket **4276**. In yet another example, the rear surface **4593** of the face portion **4575** may not contact the interior wall **4277** of the front pocket **4276**. In examples where the rear surface **4593** of the face portion **4575** only partially contacts the interior surface **4293** or does not contact the interior surface **4293**, a face cavity (not shown) may exist within the front pocket **4276** between the rear surface **4593** of the face portion **4575** and the interior wall **4277** of the front pocket **4276**. The face cavity may extend in a front-to-rear direction from the rear surface **4593** of the face portion **4575** to the interior surface **4278** of the front pocket **4276**. In one example, the face cavity may have a depth, measured front-to-rear, between and including 0.020 inch and 0.250 inch. In another example, the face cavity may have a depth, measured front-to-rear, between and including 0.030 inch and 0.110 inch. In yet another example, the face cavity may have a depth, measure front-to-rear, of less than 0.030 inch. In still another example, the face cavity may have a depth, measured front-to-rear, of greater than 0.250 inch. The apparatus, methods, and articles of manufacture described herein are not limited in this regard.

[0216] The face cavity may include a filler material. In one example, the face cavity may be fully filled with the filler material. In another example, the face cavity may be partially filled with the filler material. In yet another example, the face cavity may not be filled with the filler material. The apparatus, methods, and articles of manufacture described herein are not limited in this regard.

[0217] The filler material may be an elastic polymer or elastomer material (e.g., a viscoelastic urethane polymer material such as Sorbothane® material manufactured by Sorbothane, Inc., Kent, Ohio), a thermoplastic elastomer material (TPE), a thermoplastic polyurethane material (TPU), and/or other suitable types of materials to absorb shock, isolate vibration, and/or dampen noise. In another example, the filler material may be a high density ethylene copolymer ionomer, a fatty acid modified ethylene copolymer ionomer, a highly amorphous ethylene copolymer ionomer, an ionomer of ethylene acid acrylate terpolymer, an ethylene copolymer comprising a magnesium ionomer, an injection moldable ethylene copolymer that may be used in conventional injection molding equipment to create various shapes, an ethylene copolymer that can be used in conventional extrusion equipment to create various shapes, and/or an ethylene copolymer having high compression and low resilience similar to thermoset polybutadiene rubbers. For example, the ethylene copolymer may include any of the ethylene copolymers associated with DuPont™ High-Performance Resin (HPF) family of materials (e.g., DuPont™ HPF AD1172, DuPont™ HPF AD1035, DuPont® HPF 1000 and DuPont™ HPF 2000), which are manufactured by E.I. du Pont de Nemours and Company of Wilmington, Del. The DuPont™ HPF family of ethylene copolymers are injection moldable and may be used with conventional injection molding equipment and molds, provide low compression, and provide high resilience. The apparatus, methods, and articles of manufacture described herein are not limited in this regard.

[0218] The filler material may be added to the front pocket **4276** prior to joining the face portion **4575** to the front portion **4270**. Alternately, the filler material may be added to the face cavity after joining the face portion **4575** to the front portion **4270**. In examples where the filler material is added to the face cavity after the face portion **4575** is installed in

the front pocket **4276**, the filler material may be added to the front pocket **4276** through one or more access holes. An access hole (not shown) may extend through any bounding surface of the face cavity. For instance, the access hole may extend from the interior of the golf club head **4200** through the interior wall **4277** of the front pocket **4276**. Alternately, the access hole may be provided through the perimeter surface **4292** of the front pocket **4276** of through the face portion **4575**. One or more port holes may be provided to allow air to escape from the face cavity during the filling process. A port hole may extend through any bounding surface of the face cavity. The apparatus, methods, and articles of manufacture described herein are not limited in this regard.

[0219] The filler material may be a liquid, solid, gas, or combination thereof. In one example, the filler material may be a solid filler material with gas bubbles trapped within the solid filler material. In another example, the filler material may be a solution of liquid filler material having suspended solid particles. Where the filler material includes a liquid or gaseous filler material, the face cavity may be a sealed cavity. Where the filler material includes a liquid or gaseous filler material, the contents of the face cavity may be pressurized to a pressure greater than atmospheric pressure. In one example, the filler material may be pressurized to a pressure of between and including 1.1 atm and 25 atm. In another example, the filler material may be pressurized to a pressure of between and including 1.1 atm and 10 atm. In still another example, the filler material may be pressurized to a pressure of between and including 1.1 atm and 5 atm. The apparatus, methods, and articles of manufacture described herein are not limited in this regard.

[0220] Any of the golf club heads described herein may be part of a golf club. The golf club may include a shaft (not shown) extending from the golf club head. The shaft may have a first end attached to a hosel of the golf club head and a second end opposite the first end. The golf club may include a grip at or proximate to the second end of the shaft. The shaft may be formed from metal material, composite material, or any other suitable material or combination of materials. The grip may be formed from rubber material, polymer material, or any other suitable material or combination of materials. The apparatus, methods, and articles of manufacture described herein are not limited in this regard.

[0221] The apparatus, methods, and articles of manufacture described herein may include one or more club identifiers (e.g., a serial number, a matrix barcode, a brand name, a model, a club number, a loft angle, a character, etc.). For example, the golf club head may include a visual indicator such as a club number to identify the type of golf club. In one example, the club number may correspond to the loft angle of the golf club head (e.g., 3, 4, 5, 6, 7, 8, or 9). In one example, a 7-iron type golf club head may be marked with "7". In another example, the golf club head may include the loft angle. For example, a 54-degree wedge type golf club head may be marked "54." In yet another example, a 10.5-degree driver type golf club head may be marked "10.5." The club identifier may be a trademark to identify a brand or a model of the golf club head. The club identifier may be another type of visual indicator such as a product number or a serial number to identify the golf club head **100** as authentic equipment, to track inventory, or to distinguish the golf club head from fake or counterfeit products. Alternatively, the club identifier may be a digital signature or a machine-readable optical representation of information or data about the golf club head (e.g., numeric character(s), alphanumeric character(s), byte(s), a one-dimensional barcode such as a Universal Product Code (UPC), a two-dimensional barcode such as a Quick Response (QR) code, etc.). The club identifier may be placed at various locations on the golf club head (e.g., the hosel portion, the face portion, the sole portion, etc.) using various methods (e.g., laser etched, stamped, cast, or molded onto the golf club head). For example, the club identifier may be a serial number laser etched onto the hosel portion of the golf club head. Instead of being an integral part of the golf club head, the club identifier may be a separate component coupled to the golf club head (e.g., a label adhered via an adhesive or an epoxy).

[0222] The terms "and" and "or" may have both conjunctive and disjunctive meanings. The terms "a" and "an" are defined as one or more unless this disclosure indicates otherwise. The term "coupled," and any variation thereof, refers to directly or indirectly connecting two or more elements chemically, mechanically, and/or otherwise. The phrase "removably connected" is defined such that two elements that are "removably connected" may be separated from each other without breaking or destroying the utility of either element.

[0223] The term "substantially" when used to describe a characteristic, parameter, property, or value of an element may represent deviations or variations that do not diminish the characteristic, parameter, property, or value that the element may be intended to provide. Deviations or variations in a characteristic, parameter, property, or value of an element may be based on, for example, tolerances, measurement errors, measurement accuracy limitations and other factors. The term "proximate" is synonymous with terms such as "adjacent," "close," "immediate," "nearby," "neighboring," etc., and such terms may be used interchangeably as appearing in this disclosure.

[0224] The apparatus, methods, and articles of manufacture described herein may be implemented in a variety of embodiments, and the foregoing description of some of these embodiments does not necessarily represent a complete description of all possible embodiments. Instead, the description of the drawings, and the drawings themselves, disclose at least one embodiment, and may disclosure alternative embodiments.

[0225] As the rules of golf may change from time to time (e.g., new regulations may be adopted or old rules may be eliminated or modified by golf standard organizations and/or governing bodies such as the USGA, the R&A, etc.), golf equipment related to the apparatus, methods, and articles of manufacture described herein may be conforming or non-conforming to the rules of golf at any particular time. Accordingly, golf equipment related to the apparatus, methods, and articles of manufacture described herein may be advertised, offered for sale, and/or sold as conforming or non-conforming golf equipment. The apparatus, methods, and articles of manufacture described herein are not limited in this regard.

[0226] Further, while the above examples may be described with respect to golf clubs, the apparatus, methods and articles of manufacture described herein may be applicable to other suitable types of sports equipment such as a fishing pole, a hockey stick, a ski pole, a tennis racket, etc.

[0227] Although certain example apparatus, methods, and articles of manufacture have been described herein, the scope of coverage of this disclosure is not limited thereto. On the contrary, this disclosure covers all apparatus, methods, and articles of articles of manufacture fairly falling within the scope of the appended claims either literally or under the doctrine of equivalents.

What is claimed is:

1. A golf club head comprising:

a body portion comprising a front portion, a rear portion, a toe portion, a heel portion, a top portion, and a bottom portion, the front portion comprising:

a front pocket formed in the front portion, the front pocket defined by a perimeter surface and an interior surface, the interior surface of the front pocket defining a surface of an interior wall, the interior wall having a thickness between and including 0.020 inch and 0.030 inch, the interior wall comprising a first material having a first yield strength; and

a face portion positioned in the front pocket, the face portion comprising a second material having a second yield strength, the face portion having a front surface and a rear surface, at least a portion of the rear surface of the face portion contacting the interior surface of the front pocket, the face portion having a thickness between and including 0.080 inch and 0.120 inch,

wherein a perimeter surface of the face portion is joined to the perimeter surface of the front pocket, and

wherein the second yield strength is at least 40% greater than the first yield strength.

2. A golf club head as defined in claim **1**, wherein the first material comprises a cast titanium material, and the second material comprises a forged titanium material.

3. A golf club head as defined in claim **1** further comprising a first opening in the interior wall and a second opening in the interior wall, wherein the first opening is located above a center point of the front pocket and the second opening is located below a center point of the front pocket.

4. A golf club head as defined in claim **1** further comprising a first opening in the interior wall and a second opening in the interior wall, wherein the first opening is located on a heel side of the front pocket and the second opening is located on a toe side of the front pocket.

5. A golf club head as defined in claim **1**, wherein the face portion comprises an X-shaped protrusion on the rear surface of the face portion, the X-shaped protrusion comprising a first protrusion extending from the rear surface and intersecting with a second protrusion extending from the rear surface.

6. A golf club head as defined in claim **1**, wherein the first material has a density greater than 4.4 grams per cubic centimeter, and the second material has a density greater than 4.4 grams per cubic centimeter.

7. A golf club head comprising:

a body portion comprising a front portion, a rear portion, a toe portion, a heel portion, a top portion, and a bottom portion;

a front pocket formed in the front portion, the front pocket comprising an interior wall, the interior wall comprising a first material having a first yield strength; and

a face portion positioned in the front pocket and joined to the front portion, the face portion comprising a second material having a second yield strength,

wherein the first material is a cast titanium material,

wherein the second material is a forged titanium material, and

wherein the second yield strength is at least 40% greater than the first yield strength.

8. A golf club head as defined in claim **7**, wherein the second material has a yield strength at least 45% greater than a yield strength of the first material.

9. A golf club head as defined in claim **7**, wherein the face portion is joined to the front portion by a weld bead extending around a front perimeter edge of the face portion.

10. A golf club head as defined in claim **7**, wherein the front pocket has a depth of less than 0.110 inch.

11. A golf club head as defined in claim **7** further comprising a gap between a side surface of the face portion and a side surface of the front pocket, wherein the gap is at least partially filled with a weld material.

12. A golf club head as defined in claim **7** further comprising a V-shaped gap between a side surface of the face portion and a side surface of the front pocket, wherein the V-shaped gap is at least partially filled with a weld material.

13. A golf club head as defined in claim **7** further comprising a polymer insert on an inner surface of the bottom portion.

14. A golf club head comprising:

a body portion comprising a front portion, a rear portion, a toe portion, a heel portion, a bottom portion, and a top portion having an opening;

a front pocket formed in the front portion, the front pocket defined by an interior wall and a perimeter surface; and

a face portion comprising a front surface, a rear surface, a front perimeter edge, a rear perimeter edge, and a perimeter surface extending between the front perimeter edge and the rear perimeter edge, the face portion positioned in the front pocket, the rear surface of the face portion in contact with the interior wall of the front pocket,

wherein the interior wall comprises a first titanium-based material and the face portion comprises a second titanium-based material, the second titanium-based material having a yield strength at least 40% greater than a yield strength of the first titanium-based material.

15. A golf club head as defined in claim **14**, wherein the second titanium-based material has a yield strength at least 50% greater than a yield strength of the first titanium-based material.

16. A golf club head as defined in claim **14** further comprising a weld between a perimeter surface of the face portion and the perimeter surface of the front pocket.

17. A golf club head as defined in claim **14** further comprising a crown portion attached to the top portion and covering the opening, the crown portion comprising:

an upper plurality of composite layers;

a lower plurality of composite layers;

a crown stiffening portion disposed between the upper plurality of composite layers and the lower plurality of composite layers, the crown stiffening portion comprising:

a first integral rib extending from a front perimeter of the crown portion toward a rear perimeter of the

crown portion, the first integral rib comprising a plurality of composite layers; and

a second integral rib extending from the front perimeter of the crown portion toward the rear perimeter of the crown portion, the second integral rib comprising a plurality of composite layers.

18. A golf club head as defined in claim **14** further comprising a crown portion attached to the top portion and covering the opening, the crown portion comprising:

an upper plurality of composite layers;

a lower plurality of composite layers; and

a crown stiffening portion disposed between the upper plurality of composite layers and the lower plurality of composite layers, the crown stiffening portion comprising:

a toe-side integral rib extending from a front perimeter of the crown portion to a rear perimeter of the crown portion, the toe-side integral rib comprising a plurality of composite layers;

a heel-side integral rib extending from the front perimeter of the crown portion to the rear perimeter of the crown portion, the heel-side integral rib comprising a plurality of composite layers; and

a central integral rib extending along the front perimeter of the crown portion and connecting the toe-side integral rib to the heel-side integral rib, the central integral rib comprising a plurality of composite layers.

19. A golf club head as defined in claim **14** further comprising a crown portion attached to the top portion and covering the opening, the crown portion comprising:

an upper plurality of composite layers;

a lower plurality of composite layers;

a first integral rib disposed between the upper plurality of composite layers and the lower plurality of composite layers, the first integral rib comprising a plurality of composite layers arranged in a stack, wherein at least one composite layer in the stack is wider than an adjacent composite layer in the stack; and

a second integral rib disposed between the upper plurality of composite layers and the lower plurality of composite layers, the second integral rib comprising a plurality of composite layers arranged in a stack, wherein at least one composite layer in the stack is wider than an adjacent composite layer in the stack.

20. A golf club head as defined in claim **14**, wherein the interior wall has a thickness of less than or equal to 0.25 inch, and the face portion has a thickness of less than or equal to 0.105 inch.

* * * * *