US010451896B2

(12) **United States Patent**
Havenstrite et al.

(10) **Patent No.: US 10,451,896 B2**
(45) **Date of Patent: Oct. 22, 2019**

(54) **CONTACT LENS WITH A HYDROPHILIC LAYER**

(71) Applicant: **Tangible Science, LLC**, Menlo Park, CA (US)

(72) Inventors: **Karen L. Havenstrite**, San Francisco, CA (US); **Victor W. McCray**, San Jose, CA (US); **Brandon M. Felkins**, Half Moon Bay, CA (US); **Douglas M. Ackermann**, San Francisco, CA (US); **Garrett C. Smith**, San Francisco, CA (US); **Paul A. Cook**, Palo Alto, CA (US); **Evan S. Luxon**, San Francisco, CA (US); **Andrew A. McGibbon**, San Francisco, CA (US)

(73) Assignee: **Tangible Science, LLC**, Menlo Park, CA (US)

(*) Notice: Subject to any disclaimer, the term of this patent is extended or adjusted under 35 U.S.C. 154(b) by 0 days.

(21) Appl. No.: **15/206,103**

(22) Filed: **Jul. 8, 2016**

(65) **Prior Publication Data**

US 2016/0320635 A1 Nov. 3, 2016

Related U.S. Application Data

(63) Continuation of application No. 13/975,868, filed on Aug. 26, 2013, now Pat. No. 9,395,468.

(Continued)

(51) **Int. Cl.**

G02C 7/04	(2006.01)
G02B 1/04	(2006.01)

(Continued)

(52) **U.S. Cl.**

CPC ***G02C 7/049*** (2013.01); ***C08L 5/08*** (2013.01); ***C08L 71/00*** (2013.01); ***C09D 105/08*** (2013.01);

(Continued)

(58) **Field of Classification Search**

CPC G02C 7/049; C08L 5/08; C08L 71/00; C09D 105/08; C09D 171/00; G02B 1/043

(Continued)

(56) **References Cited**

U.S. PATENT DOCUMENTS

2,976,576	A	3/1961	Wichterle et al.
3,408,429	A	10/1968	Otto

(Continued)

FOREIGN PATENT DOCUMENTS

CN	1180416	A	4/1998
CN	1233191	A	10/1999

(Continued)

OTHER PUBLICATIONS

Havenstrite et al.; U.S. Appl. No. 15/325,678 entitled "Contact lenses and methods of making of making contact lenses," filed Jan. 11, 2017.

(Continued)

Primary Examiner — James R Greece
(74) *Attorney, Agent, or Firm* — Shay Glenn LP

(57) **ABSTRACT**

Embodiments of the technology relate to a contact lens having a core that is covalently coated by a hydrogel layer, and to methods of making such a lens. In one aspect, embodiments provide for a coated contact lens comprising a lens core comprising an outer surface; and a hydrogel layer covalently attached to at least a portion of the outer surface, the hydrogel layer adapted to contact an ophthalmic surface, wherein the hydrogel layer comprises a hydrophilic polymer population having a first PEG species and a second PEG species, the first PEG species being at least partially cross-linked to the second PEG species.

42 Claims, 48 Drawing Sheets

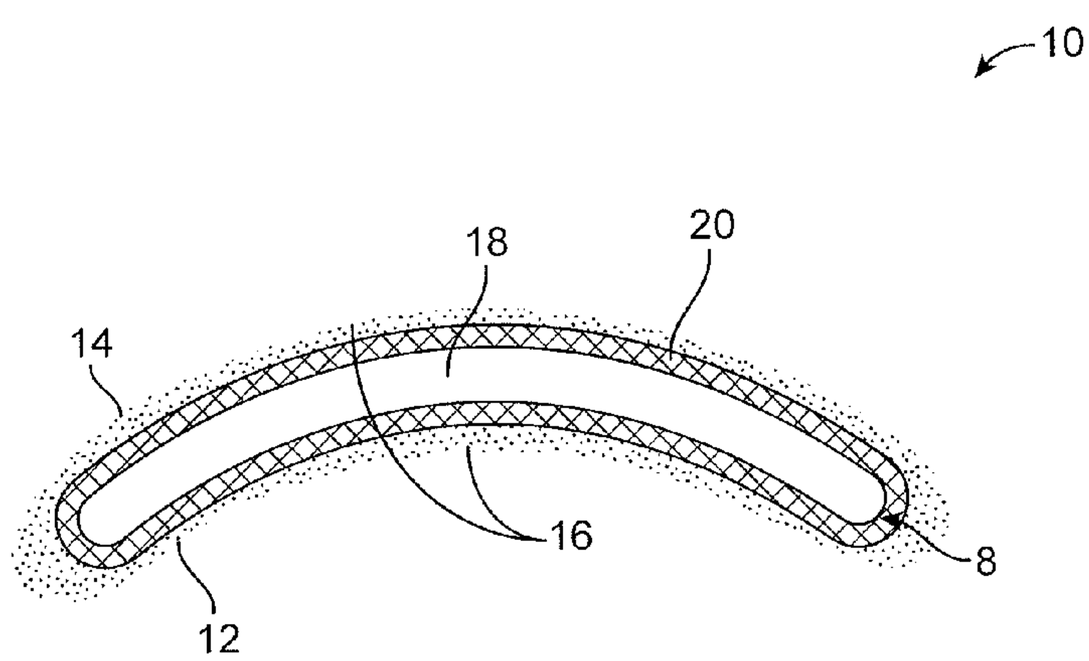

Related U.S. Application Data

(60) Provisional application No. 61/693,689, filed on Aug. 27, 2012, provisional application No. 61/800,835, filed on Mar. 15, 2013, provisional application No. 61/800,959, filed on Mar. 15, 2013, provisional application No. 61/834,813, filed on Jun. 13, 2013.

(51) **Int. Cl.**
C08L 5/08 (2006.01)
C08L 71/00 (2006.01)
C09D 105/08 (2006.01)
C09D 171/00 (2006.01)

(52) **U.S. Cl.**
CPC ***C09D 171/00*** (2013.01); ***G02B 1/043*** (2013.01); *C08L 2203/02* (2013.01); *C08L 2205/025* (2013.01); *G02C 2202/16* (2013.01)

(58) **Field of Classification Search**
USPC 359/159.33
See application file for complete search history.

(56) **References Cited**

U.S. PATENT DOCUMENTS

4,136,250 A 1/1979 Mueller et al.
4,143,949 A 3/1979 Chen
4,153,641 A 5/1979 Deichert et al.
4,182,822 A 1/1980 Chang
4,189,546 A 2/1980 Deichert et al.
4,254,248 A 3/1981 Friends
4,259,467 A 3/1981 Keogh et al.
4,260,725 A 4/1981 Keogh et al.
4,261,875 A 4/1981 Leboeuf
4,276,402 A 6/1981 Chromecek et al.
4,327,203 A 4/1982 Deichert et al.
4,338,419 A 7/1982 Korb et al.
4,341,889 A 7/1982 Deichert et al.
4,343,927 A 8/1982 Chang
4,347,198 A 8/1982 Ohkada et al.
4,355,147 A 10/1982 Deichert et al.
4,444,711 A 4/1984 Schad
4,460,534 A 7/1984 Boehm et al.
4,468,229 A * 8/1984 Su D06P 3/008 351/159.24
4,486,577 A 12/1984 Mueller et al.
4,543,398 A 9/1985 Bany et al.
4,553,975 A * 11/1985 Su D06P 3/008 351/159.33
4,559,059 A * 12/1985 Su D06P 3/008 351/159.24
4,605,712 A 8/1986 Mueller et al.
4,661,575 A 4/1987 Tom
4,684,538 A 8/1987 Klemarczyk
4,703,097 A 10/1987 Wingler et al.
4,833,218 A 5/1989 Lee
4,837,289 A 6/1989 Mueller et al.
4,929,250 A 5/1990 Hung et al.
4,954,586 A 9/1990 Toyoshima et al.
4,954,587 A 9/1990 Mueller
5,010,141 A 4/1991 Mueller
5,034,461 A 7/1991 Lai et al.
5,039,761 A 8/1991 Ono et al.
5,070,170 A 12/1991 Robertson et al.
5,098,445 A 3/1992 Hung et al.
5,135,297 A 8/1992 Valint
5,135,965 A 8/1992 Tahan
5,196,458 A 3/1993 Nunez et al.
5,219,965 A 6/1993 Valint et al.
5,260,000 A 11/1993 Nandu et al.
5,326,584 A 7/1994 Kamel et al.
5,346,946 A 9/1994 Yokoyama et al.
5,352,714 A 10/1994 Lai et al.
5,358,995 A 10/1994 Lai et al.
5,409,731 A 4/1995 Nakagawa et al.
5,416,132 A 5/1995 Yokoyama et al.
5,446,090 A 8/1995 Harris
5,451,617 A 9/1995 Lai et al.
5,486,579 A 1/1996 Lai et al.
5,508,317 A 4/1996 Muller
5,583,463 A 12/1996 Merritt
5,645,882 A 7/1997 Llanos
5,674,942 A 10/1997 Hill et al.
5,681,871 A 10/1997 Molock et al.
5,760,100 A 6/1998 Nicolson et al.
5,805,264 A 9/1998 Janssen et al.
5,843,346 A 12/1998 Morrill
5,874,500 A 2/1999 Rhee et al.
5,894,002 A 4/1999 Boneberger et al.
5,962,548 A 10/1999 Vanderlaan et al.
5,981,675 A 11/1999 Valint et al.
6,019,472 A 2/2000 Koester et al.
6,022,553 A 2/2000 Anders et al.
6,039,913 A 3/2000 Hirt et al.
6,201,065 B1 3/2001 Pathak et al.
6,218,508 B1 4/2001 Kragh et al.
6,309,660 B1 10/2001 Hsu et al.
6,340,465 B1 1/2002 Hsu et al.
6,406,739 B1 * 6/2002 LeBoeuf A61F 2/16 351/159.33
6,428,839 B1 * 8/2002 Kunzler A61L 27/34 351/159.33
6,440,571 B1 * 8/2002 Valint, Jr. A61L 27/34 351/159.33
6,447,920 B1 * 9/2002 Chabrecek C08F 290/00 427/164
6,451,871 B1 9/2002 Winterton et al.
6,458,889 B1 10/2002 Trollsas et al.
6,468,667 B1 10/2002 Chabrecek et al.
6,478,423 B1 * 11/2002 Turner G02B 1/10 351/159.62
6,500,481 B1 * 12/2002 Vanderlaan A61L 27/34 264/1.7
6,599,559 B1 * 7/2003 McGee A61L 27/34 351/159.33
6,623,747 B1 9/2003 Chatelier et al.
6,624,245 B2 9/2003 Wallace et al.
6,627,124 B1 9/2003 Herbrechtsmeier et al.
6,630,243 B2 10/2003 Valint et al.
6,638,563 B2 10/2003 McGee et al.
6,719,929 B2 4/2004 Winterton et al.
6,723,815 B2 4/2004 Callaghan et al.
6,740,116 B2 5/2004 Morcher
6,759,388 B1 7/2004 Marchant et al.
6,762,264 B2 7/2004 Künzler et al.
6,793,973 B2 9/2004 Winterton et al.
6,800,225 B1 10/2004 Hagmann et al.
6,811,259 B2 11/2004 Tucker
6,811,805 B2 11/2004 Gilliard et al.
6,815,074 B2 11/2004 Aguado et al.
6,827,966 B2 12/2004 Qiu et al.
6,852,353 B2 2/2005 Qiu et al.
6,858,248 B2 2/2005 Qiu et al.
6,896,926 B2 5/2005 Qiu et al.
6,940,580 B2 9/2005 Winterton et al.
7,037,517 B2 * 5/2006 Kataoka A61F 2/16 424/423
7,053,150 B2 5/2006 Kozlowski et al.
7,091,283 B2 8/2006 Müller et al.
7,132,475 B2 11/2006 Hubbell et al.
7,247,387 B1 * 7/2007 Huang C08J 7/047 428/447
7,251,519 B2 7/2007 Axelsson et al.
7,276,474 B2 10/2007 Marchant et al.
7,384,590 B2 6/2008 Kelly et al.
7,402,318 B2 7/2008 Morris et al.
7,507,469 B2 3/2009 Mao et al.
7,642,332 B2 1/2010 Kennedy et al.
7,674,478 B2 3/2010 Kataoka et al.
7,695,775 B2 4/2010 Kobrin et al.
7,833,715 B1 * 11/2010 Schweitzer C07H 21/00 435/6.1
7,847,025 B2 12/2010 Liu et al.

(56) **References Cited**

U.S. PATENT DOCUMENTS

7,857,447 B2 * 12/2010 Myung G02B 1/043 351/159.34
7,857,849 B2 * 12/2010 Myung A61F 2/142 351/159.33
7,858,000 B2 12/2010 Winterton
7,942,929 B2 5/2011 Linhardt et al.
7,955,704 B2 6/2011 Lowery et al.
8,071,121 B2 12/2011 Chauhan et al.
8,083,348 B2 12/2011 Linhardt et al.
8,133,580 B2 3/2012 Dias et al.
8,163,302 B2 4/2012 Marchant et al.
8,178,602 B2 5/2012 Mao et al.
8,309,117 B2 11/2012 Rubner et al.
8,357,760 B2 1/2013 Qiu
8,409,599 B2 4/2013 Wu et al.
8,425,926 B2 4/2013 Qiu et al.
8,480,227 B2 * 7/2013 Qiu G02B 1/043 351/159.33
8,790,678 B2 * 7/2014 Elbert A61L 27/18 424/400
8,871,016 B2 10/2014 Trexler et al.
8,871,869 B2 10/2014 Dias et al.
8,906,284 B2 12/2014 Crosby et al.
9,244,195 B2 1/2016 Bauman et al.
9,310,627 B2 * 4/2016 Havenstrite A61B 5/14532
9,358,735 B2 6/2016 Bothe et al.
9,395,468 B2 * 7/2016 Havenstrite G02B 1/043
9,395,627 B2 * 7/2016 Liu G03F 7/0757
2001/0044021 A1 11/2001 Ogawa et al.
2002/0006493 A1 1/2002 Chabrecek et al.
2002/0057417 A1 5/2002 Galin
2002/0086160 A1 7/2002 Qiu et al.
2002/0155222 A1 10/2002 Caron
2003/0008063 A1 1/2003 Chabrecek et al.
2003/0087099 A1 5/2003 Merill et al.
2004/0067365 A1 4/2004 Qiu
2004/0086479 A1 5/2004 Grinstaff et al.
2004/0108607 A1 6/2004 Winterton et al.
2004/0116564 A1 6/2004 Devlin et al.
2004/0142016 A1 * 7/2004 Luthra A61L 27/20 424/423
2004/0181172 A1 9/2004 Carney et al.
2005/0008676 A1 1/2005 Qiu et al.
2005/0053642 A1 3/2005 Ulbricht et al.
2005/0079195 A1 * 4/2005 Kataoka A61F 2/16 424/423
2005/0079197 A1 * 4/2005 Kataoka A61F 2/16 424/423
2005/0129731 A1 6/2005 Horres et al.
2006/0063852 A1 3/2006 Iwata et al.
2006/0275337 A1 12/2006 Cohen et al.
2006/0290882 A1 12/2006 Meyers et al.
2006/0292701 A1 * 12/2006 Huang C08B 37/0021 436/514
2007/0001155 A1 1/2007 Walters et al.
2007/0031498 A1 2/2007 Zong et al.
2007/0082019 A1 * 4/2007 Huang A61L 27/52 424/423
2007/0087113 A1 4/2007 Uilk et al.
2007/0116741 A1 5/2007 Valint et al.
2007/0122540 A1 5/2007 Salamone et al.
2007/0129792 A1 6/2007 Picart et al.
2007/0197681 A1 8/2007 Lowery et al.
2007/0229758 A1 10/2007 Matsuzawa
2008/0002146 A1 1/2008 Stachowski et al.
2008/0015315 A1 1/2008 Chang et al.
2008/0038221 A1 2/2008 Suda et al.
2008/0076851 A1 3/2008 Goldberg et al.
2008/0143003 A1 6/2008 Phelan
2008/0143958 A1 6/2008 Medina et al.
2008/0152685 A1 6/2008 Blackwell et al.
2008/0152800 A1 6/2008 Bothe et al.
2008/0174035 A1 * 7/2008 Winterton B29D 11/00076 264/1.36
2008/0181931 A1 7/2008 Qiu et al.
2008/0203592 A1 8/2008 Qiu et al.
2008/0226922 A1 9/2008 Ferreiro et al.
2008/0231798 A1 9/2008 Zhou et al.
2008/0234457 A1 9/2008 Zhou et al.
2008/0255305 A1 * 10/2008 Brook C07D 207/46 525/103
2009/0060981 A1 3/2009 Chauhan
2009/0081275 A1 3/2009 Rolfes et al.
2009/0123519 A1 5/2009 Rolfes et al.
2009/0155595 A1 6/2009 Lee
2010/0013114 A1 1/2010 Bowers et al.
2010/0069522 A1 3/2010 Linhardt et al.
2010/0099852 A1 4/2010 Cassingham et al.
2010/0114042 A1 5/2010 Dias et al.
2010/0120938 A1 5/2010 Phelan et al.
2010/0140114 A1 6/2010 Pruitt et al.
2010/0149482 A1 6/2010 Ammon et al.
2010/0152708 A1 6/2010 Li et al.
2010/0198168 A1 * 8/2010 Rooijmans A61L 29/085 604/265
2010/0226963 A1 9/2010 Cooper et al.
2010/0249273 A1 9/2010 Scales et al.
2010/0298446 A1 11/2010 Chang et al.
2011/0133350 A1 6/2011 Qiu et al.
2011/0134387 A1 * 6/2011 Samuel G02B 1/043 351/159.33
2011/0177150 A1 * 7/2011 Pathak A61K 35/12 424/422
2011/0189493 A1 8/2011 Ott et al.
2011/0293669 A1 12/2011 Bennett et al.
2011/0293687 A1 12/2011 Bennett et al.
2011/0293688 A1 12/2011 Bennett et al.
2011/0293692 A1 12/2011 Bennett et al.
2011/0293699 A1 12/2011 Bennett et al.
2012/0023869 A1 2/2012 Samuel et al.
2012/0026457 A1 * 2/2012 Qiu G02B 1/043 351/159.33
2012/0026458 A1 * 2/2012 Qiu G02B 1/043 351/159.33
2012/0038888 A1 2/2012 Gu et al.
2012/0049689 A1 3/2012 Bennett et al.
2012/0116019 A1 5/2012 Suzuki et al.
2012/0137635 A1 6/2012 Qiu et al.
2012/0139137 A1 6/2012 Qiu
2012/0147323 A1 6/2012 Domschke
2013/0090344 A1 4/2013 Thakur et al.
2013/0095235 A1 4/2013 Bothe et al.
2013/0118127 A1 5/2013 Kolluru et al.
2013/0162943 A1 6/2013 Goodenough et al.
2013/0176529 A1 7/2013 Li et al.
2013/0188124 A1 7/2013 Li et al.
2014/0155313 A1 6/2014 Eggink et al.
2015/0234204 A1 * 8/2015 Havenstrite A61B 5/14532 351/159.33
2016/0161639 A1 6/2016 Scales et al.
2016/0223836 A1 * 8/2016 Havenstrite G02C 7/049
2017/0160432 A1 * 6/2017 Havenstrite G02B 1/043
2017/0242269 A1 * 8/2017 Havenstrite G02B 1/043
2017/0360994 A1 * 12/2017 Havenstrite A61L 27/34

FOREIGN PATENT DOCUMENTS

CN 1602228 A 3/2005
CN 1961223 A 5/2007
CN 101688042 A 3/2010
CN 101726864 A 6/2010
CN 102323629 A 1/2012
CN 103254436 A 8/2013
CN 103547585 A 1/2014
EP 807140 A1 11/1997
EP 808222 B1 5/1999
EP 1251973 A1 10/2002
EP 1319037 A1 6/2003
EP 0906122 B1 9/2003
EP 1412404 A1 4/2004
EP 1268621 B1 11/2005
EP 0876165 B1 6/2006

(56) **References Cited**

FOREIGN PATENT DOCUMENTS

EP	1744836	A2	1/2007
EP	1427532	B1	2/2007
EP	0918550	B1	4/2007
EP	2061526	A2	5/2009
EP	1261557	B1	11/2009
EP	1458797	B1	12/2009
EP	2187980	A1	5/2010
EP	2219865	A2	8/2010
EP	2389895	A2	11/2011
EP	2443482	A2	4/2012
EP	1355965	B1	9/2012
EP	1932874	B1	2/2013
EP	2461767	B1	5/2013
EP	2455104	B1	7/2013
EP	2624871	A2	8/2013
JP	H09-507784	A	8/1997
JP	2000512677	A	9/2000
JP	2001131271	A	5/2001
JP	2001518528	A	10/2001
JP	2003527890	A	9/2003
JP	2005520703	A	7/2005
JP	2006508720	A	3/2006
JP	2008511870	A	4/2006
WO	WO93/00391	A1	1/1993
WO	WO98/28026	A1	7/1998
WO	WO99/55742	A1	11/1999
WO	WO01/05578	A1	1/2001
WO	WO01/32230	A2	5/2001
WO	WO01/44861	A1	6/2001
WO	WO01/57118	A2	8/2001
WO	WO01/92924	A1	12/2001
WO	WO02/16974	A2	2/2002
WO	WO02/096477	A2	12/2002
WO	WO02/097481	A1	12/2002
WO	WO03/041754	A1	5/2003
WO	WO03/057270	A1	7/2003
WO	WO03/075888	A2	9/2003
WO	WO2004/024203	A1	3/2004
WO	WO2004/025332	A1	3/2004
WO	WO2004/056403	A2	7/2004
WO	WO2004/056404	A2	7/2004
WO	WO2004/080297	A1	9/2004
WO	WO2005/014074	A1	2/2005
WO	WO2005/035607	A1	4/2005
WO	WO2007/002671	A1	1/2007
WO	WO2007/146137	A2	12/2007
WO	WO2008/024071	A1	2/2008
WO	WO2008/079809	A2	7/2008
WO	WO2008/094876	A1	8/2008
WO	WO2008/130604	A2	10/2008
WO	WO2008/156604	A1	12/2008
WO	WO2009/055082	A2	4/2009
WO	WO2009/094368	A1	7/2009
WO	WO2010/003078	A2	1/2010
WO	WO2010/011492	A1	1/2010
WO	WO2010/018293	A1	2/2010
WO	WO2010/056686	A1	5/2010
WO	WO2010/065686	A1	6/2010
WO	WO2010/065960	A2	6/2010
WO	WO2010/103089	A1	9/2010
WO	WO2011/007454	A1	1/2011
WO	WO2011/056761	A1	5/2011
WO	WO2011/071790	A1	6/2011
WO	WO2011/071791	A1	6/2011
WO	WO2012/035598	A1	3/2012
WO	WO2012/149256	A2	4/2012
WO	WO2012/055884	A1	5/2012
WO	WO2012/074859	A1	6/2012
WO	WO2012/082704	A1	6/2012
WO	WO2012/153072	A1	11/2012
WO	WO2013/055746	A1	4/2013
WO	WO2013/074535	A1	5/2013
WO	WO2013/166358	A1	11/2013
WO	WO2015/031196	A1	3/2015

OTHER PUBLICATIONS

Bearinger et al.; P(Aam-co-EG) interpenetrating polymer networks grafted to oxide surfaces: surface characterization, protein adsorption, and cell detachment studies; Langmuir; 13(19); pp. 5175-5183; Sep. 17, 1997.

Bundgaard et al.; N-Sulfonyl imidates as a novel prodrug form for an ester function or a sulfonamide group; J Med Chem; 31(11); pp. 2066-2069; Nov. 1988.

Chang et al.; U.S. Appl. No. 61/180,453 entitled "Actinically-crosslinkable siloxane-containing copolymers," filed May 22, 2009.

Dilsiz et al.; Plasma Polymerization of Selected Organic Compounds; Polymer; 37(2); pp. 333-342; Jan. 1996.

Greene et al.; Protective Groups in Organic Synthesis; 2nd Ed.; John Wiley & Sons; New York, NY; pp. 178-210; (year of pub. sufficiently earlier than effective US filing date and any foreign priority date) 1991.

Hermanson; Chapter 3: The Reactions of Bioconjugation; in Bioconjugate Techniques; 3rd Ed.; Academic Press, San Diego, CA; pp. 229-258; Sep. 2013.

Justynska et al.; U.S. Appl. No. 61/180,449 entitled "Actinically-crosslinkable siloxane-containing copolymers," filed May 22, 2009.

Keana et al.; New Reagents for Photoaffinity Labeling: Synthesis and Photolysis of Functionalized Perfluorophenyl Azides; J. Org. Chem.; 55(11); pp. 3640-3647; May 1990.

Park et al.; Surface modifications of poly(ethylene terephthalate) angioplasty balloons with a hydrophilic poly (acrylamide-co-ethylene glycol) interpenetrating polymer network coating; J. Biomed. Mater. Res.; 53(5); pp. 568-576; Sep. 1, 2000.

Petracek et al.; Hydroxymethylketones as pro-drugs; Annals NY Acad Sci; 507; pp. 353-354; Dec. 1987.

Yamada et al.;Selective modification of aspartic acid-101 in lysozyme by carbodiimide reaction; Biochemistry; 20(17); pp. 4836-4842; Aug. 1981.

Yasuda; Glow discharge polymerization; Journal of Polymer Science: Macromolecular Reviews; 16(1); pp. 199-293; (year of pub. sufficiently earlier than effective US filing date and any foreign priority date) 1981.

Havenstrite et al.; U.S. Appl. No. 15/095,759 entitled "Contact lens with a hydrophilic layer," filed Apr. 11, 2016.

Havenstrite et al.; U.S. Appl. No. 15/533,744 entitled "Medical device coating with a biocompatible layer," filed Jun. 7, 2017.

Ghormely; The advent contact lens-clinical viewpoints; 3 pages; retrieved from http://www.sciencedirect.com/science/article/pii/0892896789900321/pdf?md5=5ff798a43537ff29c508eb02d36dd&pid=1-2.0-0892896789900321-main.pdf on May 23, 2017.

Kayaman et al.; Phase transition of polyacrylamide gels in PEG solutions; Polymer Gels and Networks; 5(2); pp. 167-184; Apr. 1997.

Pantar; The polymerization of acrylamide in the presence of poly (ethylene glycol) II; European Polymer Journal; 22(11); pp. 939-942; Jan. 1986.

Pissis; Hydration studies in polymer hydrogels; Journal of Polymer Science Part B: Polymer Physics; 51(3); pp. 159-175; Feb. 2013.

Fiedler Encyclopedia of Excipients for Pharmaceuticals, Cosmetics and Related Areas; Ed. E.M. Hoepfner; vol. 2 (L-Z); 5 ed.; pp. 1224-1227; (Pluronics F-127); (year of pub. sufficiently earlier than effective US filing date and any foreign priority date) 2002.

Fiedler Encyclopedia of Excipients for Pharmaceuticals, Cosmetics and Related Areas; Ed. E.M. Hoepfner; vol. 2 (L-Z); 5 ed.; p. 1596; (Tetronic); (year of pub. sufficiently earlier than effective US filing date and any foreign priority date) 2002.

The Merck Index, An Encyclopedia of chemicals, drugs, and biologicals; Ed. Susan Budavari; 12th Edition; "7519 Phosphorycholine"; p. 1267; (year of pub. sufficiently earlier than effective US filing date and any foreign priority date) 1996.

Szczotka-Flynn; Introducing the latest silicone hydrogel lens; Contact Lens Spectrum; 20(8); 2 pages; retrieved from the internet (https://www.clspectrum.com/issues/2005/august-2005/contact-lens-materials); Aug. 1, 2005.

Vladkova; Surface engineered polymeric biomaterials with improved biocontact properties; International Journal of Polymer Science; Article ID 296094 doi:10.1155/2010/296094; 22 pages; (year of pub. sufficiently earlier than effective US filing date and any foreign priority date) 2010.

* cited by examiner

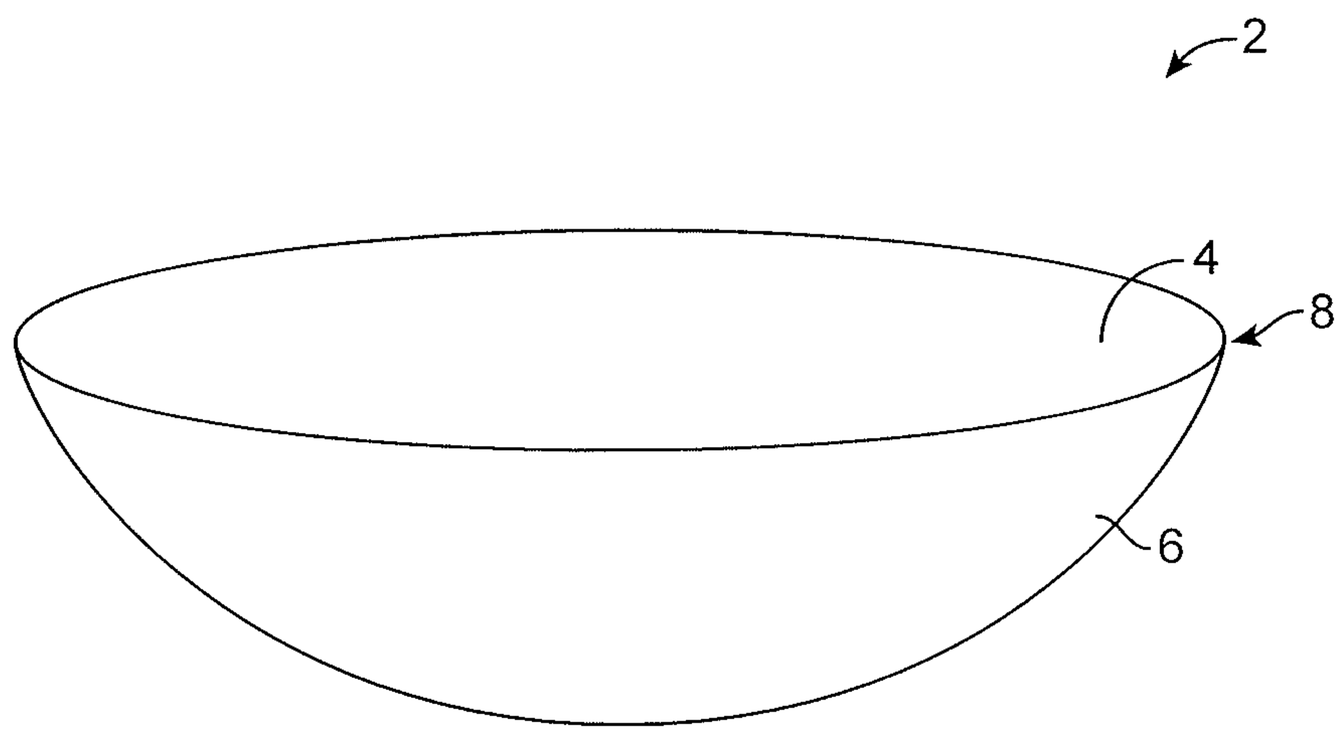

FIG. 1A

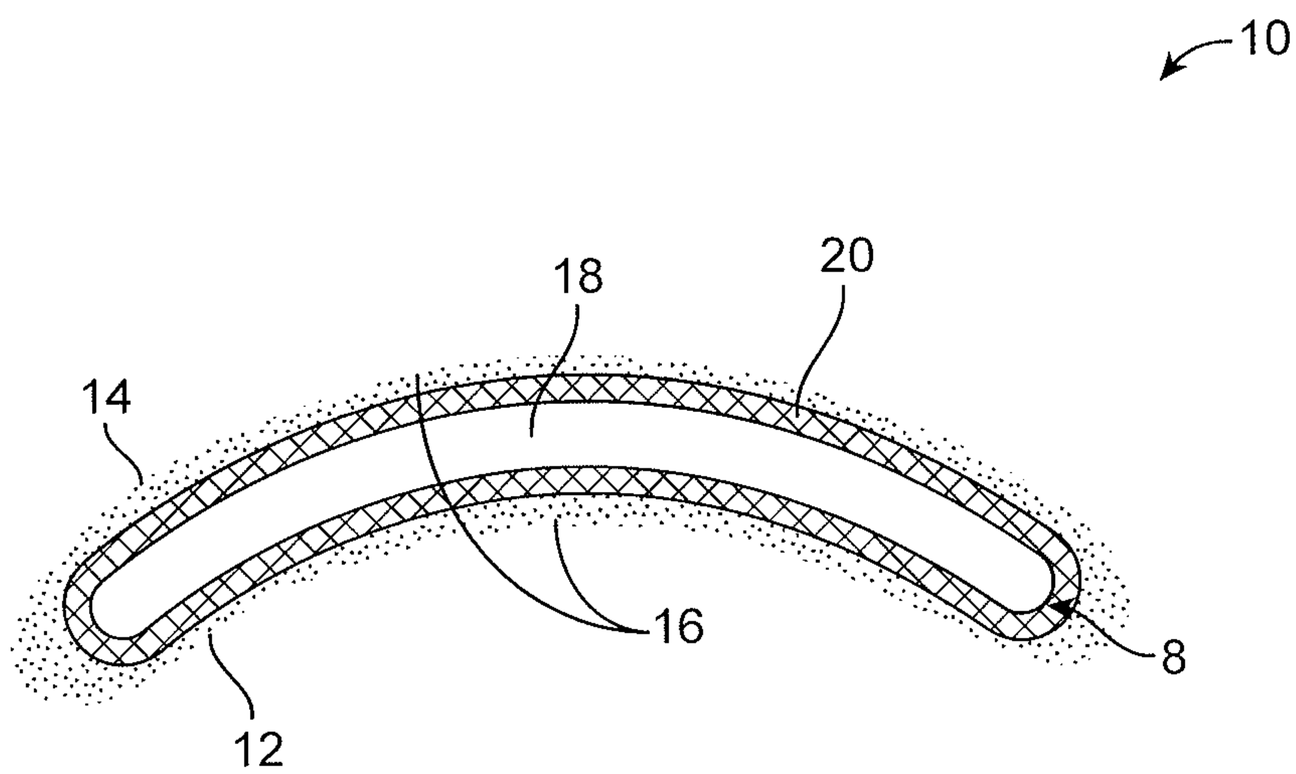

FIG. 1B

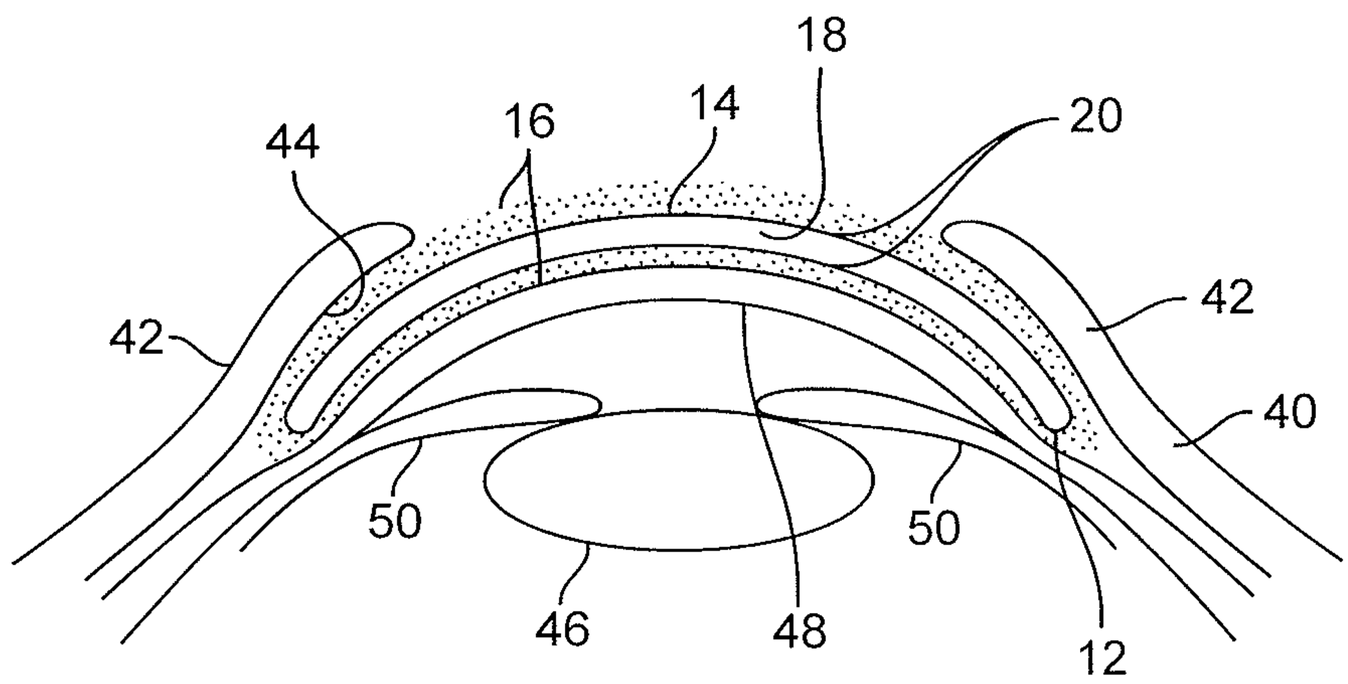

FIG. 2

FIG. 3A

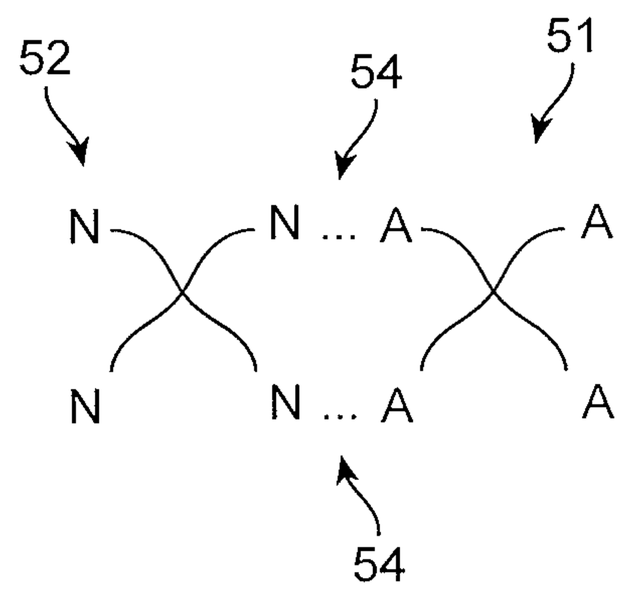

FIG. 3B

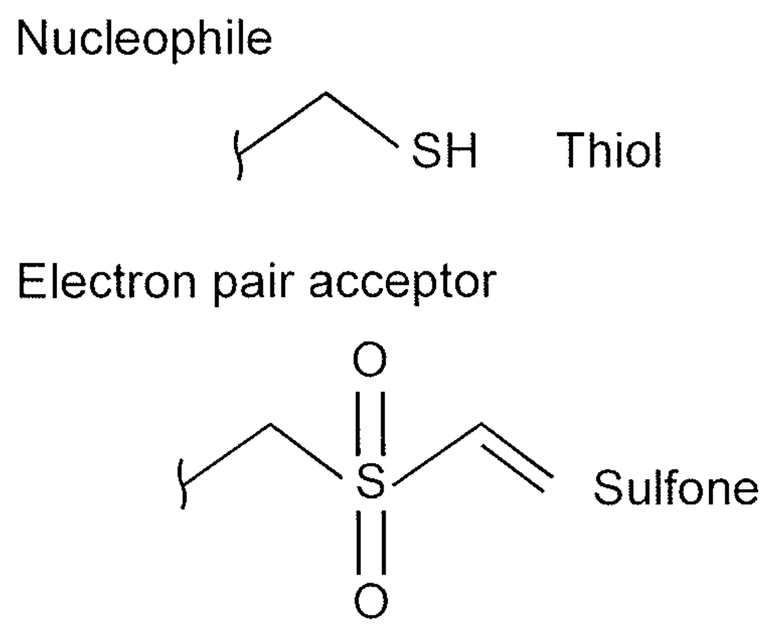
Nucleophile
SH
Thiol
Electron pair acceptor
O
S
O
Sulfone

FIG. 4A

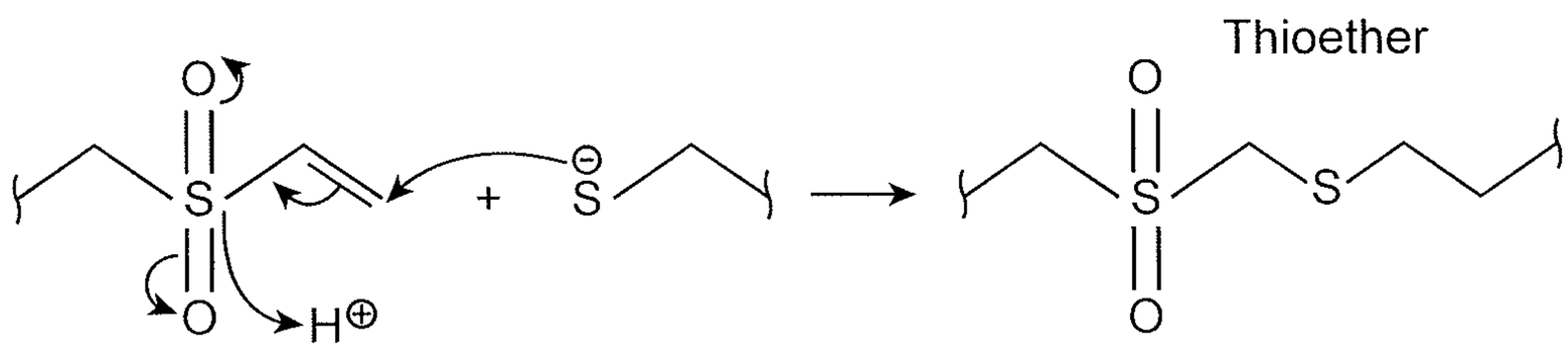
Thioether
O
S
O
H⊕
+
S
O
S
S
O

FIG. 4B

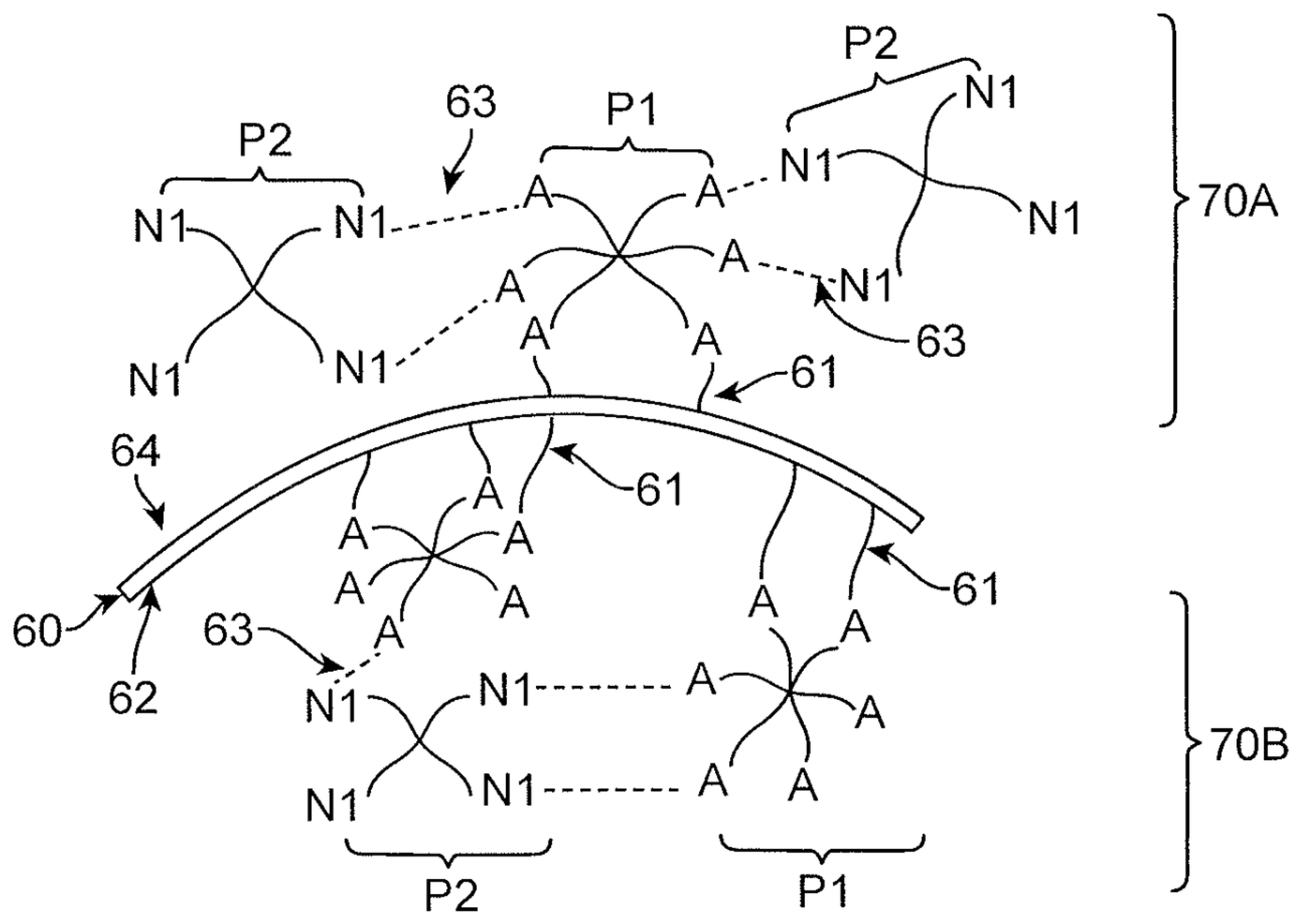
P2
63
P1
P2
N1
N1
N1
N1
A
A
N1
N1
70A
A
A
N1
N1
N1
A
A
63
61
64
61
A
A
A
A
61
60
63
A
A
A
62
N1
N1
A
A
N1
N1
A
A
70B
P2
P1

FIG. 5A

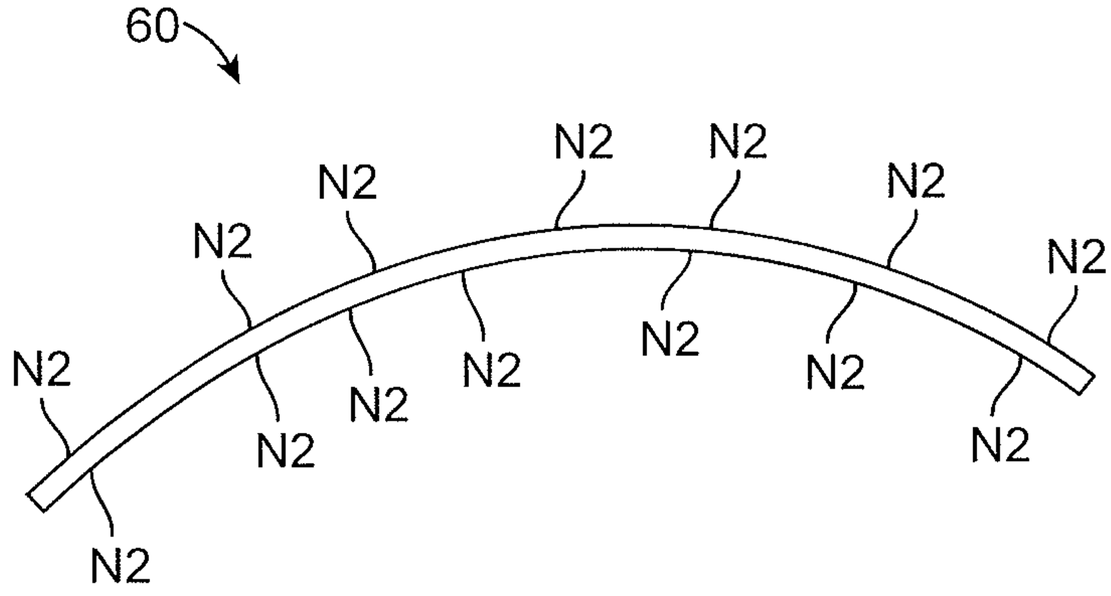
60
N2
N2
N2
N2
N2
N2
N2
N2
N2
N2
N2
N2
N2
N2

FIG. 5B

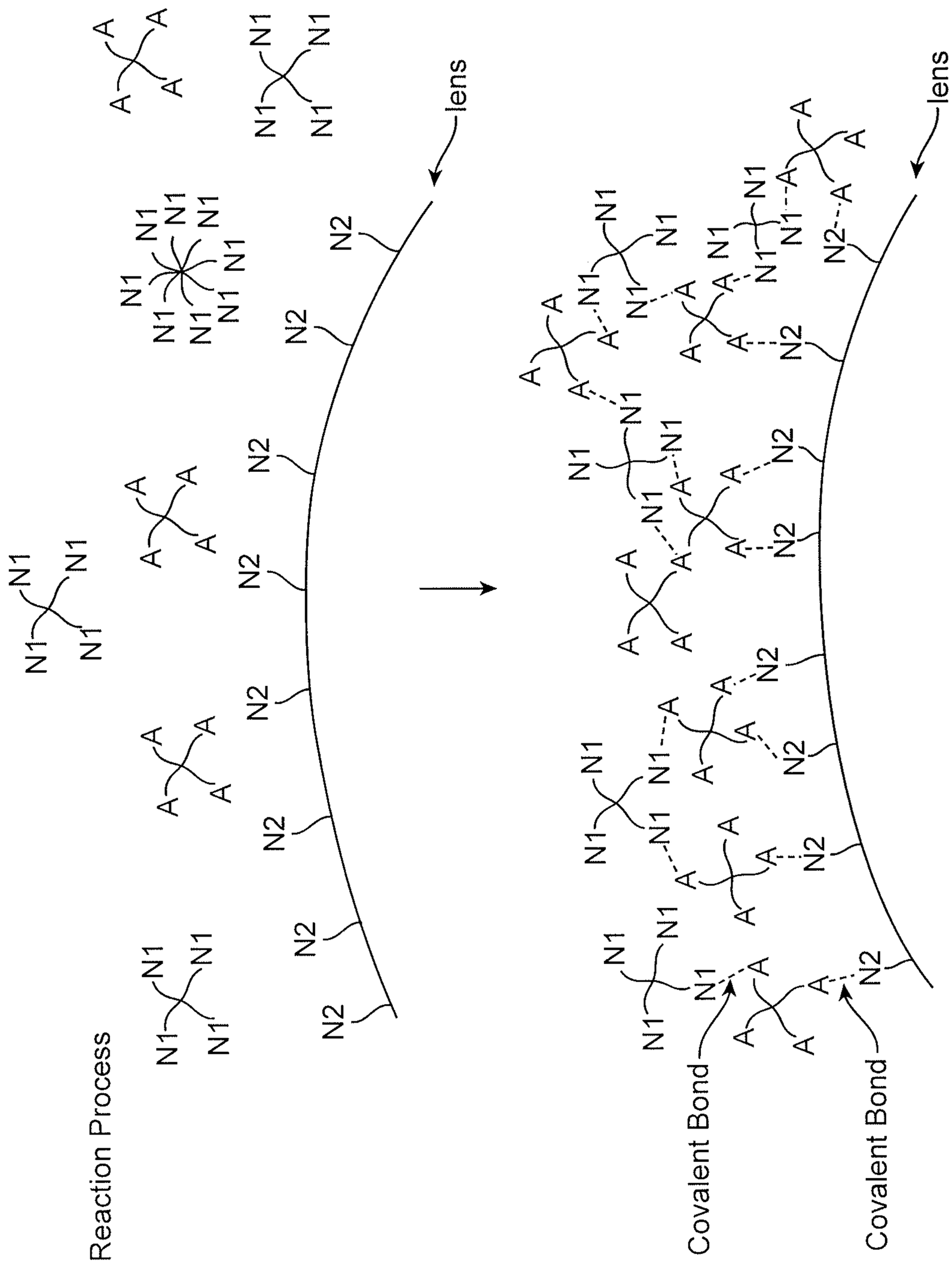

FIG. 5C

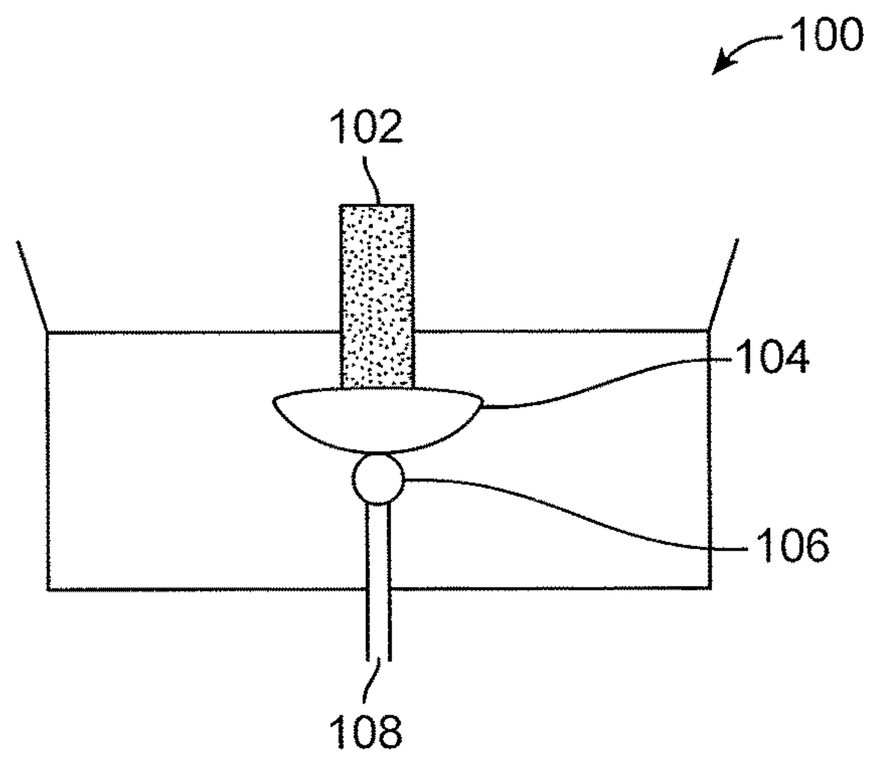

FIG. 6A

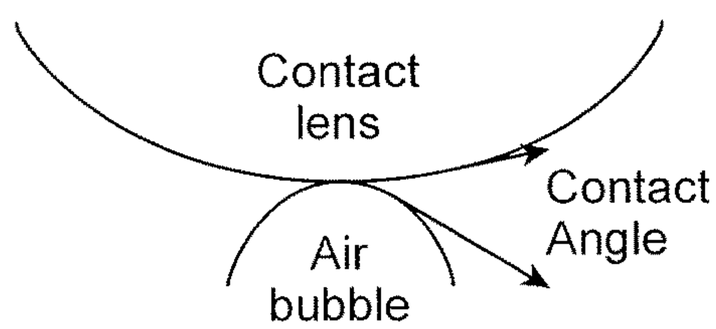

FIG. 6B

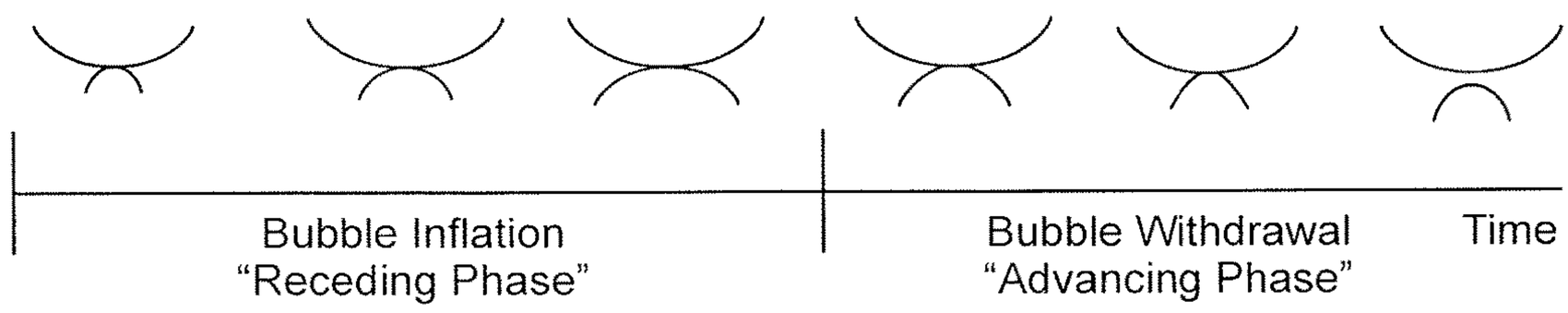

FIG. 6C

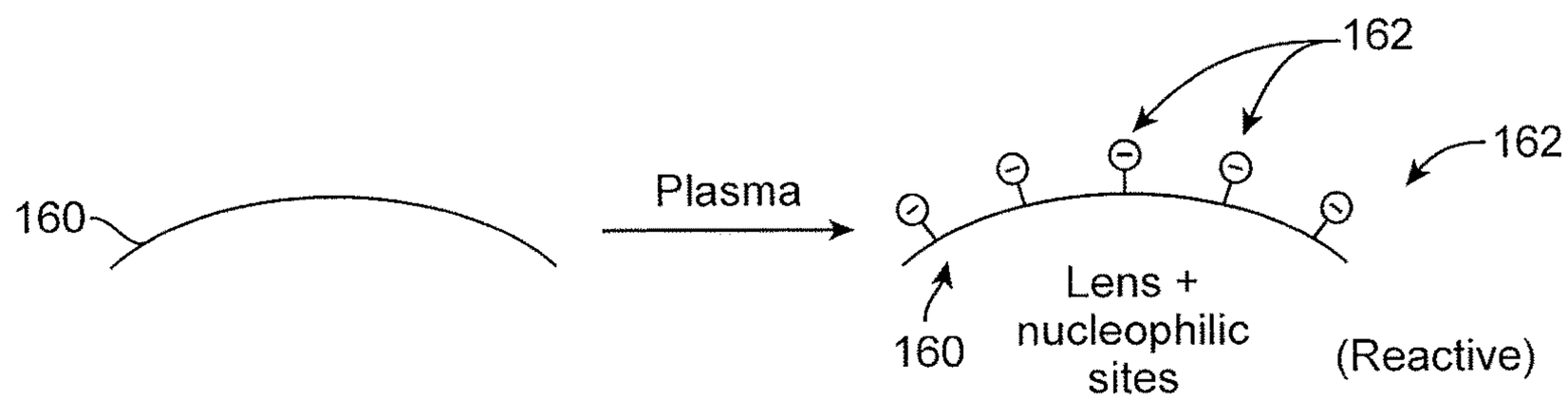

FIG. 7

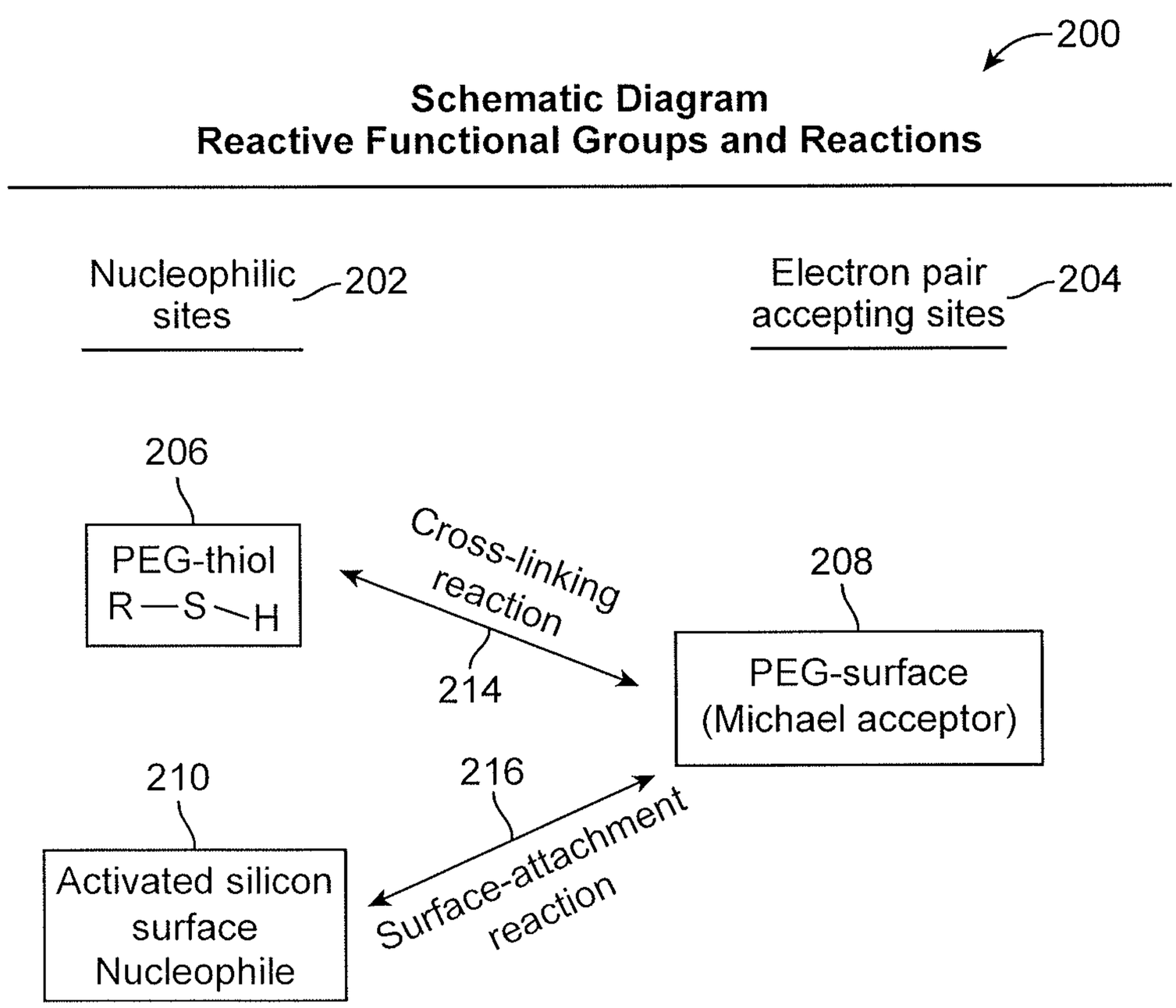
200
Schematic Diagram
Reactive Functional Groups and Reactions
Nucleophilic sites
202
Electron pair accepting sites
204
206
PEG-thiol
R—S—H
Cross-linking reaction
214
208
PEG-surface
(Michael acceptor)
210
Activated silicon surface Nucleophile
216
Surface-attachment reaction

FIG. 8

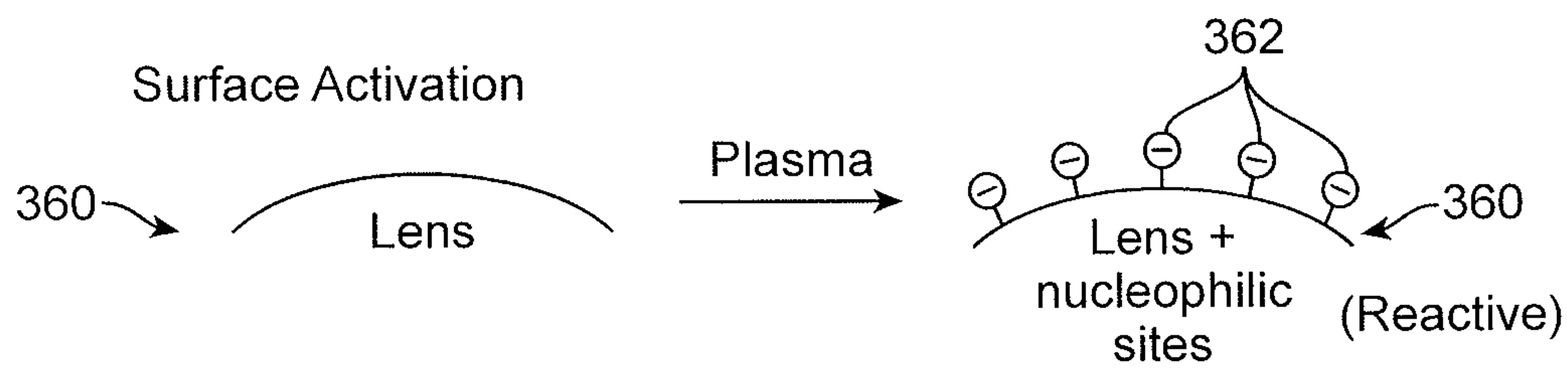

FIG. 9A

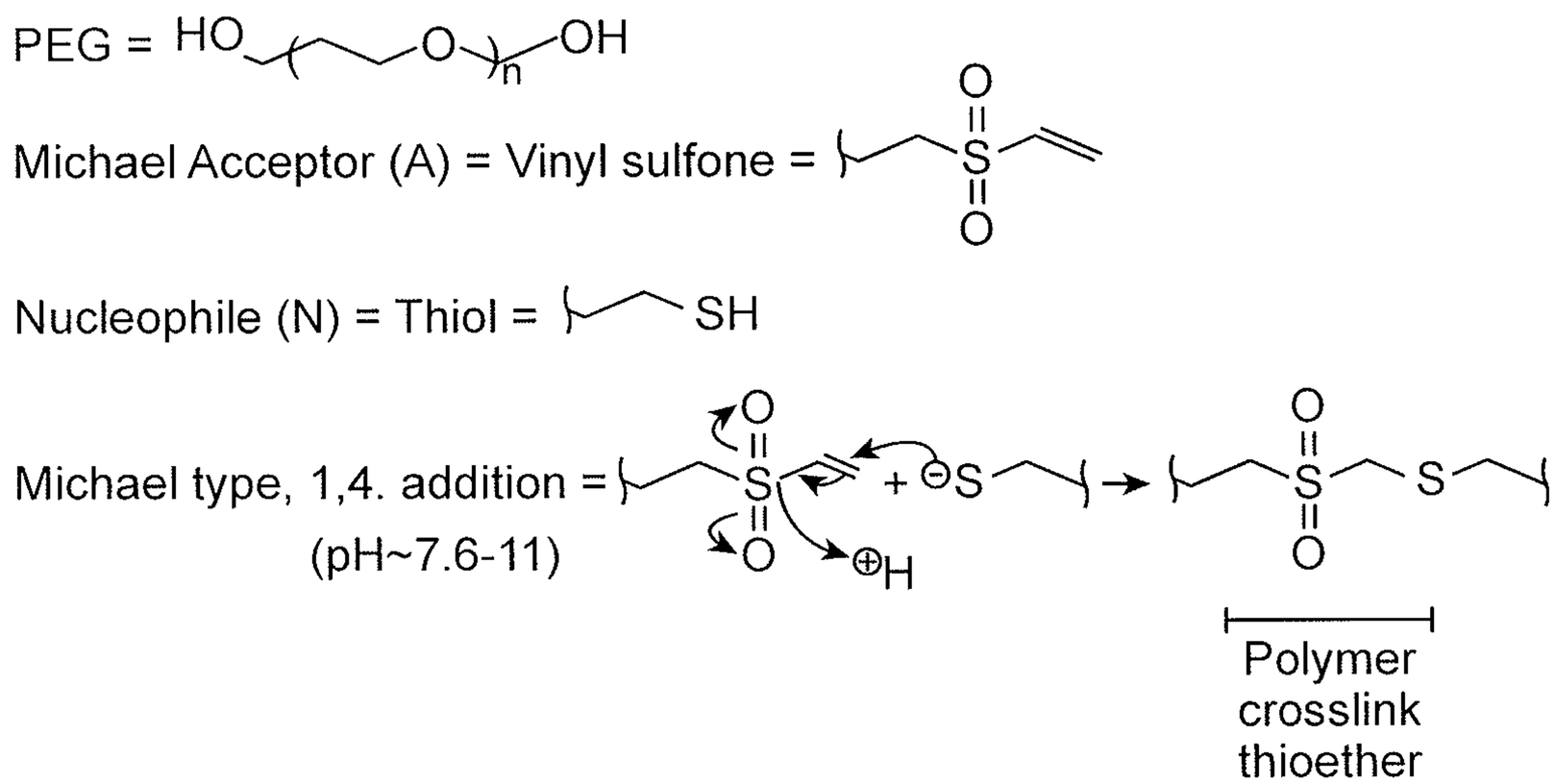

FIG. 9B

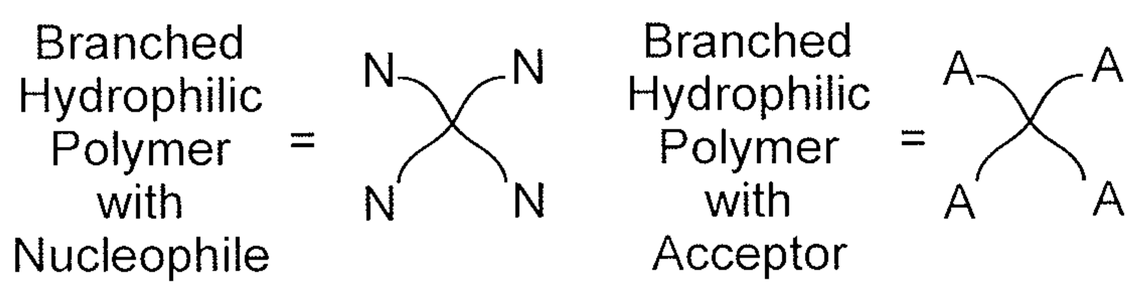

FIG. 9C

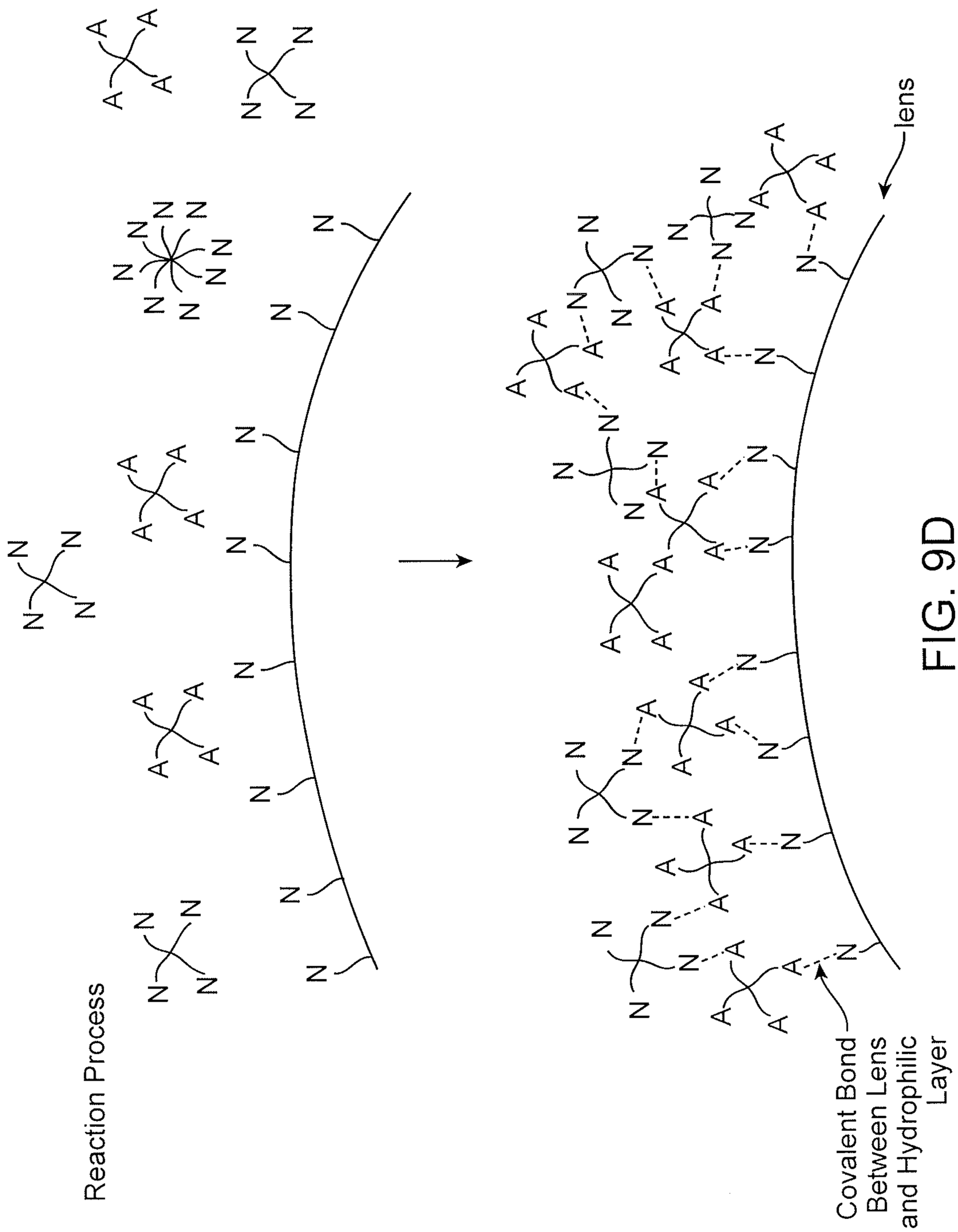
Reaction Process
lens
Covalent Bond Between Lens and Hydrophilic Layer

FIG. 9D

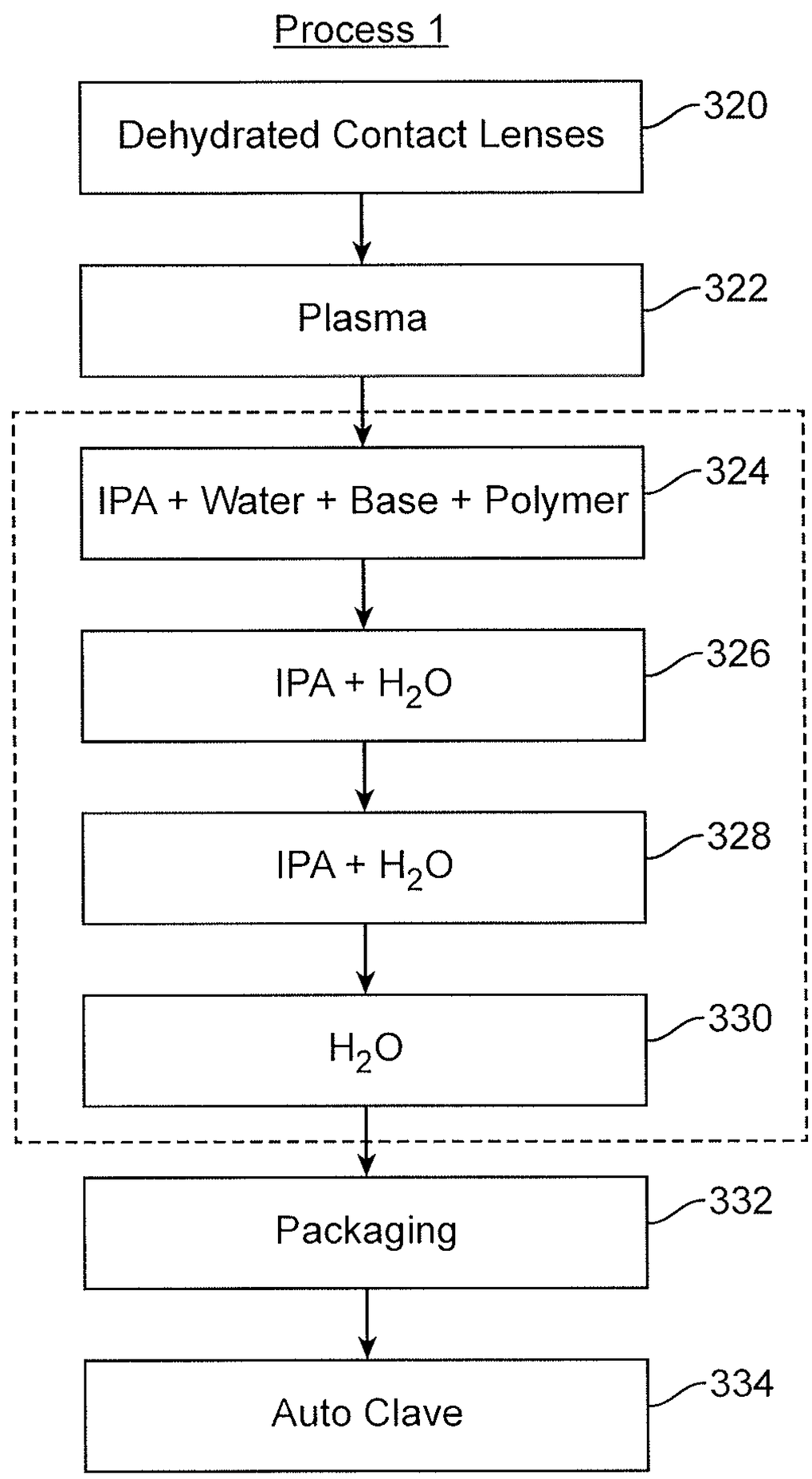
Process 1
Dehydrated Contact Lenses
320
Plasma
322
IPA + Water + Base + Polymer
324
IPA + H_2O
326
IPA + H_2O
328
H_2O
330
Packaging
332
Auto Clave
334

FIG. 10A

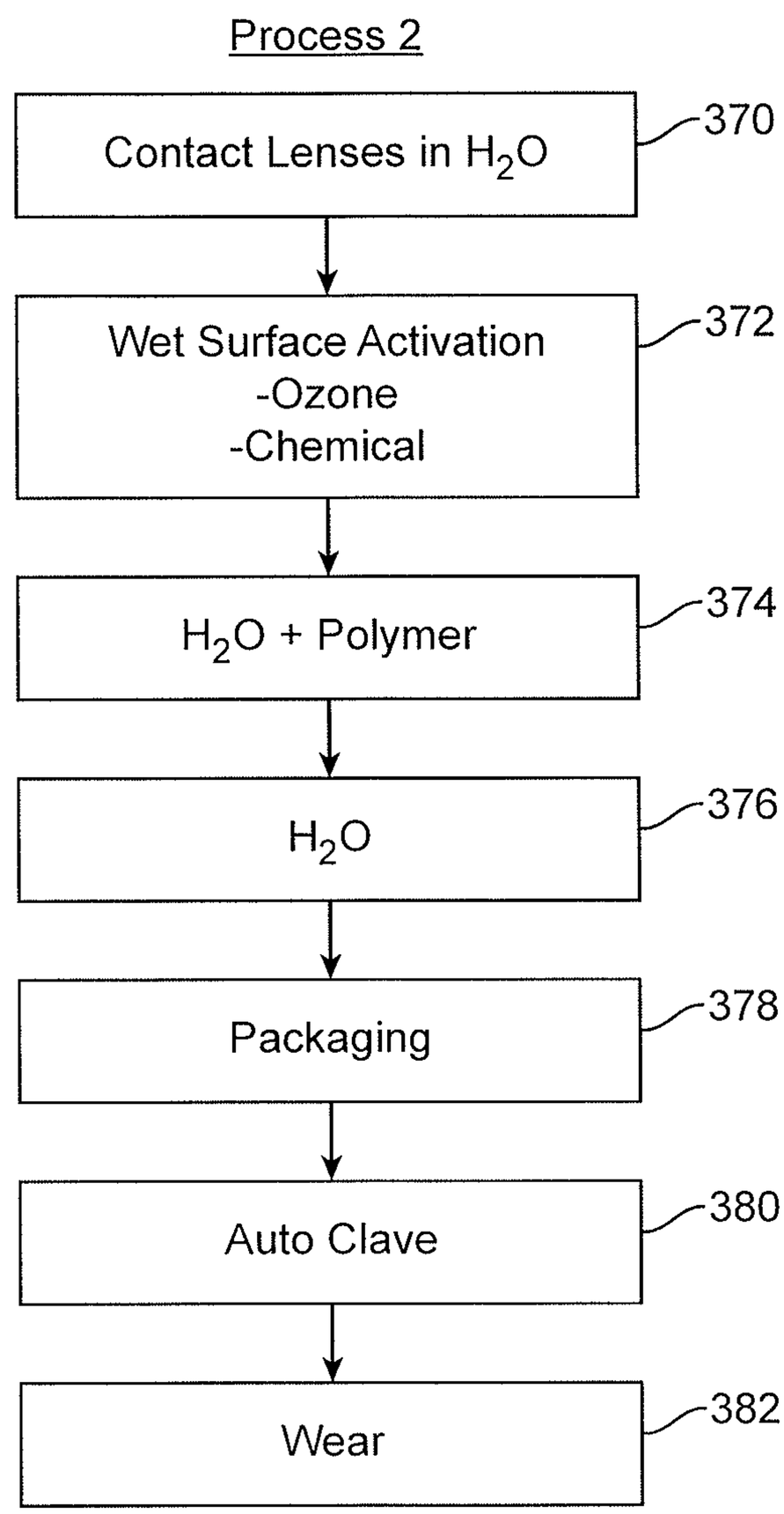
Process 2
Contact Lenses in H_2O
370
Wet Surface Activation
-Ozone
-Chemical
372
H_2O + Polymer
374
H_2O
376
Packaging
378
Auto Clave
380
Wear
382

FIG. 10B

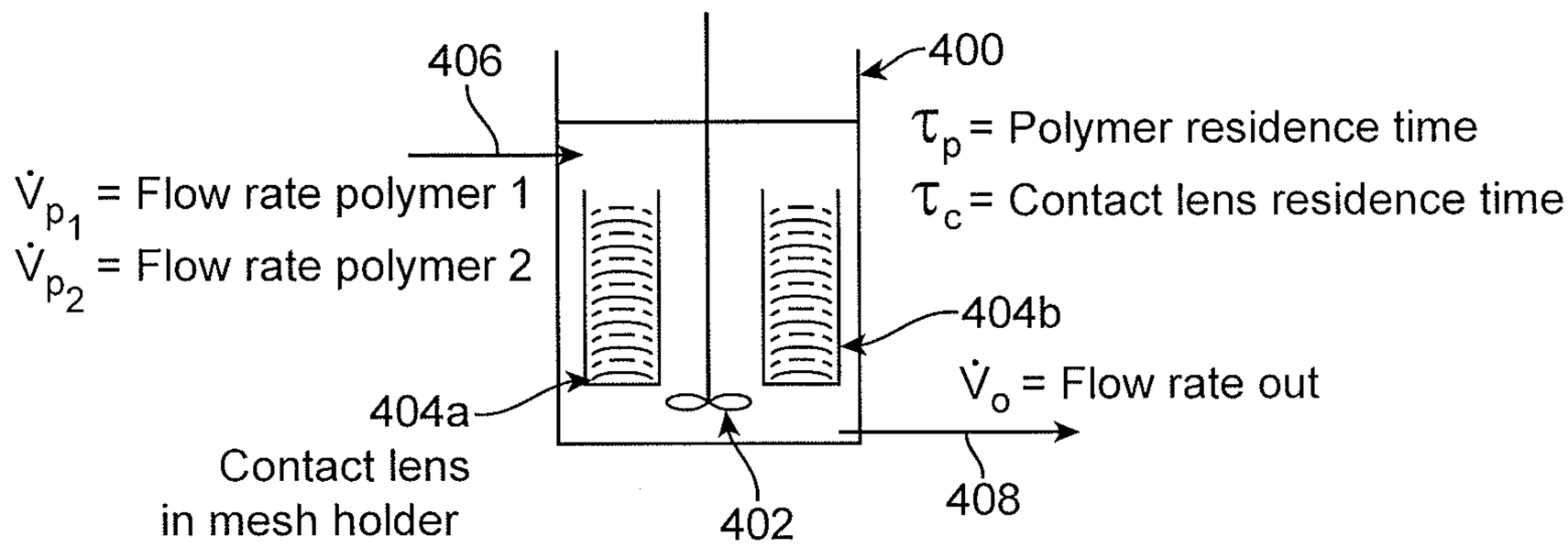

FIG. 11A

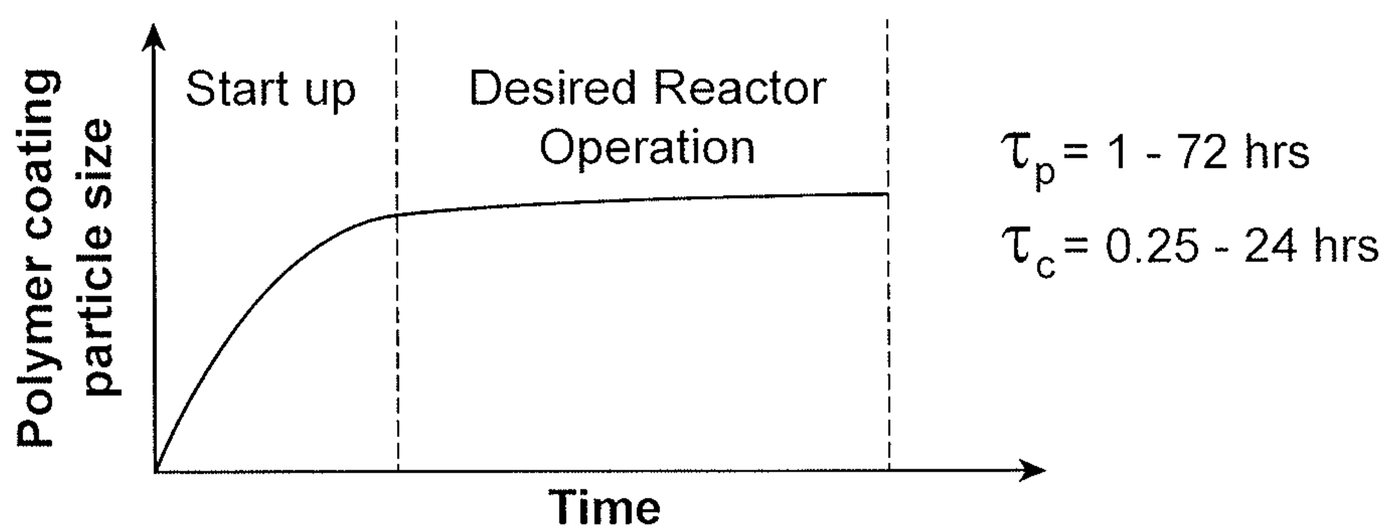

FIG. 11B

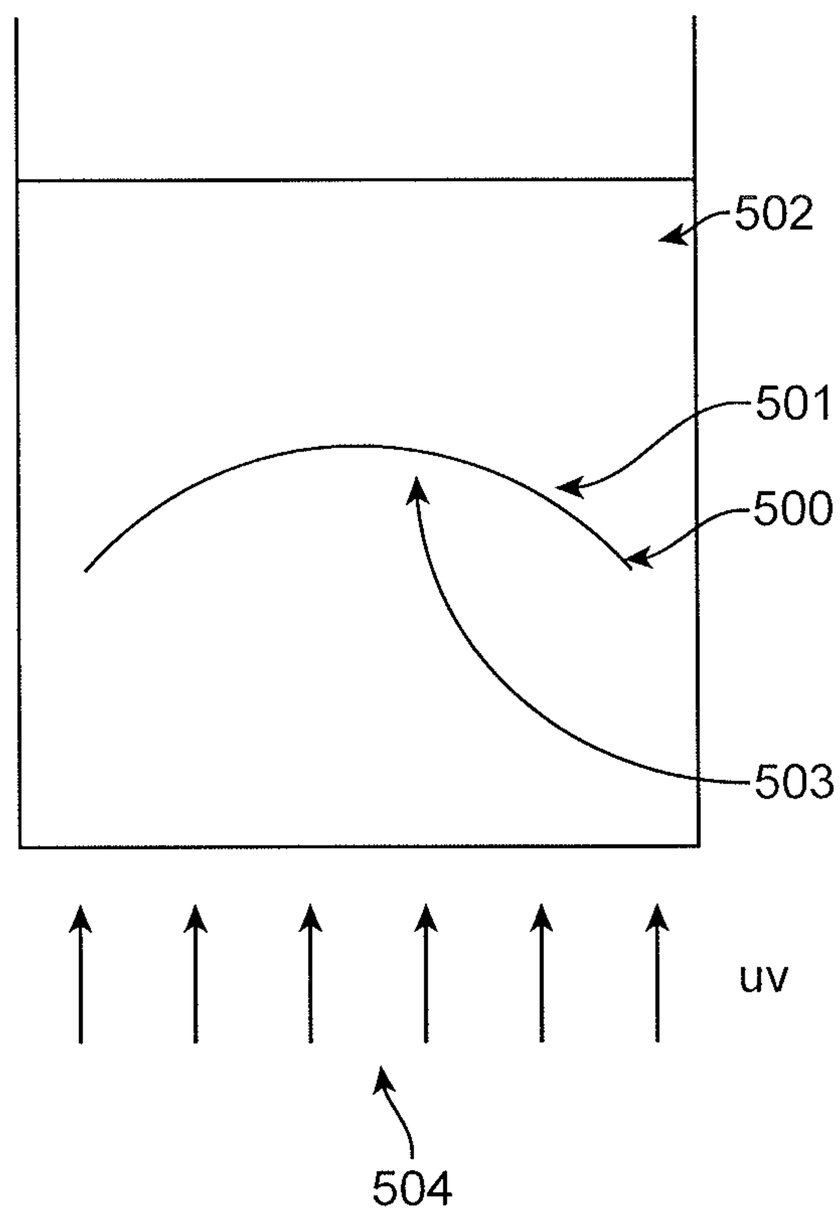

FIG. 12A

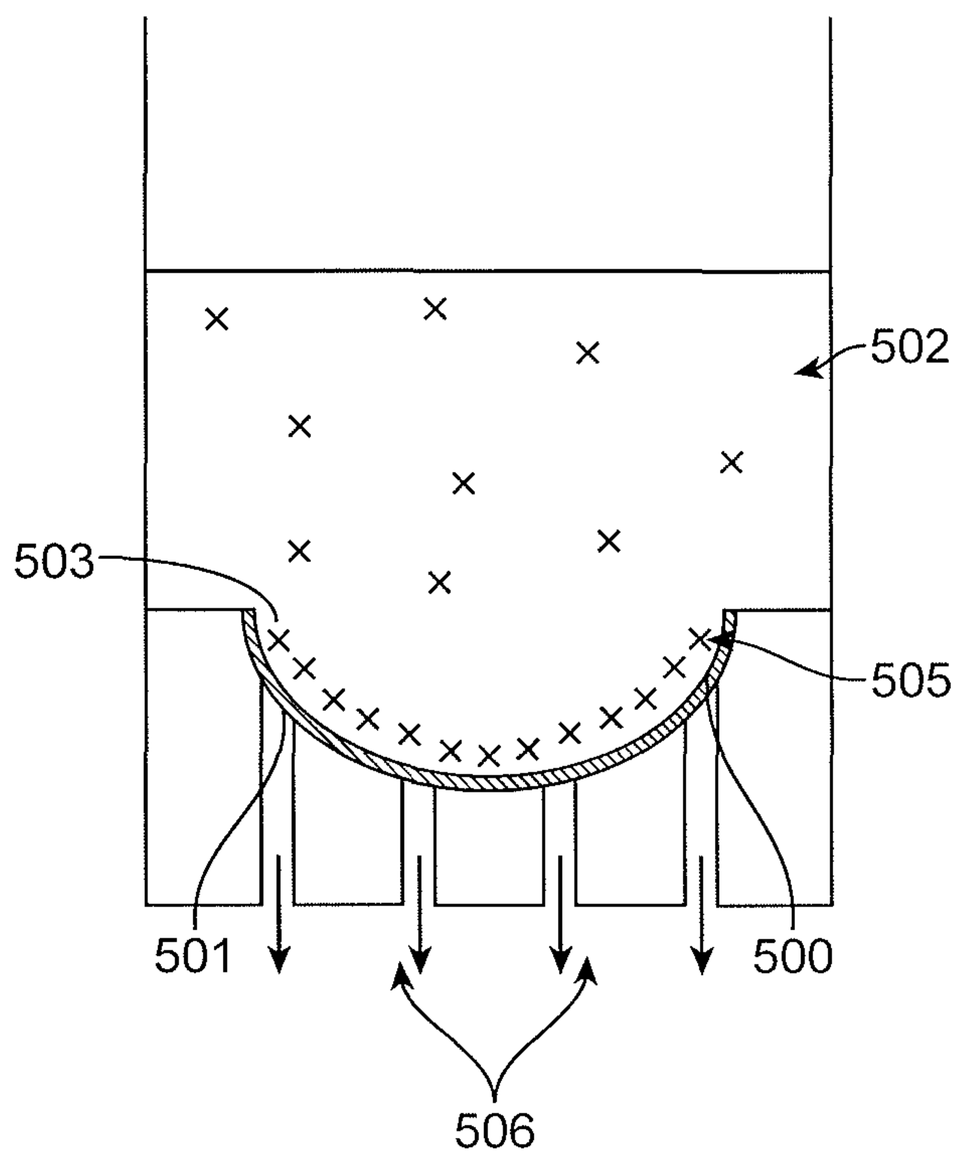

FIG. 12B

Figure13A

Example No.	Lot No.	Date	Advancing Angle
10	1	5/12/2012	
10	2	5/12/2012	
10	3	5/16/2012	
10	4	5/23/2012	
10	5	5/25/2012	
10	6	5/28/2012	
10	7	6/1/2012	
10	8	6/6/2012	
12	9	6/6/2012	
12	10	6/6/21012	
12	11	6/8/2012	
12	12	6/8/2012	
14	13	6/8/2012	
12	14	7/6/2012	
65	15		
66	17	8/20/2012	
65	19	8/24/2012	
64	21	9/14/2012	
64	22	9/14/2012	
64	23	9/14/2012	
63	24	9/19/2012	
63	25	9/19/2012	
67	26	9/19/2012	
67	27	9/20/2012	
67	28	9/20/2012	
67	29	9/20/2012	
67	30	9/20/2012	
62	31	10/3/2012	
62	32	10/3/2012	
62	33	10/3/2012	
62	34	10/3/2012	
67	35	10/3/2012	
67	36	10/3/2012	
67	37	10/3/2012	
67	38	10/3/2012	
57	39	10/10/2012	58.30
	39		58.10
	39		58.50
57	40	10/10/2012	52.50
	40		52.60
	40		52.40
57	41	10/10/2012	67.40
	41		69.10
	41		65.80
57	42	10/10/2012	41.70
	42		43.02

Figure 13B

Example No.	Lot No.	Date	Advancing Angle
	42		40.38
57	43	10/10/2012	43.38
	43		43.67
	43		45.14
	43		41.34
57	44	10/10/2012	47.60
	44		50.22
	44		48.40
	44		44.18
59	45	10/11/2012	
59	46	10/11/2012	79.75
	46		74.83
	46		73.14
	46		86.09
	46		84.94
57	47	10/11/2012	67.86
	47		85.56
	47		85.98
	47		55.19
	47		55.76
	47		56.82
60	48	10/15/2012	53.20
	48		57.20
	48		60.50
	48		44.60
	48		43.20
	48		58.40
	48		55.60
60	49	10/15/2012	59.00
	49		49.70
	49		50.30
	49		55.70
	49		58.60
	49		57.40
	49		82.20
58	50	10/16/2012	63.60
	50		87.90
	50		83.60
	50		47.60
	50		48.90
	50		55.90
	50		57.80
68	51	10/16/2012	55.80
	51		52.60
	51		53.10
	51		55.40

Figure 13C

Example No.	Lot No.	Date	Advancing Angle
	51		58.20
	51		57.20
	51		58.40
68	52	10/16/2012	79.90
	52		88.30
	52		54.00
	52		65.80
	52		98.20
	52		87.00
	52		86.40
68	53	10/16/2012	
57	54	10/16/2012	
32	55	10/16/2012	
57	56	10/16/2012	
18	57	10/16/2012	43.80
	57		40.30
	57		39.10
	57		43.00
	57		50.60
	57		42.40
	57		47.70
18	58	10/16/2012	
68	59	10/16/2012	
68	60	10/19/2020	61.40
	60		56.60
	60		61.70
	60		61.00
	60		59.70
	60		66.20
	60		63.10
25	61	11/7/2012	
25	62	11/12/2012	69.40
	62		108.68
	62		102.98
	62		105.31
	62		107.34
	62		104.23
	62		99.68
	62		86.25
	62		42.42
	62		36.22
	62		31.95
	62		30.82
	62		44.47
	62		41.93
	62		29.33

Figure 13D

Example No.	Lot No.	Date	Advancing Angle
69	63	11/12/2012	41.94
	63		36.76
	63		34.31
	63		32.57
	63		32.52
	63		40.29
	63		41.53
	63		75.57
69	64	11/12/2012	72.26
	64		57.00
	64		54.96
	64		41.59
	64		91.89
	64		92.60
	64		82.57
	64		85.19
69	65	11/12/2012	79.48
	65		80.33
	65		78.63
29	66	11/13/2012	
29	67	11/13/2012	
29	68	11/13/2012	
32	69	11/13/2012	
32	70	11/13/2012	
32	71	11/13/2012	
31	72	11/13/2012	
31	73	11/13/2012	
69	74	11/16/2012	44.97
	74		54.56
	74		56.44
	74		75.21
	74		37.36
	74		35.55
	74		71.72
	74		24.93
	74		29.66
	74		29.93
	74		34.31
69	75	11/16/2012	36.17
	75		34.32
	75		34.17
	75		38.35
	75		37.84
69	76	11/16/2012	36.14
	76		36.77
	76		36.73

Figure 13E

Example No.	Lot No.	Date	Advancing Angle
	76		34.92
56	77	11/16/2012	52.96
	77		40.59
	77		47.16
	77		37.64
	77		87.41
	77		38.74
	77		103.28
	77		37.71
	77		31.12
69	81	11/30/2012	67.60
	81		61.74
	81		64.15
	81		71.83
	81		72.67
69	82	11/30/2012	45.99
	82		72.90
	82		61.73
	82		24.95
	82		24.38
69	83	11/30/2012	24.94
	83		26.44
	83		27.70
	83		22.97
	83		22.64
56	84	11/30/2012	74.27
	84		68.61
	84		76.09
	84		76.66
	84		75.72
69	85	12/1/2012	57.60
	85		28.60
	85		27.90
	85		27.10
	85		26.60
	85		53.90
	85		48.40
	85		25.00
	85		23.00
	85		26.70
	85		27.10
	85		81.90
	85		102.10
	85		78.80
	85		87.40
	85		89.00

Figure 13F

Example No.	Lot No.	Date	Advancing Angle
	85		85.60
	85		63.30
	85		68.00
	85		66.20
	85		66.30
	85		65.20
	85		61.90
	85		69.70
	85		70.19
	85		70.06
69	86	12/1/2012	43.37
	86		35.30
	86		34.40
	86		25.10
	86		23.30
	86		24.90
	86		25.50
	86		43.80
	86		27.10
	86		23.10
	86		27.00
	86		32.20
	86		45.20
	86		41.80
	86		37.10
	86		66.20
	86		73.60
	86		48.40
	86		37.10
	86		49.60
	86		45.60
	86		53.61
	86		109.72
	86		61.85
	86		49.47
27	87	12/3/2012	
27	88	12/3/2012	
27	89	12/3/2012	
27	90	12/3/2012	74.02
	90		36.56
	90		94.03
	90		91.47
27	91	12/3/2012	27.20
	91		24.03
	91		30.07
	91		27.51

Figure 13G

Example No.	Lot No.	Date	Advancing Angle
27	92	12/3/2012	
30	93	12/3/2012	65.00
	93		65.00
30	94	12/3/2012	
30	95	12/4/2012	
30	96	12/4/2012	
31	97	12/4/2012	
31	98	12/4/2012	
32	99	12/4/2012	
31	100	12/4/2012	
33	101	12/6/2012	69.30
	101		65.56
	101		73.04
33	102	12/6/2012	33.95
	102		26.03
	102		52.78
	102		38.51
	102		26.99
	102		25.45
35	103	12/6/2012	47.76
	103		58.66
	103		57.98
	103		24.03
	103		25.56
	103		71.67
	103		71.16
	103		25.27
35	104	12/6/2012	41.88
	104		53.13
	104		24.66
	104		37.41
	104		40.17
	104		54.02
32	105	12/6/2012	
36	106	12/7/2012	49.59
	106		51.93
	106		47.25
37	107	12/11/2012	82.21
	107		84.14
	107		83.81
	107		93.88
	107		90.38
	107		72.50
	107		68.54
37	108	12/11/2012	80.11
	108		74.62

Figure 13H

Example No.	Lot No.	Date	Advancing Angle
	108		92.17
	108		73.53
38	109	12/12/2012	89.45
	109		99.72
	109		92.89
	109		84.12
	109		84.69
	109		85.84
38	110	12/12/2012	45.07
	110		42.44
	110		45.24
	110		46.63
	110		45.94
41	111	12/12/2012	34.55
	111		30.24
	111		28.88
	111		44.54
40	112	12/13/2012	68.44
	112		61.10
	112		75.77
40	113	12/13/2012	76.51
	113		73.05
	113		80.13
	113		76.34
40	114	12/13/2012	
40	115	12/13/2012	
39	116	12/13/2012	
39	117	12/13/2012	
41	118	12/19/2012	86.77
	118		85.54
	118		104.14
	118		70.63
41	119	12/19/2012	85.89
	119		87.02
	119		84.77
41	120	12/19/2012	87.61
	120		84.35
	120		108.91
	120		69.58
41	121	12/19/2012	82.71
	121		79.13
	121		86.28
41	122	1/2/2013	54.53
	122		57.28
	122		57.16
	122		55.64

Figure 13I

Example No.	Lot No.	Date	Advancing Angle
	122		50.35
	122		65.10
	122		56.03
	122		77.13
	122		60.33
	122		43.84
	122		39.50
	122		48.61
	122		43.41
41	123	1/2/2013	56.71
	123		63.25
	123		58.89
	123		63.36
	123		60.13
	123		48.83
	123		45.51
	123		43.18
	123		39.72
	123		78.52
	123		59.87
	123		66.41
	123		52.83
41	124	1/2/2013	47.94
	124		47.76
	124		43.30
	124		49.54
	124		42.04
	124		83.77
	124		48.28
	124		43.13
	124		38.94
	124		42.93
	124		39.68
41	125	1/2/2013	47.41
	125		47.43
	125		42.92
	125		46.74
	125		42.16
	125		54.67
	125		53.33
	125		55.17
	125		52.66
	125		47.09
	125		41.11
	125		45.29
	125		40.39

Figure 13J

Example No.	Lot No.	Date	Advancing Angle
30	129	1/3/2013	
30	130	1/3/2013	
42	131	1/5/2013	49.91
	131		66.25
	131		64.21
	131		78.03
	131		17.30
	131		31.97
	131		41.70
42	132	1/5/2013	42.11
	132		36.09
	132		22.61
	132		31.47
	132		62.39
	132		46.32
	132		53.79
48	133	1/7/2013	69.56
	133		80.06
	133		82.47
	133		46.14
48	134	1/7/2013	68.47
	134		98.35
	134		38.16
	134		68.88
51	135	1/9/2013	75.47
	135		126.52
	135		77.15
	135		32.07
	135		52.66
	135		86.43
	135		77.99
51	136	1/9/2013	55.75
	136		32.94
	136		43.99
	136		36.97
	136		53.34
	136		114.83
	136		52.43
48	137	1/9/2013	56.10
	137		71. 954
	137		58.70
	137		82.08
	137		27.51
48	138	1/0/1900	
55	139	1/9/2013	75.04
	139		88.41

Figure 13K

Example No.	Lot No.	Date	Advancing Angle
	139		75.62
	139		61.08
55	140	1/9/2013	34.26
	140		27.16
	140		65.25
	140		29.94
	140		27.06
	140		29.90
	140		26.25
48	143	1/9/2013	50.43
	143		27.27
	143		63.78
	143		24.61
	143		86.05
52	144	1/9/2013	46.54
	144		35.95
	144		37.65
	144		48.03
	144		28.12
	144		76.40
	144		84.49
	144		31.41
	144		30.28
52	145	1/12/2013	42.92
	145		28.25
	145		31.39
	145		31.15
	145		31.66
	145		28.85
	145		42.21
	145		75.20
	145		74.63
54	146	1/12/2013	31.52
	146		50.88
	146		28.72
	146		41.05
	146		26.02
	146		28.09
	146		27.07
	146		26.58
	146		27.69
	146		27.61
54	147	1/12/2013	37.66
	147		26.74
	147		54.17

Figure 13L

Example No.	Lot No.	Date	Advancing Angle
	147		36.13
	147		33.42
	147		36.11
	147		29.36
	147		27.73
	147		28. 863
	147		27.27
	147		28.02
	147		77.66
53	148	1/12/2013	82.46
	148		83.05
	148		79.61
	148		77.05
	148		90.13
53	149	1/0/1900	51.03
	149		30.84
	149		39.34
	149		35.24
	149		51.14
	149		70.37
	149		79.26
51	150	1/12/2013	69.20
	150		54.80
	150		89.01
	150		63.80
51	151	1/0/1900	34.64
	151		45.50
	151		24.33
	151		43.30
	151		39.30
	151		31.60
	151		23.80
48	152	1/12/2013	
48	153	1/15/2013	
50	154	1/15/2013	
50	155	1/15/2013	
51	156	1/15/2013	62.36
	156		52.06
	156		60.99
	156		68.27
	156		66.60
	156		63.90
51	157	1/16/2013	30.66
	157		37.67
	157		31.31

Figure 13M

Example No.	Lot No.	Date	Advancing Angle
	157		31.76
	157		27.90
	157		27.90
	157		27.40
51	158	1/16/2013	73.40
	158		65.00
	158		68.00
	158		100.00
	158		79.00
	158		55.00
51	159	1/17/2013	53.20
	159		34.00
	159		54.00
	159		58.00
	159		66.00
	159		54.00
48	160	1/17/2013	71.70
	160		87.00
	160		37.00
	160		99.00
	160		92.00
	160		65.00
	160		50.20
48	161	1/17/2013	52.50
	161		63.00
	161		57.00
	161		55.00
	161		41.00
	161		47.00
	161		52.00
49	162	1/17/2013	37.00
	162		32.00
	162		27.00
	162		59.00
	162		29.00
	162		38.00
51	163	2/7/2013	63.69
	163		74.34
	163		69.32
	163		63.32
	163		25.53
	163		74.89
	163		75.88
	163		70.06
	163		62.04

Figure 13N

Example No.	Lot No.	Date	Advancing Angle
	163		67.36
	163		54.11
51	164	2/7/2013	
72	167	2/19/2013	62.89
	167		56.76
	167		57.20
	167		69.59
	167		71.71
	167		54.50
	167		55.38
	167		44.74
	167		43.16
	167		63.82
	167		66.28
	167		87.29
	167		84.21
72	168	2/19/2013	70.95
	168		102.42
	168		87.63
	168		74.96
	168		76.22
	168		85.25
	168		88.20
	168		51.64
	168		51.85
	168		44.67
	168		46.70
	168		69.54
	168		72.31
72	169	2/19/2013	49.88
	169		70.90
	169		67.32
	169		47.00
	169		45.99
	169		38.65
	169		40.77

Figure 13O

Example No.	Lot No.	Date	Advancing Angle
	169		42.54
	169		45.87
	169	2/19/2013	60.11
	169		80.87
	169		78.10
	169		52.69
	169		52.66
	169		49.40
	169		46.95
72	170	2/19/2013	63.32
	170		85.59
	170		84.31
	170		69.34
	170		72.00
	170		48.64
	170		48.81
	170		51.29
	170		52.36
	170		34.27
	170		72.97
	170		76.98
72	171	2/19/2013	61.26
	171		35.74
	171		47.08
	171		80.39
	171		80.88
	171		62.28
	171		66.55
	171		74.34
	171		72.09
	171		35.51
	171		52.71
	171		63.01
	171		64.49
72	172	2/19/2013	78.21
	172		72.62
	172		73.96
	172		58.79
	172		59.47
	172		103.28
	172		101.10
	172		101.71
	172		101.78
	172		59.69
	172		58.67
	172		72.92

Figure 13P

Example No.	Lot No.	Date	Advancing Angle
	172		74.58
72	172	2/19/2013	80.77
	172		79.41
	172		79.11
	172		80.52
	172		79.48
	172		92.23
	172		96.06
	172		88.38
	172		90.77
	172		63.80
	172		63.60
	172		78.51
	172		77.33
72	173	2/19/2013	40.16
	173		41.09
	173		38.22
	173		36.86
	173		34.10
	173		45.61
	173		48.44
	173		37.82
	173		29.50
	173		38.68
	173		39.35
	173		45.22
	173		47.03
72	174	2/19/2013	56.43
	174		47.80
	174		48.36
	174		40.77
	174		46.60
	174		62.85
	174		62.18
	174		70.66
	174		72.25
72	175	2/19/2013	48.95
	175		42.35
	175		44.14
	175		41.28
	175		44.11
	175		56.39
	175		61.18
	175		61.68
	175		61.04
	175		39.58

Figure 13Q

Example No.	Lot No.	Date	Advancing Angle
	175		37.73
72	175	2/19/2013	40.51
	175		39.98
	175		35.42
	175		32.33
	175		31.91
	175		46.09
	175		45.72
	175		60.23
	175		58.03
	175		24.92
	175		30.46
72	176	2/19/2013	52.34
	176		57.74
	176		55.93
	176		48.25
	176		47.14
	176		33.65
	176		41.33
	176		76.82
	176		61.76
	176		62.15
	176		45.21
	176		45.74
72	177	2/19/2013	45.75
	177		42.93
	177		46.81
	177		50.16
	177		48.96
	177		50.10
	177		44.43
	177		39.80
	177		47.92
	177		45.89
	177		48.58
	177		41.69
	177		41.79
72	178	2/19/2013	40.36
	178		38.98
	178		44.55
	178		38.50
	178		22.37
	178		39.39
	178		50.00
	178		40.08
	178		46.42

Figure 13R

Example No.	Lot No.	Date	Advancing Angle
	178		40.70
	178		42.63
72	178	2/19/2013	35.39
	178		36.25
	178		36.21
	178		39.45
	178		40.21
	178		38.39
	178		38.42
	178		33.52
	178		34.89
	178		27.15
	178		29.46
73	179	3/4/2013	69.28
	179		91.86
	179		92.42
	179		41.88
	179		38.48
	179		79.64
	179		75.65
	179		85.11
	179		85.01
	179		52.19
	179		50.51
73	179	3/4/2013	70.47
	179		66.27
	179		67.24
	179		56.93
	179		57.89
	179		97.32
	179		97.72
	179		74.83
	179		75.57
	179		54.97
	179		55.92
73	180	3/4/2013	72.29
	180		58.24
	180		51.32
	180		59.18
	180		62.37
	180		97.80
	180		99.90
	180		73.40
	180		72.42
	180		74.60
	180		73.66

Figure 13S

Example No.	Lot No.	Date	Advancing Angle
73	180	3/4/2013	60.65
	180		43.87
	180		39.54
	180		68.43
	180		67.70
	180		60.82
	180		61.41
	180		64.75
	180		64.31
	180		67.96
	180		67.69
73	181	3/5/2013	99.18
	181		99.69
	181		104.80
	181		98.92
	181		100.89
	181		98.68
	181		92.11
73	181	3/5/2013	95.20
	181		56.08
	181		100.83
	181		86.85
	181		97.63
	181		99.44
	181		100.70
	181		103.82
	181		105.82
	181		100.57
	181		100.30
73			
	182	3/15/2013	71.6
	182		71.6
	182		52.6
	182		51.1
73	183		37.2
	183		37.4
	183		38.0
	183		34.4
	183		38.5
	183		31.6
73	184		65.7
	184		66.3
	184		74.3
	184		74.1
	184		71.3
	184		71.8

Figure 13T

Example No.	Lot No.	Date	Advancing Angle
73	185		42.6
	185		41.9
	185		37.8
	185		38.3
	185		32.3
	185		28.9

Figure 14A

Matlab Code Used to Determine Advancing and Receding Contact Angles

```
%%For Windows: change / to \, mmreader to VideoReader, mov to wmv

clear all;
clc;

warning('off','Images:initSize:adjustingMag');

input('Hit enter to choose folder containing video files: ');

FolderName = uigetdir('..\Contact Angle Videos','Pick folder containing videos to analyze: ');
mkdir(strcat(FolderName,'\BW Images'))
mkdir(strcat(FolderName,'\Frame Plots'))


% clc;
% ThreshPrompt = input('Increase sensitivity of B/W conversion? Y or N: ','s');
%
% if ThreshPrompt == 'Y'
%    ThreshOffset = 0.2;
% else
%    ThreshOffset = 0;
% end

ThreshOffset = 0;

clc;
downSample = input('Enter frame increment (1 = all frames, 24 = once per second): ');
sampleLength = 5;      % length of data to calculate angles, in sec
oneSec = floor(24/downSample);
sampleNumber = oneSec*sampleLength-1;    % length of data to calculate angles, in frames

vidStruct = dir(strcat(FolderName,'\*.wmv'));
nFiles = size(vidStruct,1);
for i = 1:nFiles
   vidNames{i} = char(vidStruct(i).name);
end

AllAngles = {'File' 'Advancing Angle' 'Receding Angle' 'Pixel Width Change'};

fid = fopen(strcat(FolderName,'\Results.csv'),'wt');
fprintf(fid,'%s,%s,%s,%s\n', AllAngles{1,:});
```

Figure 14B

```
vidName = char(vidNames(1,1));
vidObj = VideoReader(strcat(FolderName,'\',vidName));

nFrames = vidObj.NumberOfFrames;

mov{1} = read(vidObj,floor(nFrames/2));

RGB = mov{1,1}(:,:,1:3);

% I = rgb2gray(RGB);
% threshold = graythresh(I)+ThreshOffset;
% BW = im2bw(I,threshold);
% % remove all small objects
% BW = bwareaopen(BW,floor(vidObj.Width*vidObj.Height/100));
% % fill any gaps
% SE = strel('disk',2);
% BW = imclose(BW,SE);
% % fill any holes
% BW = imfill(BW,'holes');

IDX = otsu(RGB,3);
IDX = (IDX ~= 3);
BW = imfill(IDX,'holes');
BW = (BW == 0);

% clc;
% disp('Hit enter to crop video around bubble-lens interface: ');
% input('(As much white as possible without going below center of bubble)');
% [BWcrop rect] = imcrop(BW);
% close all;

% left = floor(rect(1));
% right = floor(rect(1)+rect(3));
% top = floor(rect(2));
% bottom = floor(rect(2)+rect(4));

shortbubblelength = 40;
longbubblelength = 80;
lenslength = 80;

% height = top-bottom+1;
% width = right-left+1;
```

Figure 14C

```
height = vidObj.height;
width = vidObj.width;

for x = 1:nFiles

   LeftContactAngles=0;
   RightContactAngles=0;
   ContactAngles=0;
   Widths=0;
   slope=0;
   deltaWidth=0;
   SmoothWidths=0;

   vidName = char(vidNames(1,x));
   vidObj = VideoReader(strcat(FolderName,'\',vidName));

   nFrames = vidObj.NumberOfFrames;

   for v = 1:downSample:nFrames-1
      newIndex = 1 + floor(v/downSample);
      mov{newIndex} = read(vidObj,v);
   end

   downSampleFrames = newIndex;

   bubblelength = shortbubblelength;

   RGB = mov{1,downSampleFrames}(:,:,1:3);

      for k = 1:downSampleFrames

         clc;
         StatusStr = ['Analyzing ',num2str(x),' of ',num2str(nFiles),' files, ',num2str(k),' of
',num2str(downSampleFrames-1),' frames.'];
         disp(StatusStr);

         % mov = read(vidObj,k);

         % RGB = mov(top:bottom,left:right,1:3);
         RGB = mov{1,k}(:,:,1:3);

         % I = rgb2gray(RGB);
         % threshold = graythresh(I)+ThreshOffset;
         % BW = im2bw(I,threshold);
```

Figure 14D

```
% % remove all small objects
% BW = bwareaopen(BW,floor(vidObj.Width*vidObj.Height/100));
% % fill any gaps
% SE = strel('disk',2);
% BW = imclose(BW,SE);
% % fill any holes
% BW = imfill(BW,'holes');

IDX = otsu(RGB,3);
IDX = (IDX ~= 3);
BW = imfill(IDX,'holes');
BW = (BW == 0);

whitecount = sum(BW,1);

if(isempty(find(whitecount==0,1)))
  break;
end

leftcornercolumn = find(whitecount==0,1,'first')-1;
rightcornercolumn = find(whitecount==0,1,'last')+1;
centercolumn = (leftcornercolumn+rightcornercolumn)/2;

while(find(BW(:,leftcornercolumn-1)==1,1,'first')<find(BW(:,leftcornercolumn)==1,1,'first'))
  leftcornercolumn=leftcornercolumn-1;
end

while(find(BW(:,rightcornercolumn+1)==1,1,'first')<find(BW(:,rightcornercolumn)==1,1,'first'))
    rightcornercolumn=rightcornercolumn+1;
  end

  leftcornerrow = find(BW(:,leftcornercolumn-1)==1,1,'first');
  rightcornerrow = find(BW(:,rightcornercolumn+1)==1,1,'first');


  %%%%%% LEFT %%%%%%
  leftbubbleboundary = [];
  leftlensboundary = [];
  adjustcount=1;
  while isempty(leftbubbleboundary) || isempty(leftlensboundary)
    leftbubbleboundary = bwtraceboundary(BW, [leftcornerrow, leftcornercolumn], 'NE', 8,
bubblelength);
```

Figure 14E

```
        leftlensboundary = bwtraceboundary(BW, [leftcornerrow, leftcornercolumn], 'NE', 8,
lenslength, 'counter');
        if isempty(leftbubbleboundary) || isempty(leftlensboundary)
          leftcornercolumn=leftcornercolumn-adjustcount;
          adjustcount=adjustcount+1;
          leftbubbleboundary = bwtraceboundary(BW, [leftcornerrow, leftcornercolumn], 'NE',
8, bubblelength);
          leftlensboundary = bwtraceboundary(BW, [leftcornerrow, leftcornercolumn], 'NE', 8,
lenslength, 'counter');
        end
        if isempty(leftbubbleboundary) || isempty(leftlensboundary)
          leftcornercolumn=leftcornercolumn+adjustcount;
          adjustcount=adjustcount-1;
          leftbubbleboundary = bwtraceboundary(BW, [leftcornerrow, leftcornercolumn], 'NE',
8, bubblelength);
          leftlensboundary = bwtraceboundary(BW, [leftcornerrow, leftcornercolumn], 'NE', 8,
lenslength, 'counter');
        end
      end

      leftbubblecoeff =
polyfit(transpose(leftbubbleboundary(:,2)),transpose(leftbubbleboundary(:,1)),1);
      leftlenscoeff = polyfit(transpose(leftlensboundary(:,2)),transpose(leftlensboundary(:,1)), 1);

      leftfitbubblelength = max(leftbubbleboundary(:,2))-min(leftbubbleboundary(:,2))+1;
      leftfitlenslength = max(leftlensboundary(:,2))-min(leftlensboundary(:,2))+1;

      leftybubble = zeros(leftfitbubblelength,1);
      leftylens = zeros(leftfitlenslength,1);
      leftxbubble = zeros(leftfitbubblelength,1);
      leftxlens = zeros(leftfitlenslength,1);
      leftxbubble(1) = min(leftbubbleboundary(:,2));
      leftxlens(1) = min(leftlensboundary(:,2));

      for i = 1:leftfitbubblelength;
        if i>1
          leftxbubble(i) = leftxbubble(i-1)+1;
        end
        leftybubble(i) = leftbubblecoeff(1)*leftxbubble(i)+leftbubblecoeff(2);
      end


      for i = 1:leftfitlenslength;
        if i>1
```

Figure 14F

```
    leftxlens(i) = leftxlens(i-1)+1;
  end
  leftylens(i) = leftlenscoeff(1)*leftxlens(i)+leftlenscoeff(2);
end

leftbubbleslope = leftbubblecoeff(1);
leftlensslope = leftlenscoeff(1);

leftbubbleangle = atan(leftbubbleslope)*180/pi();
leftlensangle = atan(leftlensslope)*180/pi();

if(leftbubbleslope < 0)
  LeftContactAngle = -leftbubbleangle+leftlensangle;
else
  LeftContactAngle = 180-leftbubbleangle+leftlensangle;
end

LeftContactAngles(k) = LeftContactAngle;
%%%%%% LEFT %%%%%%


%%%%%% RIGHT %%%%%%
rightbubbleboundary = [];
rightlensboundary = [];
adjustcount=1;
while isempty(rightbubbleboundary) || isempty(rightlensboundary)
  rightlensboundary = bwtraceboundary(BW, [rightcornerrow, rightcornercolumn], 'NE', 8,
lenslength);
  rightbubbleboundary = bwtraceboundary(BW, [rightcornerrow, rightcornercolumn], 'NE',
8, bubblelength, 'counter');
  if isempty(rightbubbleboundary) || isempty(rightlensboundary)
    rightcornercolumn=rightcornercolumn+adjustcount;
    adjustcount=adjustcount+1;
    rightlensboundary = bwtraceboundary(BW, [rightcornerrow, rightcornercolumn], 'NE', 8,
lenslength);
    rightbubbleboundary = bwtraceboundary(BW, [rightcornerrow, rightcornercolumn], 'NE',
8, bubblelength, 'counter');
  end
  if isempty(rightbubbleboundary) || isempty(rightlensboundary)
    rightcornercolumn=rightcornercolumn-adjustcount;
    adjustcount=adjustcount-1;
    rightlensboundary = bwtraceboundary(BW, [rightcornerrow, rightcornercolumn], 'NE', 8,
lenslength);
```

Figure 14G

```
        rightbubbleboundary = bwtraceboundary(BW, [rightcornerrow, rightcornercolumn], 'NE',
8, bubblelength, 'counter');
    end
    end

    rightbubblecoeff =
polyfit(transpose(rightbubbleboundary(:,2)),transpose(rightbubbleboundary(:,1)),1);
    rightlenscoeff =
polyfit(transpose(rightlensboundary(:,2)),transpose(rightlensboundary(:,1)), 1);

    rightfitbubblelength = max(rightbubbleboundary(:,2))-min(rightbubbleboundary(:,2))+1;
    rightfitlenslength = max(rightlensboundary(:,2))-min(rightlensboundary(:,2))+1;

    rightybubble = zeros(rightfitbubblelength,1);
    rightylens = zeros(rightfitlenslength,1);
    rightxbubble = zeros(rightfitbubblelength,1);
    rightxlens = zeros(rightfitlenslength,1);
    rightxbubble(1) = min(rightbubbleboundary(:,2));
    rightxlens(1) = min(rightlensboundary(:,2));


    for i = 1:rightfitbubblelength;
      if i>1
        rightxbubble(i) = rightxbubble(i-1)+1;
      end
      rightybubble(i) = rightbubblecoeff(1)*rightxbubble(i)+rightbubblecoeff(2);
    end


    for i = 1:rightfitlenslength;
      if i>1
        rightxlens(i) = rightxlens(i-1)+1;
      end
      rightylens(i) = rightlenscoeff(1)*rightxlens(i)+rightlenscoeff(2);
    end

    rightbubbleslope = rightbubblecoeff(1);
    rightlensslope = rightlenscoeff(1);

    rightbubbleangle = atan(rightbubbleslope)*180/pi();
    rightlensangle = atan(rightlensslope)*180/pi();

    if(rightbubbleslope > 0)
      RightContactAngle = rightbubbleangle+leftlensangle;
```

Figure 14H

```
else
  RightContactAngle = 180+rightbubbleangle+leftlensangle;
end

RightContactAngles(k) = RightContactAngle;
%%%%%% RIGHT %%%%%%

if k == floor(downSampleFrames/2)
    close all;
    BWImage = figure;
    imshow(BW);
    title(vidName(1:length(vidName)-4));
    hold on;
    plot(transpose(leftxbubble),transpose(leftybubble),'r','LineWidth',2);
    plot(transpose(leftxlens),transpose(leftylens),'c','LineWidth',2);
    plot(transpose(rightxbubble),transpose(rightybubble),'r','LineWidth',2);
    plot(transpose(rightxlens),transpose(rightylens),'c','LineWidth',2);
    saveas(BWImage,strcat(FolderName,'\BW Images\BW-',vidName(1:length(vidName)-
4)),'png');
    hold off;
  end

  if LeftContactAngle>60 || RightContactAngle>60
    bubblelength=longbubblelength;
  end

  width = rightcornercolumn-leftcornercolumn;
  Widths(k) = width;

end

ContactAngles = (LeftContactAngles + RightContactAngles)/2;

k = length(ContactAngles);

%   %%%%INFLECTION%%%%
%   SmoothWidths = smooth(Widths,20);
%   for i=1:k-2
%     slope(i) = SmoothWidths(i+2)-SmoothWidths(i);
%   end
%
%   if(isempty(find(fliplr(slope)>-2,1)))
%     AdvancingStart = k-sampleNumber;
%   else
```

Figure 14I

```
%     AdvancingStart = k-find(fliplr(slope)>-2,1,'first');
%   end
%
%   if AdvancingStart > k-sampleNumber;
%     AdvancingStart = k-sampleNumber;
%   end
%   %%%%INFLECTION%%%%

%%%%INFLECTION%%%%
for i=1:k-oneSec
  deltaWidth(i) = Widths(i+oneSec) - Widths(i);
end

if(isempty(find(fliplr(deltaWidth)>-5,1)))
  AdvancingStart = k-sampleNumber;
else
  AdvancingStart = k-find(fliplr(deltaWidth)>-5,1,'first')+oneSec;
end

if AdvancingStart > k-sampleNumber;
  AdvancingStart = k-sampleNumber;
end
%%%%INFLECTION%%%%


%AdvancingStart = k-sampleNumber;

AdvancingAngle = median(ContactAngles(AdvancingStart:AdvancingStart+sampleNumber));

disp('Advancing Angle: '),disp(AdvancingAngle);

  MinLocation = find(Widths==min(Widths(1:k/2)),1,'first');
  MidWidth = (max(Widths)-min(Widths(1:k/2)))/2+min(Widths(1:k/2));
  RecedingStart = find(Widths(MinLocation:k)>MidWidth,1,'first')+MinLocation -
floor(sampleNumber/2);
  RecedingAngle = median(ContactAngles(RecedingStart:RecedingStart+sampleNumber));
  disp('Receding Angle: '),disp(RecedingAngle);

  vidPlot = figure;
  [AX,H1,H2] = plotyy(1:k,ContactAngles,1:k,Widths);
  xlabel('Frame');
  set(get(AX(1),'Ylabel'),'String','Contact Angle (Degrees)') ;
  set(get(AX(2),'Ylabel'),'String','Bubble Width (Pixels)');
```

Figure 14J

```
    set(H1,'LineStyle','.');
    set(H2,'LineStyle','.');
    title(vidName(1:length(vidName)-4));
    hold on;

scatter(AdvancingStart:AdvancingStart+sampleNumber,ContactAngles(AdvancingStart:Advanci
ngStart+sampleNumber),'filled','red');

scatter(RecedingStart:RecedingStart+sampleNumber,ContactAngles(RecedingStart:RecedingSta
rt+sampleNumber),'filled','red');
    saveas(vidPlot,strcat(FolderName,'\Frame Plots\',vidName(1:length(vidName)-
4),'.png'),'png');
    hold off;

    AllAngles{x+1,1} = vidName(1:length(vidName)-4);
    AllAngles{x+1,2} = AdvancingAngle;
    AllAngles{x+1,3} = RecedingAngle;
    AllAngles{x+1,4} = max(Widths)-min(Widths);

    fprintf(fid,'%s,%d,%d,%d\n',AllAngles{x+1,:});
end

fclose(fid);
```

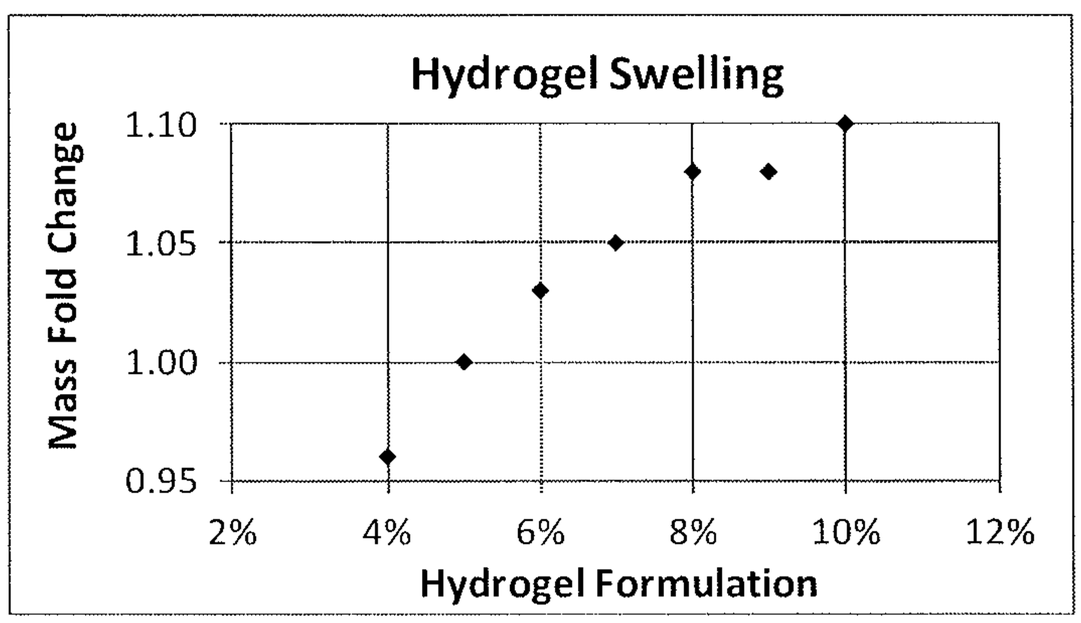
Hydrogel Swelling
Mass Fold Change
1.10
1.05
1.00
0.95
2%
4%
6%
8%
10%
12%
Hydrogel Formulation

FIG. 15

CONTACT LENS WITH A HYDROPHILIC LAYER

CROSS-REFERENCE TO RELATED APPLICATIONS

This application is a continuation of U.S. patent application Ser. No. 13/975,868, filed Aug. 26, 2013, titled "Contact Lens With a Hydrophilic Layer," which claims priority to U.S. Provisional Patent Application Nos. 61/693,689, filed Aug. 27, 2012; 61/800,835, filed Mar. 15, 2013; and 61/800,959, filed Mar. 15, 2013, each application entitled "Multi-layered Contact Lens," which are each herein incorporated by reference in its entirety. U.S. patent application Ser. No. 13/975,868 also claims priority to U.S. Provisional Patent Application No. 61/834,813, filed Jun. 13, 2013, titled "Contact Lens with a Hydrophilic Layer," which is herein incorporated by reference in its entirety.

INCORPORATION BY REFERENCE

All publications and patent applications mentioned in this specification are herein incorporated by reference to the same extent as if each individual publication or patent application was specifically and individually indicated to be incorporated by reference.

FIELD

Embodiments of the technology relate to a contact lens with improved biocompatibility and wearability and methods for making the improved lens. More particularly, the technology relates to a contact lens with a highly stable hydrogel layer covering a lens core.

BACKGROUND

Contact lenses are medical devices that are placed in contact with the ocular surface and are used for vision correction, aesthetic purposes, and to treat ocular pathologies. Substances and materials can be deposited onto a contact lens's surface to improve the biocompatibility of the lens and therefore improve the interaction of the lens with the ocular region.

The current generation of contact lenses commonly includes a silicone containing core material. These lenses have many advantages over their rigid plastic predecessors. For example, silicone-containing lenses are biocompatible for the eye and have improved oxygen and fluid permeability for normal ocular surface health. However, despite these advantages, a major challenge for silicone-containing lenses is the hydrophobicity of silicone containing materials, which can lead to abrasion of ocular tissue and infection. As such, embodiments described herein provide for a contact lens having improved hydrophilicity and biocompatibility as well as practical and cost-effective methods for making these lenses.

An additional challenge with current contact lens technology is the tendency for protein binding and absorption at the ocular site. For example, a contact lens may bind proteins on the lens to create protein deposits in the eye area. Additionally, the lens can cause structural changes including protein denaturation that can elicit an immune response such as tearing, reddening, or swelling in the ocular region. Accordingly, contemplated embodiments provide for contact lenses and methods of making lenses with improved resistance to undesirable protein interactions at the ocular site.

A further concern with contact lens use is that some users experience discomfort that is similar to the profile of patients that have a dry eye disease. Dry eye disease is considered to be a consequence of a disruption of the tear film that covers the surface of the eye, or a particular vulnerability to such disruption. This tear film is an aqueous layer disposed between an underlying mucous layer that is secreted by corneal cells, and an overlying lipid layer that is secreted by Meibomian glands on the conjunctival surface of the eyelids. The tear film includes an aqueous pool that transits across the eye surface, having a flow path that, to some degree, may be independent of the lipid layers that it is disposed between at any point in time.

Integrity of the tear film is important for such critical functions as oxygen and ion transport, and lubricating the eye surface, which is subject to a constant sliding contact by the eyelids. It is likely that dry eye disease actually exists as a spectrum of tear film vulnerability to disruption. In some cases, patients may have a low-level dry eye disease that manifests when the integrity of the film is challenged by the presence of a contact lens. To address this concern, some embodiments of the invention provide for contact lens technology that diminishes or substantially eliminates contact lens disruption of the tear film.

As can be appreciated, dry eye disease may be referred to herein as a non-limiting example for illustration purposes. The methods and devices described may be used to treat or prevent other ocular pathologies including, but not limited to, glaucoma, corneal ulcers, scleritis, keratitis, iritis, and corneal neovascularization.

SUMMARY OF THE DISCLOSURE

Some embodiments of the invention provide for a coated contact lens including a lens core comprising an outer surface and a hydrogel layer covalently attached to at least a portion of the outer surface, the hydrogel layer adapted to contact an ophthalmic surface, wherein the hydrogel layer comprises a hydrophilic polymer population having a first PEG species and a second PEG species, the first PEG species being at least partially cross-linked to the second PEG species.

In any of the preceding embodiments, the hydrogel layer and core are covalently attached at the outer surface by a sulfonyl moiety. In any of the preceding embodiments, the hydrogel layer and core are covalently attached at the outer surface by an alkylene sulfonyl moiety. In any of the preceding embodiments, the hydrogel layer and core are covalently attached at the outer surface by a dialkylene sulfonyl moiety. In any of the preceding embodiments, the hydrogel layer and core are covalently attached at the outer surface by an ethylene sulfonyl moiety. In any of the preceding embodiments, the hydrogel layer and core are covalently attached at the outer surface by a diethylene sulfonyl moiety.

In any of the preceding embodiments, the hydrogel layer and core are covalently attached at the outer surface by a thioether moiety. In any of the preceding embodiments, the hydrogel layer and core are covalently attached at the outer surface by a sulfonyl moiety and a thioether moiety.

In any of the preceding embodiments, the first PEG species comprises a reactive sulfonyl group and the second

PEG species comprises a reactive thiol, and the first PEG species and second PEG species are cross-linked by a thioether linkage.

In any of the preceding embodiments, the hydrogel layer substantially surrounds the outer surface of the core.

In any of the preceding embodiments, the hydrogel layer and core are substantially optically clear. In any of the preceding embodiments, the hydrogel layer is adapted to allow optical transmission through the hydrogel layer to the ophthalmic surface.

In any of the preceding embodiments, the hydrogel layer comprises a thickness between about 50 nm to about 500 nm. In any of the preceding embodiments, the hydrogel layer comprises a thickness below about 100 nm. In any of the preceding embodiments, the hydrogel layer comprises a maximum thickness of about 10 microns.

In any of the preceding embodiments, a first portion of the hydrogel layer comprises a first thickness different from a second thickness of a second portion of the hydrogel layer.

In any of the preceding embodiments, each of the first and second PEG species is a branched species having a branch count between two to twelve branch arms.

In any of the preceding embodiments, the first PEG species comprises a reactive electron pair accepting group and the second PEG species comprises a reactive nucleophilic group, the reactive electron pair accepting group and the reactive nucleophilic group adapted to react to thereby form cross-links between the first PEG species to the second PEG species. In any of the preceding embodiments, the reactive electron pair accepting group is a sulfone moiety. In any of the preceding embodiments, the reactive nucleophilic group is a thiol moiety.

In any of the preceding embodiments, the reactive electron pair accepting group of the first PEG species is covalently linked to the outer surface of the core.

In any of the preceding embodiments, the coated lens includes an advancing contact angle between about 20 degrees to about 50 degrees. In some embodiments, the advancing contact angle is between about 25 degrees to about 35 degrees.

In any of the preceding embodiments, the hydrogel layer comprises between about 80% to about 98% water by weight.

In any of the preceding embodiments, the core consists of silicone. In any of the preceding embodiments, the core comprises silicone. In any of the preceding embodiments, the core is substantially free of silicone. In any of the preceding embodiments, the core comprises a hydrogel.

Another aspect of the invention relates to a multi-layer contact lens including a lens core layer covered by an outer hydrophilic PEG polymer layer, wherein the hydrophilic polymer layer comprises a first PEG macromer subpopulation having an electron pair accepting moiety and a second PEG macromer subpopulation having a first nucleophilic reactive moiety, wherein the first and second PEG macromer subpopulations are cross-linked.

In any of the preceding embodiments, the hydrophilic polymer layer is attached to the core layer by a covalent linkage between the electron pair accepting moiety of the first PEG macromer and a second nucleophilic reactive moiety on a surface of the core layer. In any of the preceding embodiments, the covalent linkage between the core layer and the electron pair accepting moiety is a thioether moiety. In any of the preceding embodiments, the concentration of the electron pair accepting moiety exceeds the concentration of the first nucleophilic reactive moiety by about 1% to about 30%. In any of the preceding embodiments, the concentration of the electron pair accepting moiety exceeds the concentration of the first nucleophilic reactive moiety by about 5% to about 20%.

In any of the preceding embodiments, the electron pair accepting moiety is a sulfonyl group. In any of the preceding embodiments, the first nucleophilic reactive moiety is a thiol group.

In any of the preceding embodiments, the hydrophilic polymer layer comprises one or more species of a branched PEG polymer. In any of the preceding embodiments, the branched PEG polymer species comprises a branch count between about two arms to about twelve arms. In any of the preceding embodiments, the branched PEG polymer species comprises starred branching.

In any of the preceding embodiments, each of the first and second PEG macromers has a molecular weight between about 1 kda and about 40 kda. In any of the preceding embodiments, the molecular weight is between about 5 kda and about 30 kda.

In any of the preceding embodiments, the hydrophilic PEG layer comprises between about 80% and about 98% water by weight. In any of the preceding embodiments, the hydrophilic PEG layer comprises between about 85% and about 95% water by weight.

In any of the preceding embodiments, the hydrophilic PEG layer has a thickness less than about 1 micron. In any of the preceding embodiments, the hydrophilic PEG layer has a thickness less than about 5 micron. In any of the preceding embodiments, the hydrophilic PEG layer has a maximum thickness of about 10 microns. In any of the preceding embodiments, the hydrophilic PEG layer has a maximum thickness between about 1 micron to about 5 microns. In any of the preceding embodiments, the hydrophilic PEG layer has a thickness between about 50 nm to about 500 nm. In any of the preceding embodiments, the hydrophilic PEG layer has a thickness between about 100 nm to about 250 nm.

In any of the preceding embodiments, the hydrophilic PEG layer further comprises at least one active agent. In any of the preceding embodiments, the at least one active agent is selected from the group consisting of a UV-absorbing agent, a visibility tinting agent, an antimicrobial agent, a bioactive agent, a leachable lubricant, a leachable tear-stabilizing agent, or any mixture thereof.

Another aspect of the invention relates to a method of making a PEG hydrogel coated contact lens including the steps of reacting an outer surface of the contact lens with a first PEG species of a hydrophilic polymer solution, wherein the first PEG species comprises an electron pair accepting moiety and a first portion of the electron pair accepting moiety forms a covalent attachment to the outer surface of the contact lens through a first nucleophilic conjugate reaction; and reacting the first PEG species of the hydrophilic polymer solution with a second PEG species of the hydrophilic polymer solution, the second PEG species comprising a nucleophilic reactive moiety adapted to covalently link to a second portion of the electron pair accepting moiety of the first PEG species in a second nucleophilic conjugate reaction to thereby at least partially cross-link the first and second PEG species, wherein a PEG hydrogel coating is formed and covalently attached to the outer surface of the contact lens by the first and second nucleophilic conjugate reactions.

In any of the preceding embodiments, further including the step of modifying an outer surface of a contact lens to form the plurality of reactive nucleophilic sites on the outer surface. In any of the preceding embodiments, the modify-

ing step comprises exposing the outer surface of the contact lens to a gas plasma treatment.

In any of the preceding embodiments, the step of reacting an outer surface of the contact lens with the first PEG species includes reacting at least a portion of the plurality of reactive nucleophilic sites on the outer surface with the first portion of the electron pair accepting moiety on the first PEG species.

In any of the preceding embodiments, both of the first and second nucleophilic conjugate reactions are 1,4-nucleophilic addition reactions.

In any of the preceding embodiments, the first and second nucleophilic conjugate reactions are both a Michael-type reaction.

In any of the preceding embodiments, both of the first and second nucleophilic conjugate reactions are click reactions.

In any of the preceding embodiments, the nucleophilic reactive moiety of the second PEG species is a thiol group and the electron pair accepting moiety of the first PEG species is a sulfone group.

In any of the preceding embodiments, the first PEG species and the second PEG species are cross-linked through a thioether moiety.

In any of the preceding embodiments, the hydrophilic polymer solution comprises substantially equivalent concentrations of the first and second PEG species.

In any of the preceding embodiments, the concentration of the electron pair accepting moiety of the first PEG species exceeds the concentration of the nucleophilic reactive moiety of the second PEG species by about 1% to about 30%. In any of the preceding embodiments, the concentration of the electron pair accepting moiety of the first PEG species exceeds the concentration of the nucleophilic PEG reactive moiety of the second PEG species by about 5% and about 20%.

In any of the preceding embodiments, the reacting steps are performed at a temperature between about 15 degrees Celsius and about 100 degrees Celsius. In any of the preceding embodiments, the reacting steps are performed at a temperature between about 20 degrees Celsius and about 40 degrees Celsius. In any of the preceding embodiments, the reacting steps are performed at a ph between about 7 and about 11.

In any of the preceding embodiments, the contact lens comprises a core substantially free of silicone and includes a hydrogel core.

In an exemplary embodiment, the invention is a contact lens comprising: a silicone-containing layer and a first polyethylene glycol-containing layer; wherein said contact lens has a layered structural configuration; the subunits of the polymer of said first polyethylene glycol-containing layer are essentially all polyethylene glycol subunits; and the first polyethylene glycol-containing layer and the silicone-containing layer are covalently attached.

In an exemplary embodiment, according to the above paragraph, further comprising a second polyethylene glycol-containing layer; wherein the subunits of the polymer of said second polyethylene glycol-containing layer are essentially all polyethylene glycol subunits; and the second polyethylene glycol-containing layer and the silicone-containing layer are covalently attached.

In an exemplary embodiment, according to any of the above paragraphs, said contact lens comprises an anterior surface and a posterior surface, and wherein said layered structural configuration is the anterior surface is the first polyethylene glycol-containing layer and the posterior surface is the silicone-containing layer, or the anterior surface is the silicone-containing layer and the posterior surface is the first polyethylene glycol-containing layer.

In an exemplary embodiment, according to any of the above paragraphs, said contact lens comprises an anterior surface and a posterior surface, and wherein said layered structural configuration is the anterior surface is the first polyethylene glycol-containing layer and the posterior surface is the second polyethylene glycol-containing layer.

In an exemplary embodiment, according to any of the above paragraphs, the invention further comprises an inner layer, wherein said silicone-containing layer is said inner layer.

In an exemplary embodiment, according to any of the above paragraphs, said contact lens has a contact angle of between about 10 degrees and about 20 degrees.

In an exemplary embodiment, according to any of the above paragraphs, said first polyethylene glycol-containing layer is essentially non-swellable.

In an exemplary embodiment, according to any of the above paragraphs, said first polyethylene glycol-containing layer is essentially non-swellable and said second polyethylene glycol-containing layer is essentially non-swellable.

In an exemplary embodiment, according to any of the above paragraphs, the silicone-containing layer is substantially uniform in thickness, and the first polyethylene glycol layer is substantially uniform in thickness.

In an exemplary embodiment, according to any of the above paragraphs, the second polyethylene glycol layer is substantially uniform in thickness, and the anterior and posterior polyethylene glycol layers merge at the peripheral edge of the contact lens to completely enclose the silicone-containing layer.

In an exemplary embodiment, according to any of the above paragraphs, the silicone-containing layer has an average thickness of between about 1 micron and about 100 microns.

In an exemplary embodiment, according to any of the above paragraphs, the silicone-containing layer has an average thickness of between about 25 microns and about 75 microns.

In an exemplary embodiment, according to any of the above paragraphs, the first polyethylene glycol layer has an average thickness of between about 10 microns and about 25 microns.

In an exemplary embodiment, according to any of the above paragraphs, the second polyethylene glycol layer has an average thickness of between about 1 micron and about 40 microns.

In an exemplary embodiment, according to any of the above paragraphs, the second polyethylene glycol layer has an average thickness of between about 10 microns and about 25 microns.

In an exemplary embodiment, according to any of the above paragraphs, the first polyethylene glycol layer and the silicone-containing layer are covalently attached through a sulfonyl moiety.

In an exemplary embodiment, according to any of the above paragraphs, the second polyethylene glycol layer and the silicone-containing layer are covalently attached through a sulfonyl moiety.

In an exemplary embodiment, according to any of the above paragraphs, the silicone-containing layer is at least 99% silicone by weight.

In an exemplary embodiment, according to any of the above paragraphs, the silicone-containing layer is at least 80% H2O by weight.

In an exemplary embodiment, according to any of the above paragraphs, the silicone-containing layer is lotrafilcon or balafilcon or nusil Med 6755.

In an exemplary embodiment, according to any of the above paragraphs, further comprising a UV-absorbing agent, a visibility tinting agent, an antimicrobial agent, a bioactive agent, a leachable lubricant, or a leachable tear-stabilizing agent, and mixtures thereof.

In an exemplary embodiment, according to any of the above paragraphs, said UV-absorbing agent, visibility tinting agent, antimicrobial agent, bioactive agent, leachable lubricant, or leachable tear-stabilizing agent is in the silicone-containing layer.

In an exemplary embodiment, the invention is a lens package, comprising the contact lens according to any of the above paragraphs, and a packaging solution.

In an exemplary embodiment, according to the above paragraph, the packaging solution comprises a viscosity-enhancing polymer, polyethylene glycol, mucin-like material, or a surfactant.

In an exemplary embodiment, the invention is a method of making the contact lens according to any of the above paragraphs.

Exemplary embodiments of the technology relate to a contact lens having a base, core, or bulk material and a hydrophilic layer attached to a surface of the bulk/core/base. In some embodiments, the core or base is a silicone-containing material such as a silicone core or a silicone substrate. In some embodiments, the core or base may only contain silicone-containing material. In some embodiments, the core/bulk/base consists of silicone-containing material. In other cases, the core or base includes about 10% to about 20% a silicone-containing material. In further variations, the core/bulk/base may contain about 100% silicone. In further embodiments, the contact lens substrate may contain silicone, a hydrogel, and water. In further embodiments, the contact lens substrate may be made of any material not limited to a silicone-containing material.

In further embodiments, the hydrophilic layer may be formed from a hydrophilic polymer. In some variations, the hydrophilic layer is a hydrogel that includes one or more polymer networks. In some variations, the hydrogel polymer network is cross-linked. In further examples, the hydrogel is a cross-linked polyethylene glycol (PEG) network.

In additional embodiments, the contact lens core is chemically bonded to the hydrophilic layer. For example, in some embodiments, a hydrogel layer is covalently bonded to a surface of the core. In further variations, the covalent bonding occurs between reactive groups in a Click reaction. In some embodiments, the reactive groups are selected according to a desired thermodynamic driving force in a resulting reaction. In some cases, one or more portions of the base or core is attached to the hydrophilic layer.

Further variations provide for a contact lens with a layer of cross-linked hydrophilic polymer (for example polyethylene glycol) on some portion of the contact lens surface in order to improve the hydrophilicity of the contact lens surface (which in some embodiments may be measured as decreasing advancing contact angle) and augment the interaction of a contact lens with an ocular region. Some device or structure embodiments are directed to a hydrophilic polymer layer, itself, without specifically including an underlying lens core.

Additional embodiments provide for methods of forming a contact lens having a hydrophobic core with a hydrophilic layer. In some variations, the method includes the steps of depositing a cross-linked hydrophilic polymer onto a surface of a contact lens and covalently attaching the cross-linked hydrophilic polymer to the contact lens surface. Further variations may include activating the lens surface and incubating the lens in a low concentration solution of branched hydrophilic polymers. In some embodiments, the branched hydrophilic polymers include reactive functional groups that are reactive to each other and to the lens surface.

In some embodiments, the methods include forming a substantially optically clear cross-linked hydrophilic polymer film on the contact lens. In some cases, the optically film improves the wettability of the underlying contact lens, which may be a silicone-containing contact lens material.

BRIEF DESCRIPTION OF THE DRAWINGS

The novel features of the invention are set forth with particularity in the claims that follow. A better understanding of the features and advantages of the present invention will be obtained by reference to the following detailed description that sets forth illustrative embodiments, in which the principles of the invention are utilized, and the accompanying drawings of which:

FIG. **1**A shows a contact lens having a concave and convex surfaces.

FIG. **1**B is a cross-sectional view of an exemplary contact lens with a covalently attached cross-linked hydrogel layer.

FIG. **2** is a cross-sectional view of the contact lens shown in FIG. **1**B on the cornea.

FIGS. **3**A-**3**B show a first polymer species and a second polymer species with respective reactive groups A and N.

FIGS. **4**A-**4**B show a reaction between a sulfonyl and thiol group.

FIGS. **5**A-**5**C show schematically a hydrophilic polymer having two species covalently attached to a lens core.

FIGS. **6**A-**6**C show a captive bubble test.

FIG. **7** shows an activated lens surface.

FIG. **8** is a schematic diagram of a first and second reaction with principal reactants.

FIGS. **9**A-**9**D show more details of reactants and reactions depicted in FIG. **8**.

FIGS. **10**A-**10**B are flow diagrams of exemplary methods described.

FIGS. **11**A-**11**B show a schematic viewing of a continuously stirred tank reactor.

FIGS. **12**A-**12**B show a method of producing lenses with bilateral hydrogel layers differing in depth or composition.

FIGS. **13**A-**13**T shows contact angles for exemplary lens.

FIG. **14**A-**14**J shows MATLAB code for contact angle calculation.

FIG. **15** shows the mass change versus hydrogel formulation for PEG hydrogel formulations.

DETAILED DESCRIPTION

As shown in FIG. **1**A, a contact lens **2** may be generally understood as having a body with a concave surface **4** and a convex surface **6**. The lens body may include a periphery or a perimeter **8** between the surfaces. The periphery may also include a circumferential edge between the surfaces.

The concave surface **4** may also be referred to as a posterior surface and the convex surface **6** may also be referred to as an anterior surface, terms that refer to respective position when worn by a user. In practice, the concave surface of the lens is adapted to be worn against or adjacent to an ophthalmic surface. When worn the concave surface may lie against a user's corneal surface **48** (see FIG. **2**). The convex surface is outward-facing, exposed to the environ-

ment when the eye **40** is open. When the eye **40** is closed, the convex surface is positioned adjacent or against the inner conjunctival surface **44** of the eyelids **42** (see FIG. **2**).

Because the convex and concave surfaces of a lens may be placed against or adjacent ophthalmic tissue such as the corneal surface, the properties of the surfaces can greatly affect a user's comfort and wearability of the lens as described above. For example, the lens may disrupt the tear film **16** of the eye **40** causing symptoms associated with dry eye. As such, embodiments described herein provide for a coated contact lens having a hydrophilic polymer layer applied on at least one of the lens's surfaces to improve the lens's wettability and wearability with minimal tear film disruption.

In one embodiment, the contemplated coated contact lens includes a core or bulk material with at least one surface having a hydrophilic polymer layer. In some cases, the hydrophilic layer is adapted for placement against an ophthalmic surface. The hydrophilic layer may cover a portion of the lens core surface. Alternatively, the hydrophilic layer may completely or substantially completely cover the core surface.

In other variations, more than one core surface has a hydrophilic layer. For example, both the concave and the convex surfaces of the lens may be coated by a hydrophilic polymer layer. Each hydrophilic layer on either concave or convex surfaces may independently completely or partially cover respective surfaces. In some cases the layer on each side of the core form a contiguous hydrophilic layer across both surfaces.

In additional variations, the hydrophilic polymer layer is formed from a cross-linked hydrogel polymer network having one or more cross-linked species. The hydrophilic polymer network may be partially cross-linked or substantially fully cross-linked. In some variations, the hydrophilic polymer is cross-linked to approximately 95% end group conversion.

Referring to FIG. **1**B, a cross-section of an exemplary embodiment of a coated contact lens **10** is shown. Coated contact lens **10** includes a lens core **18** and a hydrophilic polymer layer **20** attached to the core **18**. As shown, a hydrophilic polymer layer **20** surrounds the core **18**. Both the concave and convex surfaces **12**, **14** are coated by the same hydrophilic polymer layer **20** on both sides of the lens **18** with the hydrophilic polymer layer **20** extending to the peripheral edge **8** of the core **10**. As shown, the outer hydrophilic layer **20** is substantially contiguous through or across a circumferential edge portion **18**.

Referring to FIG. **2**, the coated contact lens **10** of FIG. **1**B is positioned in a user's eye **40**. The eye **40** is shown with eye lens **46** and iris **50**. The concave surface **12** of the lens **10** is disposed and centered on the cornea. The convex surface **14** of the lens **10** is directed outwardly, facing the environment when the eye **40** is open. When the eyelid **42** close, the convex surface **14** is adjacent to the inner or conjunctival surface **44** of the eyelid **42**. As the eyelids **42** open and close the conjunctival surface **44** slides across the convex surface **14** of the lens **10**.

When placed on the cornea, the hydrophilic layer **20** of the contact lens **10** interacts with the natural tear film **16** of the eye **40**. The contact lens **10** may be positioned within the tear film **16** and/or substantially reside within the aqueous layer of the tear film **16** that covers the eye **40**. In some cases, the lens **10** is immersed in the tear film **16**. The hydrophilic layer may be adapted to minimize disruption of the tear film by the contact lens.

A. Hydrophilic Polymer Layer

As used herein, the term "hydrophilic layer" or "hydrogel layer" may refer to a single continuous layer or various coated portions on the lens core.

Although shown in FIG. **1**B as a single hydrophilic layer covering both sides of the lens core, it is to be appreciated that in some cases, only a portion of the lens (e.g. A single surface or a part of a surface) may be coated by a hydrophilic polymer layer. In some cases, the hydrophilic layer may only coat one of the core surfaces such as the concave surface. Moreover, the layer may not coat the entire area of the surface.

Additionally, other contemplated embodiments may include two or more noncontiguous hydrophilic polymer layers. For example, a first hydrophilic polymer layer may at least partially cover the concave surface while a second hydrophilic polymer layer may at least partially cover the convex surface. Unlike the embodiment depicted in FIG. **1**B, the first and second hydrophilic polymer layer may not touch or share a boundary with one another.

In certain embodiments, the arrangement between the lens core and the surrounding hydrogel or hydrophilic layer may be understood as a layered structure with a hydrophilic polymer layer attached to an outer surface of a lens core layer. The hydrophilic polymer layer may be placed on either of the concave or convex surfaces. In some variations, the hydrophilic layer may only cover a portion of the lens core layer.

In other cases, the arrangement may include a first hydrophilic polymer layer on one side of the lens core layer, a second hydrophilic polymer layer on another side of the lens core layer. The core layer being a middle layer between the two hydrophilic polymer layers. The first and second layers may share a boundary (e.g. Contiguous layers) or may form separate independent layers (e.g. Noncontiguous layers).

In some cases, the layered arrangement a contact lens of the invention can be established by fluorescence analysis methods as described in Qui et al, U.S. Pat. Appl. Nos. 201200026457 and 201200026458.

Additionally, the hydrophilic layer may have relatively uniform dimensions, compositions, and mechanical properties throughout. Referring to FIG. **1**B, the hydrophilic layer **20** has a substantially uniform thickness, water content, and chemical composition throughout the layer. In some embodiments, the hydrophilic layer has a substantially homogeneous composition and a substantially uniform depth and/or thickness.

As can be appreciated, uniformity is not required and may not be desirable for all situations. In some cases, a single layer may include portions having different characteristics including dimensions, composition, and/or mechanical properties. For example, a portion of the layer may have a different thickness than another portion, which may result in varying water content between the two portions.

Similarly, where two or more hydrophilic layers are used, the hydrophilic polymer layers may share or differ in any characteristics. For example, the core material may be asymmetrically layered with the hydrophilic polymer. The depth/thickness of the resulting hydrophilic polymer layers may vary between the layers on opposing sides of the lens substrate. This can result in, for example, different mechanical characteristics between the concave-cornea facing side of the coated contact lens and the outward facing convex face.

In some variations, the average thickness of the hydrophilic polymer layer may range between about 50 nm and about 500 nm. In particular embodiments, the hydrophilic

layer has a thickness of about 100 nm to about 250 nm. In an exemplary embodiment, the thickness of the hydrophilic layer is between about 1 micron and about 200 microns, or between about 1 micron and about 100 microns, or between about 10 microns and about 200 microns, or between about 25 microns and about 200 microns, or between about 25 microns and about 100 microns, or between about 5 microns and about 50 microns, or between about 10 microns and about 50 microns, or between about 10 microns and about 35 microns, or between about 10 microns and about 25 microns, or between about 1 micron and about 10 microns.

In other embodiments, hydrophilic layer has a thickness between about 0.01 microns and about 1 micron, or between about 0.01 microns and about 0.05 microns, or between about 0.05 microns and about 1 micron, or between about 0.02 microns and about 0.04 microns, or between about 0.025 microns and about 0.075 microns, or between about 0.02 microns and about 0.06 microns, or between about 0.03 microns and about 0.06 microns. In an exemplary embodiment, the hydrophilic layer has an average thickness of between about 0.01 microns and about 25 microns, or between about 0.01 microns and about 20 microns, or between about 0.01 microns and about 15 microns, or between about 0.01 microns and about 10 microns, or between about 0.01 microns and about 5 microns, or between about 0.01 microns and about 2.5 microns, or between about 0.01 microns and about 2 microns. In other variations, the hydrophilic layer has an average thickness from about 0.1 microns to about 20 microns, or from about 0.25 microns to about 15 microns, or from about 0.5 microns to about 12.5 microns, or from about 2 microns to about 10 microns.

In further variations, the thickness or depth of the hydrogel layer may also be expressed in terms of the fold-multiple over a layer that could be represented as a molecular monolayer. In some embodiments, the hydrophilic layer has a thickness of that exceeds the nominal thickness of a molecular monolayer by at least five-fold. For example, in some cases the hydrophilic polymer layer is formed from PEG molecules that have a PEG monolayer radius of about 5 nm. The PEG containing hydrophilic polymer layer may have a thickness of about 50 nm, which results in a layer thickness or depth that is approximately 10-fold greater than the PEG monolayer radius.

Without limitation, the thickness of the anterior or posterior surface of a contact lens of the invention can be determined by AFM or fluorescence microscopy analysis of a cross section of the contact lens in fully hydrated state as described herein. In an exemplary embodiment, the thickness of the anterior or posterior surface is at most about 30% (i.e., 30% or less), or at most about 20% (20% or less), or at most about 10% (10% or less) of the thickness of the inner layer (e.g. Core) of the contact lens described in a fully hydrated state. In an exemplary embodiment, the layers forming the anterior and posterior surface of the contact lens described in this paragraph are substantially uniform in thickness. In an exemplary embodiment, these layers merge at the peripheral edge of the contact lens to completely enclose the inner layer of the silicon-containing layer.

Additionally, the hydrophilic layer may be understood to have a volume. In some cases, a first portion of the layer may have first volume V**1** and a second portion of the layer may have a second volume V**2**. The volume may be calculated based on an estimated surface area of the layer. A total volume may also be understood to be the volume of a single hydrophilic layer (e.g. A layer covering the entire lens) or a sum of various layers with corresponding volumes.

Volume calculations may be based on an estimated surface area of approximately 1.25 square centimeters, on each side of the lens core. In some cases, the hydrophilic polymer layer has a volume in the range of about 15 nl to about 1.5 μl. In other variations, a volume range of about 15 nl to about 150 nl corresponds to an enveloping hydrophilic thickness range of about 50 nm to about 500 nm.

Additionally, in some variations, the hydrophilic layer may host an aqueous pool that includes a portion of the tear film pool volume. The total volume of the tear film is estimated to be about 4 μl to about 10 μl. For the purpose of the following calculation, consider an estimated of total tear film volume of about 7.5 μl. Accordingly, in some embodiments, the hydrophilic layer may host an aqueous pool that comprises about from about 0.2% to about 2% of the total tear film pool volume

For water content of the hydrophilic layer, in some embodiments, the water content is between about 80% and about 98% water by weight. In other embodiments, the hydrophilic layer includes between about 85% and about 95% water by weight. Additionally, the water content of the hydrophilic layer may be expressed either by total water content or by a weight/volume percent. The polymer content of the hydrophilic layer may be described also by a weight/volume percent.

The hydrophilic layer may also include a hydrophilic polymer population having one or more subpopulations or species. In some cases, one or more species or subpopulations are cross-linked to form the hydrophilic polymer layer. The hydrophilic polymer layer precursors may be provided in a solution containing the cross-linkable material. Once cross-linked, the one or more species form the hydrophilic polymer coating.

In one variation, the hydrophilic layer includes a first polymer species and a second polymer species that are at least partially cross-linked together to form the hydrophilic layer. Additionally, the polymer species or subpopulation may include linear and/or branched components. A branched species may include a polymer having a branch count ranging from 2-arm to 12-arm branching. In other embodiments, the branched species may include starred branching with about 100 branches or more.

Referring to the FIG. **3**A, a first branched polymer species **51** and a second branched polymer species **52** are schematically shown. The first branched polymer species **51** has four branch arms with reactive functional group A. The second branched polymer species **52** is shown having four branch arms with a reactive functional group N. In some embodiments, a reactive moiety A of the first polymer species **51** is adapted to react with a reactive moiety B of the second polymer species **52**. The reaction between moieties A and B may form a covalent cross-link between the first and second polymer species. FIG. **3**B depicts the first and second species **51**, **52** cross-linked by an A-N moiety formed by a reaction between the reactive group A of the first polymer species and a reactive group B of a second polymer species. In some embodiments, the cross-linking action between one or more polymer and/or macromer species forms the hydrophilic polymer layer. For example, cross-linking one or more polymer species in a polymer solution may form a hydrogel with desirable characteristics for coating the lens core.

As can be appreciated, the cross-linking mechanism and/or reaction for a first and second polymer species may include any number of suitable methods known in the art including photochemical or thermal cross-linking. In some cases, cross-linking may occur through nucleophilic conjugate reaction, Michael-type reaction (e.g. 1,4 addition),

and/or Click reaction between respective reactive groups on more than one polymer species in the hydrophilic layer.

Any suitable polymers may be used for the hydrophilic polymer population in the hydrophilic layer. In some cases, the polymer population includes species derived from polyethylene glycol (PEG), phosphorylcholine, poly(vinyl alcohol), poly(vinylpyrrolidinone), poly(N-isopropylacrylamide) (PNIPAM), polyacrylamide (PAM), poly(2-oxazoline), polyethylenimine (PEI), poly(acrylic acid), acrylic polymers such as polymethacrylate, polyelectrolytes, hyaluronic acid, chitosan, and dextran.

Additionally, any suitable reactive moieties may be used for the polymer species and subpopulations including reactive functional groups (e.g. Reactive nucleophilic groups and electron pair acceptor) that react to form covalent linkages between polymer species or subpopulations to form the hydrophilic polymer layer described.

1. Reactive Functional Groups

Reactive functional groups and classes of reactions useful in covalent linking and cross-linking are generally known in the art. In some cases, suitable classes of reactions with reactive functional groups include those that proceed under relatively mild conditions. These include, but are not limited to nucleophilic substitutions (e.g., reactions of amines and alcohols with acyl halides and activated esters), electrophilic substitutions (e.g., enamine reactions) and additions to carbon-carbon and carbon-heteroatom multiple bonds (e.g., Michael reactions and Diels-Alder reactions). These and other useful reactions are discussed, for example, in: March, ADVANCED ORGANIC CHEMISTRY, 3rd Ed., John Wiley & Sons, New York, 1985; Hermanson, BIOCONJUGATE TECHNIQUES, Academic Press, San Diego, 1996; and Feeney et al., MODIFICATION OF PROTEINS; Advances in Chemistry Series, Vol. 198, American Chemical Society, Washington, D.C., 1982.

a) Amines and Amino-Reactive Groups

In one embodiment, the reactive functional group is a member selected from amines, such as a primary or secondary amine, hydrazines, hydrazides, and sulfonylhydrazides. Amines can, for example, be acylated, alkylated or oxidized. Useful non-limiting examples of amino-reactive groups include N-hydroxysuccinimide (NHS) esters, sulfo-NHS esters, imidoesters, isocyanates, isothiocyanates, acylhalides, arylazides, p-nitrophenyl esters, aldehydes, sulfonyl chlorides and carboxyl groups.

NHS esters and sulfo-NHS esters react preferentially with the primary (including aromatic) amino groups of the reaction partner. The imidazole groups of histidines are known to compete with primary amines for reaction, but the reaction products are unstable and readily hydrolyzed. The reaction involves the nucleophilic attack of an amine on the acid carboxyl of an NHS ester to form an amide, releasing the N-hydroxysuccinimide.

Imidoesters are the most specific acylating reagents for reaction with the amine groups of e.g., a protein. At a ph between 7 and 10, imidoesters react only with primary amines. Primary amines attack imidates nucleophilically to produce an intermediate that breaks down to amidine at high ph or to a new imidate at low ph. The new imidate can react with another primary amine, thus crosslinking two amino groups, a case of a putatively monofunctional imidate reacting bifunctionally. The principal product of reaction with primary amines is an amidine that is a stronger base than the original amine. The positive charge of the original amino group is therefore retained. As a result, imidoesters do not affect the overall charge of the conjugate.

Isocyanates (and isothiocyanates) react with the primary amines of the conjugate components to form stable bonds. Their reactions with sulfhydryl, imidazole, and tyrosyl groups give relatively unstable products.

Acylazides are also used as amino-specific reagents in which nucleophilic amines of the reaction partner attack acidic carboxyl groups under slightly alkaline conditions, e.g. Ph 8.5.

Arylhalides such as 1,5-difluoro-2,4-dinitrobenzene react preferentially with the amino groups and phenolic groups of the conjugate components, but also with its sulfhydryl and imidazole groups.

p-Nitrophenyl esters of carboxylic acids are also useful amino-reactive groups. Although the reagent specificity is not very high, α- and ε-amino groups appear to react most rapidly.

Aldehydes react with primary amines of the conjugate components. Although unstable, Schiff bases are formed upon reaction of the amino groups with the aldehyde. Schiff bases, however, are stable, when conjugated to another double bond. The resonant interaction of both double bonds prevents hydrolysis of the Schiff linkage. Furthermore, amines at high local concentrations can attack the ethylenic double bond to form a stable Michael addition product. Alternatively, a stable bond may be formed by reductive amination.

Aromatic sulfonyl chlorides react with a variety of sites of the conjugate components, but reaction with the amino groups is the most important, resulting in a stable sulfonamide linkage.

Free carboxyl groups react with carbodiimides, soluble in both water and organic solvents, forming pseudoureas that can then couple to available amines yielding an amide linkage. Yamada et al., *Biochemistry* 1981, 20: 4836-4842, e.g., teach how to modify a protein with carbodiimides.

b) Sulfhydryl and Sulfhydryl-Reactive Groups

In another embodiment, the reactive functional group is a member selected from a sulfhydryl group (which can be converted to disulfides) and sulfhydryl-reactive groups. Useful non-limiting examples of sulfhydryl-reactive groups include maleimides, alkyl halides, acyl halides (including bromoacetamide or chloroacetamide), pyridyl disulfides, and thiophthalimides.

Maleimides react preferentially with the sulfhydryl group of the conjugate components to form stable thioether bonds. They also react at a much slower rate with primary amino groups and imidazole groups. However, at ph 7 the maleimide group can be considered a sulfhydryl-specific group, since at this ph the reaction rate of simple thiols is 1000-fold greater than that of the corresponding amine.

Alkyl halides react with sulfhydryl groups, sulfides, imidazoles, and amino groups. At neutral to slightly alkaline ph, however, alkyl halides react primarily with sulfhydryl groups to form stable thioether bonds. At higher ph, reaction with amino groups is favored.

Pyridyl disulfides react with free sulfhydryl groups via disulfide exchange to give mixed disulfides. As a result, pyridyl disulfides are relatively specific sulfhydryl-reactive groups.

Thiophthalimides react with free sulfhydryl groups to also form disulfides.

c) Other Reactive Functional Groups

Other exemplary reactive functional groups include:

(a) carboxyl groups and various derivatives thereof including, but not limited to, N-hydroxybenztriazole

esters, acid halides, acyl imidazoles, thioesters, p-nitrophenyl esters, alkyl, alkenyl, alkynyl and aromatic esters;

(b) hydroxyl groups, which can be converted to esters, ethers, aldehydes, etc.;

(c) haloalkyl groups, wherein the halide can be displaced with a nucleophilic group such as, for example, an amine, a carboxylate anion, thiol anion, carbanion, or an alkoxide ion, thereby resulting in the covalent attachment of a new group at the site of the halogen atom;

(d) dienophile groups, which are capable of participating in Diels-Alder reactions such as, for example, maleimido groups;

(e) aldehyde or ketone groups, such that subsequent derivatization is possible via formation of carbonyl derivatives such as, for example, imines, hydrazones, semicarbazones or oximes, or via such mechanisms as Grignard addition or alkyllithium addition;

(f) alkenes, which can undergo, for example, cycloadditions, acylation, Michael addition, etc;

(g) epoxides, which can react with, for example, amines and hydroxyl groups;

(h) phosphoramidites and other standard functional groups useful in nucleic acid synthesis and

(i) any other functional group useful to form a covalent bond between the functionalized ligand and a molecular entity or a surface.

d) Reactive Functional Groups with Non-specific Reactivities

In addition to the use of site-specific reactive moieties, the present invention contemplates the use of non-specific reactive functional groups. Non-specific groups include photoactivatable groups, for example. Photoactivatable groups are ideally inert in the dark and are converted to reactive species in the presence of light. In one embodiment, photoactivatable groups are selected from macromers of nitrenes generated upon heating or photolysis of azides. Electron-deficient nitrenes are extremely reactive and can react with a variety of chemical bonds including N—H, O—H, C—H, and C═C. Although three types of azides (aryl, alkyl, and acyl derivatives) may be employed, arylazides are presently preferred. The reactivity of arylazides upon photolysis is better with N—H and O—H than C—H bonds. Electron-deficient arylnitrenes rapidly ring-expand to form dehydroazepines, which tend to react with nucleophiles, rather than form C—H insertion products. The reactivity of arylazides can be increased by the presence of electron-withdrawing substituents such as nitro or hydroxyl groups in the ring. Such substituents push the absorption maximum of arylazides to longer wavelength. Unsubstituted arylazides have an absorption maximum in the range of 260-280 nm, while hydroxy and nitroarylazides absorb significant light beyond 305 nm. Therefore, hydroxy and nitroarylazides may be preferable since they allow to employ less harmful photolysis conditions for the affinity component than unsubstituted arylazides.

In an exemplary embodiment, photoactivatable groups are selected from fluorinated arylazides. The photolysis products of fluorinated arylazides are arylnitrenes, all of which undergo the characteristic reactions of this group, including C—H bond insertion, with high efficiency (Keana et al., *J. Org. Chem.* 55: 3640-3647, 1990).

In another embodiment, photoactivatable groups are selected from benzophenone residues. Benzophenone reagents generally give higher crosslinking yields than arylazide reagents.

In another embodiment, photoactivatable groups are selected from diazo compounds, which form an electron-deficient carbene upon photolysis. These carbenes undergo a variety of reactions including insertion into C—H bonds, addition to double bonds (including aromatic systems), hydrogen attraction and coordination to nucleophilic centers to give carbon ions.

In still another embodiment, photoactivatable groups are selected from diazopyruvates. For example, the p-nitrophenyl ester of p-nitrophenyl diazopyruvate reacts with aliphatic amines to give diazopyruvic acid amides that undergo ultraviolet photolysis to form aldehydes. The photolyzed diazopyruvate-modified affinity component will react like formaldehyde or glutaraldehyde.

It is well within the abilities of a person skilled in the art to select a reactive functional group, according to the reaction partner. As an example, an activated ester, such as an NHS ester can be a useful partner with a primary amine. Sulfhydryl reactive groups, such as maleimides can be a useful partner with SH, thiol, groups.

Additional exemplary combinations of reactive functional groups found on a compound of the invention and on a targeting moiety (or polymer or linker) are set forth in Table 1.

TABLE 1

Chemical Functionality 1	Chemical Functionality 2	Linkage
Hydroxy	Carboxy	Ester
	Hydroxy	Carbonate
	Amine	Carbamate
	SO_3	Sulfate
	PO_3	Phosphate
	Carboxy	Acyloxyalkyl
	Ketone	Ketal
	Aldehyde	Acetal
	Hydroxy	Anhydride
Mercapto	Mercapto	Disulfide
	Carboxy	Acyloxyalkyl Thioether
	Carboxy	Thioester
	Carboxy	Amino amide
	Mercapto	Thioester
	Carboxy	Acyloxyalkyl ester
	Carboxy	Acyloxyalkyl amide
	Amino	Acyloxyalkoxy carbonyl
	Carboxy	Anhydride
	Carboxy	N-acylamide
	Hydroxy	Ester
	Hydroxy	Hydroxymethyl ketone ester
	Hydroxy	Alkoxycarbonyl oxyalkyl
Amino	Carboxy	Acyloxyalkylamine
	Carboxy	Acyloxyalkylamide
	Amino	Urea
	Carboxy	Amide
	Carboxy	Acyloxyalkoxycarbonyl
	Amide	N-Mannich base
	Carboxy	Acyloxyalkyl carbamate
Phosphate oxygen ester	Hydroxy	Phosphate
	Amine	Phosphoramidate
	Mercapto	Thiophosphate ester
Ketone	Carboxy	Enol ester
Sulfonamide	Carboxy	Acyloxyalkyl sulfonamide
	Ester	N-sulfonyl-imidate

One skilled in the art will readily appreciate that many of these linkages may be produced in a variety of ways and using a variety of conditions. For the preparation of esters,

see, e.g., March supra at 1157; for thioesters, see, March, supra at 362-363, 491, 720-722, 829, 941, and 1172; for carbonates, see, March, supra at 346-347; for carbamates, see, March, supra at 1156-57; for amides, see, March supra at 1152; for ureas and thioureas, see, March supra at 1174; for acetals and ketals, see, Greene et al. Supra 178-210 and March supra at 1146; for acyloxyalkyl derivatives, see, PRODRUGS: TOPICAL AND OCULAR DRUG DELIVERY, K. B. Sloan, ed., Marcel Dekker, Inc., New York, 1992; for enol esters, see, March supra at 1160; for N-sulfonylimidates, see, Bundgaard et al., *J. Med. Chem.,* 31:2066 (1988); for anhydrides, see, March supra at 355-56, 636-37, 990-91, and 1154; for N-acylamides, see, March supra at 379; for N-Mannich bases, see, March supra at 800-02, and 828; for hydroxymethyl ketone esters, see, Petracek et al. *Annals NY Acad. Sci.,* 507:353-54 (1987); for disulfides, see, March supra at 1160; and for phosphonate esters and phosphonamidates.

The reactive functional groups can be chosen such that they do not participate in, or interfere with, the reactions necessary to assemble the reactive ligand analogue. Alternatively, a reactive functional group can be protected from participating in the reaction by the presence of a protecting group. Those of skill in the art will understand how to protect a particular functional group from interfering with a chosen set of reaction conditions. For examples of useful protecting groups, see Greene et al., PROTECTIVE GROUPS IN ORGANIC SYNTHESIS, John Wiley & Sons, New York, 1991.

Generally, prior to forming the linkage between the compound of the invention and the targeting (or other) agent, and optionally, the linker group, at least one of the chemical functionalities will be activated. One skilled in the art will appreciate that a variety of chemical functionalities, including hydroxy, amino, and carboxy groups, can be activated using a variety of standard methods and conditions. For example, a hydroxyl group of the ligand (or targeting agent) can be activated through treatment with phosgene to form the corresponding chloroformate, or p-nitrophenylchloroformate to form the corresponding carbonate.

In an exemplary embodiment, the invention makes use of a targeting agent that includes a carboxyl functionality. Carboxyl groups may be activated by, for example, conversion to the corresponding acyl halide or active ester. This reaction may be performed under a variety of conditions as illustrated in March, supra pp. 388-89. In an exemplary embodiment, the acyl halide is prepared through the reaction of the carboxyl-containing group with oxalyl chloride. The activated agent is combined with a ligand or ligand-linker arm combination to form a conjugate of the invention. Those of skill in the art will appreciate that the use of carboxyl-containing targeting agents is merely illustrative, and that agents having many other functional groups can be conjugated to the ligands of the invention.

Referring to FIG. **4**A, in some embodiments, the reactive functional groups include thiol and sulfonyl moieties. The reactive nucleophilic group may be a thiol group adapted to react to a sulfonyl group that functions as an electron pair accepting moiety. Where a first polymer species contains a reactive thiol group and a second polymer species contains a reactive sulfonyl group, the cross-linkage between the first and second species may be formed through a thioether moiety (FIG. **4**B).

In other variations, one or more polymer species in the hydrophilic layer are covalently linked through a sulfonyl moiety such as, but not limited to, an alkylene sulfonyl moiety, a dialkylene sulfonyl moiety, an ethylene sulfonyl moiety, or a diethylene sulfonyl moiety. In further variations, one or more polymer species in the hydrophilic layer are covalently linked through a sulfonyl moiety and a thioether moiety, or an alkylene sulfonyl moiety and a thioether moiety, or a dialkylene sulfonyl moiety and a thioether moiety, or an ethylene sulfonyl moiety and a thioether moiety, or a diethylene sulfonyl moiety and a thioether moiety.

In further variations, the one or more polymer species in the hydrophilic layer are covalently linked through an ester moiety, or alkylene ester moiety, or an ethylene ester moiety, or a thioether moiety, or an ester moiety and a thioether moiety, or an alkylene ester moiety and a thioether moiety, or an ethylene ester moiety and a thioether moiety.

In some embodiments, the ratio of the reactive subpopulations in the hydrophilic polymer population is approximately 1 to 1. In other embodiments, the concentration of one of the subpopulations or species exceeds another species by about 10% to about 30%. For example, the concentration of a polymer species with an electron pair accepting moiety may exceed another polymer species with a reactive nucleophilic group.

Additionally, where the concentration of a first and second polymer species are approximately 1 to 1, the relative number of reactive moieties for each species may be approximately the same or different. For example, a polymer species may have more sites having an electron pair accepting moiety compared to the number of reactive sites on the other polymer species carrying the nucleophilic group. This may be accomplished, for example, by having a first branched polymer species having more arms with reactive electron pair accepting sites compared to a second polymer species carrying the nucleophilic moiety.

2. PEG-containing Hydrophilic Layer

In some embodiments, the polymers in the hydrophilic layer comprise polyethylene glycol (PEG). The PEG may include species that have a molecular weight of between about 1 kda and about 40 kda. In particular embodiments, the PEG species have a molecular weight of between about 5 kda and about 30 kda. In some embodiments, the hydrophilic polymer population consists of a species of polyethylene glycol (PEG). In other variations, the weight average molecular weight M_w of the PEG polymer having at least one amino or carboxyl or thiol or vinyl sulfone or acrylate moiety (as a hydrophilicity-enhancing agent) can be from about 500 to about 1,000,000, or from about 1,000 to about 500,000. In other embodiments, the hydrophilic polymer population comprises different species of PEG.

In some cases, the polymer includes subunits of PEG. In some variations, the subunits of the polymers of the PEG-containing layer of the contact lens are at least about 95%, or at least about 96%, or at least about 97%, or at least about 98%, or at least about 99% or at least about 99.5% polyethylene glycol.

In some cases, the water content of the PEG-containing hydrophilic layer is between about 80% and about 98% water by weight. In other embodiments, the hydrophilic layer includes between about 85% and about 95% water by weight.

The PEG-containing hydrophilic layer may include a PEG hydrogel having a swelling ratio. To determine swelling ratio, the PEG-hydrogel can be weighed immediately following polymerization and then immersed in distilled water for a period of time. The swollen PEG hydrogel is weighed again to determine the amount of water absorbed into the polymer network to determine the swelling ratio. The mass fold increase an also be determined based on this comparison before and after water swelling. In some embodiments,

the PEG-containing layer has a mass fold increase of less than about 10%, or of less than about 8%, or of less than about 6%, or of less than about 5%, or of less than about 4%, or of less than about 3%, or of less than about 2%, or of less than about 1%. In some cases, the mass fold increase is measured by weighing the hydrogel when wet and then dehydrating it and weighing it again. The mass fold increase is then the swollen weight minus the dry weight divided by the swollen weight. For the hydrophilic layer as opposed to a bulk hydrogel, this could be accomplished by coating a non-hydrated substrate and then performing mass change calculations.

In another aspect, the invention provides for a hydrophilic layer with two cross-linkable PEG species. The first PEG species may include a reactive functional group adapted to react to another reactive functional on the second PEG species. Any of the described functional groups (e.g. Previous section (A)(1)) may be suitable for forming a cross-linkage between the first and second PEG species.

In some cases, the first PEG species includes an electron pair accepting moiety and the second PEG species may include a reactive nucleophilic moiety. Once cross-linked through a reaction between the electron pair accepting and nucleophilic moieties, the PEG polymer network forms a hydrogel with a water content or concentration. The PEG hydrogel may serve as the hydrophilic layer coating a lens core to provide improved wettability, wearability, and/or reduced tear film disruption.

3. Active Agents

The hydrophilic polymer layer may include active agents such as any one or more of a medicinal agent, UV-absorbing agent, a visibility tinting agent, an antimicrobial agent, a bioactive agent, a leachable lubricant, a leachable tear-stabilizing agent, or any mixture thereof. The substances and materials may be deposited on the contact lenses to augment the interaction of a contact lens with the ocular region. These substances may consist of polymers, drugs, or any other suitable substance and may be used to treat a variety of ocular pathologies including but not limited to dry eye disease, glaucoma, corneal ulcers, scleritis, keratitis, iritis, and corneal neovascularization.

4. Interpenetration Polymer Network

The outer hydrogel network may also consist of interpenetrating polymer networks (or semi-interpenetrating polymer networks) formed in either simultaneous or sequential polymerization steps. For example, upon forming the initial outer hydrogel layer, the layer can be swollen in a monomer solution such as acrylic acid along with a crosslinker and initiator. Upon exposure to UV light, a second interpenetrating network will form. The double network confers additional mechanical strength and durability while maintaining high water content and high wettability.

B. Lens Core

Any suitable contact lens may be used as a lens core for coating by the hydrophilic polymer layer described. For example, the lens core may be hydrophobic or a hydrophilic. A hydrophilic core may have adequate water content but lack protein binding resistance that is imparted by the contemplated hydrophilic layer. A hydrophilic core would include a hydrogel containing core such as a pure hydrogel lens. For example, the core may contain Polyhexyethyl methacrylate lenses (phema).

A suitable hydrophobic core includes a lens with high silicone content. The lens core may consist substantially entire of pure silicone, i.e. The core comprises about 100% silicone by weight. In other cases, the lens core, base, or substrate comprises about 10 to about 50 of silicone by weight. In some cases, the substrate or core comprises about 25% silicone by weight.

In another embodiment, the lens core may contain a silicone-hydrogel (sihy) where the core is more hydrophilic than a pure silicone core but less hydrophilic than a pure hydrogel. In such cases, the sihy lens core can be coated by the described hydrophilic polymer layers to improve wettability and wearability of the lens core. In other variations, the core comprises about 10% to about 20% of silicone by weight.

In an exemplary embodiment, the silicone-containing layer or core of the coated contact lens is lotrafilcon, balafilcon, galyfilcon, senofilcon, narafilcon, omafilcon, comfilcon, enfilcon, or asmofilcon. In some cases, the silicone-containing core is nusil Med 6755.

Alternatively, a non-silicone based core may be used as the substrate for coating. For example, an oxygen permeable lens made from a non-silicone material may also be coated with the described hydrophilic layer.

In an exemplary embodiment, the thickness of the core or core layer is from about 0.1 microns to about 200 microns, or from about 1 microns to about 150 microns, or from about 10 microns to about 100 microns, or from about 20 microns to about 80 microns, or from about 25 microns to about 75 microns, or from about 40 microns to about 60 microns.

C. Attachment of Hydrophilic Layer to Core

Another aspect of the invention provides for a coated contact lens with hydrophilic polymer layer that is covalently linked and attached to the core. The covalent linkage between the hydrophilic layer and the core may be understood to be a linking moiety that is covalently disposed between the lens core and the hydrophilic layer. In some cases, the linking moiety covalently attaches the hydrophilic layer to an outer surface of the lens core.

In some embodiments, the linking moiety may include any of the reactive functional groups described in at least section (A)(1). In further variations, the linking moiety may be a resultant moiety formed from a reaction between one or more of the reactive functional groups described in at least section (A)(1). For example, the linking moiety may include an electron pair accepting group such as a Michael-type Michael-Type electron pair accepter (e.g. Sulfone group) on a polymer species in the hydrophilic layer that reacts to covalently attach the hydrophilic polymer layer to the core.

Advantageously, the hydrophilic polymer layer may be attached to the core through similar reactions utilized to cross-link the hydrophilic polymer layer. Referring to FIGS. **5**A-**5**C, the hydrophilic polymer layer includes a first polymer species P**1** having a reactive group A and second polymer species P**2** with a reactive group N**1**. As described earlier, the hydrophilic polymer layer may be formed by cross-linking the first polymer species and the second polymer species through a reaction between reactive group A and N**1**. As shown in FIG. **5**A cross-linkages **63** covalently link the first and second species to form the first hydrophilic polymer layer **70**A on the convex surface **64** and the second hydrophilic polymer layer **70**B on the concave surface **62** of the lens core **60**.

Referring still to FIG. **5**A, the first polymer species also forms a covalent linkage **61** with the outer surface of the core. As shown, the covalent linkage is formed through the reactive group A of the first polymer species P**1** and the core surface. In some embodiments, the reactive group A on the first polymer species P**1** reacts to (1) crosslink the polymer species in the hydrophilic polymer layer and (2) attach the formed hydrophilic polymer layer to the core. In such cases,

this permits a first portion of the A moieties to react with the N1 moieties and a second portion of A moieties to react with the core surface. In some cases, the concentration of the first polymer species P1 and/or the number of available reactive A moieties of the first polymer species exceeds the corresponding concentration of the second polymer species and/or available reactive N1 moieties.

Referring to FIG. 5B, the lens core may include a reactive moiety N2. Reactive moiety N2 may be adapted to react with reactive groups of polymer species in the hydrophilic polymer layer. In some cases, the reactive moiety N2 only reacts to one of the polymer species. Referring to FIG. 5C, reactive moiety N2 reacts with reactive group A on the first species P1 to form a covalent attachment between the hydrophilic polymer layer and the core.

As can be appreciated, the reaction for attaching the hydrophilic polymer layer to the core may include any number of suitable methods known in the art including those described in at least section (A)(1). In some cases, covalent linking occurs through nucleophilic conjugate reaction, Michael-type reaction (e.g. 1,4 addition), and/or Click reaction between respective reactive groups on more than one polymer species in the hydrophilic layer.

In some cases, the reactive A group is an electron pair acceptor and the reactive groups N1 and N2 are reactive nucleophilic groups. N1 and N2 may be the same or different reactive groups. Continuing with the example shown in FIGS. 5A-5C, the hydrophilic polymer layer is formed by a first reaction between the reactive A group and reactive nucleophile N1. Additionally, the hydrophilic polymer layer is covalently attached to the core through a second reaction between the reactive A group and nucleophile N2. The two reactions may occur simultaneously or near simultaneously in the same reaction vessel.

Where the reactive functional groups include thiol and sulfonyl moieties, the reactive A group may be a sulfonyl group on a first PEG macromer. The sulfone moiety functions as an electron pair accepting moiety on the first PEG macromer. The reactive nucleophiles N1 and/or N2 may be a thiol group (see FIG. 4A). For the first reaction, the first and second PEG macromer form a cross-link through the reactive thiol and sulfonyl groups, which can results in a thioether moiety (see FIG. 4B). Where the N2 nucleophile on the core is also thiol, a thioether may also be formed by a reaction between the sulfonyl moiety on the first PEG macromer and the N2 on the surface of the lens core.

As can be appreciated, the nucleophilic group (or other type of reactive group) on the core does not need to be the same as the reactive groups in the hydrophilic polymer layers. However, utilizing the same reactive groups may provide some advantages such as controllability and predictability of the respective reactions.

In other variations, the hydrophilic polymer layer are covalently linked to the lens core through a sulfonyl moiety such as, but not limited to, an alkylene sulfonyl moiety, a dialkylene sulfonyl moiety, an ethylene sulfonyl moiety, or a diethylene sulfonyl moiety. In further variations, the hydrophilic polymer layer is covalently attached to the core through a sulfonyl moiety and a thioether moiety, or an alkylene sulfonyl moiety and a thioether moiety, or a dialkylene sulfonyl moiety and a thioether moiety, or an ethylene sulfonyl moiety and a thioether moiety, or a diethylene sulfonyl moiety and a thioether moiety.

In further variations, the hydrophilic polymer layer is covalently attached to the core through an ester moiety, or alkylene ester moiety, or an ethylene ester moiety, or a thioether moiety, or an ester moiety and a thioether moiety, or an alkylene ester moiety and a thioether moiety, or an ethylene ester moiety and a thioether moiety.

In further embodiments, the linkage between the core lens and the hydrophilic layer is covalent, to the particular exclusion of any other form of chemical bond or association. For example, a hydrogel layer as described may be bound to the surface of a hydrophobic lens core by a chemical bond that consists of a covalent bond.

D. Multi-Layer Contact Lens

In some embodiments, the coated contact lens contemplated herein is a layered lens with a hydrophilic polymer layer on a silicone-containing layer. Some variations provide for a silicone-containing layer and a first polyethylene glycol-containing layer, wherein the first polyethylene glycol-containing layer and the silicon-containing layer are covalently attached to one another, and the contact lens has a layered structural configuration. In an exemplary embodiment, the contact lens does not comprise a second silicone-containing layer. In other embodiments, the contact lens does not comprise a second polyethylene glycol-containing layer. In another embodiment, the contact lens does not comprise either a second silicone-containing layer or a second polyethylene glycol-containing layer. In an exemplary embodiment, the contact lens comprises an anterior surface and a posterior surface wherein the anterior surface is the first polyethylene glycol-containing layer and the posterior surface is the silicone-containing layer. In an exemplary embodiment, the contact lens comprises an anterior surface and a posterior surface wherein the anterior surface is the silicone-containing layer and the posterior surface is the first polyethylene glycol-containing layer.

In an exemplary embodiment, the layer which forms the anterior surface and the layer which forms the posterior surface of the contact lens are of substantially the same thickness. In other cases, the layers may independently have any suitable thickness, including the thickness described above for either the hydrogel layer or the core.

In another aspect, the invention provides a contact lens comprising a silicone-containing layer, a first polyethylene glycol-containing layer and a second polyethylene glycol-containing layer, wherein the first polyethylene glycol-containing layer and the silicone-containing layer are covalently attached to one another, and the second polyethylene glycol-containing layer and the silicone-containing layer are covalently attached to one another, and the contact lens has a layered structural configuration. In an exemplary embodiment, the contact lens does not comprise a second silicone-containing layer. In an exemplary embodiment, the contact lens described does not comprise a third polyethylene glycol-containing layer. In an exemplary embodiment, the contact lens does not comprise either a second silicon-containing layer or a third polyethylene glycol-containing layer. In an exemplary embodiment, the contact lens comprises an anterior surface and a posterior surface wherein the anterior surface is the first polyethylene glycol-containing layer and the posterior surface is the second polyethylene glycol-containing layer. In an exemplary embodiment, the contact lens described in this paragraph comprises an anterior surface and a posterior surface wherein the anterior surface is the first polyethylene glycol-containing layer and the posterior surface is the second polyethylene glycol-containing layer and the first and second polyethylene glycol-containing layer are substantially identical to each other. In other cases, the first polyethylene glycol-containing layer has a composition, dimension, or other characteristic independent of the second polyethylene glycol-containing layer.

In an exemplary embodiment, for any of the contact lenses of the invention, the first polyethylene glycol layer and the silicone-containing layer are covalently attached through a sulfonyl moiety. In an exemplary embodiment, for any of the contact lenses of the invention, the first polyethylene glycol layer and the silicone-containing layer are covalently attached through an alkylene sulfonyl moiety. In an exemplary embodiment, for any of the contact lenses of the invention, the first polyethylene glycol layer and the silicone-containing layer are covalently attached through a dialkylene sulfonyl moiety. In an exemplary embodiment, for any of the contact lenses of the invention, the first polyethylene glycol layer and the silicone-containing layer are covalently attached through an ethylene sulfonyl moiety. In an exemplary embodiment, for any of the contact lenses of the invention, the first polyethylene glycol layer and the silicone-containing layer are covalently attached through a diethylene sulfonyl moiety. In an exemplary embodiment, for any of the contact lenses of the invention, the first polyethylene glycol layer and the silicone-containing layer are covalently attached through a thioether moiety.

In an exemplary embodiment, for any of the contact lenses of the invention, the first polyethylene glycol layer and the silicone-containing layer are covalently attached through a sulfonyl moiety and a thioether moiety. In an exemplary embodiment, for any of the contact lenses of the invention, the first polyethylene glycol layer and the silicone-containing layer are covalently attached through an alkylene sulfonyl moiety and a thioether moiety. In an exemplary embodiment, for any of the contact lenses of the invention, the first polyethylene glycol layer and the silicone-containing layer are covalently attached through a dialkylene sulfonyl moiety and a thioether moiety. In an exemplary embodiment, for any of the contact lenses of the invention, the first polyethylene glycol layer and the silicon-containing layer are covalently attached through an ethylene sulfonyl moiety and a thioether moiety. In an exemplary embodiment, for any of the contact lenses of the invention, the first polyethylene glycol layer and the silicone-containing layer are covalently attached through a diethylene sulfonyl moiety and a thioether moiety.

In an exemplary embodiment, for any of the contact lenses of the invention, the second polyethylene glycol layer and the silicone-containing layer are covalently attached through a sulfonyl moiety. In an exemplary embodiment, for any of the contact lenses of the invention, the second polyethylene glycol layer and the silicone-containing layer are covalently attached through an alkylene sulfonyl moiety. In an exemplary embodiment, for any of the contact lenses of the invention, the second polyethylene glycol layer and the silicone-containing layer are covalently attached through a dialkylene sulfonyl moiety. In an exemplary embodiment, for any of the contact lenses of the invention, the second polyethylene glycol layer and the silicone-containing layer are covalently attached through an ethylene sulfonyl moiety. In an exemplary embodiment, for any of the contact lenses of the invention, the second polyethylene glycol layer and the silicone-containing layer are covalently attached through a diethylene sulfonyl moiety. In an exemplary embodiment, for any of the contact lenses of the invention, the second polyethylene glycol layer and the silicone-containing layer are covalently attached through a thioether moiety.

In an exemplary embodiment, for any of the contact lenses of the invention, the second polyethylene glycol layer and the silicone-containing layer are covalently attached through a sulfonyl moiety and a thioether moiety. In an exemplary embodiment, for any of the contact lenses of the invention, the second polyethylene glycol layer and the silicone-containing layer are covalently attached through an alkylene sulfonyl moiety and a thioether moiety. In an exemplary embodiment, for any of the contact lenses of the invention, the second polyethylene glycol layer and the silicone-containing layer are covalently attached through a dialkylene sulfonyl moiety and a thioether moiety. In an exemplary embodiment, for any of the contact lenses of the invention, the second polyethylene glycol layer and the silicone-containing layer are covalently attached through an ethylene sulfonyl moiety and a thioether moiety. In an exemplary embodiment, for any of the contact lenses of the invention, the second polyethylene glycol layer and the silicone-containing layer are covalently attached through a diethylene sulfonyl moiety and a thioether moiety.

In an exemplary embodiment, for any of the contact lenses of the invention, the first polyethylene glycol layer and the silicone-containing layer are covalently attached through an ester moiety. In an exemplary embodiment, for any of the contact lenses of the invention, the first polyethylene glycol layer and the silicone-containing layer are covalently attached through an alkylene ester moiety. In an exemplary embodiment, for any of the contact lenses of the invention, the first polyethylene glycol layer and the silicone-containing layer are covalently attached through an ethylene ester moiety. In an exemplary embodiment, for any of the contact lenses of the invention, the first polyethylene glycol layer and the silicone-containing layer are covalently attached through a thioether moiety.

In an exemplary embodiment, for any of the contact lenses of the invention, the first polyethylene glycol layer and the silicone-containing layer are covalently attached through an ester moiety and a thioether moiety. In an exemplary embodiment, for any of the contact lenses of the invention, the first polyethylene glycol layer and the silicone-containing layer are covalently attached through an alkylene ester moiety and a thioether moiety. In an exemplary embodiment, for any of the contact lenses of the invention, the first polyethylene glycol layer and the silicone-containing layer are covalently attached through an ethylene ester moiety and a thioether moiety.

In an exemplary embodiment, for any of the contact lenses of the invention, the second polyethylene glycol layer and the silicone-containing layer are covalently attached through an ester moiety and a thioether moiety. In an exemplary embodiment, for any of the contact lenses of the invention, the second polyethylene glycol layer and the silicone-containing layer are covalently attached through an alkylene ester moiety and a thioether moiety. In an exemplary embodiment, for any of the contact lenses of the invention, the second polyethylene glycol layer and the silicone-containing layer are covalently attached through an ethylene ester moiety and a thioether moiety.

E. Contact Angle

Advantageously, some of the contemplated coated contact lens provide for a hydrophilic polymer layer that has a population of hydrophilic polymers that are cross-linked with each other and, moreover, are as a whole, covalently attached to a lens core or layer. As such, the hydrophilic polymer layer can improve the wettability of the core contact lens.

As described in further detail below, the hydrophilicity or wettability of the hydrogel layer may be measured by a contact angle goniometer that implements a method known as a captive bubble contact angle test. Relatively high hydrophilicity is associated with a relatively low advancing contact angle.

In typical embodiments of the contact lenses according to the disclosed technology, when the lens is subjected to a bubble contact angle test, the lens shows an advancing contact in the range about 20° to about 50°. In more particular embodiments, the lens shows an advancing contact in the range about 25° to about 35°.

FIGS. **6**A-**6**C show aspects of a captive bubble test that is commonly used in the contact lens industry as a surrogate measure of wettability or hydrophilicity of contact lenses, as provided by embodiments of the technology. FIG. **6**A shows the setup **100** for a captive bubble test. The setup **100** includes a lens holding fixture **102** in communication with a test lens **104**. An air bubble **106** is positioned at a surface of the test lens from a syringe pump **108**.

FIG. **6**B shows a schematic view of the contact angle as it occurs in an aqueous solution between the surface of a contact lens and an air bubble, as the air bubble is being inflated against or being withdrawn away from the contact lens.

FIG. **6**C provides a schematic series of angles created as a bubble is being inflated against the contact lens surface, and then withdrawn. The left side of the drawing depicts the "receding phase" of the test; the right side of the drawing depicts the "advancing phase of the test. On the left, after the bubble first makes contact at what will be the central contact point between the bubble and the contact lens, the area of mutual contact expands, and the surrounding aqueous space recedes from the central contact point. Accordingly, this is termed the "receding phase". On the right, as the bubble is being withdrawn, the aqueous solution advances toward the central point of contact between the bubble and the contact lens. Accordingly, this is termed the "advancing phase" of the test. These profiles can be videographed during the test to capture the dynamics. In the recorded videos, software-based edge detection and angular separation techniques can be used to measure the receding and advancing angles at the interface of the bubble and lens.

In both the advancing and receding portions of the test, a small angle reflects the relatively high affinity of the contact lens surface for water, rather than air. Thus, there is an association between a small contact angle and hydrophilicity or wettability of the contact lens surface. In contrast, a large contact angle reflects a relative lack of affinity of the contact lens surface with water. By means of this test, the hydrophilicity of contact lens embodiments of the technology may be quantified.

In an exemplary embodiment, the contact lens having a hydrophilic polymer layer as described has an advancing contact angle of at least 20 degrees, or at least 25 degrees, or at least 30 degrees, or at least 35 degrees, or at least 40 degrees. In another embodiment, the advancing contact angle is between about 20 degrees and about 40 degrees, or between about 20 degrees and about 35 degrees, or between about 20 degrees and about 30 degrees, or between about 20 degrees and about 25 degrees, or between about 25 degrees and about 40 degrees, or between about 25 degrees and about 35 degrees, or between about 25 degrees and about 30 degrees, or between about 30 degrees and about 40 degrees or between about 35 and about 40 degrees. In another variation, the advancing contact angle is at least about 8 degrees, or at least about 9 degrees, or at least about 10 degrees, or at least about 11 degrees, or at least about 12 degrees, or at least about 13 degrees. In an exemplary embodiment, the advancing contact angle is between about 8 degrees and about 20 degrees, or between about 8 degrees and about 17 degrees, or between about 8 degrees and about 14 degrees, between about 8 degrees and about 12 degrees, or between about 9 degrees and about 20 degrees, or between about 9 degrees and about 17 degrees, or between about 9 degrees and about 14 degrees, between about 9 degrees and about 12 degrees, or between about 10 degrees and about 20 degrees, or between about 10 degrees and about 17 degrees, or between about 10 degrees and about 14 degrees, between about 10 degrees and about 12 degrees, or between about 11 degrees and about 20 degrees, or between about 11 degrees and about 17 degrees, or between about 11 degrees and about 14 degrees.

F. Methods of Making a Coated Contact Lens or Multi-Layered Contact Lens

Another aspect of the invention provides for methods of making described coated and/or layered contact lenses.

In some embodiments, the method includes the steps of reacting a surface of a contact lens with a hydrophilic polymer solution. The hydrophilic polymer solution may contain one or more subpopulations or species that are adapted to react to form a coating on at least a portion of the contact lens. In some cases, the hydrophilic polymer solution reacts to form a cross-linked coating on the contact lens. The coating may be partially or substantially completely cross-linked.

As shown in FIG. **3**A, the hydrophilic polymer solution may include a first polymer species with a reactive group A and a second polymer species with a reactive group N. The hydrophilic polymer layer may be formed on the contact lens by reacting the reactive groups on the first and second polymer species to form the cross-linked hydrophilic polymer layer. As shown in FIG. **3**B, the reactive groups A and N may form a covalent linkage **54** between the first and second polymer species to thereby cross-link the two species and result in a hydrophilic polymer layer. In some cases, the reaction between the first and second reactive groups on respective polymer species forms a hydrogel.

As described, any suitable reaction may be employed to form the hydrophilic polymer layer. These include (without limitation) nucleophilic conjugate reactions, Michael-type reactions (e.g. 1,4 nucleophilic addition reactions), and/or click reactions. In some cases, the reactive groups A and N are an electron pair accepting moiety and a nucleophilic moiety respectively.

Additionally, in some variations, the polymer species or subpopulation with in the hydrophilic polymer layer may include PEG species. In some cases, a first PEG species reacts with a second PEG species to form the hydrophilic polymer layer. For example, the first PEG species may include an electron pair acceptor adapted to react to a nucleophilic reactive moiety of a second PEG species to covalently link the PEG species.

Some embodiments provide for a covalent attachment between the hydrophilic polymer layer and the lens core or layer. For example, one or more of the polymer subpopulation or species within the hydrophilic polymer layer or solution may be adapted to react to the lens core to form a covalent attachment between the hydrophilic layer and the lens core. In some cases, the method of hydrophilic polymer layer attachment includes the step of reacting at least one of the polymer species with reactive sites on the surface of the core to form covalent bonds between the polymer species and the core surface.

Referring again to FIGS. **5**A-**5**C, a first polymer species P**1** may include a reactive group A that is adapted to react to a reactive group N**2** of the core **60** surface. The reaction between the A and N**2** groups results in a covalent linkage **61** between the first polymer species P**1** and the core **60**. As shown, the reactive group A may also be adapted to react

with another reactive moiety N1 of a second polymer species P2 to form the hydrophilic polymer layer. As such, a first reaction between P1 and P2 forms the hydrophilic polymer layer and a second reaction couples the hydrophilic polymer layer to the core.

In some cases, the same reactive group A on the first polymer species P1 is capable of reacting to either the reactive moiety N1 or N2. In one variation, a first portion of the reactive A groups react to the N1 moiety and a second portion of the reactive groups react to the N2 moiety. In some embodiments, the first and second portions of the reactive A groups are on the same molecule of a polymer species. In further variations, the first and second portions of the reactive A groups are on different branch arms of the same polymer species. The dual reactions between P1 and P2, and P1 and core may occur in the same reactive vessel and during the same reaction time (or overlapping in some portion of the reaction time).

As described, any suitable reaction may be employed to form the hydrophilic polymer layer and attach the hydrophilic polymer layer to the lens core. These include (without limitation) nucleophilic conjugate reactions, Michael-type reactions (e.g. 1,4 nucleophilic addition reactions), and/or click reactions. For example, the plurality of reactions may all be nucleophilic conjugate reactions. Alternatively, the plurality of reactions may be different types of reactions.

In some embodiments, the first and second reactions are nucleophilic conjugate reactions, more particularly, both are 1,4-nucleophilic addition Michael-type reactions. By way of example, in some embodiments, the nucleophilic reactive moiety of the first macromer population comprises a thiol group and the electron pair accepting moiety of the second macromer population comprises a sulfone group.

In other embodiments of the method the first and second nucleophilic conjugate reactions may be described more broadly as a "Click" type reaction. Click reactions, as originally described by Karl Sharpless and others, refer to modular assembly of macromolecules that are typified as occurring in an aqueous environment, delivering high yield as a result of being driven to completion by large thermodynamic force, and creating substantially no byproducts, or byproducts that are non-toxic to biological systems. The click reactions are advantageous for application toward the manufacture of contact lenses because the lenses may be reacted in an aqueous solution, without toxic byproducts, rapidly, and to high yield.

Other examples of click type reactions that could be used to attach branched polymers in our immersive dip coating process including (a) general thiol-ene click reactions in general, (b) [3+2] cycloadditions, including the Huisgen 1,2-dipolar cycloaddition, (c) Diels-Alder reaction, (d) [4+1] cycloadditions between isonitriles (isocyanides) and tetrazines, (e) nucleophilic substitution especially to small strained rings like epoxy and aziridine compounds, (f) carbonyl-chemistry-like formation of ureas, and (g) addition reactions to carbon-carbon double bonds, such as involve dihydroxylation or the alkynes in the thiolyne reaction.

In a particular embodiment, the method of making the described coated lens includes the steps of reacting an outer surface of the contact lens with a first PEG species of a hydrophilic polymer solution, wherein the first PEG species comprises an electron pair accepting moiety and a first portion of the electron pair accepting moiety forms a covalent attachment to the outer surface of the contact lens through a first nucleophilic conjugate reaction; and reacting the first PEG species of the hydrophilic polymer solution with a second PEG species of the hydrophilic polymer solution, the second PEG species comprising a nucleophilic reactive moiety adapted to covalently link to a second portion of the electron pair accepting moiety of the first PEG species in a second nucleophilic conjugate reaction to thereby at least partially cross-link the first and second PEG species, wherein a PEG hydrogel coating is formed and covalently attached to the outer surface of the contact lens by the first and second nucleophilic conjugate reactions.

In additionally embodiments, the method includes activating a surface of the lens core. Activating the surface may form a plurality of chemically reactive sites on the surface. The reactive sites may be, for example, nucleophilic sites for reaction with a hydrophilic polymer.

Referring to FIG. **7**, a lens **160** without reactive sites is shown with a plurality of reactive sites **162** following an activation or modification process. In some cases, a plasma process is used to activate the surface of a core lens. The activation process may include the step of exposing the outer surface of the lens core to gas plasma. In some embodiments, the lens is transferred to a holding device, typically metal, and placed in a vacuum plasma chamber. The lens is plasma treated in an atmospheric plasma to form reactive sites on the surface. In some cases, an atmospheric plasma is applied to lens at 200 mtorr for about 3 minutes to thereby result in nucleophilic functional sites on the lens. In some embodiments, the lens are dehydrated prior to the plasma treatment.

In further variations, the contact lens surface may be activated through plasma treatment, preferably in oxygen or nitrogen gas. For example, the contemplated process may include activating a core material in a nitrogen plasma.

In other embodiments, activation of the contact lens surface can also occur through exposure to increasing ph's, for example solution ph of above 11.

In further embodiments, activation can also occur by modifying the monomer mix to include groups that are reactive to the branched hydrophilic coating polymers. Activation of the monomer mix can be a direct activation, or activation with a protected group that is cleaved, for example by light or changing ph. In other cases, plasma polymerization of functional silanes including mercapto and amino silanes may be used for activation. Additionally, plasma polymerization of allyl alcohol and allyl amine can also be used for activation.

In some embodiments, the core activation or modification step results in a reactive group N2 (shown in FIG. **5**B) that is capable of reacting with at least one of the polymer species of the hydrophilic polymer layer. In some cases, at least one of the polymer species in the hydrophilic polymer layer reacts with a portion of the plurality of reactive sites on the core outer surface to form a covalent attachment between the hydrophilic polymer layer and the core surface. In some cases, the lens core is activated prior to the formation of the hydrophilic polymer layer on the core surface.

In some embodiments, the process of making the coated lens includes the step of reacting the activated core surface with a population of functionalized hydrophilic polymers. For example, the hydrophilic polymers may include a population of functionalized branched hydrophilic macromers with a first subpopulation functionalized with a nucleophilic reactive moiety and a second subpopulation functionalized with an electron pair accepting moiety. In further embodiments, the method may include reacting the functional moieties of two macromer subpopulations with each other in a first nucleophilic conjugate reaction to form covalent linkages between the two macromer subpopulations, thereby forming a cross-linked polymer network.

The method may also include reacting the electron pair accepting moieties of second macromer subpopulation and the nucleophilic moieties of the activated lens core surface in a second nucleophilic conjugate reaction to covalently attach the electron pair accepting moieties to the lens core surface. The first and second nucleophilic conjugate reactions, when complete, yield a contact lens that has a lens core with a cross-linked hydrophilic hydrogel layer covalently attached thereto.

As described, the first and second nucleophilic conjugate reactions may be of the same type with the reactions differing by having different reactants. The two reactions may involve the same electron pair acceptor, such as the hydrophilic polymer species comprising an electron pair accepter that can participate in a plurality of reactions. The plurality of reactions may differ by having distinct nucleophilically-reactive parent molecules, in one case, a hydrophilic polymer species with a nucleophilic moiety, and in the second case, a silicone-based polymer of the lens core with a nucleophilic moiety.

Referring to FIG. **8**, a schematic diagram **200** of two exemplary conjugate addition reactions **214**, **216** and the principal reactants are shown. The principal reactants can be understood as nucleophilic moieties **202** and electron pair accepting moieties **204**. In a first reaction, a reactant having nucleophilic functional moiety, such as PEG-thiol **206**, reacts with a reactant having an electron pair accepting functional moiety **204**, such as PEG-sulfone **204**; the product of the reaction **214** is a linked pair of PEG molecules, linked by way of a central thioether bond. As the reaction proceeds among the functionalized PEG molecules, the PEG takes the form of a linked network, and inasmuch as a PEG network is hydrophilic, in an aqueous environment, the network takes the form of an integrated hydrogel.

In a second reaction **216**, a reactant **204** having an electron pair accepting functional moiety, such as PEG-sulfone **204**, reacts with a nucleophilic site on the surface of the silicone-based lens core **210**; the product of this second reaction **216** is a covalent bond between the PEG-sulfone and the lens core. As above, inasmuch as the individual molecular that covalently link to the activated silicone-based core also are included as a constituent of a hydrogel structure, the hydrogel structure, as a whole, becomes covalently linked lens core.

FIGS. **9**A-**9**D show more detailed and particular aspects of reactants and reactions, as depicted schematically in FIG. **8**. FIG. **9**A shows a silicone-based lens core being activated by a plasma treatment to yield a lens surface covered with a bed of activated nucleophilic sites. FIG. **9**B shows the structure of examples of reactants, including a PEG molecule, a Michael-Type electron acceptor such as a vinyl sulfone moiety, a nucleophile functional group such as a thiol, and the detail of the Michael type reaction itself.

FIGS. **9**C-**9**D show a reaction process whereby two subpopulations of branched hydrophilic polymer species, a first subpopulation with a nucleophile functionality (N) and a second subpopulation with an electron pair accepting functionality (A) are in a reaction solution that bathes a nucleophilically activated (N) lens core. In the lower portion of FIG. **9**D, per the first reaction as depicted in FIG. **8**, reaction individual members of the two subpopulations have begun to link together by way of their functional groups, to form a hydrogel network. And, per the second reaction as depicted in FIG. **8**, electron pair accepting moieties (A) of hydrophilic polymers engage in covalent linking with the nucleophilic sites on the lens surface, thereby covalently attaching the hydrogel network to the lens surface.

FIGS. **10**A-**10**B provide flow diagrams of two variations of processes for making a contact lens with a covalently attached hydrogel membrane. FIG. **10**A shows a process that includes a plasma activation method. Such plasma treatment may include exposure to any of an oxygen plasma or a nitrogen plasma. FIG. **10**B shows a process that includes a chemical or "wet" activation method.

As described in FIG. **10**A, a contact lens **320** plasma treated **324** to form a plurality of reactive sites on the contact lens. This may be accomplished by placing the lens into a vacuum plasma chamber. In some embodiments, the lens is transferred to a holding device, typically metal, and placed in a vacuum plasma chamber. The lenses are plasma treated in an atmospheric plasma at 200 mtorr for about 3 minutes, thereby creating nucleophilic functional sites on the lens. As described, the lens may be in a dehydrated state prior to the plasma treatment.

Referring still to FIG. **10**A, after the lens core is activated, the activated lens core is placed into a solution that includes coating polymer and/or coating polymer species or precursors **324**. The coating polymer may be any of the described hydrophilic polymers described including a hydrophilic polymer population including subpopulations of functionalized branched PEG species. In some cases, the solution also includes isopropyl alcohol and water. The solution may have a ph >7. The solution may be agitated to create a well-stirred bath and the lenses incubate in the solution for some period of time. In some cases, the incubation time is about 50 minutes.

Optionally, the coating process may include extraction steps to remove an unwanted component from the coated lens. For example, where a silicone-based lens core is used for a base or substrate, unreacted silicone molecules in the lens cores are extracted or diffused out of the lenses. Advantageously, the extraction process removes raw lens core material (e.g. Raw silicone for a silicone-containing core) that may leach out of the lens into the ocular region. As such, further steps of the process may include transferring the lens to a solution of isopropyl alcohol and water for a period of time such as about 50 minutes **326** to continue extracting unreacted silicone molecules from the lens cores. Additionally, as a second rinse **328**, the lens may be transferred to a fresh solution of isopropyl alcohol and water for a period of time such as about 50 minutes to further extract unreacted silicone molecules from the lens cores. In some variations, the lens may also be transferred into a water bath **330** to equilibrate in water for a period of time (e.g. About 50 minutes).

Additionally, as shown in FIG. **10**A, the lens may be transferred to a packaging container with a packaging solution **332**. The lens may also be autoclaved **334**. In some cases, the lens is autoclaved at about 250° F. For about 30 minutes.

FIG. **10**B describes a wet-activation process for activating a lens core and coating the activated core. The process may begin with a lens in a hydrated state **370**. The next step may include activating the hydrated surface lens core **372**. This may be accomplished by a plasma or chemical treatment. For example, ozone may be used to activate the core surface. Once activated, the activated lens may be placed into a solution containing the coating material **374**. The solution may include a hydrophilic polymer solution as described and water. In some cases, the solution is at a ph >7. The solution may be agitated to create a well-stirred bath and the lens incubates therein. In some cases, the lens incubates for about 50 minutes.

Next, the lens may be transferred to a water bath to equilibrate in water **376**. The equilibration step may also serve to wash excess polymer from the lens. The lens may be equilibrated in water for about 50 minutes. The lens may be transferred to a packaging container with packaging solution **378**. Additionally, as another step, the lens may be autoclaved. In some cases, the lens is autoclaved at about 250° F. For about 30 minutes. After the autoclave step, the resulting coated lens is ready for use **382**.

Advantageously, the methods described herein provide for a cost-effective coating process that can be integrated with contact lens manufacturing processes currently employed in the industry.

Some embodiments of the method may be understood as an immersive method, wherein activated lens cores are immersed in a reaction solution within a stirred vessel, the solution including hydrophilic macromer reactants, and the reaction vessel operated to achieve appropriate reaction conditions. The reaction vessel and aspects of the conditions, in biochemical engineering terms, may be understood as occurring in a continuously stirred reaction tank (CSTR). In typical embodiments, the reacting steps occur within a reaction solution that has an aqueous solvent. Such the aqueous solvent may include any one or more of water, methanol, ethanol, or any suitable aqueous solvent that solubilizes PEG.

FIG. **11**A provides a schematic view of a continuously stirred tank reactor (CSTR) **400** suitable for performing the reaction described. The CSTR **400** includes an agitator **402** for stirring the reaction contents within the tank. A feeding line or conduit **404** allows input or inflow **406** of reaction solutions including a hydrophilic polymer solution containing at least one polymer species. As shown, first and second polymer species flow into the CSTR **400**. In some cases, the first and second polymer species have different flow rates VP**1** and VP**2** respectively. In other cases, the flow rates may be the same.

FIG. **11**A shows a plurality of contact lenses **404***a* and **404***b* in the CSTR **400**. In some cases, the contact lenses may be held in a mesh holder with openings or sufficient porosity to allow contact between the held lenses and the solution in the CSTR.

FIG. **11**A also shows an output or outflow opening or conduit **408** for removing fluid from the CSTR **400**. In some cases, the removed fluid is spent reaction fluid. The flow rate of the removed fluid may be designed as V_0.

In some cases, T_p indicates the polymer residence time and T_C indicates the contact residence time in the CSTR **400**. FIG. **11**B shows the relationship between polymer coating particle size as a function of time in a CSTR **400** where T_P is 1-72 hours and T_C is 0.25-24 hours.

In some variations, within the reaction solution, the total hydrophilic macromer concentration in the solution typically ranges between about 0.01 (w/v) % and about 0.50 (w/v) %. In some embodiments, the first and second macromer subpopulations are present in the solution at substantially equivalent concentrations. However, in other embodiments, the concentration of the reactive moiety of the second macromer subpopulation (an electron pair accepter) exceeds the concentration of the reactive moiety of first macromer subpopulation (a nucleophile).

Having an excess of electron pair reactive moieties with respect to the nucleophilic reactive moieties can be advantageous for the reactions included herein for the purpose of forming embodiments of hydrogel-coated contact lenses in that the electron pair accepting moieties of the hydrophilic polymer subpopulation so-functionalized can participate in two reactions. The polymer subpopulation functionalized with the electron pair acceptors participates (1) in covalent cross linking with the subpopulation functionalized with nucleophiles and (2) covalent attachment to nucleophilic sites on the silicone-based core lens surface. In contrast, the polymer subpopulation functionalized with a nucleophilic moiety engages only in the single reaction wherein it engages the polymer subpopulation functionalized with the electron pair accepting moiety.

The reactant concentration may also be appropriately expressed in terms of the relative concentrations of the reactive moieties of the participant macromers, rather than the concentrations of the macromers themselves. This follows from the possible variations in the degree to which the macromers are decorated with the function moieties that actually participate in the reactions. Accordingly, in some reaction embodiments, the concentration of the reactive moiety of the second macromer subpopulation exceeds the concentration of the reactive moiety of the first macromer subpopulation by at least about 1%. In more particular embodiments, the concentration of the reactive moiety of the second macromer subpopulation exceeds the concentration of the reactive moiety of the first macromer subpopulation by an amount that ranges between about 1% and about 30%. And in still more particular embodiments, the concentration of the reactive moiety of the second macromer subpopulation exceeds the concentration of the reactive moiety of the first macromer subpopulation by an amount that ranges between about 5% and about 20%.

Returning now to aspects of the reaction conditions, in some embodiments, the reacting steps are performed for a duration of between about 5 minutes and about 24 hours. In particular embodiments, the reacting steps are performed for a duration of between about 0.5 hour and about 2 hrs. In some embodiments, the reacting steps are performed at a temperature at a range between about 15° C. And about 100° C. In more particular embodiments, the reacting steps are performed at a temperature at a range between about 20° C. And about 40° C. In some embodiments, the reacting steps are performed at a ph between about 7 and about 11.

In some embodiments, the activated lens material is incubated in a dilute reaction solution containing 4-arm branched, 10 kda PEG end functionalized with thiol groups, and 8-arm branched, 10 kda PEG end functionalized with vinyl sulfone groups. The dilute solution contains between 0.01 and 0.5% total polymer, with a 10% excess of vinyl sulfone groups. The reaction can be performed in aqueous conditions, methanol, ethanol, or other solvents in which PEG is soluble. The reaction can be performed at a range of temperatures between about 15 degrees C. And about 100 degrees C. The reaction can be performed from between about 5 minutes and about 24 hours. The reaction can be performed at basic ph's, preferably in the range of 7-11.

As polymer reaction proceeds in the dilute solution, hydrogels (e.g. Cross-linked hydrophilic polymer particles) are formed as branched polymers react with each other. Reaction progress can be monitored using dynamic light scattering techniques to measure hydrogel particle size and/or macromer aggregation level as the hydrogel network is forming. Temperature, ph, convection speed, and concentration will influence reaction rate and hydrogel particle size and formation rate. Hydrogel particles that are smaller than visible light will not cause optical distortions in the contact lens. Layer thickness can be regulated by monitoring hydrogel formation during the course of reaction.

In some variations, polyethylene glycol is the hydrophilic polymer. However, other multifunctional natural and syn-

thetic hydrophilic polymers can also be used, for example poly(vinyl alcohol), poly(vinylpyrrolidinone), Poly(N-isopropylacrylamide) (PNIPAM) and Polyacrylamide (PAM), Poly(-oxazoline) and Polyethylenimine (PEI), Poly(acrylic acid), Polymethacrylate and Other Acrylic Polymers, Polyelectrolytes, hyaluronic acid, chitosan, dextran.

In other embodiments, the methods include the step of forming a cross-linked hydrophilic polymer layer on a lens surface that is covalently attached to the contact lens. Covalent linkages between the branched hydrophilic polymers may occur due to Michael type nucleophilic conjugate addition reaction between vinyl sulfone and thiol and covalent linkages between the hydrophilic polymer and the lens surface occur due to conjugate addition reaction between vinyl sulfone and nucleophiles generated during the activation step. In some cases, reactivity of nucleophiles will increase with rising ph as molecules are increasingly deprotonated.

In further variations, any general Michael type reaction between enolates and conjugated carbonyls can also be used. For example, acrylate, methacrylate, or maleimide can be substituted for vinyl sulfone. Other examples include the Gilman reagent as an effective nucleophile for addition to conjugated carbonyls. The stork enamine reaction can be performed using enamines and conjugated carbonyls.

Additional covalent reaction mechanisms include hydroxylamine reaction with electrophiles such as aldehyde or ketone to produce oxime linkages.

Additional covalent reaction mechanisms include reaction of N-Hydroxysuccinimidyl esters with amines.

Additional covalent reaction mechanisms include isocyanates reaction with nucleophiles including alcohols and amines to form urethane linkages.

An additional embodiment provides for a method of forming a contact lens that includes casting of lenses in disposable soft molds. In some embodiments, a lens is coated in agar. This may be done by encapsulating the lens in a liquid agar solution. The agar is cooled and allowed to harden. After hardening, the encapsulated lens is removed from the agar, yielding an agar mold that includes a top piece, making the concave side of the lens, and a bottom piece matching the convex side of the lens. The mold is taken apart, a first drop of liquid hydrogel solution is added to the bottom half of the mold, followed by an activated lens core, followed by another drop of liquid hydrogel solution, followed the top half of the lens. The mold is then incubated until the hydrogel solidifies, then the contact lens is removed from the mold, yielding a lens with attached hydrophilic layers.

In some embodiments, a soft molding process employing agar is used. For example, Delrin plates may be machined with cavities (e.g. 12 cavities). To produce molds, agar may be melted and a small volume of liquid agar added to a mold cavity, followed by a lens, and then additional liquid agar to cover the lens. The mold may be refrigerated to solidify the agar. In some cases, the mold is refrigerated for about 20 minutes in the refrigerator to solidify the agar.

In further embodiments, a punch of the same diameter as the lens is used to punch around the lens. A small vacuum pick-up tool can then be used to remove the top of the mold, then a second vacuum pick-up tool can be used to remove the lens from the mold, and the top of the mold replaced.

This process can yield trays of soft disposable molds with a cavity matching the lenses to be coated (the lenses used to make the molds may be the same type as the ones to be coated, but not the actually lenses that were ultimately coated).

To produce coated lenses, lens cores can be activated using one of the methods described above. The top of the agar lens mold may then be removed and hydrogel precursor solution (e.g. 10 μL) added to the bottom of the mold, followed by the lens core, followed by more of hydrogel precursor solution (e.g. 10 μL), followed by the lid of the mold. Forceps may be used to push the top of the mold down and remove any bubbles.

The tray of lenses can then be incubated. In some cases, the tray of lenses is incubated for 1 hour at 37° C. In order to polymerize the hydrogel. Following polymerization, the lenses may be removed from the molds and stored in PBS containing azide to prevent contamination.

To observe layer thickness, a small amount of fluorescein-maleimide may be added to the hydrogel layer on a coated lens. The fluorescein-maleimide reacts covalently with the hydrogel and enables the layer to be visualized using fluorescence microscopy.

In some cases, the coated lenses can be cut into 500 micron thick sections by striking 2 microtome blades held in parallel to cut the lens and leave a thin section between the blades. The lens cross section can be visualized using a fluorescent microscope (this is for a lens only functionalized with hydrogel on one side, the uncoated side serves as an internal control). In some cases, the average layer thickness was estimated to be about 25 microns based on this technique.

Additionally, the soft agar molds may be used to coated silicone hydrogel core lenses as well as coated pure silicone cores. Lenses can also be evaluated with the contact angle measurement technique described or any other suitable techniques.

In another embodiment, a PEG containing layer can be attached to a silicone containing lens layer using cast molding techniques. First, the silicone containing layer is modified to ensure surface groups are present that will react covalently with the PEG macromers. Second, molds are prepared that contain a top part and a bottom part in the same or similar shape as the silicone containing layer. The silicone containing layer is placed into the mold along with the liquid macromer PEG solution and the mold halves are placed together. The PEG can cure thermally for approximately 1 hour and the mold is taken apart.

The PEG containing layer can also be attached to the silicone containing layer using a dip coating method. First, the silicone containing layer is modified to ensure surface groups are present that will react covalently with the PEG macromers. For example, surface groups can be generated in a plasma treatment step, or by incubating in a basic solution, or by including reactive groups in the monomer mix. Next, a dip coating solution is prepared that consists of a dilute solution of reactive, branched, hydrophilic polymers. The activated lens is placed in the dip coating solution and incubated for 1-24 hours. Following incubation, the lens is rinsed thoroughly and then autoclaved in an excess volume of buffer solution prior to measuring captive bubble contact angles.

In alternative method, the hydrophilic polymer layer can be covalently attached to the silicone containing layer using another dip coating method. First, the silicone containing layer can be modified to create surface chemical moieties that are covalently reactive to the hydrophilic macromers. For example, surface groups can be generated in a plasma treatment step, or by incubating in a basic solution, or by including reactive groups in the monomer mix. Next, a dip coating solution can be prepared that consists of a dilute solution of reactive, branched, hydrophilic polymers. For

example, the dilute solution can consist of a branched poly(ethylene glycol) end functionalized with vinyl sulfone and thiol in a solution containing 0.2M triethanolamine. The activated lens is placed in the dip coating solution and incubated for 1-24 hours at a temperature between about 20° C. And about 60° C. Following incubation, the lens is rinsed thoroughly and then autoclaved in an excess volume of phosphate buffered saline.

In an exemplary embodiment, the invention provides a method of making a contact lens described herein. The method comprises contacting an activated lens and a dip coating solution, thereby making a contact lens. In an exemplary embodiment, the method further comprises activating a lens, thereby creating an activated lens. A lens can be activated through a method known to one of skill in the art or a method described herein, such as plasma treatment or incubation in a basic solution, or by including reactive groups in the monomer mix. In an exemplary embodiment, the contacting takes place for between 1-24 hours, or from 1-12 hours, or from 12-24 hours, or from 6-18 hours. In an exemplary embodiment, the method further comprises rising the lens after the contacting step. In an exemplary embodiment, the method further comprises autoclaving the lens after the contacting step. In an exemplary embodiment, the method further comprises autoclaving the lens after the rinsing step.

In another embodiment, an alternative method of forming a contact lens includes a spray coating approach wherein a reactive ultrasonic spray coating is used to coat substrates with a thin, adhered layer of cross-linked hydrogel. A two-component hydrogel, comprising branched PEG end-capped with vinyl sulfone, and branched PEG end-capped with thiol, was used to produce the cross-linked thin films. The two components are simultaneously dripped onto an ultrasonic spray nozzle where they are combined and atomized into small droplets, which then are accelerated to the substrate in an air sheath. The rate of reaction is adjusted to ensure that reaction is fast enough that a solid structure forms on the surface, but slow enough that the components do not instantly polymerize upon mixing at the nozzle.

An alternative spray method, considered appropriate for scaled manufacturing, is ultrasonic spray coating, a technique that enables precise, thin film coatings. It has been employed previously for stents and in the microelectronics industry, and is currently used in several high volume manufacturing lines. A state of the art Sonotek instrument was used to form coated contact lens prototypes. This technology enables 3D printing, thus potentially providing a platform for constructing complicated lens structures with integrated sensors or electronics.

The Sonotek instrument has an ultrasonically driven spray nozzle with two feed lines that deposit solution onto the tip. A two-component hydrogel system involves dissolving the PEG vinyl sulfone component in methanol containing triethanolamine (TEOA; acting as an organic base) and the PEG thiol component in pure methanol. The two solutions are delivered to the nozzle tip at a rate of 5 microliters per minute and the concentration of each PEG component is adjusted such that equal volumes of each component mix to achieve a 10% molar excess of vinyl sulfone groups. When the solutions are deposited on the ultrasonic tip, they mix and are atomized into droplets that are approximately 20 microns in diameter. A pressured air sheath then accelerates the droplets onto the surface to be coated. By including FITC-malelimide in the PEG vinyl sulfone component, mixing and crosslinking that result in film deposition can be films. A concentration of TEOA and identified that at a molar ratio of TEOA:SH of 6:1 could deposit a uniform cross-linked hydrogel on a variety of substrates, including pure silicone and silicone hydrogel core lenses. An alternative aqueous spray coating method was also tested and was shown to be feasible, however for the contact lens substrates, the methanol process advantageously produces a highly uniform film of ~5 microns. The contact angle measurements on coated lenses demonstrated the integrity of the deposited film.

FIGS. **12**A and **12**B depict alternative embodiments of methods of the technology that are directed toward making lenses with a covalently attached bilateral hydrogel layer, in which the hydrogel layer sides differ in composition or depth. In some instances, it may be advantageous to produce a contact lens that is asymmetric (convex side vs. Concave side) with regard to the thickness or composition of the hydrogel coating that is associated with the two surfaces, respectively. For example, it may be advantageous to form a hydrogel layer on the concave (or posterior) lens surface that is thicker than the layer on the convex (or anterior) lens surface, in order to hold a greater volume of aqueous tears against the cornea and prevent symptoms of dryness.

FIG. **12**A shows a method to produce a lens with a thicker hydrophilic layer on the concave surface **503** in which a lens core **500** containing a UV blocking agent is dipped into a non-mixed solution **502** of coating polymer, and then exposed to UV light **504**. UV light accelerates the reaction between polymers as well as the reaction between polymer and surface. The light strikes the lens on a vector that is perpendicular to the lens surface, directly onto the concave side **503** and through the convex side **501**. Due to the UV blocking agent present in the lens, the concave side **503** is exposed to a higher dose of UV light, while the convex side **501** receives a relatively lower dose. This asymmetric UV dosing creates layers of varying thickness. To achieve complete independent variation in layer thickness control, light dosage of varying intensity can also be used to shine from each side.

FIG. **12**B shows an alternative method for producing a thicker hydrogel layer on the concave surface **503** of the lens **500**. As shown, the convex surface **501** of the lens **500** is held in a vacuum chuck **506** while exposing the concave surface **503** to the coating polymer **502**. The vacuum suction pulls the aqueous solvent through the lens **500** while concentrating coating polymer at the lens interface at the concave surface **503**. After achieving a desired layer thickness, the lens **500** is removed from the chuck **506**. In some variations, the lens **500** is then placed into a well-mixed bath of coating polymer, to continue building the hydrogel layer on both sides of the lens.

G. Examples

The invention is further illustrated by the Examples that follow. The Examples are not intended to define or limit the scope of the invention.

EXAMPLE 1

Functionalization of Silicone Hydrogel Lenses. Silicone hydrogel lenses were stored in purified water prior to functionalization. A solution of 10% by volume divinyl sulfone in 0.5M sodium bicarbonate (ph 11) were prepared. Lenses were added to the solution at a ratio of 6 lenses per 10 ml of solution and mixed vigorously on a shake plate for 60 minutes. The lenses were removed, washed in a strainer to remove any excess reaction solution, and added to a container of purified water at a ratio of 1 lens per 20 ml of water. They were mixed vigorously on a shake plate for 60

minutes. The washing procedure was repeated twice more for a total of 3 washes. Next, the lenses were stored in triethanolamine (TEOA) for at least 20 minutes and up to 6 hours prior to attaching the hydrogel layer.

EXAMPLE 2

Functionalization of Silicone Lenses. Silicone lenses were stored dry prior to functionalization. Lenses were added to a solution of 10% hydrochloric acid and 2% hydrogen peroxide at a ratio of 6 lenses per 10 ml. The lenses were mixed vigorously for 5 minutes and then removed, washed in a plastic strainer to remove any excess reaction solution, and then added to a container of purified water a ratio of 1 lens per 20 ml of water. They were mixed vigorously for 5 minutes. Next the lenses were added to a solution of 95% ethanol, 3% water, 1% glacial acetic acid, and 1% 3-mercaptopropyltrimethoxysilane and mixed vigorously for 60 minutes. The lenses were rinsed in a strainer with pure ethanol and added to a container of pure ethanol at a ratio of 1 lens per 20 ml of ethanol. The lenses were mixed vigorously for 60 minutes. This washing procedure was repeated once more. Finally the lenses were removed from the rinse solution and allowed to dry. They were stored at 4° C. Prior to attaching hydrogel to the lenses, they were immersed in a solution of 150 mm dithiothreitol for 30 minutes and then rinsed in DI water. Following this step, hydrogel must be attached within 15 minutes.

EXAMPLE 3

Plasma Functionalization of Silicone Containing Layers. Silicone containing layers (silicone or silicone hydrogel) were placed in a vacuum chamber for 2 hours to ensure all moisture was removed. After drying, lenses were inserted into a plasma chamber. Pressure was reduced to 375 millitorr with continuous flow of nitrogen gas at 10 standard cubic centimeters per minute. The chamber was allowed to stabilize for 30 seconds before initiating plasma at 100 W for 3 minutes. The chamber was then vented to atmosphere and lenses removed. Lenses were then used within 1 hour.

EXAMPLE 4

Preparation of molds for adding bulk layers to contact lenses. Molds were prepared using silicone hydrogel lenses and agar. 5 grams of Agar were dissolved in 333 ml of water and the solution was heated on a temperature controlled stirred plate until it reaches 88° C. A delrin plate containing small cavities (1" in diameter and 0.5" deep) was used to contain each individual mold. Liquid agar is pipetted to fill a mold cavity half full. A contact lens was then placed, convex side down, on top of the molten agar and additional agar was added on top to completely encase each lens in agar. Each plate contained 12 mold cavities and upon forming all 12, the plate was placed at 4° C. For 10 minutes until it is completely solidified. Once solid, a small brass punch of the same diameter as the contact lens (14 mm) was used to punch a hole in the agar around each lens. A hand held vacuum suction cup was used to pull the top of the agar mold off, tweezers were used to remove the silicone hydrogel lens, and then the top of the mold was replaced. This is repeated for each mold. Molds were then ready to be used for hydrogel attachment.

EXAMPLE 5

Preparation of poly(ethylene glycol) hydrogel macromer solutions. The PEG hydrogel consists of two components. The first is 8-arm, 10 kda poly(ethylene glycol) (PEG) end functionalized with vinyl sulfone (PEG-VS). The second is 4-arm, 10 kda PEG end functionalized with thiol groups (PEG-SH). The PEG-VS was dissolved to 10% w/v in triethanolamine buffer (TEOA) at ph 8.0 and then filter sterilized in a 0.45 micron PVDF filter. The PEG-SH was dissolved to 10% w/v in distilled water and then filter sterilized in a 0.45 micron PVDF filter.

EXAMPLE 6

Fabrication of a PEG hydrogel. To form a PEG hydrogel, the macromer solutions of Example 5 were mixed together. To achieve varying polymer concentrations, a diluting volume of TEOA was added to the PEG-VS solution prior to mixing. The components were combined together with a 10% molar excess of thiol groups. The table below lists quantities used to fabricate various weight percentage PEG hydrogels. For example, to form a 5% PEG hydrogel: 96 μL of TEOA, was added to 30 μL of PEG-VS in an eppendorf tube. Finally, 66 ml of PEG-SH was added to the tube and it is mixed using a vortex for 3 seconds to ensure complete mixing. The PEG hydrogel was then incubated at 37° C. For 1 hour to ensure complete polymerization.

	Volume (μL)			
Hydrogel	TEOA	PEG-VS	PEG-SH	Total
4%	115.2	24.0	52.8	192.0
5%	96.0	30.0	66.0	192.0
6%	76.8	36.0	79.2	192.0
7%	57.6	42.0	92.4	192.0
8%	38.4	48.0	105.6	192.0
9%	19.2	54.0	118.8	192.0
10%	0.0	60.0	132.0	192.0

EXAMPLE 7

Determining a non-swelling PEG hydrogel formulation. PEG hydrogel macromer solutions of Example 6 were pipetted between two hydrophobic glass slides separated by a 1 mm spacer and allowed to incubate at 37° C. For 1 hour. To determine swelling ratio, the PEG hydrogel was weighed immediately following polymerization and then immersed in distilled water for 24 hours. The swollen PEG hydrogel was weighed again to determine the amount of water absorbed into the polymer network to determine the mass fold increase. As seen in FIG. **15**, the mass change for all PEG hydrogel formulations was small and the PEG hydrogel formulation of 5% did not undergo any swelling following polymerization.

EXAMPLE 8

Fabricating a Contact Lens with a bulk layer of PEG Hydrogel on the Concave Side. To produce a contact lens with a bulk layer of PEG hydrogel, the molds of Example 3 were prepared using sacrificial lenses identical to those receiving a bulk layer of PEG hydrogel. A solution of 50% by volume TEOA, 34.4% PEG-SH, and 15.6% PEG-VS were prepared by mixing in an eppendorf tube and vortexing. The top of the agar mold was removed using a small hand held vacuum suction device and the functionalized lens (of either Example 1 or Example 2 or Example 3) were placed into the mold. 20 μL of the mixed PEG solution was placed onto the concave side of the lens, and the top of the

agar mold was replaced on top. Air bubbles were removed by gently tapping on the top of the mold until all air was removed from the mold. The mold was placed in an incubator at 37° C. For 1 hour. The lenses were then removed, visually inspected, and placed in purified water for storage.

EXAMPLE 9

Fabricating a Contact Lens with a bulk layer of PEG Hydrogel on the Convex Side. To produce a contact lens with a bulk layer of PEG hydrogel, the molds of Example 3 were prepared using sacrificial lenses identical to those receiving a bulk layer of PEG hydrogel. A solution of 50% by volume TEOA, 34.4% PEG-SH, and 15.6% PEG-VS were prepared by mixing in an eppendorf tube and vortexing. The top of the agar mold were removed using a small hand held vacuum suction device and 20 μL of the mixed PEG solution was placed into the bottom of the mold. The functionalized lenses (of either Example 1 or Example 2 or Example 3) were placed into the mold and the top of the agar mold was replaced on top. Air bubbles were removed by gently tapping on the top of the mold until all air was removed from the mold. The mold was placed in an incubator at 37° C. For 1 hour. The lenses are then removed, visually inspected, and placed in purified water for storage.

EXAMPLE 10

Fabricating a Contact Lens with a bulk layer of Hydrogel on both Concave and Convex Sides (Encased). To produce a contact lens encased in a bulk layer of PEG hydrogel, the molds of Example 4 were prepared using sacrificial lenses identical to those receiving a bulk layer of PEG hydrogel. A solution of 50% by volume TEOA, 34.4% PEG-SH, and 15.6% PEG-VS was prepared by mixing in an eppendorf tube and vortexing. The top of the agar mold was removed using a small hand held vacuum suction device and 20 μL of the mixed PEG solution is placed into the bottom of the mold. The functionalized lens (of either Example 1 or Example 2 or Example 3) were placed into the mold and 20 μL of the mixed PEG solution was placed onto the concave side of the lens and then the top of the agar mold was placed on top. Air bubbles were removed by gently tapping on the top of the mold until all air was removed from the mold. The mold was placed in an incubator at 37° C. For 1 hour. The lenses were then removed, visually inspected, and placed in purified water for storage.

EXAMPLE 11

Oaysys Lenses Encapsulated in PEG Hydrogel. Contact lenses (Acuvue Oaysys, lotrafilcon A) were functionalized according to Example 1. Agar molds were prepared according to Example 4. Lenses were encapsulated according to Example 10.

EXAMPLE 12

Oaysys Lenses with a bulk layer of PEG Hydrogel. Contact lenses (Acuvue Oaysys, lotrifilcon A) were functionalized according to Example 1. Agar molds were prepared according to Example 4. A bulk layer was added according to Example 8.

EXAMPLE 13

purevision Lenses Encapsulated in PEG Hydrogel. Contact lenses (purevision, balafilcon A) were functionalized according to Example 1. Agar molds were prepared according to Example 4. Lenses were encapsulated according to Example 10.

EXAMPLE 14

purevision Lenses with a bulk layer of PEG Hydrogel. Contact lenses (purevision, balafilcon A) were functionalized according to Example 1. Agar molds were prepared according to Example 4. A bulk layer was added according to Example 8.

EXAMPLE 15

Silicone Lenses Encapsulated in a bulk layer of PEG Hydrogel Silicone lenses (nusil, Med 6755) were functionalized according to Example 2. Agar molds were prepared according to Example 4. Lenses were encapsulated according to Example 10.

EXAMPLE 16

Silicone Lenses with a bulk layer of PEG Hydrogel on the Concave Side. Silicone lenses (nusil, Med 6755) were functionalized according to Example 2. Agar molds were prepared according to Example 4. A bulk layer was added according to Example 8.

EXAMPLE 17

Silicone Lenses with a bulk layer of PEG Hydrogel on the Convex Side. Silicone lenses (nusil, Med 6755) were functionalized according to Example 2. Agar molds were prepared according to Example 4. A bulk layer was added according to Example 9.

EXAMPLE 18

Contact Angle Measurement. To measure lens contact angles, the captive bubble technique was used. First, the lens was spun in a vortex in distilled water to remove surface contaminants. The lens was then submerged in distilled water and suspended atop a plate that has a hole through which the convex surface of the lens protrudes downward. An 11/16" diameter stainless steel ball was placed atop the lens to keep it in place when the bubble was applied. Next, the curved tip of a 16 gauge blunt needle was placed just below the surface of the center of the lens. A bubble was then advanced until it makes contact with the lens, at which point the bubble was retracted until it breaks free from either the lens or the needle. A high-definition video camera records the entire procedure, after which an image was saved from the frame immediately preceding the moment the bubble detaches from either the lens or the needle. From this image, the angles between the lens and the bubble on both sides of the bubble were calculated in MATLAB and saved as the contact angles for that lens.

EXAMPLE 19

Contact Angle Measurement of Oasys Lenses with bulk layers of PEG Hydrogel. The contact angle of lenses of Example 11 were measured according to Example 18.

Lens with bulk layers of PEG hydrogel	Contact Angle*
Lens 1	12.3
Lens 2	14.6
Lens 3	10.7
Average	12.5

*Contact angle is the average of 3 tests

EXAMPLE 20

Preparation of photo-polymerizable poly(ethylene glycol) hydrogel macromer solutions. The hydrogel consists of two components. The first is 8-arm, 10 kda poly(ethylene glycol) (PEG) end functionalized with acrylate (PEG-Ac). The second is 4-arm, 10 kda PEG end functionalized with thiol groups (PEG-SH). The PEG-Ac is dissolved to 10% w/v in triethanolamine buffer (TEOA) at ph 8.0 and then filter sterilized in a 0.45 micron PVDF filter. The PEG-SH is dissolved to 10% w/v in distilled water and then filter sterilized in a 0.45 micron PVDF

EXAMPLE 21

Fabrication of a photo-polymerizable PEG hydrogel. To form a hydrogel, the macromer solutions of Example 20 are mixed together. To achieve varying polymer concentrations, a diluting volume of TEOA is added to the PEG-Ac solution prior to mixing. The components are combined together with a 10% molar excess of thiol groups. The table below lists quantities used to fabricate various weight percentage hydrogels. For example, to form a 5% PEG hydrogel: 96 μL of TEOA, is added to 30 μL of PEG-Ac in an eppendorf tube. Finally, 66 ml of PEG-SH is added to the tube and it is mixed using a vortex for 3 seconds to ensure complete mixing. The solution is then exposed to UV light (365 nm, 5 mw/cm2, 10 min) to polymerize the mixture.

	Volume (μL)			
Hydrogel	TEOA	PEG-Ac	PEG-SH	Total
4%	115.2	24.0	52.8	192.0
5%	96.0	30.0	66.0	192.0
6%	76.8	36.0	79.2	192.0
7%	57.6	42.0	92.4	192.0
8%	38.4	48.0	105.6	192.0
9%	19.2	54.0	118.8	192.0
10%	0.0	60.0	132.0	192.0

EXAMPLE 22

Layer by Layer Reactive Spin Coating. The macromer solutions of Example 20 are prepared. Lenses of Example 1 or 2 or Example 3 are fixed to a spin coater chuck. The lenses are rotated at speeds ranging from 500-5000 rpms. While revolving, the lens is continuously exposed to UV light (365 nm, 5 mw/cm2), while drops of macromer solution are alternately added to the lenses as follows: 10 μL of PEG-Ac followed by 10 μL of PEG-SH, etc. This is repeated for multiple cycles, ranging from 10-1000.

EXAMPLE 23

PEG Dipping Solution for Enzyme Mediated Redox Chain Initiation. The PEG dipping solution consists of a mixture of glucose oxidase (GOX), Fe+2, and polyethylene glycol diacrylate (PEGDA) (MW from 2,000 Da-10,000 Da). For example, a dipping solution may contain 3.1×10-6 M GOX, 2.5×10-4 M iron (II) sulfate, 10% PEGDA 5,000 Da.

EXAMPLE 24

Contact Lens Encapsulated in PEG Hydrogel Via Interfacial Enzyme Mediated Redox Chain Initiation. The glucose loaded lenses of Example 18 are dipped into the solution of Example 19 until the hydrogel layer grows to the desired thickness. The time to achieve a layer thickness of 10-100 microns ranges from 2 seconds-10 minutes.

EXAMPLE 25

Captive Bubble Contact Angle Measurement. A macro lens of 10× magnification was affixed to the camera detailed in Example 17, Contact Angle Measurement. The macro lens enables close-up movies of the bubble/contact lens interface. A syringe pump (New Era Syringe Pump 750) was added to the testing fixture to enable continuous and repeatable bubble control. The pump was programmed using Syringe Pump Pro programming software. A new test fixture chamber was constructed of black acrylonitrile butadiene styrene (abs) to facilitate the use of a thin, clear, glass viewing plate and a semi-opaque background screen. The tested lens were held between two plates and submerged in PBS. An air bubble was extended 2 mm from a straight 16 gage blunt needle until it made contact with the lens. A high-definition web camera recorded the lens+bubble interface while 3 μl of air was infused and then withdrawn at a rate of 7.4 μl/min from the micro-syringe (Precision Sampling corp, series A-2, 25 ul). The contact angle of lenses described herein were measured using Example 25 and are detailed in FIGS. **13**A-**13**T. The contact angles were measured using specially developed matlab Code which is detailed in FIGS. **14**A-**14**J.

EXAMPLE 26

PEG Concentration Dependence. To determine the effect of PEG concentration on polymerization rate for the hydrogel, the macromer solutions of Example 4 were combined at decreasing concentrations and checked at set time intervals until solidification. PEG-VS and PEG-SH were combined in the below quantities with the specified quantity of 0.2M TEOA in 1.5 ml eppendorf tubes to form the noted concentrations. Each solution was vortexed and then pippted onto a glass slide. The PEG solution was pippeted at 5, 10, or 30 second intervals (increasing time interval for lower concentrations) until filaments formed, indicating that the gel had polymerized. The time-until-polymerization was recorded.

		PEG Concentration						
		1%	2%	3%	4%	6%	8%	10%
Volume (μL)	PEG-VS	10.6	10.6	16.0	21.3	31.9	42.6	53.2
	PEG-SH	19.4	19.4	29.0	38.7	58.1	77.4	96.8
	TEOA	270	120	105	90	60	30	0
	Total Volume	300	150	150	150	150	150	150
	Polymerization Time (Sec)	8820	680	406	250	150	103	83

EXAMPLE 27

PEG ph Dependence. To determine the polymerization rate of the hydrogel as a function of ph, the macromer solutions of Example 4 were combined with 0.2M TEOA at increasing ph levels. 20% PEG-VS and 10% PEG-SH were combined in the below quantities with TEOA at the specified ph in 1.5 ml eppendorf tubes. The TEOA buffer was prepared at the noted concentrations by adjusting ph with naoh or hcl as required. A 4% hydrogel solution was made. Each solution was vortexed and then pippted onto a glass slide. The PEG solution was pippeted at 5, 10, or 30 second intervals (increasing time interval for lower ph) until filaments formed, indicating that the gel had polymerized. The time-until-polymerization was recorded.

EXAMPLE 28

Lenses Dip Coated to Obtain a Bulk Layer of PEG. Lenses were functionalized using nitrogen gas in a plasma chamber (Plasma Etch PE-50) at settings: 375 mtorr, 3 min, 100% RF power. Pressure was reduced to 375 millitorr with continuous flow of nitrogen gas at 10-20 standard cubic centimeters per minute. The chamber was allowed to stabilize for 30 seconds before initiating plasma at 100 W for 3 minutes. The chamber was then vented to atmosphere and lenses removed. Lenses were then used within 1 hour. The PEG macromer solutions of Example 4 were combined with excess TEOA to obtain solutions with a total solids concentration of 0.1% and 0.5% and with a 10% molar excess of VS (See quantities in table below). A 0% PEG solution was also prepared as a control. The volume of 0.2M TEOA detailed below was added to individual plastic vials (mcmaster Carr 4242T83); followed by the noted volume of PEG-VS. The surface functionalized purevision lenses were added to this solution and vortexed. The PEG-SH was added and the solution was again vortexed. The lenses were placed on a mixing table for 24 hrs. The lenses were transferred to new plastic vials containing Phosphate Buffered Saline (PBS) and placed on the mixing table for 24 hrs. The lenses were transferred to glass jars and autoclaved (Tuttnauer 3870 E) in a wet cycle at 250° F. For 30 min.

		PEG Concentration		
		0.00%	0.1%	0.5%
Volume (μL)	PEG-VS	0.0	5.3	26.6
	PEG-SH	0.0	9.7	48.4
	TEOA	1500	1485	1425
	Total	1500	1500	1500

EXAMPLE 29

Silicone Lenses Surface Activated to Enhance Hydrogel Adhesion Silicone lenses (nusil, Med 6755) were functionalized with the plasma treatment process of Example 28. In a 50 ml conical tube, the lenses were placed in a 10% w/v divinyl sulfone solution with a sodium bicarbonate buffer at ph 11 and vortexed. After 1 hr on a mixing table, the lenses were washed with 20 ml of deionized water (DI Water) and placed back on the mixing table in 40 ml of DI water. After 1 hr, this cycle was repeated once more and the lenses were placed in the fridge for 8 hrs in 40 ml of DI water.

EXAMPLE 30

Silicone Lenses Dip Coated to Obtain a Bulk Layer of PEG. Silicone lenses (nusil, Med 6755) were functionalized, dip coated and autoclaved, in the 0%, 0.1%, and 0.5% PEG solutions per Example 28.

EXAMPLE 31

purevision Lenses Surface Activated and Dip Coated to Obtain a Bulk PEG Layer. Contact lenses (purevision, balafilcon A) were functionalized with the plasma treatment process of Example 28. The lenses were placed into 400 ul of 10% PEGVS, vortexed, and then positioned on the mixing table for 5 minutes. Subsequently, the lenses were placed in 3 ml of 0.2M TEOA, vortexed, and set on the mixing table for 5 minutes. The lenses were added to a solution of 0.1% PEG in TEOA according to example 28. The lenses were vortexed, stationed on the mixing table for 24 hrs, and autoclaved according to Example 28.

EXAMPLE 32

purevision Lenses Dip Coated with FITC-Maleimide Addition for PEG Layer Visualization. Contact lenses (purevision, balafilcon A) were functionalized with the plasma treatment process of Example 28. The lenses were placed into 0.1% and 0.5% PEG solutions according to example 28. 5.1 μl of FITC-Maleimide @ 10 mg/ml was added to each of the solutions to visualize the PEG layer. The solutions were vortexed and placed on a mixing table for 24 hrs.

EXAMPLE 33

purevision Lenses Dip Coated to Obtain a Bulk Layer of PEG with Shortened Wash Cycle. Contact lenses (purevision, balafilcon A) were functionalized and coated according to Example 28. After 24 hrs in the PEG solution, the lenses were placed in vials containing PBS and placed on the mixing table for 1.5 hrs. The lenses were placed in a second set of vials containing PBS and placed on the mixing table for 1.5 hrs. The lenses were autoclaved according to Example 28.

EXAMPLE 34

purevision Lenses Dip Coated in Ultra-Low Concentration PEG with No Wash Cycle. Contact lenses (purevision, balafilcon A) were functionalized with the plasma treatment process of Example 28. The macromer solutions of Example 4 were combined with TEOA at 0.01% and 0.05% PEG. A 0% PEG solution was also prepared as a control. The purevision lenses were added to this solution and vortexed. The PEG-SH was added and the solution was again vortexed. The lenses were autoclaved in individual plastic vials for 30 min at 250° F. Without being washed and without being removed from the PEG solution.

		PEG Concentration		
		0.00%	0.01%	0.05%
Volume (μL)	PEG-VS	0.0	0.53	2.66
	PEG-SH	0.0	.97	4.84
	TEOA	1500	1498.5	1492.5
	Total	1500	1500	1500

EXAMPLE 35

purevision Lenses Dip Coated in Low Concentration PEG with Immediate Autoclave in Glass. Contact lenses (purevision, balafilcon A) were functionalized and coated according to Example 28. The lenses were placed in glass vials (mcmaster-Carr 4417T48) containing 3 ml of PBS and autoclaved according to Example 28.

EXAMPLE 36

purevision Lenses Dip Coated and Extracted in Isopropanol Alcohol Contact lenses (purevision, balafilcon A) were functionalized and coated at the 0% and 0.5% concentrations according to Example 28. The lenses were placed on a mixing table for 18 hrs. The PEG solution was replaced with pure isopropanol alcohol (IPA) and returned to the mixing table for 1 hr. The IPA was switched and the lenses were washed for an additional hour. The IPA was replaced with deionized water and the lenses were washed for 1 hr. The water was replaced twice and the lenses were washed for 30 min each time. The lenses were placed in PBS and autoclaved per Example 28.

EXAMPLE 37

purevision Lenses Dip Coated in Organic Solvents to Obtain Bulk Layer of PEG. 1 ml of pure TEOA was added to 40 ml of isopropyl alcohol (IPA) to make a 0.2M solution. Pure Methanol was added to IPA at 0.2M TEOA to create a 50% solution. 1 ml of concentrated TEOA was dissolved into 40 ml of pure Methanol (meoh) to form a meoh at 0.2 Molar TEOA solution. Contact lenses (purevision, balafilcon A) were functionalized with the plasma treatment process of Example 28. The macromer solutions of Example 4 were combined with the 50% meoh and 50% IPA at 0.2M TEOA at 0.5% PEG. A 0% PEG solution was also prepared as a control. The macromer solutions of Example 4 were also combined with the meoh at 0.2 M TEOA at 0.5% PEG. The volume of meoh and IPA detailed below were added to individual plastic vials; the surface functionalized purevision lenses were added to the solution and vortexed. The PEG-VS and PEG-SH were added and the solution but the solution was not vortexed due to the sensitivity of the lenses in solvents. The lenses were placed on a mixing table for 18 hrs. A washing series was utilized to remove the organic solvents; the solutions were changed to pure IPA and the lens were placed on the mixing table for 1 hr. The IPA was replaced with deionized (DI) water and the lenses were placed on the mixing table for 1 hr. The DI water was replaced with PBS and the lenses were autoclaved per Example 28.

EXAMPLE 38

purevision Lenses with DVS Activation during IPA Solvent Extraction. 1 ml of 100% TEOA was added to 40 ml of isopropyl alcohol (IPA) to make a 0.2M solution. Contact lenses (purevision, balafilcon A) were functionalized according to Example 28 and placed in 5 ml of IPA at 0.2M TEOA. Non-plasma treated and no-peg lenses were also prepared as controls. 7.5% DVS was added to each vial. The lenses were swirled in the solution and then placed on the mixing table for 1 hour. The DVS was discarded and 40 ml of IPA was added to each solution prior to placing the lenses on the mixing table for 1 hour. The IPA was changed and the lenses were placed on the mixing table for 1 hr. The IPA was replaced with 40 ml of deionized (DI) water and mixed for 1 hr. The DI water was changed and the lenses were mixed for 1 hr. The lenses were dip coated and autoclaved according to Example 28.

EXAMPLE 39

purevision Lenses with DVS Activation during meoh Solvent Extraction. 1 ml of 100% TEOA was added to 40 ml of methanol alcohol (meoh) to make a 0.2M solution. Contact lenses (purevision, balafilcon A) were functionalized according to Example 28 and placed in 5 ml of meoh at 0.2M TEOA. Non-plasma treated and no-peg lenses were also prepared as controls. 7.5% DVS was added to each vial. The lenses were swirled in the solution and then placed on the mixing table for 1 hour. The DVS was discarded and 40 ml of IPA was added to each solution prior to placing the lenses on the mixing table for 1 hour. The IPA was changed and the lenses were placed on the mixing table for 1 hr. The IPA was replaced with 40 ml of deionized (DI) water and mixed for 1 hr. The DI water was changed and the lenses were mixed for 1 hr. The lenses were dip coated and autoclaved according to Example 28.

EXAMPLE 40

purevision Lenses Dip Coated in Methanol Solvent to Obtain a Bulk Layer of PEG. Contact lenses (purevision, balafilcon A) were functionalized according to Example 28. A meoh at 0.2 Molar TEOA solution was made according to Example 39. The macromer solutions of Example 4 were combined with the meoh at 0.2 M TEOA at 0.1%, 0.25% and 0.5% PEG. A 0% PEG solution was also prepared as a control. The volume of meoh detailed below was added to individual glass vials; followed by the noted volume of PEG-VS. The surface functionalized purevision lenses were added to this solution and vortexed. The PEG-SH was added and the solution was again vortexed. The lenses were placed on a mixing table for 24 hrs.

A meoh washing cycle was developed and implemented: The meoh at 0.2 M TEOA and PEG solution was replaced with pure meoh and the lenses were placed on the mixing table for 1 hr. The meoh was replaced with IPA and the lenses were placed on the mixing table for 1 hr. The IPA was replaced with a solution consisting of 50% IPA and 50% DI water and the lenses were placed on the mixing table for 1 hr. The 50% solution was replaced with 100% DI water and the lenses were placed on the mixing table for 1 hr. The DI water was replaced with Phosphate Buffered Saline (PBS) and autoclaved according to Example 28.

		PEG Concentration			
		0.00%	0.1%	0.25%	0.5%
Volume (μL)	PEG-VS	0.0	5.3	13.25	26.6
	PEG-SH	0.0	9.7	24.25	48.4
	MeOH at 0.2M TEOA	1500	1485	1462.5	1425
	Total	1500	1500	1500	1500

EXAMPLE 41

Plasma Treatment Process. The setting for the plasma treatment process were tested and updated. The plasma treatment process used nitrogen gas, grade 5, in a plasma

chamber (Plasma Etch PE-50) with settings: 150 mtorr set point, 200 mtorr vacuum, 3 min, @ 100% RF power. Pressure was reduced to 200 millitorr with continuous flow of nitrogen gas at 2.5-5 standard cubic centimeters per minute. The chamber was allowed to stabilize for 30 seconds before initiating plasma at 100 W for 3 minutes. The chamber was then vented to atmosphere and lenses removed. Lenses were then used within 1 hour.

EXAMPLE 42

Lenses Extracted in Isopropanol Alcohol, Desiccated, and Dip Coated Lenses were placed in 1.5 ml of IPA and set on a mixing table for 18 hrs. The IPA was switched and the lenses were washed for an additional hour. The IPA was replaced with deionized water and the lenses were washed for 1 hr. The water was replaced twice and the lenses were washed for 30 min each time. The lenses were placed in a vacuum chamber and the chamber was evacuated using a pump (Mastercool, 6 cfm) for 24 hrs. The lenses were functionalized and coated at the 0% and 0.5% concentrations according to Example 28 with the plasma treatment process of Example 41. The PEG solution was replaced with deionized water and the lenses were washed for 1 hr. The lenses were placed in PBS and autoclaved per Example 28.

EXAMPLE 43

purevision Lenses Dip Coated to Obtain a Bulk Layer of PEG Example 28 was repeated using the plasma treatment process of Example 41.

EXAMPLE 44

purevision Lenses Dip Coated in Low Concentration PEG with Immediate Autoclave in Glass. Example 36 was repeated using the plasma treatment process of Example 41.

EXAMPLE 45

purevision Lenses Dip Coated in Organic Solvents to Obtain Bulk Layer of PEG. Example 38 was repeated using the plasma treatment process of Example 41.

EXAMPLE 46

purevision Lenses Dip Coated in Methanol Solvent to Obtain a Bulk Layer of PEG. Example 40 was repeated using the plasma treatment process of Example 41.

EXAMPLE 47

purevision Lenses Extracted in Isopropanol Alcohol, Desiccated, Dip Coated, with Immediate Autoclave. Contact lenses (purevision, balafilcon A) were extracted, desiccated, and dip coated according to Example 42. Immediately after the dip coating process the lenses were autoclaved while in the PEG solution according to Example 28.

EXAMPLE 48

Silicone Lenses Extracted in Isopropanol Alcohol, Desiccated, and Dip Coated. Silicone contact lenses (nusil, Med 6755) were extracted, desiccated, dip coated and autoclaved according to Example 42.

EXAMPLE 49

purevision Lenses Extracted in Isopropanol Alcohol, Desiccated, and Dip Coated. Contact lenses (purevision, balafilcon A) lenses were extracted, desiccated, dip coated and autoclaved according to Example 42.

EXAMPLE 50

purevision Lenses Dip Coated in Methanol Solvent with Heated Rotation to Obtain a Bulk Layer of PEG. Contact lenses (purevision, balafilcon A) were functionalized using oxygen gas in a plasma chamber (Plasma Etch PE-50) at settings: 200 mtorr, 3 min, 100% RF power. The lenses were dip coated according to Example 40 and placed in a heated oven with rotation at 37 C for 24 hours. The lenses were washed and autoclaved according to Example 40, but with the following shortened wash times: meoh 2× quick swirls, IPA 2×20 min, IPA:H20 (50:50) 20 min, H20 10 min, and PBS for autoclave.

EXAMPLE 51

Silicone Lenses Dip Coated in Methanol Solvent with Heated Rotation to Obtain a Bulk Layer of PEG. Silicone contact lenses (nusil, Med 6755) were functionalized using oxygen gas in a plasma chamber (Plasma Etch PE-50) at settings: 200 mtorr, 3 min, 100% RF power. The lenses were dip coated according to Example 40 and placed in a heated oven with rotation at 37° C. For 24 hours. The lenses were washed and autoclaved according to Example 40, but with the following shortened wash times: meoh 2× quick swirls, IPA 2×20 min, IPA:H20 (50:50) 20 min, H20 10 min, and PBS for autoclave.

EXAMPLE 52

purevision Lenses Pre-Activated, Dip Coated in Methanol Solvent with Heated Rotation. Lenses (purevision, balafilcon A) were functionalized using oxygen gas in a plasma chamber (Plasma Etch PE-50) at settings: 200 mtorr, 3 min, 100% RF power. The lenses were pre-activated with PEG-VS or VS, dip coated according to Example 40 and placed in a heated oven with rotation at 37 C for 24 hours. The lenses were washed and autoclaved according to Example 40, but with the following shortened wash times: meoh 2× quick swirls, IPA 2×20 min, IPA:H20 (50:50) 20 min, H20 10 min, and PBS for autoclave.

EXAMPLE 53

Silicone Lenses Dip Coated to Obtain a Bulk Layer of PEG. Example 30 was repeated using the plasma treatment process of Example 41.

EXAMPLE 54

purevision Lenses Dip Coated to Obtain a Bulk Layer of PEG using Oxygen Gas. Example 28 was repeated using oxygen gas, grade 5, during the plasma treatment process.

EXAMPLE 55

purevision Lenses Plasma Treated and Dip Coated in Hyaluronic Acid to Obtain a Bulk Layer. Contact lenses (purevision, balafilcon A) were functionalized according to Example 28 with the addition hyaluronic acid (HA) at of 10 mg of hyaluronic acid (HA). Lenses were added to this solution and placed on the mixing table for 1 hr. The HA solution was replaced with DI water and the lenses were placed on a mixing table for 1 hr. The water was replaced

and the lenses were placed on a mixing table for 1 hr, 2 additional times. The lenses were placed in individual plastic vials containing 3 ml-5 ml of PBS.

EXAMPLE 56

purevision Lenses Plasma Treated and Surface Activated with DVS in naoh. Contact lenses (purevision, balafilcon A) were functionalized according to Example 28. 0.5 ml of DVS was added to 4.5 ml of 0.5M Sodium bicarbonate (naoh). Lenses were added to this solution and placed on the mixing table for 20 min. Lenses were also placed in 5 ml of naoh as controls. The solution was replaced with DI water and the lenses were placed on the mixing table for 20 min. This step was repeated 2 additional times.

EXAMPLE 57

purevision Lenses Plasma Treated and Dip Coated in Hyaluronic Acid to Obtain a Bulk Layer with a FITC-Maleimide Addition for Layer Visualization. Contact lenses (purevision, balafilcon A) were functionalized according to Example 28 and dip coated according to Example 55. 51 μl of FITC-Maleimide was added to each of the solutions to visualize the PEG layer. The lenses were washed and stored according to Example 55.

EXAMPLE 58

purevision Lenses Plasma Treated and Dip Coated in Hyaluronic Acid in naoh to Obtain a Bulk Layer. Contact lenses (purevision, balafilcon A) were functionalized according to Example 28. 5 ml of HA was added to 45 ml of 10M naoh. 5 ml of HA was added to 45 ml of DI water for a control. Lenses were added to these solutions and placed on the mixing table for 1 hr. The solutions were replaced with DI water and the lenses were placed on the mixing table for 1 hr. The lenses were placed in individual plastic vials containing 3 ml-5 ml of PBS.

EXAMPLE 59

Silicone Lenses Plasma Treated then Encapsulated in PEG Hydrogel Silicone lenses (nusil, Med 6755) were functionalized according to Example 28. Agar molds were prepared according to Example 4. Lenses were encapsulated according to Example 10.

EXAMPLE 60

purevision Lenses Plasma Treated and Dip Coated in Low or High Molecular Weight PEG. Contact lenses (purevision, balafilcon A) were functionalized using monofunctional polyethylene glycol, end functionalized in vinyl sulfone (mpeg-VS). Mpegs of 5 kda and 20 kda were used.

5% w/v total mpeg-VS solutions were prepared in triethanolamine buffer (TEOA) at ph 8.0 and then filter sterilized in a 0.45 micron PVDF filter. A 0% PEG solution was also prepared as a control.

3 ml of PEG solution was added to individual plastic vials (mcmaster Can 4242T83). The surface functionalized purevision lenses were added to this solution and vortexed. The lenses were placed on a mixing table for 24 hrs. The lenses were transferred to new plastic vials containing Phosphate Buffered Saline (PBS) and placed on the mixing table for 24 hrs.

EXAMPLE 61

Silicone Lenses Plasma Treated then Encapsulated in PEG Hydrogel with a FITC-Maleimide Addition for PEG Layer Visualization. Silicone lenses (nusil, Med 6755) were functionalized according to Example 28. Agar molds were prepared according to Example 4. 5.1 μl of FITC-Maleimide was added to each of the solutions to visualize the PEG layer. Lenses were encapsulated according to Example 10.

EXAMPLE 62

Oaysys Lenses Desiccated and Plasma Treated then Encapsulated in PEG Hydrogel. Contact lenses (Acuvue Oaysys, senofilcon A) were desiccated according to Example 42 and functionalized according to Example 28. Agar molds were prepared according to Example 4. Lenses were encapsulated according to Example 10.

EXAMPLE 62

Lenses Encapsulated in PEG Hydrogel. Lenses (Lotrafilcon B) were functionalized according to Example 1. Agar molds were prepared according to Example 4. Lenses were encapsulated according to Example 10.

EXAMPLE 63

Lenses Desiccated and Plasma Treated then Encapsulated in PEG Hydrogel. Lenses (Lotrafilcon B) were desiccated according to Example 42 and functionalized according to Example 28. Agar molds were prepared according to Example 4. Lenses were encapsulated according to Example 10.

EXAMPLE 64

Silicone Lenses Plasma Treated and Dip Coated in Low or High Molecular Weight PEG. Silicone lenses (nusil, Med 6755) were functionalized according to Example 28, with the addition of a non-plasma treated control, and dip coated according to Example 60.

EXAMPLE 65

purevision Lenses Plasma Treated then Encapsulated in PEG Hydrogel. Contact lenses (purevision, balafilcon A) were functionalized according to Example 28. Agar molds were prepared according to Example 4. Lenses were encapsulated according to Example 10.

EXAMPLE 66

purevision Lenses Dip Coated to Obtain a Bulk Layer of PEG Contact lenses (purevision, balafilcon A) were functionalized and coated according to Example 28. The lenses were washed according to example 33 and autoclaved according to Example 28.

EXAMPLE 67

Glucose Loading of Hydrogel Contact Lenses. Hydrogel contact lenses containing acrylate groups on the surface were incubated in d-Glucose solution (10 ml/lens) for at least 4 hours. The glucose concentration may range from 0.1 mm to 25 mm.

EXAMPLE 68

purevision Lenses Dip Coated and Accelerated Life Tested to Identify the Stability of the Bulk Layer of PEG. Example 46 was repeated; contact lenses (purevision, balafilcon A) dip coated in methanol solvent to obtain a bulk layer of peg. Post autoclave process according to Example 28, the lenses were tested according to Example 25. The lenses were placed in PBS and autoclaved once more according to Example 28 or placed in sterile saline (Walgreens—Sterile Saline Solution). The lenses were placed in hybridization ovens (Stovall Life Science Inc) at 20, 40, or 60 degrees Centigrade. The lenses were tested on dates that correspond to six or twelve months of accelerated life testing as detailed by FDA 510K clearance requirements for medical devices generally, and daily wear contacts specifically. Post testing, the sterile saline was replaced with new sterile saline and the lenses were replaced in the respective hybridization oven. Lot numbers with corresponding solutions and temperatures are detailed below.

n = 6 Temp [C.]	Storage Solution Saline	Sterile Saline
0% PEG		
20	M167	M170
45	M168	M171
60	M169	M172
0.5% PEG		
20	M173	M176
45	M174	M177
60	M175	M178

EXAMPLE 69

MJS Lenses Dip Coated to obtain a Bulk Layer of PEG. MJS Lenses (MJS Lens Technology Ltd, Standard Product, 55% water content) were functionalized according to Example 41, coated and autoclaved according to Example 28, and tested according to Example 25. The lenses were then placed in hybridization ovens (Stovall Life Science Inc) at 60 degrees Celsius for 7 days. The sterile saline (Walgreens—Sterile Saline Solution) was replaced and the lenses were retested according to Example 25.

EXAMPLE 70

Determining water content of poly(ethylene glycol) coated contact lenses utilizing mass balance. This example illustrates how to determine the water content of a contact lens of the invention. In an effort to determine the potential water content of the polyethylene-glycol layer(s) of the contact lenses of the invention, samples consisting of the layer components are prepared for evaluation. The resulting gels are then hydrated and tested to determine water content.

PEG hydrogel macromer solutions as described in Example 5 were pipetted between two hydrophobic glass slides separated by a 1 mm spacer and allowed to incubate at 37° C. For 1 hour.

Hydrated samples were blotted dry and the mass at hydrated state was recorded via mass balance. Following the recording of the mass at hydrated state, the samples were all dried under a vacuum of <1 inch Hg overnight.

Dried samples were removed from the vacuum oven after overnight drying and then measured to record dry mass. Water content was calculated using the following relationship: Water content=[(wet mass-dry mass)/wet mass]×100%

EXAMPLE 71

Preparation of Poly(ethylene glycol) Hydrogel Macromer Solutions. In one example, the PEG hydrogel consists of two components. The first is 8-arm, 10 kda poly(ethylene glycol) (PEG) end functionalized with vinyl sulfone (PEG-VS). The second is 4-arm, 10 kda PEG end functionalized with thiol groups (PEG-SH). The PEG-VS was dissolved to 10% w/v in triethanolamine buffer (TEOA) at ph 8.0 and then filter sterilized in a 0.45 micron PVDF filter. The PEG-SH was dissolved to 10% w/v in distilled water and then filter sterilized in a 0.45 micron PVDF filter.

EXAMPLE 72

Contact Lenses. In another example, the following lenses and materials were each processed through the subsequent examples: Silicone (nusil, Med 6755); purevision, balafilcon A; Acuvue Oaysys, senofilcon A; AIR OPTIX, Lotrafilcon B, MJS Lenses, MJS Lens Technology Ltd. All subsequent references to 'lenses', include each of the above lenses and materials.

EXAMPLE 73

Contact Lenses Dip Coated to Obtain a Bulk Layer of Poly(ethylene glycol) (PEG) Hydrogel. In another example, commercially available and hydrated lenses were washed in deionized water three times for 30 min each time. The lenses were desiccated in a vacuum chamber for 2-24 hrs.

Lens surfaces were functionalized using nitrogen gas in a standard plasma chamber (Plasma etch PE-50) at settings: 200 mtorr, 3 min, 100 W RF power, 5-20 standard cubic centimeters per minute. Lenses were then used within 1 hour.

The PEG macromers were combined with either deionized water (DI Water), Isopropanol Alcohol (IPA), or Methanol (meoh) @ 0.2M TEOA to obtain solutions with a total solids concentration of 0.1%, 0.25% and 0.5%. Various concentrations of substrates were used; each solution was at a 10% molar excess of VS (See quantities in table below) and a 0% PEG solution was also prepared as a control.

The volume of substrate detailed below was added to individual vials, followed by the noted volume of PEG-VS. The surface functionalized lenses were added to this solution. The PEG-SH was added and the lenses were placed on a mixing table for 1 hr-24 hrs. The lenses were washed individually in the corresponding substrate for 30 min. For the solvent conditions, consecutive 30 min washes were in 100% IPA, 50% IPA in DI Water, and 100% DI Water. Lenses in the aqueous substrate were only washed in 100% DI water.

The lenses were placed in Phosphate Buffered Saline (PBS) and autoclaved in a wet cycle at 250° F. For 30 min. Lens general comfort and contact angle were determined through wear and direct in-house measurement, respectively.

		PEG Concentration			
		0.00%	0.1%	0.25%	0.5%
Volume (μL)	PEG-VS	0.0	5.3	13.25	26.6
	PEG-SH	0.0	9.7	24.25	48.4
	DI H20, IPA, or MeOH @ 0.2M TEOA	1500	1485	1462.5	1425
	Total	1500	1500	1500	1500

EXAMPLE 74

Lenses Dip Coated with Recycled PEG. In another example, the steps of above Example 73 were repeated for contact lenses purevision, balafilcon A, at a 0.4M concentration of TEOA. The PEG from this process was kept. After 24 hrs, a PEG solution was developed using 50% of the original (750 μL) and 50% fresh or non-previously-used PEG. Example 73 was repeated using this PEG solution.

EXAMPLE 75

Lenses Surface Activated using Hydrogen Peroxide and Dip Coated In another example, dehydrated contact lenses purevision, balafilcon A, were placed in commercially available Hydrogen Peroxide for 1 hr. The lenses were washed with DI water for 30 min. The coating, washing, autoclave, and testing process was repeated according to Example 73.

EXAMPLE 76

Lenses Extracted, Desiccated, and Dip Coated. In another example, lenses were placed in 1.5 ml of IPA or meoh (solvent) and set on a mixing table for 12-18 hrs. The solvent was switched and the lenses were washed in the corresponding solvent for an additional hour. The solvent was replaced with deionized water and the lenses were washed three times for 30 min to 1 hr each time. The lenses were desiccated in a vacuum chamber for 2-24 hrs.

Lens surfaces were functionalized using nitrogen gas in a standard plasma chamber (Plasma etch PE-50) at settings: 200 mtorr, 3 min, 100 W RF power, 5-20 standard cubic centimeters per minute. Lenses were then used within 1 hour. The lenses were coated, washed, autoclaved, and tested according to the aqueous process of Example 73.

EXAMPLE 77

Lenses Dip Coated and Accelerated Life Tested to Identify the Stability of the Bulk Layer of PEG. In another example, the steps of Example 73 were repeated; for contact lenses (purevision, balafilcon A and MJS Lens Technology Ltd). Post autoclave and testing process, the lenses were placed in PBS and autoclaved once more or placed in sterile saline. The lenses were placed in hybridization ovens (Stovall Life Science Inc) at 20, 40, or 60 degrees Centigrade. The lenses were tested on dates that correspond to six or twelve months of accelerated life testing as detailed by FDA 510K clearance requirements for medical devices generally, and daily wear contacts specifically. Post-testing, the sterile saline was replaced with new sterile saline and the lenses were replaced in the respective hybridization oven.

EXAMPLE 78

Coating Characterized via Captive Bubble Contact Angle Testing. In another example, to measure lens contact angles, the captive bubble technique was used. The lens was loaded onto a small plate with a bulbous feature. The lens was submerged in PBS and suspended atop a plate that has a hole through which the convex surface of the lens protrudes downward. A blunt needle was placed just below the surface of the center of the lens. A bubble was then advanced with a syringe pump until it makes contact with the lens, at which point the bubble was retracted until it breaks free from either the lens or the needle. Through a magnifying lens, a high-definition video camera records the entire procedure, after which an image was saved from the frame immediately preceding the moment the bubble detaches from either the lens or the needle. From this image, the angles between the lens and the bubble on both sides of the bubble were calculated in MATLAB and saved as the contact angles for that lens.

EXAMPLE 79

Lubricity Test Method

A test method was designed and built to observe the affects that the hydrogel coating has on the lubricity of the lens. Three contact lenses were used in this evaluation:

1. Packaged silicone hydrogel lens A
2. Hydrogel coated silicone hydrogel lens A
3. Packaged silicone hydrogel lens B 6 sec

A borosilicate glass plate was cleaned and submerged in a tank of PBS. One end of the plate was raised 30 mm with a shim to create a ramp with an angle of ~11 degrees. The test lenses were placed at the top of the ramp and weighted down with a stainless steel bolt, weighting approximately 1.13 grams. The lenses were allowed to slide down the ramp ~152 mm and the time required to reach the bottom of the ramp was recorded. Results:

Lens Type	Time to Slide (sec)
Packaged silicone hydrogel lens A	Lens allowed to slide for X seconds but only slid down X mm
Hydrogel coated silicone hydrogel lens A	2 second
Packaged silicone hydrogel lens B 6 sec	6 seconds

The results of the tests demonstrate a significant increase in lubricity of the lens coated with hydrogel as compared with the uncoated control.

As used herein in the specification and claims, including as used in the examples and unless otherwise expressly specified, all numbers may be read as if prefaced by the word "about" or "approximately," even if the term does not expressly appear. The phrase "about" or "approximately" may be used when describing magnitude and/or position to indicate that the value and/or position described is within a reasonable expected range of values and/or positions. For example, a numeric value may have a value that is +/−0.1% of the stated value (or range of values), +/−1% of the stated value (or range of values), +/−2% of the stated value (or range of values), +/−5% of the stated value (or range of values), +/−10% of the stated value (or range of values), etc. Any numerical range recited herein is intended to include all sub-ranges subsumed therein.

As for additional details pertinent to the present invention, materials and manufacturing techniques may be employed as within the level of those with skill in the relevant art. The same may hold true with respect to method-based aspects of

the invention in terms of additional acts commonly or logically employed. Also, it is contemplated that any optional feature of the inventive variations described may be set forth and claimed independently, or in combination with any one or more of the features described herein. Likewise, reference to a singular item, includes the possibility that there are plural of the same items present. More specifically, as used herein and in the appended claims, the singular forms "a," "and," "said," and "the" include plural referents unless the context clearly dictates otherwise. It is further noted that the claims may be drafted to exclude any optional element. As such, this statement is intended to serve as antecedent basis for use of such exclusive terminology as "solely," "only" and the like in connection with the recitation of claim elements, or use of a "negative" limitation. Unless defined otherwise herein, all technical and scientific terms used herein have the same meaning as commonly understood by one of ordinary skill in the art to which this invention belongs. The breadth of the present invention is not to be limited by the subject specification, but rather only by the plain meaning of the claim terms employed.

What is claimed is:

1. A coated contact lens comprising:

a lens core comprising an outer surface; and

a hydrogel layer covalently attached to at least a portion of the outer surface, the hydrogel layer adapted to contact an ophthalmic surface, wherein the hydrogel layer comprises a hydrophilic polymer population having a first polyacrylamide species with a reactive electron pair accepting group and a second polyacrylamide species with a reactive nucleophilic group, the first polyacrylamide species being at least partially cross-linked to the second polyacrylamide species through the reactive electron pair accepting group of the first polyacrylamide species and the reactive nucleophilic group through the second polyacrylamide species.

2. The lens of claim **1**, wherein the hydrogel layer has a substantially uniform chemical composition.

3. The lens of claim **1**, wherein the hydrogel layer is covalently attached to the core by a sulfonyl moiety, a thioether moiety, or a sulfonyl moiety and a thioether moiety.

4. The lens of claim **1**, wherein the hydrogel layer has a substantially uniform water content.

5. The lens of claim **1**, wherein a thickness of the hydrogel layer is greater than a monolayer of the first polyacrylamide species.

6. The lens of claim **1**, wherein the hydrogel layer comprises a thickness between about 0.01 microns and about 0.05 microns.

7. The lens of claim **1**, wherein the hydrogel layer and core are covalently attached at the outer surface by a sulfonyl moiety.

8. The lens of claim **1**, wherein the hydrogel layer and core are covalently attached at the outer surface by a thioether moiety.

9. The lens of claim **1**, wherein the hydrogel layer and core are covalently attached at the outer surface by a sulfonyl moiety and a thioether moiety.

10. The lens of claim **1**, wherein the hydrogel layer substantially surrounds the outer surface of the core.

11. The lens of claim **1**, wherein the hydrogel layer and core are substantially optically clear.

12. The lens of claim **1**, wherein the hydrogel layer is adapted to allow optical transmission through the hydrogel layer to the ophthalmic surface.

13. The lens of claim **1**, wherein the hydrogel layer comprises a thickness between about 50 nm to about 500 nm.

14. The lens of claim **1**, wherein the hydrogel layer comprises a thickness below about 100 nm.

15. The lens of claim **1**, wherein each of the first polyacrylamide species and second polyacrylamide species is a branched species having a branch count between two to twelve branch arms.

16. The lens of claim **1**, wherein the reactive electron pair accepting group is a sulfone moiety.

17. The lens of claim **1**, wherein the reactive nucleophilic group is a thiol moiety.

18. The lens of claim **1**, wherein the reactive electron pair accepting group of the first polyacrylamide species is covalently linked to the outer surface of the core.

19. The lens of claim **1**, wherein the coated contact lens is characterized as comprising an advancing contact angle between about 20 degrees to about 50 degrees.

20. The lens of claim **1**, wherein the coated contact lens is characterized as comprising an advancing contact angle between about 25 degrees to about 35 degrees.

21. The lens of claim **1**, wherein the hydrogel layer comprises between about 80% to about 98% water by weight.

22. The lens of claim **1**, wherein the core consists of silicone.

23. The lens of claim **1**, wherein the core comprises silicone.

24. The lens of claim **1**, wherein the core is substantially free of silicone.

25. The lens of claim **1**, wherein the core comprises a hydrogel.

26. The lens of claim **1**, wherein the hydrogel layer further comprises at least one active agent.

27. The lens of claim **26**, wherein the at least one active agent comprises one or more of a UV-absorbing agent, a visibility tinting agent, an antimicrobial agent, a bioactive agent, a leachable lubricant, a leachable tear-stabilizing agent, and any mixture thereof.

28. A coated contact lens comprising:

a lens core comprising an outer surface; and

a hydrogel layer covalently attached to at least a portion of the outer surface, the hydrogel layer adapted to contact an ophthalmic surface, wherein the hydrogel layer comprises a hydrophilic polymer population having a first polyacrylamide species with a reactive sulfonyl group and a second polyacrylamide species with a reactive amine group, the first polyacrylamide species being at least partially cross-linked to the second polyacrylamide species through a sulfonamide covalent linkage between the reactive sulfonyl group of the first polyacrylamide species and the reactive amine group of the second polyacrylamide species.

29. The lens of claim **28**, wherein the hydrogel layer has a substantially uniform chemical composition.

30. The lens of claim **29**, wherein the hydrogel layer is covalently attached to the core by a sulfonyl moiety, a thioether moiety, or a sulfonyl moiety and a thioether moiety.

31. The lens of claim **29**, wherein at least one of the first polyacrylamide species is a branched polymer.

32. The lens of claim **28**, wherein a thickness of the hydrogel layer is greater than a monolayer of the first polyacrylamide species.

33. The lens of claim **28**, wherein the hydrogel layer comprises a thickness below about 100 nm.

34. The lens of claim **28**, wherein the hydrogel layer comprises a thickness between about 0.01 microns and about 0.05 microns.

35. The lens of claim **28**, wherein the hydrogel layer further comprises at least one active agent.

36. The lens of claim **28**, wherein the at least one active agent comprises one or more of a UV-absorbing agent, a visibility tinting agent, an antimicrobial agent, a bioactive agent, a leachable lubricant, a leachable tear-stabilizing agent, and any mixture thereof.

37. The lens of claim **28**, wherein the core layer consists of silicone.

38. The lens of claim **28**, wherein the core layer comprises a hydrogel.

39. The lens of claim **28**, wherein the core layer is substantially free of silicone.

40. A coated contact lens comprising:

a lens core comprising an outer surface; and

a hydrogel layer covalently attached to at least a portion of the outer surface, the hydrogel layer adapted to contact an ophthalmic surface, wherein the hydrogel layer comprises a hydrophilic polymer population comprising a first polyacrylamide species with a reactive amine group and a second polyacrylamide species with a reactive carboxyl group, the first polyacrylamide species being at least partially cross-linked to the second polyacrylamide species through an amide covalent linkage between the reactive amine group of the first polyacrylamide species and the reactive carboxyl group of the second polyacrylamide species.

41. The lens of claim **40**, wherein the hydrogel layer comprises a thickness between about 0.01 microns and about 0.05 microns.

42. The lens of claim **40**, wherein the hydrogel layer comprises a thickness below about 100 nm.

* * * * *