US010455124B2

(12) **United States Patent**
**Honma**

(10) **Patent No.: US 10,455,124 B2**
(45) **Date of Patent: Oct. 22, 2019**

(54) **IMAGE FORMING APPARATUS, IMAGE FORMING SYSTEM, MANAGEMENT APPARATUS, AND NON-TRANSITORY COMPUTER-READABLE RECORDING MEDIUM THAT STORES PROGRAM**

(71) Applicant: **KONICA MINOLTA, INC.**, Chiyoda-ku, Tokyo (JP)

(72) Inventor: **Mikimasa Honma**, Tokyo (JP)

(73) Assignee: **KONICA MINOLTA, INC.**, Tokyo (JP)

( * ) Notice: Subject to any disclaimer, the term of this patent is extended or adjusted under 35 U.S.C. 154(b) by 40 days.

(21) Appl. No.: **15/787,110**

(22) Filed: **Oct. 18, 2017**

(65) **Prior Publication Data**

US 2018/0131840 A1 May 10, 2018

(30) **Foreign Application Priority Data**

Nov. 9, 2016 (JP) ..... 2016-219129

(51) **Int. Cl.**
***H04N 1/60*** (2006.01)
***G03G 15/00*** (2006.01)

(52) **U.S. Cl.**
CPC ..... ***H04N 1/6041*** (2013.01); ***G03G 15/5062*** (2013.01); ***G03G 15/5083*** (2013.01);
(Continued)

(58) **Field of Classification Search**
CPC ..... G03G 15/5062; G03G 15/5083; G03G 2215/00113; H04N 1/6033; H04N 1/6041; H04N 1/6058
(Continued)

(56) **References Cited**

U.S. PATENT DOCUMENTS

6,061,144 A * 5/2000 Mamizuka ..... H04N 1/40006 358/1.9
8,171,503 B2 5/2012 Toru
(Continued)

FOREIGN PATENT DOCUMENTS

CN 101207675 A 6/2008
JP 2005238854 A 9/2005
(Continued)

OTHER PUBLICATIONS

Chinese Office Action dated Feb. 22, 2019 (and English translation thereof) issued in counterpart Chinese Application No. 201711089509.8.

*Primary Examiner* — Negussie Worku
(74) *Attorney, Agent, or Firm* — Holtz, Holtz & Volek PC

(57) **ABSTRACT**

An image forming apparatus used for an image forming system that outputs a job in a plurality of image forming apparatuses in a distributed manner, the image forming apparatus including: a communication unit that communicates with other image forming apparatuses; and a control unit that controls the communication and a distributed output of the job and includes state information on the plurality of the image forming apparatuses. The control unit determines, according to the states of each of the image forming apparatuses, the image forming apparatus for printing of a reference test chart on a transfer medium, the test chart being used as a reference for an image formation adjustment in each of the image forming apparatuses.

**19 Claims, 13 Drawing Sheets**

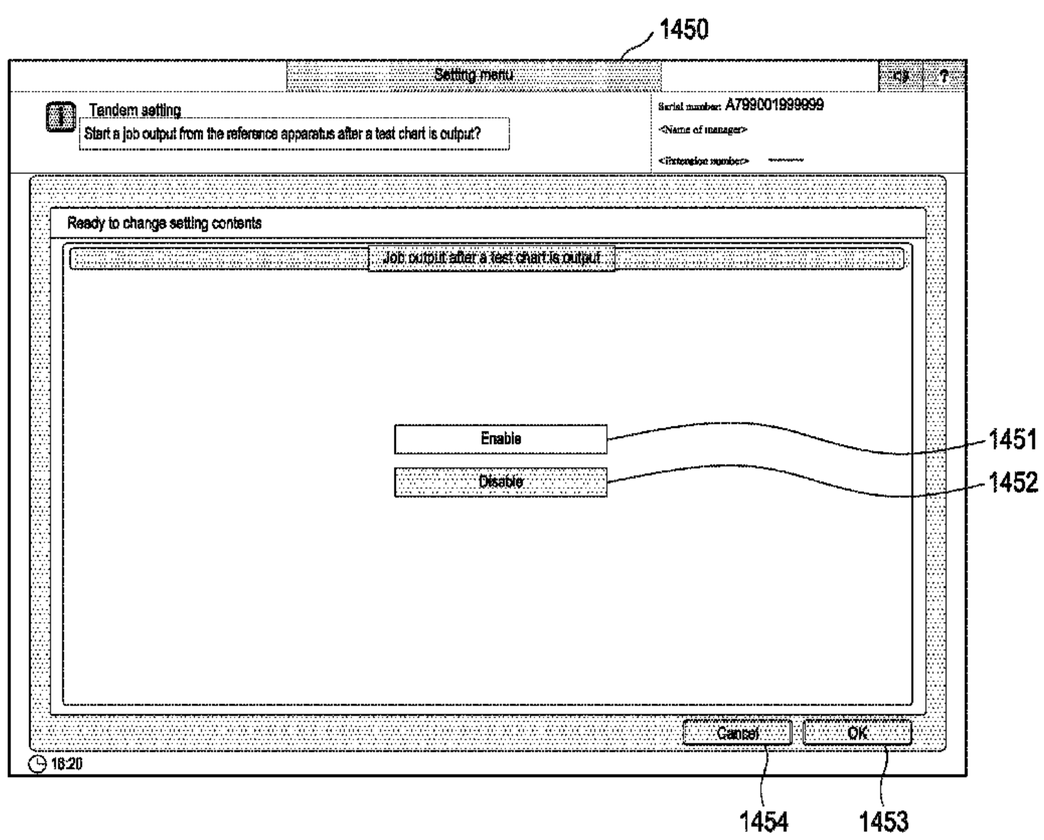

(52) **U.S. Cl.**
CPC ..... ***H04N 1/6033*** (2013.01); ***H04N 1/6058*** (2013.01); *G03G 2215/00113* (2013.01)

(58) **Field of Classification Search**
USPC ..... 358/1.15, 406; 399/17, 16, 223, 27, 301, 399/359, 49, 51
See application file for complete search history.

(56) **References Cited**

U.S. PATENT DOCUMENTS

2006/0159480 A1* 7/2006 Mima ..... B41J 3/60 399/82
2007/0024657 A1* 2/2007 Zhang ..... H04N 1/6033 347/19
2008/0155568 A1 6/2008 Toru
2011/0262186 A1* 10/2011 Takuwa ..... G03G 15/0126 399/223
2013/0250322 A1* 9/2013 Kawabata ..... H04N 1/60 358/1.9
2014/0043632 A1* 2/2014 Uchida ..... G06F 3/1297 358/1.13
2014/0043634 A1* 2/2014 Haga ..... H04N 1/00904 358/1.13
2014/0139869 A1* 5/2014 Honma ..... H04N 1/00347 358/1.15
2015/0271347 A1* 9/2015 Honma ..... H04N 1/00862 358/1.13
2016/0112581 A1* 4/2016 Kishi ..... H04N 1/6033 358/504
2017/0075260 A1* 3/2017 Honma ..... G03G 15/161
2019/0122351 A1* 4/2019 Honma ..... G06T 7/001

FOREIGN PATENT DOCUMENTS

JP 2006343599 A 12/2006
JP 2013214269 A 10/2013

* cited by examiner

FIG.1

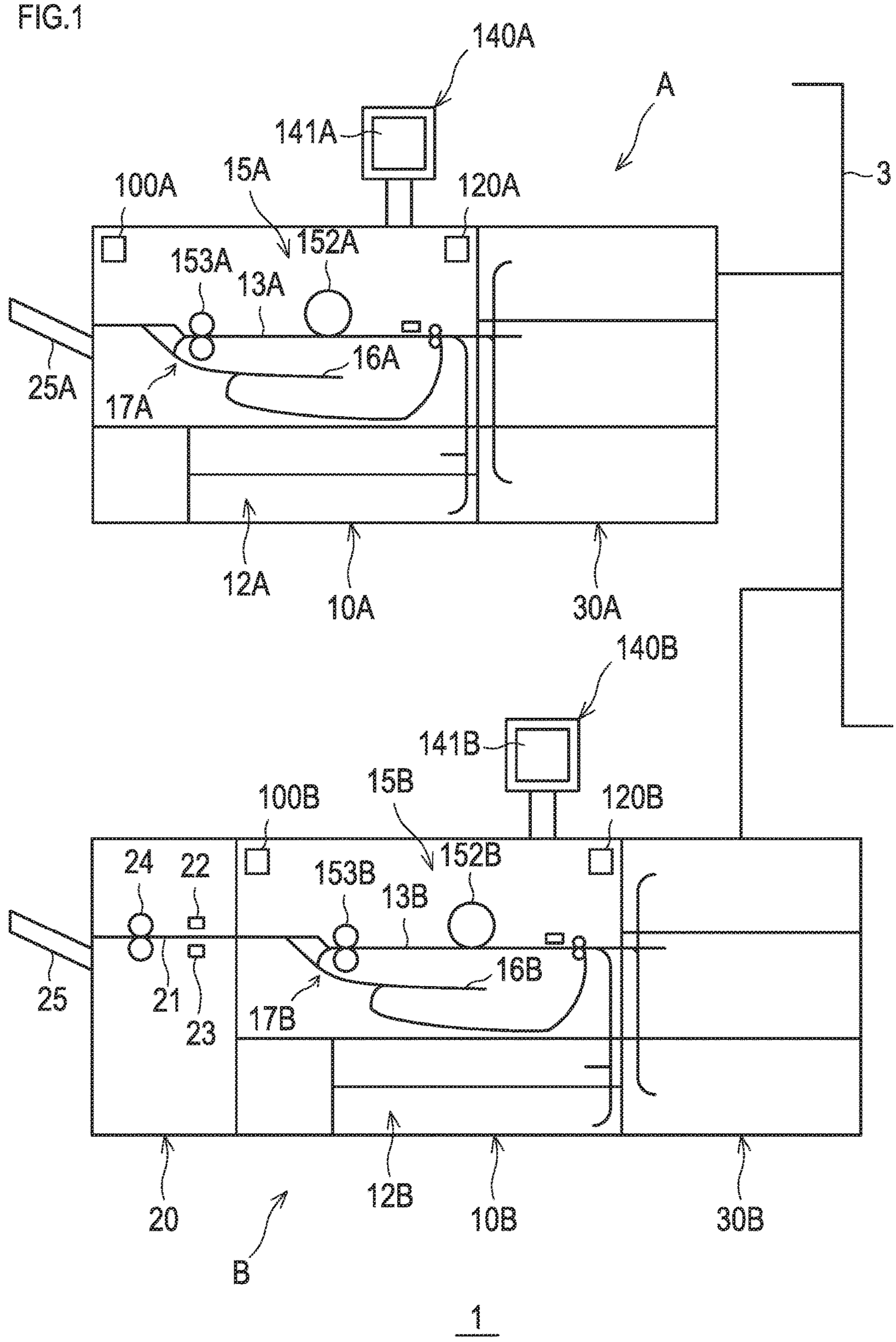
140A
A
141A
3
100A
15A
120A
152A
153A
13A
16A
25A
17A
12A
10A
30A
140B
141B
15B
100B
120B
24
22
152B
153B
13B
16B
25
21
23
17B
20
12B
10B
30B
B
1

FIG.2

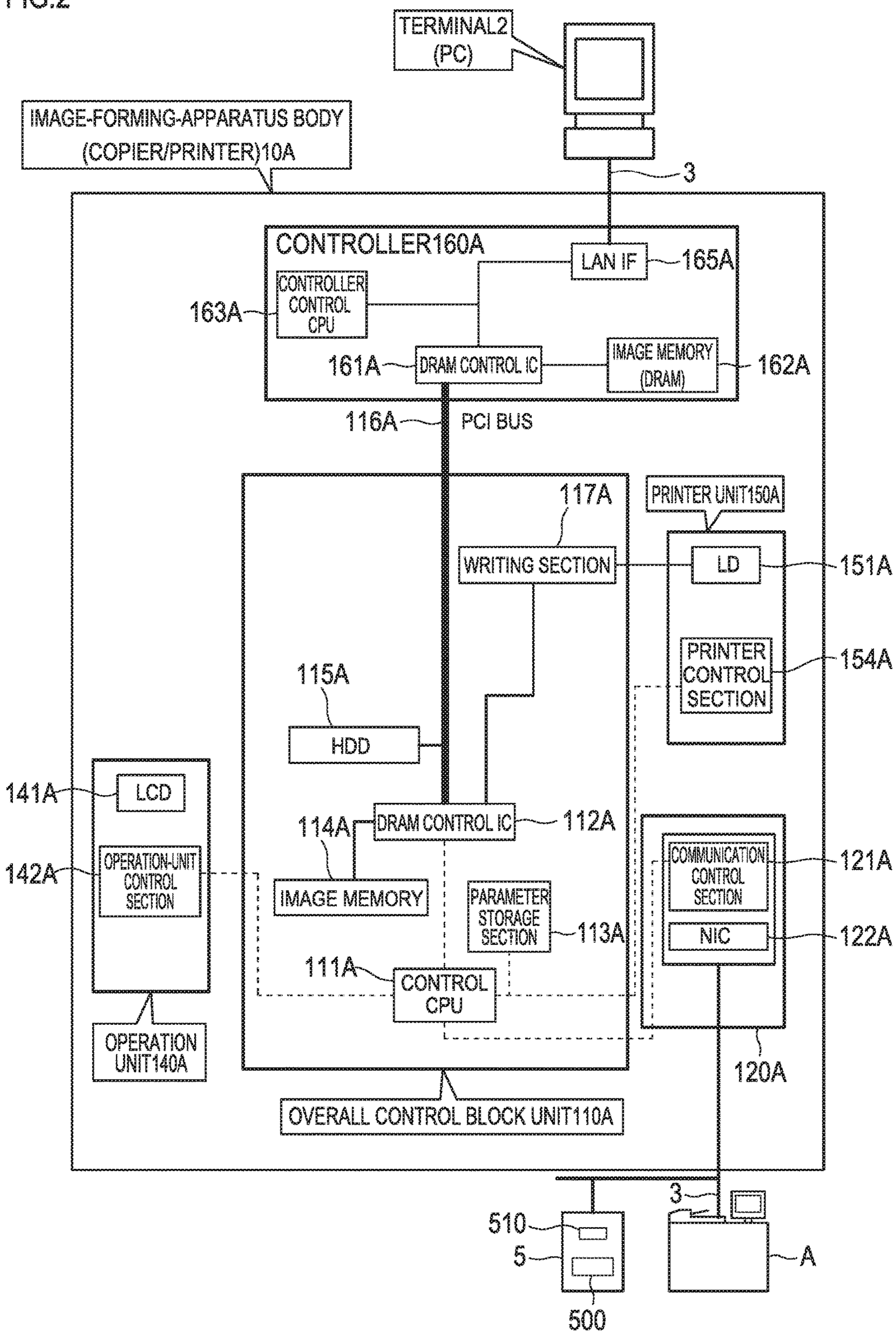
TERMINAL2
(PC)
IMAGE-FORMING-APPARATUS BODY
(COPIER/PRINTER)10A
3
CONTROLLER160A
LAN IF
165A
CONTROLLER
CONTROL
CPU
163A
161A
DRAM CONTROL IC
IMAGE MEMORY
(DRAM)
162A
116A
PCI BUS
117A
PRINTER UNIT150A
WRITING SECTION
LD
151A
PRINTER
CONTROL
SECTION
154A
115A
HDD
141A
LCD
114A
DRAM CONTROL IC
112A
142A
OPERATION-UNIT
CONTROL
SECTION
IMAGE MEMORY
PARAMETER
STORAGE
SECTION
113A
COMMUNICATION
CONTROL
SECTION
121A
NIC
122A
111A
CONTROL
CPU
OPERATION
UNIT140A
120A
OVERALL CONTROL BLOCK UNIT110A
3
510
5
A
500

FIG.3

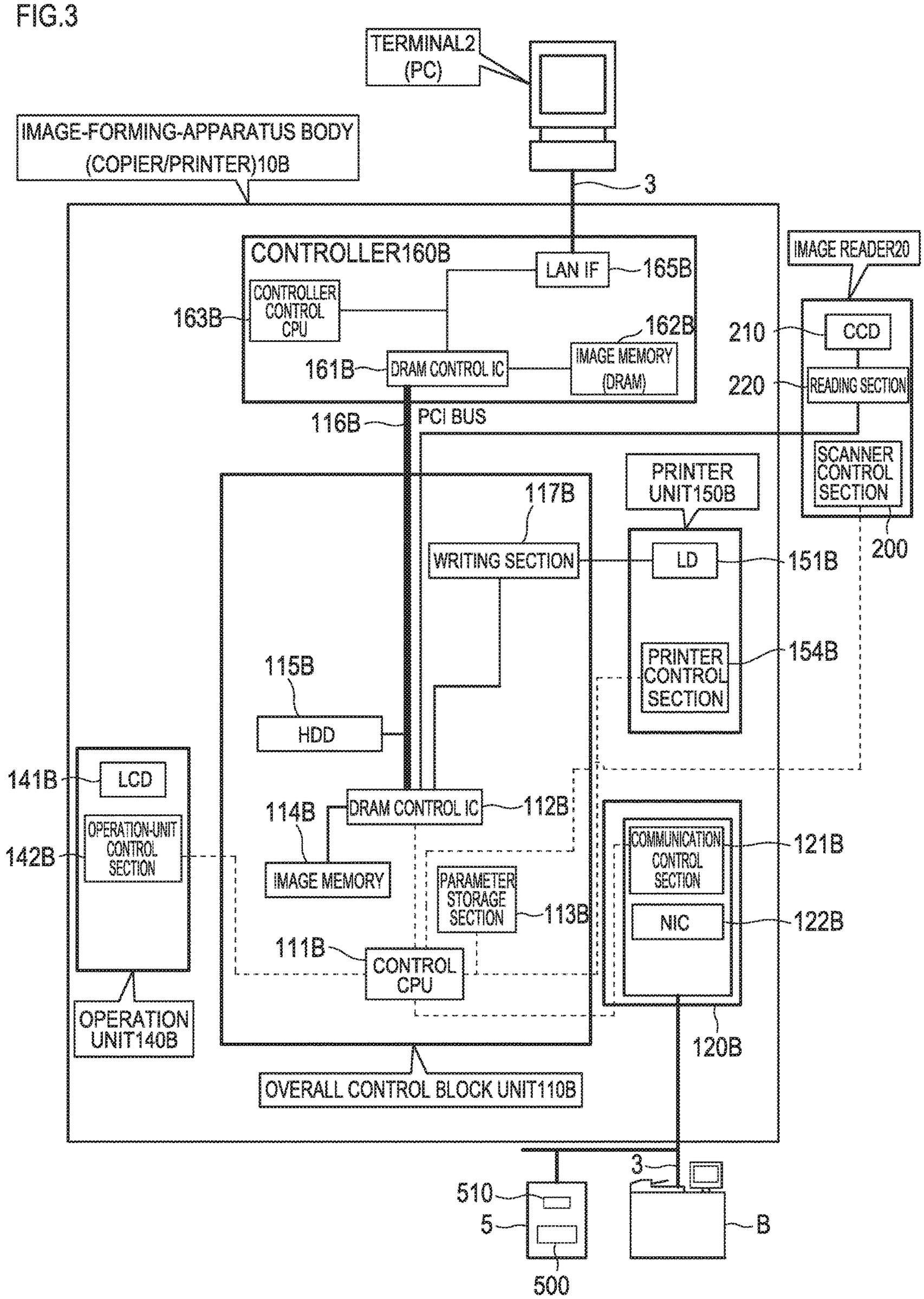
TERMINAL2
(PC)
IMAGE-FORMING-APPARATUS BODY
(COPIER/PRINTER)10B
3
CONTROLLER160B
LAN IF
165B
CONTROLLER
CONTROL
CPU
163B
162B
IMAGE MEMORY
(DRAM)
161B
DRAM CONTROL IC
IMAGE READER20
210
CCD
220
READING SECTION
116B
PCI BUS
SCANNER
CONTROL
SECTION
200
PRINTER
UNIT150B
117B
WRITING SECTION
LD
151B
PRINTER
CONTROL
SECTION
154B
115B
HDD
141B
LCD
114B
DRAM CONTROL IC
112B
142B
OPERATION-UNIT
CONTROL
SECTION
IMAGE MEMORY
PARAMETER
STORAGE
SECTION
113B
COMMUNICATION
CONTROL
SECTION
121B
NIC
122B
111B
CONTROL
CPU
OPERATION
UNIT140B
120B
OVERALL CONTROL BLOCK UNIT110B
3
510
5
B
500

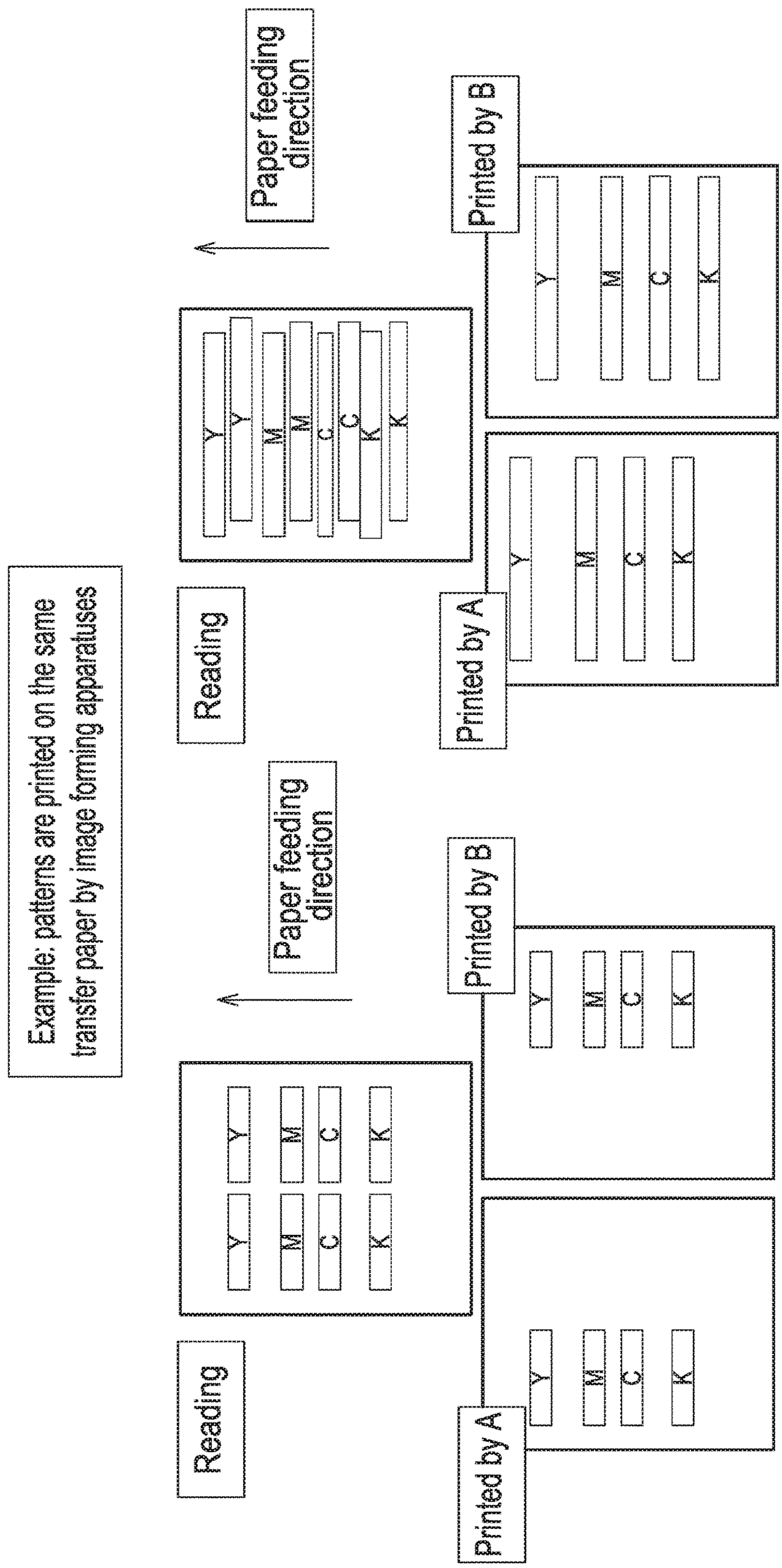
Example: patterns are printed on the same transfer paper by image forming apparatuses
Reading
Y Y M M C C K K
Paper feeding direction
Printed by A
Y M C K
Printed by B
Y M C K
Reading
Y M C K
Y M C K
Paper feeding direction
Printed by A
Y M C K
Printed by B
Y M C K

FIG.4

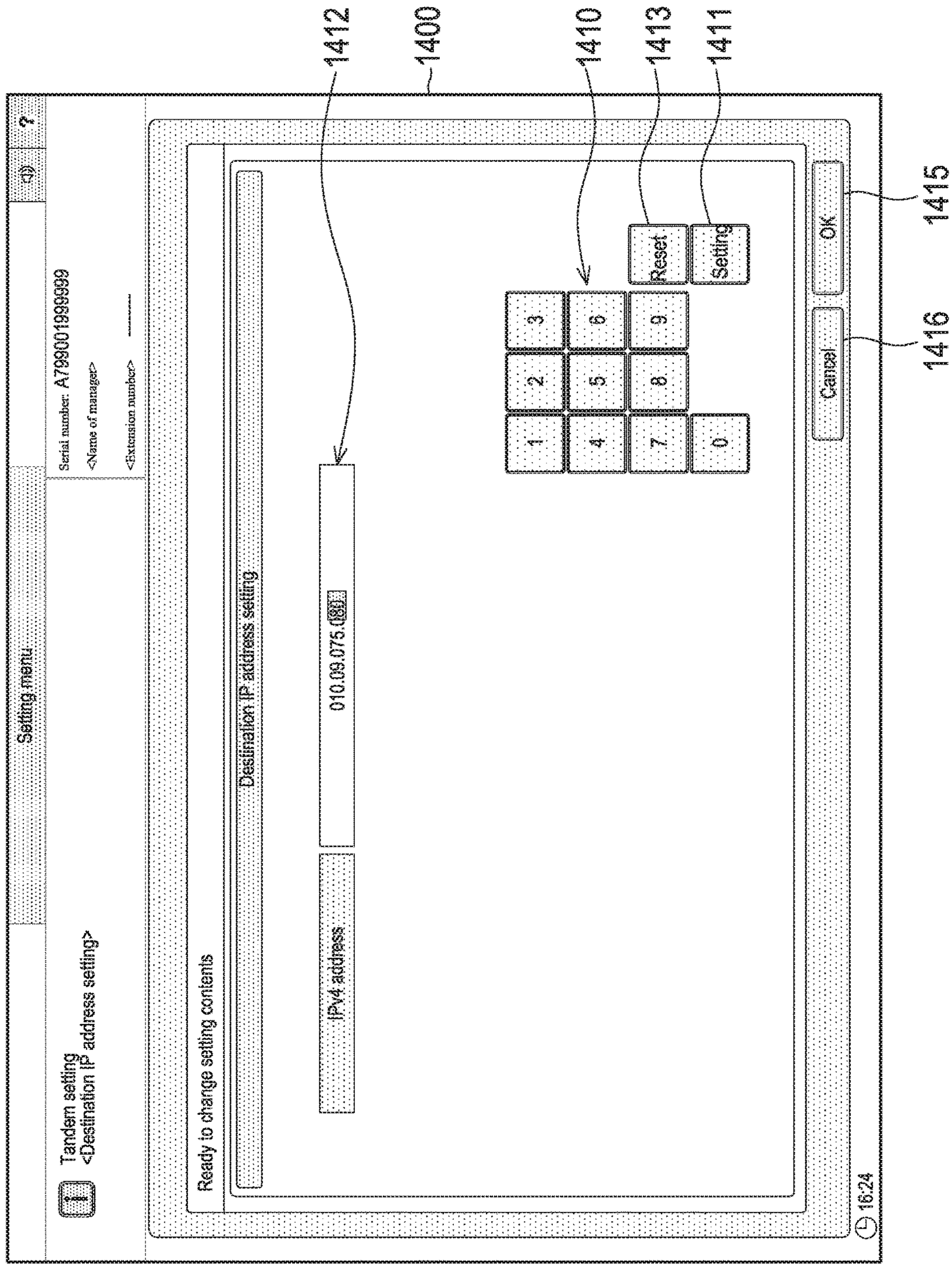
1412
1400
1410
1413
1411
1415
1416
Setting menu
Serial number: A799001999999
<Name of manager>
<Extension number> ------
Tandem setting
<Destination IP address setting>
Ready to change setting contents
Destination IP address setting
010.09.075.(8)
IPv4 address
1
2
3
4
5
6
7
8
9
0
Reset
Setting
OK
Cancel
16:24

FIG.5

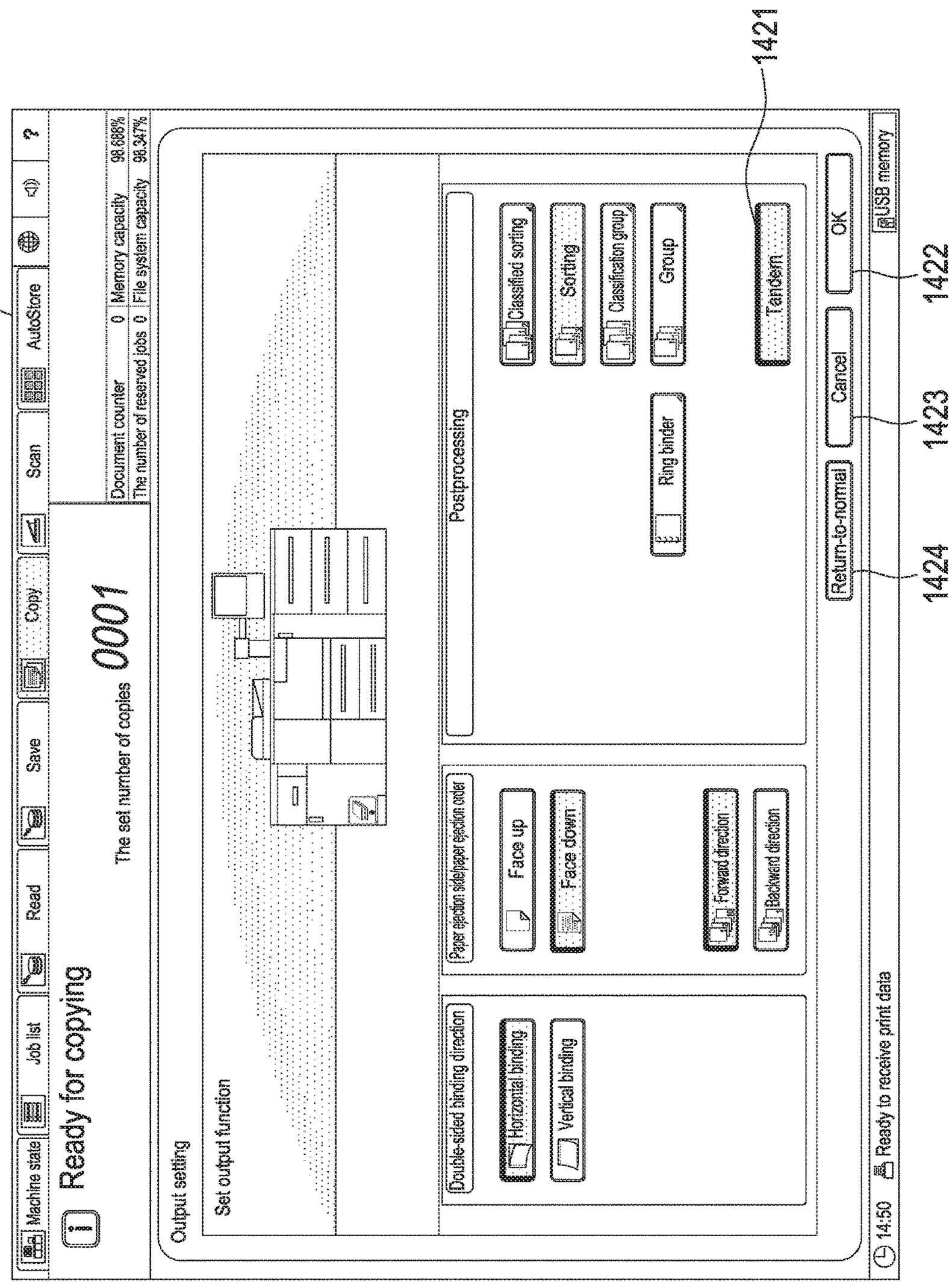
1420
1421
1422
1423
1424
Machine state
Job list
Read
Save
Copy
Scan
AutoStore
Ready for copying
The set number of copies
0001
Document counter
0
Memory capacity
98.686%
The number of reserved jobs
0
File system capacity
98.347%
Output setting
Set output function
Double-sided binding direction
Horizontal binding
Vertical binding
Paper ejection side/paper ejection order
Face up
Face down
Forward direction
Backward direction
Postprocessing
Classified sorting
Sorting
Classification group
Group
Ring binder
Tandem
Return-to-normal
Cancel
OK
USB memory
14:50
Ready to receive print data

FIG.6

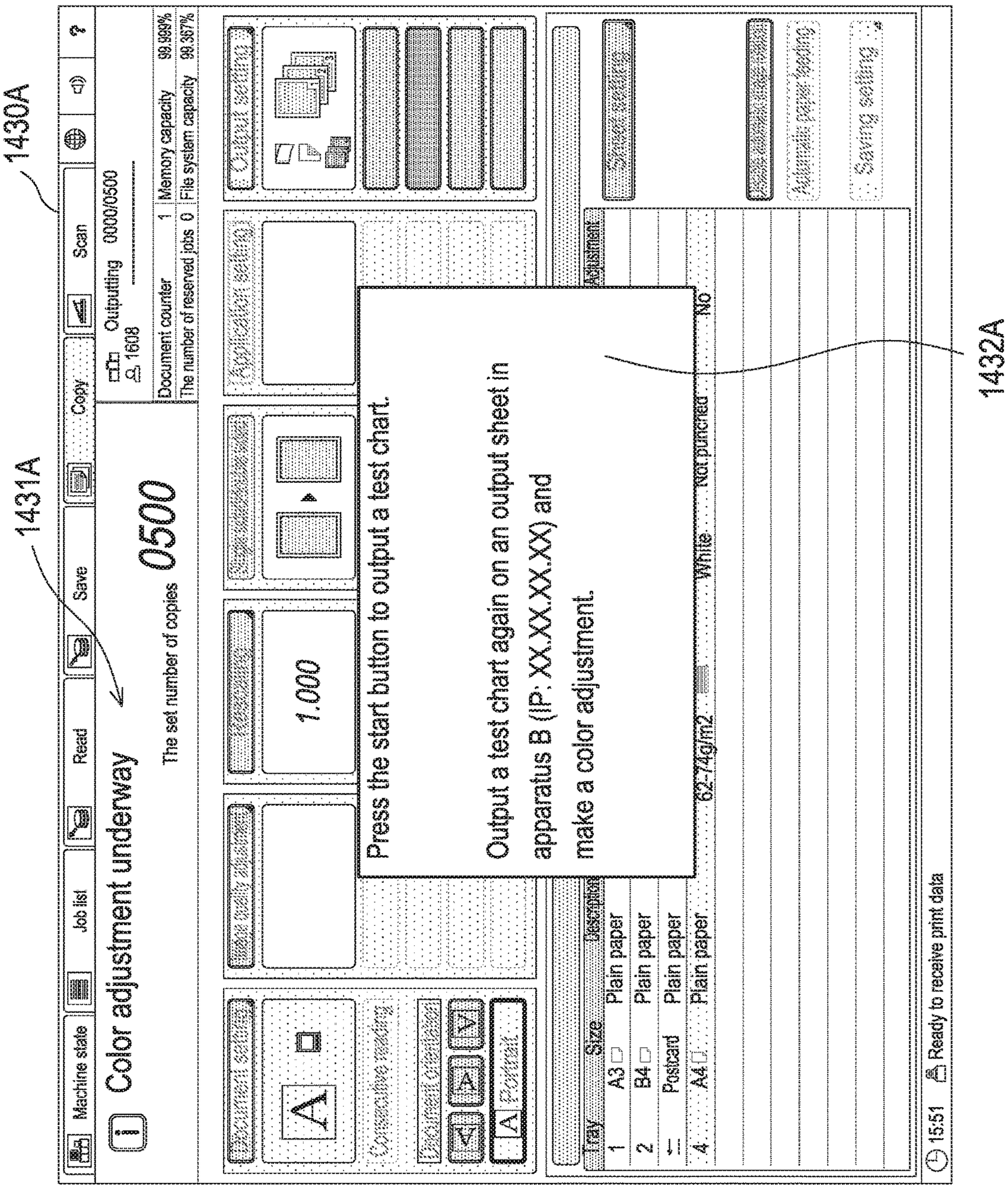
1430A
1431A
1432A
Machine state
Job list
Read
Save
Copy
Scan
Color adjustment underway
The set number of copies 0500
Outputting 0000/0500
1608
Document counter 1 Memory capacity 99.989%
The number of reserved jobs 0 File system capacity 99.367%
1.000
Press the start button to output a test chart.
Output a test chart again on an output sheet in apparatus B (IP: XX.XX.XX.XX) and make a color adjustment.
Tray Size Description
1 A3 Plain paper
2 B4 Plain paper
Postcard Plain paper
4 A4 Plain paper
62-74g/m2
White
Not punched
No
Adjustment
15:51
Ready to receive print data

FIG.7

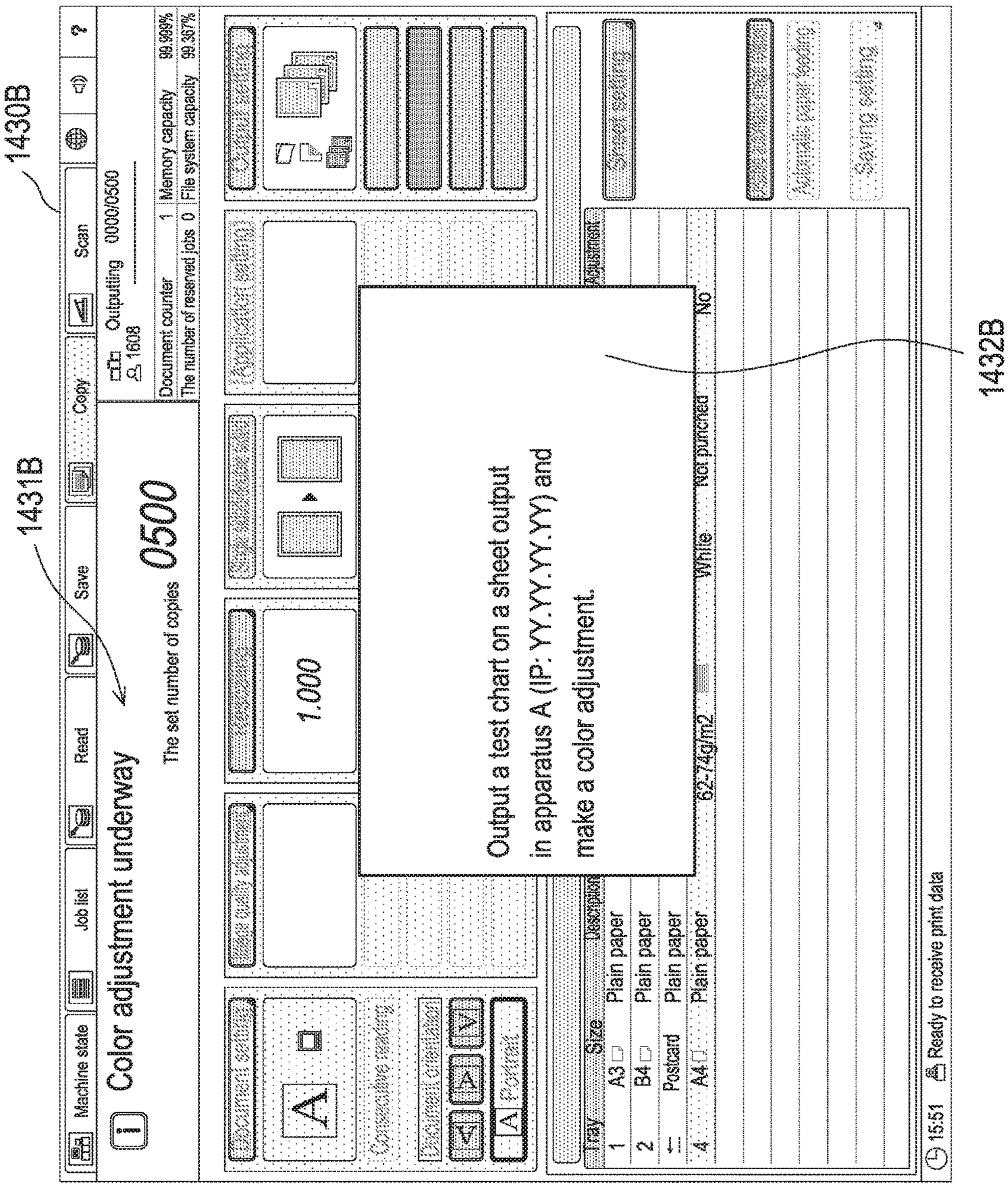
1430B
1431B
1432B
Machine state
Job list
Read
Save
Copy
Scan
Color adjustment underway
The set number of copies
0500
Outputting 0000/0500
1608
Document counter 1 Memory capacity 99.999%
The number of reserved jobs 0 File system capacity 99.367%
1.000
Output a test chart on a sheet output in apparatus A (IP: YY.YY.YY.YY) and make a color adjustment.
Tray Size Description
1 A3 Plain paper
2 B4 Plain paper
Postcard Plain paper
4 A4 Plain paper
62-74g/m2
White
Not punched
No
15:51
Ready to receive print data

FIG.8

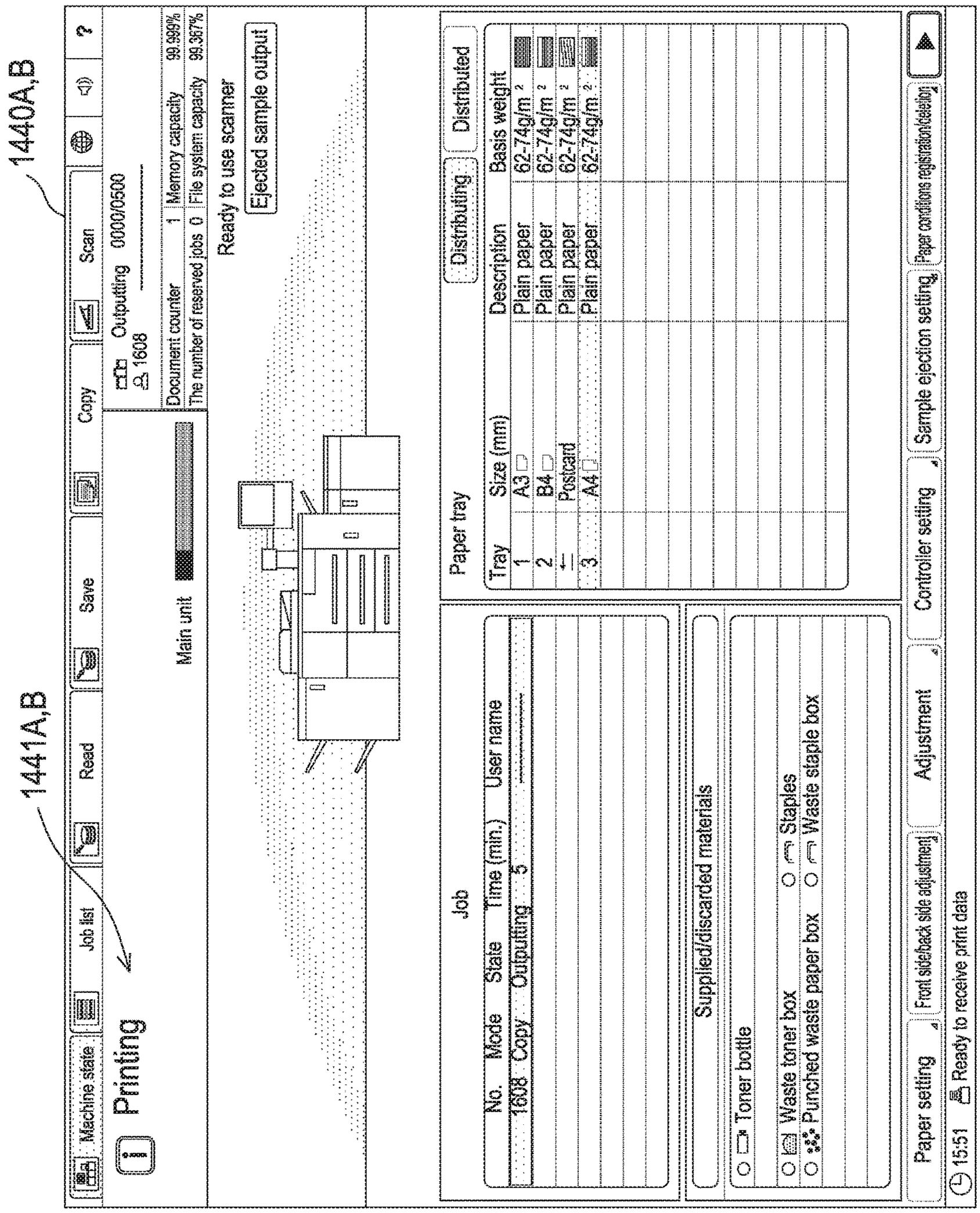
1440A,B
1441A,B
Machine state
Job list
Read
Save
Copy
Scan
?
Printing
Outputting 0000/0500
1608
Document counter 1
Memory capacity 99.999%
The number of reserved jobs 0
File system capacity 99.367%
Main unit
Ready to use scanner
Ejected sample output
Job
Distributing
Distributed
No. Mode State Time (min.) User name
1608 Copy Outputting 5
Paper tray
Tray Size (mm) Description Basis weight
1 A3 Plain paper 62-74g/m²
2 B4 Plain paper 62-74g/m²
Postcard Plain paper 62-74g/m²
3 A4 Plain paper 62-74g/m²
Supplied/discarded materials
Toner bottle
Staples
Waste toner box
Waste staple box
Punched waste paper box
Paper setting
Front side/back side adjustment
Adjustment
Controller setting
Sample ejection setting
Paper conditions registration/deletion
15:51
Ready to receive print data

FIG.9

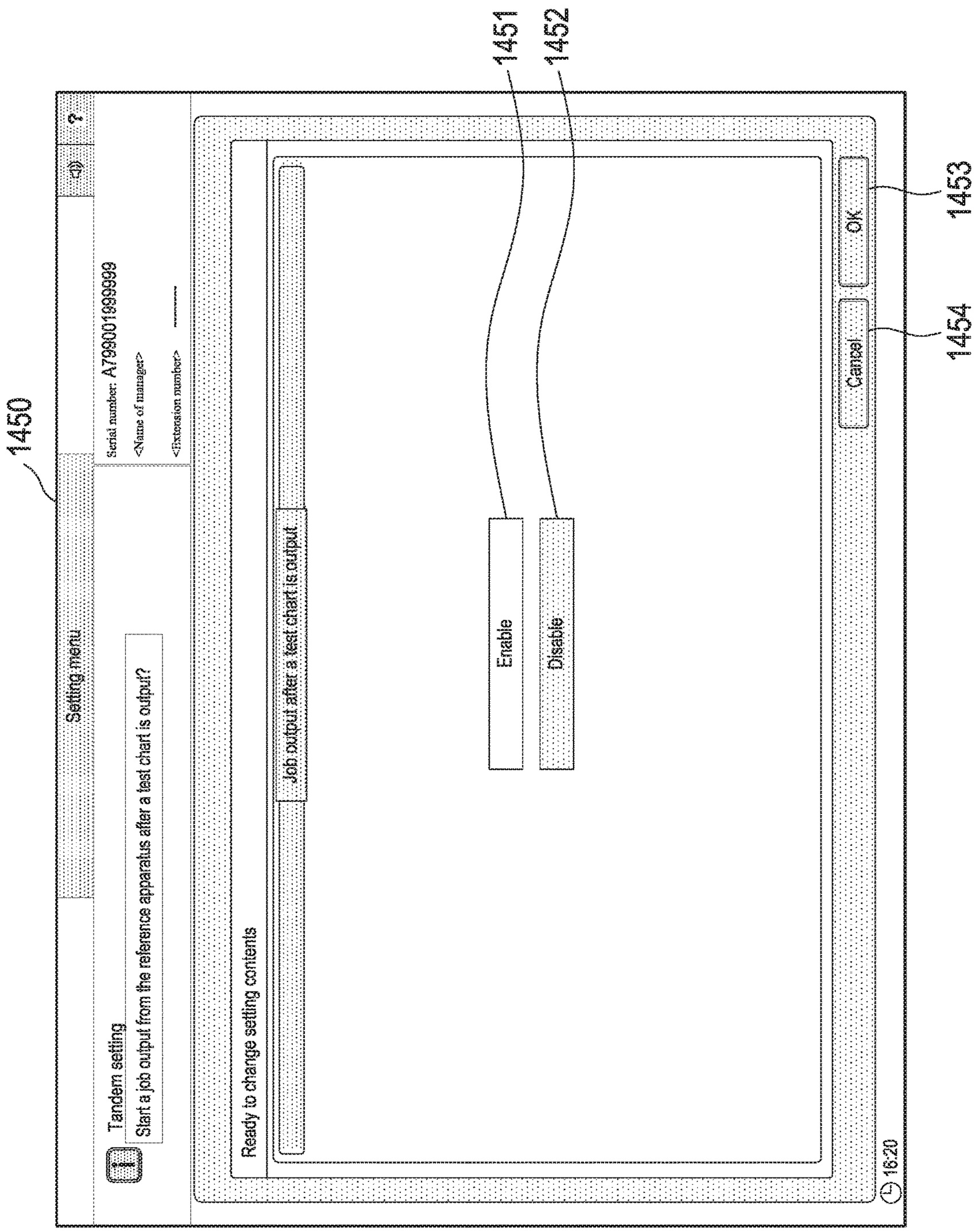
1450
1451
1452
1453
1454
Setting menu
Tandem setting
Start a job output from the reference apparatus after a test chart is output?
Serial number: A799001999999
<Name of manager>
<Extension number>
Ready to change setting contents
Job output after a test chart is output
Enable
Disable
Cancel
OK
16:20

FIG.10

FIG.11

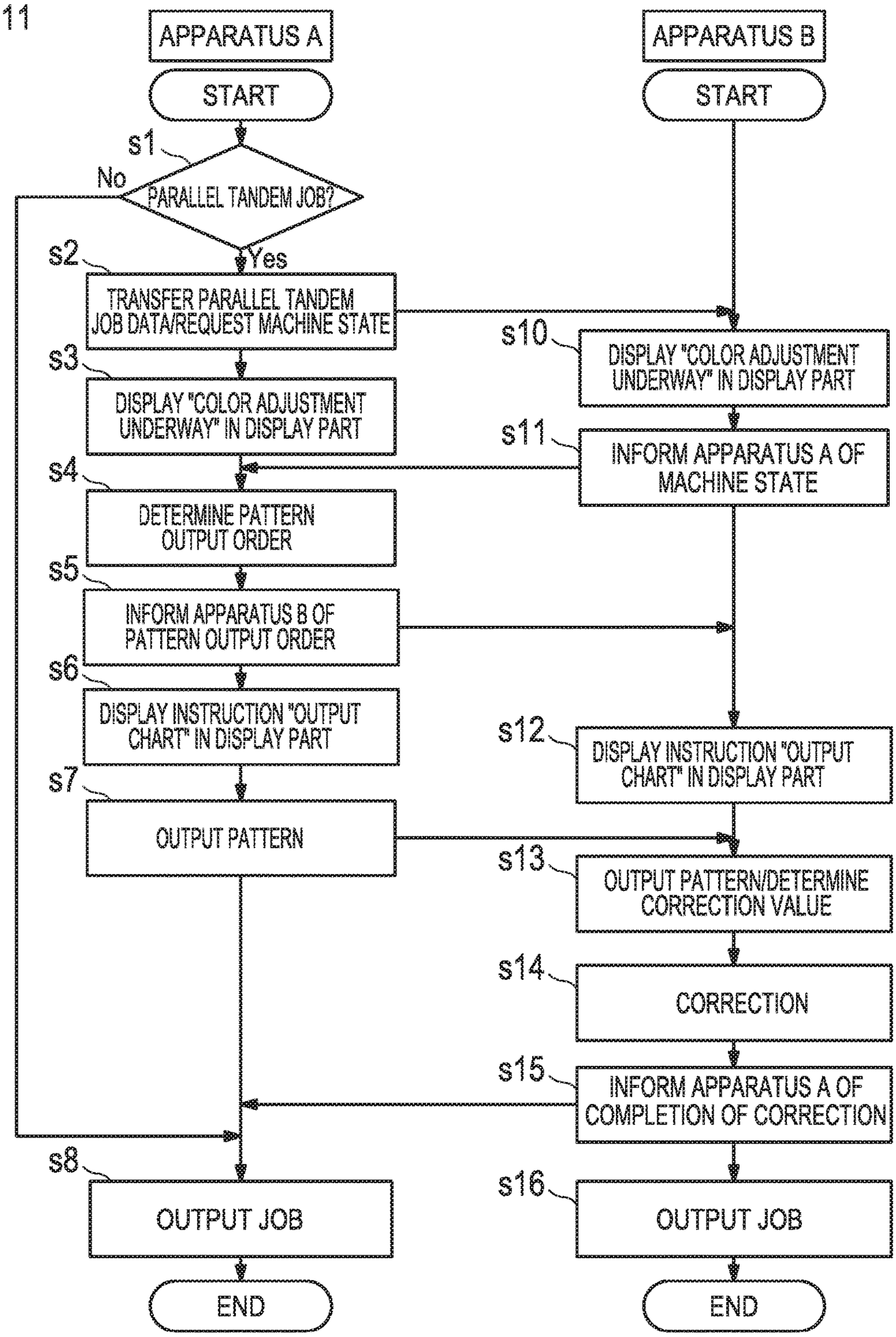
APPARATUS A
START
s1
PARALLEL TANDEM JOB?
No
Yes
s2
TRANSFER PARALLEL TANDEM JOB DATA/REQUEST MACHINE STATE
s3
DISPLAY "COLOR ADJUSTMENT UNDERWAY" IN DISPLAY PART
s4
DETERMINE PATTERN OUTPUT ORDER
s5
INFORM APPARATUS B OF PATTERN OUTPUT ORDER
s6
DISPLAY INSTRUCTION "OUTPUT CHART" IN DISPLAY PART
s7
OUTPUT PATTERN
s8
OUTPUT JOB
END
APPARATUS B
START
s10
DISPLAY "COLOR ADJUSTMENT UNDERWAY" IN DISPLAY PART
s11
INFORM APPARATUS A OF MACHINE STATE
s12
DISPLAY INSTRUCTION "OUTPUT CHART" IN DISPLAY PART
s13
OUTPUT PATTERN/DETERMINE CORRECTION VALUE
s14
CORRECTION
s15
INFORM APPARATUS A OF COMPLETION OF CORRECTION
s16
OUTPUT JOB
END

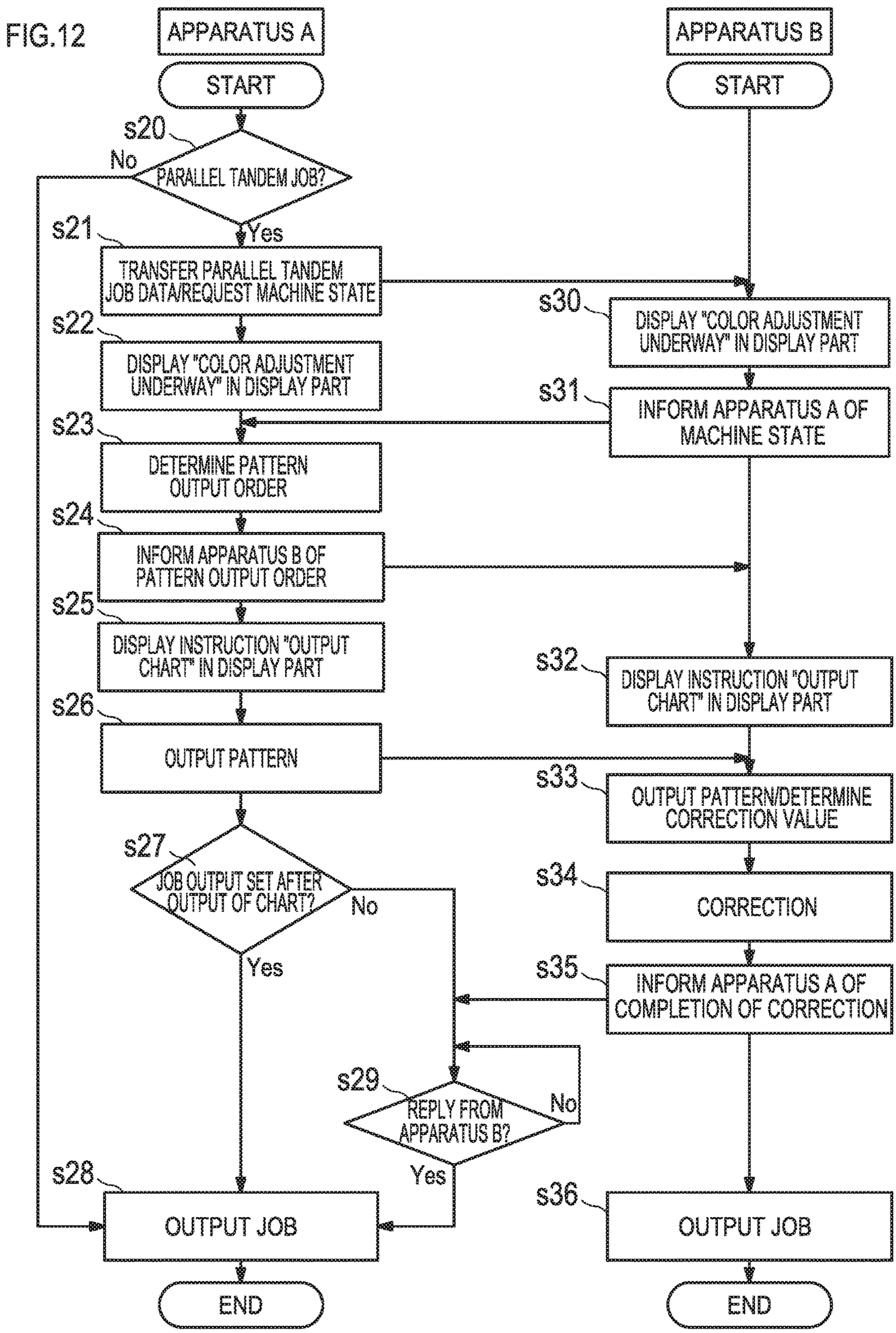
FIG.12
APPARATUS A
START
s20
PARALLEL TANDEM JOB?
No
Yes
s21
TRANSFER PARALLEL TANDEM JOB DATA/REQUEST MACHINE STATE
s22
DISPLAY "COLOR ADJUSTMENT UNDERWAY" IN DISPLAY PART
s23
DETERMINE PATTERN OUTPUT ORDER
s24
INFORM APPARATUS B OF PATTERN OUTPUT ORDER
s25
DISPLAY INSTRUCTION "OUTPUT CHART" IN DISPLAY PART
s26
OUTPUT PATTERN
s27
JOB OUTPUT SET AFTER OUTPUT OF CHART?
No
Yes
s29
REPLY FROM APPARATUS B?
No
Yes
s28
OUTPUT JOB
END
APPARATUS B
START
s30
DISPLAY "COLOR ADJUSTMENT UNDERWAY" IN DISPLAY PART
s31
INFORM APPARATUS A OF MACHINE STATE
s32
DISPLAY INSTRUCTION "OUTPUT CHART" IN DISPLAY PART
s33
OUTPUT PATTERN/DETERMINE CORRECTION VALUE
s34
CORRECTION
s35
INFORM APPARATUS A OF COMPLETION OF CORRECTION
s36
OUTPUT JOB
END

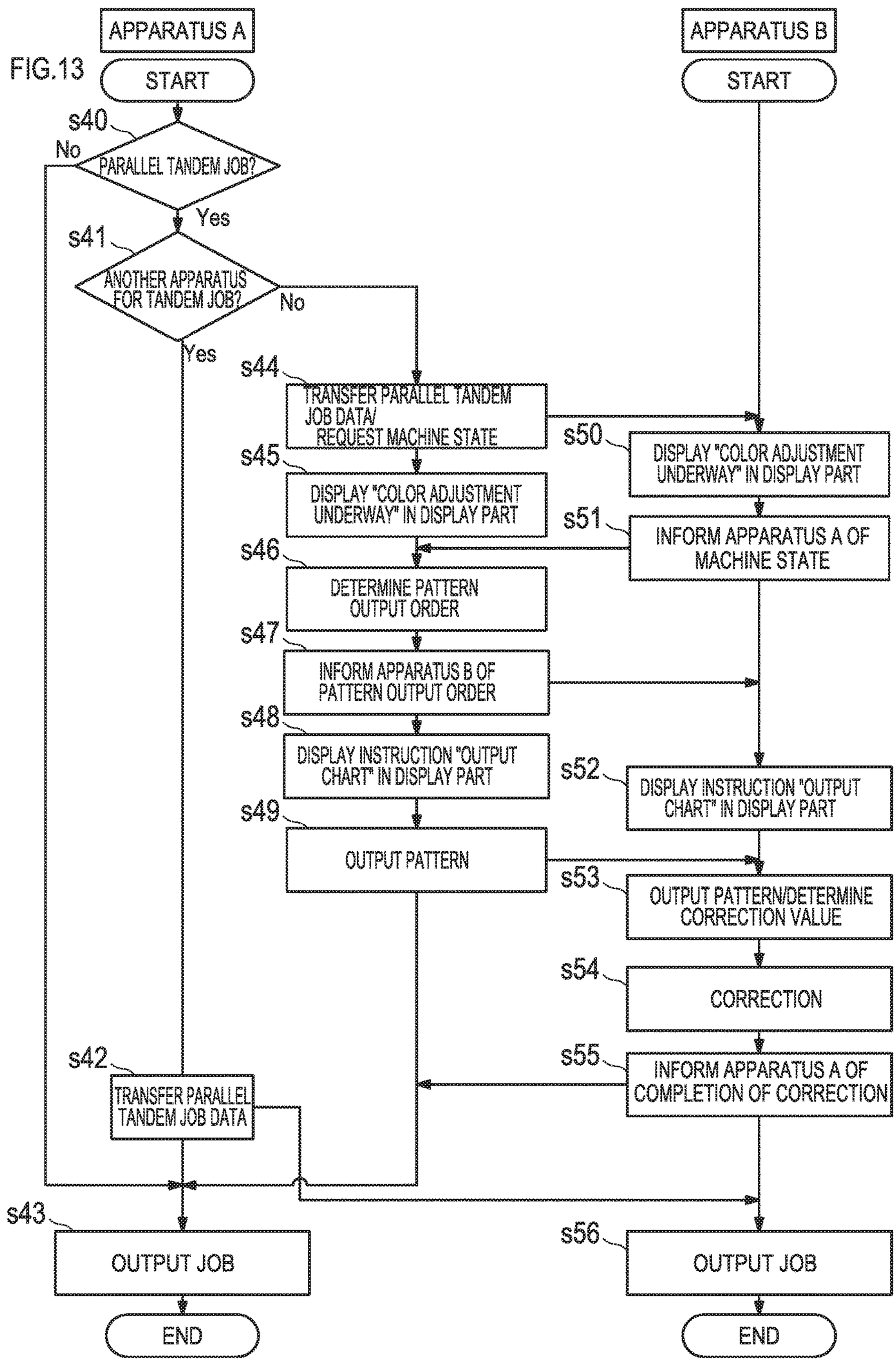
FIG.13
APPARATUS A
START
s40
PARALLEL TANDEM JOB?
No
Yes
s41
ANOTHER APPARATUS FOR TANDEM JOB?
No
Yes
s44
TRANSFER PARALLEL TANDEM JOB DATA/ REQUEST MACHINE STATE
s45
DISPLAY "COLOR ADJUSTMENT UNDERWAY" IN DISPLAY PART
s46
DETERMINE PATTERN OUTPUT ORDER
s47
INFORM APPARATUS B OF PATTERN OUTPUT ORDER
s48
DISPLAY INSTRUCTION "OUTPUT CHART" IN DISPLAY PART
s49
OUTPUT PATTERN
s42
TRANSFER PARALLEL TANDEM JOB DATA
s43
OUTPUT JOB
END
APPARATUS B
START
s50
DISPLAY "COLOR ADJUSTMENT UNDERWAY" IN DISPLAY PART
s51
INFORM APPARATUS A OF MACHINE STATE
s52
DISPLAY INSTRUCTION "OUTPUT CHART" IN DISPLAY PART
s53
OUTPUT PATTERN/DETERMINE CORRECTION VALUE
s54
CORRECTION
s55
INFORM APPARATUS A OF COMPLETION OF CORRECTION
s56
OUTPUT JOB
END

# IMAGE FORMING APPARATUS, IMAGE FORMING SYSTEM, MANAGEMENT APPARATUS, AND NON-TRANSITORY COMPUTER-READABLE RECORDING MEDIUM THAT STORES PROGRAM

Japanese patent application No. 2016-219129 filed on Nov. 9, 2016 including description, claims, drawings, and abstract the entire disclosure is incorporated herein by reference in its entirety

## BACKGROUND

### Technological Field

The present invention relates to an image forming apparatus, an image forming system, a management apparatus, and a non-transitory computer-readable recording medium that stores a program that can output a job in a plurality of image forming apparatuses in a distributed manner.

### Description of the Related Art

At present, there has been a need for high-speed printing, for example, when a large volume of printed matters are to be printed. For example, there is a system enabling distributed printing, in which a plurality of image forming apparatuses on a network are used to distribute a job to simultaneously output printed matters (Hereinafter, will be called parallel tandem).

For example, a job of 500 copies can be evenly divided to 250 copies each between an image forming apparatus A and an image forming apparatus B, or 300 copies can be assigned to the image forming apparatus A and 200 copies can be assigned to the image forming apparatus B according to the output speeds of the devices, thereby saving time. Alternatively, the pages of a copy can be output by multiple image forming apparatuses in a distributed manner.

Generally, in image forming apparatuses, stabilization control is performed to adjust color matching and concentrations in a proper range. For example, in Japanese Patent Laid-Open No. 2006-343599, a test chart is output in an image forming apparatus where color matching is needed, information on the image forming apparatus is selected, and then the chromaticity of the test chart is accurately detected by an image forming apparatus including a color sensor. After that, correction information is output to reduce an image color difference between the devices according to the chromaticity result of the test chart, and then an image is output using the correction information in the image forming apparatus where color matching is needed. However, the devices in Japanese Patent Laid-Open No. 2006-343599 are not devised in consideration of parallel tandem.

In a tandem system, stabilization control is performed in every image forming apparatus when a main image forming apparatus satisfies certain conditions (including a specified number of prints, an extended period of standby, and the first startup in the morning). For example, Japanese Patent Laid-Open No. 2013-214269 proposes a management system that manages the color-corrected states of multiple image output devices, the management system including acquisition means that acquires, from the image output devices, information on color-corrected states under predetermined color correction conditions, and indication means that indicates the color-corrected states of the image output devices under the predetermined color correction conditions based on the acquired information on the color-corrected states.



However, the management system of Japanese Patent Laid-Open No. 2013-214269 is assumed to be a system that previously has knowledge of a color-corrected state, and the management system cannot accommodate a system in which a reference for color correction varies.

To address the problem, for example, when the image forming apparatus A is used as a reference, a test chart is output in the image forming apparatus A and the same test chart is visually inspected or a correction amount is determined by a reader in the image forming apparatus B. The correction amount is a difference determined between the image forming apparatus A and the image forming apparatus B. A correction can be made using the correction amount set as a correction set value of the image forming apparatus B. However, a smooth adjustment is likely to become difficult depending on the states of the apparatuses.

## SUMMARY

The present invention has been devised against the backdrop of these circumstances. An object of the present invention is to properly determine an image forming apparatus that prints a reference test chart when a job is output in a distributed manner.

To achieve at least one of the abovementioned objects, according to an aspect of the present invention, an image forming apparatus reflecting one aspect of the present invention is an image forming apparatus used for an image forming system that outputs a job in a plurality of image forming apparatuses in a distributed manner,

the image forming apparatus including:

a communication unit that communicates with other image forming apparatuses; and

a control unit that controls the communication and a distributed output of the job and includes state information on the plurality of the image forming apparatuses,

wherein the control unit determines, according to states of each of the image forming apparatuses, the image forming apparatus for printing of a reference test chart on a transfer medium, the test chart being used as a reference for an image formation adjustment in each of the image forming apparatuses.

To achieve at least one of the abovementioned objects, according to an aspect of the present invention, an image forming system reflecting one aspect of the present invention is an image forming system including a plurality of image forming apparatuses, the image forming system outputting a job in the plurality of the image forming apparatuses in a distributed manner,

the system including:

a control unit that controls a distributed output of the job and includes state information on the plurality of the image forming apparatuses; and

a communication unit that provides communications between the control unit and the plurality of the image forming apparatuses and is controlled by the control unit,

wherein the control unit determines, according to states of each of the image forming apparatuses, the image forming apparatus for printing of a reference test chart on a transfer medium, the test chart being used as a reference for an image formation adjustment in each of the image forming apparatuses.

To achieve at least one of the abovementioned objects, according to an aspect of the present invention, a management apparatus reflecting one aspect of the present invention is a management apparatus that manages a system including a plurality of image forming apparatuses, the system out-

putting a job in the plurality of the image forming apparatuses in a distributed manner,

the management apparatus including:

a communication section that provides communications between the management apparatus and the image forming apparatuses; and

a management control section that controls a distributed output of the job and includes state information on the plurality of the image forming apparatuses,

wherein the management control section determines, according to states of each of the image forming apparatuses, the image forming apparatus for printing of a reference test chart on a transfer medium, the test chart being used as a reference for an image quality adjustment in each of the image forming apparatuses.

To achieve at least one of the abovementioned objects, according to an aspect of the present invention, a non-transitory computer-readable recording medium that stores a program reflecting one aspect of the present invention is a non-transitory computer-readable recording medium that stores a program executed in a computer for controlling a distributed output of an image forming system including a plurality of image forming apparatuses, the image forming system outputting a job in the plurality of the image forming apparatuses in a distributed manner,

the program causing the computer to perform:

communications with the plurality of the image forming apparatuses;

control of distributing the job and causing a group of the plurality of the image forming apparatuses to form images; and

determination of the image forming apparatus for printing of a reference test chart on a transfer medium, according to states of each of the image forming apparatuses, the test chart being used as a reference for an image quality adjustment in each of the image forming apparatuses.

## BRIEF DESCRIPTION OF THE DRAWINGS

The advantages and features provided by one or more embodiments of the invention will become more fully understood from the detailed description given hereinbelow and the appended drawings which are given by way of illustration only, and thus are not intended as a definition of the limits of the present invention, wherein;

FIG. **1** is a schematic diagram showing image forming apparatuses and an image forming system according to an embodiment of the present invention;

FIG. **2** is a control block diagram showing one of the image forming apparatuses;

FIG. **3** is a control block diagram showing the other image forming apparatus;

FIG. **4** shows the printing results of test charts;

FIG. **5** shows a setting screen indicating an operation screen for specifying another apparatus for a tandem job;

FIG. **6** shows a setting screen for setting tandem on/off;

FIG. **7** shows a screen indicating that an image quality adjustment is underway in the reference image forming apparatus and a screen indicating an instruction to start the output of a test chart and the image forming apparatus that uses the test chart;

FIG. **8** shows a screen indicating that an image quality adjustment is underway in the other image forming apparatus for a tandem job and a screen indicating the image forming apparatus having output a test chart and an instruction to start a test chart;

FIG. **9** shows a screen indicating that a job is being output;

FIG. **10** shows a screen for setting a job output after a reference test chart is output;

FIG. **11** is a flowchart showing the steps of determining the order of the image forming apparatuses for adjusting image quality, and outputting a job in a distributed manner;

FIG. **12** is a flowchart showing the steps of determining, in a distributed output, the order of the image forming apparatuses for adjusting image quality, and outputting a job based on the setting of a job output after the output of a pattern; and

FIG. **13** is a flowchart showing the step of outputting a job when a distributed output is continued in the absence of another destination apparatus for distribution.

## DETAILED DESCRIPTION OF EMBODIMENTS

Hereinafter, one or more embodiments of the present invention will be described with reference to the drawings. However, the scope of the invention is not limited to the disclosed embodiments.

An image forming apparatus and an image forming system according to an embodiment of the present invention will be described below in accordance with the accompanying drawings.

An image forming system **1** includes image forming apparatuses (image forming apparatuses A and B in the drawings). The image forming apparatuses are electrically connected to one another via a network **3**, e.g., a LAN or Ethernet (trademark). In FIG. **1**, the image forming apparatuses is connected via a bus, but can be connected in a ring or a star. The pattern of connection according to the present invention is not particularly limited. Moreover, the number of image forming apparatuses constituting the image forming system is not particularly limited.

In the image forming apparatuses, the presence or absence of postprocessing devices, the kind of postprocessing, and the number of postprocessing devices are not particularly limited. Thus, the device configuration is not particularly limited. Image forming devices of different models can be provided or some or all of the image forming apparatuses can be provided as the same model. Image quality may vary among the devices of the same model.

The image forming apparatus A includes an image-forming apparatus body **10**A. A feeder **30**A on the upstream side in a paper feeding direction is connected to the image-forming apparatus body **10**A. Transfer paper can be fed from the feeder **30**A into the image-forming apparatus body **10**A. In the present embodiment, the image-forming apparatus body **10**A and the feeder **30**A constitute the image forming apparatus A. The image forming apparatus A may only include the image-forming apparatus body **10**A, or the image-forming apparatus body **10**A and the feeder **30**A may constitute the system. Devices connected to the image forming apparatus are not particularly limited.

The image-forming apparatus body **10**A further includes a feed tray **12**A that holds sheets of transfer paper in the lower part of the body. The transfer paper can be fed from the feeder **30**A or the feed tray **12**A. The transfer paper corresponds to a transfer medium. The transfer medium can be an OHP medium or a fabric as well as paper.

The image-forming apparatus body **10**A includes an image forming unit **15**A that forms an image on a sheet of transfer paper. The image forming unit **15**A includes photoconductors **152**A prepared for respective colors (cyan, magenta, yellow, black, etc.). Moreover, electrifiers (not shown), writing units each of which includes an LD **151**A, and developing units are respectively disposed on the

peripheries of the photoconductors **152**A for the respective colors. On the surface of the photoconductor **152**A electrically charged by the electrifier, the writing unit performs image exposure based on image information about documents recorded in image memory or the like, forming a latent image on the surface of the photoconductor **152**A. The latent image is developed into a toner image by the developing unit. The toner image is transferred onto an intermediate transfer belt. At the time of image formation, a sheet of transfer paper is fed from the feeder **30**A or the feed tray **12**A and is transported along a transport path **13**A. An image on the intermediate transfer belt is transferred by a secondary transfer roller onto the sheet of transfer paper transported along the transport path **13**A.

The sheet of transfer paper with the transferred image is fused by a fuser **153**A and then is transported along the transport path **13**A. The image forming apparatus of the present invention can be a monochrome model or a special color (clear) can be used in addition to the above-mentioned colors.

On the downstream side of the fuser **153**A on the transport path **13**A, an inverting transport path **17**A branches where the sheet of image-bearing transfer paper is inverted and circulated to the upstream side of the image forming unit **15**A. The inverting transport path **17**A has an inverting unit **16**A that inverts a sheet of transfer paper fed to the inverting transport path **17**A and circulates the sheet to the transport path **13**A upstream of the image forming unit **15**A, thereby forming the image on the back side of the sheet.

A sheet of transfer paper with an image formed on one side or a sheet of transfer paper with images formed on both sides is ejected through the transport path **13**A onto a paper output tray **25**A.

The image-forming apparatus body **10**A further contains an image control unit **100**A that controls the overall image forming apparatus A. The image control unit **100**A includes a CPU, programs executed by the CPU, parameters, and a storage part serving as a work area. The programs can be distributed through a mobile storage medium. When the image control unit **100**A performs control upon outputting a job in a distributed manner, the image control unit **100**A corresponds to the control unit of the present invention. In this case, the control unit indicates, as a computer, the image forming apparatuses to output the job in a distributed manner. The programs executed by the control unit correspond to the programs of the present invention. The storage unit that stores the programs corresponds to a non-transitory computer-readable recording medium that stores programs according to the present invention.

Furthermore, the device configurations and operating states of the image forming apparatuses can be obtained to determine which one of the image forming apparatuses is to be used for printing a reference test chart of an image quality adjustment. The image-forming apparatus body **10**A further includes a communication unit **120**A that communicates with other image forming apparatuses through the network **3**.

The image forming apparatus B will be discussed below.

The image forming apparatus B includes an image-forming apparatus body **10**B. A feeder **30**B on the upstream side in a feeding direction is connected to the image-forming apparatus body **10**B. Transfer paper can be fed from the feeder **30**B into the image-forming apparatus body **10**B. In the present embodiment, the image-forming apparatus body **10**B and the feeder **30**B constitute the image forming apparatus B. The image forming apparatus B may only include the image-forming apparatus body **10**B, or the image-forming apparatus body **10**B and the feeder **30**B may constitute the system. Devices connected to the image forming apparatus are not particularly limited.

The image-forming apparatus body **10**B further includes a feed tray **12**B that holds sheets of transfer paper in the lower part of the body. The transfer paper can be fed from the feeder **30**B or the feed tray **12**B. The transfer paper corresponds to a transfer medium. The transfer medium can be an OHP medium or a fabric as well as paper.

The image-forming apparatus body **10**B includes an image forming unit **15**B that forms an image on a sheet of transfer paper. The image forming unit **15**B includes photoconductors **152**B prepared for respective colors (cyan, magenta, yellow, black, etc.). Moreover, electrifiers (not shown), writing units each of which includes an LD **151**B, and developing units are respectively disposed on the peripheries of the photoconductors **152**B for the respective colors. On the surface of the photoconductor **152**B electrically charged by the electrifier, the writing unit performs image exposure based on image information about documents recorded in image memory or the like, forming a latent image on the surface of the photoconductor **152**B. The latent image is developed into a toner image by the developing unit. The toner image is transferred onto an intermediate transfer belt. At the time of image formation, a sheet of transfer paper is fed from the feeder **30**B or the feed tray **12**B and is transported along a transport path **13**B. An image on the intermediate transfer belt is transferred by a secondary transfer roller onto the sheet of transfer paper transported along the transport path **13**B.

The sheet of transfer paper with the transferred image is fused by a fuser **153**B and then is transported along the transport path **13**B. The image forming apparatus of the present invention can be a monochrome model or a special color (clear) can be used in addition to the above-mentioned colors.

On the downstream side of the fuser **153**B on the transport path **13**B, an inverting transport path **17**B branches where the sheet of image-bearing transfer paper is inverted and circulated to the upstream side of the image forming unit **15**A. The inverting transport path **17**B has an inverting unit **16**B that inverts a sheet of transfer paper fed to the inverting transport path **17**B and circulates the sheet to the transport path **13**B upstream of the image forming unit **15**A, thereby forming the image on the back side of the sheet.

The image-forming apparatus body **10**B further contains an image control unit **100**B that controls the overall image forming apparatus B. The image control unit **100**B includes a CPU, programs executed by the CPU, parameters, and a storage part serving as a work area. The programs can be distributed through a mobile storage medium. When the image control unit **100**B perform control upon outputting a job in a distributed manner, the image control unit **100**B corresponds to the control unit of the present invention. In this case, the control unit indicates the image forming apparatuses to output a job in a distributed manner. Furthermore, the device configurations and operating states of the image forming apparatuses can be obtained to determine which one of the image forming apparatuses is to be used for printing a reference test chart of an image quality adjustment. In this case, the control unit indicates, as a computer, the image forming apparatuses to output a job in a distributed manner. The programs executed by the control unit correspond to the programs of the present invention. The storage unit that stores the programs corresponds to a non-transitory computer-readable recording medium that stores programs according to the present invention. The

image-forming apparatus body **10**B further includes a communication unit **120**B that communicates with other image forming apparatuses through the network **3**.

An image reader **20** is connected to the downstream side of the image-forming apparatus body **10**B in the paper feeding direction. In the present embodiment, the image-forming apparatus body **10**B, the image reader **20**, and the feeder **30**B constitute the image forming apparatus B. The image forming apparatus B may only include the image-forming apparatus body **10**B, or the image forming apparatus B, the image reader **20**, and the feeder **30**B may constitute the system.

The image reader **20** includes a transport path **21** connected to the transport path **13**B, an image reading unit **22** that reads an image under the image reading unit **22**, the image reading unit **22** being disposed at an upstream position on the transport path **21** so as to be placed above the transport path **21**, and an image reading unit **23** that reads an image above the image reading unit **23**, the image reading unit **23** being disposed under the transport path **21**. The reading results of the image reading units **22** and **23** are transmitted to the image control unit **100**B and are used for an image quality adjustment, e.g., a color correction or a density correction in the image forming unit **15**B. Transfer rollers **24** provided on the transport path **21** allow the image reading units **22** and **23** to read an image on a sheet of transfer paper.

The image reading units **22** and **23** can be image pickup devices such as a CCD and a CIS and are desirably longer than the width of a sheet of transfer paper transported along the transport path **21**. The image reading unit can be a colorimeter.

In this explanation, the image forming apparatus B includes the image reader. The image reader can be provided outside the image forming apparatus so as to read an image on a sheet of transfer paper.

FIGS. **2** and **3** are control block diagrams of the image forming system **1**. In FIG. **2**, the image forming apparatus A is a main constituent element.

The image forming apparatus A is mainly composed of an overall control block unit **110**A, an operation unit **140**A, a printer unit **150**A, and a controller **160**A that processes image data input and output to and from an external apparatus (e.g., a terminal **2**) through the network **3**.

The overall control block unit **110**A includes a control CPU **111**A. A DRAM control IC **112**A is connected to the control CPU **111**A. Moreover, a parameter storage section **113**A including nonvolatile memory and an image memory **114**A are connected to the control CPU **111**A. The control CPU **111**A, the parameter storage section **113**A, the image memory **114**A, and so on are included in the image control unit **100**A. In the parameter storage section **113**A, operation parameters and programs for operating the control CPU **111**A are stored.

The control CPU **111**A controls the overall image forming apparatus A, for example, image formation in the image forming unit **15**A and the transportation of transfer paper on the transport path **13**A and identifies the state of the overall image forming apparatus A. Moreover, the control CPU **111**A controls the communication unit **120**A, which will be discussed later, so as to transmit and receive data to and from external devices or image forming apparatuses through the network **3**. The control CPU **111**A can constitute the control unit of the present invention, that is, a computer along with programs executed by the control CPU **111**A. In the case where the programs are stored in the parameter storage section **113**A, the parameter storage section **113**A corresponds to a non-transitory computer-readable recording medium that stores programs according to the present invention.

The overall control block unit **110**A includes a PCI bus **116**A that is connected to the DRAM control IC **112**A and transmits and receives data to and from the controller **160**A.

The operation unit **140**A includes a touch-panel LCD **141**A and an operation-unit control section **142**A. The LCD **141**A and the operation-unit control section **142**A are connected to each other. The operation-unit control section **142**A and the control CPU **111**A are connected to each other so as to perform serial communications. With this configuration, the operation unit **140**A is controlled by the control CPU **111**A. The operation-unit control section **142**A can be configured with a CPU and programs for operating the CPU.

The DRAM control IC **112**A is connected to the image memory **114**A. The image memory **114**A stores, for example, image information acquired by a scanner unit or the like, image information externally acquired through the network **3**, printing conditions, and file information.

In addition, an HDD **115**A (hard disk) is connected to the DRAM control IC **112**A via the PCI bus **116**A. The HDD **115**A can store data with nonvolatility. The HDD **115**A can store programs, parameters, image data, and so on. In the case where the programs of the present invention are stored in the HDD **115**A, the HDD **115**A corresponds to a non-transitory computer-readable recording medium that stores programs.

Moreover, a writing section **117**A is connected to the DRAM control IC **112**A. The writing section **117**A is connected to the LD **151**A of the printer unit **150**A and processes data used for an operation of the LD **151**A. The printer unit **150**A includes a printer control section **154**A that controls the overall printer unit **150**A. The printer control section **154**A is connected to the control CPU **111**A by serial connection so as to be controlled by the control CPU **111**A.

In the controller **160**A, an image memory (DRAM) **162**A including DRAM is connected to the DRAM control IC **161**A. The DRAM control IC **161**A, a controller control CPU **163**A that controls the overall controller **160**A, and a LAN interface **165**A are connected to a common bus in the controller **160**A. The LAN interface **165**A is connected to the network **3**.

Moreover, a communication control section **121**A that controls the overall communication unit **120**A for external communications is connected to the control CPU **111**A. The communication control section **121**A can be connected to the network **3** via a NIC **122**A (network interface card) included in the communication unit **120**A.

The communication control section **121**A operates in response to an operation command of the control CPU **111**A. The communication control section **121**A can transmit data including the configuration of the apparatus, image information, the number of reserved jobs, and image parameters from the control CPU **111**A to the network **3** through the NIC **122**A according to a predetermined communication procedure. Moreover, the communication control section **121**A can receive data including the apparatus configurations of other image forming apparatuses, image information, and the number of reserved jobs, and so on from the network **3** through the NIC **122**A, and transmit the data to the control CPU **111**A. In other words, the image forming apparatus A can transmit state information on the apparatus to other image forming apparatuses and acquire state information on other image forming apparatuses.

Referring to FIG. **3**, the control block of the image forming apparatus B will be described below.

FIG. **3** is a control block diagram of the image forming system **1**. The image forming apparatus B is a main constituent element.

The image forming apparatus B is mainly composed of an overall control block unit **110**B, an operation unit **140**B, a printer unit **150**B, and a controller **160**B that processes image data input and output to and from an external apparatus (e.g., a terminal **2**) through the network **3**.

The overall control block unit **110**B includes a control CPU **111**B. A DRAM control IC **112**B is connected to the control CPU **111**B. Moreover, a parameter storage section **113**B including nonvolatile memory and an image memory **114**B are connected to the control CPU **111**B. The control CPU **111**B, the parameter storage section **113**B, the image memory **114**B, and so on are included in the image control unit **100**B.

In the parameter storage section **113**B, operation parameters and programs for operating the control CPU **111**B are stored.

The control CPU **111**B controls the overall image forming apparatus B, for example, image formation in the image forming unit **15**B and the transportation of transfer paper on the transport path **13**B and identifies the state of the overall image forming apparatus B. Moreover, the control CPU **111**B receives the reading results of the image reading units **22** and **23**. Moreover, the control CPU **111**B controls the communication unit **120**B, which will be discussed later, so as to transmit and receive data to and from external devices or image forming apparatuses through the network **3**.

The overall control block unit **110**B includes a PCI bus **116**B that is connected to the DRAM control IC **112**B and transmits and receives data to and from the controller **160**B.

The operation unit **140**B includes a touch-panel LCD **141**B and an operation-unit control section **142**B. The LCD **141**B and the operation-unit control section **142**B are connected to each other. The operation-unit control section **142**B and the control CPU **111**B are connected to each other so as to perform serial communications. With this configuration, the operation unit **140**B is controlled by the control CPU **111**B. The operation-unit control section **142**B can be configured with a CPU and programs for operating the CPU.

The DRAM control IC **112**B is connected to the image memory **114**B. The image memory **114**B stores, for example, image information acquired by a scanner unit or the like, image information externally acquired through the network **3**, printing conditions, and file information.

In addition, an HDD **115**B (hard disk) is connected to the DRAM control IC **112**B via the PCI bus **116**B. The HDD **115**B can store data with nonvolatility. The HDD **115**B can store programs, parameters, image data, and so on. In the case where the programs of the present invention are stored in the HDD **115**B, the HDD **115**B corresponds to a non-transitory computer-readable recording medium that stores programs.

Moreover, a writing section **117**B is connected to the DRAM control IC **112**B. The writing section **117**B is connected to the LD **151**B of the printer unit **150**B and processes data used for an operation of the LD **151**B. The printer unit **150**B includes a printer control section **154**B that controls the overall printer unit **150**A. The printer control section **154**B is connected to the control CPU **111**B by serial connection and is controlled by the control CPU **111**B.

In the controller **160**B, an image memory (DRAM) **162**B including DRAM is connected to the DRAM control IC **161**B. The DRAM control IC **161**B, a controller control CPU **163**B that controls the overall controller **160**B, and a LAN interface **165**B are connected to a common bus in the controller **160**B. The LAN interface **165**B is connected to the network **3**.

Moreover, a communication control section **121**B that controls the overall communication unit **120**B for external communications is connected to the control CPU **111**B. The communication control section **121**B can be connected to the network **3** via a NIC **122**B (network interface card) included in the communication unit **120**B.

The communication control section **121**B operates in response to an operation command of the control CPU **111**B. The communication control section **121**B can transmit data including the configuration of the apparatus, image information, the number of reserved jobs, and image parameters from the control CPU **111**B to the network **3** through the NIC **122**B according to a predetermined communication procedure. Moreover, the communication control section **121**B can receive data including the apparatus configurations of other image forming apparatuses, image information, operating states, and the number of reserved jobs from the network **3** through the NIC **122**B, and transmit the data to the control CPU **111**B. In other words, the image forming apparatus B can transmit state information on the apparatus to other image forming apparatuses and acquire state information on other image forming apparatuses.

A scanner control section **200** of the image reader **20** is connected to the control CPU **111**B. The scanner control section **200** controls an operation of a CCD **210** included in each of the image reading units **22** and **23**. The CCD is provided in each of the image reading units **22** and **23**. Moreover, a reading control section **220** is connected to the CCD **210** and the DRAM control IC **112**B. Data read by the CCD **210** is processed by the reading control section **220** and then is transmitted to the DRAM control IC **112**B. After that, image quality parameters such as a color tone, density balance, and a line width can be calculated in the control CPU **111**B, allowing an image quality adjustment of the image forming unit **15**B. Image quality can be automatically adjusted according to settings such as a predetermined number of sheets and a predetermined elapsed time or a user may provide an instruction to adjust image quality through the operation unit **140**B. Furthermore, when a job is output by a plurality of image forming apparatuses in a distributed manner, image quality can be evenly adjusted among the image forming apparatuses under the control of the control sections, which control the distributed jobs, and in response to instructions from the control sections.

In the examples shown in FIGS. **2** and **3**, a management apparatus **5** is connected to the network **3**. In the present invention, the management apparatus is optionally included in the image forming system.

The management apparatus **5** includes a management control section **500** that controls the overall management apparatus **5**. The management apparatus **5** further includes an NIC **510** that is connected to, for example, the managed image forming apparatuses A and B through the network **3**.

The management control section **500** includes a CPU and programs for operating the CPU. Moreover, the management control section **500** includes a storage section having ROM, RAM, or nonvolatile memory.

In the case where the role of the management control section **500** is to manage the image forming apparatuses connected to the network, the management control section **500** can control the operations of the image forming apparatuses and acquire the machine configurations and operating states (including the number of reserved jobs) of the image forming apparatuses. At the printing of a distributed

job, the management control section **500** can select the image forming apparatus capable of outputting the job in response to a request for distributed printing, and then provide an instruction to print the job in a distributed manner for the selected image forming apparatus.

In the case of an image quality adjustment, the image forming apparatus for printing a reference test chart is determined according to the apparatus configurations and operating states (including the number of reserved jobs) of the image forming apparatuses. After that, image information of the test chart is transmitted to the image forming apparatuses. When the reference test chart and an individual test chart are printed on the same sheet of transfer paper, area information on the charts on the sheet can be transmitted to the image forming apparatuses. In addition, in the following explanation, a distributed job is controlled by the control sections, but the functions of the control sections may be performed in the management control section **500** of the management apparatus **5**. In this case, programs executed in the management control section **500** can be stored in a storage section (not shown) installed in, for example, the management control section **500**. The storage section that stores the programs corresponds to the non-transitory computer-readable recording medium that stores programs in the present invention.

The basic operations of the image forming apparatuses A and B will be described below.

First, the steps of accumulating image information in the image forming apparatuses A and B will be described below.

In the case where a document image is read by the scanner unit to generate image information in the image forming apparatuses A and B, the scanner unit is controlled from the control CPUs **111**A and **111**B. The image data read by the CCD of the scanner unit is processed and then the processed image information is stored in the image memories **114**A and **114**B and the HDDs **115**A and **115**B through the DRAM control ICs **112**A and **112**B. The image information and printing information that are in the image memories **114**A and **114**B and the HDDs **115**A and **115**B are managed as jobs by the control CPUs **111**A and **111**B. If the information is managed by the management apparatus **5**, the information can be stored in the management apparatus **5**.

In the case where image information and printing information are acquired from the outside, for example, job information and image information that are transmitted from the terminal **2** or the like through the network **3** are stored in the image memories **162**A and **162**B through the LAN interfaces **165**A and **165**B by the DRAM control ICs **161**A and **161**B.

Data in the image memories **162**A and **162**B is stored in the image memories **114**A and **114**B through the DRAM control ICs **161**A and **161**B, the PCI buses **116**A and **116**B, and the DRAM control ICs **111**A and **111**B. In the case where printing data is page description data, the CPUs **163**A and **163**B can perform RIP processing on the printing data to generate a raster image.

The image information and the printing information can be acquired from the management apparatus **5** and other image forming apparatuses through the NICs **122**A and **122**B. The job information is stored in the image memories **114**A and **114**B and the HDDs **115**A and **115**B through the DRAM control ICs **112**A and **112**B.

In the reception of a distributed job, the job can be received through the NICs **122**A and **122**B. Likewise, image information for test charts can be received through the NICs **122**A and **122**B. The image information and the printing information are processed by the control CPUs **111**A and **111**B.

The job information is managed by the control CPUs **111**A and **111**B. In the job management, printing conditions are set and are stored in the image memories **114**A and **114**B and the HDDs **115**A and **115**B in association with the image information.

The printing conditions include information on a print mode, transfer paper information, a feed tray, a destination of paper delivery, and postprocessing conditions. Specifically, the printing conditions include the number of pixels of an output image, a color or monochrome image, single-sided/double-sided printing, a color tone adjustment, a sheet size, a paper orientation, the type of transfer paper (e.g., a sheet type, a basis weight, and a paper color), feed tray selection, an image formation position, the presence or absence of postprocessing, and postprocessing conditions.

The printing conditions are set by a user through the operation units **140**A and **140**B or are automatically set by the control sections according to initial settings or operating states.

In the case where an image is output by the image forming apparatuses A and B, that is, the image forming apparatuses A and B serve as copiers or printers, in the use of printing data stored in the image memories **114**A and **114**B, image information is transmitted to the writing sections **117**A and **117**B through the DRAM control ICs **112**A and **112**B and is written in the photoconductors **152**A and **152**B by the LDs **151**A and **151**B according to the printing information associated with the image information.

In the printer units **150**A and **150**B, the sections are controlled by the printer control sections **154**A and **154**B having received commands from the control CPUs **111**A and **111**B. The printer units **150**A and **150**B include image forming units **15**A and **15**B, paper feed mechanisms, and transport mechanisms.

The printer units **150**A and **150**B refer to the printing conditions and perform control based on the contents of the printing conditions. In the image forming units **15**A and **15**B, toner images written to the photoconductors **152**A and **152**B are transferred to the intermediate transfer belts, are transferred to sheets of transfer paper fed through the feed trays **12**A and **12**B, and then are fixed by the fusers **153**A and **153**B. The transfer paper is ejected downstream by the transport paths **13**A and **13**B. In double-sided printing on transfer paper, sheets of transfer paper having passed through the fusers **153**A and **153**B are delivered to the inverting transport paths **17**A and **17**B so as to be inverted by the inverting units **16**A and **16**B, and then are returned to the transport paths **13**A and **13**B to form images on the back sides of the sheets.

In an image quality adjustment, an image patch is formed on a sheet of transfer paper and is read by each of the image reading units **22** and **23**, allowing an adjustment. Images can be periodically corrected every predetermined number of sheets or predetermined time and can be corrected under the control of the control CPUs **111**A and **111**B in response to user instructions through the operation units **140**A and **140**B or commands from external apparatuses.

In the case of distributed printing in the image forming apparatuses A and B, if distributed jobs are managed by the image forming apparatus for controlling distributed jobs, specifically, the image forming apparatus A, the control CPU **111**A distributes a job and determines parts of the job to be allocated to each of the image forming apparatuses. The image forming apparatus A outputs the job as needed, as

well as instructs other image forming apparatuses of distributed printing, and transmits image information. The jobs can be distributed according to copies, or pages can be printed in a distributed manner.

The control CPU **111**A having acquired the machine configurations and operating states (including the number of reserved jobs) of the image forming apparatuses determines the image forming apparatus for printing the reference test chart, according to the apparatus configurations and operating states (including the number of reserved jobs) of the image forming apparatuses in an image quality adjustment during the printing of the distributed jobs. Furthermore, in the case of printing of test-chart image information or the reference test chart and an individual test chart on the same sheet of transfer paper, area information on the charts on the sheet of transfer paper can be transmitted to the image forming apparatus.

Causing the multiple image forming apparatuses on the network to output the same job in a distributed manner will be specifically discussed below.

For example, a job of 500 copies can be evenly divided to 250 copies each between the image forming apparatuses, or 300 copies can be distributed to the image forming apparatus A and 200 copies can be distributed to the image forming apparatus B to be output according to the output speeds of the apparatuses, thereby saving time.

In this case, individual differences between the apparatuses may cause a color difference between output matters according to the contents of previously output jobs and the degree of correction. Thus, a correction for color matching between the apparatuses is desirably made before a parallel tandem job.

In a color matching method, a test chart is output in the image forming apparatus A, an output sheet is set on the tray of the image forming apparatus B, and then the same test chart is printed in a region other than a region printed by the image forming apparatus A, allowing a correction with a correction amount determined by a visual inspection or a reader.

(FIG. **1**)

(For example, when the image forming apparatus A is used as a reference, a difference from the image forming apparatus B to the image forming apparatus A is determined and is set as a correction set value of the image forming apparatus B.)

FIG. **4** shows an example of the test chart.

In this configuration, the reference test chart and an individual test chart are printed on the same sheet of transfer paper. For example, the reference chart is printed in the image forming apparatus A while the individual chart is printed in the image forming apparatus B.

The left part of FIG. **4** shows that in the left half of a sheet of transfer paper, a chart of Y, M, C, and K along a main scanning direction is printed with a certain spacing in a transport direction. The sheet of transfer paper is then set on the feed tray of the image forming apparatus B. After that, in the right half of the sheet, a chart of Y, M, C, and K along the main scanning direction is printed using the same image data with a certain spacing in the transport direction. Regarding the printing regions of the charts, regions allocated to each of the image forming apparatuses can be indicated by the control sections that control distributed jobs. The sheet of transfer paper at the upper left of FIG. **4** shows a result after the chart printed in the image forming apparatus B. The reference test chart and the individual test chart are printed separately on the right and left sides. The sheet of transfer paper is read by the image reading units **22** and **23** (each of which reads a corresponding surface) of the image forming apparatus B. If it is found that image quality in the image forming apparatus B is different from that of the test chart printed in the image forming apparatus A as a result of reading, the image forming apparatus B is adjusted so as to have the same image quality as the image forming apparatus A.

In the right part of FIG. **4**, a reference chart of Y, M, C, and K along the main scanning direction is printed with a certain spacing in the transport direction on a sheet of transfer paper. After that, the sheet of transfer paper is set on the feed tray of the image forming apparatus B, and then an individual chart of Y, M, C, and K is printed along the main scanning direction such that Y, M, C, and K of the charts are alternately placed in the transport direction. The reference chart and the individual chart are printed so as to be shifted from each other in the main scanning direction. The sheet of transfer paper is read by the image reading units **22** and **23** (each of which reads a corresponding surface) of the image forming apparatus B. If it is found that image quality in the image forming apparatus B is different from that of the test chart printed in the image forming apparatus A as a result of reading, the image forming apparatus B is adjusted so as to have the same image quality as the image forming apparatus A.

During the printing of an image on the same sheet of transfer paper, the reference chart and an individual chart can be arranged in any layout. The layout of the charts of the present invention is not particularly limited as long as images can be distinguished from others when being read.

However, an image quality adjustment is a time-consuming process and thus efficient color matching is required for reducing downtime. Moreover, after a parallel tandem job of the image forming apparatus A and the image forming apparatus B is decided, if a chart is output by the image forming apparatus A and then another job is output by the image forming apparatus A so as to make an aging correction during color matching in the image forming apparatus B, a color tone is changed from that at the output of a color matching chart. This causes a mismatch between the image forming apparatus A and the image forming apparatus B.

An object of the present embodiment is to efficiently perform color matching in a plurality of image forming apparatuses. In the present invention, however, an image adjustment is not limited to color matching. The present invention may be aimed at properly adjusting image quality.

At the time of color matching in the image forming apparatuses, the image forming apparatus to output a reference test chart is determined according to the states of the image forming apparatuses. Furthermore, the output order of the image forming apparatuses for printing test charts can be determined.

In some cases, an imaging apparatus includes a printer not provided with a reader, readers such as a scanner, or a reader for reading by the time of paper ejection after the output of a chart. In this case, for example, if a chart is finally output by a printer not provided with a reader, a correction value is determined by a visual check. Thus, if a chart is finally output by a printer provided with a reader, a correction value can be correctly calculated with ease from the reading result of the reader.

## First Embodiment

In the printing of distributed jobs, an image forming apparatus for a distributed output needs to be selected. For

example, a parallel tandem output apparatus is set by inputting a destination IP address (FIG. **5**).

FIG. **5** shows a destination IP-address setting screen **1400** on the operation unit **140**A or the operation unit **140**B. Also when controlling a distributed job in the management apparatus **5**, the same destination IP-address setting screen can be displayed on an operation unit included in the management apparatus **5**.

The destination IP-address setting screen **1400** has a ten key **1410** for entering a destination IP address of a distributed job. A setting button **1411** is pressed to allow entry. An entered number is displayed in an IP address display field **1412**. The entered number is reset by pressing a reset button **1413**.

The destination IP-address setting screen **1400** displays an OK button **1415** and a cancel button **1416** that are kept active at the bottom right of the screen. The entered destination IP address is established by pressing the OK button **1415**. If another image forming apparatus is subsequently designated as a destination, the apparatus can be added by repeating the above process.

The display on the destination IP-address setting screen is canceled by pressing the cancel button **1416**.

A parallel tandem job can be switched on or off on the output setting screen of a job. FIG. **6** shows an example of the setting on an output setting screen **1420**.

On the output setting screen **1420**, a tandem button **1421** is displayed in an active state at the bottom right of the screen. Pressing the tandem button **1421** causes a tandem job to switch on or off. When a tandem job is switched on, the button is highlighted to indicate a state of selection. Moreover, an OK button **1422**, a cancel button **1423**, and a return-to-normal button **1424** are displayed in an active state under the tandem button **1421**. Pressing the OK button **1422** establishes the contents of settings. Pressing the cancel button **1423** cancels the contents of settings. Pressing the return-to-normal button **1424** causes the settings to return to normal settings.

At the start of a parallel tandem job (e.g., a print or copy button is pressed from the controller), the image forming apparatus A having received the job requests a reply about a parallel tandem job reservation and a machine state from the image forming apparatus B, which serves as a tandem output destination, and then waits for a response. During that time, as shown in FIG. **7**, "Color adjustment underway" is displayed in a display part **1431**A on an operation screen **1430**A of the image forming apparatus A. The image forming apparatus B having received the request for a parallel tandem job reservation and a machine state from the image forming apparatus A informs the image forming apparatus A of the machine state (reader installation state/reversed job state) of the image forming apparatus B while receiving data on reserved jobs.

In the case where the image forming apparatus A is a printer in the configuration diagram and the image forming apparatus B is an apparatus connected to a reader in the configuration diagram, the image forming apparatus A having received a reply about the presence of a reader from the image forming apparatus B decides that a test chart should be output later in the image forming apparatus B, since the image forming apparatus A is not connected to a reader. Then, as shown in FIG. **7**, "Output a test chart and make a color adjustment in apparatus B (IP: XX.XX.XX.XX)" is displayed in a display part **1432**A of the image forming apparatus A (FIG. **7**), and the image forming apparatus B is instructed to output a chart.

During that time, when a parallel tandem job is output in response to a parallel tandem job reservation, the image forming apparatus B displays, as shown in FIG. **8**, "Color adjustment underway" in a display part **1431**B of a setting screen **1430**B until a reply is received from the image forming apparatus A. When the image forming apparatus B is instructed from the image forming apparatus A to output a test chart later, the image forming apparatus B displays "Set a sheet output in apparatus A (IP: YY.YY.YY.YY) in the tray and make a color adjustment" in a display part **1432**B.

A user outputs a test chart in the image forming apparatus A and then outputs a test chart in the image forming apparatus B. The image forming apparatus B calculates a correction value of the image forming apparatus B based on the reading result of the reader, which is connected to the image forming apparatus A, so as to match colors to those of the image forming apparatus A, and then informs the image forming apparatus A of the completion of adjustment. The image forming apparatus A starts the output of a parallel tandem job in response to the reply, and then the image forming apparatus B outputs a parallel tandem job after making a correction according to the correction value.

As shown in FIG. **9**, during the output of a chart, the image forming apparatuses A and B only need to display "Printing" in display parts **1441**A and **1441**B of display screens **1440**A and **1440**B as in regular printing.

As described above, the order of color matching is determined according to the state of the image forming apparatus, achieving an efficient color adjustment.

## Second Embodiment

In the case where a chart output by a reference image forming apparatus is set on the tray of another image forming apparatus and is output, it is preferable to initially output the chart from the image forming apparatus having a smaller number of reserved jobs before a parallel tandem job.

While a reference test chart is output by the image forming apparatus that prints the reference test chart, the other image forming apparatus (a target of color matching) may perform reserved jobs before a parallel tandem job. Thus, in response to a machine state, the image forming apparatus A having a smaller number of reserved jobs first outputs a chart according to the reserved job states of the image forming apparatus A and the image forming apparatus B, and then the image forming apparatus B is instructed to output a chart later.

Thus, from the output of a chart from the image forming apparatus A to the setting of the chart on the tray of the image forming apparatus B, the image forming apparatus B can also output reserved jobs before a parallel tandem job, achieving an efficient color adjustment.

## Third Embodiment

Correction history information (a correction frequency, a correction degree) in an operation of an image forming apparatus alone is included in machine state information. A test chart is first output in a stable image forming apparatus having a smaller number of corrections, that is, a smaller range of correction. After the test chart is output, a parallel tandem job is output during an adjustment of another image forming apparatus, thereby increasing the outputs of the stable image forming apparatus.

Moreover, the image forming apparatus having made a color adjustment disables a color correction corresponding

to the number of output sheets/aged deterioration. This prevents a color correction only in one of the image forming apparatuses, thereby precluding an increase in color difference between the image forming apparatuses in parallel tandem.

Alternatively, after a test chart is output, the reference image forming apparatus can start an output during an adjustment of the other image forming apparatus. Since a color adjustment may be performed (repeated) several times, whether to start the output of a parallel tandem job is determined by a user setting, for example, during an adjustment of the other image forming apparatus. In FIG. **10**, whether to start the output of a job can be set after a test chart is output on a setting screen **1450** of the image forming apparatus. The setting screen **1450** displays an enable button **1451** and a disable button **1452** in an active state so as to be selectively pressed. When the enable button **1451** pressed to establish a setting, a job output is started after a test chart is output. When the disable button **1452** is pressed to establish a setting, a job output is disabled after a test chart is output. In the case of a job output, the output can be distributed in response to a user's instruction to start the output or at the completion of correction.

Pressing an OK button **1453** establishes the contents of settings, whereas pressing a cancel button **1454** cancels the contents of settings.

In the case where a job subsequent to a parallel tandem job is a parallel tandem job between the image forming apparatuses where color matching has been conducted, a color adjustment has been already made and thus additional adjustment is not necessary. Thus, the parallel tandem job may be output.

Referring to the flowchart of FIG. **11**, the following will discuss the steps of determining, in a distributed output, the order of the image forming apparatuses for adjusting image quality, and outputting a job. The steps are performed under the control of the control sections. A distributed job is controlled by the image forming apparatus A.

The image forming apparatus A is activated in response to reception of a job; meanwhile, the image forming apparatus B is activated into a standby state. The image forming apparatus A decides whether a job is a parallel tandem job or not (step s**1**). If the job is not a parallel tandem job (step s**1**, No), the process advances to step s**8** to output the job, and then the process is completed. If the job is a parallel tandem job (step s**1**, Yes), the image forming apparatus A transfers the data of a distributed job to the image forming apparatus that outputs a distributed job, and then the image forming apparatus A requests a machine state from the image forming apparatus having received the transferred data (step s**2**). The display part displays "Color adjustment underway" (step s**3**).

The image forming apparatus B receives the data of a distributed job from the image forming apparatus A, displays "Color adjustment underway" in the display part (step s**10**), and then informs the image forming apparatus A of the machine state of the image forming apparatus B (step s**11**).

In the image forming apparatus A, the output order of patterns, that is, charts is determined also for the image forming apparatus that outputs an individual test chart, such that the first image forming apparatus outputs a reference test chart, in response to the machine state of the image forming apparatus B (step s**4**). After that, the image forming apparatus A informs the image forming apparatus B, which performs a distributed job, of the output order of patterns (step s**5**). In the image forming apparatus B, the display part displays an instruction "Output a chart" (step s**12**). In the image forming apparatus A, the display part displays an instruction "Output a chart" after the image forming apparatus is informed of the output order of patterns (step s**6**), and then the image forming apparatus A outputs a pattern (step s**7**).

In the image forming apparatus B, a pattern is output using transfer paper with a pattern output from the image forming apparatus A. The pattern is read by the reader, and then the reading result is analyzed by the control section to determine a correction value (step s**13**). After that, a correction is made (step s**14**).

At the completion of correction, the image forming apparatus B informs the image forming apparatus A of the completion of correction (step s**15**), outputs a job (step s**16**), and then completes the processing.

After the output of the pattern, the image forming apparatus A is informed of the completion of correction from the image forming apparatus B, outputs a job (step s**8**), and then completes the processing. Since the job is output after the output of the pattern, the job can be output regardless of the completion of correction in the image forming apparatus B. The image forming apparatus A may be informed of the completion of correction during the output of a job or after the completion of a job.

Referring to the flowchart of FIG. **12**, the following will discuss the steps of determining, in a distributed output, the order of the image forming apparatuses for adjusting image quality, and outputting a job based on the setting of a job output after the output of a pattern. The steps are performed under the control of the control sections. A distributed job is controlled by the image forming apparatus A.

The image forming apparatus A is activated in response to reception of a job; meanwhile, the image forming apparatus B is activated into a standby state. The image forming apparatus A decides whether a job is a parallel tandem job or not (step s**20**). If the job is not a parallel tandem job (step s**20**, No), the process advances to step s**28** to output the job, and then the process is completed. If the job is a parallel tandem job (step s**20**, Yes), the image forming apparatus A transfers the data of a distributed job to the image forming apparatus that outputs a distributed job, and then the image forming apparatus A requests a machine state from the image forming apparatus having received the transferred data (step s**21**). The display part displays "Color adjustment underway" (step s**22**).

The image forming apparatus B receives the data of a distributed job from the image forming apparatus A, displays "Color adjustment underway" in the display part (step s**30**), and then informs the image forming apparatus A of the machine state of the image forming apparatus B (step s**31**).

In the image forming apparatus A, the output order of patterns, that is, charts is determined also for the image forming apparatus that outputs an individual test chart, such that the first image forming apparatus outputs a reference test chart, in response to the machine state of the image forming apparatus B (step s**23**). After that, the image forming apparatus A informs the image forming apparatus B, which performs a distributed job, of the output order of patterns (step s**24**). In the image forming apparatus B, the display part displays an instruction "Output a chart" (step s**32**). In the image forming apparatus A, the display part displays an instruction "Output a chart" after the image forming apparatus is informed of the output order of patterns (step s**25**), and then the image forming apparatus A outputs a pattern (step s**26**).

In the image forming apparatus B, a pattern is output using transfer paper with a pattern output from the image

forming apparatus A. The pattern is read by the reader, and then the reading result is analyzed by the control section to determine a correction value (step s**33**). After that, a correction is made (step s**34**).

At the completion of correction, the image forming apparatus B informs the image forming apparatus A of the completion of correction (step s**35**), outputs a job (step s**36**), and then completes the processing.

After the output of the pattern, the image forming apparatus A decides whether a job output has been set after the output of a chart (step s**27**). In the case where a job output is set after the output of a chart (step s**27**, Yes), a job is output (step s**28**), and then the processing is completed. In the case where a job output is not set after the output of a chart (step s**27**, No), it is decided whether or not the image forming apparatus B has informed the image forming apparatus A of the completion of correction (step s**29**). The image forming apparatus A waits for the completion of correction (step s**29**, No). When being informed of the completion of correction (step s**29**, Yes), the image forming apparatus A outputs a job (step s**28**) and then completes the processing.

Referring to the flowchart of FIG. **13**, the following will discuss the step of outputting a job when a distributed output is continued in the absence of another destination apparatus for distribution. The steps are performed under the control of the control sections. A distributed job is controlled by the image forming apparatus A.

The image forming apparatus A is activated in response to reception of a job; meanwhile, the image forming apparatus B is activated into a standby state. The image forming apparatus A decides whether a job is a parallel tandem job or not (step s**40**). If the job is not a parallel tandem job (step s**40**, No), the process advances to step s**43** to output the job, and then the process is completed. If the job is a parallel tandem job (step s**40**, Yes), the presence or absence of another apparatus for the tandem job is decided (step s**41**). In the presence of another apparatus for the tandem job (step s**41**, No), the image forming apparatus A transfers the data of a distributed job to the image forming apparatus that outputs a distributed job, and then the image forming apparatus A requests a machine state from the image forming apparatus having received the transferred data (step s**44**). The display part displays "Color adjustment underway" (step s**45**).

The image forming apparatus B receives the data of a distributed job from the image forming apparatus A, displays "Color adjustment underway" in the display part (step s**50**), and then informs the image forming apparatus A of the machine state of the image forming apparatus B (step s**51**).

In the image forming apparatus A, the output order of patterns, that is, charts is determined also for the image forming apparatus that outputs an individual test chart, such that the first image forming apparatus outputs a reference test chart, in response to the machine state of the image forming apparatus B (step s**46**). After that, the image forming apparatus A informs the image forming apparatus B, which performs a distributed job, of the output order of patterns (step s**47**). In the image forming apparatus B, the display part displays an instruction "Output a chart" (step s**52**). In the image forming apparatus A, the display part displays an instruction "Output a chart" after the image forming apparatus is informed of the output order of patterns (step s**48**), and then the image forming apparatus A outputs a pattern (step s**49**).

In the image forming apparatus B, a pattern is output using transfer paper with a pattern output from the image forming apparatus A. The pattern is read by the reader, and then the reading result is analyzed by the control section to determine a correction value (step s**53**). After that, a correction is made (step s**54**).

At the completion of correction, the image forming apparatus B informs the image forming apparatus A of the completion of correction (step s**55**), outputs a job (step s**56**), and then completes the processing.

After the output of the pattern, the image forming apparatus A is informed of the completion of correction from the image forming apparatus B, outputs a job (step s**43**), and then completes the processing. Since the job is output after the output of the pattern, the job can be output regardless of the completion of correction in the image forming apparatus B. The image forming apparatus A may be informed of the completion of correction during the output of a job or after the completion of a job.

In step s**41**, in the absence of another apparatus for the tandem job (step **41**, Yes), the parallel tandem job is transferred to the image forming apparatus B (step s**42**), allowing the image forming apparatus B to output a job (step s**56**). After step s**42**, the image forming apparatus A outputs a job (step s**43**) and then completes the processing. In this configuration, if image quality has been already adjusted in the absence of another apparatus for a tandem job, a distributed job can be performed without adjusting image quality.

The present embodiment has the effect of properly determining, according to the states of the image forming apparatuses, the image forming apparatus that prints a reference test chart for an image quality adjustment when a job is output to the image forming apparatuses in a distributed manner.

The present invention was described according to the foregoing embodiments. The present invention is not limited to the contents of the embodiments and changes can be optionally made without departing from the scope of the invention.

Although embodiments of the present invention have been described and illustrated in detail, it is clearly understood that the same is by way of illustration and example only and not limitation, the scope of the present invention should be interpreted by terms of the appended claims.

What is claimed is:

**1**. An image forming apparatus which is included in an image forming system that comprises a plurality of image forming apparatuses that are connected via a network, and that outputs a job to the plurality of image forming apparatuses in a distributed manner, the image forming apparatus comprising:

a printer; and

a hardware processor that is configured to:

receive the job;

determine whether the received job is a parallel tandem job;

in a case in which it is determined that the received job is a parallel tandem job, transfer, via the network, data of the parallel tandem job to distribute the job to at least one other image forming apparatus of the image forming system, and acquire, via the network, state information indicating an operating state of the at least one other image forming apparatus to which the distributed job is transmitted;

determine, based on the acquired state information of the at least one other image forming apparatus and based on state information of the present image forming apparatus, which among the plurality of image forming apparatuses is to print a reference test chart on a transfer medium, and which among the plurality of

image forming apparatuses is to print an individual test chart on a transfer medium, wherein the reference test chart is used as a reference for an image formation adjustment in each of the image forming apparatuses,

in a case in which it is determined that the present image forming apparatus is to print the reference test chart, control the printer to print the reference test chart on the transfer medium, and transmit an instruction to the at least one other image forming apparatus to print the individual test chart, wherein the at least one other image forming apparatus performs image quality correction based on the reference test chart printed by the printer of the present image forming apparatus and the individual test chart printed by a printer of the at least one other image forming apparatus so as to match image quality of the present image forming apparatus; and

in a case in which it is determined that the present image forming apparatus is to print the individual test chart, control the printer of the present image forming apparatus to print the individual test chart, and perform image quality correction based on the printed individual test chart and based on a reference test chart printed by another one of the image forming apparatuses so as to match the image quality of the image forming apparatus which printed the reference test chart,

wherein the state information includes at least one of a number of reserved jobs and an installation status of a sensor for reading the reference test chart and the individual test chart.

**2**. The image forming apparatus according to claim **1**, wherein the state information further includes information about machine configurations of the image forming apparatuses.

**3**. The image forming apparatus according to claim **1**, wherein the reference test chart and the individual test chart are identical to each other.

**4**. The image forming apparatus according to claim **1**, wherein the hardware processor is configured to determine a printing order of the plurality of image forming apparatuses that print the reference test chart and the at least one individual test chart, such that one of the present image forming apparatus and the at least one other image forming apparatus that prints the reference test chart performs printing of the reference test chart before the other of the present image forming apparatus and the at least one other image forming apparatus that prints the individual test chart performs printing of the individual test chart.

**5**. The image forming apparatus according to claim **1**, wherein the hardware processor is configured to indicate, on the same transfer medium, a printing region of the reference test chart, and a printing region of the individual test chart to be printed, to the respective one of the present image forming apparatus and the at least one other image forming apparatus that is to print the reference test chart and the one of the present image forming apparatus and the at least one other image forming apparatus that is to print the individual test chart.

**6**. The image forming apparatus according to claim **1**, wherein when a job is output in a distributed manner, the image forming apparatuses perform the image formation adjustment under control of the hardware processor before the job is output.

**7**. The image forming apparatus according to claim **1**, wherein in a case in which the image forming system includes an image forming apparatus among the plurality of image forming apparatuses in which the sensor is installed and an image forming apparatus among the plurality of image forming apparatuses in which the sensor is not installed, the hardware processor determines the image forming apparatus in which the sensor is not installed as an image forming apparatus among the plurality of image forming apparatuses that is to print the reference test chart on the transfer medium.

**8**. The image forming apparatus according to claim **1**, wherein the state information includes the number of reserved jobs for the plurality of image forming apparatuses, and the hardware processor determines the image forming apparatus among the plurality of image forming apparatuses that is to print the reference test chart according to the number of jobs reserved for the image forming apparatuses indicated in the state information.

**9**. The image forming apparatus according to claim **8**, wherein the hardware processor determines, according to the number of reserved jobs, a printing order of the one of the present image forming apparatus and the at least one other image forming apparatus that is to print the reference test chart and the other of the present image forming apparatus and the at least one other image forming apparatus that is to print the individual test chart.

**10**. The image forming apparatus according to claim **1**, wherein the hardware processor is configured to determine a printing order for the image forming apparatus among the plurality of image forming apparatuses that is to print the reference test chart and the at least one other image forming apparatus that is to print the individual test chart according to previous results of image formation adjustment of the plurality of image forming apparatuses, such that the reference test chart is first printed in the image forming apparatus where image formation is relatively stable.

**11**. The image forming apparatus according to claim **1**, wherein the hardware processor is configured to disable additional image formation adjustment when a job is output in a distributed manner.

**12**. The image forming apparatus according to claim **1**, wherein the hardware processor is configured to control the one of the present image forming apparatus and the at least one other image forming apparatus that printed the reference test chart, such that a distributed output of a job is started before completion of image formation adjustment in the other of the present image forming apparatus and the at least one other image forming apparatus.

**13**. The image forming apparatus according to claim **1**, wherein in the case where a job subsequent to a current distributed output job is a distributed output job, when the image forming apparatuses to receive subsequently output jobs do not include an image forming apparatus with unadjusted image formation from among the plurality of image forming apparatuses, the hardware processor performs the distributed output job of the subsequent job without adjusting image formation of the subsequent job.

**14**. An image forming system comprising a plurality of image forming apparatuses that are connected via a network, the image forming system outputting a job to the plurality of the image forming apparatuses in a distributed manner, each of the plurality of the image forming apparatuses including a printer, the system comprising:

a hardware processor that is configured to:

receive the job;

determine whether the received job is a parallel tandem job;

in a case in which it is determined that the received job is a parallel tandem job, transfer, via the network, data of

the parallel tandem job to distribute the job to the plurality of image forming apparatuses, and acquire, via the network, state information indicating an operating state of the plurality of image forming apparatuses to which the distributed job is transmitted;

determine based on the acquired state information of the plurality of image forming apparatuses, which among the plurality of image forming apparatuses is to print a reference test chart on a transfer medium, and which among the plurality of image forming apparatuses is to print an individual test chart on a transfer medium, wherein the test chart is used as a reference for an image formation adjustment in each of the image forming apparatuses;

control the printer of a first image forming apparatus among the plurality of image forming apparatuses which is determined as the image forming apparatus to print the reference test chart, to print the reference test chart on the transfer medium;

control the printer of at least one other image forming apparatus among the plurality of image forming apparatuses which is determined as the image forming apparatus to print the individual test chart, to print the individual test chart; and

control the at least one other image forming apparatus to perform image quality correction based on the reference test chart printed by the printer of the first image forming apparatus and the individual test chart printed by the printer of the at least one other image forming apparatus so as to match image quality of the first image forming apparatus,

wherein the state information includes at least one of a number of reserved jobs and an installation status of a sensor for reading the reference test chart and the individual test chart.

**15**. The image forming system according to claim **14**, wherein the hardware processor determines a printing order such that the first image forming apparatus prints the reference test chart before the at least one other image forming apparatus prints the individual test chart.

**16**. A management apparatus managing a system comprising a plurality of image forming apparatuses that are connected via a network, the system outputting a job to the plurality of the image forming apparatuses in a distributed manner, each of the plurality of image forming apparatuses including a printer, the management apparatus comprising:

a hardware processor that is configured to:

receive the job;

determine whether the received job is a parallel tandem job;

in a case in which it is determined that the received job is a parallel tandem job, transfer, via the network, data of the parallel tandem job to distribute the job to the plurality of image forming apparatuses, and acquire, via the network, state information indicating an operating state of the plurality of image forming apparatuses to which the distributed job is transmitted;

determine based on the acquired state information of the plurality of image forming apparatuses, which among the plurality of image forming apparatuses is to print a reference test chart on a transfer medium, and which among the plurality of image forming apparatuses is to print an individual test chart on a transfer medium, wherein the test chart being used as a reference for an image quality adjustment in each of the image forming apparatuses;

control the printer of a first image forming apparatus among the plurality of image forming apparatuses which is determined as the image forming apparatus to print the reference test chart, to print the reference test chart on the transfer medium;

control the printer of at least one other image forming apparatus among the plurality of image forming apparatuses which is determined as the image forming apparatus to print the individual test chart, to print the individual test chart; and

control the at least one other image forming apparatus to perform image quality correction based on the reference test chart printed by the printer of the first image forming apparatus and the individual test chart printed by the printer of the at least one other image forming apparatus so as to match image quality of the first image forming apparatus,

wherein the state information includes at least one of a number of reserved jobs and an installation status of a sensor for reading the reference test chart and the individual test chart.

**17**. The management apparatus according to claim **16**, wherein the hardware processor determines a printing order such that the first image forming apparatus prints the reference test chart before the at least one other image forming apparatus prints the individual test chart.

**18**. A non-transitory computer-readable recording medium that stores a program executed in a computer for controlling a distributed output of an image forming system including a plurality of image forming apparatuses, the image forming system outputting a job to the plurality of the image forming apparatuses in a distributed manner, each of the plurality of image forming apparatuses including a printer, the program causing the computer to perform functions comprising:

receiving the job;

determining whether the received job is a parallel tandem job;

in a case in which it is determined that the received job is a parallel tandem job, transferring, via the network, data of the parallel tandem job to distribute the job to the plurality of image forming apparatuses, and acquiring, via the network, state information indicating an operating state of the plurality of image forming apparatuses to which the distributed job is transmitted;

determining based on the acquired state information of the plurality of image forming apparatuses, which among the plurality of image forming apparatuses is to print a reference test chart on a transfer medium, and which among the plurality of image forming apparatuses is to print an individual test chart on a transfer medium, wherein the reference test chart is used as a reference for an image quality adjustment in each of the image forming apparatuses

controlling the printer of a first image forming apparatus among the plurality of image forming apparatuses which is determined as the image forming apparatus to print the reference test chart, to print the reference test chart on the transfer medium;

controlling the printer of at least one other image forming apparatus among the plurality of image forming apparatuses which is determined as the image forming apparatus to print the individual test chart, to print the individual test chart; and

controlling the at least one other image forming apparatus to perform image quality correction based on the reference test chart printed by the printer of the first image

forming apparatus and the individual test chart printed by the printer of the at least one other image forming apparatus so as to match image quality of the first image forming apparatus,

wherein the state information includes at least one of a number of reserved jobs and an installation status of a sensor for reading the reference test chart and the individual test chart.

**19**. The non-transitory computer-readable recording medium that stores a program according to claim **18**, wherein the program determines a printing order such that the first image forming apparatus prints the reference test chart, before the at least one other image forming apparatus prints the individual test chart, and

the program causes the computer to instruct the image forming apparatuses to print the respective reference test chart and individual test chart according to the printing order.

* * * * *