US 20190323806A1

(19) United States

(12) Patent Application Publication

Bednar et al.

(10) Pub. No.: US 2019/0323806 A1

(43) Pub. Date: Oct. 24, 2019

(54) **METHOD AND APPARATUS FOR ALIGNING ARROW NOCKS**

(71) Applicant: **Hunter's Manufacturing Company, Inc. d/b/a TenPoint Crossbow Technologies**, Suffield, OH (US)

(72) Inventors: **Richard L. Bednar**, Munroe Falls, OH (US); **Michael J. Shaffer**, Mogadore, OH (US); **Jacob A. Hout**, Akron, OH (US); **Dean Mook**, Akron, OH (US)

(73) Assignee: **Hunter's Manufacturing Company, Inc. d/b/a TenPoint Crossbow Technologies**, Suffield, OH (US)

(21) Appl. No.: **16/459,666**

(22) Filed: **Jul. 2, 2019**

Related U.S. Application Data

(63) Continuation of application No. 16/173,042, filed on Oct. 29, 2018, now Pat. No. 10,393,484, which is a continuation of application No. 15/833,440, filed on Dec. 6, 2017, now Pat. No. 10,119,796, which is a continuation of application No. 15/643,056, filed on Jul. 6, 2017, now Pat. No. 10,030,948, which is a continuation of application No. 15/276,375, filed on Sep. 26, 2016, now Pat. No. 9,759,513, which is a continuation-in-part of application No. 14/729,098, filed on Jun. 3, 2015, now Pat. No. 9,453,700, which is a continuation-in-part of application No. 14/091,855, filed on Nov. 27, 2013, now Pat. No. 9,470,486, which is a continuation of application No. 14/075,244, filed on Nov. 8, 2013, now Pat. No. 9,074,837, said application No. 15/643,056 is a continuation-in-part of application No. 13/669,833, filed on Nov. 6, 2012, now Pat. No. 8,622,855.

(60) Provisional application No. 61/846,141, filed on Jul. 15, 2013, provisional application No. 61/556,527, filed on Nov. 7, 2011.

Publication Classification

(51) **Int. Cl.**

F42B 6/06	(2006.01)
F41B 5/14	(2006.01)
F42B 33/00	(2006.01)
F42B 12/42	(2006.01)

(52) **U.S. Cl.**

CPC ***F42B 6/06*** (2013.01); ***F42B 12/42*** (2013.01); ***F42B 33/001*** (2013.01); ***F41B 5/148*** (2013.01)

(57) **ABSTRACT**

An arrow nock may have at least two distinct string guide impressions each designed to receive a bowstring to fire an arrow from a bow. The nock may be operable when connected and aligned with the arrow to cause the bowstring to be received within at least one of the string guide impressions to fire the arrow. As it is received within the string guide impression, the bowstring may cause the arrow to rotate about its longitudinal axis.

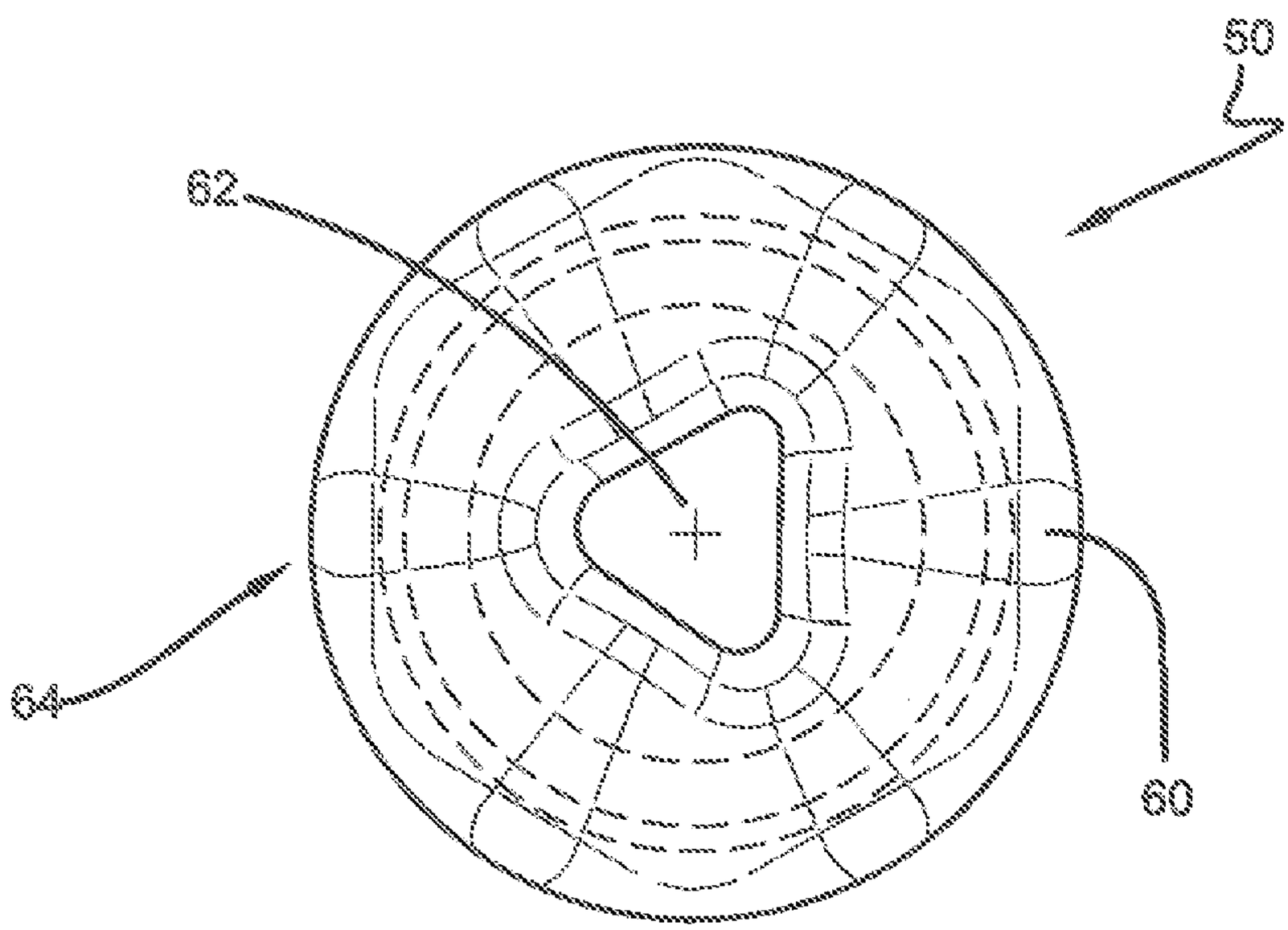

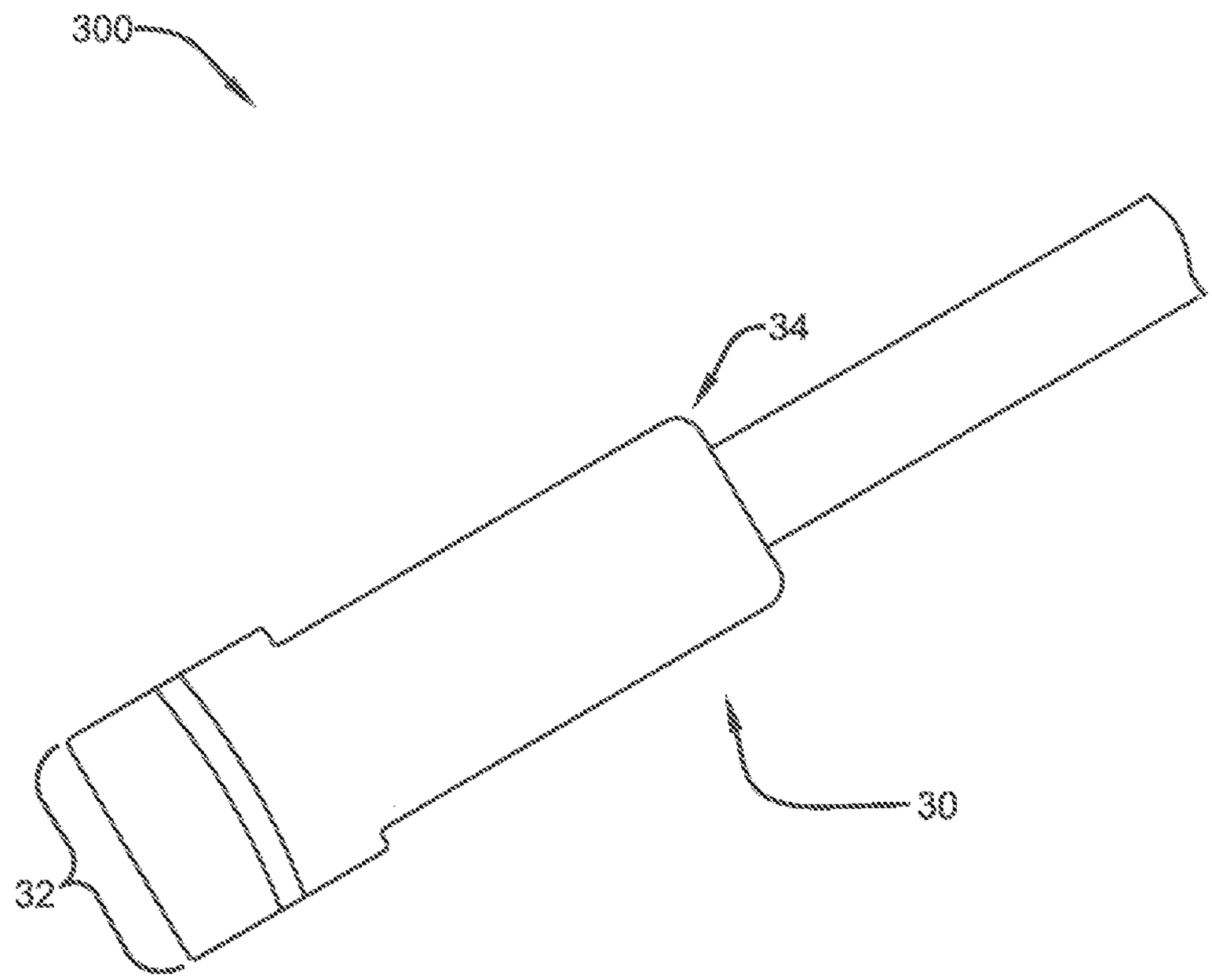

FIG. 1
PRIOR ART

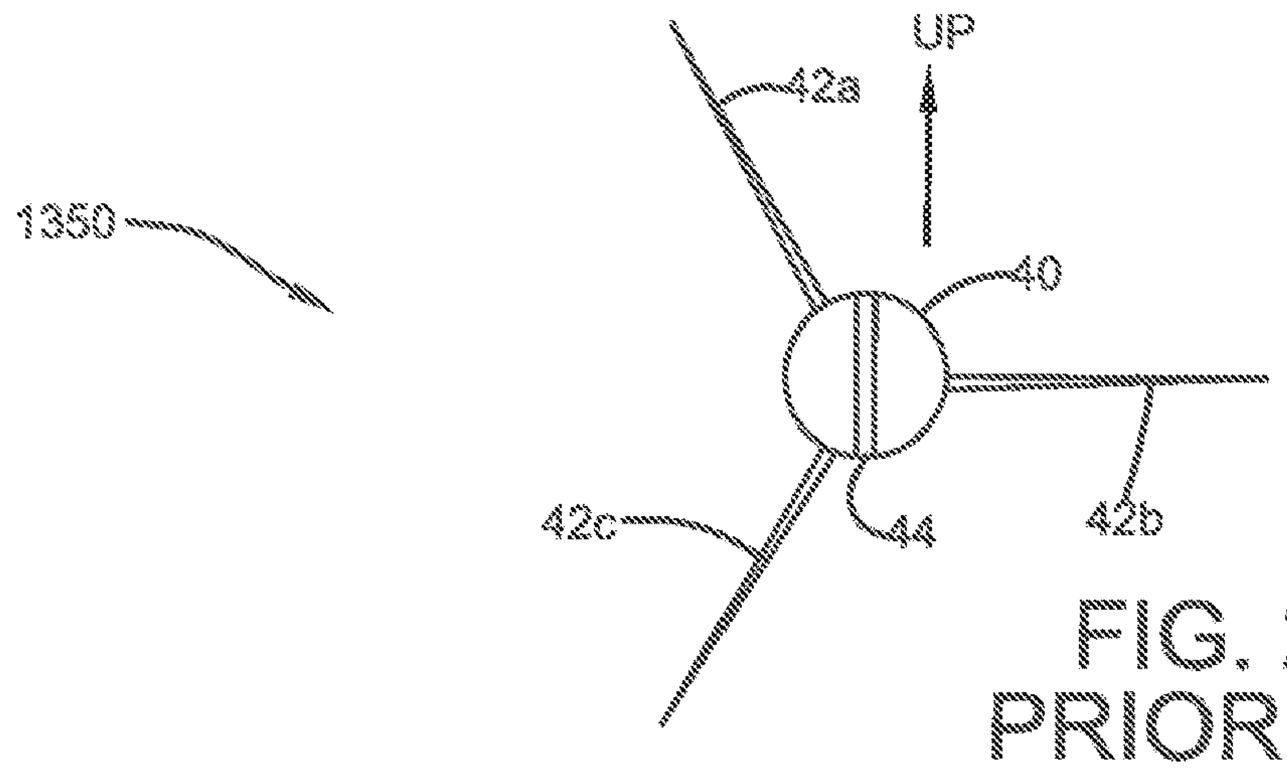

FIG. 2A
PRIOR ART

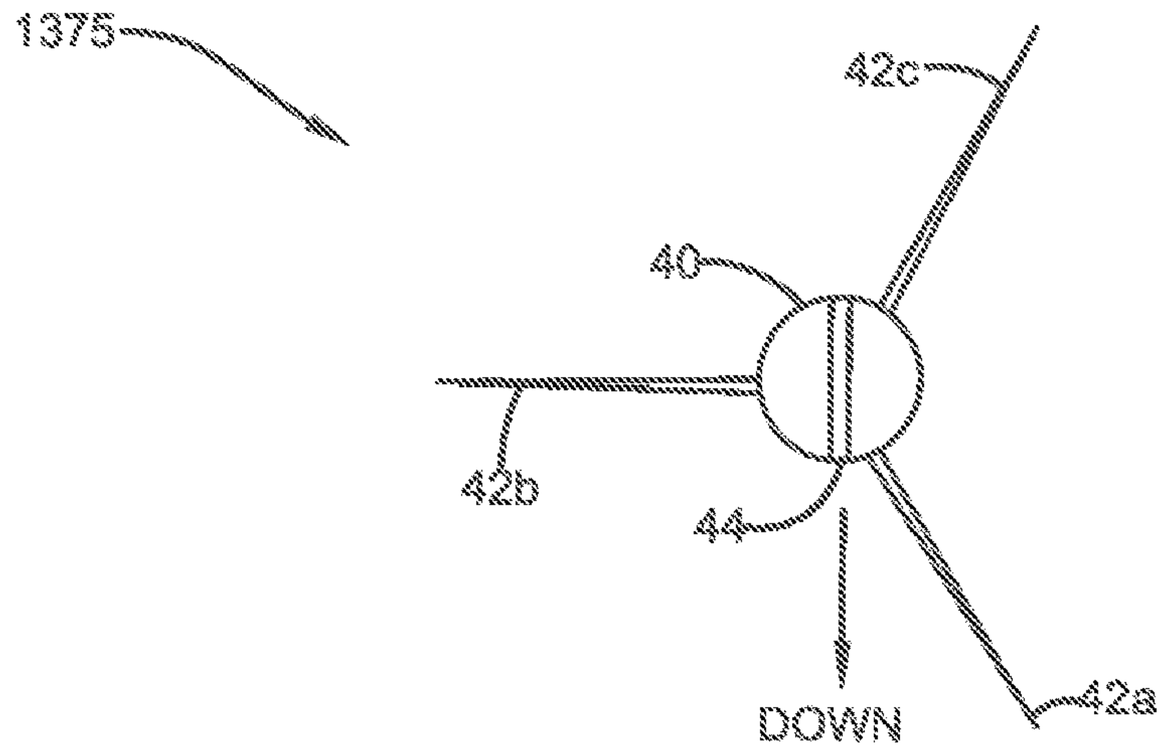

FIG. 2B
PRIOR ART

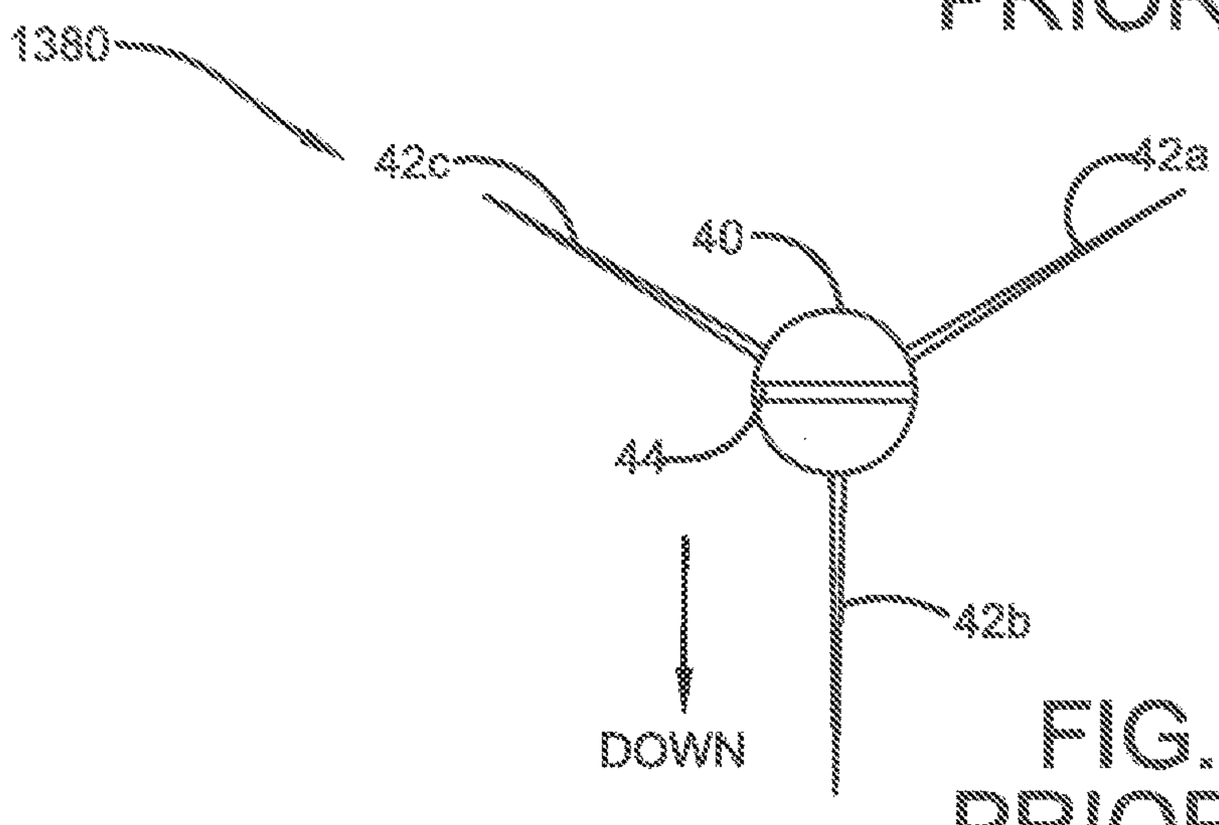

FIG. 2C
PRIOR ART

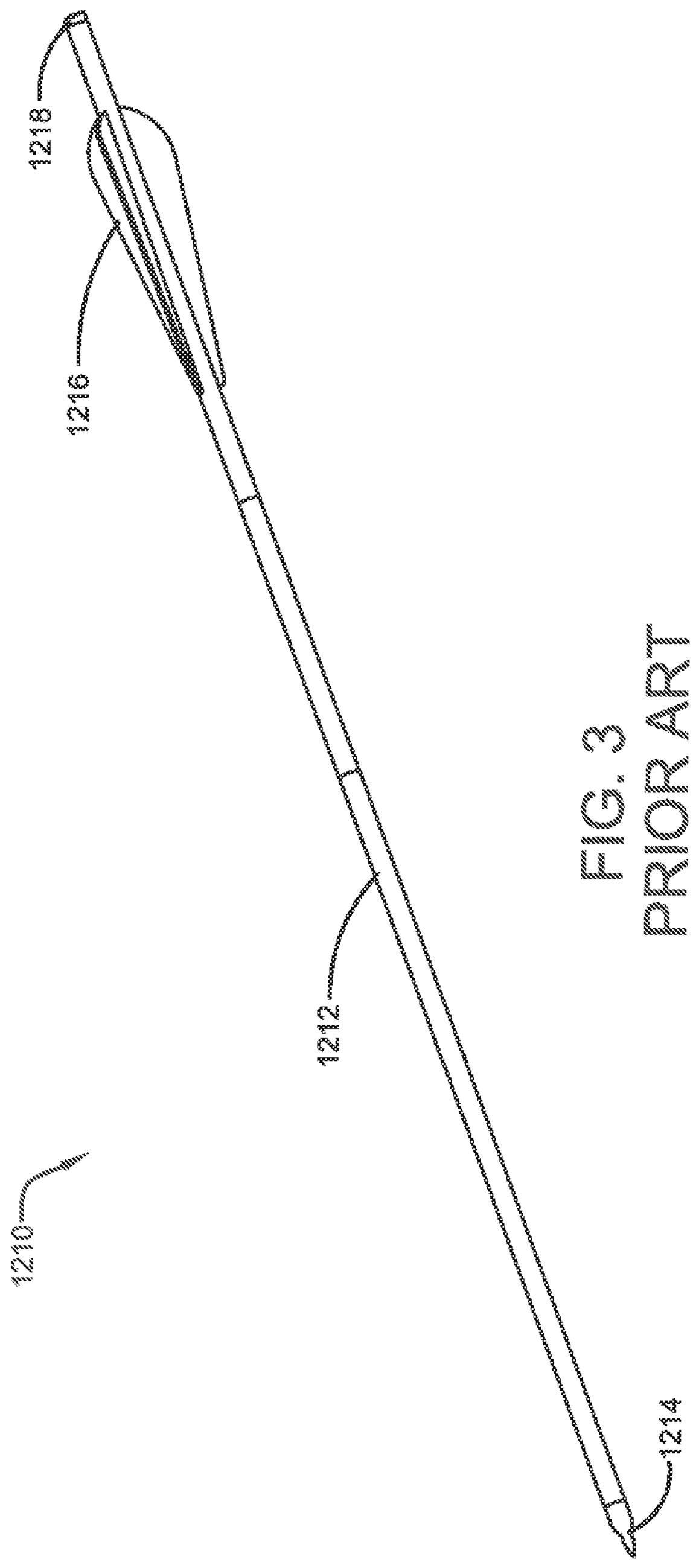

FIG. 3
PRIOR ART

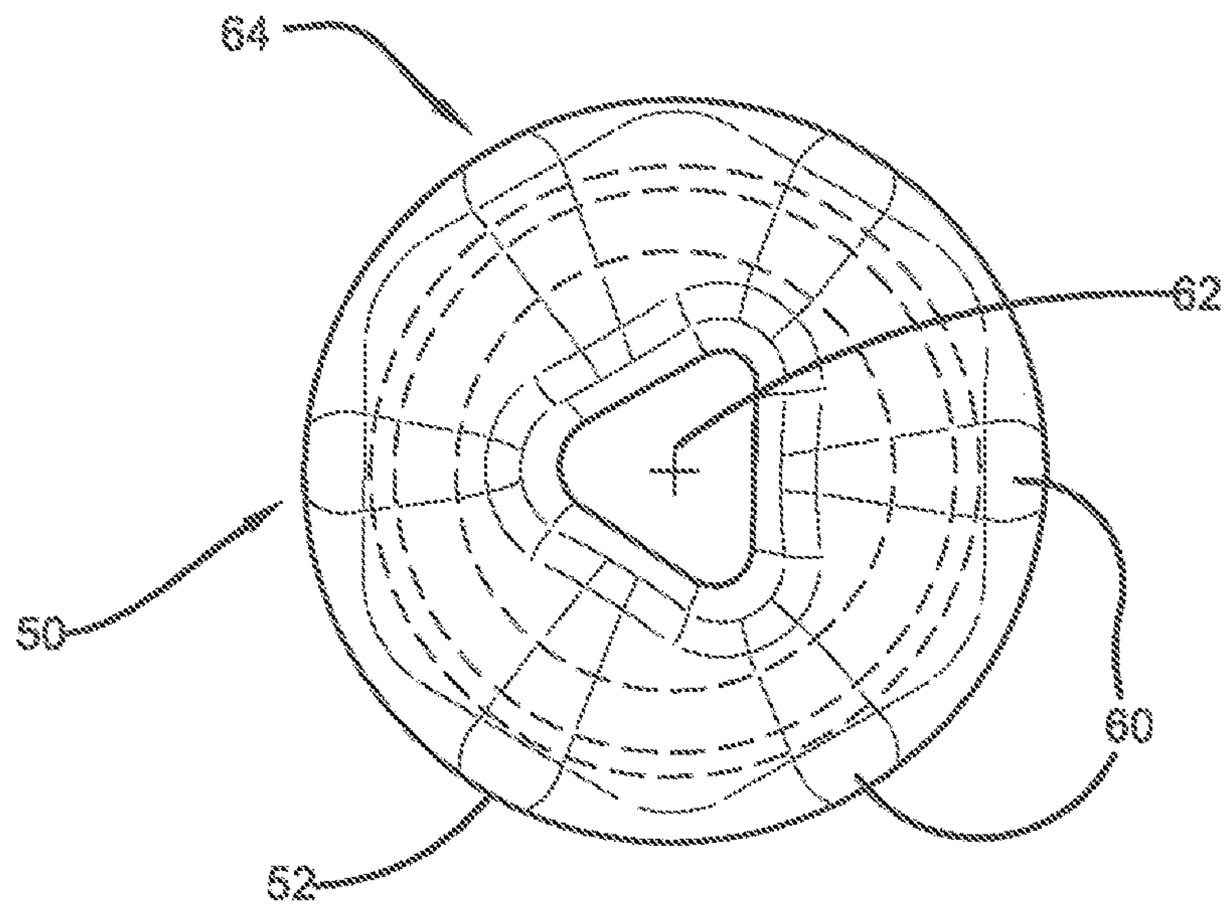

FIG. 4A

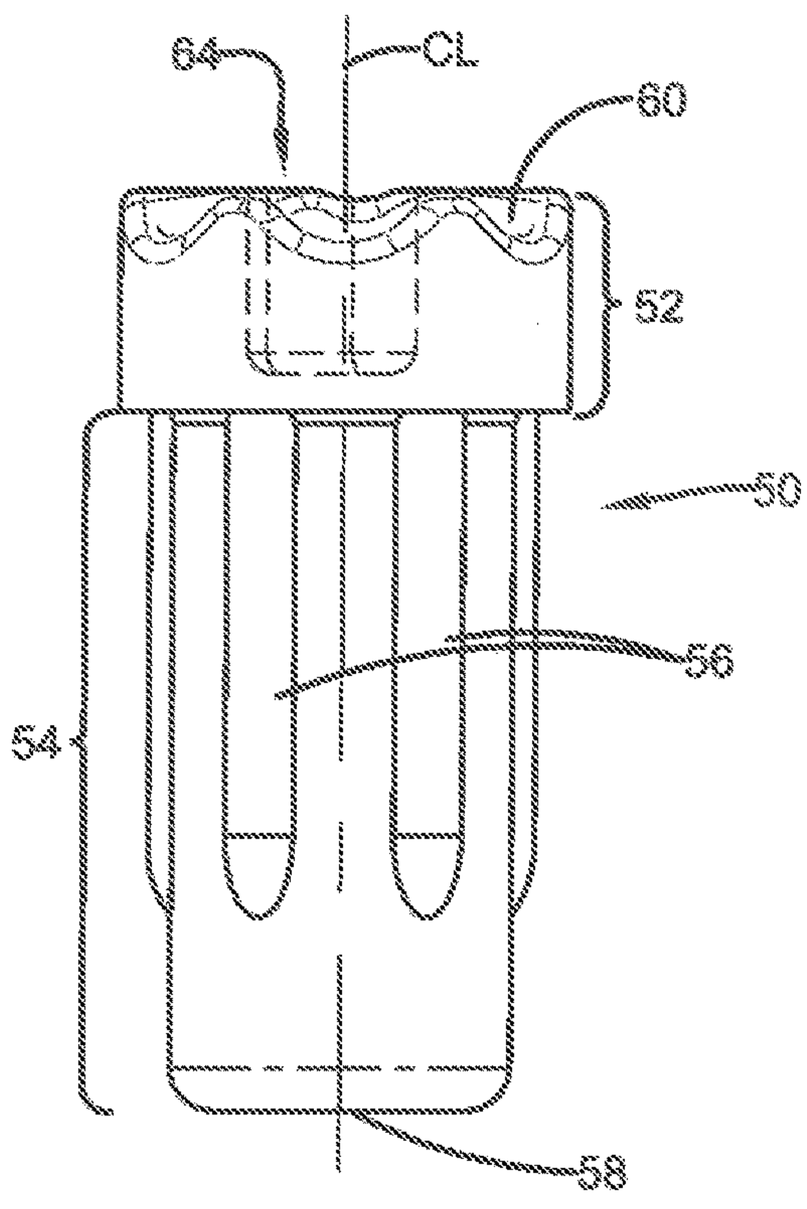

FIG. 4B

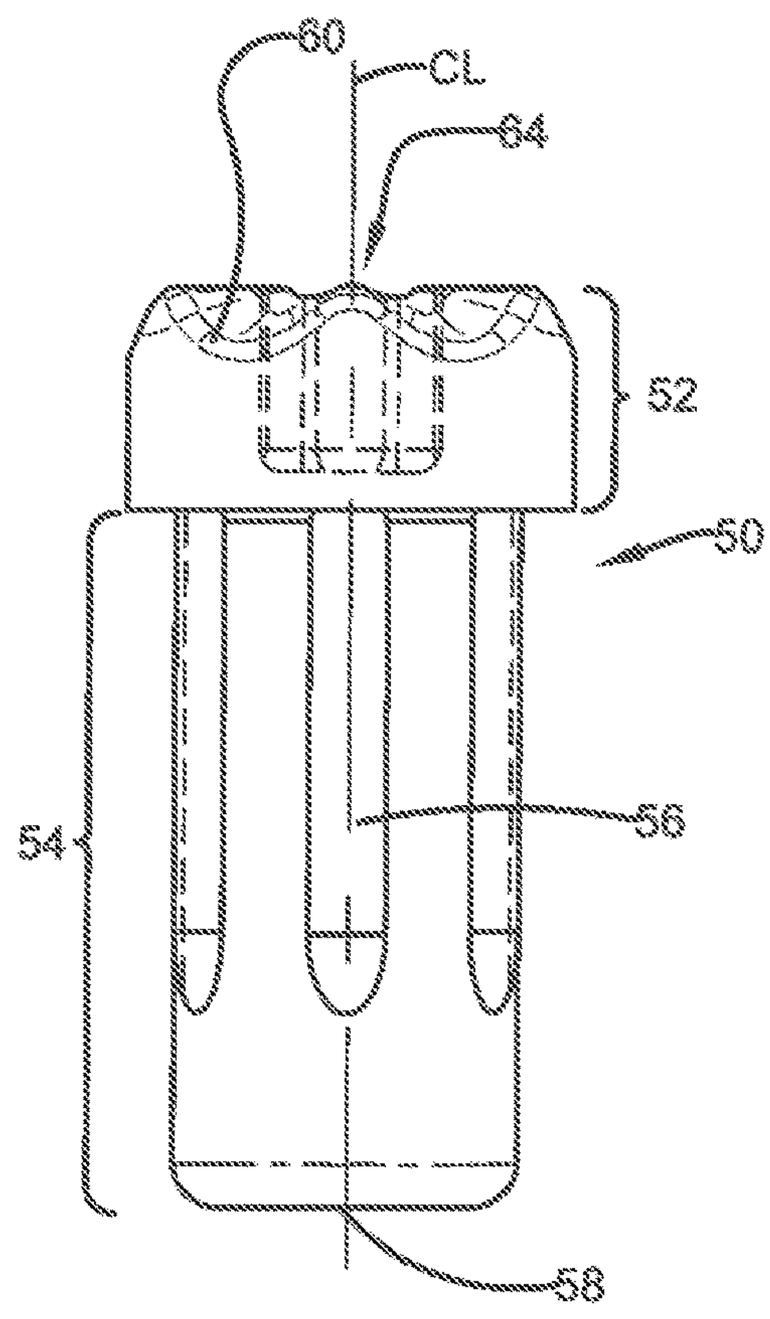

FIG. 4C

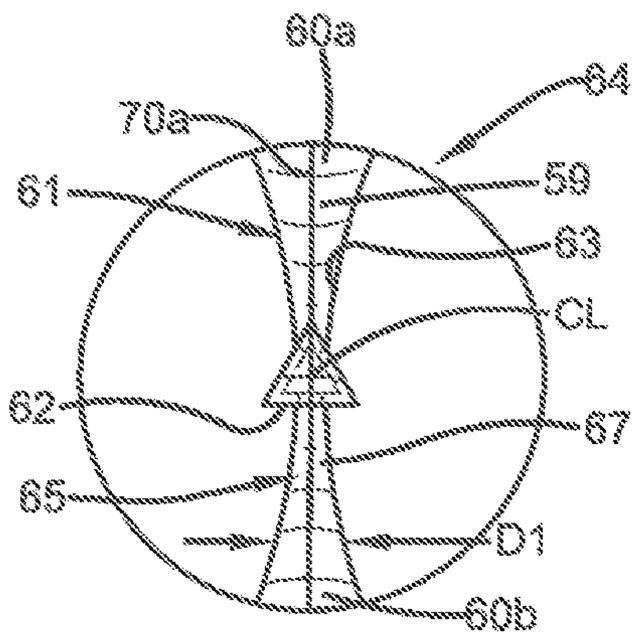

FIG. 5A

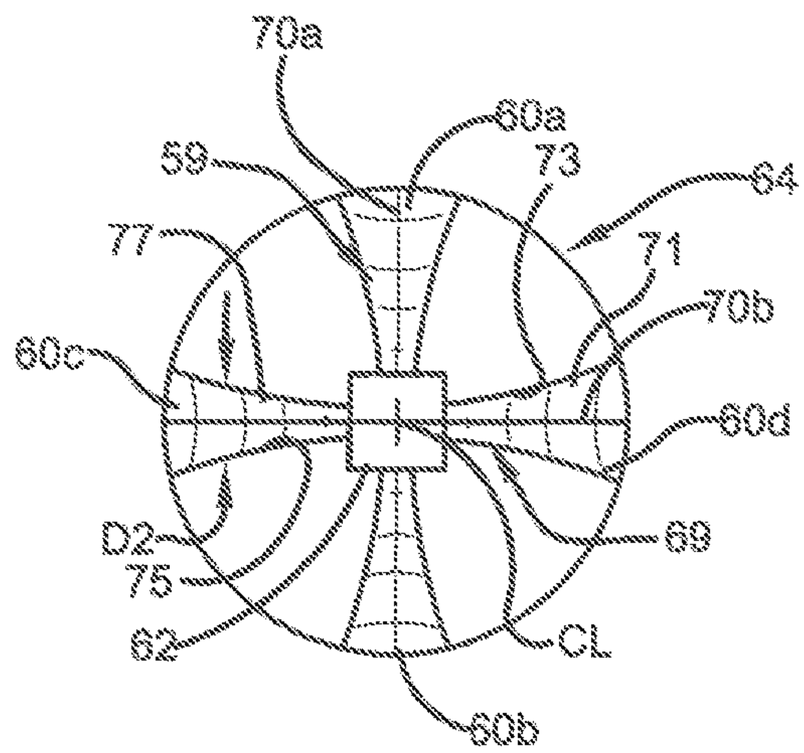

FIG. 5B

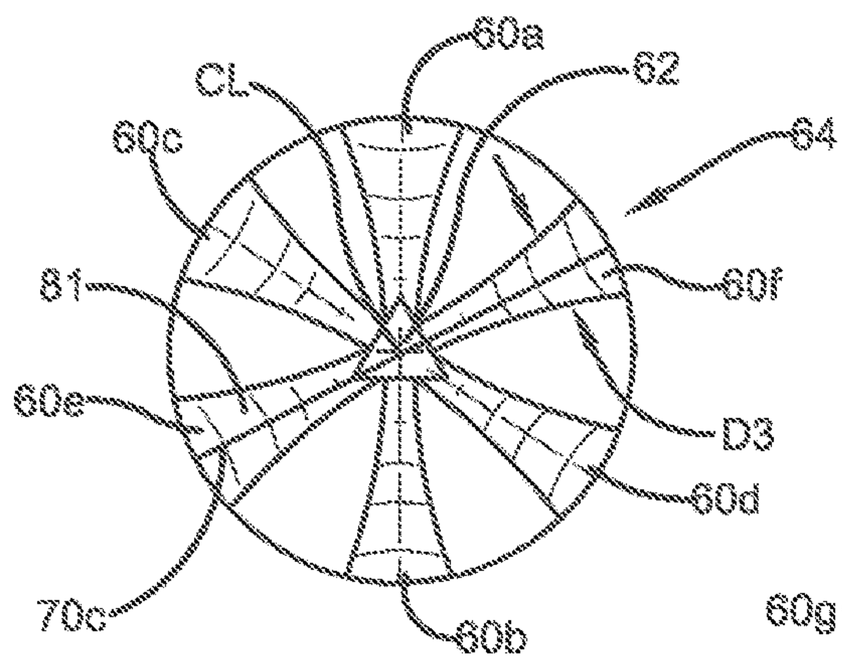

FIG. 5C

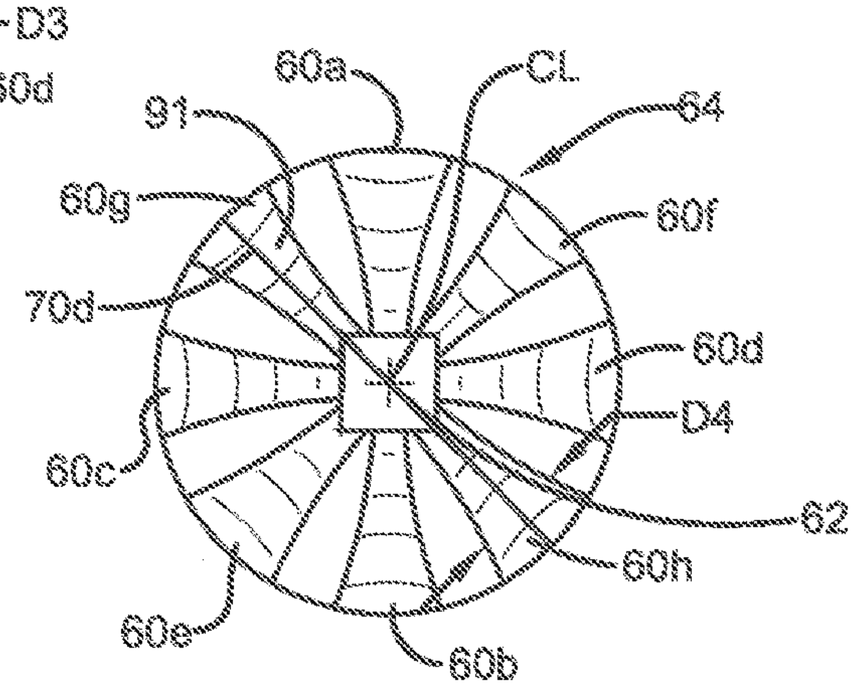

FIG. 5D

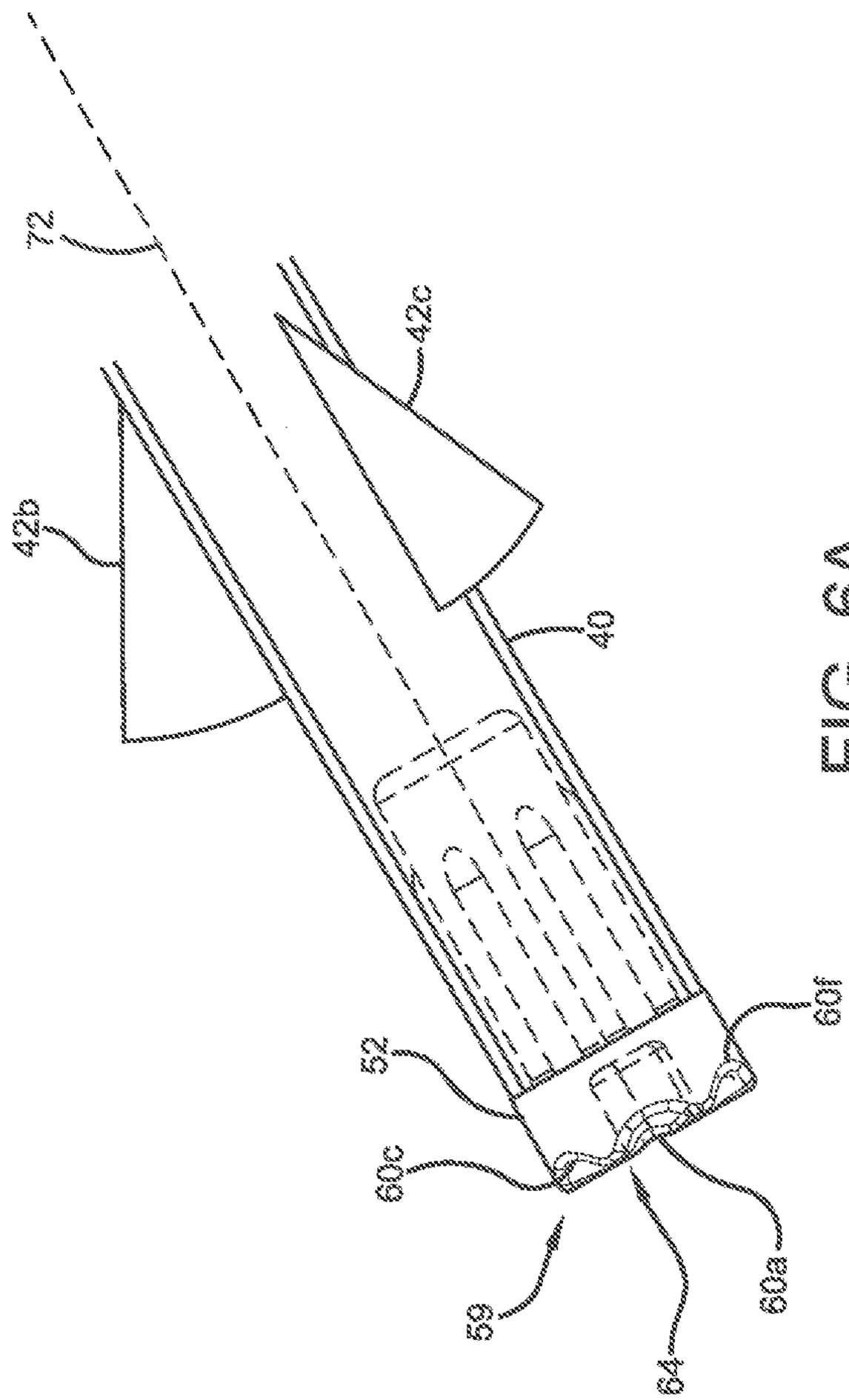

FIG. 6A

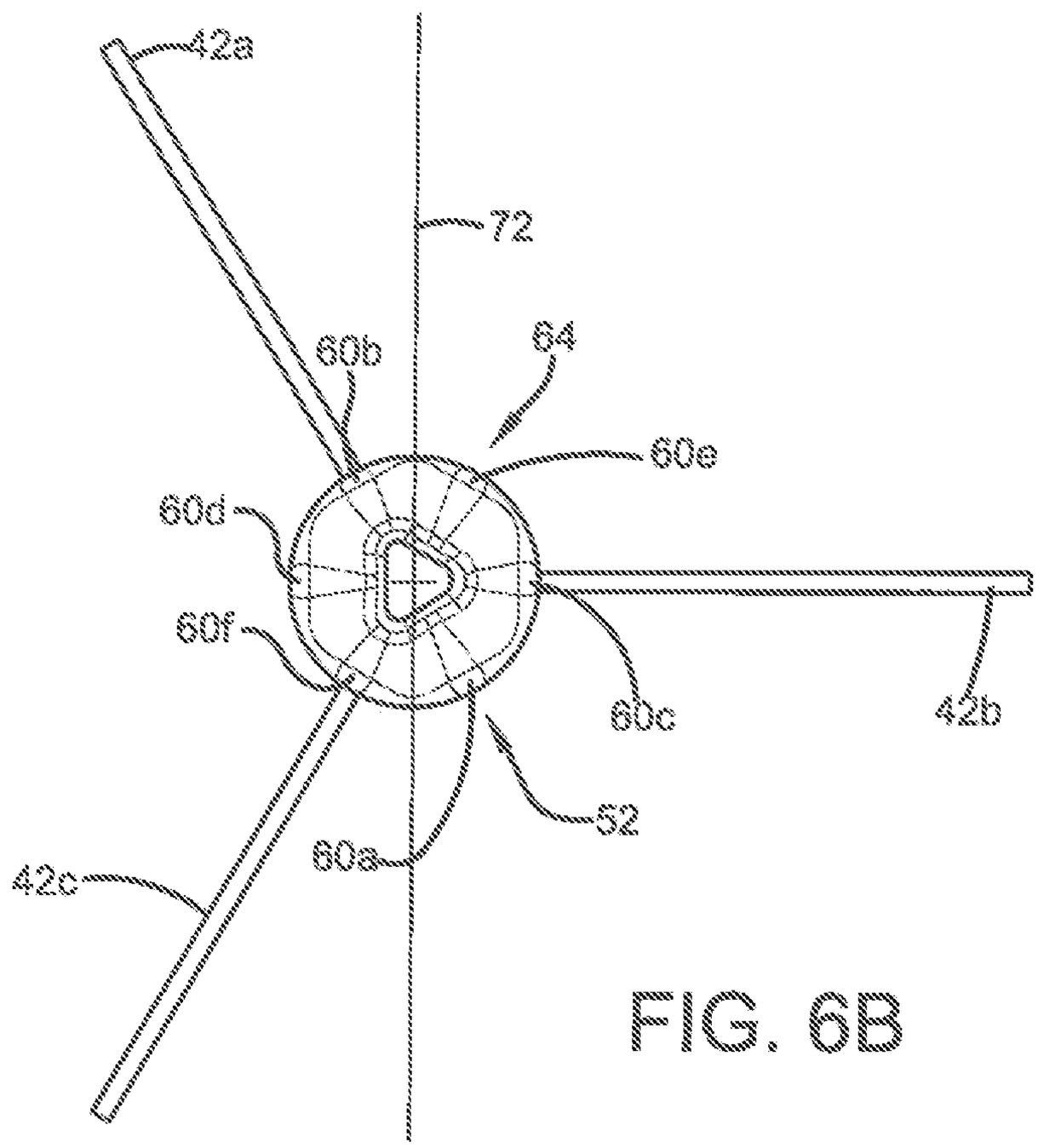
42a
72
60b
64
60e
60d
60f
60c
42b
52
60a
42c

FIG. 6B

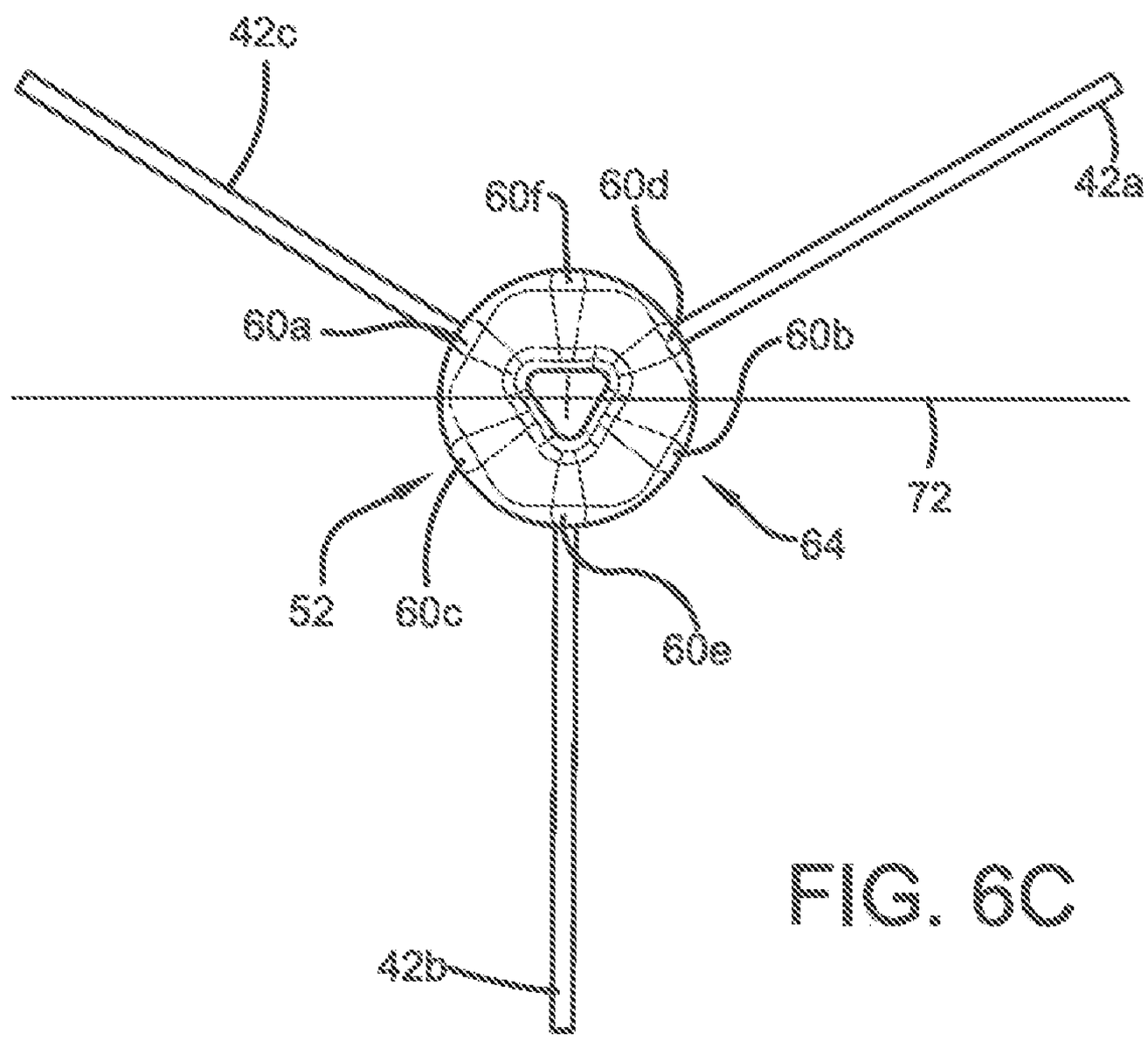
42c
42a
60f
60d
60a
60b
72
64
52
60c
60e
42b

FIG. 6C

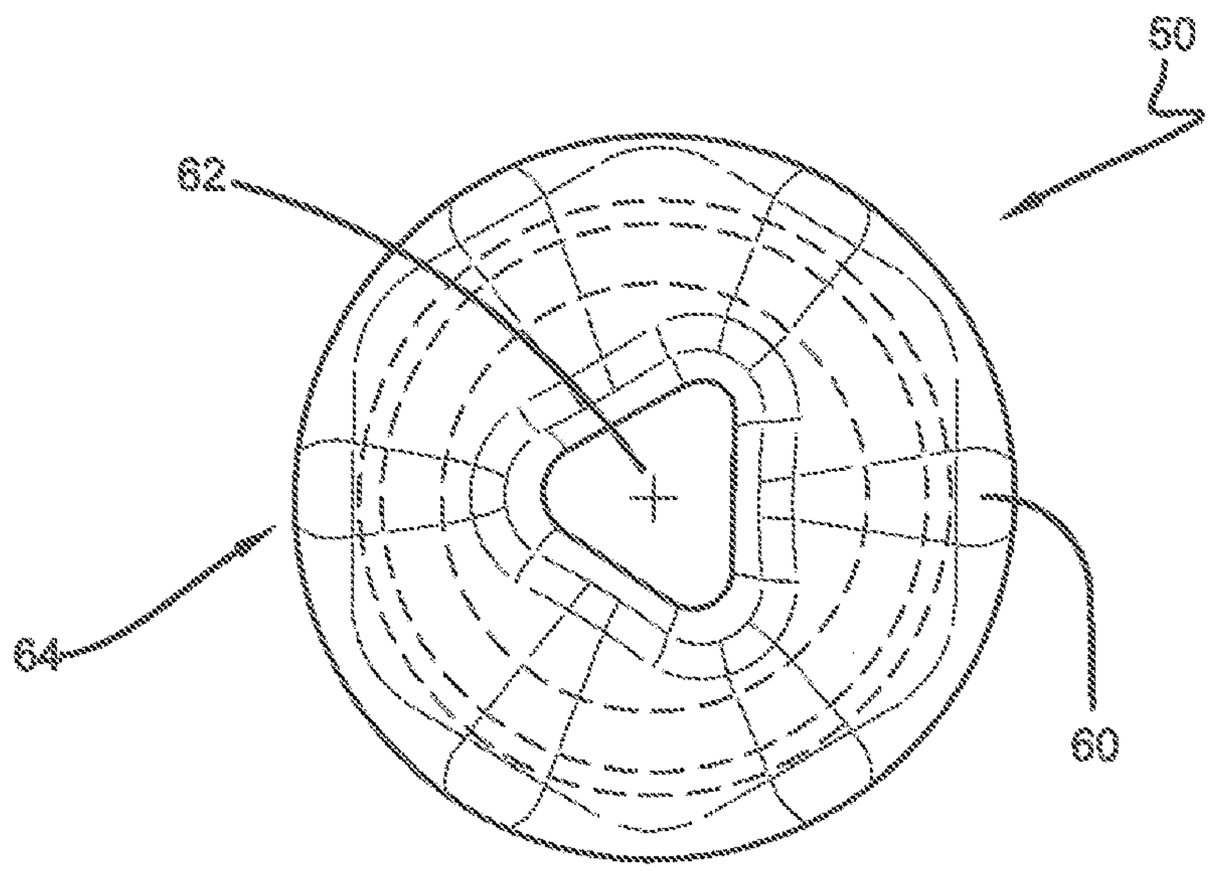

FIG. 7A

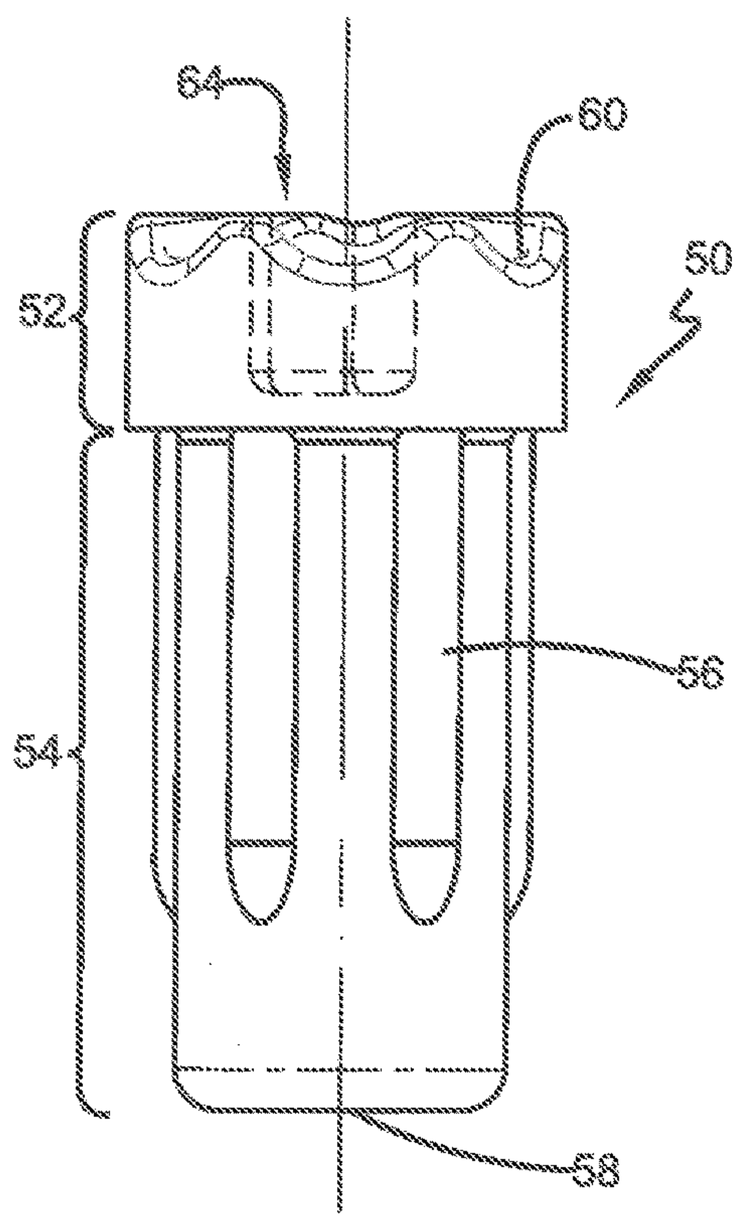

FIG. 7B

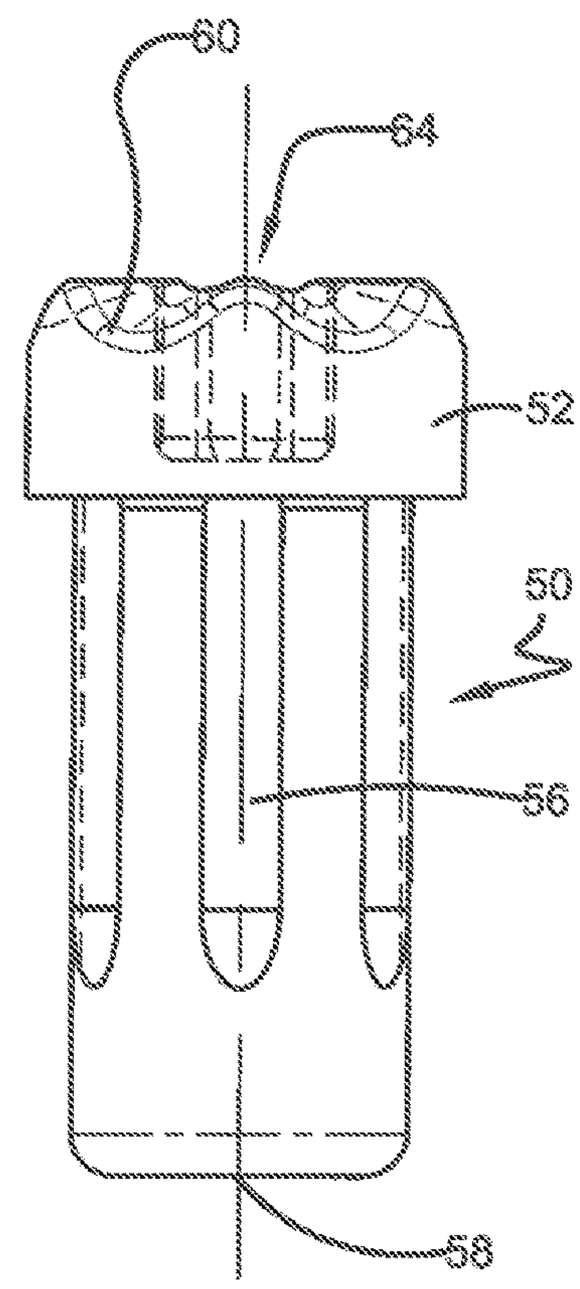

FIG. 7C

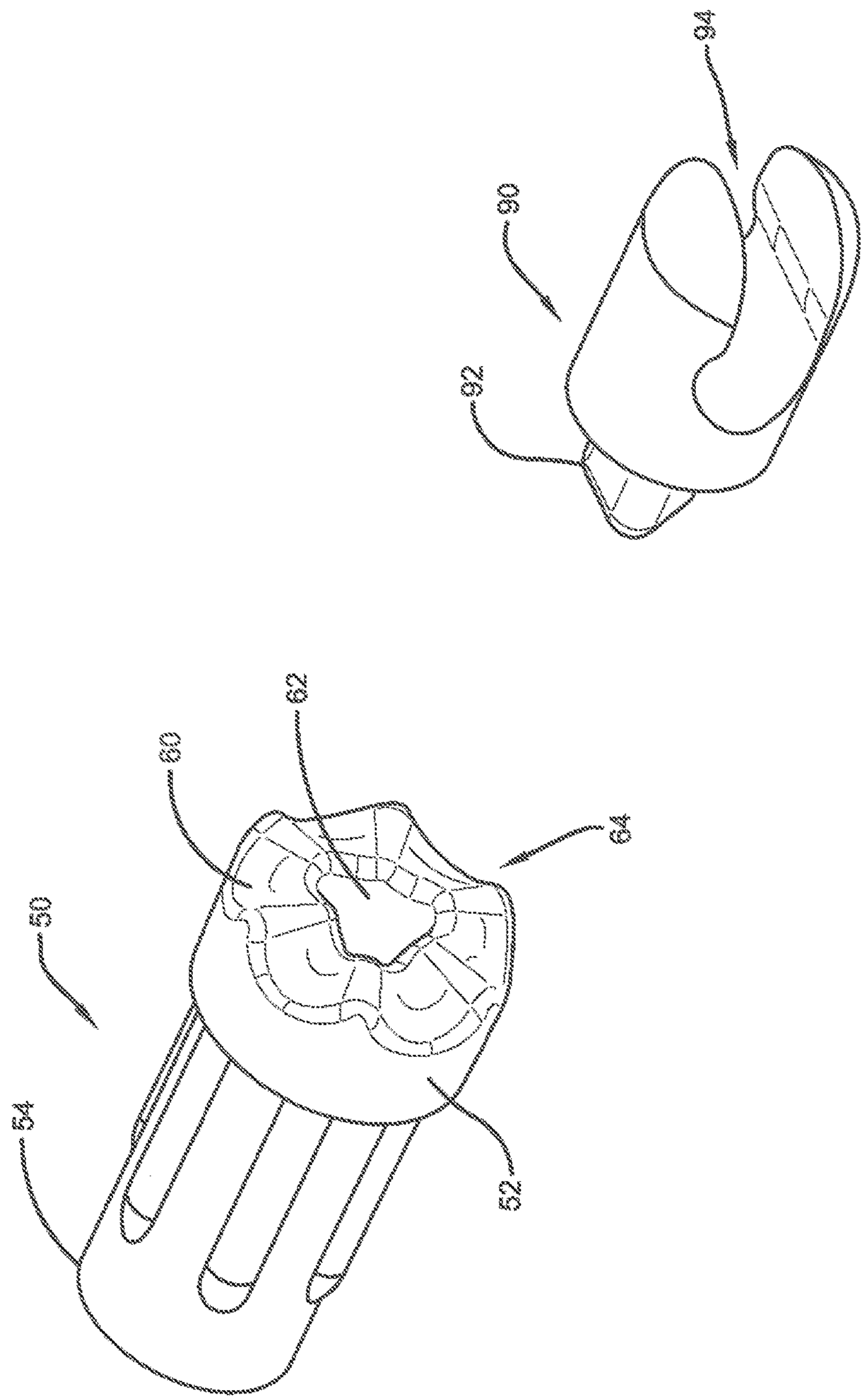

FIG. 8

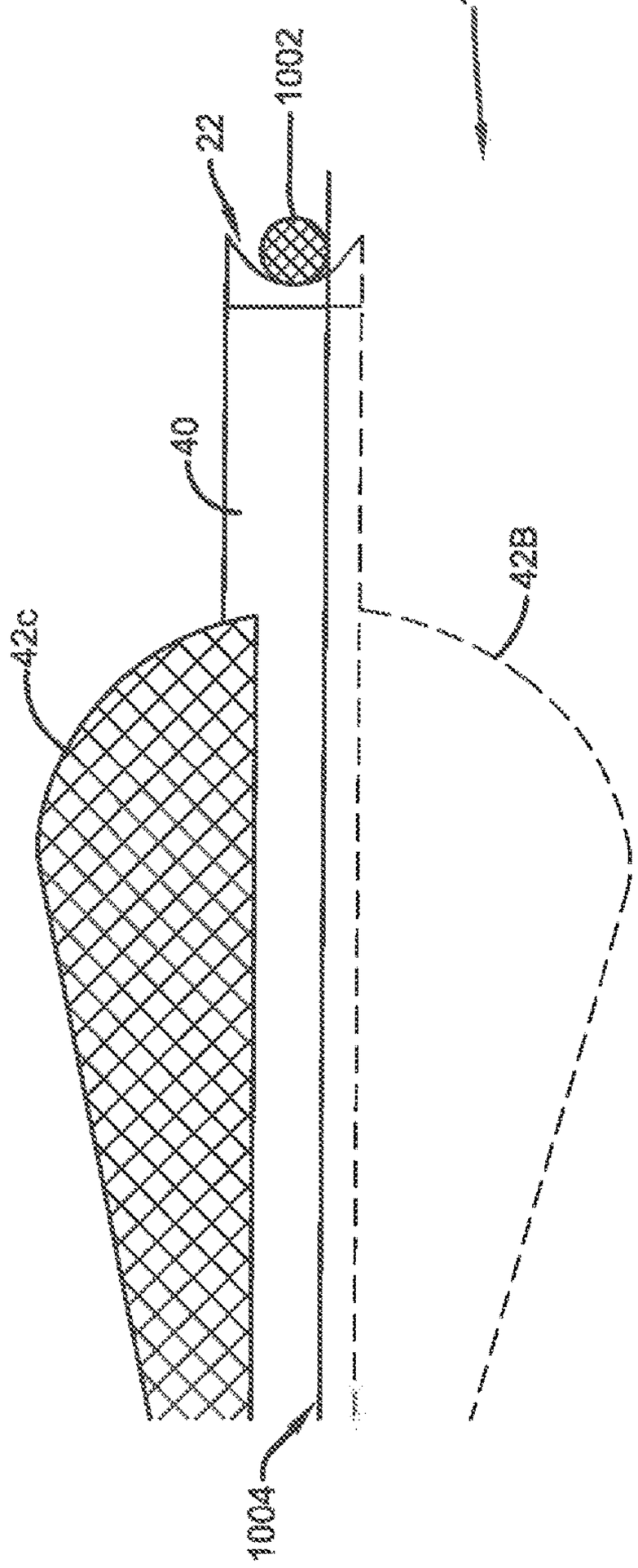

FIG. 9A

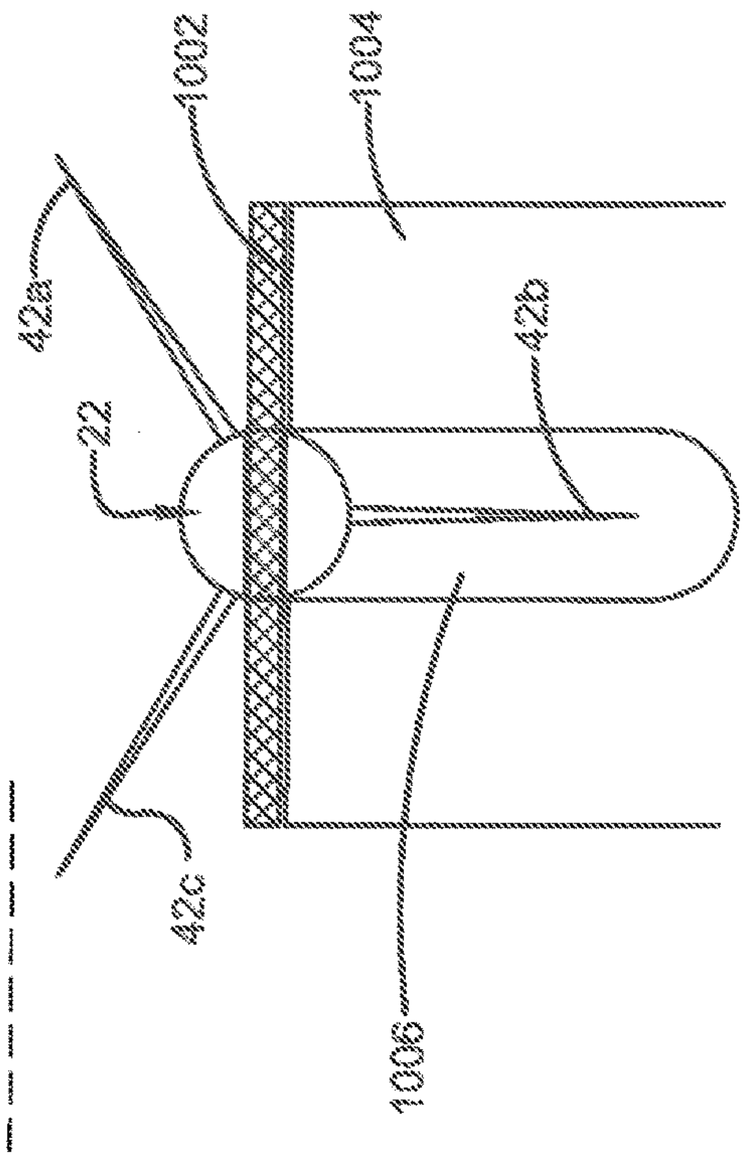

FIG. 9B

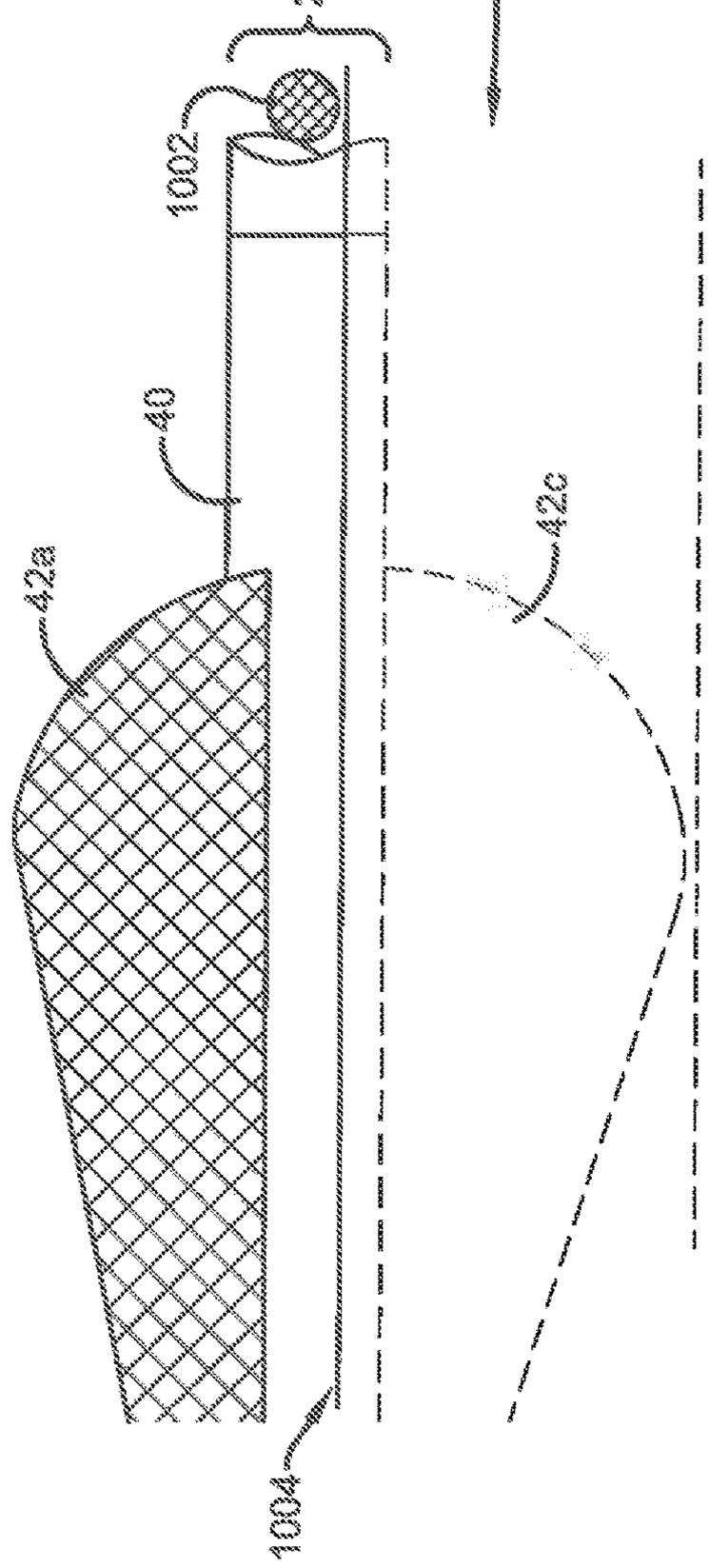

FIG. 10A

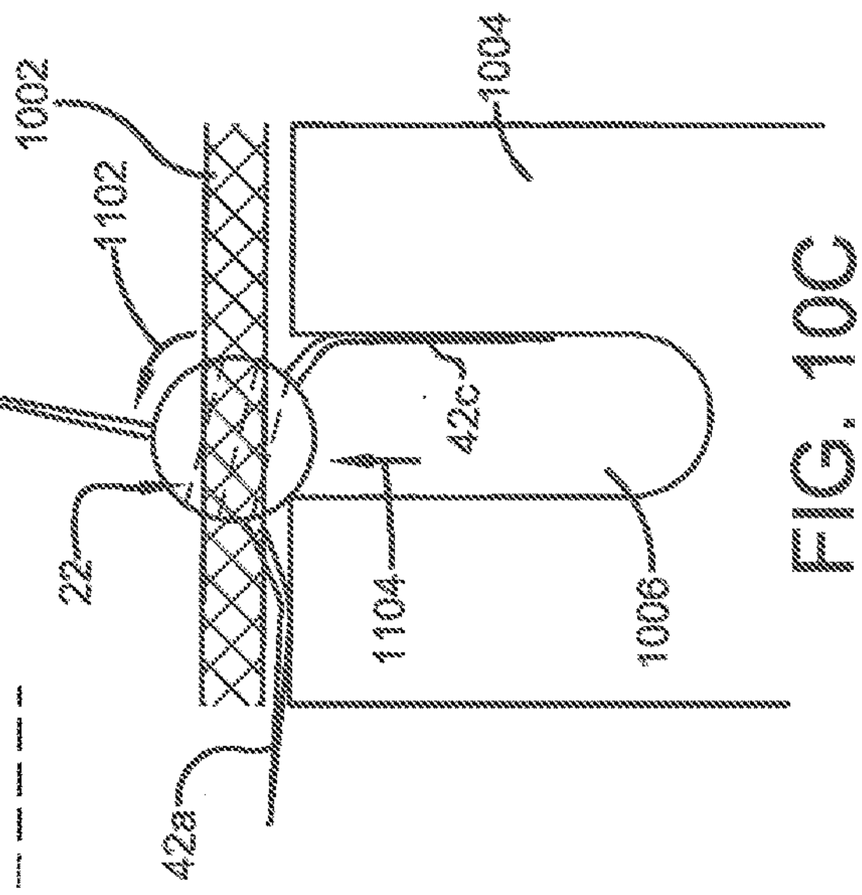

FIG. 10C

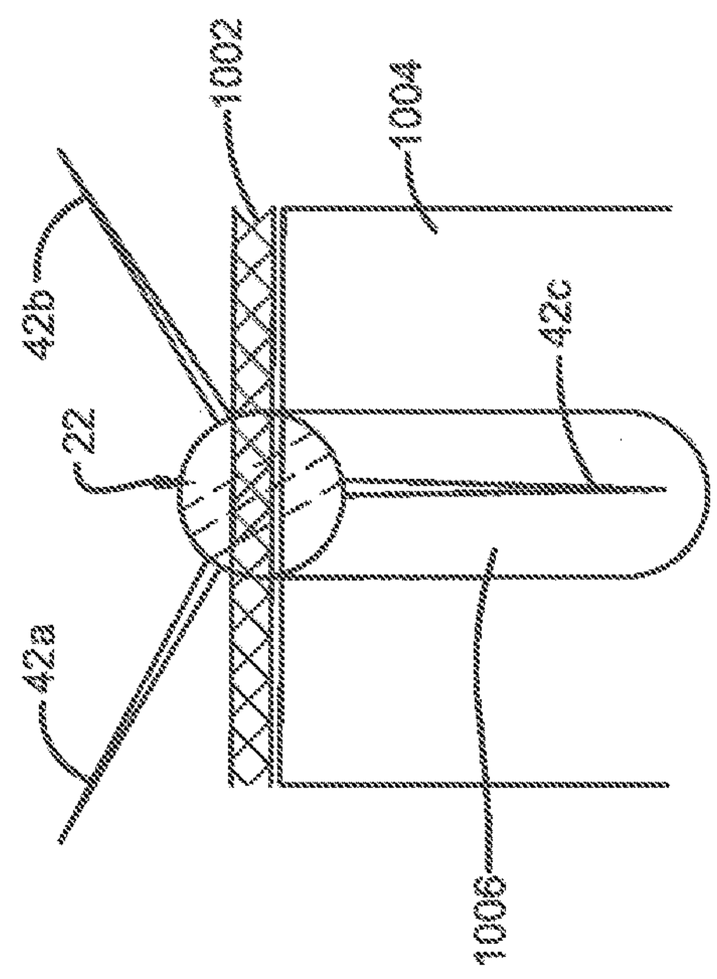

FIG. 10B

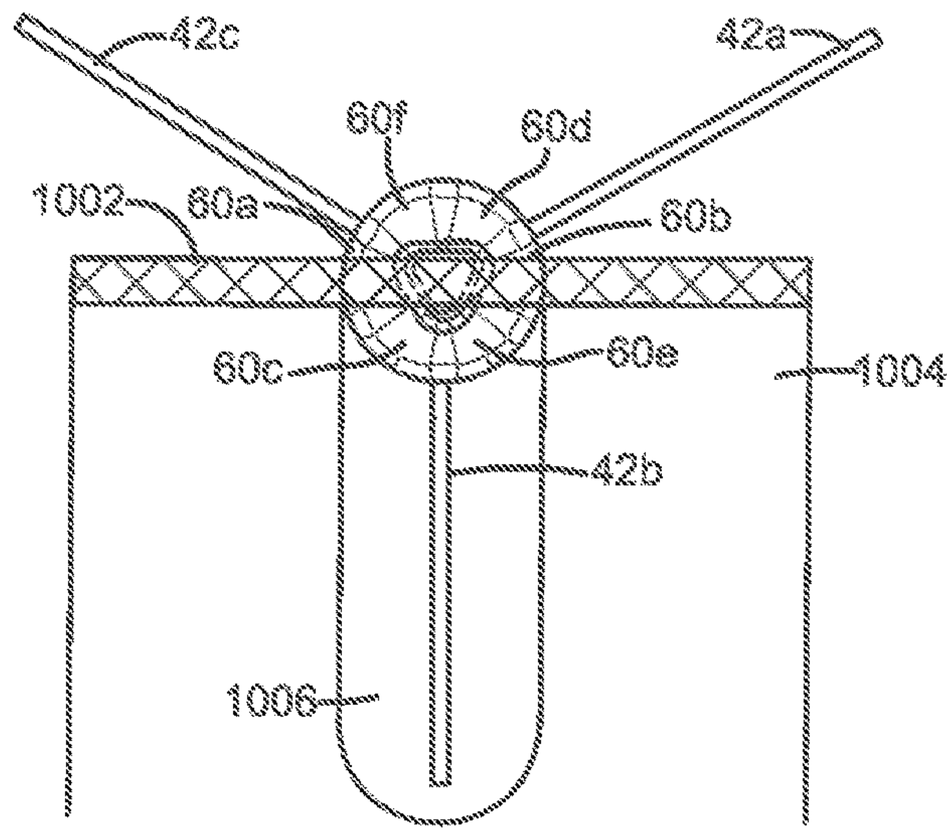

FIG. 11A

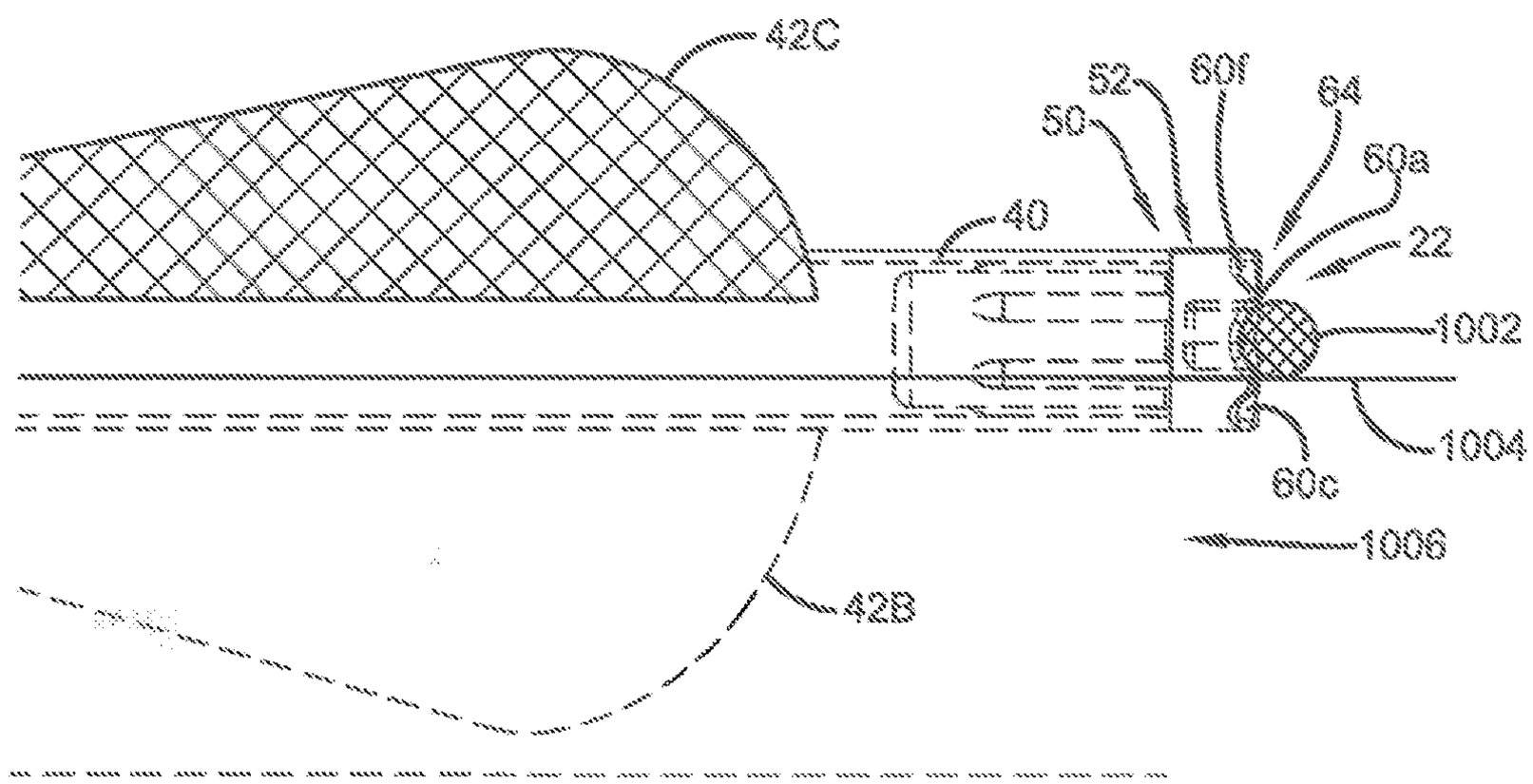

FIG. 11B

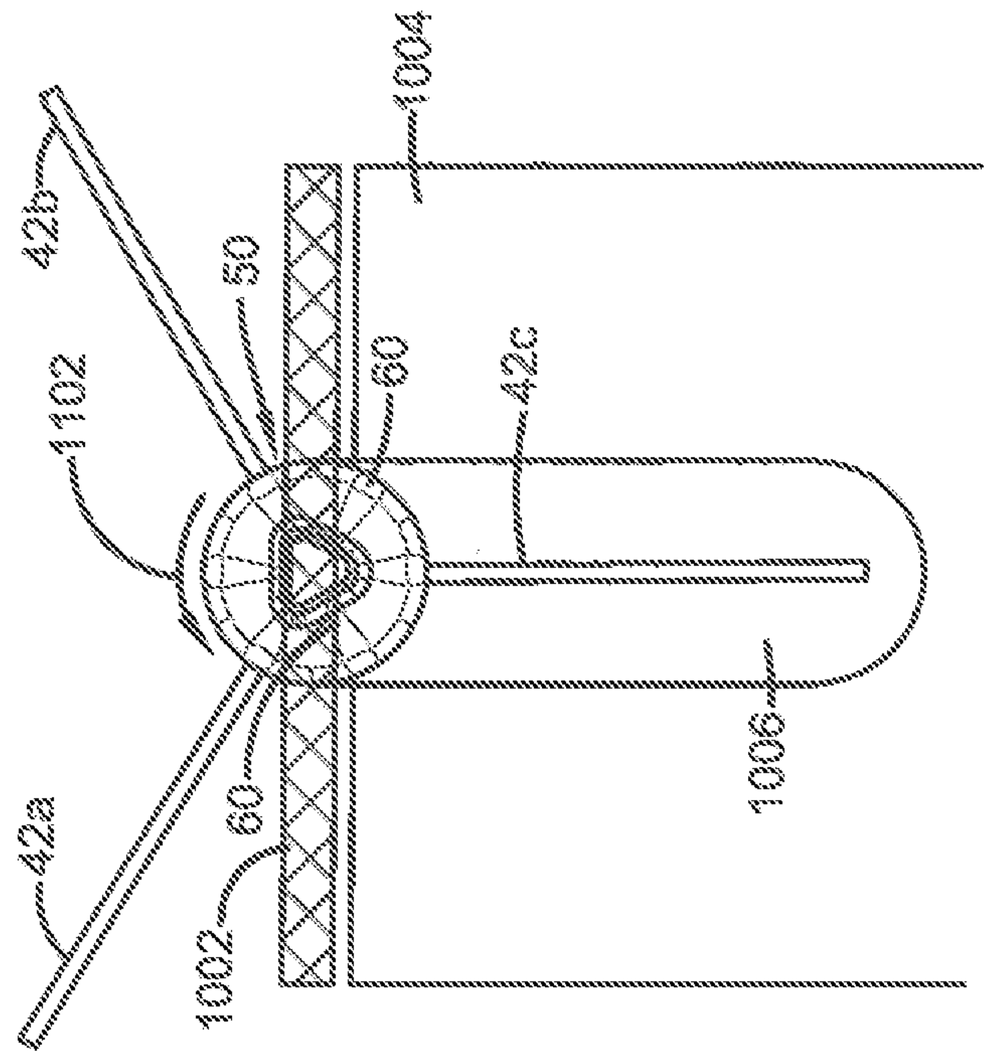

FIG. 12B

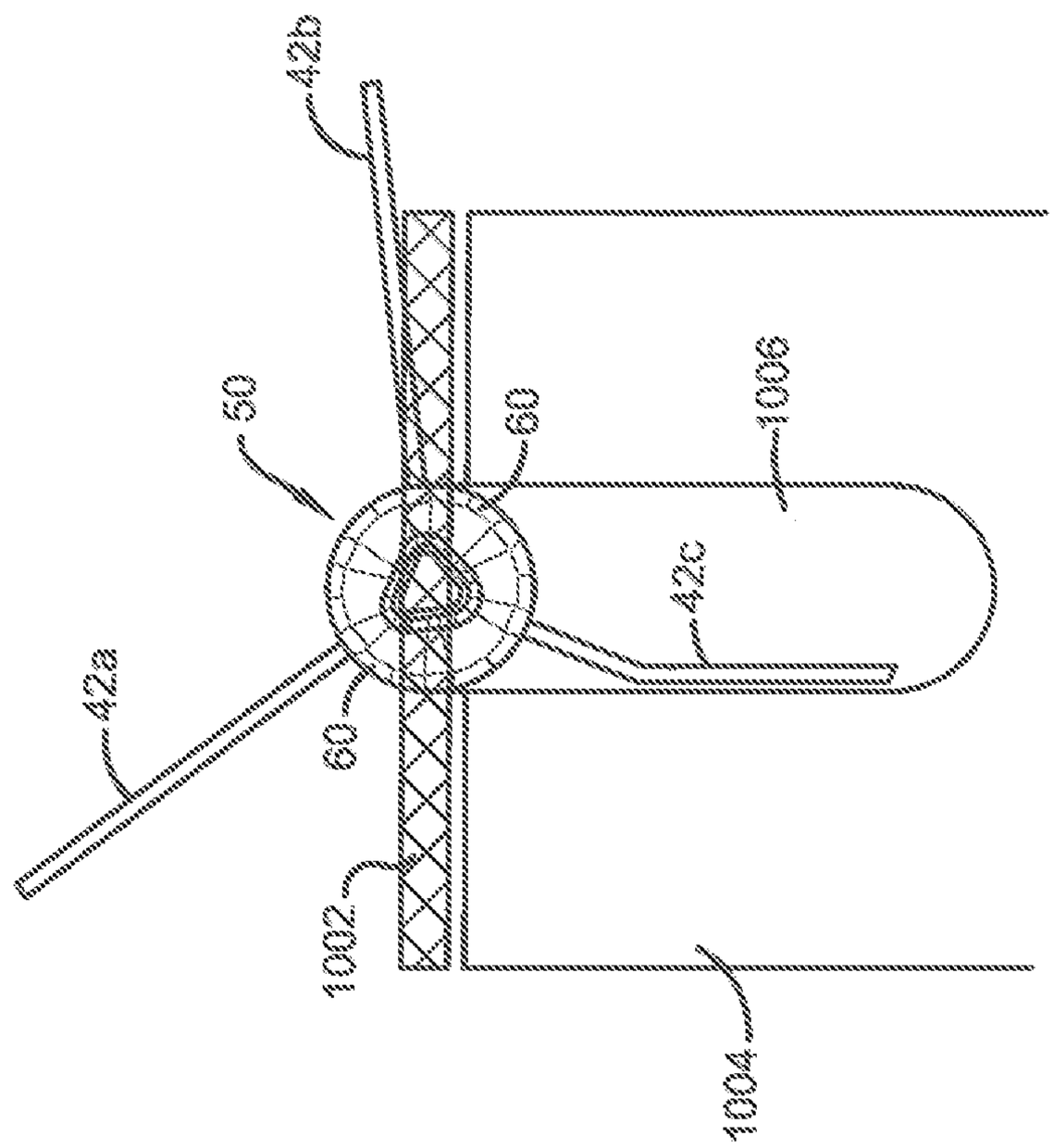

FIG. 12A

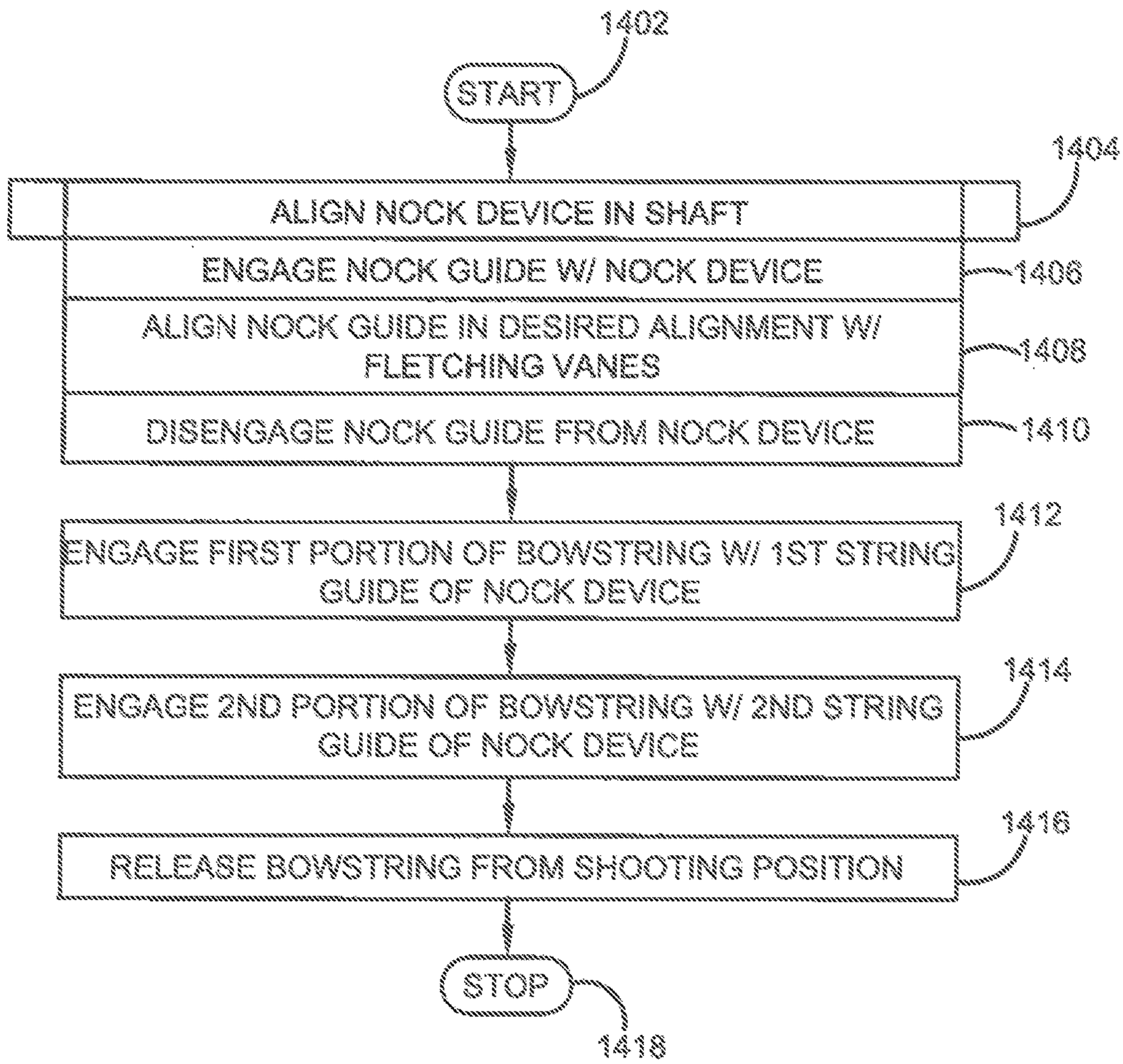
1402
START
1404
ALIGN NOCK DEVICE IN SHAFT
ENGAGE NOCK GUIDE W/ NOCK DEVICE
1406
ALIGN NOCK GUIDE IN DESIRED ALIGNMENT W/ FLETCHING VANES
1408
DISENGAGE NOCK GUIDE FROM NOCK DEVICE
1410
ENGAGE FIRST PORTION OF BOWSTRING W/ 1ST STRING GUIDE OF NOCK DEVICE
1412
ENGAGE 2ND PORTION OF BOWSTRING W/ 2ND STRING GUIDE OF NOCK DEVICE
1414
RELEASE BOWSTRING FROM SHOOTING POSITION
1416
STOP
1418

FIG. 13

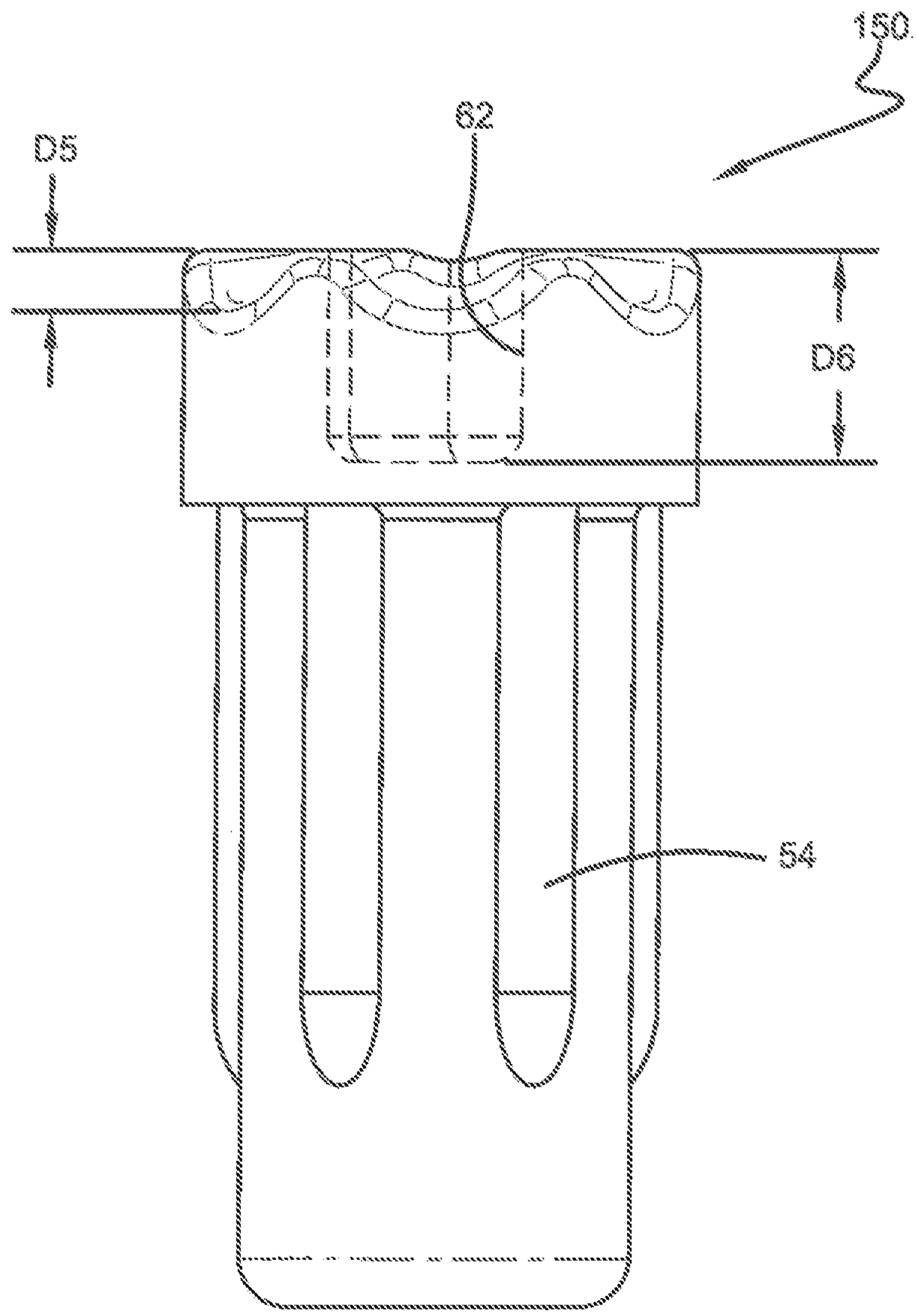

FIG. 14

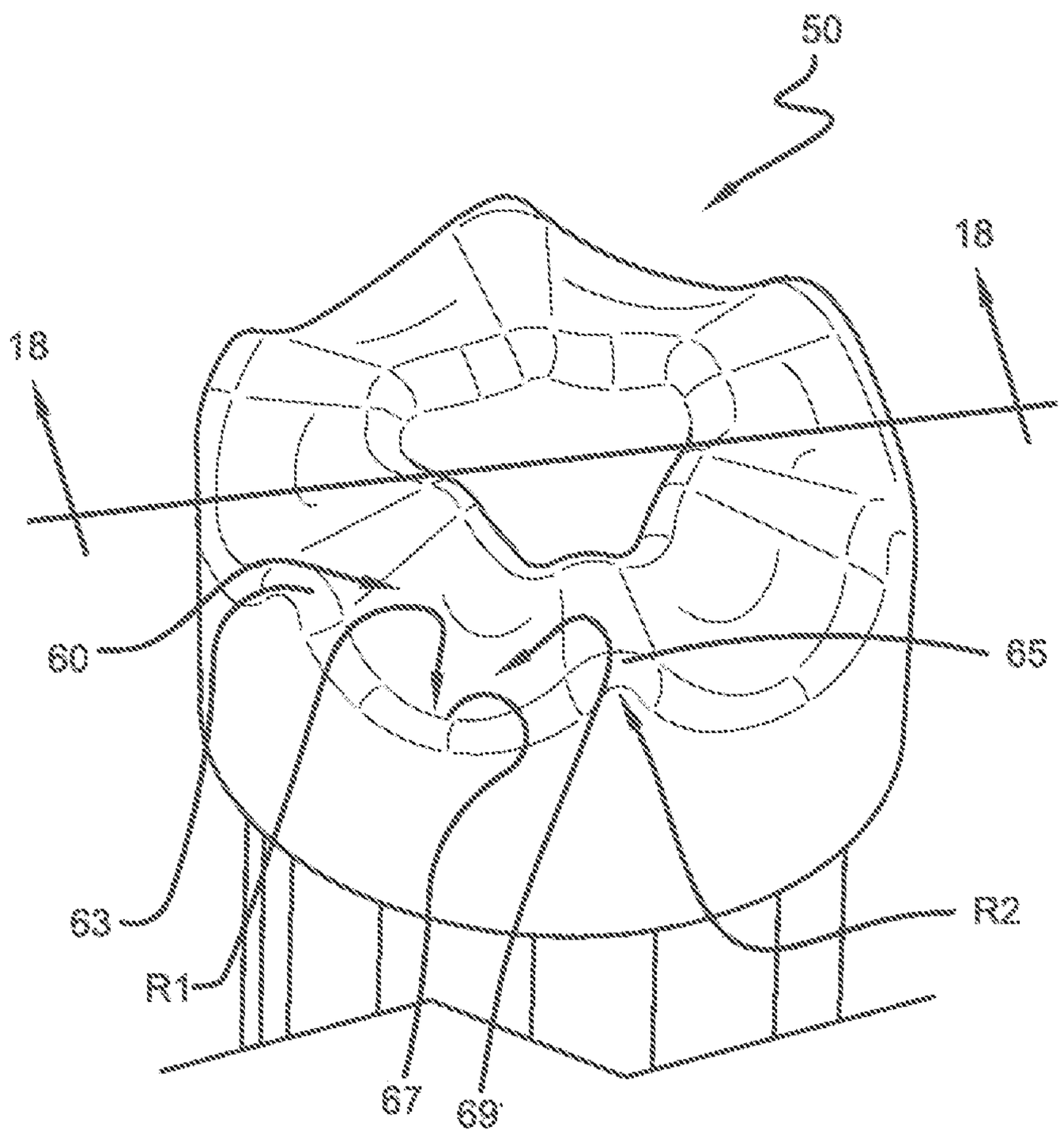

FIG. 15

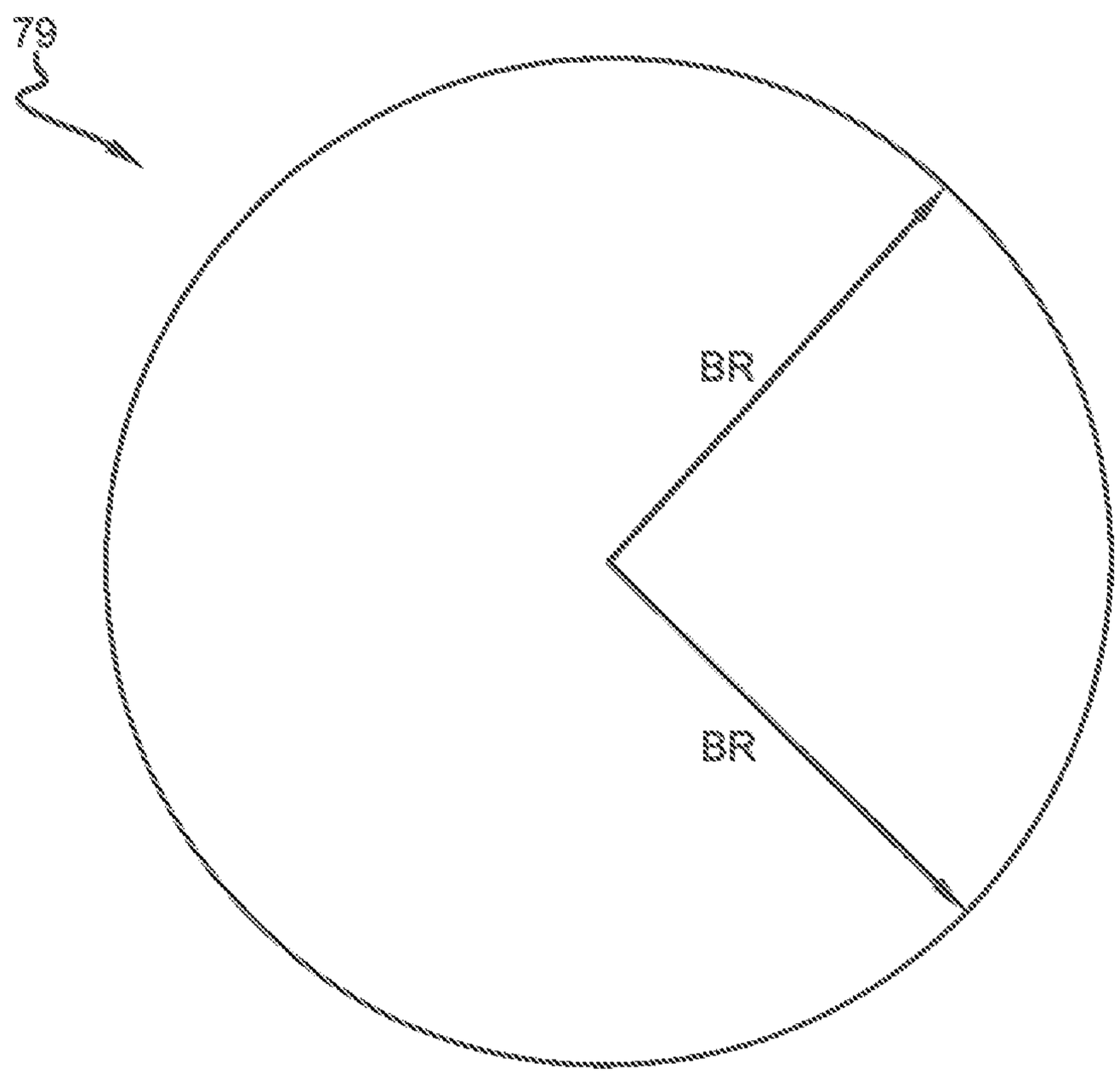

FIG. 16

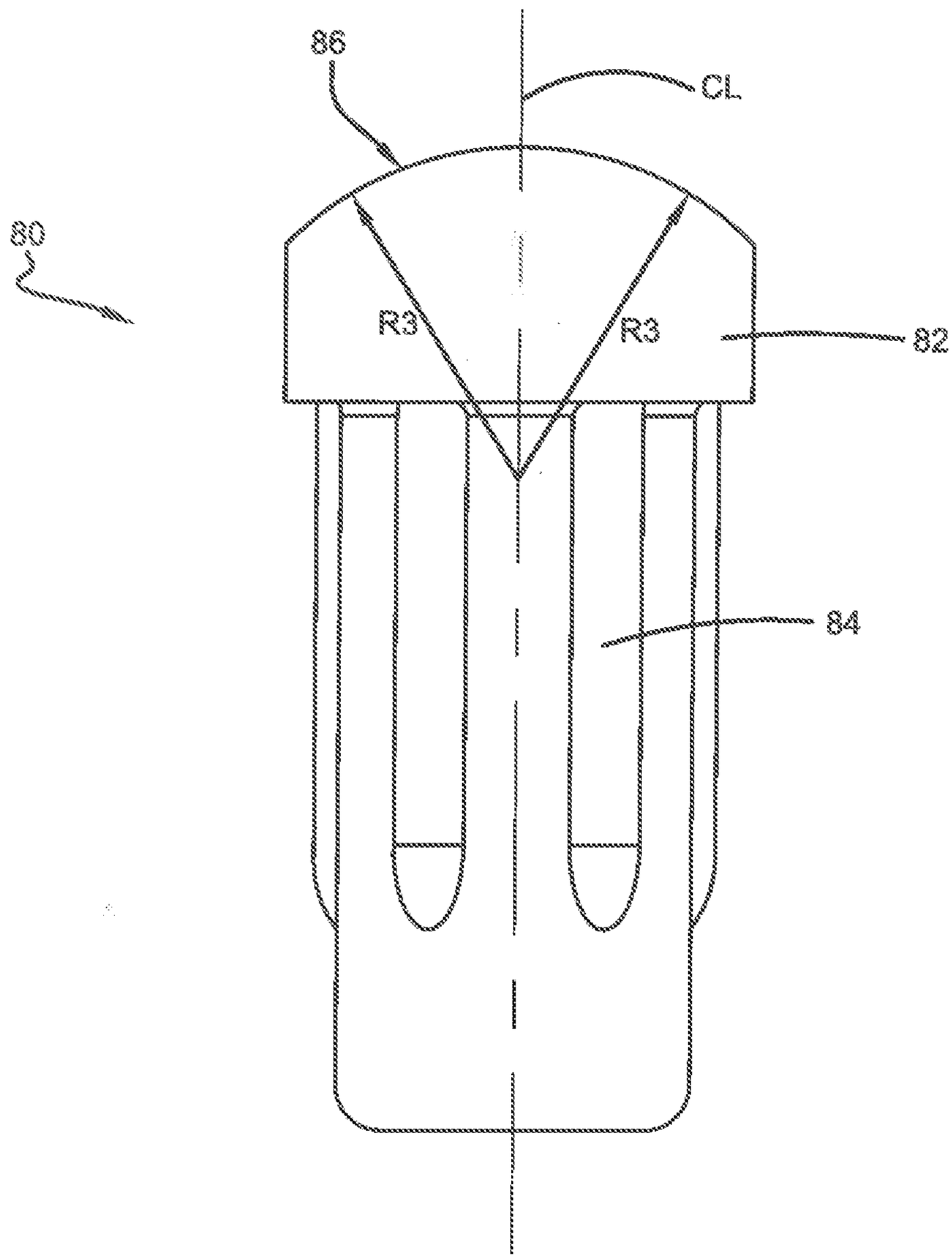

FIG. 17

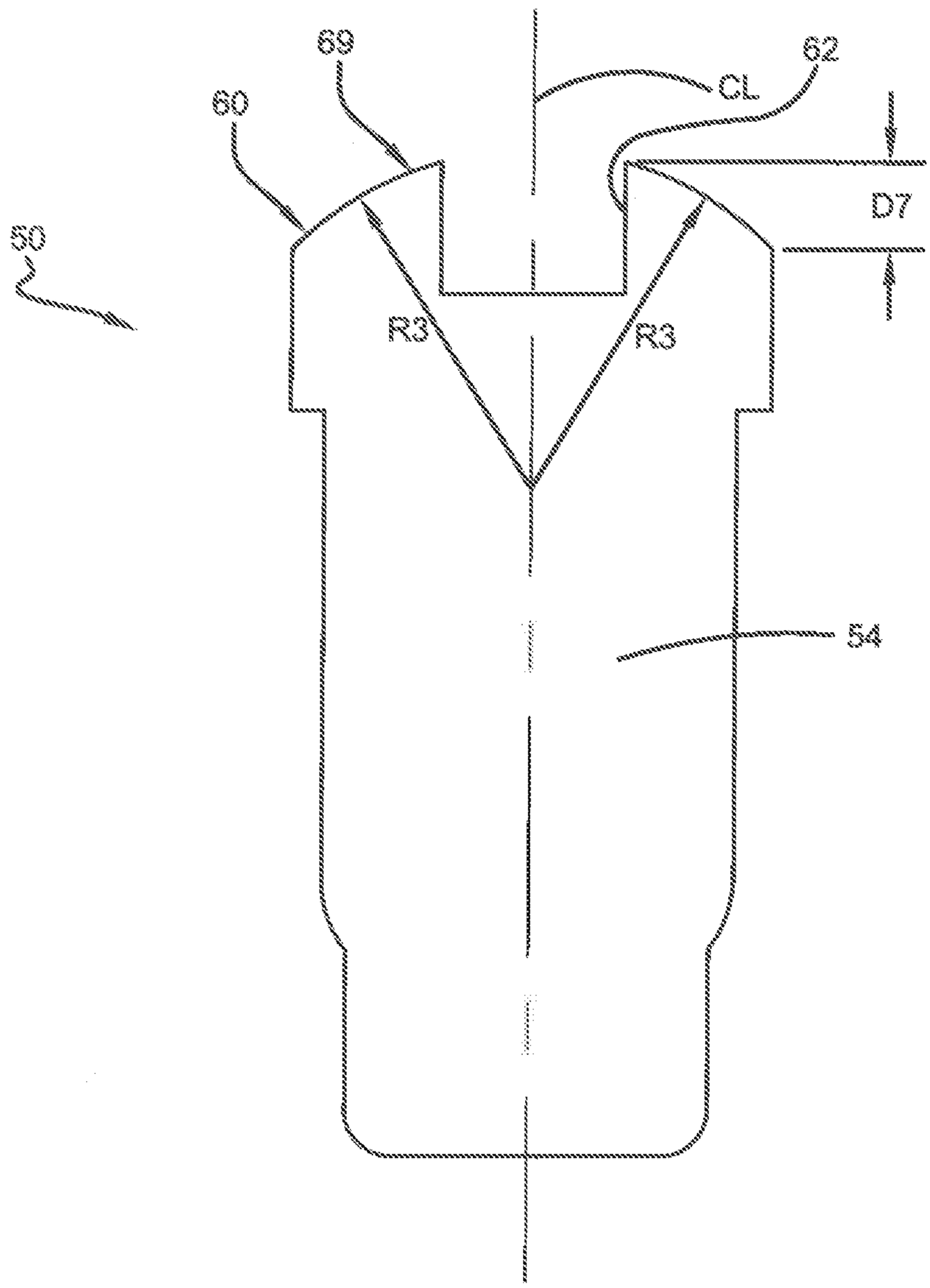

FIG. 18

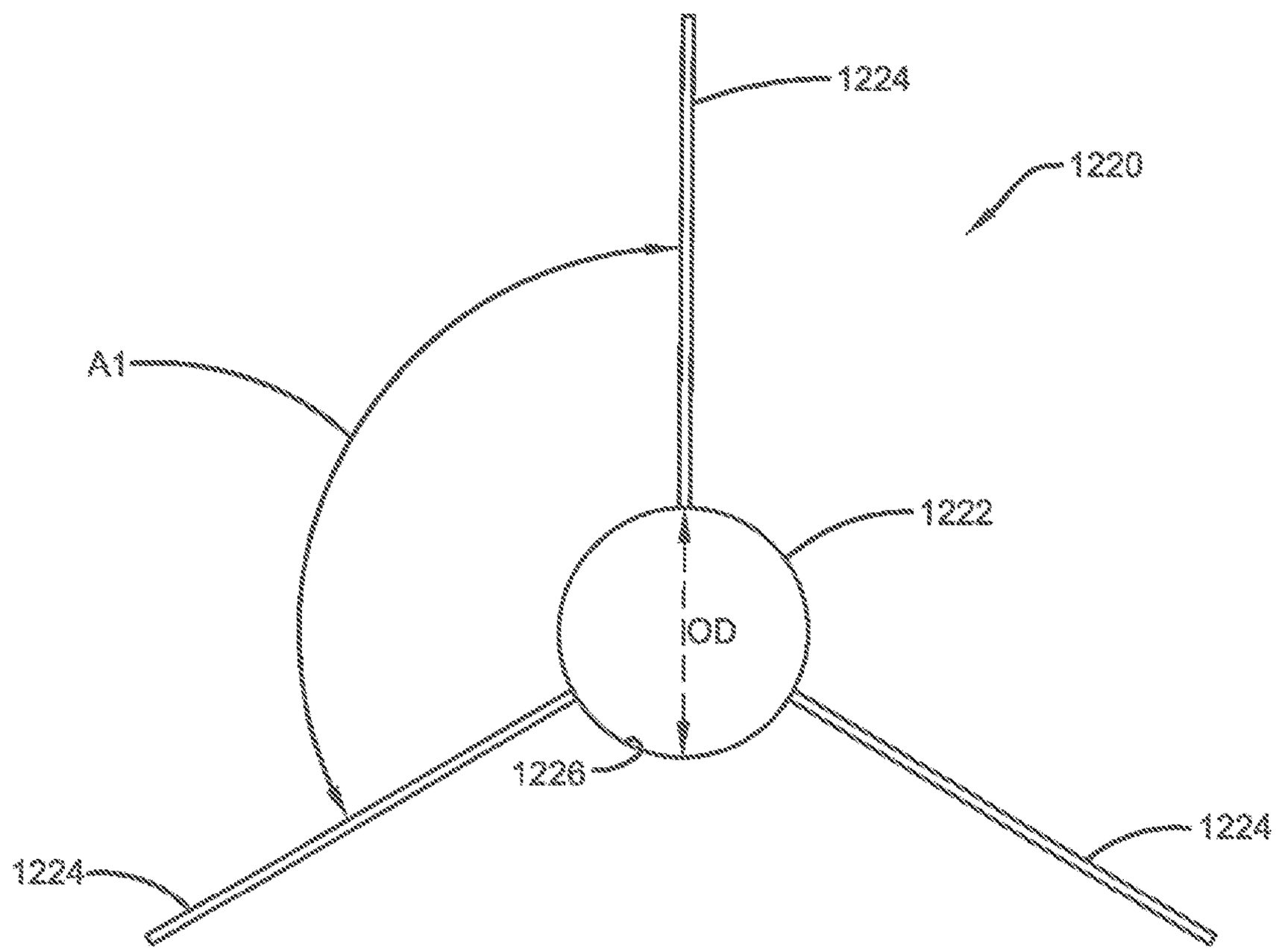

FIG. 19

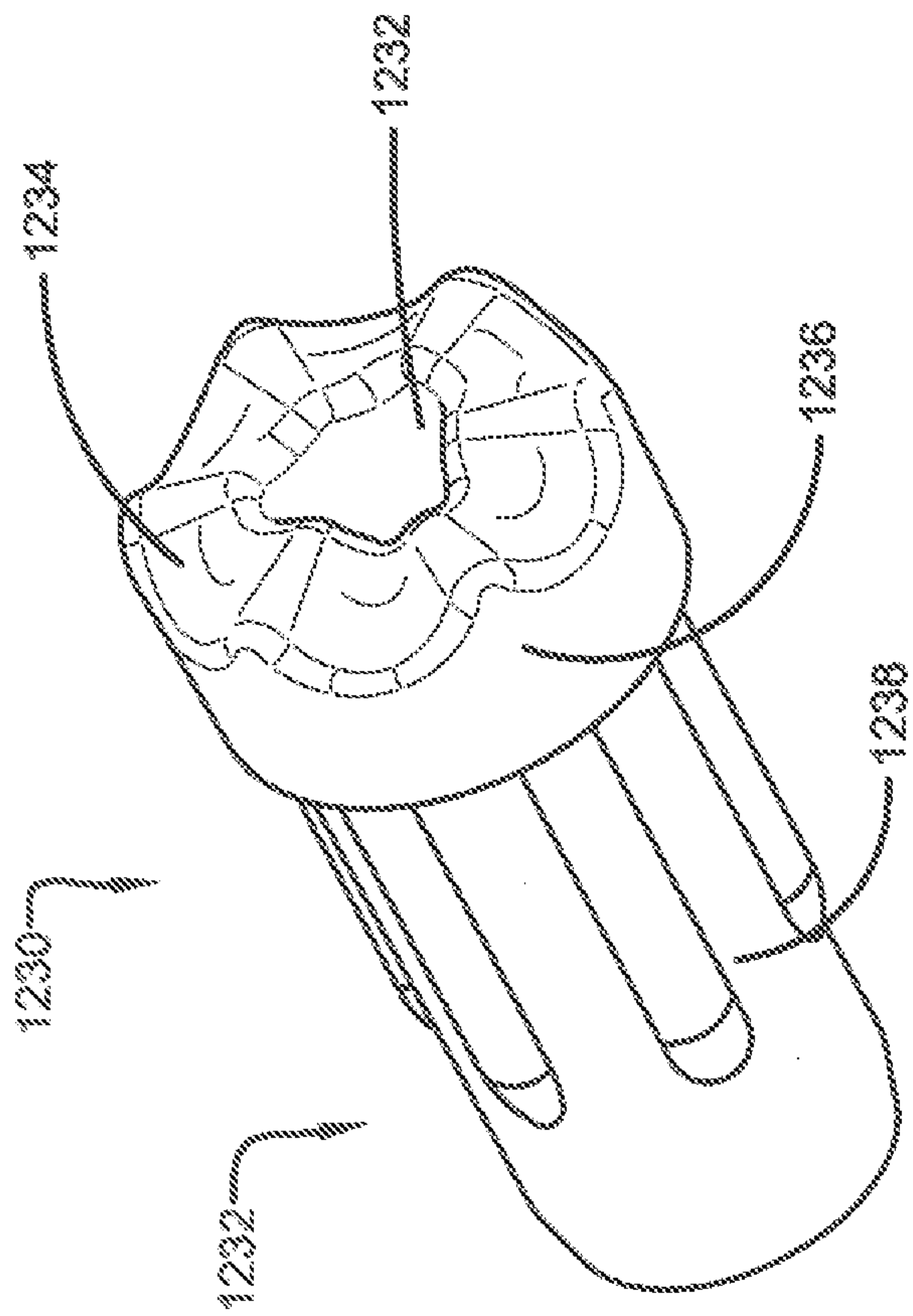

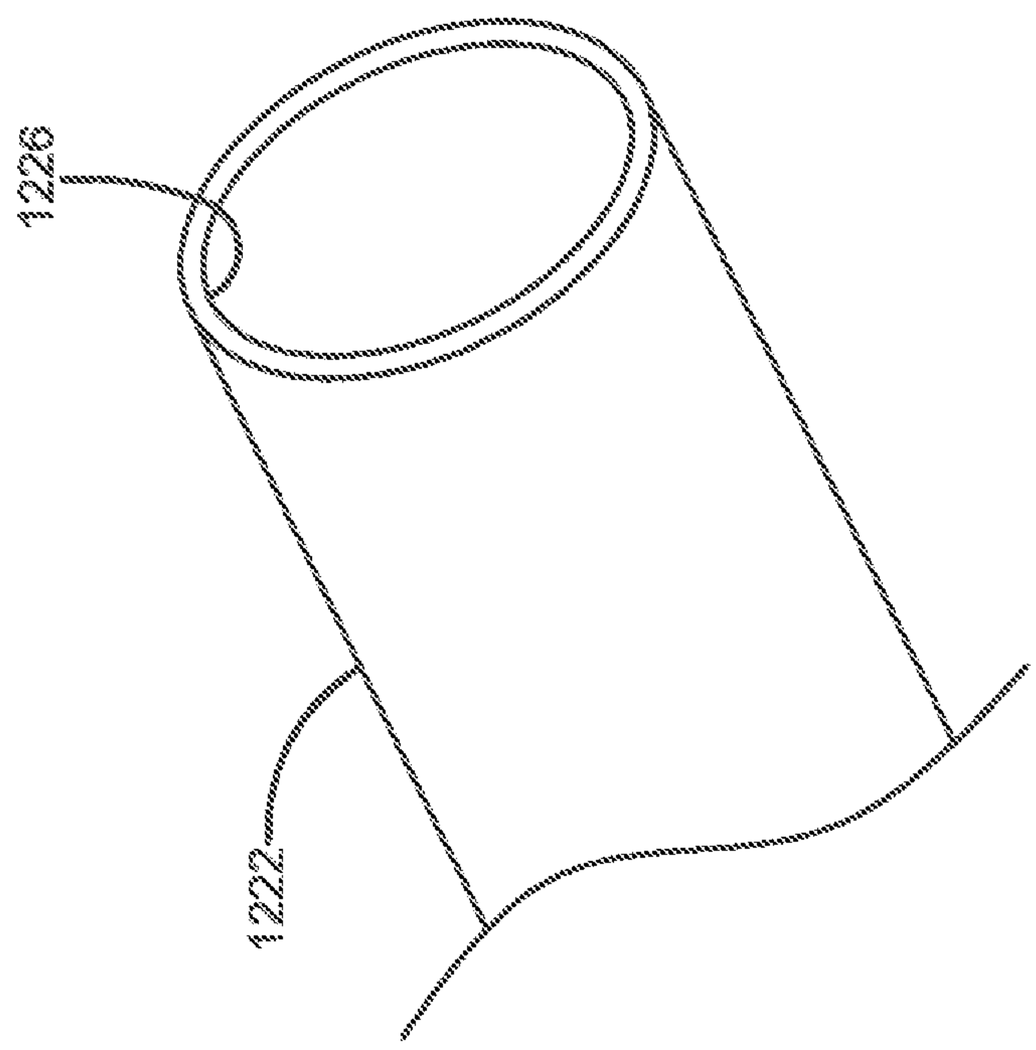

FIG. 20

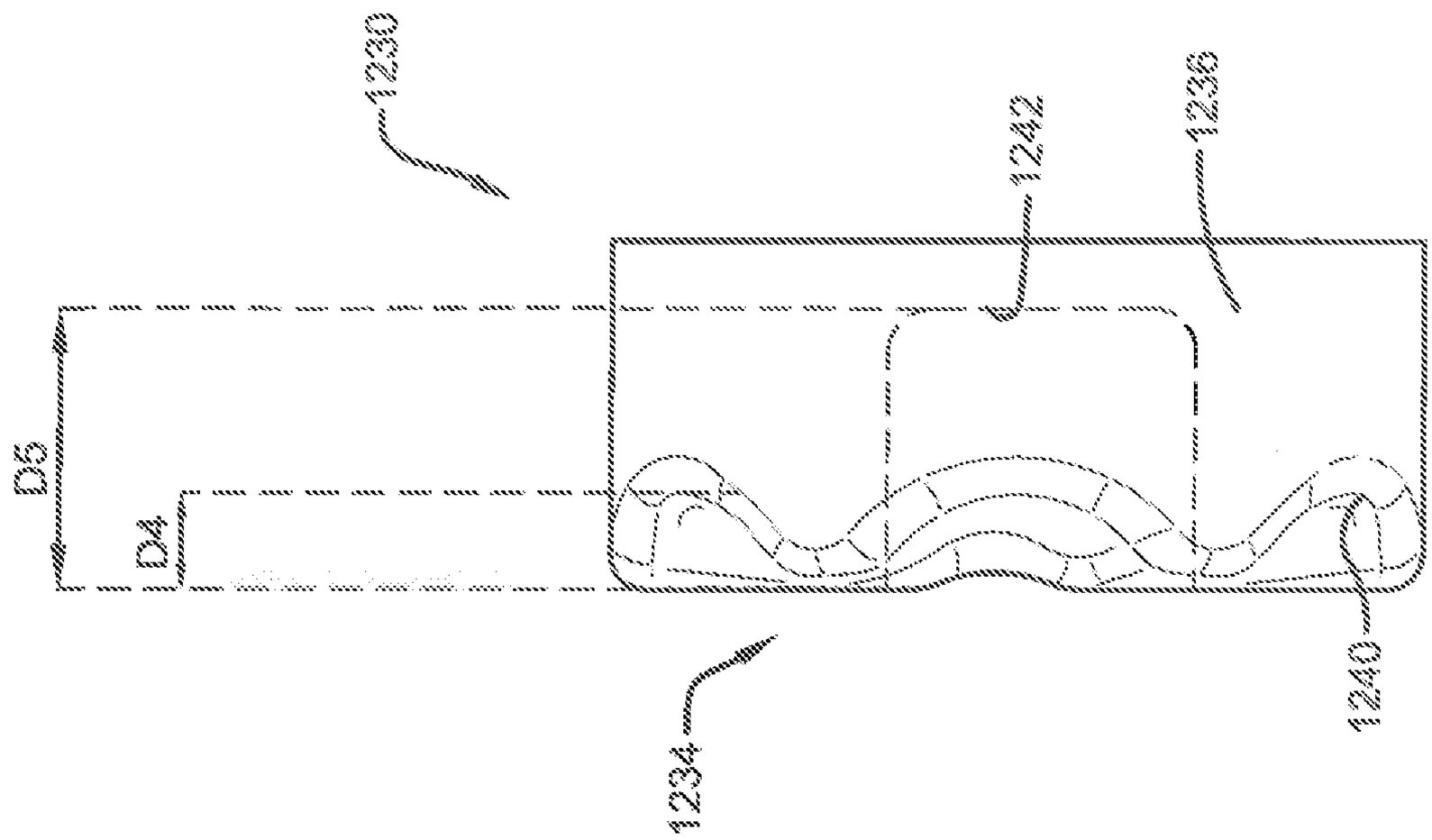
1230
1242
1236
D5
D4
1234
1240

FIG. 22

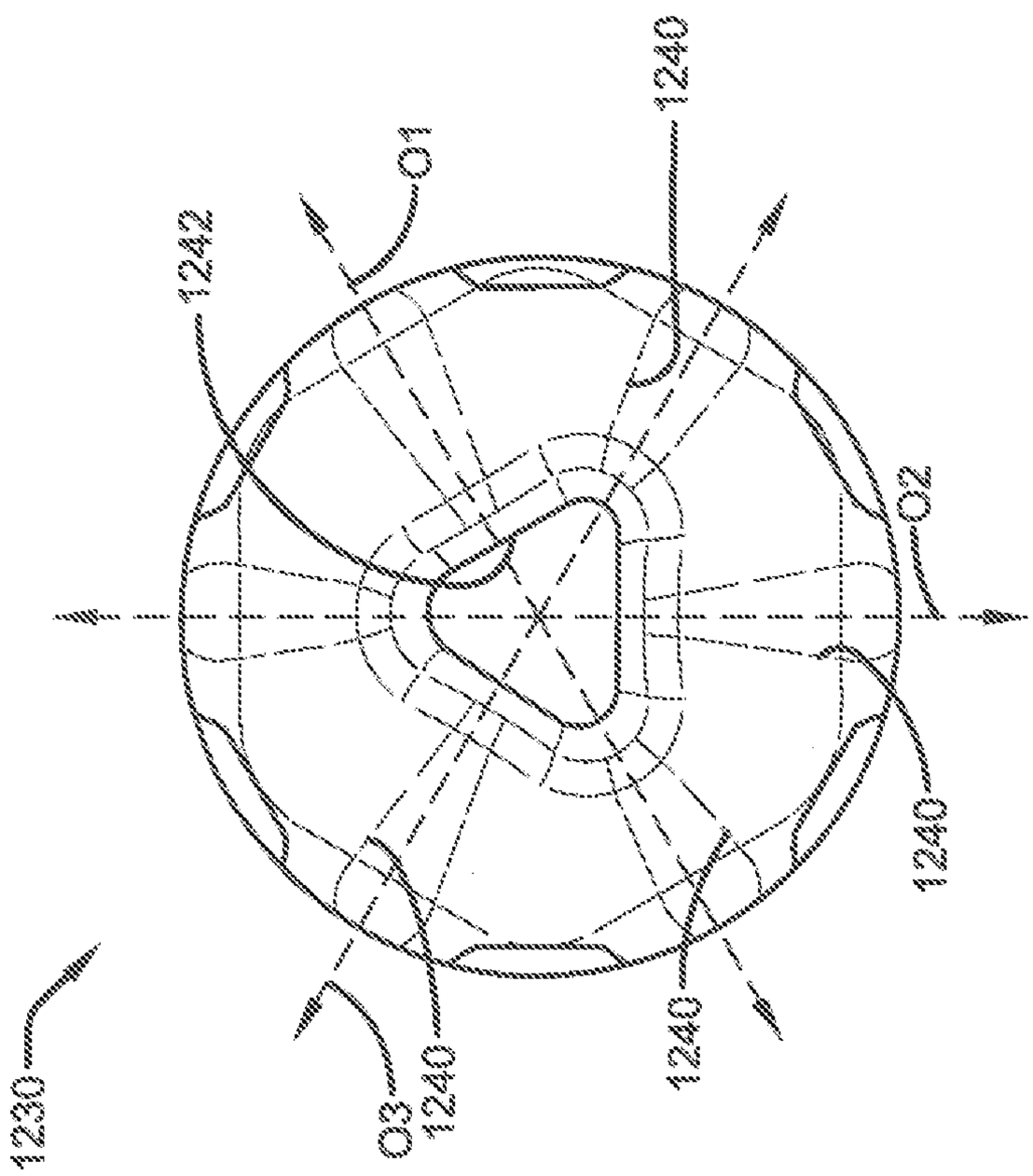
1240
O1
1242
O2
1240
1230
O3
1240
1240

FIG. 21

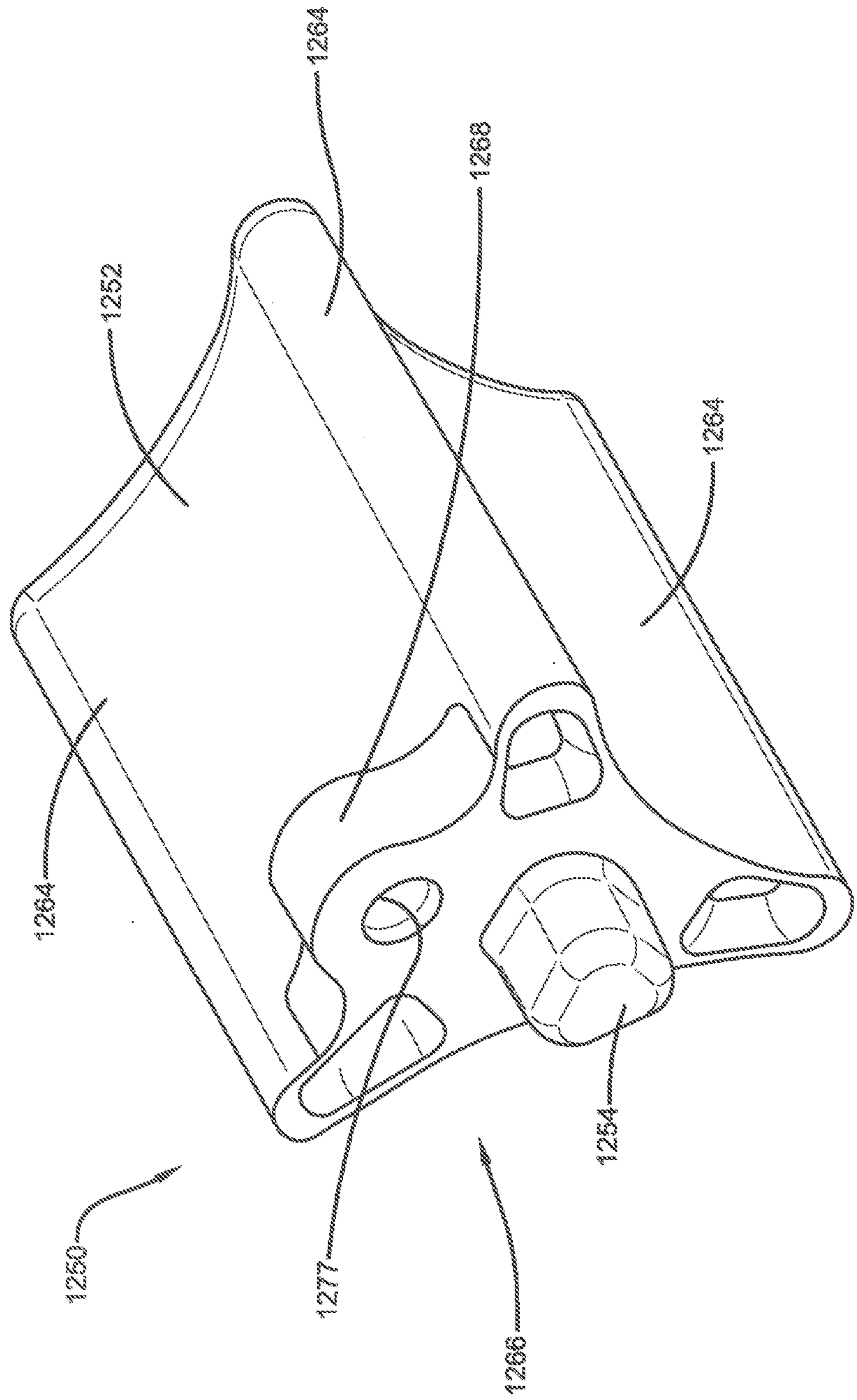

FIG. 23

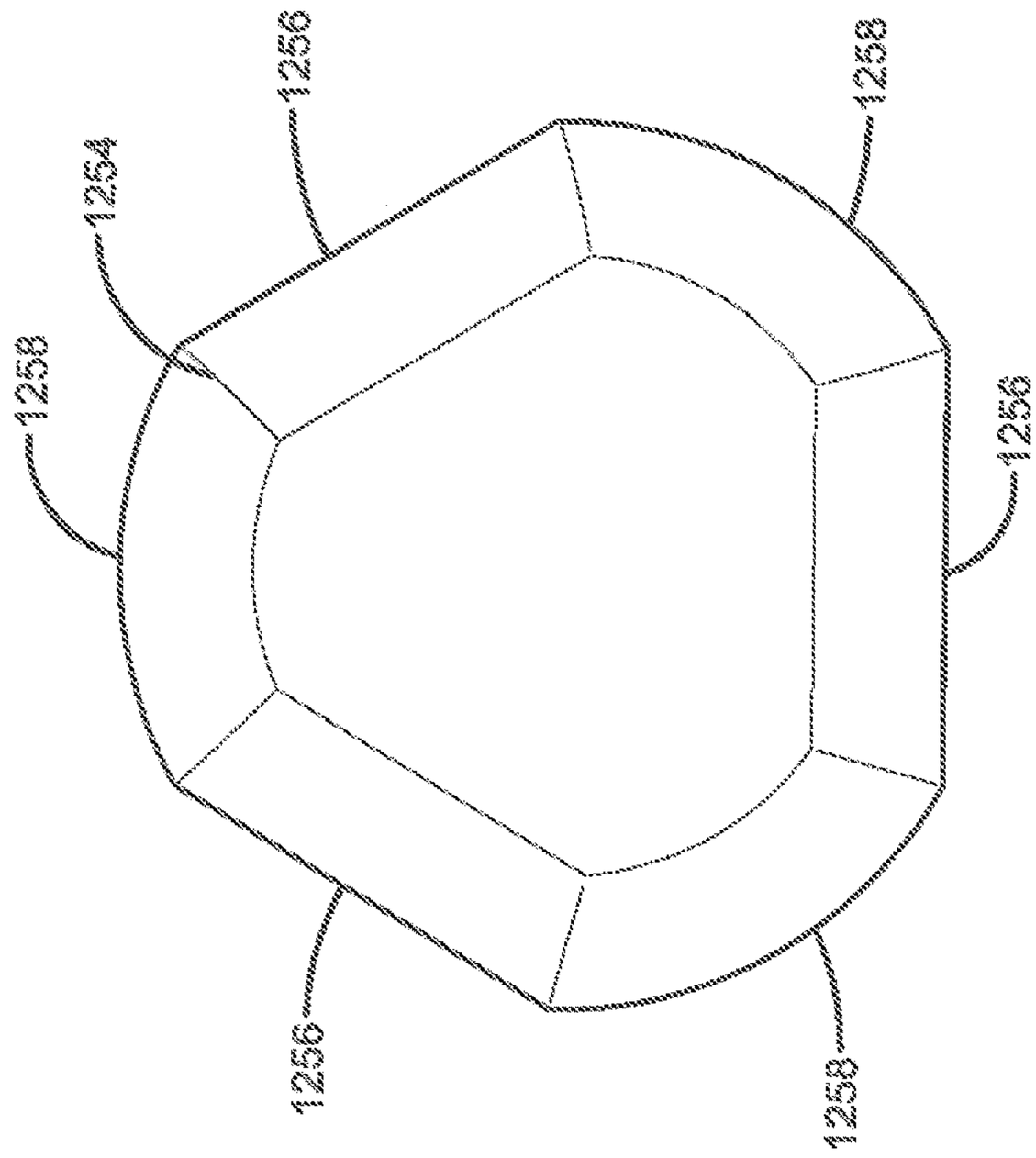
1258
1254
1256
1258
1256
1256
1258

FIG. 25

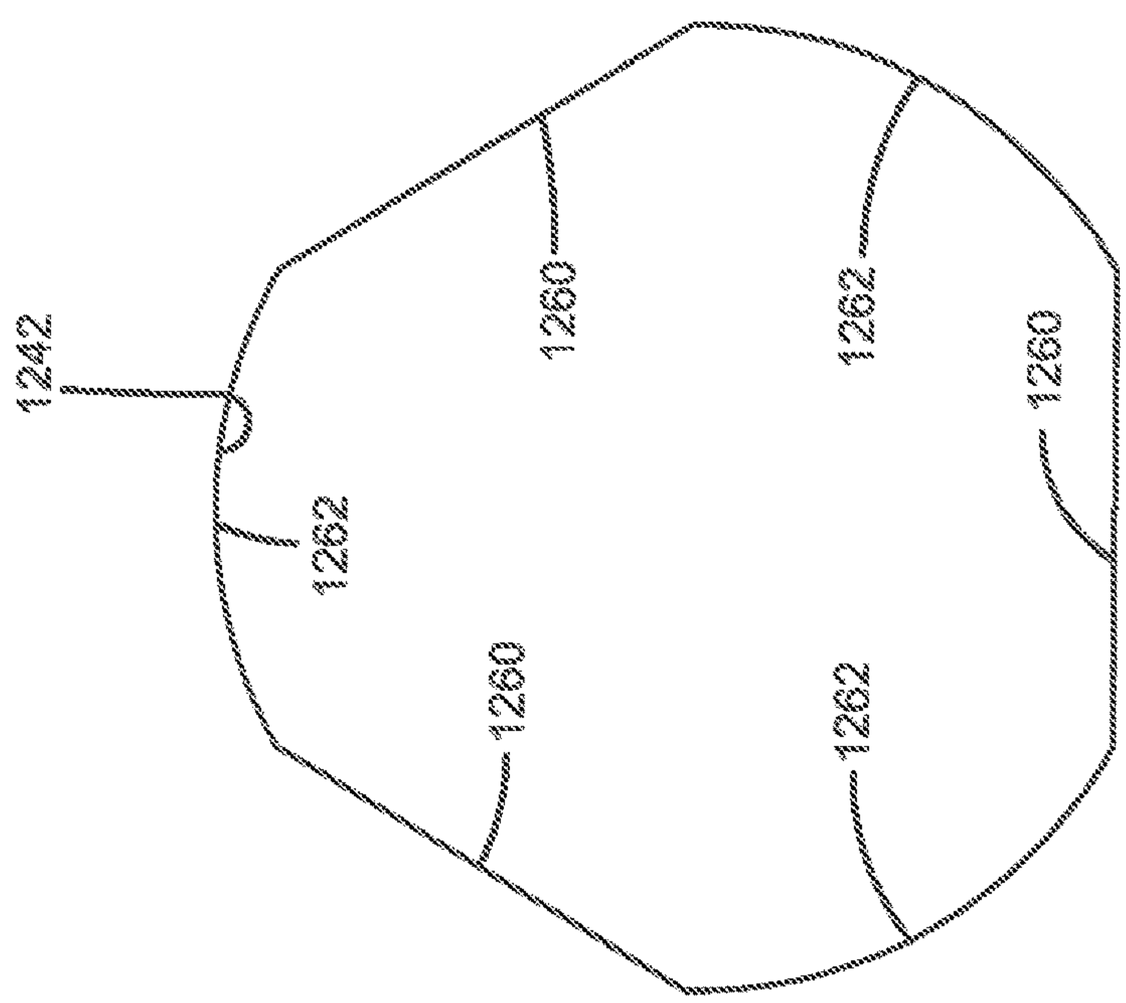
1242
1262
1260
1262
1260
1262
1260

FIG. 24

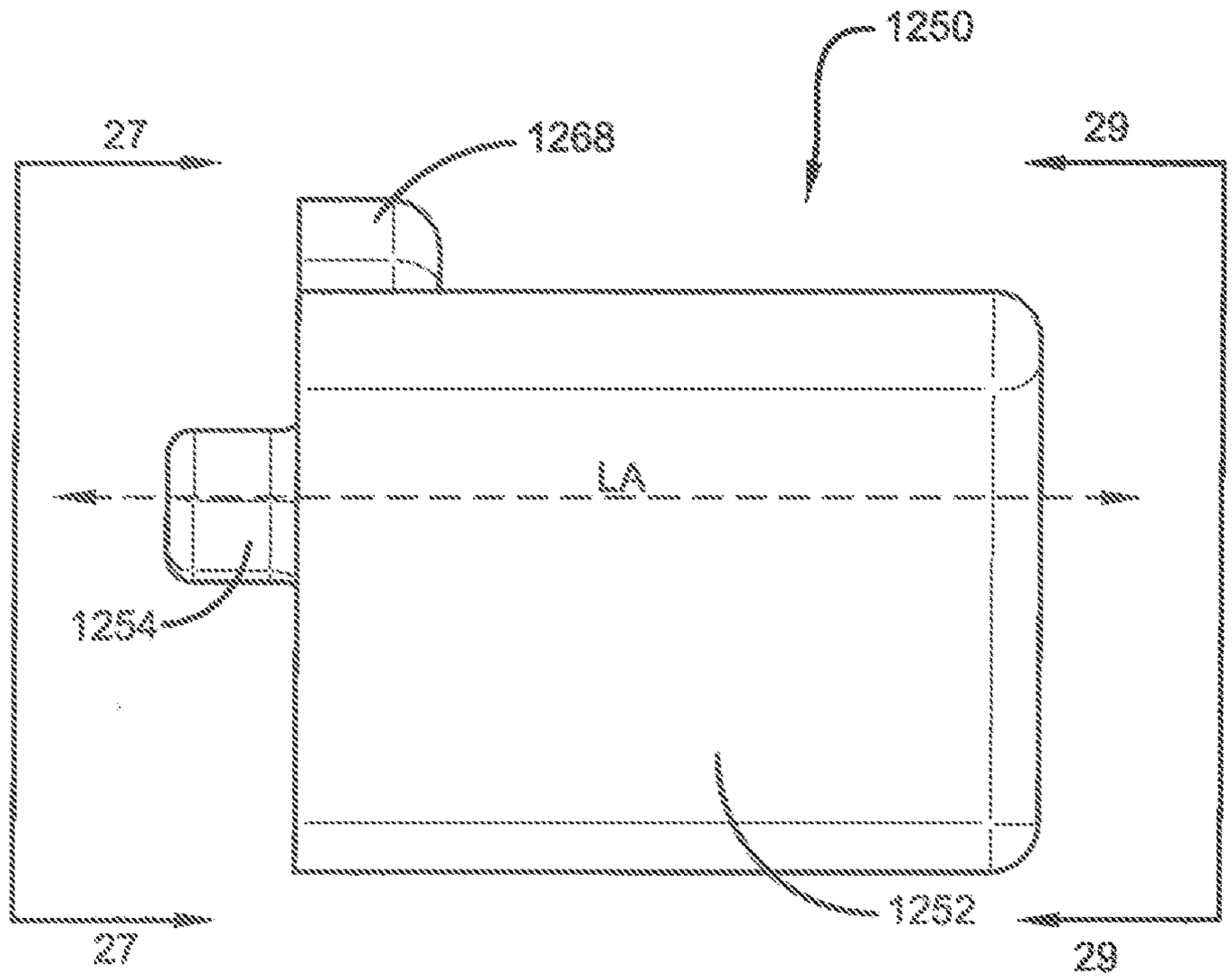
1250
27
1268
29
LA
1254
1252
27
29

FIG. 26

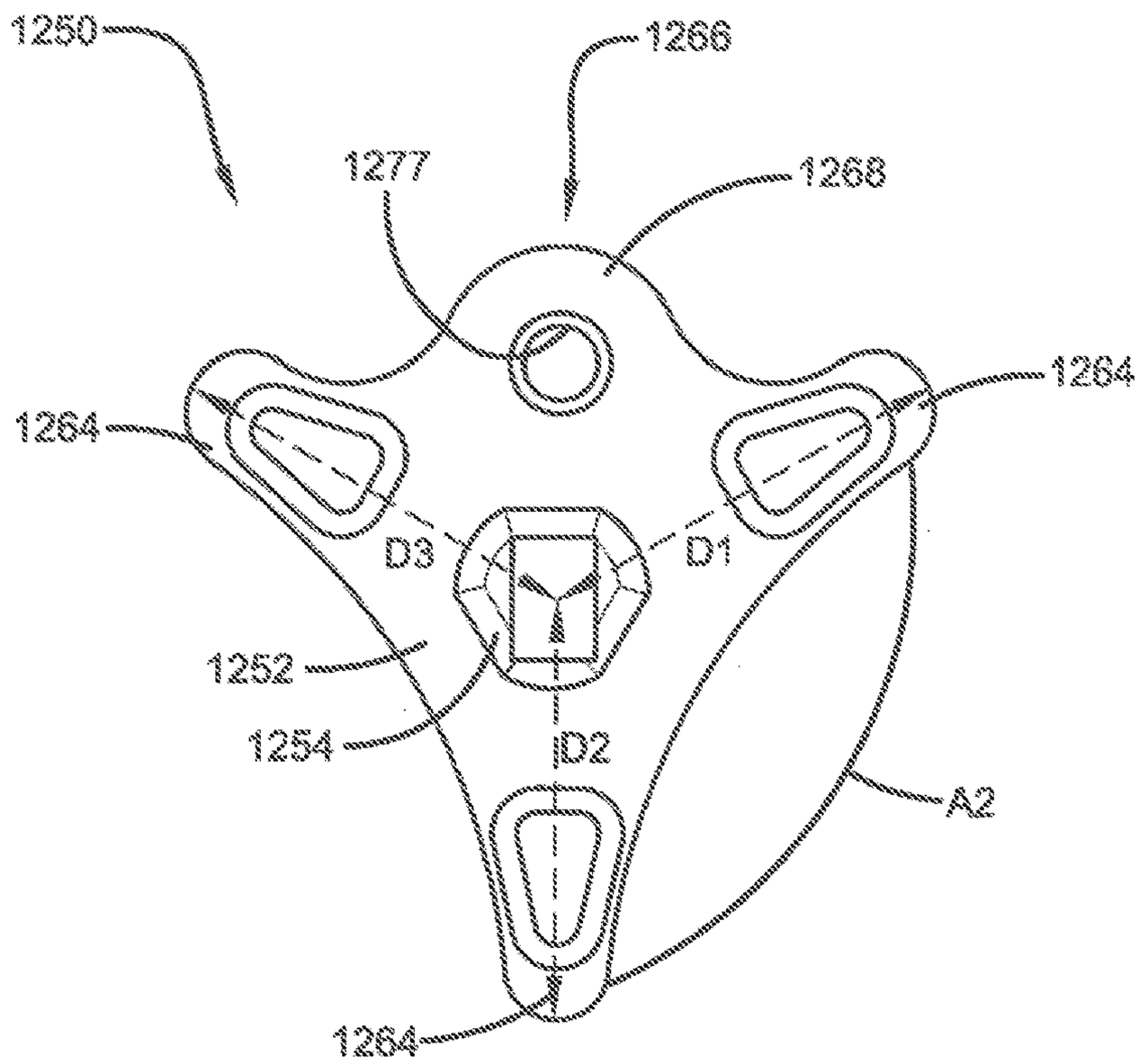
1250
1266
1277
1268
1264
1264
D3
D1
1252
1254
D2
A2
1264

FIG. 27

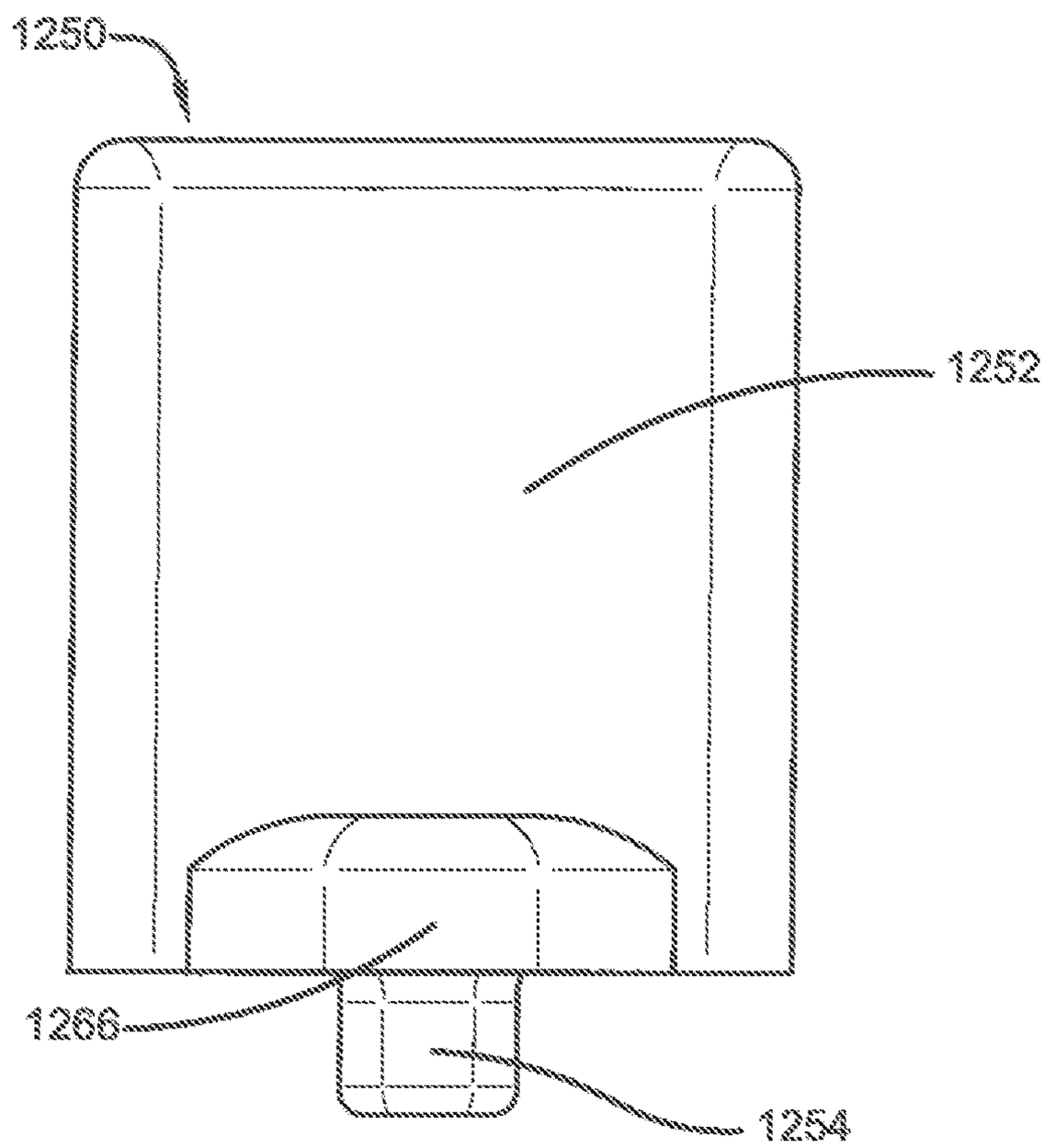

FIG. 28

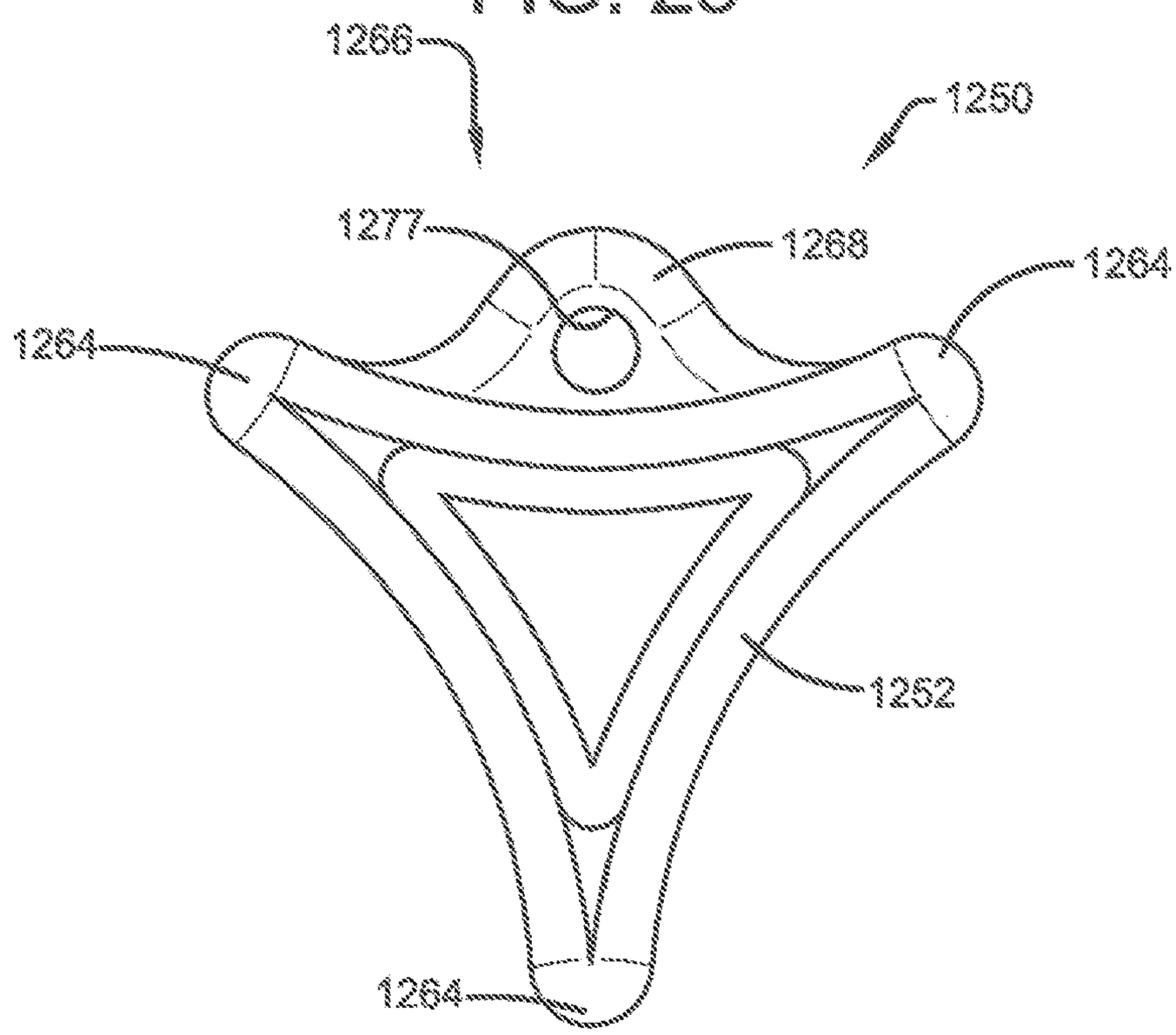

FIG. 29

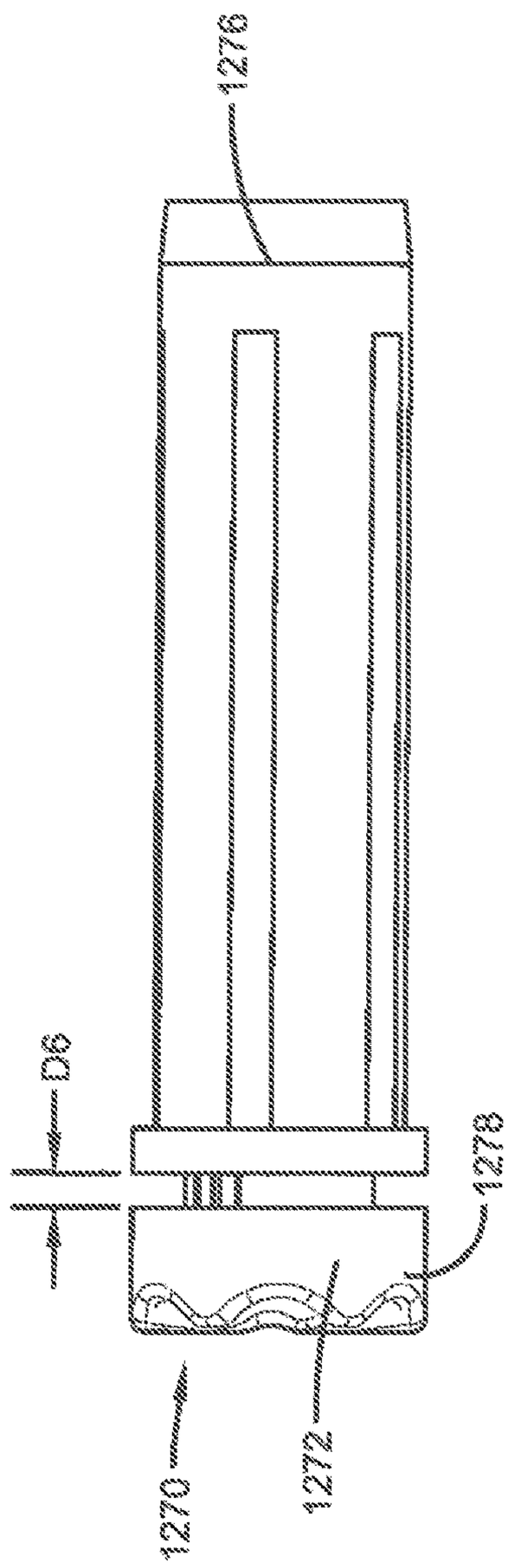
1276
D6
1278
1270
1272

FIG. 30

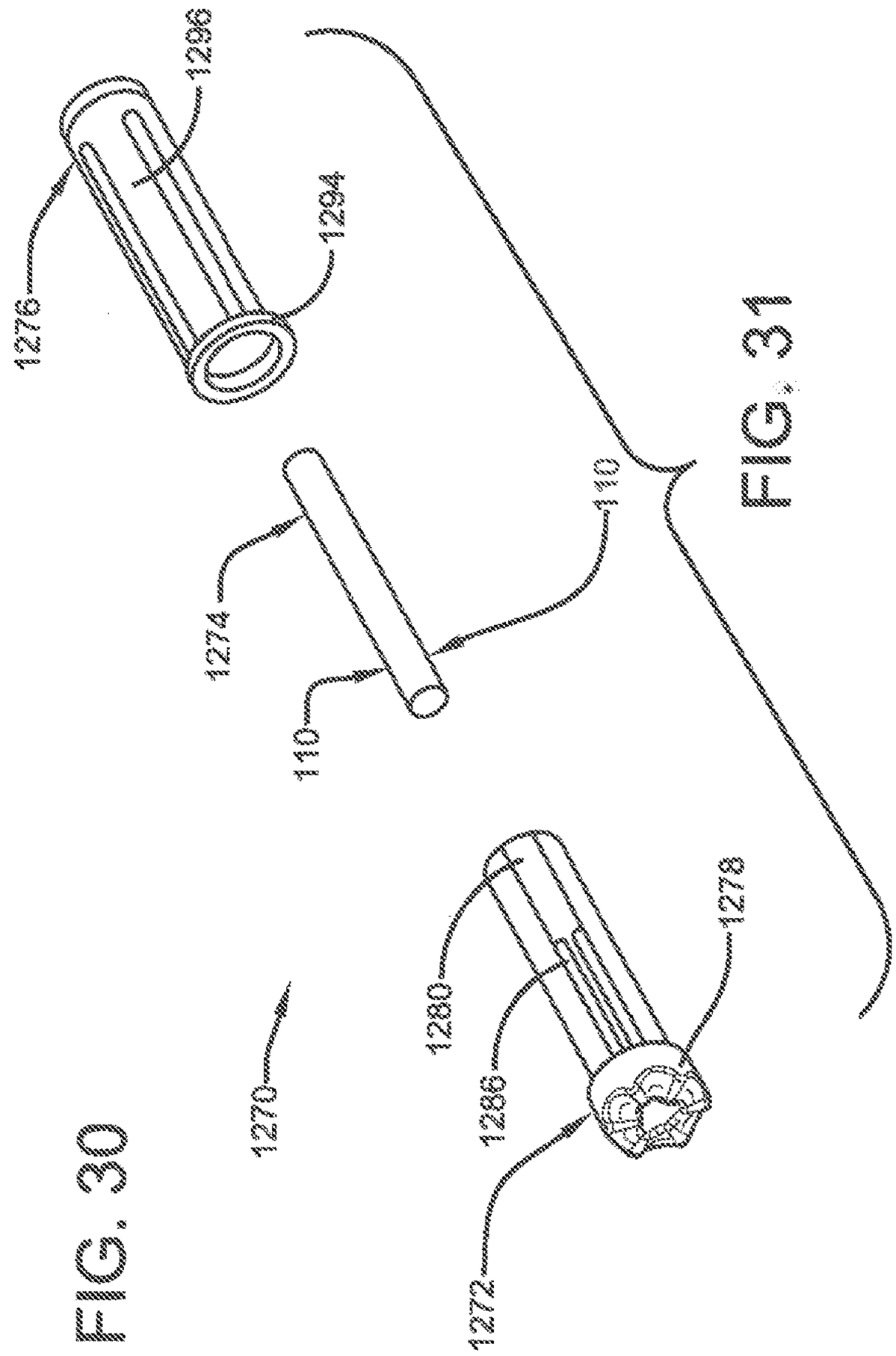
1296
1294
1276
1274
110
110
1270
1280
1286
1278
1272

FIG. 31

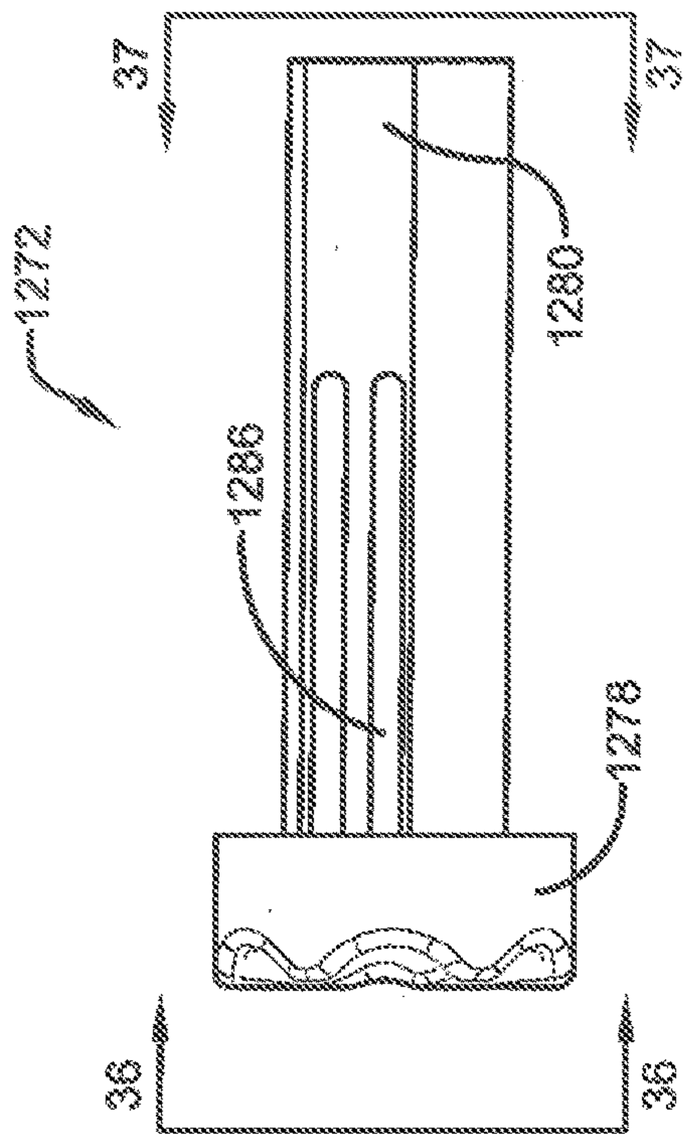

FIG. 33

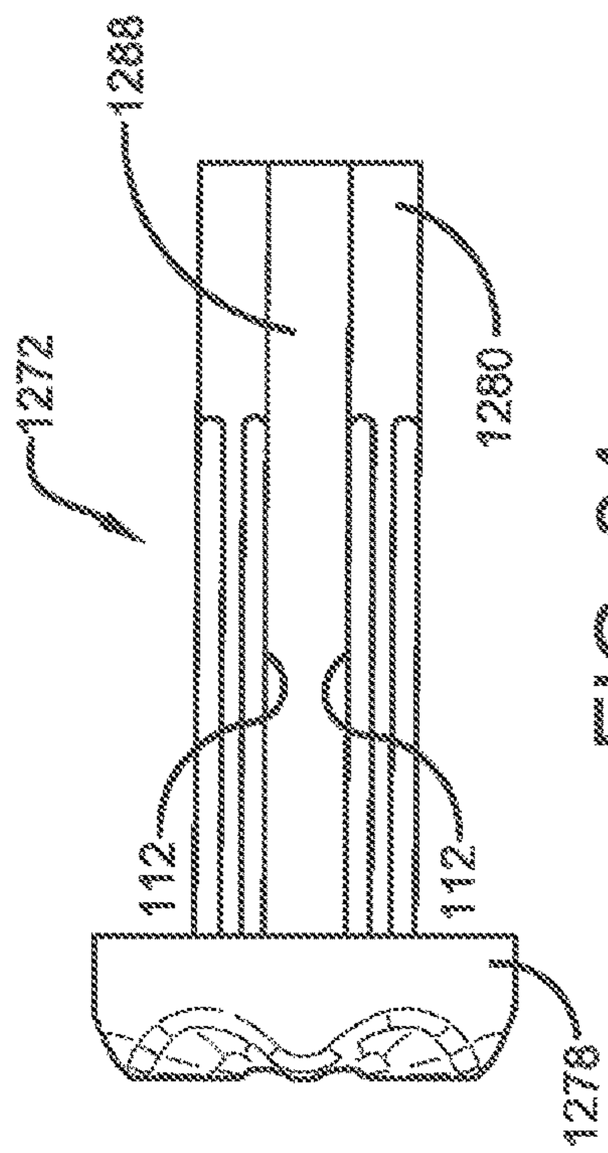

FIG. 34

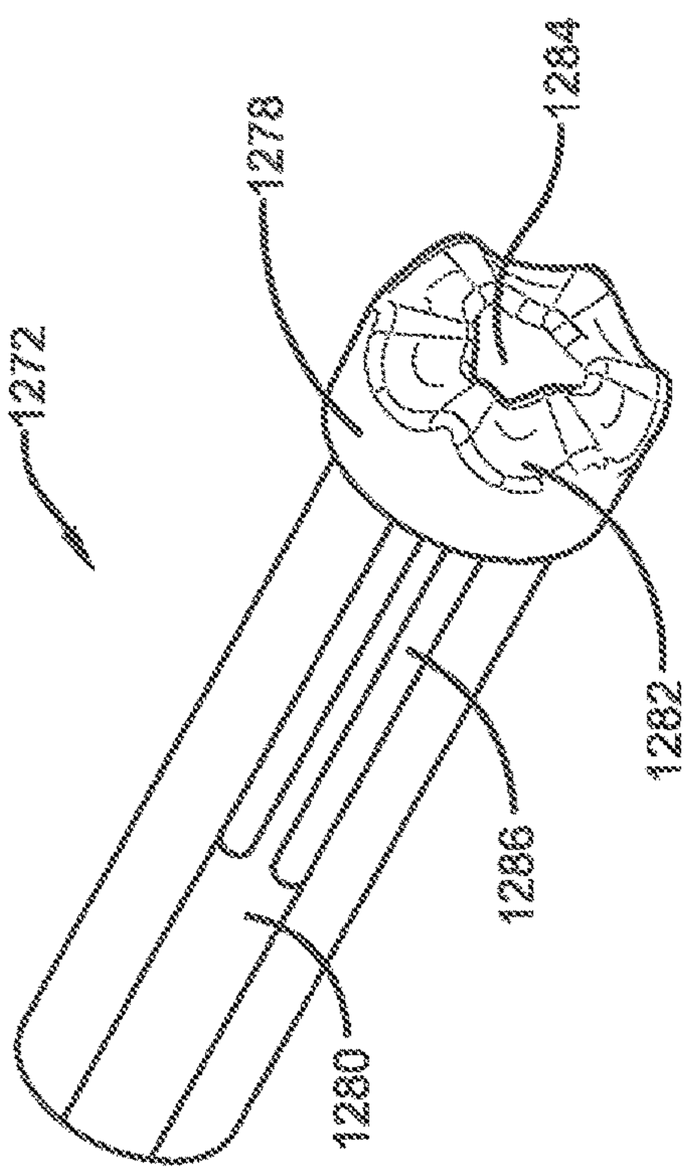

FIG. 32

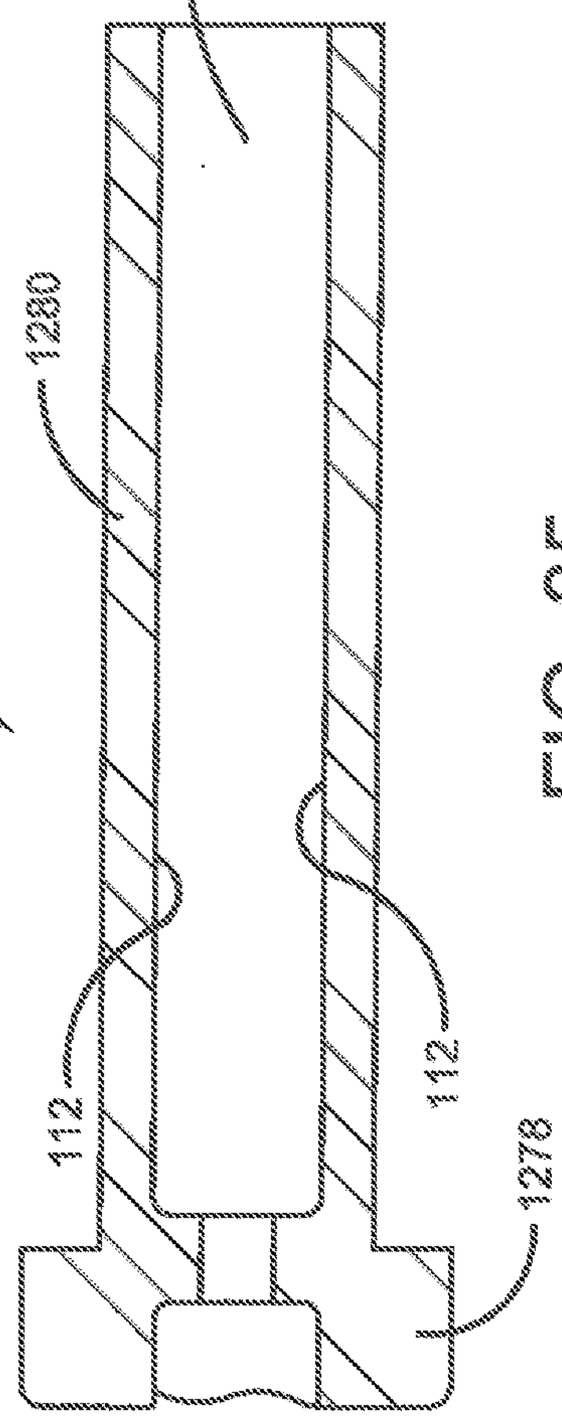

FIG. 35

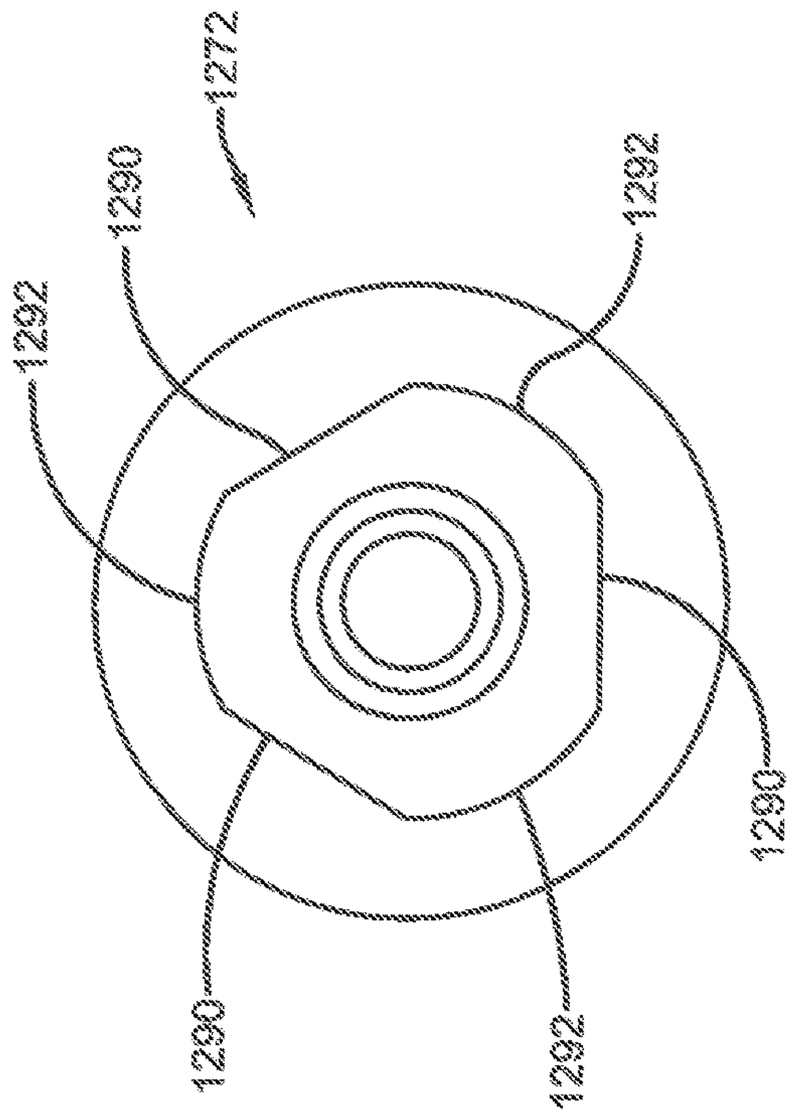

FIG. 37

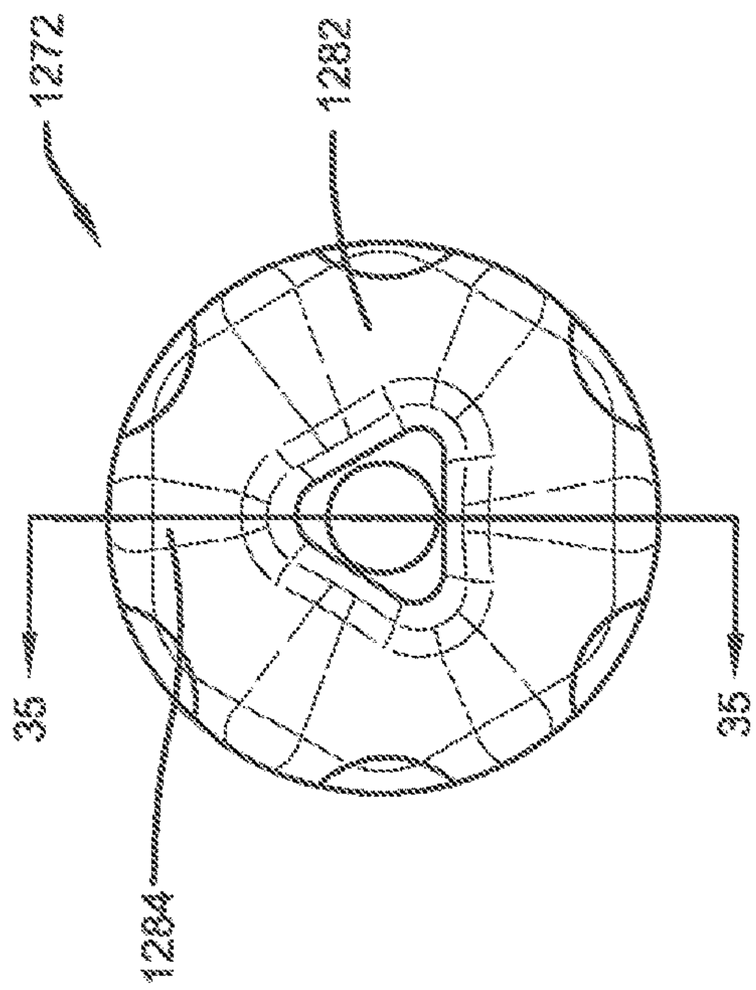

FIG. 36

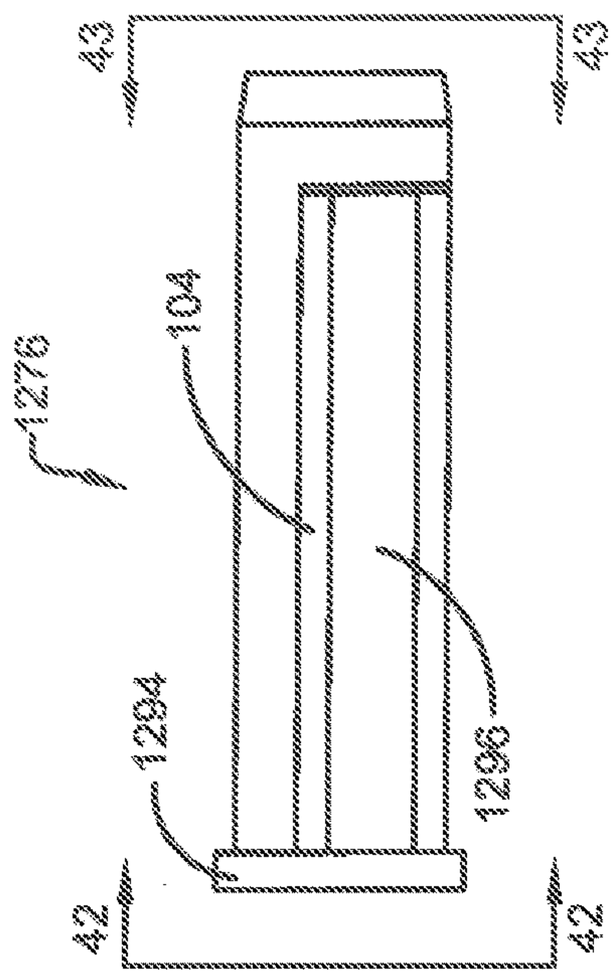

FIG. 39

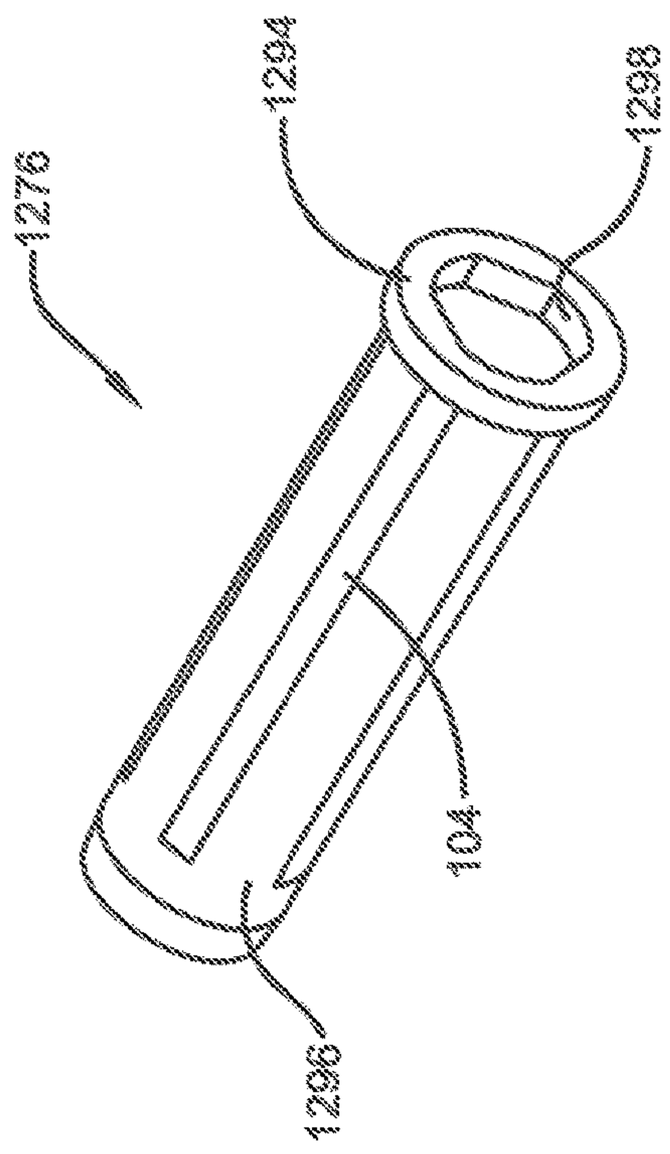

FIG. 38

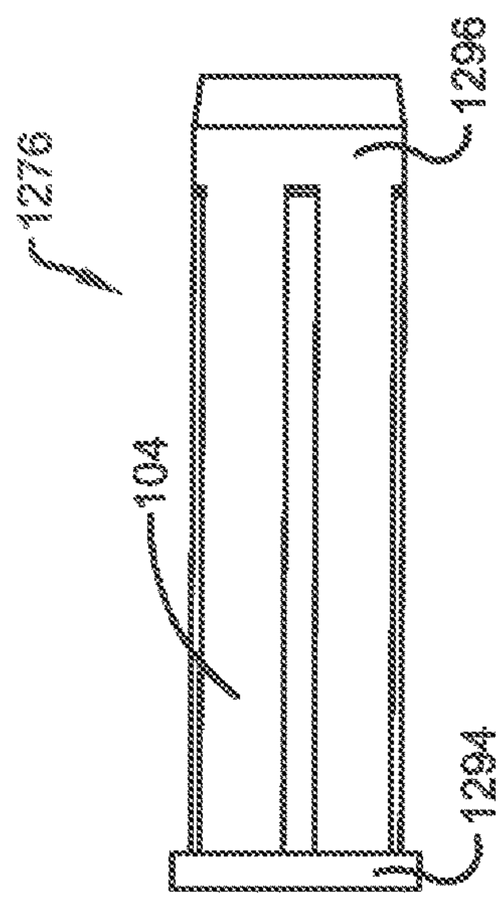

FIG. 40

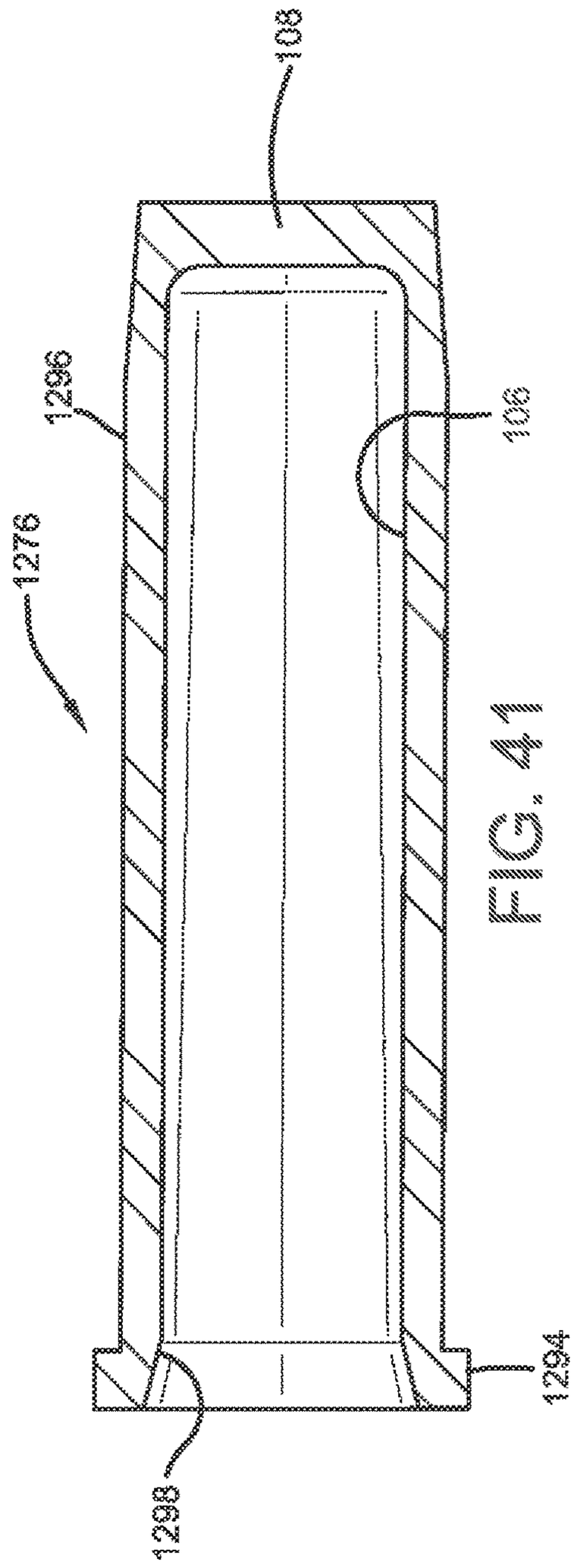

FIG. 41

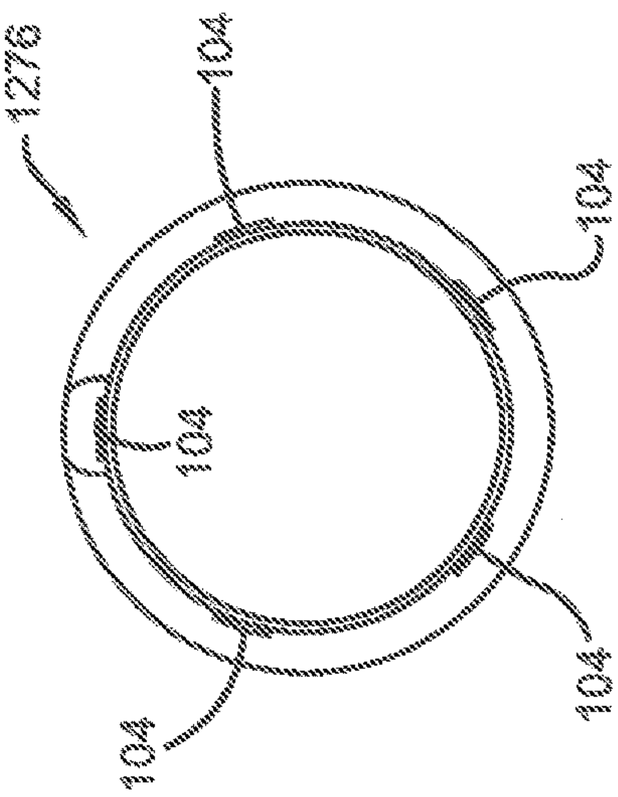

FIG. 43

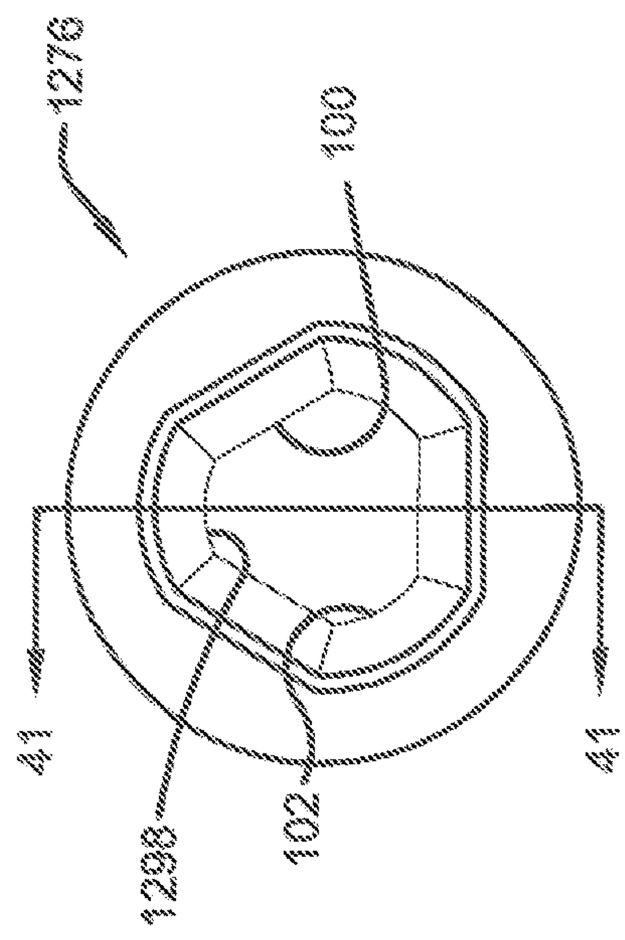

FIG. 42

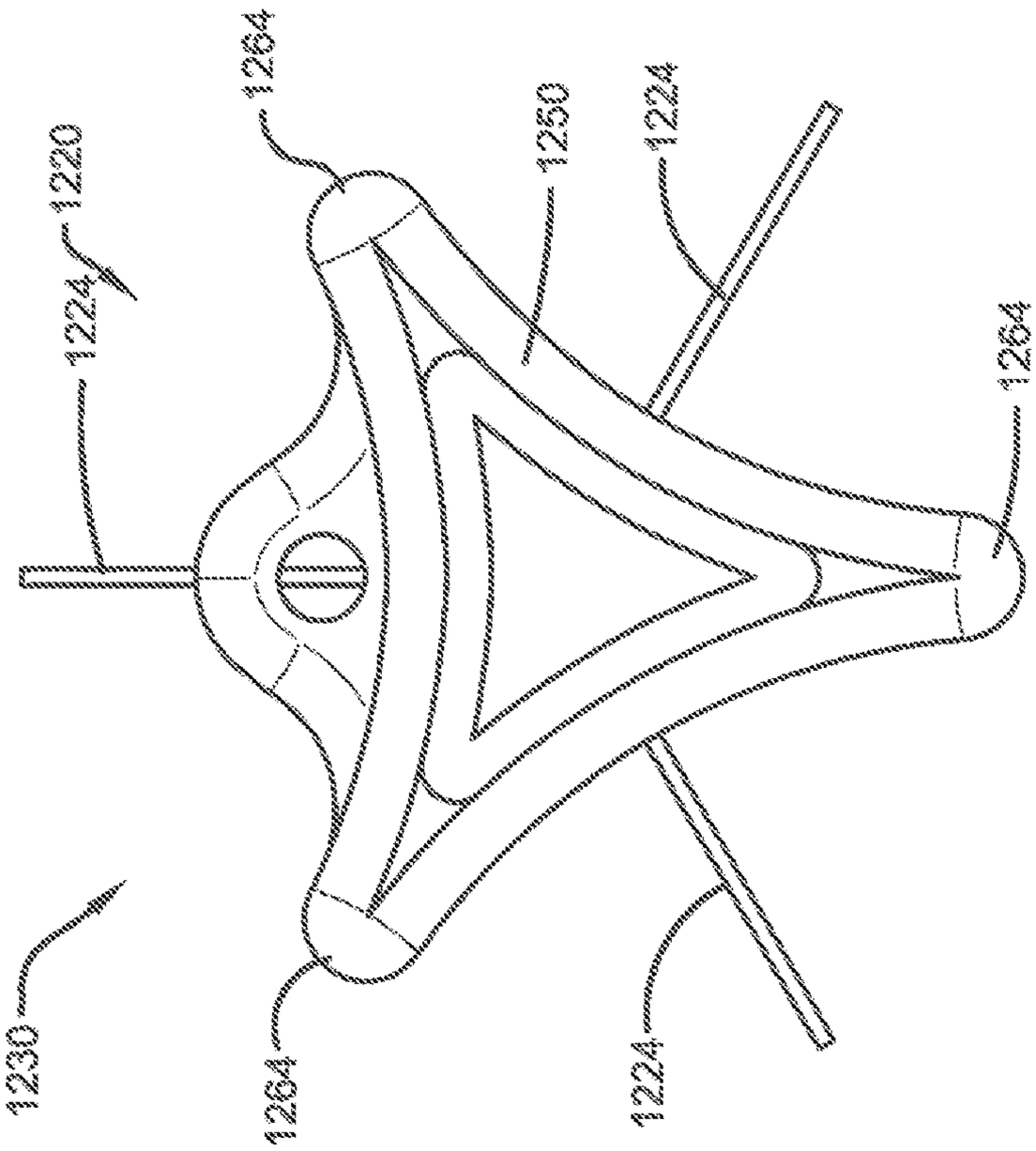
1224
1220
1264
1250
1224
1264
1230
1264
1224

FIG. 45

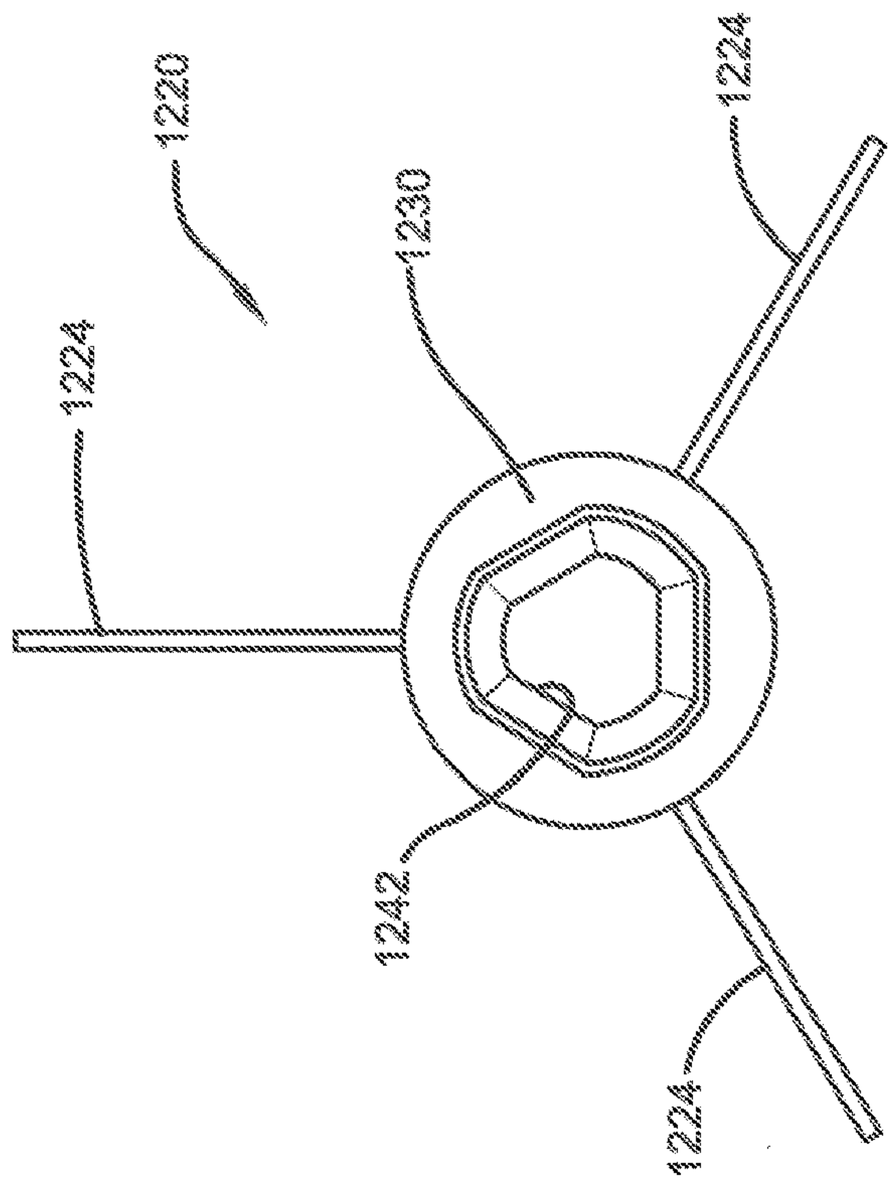
1220
1224
1230
1224
1242
1224

FIG. 44

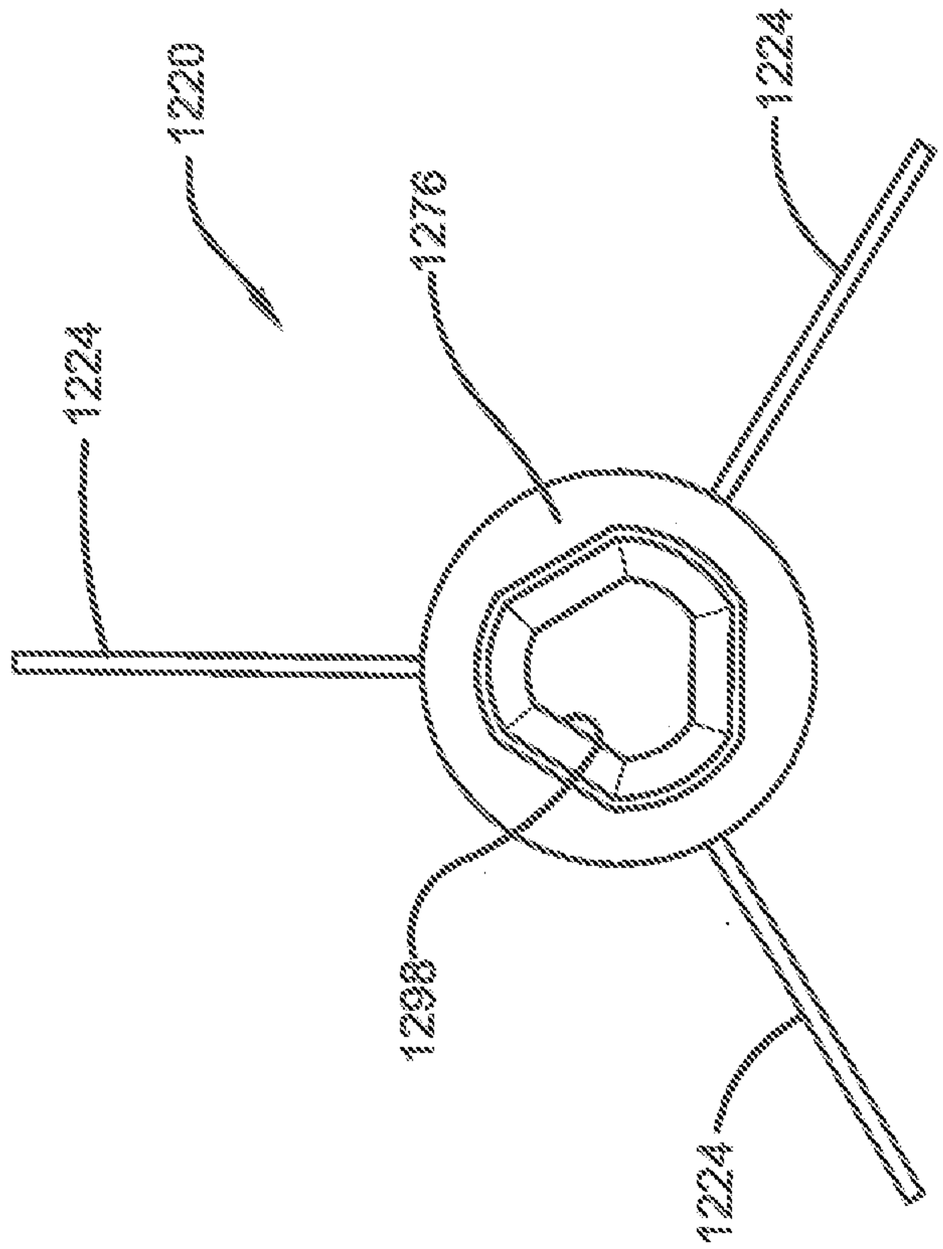
1220
1224
1276
1224
1298
1224

FIG. 47

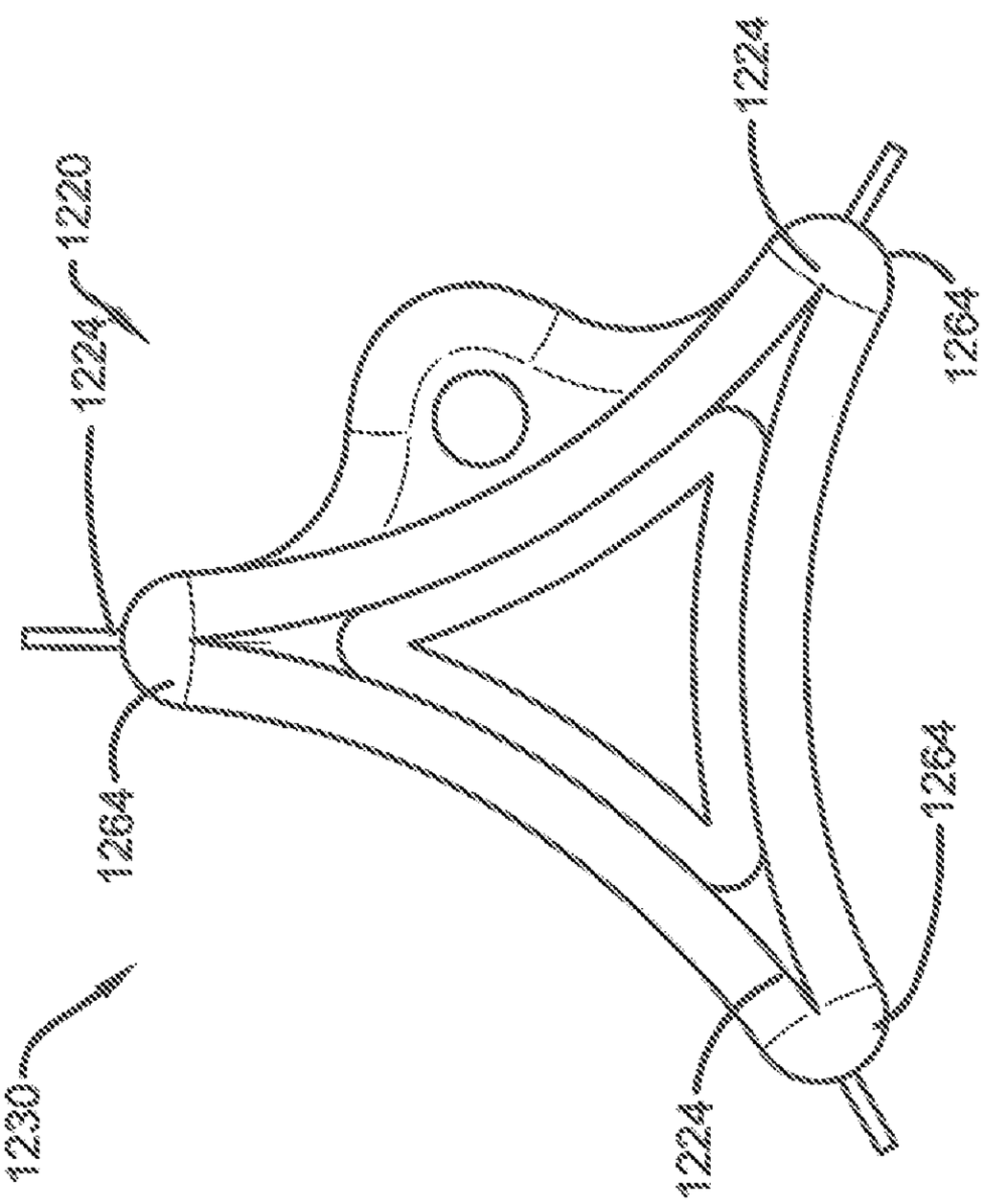
1224
1220
1224
1264
1264
1264
1230
1224

FIG. 46

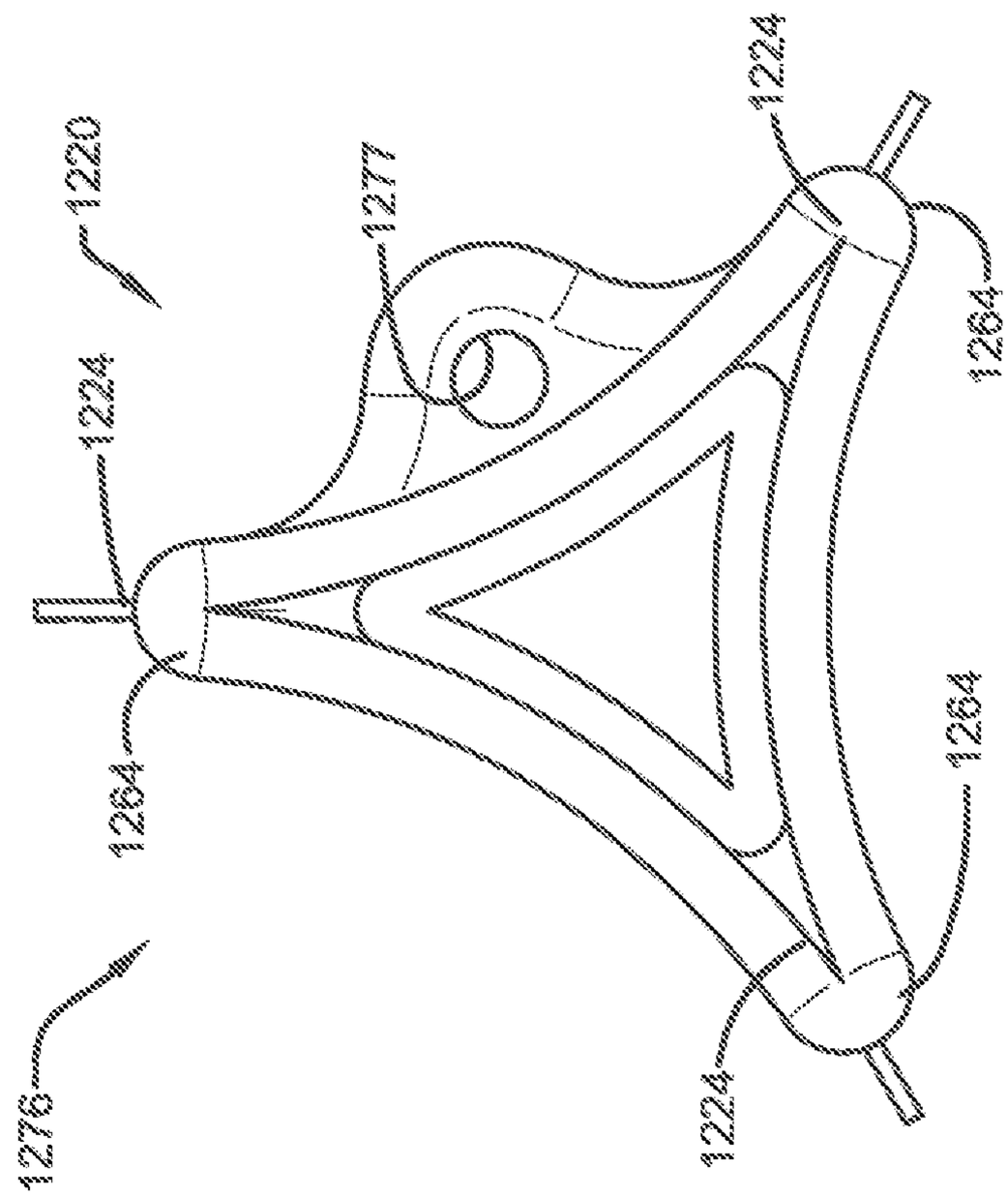
1220
1224
1277
1224
1264
1264
1264
1276
1224

FIG. 49

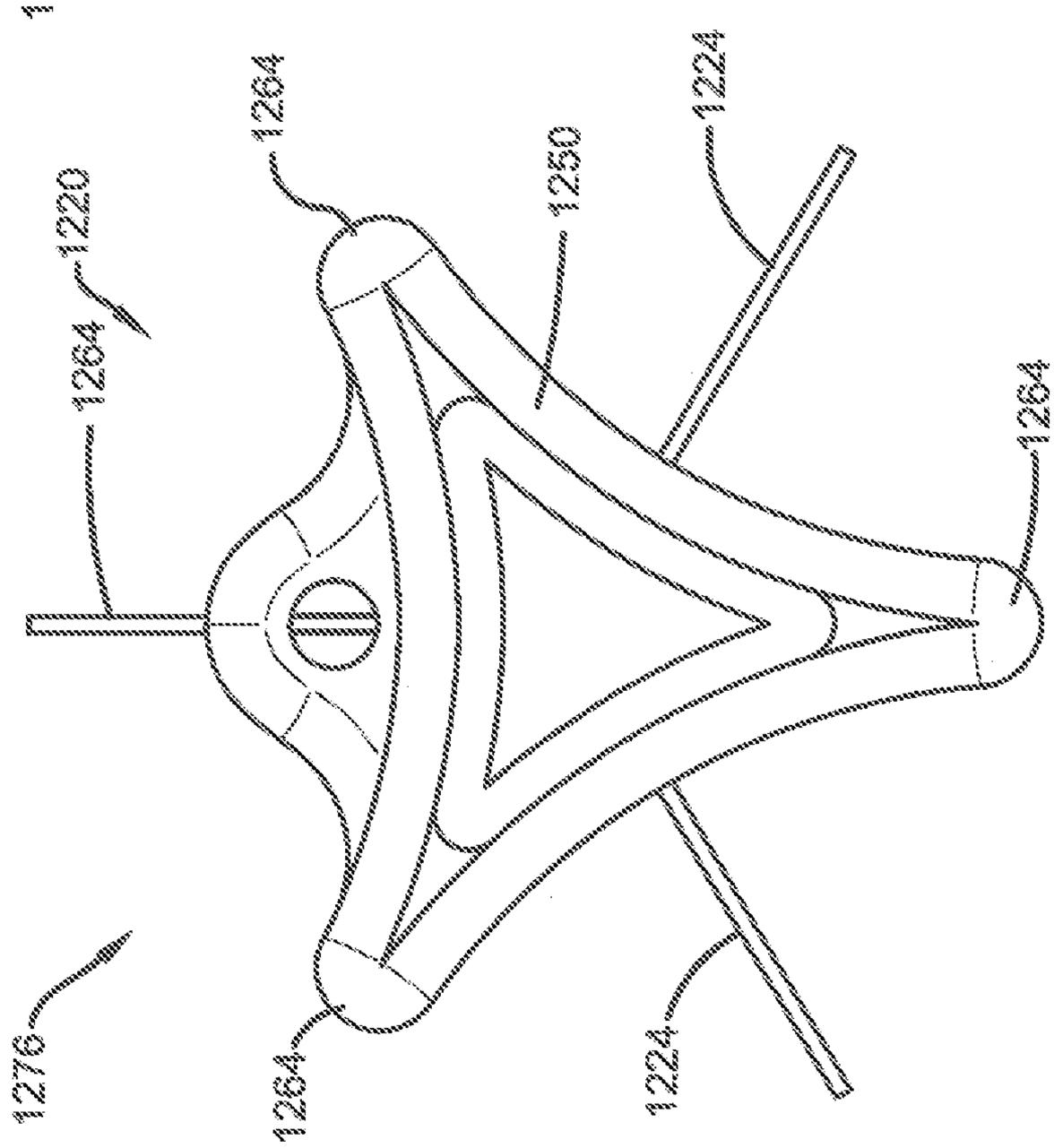
1264
1220
1264
1250
1224
1264
1276
1264
1224

FIG. 48

METHOD AND APPARATUS FOR ALIGNING ARROW NOCKS

[0001] This application is a continuation of U.S. patent application Ser. No. 16/173,042 filed Oct. 29, 2018 entitled METHOD AND APPARATUS FOR ALIGING ARROW NOCK, which is a continuation of U.S. patent application Ser. No. 15/833,440 filed Dec. 6, 2017 entitled METHOD AND APPARATUS FOR ALIGNING ARROW NOCKS, which is a continuation of U.S. patent application Ser. No. 15/643,056 filed Jul. 6, 2017 entitled METHOD AND APPARATUS FOR ALIGNING ARROW NOCKS, which is a continuation of U.S. patent application Ser. No. 15/276,375 filed Sep. 26, 2016 entitled METHOD AND APPARATUS FOR ALIGNING ARROW NOCKS, which is a continuation-in-part of U.S. patent application Ser. No. 14/729,098 filed Jun. 3, 2015 entitled METHOD AND APPARATUS FOR ALIGNING ARROW NOCKS, which is a continuation-in-part of U.S. patent application Ser. No. 14/091,855 filed Nov. 27, 2013 entitled NOCK DEVICE FOR BOW, which is a continuation of U.S. patent application Ser. No. 14/075,244 filed Nov. 8, 2013 entitled METHOD AND APPARATUS FOR ALIGNING ARROW NOCKS, which claims the benefit of U.S. Provisional Patent Application No. 61/846,141 filed Jul. 15, 2013 entitled METHOD AND APPARATUS FOR ALIGNING ARROW NOCKS. U.S. patent application Ser. No. 15/643,056 is also a continuation-in-part of U.S. patent application Ser. No. 13/669,833 filed Nov. 6, 2012 entitled NOCK DEVICE FOR BOW, which claims the benefit of U.S. Provisional Patent Application No. 61/556,527 filed Nov. 7, 2011 entitled NOCK DEVICE FOR BOW.

I. BACKGROUND

A. Field of the Invention

[0002] This invention relates generally to arrows that are shot or fired by bows, crossbows and the like. More particularly, this invention relates to methods and apparatuses used to align arrow nocks to arrows and arrows to crossbows.

B. Description of Related Art

[0003] In the sport of archery it is well known to provide a so-called nock at the back end of the arrow, which, in essence is a slot, or other means, to engage the bowstring of a bow during the draw. It is also well known that in order to perform a good aim and subsequent shot of the arrow the nock should be placed on the bow string at a point close to the center of the bowstring and that said point should also be aligned horizontally with a point at which the arrow is supported at the center of the bow. In order to attain such alignment, it is known to provide a so-called center nock attached to the center of the bowstring, which may engage the rear end of the arrow, while it is being driven by the bowstring toward the target.

[0004] FIG. **1** is a component diagram illustrating a perspective view of an example implementation **1300** of a nock. In the example implementation **1300**, a flat nock **30** does not comprise an obvious slot or groove, but merely comprises a flat portion **32** and a shaft engagement portion **34**. In this implementation, for example, a user may engage the bowstring to the flat portion **32** of the flat nock **30** at any suitable location on the flat portion **32**. Further, in this example, attachment surface **34** may be a shaft engagement portion configured to suitably fit into an end of an arrow shaft (not shown). The flat nock **30** may allow various orientations of the arrow against the bowstring, merely dependent upon how the user decides to align the nock **30** on the bowstring. However, the configuration of the flat portion **32** of the flat nock **30** may not provide for a way of appropriately centering the bowstring on the flat portion **32**. That is, for example, while the orientation of the flat nock **30** is not limited by a slot or groove, thereby allowing various alignments of the arrow's fletching vanes, the center alignment of the bowstring on the nock cannot be assured.

[0005] FIGS. **2**A and **2**B are component diagrams illustrating a rear perspective view of example implementations **1350**, **1375** of a portion of an arrow. In the example implementation **1350**, an arrow shaft **40** comprises an alignment groove/slot **44** (e.g., comprised on the nock), which is oriented in an up position. In this position, the fletching vanes **42** attached to the arrow shaft **40** can be aligned in the first position, for example, where vane **42***b* protrudes to the right at approximately ninety degrees from the orientation of the groove **44**, and vanes **42***a* and **42***c* protrude to the left at approximately thirty degrees and one-hundred and fifty degrees, respectively, from the orientation of the groove **44** (e.g., respective vanes aligned approximately one-hundred and twenty degrees apart).

[0006] In the example implementation **1375**, the arrow shaft **40** may be rotated one-hundred and eighty degrees (e.g., flipped over), where the alignment groove **44** is oriented in a down position. In this implementation **1375**, the respective alignment of the vanes **42** has changed to a second position, placing them in an opposite position relative to the up orientation of the example implementation **1350**. In this way, for example, the dual orientation of the slotted nock may accommodate both right-handed and left-handed vertical bow shooters. The slotted nock can accommodate merely one appropriate position on a crossbow barrel, as illustrated in FIG. **2**C, where, in the example implementation **1380**, the vane **42***b* may be disposed in a barrel slot of the crossbow (e.g., proper operational position). In this example implementation **1380**, placing either vane **42***a* or **42***b* in the downward position (e.g., in the barrel slot) may not allow for proper alignment of the groove **44** with a crossbow bowstring. The slotted nock is merely limited to these two orientations, for example, where merely one orientation (e.g., **1350**) may be used in a crossbow.

[0007] FIG. **3** shows a known arrow **1210** that may be shot or fired by a bow, a crossbow or other such device (hereinafter any and all devices that can propel or fire an arrow will be referred to as a "bow" unless specified otherwise). The arrow **1210** may include a body **1212** with an arrow head **1214** positioned at the front end of the body **1212** and three fletchings or vanes **1216** positioned near the back end of the body **1212**. The arrow head **1214** is the portion that strikes a target when the arrow **1210** is shot. The vanes **1216** act as airfoils and stabilize the arrow **1210** when it is in flight. A nock **1218** may be positioned at the back end of the arrow **1210**. The nock **1218** has one end with an extension that is received in an opening in the arrow body **1212**. At the opposite end, the nock **1218** has a head with a bowstring reception surface, typically in the form of a groove, which receives the bowstring on the bow that propels the arrow **1210**. More recently, it is known to provide arrows with lighted nocks. By "lighted" it is meant that a light source

illuminates the nock so that the user can see the nock, and thus the arrow, after the arrow has been shot.

[0008] A known problem is properly aligning the nock, lighted or otherwise, with respect to the arrow. If the nock is not properly aligned, one or more of the vanes may contact the bow as the arrow is shot, decreasing the force and accuracy of the shot arrow. Misalignment may also prevent the nock from effectively engaging the bowstring. That is, for example, a groove in the nock may not lie along the bowstring properly.

[0009] To assist with nock alignment, it is known to provide nocks with a tab or ridge on the head and to provide the arrow with an index or cock vane. Typically the index vane is provided with a unique color and thus is easily identified. To align the nock, the user inserts the extension of the nock into the arrow opening and then rotates the nock with his/her fingers with respect to the arrow until the tab is aligned with respect to the index vane. While the use of such nock tabs assist with alignment, they do not provide the precise alignment desired unless the user spends considerable time carefully rotating the nock while "eyeing" the relative position of the tab with the index vane.

[0010] What is needed is a nock that provides effective alignment of the arrow with respect to the crossbow and a tool to improve both the speed and accuracy of nock alignment with respect to an arrow.

II. SUMMARY OF THE INVENTION

[0011] This Summary is provided to introduce a selection of concepts in a simplified form that are further described below in the Detailed Description. This Summary is not intended to identify key factors or essential features of the claimed subject matter, nor is it intended to be used to limit the scope of the claimed subject matter.

[0012] According to some implementations of this invention, a method may comprise the steps of: (A) providing a nock with: (1) a circumference; (2) an attachment surface; and (3) a top portion having an axial centerline and first, second and third distinct string guide impressions; (B) providing each string guide impression with two circumferentially spaced walls separated by a floor that is curvilinear in shape; (C) providing each wall with: (1) an axially extending peak that is curvilinear in shape; and (2) first and second circumferentially spaced sides that are curvilinear in shape; (D) providing the nock to be useful with an associated arrow having a longitudinal axis and an associated bow having a bowstring; and (E) providing the nock to be operable to perform the following steps: (1) connecting the attachment surface to the associated arrow and aligning the nock with respect to the associated arrow; and (2) contacting the associated bowstring to any surface on the top portion of the nock. Step (E)(2) may comprise the steps of: (1) contacting a curvilinear surface of the nock with the associated bowstring; and (2) positioning the associated bowstring within at least one of the string guide impressions to fire the associated arrow.

[0013] According to some implementations of this invention, a method may comprise the steps of: (A) providing a nock with: (1) a circumference; (2) an attachment surface; and (3) a top portion having an axial centerline and first, second and third distinct string guide impressions; (B) providing each string guide impression with two circumferentially spaced walls separated by a floor; (C) providing each wall with: (1) an axially extending peak; and (2) first and second circumferentially spaced sides that are curvilinear in shape; (D) providing the nock to be useful with an associated arrow having a longitudinal axis and an associated bow having a bowstring with a circular cross-section; and (E) providing the nock to be operable to perform the following steps: (1) connecting the attachment surface to the associated arrow and aligning the nock with respect to the associated arrow; and (2) receiving a portion of the associated bowstring within at least one of the string guide impressions to fire the associated arrow. Step (E)(2) may comprise the steps of: (1) contacting the corresponding floor with the associated bowstring; and (2) simultaneously extending the associated bowstring axially beyond the corresponding wall peaks.

[0014] According to some implementations of this invention, a method may comprise the steps of: (A) providing a nock with: (1) an attachment surface; and (2) a top portion having first and second distinct string guide impressions; (B) providing the nock to be useful with an associated arrow having a longitudinal axis and an associated bow that: (1) has a bowstring; and (2) is designed to receive the associated arrow for firing in a limited number of alignment orientations; and (C) providing the nock to be operable to perform the following steps: (1) connecting the attachment surface to the associated arrow and aligning the nock with respect to the associated arrow; (2) contacting the associated bowstring to the top portion of the nock; and (3) receiving a portion of the associated bowstring within at least one of the string guide impressions to fire the associated arrow. Steps (C)(2) and (C)(3) may comprise the step of: rotating the associated arrow about its longitudinal axis with respect to the associated bow to prevent the associated arrow from remaining in any orientation other than one of the limited number of alignment orientations.

III. BRIEF DESCRIPTION OF THE DRAWINGS

[0015] The invention may take physical form in certain parts and arrangement of parts, implementations of which will be described in detail in this specification and illustrated in the accompanying drawings which form a part hereof and wherein:

[0016] FIG. **1** is a component diagram illustrating a perspective view of an example implementation of a nock.

[0017] FIGS. **2**A, **2**B and **2**C are component diagrams illustrating a rear view of example implementations where one or more systems described herein may be implemented.

[0018] FIG. **3** is a perspective view of a typical known arrow.

[0019] FIG. **4**A is a component diagram illustrating a top view of an example implementation of a nock device.

[0020] FIG. **4**B is a component diagram illustrating a side view of an example implementation of a nock device.

[0021] FIG. **4**C is a component diagram illustrating a side view of an example implementation of a nock device.

[0022] FIGS. **5**A, **5**B, **5**C and **5**D are component diagrams illustrating a rear view of example implementations of one or more systems described herein.

[0023] FIG. **6**A is a component diagram illustrating a perspective view of an example implementation of a nock device for use in one or more systems described here.

[0024] FIGS. **6**B and **6**C are component diagrams illustrating a rear view of an example implementation of a nock device for use in one or more systems described here.

[0025] FIG. **7**A is a component diagram illustrating a top solid view of an example implementation of a nock device.

[0026] FIG. **7**B is a component diagram illustrating a front solid view of an example implementation of a nock device.

[0027] FIG. **7**C is a component diagram illustrating a side solid view of an example implementation of a nock device.

[0028] FIG. **8** is a component diagram illustrating a perspective view of an example implementation of one or more portions of the systems described herein.

[0029] FIGS. **9**A and **9**B are component diagrams illustrating example implementations where a nock may be utilized.

[0030] FIGS. **10**A, **10**B and **10**C are component diagrams illustrating example implementations where a nock may be utilized.

[0031] FIGS. **11**A and **11**B are component diagrams illustrating example implementations where one or more systems described herein may be implemented.

[0032] FIGS. **12**A and **12**B are component diagrams illustrating example implementations where one or more systems described herein may be implemented.

[0033] FIG. **13** is a flow diagram illustrating an implementation of an exemplary method for using a nock device.

[0034] FIG. **14** is a component diagram illustrating a front solid view of an example implementation of a nock device.

[0035] FIG. **15** is a top perspective view of an example implementation of a nock device.

[0036] FIG. **16** is a sectional view of a bowstring.

[0037] FIG. **17** is a component diagram illustrating a front solid view of an example implementation of a nock device.

[0038] FIG. **18** is a sectional view along line **18-18** in FIG. **16**.

[0039] FIG. **19** is a back view of an arrow.

[0040] FIG. **20** is a side view of the back end of the arrow shown in FIG. **19** showing a nock according to some embodiments of this invention.

[0041] FIG. **21** is a front end view of the nock shown in FIG. **20**.

[0042] FIG. **22** is a side view of the nock head shown in FIGS. **19** and **20**.

[0043] FIG. **23** is a perspective end view of an alignment tool according so some embodiments of this invention.

[0044] FIG. **24** shows the shape of the opening in the nock shown in FIGS. **20-22**.

[0045] FIG. **25** shows the shape of the connection member shown in FIG. **23**.

[0046] FIG. **26** is a side view of the alignment tool shown in FIG. **23**.

[0047] FIG. **27** is an end view of the alignment tool taken along line **27-27** in FIG. **26**.

[0048] FIG. **28** is a top view of the alignment tool shown in FIG. **23**.

[0049] FIG. **29** is an end view of the alignment tool taken along line **29-29** in

[0050] FIG. **26**.

[0051] FIG. **30** is a side view of a lighted nock assembly according to some embodiments of this invention.

[0052] FIG. **31** is an exploded view of the lighted nock assembly shown in FIG. **30**.

[0053] FIG. **32** is a perspective view of the nock shown in FIG. **31**.

[0054] FIG. **33** is a side view of the nock shown in FIG. **31**.

[0055] FIG. **34** is a side view of the nock shown in FIG. **31**.

[0056] FIG. **35** is a sectional view of the nock taken along the line **35-35** in FIG. **36**.

[0057] FIG. **36** is an end view of the nock taken along the line **36-36** in FIG. **33**.

[0058] FIG. **37** is an end view of the nock taken along the line **37-37** in FIG. **33**.

[0059] FIG. **38** is a perspective view of the insert shown in FIG. **31**.

[0060] FIG. **39** is a side view of the insert shown in FIG. **31**.

[0061] FIG. **40** is a top view of the insert shown in FIG. **31**.

[0062] FIG. **41** is a sectional view of the insert taken along the line **41-41** in

[0063] FIG. **42**.

[0064] FIG. **42** is an end view of the insert taken along the line **42-42** of FIG. **39**.

[0065] FIG. **43** is an end view of the insert taken along the line **43-43** of FIG. **39**.

[0066] FIG. **44** is a back end view of an arrow with a nock attached to the arrow.

[0067] FIG. **45** is a back end view of the arrow shown in FIG. **44** but with the alignment tool attached to the nock.

[0068] FIG. **46** is a back end view similar to that shown in FIG. **45** but with the alignment tool and nock rotated to align the nock with respect to the arrow's vanes.

[0069] FIG. **47** is a back end view of an arrow with an insert attached to the arrow.

[0070] FIG. **48** is a back end view of the arrow shown in FIG. **47** but with the alignment tool attached to the insert.

[0071] FIG. **49** is a back end view similar to that shown in FIG. **48** but with the alignment tool and insert rotated to align the insert with respect to the arrow's vanes.

IV. DETAILED DESCRIPTION

[0072] In the following description, for purposes of explanation, numerous specific details are set forth in order to provide a thorough understanding of the claimed subject matter. It may be evident, however, that the claimed subject matter may be practiced without these specific details. In other instances, structures and devices are shown in block diagram form in order to facilitate describing the claimed subject matter.

[0073] Referring now to the drawings wherein the showings are for purposes of illustrating embodiments of the invention only and not for purposes of limiting the same, and wherein like reference numerals are understood to refer to like components, FIGS. **4-8** illustrate one of more example implementations of a nock device **50** having an axial centerline CL and an attachment surface **54** that is configured to attach the nock to an associated arrow. FIG. **6**A shows a back or rear view of a nock that includes a bowstring contact surface **59** that is configured to receive an associated bowstring to fire the associated arrow. The bowstring contact surface **59** may be positioned within a bowstring guide **61** that is defined by first and second walls **63**, **65** separated by a floor **67** and by a distance D**1**. The bowstring guide **61** may include a first string guide impression **60***a* positioned on a first side of the nock's axial centerline CL and a second string guide impression **60***b* positioned on a second side of

the axial centerline CL. The string guide impressions **60***a*, **60***b* may be symmetrically disposed on the top surface **64** of the top portion, as shown.

[0074] As illustrated in the example embodiments of FIGS. **5**A, **5**B, **5**C, and **5**D, the first string guide impression **60***a* is configured to receive a first part of a bowstring, and the second string guide impression **60***b* is configured to receive a second part of the bowstring. Further, the first string guide impression **60***a* is disposed at a first location on the top surface **64**, and the second string guide impression **60***b* is disposed at a second location on the top surface **64**. In this implementation, the first location and the second location are disposed at opposite ends of a first bisecting line **70***a* of the top surface **64**.

[0075] In one implementation, illustrated in FIG. **5**B, two bowstring contact surfaces **59**, **69** may be used. The bowstring contact surface **69** may also be configured to receive an associated bowstring to fire the associated arrow. The bowstring contact surface **69** may be positioned within a bowstring guide **71** that is defined by first and second walls **73**, **75** separated by a floor **77** and by a distance D**2**. The bowstring guide **71** may include a first string guide impression **60***c* positioned on a first side of the nock's axial centerline CL and a second string guide impression **60***d* positioned on a second side of the axial centerline CL. The string guide impressions **60***c*, **60***d* may be symmetrically disposed on the top surface **64** of the top portion, as shown. In this implementation, the bowstring guide **71** is positioned along a bisecting line **70***b* that is angled with respect to the bisecting line **70***a* by about 90 degrees.

[0076] In another implementation, illustrated in FIG. **5**C, three bowstring contact surfaces, each positioned within a bowstring guide may be used. The third bowstring guide **81** may be, as shown, defined by first and second walls separated by a floor and by a distance D**3**. The bowstring guide **81** may include a first string guide impression **60***e* positioned on a first side of the nock's axial centerline CL and a second string guide impression **60***f* positioned on a second side of the axial centerline CL. The string guide impressions **60***e*, **60***f* may be symmetrically disposed on the top surface **64** of the top portion, as shown. In this implementation, the bowstring guide **81** is positioned along a bisecting line **70***c* and each of the bisecting lines **70***a*, **70***b* and **70***c* are angled with respect to each neighboring line by about 60 degrees.

[0077] In yet another implementation, illustrated in FIG. **5**D, four bowstring contact surfaces, each positioned within a bowstring guide may be used. The fourth bowstring guide **91** may also be defined by first and second walls separated by a floor and by a distance D**4**, as shown. The bowstring guide **91** may include a first string guide impression **60***g* positioned on a first side of the nock's axial centerline CL and a second string guide impression **60***h* positioned on a second side of the axial centerline CL. The string guide impressions **60***g*, **60***h* may be oriented as with the other string guide impressions explained above. In this implementation, the bowstring guide **91** is positioned along a bisecting line **70***d* and each of the bisecting lines **70***a*, **70***b*, **70***c* and **70***d* are angled with respect to each neighboring line by about 45 degrees. It will be understood that the systems, described herein, are not limited to the example implementations described above. It is anticipated that those skilled in the art may devise alternate arrangements for the string guide impressions.

[0078] For example, while implementations of up to four bowstring guides and four pairs of string guide impressions have been described above, utilizing symmetrical spacings of approximately one-hundred and eighty degrees, ninety degrees, sixty degrees, and forty-five degrees apart, other orientations are anticipated to be within the scope of the described systems. As one example, the top portion **52** may comprise five or more pairs of string guide impressions arranged in an orientation to accommodate a particular arrangement of fletching vanes and/or shooting arrangements (e.g., left-handed, right handed, crossbow, longbow, etc.).

[0079] In one implementation, the string guide impressions may be arranged in accordance with an arrangement of the fletching vanes of the arrow, for example, configured to accommodate the number and arrangement of vanes on the arrow (e.g., two, three, four, or more). That is, for example, when the nock device is attached to the arrow, a center line of a string guide impression **60** may be offset from a center line (measured along the length of the arrow) of one or the fletching vanes **42**. As an illustrative example, FIG. **6**A illustrates an example implementation of an arrangement of a portion of an arrow. In this implementation, an alignment of the fletching vane **42***c* can be offset from the center line **72** of the string guide impression **60***a* (e.g., by thirty degrees). Further, in this implementation, the alignment of the fletching vane **42***b* may be offset (e.g., by ninety degrees) from the center line **72** of the string guide impression **60***a* (e.g., and by thirty degrees from the center line or string guide impression **60***c*).

[0080] As another illustrative example, in FIG. **6**B, when using an arrow comprises merely three fletching vanes **42***a*, **42***b*, **42***c*, the nock device implemented can comprise three pairs of symmetrically aligned string guide impressions **60***a*-**60***f* (e.g., FIG. **5**C). In this example implementation, an arrangement of the impressions **60***a*-**60***f* can be configured to mitigate interference of the fletching vanes **42***a*-**42***c* with the structure of the bow, and/or accommodate the barrel of a crossbow. In order to mitigate interference of the vanes with the bow structure and/or accommodate a crossbow, the impressions **60** may be aligned when the nock device is inserted into the arrow shaft in an orientation (e.g., in FIGS. **2**A and **2**B) that allows the vane(s) to pass over the riser (e.g., for a bow), and/or to be inserted into a barrel (e.g., for a crossbow), appropriately.

[0081] In the example implementation of FIG. **6**B, the center line **72** of the string guide impression **60***a* and **60***b* may comprise a centrally bisecting line on the top surface **64** of the top portion **52** of the nock device. Further, as one example, a user of the nock device may aligned the bowstring (e.g., of a bow and/or crossbow) along the center line **72** of the string guide impression **60***a* and **60***b*. In this example, a vertical bow, bowstring aligned in such a manner (e.g., for a left-handed archer) may allow the fletching vanes **42***a* and **42***c* to appropriately clear a vertical riser of the bow when the bowstring is released (e.g., thereby shooting the arrow). Further, as illustrated in FIG. **6**C, a crossbow, bowstring aligned along the center line **72** in such a manner may allow the fletching vane **42***b* to be appropriately engaged (e.g., inserted down into) a barrel slot of the barrel of the crossbow; thereby allowing the arrow to be appropriately shot from the crossbow.

[0082] As another example, an arrow comprising three vanes (e.g., **42***a*, **42***b*, **42***c*), disposed one-hundred and

twenty degrees apart from each other around the arrow shaft, may allow for three nocking positions (e.g., comprising six string guide impressions) on a bowstring of a bow and/or on the crossbow barrel. Further, for example, an arrow comprising two vanes, disposed one-hundred and eighty degrees apart, may utilize a nock device comprising four string guide impressions (e.g., FIG. **5**B) at ninety degrees (e.g., allowing for two nocking positions, one for a bow the other for a crossbow). Additionally, as an example, an arrow comprising four vanes may utilize a nock device comprising eight string guide impressions (e.g., FIG. **5**D), disposed at forty-five degrees apart (e.g., allowing for four nocking positions, two for a bow, two for a crossbow); and so on.

[0083] Returning to FIGS. **4-8**, in one implementation, as illustrated in the example embodiments of FIGS. **4**B, **4**C, **7**B and **7**C, the attachment surface **54** can comprise a stem portion **54**, which may comprise one or more outward protrusions **56** and/or a chamfered base **58**. As an example, the stem portion **54** may be configured to be inserted into a rear opening of an arrow shaft. Further, for example, the chamfered base **58** of the stem portion **54** may be configured to facilitate insertion into the rear opening of an arrow shaft, where the rounded edges can mitigate snagging of the stem portion **54** on an edge of the rear opening of an arrow shaft. Additionally, as an example the outward protrusions **56** may facilitate securing the nock device **50** within the shaft of the arrow. That is, for example, the outward protrusions **56** can increase the diameter of the nock device **50** with respect to the diameter of the shaft, which may help form a pressure friction fit within the shaft of the arrow.

[0084] In one implementation the top portion **52** may include a slot **62**. The slot **62** may be disposed on or near the axial centerline of the top portion **52**. In one implementation, shown, the slot **62** the slot extends into the nock farther than the floor of the bowstring guide. FIG. **14**, for example, shows the floor of the nock **50** extending into the nock a distance D**5** and the slot **62** extending into the nock a distance D**6** with D**6** being greater than D**5**. In one specific implementation, D**5** is approximately 0.04 inches and D**6** is approximately 0.2 inches. The slot, in one implementation, may be used as an attachment slot as described further below. In one implementation, the slot **62** may be formed into a triangular shape. In other implementations, the slot **62** may be formed to any appropriate shape for aligning an attachment, such as a square and/or other polygon.

[0085] FIG. **8** is a component diagram illustrating an example implementation of the nock device. In one implementation, the nock device **50** can comprise a nock guide or tool **90**. The nock guide **90** may be configured to be selectively removable from the nock device **50**, such as from the attachment slot **62**. The nock guide **90** may be further configured to facilitate appropriate alignment of the nock device **50**, for example, when assembled to an arrow. In one implementation, the nock guide **90** can comprise a male portion **92** that is configured to selectively mate with the attachment slot **62**. As one example, a shape of the male portion **92** may comprise a complimentary shape of an attachment slot **62** to which it is intended to be mated (e.g., both the male portion and slot are triangular, or square, etc.).

[0086] In one implementation, the nock guide **90** can be attached to the nock device **50**, and the bowstring of the bow (e.g., longbow, crossbow, etc.) may be inserted into a nock guide slot **94** of the nock guide **90**. As one example, an arrow shaft may be attached to the stem portion **54** of the nock device **50** while the user aligns the fletching vanes in accordance with the desired use (e.g., right-handed, left-handed, longbow, crossbow, etc.) In this way, for example, the arrow, the nock guide **90**, and nock device **50** can be in appropriate alignment with the fletching vanes of the arrow, such as for use with crossbows in aligning the vanes within the slotted portion of the barrel.

[0087] As an illustrative example, in an operation of a bow, the bowstring is cocked and the arrow, with the nock against the bowstring, is drawn back with the bowstring. In accordance with one implementation of the nock device **50** comprising the three pairs of string guide impressions, the arrow can be aligned any one of three arrangements in accordance with the vanes of the arrow, the handedness of the shooter, and/or the arrangement of the bow riser/handle. As another example, in operation of a crossbow, the bowstring is cocked into a ready-to-shoot position by the user. Subsequently, the arrow can be loaded on the barrel, with at least one of the vanes inserted into a slotted portion of the barrel, with the nock device **50** pressed against the bowstring. In this example, the arrow may be aligned in any one of three positions, in accordance with the vanes of the arrow and the slotted portion of the barrel.

[0088] Now with reference to FIGS. **9-12**, and continued reference to FIGS. **4-8**, in one aspect, when a traditional nock, such as a half-moon nock, is misaligned with the bowstring **1002**, for example, such that a centerline of the groove portion **22** of the nock is not aligned with (e.g., parallel to) the bowstring **1002**, the arrow **40** may not shoot from the bow (e.g., crossbow) in a desired manner. That is, for example, a user of a bow (e.g., crossbow, vertical bow) may occasionally misalign a traditional nock with the bowstring **1002**. A misalignment of this type can result in undesirable flight characteristics for the arrow **40** when the bowstring **1002** is released, for example, causing the arrow **40** to miss an intended target.

[0089] As one example, the groove portion **22** of a half-moon nock (e.g., and other traditional nocks) is configured to align parallel to, and engage with, the bowstring **1002**. Due to this alignment, as described above, merely one configuration of the fletching vanes **42** of an arrow **40** may be utilized. For example, when a crossbow is used, a first fletching vane **42***b* is disposed in the barrel slot **1006** of the barrel **1004** of the crossbow, such that the groove portion **22** of the nock is appropriately aligned with the bowstring **1002**. Further, two second vanes **42***a*, **42***c* are disposed above (e.g., and not in contact with) the barrel **1004**. In this way, for example, when the bowstring is released from a shooting position (e.g., the crossbow is shot), the arrow may travel properly down the barrel, and may further travel a desired flight path (e.g., to the intended target).

[0090] However, an arrow **40** shot with a misaligned nock may rise up **1104** from the barrel **1004**, and/or rotate **1102** out of the barrel slot **1006** of a crossbow, causing an inaccurate shot. As one example, rotating a groove portion **22** of a half-moon nock out of alignment with the bowstring **1002**, as illustrated in FIGS. **10**A-C, can cause the arrow to rise **1104** and rotate **1102** out of the barrel slot **1006** when shot from the crossbow. In this example, raising **1104** and rotating **1102** the arrow **40** out of the barrel slot **1006** may cause the arrow **40** to miss the intended target, due to undesired alignment of the arrow's fletchings **42** during a flight path of the shot.

[0091] In one implementation, the user of the crossbow may misalign the groove portion **22** of the traditional nock with the bowstring **1002**, for example, by inadvertently placing the incorrect fletching vane **42***c* in the barrel slot **1006**. In this implementation, for example, when the bowstring **1002** is released (e.g., shot) the shape of the groove portion **22** of the half-moon nock may cause the arrow **40** to rotate **1102** (e.g., counter-clockwise in this example) as the groove portion **22** is forced to align with the bowstring **1002** during the shot (e.g., due to a great force applied by the bowstring to nock during a shot). Further, in this example, the rotation **1102** of the arrow **40** can force the fletching vane **42***c* against a wall of the barrel slot **1006**, thereby pushing the arrow **40** up **1104** and out of the barrel slot **1006** during the shot. Additionally, the rotation **1102** can force the fletching vane **42***a* against the barrel **1004**, further providing for the arrow **40** to rise **1104** out of the barrel slot **1006** (e.g., due to the configuration of the vanes **42**).

[0092] In one implementation of this aspect, as illustrated in FIGS. **11**A-B and **12**A-B, when an arrow **40** comprising the alternate nock design **50** is misaligned on the bowstring **1002**, the design of the alternate nock **50** can cause the arrow **40** to rotate into appropriate alignment upon release of the bowstring **1002**. That is, for example, instead of causing the arrow to rise and rotate out of the barrel slot **1006** of a crossbow, the bowstring **1002** engaging with the alternate nock **50** can cause the arrow **40** to rotate **1102** into appropriate alignment (e.g., in the barrel slot **1006**) prior to release from the bow, and not deviate from a desired path (e.g., rise up), thereby providing a more accurate shot.

[0093] In this implementation, the disposition of the string guide impressions **60** on the top surface **64** of the top portion **52** of the nock **50** may provide for multiple alignment positions for the arrow **40**, with respect to the fletching vanes **40** and the bow. That is, for example, when using a crossbow, a first fletching vane **42***b* may be disposed in the barrel slot **1006**, where respective second fletching vanes **42***a*, **42***b*, are disposed above, and not in contact with, the barrel. In this example, the first string impression **60***a* and the second string impression **60***b* may be engaged with the bowstring **1002** in a desired alignment (e.g., parallel). Further, if the arrow **40** is rotated such that the fletching vane **42***a* is disposed in the barrel slot **1006**, string guide impression **60***e* and **60***f* may provide an appropriate alignment with the bowstring **1002**. Additionally, if the arrow **40** is again rotated such that the fletching vane **42***c* is disposed in the barrel slot **1006**, string guide impression **60***c* and **60***d* may provide an appropriate alignment with the bowstring **1002**. That is, for example, regardless of which fletching vane **60** is disposed in the barrel slot **1006**, an appropriate alignment of the bowstring **1002** to a string guide impression may be maintained.

[0094] In one implementation, in this aspect, use of the nock device **50** (e.g., described in FIGS. **4-8**, **11**, and **12**) may mitigate undesired flight path characteristics for an arrow **40** that is misaligned with respect to the bowstring **1002**. As one example, as in FIG. **12**A, the nock device **50** may not be fully engaged with the bowstring, such that the bowstring **1002** is not in full contact with the respective string guide impressions (e.g., the nock is, at least, partially offset from the bowstring). In this example, the string guide impressions may not be aligned properly with the bowstring **1002** (e.g., the bowstring may not be aligned with the first bisecting line). In this implementation, for example, when the bowstring **1002** is released (e.g., the arrow is shot) the nock device **50** may cause the arrow **40** to rotate **1102** into proper alignment, prior to release from the bow, upon the bowstring **1002** engaging the nock device **50** (e.g., as in FIG. **12**B).

[0095] As one example, the string guide impressions **60** may comprise a concave impression with gradually sloping sides (e.g., as illustrated in FIGS. **4**B, **4**C, **6**A, **7**B, **7**C, and **8**). In this implementation, for example, the concavity design of the impression **60** may allow the bowstring to slide down a gradually sloping side to the base of the impression **60**, upon release of the bowstring **1002**, when the bowstring **1002** is not appropriately aligned with the bisecting line **70** of the impression **60** (e.g., with the base of the impression **60**). In this way, for example, an arrow **40** engaged with the alternate nock device **50** may rotate **1102** into proper alignment with the bowstring **1002**, as the bowstring **1002** slides into the base of the impression **60** (e.g., the nock **50** slides up the bowstring **1002**), upon release of the bowstring **1002**.

[0096] A method may be devised wherein an alternate nock device may be used, for example, to nock an arrow for subsequent shooting (e.g., from a bow and/or crossbow). Typical nocks merely provide for a single alignment of a bowstring, for example, where the arrow may be oriented in an up or down position, according a nock's groove (e.g., bowstring receiver). Some flat nocks may allow for multiple alignments of the bowstring against the nock, but they may not provide for a centering (e.g., comprising a central bisection) of the bowstring on the flat portion of the nock. Using an alternate nock design (e.g., **50** in FIGS. **4-8**), the user may be able to align the arrow on the bowstring in multiple alignments, and/or may be able to appropriately center the bowstring on the back (e.g., top surface) of the nock.

[0097] FIG. **13** is a flow diagram illustrating an exemplary method **1000** for using a nock device. The exemplary method **1400** begins at **1402**. At **1404** a process of aligning the nock device on/in a shaft of an arrow begins. That is, for example, when a nock is engaged with the shaft of the arrow, it is typically aligned in accordance with fletchings attached to the shaft. At **1406**, a nock guide can be engaged with the nock device. As described above, the nock device may comprise an attachment slot on its top (e.g., back) surface of its top portion. In one implementation, the attachment slot can protrude, at least partially, into top portion of the nock device, for example, into which a user may selectively engage a male portion of the nock guide.

[0098] At **1408**, the nock guide can be aligned in a desired alignment with the arrow's fletching vanes. As one example, the nock guide can be used to guide engagement of the nock device with the arrow shaft to a desired orientation, for example, with respect to one or more arrow fletching vanes disposed on said arrow shaft. As described above, the nock guide may comprise a groove, for example, that may engage a bowstring. In this example, the groove of the nock guide (e.g., **94** of FIG. **8**) may be appropriately aligned with the bowstring, and the fletchings may be appropriately aligned (e.g., appropriate for a bow or crossbow) for shooting. In one embodiment, when aligned to the desired orientation, the nock device may be fully engaged (e.g., friction/pressure fit, and/or glued) in the desired orientation.

[0099] At **1410**, the nock guide may be disengaged from the nock device. For example, the male portion of the nock guide may be pulled from the attachment slot on top of the

top surface of the nock device. At **1412**, a first portion of the bowstring can be engaged with a first string guide impression on the nock device; and a second portion of the bowstring can be engaged with a second string guide impression on the nock device, at **1414**. In one implementation, a bowstring guide on the nock device may comprise a pair of impressions (e.g., the first and second), respectively disposed at opposite ends of a generally, centrally bisecting line across the top surface of the nock device. In this implementation, the user may engage (e.g., nock) the arrow to the bowstring by engaging the bowstring with both of the impressions in the pair, at two different locations (e.g., either end of the bisecting line). In this way, for example, the bowstring can be centrally aligned on the top surface of the nock, and, therefore, centrally aligned on the back of the arrow.

[0100] In one implementation, the nock device may comprise a third and a fourth string guide impression (e.g., a pair of impressions) that are respectively located at opposite ends of a second generally, centrally bisecting line of the top surface. In one implementation, the nock device may comprise a fifth and a sixth string guide impression that are respectively located at opposite ends of a third generally, centrally bisecting line of the top surface. In one implementation, the respective bisecting lines (e.g., and therefore the respective impressions) can be oriented on the top surface in a generally symmetrical layout, for example, such that an intersection of any two lines comprises a similar angle (e.g., ninety degrees, sixty degrees, forty-five degrees, thirty-six degrees, and/or thirty degrees), such as illustrated in FIGS. **5**A-**6**D. In this way, for example, the user may engage (e.g., nock) the arrow to the bowstring using any one of the string guide impression pairs, based on the user's desired orientation of the arrow's fletchings.

[0101] At **1416** of the exemplary method **1400**, the bowstring, engaged with the nock device, may be released from a shooting position. As one example, a bowstring of a bow (e.g., recurve, long, compound, etc.) may be released from a shooting position (e.g., where the bow is cocked, drawn, etc.) by the user when the user uncocks (e.g., straightens) their fingers wrapped around the bowstring, or may be released when the user opens or releases a bowstring release device engaged with the bowstring. As another example, a bowstring of a crossbow may be released when the user activates (e.g., pulls, releases, etc.) a trigger mechanism engaged with the bowstring. Typically, when the bowstring is released, the engagement of the nock to the bowstring causes the arrow to be shot from the bow (e.g., bow, crossbow).

[0102] With reference now to FIGS. **5**A-**5**D, in one implementation shown, the distance D**1**, D**2**, D**3** and/or D**4**, between the first and second walls of the bowstring guide is greater at a relative radially outer portion than at a relative radially inner portion. This design assists in centers the bowstring within the bowstring guide. In one implementation, the distances D**1**, D**2**, D**3**, and/or D**4** gradually change (narrow) moving from the relative radially outer portion toward the relative radially inner portion. For the implementation shown, distances D**1**, D**2**, D**3** and D**4** are equal to provide uniformity of performance. These distances may be varied, in another implementation, if desired.

[0103] With reference now to FIG. **15**, in one implementation the bowstring contact surface **69** within the string guide impressions **60** may be substantially continuously curved from the first wall **63** through the second wall **67**. In a more specific implementation, the bowstring contact surface **69** may be curved along a substantially constant radius R**1**. FIG. **16** is a cross section of a typical bowstring **79**. The bowstring **79** is substantially circular in cross section having a radius BR. In one implementation, the radius R**1** of the bowstring contact surface **69** is greater than or equal to two times the radius BR (2BR). This provides a good fit for the bowstring within the bowstring contact surface. In one specific implementation, the bowstring radius BR is approximately 0.075 inches and the radius R**1** is approximately 0.18 inches. In one implementation, shown in FIG. **15**, each wall **63**, **65** may be positioned between string guide impressions **60**. The wall peaks may be substantially continuously curved. In one implementation, the wall peaks may be curved along a substantially constant radius R**2**. In one specific implementation, the radius R**2** may be approximately 0.03 inches.

[0104] With reference now to FIG. **17**, in one implementation a nock device **80** may include a top portion **82** and an attachment surface **84** that is configured to attach the nock to an associated arrow. The top portion **82** may have an axial centerline CL and a bowstring contact surface **86** that is configured to receive an associated bowstring to fire the associated arrow. For the implementation shown, the contact surface **86** may be substantially continuously curved from its outer radial ends, or edges, outwardly toward the axial centerline CL. The top portion **82** is similar to the flat nock **30** discussed above (see FIG. **1**) in that it allows various orientations of the arrow against the bowstring merely dependent on how the user decides to align the nock **80** on the bowstring. It differs from the flat nock **30**, however, in that the curved surface **86** better engages the bowstring for firing the arrow. In a specific implementation, shown, the bowstring contact surface **86** may be curved along a substantially constant radius R**3**. The implementation shown in FIG. **17** provides a bowstring contact surface **86** that is partially spherical in shape with the portion at the axial centerline having the greatest outward extension and the contact surface **86** curving relatively downward in all directions from there. In one implementation, the radius R**3** of the bowstring contact surface **86** is greater than or equal to two times the bowstring radius BR (2BR). In a more specific implementation, the radius R**3** of the bowstring contact surface **86** is greater than or equal to three times the bowstring radius BR (3BR). In a more specific implementation, the radius R**3** of the bowstring contact surface **86** is greater than or equal to four times the bowstring radius BR (3BR). In one specific implementation, the radius R**3** may be approximately 0.34 inches.

[0105] FIG. **18** is a sectional view of FIG. **15** showing an implementation of a nock where the bowstring contact surface **69** is continuously curved from its outer radial ends, or edges, outwardly toward the axial centerline CL. Unlike the bowstring contact surface **86** shown in FIG. **17**, the bowstring contact surface **69** is formed within the within the string guide impressions **60**. In a specific implementation, shown, the bowstring contact surface **69** may be curved along a substantially constant radius R**3**. In one implementation, the radius R**3** of the bowstring contact surface **69** is greater than or equal to two times the bowstring radius BR (2BR). In a more specific implementation, the radius R**3** of the bowstring contact surface **86** is greater than or equal to three times the bowstring radius BR (3BR). In a more

specific implementation, the radius R**3** of the bowstring contact surface **86** is greater than or equal to four times the bowstring radius BR (3BR). In one specific implementation, the radius R**3** may be approximately 0.34 inches. The distance D**7** between the radially outer edge of the nock and the uppermost surface of the bowstring contact surface **69** may be approximately 0.03 inches.

[0106] FIG. **19** shows the back end of an arrow **1220** which may be a typical known arrow. The arrow **1220** may have a body **1222**, an arrow head (not shown but which may be similar to arrow head **1214** shown in FIG. **3**) and vanes **1224**. The back end of the body **1222** may have an outside diameter OD. This back end is the location on the arrow **1220** where a nock may be attached to the body **1222**. The body **1222** may have a cylindrical opening **1226** which extends along the length of the arrow **1220** as is typical in arrows. The vanes **1224** may extend outwardly from the body **1222**, as shown, and may have an angular orientation. For the embodiment shown, the angular orientation is an angle A**1** between neighboring vanes **1224** of 120 degrees. This is typical for arrows as it provides desirable stabilization for the arrow **1220** when it is in flight. It should be noted, however, that this invention will work with any arrow chosen with the sound judgment of a person with skill in the art, including vanes having a different number of vanes and/or having a different angular orientation.

[0107] With reference now to FIGS. **19-20**, a nock **1230** may be attached to the arrow **1220**. The nock **1230** may have a connection surface **1232** that is connectable to the arrow body **1222** and a bowstring reception surface **1234** that is designed to receive the bowstring of a bow in order to propel or fire the arrow **1220**. The nock **1230** may have a first end with an extension **1238** that defines the connection surface **1232** but it should be understood that this invention will work with nocks that connect to arrow bodies in other ways. The extension **1238** may have a generally cylindrical shape, as shown. The outer surface of the extension **1238** may be smooth, in one embodiment, or may have a textured surface as in the embodiment shown. To attach the nock **1230** to the arrow **1220**, the extension **1238** may be inserted into the opening **1226** until a portion of a head **1236** opposite the bowstring reception surface **1234** contacts the back end of the arrow body **1222**. The nock **1230** may be held in place by a friction fit or press fit between the extension **1238** and the surface of the arrow **1220** that defines the opening **1226** although other methods of holding the nock **1230** to the arrow **1220** may also work with this invention, such as using an adhesive.

[0108] With reference now to FIGS. **20-22**, the nock **1230** may have a second end with the head **1236** upon which the bowstring reception surface **1234** is formed. The bowstring reception surface **1234** shown is designed to receive a bowstring in any one of three relative orientations, indicated with dashed lines O**1**, O**2** and O**3**. It should be noted, however, that this invention will work with nocks having other bowstring reception surface designs. The bowstring reception surface **1234** may comprise pairs of grooves **1240** on opposite sides of an opening **1242** to form the three bowstring reception orientation options. The grooves **1240**, and thus the bowstring reception surface **1234**, extend inwardly a maximum distance D**4**. The opening **1242** extends inwardly a distance D**5**. Note that distance D**5** is greater than distance D**4**. In one embodiment, the opening **1242** extends all the way through the length of the nock **1230**.

[0109] With reference now to FIGS. **19-20** and **23-25**, to properly align the nock **1230** with respect to the vanes **1224** on the arrow **1220**, an alignment tool **1250** may be used. The alignment tool **1250** may have a body **1252** and a connection member **1254**. The connection member **1254** may extend outwardly from the body **1252**, as shown. The connection member **1254** may be shaped to be received within the opening **1242** in the nock **1230** so that once received within the opening **1242**, rotation of the alignment tool **1250** will cause rotation of the nock **1230** with respect to the arrow **1220**. In one embodiment, as seen best in FIG. **25**, the outer surface of the connection member **1254** is generally triangular in shape having three planar portions **1256**. Between the planar portions **1256**, the outer surface may have curved portions **1258**. The opening **1242** in the nock **1230**, as seen best in FIG. **24** may have a matching shape with planar portions **1260** and curved portions **1262**. While a triangular shape has advantages that will be described below, it should be understood that the connection member **1254** and opening **1242** can have any design chosen with the sound judgment of a person of skill in the art that permits rotation of the alignment tool **1250** to cause rotation of the nock **1230**.

[0110] With reference now to FIG. **23**, the attachment of the connection member **1254** to the body **1252** can be in any manner chosen with the sound judgment of a person of skill in the art. In one embodiment, the connection member **1254** is made integrally, as one piece, with the body **1252**. In another embodiment, the connection member **1254** can be selectively attached and detached from the body **1252**. In this case, a worn connection member **1254** could be removed from the body **1252** and a new connection member **1254** could be added in its place. It is also contemplated to provide different connection members **1254** having different sizes and/or shapes to correspond with different nocks. In this case, a connection member of one size and/or shape could be removed from the body **1252** and replaced with a connection member of another size and/or shape.

[0111] With reference now to FIGS. **23** and **26-29**, the body **1252** of the alignment tool **1250** may have any shape and size chosen with the sound judgment of a person of skill in the art. The body **1252** may have at least two indicating surfaces **1264** that are spaced around the outer surface of the alignment tool body **1252** at a relative angular orientation that matches the angular orientation of the vanes **1224** on the arrow body **1222**. In one embodiment, shown, there are three indicating surfaces **1264** to match the number of vanes **1224** on the typical arrow. For the embodiment shown, there is an angular orientation of 120 degrees, see angle A**2** in FIG. **27**, between the indicating surfaces **1264** to match the 120 degree angular orientation of the vanes **1224** on the arrow **1220**, as shown in FIG. **19**. It should be understood, however, that the alignment tool body **1252** can be designed to have indicating surfaces at any angular orientation to match the angular orientation of the vanes on an arrow. The indicating surfaces **1264** can take any form chosen with the sound judgment of a person of skill in the art. In one embodiment, the indicating surfaces **1264** are markings or indicia applied to the outer surface of the alignment tool body **1252**. For the embodiment shown, the indicating surfaces **1264** are surfaces that extend or project outwardly

from the alignment tool body **1252**. In one embodiment, the indicating surfaces **1264** have an angular orientation that matches the connection member **1254**. In one specific embodiment, as seen best in FIG. **27**, the indicating surfaces **1264** have an angular orientation that matches the curved portions **1258** of the connection member **1254**. In an alternate embodiment, the indicating surfaces **1264** could be positioned to have an angular orientation that matches the planar portions **1256** of the connection member **1254**.

[0112] With continuing reference to FIGS. **23** and **26-29**, the indicating surfaces **1264** may be spaced from a longitudinal axis LA of the connection member **1254**. FIG. **27** shows three indicating surfaces **1264** spaced distances D**1**, D**2** and D**3** from the longitudinal axis LA. It should be noted that for the embodiment shown, distances D**1**, D**2** and D**3** are greater than the outside diameter OD, shown in FIG. **19**, of the back end of the arrow body **1222**. The embodiment shown also provides that distances D**1**, D**2** and D**3** are equal to each other but in another embodiment they are not equal. The outer surface of the alignment tool body **1252** may extend inwardly between the indicating surfaces **1264**. For the embodiment shown, the outer surface of the alignment tool body **1252** extends inwardly along a curved surface between the indicating surfaces **1264**.

[0113] Still referring to FIGS. **23** and **26-29**, the alignment tool **1250** may also have an attachment surface **1266**. The attachment surface **1266** may be used to attach the alignment tool **1250** to another object for safe keeping. The alignment tool **1250** may, for example, be attached to a bow. For another example, the alignment tool **1250** may be attached to a user's key chain or the like. While the attachment surface **1266** may have any shape and size chosen with the sound judgment of a person of skill in the art, for the embodiment shown the attachment surface **1266** includes an extension surface **1268** that extends from the body **1252** and an opening **1277**.

[0114] To use the alignment tool **1250**, shown in FIG. **23**, with the nock **1230**, shown in FIGS. **20-22**, the user may begin with the arrow **1220** as shown in FIG. **19**. The user may then attach the nock **1230** to the arrow **1220**. In one embodiment, this is done by inserting the nock extension **1238** into the arrow opening **1226**, as described above and shown in FIG. **20**. The alignment tool **1250** may then be attached to the nock **1230**. Alternatively, the user may attach the alignment tool **1250** to the nock **1230** and then attach the nock **1230** to the arrow **1220**. To attach the alignment tool **1250** to the nock **1230**, the user simply inserts the connection member **1254** into the opening **1242**. To make this insertion, with reference to FIGS. **24-25**, the planar portions **1256** of the connection member **1254** are juxtaposed to the planar portions **1260** in the nock opening **1242** and the curved portions **1258** of the connection member **1254** are juxtaposed to the curved portions **1262** in the nock opening **1242**. Because, in the embodiment shown, there are three juxtaposed planar portions and three juxtaposed curved portions, there are three relative orientations where the alignment tool **1250** can be received in the opening **1242**. All three work equally well, provided that the bowstring reception surface **1234** is designed to receive a bowstring in any one of three relative orientations, as discussed above.

[0115] With reference now to FIGS. **20-23**, once the alignment tool **1250** has been attached to the nock **1230**, the nock **1230** may be inserted into the opening **1226** in the arrow **1220** as described above (unless the nock **1230** has already been inserted). FIG. **45** shows the alignment tool **1250** attached to the nock **1230** and the nock **1230** attached to the arrow **1220**. To then align the nock **1230** with respect to the vanes **1224** on the arrow **1220**, it is only necessary to rotate the alignment tool **1250**, and thus the nock **1230**, with respect to the arrow **1220** until the indicating surfaces **1264** are aligned with respect to the vanes **1224**. With this invention, alignment can be quickly and easily seen by the user. This is shown, for example, in FIG. **46**. It should be noted, however, that while proper alignment for the embodiment shown occurs when the indicating surfaces **1264** and vanes **1224** have the same angular orientation, in other embodiments proper alignment may occur when the indicating surfaces **1264** and vanes **1224** have different angular orientations (though they may maintain the same relative angular orientation, such as 120 degrees, for example). As an example of this embodiment, FIG. **45** might show proper alignment. All that is necessary is that the indicating surfaces **1264** be properly aligned with respect to the vanes **1224** for any particular application. Once proper alignment has been achieved, the user can easily remove the alignment tool **1250** from the arrow **1220** by removing the connection member **1254** from the nock opening **1242**.

[0116] In another embodiment, a nock may be lighted. By "lighted" it is meant that a light source may illuminate the nock when activated so that the user can see the arrow after it has been shot. FIGS. **31-32**, show the components of a lighted nock assembly **1270** according to some embodiments of this invention. The lighted nock assembly **1270** may include a nock **1272**, an LED-battery combination component **1274**, and an insert **1276**. The LED-battery combination component **1274** may, in one embodiment, be activated by applying a compression force to the LED-battery combination component **1274**.

[0117] With reference now to FIGS. **30-37**, the nock **1272** may have a connection surface **1280** that is connectable to the insert **1276** and a bowstring reception surface **1282** that is designed to receive a bowstring. For the embodiment shown, the nock **1272** may have a first end with an extension that defines the connection surface **1280** but it should be understood that this invention will work with nocks that connect to inserts in other ways. The extension may have a generally cylindrical shape, as shown. The outer surface of the extension may be smooth, in one embodiment, or may have a textured surface in another embodiment. For the embodiment shown, the outer surface of the extension may have slots **1286**, as shown. The extension may have an opening **1288**. The opening **1288** may communicate with an opening **1284**, as shown. In one embodiment, the outer surface of the extension is generally triangular in shape having three planar portions **1290** connected by three curved portions **1292**. The purpose for this shape will be discussed further below. The nock **1272** may have a second end with a head **1278** upon which a bowstring reception surface **1282** is formed. The bowstring reception surface **1282** may be designed to receive a bowstring in any one of three relative orientations, as described above, but this invention will work with nocks having other bowstring reception surface designs. The opening **1284** may be formed in the head **1278**, as shown.

[0118] With reference now to FIGS. **19-20**, **30-31** and **38-43**, the insert **1276** may have a connection surface **1296** that is connectable to the arrow body **1222** and an opening **1298**. The insert **1276** may have a first end with an extension

that defines the connection surface **1296** but it should be understood that this invention will work with inserts that connect to arrow bodies in other ways. The extension may have a generally cylindrical shape, as shown. The outer surface of the extension may be smooth, in one embodiment, or may have a textured surface in another embodiment. For the embodiment shown, the outer surface of the extension may have ribs **104** that extend longitudinally, as shown. While five ribs **104** are shown, any proper number of ribs could be used. The extension may have an opening **106** that communicates with the opening **1298** which may be formed in a head **1294**, as shown. The end of the extension opposite the head **1294** may have a wall **108** that encloses the extension. To attach the insert **1276** to the arrow **1220**, the extension may be inserted into the opening **1226** until an edge of the head **1294** closest to the extension contacts the back end of the arrow body **1222**. The insert **1276** may be held in place by a friction fit between the extension and the surface of the arrow **1220** that defines the opening **1226** although other methods of holding the insert **1276** to the arrow **1220** may also work with this invention.

[0119] With reference now to FIGS. **38-43**, the opening **1298** in the head **1294** of the insert **1276** may match the connection member **1254** of the alignment tool **1250** (shown in FIG. **23**). In another embodiment, shown, the opening **1298** also matches the outer surface of the extension of the nock **1272** (shown in FIG. **32**). In one specific embodiment, as seen best in FIG. **38**, the opening **1298** may have a matching triangular shape. Specifically, the opening **1298** may have three planar portions **100** and three curved portions **102**. This design permits the extension of the nock **1272**, and thus the nock **1272**, to be insertable into the insert **1276** in at least one, three shown, specific relative positions.

[0120] To use the alignment tool **1250**, shown in FIG. **23**, with the lighted nock assembly **1270**, shown in FIGS. **30-31**, the user may begin with the arrow **1220** as shown in FIG. **19**. The user may first insert the insert **1276** into the arrow opening **1226**. More specifically, the insert extension may be inserted into the opening **1226** in the arrow **1220** in the same manner as the nock extension **1238**, shown in FIG. **20**, as described above and shown in FIG. **47**. The alignment tool **1250** may then be attached to the insert **1276**. Alternatively, the user may attach the alignment tool **1250** to the insert **1276** and then insert the insert **1276** into the arrow **1220**. To attach the alignment tool **1250** to the insert **1276**, the user simply inserts the connection member **1254** into the opening **1298** in the head **1294**, as seen best in FIGS. **38** and **42**. To make this insertion the planar portions **1256** of the connection member **1254**, shown in FIG. **25**, are juxtaposed to the planar portions **100** in the insert opening **1298**, shown in FIG. **42**, and the curved portions **1258** of the connection member **1254** are juxtaposed to the curved portions **102** in the insert opening **1298**. Because, in the embodiment shown, there are three juxtaposed planar portions and three juxtaposed curved portions, there are three relative orientations where the alignment tool **1250** can be received in the opening **1298**. All three work equally well. FIG. **48** shows the alignment tool **1250** attached to the insert **1276** and the insert **1276** attached to the arrow **1220**. Once the alignment tool **1250** has been attached to the insert **1276**, the insert **1276** may be inserted into the opening **1226** in the arrow **1220** as described above (unless the insert **1276** has already been inserted). To then align the insert **1276** with respect to the vanes **1224** on the arrow **1220**, it is only necessary to rotate the alignment tool **1250**, and thus the insert **1276**, with respect to the arrow **1220** until the indicating surfaces **1264** are aligned with respect to the vanes **1224**. With this invention, alignment can be quickly and easily seen by the user. This is shown, for example, in FIG. **49**. In some embodiments, the opening **1277** may be used as a reference hole that is aligned with a cock vane (not shown). As with the nock noted above, alignment of the insert **1276** with respect to the vanes **1224** may vary depending on application. Once proper alignment has been achieved, the user can easily remove the alignment tool **1250** from the arrow **1220** by removing the connection member **1254** from the insert opening **1298**.

[0121] The LED-battery combination component **1274**, shown in FIG. **31**, may then be inserted into the opening **1288**, shown in FIGS. **34-35**, in the nock **1272**. In one embodiment, the LED-battery combination component **1274** has an outer surface **110**, at least part of which may be held in place by a friction fit or press fit with inner surface **112** of the nock opening **1288**. It should be noted, however, that other methods of holding the LED-battery combination component **1274** to the nock **1272** may also work with this invention. The nock **1272** and LED-battery combination component **1274** may then be simultaneously inserted into the openings **1298** and **106** in the insert **1276**, shown in FIGS. **41-42**, with the result shown in FIG. **30**. Note that for the embodiment shown, the nock head **1278** remains outside the insert **1276** when the notch extension is inserted into the insert opening **1298**. Note also that for the embodiment shown in FIG. **30**, a gap D**6**, which may be about the thickness of a dime, is maintained between the head **1278** of the nock **1272** and the end of the insert **1276** to prevent the LED from illuminating before it is desired. To make this insertion the planar portions **1290** of the nock **1272**, shown in FIG. **37**, are juxtaposed to the planar portions **100** of the insert opening **1298**, shown in FIG. **42**, and the curved portions **1292** of the nock **1272** are juxtaposed to the curved portions **102** in the insert opening **1298**. Because, in the embodiment shown, there are three juxtaposed planar portions and three juxtaposed curved portions, there are three relative orientations where the nock **1272** can be received in the opening **1298**. All three work equally well for the nock **1272** as its contact surface **1282**, as seen best in FIG. **36**, provides three bowstring reception areas that can be used to receive and contact the bowstring, as shown. In this way, the nock **1272** is aligned both with respect to the insert **1276** and with respect to the vanes **1224** on the arrow **1220**. When the lighted nock assembly **1270** is attached to an arrow and the arrow is fired, the bowstring will contact the nock **1272** closing the gap D**6** and causing the LED to illuminate.

[0122] With reference now FIGS. **28-31** and **34-35**, if it is desired to remove the nock **1272** from the insert **1276**, the user can simply grip the head **1278** of the nock **1272** and pull it out of the insert openings **1298**, **106**. If the LED-battery combination component **1274** was press fit or otherwise attached to the nock **1272**, removing the nock **1272** from the insert **1276** will simultaneously remove the LED-battery combination component **1274** from the insert **1276**. The LED-battery combination component **1274** can then be easily removed from the nock **1272** by pulling it out of the nock opening **1288**, if desired.

[0123] The word "exemplary" is used herein to mean serving as an example, instance or illustration. Any aspect or design described herein as "exemplary" is not necessarily to

be construed as advantageous over other aspects or designs. Rather, use of the word exemplary is intended to present concepts in a concrete fashion. As used in this application, the term "or" is intended to mean an inclusive "or" rather than an exclusive "or." That is, unless specified otherwise, or clear from context, "X employs A or B" is intended to mean any of the natural inclusive permutations. That is, if X employs A; X employs B; or X employs both A and B, then "X employs A or B" is satisfied under any of the foregoing instances. Further, at least one of A and B and/or the like generally means A or B or both A and B. In addition, the articles "a" and "an" as used in this application and the appended claims may generally be construed to mean "one or more" unless specified otherwise or clear from context to be directed to a singular form.

[0124] Although the subject matter has been described in language specific to structural features and/or methodological acts, it is to be understood that the subject matter defined in the appended claims is not necessarily limited to the specific features or acts described above. Rather, the specific features and acts described above are disclosed as example forms of implementing the claims. Of course, those skilled in the art will recognize many modifications may be made to this configuration without departing from the scope or spirit of the claimed subject matter.

[0125] Also, although the disclosure has been shown and described with respect to one or more implementations, equivalent alterations and modifications will occur to others skilled in the art based upon a reading and understanding of this specification and the annexed drawings. The disclosure includes all such modifications and alterations and is limited only by the scope of the following claims. In particular regard to the various functions performed by the above described components (e.g., elements, resources, etc.), the terms used to describe such components are intended to correspond, unless otherwise indicated, to any component which performs the specified function of the described component (e.g., that is functionally equivalent), even though not structurally equivalent to the disclosed structure which performs the function in the herein illustrated exemplary implementations of the disclosure.

[0126] In addition, while a particular feature of the disclosure may have been disclosed with respect to only one of several implementations, such feature may be combined with one or more other features of the other implementations as may be desired and advantageous for any given or particular application. Furthermore, to the extent that the terms "includes," "having," "has," "with," or variants thereof are used in either the detailed description or the claims, such terms are intended to be inclusive in a manner similar to the term "comprising."

[0127] When the word "associated" is used in the claims, the intention is that the object so labeled is not positively claimed but rather describes an object with which the claimed object may be used.

[0128] Having thus described the invention, it is now claimed:

I/We claim:

1. A method comprising the steps of:

(A) providing a nock with: (1) a circumference; (2) an attachment surface; and (3) a top portion having an axial centerline and first, second and third distinct string guide impressions;

(B) providing each string guide impression with two circumferentially spaced walls separated by a floor that is curvilinear in shape;

(C) providing each wall with: (1) an axially extending peak that is curvilinear in shape; and (2) first and second circumferentially spaced sides that are curvilinear in shape;

(D) providing the nock to be useful with an associated arrow having a longitudinal axis and an associated bow having a bowstring; and

(E) providing the nock to be operable to perform the following steps: (1) connecting the attachment surface to the associated arrow and aligning the nock with respect to the associated arrow; and (2) contacting the associated bowstring to any surface on the top portion of the nock;

wherein step (E)(2) comprises the steps of: (1) contacting a curvilinear surface of the nock with the associated bowstring; and (2) positioning the associated bowstring within at least one of the string guide impressions to fire the associated arrow.

2. The method of claim **1** wherein:

step (A)(3) comprises the step of: providing the top portion with a fourth distinct string guide impression;

step (A) further comprises the steps of: providing the first string guide impression and the second string guide impression on opposite ends of a first bisecting line of the top portion;

providing the third string guide impression and the fourth string guide impression on opposite ends of a second bisecting line of the top portion; and

step (E)(2) comprises the step of: positioning the associated bowstring within one of: the first and second string guide impressions; and, the third and fourth string guide impressions.

3. The method of claim **1** wherein step (E)(2) comprises the step of:

causing the associated arrow to rotate about its longitudinal axis with respect to the associated bow.

4. The method of claim **1** wherein:

step (B) comprises the step of: providing each floor with a concave shape facing a first axial direction; and

step (C) comprises the step of: providing each peak with a convex shape facing the first axial direction.

5. The method of claim **1** wherein step (A) further comprises the step of:

providing the top portion with a slot positioned on the axial centerline.

6. The method of claim **1** wherein:

step (C) comprises the step of: providing each peak to be curved along a substantially constant first radius; and

step (B) comprises the step of: providing each floor to be curved along a substantially constant second radius that is greater than the first radius.

7. The method of claim **1** wherein:

step (D) comprises the step of: providing the bowstring to have a first radius; and

step (B) comprises the step of: providing each floor to be curved along a substantially constant second radius that is greater than the first radius.

8. A method comprising the steps of:

(A) providing a nock with: (1) a circumference; (2) an attachment surface; and (3) a top portion having an axial centerline and first, second and third distinct string guide impressions;

(B) providing each string guide impression with two circumferentially spaced walls separated by a floor;

(C) providing each wall with: (1) an axially extending peak; and (2) first and second circumferentially spaced sides that are curvilinear in shape;

(D) providing the nock to be useful with an associated arrow having a longitudinal axis and an associated bow having a bowstring with a circular cross-section; and

(E) providing the nock to be operable to perform the following steps: (1) connecting the attachment surface to the associated arrow and aligning the nock with respect to the associated arrow; and (2) receiving a portion of the associated bowstring within at least one of the string guide impressions to fire the associated arrow;

wherein step (E)(2) comprises the steps of: (1) contacting the corresponding floor with the associated bowstring; and (2) simultaneously extending the associated bowstring axially beyond the corresponding wall peaks.

9. The method of claim **8** wherein:

step (A)(3) comprises the step of: providing the top portion with a fourth distinct string guide impression;

step (A) further comprises the steps of: providing the first string guide impression and the second string guide impression on opposite ends of a first bisecting line of the top portion;

providing the third string guide impression and the fourth string guide impression on opposite ends of a second bisecting line of the top portion; and

step (E)(2) comprises the step of: positioning the associated bowstring within one of: the first and second string guide impressions; and, the third and fourth string guide impressions.

10. The method of claim **8** wherein step (E)(2) comprises the step of:

causing the associated arrow to rotate about its longitudinal axis with respect to the associated bow.

11. The method of claim **8** wherein step (B) comprises the step of:

providing the floor to extend into the nock a distance of about 0.04 inches.

12. The method of claim **8** wherein step (A) further comprises the step of:

providing the top portion with a slot positioned on the axial centerline.

13. The method of claim **12** further comprising the steps of:

providing the floor to extend into the nock a first distance; and

providing the slot to extend into the nock a second distance that is greater than the first distance.

14. A method comprising the steps of:

(A) providing a nock with: (1) an attachment surface; and (2) a top portion having first and second distinct string guide impressions;

(B) providing the nock to be useful with an associated arrow having a longitudinal axis and an associated bow that: (1) has a bowstring; and (2) is designed to receive the associated arrow for firing in a limited number of alignment orientations; and

(C) providing the nock to be operable to perform the following steps: (1) connecting the attachment surface to the associated arrow and aligning the nock with respect to the associated arrow; (2) contacting the associated bowstring to the top portion of the nock; and (3) receiving a portion of the associated bowstring within at least one of the string guide impressions to fire the associated arrow;

wherein steps (C)(2) and (C)(3) comprise the step of: rotating the associated arrow about its longitudinal axis with respect to the associated bow to prevent the associated arrow from remaining in any orientation other than one of the limited number of alignment orientations.

15. The method of claim **14** wherein step (A) further comprises the step of:

providing each string guide impression with a concave shape having gradually sloping walls separated by a floor.

16. The method of claim **14** wherein:

step (A)(2) comprises the step of: providing the first string guide impression and the second string guide impression on opposite ends of a bisecting line of the top portion; and

wherein steps (C)(2) and (C)(3) comprise the step of: positioning the associated bowstring within the first and second string guide impressions.

17. The method of claim **14** wherein:

step (A)(3) comprises the step of: providing the top portion with third and fourth distinct string guide impressions;

step (A) further comprises the steps of: providing the first string guide impression and the second string guide impression on opposite ends of a first bisecting line of the top portion;

providing the third string guide impression and the fourth string guide impression on opposite ends of a second bisecting line of the top portion; and

wherein steps (C)(2) and (C)(3) comprise the step of: positioning the associated bowstring within one of: the first and second string guide impressions; and, the third and fourth string guide impressions.

18. The method of claim **14** wherein:

step (B) comprises the steps of: providing the associated arrow with at least one fletching vane; and providing the associated bow on an associated crossbow having a barrel slot; and

steps (C)(2) and (C)(3) comprise the step of: preventing the at least one fletching vane from remaining misaligned with respect to the barrel slot.

19. The method of claim **14** wherein:

step (B) comprises the step of: providing the associated bow on an associated crossbow having a barrel slot; and

steps (C)(2) and (C)(3) comprise the step of: preventing the associated arrow from remaining in a position above the barrel slot.

20. The method of claim **14** wherein step (A) further comprises the steps of:

providing the top with an axial centerline; and

providing the top portion with a slot positioned on the axial centerline.

* * * * *