US010460217B2

(12) **United States Patent**
Sagimori et al.

(10) **Patent No.: US 10,460,217 B2**
(45) **Date of Patent: Oct. 29, 2019**

(54) **INFORMATION PROCESSING DEVICE, INFORMATION PROCESSING METHOD, AND COMPUTER-READABLE RECORDING MEDIUM**

(71) Applicants: **Yuuki Sagimori**, Kanagawa (JP); **Akiho Watanabe**, Kanagawa (JP)

(72) Inventors: **Yuuki Sagimori**, Kanagawa (JP); **Akiho Watanabe**, Kanagawa (JP)

(73) Assignee: **Ricoh Company, Ltd.**, Tokyo (JP)

(*) Notice: Subject to any disclaimer, the term of this patent is extended or adjusted under 35 U.S.C. 154(b) by 55 days.

(21) Appl. No.: **15/921,697**

(22) Filed: **Mar. 15, 2018**

(65) **Prior Publication Data**

US 2018/0268269 A1 Sep. 20, 2018

(30) **Foreign Application Priority Data**

Mar. 16, 2017 (JP) 2017-051236
Jan. 18, 2018 (JP) 2018-006753

(51) **Int. Cl.**
G06K 15/02 (2006.01)
G03G 15/01 (2006.01)
G03G 15/00 (2006.01)

(52) **U.S. Cl.**
CPC ***G06K 15/027*** (2013.01); ***G03G 15/01*** (2013.01); ***G03G 15/5054*** (2013.01);
(Continued)

(58) **Field of Classification Search**
CPC G06K 15/027; G06K 15/1878; G06K 15/1881; G06K 2215/0094; G03G 15/01;
(Continued)

(56) **References Cited**

U.S. PATENT DOCUMENTS

2011/0058196 A1* 3/2011 Teraue H04N 1/6033 358/1.9
2011/0216335 A1* 9/2011 Horita H04N 1/60 358/1.9

(Continued)

FOREIGN PATENT DOCUMENTS

JP 2008-015197 1/2008
JP 2009-031511 2/2009

(Continued)

Primary Examiner — Iriana Cruz
(74) *Attorney, Agent, or Firm* — Oblon, McClelland, Maier & Neustadt, L.L.P.

(57) **ABSTRACT**

A specification part of an information processing device specifies, by using image data for a correction chart defining a plurality of patch regions having different color values, a target characteristic indicating a relation between the color value and a first colorimetric value of a first patch image as a laminated image of a special color image and a colored image that correspond to each of the patch regions formed by the device through the 2-path printing. A generation part of the device generates a correction table for correcting the color value so that a measured characteristic comes close to the target characteristic, the measured characteristic indicating a relation between the color value and a second colorimetric value of a second patch image as the laminated image corresponding to each of the patch regions formed by the device through the 1-path printing using the image data for a correction chart.

19 Claims, 29 Drawing Sheets

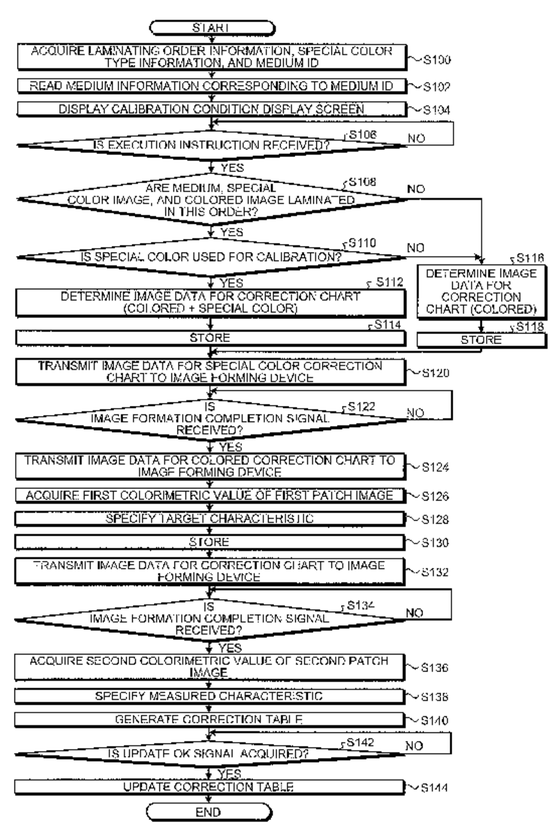

(52) **U.S. Cl.**
CPC ***G03G 15/5062*** (2013.01); ***G03G 15/6585*** (2013.01); ***G06K 15/1878*** (2013.01); ***G06K 15/1881*** (2013.01); *G03G 2215/00063* (2013.01); *G06K 2215/0094* (2013.01)

(58) **Field of Classification Search**
CPC G03G 15/5054; G03G 15/5062; G03G 15/6585; G03G 2215/00063
See application file for complete search history.

(56) **References Cited**

U.S. PATENT DOCUMENTS

2016/0080607	A1*	3/2016	Horita	H04N 1/6033 358/1.9
2017/0153573	A1*	6/2017	Kawasaki	G03G 15/0121

FOREIGN PATENT DOCUMENTS

JP	2015-206951	11/2015
JP	2016-063287	4/2016
JP	2016-129990	7/2016

* cited by examiner

FIG.1

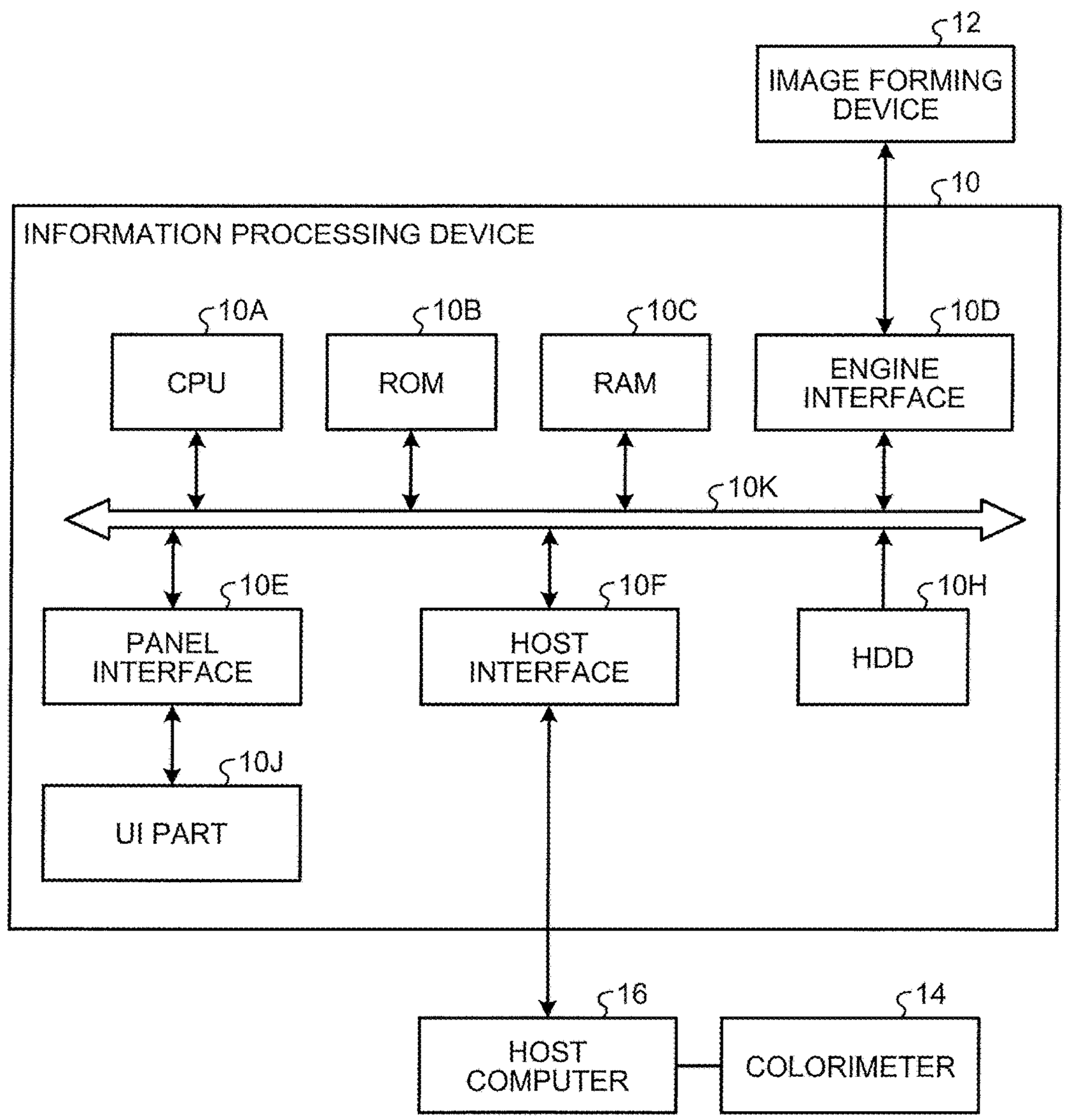
12
IMAGE FORMING DEVICE
10
INFORMATION PROCESSING DEVICE
10A
CPU
10B
ROM
10C
RAM
10D
ENGINE INTERFACE
10K
10E
PANEL INTERFACE
10F
HOST INTERFACE
10H
HDD
10J
UI PART
16
HOST COMPUTER
14
COLORIMETER

FIG.2

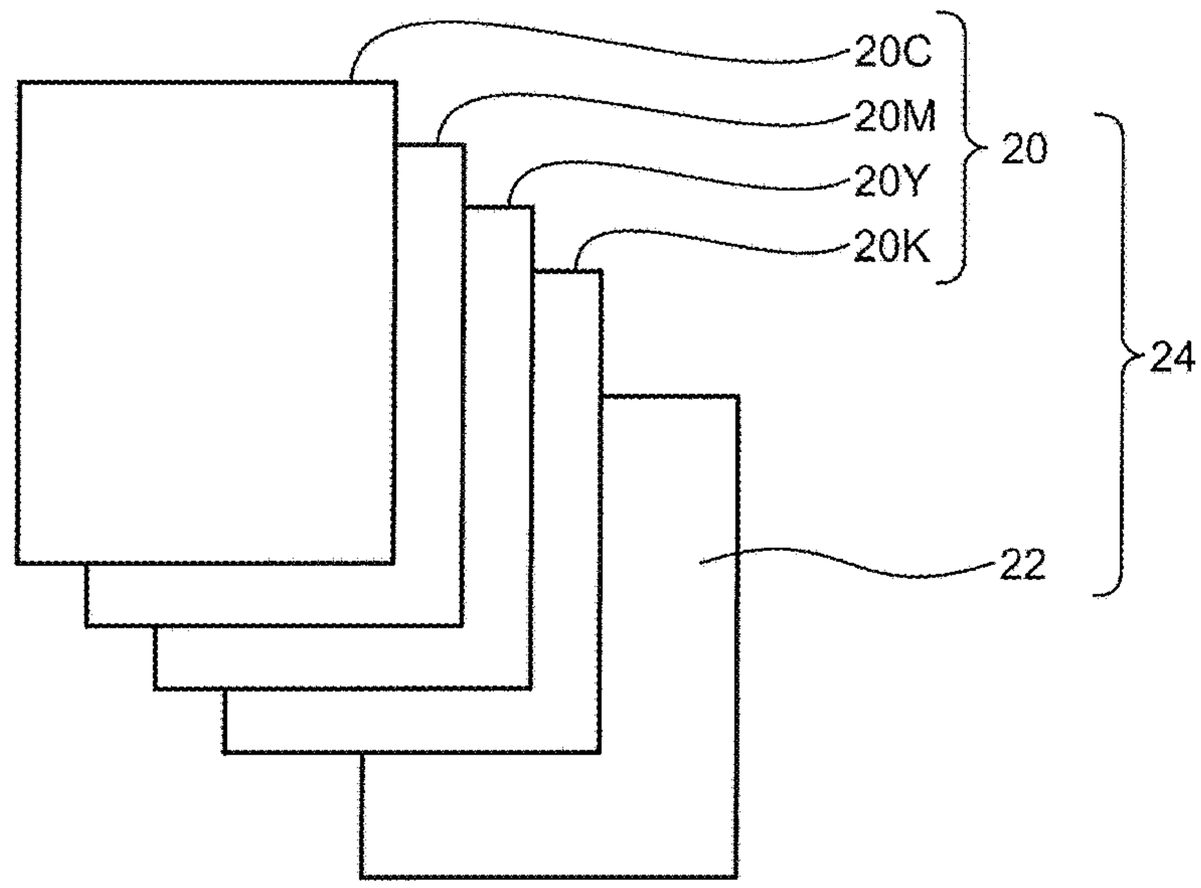
20C
20M
20Y
20K
20
24
22

FIG.3

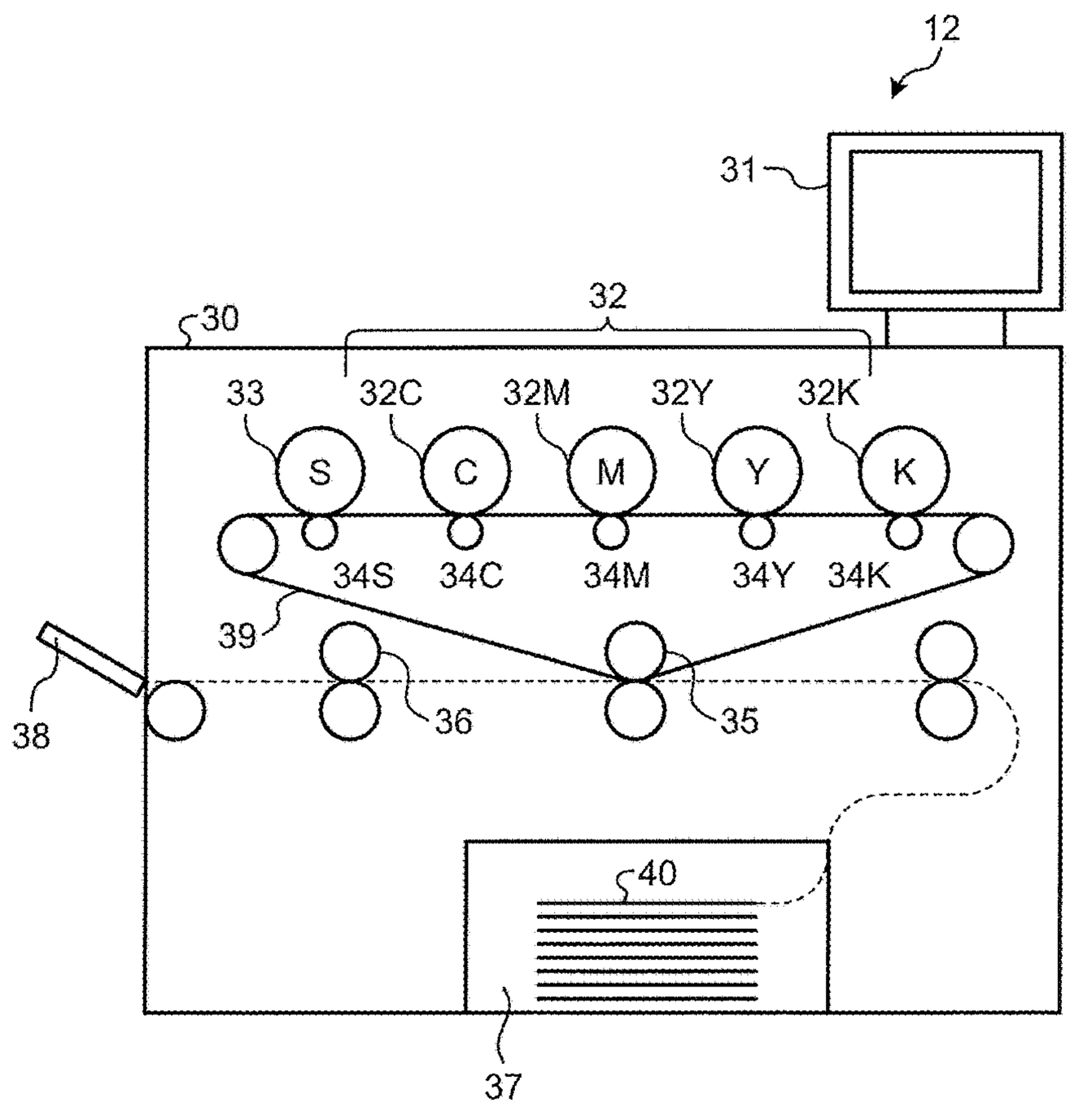
12
31
32
30
33
32C
32M
32Y
32K
S
C
M
Y
K
34S
34C
34M
34Y
34K
39
38
36
35
40
37

FIG.4A

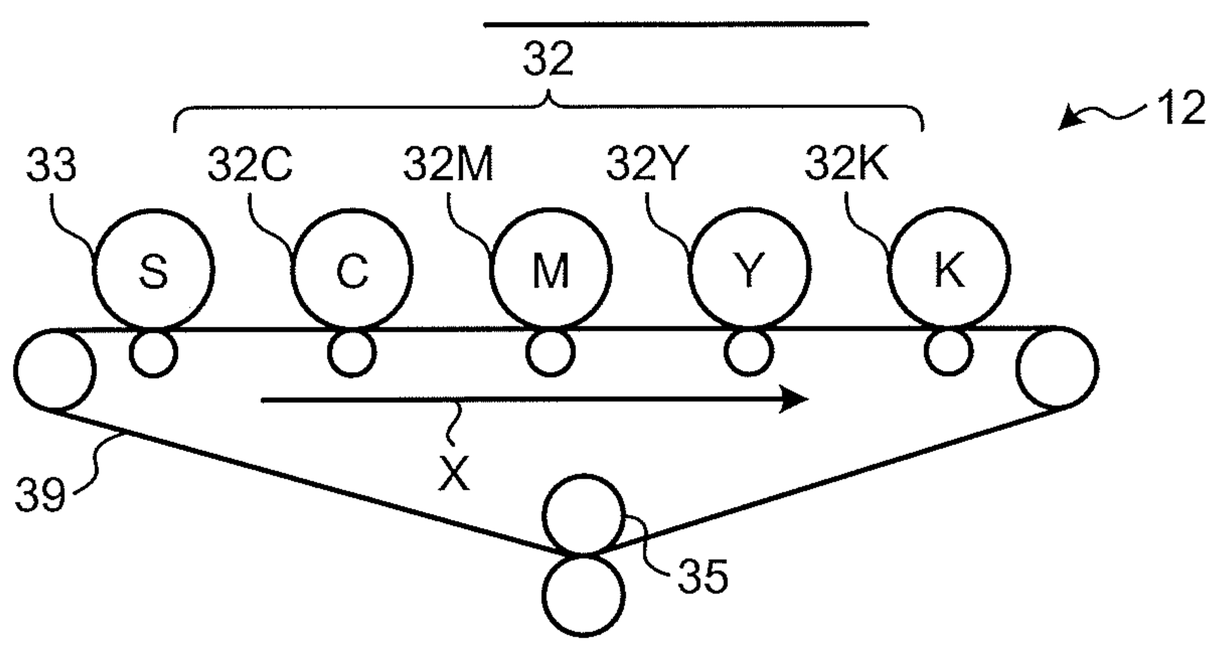
32
12
33
32C
32M
32Y
32K
S
C
M
Y
K
X
39
35

FIG.4B

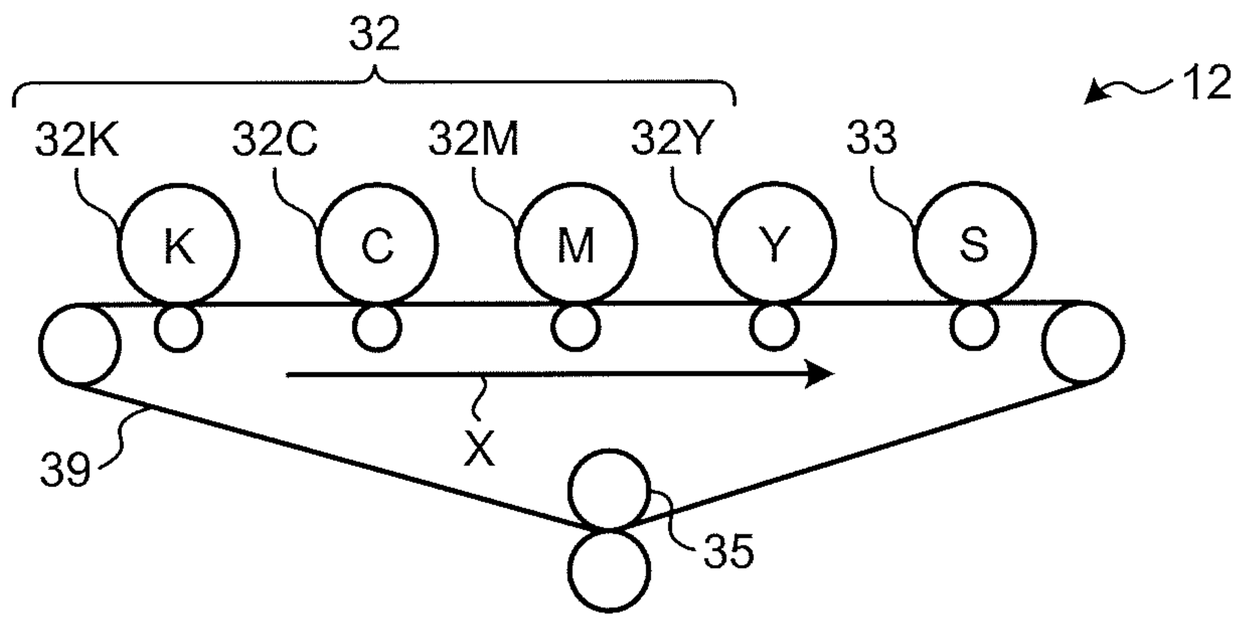
32
12
32K
32C
32M
32Y
33
K
C
M
Y
S
X
39
35

FIG.5A

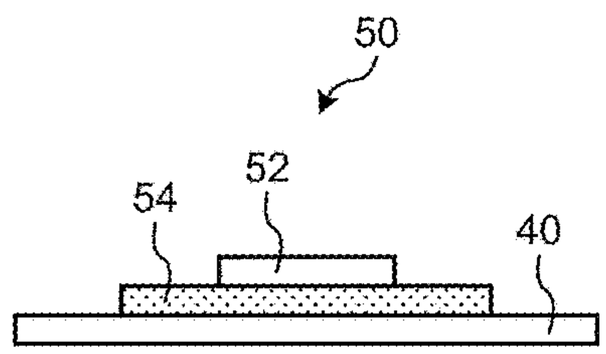

FIG.5B

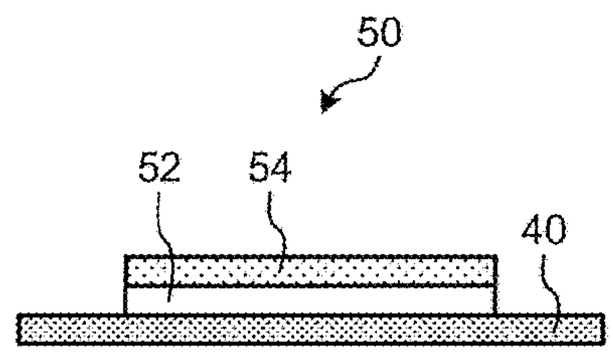

FIG.6A

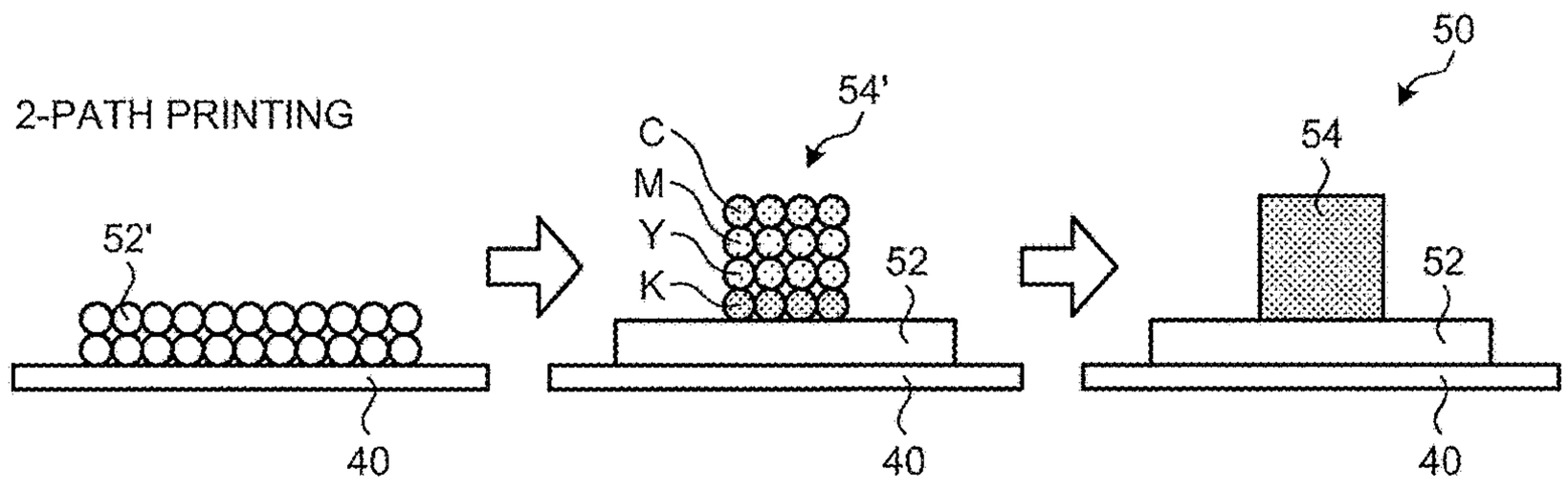

FIG.6B

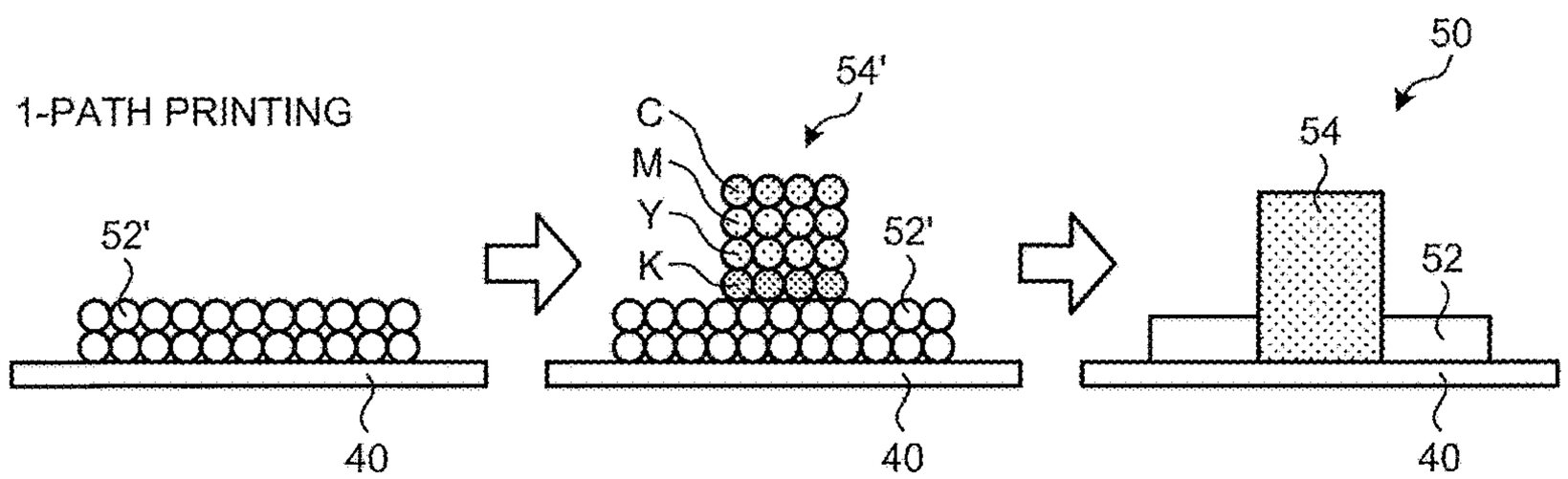

FIG.7

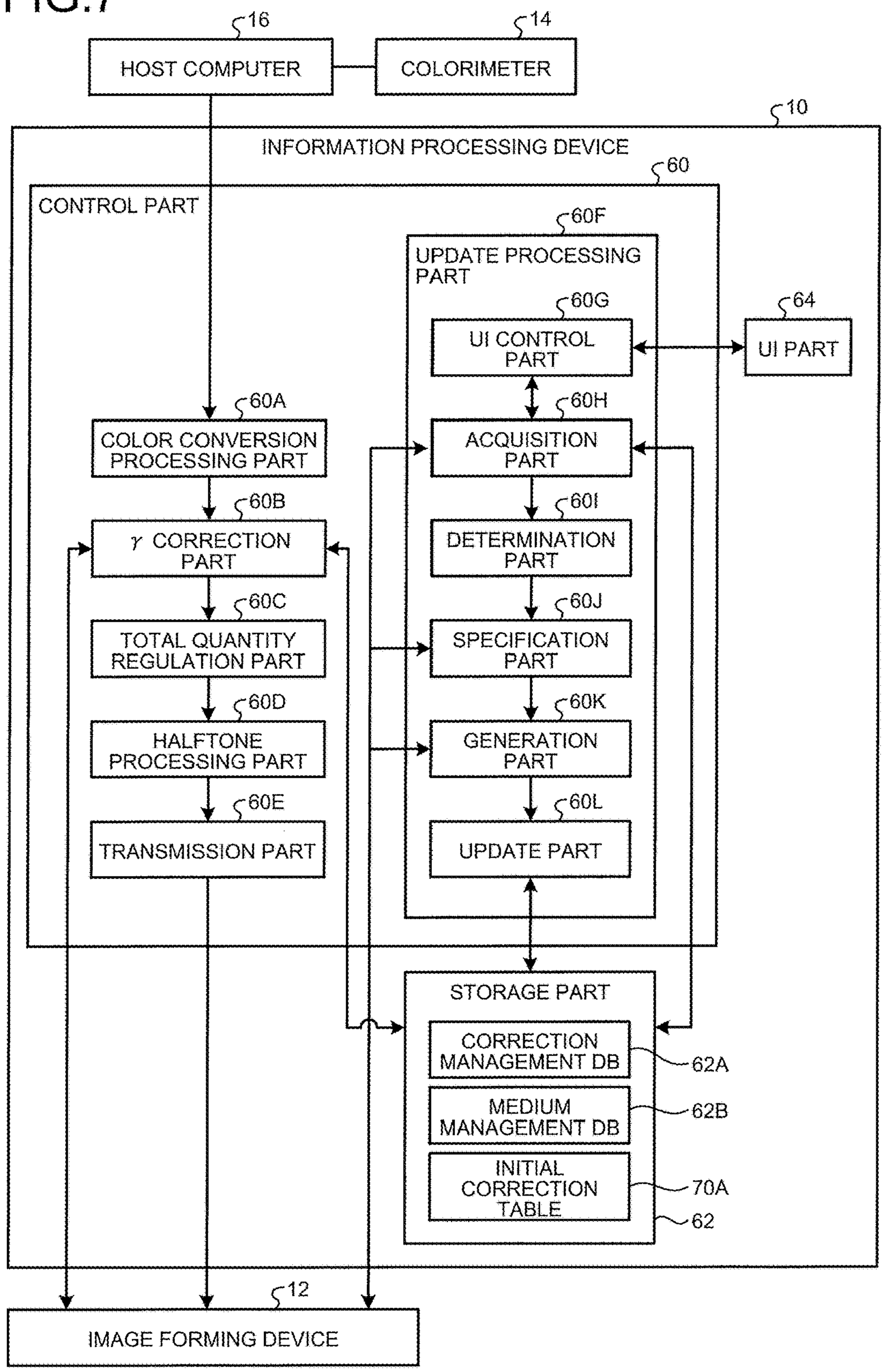
16
HOST COMPUTER
14
COLORIMETER
10
INFORMATION PROCESSING DEVICE
60
CONTROL PART
60F
UPDATE PROCESSING PART
60G
UI CONTROL PART
64
UI PART
60A
COLOR CONVERSION PROCESSING PART
60H
ACQUISITION PART
60B
γ CORRECTION PART
60I
DETERMINATION PART
60C
TOTAL QUANTITY REGULATION PART
60J
SPECIFICATION PART
60D
HALFTONE PROCESSING PART
60K
GENERATION PART
60E
TRANSMISSION PART
60L
UPDATE PART
STORAGE PART
CORRECTION MANAGEMENT DB
62A
MEDIUM MANAGEMENT DB
62B
INITIAL CORRECTION TABLE
70A
62
12
IMAGE FORMING DEVICE

FIG.8

62A

CORRECTION MANAGEMENT DB

CALIBRATION CONDITION					IMAGE DATA FOR CORRECTION CHART		TARGET CHARAC-TERISTIC	CORRECTION TABLE
CALIBRATION ID	MEDIUM ID	LAMINATING ORDER INFORMATION	SPECIAL COLOR TYPE INFORMATION	WHETHER TO USE SPECIAL COLOR FOR CALIBRATION	IMAGE DATA FOR COLORED CORRECTION CHART	IMAGE DATA FOR SPECIAL COLOR CORRECTION CHART		
01	A	MEDIUM, SPECIAL COLOR IMAGE, COLORED IMAGE	WHITE	USE	A1	B1	C1	D1
02	B	MEDIUM, SPECIAL COLOR IMAGE, COLORED IMAGE	GOLD	USE	A1	B2	C2	D2
03	C	MEDIUM, COLORED IMAGE, SPECIAL COLOR IMAGE	TRANSPARENT	USE	A1	B3	C3	D3
04	A	MEDIUM, SPECIAL COLOR IMAGE, COLORED IMAGE	WHITE	NOT USE	A1	-	-	D4
⋮								

FIG.9A

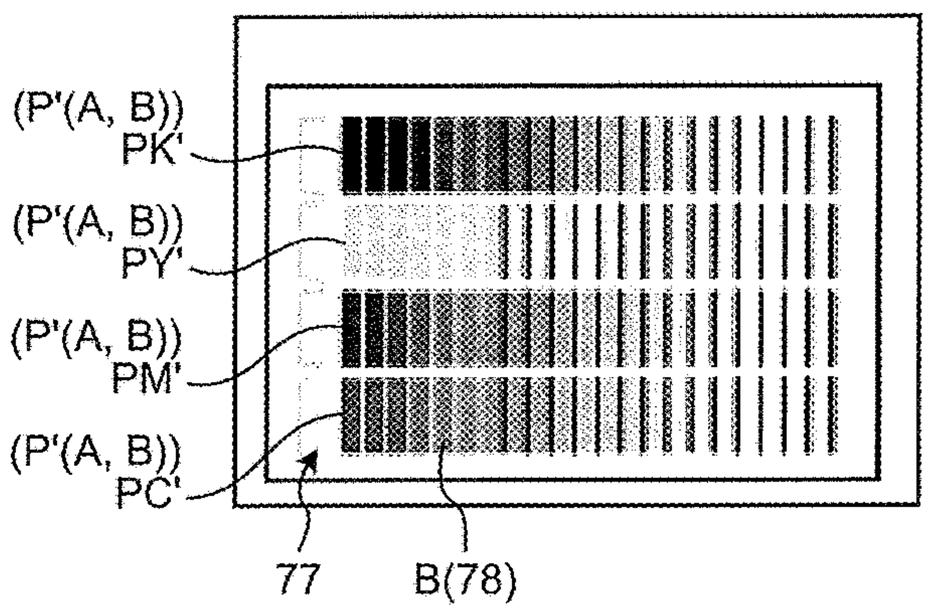

FIG.9B

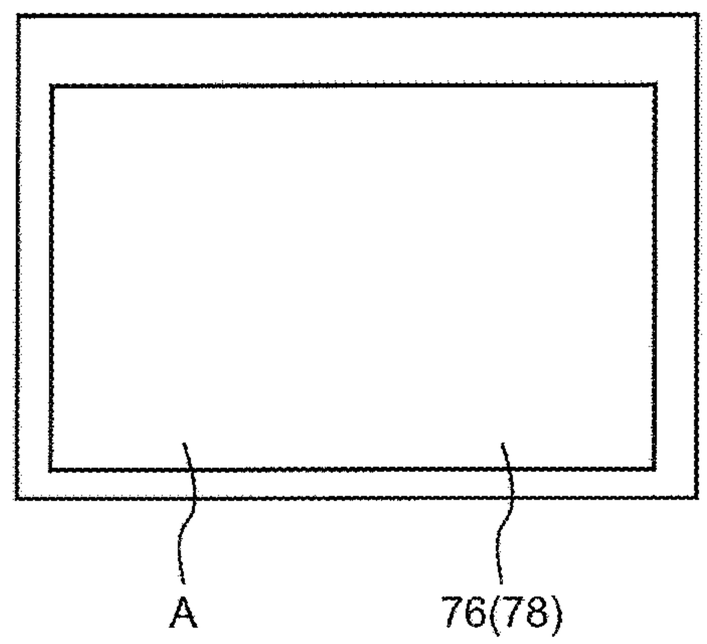

FIG.10

62B

MEDIUM MANAGEMENT DB

MEDIUM ID	MEDIUM INFORMATION				
	MEDIUM NAME	SIZE (WIDTH AND HEIGHT)	WEIGHTING	COLOR	TYPE
A	paperA	XXX, YYY	JJJJ	BLACK	PLAIN PAPER
B	paperB	XXX, YYY	JJJJ	WHITE	PLAIN PAPER
C	paperC	XXX, YYY	JJJJ	WHITE	PLAIN PAPER

FIG.11

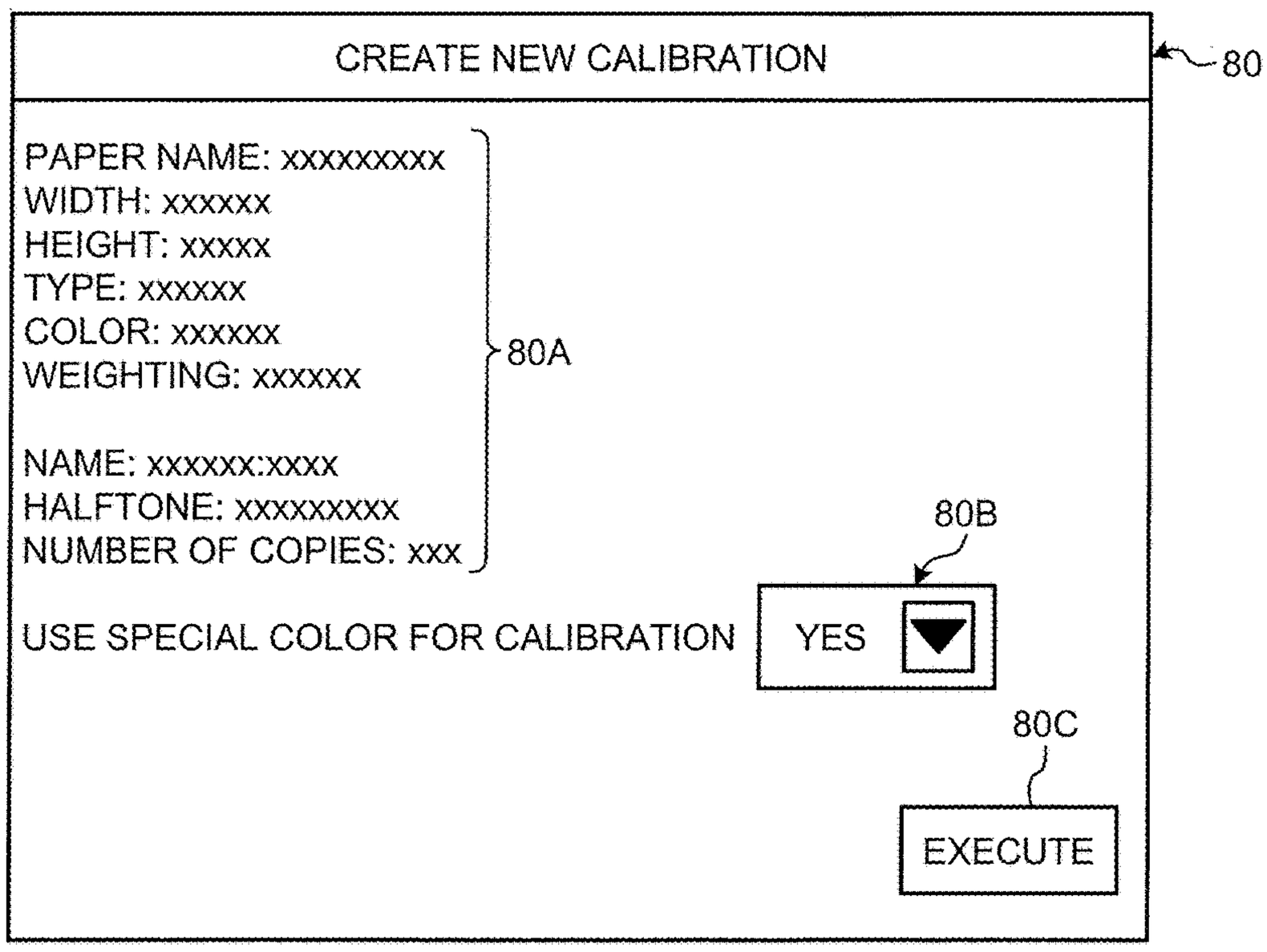
CREATE NEW CALIBRATION
80
PAPER NAME: xxxxxxxxx
WIDTH: xxxxxx
HEIGHT: xxxxx
TYPE: xxxxxx
COLOR: xxxxxx
WEIGHTING: xxxxxx
NAME: xxxxxx:xxxx
HALFTONE: xxxxxxxxx
NUMBER OF COPIES: xxx
80A
80B
USE SPECIAL COLOR FOR CALIBRATION
YES
80C
EXECUTE

FIG.12A

FIRST PATH

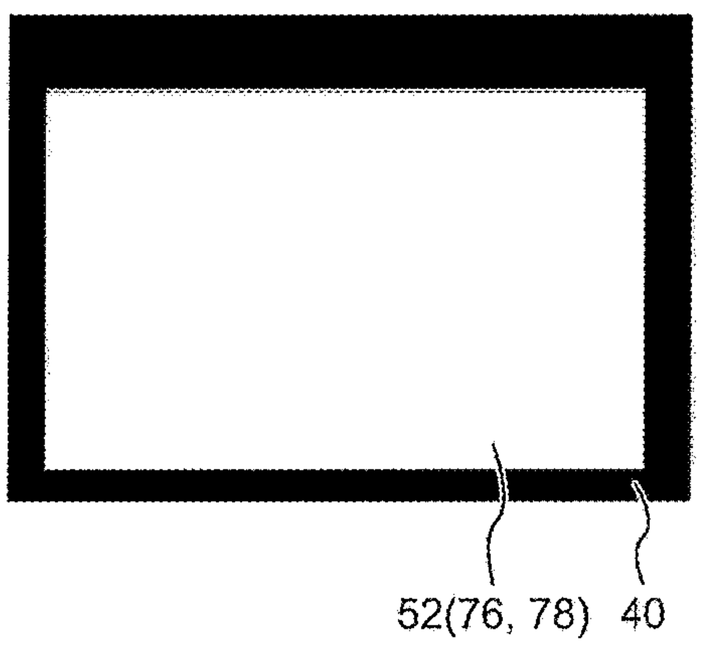

FIG.12B

SECOND PATH

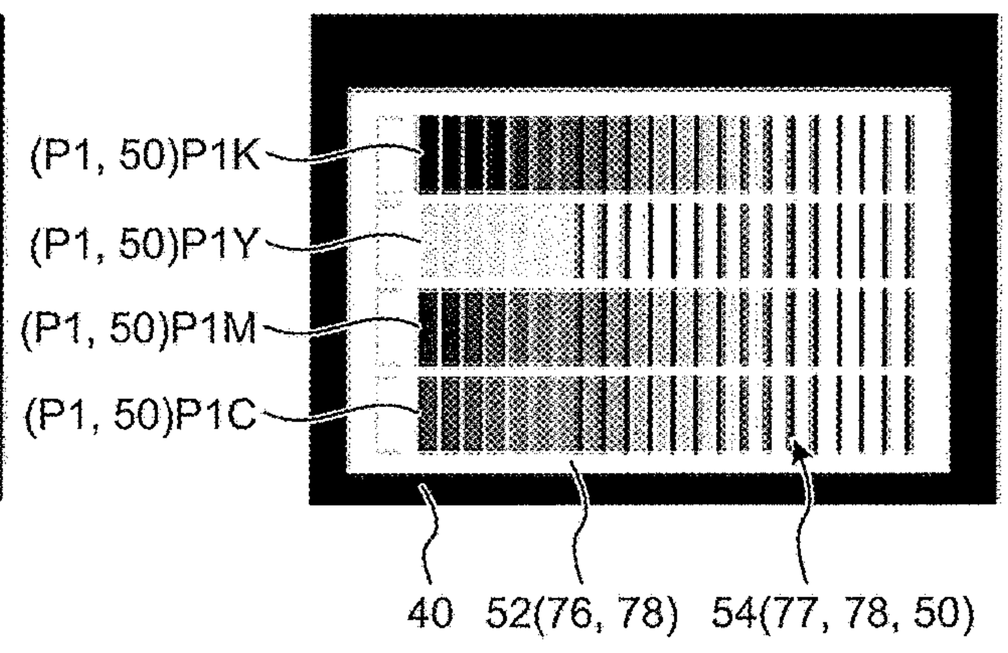

FIG.12C

1-PATH

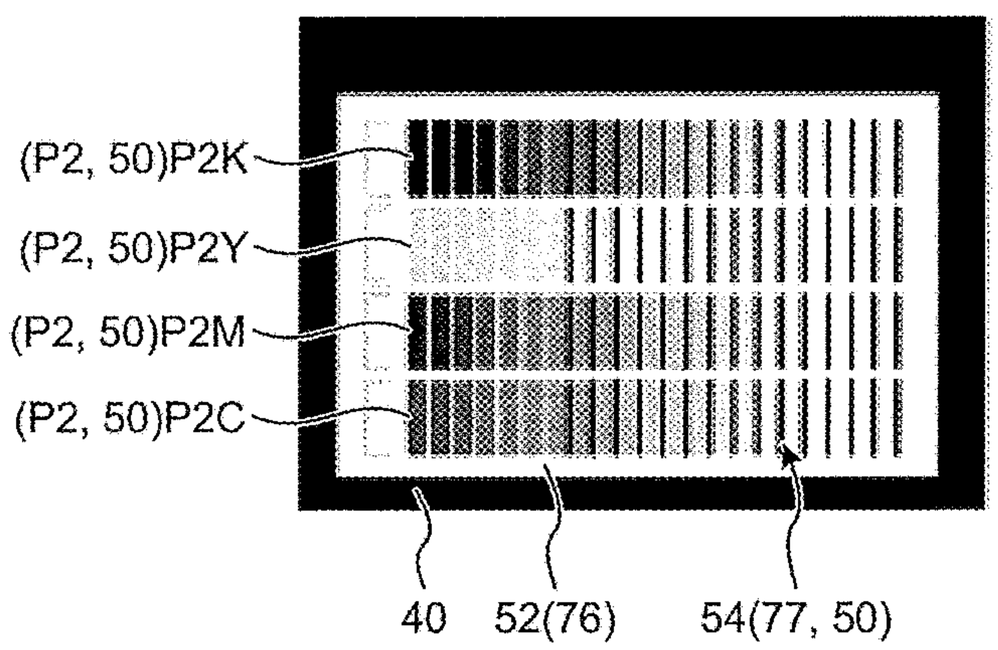

FIG.13

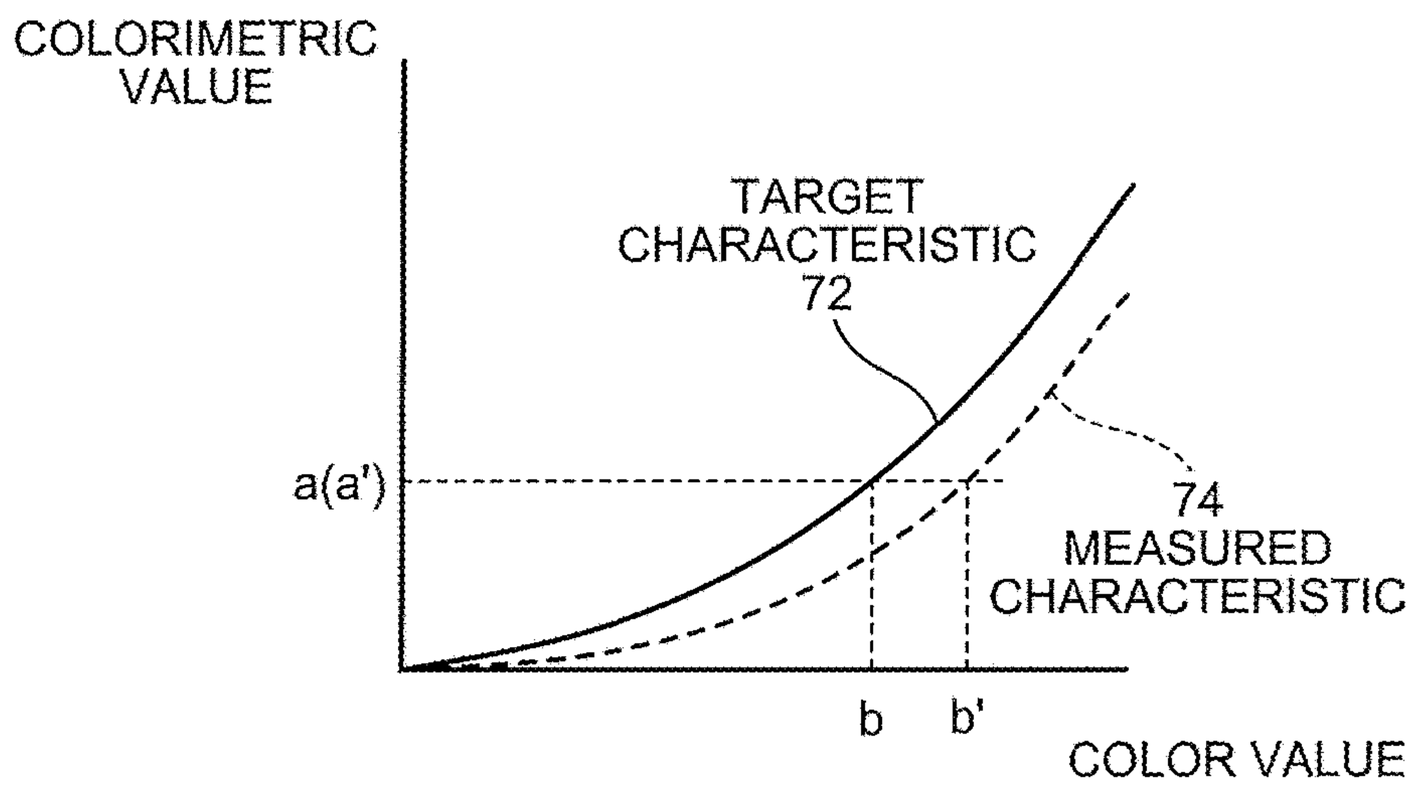
COLORIMETRIC VALUE
TARGET CHARACTERISTIC 72
a(a')
74 MEASURED CHARACTERISTIC
b
b'
COLOR VALUE

FIG.14

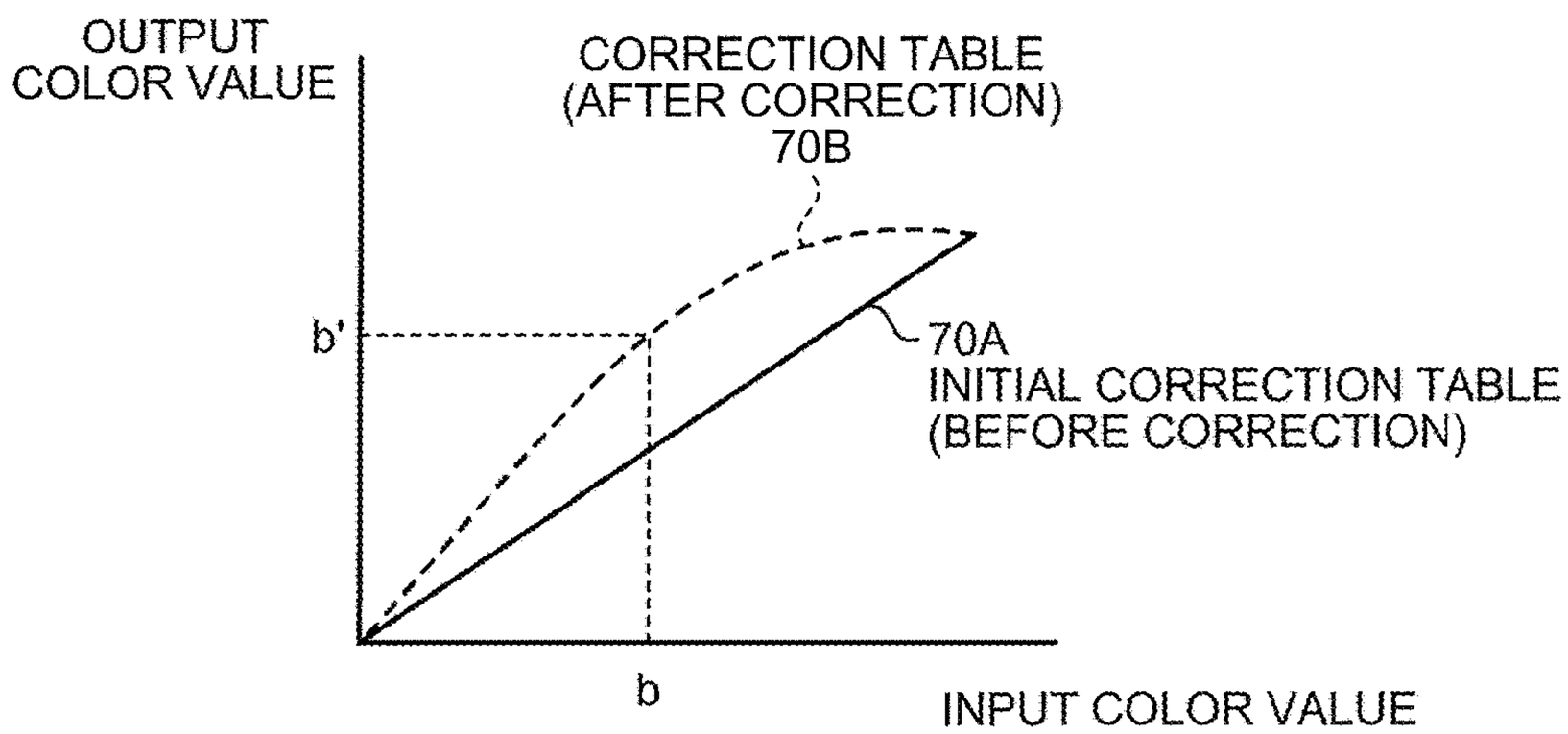
OUTPUT COLOR VALUE
CORRECTION TABLE (AFTER CORRECTION) 70B
b'
70A INITIAL CORRECTION TABLE (BEFORE CORRECTION)
b
INPUT COLOR VALUE

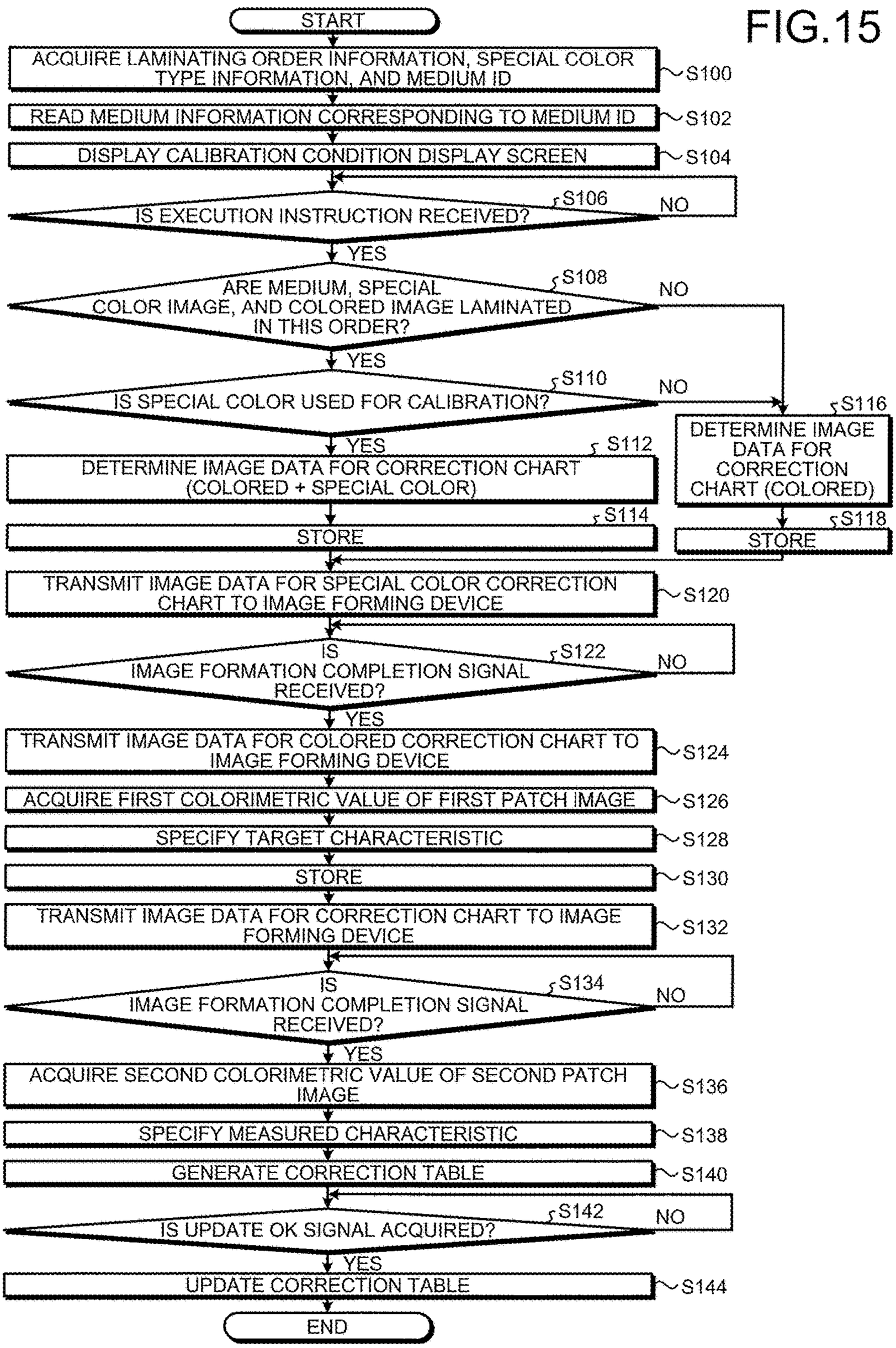
START
ACQUIRE LAMINATING ORDER INFORMATION, SPECIAL COLOR TYPE INFORMATION, AND MEDIUM ID
S100
READ MEDIUM INFORMATION CORRESPONDING TO MEDIUM ID
S102
DISPLAY CALIBRATION CONDITION DISPLAY SCREEN
S104
IS EXECUTION INSTRUCTION RECEIVED?
S106
NO
YES
ARE MEDIUM, SPECIAL COLOR IMAGE, AND COLORED IMAGE LAMINATED IN THIS ORDER?
S108
NO
YES
IS SPECIAL COLOR USED FOR CALIBRATION?
S110
NO
YES
DETERMINE IMAGE DATA FOR CORRECTION CHART (COLORED + SPECIAL COLOR)
S112
DETERMINE IMAGE DATA FOR CORRECTION CHART (COLORED)
S116
STORE
S114
STORE
S118
TRANSMIT IMAGE DATA FOR SPECIAL COLOR CORRECTION CHART TO IMAGE FORMING DEVICE
S120
IS IMAGE FORMATION COMPLETION SIGNAL RECEIVED?
S122
NO
YES
TRANSMIT IMAGE DATA FOR COLORED CORRECTION CHART TO IMAGE FORMING DEVICE
S124
ACQUIRE FIRST COLORIMETRIC VALUE OF FIRST PATCH IMAGE
S126
SPECIFY TARGET CHARACTERISTIC
S128
STORE
S130
TRANSMIT IMAGE DATA FOR CORRECTION CHART TO IMAGE FORMING DEVICE
S132
IS IMAGE FORMATION COMPLETION SIGNAL RECEIVED?
S134
NO
YES
ACQUIRE SECOND COLORIMETRIC VALUE OF SECOND PATCH IMAGE
S136
SPECIFY MEASURED CHARACTERISTIC
S138
GENERATE CORRECTION TABLE
S140
IS UPDATE OK SIGNAL ACQUIRED?
S142
NO
YES
UPDATE CORRECTION TABLE
S144
END

FIG.15

FIG.16

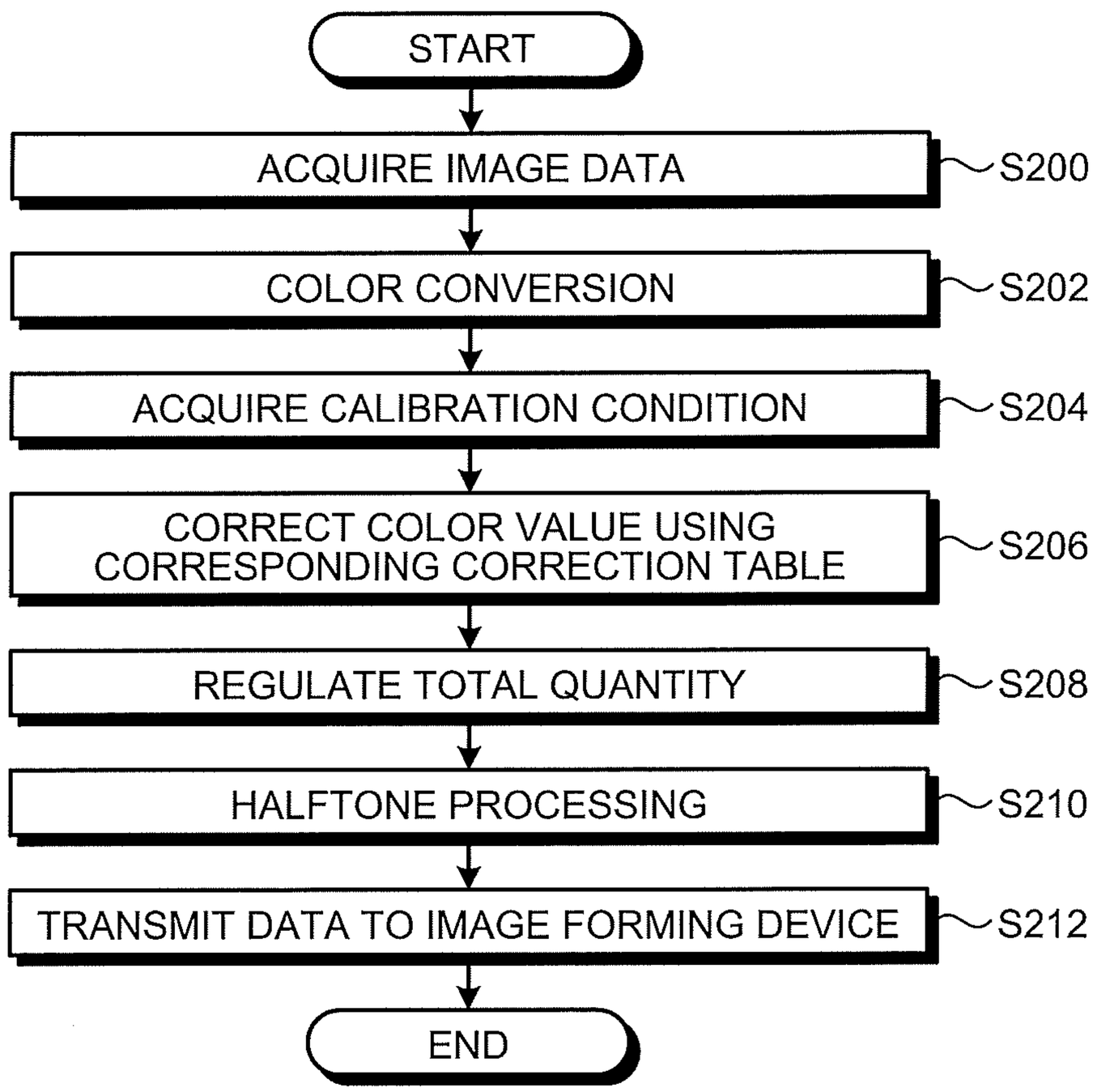
START
ACQUIRE IMAGE DATA
S200
COLOR CONVERSION
S202
ACQUIRE CALIBRATION CONDITION
S204
CORRECT COLOR VALUE USING CORRESPONDING CORRECTION TABLE
S206
REGULATE TOTAL QUANTITY
S208
HALFTONE PROCESSING
S210
TRANSMIT DATA TO IMAGE FORMING DEVICE
S212
END

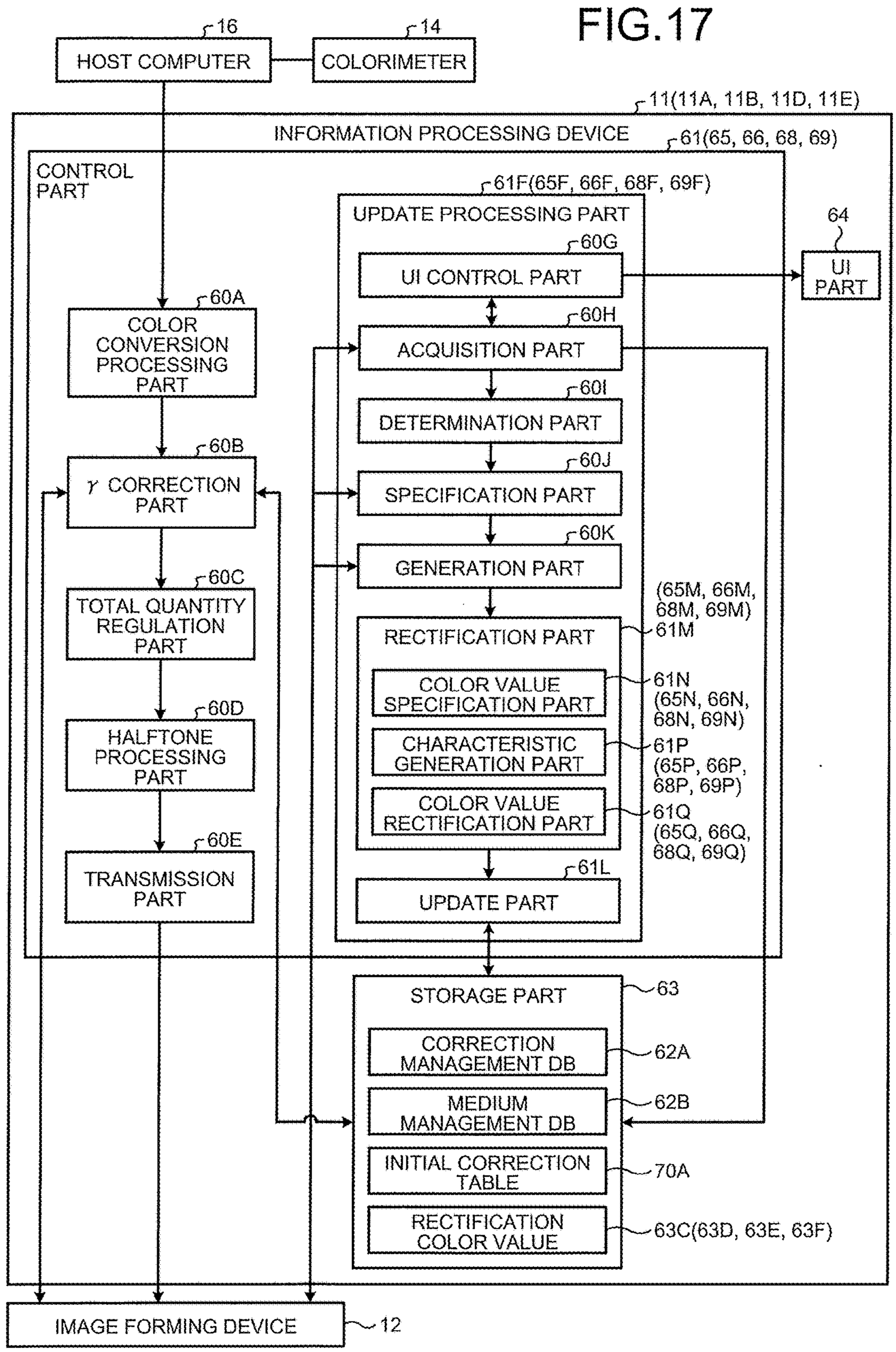
FIG.17
16
HOST COMPUTER
14
COLORIMETER
11(11A, 11B, 11D, 11E)
INFORMATION PROCESSING DEVICE
61(65, 66, 68, 69)
CONTROL PART
61F(65F, 66F, 68F, 69F)
UPDATE PROCESSING PART
64
60G
UI CONTROL PART
UI PART
60A
COLOR CONVERSION PROCESSING PART
60H
ACQUISITION PART
60I
DETERMINATION PART
60B
γ CORRECTION PART
60J
SPECIFICATION PART
60K
GENERATION PART
60C
TOTAL QUANTITY REGULATION PART
(65M, 66M, 68M, 69M)
61M
RECTIFICATION PART
COLOR VALUE SPECIFICATION PART
61N (65N, 66N, 68N, 69N)
60D
HALFTONE PROCESSING PART
CHARACTERISTIC GENERATION PART
61P (65P, 66P, 68P, 69P)
COLOR VALUE RECTIFICATION PART
61Q (65Q, 66Q, 68Q, 69Q)
60E
TRANSMISSION PART
61L
UPDATE PART
STORAGE PART
63
CORRECTION MANAGEMENT DB
62A
MEDIUM MANAGEMENT DB
62B
INITIAL CORRECTION TABLE
70A
RECTIFICATION COLOR VALUE
63C(63D, 63E, 63F)
IMAGE FORMING DEVICE
12

FIG.18

77(78)

PATCH REGION				COLOR VALUE
C00	M00	Y00	K00	0
C01	M01	Y01	K01	16
C02	M02	Y02	K02	32
C03	M03	Y03	K03	48
C04	M04	Y04	K04	64
C05	M05	Y05	K05	80
C06	M06	Y06	K06	96
C07	M07	Y07	K07	112
C08	M08	Y08	K08	128
C09	M09	Y09	K09	143
C10	M10	Y10	K10	159
C11	M11	Y11	K11	175
C12	M12	Y12	K12	191
C13	M13	Y13	K13	207
C14	M14	Y14	K14	223
C15	M15	Y15	K15	239
C16	M16	Y16	K16	255

FIG.19

72

COLOR VALUE	FIRST COLORIMETRIC VALUE			
	C	M	Y	K
0	0.04	0.05	0.03	0.06
16	0.07	0.06	0.04	0.07
32	0.09	0.07	0.05	0.10
48	0.12	0.10	0.06	0.14
64	0.16	0.14	0.08	0.20
80	0.20	0.18	0.11	0.26
96	0.25	0.22	0.14	0.34
112	0.32	0.27	0.17	0.42
128	0.39	0.33	0.20	0.51
143	0.47	0.40	0.24	0.60
159	0.57	0.50	0.30	0.72
175	0.67	0.60	0.36	0.84
191	0.80	0.71	0.45	0.96
207	0.93	0.83	0.55	1.10
223	1.07	0.97	0.69	1.24
239	1.25	1.12	0.84	1.40
255	1.45	1.30	1.00	1.60

FIG.20

72(74)

COLOR VALUE	K-COLOR COLORIMETRIC VALUE	
	FIRST COLORIMETRIC VALUE	SECOND COLORIMETRIC VALUE
0	0.06	0.06
16	0.07	0.07
32	0.10	0.08
48	0.14	0.09
64	0.20	0.12
80	0.26	0.16
96	0.34	0.20
112	0.42	0.25
128	0.51	0.30
143	0.60	0.37
159	0.72	0.42
175	0.84	0.50
191	0.96	0.60
207	1.10	0.72
223	1.24	0.85
239	1.40	1.00
255	1.60	1.20

FIG.21

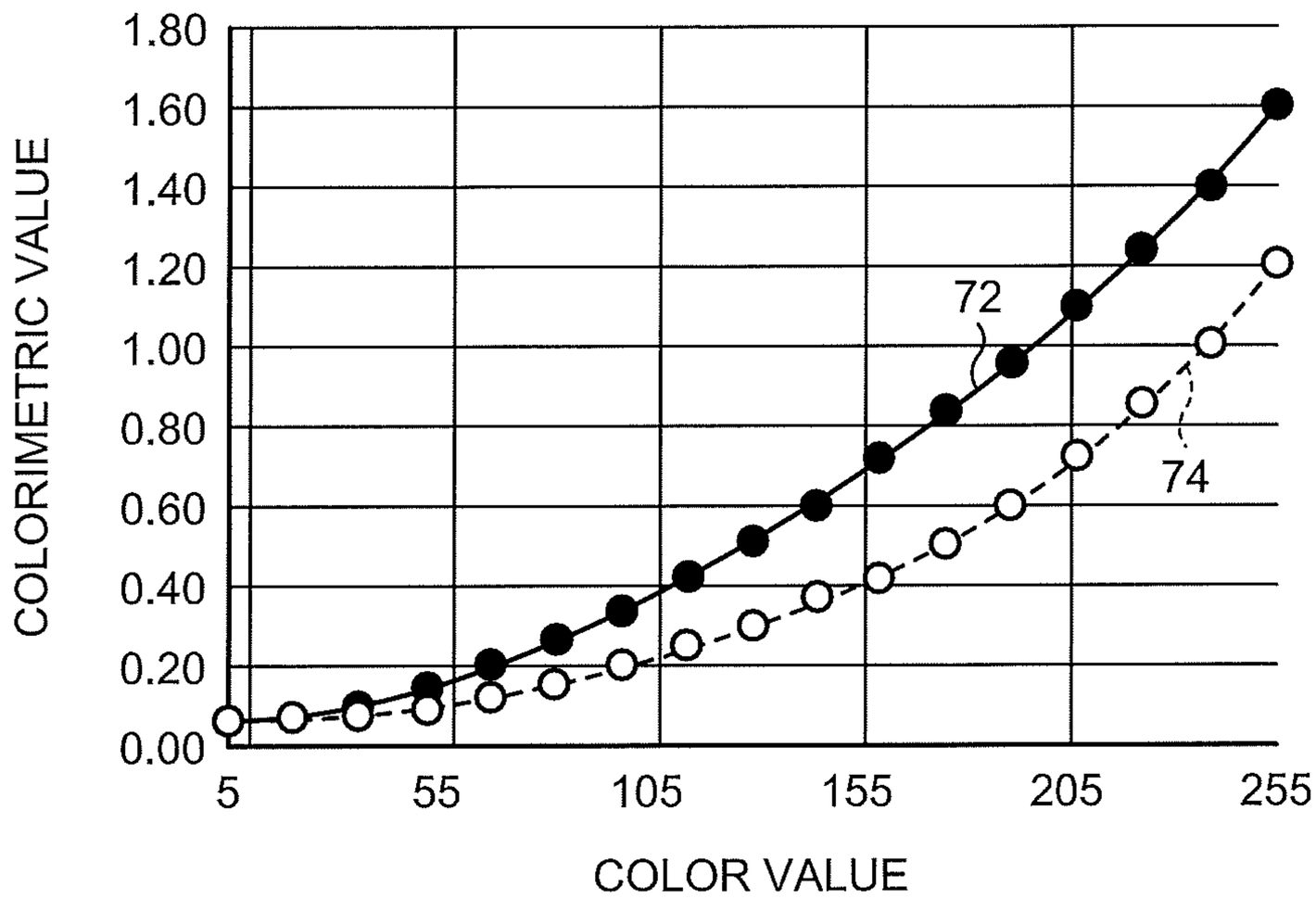
1.80
1.60
1.40
1.20
1.00
0.80
0.60
0.40
0.20
0.00
COLORIMETRIC VALUE
5
55
105
155
205
255
COLOR VALUE
72
74

FIG.22

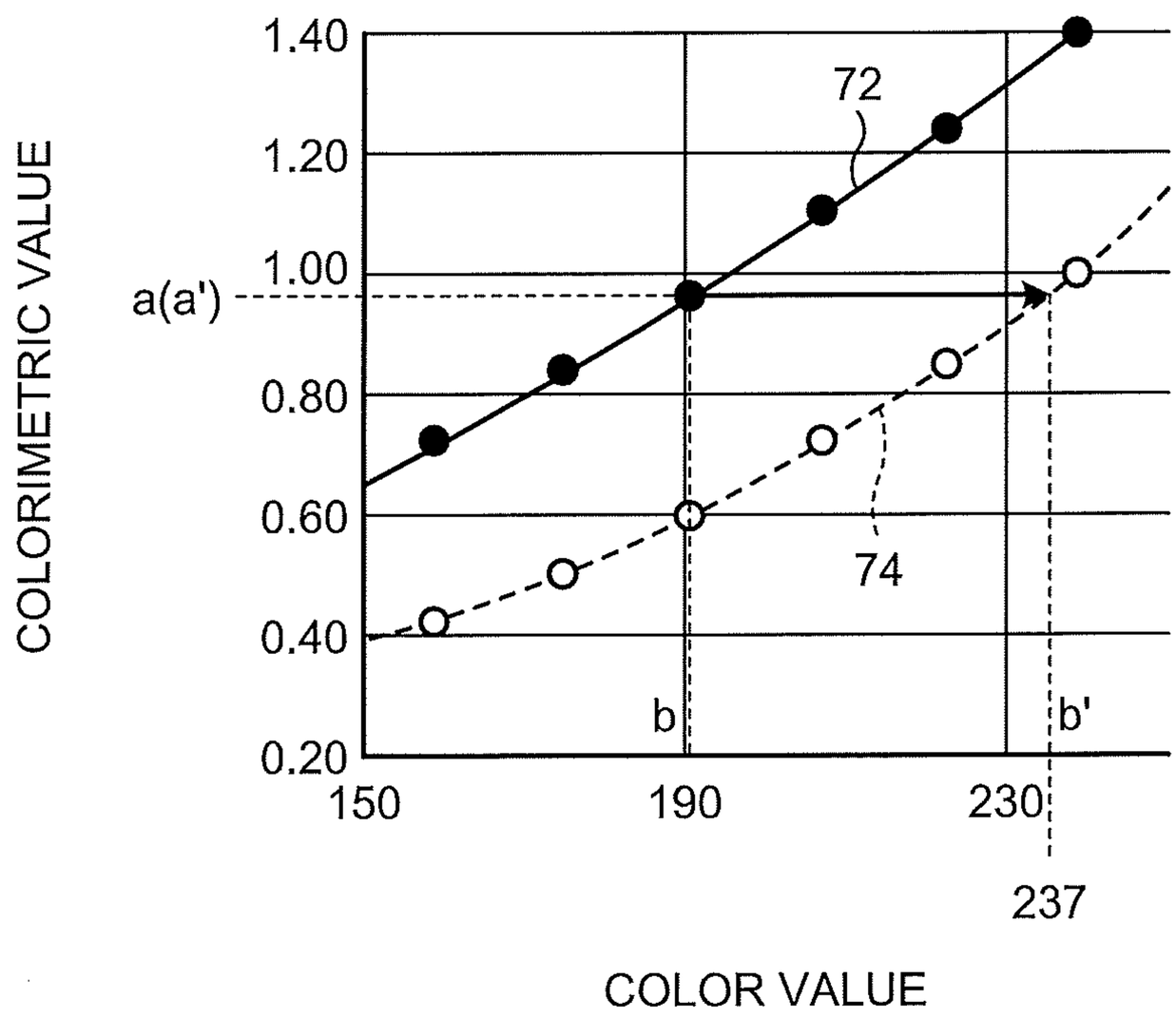
1.40
1.20
1.00
0.80
0.60
0.40
0.20
a(a')
COLORIMETRIC VALUE
150
190
230
237
b
b'
COLOR VALUE
72
74

FIG.23

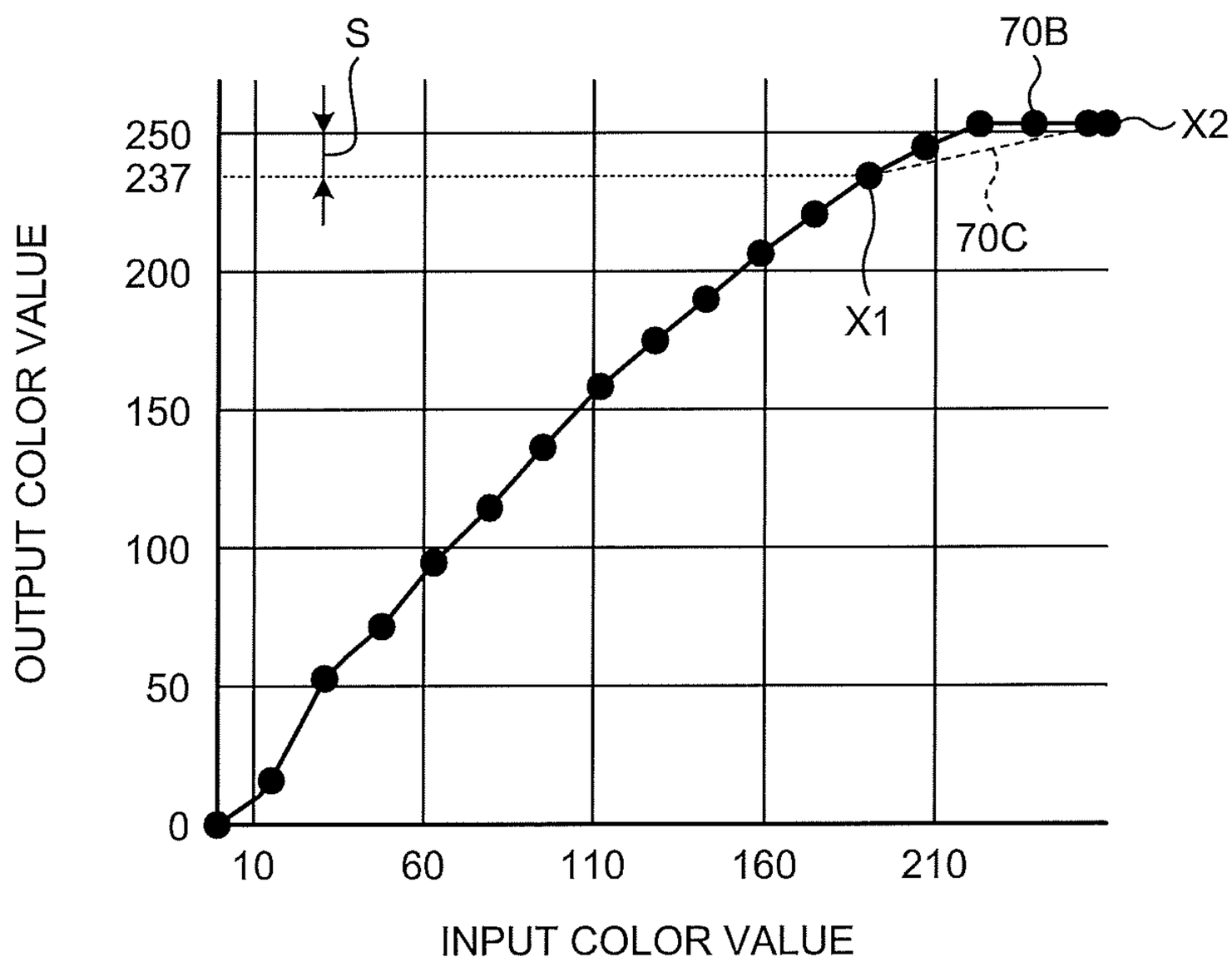
S
70B
X2
250
237
200
150
100
50
0
70C
X1
OUTPUT COLOR VALUE
10
60
110
160
210
INPUT COLOR VALUE

FIG.24

70B 75

CORRECTION TABLE		COLORIMETRIC VALUE AFTER γ CORRECTION
INPUT COLOR VALUE	OUTPUT COLOR VALUE	
0	0	0.06
16	16	0.07
32	53	0.10
48	72	0.14
64	96	0.20
80	115	0.26
96	137	0.34
112	159	0.42
128	177	0.51
143	191	0.60
159	207	0.72
175	222	0.84
191	237	0.96
207	247	1.10
223	255	1.20
239	255	1.20
255	255	1.20

V1

FIG.25

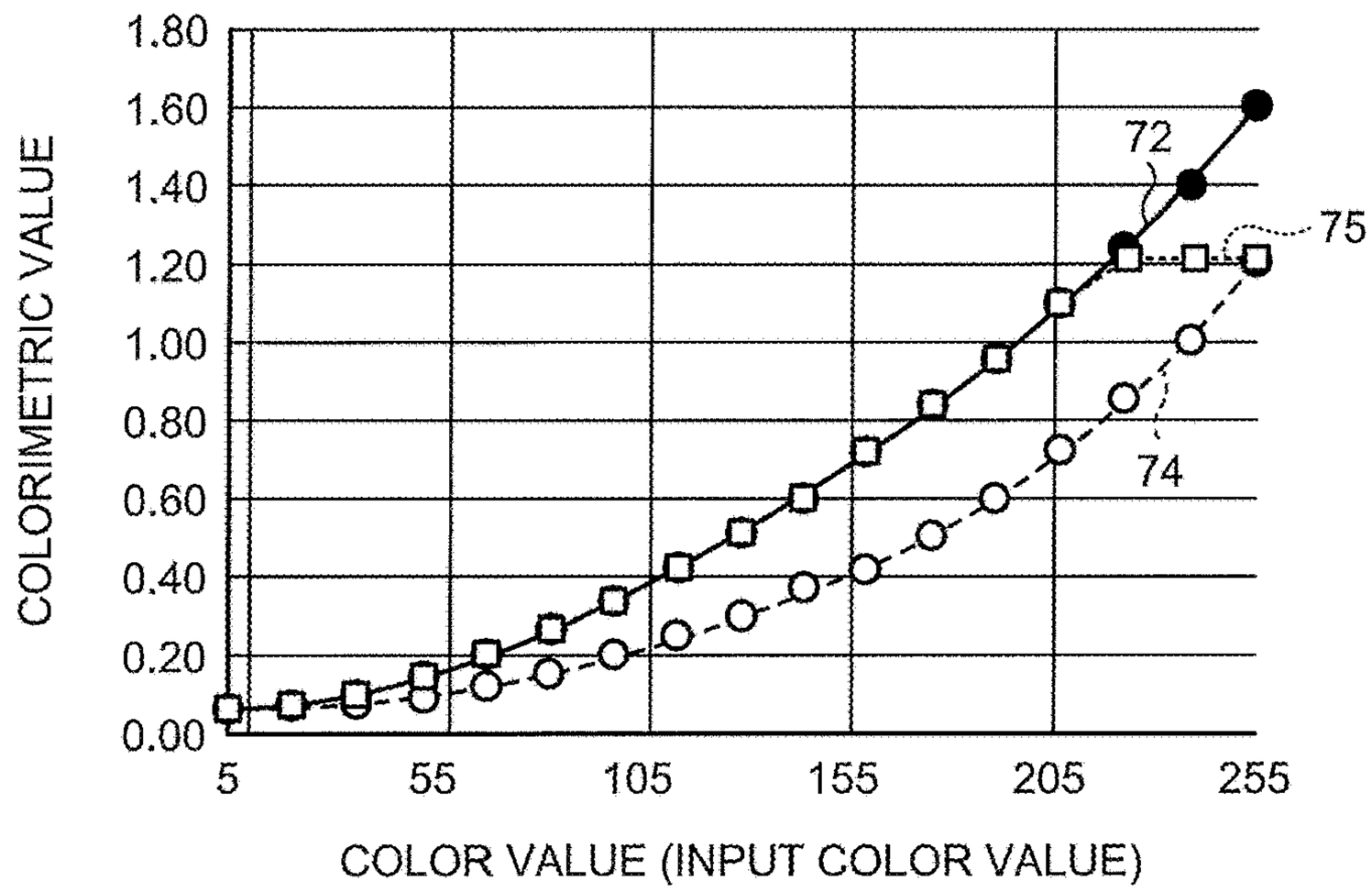
1.80
1.60
1.40
1.20
1.00
0.80
0.60
0.40
0.20
0.00
COLORIMETRIC VALUE
5
55
105
155
205
255
COLOR VALUE (INPUT COLOR VALUE)
72
75
74

FIG.26

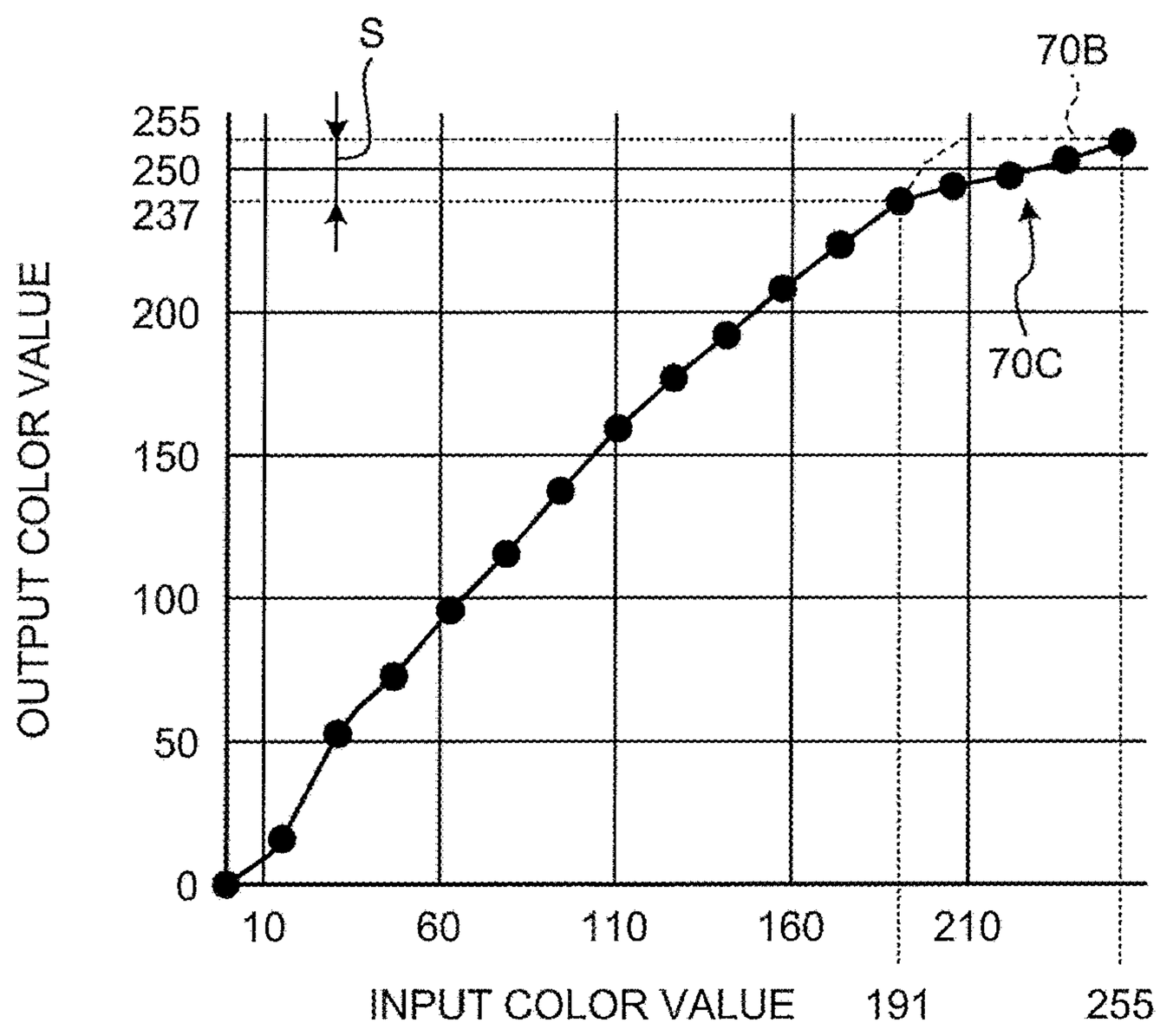
S
70B
255
250
237
200
150
100
50
0
OUTPUT COLOR VALUE
70C
10
60
110
160
210
INPUT COLOR VALUE
191
255

FIG.27

70B 70C

INPUT COLOR VALUE	OUTPUT COLOR VALUE BEFORE RECTIFICATION	OUTPUT COLOR VALUE AFTER RECTIFICATION	THIRD COLORIMETRIC VALUE
0	0	0	0.06
16	16	16	0.07
32	53	53	0.10
48	72	72	0.14
64	96	96	0.20
80	115	115	0.26
96	137	137	0.34
112	159	159	0.42
128	177	177	0.51
143	191	191	0.60
159	207	207	0.72
175	222	222	0.84
191	237	237	0.96
207	247	241	1.02
223	255	245	1.08
239	255	250	1.14
255	255	255	1.20

S1 S2 V2

FIG.28

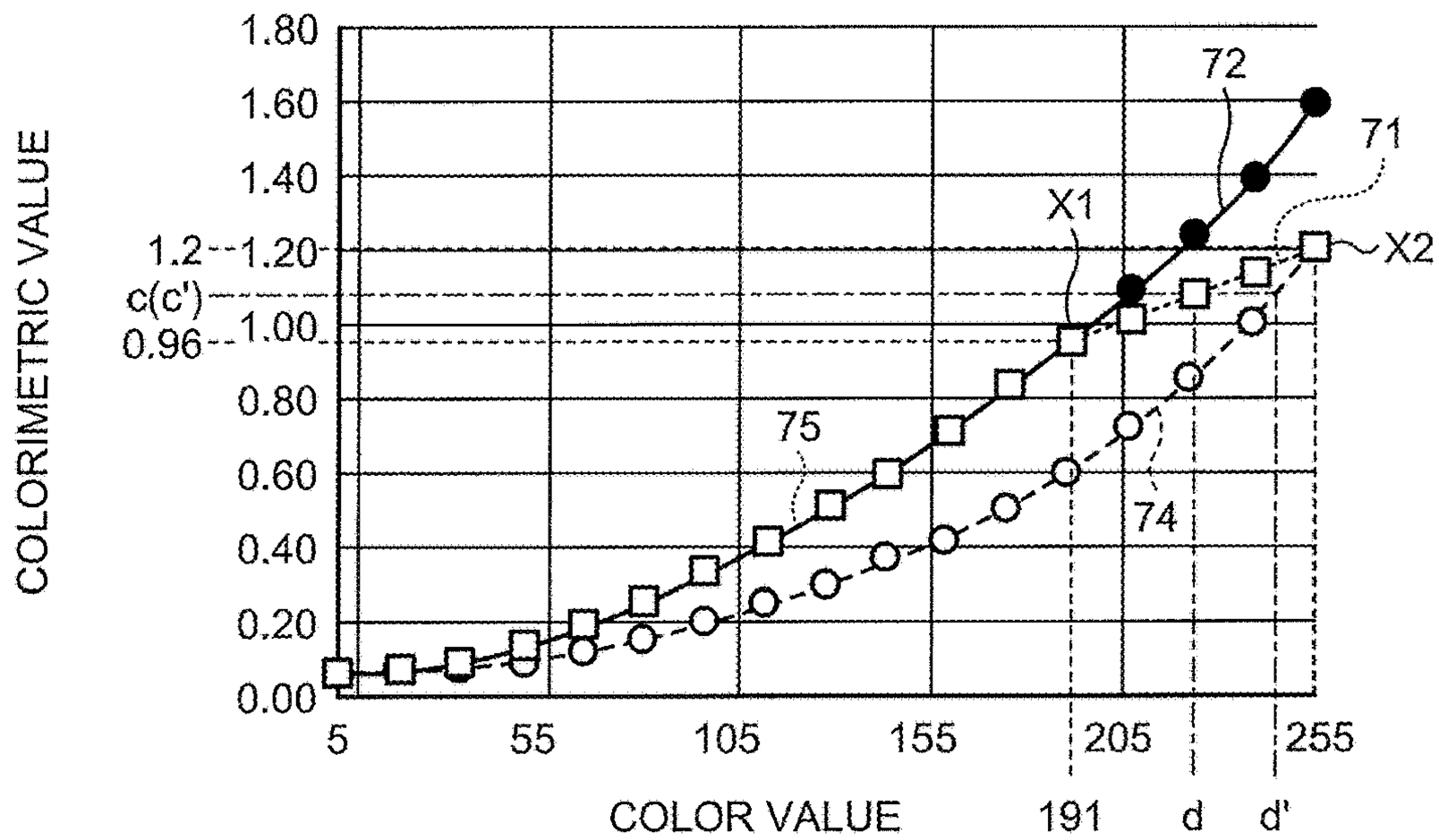
COLORIMETRIC VALUE
1.80
1.60
1.40
1.2
1.20
c(c')
0.96
1.00
0.80
0.60
0.40
0.20
0.00
5
55
105
155
205
255
COLOR VALUE
191
d
d'
72
71
X1
X2
75
74

FIG.29

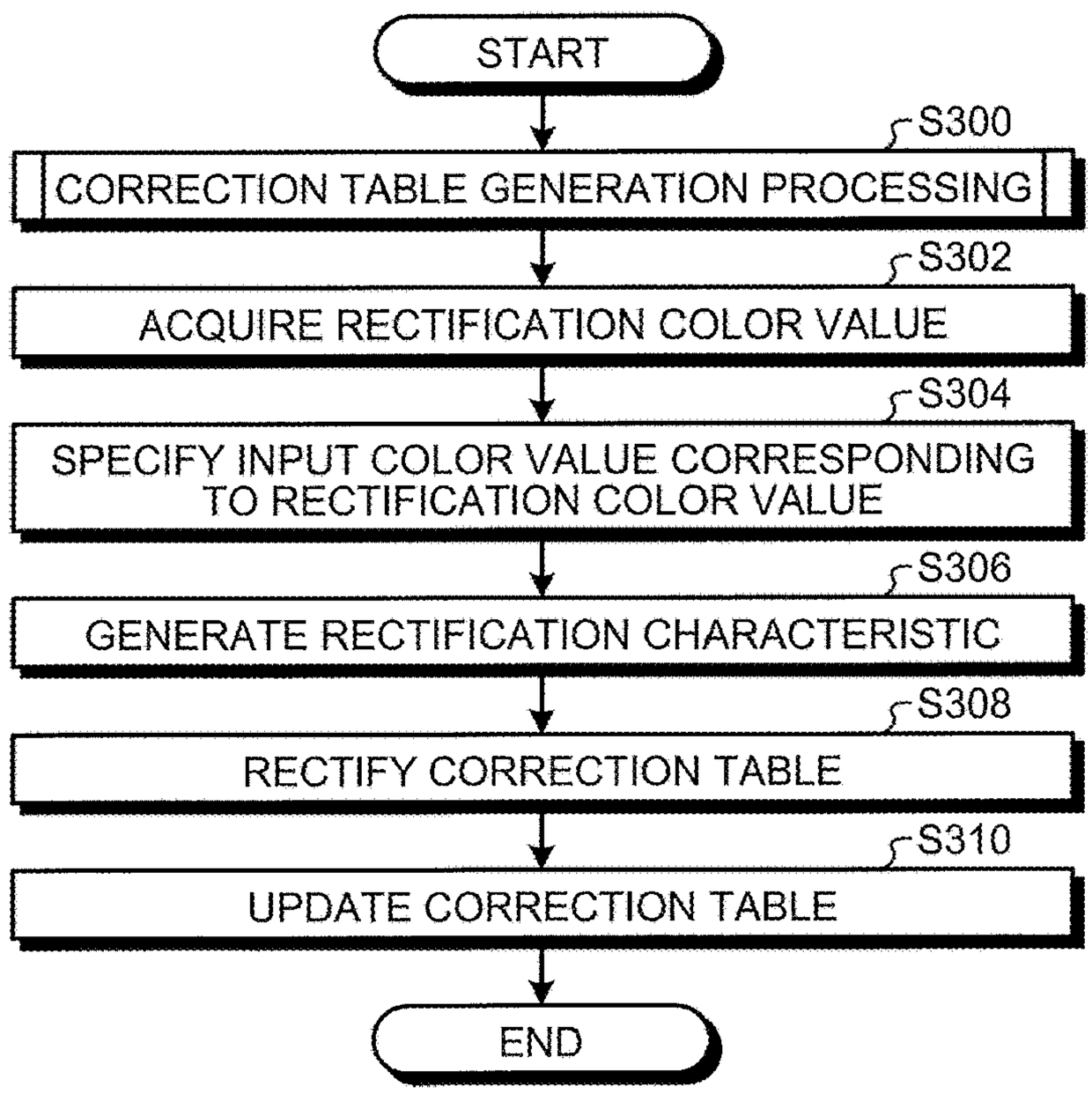
START
S300
CORRECTION TABLE GENERATION PROCESSING
S302
ACQUIRE RECTIFICATION COLOR VALUE
S304
SPECIFY INPUT COLOR VALUE CORRESPONDING TO RECTIFICATION COLOR VALUE
S306
GENERATE RECTIFICATION CHARACTERISTIC
S308
RECTIFY CORRECTION TABLE
S310
UPDATE CORRECTION TABLE
END

FIG.30

63D

COLOR	C	M	Y	K
RECTIFICATION COLOR VALUE	207	207	223	159

FIG.31A

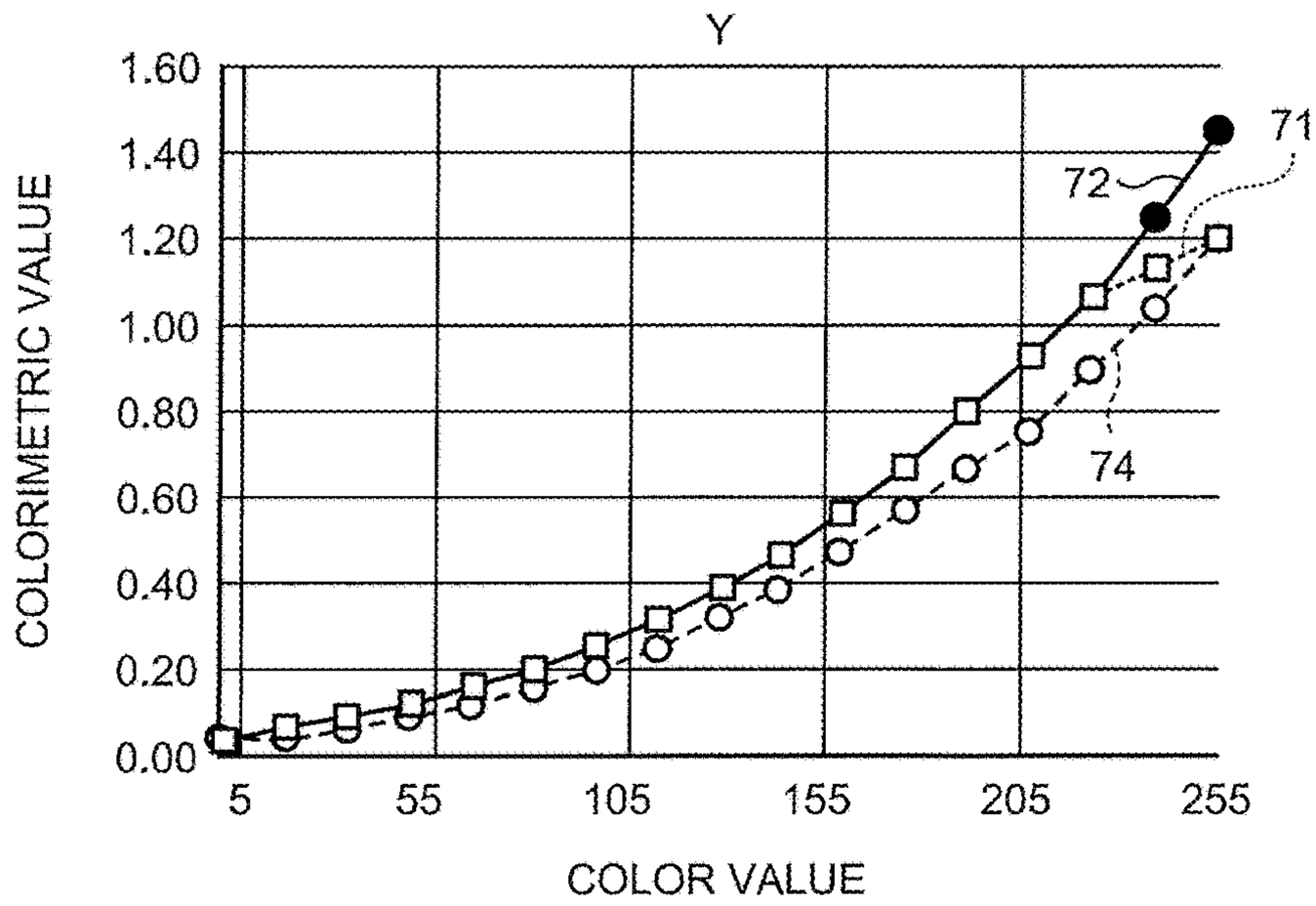

FIG.31B

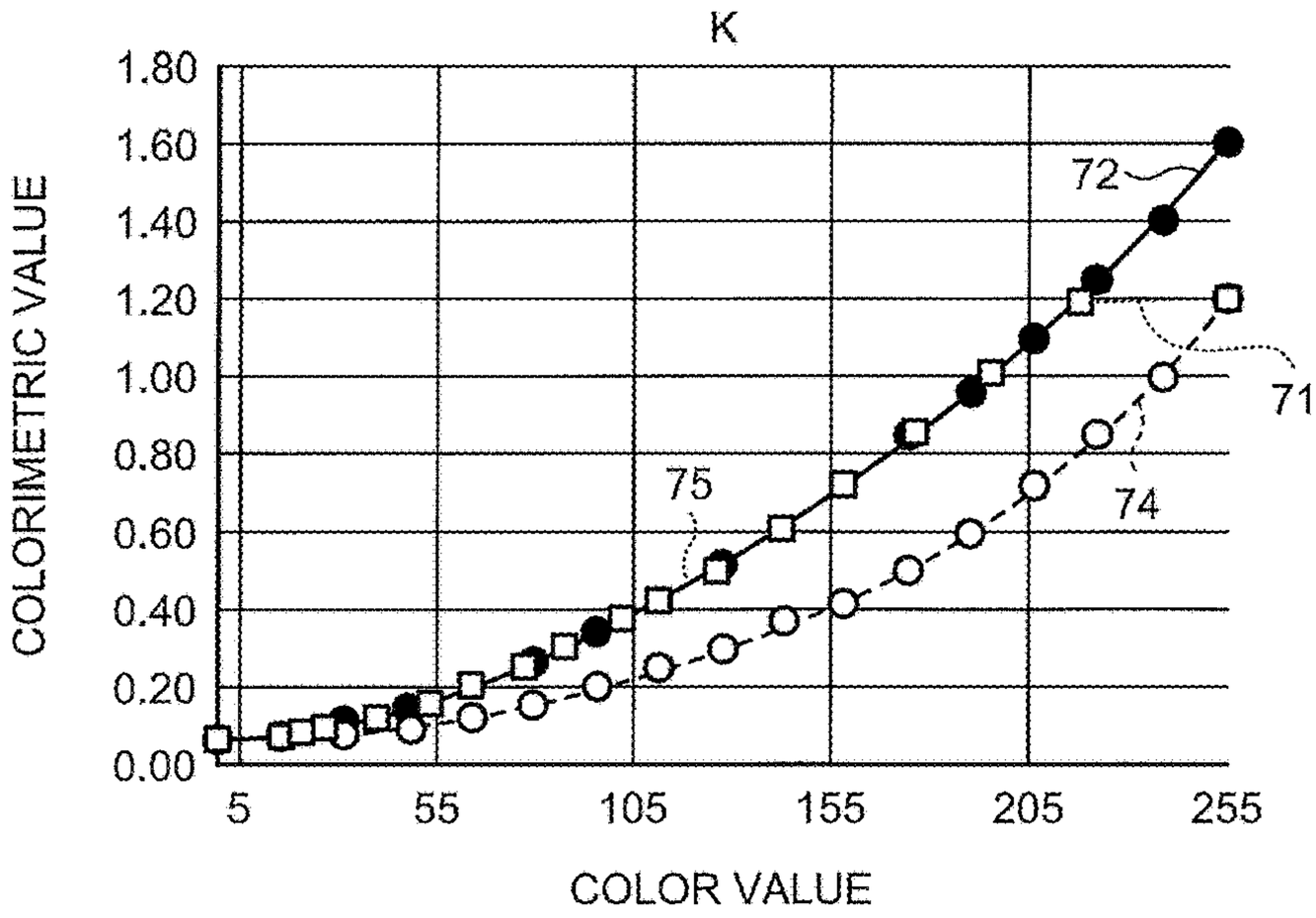

FIG.32

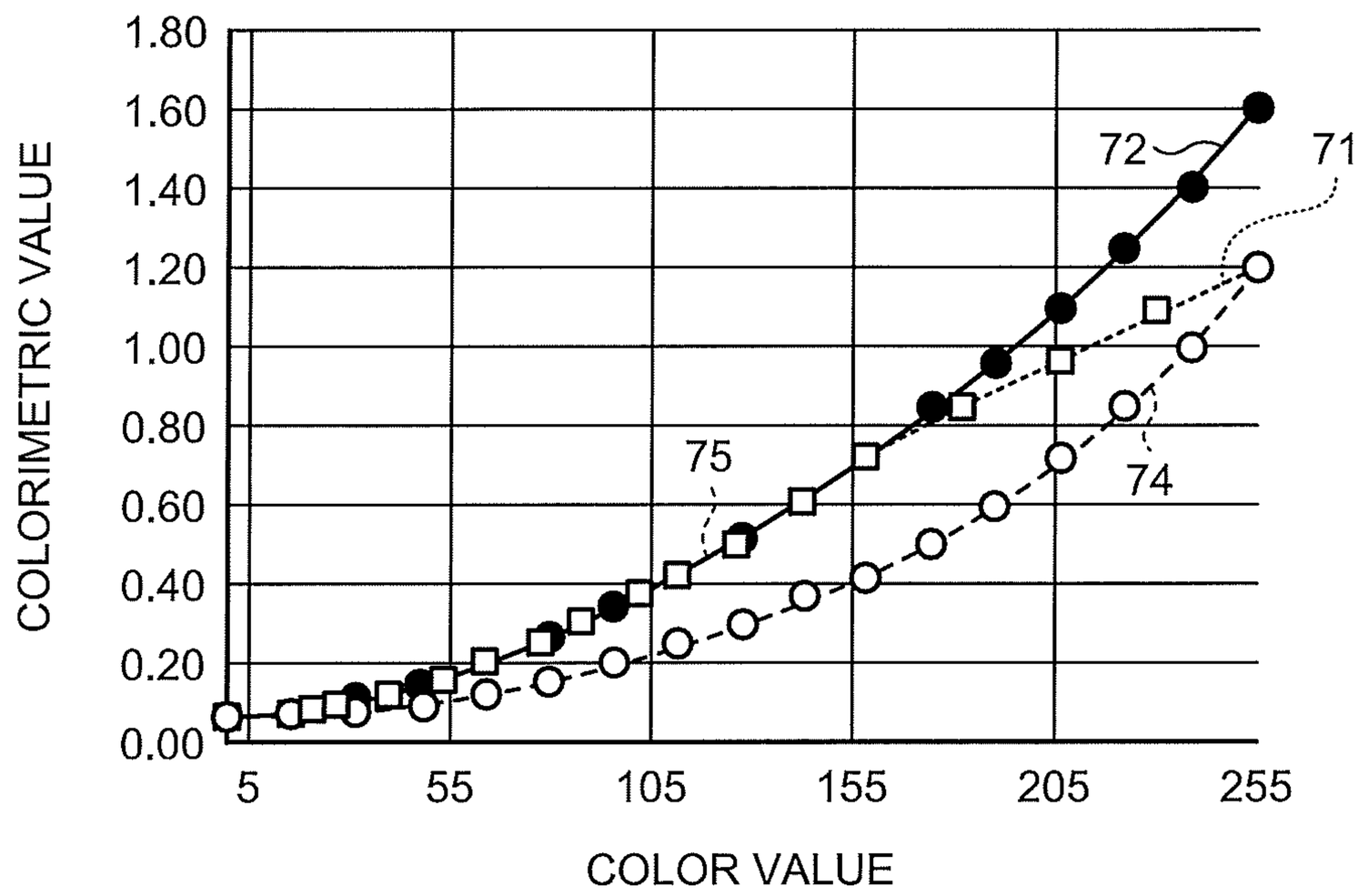

FIG.33

63E

MEDIUM ID	RECTIFICATION COLOR VALUE
A	223
B	191
C	207

FIG.34A

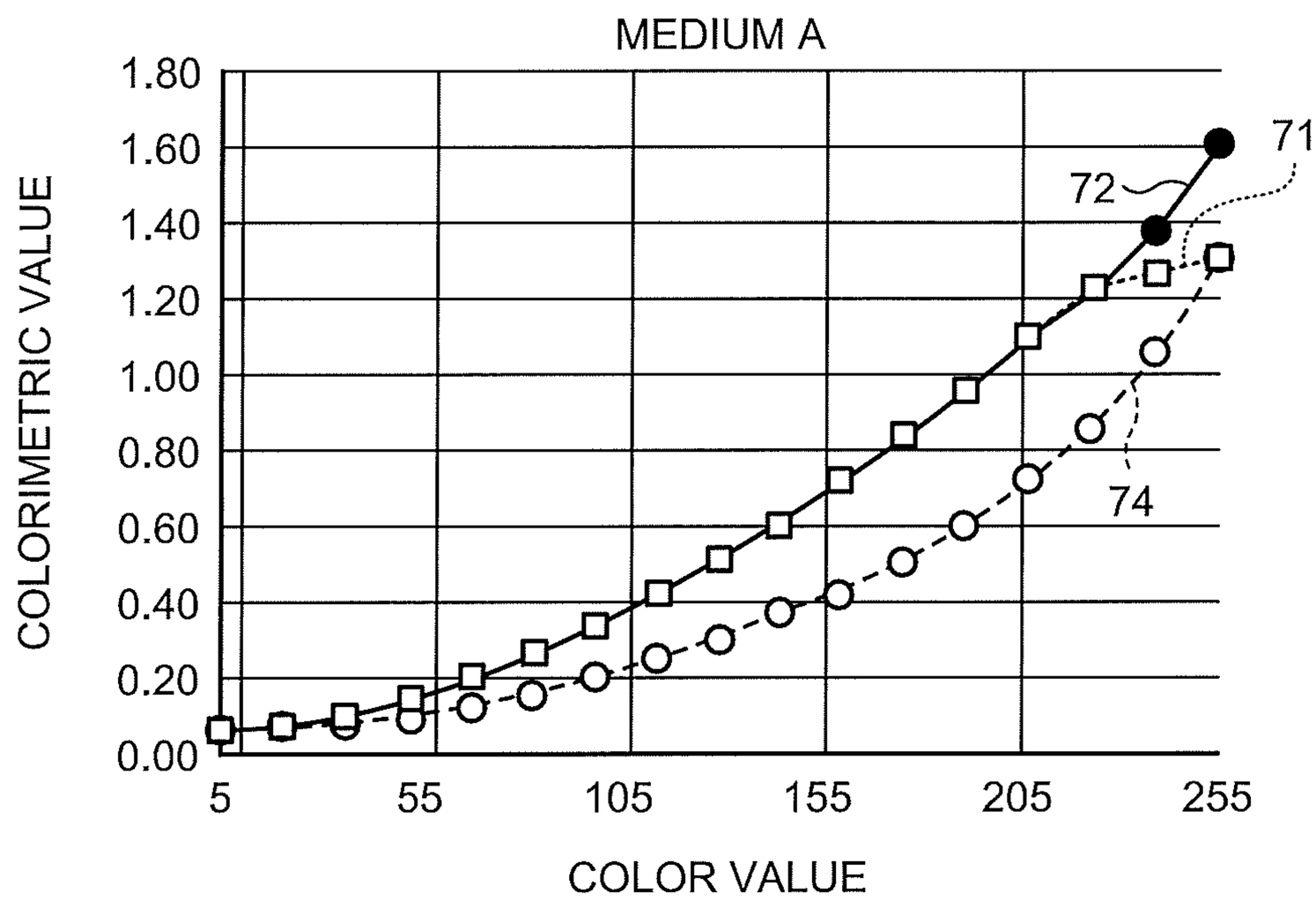

FIG.34B

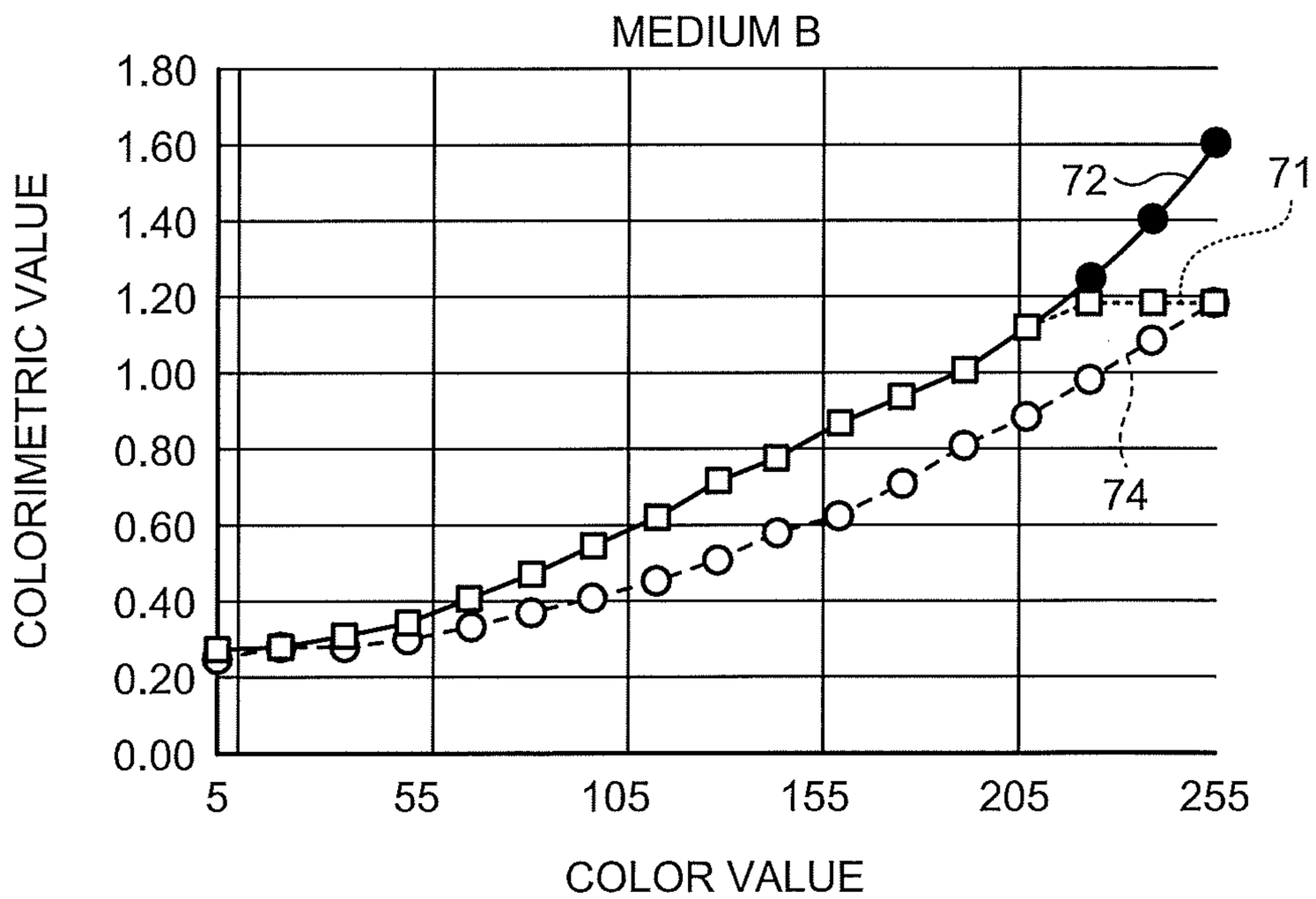

FIG.35

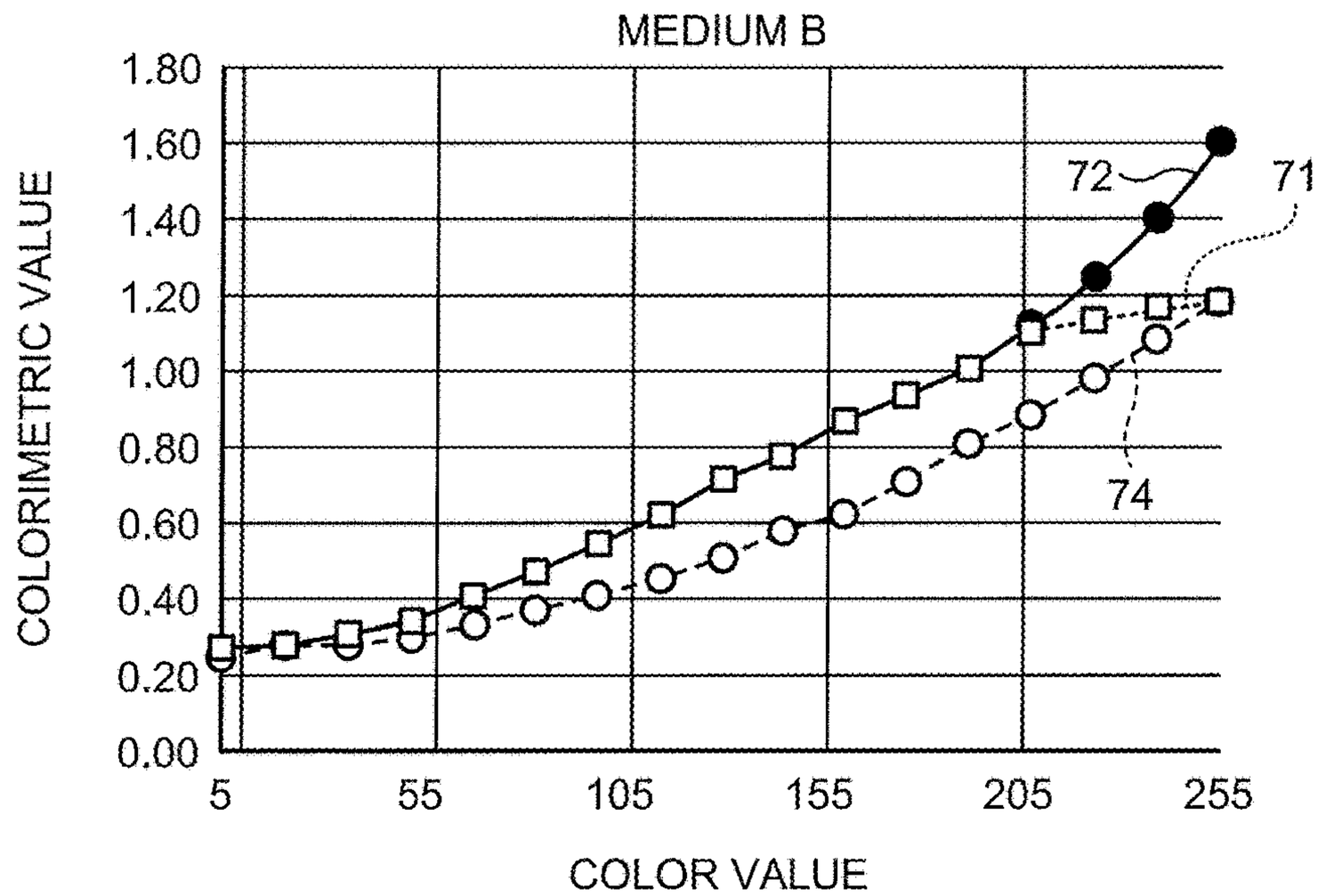

FIG.36

63F

TRANSFER ORDER	1	2	3	4
CORRECTION AMOUNT [%]	-6	-4	-2	0

FIG.37

TRANSFER ORDER	4	3	2	1
COLOR	C	M	Y	K
RECTIFICATION COLOR VALUE	207	203	199	195

FIG.38A

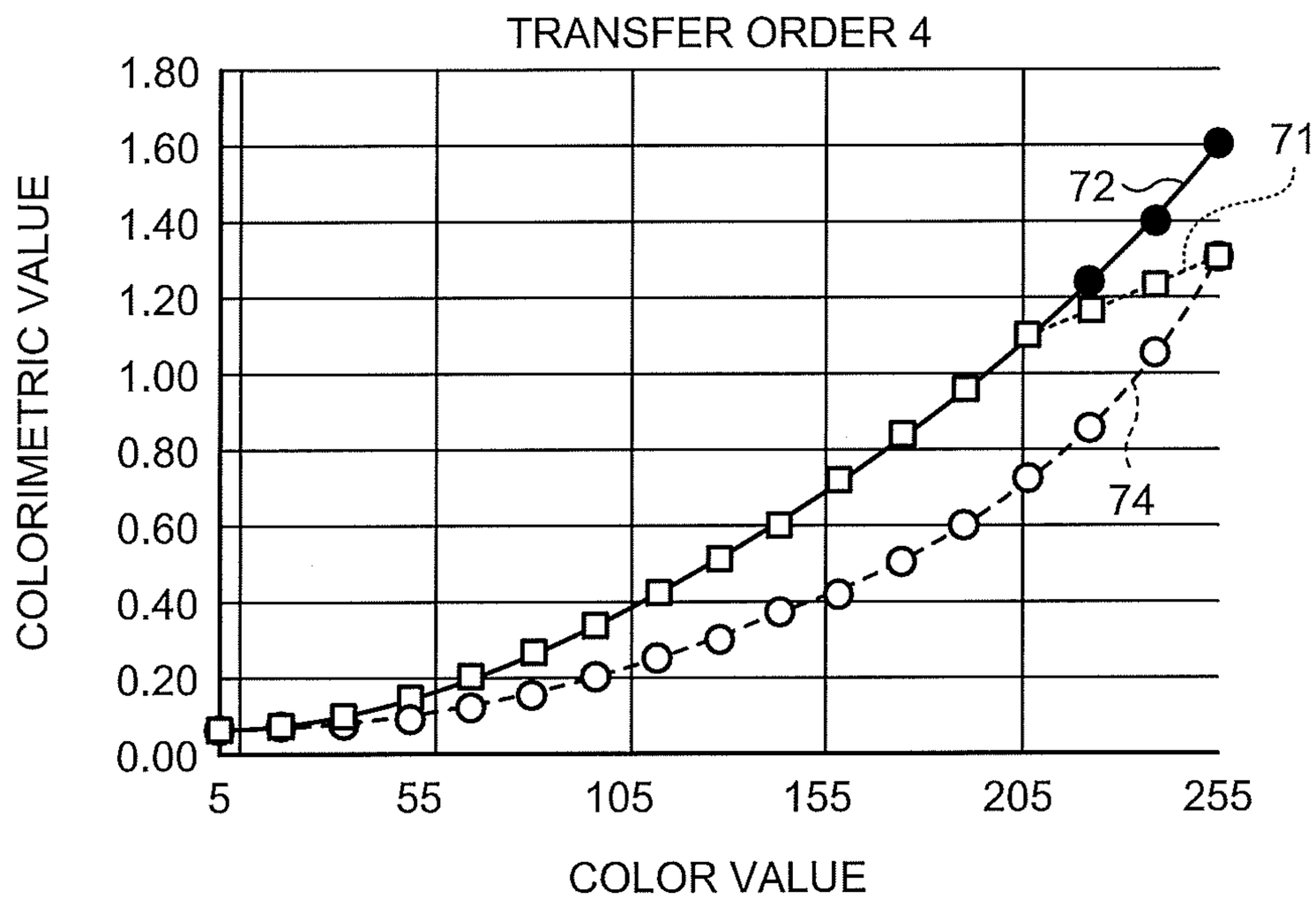

FIG.38B

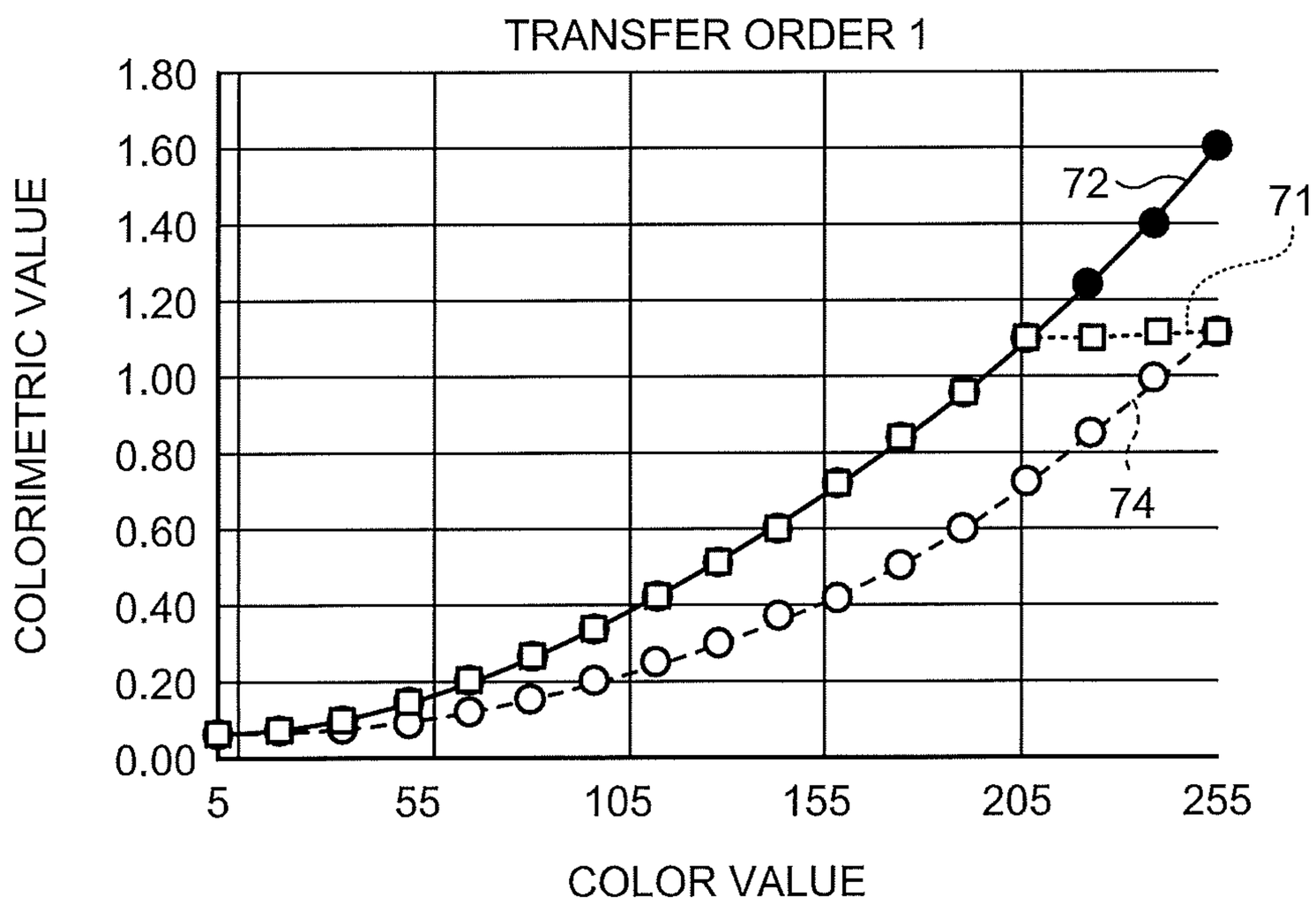

FIG.39

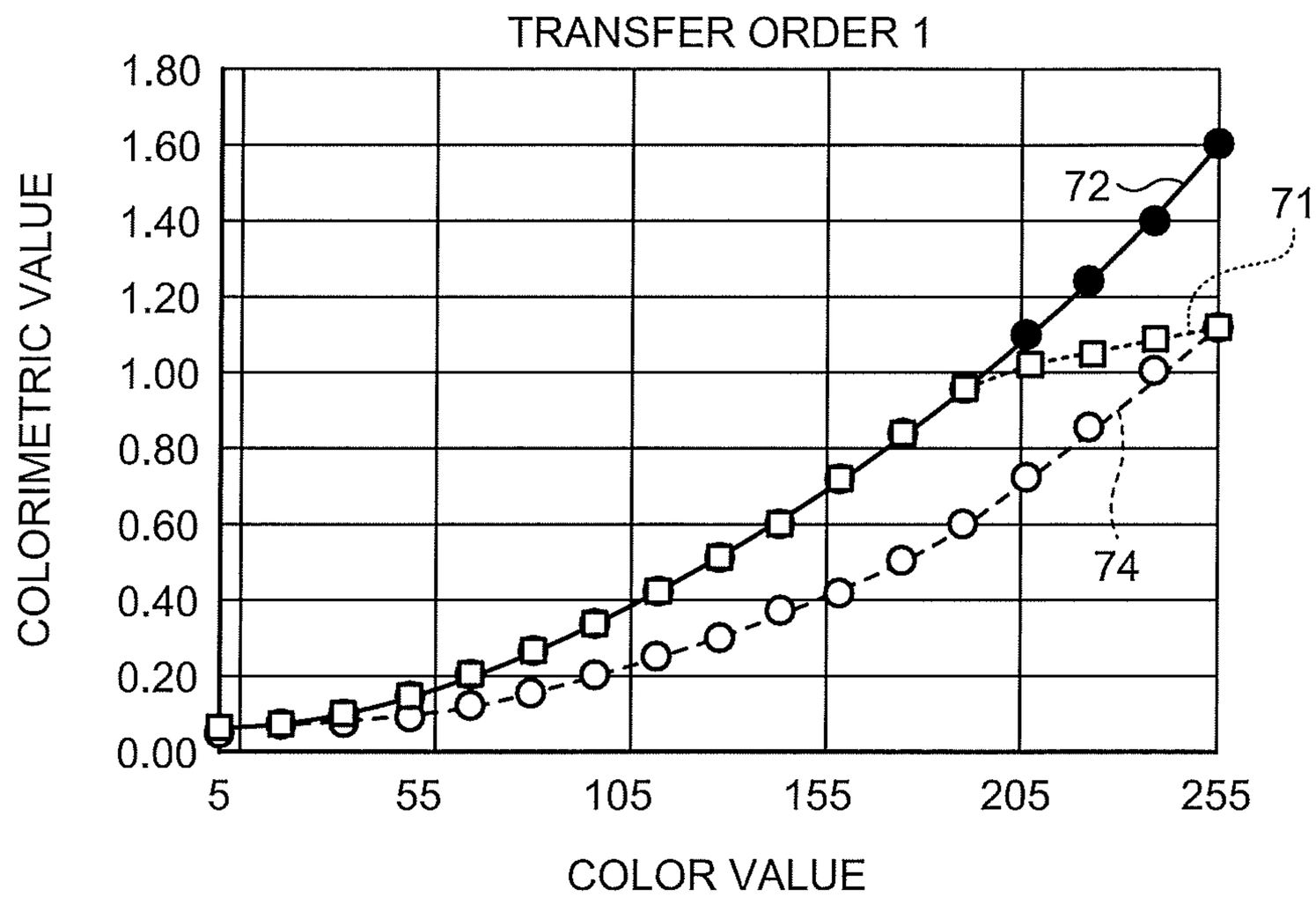
TRANSFER ORDER 1
COLORIMETRIC VALUE
1.80
1.60
1.40
1.20
1.00
0.80
0.60
0.40
0.20
0.00
5
55
105
155
205
255
COLOR VALUE
72
71
74

FIG.40

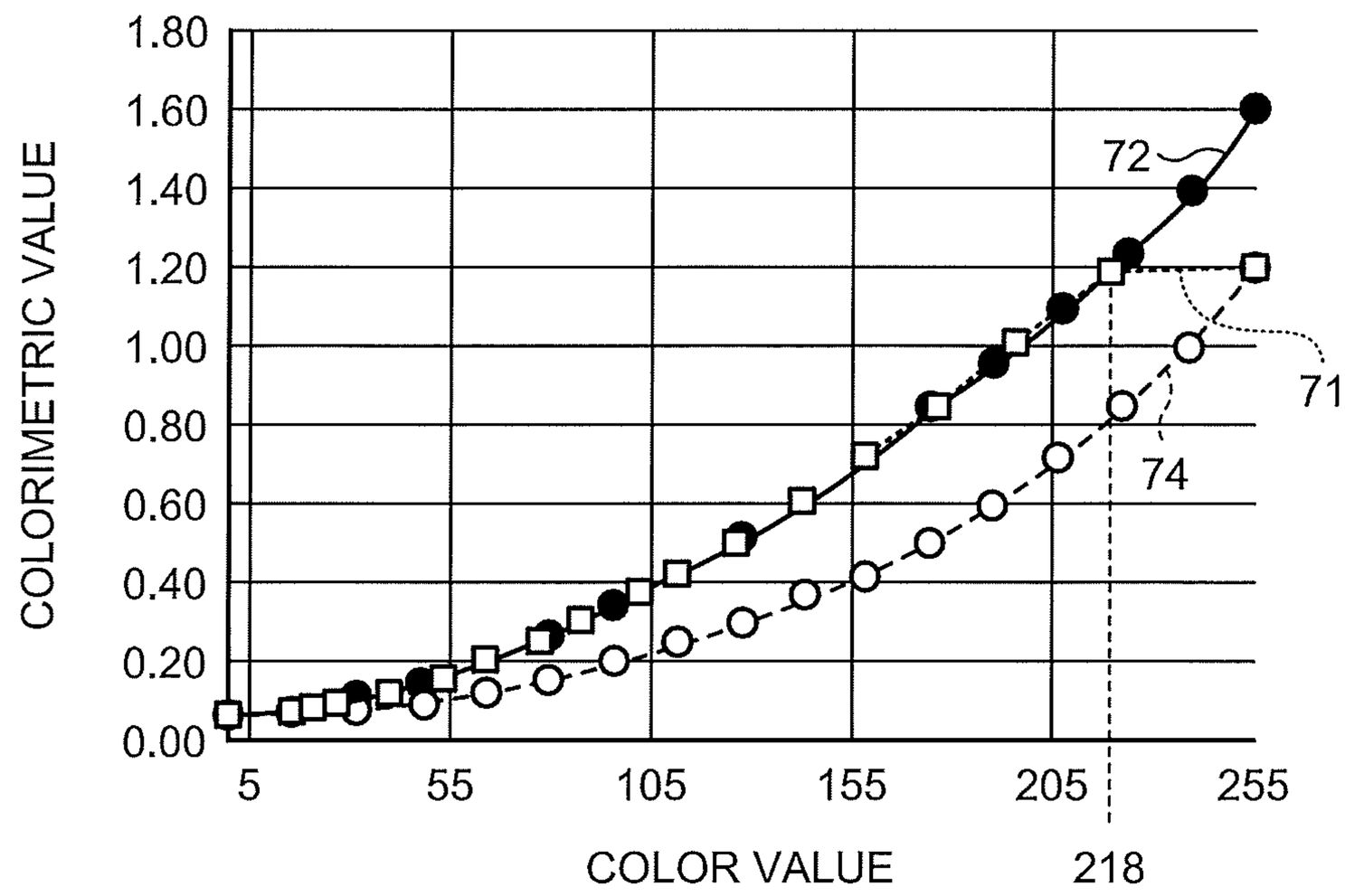
COLORIMETRIC VALUE
1.80
1.60
1.40
1.20
1.00
0.80
0.60
0.40
0.20
0.00
5
55
105
155
205
255
COLOR VALUE
218
72
71
74

FIG.41

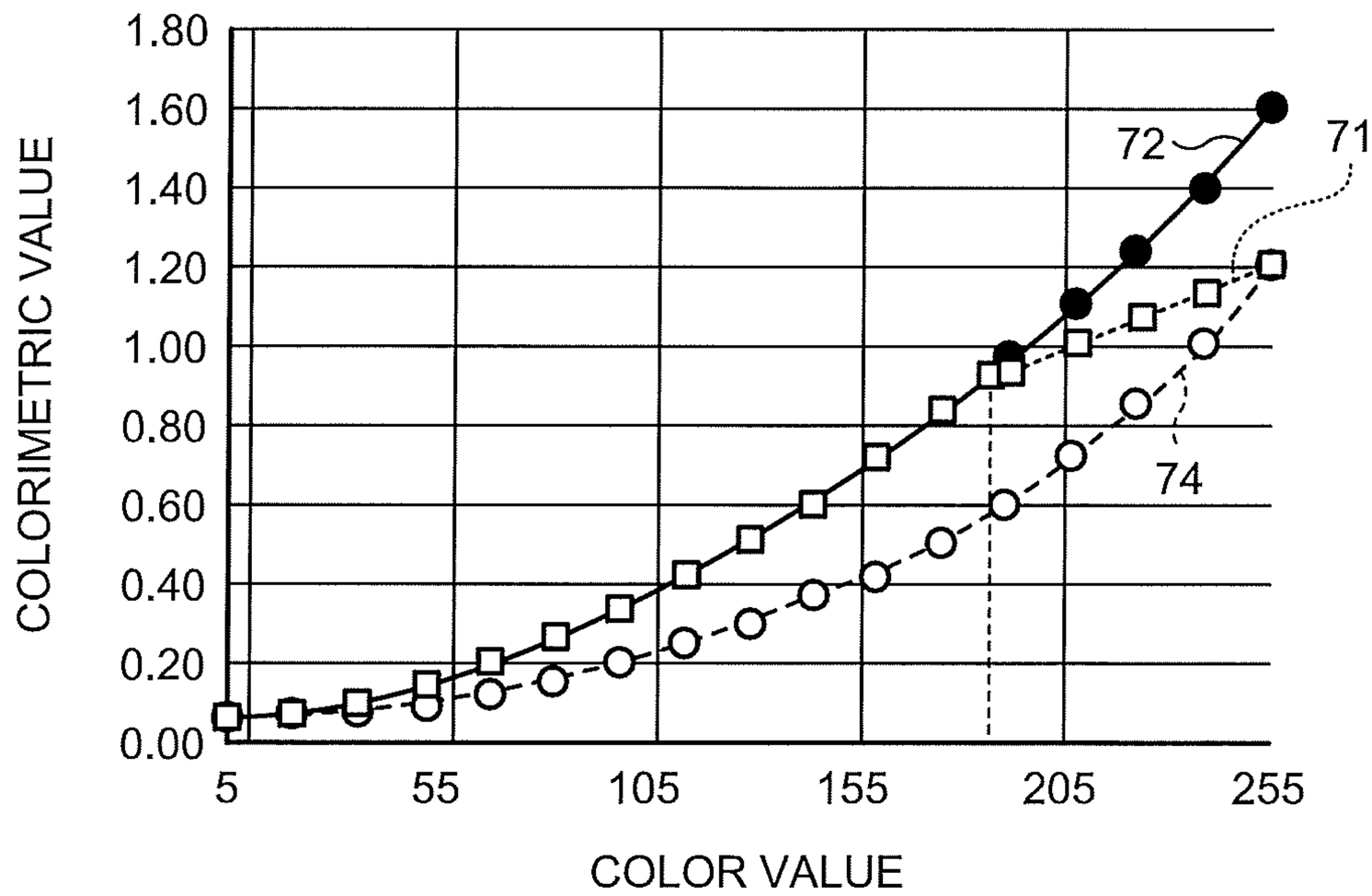
1.80
1.60
1.40
1.20
1.00
0.80
0.60
0.40
0.20
0.00
COLORIMETRIC VALUE
5
55
105
155
205
255
COLOR VALUE
72
71
74

FIG.42

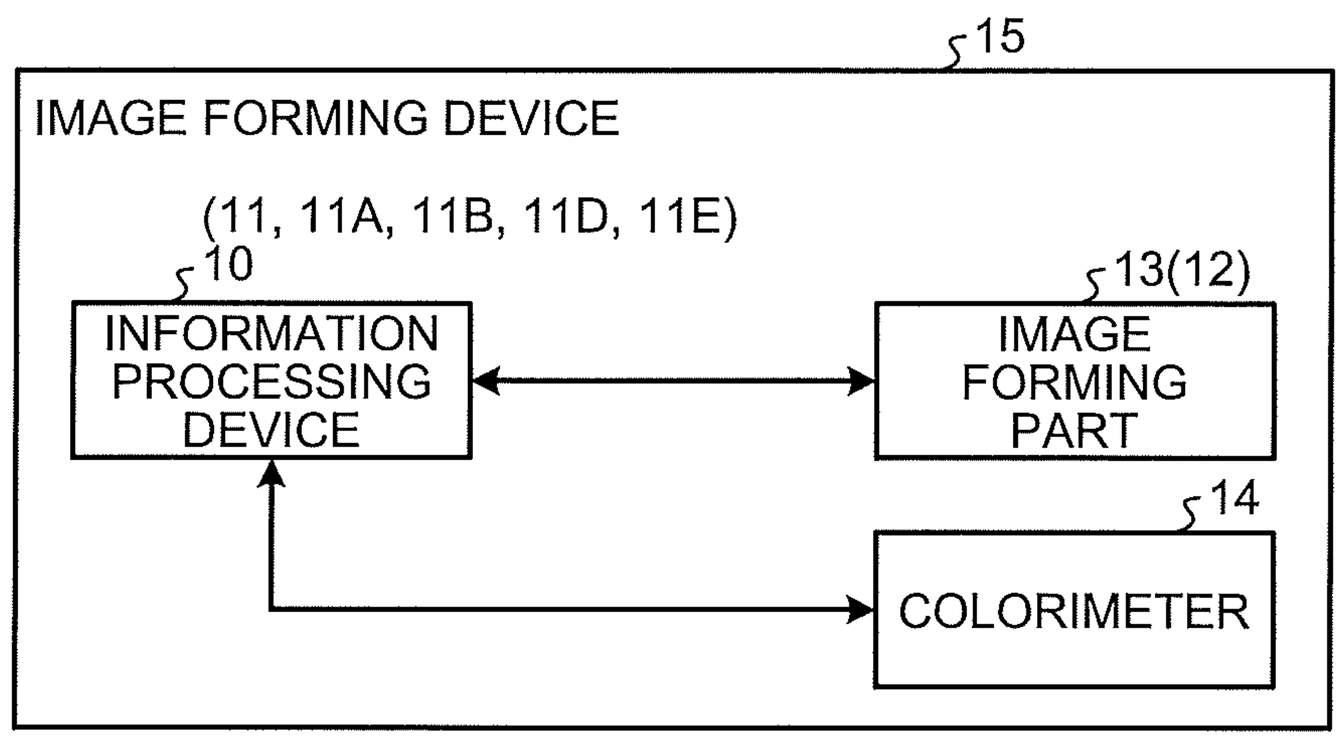
15
IMAGE FORMING DEVICE
(11, 11A, 11B, 11D, 11E)
10
INFORMATION PROCESSING DEVICE
13(12)
IMAGE FORMING PART
14
COLORIMETER

INFORMATION PROCESSING DEVICE, INFORMATION PROCESSING METHOD, AND COMPUTER-READABLE RECORDING MEDIUM

CROSS-REFERENCE TO RELATED APPLICATIONS

The present application claims priority under 35 U.S.C. § 119 to Japanese Patent Application No. 2017-051236, filed on Mar. 16, 2017 and Japanese Patent Application No. 2018-006753, filed on Jan. 18, 2018. The contents of which are incorporated herein by reference in their entirety.

BACKGROUND OF THE INVENTION

1. Field of the Invention

The present invention relates to an information processing device, an information processing method, and a computer-readable recording medium having an information processing program.

2. Description of the Related Art

There is known a device that forms a laminated image obtained by laminating a colored image using a colored color material such as CMYK and a special color image using a special color material. An image formation method for forming the laminated image of the colored image and the special color image includes 2-path printing in which a special color image is formed to be fixed onto a medium and a colored image is formed being overlapped therewith to be fixed, and 1-path printing in which a special color image and a colored image are formed being overlapped with each other to be fixed onto a medium (for example, refer to Japanese Unexamined Patent Application Publication No. 2009-031511).

Japanese Unexamined Patent Application Publication No. 2009-031511 discloses a configuration enabling the 1-path printing irrespective of a laminating order of the special color image and the colored image by enabling switching whether to develop colorless transparent toner or white toner before colored toner or to develop it lastly.

By forming a laminated image through the 1-path printing, ease of use for a user can be improved. However, in a case of employing the 1-path printing, the special color material and the colored color material are mixed, and image quality is deteriorated in some cases as compared with a case of forming the same laminated image through the 2-path printing.

SUMMARY OF THE INVENTION

According to an embodiment, there is provided an information processing device configured to control an image forming part that forms a laminated image of a special color image using a special color material and a colored image using a colored color material through 2-path printing in which one of the special color image and the colored image is formed on a medium to be immobilized and the other one is laminated thereon, or 1-path printing in which one of the special color image and the colored image is formed on a medium and the other one is laminated thereon without performing immobilization. The information processing device includes a specification part and a generation part. The specification part specifies, by using image data for a

correction chart defining a plurality of patch regions having different color values, a target characteristic indicating a relation between the color value and a first colorimetric value of a first patch image as the laminated image corresponding to each of the patch regions formed by the image forming part through the 2-path printing. The generation part generates a correction table for correcting the color value so that a measured characteristic comes close to the target characteristic, the measured characteristic indicating a relation between the color value and a second colorimetric value of a second patch image as the laminated image corresponding to each of the patch regions formed by the image forming part through the 1-path printing using the image data for a correction chart.

BRIEF DESCRIPTION OF THE DRAWINGS

FIG. **1** illustrates an example of a hardware configuration of an information processing device according to an embodiment;

FIG. **2** is a schematic diagram conceptually illustrating image data;

FIG. **3** is a schematic diagram illustrating an example of a configuration of an image forming device according to the embodiment;

FIGS. **4**A and **4**B are explanatory diagrams of the image forming device;

FIGS. **5**A and **5**B are explanatory diagrams of an example of a laminating order;

FIGS. **6**A and **6**B are explanatory diagrams of 1-path printing and 2-path printing;

FIG. **7** is a block diagram illustrating a functional configuration of the information processing device;

FIG. **8** is a schematic diagram illustrating an example of a data configuration of a correction management DB;

FIGS. **9**A and **9**B are schematic diagrams illustrating an example of image data for a correction chart;

FIG. **10** is a schematic diagram illustrating an example of a data configuration of a medium management DB;

FIG. **11** is a diagram illustrating an example of a calibration condition display screen;

FIGS. **12**A, **12**B, and **12**C are explanatory diagrams of an example of a patch image;

FIG. **13** is a chart illustrating an example of a target characteristic and a measured characteristic;

FIG. **14** is a schematic diagram illustrating an example of correction table generation;

FIG. **15** is a flowchart illustrating an example of an information processing procedure;

FIG. **16** is a flowchart illustrating an example of an information processing procedure;

FIG. **17** is an example of a block diagram illustrating a functional configuration of the information processing device;

FIG. **18** is a schematic diagram illustrating an example of image data for a colored correction chart;

FIG. **19** is a diagram illustrating an example of the target characteristic;

FIG. **20** is an example of a diagram representing the target characteristic and the measured characteristic in a table;

FIG. **21** is an example of a chart illustrating the target characteristic and the measured characteristic;

FIG. **22** is an enlarged view of part of FIG. **21**;

FIG. **23** is a chart illustrating an example of the correction table;

FIG. **24** is a diagram illustrating an example of a relation between the correction table and a colorimetric value after γ correction;

FIG. **25** is a schematic diagram illustrating an example of the target characteristic, the measured characteristic, and a characteristic after γ conversion;

FIG. **26** is a schematic diagram illustrating an example of the correction table after rectification;

FIG. **27** is a chart illustrating an example of a relation among the correction table before rectification, the correction table after rectification, and a third colorimetric value;

FIG. **28** is an explanatory diagram of an example of a rectification characteristic;

FIG. **29** is a flowchart illustrating an example of an information processing procedure at the time when the correction table is updated;

FIG. **30** is a schematic diagram illustrating an example of a data configuration of a color management table;

FIGS. **31**A and **31**B are schematic diagrams illustrating an example of the rectification characteristic;

FIG. **32** is an explanatory diagram of an example of the rectification characteristic;

FIG. **33** is a schematic diagram illustrating an example of a data configuration of a medium management table;

FIGS. **34**A and **34**B are schematic diagrams illustrating an example of the rectification characteristic;

FIG. **35** is an explanatory diagram of an example of the rectification characteristic;

FIG. **36** is a schematic diagram illustrating an example of a data configuration of a transfer order management table;

FIG. **37** is a diagram illustrating an example of a rectification color value;

FIGS. **38**A and **38**B are schematic diagrams illustrating an example of the rectification characteristic;

FIG. **39** is an explanatory diagram of an example of the rectification characteristic;

FIG. **40** is a schematic diagram illustrating an example of the rectification characteristic;

FIG. **41** is an explanatory diagram of an example of the rectification characteristic; and

FIG. **42** is a schematic diagram illustrating an example of the image forming device.

The accompanying drawings are intended to depict exemplary embodiments of the present invention and should not be interpreted to limit the scope thereof. Identical or similar reference numerals designate identical or similar components throughout the various drawings.

DESCRIPTION OF THE EMBODIMENTS

The terminology used herein is for the purpose of describing particular embodiments only and is not intended to be limiting of the present invention.

As used herein, the singular forms "a", "an" and "the" are intended to include the plural forms as well, unless the context clearly indicates otherwise.

In describing preferred embodiments illustrated in the drawings, specific terminology may be employed for the sake of clarity. However, the disclosure of this patent specification is not intended to be limited to the specific terminology so selected, and it is to be understood that each specific element includes all technical equivalents that have the same function, operate in a similar manner, and achieve a similar result.

An embodiment of the present invention will be described in detail below with reference to the drawings.

The following describes embodiments of an information processing device, an information processing method, and a computer-readable recording medium having an information processing program in detail with reference to the attached drawings.

First Embodiment

FIG. **1** illustrates an example of a hardware configuration of an information processing device **10** according to the present embodiment.

The information processing device **10** is a device that performs information processing according to the present embodiment. A host computer **16** is connected to the information processing device **10**. The host computer **16** is a personal computer (PC) and the like. The information processing device **10** receives image data from the host computer **16**. The information processing device **10** performs information processing on the image data and outputs it to an image forming device **12**.

FIG. **2** is a schematic diagram conceptually illustrating image data **24**. The image data **24** includes colored image data **20** and special color image data **22**. The image data **24** may further include a job command and the like indicating an image formation condition of the image forming device **12**.

The colored image data **20** is image data defining a color concentration value of RGB, CMYK, and the like. In the present embodiment, the colored image data **20** includes a plurality of types of pieces of color image data having different colors. In the present embodiment, the colored image data **20** is described by exemplifying a case of including each piece of the color image data of yellow, magenta, cyan, and black (color image data **20**Y, **20**M, **20**C, and **20**K).

In the present embodiment, described is a case in which the colored image data **20** is image data defining the colored concentration value for each pixel. Thus, in the present embodiment, each piece of the color image data (color image data **20**Y, **20**M, **20**C, and **20**K) constituting the colored image data **20** is image data defining the concentration value of each corresponding color (C, M, Y, and K) for each pixel. In the present embodiment, described is a case in which the colored image data **20** is data representing the concentration value of one pixel in 8 bits as an example.

The information processing device **10** may receive the image data **24** including color image data of R, G, and B from the host computer **16**. In this case, the information processing device **10** converts the color image data of R, G, and B into color image data of C, M, Y, and K (**20**Y, **20**M, **20**C, and **20**K).

The special color image data **22** is image data defining a concentration value of a special color for each pixel. The special color is a color other than basic colors such as CMYK and RGB. Examples of the special color include a metal color with metal, white, a transparent color, and a fluorescent color. The metal color is a color reproducing metallic luster. Examples of the metal color include gold and silver. The metal color may be a color obtained by adding a color tone such as CMYK and RGB to a basic metal color such as gold and silver. The fluorescent color may be a color representing a color tone such as CMYK as a fluorescent color. The special color material may include a component that absorbs or reflects light in a specific wavelength region such as ultraviolet rays.

In the present embodiment, exemplified is a case in which the special color image data **22** is data representing the concentration value of one pixel in 8 bits.

Returning to FIG. **1**, the description will be continued. The information processing device **10** performs information processing on the image data **24** received from the host computer **16**. Through this information processing, the information processing device **10** performs various pieces of processing such as correction on the image data received from the host computer **16**, and converts the image data into a format that can be processed by the image forming device **12**. The information processing device **10** then outputs, to the image forming device **12**, the image data on which processing such as conversion or correction is performed.

That is, the information processing device **10** transmits, to the image forming device **12**, the image data that can be processed by the image forming device **12** to control the image forming device **12**.

The information processing device **10** includes a central processing unit (CPU) **10**A, a ROM **10**B, a RAM **10**C, an engine interface **10**D, a panel interface **10**E, a user interface (UI) part **10**J, a host interface **10**F, and a hard disk drive (HDD) **10**H. The CPU **10**A, the ROM **10**B, the RAM **10**C, the engine interface **10**D, the panel interface **10**E, the host interface **10**F, and the HDD **10**H are connected to each other via a bus **10**K so as to exchange data with each other.

The panel interface **10**E is a connection interface of the UI part **10**J. The UI part **10**J has an input function for receiving an operation instruction from a user, and a display function for displaying various images. The UI part **10**J may separately include the input function and the display function.

Examples of the input function include a touch panel. Examples of the input function include a keyboard and a mouse. Examples of the display function include a liquid crystal display device and a display device using organic EL.

The host interface **10**F is a connection interface of the host computer **16**. The engine interface **10**D is a connection interface of the image forming device **12**.

Next, the following describes a colorimeter **14**. The colorimeter **14** is a device that measures a color of an image formed on a medium. As the colorimeter **14**, a known colorimeter may be used. For example, the colorimeter **14** irradiates a measured object with light, and receives reflected light to measure a color. The colorimeter **14** may be an automatic scanning type or a manual scanning type. In the present embodiment, the colorimeter **14** measures a color of each patch image formed on the medium (details will be described later).

For example, the colorimeter **14** is connected to the host computer **16**. Specifically, the colorimeter **14** is connected to the host computer **16** via a universal serial bus (USB) cable. A connection form between the colorimeter **14** and the host computer **16** is not limited to connection using the USB cable. The colorimeter **14** may be connected to the information processing device **10**. The present embodiment describes a form in which the colorimeter **14** is connected to the host computer **16** as an example.

Next, the following describes the image forming device **12**. The image forming device **12** is an example of an image forming part. The image forming device **12** forms an image on the medium using the image data generated by the information processing device **10**.

The medium may be a medium on which an image can be formed. Examples of the medium include a known paper medium (sheet), synthetic paper, and plastic paper.

The image forming device **12** is a device that can form a laminated image of a special color image using a special color material and a colored image using a colored color material. The image forming device **12** is, for example, an image forming device of an electrophotographic type or an ink jet type.

The present embodiment describes a case in which the image forming device **12** is an image forming device of electrophotographic type as an example. The present embodiment also describes a case in which colored toner of CMYK and special color toner are loaded on the image forming device **12** as the colored color material and the special color material. The special color toner is toner used for realizing a special color. Examples of the special color toner include metal toner, transparent (colorless) toner, white toner, and fluorescent toner. The image forming device **12** may be a device that forms an image using colored ink of CMYK and special color ink of a special color as the colored color material and the special color material.

FIG. **3** is a schematic diagram illustrating an example of a configuration of the image forming device **12** according to the present embodiment. The image forming device **12** includes a panel operation part **31** and a main body part **30**. The panel operation part **31** receives various operations from the user, and displays various images. The main body part **30** includes a mechanism used for image formation arranged therein.

Specifically, the main body part **30** includes a colored image forming unit **32** and a special color image forming unit **33**.

The colored image forming unit **32** includes colored image forming units **32**C, **32**M, **32**Y, and **32**K. Each of the colored image forming units **32**C, **32**M, **32**Y, and **32**K includes an image bearer on which a colored toner image is formed with the colored toner of CMYK. The colored toner image formed on the image bearer of the colored image forming unit **32** is primarily transferred onto an intermediate transfer belt **39** by each of primary transfer units **34**C, **34**M, **34**Y, and **34**K.

The special color image forming unit **33** includes an image bearer on which a special color toner image is formed with the special color toner. The special color toner image formed on the image bearer of the special color image forming unit **33** is primarily transferred onto the intermediate transfer belt **39** by a primary transfer unit **34**S. A medium **40** accumulated in a sheet feeding tray **37** is conveyed to a secondary transfer unit **35** one by one.

The special color toner image and the colored toner image that are primarily transferred onto the intermediate transfer belt **39** are secondarily transferred onto the medium **40** by the secondary transfer unit **35**, and fixed by a fixing unit **36**. That is, the colored image and the special color image are fixed onto the medium **40** by the fixing unit **36**. Fixing is an example of immobilization.

In a case of using the special color ink and the colored ink as the special color material and the colored color material, the fixing unit **36** may dry ink (the special color ink, the colored ink) given to the secondary transfer unit **35** to be fixed to the medium **40**. That is, drying is also an example of immobilization.

The medium **40** on which the laminated image of the special color image and the colored image is formed is ejected to an ejection tray **38**.

In the image forming device **12** according to the present embodiment, the positions of the colored image forming unit **32** and the special color image forming unit **33** may be replaced with each other.

FIGS. **4**A and **4**B are explanatory diagrams of the image forming device **12**. In the image forming device **12** accord-

ing to the present embodiment, the special color image forming unit **33** may be arranged on an upstream side of a moving direction X of the intermediate transfer belt **39** with respect to the colored image forming unit **32** (refer to FIG. **4**A). In the image forming device **12**, the special color image forming unit **33** may be arranged on a downstream side of the moving direction X of the intermediate transfer belt **39** with respect to the colored image forming unit **32** (refer to FIG. **4**B).

The arrangement positions of the colored image forming unit **32** and the special color image forming unit **33** can be changed, for example, through position exchanging work by the user. The arrangement positions of the colored image forming unit **32** and the special color image forming unit **33** may be caused to be replaceable by a driving mechanism by providing the driving mechanism for replacing the positions.

That is, the image forming device **12** according to the present embodiment has a configuration in which the laminating order of the colored image and the special color image with respect to the medium **40** is variable.

FIGS. **5**A and **5**B are explanatory diagrams of an example of the laminating order. For example, the colored image forming unit **32** and the special color image forming unit **33** are arranged so that a laminated image **50** obtained by laminating a colored image **54** and a special color image **52** in this order can be formed on the medium **40**. In this case, as illustrated in FIG. **5**A, the laminated image **50** formed by the image forming device **12** becomes an image obtained by laminating the colored image **54** and the special color image **52** in this order on the medium **40**.

The colored image forming unit **32** and the special color image forming unit **33** are arranged so that the laminated image **50** obtained by laminating the special color image **52** and the colored image **54** in this order can be formed on the medium **40**. In this case, as illustrated in FIG. **5**B, the laminated image **50** formed by the image forming device **12** becomes the laminated image **50** obtained by laminating the special color image **52** and the colored image **54** in this order on the medium **40**.

A method of forming the laminated image **50** by the image forming device **12** includes 1-path printing and 2-path printing. FIGS. **6**A and **6**B are explanatory diagrams of the 1-path printing and the 2-path printing.

FIG. **6**A is an explanatory diagram of the 2-path printing. The 2-path printing is a printing method of forming one of the special color image **52** and the colored image **54** on the medium **40** to be immobilized, and laminating the other one thereof thereon.

Immobilization means to immobilize the color material on the medium **40**. Specifically, in a case in which the color material is toner (special color toner, colored toner), immobilization means fixation. In a case in which the color material is ink (special color ink, colored ink), immobilization means drying.

For example, in the 2-path printing, as illustrated in FIG. **6**A, special color toner **52'** is applied and fixed onto the medium **40** to be the special color image **52**, and colored toner **54'** is further applied and fixed onto the special color image **52** to form the laminated image **50** obtained by laminating the colored image **54** on the special color image **52**.

FIG. **6**B is an explanatory diagram of the 1-path printing. The 1-path printing is a printing method of forming one of the special color image **52** and the colored image **54** on the medium **40**, and laminating the other one thereof thereon without performing immobilization.

For example, in the 1-path printing, as illustrated in FIG. **6**B, the special color toner **52'** is applied onto the medium **40**, and the colored toner **54'** is laminated on the special color toner **52'** without performing fixation, and they are fixed lastly. Accordingly, the laminated image **50** obtained by laminating the special color image **52** and the colored image **54** is formed on the medium **40**.

In a case of forming the laminated image **50** through the 2-path printing by using the image forming device **12**, a toner image (a colored toner image or a special color toner image) is formed on the medium **40** by one of the colored image forming unit **32** and the special color image forming unit **33**, and the toner image is fixed by the fixing unit **36**. The medium **40** is then set to the image forming device **12** again. The toner image (the colored toner image or the special color toner image) is formed on the medium **40** by the other one of the units (the other one of the colored image forming unit **32** and the special color image forming unit **33**), and the toner image is fixed by the fixing unit **36**. Thus, operability for the user is poor in a case of 2-path printing, and creases and the like may be generated on the medium **40** when the medium **40** is repeatedly conveyed, for example.

However, in a case of forming the laminated image **50** through the 2-path printing, as illustrated in FIG. **6**A, the colored color material and the special color material are prevented from being mixed with each other, and good image quality is achieved as compared with the laminated image **50** formed through the 1-path printing (refer to FIG. **6**B).

On the other hand, in a case of forming the laminated image **50** through the 1-path printing, fixation (immobilization) is not performed between formation of the colored image and formation of the special color image, so that the operability is improved and time for image formation is shortened, for example. However, in a case of 1-path printing, as illustrated in FIG. **6**B, the colored color material and the special color material are mixed with each other, and the image quality may be deteriorated as compared with the case of 2-path printing.

The information processing device **10** according to the present embodiment generates a correction table for correcting a color value of the image data to improve the image quality of the laminated image **50** formed through the 1-path printing (details will be described later). The correction table for correcting the color value is referred to as a γ correction table in some cases.

Next, the following describes a functional configuration of the information processing device **10** according to the present embodiment. FIG. **7** is a block diagram illustrating a functional configuration of the information processing device **10**.

The information processing device **10** includes a control part **60**, a UI part **64**, and a storage part **62**. The UI part **64** and the storage part **62** are connected to the control part **60** so as to exchange data and a signal with each other.

The UI part **64** is implemented by the UI part **10**J (refer to FIG. **1**). The storage part **62** is, for example, implemented by the HDD **10**H (refer to FIG. **1**). The storage part **62** stores therein various pieces of data. In the present embodiment, the storage part **62** stores therein a correction management DB **62**A, a medium management DB **62**B, and an initial correction table **70**A (details will be described later).

The control part **60** includes a color conversion processing part **60**A, a γ correction part **60**B, a total quantity regulation part **60**C, a halftone processing part **60**D, a transmission part **60**E, and an update processing part **60**F. The update processing part **60**F includes a UI control part

60G, an acquisition part 60H, a determination part 60I, a specification part 60J, a generation part 60K, and an update part 60L.

Part or all of the color conversion processing part 60A, the γ correction part 60B, the total quantity regulation part 60C, the halftone processing part 60D, the transmission part 60E, the update processing part 60F, the UI control part 60G, the acquisition part 60H, the determination part 60I, the specification part 60J, the generation part 60K, and the update part 60L are implemented by one or a plurality of processors, for example. For example, the components described above may be implemented by causing a processor such as a CPU to execute a computer program, that is, implemented by software. The components described above may be implemented by a processor such as a dedicated integrated circuit (IC), that is, implemented by hardware. The components described above may be implemented by using both of the software and the hardware. In a case of using a plurality of processors, each processor may implement one of the components, or implement two or more of the components.

The color conversion processing part 60A acquires the image data 24 from the host computer 16. For example, the color conversion processing part 60A acquires the image data 24 in which one pixel is represented by a concentration value in 8 bits. The color conversion processing part 60A then performs color conversion processing on the colored image data 20 included in the acquired image data 24. For example, it is assumed that the colored image data 20 included in the image data 24 acquired from the host computer 16 is an RGB color space. In this case, the color conversion processing part 60A converts the colored image data 20 of the RGB color space into the colored image data 20 of a CMYK color space. Accordingly, the color conversion processing part 60A obtains the colored image data 20 (color image data 20C, 20M, 20Y, and 20K) of each color of CMYK. The color conversion processing part 60A then outputs, to the γ correction part 60B, the colored image data 20 on which color conversion is performed.

The color conversion processing part 60A outputs, to the γ correction part 60B, the special color image data 22 included in the acquired image data 24 as it is without performing image processing.

The γ correction part 60B performs γ correction on the colored image data 20 (color image data 20C, 20M, 20Y, and 20K) of each color of CMYK and the special color image data 22. In the present embodiment, the γ correction part 60B performs γ correction on a color value (a concentration value, a gradation value) of the colored image data 20 using the correction table. At this point in time, the γ correction part 60B reads the correction table corresponding to a calibration condition (described later) from the storage part 62, and performs γ correction using the read correction table (details will be described later).

The γ correction part 60B outputs, to the total quantity regulation part 60C, the special color image data 22 included in the acquired image data 24 as it is without performing γ correction.

The correction table is updated by the update processing part 60F (details will be described later). That is, the γ correction part 60B performs γ correction using the correction table corrected by the update processing part 60F.

The total quantity regulation part 60C performs total quantity regulation processing using the special color image data 22 and the colored image data 20 on which γ correction is performed. There is a limit to a quantity of color materials (quantity of toner) that can be placed in a region corresponding to one pixel on the medium 40 by the image forming device 12. Total quantity regulation is processing of correcting each pixel value (concentration value) of the colored image data 20 and the special color image data 22 so that a total quantity of color materials per region corresponding to one pixel on the medium 40 is equal to or smaller than the limit quantity.

The total quantity regulation part 60C outputs, to the halftone processing part 60D, the colored image data 20 (color image data 20C, 20M, 20Y, and 20K) and the special color image data 22 on which total quantity regulation is performed.

The halftone processing part 60D performs halftone processing. The halftone processing part 60D performs halftone processing on the colored image data 20 (color image data 20C, 20M, 20Y, and 20K) and the special color image data 22 received from the total quantity regulation part 60C.

The halftone processing is processing of causing each pixel value of the colored image data 20 (color image data 20C, 20M, 20Y, and 20K) and the special color image data 22 in which the pixel value of each pixel is represented by a gradation value from 0 to 255 represented in 8 bits to be small (for example, to be binarized). The halftone processing is referred to as screen processing in some cases.

The transmission part 60E outputs, to the image forming device 12, the image data 24 on which halftone processing is performed by the halftone processing part 60D.

The following describes the storage part 62 storing the correction table used by the γ correction part 60B. As described above, the storage part 62 stores therein the correction management DB 62A, the medium management DB 62B, and the initial correction table 70A.

The correction management DB 62A is a database for managing the correction table used at the time when the γ correction part 60B performs γ correction. A data format of the correction management DB 62A is not limited to a database. For example, the data format of the correction management DB 62A may be a table.

FIG. 8 is a schematic diagram illustrating an example of a data configuration of the correction management DB 62A. In the correction management DB 62A, the calibration condition, image data for a correction chart, a target characteristic, and a correction table are associated with each other. The calibration condition, the image data for a correction chart, the target characteristic, and the correction table in the correction management DB 62A are registered and updated by the update processing part 60F described later.

The calibration condition indicates a condition at the time when the γ correction part 60B performs γ correction. The calibration condition registered in the correction management DB 62A is defined in accordance with a current setting of the image forming device 12. In the present embodiment, the calibration condition includes a calibration ID, a medium ID, laminating order information, special color type information, and information indicating whether to use the special color for calibration.

The calibration ID is identification information of the calibration condition. The medium ID is identification information for identifying medium information of the medium 40. The medium information is defined with a plurality of parameters for specifying the medium 40. For example, the medium information is defined with the parameters such as a medium name, a size (width and height), weighting, a color, and a type.

The laminating order information is information indicating the laminating order of the special color image 52 and the colored image 54 with respect to the medium 40. The

laminating order information includes laminating order information indicating that the special color image and the colored image are laminated on the medium in this order, and laminating order information indicating that the colored image and the special color image are laminated on the medium in this order.

The special color type information is information indicating a type of the special color material mounted on the image forming device **12**. In the present embodiment, the special color type information is information indicating white, gold, transparent (clear), or fluorescence, for example.

Whether to use the special color for calibration indicates "use" indicating that γ correction is performed using the special color, or "not use" indicating that γ correction is performed without using the special color.

Next, the following describes the image data for a correction chart. The image data for a correction chart is data defining a plurality of patch regions having different color values. FIGS. **9**A and **9**B are schematic diagrams illustrating an example of image data **78** for a correction chart.

FIG. **9**A is an example of the image data **78** for a correction chart. The image data **78** for a correction chart is data defining a plurality of patch regions P' having different color values. The patch region P' is a laminated region of a patch region A of special color and a colored region B.

Specifically, the image data **78** for a correction chart includes a plurality of patch regions PK', a plurality of patch regions PY', a plurality of patch regions PM', and a plurality of patch regions PC' as the patch regions P'. Each of the patch regions P' is the laminated region of the patch region A of special color and the colored region B.

The patch region PK' is a region in which the colored region B of K color is laminated on the patch region A of special color. Concentration values of K color in the patch regions PK' are different from each other. The patch region PY' is a region in which the colored region B of Y color is laminated on the patch region A of special color. Concentration values of Y color in the patch regions PY' are different from each other. The patch region PM' is a region in which the colored region B of M color is laminated on the patch region A of special color. Concentration values of M color in the patch regions PM' are different from each other. The patch region PC' is a region in which the colored region B of C color is laminated on the patch region A of special color. Concentration values of C color in the patch regions PC' are different from each other.

Each of the patch regions P' is a laminated region, so that, specifically, the image data **78** for a correction chart is constituted of image data **76** for a special color correction chart and image data **77** for a colored correction chart. As illustrated in FIG. **9**B, the image data **76** for a special color correction chart is data defining the special color value of the patch region A of special color with the special color material. In the present embodiment, described is a case in which the patch region A of special color is represented as a region of a solid image (100% concentration).

The storage part **62** previously stores therein the image data **76** for a special color correction chart corresponding to the special color type information for each piece of special color type information. For example, the storage part **62** previously stores therein the image data **76** for a special color correction chart defining the special color value (a white concentration value) of the patch region A of special color of white corresponding to the special color type information "white". The storage part **62** previously stores therein the image data **76** for a special color correction chart defining the special color value (a gold concentration value) of the patch region A of special color of gold corresponding to the special color type information "gold". The storage part **62** previously stores therein the image data **76** for a special color correction chart defining the special color value (a concentration value) of the patch region A of special color of transparency corresponding to the special color type information "transparent". The storage part **62** previously stores therein the image data **76** for a special color correction chart defining the special color value (a fluorescence concentration value) of the patch region A of special color of fluorescence corresponding to the special color type information "fluorescence".

On the other hand, as illustrated in FIG. **9**A, the image data **77** for a colored correction chart is data defining a colored color value of the colored region B using the colored color material. The image data **77** for a colored correction chart defines a plurality of colored regions B of K color, Y color, M color, and C color having different concentration values.

Returning to FIG. **8**, the description will be continued. In the correction management DB **62**A, the image data **78** for a correction chart corresponding to the calibration condition is registered. The image data **78** for a correction chart corresponding to the calibration condition is registered in the correction management DB **62**A by the update processing part **60**F described later.

The target characteristic indicates a characteristic serving as a target at the time when the update processing part **60**F corrects the correction table. Although details will be described later, in the present embodiment, the update processing part **60**F corrects the initial correction table **70**A to generate the correction table corresponding to the calibration condition. The target characteristic indicates a characteristic serving as a target at the time when the initial correction table **70**A is corrected. The target characteristic may also be referred to as a correction target. Details about the target characteristic will be described later.

The correction table is a γ correction table used for γ correction. For example, the initial correction table **70**A is registered in the correction management DB **62**A in advance. The initial correction table **70**A is a γ correction table used for γ correction. The update processing part **60**F corrects the initial correction table **70**A using the target characteristic to generate the correction table corresponding to the calibration condition. For example, in the correction management DB **62**A, correction tables (in FIG. **8**, D**1** to D**4**) corresponding to respective calibration conditions are registered through processing performed by the update processing part **60**F described later. The processing performed by the update processing part **60**F will be described later.

Next, the following describes the medium management DB **62**B. FIG. **10** is a schematic diagram illustrating an example of a data configuration of the medium management DB **62**B. In the medium management DB **62**B, the medium ID is associated with the medium information. A data format of the medium management DB **62**B is not specifically limited. The medium management DB **62**B may be a database or a table, for example. In the present embodiment, it is assumed that the medium management DB **62**B is registered in the storage part **62** in advance.

Returning to FIG. **7**, the description will be continued. The following describes the update processing part **60**F.

The update processing part **60**F is a functional part that generates the correction table used for γ correction.

The update processing part **60**F includes the UI control part **60**G, the acquisition part **60**H, the determination part **60**I, the specification part **60**J, the generation part **60**K, and the update part **60**L.

First, the following describes the acquisition part **60**H.

The acquisition part **60**H acquires the special color type information. In the present embodiment, the acquisition part **60**H acquires the special color type information from the image forming device **12**. When receiving an acquisition request for the special color type information, from the acquisition part **60**H, the image forming device **12** transmits, to the information processing device **10**, the special color type information indicating the type of the special color material currently loaded on the image forming device **12**.

For example, it is assumed that a memory that stores therein the special color type information indicating the type of the special color material is loaded on an accumulation part accumulating the special color material loaded on the image forming device **12**. In this case, the image forming device **12** reads the special color type information from the memory and transmits the special color type information to the information processing device **10**. The user operating the image forming device **12** may input the special color type information of the special color material loaded on the image forming device **12** to store the special color type information in the memory of the image forming device **12**. When receiving the acquisition request for the special color type information, from the information processing device **10**, the image forming device **12** reads the special color type information from the storage part **62** and transmits the special color type information to the information processing device **10**.

In this way, the acquisition part **60**H acquires the special color type information of the special color material currently loaded on the image forming device **12**.

The acquisition part **60**H acquires the laminating order information. In the present embodiment, the acquisition part **60**H acquires the laminating order information from the image forming device **12**. The laminating order information is information indicating the laminating order of the special color image **52** and the colored image **54** with respect to the medium **40** in the laminated image **50** formed with a current configuration of the image forming device **12**.

For example, the image forming device **12** specifies whether the positions of the colored image forming unit **32** and the special color image forming unit **33** are in a positional relation of forming the laminated image **50** in which the special color image **52** and the colored image **54** are laminated in this order with respect to the medium **40**, or in a positional relation of forming the laminated image **50** in which the colored image **54** and the special color image **52** are laminated in this order with respect to the medium **40**.

Specifically, a sensor for identifying the respective positions of the colored image forming unit **32** and the special color image forming unit **33** is arranged in the main body part **30** of the image forming device **12**. The image forming device **12** specifies the laminating order information by specifying the positional relation between the colored image forming unit **32** and the special color image forming unit **33** using a detection signal from the sensor. When receiving the acquisition request for the laminating order information, from the information processing device **10**, the image forming device **12** may transmit the laminating order information to the information processing device **10**. Accordingly, the acquisition part **60**H acquires the laminating order information from the image forming device **12**.

The acquisition part **60**H acquires the medium ID. In the present embodiment, the acquisition part **60**H acquires the medium ID from the image forming device **12**. For example, the image forming device **12** specifies the medium ID of the medium **40** accumulated in the sheet feeding tray **37**. For example, the image forming device **12** specifies the medium ID input through an operation of the panel operation part **31** by the user. The image forming device **12** may specify the medium ID of the medium **40** by detecting the medium **40** accumulated in the sheet feeding tray **37** using a known method. The image forming device **12** then transmits the specified medium ID to the information processing device **10**. Accordingly, the acquisition part **60**H of the information processing device **10** acquires the medium ID from the image forming device **12**.

The acquisition part **60**H then associates the medium ID, the laminating order information, and the special color type information that have been acquired with the correction management DB **62**A to be registered as new calibration conditions (refer to FIG. **8**).

As described above with reference to FIG. **8**, the calibration condition may further include information indicating whether to use the special color for calibration. This information is updated through an operation instruction from the user.

For example, the UI control part **60**G causes the UI part **64** to display a display screen displaying the calibration condition. FIG. **11** is an example of a calibration condition display screen **80**.

As illustrated in FIG. **11**, the calibration condition display screen **80** includes a medium information display region **80**A, a selection window **80**B, and an execution button **80**C.

The medium information display region **80**A is a region for displaying the medium information of the medium **40** to be used for calibration. The UI control part **60**G reads, from the medium management DB **62**B, the medium information corresponding to the medium ID acquired by the acquisition part **60**H, and displays the medium information in the medium information display region **80**A. The calibration condition display screen **80** may further include at least one of the laminating order information and the special color type information acquired by the acquisition part **60**H.

The selection window **80**B is a window for selecting whether to use the special color for calibration. The user operates the selection window **80**B using the UI part **64** to input whether to use the special color for calibration.

The execution button **80**C is operated by the user to instruct to perform calibration based on content displayed on the calibration condition display screen **80**. When the execution button **80**C is operated by the user, the UI control part **60**G outputs, to the acquisition part **60**H, the information indicating whether to use the special color for calibration input through the calibration condition display screen **80**.

Accordingly, the acquisition part **60**H acquires the information indicating whether to use the special color for calibration, and registers the information in the correction management DB **62**A.

Returning to FIG. **7**, the description will be continued. The determination part **60**I determines the image data **78** for a correction chart corresponding to the special color type information acquired by the acquisition part **60**H.

In more detail, the determination part **60**I determines the image data **78** for a correction chart by reading, from the storage part **62**, the image data **76** for a special color correction chart corresponding to the special color type information acquired by the acquisition part **60**H. Specifically, for example, in a case in which the special color type

information is information indicating white, the determination part **60**I reads, from the storage part **62**, the image data **76** for a special color correction chart defining the special color value (white concentration value) of the patch region A of special color of white corresponding to the special color type information "white".

The storage part **62** previously stores therein one type of image data **77** for a colored correction chart (refer to FIG. **9**(A)). Due to this, the determination part **60**I reads the image data **77** for a colored correction chart from the storage part **62**.

Accordingly, the determination part **60**I determines the image data **78** for a correction chart including the image data **76** for a special color correction chart corresponding to the special color type information acquired by the acquisition part **60**H and the image data **77** for a colored correction chart.

The acquisition part **60**H may acquire information indicating that the special color is not used for calibration, from the user via the calibration condition display screen **80**. In this case, the determination part **60**I determines the image data **78** for a correction chart by reading only the image data **77** for a colored correction chart from the storage part **62**.

Next, the following describes the specification part **60**J.

The specification part **60**J specifies the target characteristic using the image data **78** for a correction chart determined by the determination part **60**I.

The target characteristic indicates a relation between a first colorimetric value of a first patch image P**1** formed through the 2-path printing by the image forming device **12** using the image data **78** for a correction chart, and the color value of the image data **78** for a correction chart. The relation is represented as a chart or a function. In the present embodiment, described is a case in which the target characteristic is represented as a chart. The color value of the image data **78** for a correction chart used for the target characteristic is, specifically, the colored color value of the image data **77** for a colored correction chart included in the image data **78** for a correction chart.

FIG. **12**A and FIG. **12**B are explanatory diagrams of an example of the first patch image P**1** formed through the 2-path printing using the image data **78** for a correction chart.

For example, the laminating order information acquired by the acquisition part **60**H is assumed to indicate that the special color image **52** and the colored image **54** are laminated in this order on the medium **40**. Additionally, it is assumed that the determination part **60**I determines the image data **76** for a special color correction chart and the image data **77** for a colored correction chart to be the image data **78** for a correction chart.

In this case, the specification part **60**J transmits the determined image data **76** for a special color correction chart to the image forming device **12**. By using the received image data **76** for a special color correction chart, the image forming device **12** forms the special color image **52** corresponding to the patch region A of special color shown in the image data **76** for a special color correction chart on the medium **40** to be fixed (the first path) (refer to FIG. **12**A). The user sets the medium **40** to which the special color image **52** is fixed to the sheet feeding tray **37** of the image forming device **12** again.

Next, the specification part **60**J transmits the determined image data **77** for a colored correction chart to the image forming device **12**. By using the received image data **77** for a colored correction chart, the image forming device **12** forms the colored image **54** corresponding to the colored region B indicated by the image data **77** for a colored correction chart on the special color image **52** on the medium **40** to be fixed (the second path) (refer to FIG. **12**B). Accordingly, the laminated image **50** corresponding to the image data **78** for a correction chart determined by the determination part **60**I is formed on the medium **40** through the 2-path printing.

Through the 2-path printing, the first patch image P**1** as the laminated image **50** corresponding to each patch region P' shown in the image data **78** for a correction chart is formed on the medium **40** (refer to FIG. **12**B).

The colorimeter **14** measures a color of each first patch image P**1** to obtain the first colorimetric value. The colorimeter **14** outputs the first calorimetric value of each of the first patch images P**1** to the information processing device **10** via the host computer **16**.

The specification part **60**J of the information processing device **10** specifies the target characteristic indicating a relation between the colored color value indicated by each of the patch regions P' shown in the image data **78** for a correction chart determined by the determination part **60**I and the first colorimetric value of the first patch image P**1** corresponding to each of the patch regions P'.

FIG. **13** is a chart illustrating an example of a relation between a target characteristic **72** and a measured characteristic **74**. For example, the specification part **60**J specifies the target characteristic **72** illustrated in FIG. **13**. The specification part **60**J specifies the target characteristic **72** indicating a relation between the color value (colored color value) and the colorimetric value (first calorimetric value).

Returning to FIG. **7**, the description will be continued. Next, the following describes the generation part **60**K. The generation part **60**K generates the correction table using the image data **78** for a correction chart determined by the determination part **60**I.

In more detail, first, the generation part **60**K determines the measured characteristic using the image data **78** for a correction chart determined by the determination part **60**I.

The measured characteristic indicates a relation between a second colorimetric value of a second patch image P**2** formed through the 1-path printing by the image forming device **12** using the image data **78** for a correction chart determined by the determination part **60**I, and the color value of the image data **78** for a correction chart. The relation is represented as a chart or a function. In the present embodiment, described is a case in which the measured characteristic is represented as a chart. The color value of the image data **78** for a correction chart used for the measured characteristic is, specifically, the colored color value of the image data **77** for a colored correction chart included in the image data **78** for a correction chart.

FIG. **12**C is an explanatory diagram of an example of the second patch image P**2** formed through the 1-path printing using the image data **78** for a correction chart.

For example, the laminating order information acquired by the acquisition part **60**H is assumed to indicate that the special color image **52** and the colored image **54** are laminated in this order on the medium **40**. Additionally, it is assumed that the determination part **60**I determines the image data **76** for a special color correction chart and the image data **77** for a colored correction chart to be the image data **78** for a correction chart.

In this case, the determination part **60**I transmits the determined image data **78** for a correction chart (the image data **76** for a special color correction chart, and the image data **77** for a colored correction chart) to the image forming device **12**. By using the image data **76** for a special color

correction chart included in the received image data **78** for a correction chart, the image forming device **12** forms the special color image **52** corresponding to the patch region A of special color on the medium **40**, thereafter forms the colored image **54** corresponding to the colored region B on the special color image **52** using the image data **77** for a colored correction chart without performing fixing, and fixes the colored image **54** thereon (refer to FIG. **12**C). Accordingly, the laminated image **50** corresponding to the image data **78** for a correction chart determined by the determination part **60**I is formed on the medium **40** through the 1-path printing.

Through the 1-path printing, the second patch image P**2** as the laminated image **50** corresponding to each patch region P' shown in the image data **78** for a correction chart is formed on the medium **40** (refer to FIG. **12**C).

The colorimeter **14** measures a color of each second patch image P**2** to obtain the second colorimetric value. The colorimeter **14** outputs the second colorimetric value of each of the second patch images P**2** to the information processing device **10** via the host computer **16**.

The generation part **60**K of the information processing device **10** specifies the measured characteristic indicating a relation between the colored color value indicated by each of the patch regions P' shown in the image data **78** for a correction chart determined by the determination part **60**I and the second calorimetric value of the second patch image P**2** corresponding to each of the patch regions P'.

For example, the generation part **60**K specifies the measured characteristic **74** illustrated in FIG. **13**. The generation part **60**K specifies the measured characteristic **74** indicating a relation between the color value (colored color value) and the colorimetric value (second colorimetric value).

At the time of forming the first patch image P**1** and the second patch image P**2** used for specifying the target characteristic **72** and the measured characteristic **74**, the image forming device **12** is in a state indicated by the calibration condition acquired by the acquisition part **60**H. That is, the medium **40** identified with the medium ID and the special color material of a type indicated by the special color type information are loaded on the image forming device **12**, the medium ID and the special color type information being indicated by the calibration condition acquired by the acquisition part **60**H, and the image forming device **12** is in a state in which the laminated image **50** can be formed in the laminating order indicated by the laminating order information included in the calibration condition.

Thus, the target characteristic **72** specified by the specification part **60**J and the measured characteristic **74** specified by the generation part **60**K are characteristics obtained from the laminated image **50** formed by the image forming device **12** under the same calibration condition using the same image data **78** for a correction chart. The target characteristic **72** specified by the specification part **60**J is different from the measured characteristic **74** specified by the generation part **60**K in that the target characteristic **72** is a characteristic obtained from the laminated image **50** formed through the 1-path printing, and the measured characteristic **74** is a characteristic obtained from the laminated image **50** formed through the 2-path printing.

The generation part **60**K then generates the correction table for correcting the color value defined for the colored image data **20** so that the measured characteristic **74** comes close to the target characteristic **72**. The generation part **60**K preferably generates the correction table for correcting the color value so that the measured characteristic **74** is matched with the target characteristic **72**.

FIG. **14** is a schematic diagram illustrating an example of correction table generation performed by the generation part **60**K. In the present embodiment, the generation part **60**K generates a correction table **70**B by correcting the initial correction table **70**A previously stored in the storage part **62**.

In more detail, the generation part **60**K generates the correction table **70**B in which the color value in the target characteristic **72** is set to be an input color value, and the color value in the measured characteristic **74** corresponding to the second colorimetric value indicating the first colorimetric value of the target characteristic **72** is set to be an output color value.

Specifically, as illustrated in FIG. **13**, the generation part **60**K specifies a color value b' in the measured characteristic **74** corresponding to a second colorimetric value a' that is the same value as a first colorimetric value a corresponding to a color value b in the target characteristic **72**. As illustrated in FIG. **13** and FIG. **14**, the generation part **60**K then generates the correction table **70**B in which the color value b in the target characteristic **72** is set to be the input color value, and the color value b' in the measured characteristic **74** is set to be the output color value.

In the present embodiment, the generation part **60**K generates the correction table **70**B (refer to FIG. **14**) for correcting the color value (colored color value) by correcting the initial correction table **70**A so that the measured characteristic **74** illustrated in FIG. **13** comes close to the target characteristic **72**.

The initial correction table **70**A and the correction table **70**B are tables in which the color value illustrated in the colored image data **20** (the colored color value, that is, the colored concentration value) is set to be the input color value, and the corrected color value is set to be the output color value.

That is, to achieve, through the 1-path printing, image quality similar to that of the laminated image **50** formed through the 2-path printing, the generation part **60**K generates the correction table **70**B for correcting the color value (the colored color value, the colored concentration value) of the colored image data **20**.

The update part **60**L associates the correction table **70**B generated by the generation part **60**K with the calibration condition acquired by the acquisition part **60**H and registers them in the correction management DB **62**A. Due to this, the update part **60**L updates the initial correction table **70**A to the correction table **70**B.

Thus, the correction table **70**B corresponding to the calibration condition is registered in the storage part **62**.

The γ correction part **60**B described above performs γ correction, using the correction table **70**B, on the colored image data **20** (color image data **20**C, **20**M, **20**Y, and **20**K) of each color of CMYK included in the image data **24** received from the host computer **16** via the color conversion processing part **60**A. At this point in time, the γ correction part **60**B acquires the calibration condition similarly to the acquisition part **60**H, and performs γ correction using the correction table **70**B corresponding to the calibration condition based on a current setting of the image forming device **12**. The transmission part **60**E then outputs, to the image forming device **12**, the image data **24** that is γ-corrected by the γ correction part **60**B and processed by the total quantity regulation part **60**C and the halftone processing part **60**D.

Next, the following describes an example of an information processing procedure at the time when the correction table is updated performed by the control part **60** of the information processing device **10**.

FIG. **15** is a flowchart illustrating an example of the information processing procedure at the time when the correction table is updated performed by the control part **60** of the information processing device **10**.

First, the acquisition part **60**H acquires, from the image forming device **12**, the laminating order information, the special color type information, and the medium ID (Step S**100**).

Next, the acquisition part **60**H reads the medium information corresponding to the medium ID acquired at Step S**100** from the medium management DB **62**B (Step S**102**). Subsequently, the acquisition part **60**H displays the calibration condition display screen **80** including the medium information read at Step S**102** on the UI part **64** (Step S**104**) (refer to FIG. **11**).

The user refers to the calibration condition display screen **80** and operates the selection window **80**B to input the information indicating whether to use the special color for calibration. The user then operates the execution button **80**C.

Next, the acquisition part **60**H repeats negative determination (No at Step S**106**) until it is determined that an execution instruction is received (Yes at Step S**106**). The acquisition part **60**H makes determination at Step S**106** by determining whether the execution button **80**C is operated. If positive determination is made at Step S**106** (Yes at Step S**106**), the process proceeds to Step S**108**.

Next, the determination part **60**I determines whether the laminating order indicated by the laminating order information acquired at Step S**100** is such that the special color image **52** and the colored image **54** are laminated on the medium **40** in this order (Step S**108**).

If positive determination is made at Step S**108** (Yes at Step S**108**), the process proceeds to Step S**110**. At Step S**110**, the determination part **60**I determines whether to use the special color for calibration (Step S**110**). If positive determination is made at Step S**110** (Yes at Step S**110**), the process proceeds to Step S**112**. At Step S**112**, the determination part **60**I determines the image data **77** for a colored correction chart and the image data **76** for a special color correction chart to be the image data **78** for a correction chart (Step S**112**). At this point in time, the determination part **60**I determines the image data **76** for a special color correction chart corresponding to the special color type information acquired at Step S**100**.

The determination part **60**I associates the laminating order information, the special color type information, and the medium ID that are acquired at Step S**100**, the information indicating that the special color is "used" for calibration, and the image data **78** for a correction chart determined at Step S**112** with each other, and stores them in the correction management DB **62**A (Step S**114**). The process then proceeds to Step S**120**.

On the other hand, if negative determination is made at Step S**108** (No at Step S**108**), the process proceeds to Step S**116**. If negative determination is made at Step S**110** (No at Step S**110**), the process proceeds to Step S**116**.

At Step S**116**, the determination part **60**I determines the image data **77** for a colored correction chart to be the image data **78** for a correction chart (Step S**116**).

The determination part **60**I then associates the laminating order information, the special color type information, and the medium ID that are acquired at Step S**100**, the information indicating the determination result ("not to use" the special color for calibration) at Step S**110**, and the image data **78** for a correction chart determined at Step S**116** with each other, and stores them in the correction management DB **62**A (Step S**118**). The process then proceeds to Step S**120**.

At Step S**120**, the determination part **60**I transmits the image data **76** for a special color correction chart determined at Step S**112** to the image forming device **12** (Step S**120**). The image forming device **12** forms the special color image **52** corresponding to the patch region A of special color shown in the image data **76** for a special color correction chart on the medium **40** to be fixed, using the received image data **76** for a special color correction chart (the first path) (refer to FIG. **12**A). The user sets the medium **40** to which the special color image **52** is fixed to the sheet feeding tray **37** of the image forming device **12** again. When image formation on the medium **40** is ended, the image forming device **12** outputs an image formation completion signal to the information processing device **10**.

The determination part **60**I of the information processing device **10** repeats negative determination (No at Step S**122**) until it is determined that the image formation completion signal is received (Yes at Step S**122**). If positive determination is made at Step S**122** (Yes at Step S**122**), the process proceeds to Step S**124**.

At Step S**124**, the determination part **60**I transmits the image data **77** for a colored correction chart determined at Step S**112** or Step S**116** to the image forming device **12** (Step S**124**). The image forming device **12** forms the colored image **54** corresponding to the colored region B shown in the image data **77** for a colored correction chart on the special color image **52** on the medium **40** to be fixed, using the received image data **77** for a colored correction chart (the second path) (refer to FIG. **12**B).

Through the processing from Step S**120** to Step S**124**, the laminated image **50** corresponding to the image data **78** for a correction chart determined at Step S**112** or Step S**116** is formed on the medium **40** through the 2-path printing. At Step S**116**, only the image data **77** for a colored correction chart is determined to be the image data **78** for a correction chart, so that only the colored image **54** is formed on the medium **40** in this case.

Next, the specification part **60**J acquires, from the colorimeter **14**, the first colorimetric value of each first patch image P**1** (refer to FIG. **12**B) as the laminated image **50** formed on the medium **40** through the 2-path printing after the processing from Step S**120** to Step S**124** (Step S**126**).

The specification part **60**J then specifies the target characteristic **72** indicating a relation between the colored color value indicated by each of the patch regions P' shown in the image data **77** for a colored correction chart determined at Step S**112** or Step S**116**, and the first colorimetric value of the first patch image P**1** corresponding to each of the patch regions P' (Step S**128**). Through the processing at Step S**128**, for example, the target characteristic **72** illustrated in FIG. **13** is specified.

The specification part **60**J then stores, in the correction management DB **62**A, the target characteristic **72** specified at Step S**128** being associated with the calibration condition (the laminating order information, the special color type information, and the medium ID) acquired at Step S**100** (Step S**130**).

Next, the generation part **60**K transmits the image data **78** for a correction chart determined at Step S**112** or Step S**116** to the image forming device **12** (Step S**132**).

After forming the special color image **52** corresponding to the patch region A of special color on the medium **40** using the image data **76** for a special color correction chart included in the received image data **78** for a correction chart,

the image forming device **12** forms the colored image **54** corresponding to the colored region B on the special color image **52** using the image data **77** for a colored correction chart without performing fixation, and fixes the colored image **54** (refer to FIG. **12**C). Due to this, the laminated image **50** corresponding to the image data **78** for a correction chart determined by the determination part **60**I is formed on the medium **40** through the 1-path printing. When image formation on the medium **40** is ended, the image forming device **12** transmits the image formation completion signal to the information processing device **10**.

The generation part **60**K of the information processing device **10** repeats negative determination (No at Step S**134**) until it is determined that the image formation completion signal is received from the image forming device **12** (Yes at Step S**134**). If positive determination is made at Step S**134** (Yes at Step S**134**), the process proceeds to Step S**136**.

At Step S**136**, the generation part **60**K acquires, from the colorimeter **14**, the second colorimetric value of each second patch image P**2** (refer to FIG. **12**C) as the laminated image **50** formed on the medium **40** through the 1-path printing after the processing from Step **132** to Step S**134** (Step S**136**).

The generation part **60**K then specifies the measured characteristic **74** indicating a relation between the colored color value indicated by each of the patch regions P' shown in the image data **78** for a correction chart (image data **77** for a colored correction chart) determined at Step S**112** or Step S**116**, and the second colorimetric value of the second patch image P**2** corresponding to each of the patch regions P' (Step S**138**) (refer to FIG. **13**).

The generation part **60**K then generates the correction table **70**B for correcting the color value so that the measured characteristic **74** specified at Step S**138** comes closer to the target characteristic **72** specified at Step S**128** (Step S**140**).

Next, the update part **60**L repeats negative determination (No at Step S**142**) until it is determined that an update OK signal indicating update OK is acquired (Yes at Step S**142**). For example, when a button image indicating update OK is operated when the user operates the UI part **64**, the update part **60**L receives the update OK signal from the UI part **64**. The update part **60**L then determines whether the update OK signal is received from the UI part **64** to make determination at Step S**142**.

If positive determination is made at Step S**142** (Yes at Step S**142**), the process proceeds to Step S**144**. At Step S**144**, the correction table **70**B generated at Step S**140** is registered in the correction management DB **62**A being associated with the calibration condition acquired at Step S**100**. Due to this, the update part **60**L updates the correction table. This routine is then ended.

Next, the following describes an example of an information processing procedure performed by the information processing device **10** when the image data **24** is received from the host computer **16**. FIG. **16** is a flowchart illustrating an example of the information processing procedure that is performed at the time when the image data **24** is received.

First, the color conversion processing part **60**A acquires the image data **24** from the host computer **16** (Step S**200**). Next, the color conversion processing part **60**A performs color conversion processing on the colored image data **20** included in the image data **24** acquired at Step S**200** (Step S**202**).

Next, the γ correction part **60**B acquires the calibration condition (Step S**204**). For example, the γ correction part **60**B acquires, from the image forming device **12**, the laminating order information, the special color type information, and the medium ID as the calibration condition. At this point in time, the γ correction part **60**B may acquire, from the image forming device **12**, the information indicating whether to use the special color for calibration. The γ correction part **60**B may acquire, from the UI part **64**, the information indicating whether to use the special color for calibration.

Next, the γ correction part **60**B corrects (γ-corrects) the color value of the colored image data **20** on which color conversion is performed at Step S**202** using the correction table **70**B corresponding to the calibration condition acquired at Step S**204** in the correction management DB **62**A (Step S**206**).

Next, the total quantity regulation part **60**C performs total quantity regulation processing using the colored image data **20** that is γ-corrected at Step S**206** and the special color image data **22** included in the image data **24** acquired at Step S**200** (Step S**208**).

Next, the halftone processing part **60**D performs halftone processing on the colored image data **20** (color image data **20**C, **20**M, **20**Y, and **20**K) and the special color image data **22** on which total quantity regulation processing is performed at Step S**208** (Step S**210**). The transmission part **60**E transmits, to the image forming device **12**, the image data **24** (the colored image data **20**, the special color image data **22**) on which halftone processing is performed by the halftone processing part **60**D (Step S**212**). This routine is then ended.

As described above, the information processing device **10** according to the present embodiment controls the image forming device **12** (image forming part). The image forming device **12** forms the laminated image **50** of the special color image **52** using the special color material and the colored image **54** using the colored color material through the 2-path printing or the 1-path printing. In the 2-path printing, after forming one of the special color image **52** and the colored image **54** on the medium **40** to be immobilized, the other one thereof is laminated thereon. In the 1-path printing, after forming one of the special color image **52** and the colored image **54** on the medium **40**, the other one thereof is laminated thereon without performing immobilization.

The information processing device **10** includes the specification part **60**J and the generation part **60**K. The specification part **60**J specifies the target characteristic **72** indicating a relation between the color value and the first colorimetric value of the first patch image P**1** as the laminated image **50** corresponding to each patch region P' formed through the 2-path printing by the image forming device **12** using the image data **78** for a correction chart defining the patch regions P' having different color values. The generation part **60**K generates the correction table for correcting the color value so that the measured characteristic **74** comes close to the target characteristic **72**, the measured characteristic **74** indicating a relation between the color value and the second colorimetric value of the second patch image P**2** as the laminated image **50** corresponding to each patch region P' formed through the 1-path printing by the image forming device **12** using the image data **78** for a correction chart.

In this way, the information processing device **10** according to the present embodiment generates the correction table **70**B for correcting the color value so that the measured characteristic **74** indicating a relation between the color value and the second colorimetric value of the second patch image P**2** formed through the 1-path printing using the image data **78** for a correction chart comes close to the target characteristic **72** indicating a relation between the color value and the first colorimetric value of the first patch image P**1** formed through the 2-path printing using the image data

78 for a correction chart. That is, the information processing device 10 generates the correction table 70B for correcting the color value (the colored color value, the colored concentration value) of the image data to achieve, through the 1-path printing, image quality that is substantially equal to that of the laminated image 50 formed through the 2-path printing.

By forming the laminated image 50 on the medium 40 through the 1-path printing using the image data the color value of which is corrected by using the correction table 70B, the image forming device 12 can form, through the 1-path printing, the laminated image 50 having image quality equal to that obtained through the 2-path printing.

Accordingly, with the information processing device 10 according to the present embodiment, image quality of the laminated image 50 of the special color image 52 and the colored image 54 can be improved.

In other words, the information processing device 10 according to the present embodiment can provide the correction table 70B that can improve the image quality of the laminated image 50 formed through the 1-path printing.

The acquisition part 60H acquires the special color type information indicating the type of the special color material used for image formation. The determination part 60I determines the image data 78 for a correction chart corresponding to the special color type information. The specification part 60J determines the target characteristic 72 using the determined image data 78 for a correction chart. The generation part 60K generates the correction table 70B using the determined image data 78 for a correction chart.

The determination part 60I determines the image data 78 for a correction chart including the image data 76 for a special color correction chart and the image data 77 for a colored correction chart. The image data 76 for a special color correction chart defines the special color value of the patch region A of special color with the special color material of a type indicated by the special color type information. The image data 77 for a colored correction chart defines the colored color value of the colored region B with the colored color material.

The image forming device 12 is configured to be able to switch the laminating order of the colored image 54 and the special color image 52 with respect to the medium 40. The acquisition part 60H acquires the laminating order information indicating the laminating order from the image forming device 12. The specification part 60J specifies the target characteristic 72 indicating a relation between the color value and the first colorimetric value of the first patch image P1 using the image data 78 for a correction chart determined by the determination part 60I, the first patch image P1 being formed on the medium 40 by the image forming device 12 through the 2-path printing with the special color material of a type indicated by the special color type information acquired by the acquisition part 60H in the laminating order indicated by the acquired laminating order information. The generation part 60K generates the correction table 70B so that the measured characteristic 74 is matched with the target characteristic 72 using the image data 78 for a correction chart determined by the determination part 60I, the measured characteristic 74 indicating a relation between the color value and the second colorimetric value of the second patch image P2 formed on the medium 40 through the 1-path printing by the image forming device 12 with the special color material of a type indicated by the special color type information acquired by the acquisition part 60H in the laminating order indicated by the acquired laminating order information.

The γ correction part 60B (correction part) corrects the color value of the image data 24 as a formation target using the correction table 70B. The transmission part 60E transmits the corrected image data 24 to the image forming device 12.

The special color material is a color material indicating any of a metal color, white, a transparent color, and a fluorescent color.

The information processing method according to the present embodiment is a control method for controlling the image forming device 12 that forms the laminated image 50 of the special color image 52 using the special color material and the colored image 54 using the colored color material through the 2-path printing in which one of the special color image 52 and the colored image 54 is formed on the medium 40 to be immobilized and the other one thereof is laminated thereon, or the 1-path printing in which one of the special color image 52 and the colored image 54 is formed on the medium 40 and the other one thereof is laminated thereon without performing immobilization.

The information processing method according to the present embodiment is an information processing method including: specifying the target characteristic 72 indicating a relation between the color value and the first colorimetric value of the first patch image P1 as the laminated image 50 corresponding to each patch region P' formed through the 2-path printing by the image forming device 12 using the image data 78 for a correction chart defining the patch regions P' having different color values; and generating the correction table 70B for correcting the color value so that the measured characteristic 74 comes close to the target characteristic 72, the measured characteristic 74 indicating a relation between the color value and the second colorimetric value of the second patch image P2 as the laminated image 50 corresponding to each patch region P' formed through the 1-path printing by the image forming device 12 using the image data 78 for a correction chart.

The information processing program according to the present embodiment is an information processing program to be executed by a computer for controlling the image forming device 12 that forms the laminated image 50 of the special color image 52 using the special color material and the colored image 54 using the colored color material through the 2-path printing in which one of the special color image 52 and the colored image 54 is formed on the medium 40 to be immobilized and the other one thereof is laminated thereon, or the 1-path printing in which one of the special color image 52 and the colored image 54 is formed on the medium 40 and the other one thereof is laminated thereon without performing immobilization.

The information processing program according to the present embodiment includes: specifying the target characteristic 72 indicating a relation between the color value and the first colorimetric value of the first patch image P1 as the laminated image 50 corresponding to each patch region P' formed through the 2-path printing by the image forming device 12 using the image data 78 for a correction chart defining the patch regions P' having different color values; and generating the correction table 70B for correcting the color value so that the measured characteristic 74 comes close to the target characteristic 72, the measured characteristic 74 indicating a relation between the color value and the second colorimetric value of the second patch image P2 as the laminated image 50 corresponding to each patch region P' formed through the 1-path printing by the image forming device 12 using the image data 78 for a correction chart.

In the embodiment described above, described is a form in which the information processing device **10** is connected to the host computer **16** in a communicable manner by way of example. Alternatively, only the information processing device **10** may be provided without providing the host computer **16**. In this case, the colorimeter **14** is connected to the information processing device **10** so as to exchange data or a signal with each other.

First Modification

In the embodiment described above, described is a form in which the update processing part **60**F generates the correction table **70**B in accordance with the calibration condition of the image forming device **12**. However, in a case in which the setting of the image forming device **12** is fixed, the update processing part **60**F generates the correction table **70**B corresponding to one type of calibration condition based on the fixed setting.

For example, it is assumed that white toner is loaded on the image forming device **12**, and the image forming device **12** is configured to form the special color image **52** and the colored image **54** on the medium **40** in this order to form the laminated image **50**. It is also assumed that only the medium **40** indicated by the medium information corresponding to a specific medium ID is loaded on the sheet feeding tray **37** as the medium **40**.

In this case, the image data **77** for a colored correction chart and the image data **76** for a special color correction chart corresponding to the special color type information "white" are previously stored in the storage part **62** of the information processing device **10** as the image data **78** for a correction chart. The update processing part **60**F of the information processing device **10** performs processing from Step S**120** to Step S**144** after determining the image data **78** for a correction chart by reading the image data **76** for a special color correction chart and the image data **77** for a colored correction chart stored in the storage part **62** without performing processing from Step S**100** to Step S**118** in FIG. **15**.

In this way, when the calibration condition of the image forming device **12** is fixed, the same effect as that in the above embodiment can be obtained, and the information processing performed by the information processing device **10** can be simplified.

Second Embodiment

In the present embodiment, described is a form of further rectifying the correction table **70**B.

FIG. **17** is a block diagram illustrating a functional configuration of the information processing device **11** according to the present embodiment.

The information processing device **11** includes a control part **61**, the UI part **64**, and a storage part **63**. The UI part **64** and the storage part **63** are connected to the control part **61** so as to exchange data or a signal with each other.

The UI part **64** is the same as that in the first embodiment. The storage part **63** is the same as the storage part **62** in the first embodiment except that the storage part **63** further stores therein a rectification color value.

The control part **61** includes the color conversion processing part **60**A, the γ correction part **60**B, the total quantity regulation part **60**C, the halftone processing part **60**D, the transmission part **60**E, and an update processing part **61**F. The control part **61** is the same as the control part **60** in the first embodiment except that the control part **61** includes the update processing part **61**F in place of the update processing part **60**F.

The update processing part **61**F includes the UI control part **60**G, the acquisition part **60**H, the determination part **60**I, the specification part **60**J, the generation part **60**K, an update part **61**L, and a rectification part **61**M. The UI control part **60**G, the acquisition part **60**H, the determination part **60**I, the specification part **60**J, and the generation part **60**K are the same as those in the first embodiment.

Similarly to the first embodiment, the determination part **60**I determines the image data **78** for a correction chart. Specifically, the determination part **60**I determines the image data **78** for a correction chart including the image data **76** for a special color correction chart and the image data **77** for a colored correction chart.

FIG. **18** is a schematic diagram illustrating an example of the image data **77** for a colored correction chart. As described above, the image data **78** for a correction chart is data defining a plurality of patch regions P' having different color values. The patch region P' is a laminated region of the patch region A of special color and the colored region B. The image data **77** for a colored correction chart defines a plurality of colored regions B having different color values of K color, Y color, M color, and C color in each patch region P'.

In the present embodiment, described is a case of using a gradation value as the color value by way of example.

Similarly to the first embodiment, the specification part **60**J specifies the target characteristic **72** using the image data **78** for a correction chart determined by the determination part **60**I. A chart representing the target characteristic **72** is, for example, the chart illustrated in FIG. **13**. The target characteristic **72** represented in a table is, for example, the table illustrated in FIG. **19**. FIG. **19** is a diagram illustrating an example of the target characteristic **72**.

Similarly to the first embodiment, the generation part **60**K generates the measured characteristic **74** using the image data **78** for a correction chart determined by the determination part **60**I. A chart representing the measured characteristic **74** is, for example, the chart illustrated in FIG. **13**.

FIG. **20** is an example of a diagram representing the target characteristic **72** and the measured characteristic **74** in a table. FIG. **20** illustrates only the target characteristic **72** and the measured characteristic **74** of K color. FIG. **21** is a chart representing the target characteristic **72** and the measured characteristic **74** illustrated in FIG. **20**.

When a relation between the color value and the first calorimetric value illustrated in FIG. **20** is obtained, a chart representing the target characteristic **72** indicating the relation is the chart illustrated in FIG. **21**. When a relation between the color value and the second calorimetric value illustrated in FIG. **20** is obtained, a chart of the measured characteristic **74** indicating the relation is the chart illustrated in FIG. **21**.

Similarly to the first embodiment, the generation part **60**K generates the correction table **70**B for correcting the color value defined in the colored image data **20** so that the measured characteristic **74** comes close to the target characteristic **72** (refer to FIG. **14**). FIG. **22** is an enlarged view of part of FIG. **21**. As illustrated in FIG. **22**, the generation part **60**K specifies the color value b' in the measured characteristic **74** corresponding to the second colorimetric value a' that is the same value as the first calorimetric value a corresponding to the color value b in the target characteristic **72**. The generation part **60**K then similarly derives the color value b in the target characteristic **72** and the color value b' in the measured characteristic **74** for the calorimetric value (the first calorimetric value, the second calorimetric

value) of each patch image P' indicated by the target characteristic **72** and the measured characteristic **74**.

The generation part **60**K then generates the correction table **70**B in which the color value b in the target characteristic **72** is set to be the input color value and the color value b' in the measured characteristic **74** is set to be the output color value for each of a plurality of combinations of the color value b and the color value b' derived for each colorimetric value.

For example, a description is made using the color value of "191". The generation part **60**K specifies the first calorimetric value of "0.96" corresponding to the color value of "191" in the target characteristic **72** (refer to FIG. **20** to FIG. **22**). The generation part **60**K then specifies the color value of "237" corresponding to the second calorimetric value of "0.96" in the measured characteristic **74** (refer to FIG. **20** to FIG. **22**).

The generation part **60**K then derives the color value of "191" as the color value b to be the input color value, and derives the color value of "237" as the color value b' to be the output color value. Similarly, the generation part **60**K performs similar processing for each calorimetric value of the other patch images P', and derives the color value b in the target characteristic **72** and the color value b' in the measured characteristic **74** to generate the correction table **70**B.

The color of the second calorimetric value that is the same value as the first calorimetric value is not measured as the calorimetric value of the measured characteristic **74** in some cases. In this case, the generation part **60**K may specify the color value in the measured characteristic **74** by interpolating between the color values corresponding to two second calorimetric values most approximate to the first colorimetric value. Examples of interpolation include linear interpolation and spline interpolation.

For example, the generation part **60**K specifies two second calorimetric values of "0.85" and "1.00" approximate to the first calorimetric value of "0.96" corresponding to the color value of "191" in the target characteristic **72** in FIG. **20**. The generation part **60**K linearly interpolates a point indicating the second colorimetric value of "0.85" and a point indicating the second colorimetric value of "1.00" in the measured characteristic **74**. Due to this, the generation part **60**K specifies the color value of "237" corresponding to the second colorimetric value of "0.96" in the measured characteristic **74**. The generation part **60**K generates the correction table **70**B using the specified color value.

FIG. **23** is a chart representing an example of the correction table **70**B. FIG. **23** is an example of the correction table **70**B generated by using the target characteristic **72** and the measured characteristic **74** illustrated in FIG. **20** to FIG. **22**.

Returning to FIG. **17**, the description will be continued. Similarly to the first embodiment, it is assumed that the γ correction part **60**B γ-corrects the color value (the concentration value, the gradation value) of the colored image data **20** (color image data **20**C, **20**M, **20**Y, and **20**K) by using the correction table **70**B. The γ-corrected colored image data **20** and special color image data **22** are assumed to be output to the image forming device **12** via the total quantity regulation part **60**C, the halftone processing part **60**D, and the transmission part **60**E.

Thus, the colorimetric value of the laminated image **50** formed through the 1-path printing using the γ-corrected colored image data **20** becomes a value corrected through γ correction.

FIG. **24** is a diagram illustrating a relation between the correction table **70**B indicating a relation between the input color value and the output color value and the calorimetric value of the laminated image **50** (hereinafter, referred to as a colorimetric value after γ correction) formed through the 1-path printing using the colored image data **20** the color value of which is corrected with the correction table **70**B. A gradation number of the input color value or the output color value represented as a gradation value, and a value of the gradation value are not limited to the form illustrated in FIG. **24**.

FIG. **25** is a schematic diagram illustrating the target characteristic **72**, the measured characteristic **74**, and the characteristic after γ conversion **75**. The characteristic after γ conversion **75** indicates a relation between the color value and a colorimetric value after γ correction using the correction table **70**B.

As indicated by the characteristic after γ conversion **75** in FIG. **24** and FIG. **25**, the colorimetric value after γ correction of the laminated image **50** formed through the 1-path printing using the colored image data **20** that is γ-corrected by using the correction table **70**B is saturated as the color value comes closer to the maximum color value (for example, the gradation value of "255"). This is because the correction table **70**B is a correction table for achieving, through the 1-path printing, image quality substantially the same as that of the laminated image **50** formed through the 2-path printing.

Thus, when the laminated image **50** is formed through the 1-path printing using the colored image data **20** that is γ-corrected by using the correction table **70**B, a difference corresponding to a difference in the color value of the colored image data **20** is hardly caused in the calorimetric value after γ correction of the laminated image **50** to be formed as the color value (gradation value) defined in the colored image data **20** is larger in some cases.

Thus, the correction table **70**B is rectified in the present embodiment. Returning to FIG. **17**, the description will be continued. The rectification part **61**M rectifies the correction table **70**B generated by the generation part **60**K.

The description is made with reference to FIG. **23**. The rectification part **61**M rectifies the output color value in a rectification range S from a predetermined rectification color value to the maximum color value in the correction table **70**B to be an output color value that increases monotonically.

The rectification range S is a range of the output color value from a predetermined rectification color value to the maximum color value that is the maximum value of the output color value in the correction table **70**B.

The rectification color value is an output color value indicating a lower limit of the rectification range S. FIG. **23** illustrates a case in which the rectification color value is "237" by way of example. The rectification color value may be determined in advance. For example, the rectification color value may be an output color value the increase in which starts to be saturated with respect to increase in the input color value in the correction table **70**B.

In the present embodiment, the update processing part **61**F previously measures the rectification color value satisfying the condition described above, and stores the rectification color value in the storage part **63** in advance (refer to a rectification color value **63**C in FIG. **17**). The rectification part **61**M may read the rectification color value from the storage part **63** and use the rectification color value for rectifying the correction table **70**B.

The rectification part **61**M rectifies the output color value in the rectification range S in the correction table **70**B to be the output color value that increases monotonically with

respect to increase in the input color value, the output color value not being constant or substantially constant.

FIG. **26** is a schematic diagram illustrating an example of the correction table **70**C after rectification. FIG. **27** is a diagram illustrating a relation among the correction table **70**C after rectification, the correction table **70**B, and a third colorimetric value described later. FIG. **26** and FIG. **27** illustrate a case in which the rectification color value is "237" by way of example. When the rectification part **61**M rectifies the output color value in the rectification range S in the correction table **70**B, the output color value in the rectification range S is rectified to be the output color value that monotonically increases from the input color value of "191" corresponding to the rectification color value of "237" toward the maximum color value of "255". Through this rectification processing, the correction table **70**C after rectification is generated.

Returning to FIG. **17**, the description will be continued. In the present embodiment, the rectification part **61**M rectifies the correction table **70**B by using the target characteristic **72** and the measured characteristic **74** used for generating the correction table **70**B, and the rectification color value.

Specifically, the rectification part **61**M includes a color value specification part **61**N, a characteristic generation part **61**P, and a color value rectification part **61**Q.

The color value specification part **61**N specifies the input color value corresponding to the output color value indicating the rectification color value in the correction table **70**B. For example, the rectification color value is assumed to be "237". In this case, the color value specification part **61**N specifies the input color value of "191" corresponding to the output color value of "237" from the correction table **70**B illustrated in FIG. **23** and FIG. **24**.

The color value specification part **61**N may acquire the rectification color value by reading the rectification color value from the storage part **63** to be used for specifying the input color value.

The characteristic generation part **61**P generates a rectification characteristic. The rectification characteristic is a characteristic obtained by rectifying part of the characteristic after γ conversion **75** (refer to FIG. **25**), and indicates a relation between the color value and the colorimetric value (hereinafter, referred to as the third colorimetric value).

FIG. **28** is an explanatory diagram of an example of the rectification characteristic **71**. FIG. **28** illustrates a case in which the rectification color value is "237" by way of example. The characteristic generation part **61**P generates the rectification characteristic **71** using the target characteristic **72** and the measured characteristic **74** used for generating the correction table **70**B, and the rectification color value.

First, the characteristic generation part **61**P specifies the colorimetric value (for example, "0.96") at the time when an image of the rectification color value "237" is formed on the medium through the 1-path printing by the image forming device **12**. The characteristic generation part **61**P then specifies a first point X**1** indicating the colorimetric value of "0.96" in the target characteristic **72**. The characteristic generation part **61**P also specifies a second point X**2** indicating the maximum color value of "255" in the measured characteristic **74**. The characteristic generation part **61**P then interpolates between the first point X**1** and the second point X**2** to generate the rectification characteristic **71**. Examples of interpolation include linear interpolation and spline interpolation. By way of example, the following describes a case of performing linear interpolation.

Thus, the rectification characteristic **71** is obtained by linearly interpolating a range from the colorimetric value after γ correction of "0.96" corresponding to the rectification color value of "237" to the second colorimetric value of "1.2" corresponding to the maximum color value of "255" in the characteristic after γ conversion **75** indicating a relation between the color value and the colorimetric value after γ correction using the correction table **70**B.

In other words, the characteristic generation part **61**P corrects a relation between the input color value and the colorimetric value after γ correction shown in a range V**1** in which the output color value corresponds to the rectification color value of "237" to the maximum color value of "255" in the characteristic after γ conversion **75** illustrated in FIG. **24** to be a relation between the third colorimetric value in a range V**2** and the input color value illustrated in FIG. **27**. Due to this, the characteristic generation part **61**P generates the rectification characteristic **71**.

Returning to FIG. **17**, the following describes the color value rectification part **61**Q. The color value rectification part **61**Q rectifies the output color value in the rectification range S in the correction table **70**B to be a color value corresponding to the second colorimetric value indicating the third colorimetric value in the rectification characteristic **71** in the measured characteristic **74**.

A description will be made with reference to FIG. **27** and FIG. **28**. It is assumed that the rectification range S of the output color value in the correction table **70**B is from the rectification color value of "237" to the maximum color value of "255" (refer to the region S**1** in FIG. **27**). In this case, the color value rectification part **61**Q rectifies the output color value of "237" to the maximum color value of "255" in the correction table **70**B to be a value shown in the region S**2** of FIG. **27**.

A specific description will be made with reference to FIG. **28**. The color value rectification part **61**Q specifies a color value d' in the measured characteristic **74** corresponding to a second colorimetric value c' that is the same value as a third colorimetric value c corresponding to a color value d in the rectification characteristic **71**.

The color value rectification part **61**Q performs the same processing as described above on each output color value in the rectification range S in the correction table **70**B to specify a pair of the color value d in the rectification characteristic **71** and the color value d' in the measured characteristic **74**. The color value rectification part **61**Q rectifies the correction table **70**B so that the color value d in the rectification characteristic **71** is set to be the input color value and the color value d' in the measured characteristic **74** is set to be the output color value in each pair, and generates the correction table **70**C after rectification.

In this way, the rectification part **61**M rectifies the output color value in the rectification range S from the rectification color value to the maximum color value in the correction table **70**B generated by the generation part **60**K to be the output color value that monotonically increases (refer to FIG. **26**). Due to this, the rectification part **61**M rectifies the correction table **70**B to be the correction table **70**C after rectification.

Returning to FIG. **17**, the description will be continued. The update part **61**L associates the correction table **70**C after rectification rectified by the rectification part **61**M with the calibration condition acquired by the acquisition part **60**H and registers them in the correction management DB **62**A (refer to FIG. **8**). That is, the update part **61**L performs processing similar to that performed by the update part **60**L according to the first embodiment except that the update part

61L uses the correction table 70C after rectification obtained by rectifying the correction table 70B in place of the correction table 70B generated by the generation part 60K. Thus, in the present embodiment, the correction table 70C after rectification is registered in the correction management DB 62A of the storage part 63 in place of the correction table 70B.

Next, the following describes an example of an information processing procedure at the time when the correction table is updated performed by the control part 61 of the information processing device 11.

FIG. 29 is a flowchart illustrating an example of the information processing procedure at the time when the correction table is updated performed by the control part 61 of the information processing device 11.

First, the control part 61 performs correction table generation processing (Step S300). The processing at Step S300 is the same as Step S100 to Step S140 in FIG. 15 described in the first embodiment. Accordingly, the correction table 70B is generated through the processing at Step S300.

Next, the color value specification part 61N acquires the rectification color value (Step S302). In the present embodiment, the color value specification part 61N reads the rectification color value from the storage part 63 to acquire the rectification color value.

Next, the color value specification part 61N specifies the input color value corresponding to the output color value indicating the rectification color value acquired at Step S302 in the correction table 70B generated at Step S300 (Step S304).

Next, the characteristic generation part 61P generates the rectification characteristic 71 by using the target characteristic 72 and the measured characteristic 74 used for generating the correction table 70B generated at Step S300, and the rectification color value acquired at Step S302 (Step S306).

Next, the color value rectification part 61Q rectifies the correction table 70B generated at Step S300 (Step S308). The color value rectification part 61Q rectifies the output color value in the rectification range S from the rectification color value acquired at Step S302 to the maximum color value in the correction table 70B. At this point in time, the color value rectification part 61Q rectifies the output color value in the rectification range S to be the color value, in the measured characteristic 74 specified at Step S300, corresponding to the second colorimetric value indicating the third colorimetric value in the rectification characteristic 71 generated at Step S306.

Next, the update part 61L registers, in the correction management DB 62A, the correction table 70C after being rectified at Step S308 being associated with the calibration condition acquired at Step S300 (specifically, Step S100 in FIG. 15). Due to this, the update part 61L updates the correction table (Step S310). This routine is then ended.

As described above, in the present embodiment, the rectification part 61M rectifies the output color value in the rectification range S from the predetermined rectification color value to the maximum color value in the correction table 70B to be the output color value that monotonically increases.

Thus, the information processing device 11 according to the present embodiment can prevent the colorimetric value of the formed image from being saturated as the output color value comes closer to the maximum color value (for example, the gradation value of "255").

Accordingly, with the information processing device 11 according to the present embodiment, the image quality of the laminated image 50 of the special color image 52 and the colored image 54 can be further improved.

The rectification part 61M includes the color value specification part 61N, the characteristic generation part 61P, and the color value rectification part 61Q. The color value specification part 61N specifies the input color value corresponding to the output color value indicating the rectification color value in the correction table 70B. The characteristic generation part 61P interpolates between the first point indicating the colorimetric value at the time when the image of the rectification color value is formed on the medium through the 1-path printing by the image forming device 12 in the target characteristic 72 and the second point indicating the maximum color value in the measured characteristic 74 to generate the rectification characteristic 71 indicating a relation between the colorimetric value and the color value. The color value rectification part 61Q rectifies the output color value in the rectification range S in the correction table 70B to be the color value, in the measured characteristic 74, corresponding to the second colorimetric value indicating the colorimetric value in the rectification characteristic 71.

Third Embodiment

In the second embodiment described above, described is a form of storing the rectification color value of one value in the storage part 63 in advance. In the present embodiment, described is a form of rectifying the correction table 70B for each color using the rectification color value corresponding to a color of the color material used for image formation.

FIG. 17 is a block diagram illustrating a functional configuration of the information processing device 11A according to the present embodiment.

The information processing device 11A includes a control part 65, the UI part 64, and the storage part 63. The UI part 64 and the storage part 63 are connected to the control part 65 so as to exchange data or a signal with each other.

The UI part 64 is the same as that in the first embodiment. The storage part 63 is the same as that in the second embodiment except that the storage part 63 previously stores therein the color management table 63D (details will be described later) in place of the rectification color value 63C.

The control part 65 is the same as the control part 61 in the second embodiment except that the control part 65 includes an update processing part 65F in place of the update processing part 61F. The update processing part 65F is the same as the update processing part 61F in the second embodiment except that the update processing part 65F includes a rectification part 65M in place of the rectification part 61M.

The rectification part 65M rectifies the correction table 70B for each color of the color material using the rectification color value corresponding to the color of the color material used for image formation.

For example, the rectification part 65M acquires the rectification color value corresponding to each color (for example, C, M, Y, and K) of the colored color material used by the image forming device 12 for image formation.

In this case, the storage part 63 stores therein the color management table 63D in advance. FIG. 30 is a schematic diagram illustrating an example of a data configuration of the color management table 63D. The color management table 63D previously associates each color of C, M, Y, and K with the rectification color value corresponding to each color.

The rectification color value to be registered in the color management table 63D may be previously determined to be

a value for preventing the colorimetric value from being saturated on a high color value side using a measurement result obtained by using the image forming device **12** and the colorimeter **14**.

As illustrated in FIG. **30**, the rectification color value is preferably smaller as brightness of an image as a formation target is lower. That is, it is preferable that a smaller rectification color value is previously associated with a color having lower brightness to be registered in the color management table **63**D.

In the present embodiment, from a color having high brightness toward a color having low brightness (in order of Y, C and M, and K), rectification color values previously associated therewith to be registered in the color management table **63**D becomes smaller.

The rectification part **65**M reads, from the color management table **63**D, the rectification color value corresponding to the color of the color material used for image formation. The rectification part **65**M preferably rectifies the correction table **70**B for each color using the rectification color value acquired for each color.

Specifically, the rectification part **65**M according to the present embodiment includes a color value specification part **65**N, a characteristic generation part **65**P, and a color value rectification part **65**Q.

The rectification part **65**M performs the same processing as that performed by the color value specification part **61**N in the second embodiment except that the rectification part **65**M uses the rectification color value corresponding to the color of C, M, Y, and K. That is, for each color of the color material used for image formation, the rectification part **65**M specifies the input color value corresponding to the output color value indicating the rectification color value of the color from the correction table **70**B corresponding to the color.

For example, the rectification part **65**M acquires the rectification color value of "159" corresponding to K color from the color management table **63**D. The rectification part **65**M then specifies the input color value corresponding to the output color value of "159" from the correction table **70**B generated for K color. The rectification part **65**M also specifies the input color value for each color of C, M, and Y in the same manner.

The characteristic generation part **65**P specifies the rectification characteristic **71**. In the present embodiment, the characteristic generation part **65**P performs the same processing as that performed by the characteristic generation part **61**P in the second embodiment except that the characteristic generation part **65**P specifies the rectification characteristic **71** for each color of C, M, Y, and K.

That is, for each color of C, M, Y, and K, the characteristic generation part **65**P generates the rectification characteristic **71** for each color using the target characteristic **72** and the measured characteristic **74** used for generating the correction table **70**B for each color and the rectification color value ("207", "207", "223", and "159") of each color.

The color value rectification part **65**Q performs the same processing as that performed by the color value rectification part **61**Q according to the second embodiment except that the color value rectification part **65**Q rectifies, for each color of C, M, Y, and K, the correction table **70**B corresponding to each color using the rectification color value corresponding to each color.

That is, the color value rectification part **65**Q rectifies the output color value in the rectification range S in the correction table **70**B corresponding to each color of C, M, Y, and K to be the color value, in the measured characteristic **74** corresponding to each color, corresponding to the second colorimetric value indicating the third colorimetric value of the rectification characteristic **71** corresponding to each color.

In this way, the rectification part **65**M rectifies the correction table **70**B corresponding to each color to be the correction table **70**C after rectification using the rectification color value corresponding to each color.

Thus, the γ correction part **60**B can perform γ correction on the colored image data **20** (color image data **20**C, **20**M, **20**Y, and **20**K) of each color of C, M, Y, and K using the correction table **70**C after rectification corresponding to each color.

In a case of using the rectification color value of one value without using the rectification color value corresponding to each color of C, M, Y, and K, in some cases, saturation of the colorimetric value after γ correction is not improved for the laminated image **50** formed through the 1-path printing using the colored image data **20** that is γ-corrected by using the correction table **70**C after rectification. This is because, in a case of using the rectification color value of one value irrespective of the color, the rectification characteristic **71** indicating a characteristic in which a measurement value is slightly changed even when the color value is changed may be generated.

FIGS. **31**A and **31**B are schematic diagrams illustrating an example of the rectification characteristic **71**. FIG. **31**A is a schematic diagram illustrating the target characteristic **72**, the measured characteristic **74**, and the rectification characteristic **71** corresponding to Y color. FIG. **31**B is a schematic diagram illustrating the target characteristic **72**, the measured characteristic **74**, and the rectification characteristic **71** corresponding to K color. FIG. **31**A and FIG. **31**B are diagrams illustrating cases of generating the rectification characteristic **71** using the same rectification color value of "223".

As illustrated in FIG. **31**A, in a case of using the same rectification color value for each color, the rectification characteristic **71** corresponding to Y color having higher brightness indicates a relation in which the colorimetric value monotonically increases in accordance with a change of the color value. On the other hand, as illustrated in FIG. **31**B, the rectification characteristic **71** corresponding to K color having lower brightness may indicate a relation in which the calorimetric value is substantially constant irrespective of the change of the color value in a case of using the same rectification color value as that of Y color. In this way, in a case of using the same rectification color value for each color, even when the calorimetric value of a certain color is prevented from being saturated, the colorimetric value of another color is not prevented from being saturated in some cases.

Thus, when the correction table **70**B is rectified using the rectification characteristic **71** illustrated in FIG. **31**B for K color, the colorimetric value of the formed image cannot be prevented from being saturated in the vicinity of the maximum color value in some cases.

Thus, in the present embodiment, as described above, the color value rectification part **65**Q rectifies, for each color of C, M, Y, and K, the correction table **70**B corresponding to each color using the rectification color value corresponding to each color. Thus, the rectification characteristic **71** generated by using the rectification color value corresponding to K color is, for example, a rectification characteristic illustrated in FIG. **32**. FIG. **32** is an explanatory diagram of the rectification characteristic **71** generated by using the rectification color value corresponding to K color.

As illustrated in FIG. **32**, the rectification characteristic **71** generated by using the rectification color value corresponding to K color indicates a relation in which the colorimetric value monotonically increases in accordance with a change of the color value as compared with the rectification characteristic **71** generated by using the same rectification color value as that of Y color (refer to FIG. **31**B).

Due to this, by generating the rectification characteristic **71** for each color using the rectification color value corresponding to each color, and rectifying the correction table **70**B for each color using the rectification characteristic **71**, the image quality can be further improved.

As described above, the rectification part **65**M of the information processing device **11**A according to the present embodiment rectifies the correction table **70**B for each color of the color material using the rectification color value corresponding to the color of the color material used for image formation.

Accordingly, with the information processing device **11**A according to the present embodiment, the image quality of the laminated image **50** of the special color image **52** and the colored image **54** can be further improved.

Fourth Embodiment

In the second embodiment, described is a form in which the rectification color value of one value is stored in the storage part **63** in advance. In the present embodiment, described is a form of rectifying the correction table **70**B by using the rectification color value corresponding to the medium **40** as an image formation target.

FIG. **17** is a block diagram illustrating a functional configuration of an information processing device **11**B according to the present embodiment.

The information processing device **11**B includes a control part **66**, the UI part **64**, and the storage part **63**. The UI part **64** and the storage part **63** are connected to the control part **66** so as to exchange data or a signal with each other.

The UI part **64** is the same as that in the first embodiment. The storage part **63** is the same as that in the second embodiment except that the storage part **63** previously stores therein a medium management table **63**E (details will be described later) in place of the rectification color value **63**C.

The control part **66** is the same as the control part **61** according to the second embodiment except that the control part **66** includes an update processing part **66**F in place of the update processing part **61**F. The update processing part **66**F is the same as the update processing part **61**F in the second embodiment except that the update processing part **66**F includes a rectification part **66**M in place of the rectification part **61**M.

The rectification part **66**M rectifies the correction table **70**B using the rectification color value corresponding to the medium **40** as an image formation target.

In this case, the storage part **63** stores therein the medium management table **63**E in advance. FIG. **33** is a schematic diagram illustrating an example of a data configuration of the medium management table **63**E. The medium management table **63**E associates the medium ID of the medium **40** with the rectification color value. The medium ID is the same as that in the first embodiment.

The rectification color value to be registered in the medium management table **63**E may be previously determined to be a value for preventing the colorimetric value from being saturated on a high color value side with a measurement result for each medium **40** identified with the medium ID using the image forming device **12** and the colorimeter **14**.

The rectification part **66**M acquires the medium ID of the medium **40** as an image formation target from the image forming device **12** via the acquisition part **60**H. The rectification part **66**M may acquire the rectification color value corresponding to the medium **40** by reading the rectification color value corresponding to the acquired medium ID from the medium management table **63**E.

The rectification part **66**M may rectify the correction table **70**B using the acquired rectification color value. Rectification of the correction table **70**B performed by the rectification part **66**M is the same as that in the second embodiment except that the rectification color value corresponding to the medium **40** as an image formation target is used.

Specifically, the rectification part **66**M according to the present embodiment includes a color value specification part **66**N, a characteristic generation part **66**P, and a color value rectification part **66**Q.

The color value specification part **66**N, the characteristic generation part **66**P, and the color value rectification part **66**Q perform the same processing as that performed by the color value specification part **61**N, the characteristic generation part **61**P, and the color value rectification part **61**Q in the second embodiment except that the rectification color value corresponding to the medium **40** is used.

When the rectification part **65**M rectifies the correction table **70**B using the rectification color value corresponding to the medium **40**, the γ correction part **60**B can perform γ correction using the rectified correction table **70**C.

In a case of using the rectification color value of one value irrespective of the medium **40**, there is a case in which saturation of the colorimetric value after γ correction is not improved for the laminated image **50** formed through the 1-path printing using the colored image data **20** that is γ-corrected by using the correction table **70**C after rectification. This is because the rectification characteristic **71** indicating a characteristic in which a measurement value is slightly changed even when the color value is changed may be generated due to a color, a type, weighting, and the like of the medium **40**.

FIGS. **34**A and **34**M are schematic diagrams illustrating an example of the rectification characteristic **71**. FIG. **34**A is a schematic diagram illustrating the target characteristic **72**, the measured characteristic **74**, and the rectification characteristic **71** corresponding to the medium **40** of the medium ID "A". FIG. **34**B is a schematic diagram illustrating the target characteristic **72**, the measured characteristic **74**, and the rectification characteristic **71** corresponding to the medium **40** of the medium ID "B". FIG. **34**A and FIG. **34**B are diagrams illustrating cases of generating the rectification characteristic **71** using the same rectification color value of "223".

As illustrated in FIG. **34**A, in a case of using the same rectification color value irrespective of the medium **40**, the rectification characteristic **71** corresponding to the medium **40** of the medium ID "A" indicates a relation in which the colorimetric value monotonically increases in accordance with a change of the color value. On the other hand, as illustrated in FIG. **34**B, the rectification characteristic **71** of the medium ID "B" generated by using the same rectification color value as that of the medium ID "A" may indicate a relation in which the colorimetric value is substantially constant irrespective of a change of the color value. In this way, in a case of using the same rectification color value for each medium **40**, even when the calorimetric value of a

certain medium **40** is prevented from being saturated, the colorimetric value of another medium **40** is not prevented from being saturated in some cases.

Thus, depending on the type of the medium **40** and the like, when the correction table **70**B is rectified by using the same rectification color value irrespective of the medium **40**, the calorimetric value of the formed image cannot be prevented from being saturated in the vicinity of the maximum color value in some cases.

Thus, in the present embodiment, as described above, the color value rectification part **66**Q rectifies the correction table **70**B using the rectification color value corresponding to the medium **40** as an image formation target. Accordingly, for example, the rectification characteristic **71** generated by using the rectification color value of "191" corresponding to the medium ID "B" is a rectification characteristic illustrated in FIG. **35**. FIG. **35** is an explanatory diagram of the rectification characteristic **71** generated by using the rectification color value corresponding to the medium ID "B" of the medium **40** as a formation target.

As illustrated in FIGS. **34**A and **34**B, the rectification characteristic **71** generated by using the rectification color value of "191" corresponding to the medium ID "B" indicates a relation in which the colorimetric value monotonically increases in accordance with a change of the color value as compared with the rectification characteristic **71** generated by using the same rectification color value of "223" as that of the medium ID "A" (refer to FIG. **34**B).

Thus, by generating the rectification characteristic **71** using the rectification color value corresponding to the medium **40**, and rectifying the correction table **70**B using the rectification characteristic **71**, the image quality can be further improved.

As described above, the rectification part **66**M of the information processing device **11**B according to the present embodiment rectifies the correction table **70**B using the rectification color value corresponding to the medium **40** as an image formation target.

Accordingly, with the information processing device **11**B according to the present embodiment, the image quality of the laminated image **50** of the special color image **52** and the colored image **54** can be further improved.

Fifth Embodiment

In the second embodiment, described is a form of previously storing the rectification color value of one value in the storage part **63**. In the present embodiment, described is a form of rectifying the correction table **70**B for each color in transfer order using the rectification color value corresponding to the transfer order of the color material used for image formation with respect to a transfer member (intermediate transfer belt **39**).

FIG. **17** is a block diagram illustrating a functional configuration of an information processing device **11**D according to the present embodiment.

The information processing device **11**D includes a control part **68**, the UI part **64**, and the storage part **63**. The UI part **64** and the storage part **63** are connected to the control part **68** so as to exchange data or a signal with each other.

The UI part **64** is the same as that in the first embodiment. The storage part **63** is the same as that in the second embodiment except that the storage part **63** previously stores therein a transfer order management table **63**F (details will be described later) together with the rectification color value **63**C.

The control part **68** is the same as the control part **61** in the second embodiment except that the control part **68** includes an update processing part **68**F in place of the update processing part **61**F. The update processing part **68**F is the same as the update processing part **61**F in the second embodiment except that the update processing part **68**F includes a rectification part **68**M in place of the rectification part **61**M.

The rectification part **68**M rectifies the correction table **70**B in the transfer order using the rectification color value corresponding to the transfer order of primary transfer onto the intermediate transfer belt **39**. Specifically, for each color of the color material transferred onto the intermediate transfer belt **39** in the image forming device **12**, the rectification part **68**M rectifies the correction table **70**B using a rectification value corresponding to the transfer order of the color material of the color.

In the present embodiment, the rectification part **68**M rectifies the correction table **70**B in the transfer order onto the intermediate transfer belt **39** using the rectification color value smaller than a reference value as the transfer order is earlier. "The transfer order onto the intermediate transfer belt **39** is earlier" means that the color material is positioned closer to the intermediate transfer belt **39** when being primarily transferred.

For example, the rectification part **68**M acquires, from the image forming device **12**, the transfer order of each color of the colored color material used by the image forming device **12** for image formation. The rectification part **68**M acquires the transfer order of each color from the image forming device **12** via the acquisition part **60**H.

The rectification part **68**M acquires the rectification color value corresponding to the transfer order.

For example, the storage part **63** previously stores therein the rectification color value **63**C of one value and the transfer order management table **63**F. The rectification color value **63**C of one value is an example of a reference value.

FIG. **36** is a schematic diagram illustrating an example of a data configuration of the transfer order management table **63**F. The transfer order management table **63**F previously associates the transfer order with a correction amount of the reference value. The correction amount for correcting the reference value to be a smaller value as the transfer order is earlier (a value thereof is smaller) is previously registered in the transfer order management table **63**F.

The rectification part **68**M reads, from the transfer order management table **63**F, the correction amount corresponding to the transfer order of each color (C, M, Y, and K) used for image formation. The rectification part **68**M corrects the rectification color value **63**C as the reference value with the read correction amount. Due to this, the rectification part **68**M calculates, for each color primarily transferred in the transfer order, the rectification color value smaller than the reference value as the transfer order onto the intermediate transfer belt **39** is earlier. Accordingly, the rectification part **68**M acquires the rectification color value in the transfer order of the color of the color material used for image formation.

FIG. **37** is a diagram illustrating an example of the rectification color value corresponding to the transfer order of the color of the color material used for image formation. As illustrated in FIG. **37**, the rectification part **68**M acquires, for each color, a smaller rectification color value as the transfer order of primary transfer onto the intermediate transfer belt **39** is earlier.

The rectification part **68**M then rectifies the correction table **70**B in the transfer order (that is, for each color) using

the rectification color value acquired in the transfer order of the color of the color material used for image formation.

Specifically, the rectification part **68**M according to the present embodiment includes a color value specification part **68**N, a characteristic generation part **68**P, and a color value rectification part **68**Q.

The rectification part **68**M performs the same processing as that performed by the color value specification part **61**N in the second embodiment except that the rectification part **68**M uses the rectification color value corresponding to the transfer order of each color of C, M, Y, and K. That is, the rectification part **68**M specifies, in the transfer order of each color of the color material used for image formation, the input color value corresponding to the output color value indicating the rectification color value of the transfer order from the correction table **70**B corresponding to the color.

The characteristic generation part **68**P specifies the rectification characteristic **71**. In the present embodiment, the characteristic generation part **68**P performs the same processing as that performed by the characteristic generation part **61**P in the second embodiment except that the characteristic generation part **68**P generates the rectification characteristic **71** in the transfer order of the color of C, M, Y, and K.

The color value rectification part **68**Q performs the same processing as that performed by the color value rectification part **61**Q in the second embodiment except that the color value rectification part **68**Q rectifies, in the transfer order of each color of C, M, Y, and K, the correction table **70**B corresponding to each color using the rectification color value corresponding to the transfer order.

In this way, the rectification part **68**M rectifies the correction table **70**B corresponding to each color to be the correction table **70**C after rectification using the rectification color value corresponding to the transfer order of each color.

Thus, the γ correction part **60**B can perform γ correction on the colored image data **20** of each color of C, M, Y, and K (color image data **20**C, **20**M, **20**Y, and **20**K) using the correction table **70**C after rectification corresponding to the transfer order of primary transfer of the color material of each color onto the intermediate transfer belt **39**.

In a case of using the rectification color value of one value (for example, the reference value) without using the rectification color value corresponding to the transfer order of each color of C, M, Y, and K, in some cases, saturation of the colorimetric value after γ correction is not improved for the laminated image **50** formed through the 1-path printing using the colored image data **20** that is γ-corrected by using the correction table **70**C after rectification. This is because, when the rectification color value of one value is used irrespective of the transfer order, the rectification characteristic **71** indicating a characteristic in which a measurement value is slightly changed even when the color value is changed may be generated.

FIGS. **38**A and **38**B are schematic diagrams illustrating an example of the rectification characteristic **71**. FIG. **38**A is a schematic diagram illustrating the target characteristic **72**, the measured characteristic **74**, and the rectification characteristic **71** corresponding to a color that is primarily transferred in the transfer order of "4". FIG. **38**B is a schematic diagram illustrating the target characteristic **72**, the measured characteristic **74**, and the rectification characteristic **71** corresponding to the color that is primarily transferred in the transfer order of "1". FIG. **38**A and FIG. **38**B are diagrams illustrating cases of generating the rectification characteristic **71** using the same rectification color value of "207". FIG. **38**A and FIG. **38**B are diagrams illustrating cases of using the color material of the same color.

As illustrated in FIG. **38**A, in a case of using the same rectification color value for the same color irrespective of the transfer order, the rectification characteristic **71** in a case of the latest transfer order of "4" indicates a relation in which the colorimetric value monotonically increases in accordance with a change of the color value. On the other hand, as illustrated in FIG. **38**B, the rectification characteristic **71** in a case of the earliest transfer order of "1" may indicate a relation in which the colorimetric value is substantially constant irrespective of a change of the color value. It can be considered that transfer performance onto the intermediate transfer belt **39** may be deteriorated as the transfer order of primary transfer is earlier. Thus, it can be considered that the amount of the color material that is secondarily transferred onto the medium **40** is reduced as the transfer order of primary transfer is earlier, and the above-stated result may be obtained.

Thus, in a case of using the same rectification color value irrespective of the transfer order, when the correction table **70**B is rectified by using the rectification characteristic **71** illustrated in FIG. **38**B for a color transferred in the earliest transfer order of "1", the colorimetric value of the formed image cannot be prevented from being saturated in the vicinity of the maximum color value in some cases.

In the present embodiment, as described above, the color value rectification part **68**Q rectifies the correction table **70**B corresponding to each color using the rectification color value corresponding to the transfer order in the transfer order of primary transfer onto the intermediate transfer belt **39** of colors of C, M, Y, and K. Thus, the rectification characteristic **71** generated by using the rectification color value corresponding to the earliest transfer order of "1" is, for example, a rectification characteristic illustrated in FIG. **39**. FIG. **39** is an explanatory diagram of the rectification characteristic **71** generated by using the rectification color value corresponding to the transfer order of "1".

As illustrated in FIG. **39**, the rectification characteristic **71** generated by using the rectification color value corresponding to the transfer order of "1" indicates a relation in which the colorimetric value monotonically increases in accordance with a change of the color value as compared with the rectification characteristic **71** generated by using the same rectification color value as that of the transfer order of "4" (refer to FIG. **38**B).

Thus, by generating the rectification characteristic **71** for each color in the transfer order using the rectification color value corresponding to the transfer order, and rectifying the correction table **70**B for each color of the transfer order using the rectification characteristic **71**, the image quality can be further improved.

As described above, the information processing device **11**D according to the present embodiment controls the image forming device **12** (image forming part) that laminates a plurality of images to be primarily transferred onto the intermediate transfer belt **39** (transfer member) and secondarily transfers the laminate of the images onto the medium **40**. The rectification part **68**M of the information processing device **11**D rectifies the correction table **70**B for each color in the transfer order using the rectification color value that is smaller than the reference value as the transfer order onto the intermediate transfer belt **39** (transfer member) is earlier.

Accordingly, with the information processing device **11**D according to the present embodiment, the image quality of the laminated image **50** of the special color image **52** and the colored image **54** can be further improved.

Sixth Embodiment

In the second embodiment described above, described is a form of rectifying the correction table **70**B using the rectification color value of one value. In the present embodiment, described is a form of updating the rectification color value stored in the storage part **63**, and rectifying the correction table **70**B using the updated rectification color value.

FIG. **17** is a block diagram illustrating a functional configuration of an information processing device **11**E according to the present embodiment.

The information processing device **11**E includes a control part **69**, the UI part **64**, and the storage part **63**. The UI part **64** and the storage part **63** are connected to the control part **69** so as to exchange data or a signal with each other.

The UI part **64** is the same as that in the first embodiment. The storage part **63** is the same as the storage part **62** in the first embodiment. That is, the rectification color value of one value is previously stored in the storage part **63**.

The control part **69** is the same as the control part **61** in the second embodiment except that the control part **69** includes an update processing part **69**F in place of the update processing part **61**F. The update processing part **69**F is the same as the update processing part **61**F in the second embodiment except that the update processing part **69**F includes a rectification part **69**M in place of the rectification part **61**M.

If a predetermined condition is satisfied, the rectification part **69**M updates the rectification color value stored in the storage part **63**, and rectifies the correction table **70**B using the updated rectification color value.

The rectification part **69**M according to the present embodiment includes a color value specification part **69**N, a characteristic generation part **69**P, and a color value rectification part **69**Q. The color value specification part **69**N, the characteristic generation part **69**P, and the color value rectification part **69**Q respectively perform the same processing as that performed by the color value specification part **61**N, the characteristic generation part **61**P, and the color value rectification part **61**Q in the second embodiment described above except that the updated rectification color value is used.

Specifically, in the present embodiment, if the predetermined rectification color value is equal to or larger than the color value in the target characteristic **72** corresponding to the first colorimetric value indicating the second colorimetric value of the maximum color value in the measured characteristic **74**, the rectification part **69**M updates the rectification color value to be smaller than the color value. The rectification part **69**M rectifies the correction table **70**B using the updated rectification color value.

FIG. **40** is a schematic diagram illustrating an example of the rectification characteristic **71**. FIG. **40** is a schematic diagram illustrating the target characteristic **72** and the measured characteristic **74** in a case in which the predetermined rectification color value is equal to or larger than "218".

The color value of "218" is the color value of "218" in the target characteristic **72** corresponding to the first calorimetric value indicating the second calorimetric value of "1.00" of the maximum color value of "255" in the measured characteristic **74** illustrated in FIG. **40**.

In a case in which the rectification color value is equal to or larger than such a color value (in the example illustrated in FIG. **40**, the color value of "218"), the calorimetric value may be substantially constant irrespective of a change of the color value. Thus, in this case, when the correction table **70**B is rectified using the rectification color value, the colorimetric value of the formed image cannot be prevented from being saturated in the vicinity of the maximum color value in some cases.

Thus, the rectification color value is preferably smaller than the color value in the target characteristic **72** corresponding to the first colorimetric value indicating the second colorimetric value of the maximum color value in the measured characteristic **74**.

Thus, in the present embodiment, if the predetermined rectification color value is equal to or larger than the color value in the target characteristic **72** corresponding to the first colorimetric value indicating the second colorimetric value of the maximum color value in the measured characteristic **74**, the rectification part **69**M updates the rectification color value to be smaller than the color value. The rectification part **69**M rectifies the correction table **70**B using the updated rectification color value.

The rectification color value is preferably a color value obtained by subtracting a difference between the maximum color value in the measured characteristic **74** and the color value from the color value in the target characteristic **72** corresponding to the first colorimetric value indicating the second calorimetric value of the maximum color value in the measured characteristic **74**.

Thus, the rectification part **69**M preferably rectifies the predetermined rectification color value to be a color value obtained by subtracting a difference between the maximum color value in the measured characteristic **74** and the color value from the color value in the target characteristic **72** corresponding to the first colorimetric value indicating the second colorimetric value of the maximum color value in the measured characteristic **74**.

In a case of the example illustrated in FIG. **40**, the rectification part **69**M updates the rectification color value to be the color value of "181" obtained by subtracting the difference of "37" between the maximum color value of "255" in the measured characteristic **74** and the color value of "218" from the color value of "218". The rectification part **69**M rectifies the correction table **70**B using the updated color value.

Thus, for example, the rectification characteristic **71** generated by using the updated rectification color value becomes a rectification characteristic illustrated in FIG. **41**. FIG. **41** is an explanatory diagram of the rectification characteristic **71** generated by using the updated rectification color value.

As illustrated in FIG. **41**, the rectification characteristic **71** generated by using the updated rectification color value of "181" indicates a relation in which the colorimetric value monotonically increases in accordance with a change of the color value as compared with the rectification characteristic **71** (refer to FIG. **40**) generated by using the rectification color value before update (a value equal to or larger than "218").

Thus, by generating the rectification characteristic **71** using the updated rectification color value, and rectifying the correction table **70**B using the rectification characteristic **71**, the image quality can be further improved.

As described above, if the predetermined rectification color value is equal to or larger than the color value in the target characteristic **72** corresponding to the first colorimetric value indicating the second colorimetric value of the maximum color value in the measured characteristic **74**, the rectification part **69**M of the information processing device **11**E according to the present embodiment updates the rec-

tification color value to be smaller than the color value, and rectifies the correction table **70**B using the updated rectification color value.

Accordingly, with the information processing device **11**E according to the present embodiment, the image quality of the laminated image **50** of the special color image **52** and the colored image **54** can be further improved.

The rectification color value is preferably a color value obtained by subtracting a difference between the maximum color value in the measured characteristic **74** and the color value from the color value in the target characteristic **72** corresponding to the first colorimetric value indicating the second colorimetric value of the maximum color value in the measured characteristic **74**.

The rectification color value is preferably smaller as a difference between the first colorimetric value corresponding to the maximum color value in the target characteristic **72** and the second colorimetric value corresponding to the maximum color value in the measured characteristic **74** is larger.

Second Modification

In the embodiment described above, described is a form in which the image forming device **12** and the information processing devices **10**, **11**, **11**A, **11**B, **11**D, and **11**E are separately configured. However, the image forming device **12** and the information processing devices **10**, **11**, **11**A, **11**B, **11**C, **11**D, or **11**E may be integrally configured.

FIG. **42** is a schematic diagram illustrating an example of an image forming device **15** according to the present modification. The image forming device **15** includes the information processing device **10**, **11**, **11**A, **11**B, **11**C, **11**D, or **11**E, an image forming part **13**, and the colorimeter **14**. The information processing devices **10**, **11**, and **11**A to **11**E are the same as the information processing devices **10**, **11**, and **11**A to **11**E in the above embodiment. The image forming part **13** is the same as the image forming device **12** in the above embodiment. The colorimeter **14** is the same as the colorimeter **14** in the above embodiment. The information processing devices **10**, **11**, and **11**A to **11**E are connected to the image forming part **13** so as to exchange data or a signal with each other. The information processing devices **10**, **11**, and **11**A to **11**E are connected to the colorimeter **14** so as to exchange data or a signal with each other.

In this way, the image forming device **15** may include the information processing device **10**, **11**, **11**A, **11**B, **11**C, **11**D, or **11**E, the image forming part **13** (image forming device **12**), and the colorimeter **14**.

In the above embodiment, described is a form in which the colorimeter **14** is connected to the information processing device **10**, **11**, **11**A, **11**B, **11**C, **11**D, or **11**E by way of example. Alternatively, the colorimeter **14** and the image forming device **12** may be directly connected to each other.

The processing performed by the information processing devices **10**, **11**, **11**A, **11**B, **11**C, **11**D, and **11**E in the above embodiments and the modifications is recorded and provided as a computer program product in a computer-readable recording medium such as a compact disc read only memory (CD-ROM), a flexible disk (FD), a compact disc recordable (CD-R), and a digital versatile disc (DVD), as an installable or executable file.

The computer program executed by the information processing devices **10**, **11**, **11**A, **11**B, **11**D, and **11**E in the above embodiments and the modifications may be stored in a computer connected to a network such as the Internet and provided by being downloaded via the network. Furthermore, the computer program executed by the information processing devices **10**, **11**, **11**A, **11**B, **11**D, and **11**E according to the above embodiments and the modifications may be provided or distributed via a network such as the Internet.

The computer program executed by the information processing devices **10**, **11**, **11**A, **11**B, **11**D, and **11**E according to the above embodiments and the modifications may be embedded and provided in a ROM, for example.

According to the embodiments, image quality of the laminated image of the colored image and the special color image can be improved.

The above-described embodiments are illustrative and do not limit the present invention. Thus, numerous additional modifications and variations are possible in light of the above teachings. For example, at least one element of different illustrative and exemplary embodiments herein may be combined with each other or substituted for each other within the scope of this disclosure and appended claims. Further, features of components of the embodiments, such as the number, the position, and the shape are not limited the embodiments and thus may be preferably set. It is therefore to be understood that within the scope of the appended claims, the disclosure of the present invention may be practiced otherwise than as specifically described herein.

The method steps, processes, or operations described herein are not to be construed as necessarily requiring their performance in the particular order discussed or illustrated, unless specifically identified as an order of performance or clearly identified through the context. It is also to be understood that additional or alternative steps may be employed.

Further, any of the above-described apparatus, devices or units can be implemented as a hardware apparatus, such as a special-purpose circuit or device, or as a hardware/software combination, such as a processor executing a software program.

Further, as described above, any one of the above-described and other methods of the present invention may be embodied in the form of a computer program stored in any kind of storage medium. Examples of storage mediums include, but are not limited to, flexible disk, hard disk, optical discs, magneto-optical discs, magnetic tapes, non-volatile memory, semiconductor memory, read-only-memory (ROM), etc.

Alternatively, any one of the above-described and other methods of the present invention may be implemented by an application specific integrated circuit (ASIC), a digital signal processor (DSP) or a field programmable gate array (FPGA), prepared by interconnecting an appropriate network of conventional component circuits or by a combination thereof with one or more conventional general purpose microprocessors or signal processors programmed accordingly.

Each of the functions of the described embodiments may be implemented by one or more processing circuits or circuitry. Processing circuitry includes a programmed processor, as a processor includes circuitry. A processing circuit also includes devices such as an application specific integrated circuit (ASIC), digital signal processor (DSP), field programmable gate array (FPGA) and conventional circuit components arranged to perform the recited functions.

What is claimed is:

1. An information processing device configured to control an image forming part that forms a laminated image of a special color image using a special color material and a colored image using a colored color material through 2-path

printing in which one of the special color image and the colored image is formed on a medium to be immobilized and the other one is laminated thereon, or 1-path printing in which one of the special color image and the colored image is formed on a medium and the other one is laminated thereon without performing immobilization, the information processing device comprising:

a specification part configured to specify, by using image data for a correction chart defining a plurality of patch regions having different color values, a target characteristic indicating a relation between the color value and a first colorimetric value of a first patch image as the laminated image corresponding to each of the patch regions formed by the image forming part through the 2-path printing; and

a generation part configured to generate a correction table for correcting the color value so that a measured characteristic comes close to the target characteristic, the measured characteristic indicating a relation between the color value and a second colorimetric value of a second patch image as the laminated image corresponding to each of the patch regions formed by the image forming part through the 1-path printing using the image data for a correction chart.

2. The information processing device according to claim **1**, wherein

the generation part generates the correction table in which the color value in the target characteristic is set to be an input color value and the color value in the measured characteristic corresponding to the second colorimetric value indicating the first colorimetric value in the target characteristic is set to be an output color value.

3. The information processing device according to claim **1**, further comprising:

an acquisition part configured to acquire special color type information indicating a type of the special color material used for image formation; and

a determination part configured to determine the image data for a correction chart corresponding to the special color type information, wherein

the specification part determines the target characteristic using the determined image data for a correction chart, and

the generation part generates the correction table using the determined image data for a correction chart.

4. The information processing device according to claim **3**, wherein

the determination part determines the image data for a correction chart defining the patch region in which the special color region and the colored region are laminated with the color value including a special color value and a colored color value, the image data for a correction chart including image data for a special color correction chart defining the special color value of the special color region using the special color material of the type indicated by the special color type information and image data for a colored correction chart defining the colored color value of the colored region using the colored color material.

5. The information processing device according to claim **3**, wherein

the image forming part is configured to be able to switch a laminating order of the colored image and the special color image with respect to a medium,

the acquisition part acquires laminating order information indicating the laminating order from the image forming part,

the specification part specifies, by using the determined image data for a correction chart, the target characteristic indicating a relation between the color value and the first colorimetric value of the first patch image that is formed on a medium through the 2-path printing by the image forming part in the laminating order indicated by the acquired laminating order information using the special color material of the type indicated by the acquired special color type information, and

the generation part generates the correction table so that a measured characteristic is matched with the target characteristic using the determined image data for a correction chart, the measured characteristic indicating a relation between the color value and the second colorimetric value of the second patch image formed on a medium through the 1-path printing by the image forming part in the acquired laminating order with the special color material of the type indicated by the acquired special color type information.

6. The information processing device according to claim **1**, further comprising:

a correction part configured to correct a color value of image data as a formation target using the correction table; and

a transmission part configured to transmit the corrected image data to the image forming part.

7. The information processing device according to claim **1**, wherein

the special color material is a color material indicating any of a metal color, white, a transparent color, and a fluorescent color.

8. The information processing device according to claim **1**, further comprising:

a rectification part configured to rectify an output color value in a rectification range from a predetermined rectification color value to a maximum color value in the correction table to be the output color value that monotonically increases.

9. The information processing device according to claim **8**, wherein

the rectification part comprises:

a color value specification part configured to specify an input color value corresponding to the output color value indicating the rectification color value in the correction table;

a characteristic generation part configured to interpolate between a first point indicating a colorimetric value at the time when an image of the rectification color value is formed on a medium through the 1-path printing by the image forming part in the target characteristic and a second point indicating a maximum color value in the measured characteristic to generate a rectification characteristic indicating a relation between the colorimetric value and the color value; and

a color value rectification part configured to rectify the output color value in the rectification range in the correction table to be the color value corresponding to the second colorimetric value indicating the calorimetric value in the rectification characteristic in the measured characteristic.

10. The information processing device according to claim **8**, wherein

the rectification color value is smaller than the color value in the target characteristic corresponding to the first calorimetric value indicating the second colorimetric value of a maximum color value in the measured characteristic.

11. The information processing device according to claim **8**, wherein

the rectification color value is a color value obtained by subtracting a difference between the color value and the maximum color value in the measured characteristic from the color value in the target characteristic corresponding to the first colorimetric value indicating the second colorimetric value of the maximum color value in the measured characteristic.

12. The information processing device according to claim **8**, wherein

the rectification color value becomes smaller as a difference between the first colorimetric value corresponding to the maximum color value in the target characteristic and the second colorimetric value corresponding to the maximum color value in the measured characteristic becomes larger.

13. The information processing device according to claim **8**, wherein

the rectification color value becomes smaller as brightness of an image as a formation target becomes lower.

14. The information processing device according to claim **8**, wherein

the rectification part rectifies the correction table for each color of the color material using the rectification color value corresponding to the color of the color material used for image formation.

15. The information processing device according claim **8**, wherein

the rectification part rectifies the correction table using the rectification color value corresponding to a medium as an image formation target.

16. The information processing device according to claim **8**, wherein

the information processing device controls the image forming part that laminates a plurality of images to be primarily transferred onto a transfer member and secondarily transfers a laminate of the images onto a medium, and

the rectification part rectifies the correction table for each color in a transfer order onto the transfer member using the rectification color value that is smaller than a reference value as the transfer order is earlier.

17. The information processing device according to claim **8**, wherein

when the predetermined rectification color value is equal to or larger than the color value in the target characteristic corresponding to the first colorimetric value indicating the second colorimetric value of the maximum color value in the measured characteristic, the rectification part updates the rectification color value to be smaller than the color value, and rectifies the correction table using the updated rectification color value.

18. An information processing method for controlling an image forming part that forms a laminated image of a special color image using a special color material and a colored image using a colored color material through 2-path printing in which one of the special color image and the colored image is formed on a medium to be immobilized and the other one is laminated thereon, or 1-path printing in which one of the special color image and the colored image is formed on a medium and the other one is laminated thereon without performing immobilization, the information processing method comprising:

specifying, by using image data for a correction chart defining a plurality of patch regions having different color values, a target characteristic indicating a relation between the color value and a first colorimetric value of a first patch image as the laminated image corresponding to each of the patch regions formed by the image forming part through the 2-path printing; and

generating a correction table for correcting the color value so that a measured characteristic comes close to the target characteristic, the measured characteristic indicating a relation between the color value and a second colorimetric value of a second patch image as the laminated image corresponding to each of the patch regions formed by the image forming part through the 1-path printing using the image data for a correction chart.

19. A non-transitory computer-readable recording medium that contains an information processing program to be executed by a computer that controls an image forming part that forms a laminated image of a special color image using a special color material and a colored image using a colored color material through 2-path printing in which one of the special color image and the colored image is formed on a medium to be immobilized and the other one is laminated thereon, or 1-path printing in which one of the special color image and the colored image is formed on a medium and the other one is laminated thereon without performing immobilization, the information processing program causing the computer to execute:

specifying, by using image data for a correction chart defining a plurality of patch regions having different color values, a target characteristic indicating a relation between the color value and a first colorimetric value of a first patch image as the laminated image corresponding to each of the patch regions formed by the image forming part through the 2-path printing; and

generating a correction table for correcting the color value so that a measured characteristic comes close to the target characteristic, the measured characteristic indicating a relation between the color value and a second colorimetric value of a second patch image as the laminated image corresponding to each of the patch regions formed by the image forming part through the 1-path printing using the image data for a correction chart.

* * * * *