US010460717B2

(12) **United States Patent**
Beckman et al.

(10) **Patent No.: US 10,460,717 B2**
(45) **Date of Patent: Oct. 29, 2019**

(54) **CARBON NANOTUBE TRANSDUCERS ON PROPELLER BLADES FOR SOUND CONTROL**

(71) Applicant: **Amazon Technologies, Inc.**, Seattle, WA (US)

(72) Inventors: **Brian C. Beckman**, Newcastle, WA (US); **Vedran Coralic**, Seattle, WA (US); **Gur Kimchi**, Bellevue, WA (US)

(73) Assignee: **Amazon Technologies, Inc.**, Seattle, WA (US)

(*) Notice: Subject to any disclaimer, the term of this patent is extended or adjusted under 35 U.S.C. 154(b) by 750 days.

(21) Appl. No.: **15/189,849**

(22) Filed: **Jun. 22, 2016**

(65) **Prior Publication Data**

US 2017/0178618 A1 Jun. 22, 2017

Related U.S. Application Data

(63) Continuation-in-part of application No. 14/975,291, filed on Dec. 18, 2015, now abandoned.

(51) **Int. Cl.**
B64C 39/02 (2006.01)
B64C 27/20 (2006.01)
(Continued)

(52) **U.S. Cl.**
CPC ***G10K 11/178*** (2013.01); ***B64C 11/00*** (2013.01); ***B64C 11/20*** (2013.01); ***B64C 27/46*** (2013.01);
(Continued)

(58) **Field of Classification Search**
CPC F02C 7/045; F03C 7/0296; F05D 2260/96; F05D 2260/962; F05B 2220/709;
(Continued)

(56) **References Cited**

U.S. PATENT DOCUMENTS

1,946,129 A 2/1934 Joseph
2,049,832 A 8/1936 John
(Continued)

FOREIGN PATENT DOCUMENTS

CN 105620727 A 6/2016
DE 202011106150 U1 1/2012
(Continued)

OTHER PUBLICATIONS

International Search Report for PCT Application No. PCT/US2016/066706 dated Apr. 10, 2017.

Primary Examiner — Jason D Shanske
Assistant Examiner — Joshua R Beebe
(74) *Attorney, Agent, or Firm* — Athorus, PLLC

(57) **ABSTRACT**

The present disclosure is directed to controlling, reducing, and/or altering sound generated by an aerial vehicle, such as an unmanned aerial vehicle ("UAV"), while the aerial vehicle is airborne. For example, one or more transducers, such as piezoelectric thin-film transducers, or carbon nanotube transducers may be applied or incorporated into or on the surface of propeller blades that are used to aerially navigate the aerial vehicle. As the propeller blade rotates and generates sound, the transducers may be activated to generate one or more anti-sounds that cancel, reduce, or otherwise modify the sound generated by the rotation of the propeller blade. The anti-sound combines with the sound and causes interference such that the combined, or net-effect, is an overall cancellation, reduction, or other modification of the sound.

20 Claims, 36 Drawing Sheets

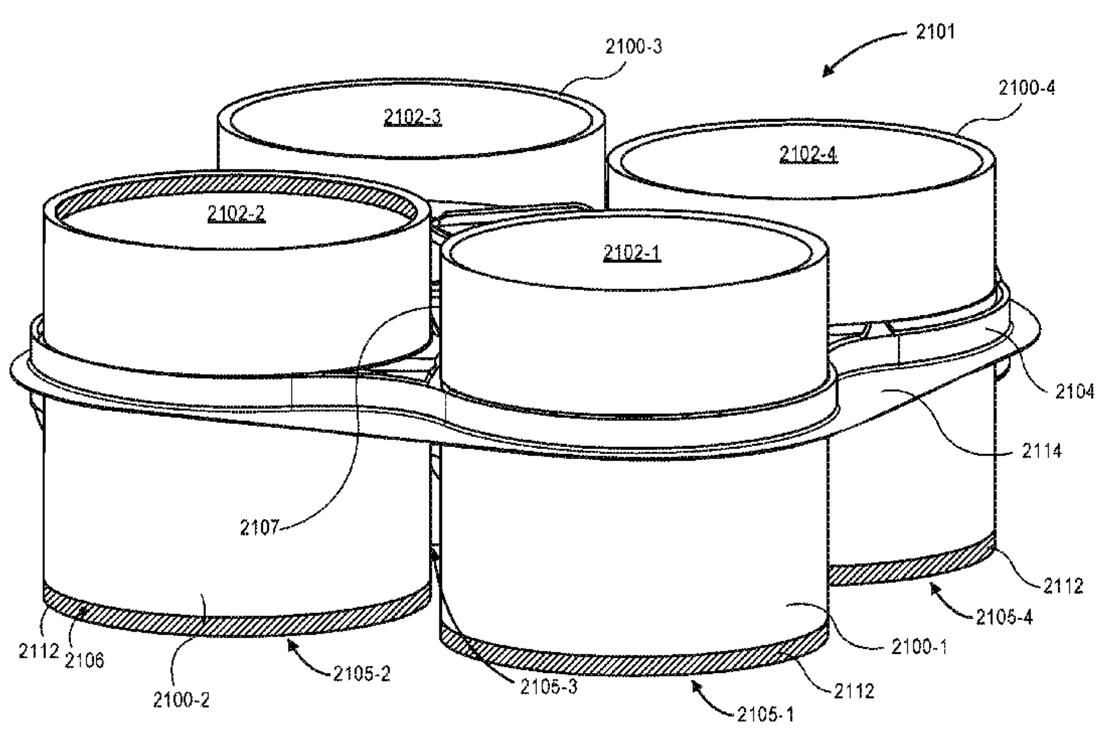

(51) **Int. Cl.**

B64C 1/40	(2006.01)
G10K 11/178	(2006.01)
B64C 27/46	(2006.01)
B64C 27/473	(2006.01)
B64C 11/00	(2006.01)
B64C 11/20	(2006.01)

(52) **U.S. Cl.**
CPC ***B64C 27/473*** (2013.01); ***B64C 39/024*** (2013.01); ***G10K 11/17883*** (2018.01); *B64C 2201/027* (2013.01); *B64C 2201/108* (2013.01); *B64C 2220/00* (2013.01); *B64C 2230/14* (2013.01); *G10K 2210/1281* (2013.01); *G10K 2210/3216* (2013.01); *G10K 2210/3229* (2013.01); *Y02T 50/166* (2013.01)

(58) **Field of Classification Search**
CPC F05B 2260/96; F05B 2260/962; F05B 2280/2006; B64C 2220/00; B64C 2230/14; B64C 27/46; B64C 27/473; B64C 39/024; B64C 2201/027; B64C 39/02; B64C 27/20; B64C 1/40; B64C 11/00; B64C 11/20; G10K 11/178; G10K 11/17833; G10K 2210/1281; G10K 2210/3216; G10K 2210/3229; Y02T 50/166; F03D 7/0296; B64D 2033/0206
See application file for complete search history.

(56) **References Cited**

U.S. PATENT DOCUMENTS

2,065,343	A		12/1936	Moore et al.	
2,071,012	A		2/1937	Luther	
2,650,752	A		9/1953	Hoadley	
3,092,558	A		6/1963	Hughes et al.	
3,559,923	A		2/1971	Moore	
3,776,363	A		12/1973	Kuethe	
3,853,428	A		12/1974	Hayden et al.	
4,687,691	A		8/1987	Kay	
4,726,548	A		2/1988	Clites	
4,877,988	A	*	10/1989	McGinniss	H01L 37/025 310/306
5,478,199	A	*	12/1995	Gliebe	B64D 33/02 415/119
5,515,444	A	*	5/1996	Burdisso	G10K 11/178 381/71.5
5,533,865	A		7/1996	Dassen et al.	
5,540,406	A		7/1996	Occhipinti	
5,551,840	A		9/1996	Benoit et al.	
5,590,849	A	*	1/1997	Pla	F02C 7/04 244/1 N
5,606,622	A	*	2/1997	Christenson	G10K 11/178 381/71.5
5,636,287	A	*	6/1997	Kubli	F04D 29/663 381/71.2
5,668,744	A	*	9/1997	Varadan	G10K 11/178 700/280
5,755,408	A		5/1998	Schmidt et al.	
5,785,282	A		7/1998	Wake et al.	
5,961,067	A		10/1999	Hall et al.	
6,140,730	A	*	10/2000	Tkaczyk	H02K 21/24 310/181
6,161,800	A		12/2000	Liu et al.	
6,201,872	B1	*	3/2001	Hersh	G10K 11/178 381/71.5
6,270,038	B1	*	8/2001	Cycon	B64C 27/20 244/12.2
6,358,013	B1		3/2002	Rose et al.	
6,368,059	B1		4/2002	Maines	
6,654,467	B1	*	11/2003	York	G10K 11/178 381/71.14
6,671,590	B1		12/2003	Betzina et al.	
7,360,996	B2		4/2008	Driver	
7,413,408	B1		8/2008	Tafoya	
7,604,461	B2		10/2009	Bonnet	
7,693,292	B1	*	4/2010	Gross	G10K 11/178 381/71.14
7,878,457	B2		2/2011	Narramore	
8,047,801	B2		11/2011	Fang et al.	
8,210,482	B2		7/2012	Miller et al.	
8,414,261	B2		4/2013	Bonnet	
8,425,191	B2		4/2013	Ali	
8,444,092	B2		5/2013	Li et al.	
8,523,515	B2		9/2013	Drobietz et al.	
8,535,008	B2		9/2013	Dewar et al.	
8,742,641	B2	*	6/2014	Kubes	B60K 7/0007 310/102 R
8,855,329	B2	*	10/2014	Slapak	F24F 13/24 181/201
8,870,124	B2		10/2014	Ireland	
9,752,559	B2		9/2017	Herr et al.	
2003/0219132	A1	*	11/2003	Sommerfeldt	G10K 11/178 381/71.14
2005/0163963	A1		7/2005	Munro et al.	
2006/0060721	A1		3/2006	Watts et al.	
2006/0138777	A1	*	6/2006	Hofbauer	B64C 39/024 290/1 R
2006/0263223	A1		11/2006	Gustafson et al.	
2008/0080977	A1		4/2008	Bonnet	
2008/0166241	A1		7/2008	Herr et al.	
2008/0217485	A1		9/2008	Ikeda	
2008/0243313	A1		10/2008	Schaeffer	
2008/0286110	A1		11/2008	Gupta et al.	
2009/0268556	A1	*	10/2009	Jiang	H04R 23/002 367/140
2010/0266416	A1		10/2010	Marshall et al.	
2010/0329879	A1		12/2010	Presz et al.	
2011/0015034	A1		1/2011	Ehinger et al.	
2011/0041494	A1		2/2011	Parker et al.	
2011/0142628	A1		6/2011	Xiong	
2011/0223030	A1		9/2011	Huck et al.	
2011/0229321	A1		9/2011	Kilaras	
2011/0260008	A1		10/2011	Smith	
2011/0262705	A1		10/2011	Gupta et al.	
2014/0142888	A1	*	5/2014	Duncan	F03D 7/0296 702/150
2014/0186188	A1		7/2014	Takeuchi	
2014/0248148	A1		9/2014	Abdallah et al.	
2014/0312166	A1		10/2014	Zhu	
2015/0050154	A1		2/2015	Dixon et al.	
2016/0131108	A1		5/2016	Shimura et al.	
2017/0276117	A1		9/2017	Church	

FOREIGN PATENT DOCUMENTS

EP	2774843	A1		9/2014	
WO	WO 2008043874	A1	*	4/2008	F03D 80/00
WO	2010028653	A3		9/2010	
WO	2012110267	A1		8/2012	

* cited by examiner

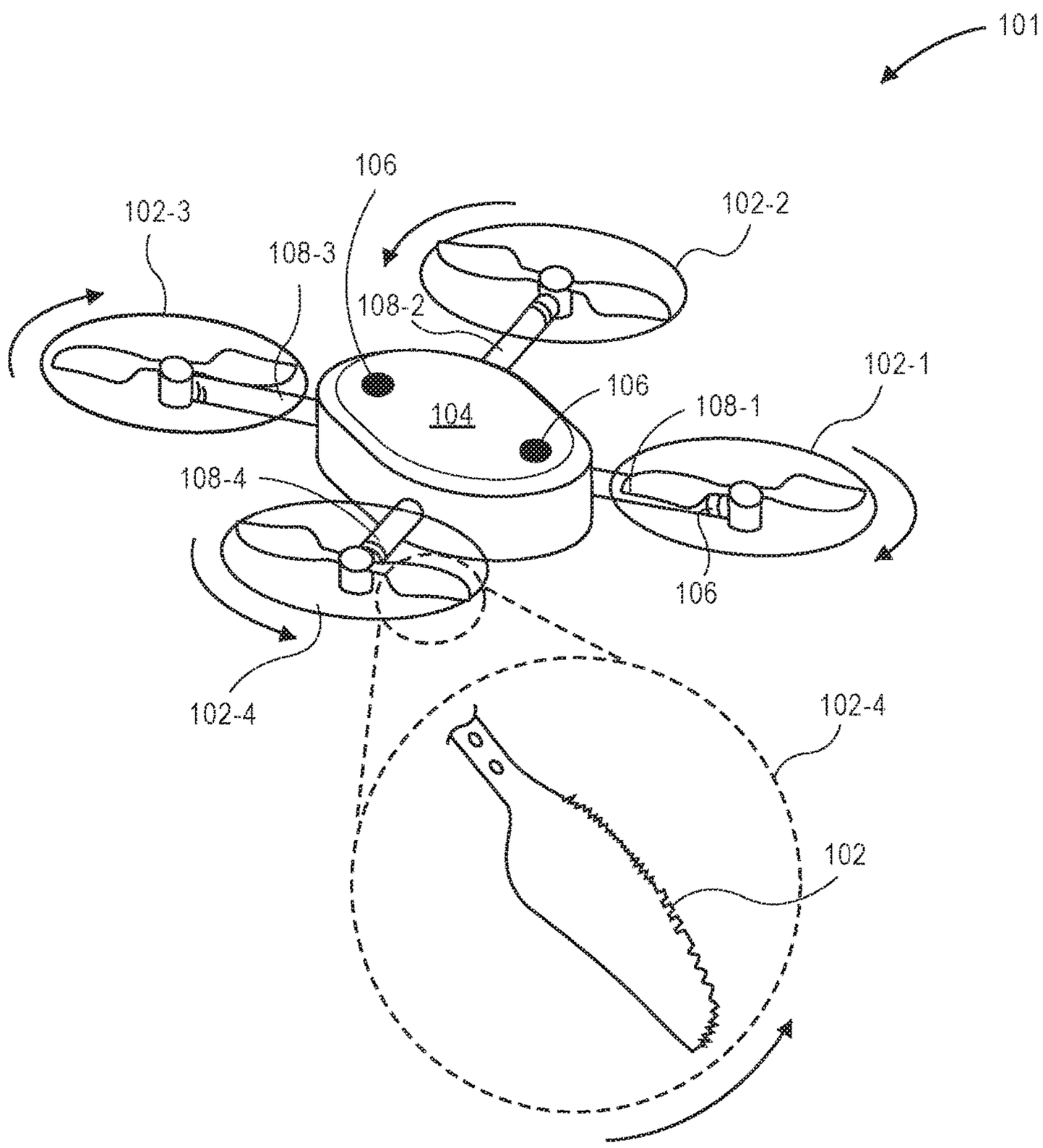
101
106
102-3
108-3
102-2
108-2
102-1
106
104
108-1
108-4
106
102-4
102-4
102

FIG. 1

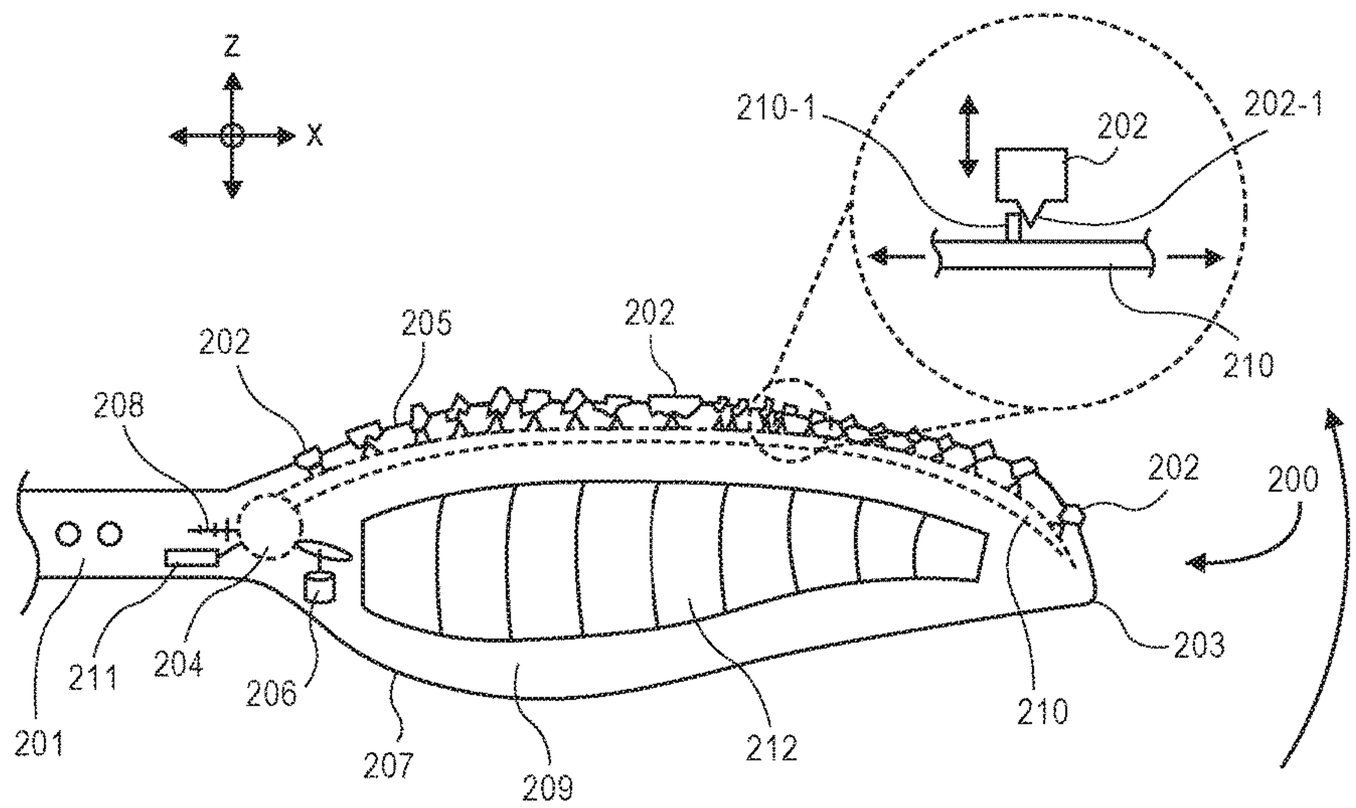
Z
X
210-1
202
202-1
210
202
205
202
208
202
200
211
204
206
203
201
207
209
212
210

FIG. 2A

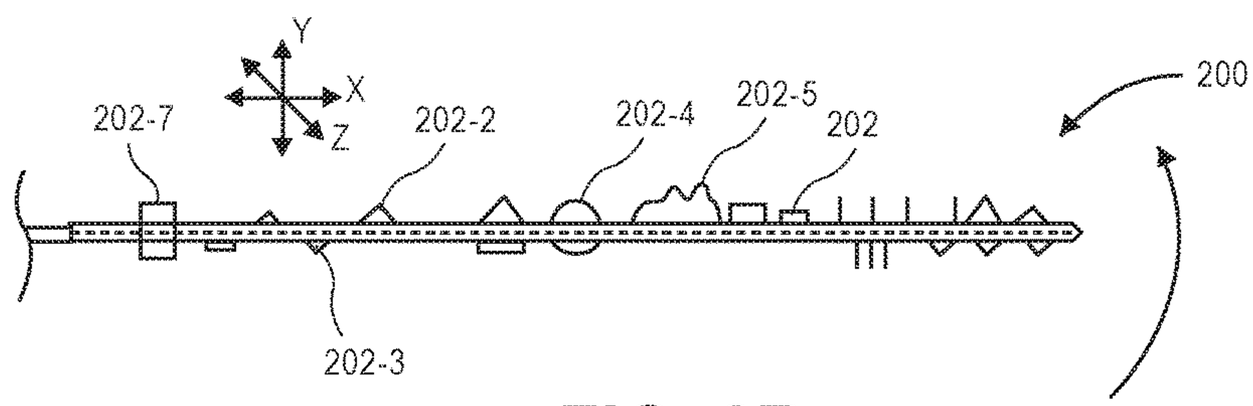
Y
X
Z
200
202-7
202-2
202-4
202-5
202
202-3

FIG. 2B

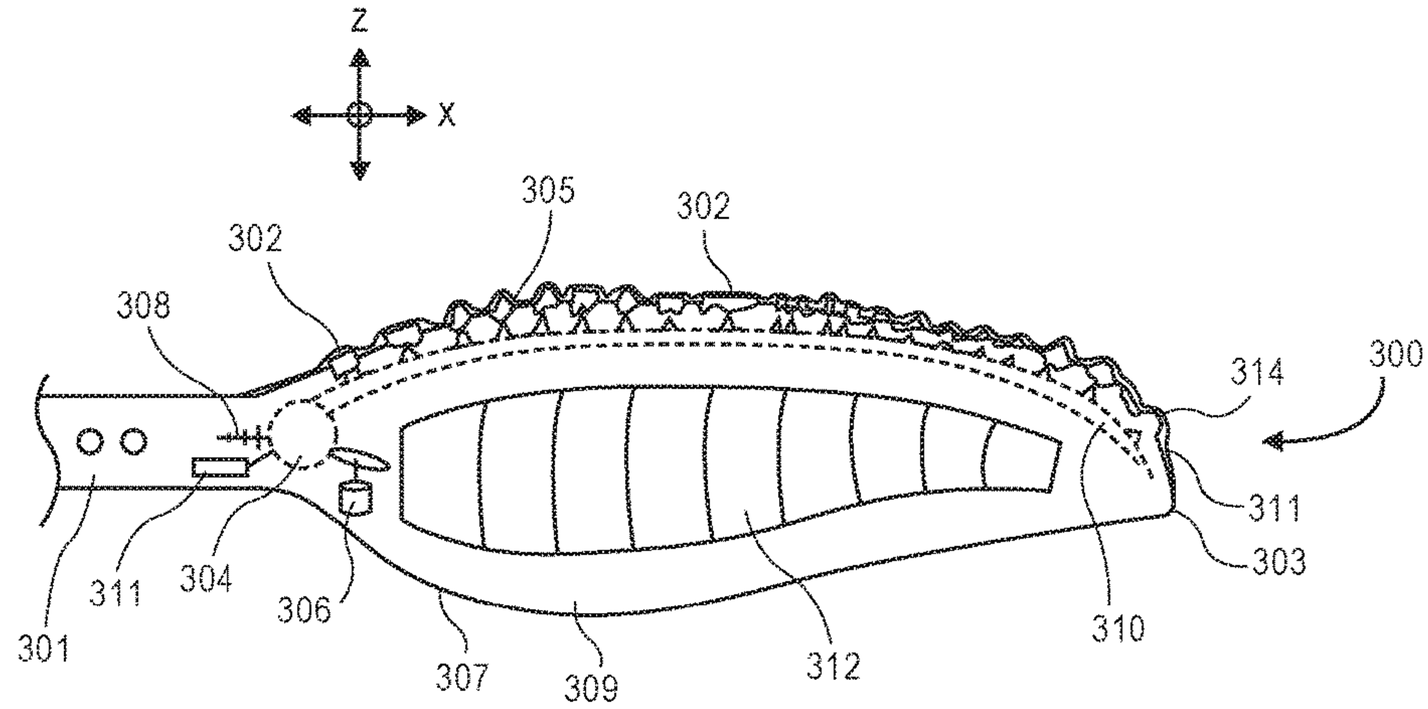
z
x
305
302
302
308
314
300
311
303
311
304
306
301
307
309
312
310

FIG. 3A

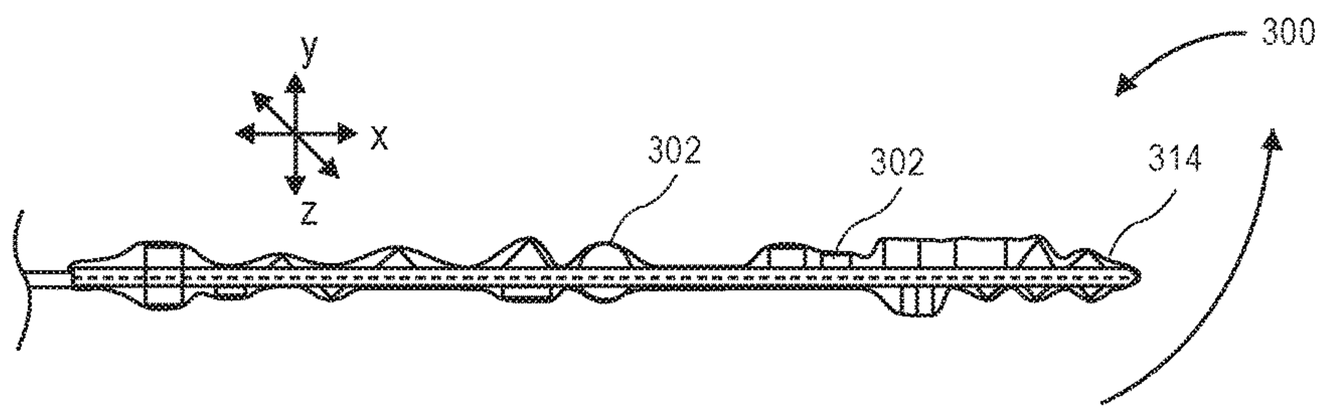
y
x
z
300
302
302
314

FIG. 3B

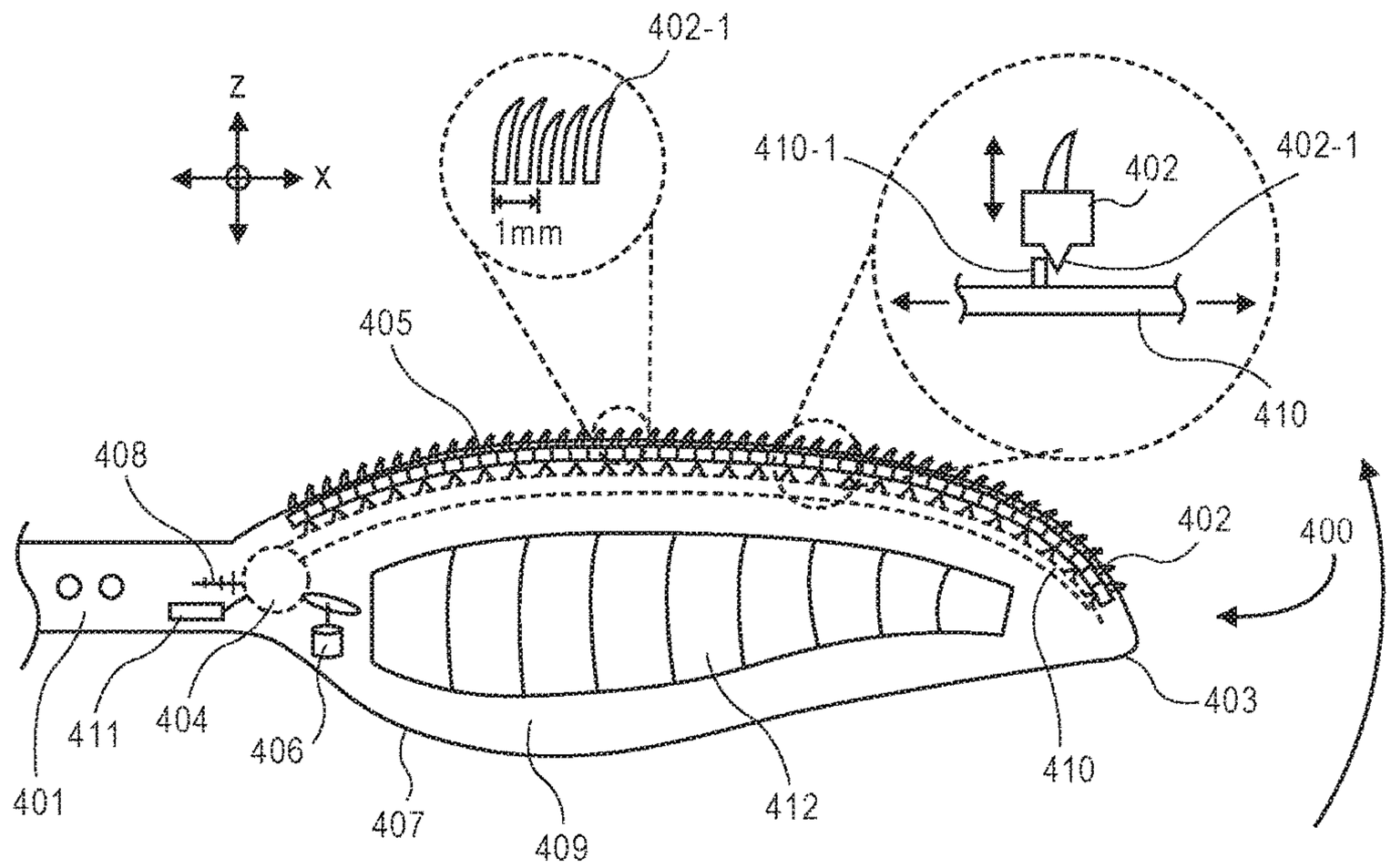
402-1
Z
X
1mm
410-1
402
402-1
410
405
408
402
400
403
411
404
406
401
407
409
412
410

FIG. 4A

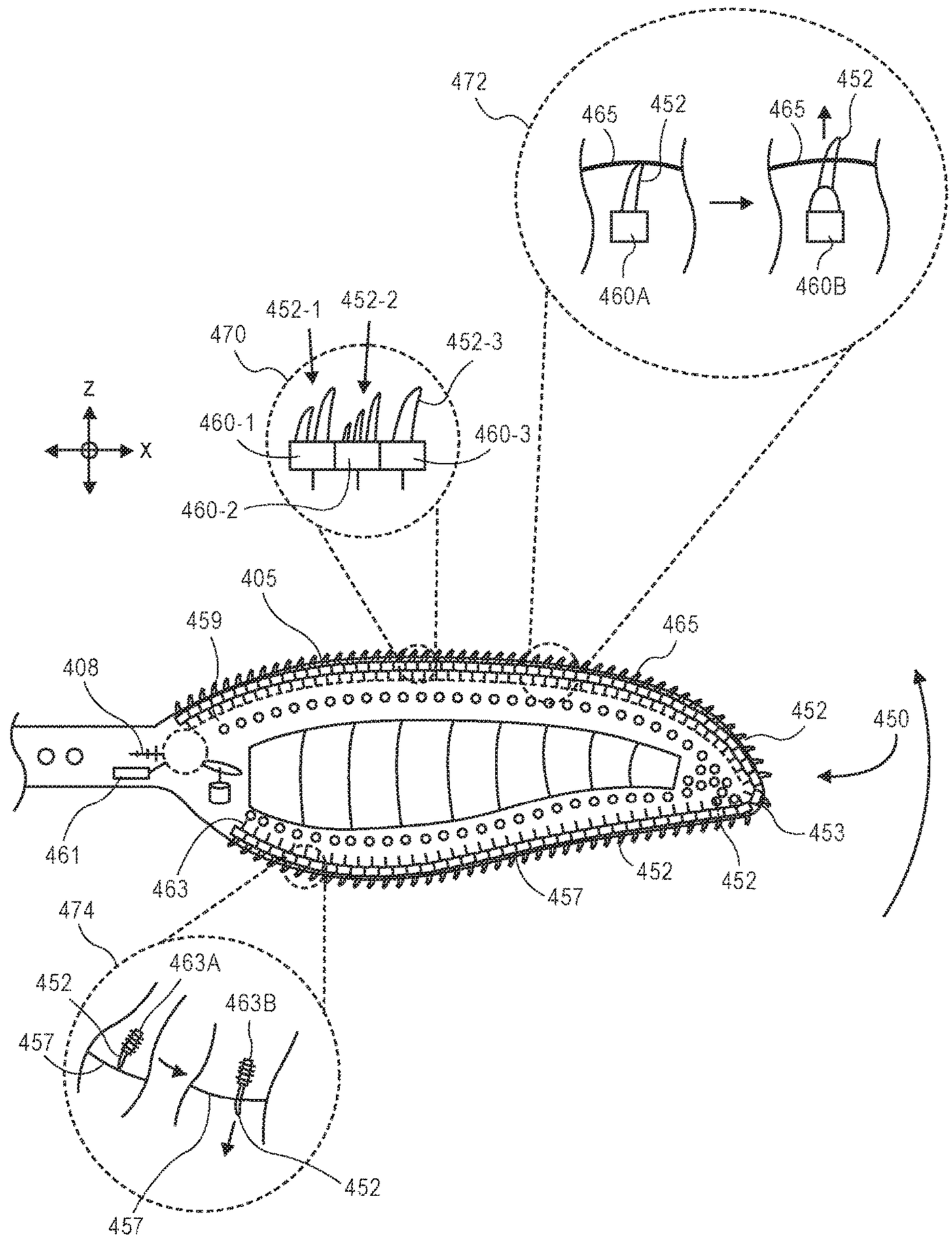
472
465
452
465
452
460A
460B
452-1
452-2
470
452-3
Z
X
460-1
460-3
460-2
405
459
465
408
452
450
461
463
457
452
452
453
474
463A
452
463B
457
452
457

FIG. 4B

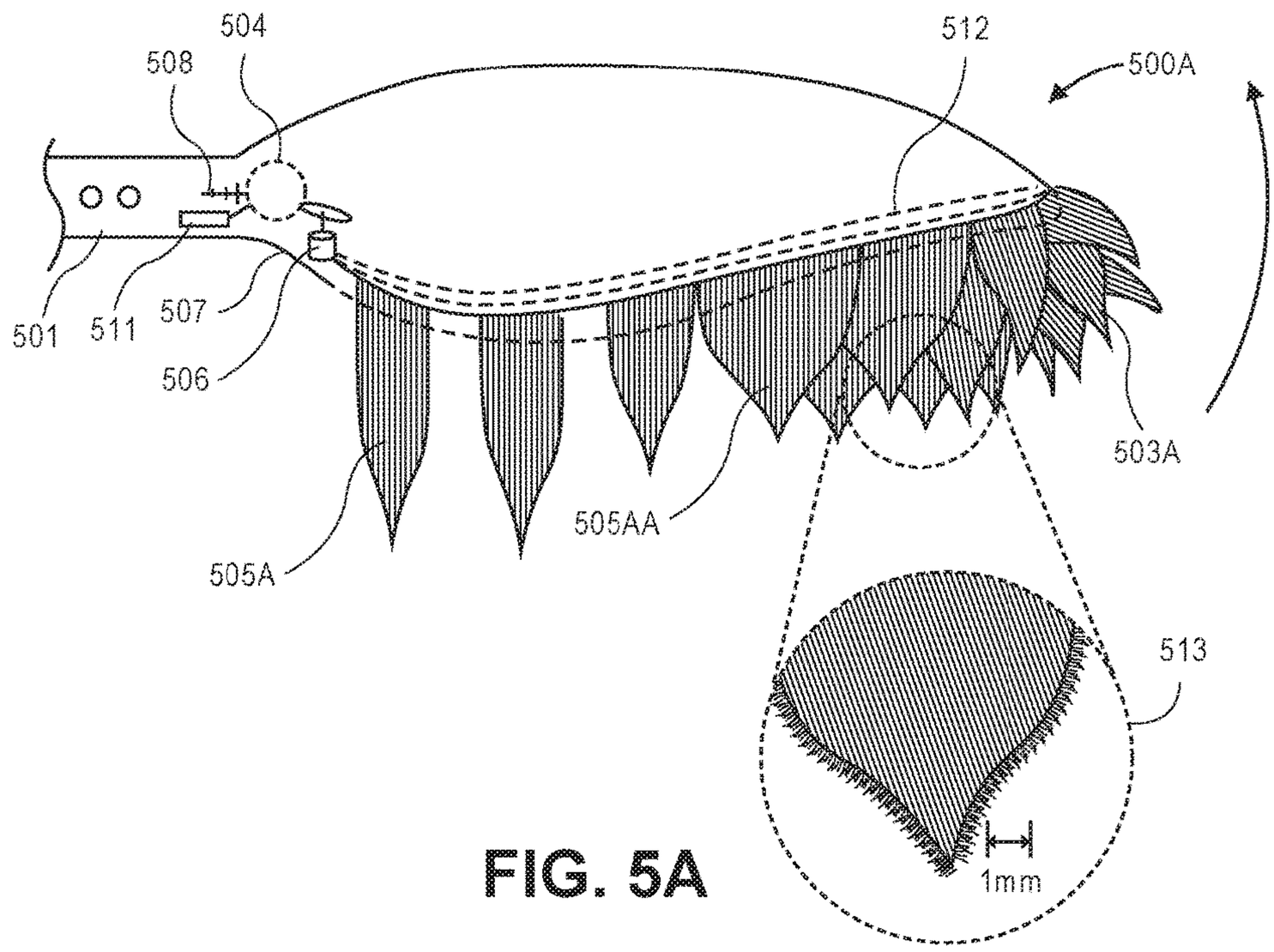
504
508
512
500A
501
511
507
506
503A
505AA
505A
513
1mm

FIG. 5A

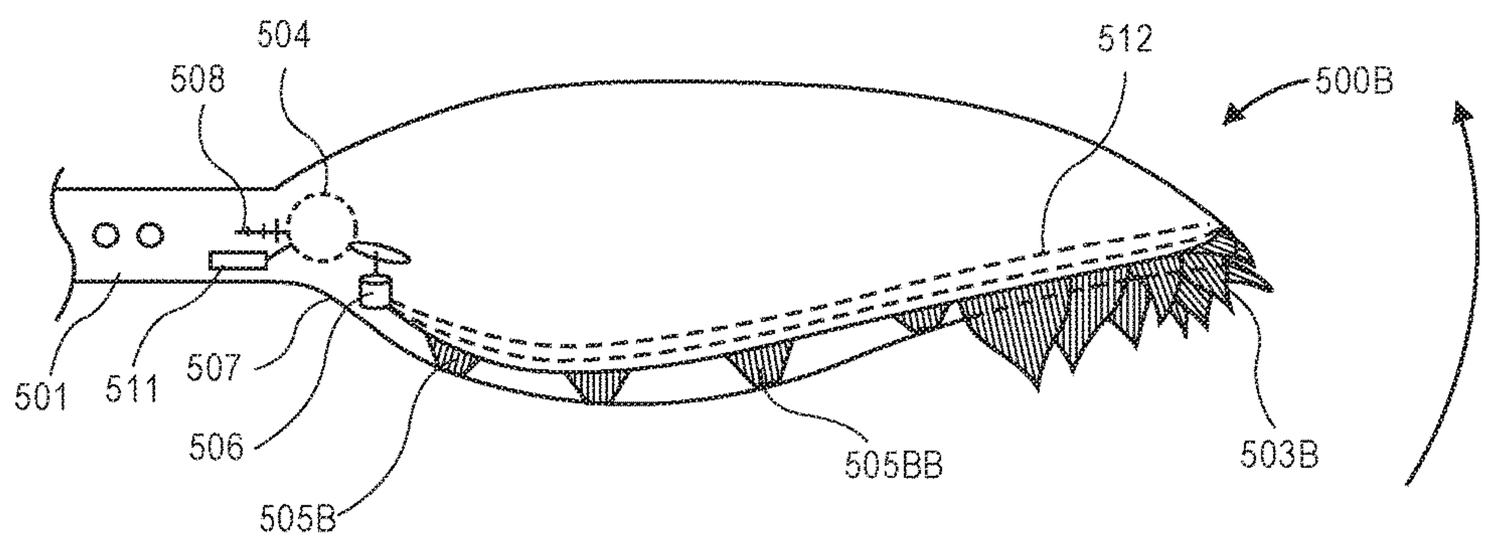
504
508
512
500B
501
511
507
506
505B
505BB
503B

FIG. 5B

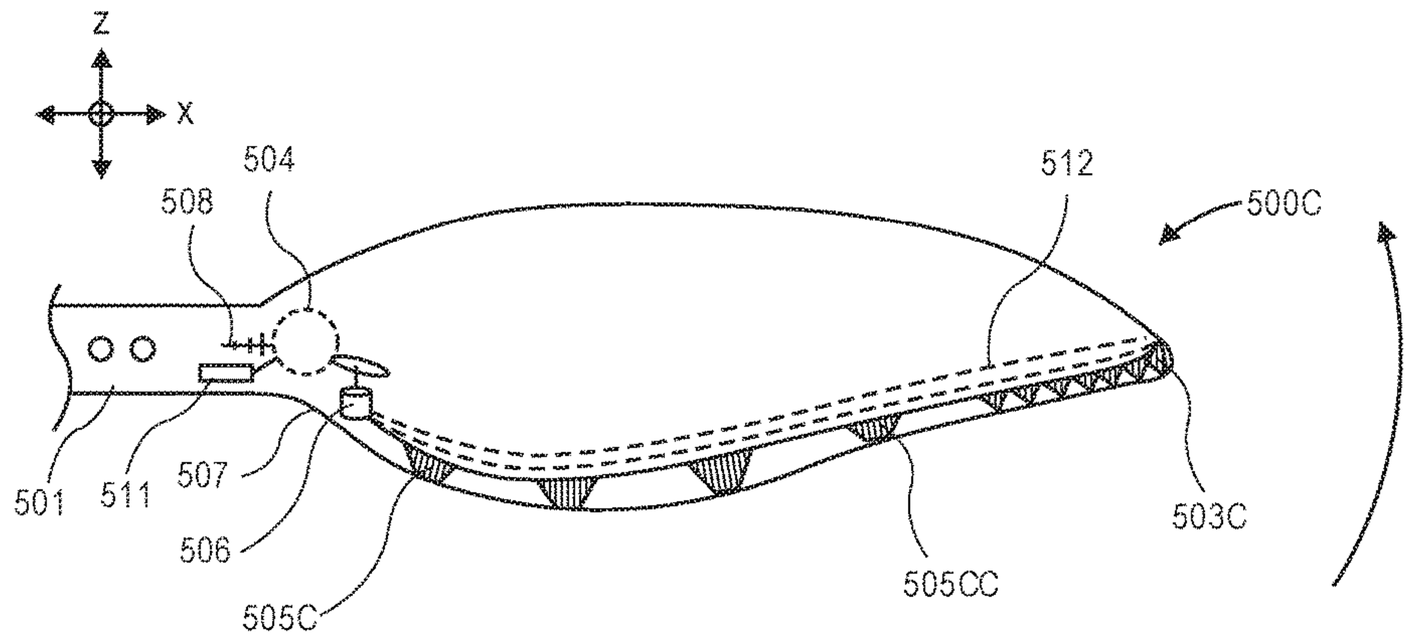
Z
X
504
508
512
500C
501
511
507
506
505C
505CC
503C

FIG. 5C

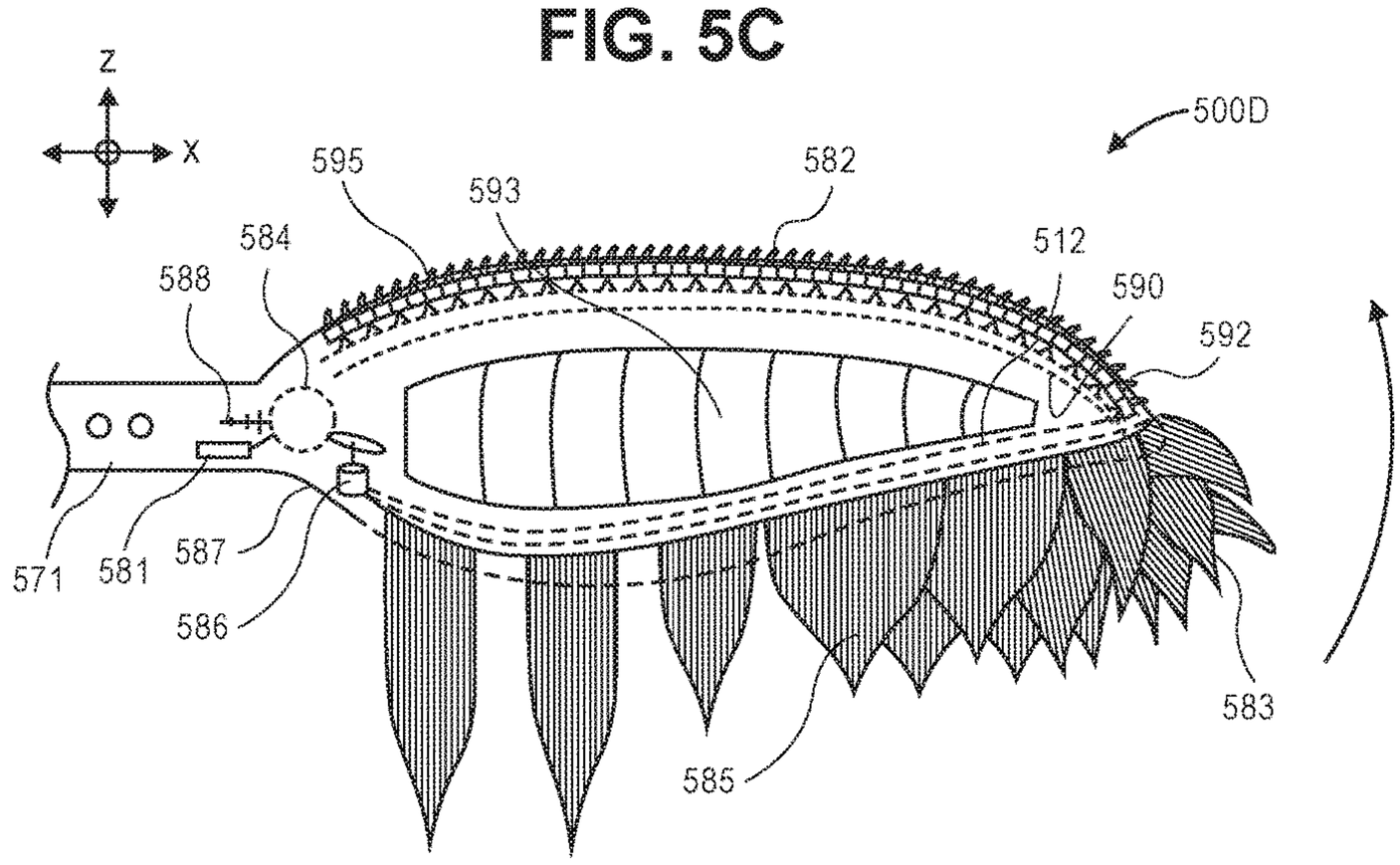
Z
X
500D
595
593
582
584
588
512
590
592
571
581
587
586
585
583

FIG. 5D

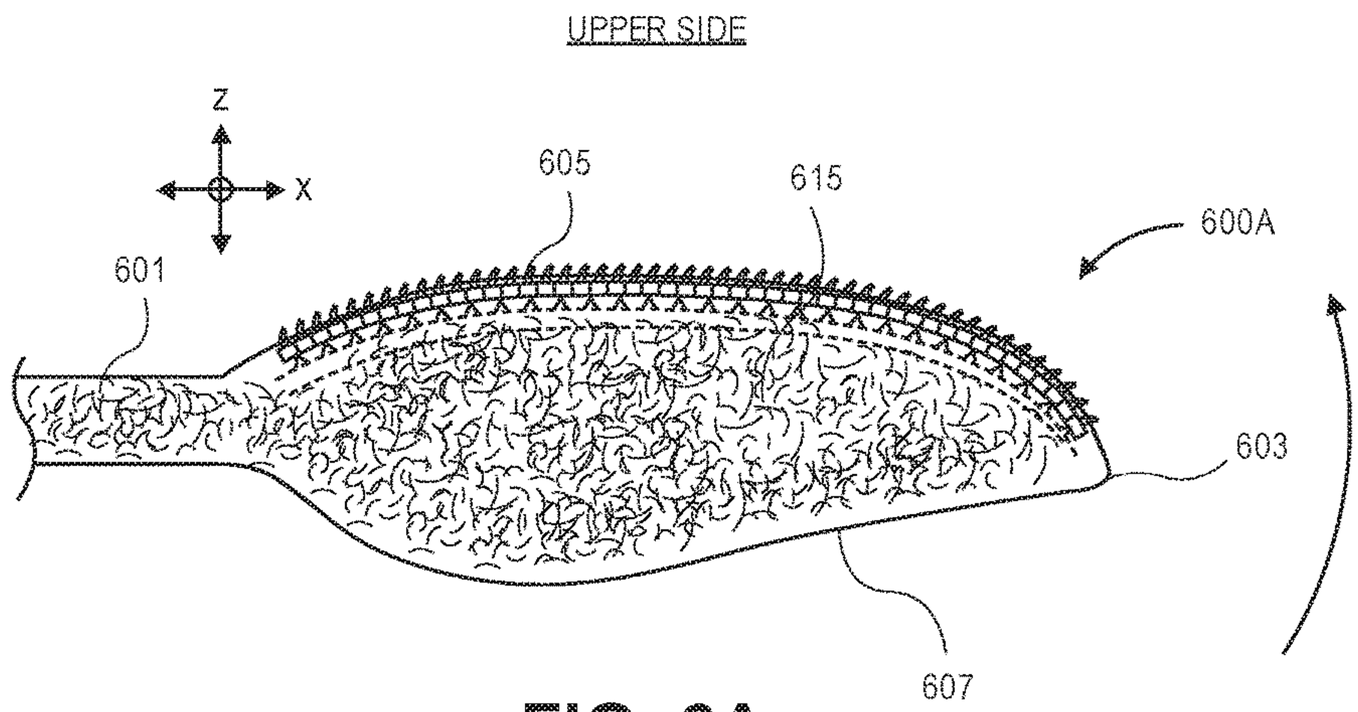
UPPER SIDE
Z
X
605
615
600A
601
603
607

FIG. 6A

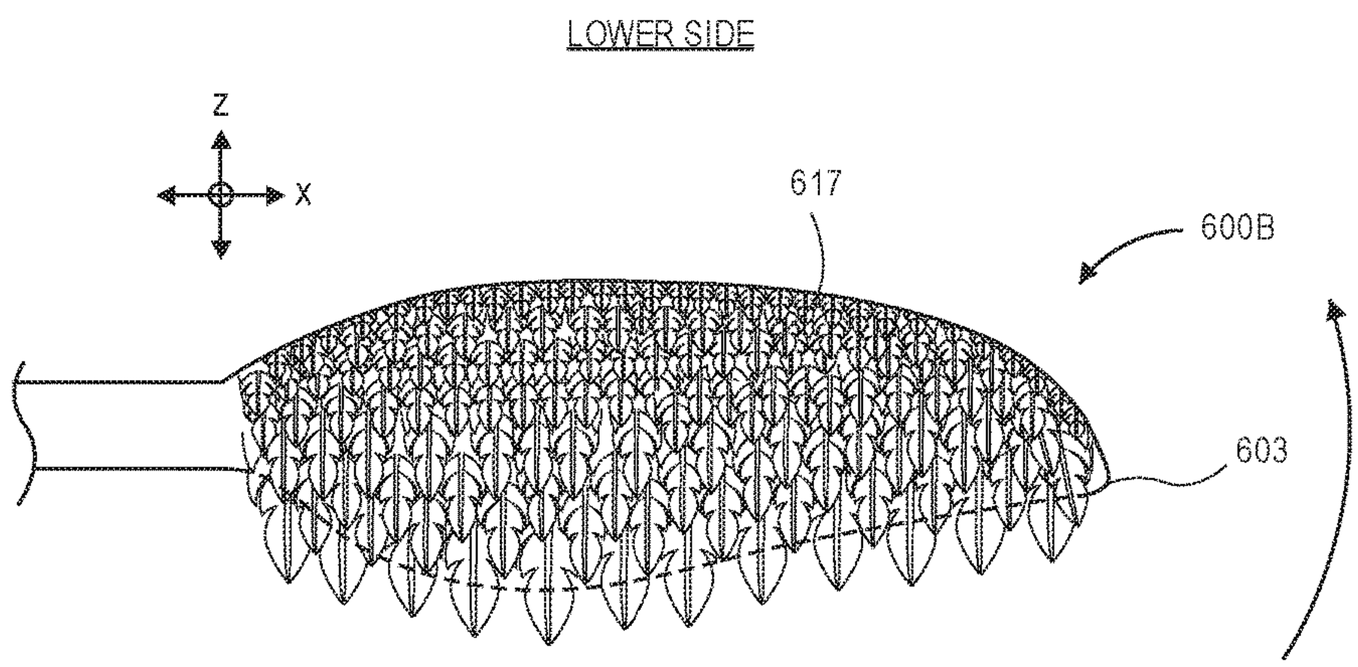
LOWER SIDE
Z
X
617
600B
603

FIG. 6B

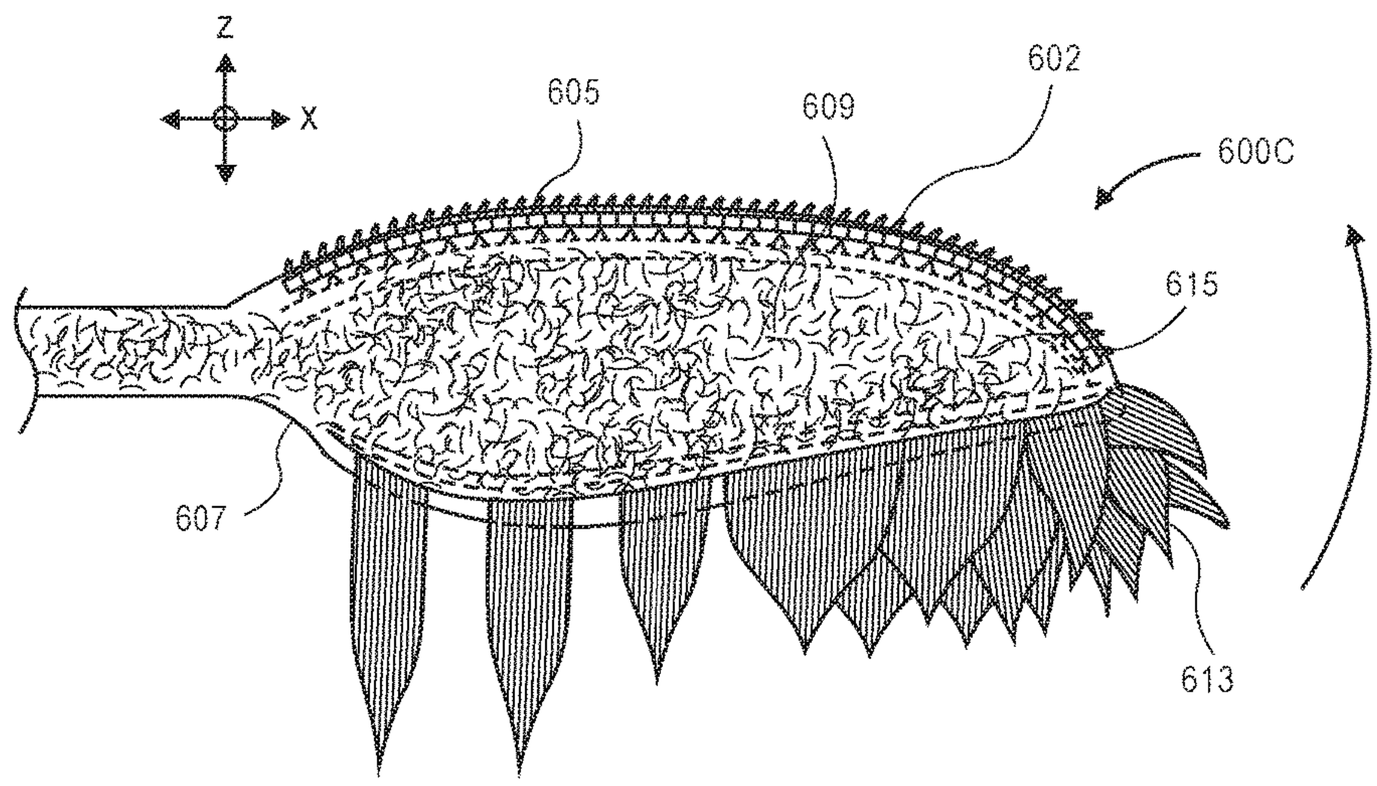
Z
X
605
609
602
600C
615
607
613

FIG. 6C

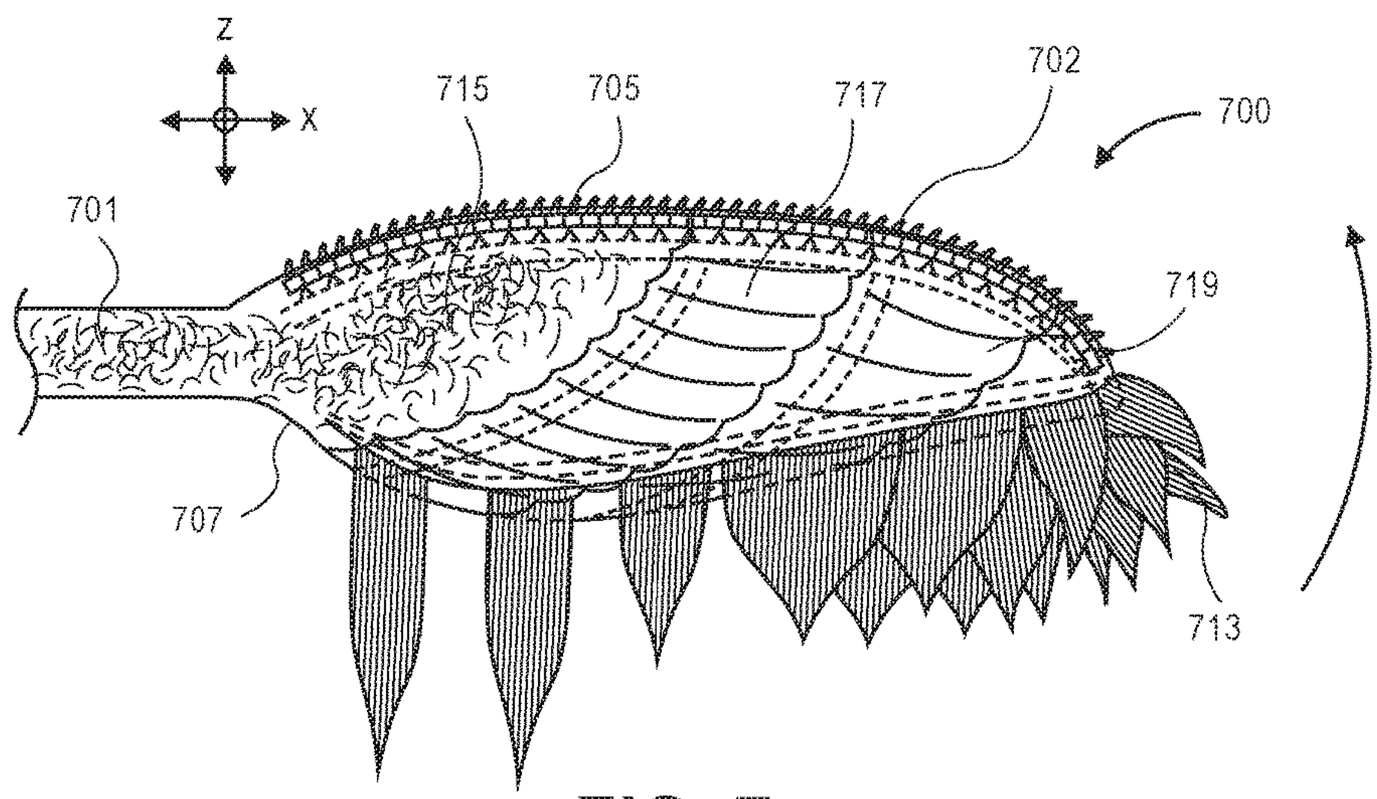
Z
X
715
705
717
702
700
701
719
707
713

FIG. 7

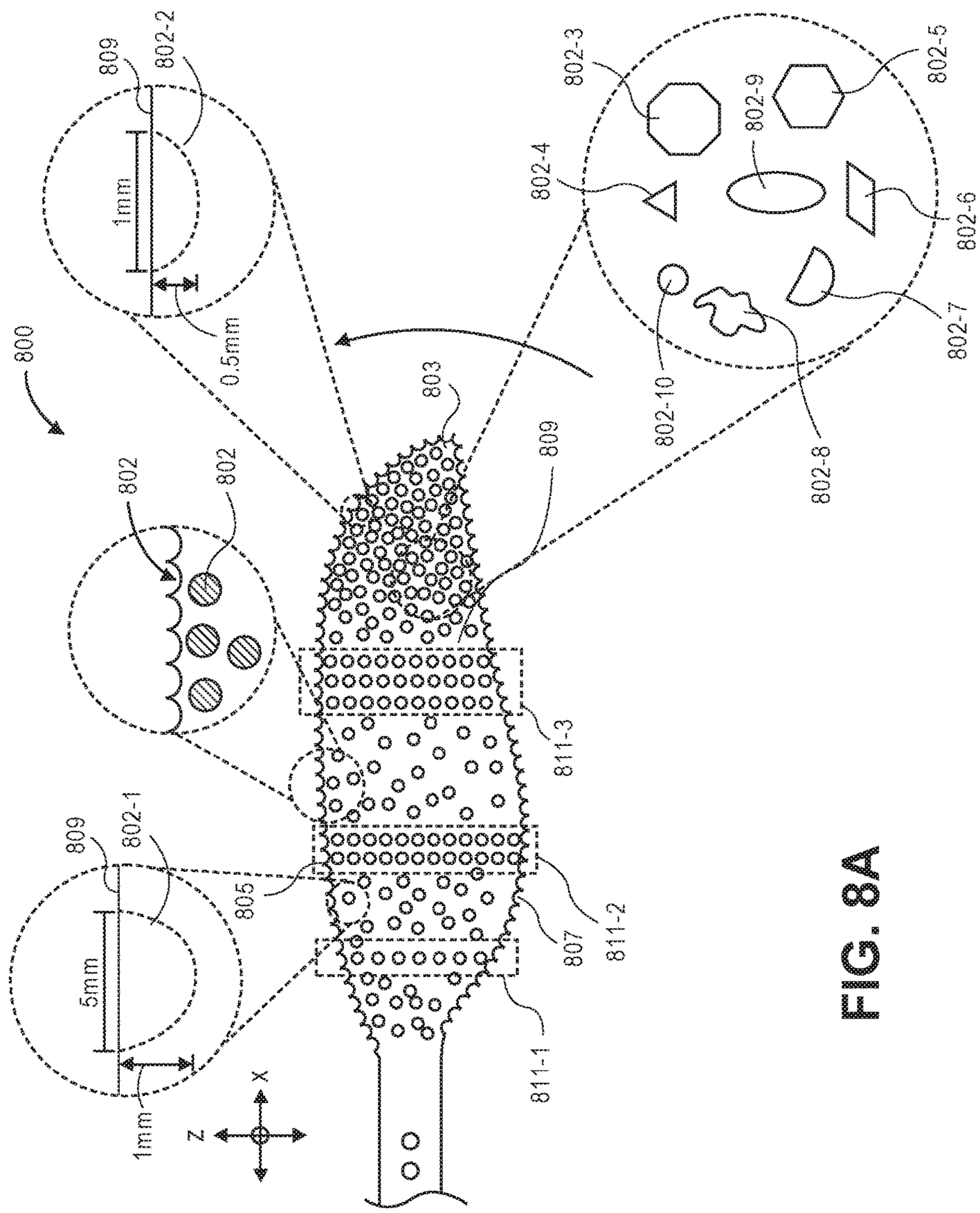
800
809
802-2
1mm
0.5mm
802-3
802-5
802-9
802-4
802-6
802-7
802-10
802-8
803
809
802
802
811-3
809
802-1
805
807
811-2
5mm
1mm
811-1
Z
X

FIG. 8A

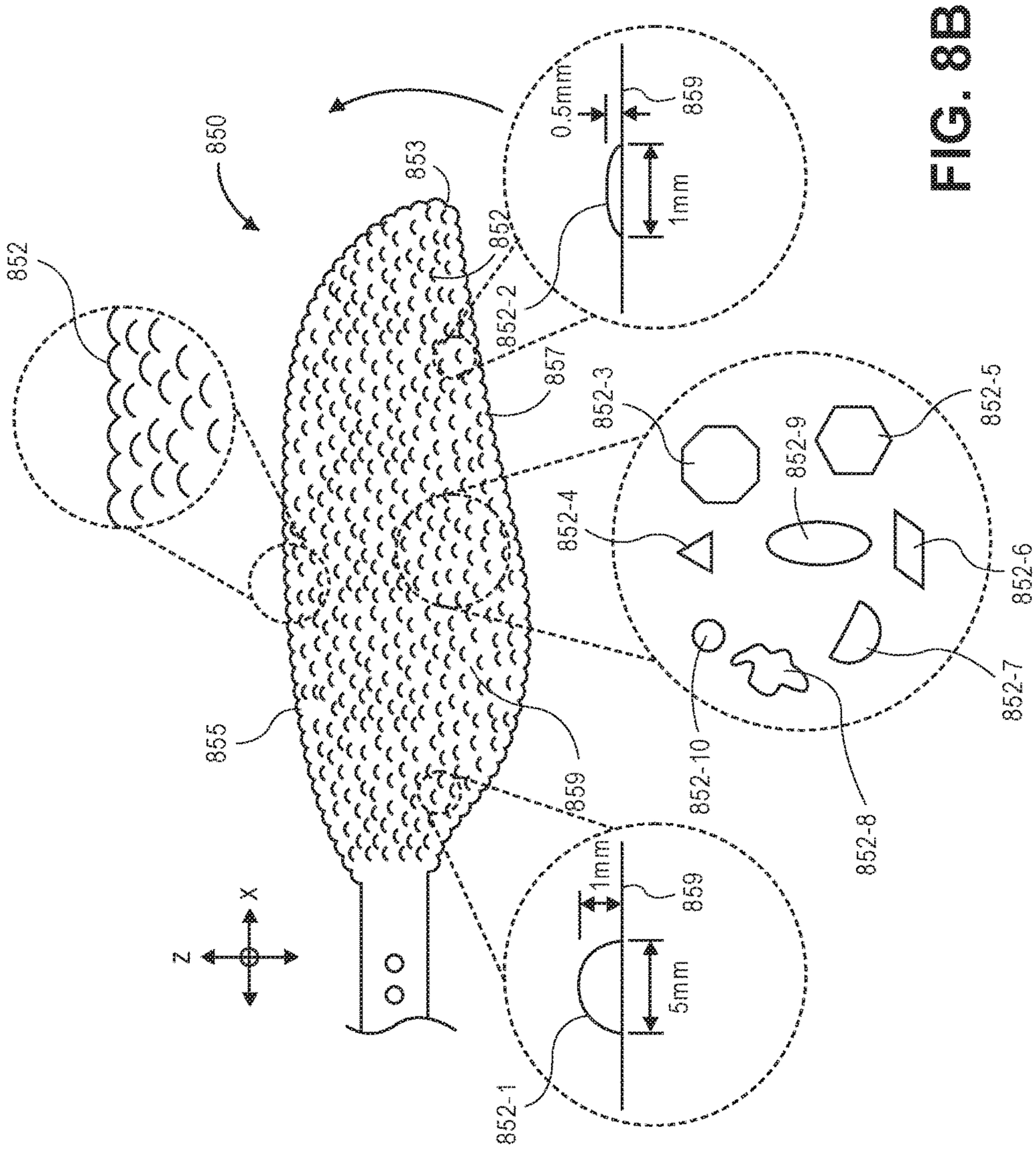
850
852
853
852
852-2
0.5mm
859
1mm
857
852-3
852-9
852-5
852-4
852-6
852-7
852-10
852-8
855
859
1mm
859
5mm
852-1
Z
X

FIG. 8B

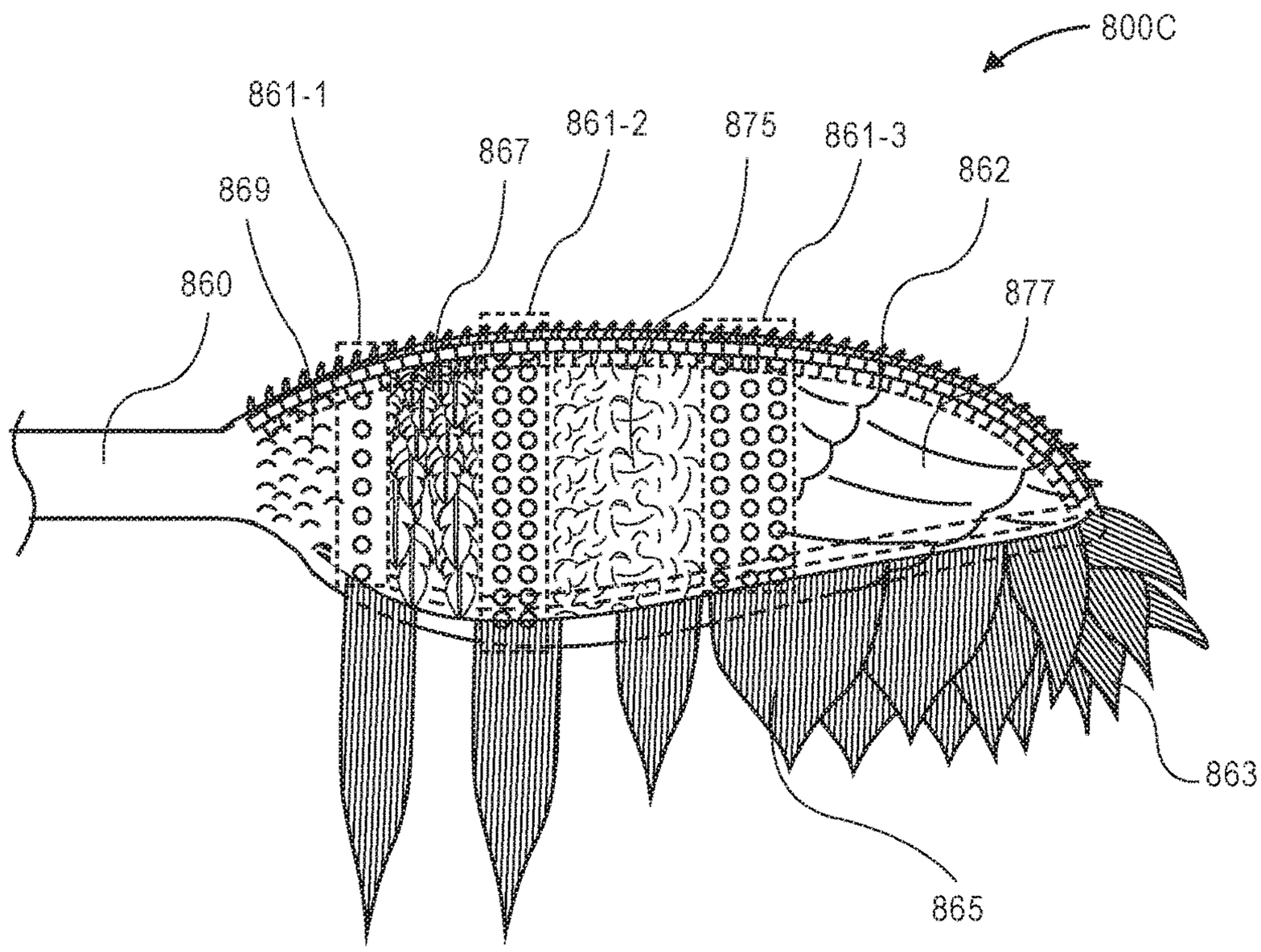

FIG. 8C

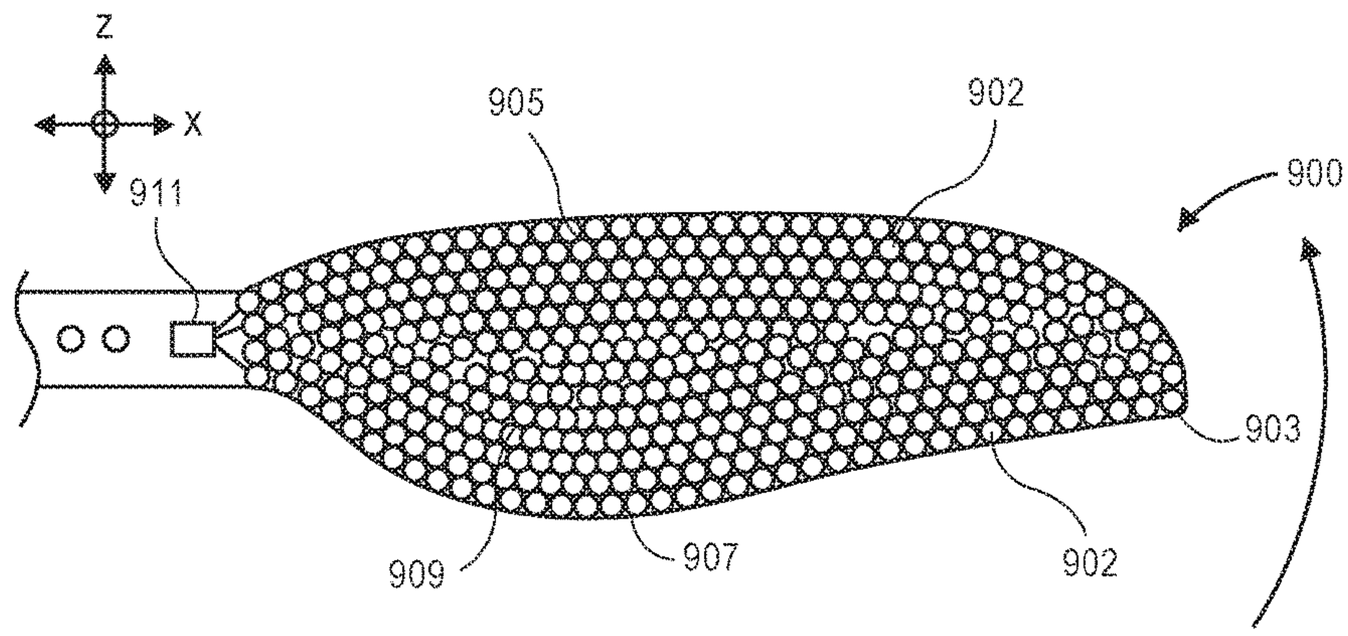

FIG. 9A

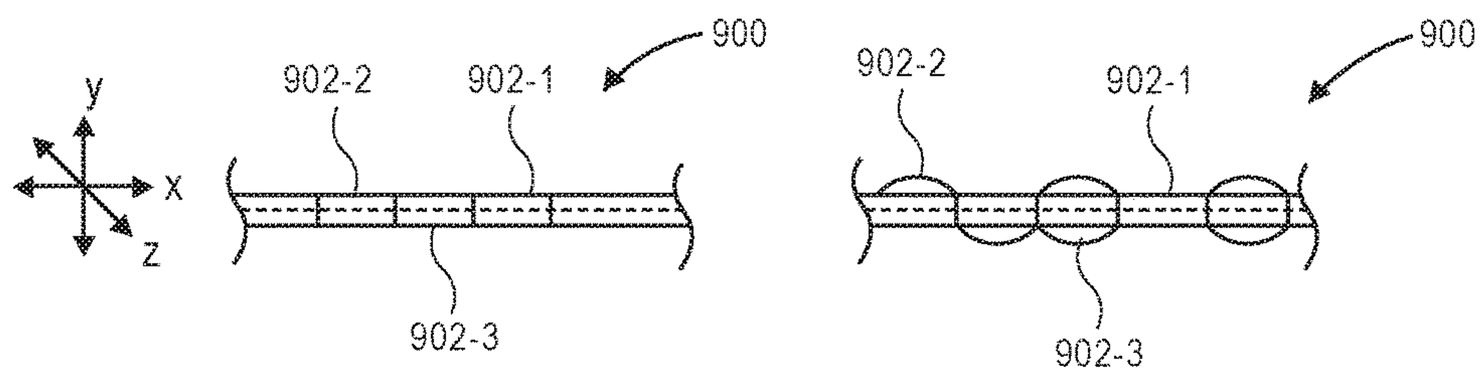

FIG. 9B

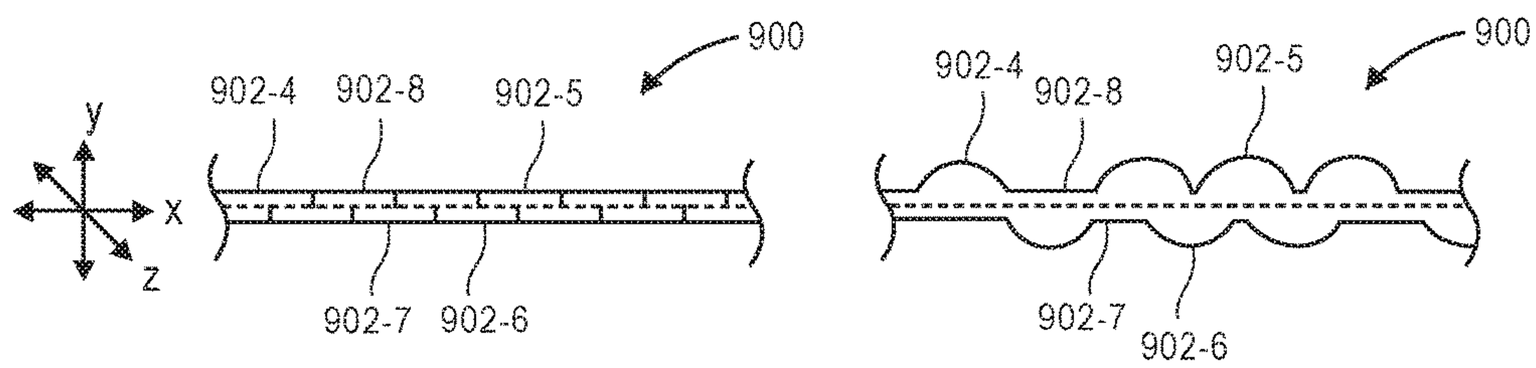

FIG. 9C

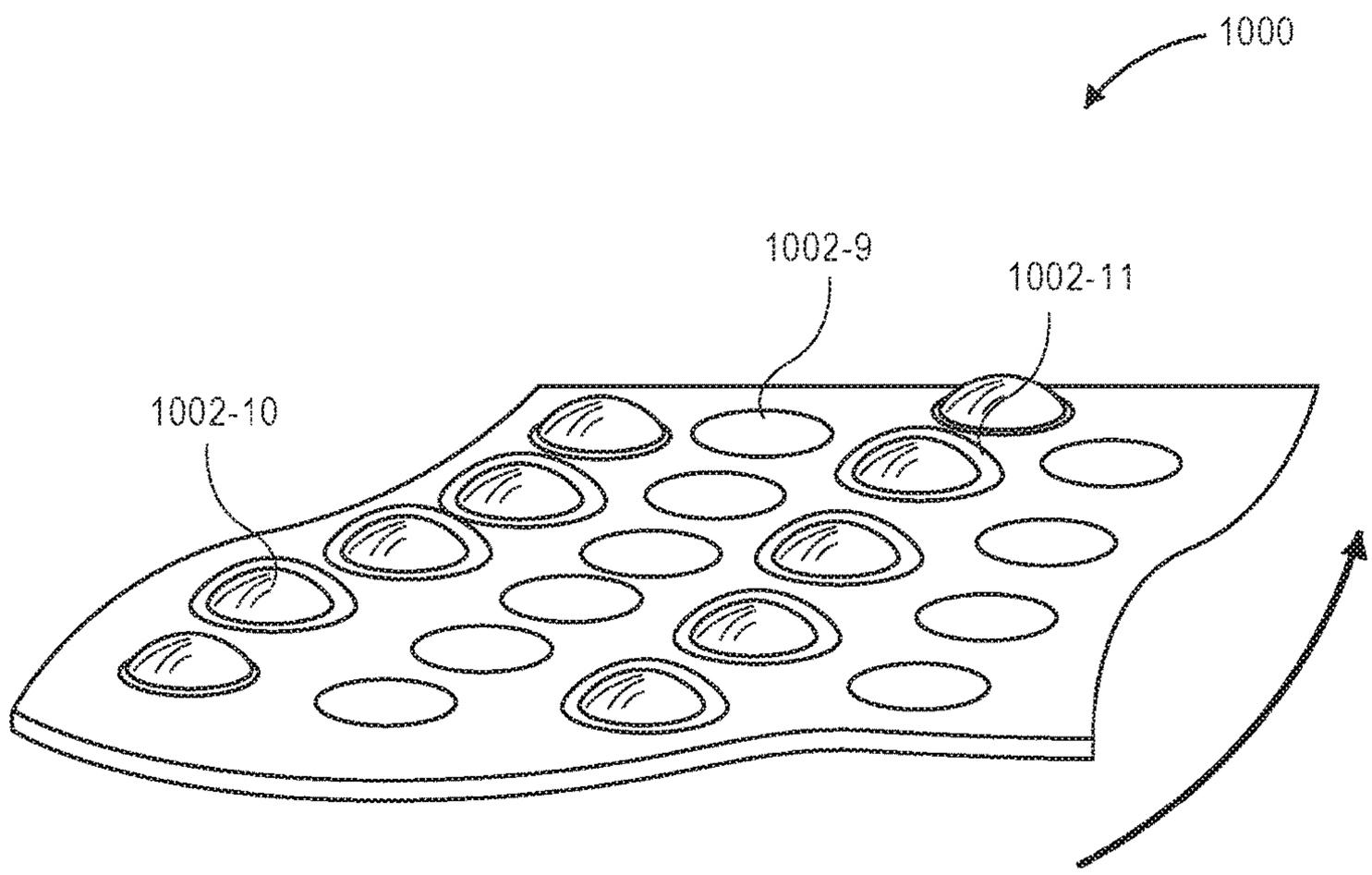

FIG. 10

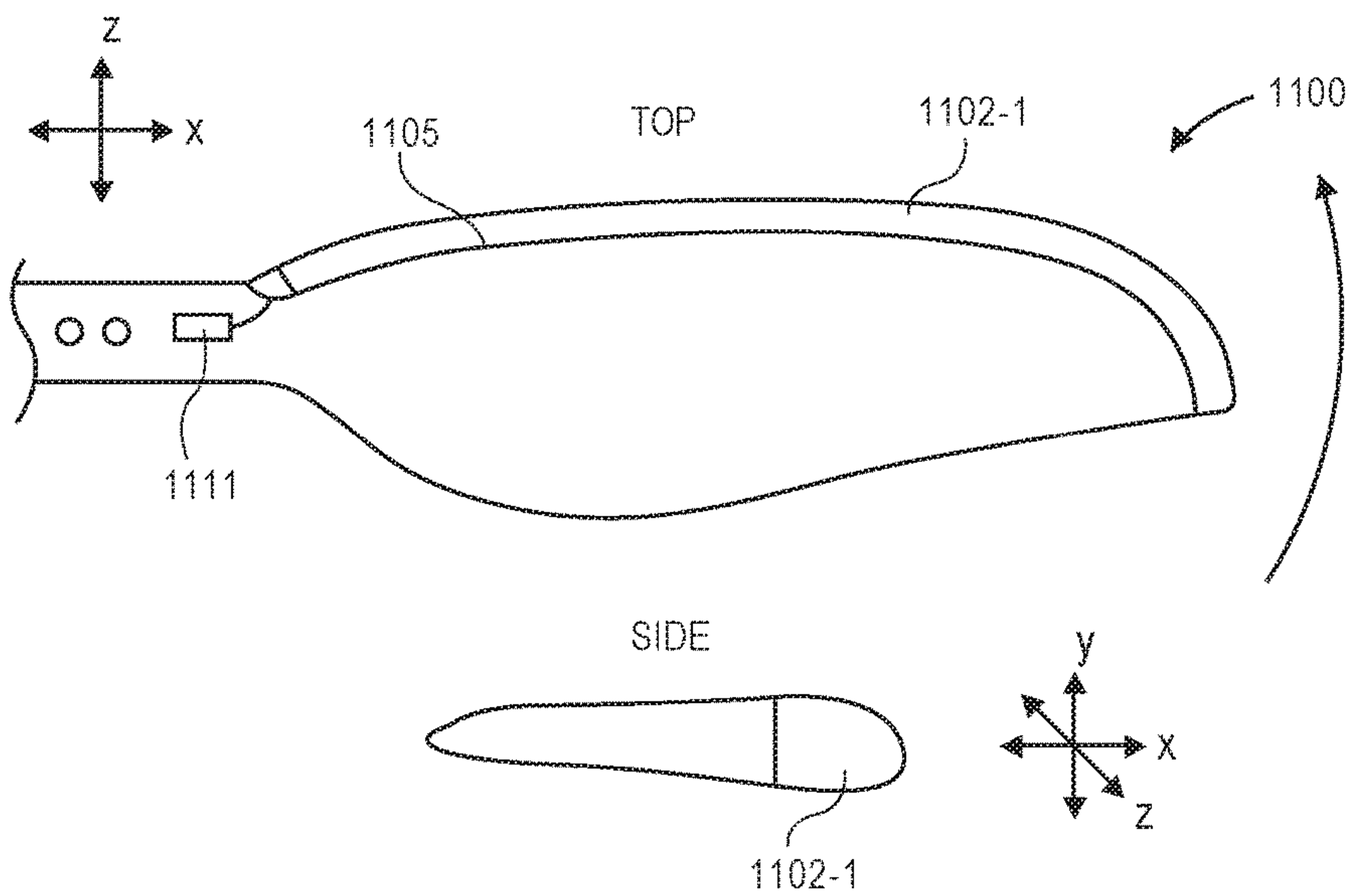

FIG. 11A

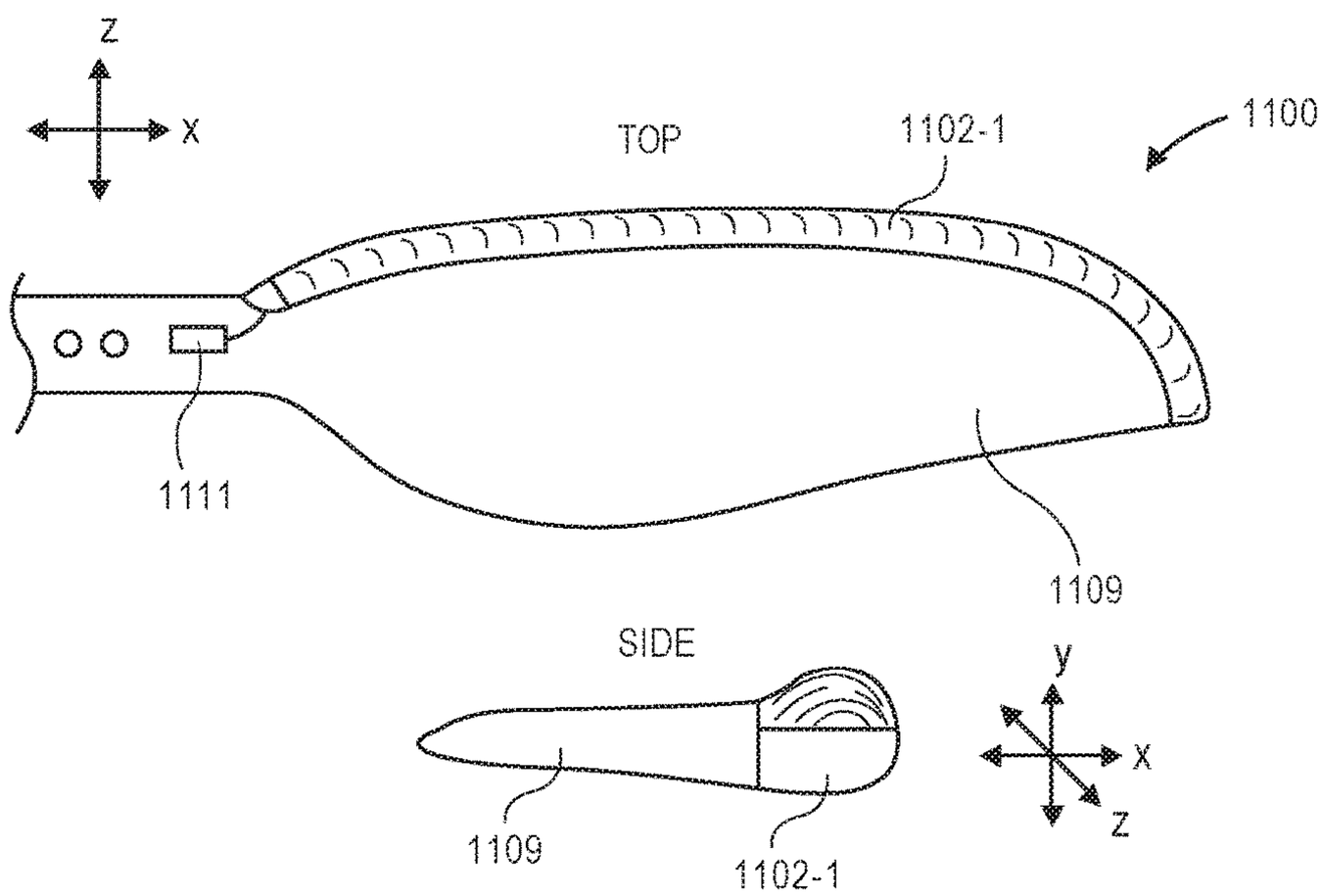

FIG. 11B

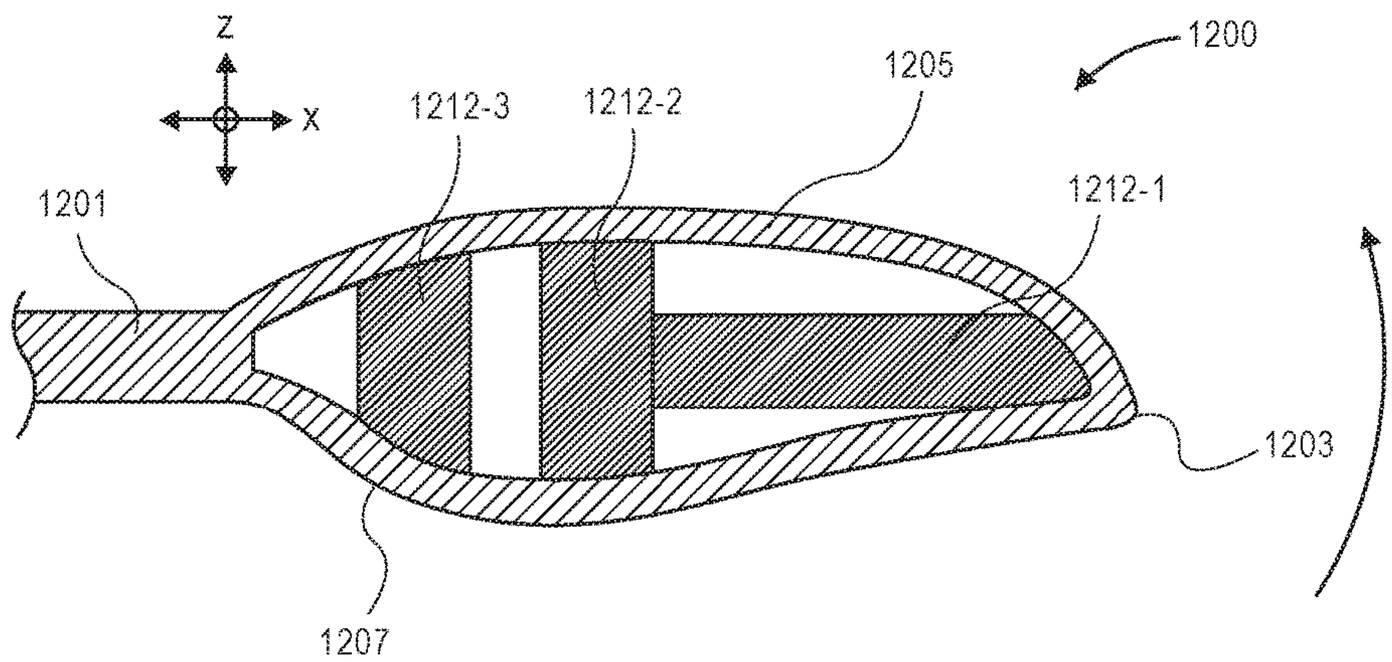

FIG. 12A

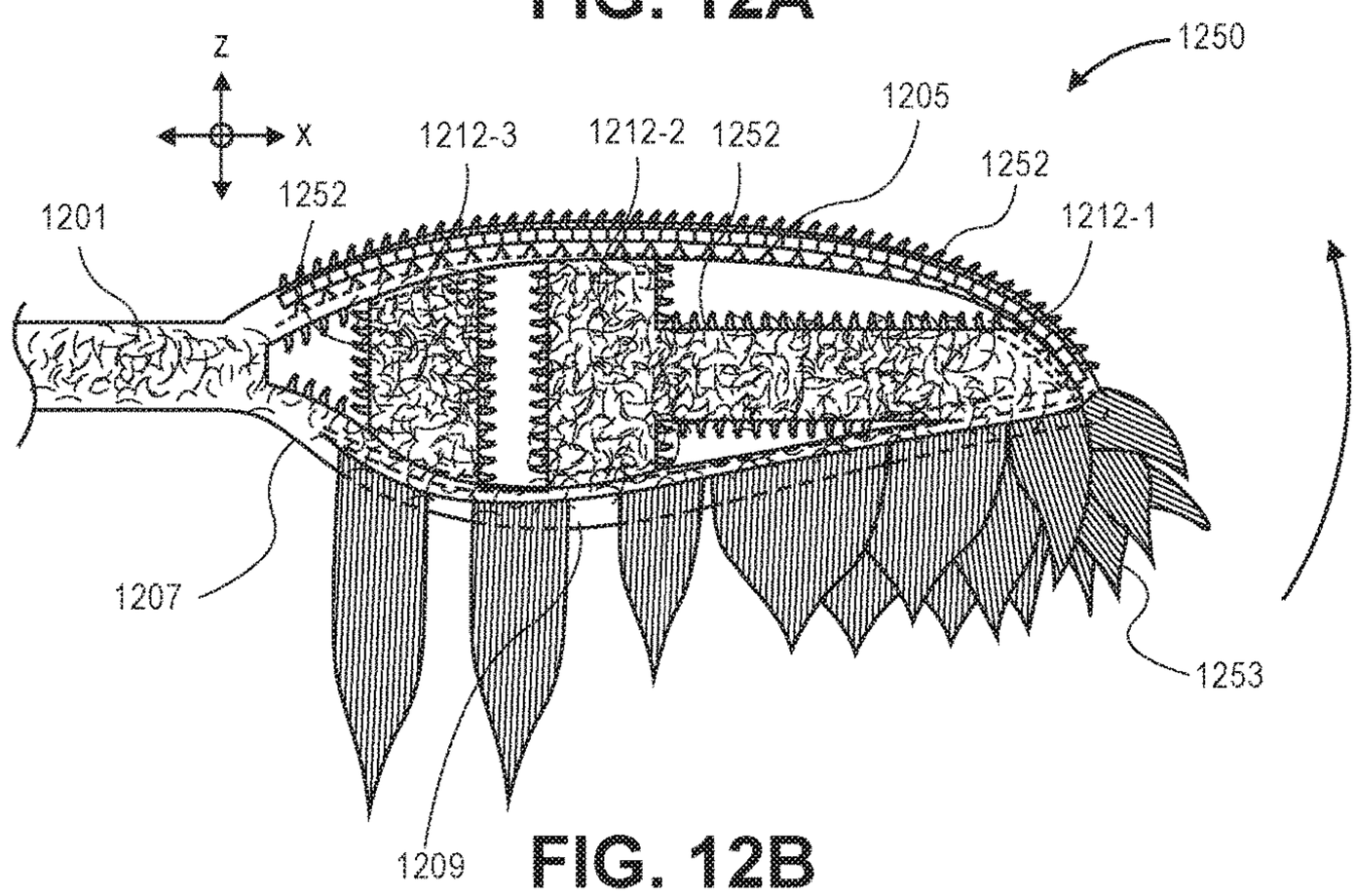

FIG. 12B

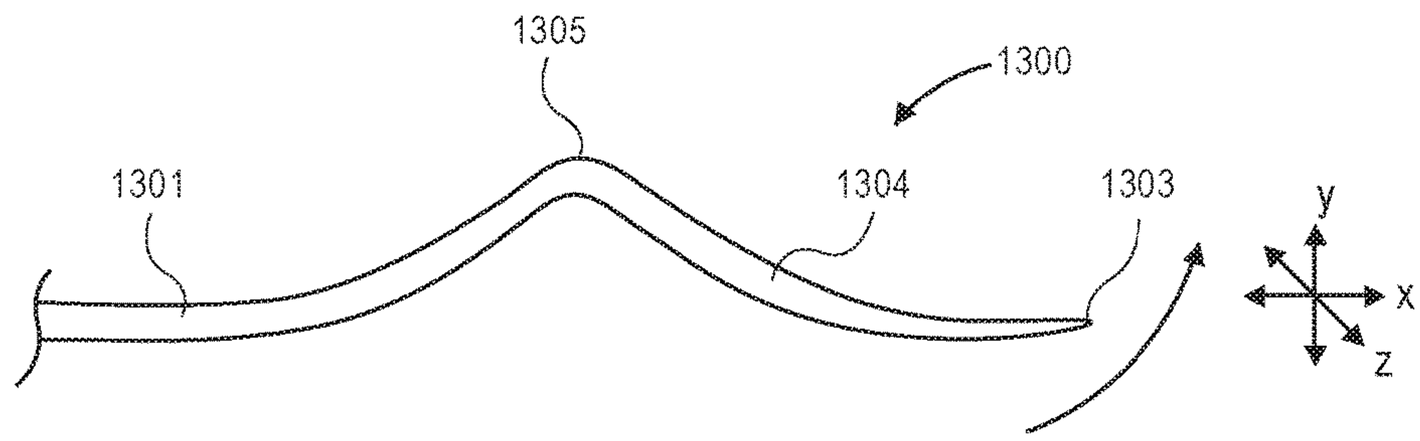

FIG. 13A

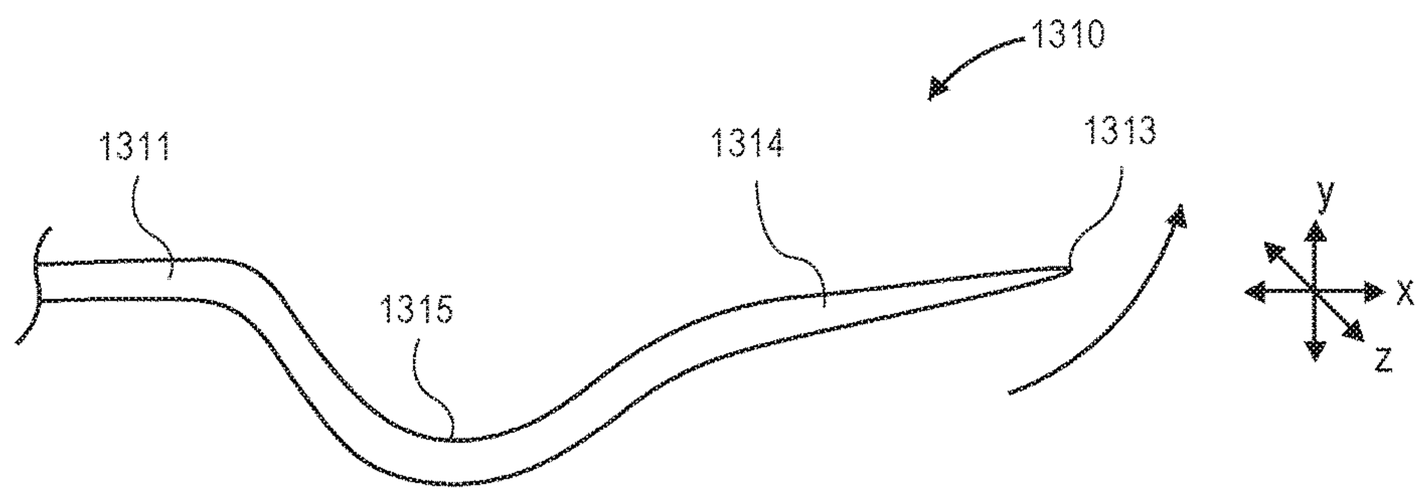

FIG. 13B

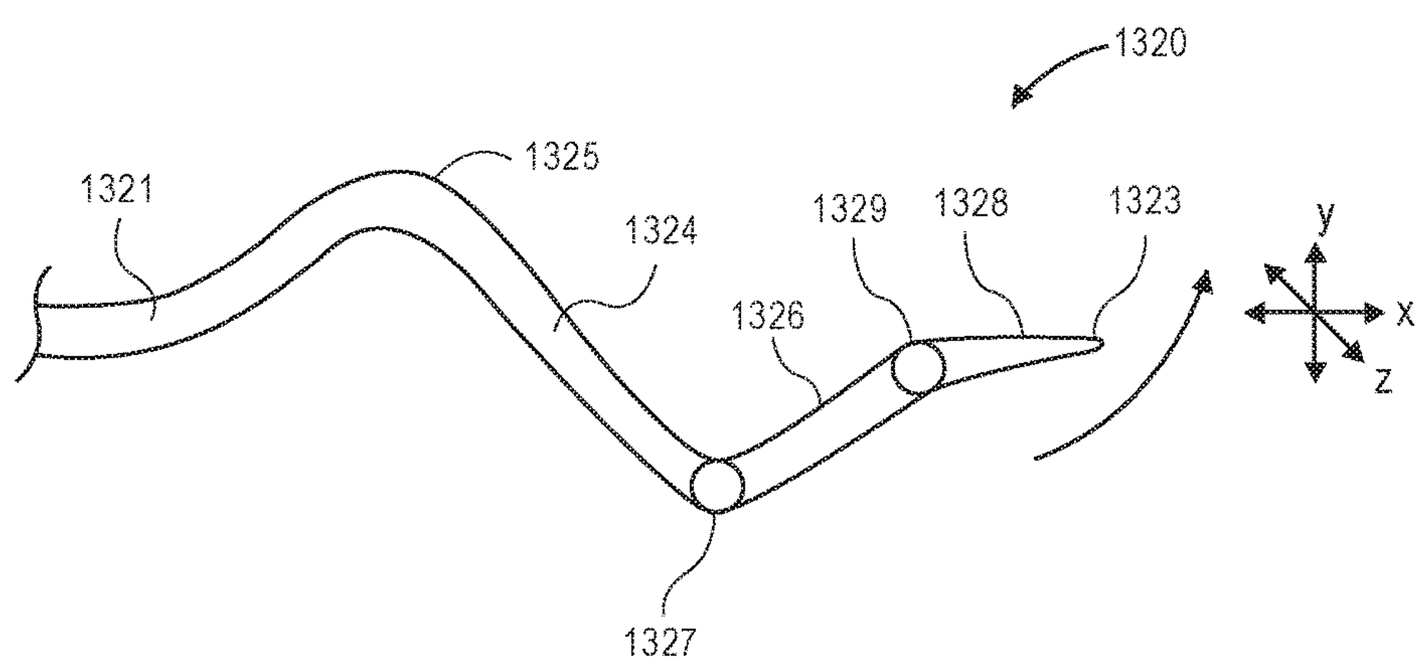

FIG. 13C

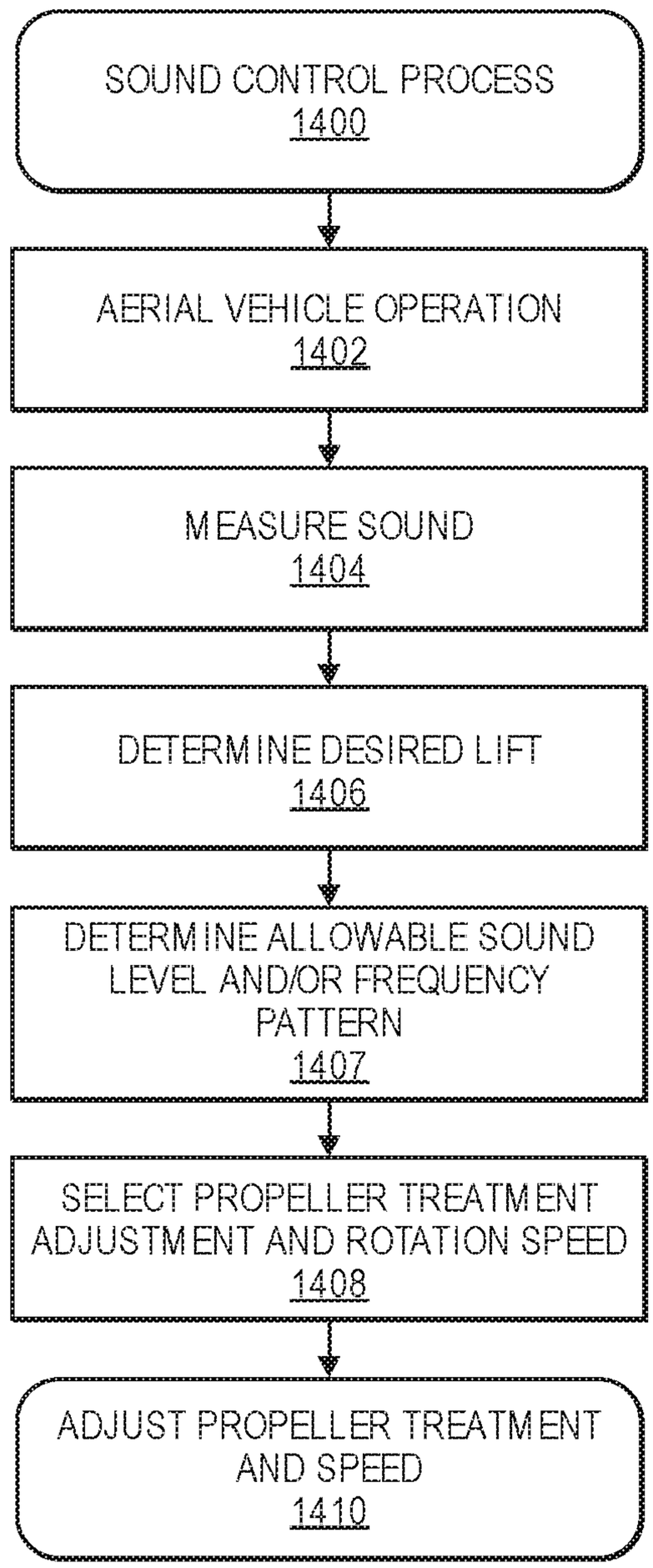
SOUND CONTROL PROCESS
1400
AERIAL VEHICLE OPERATION
1402
MEASURE SOUND
1404
DETERMINE DESIRED LIFT
1406
DETERMINE ALLOWABLE SOUND LEVEL AND/OR FREQUENCY PATTERN
1407
SELECT PROPELLER TREATMENT ADJUSTMENT AND ROTATION SPEED
1408
ADJUST PROPELLER TREATMENT AND SPEED
1410

FIG. 14

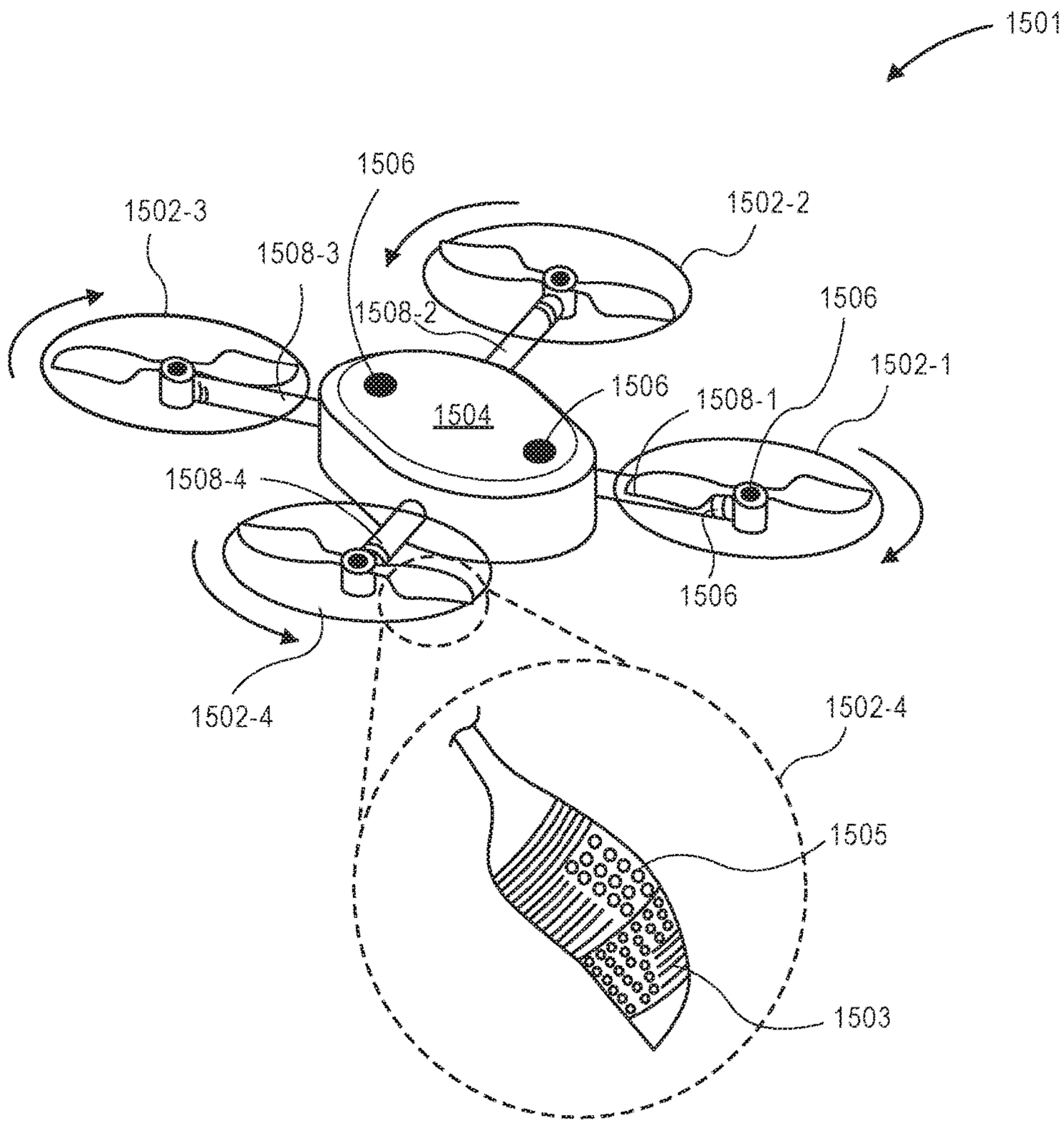
1501
1506
1502-3
1508-3
1502-2
1508-2
1506
1502-1
1506
1508-1
1504
1508-4
1506
1502-4
1502-4
1505
1503

FIG. 15

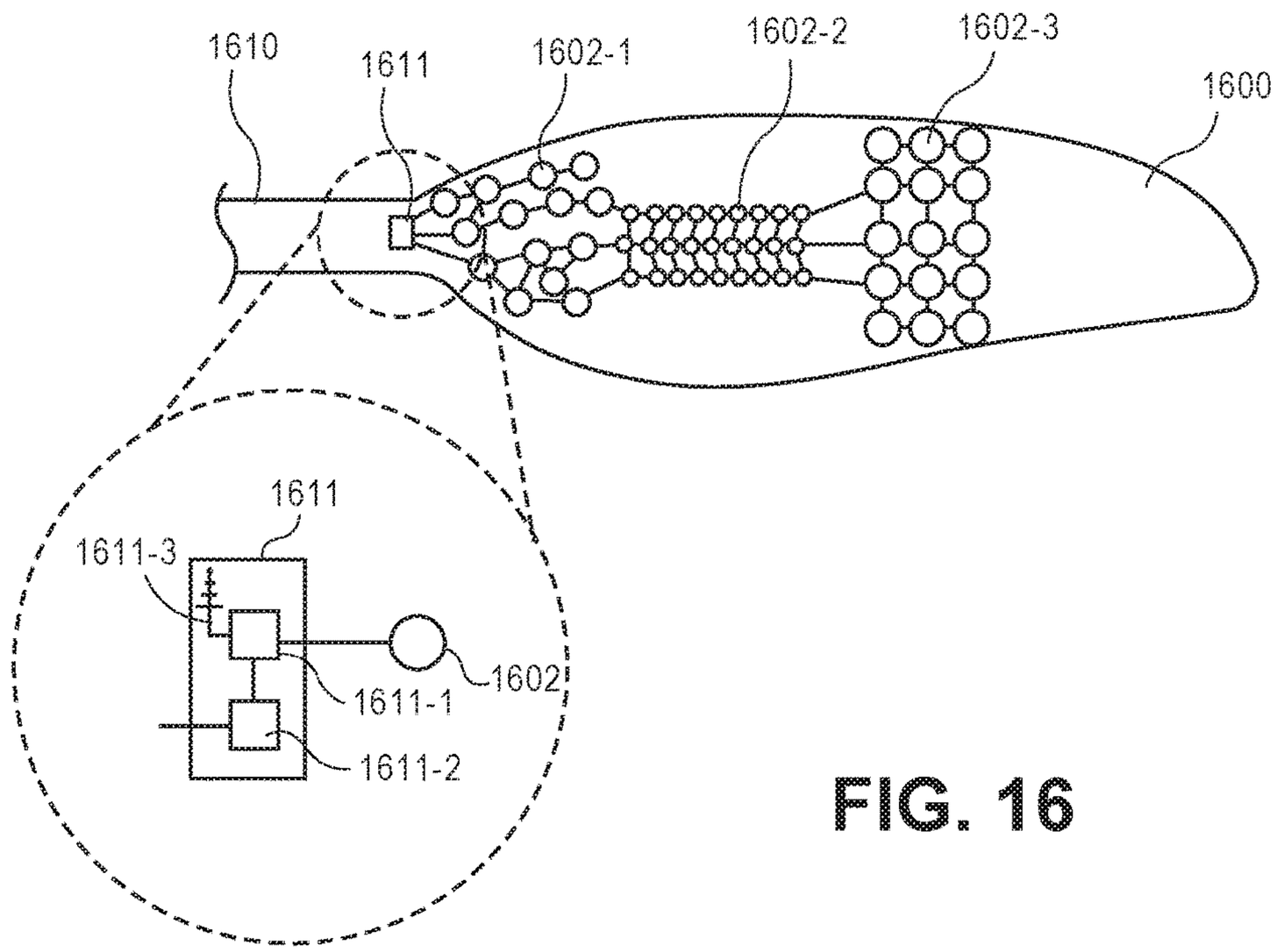
1610
1611
1602-1
1602-2
1602-3
1600
1611
1611-3
1611-1
1602
1611-2

FIG. 16

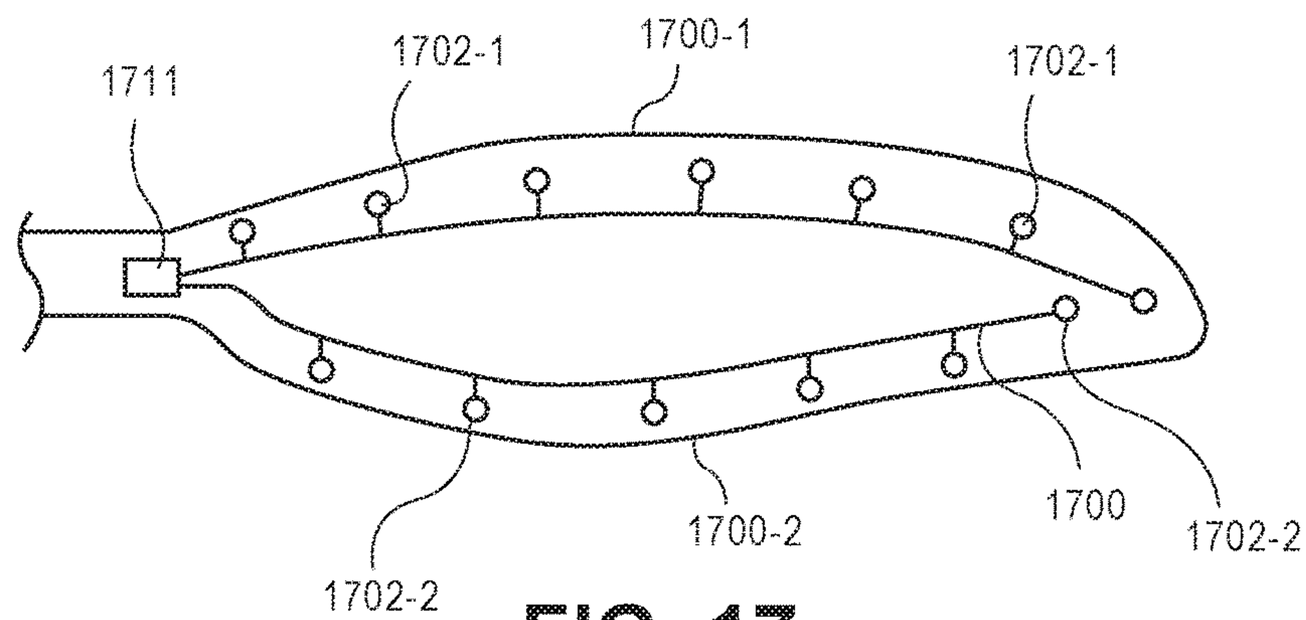
1711
1702-1
1700-1
1702-1
1700
1702-2
1700-2
1702-2

FIG. 17

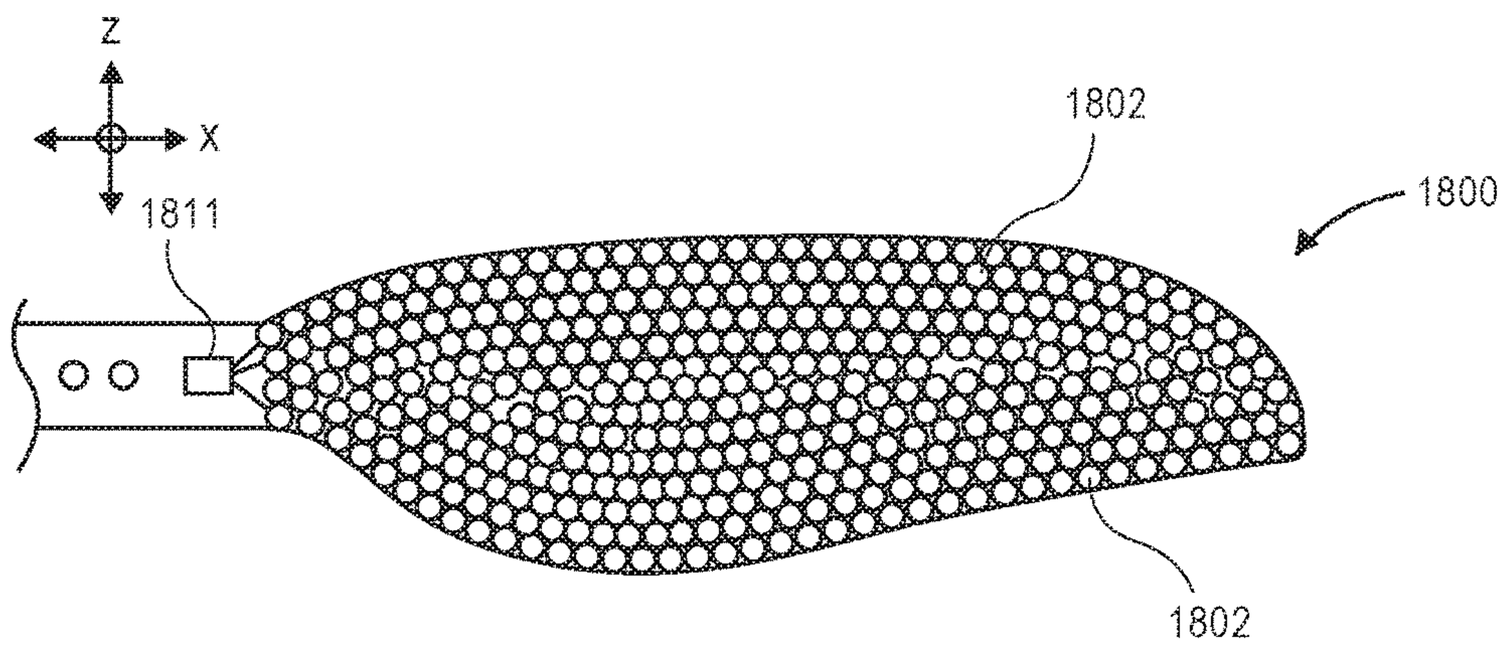

FIG. 18

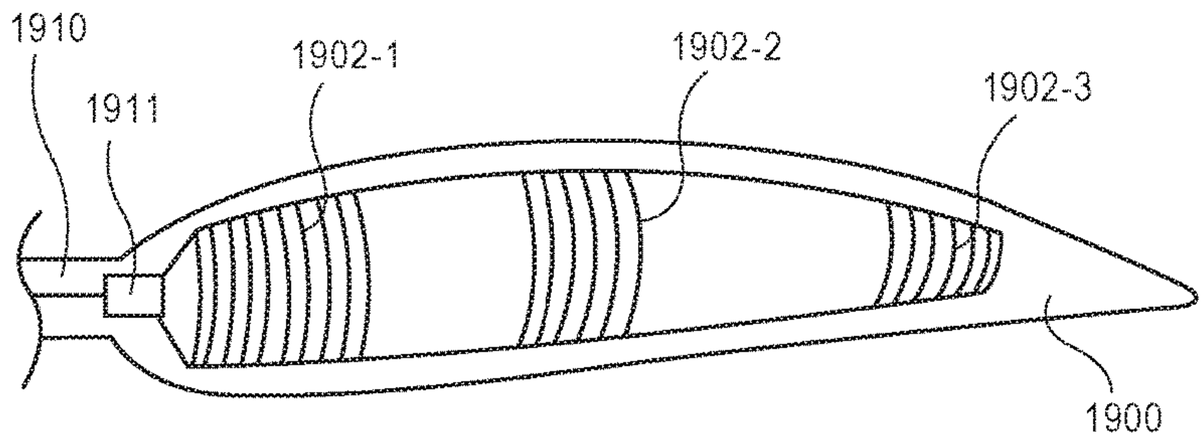

FIG. 19

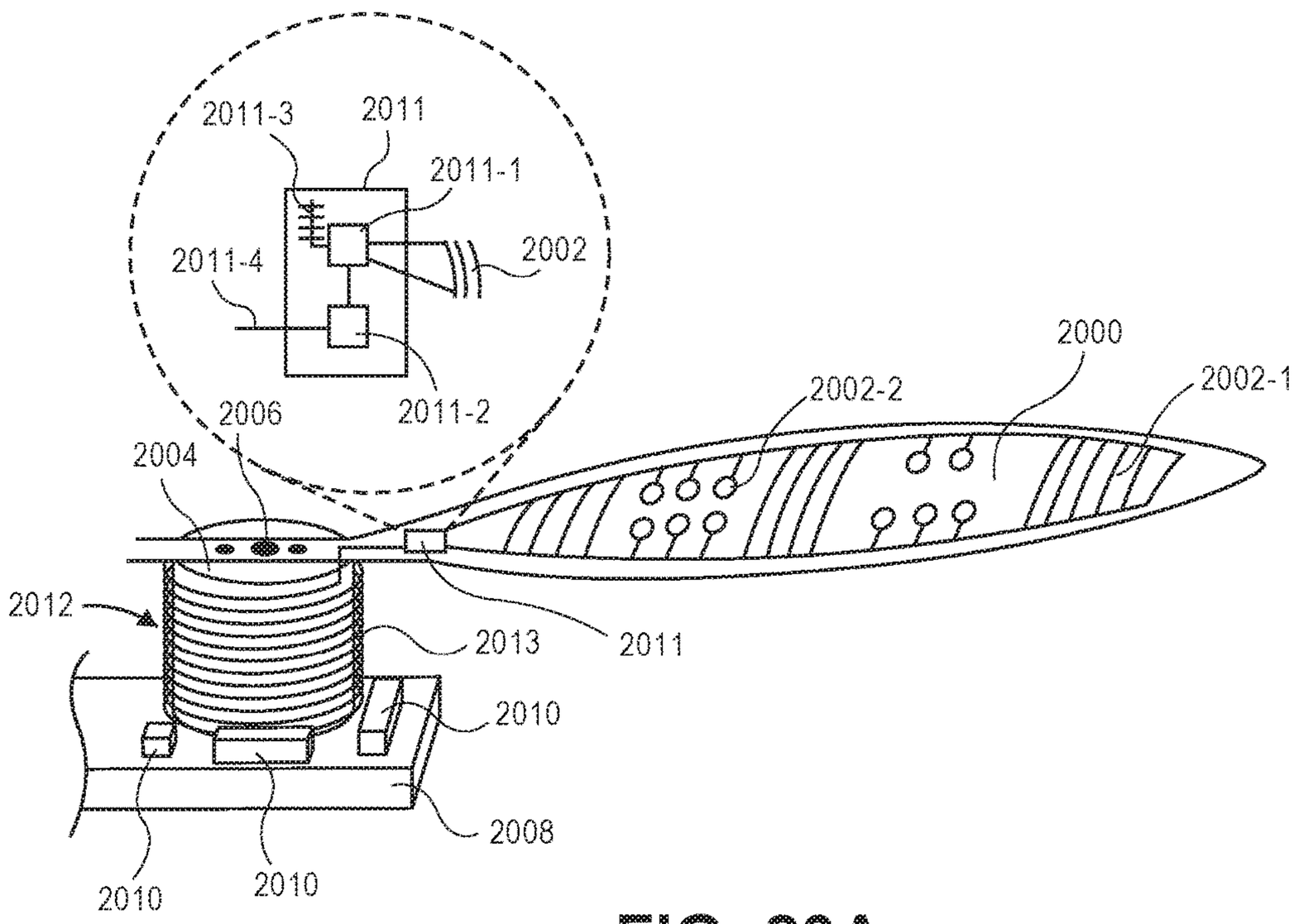

FIG. 20A

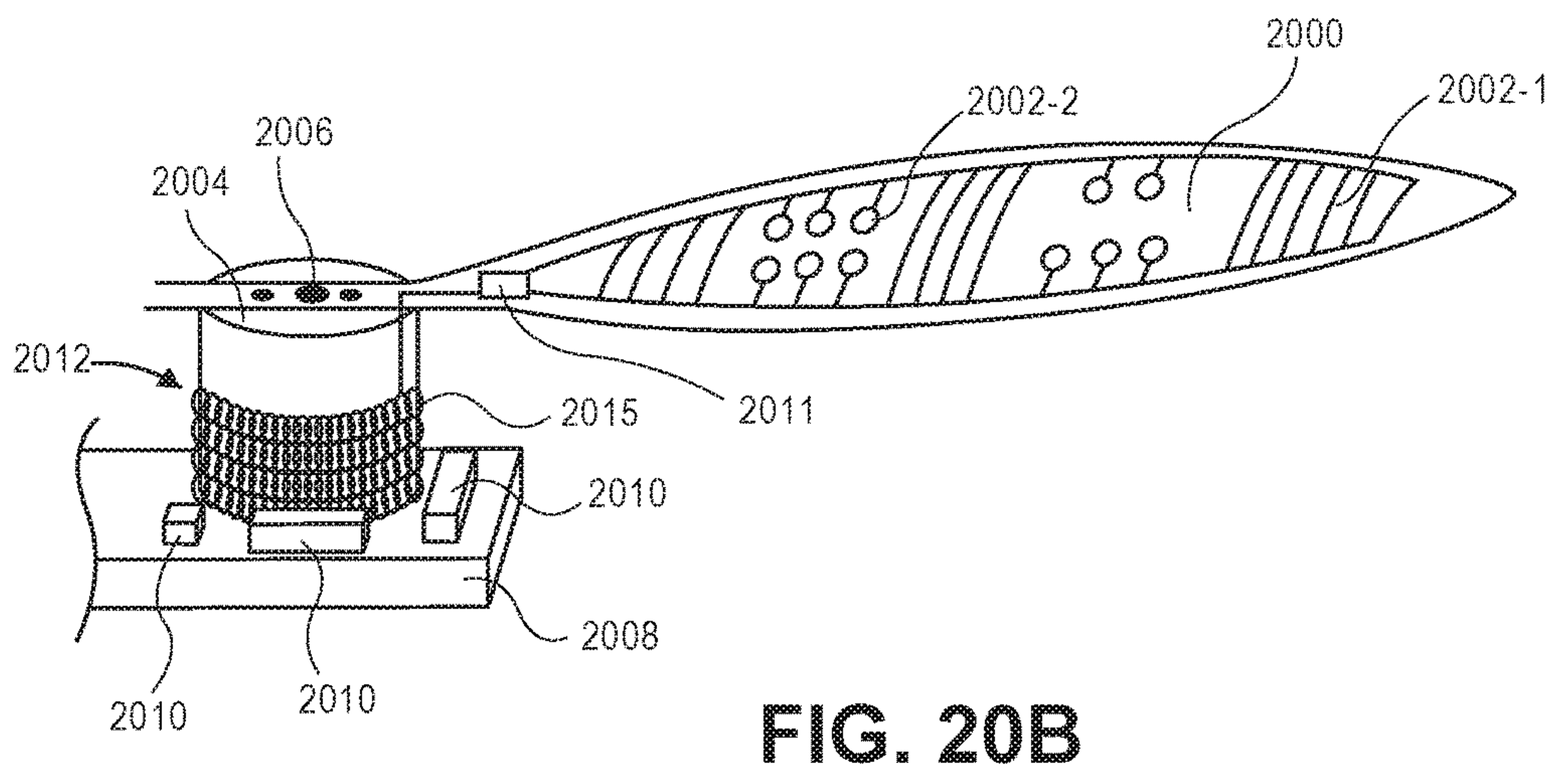
2000
2002-2
2002-1
2006
2004
2012
2015
2011
2010
2008
2010
2010

FIG. 20B

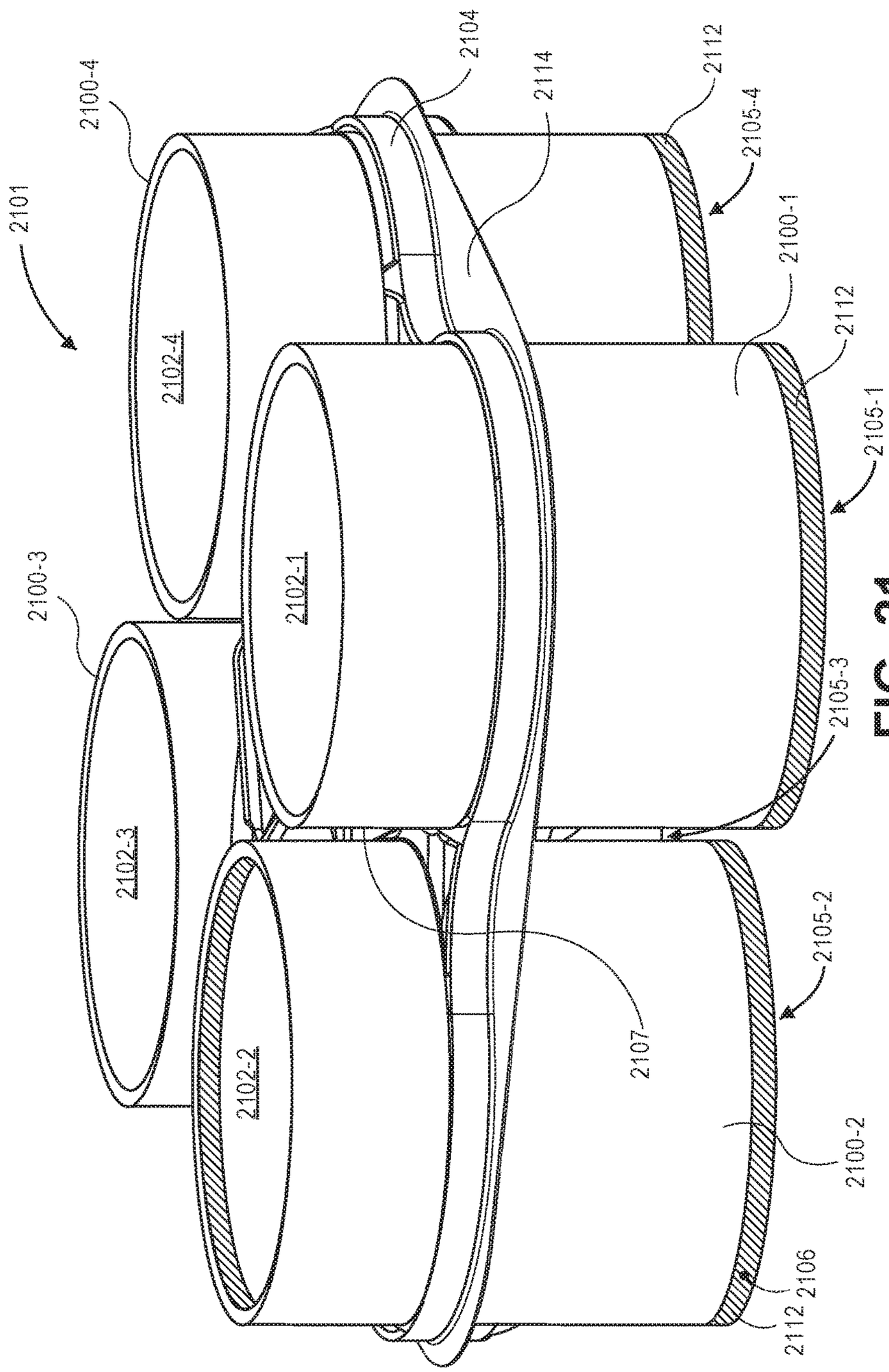
2101
2100-4
2104
2114
2112
2105-4
2100-1
2112
2105-1
2102-4
2100-3
2102-1
2105-3
2102-3
2105-2
2107
2102-2
2100-2
2106
2112

FIG. 21

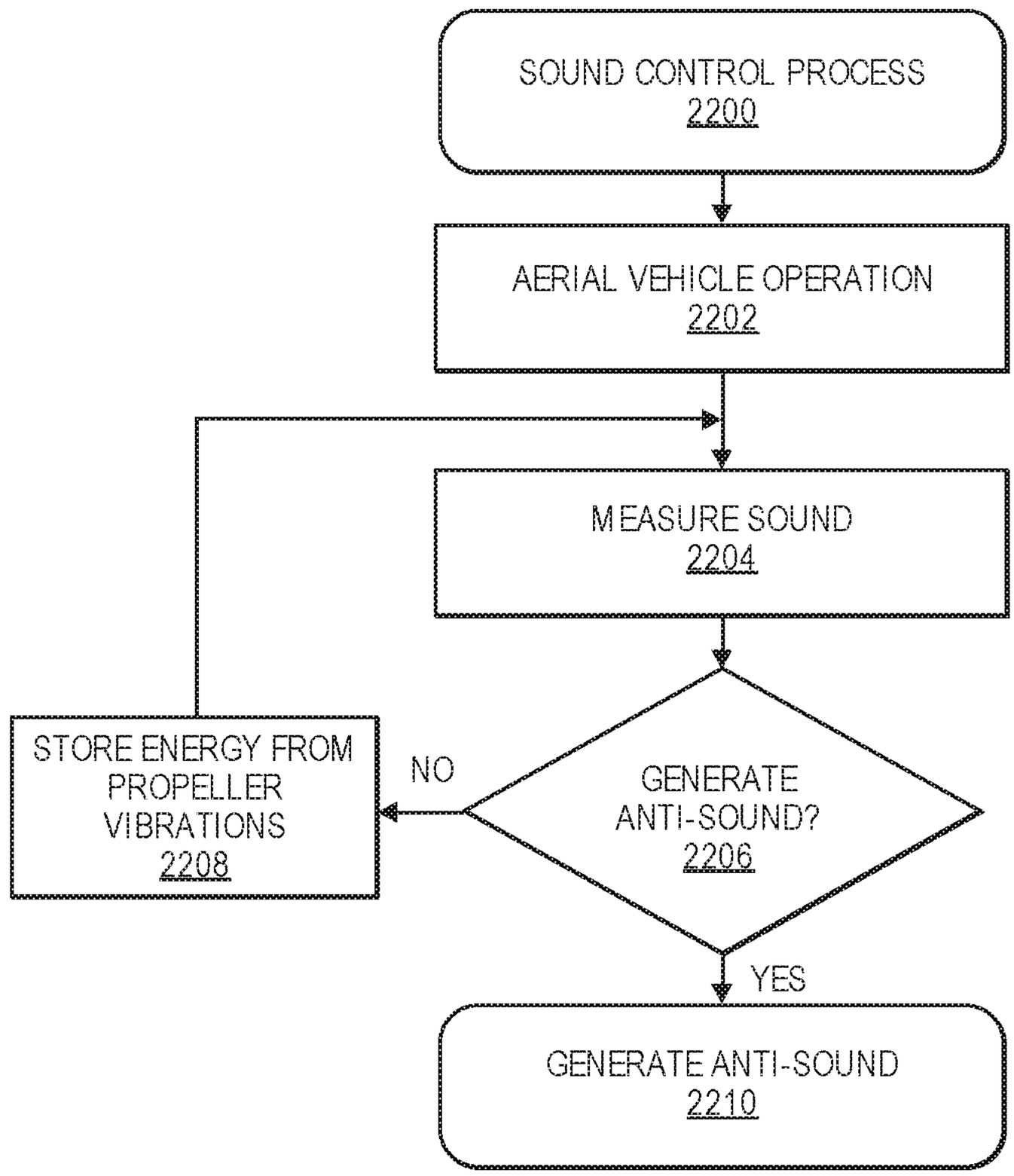
SOUND CONTROL PROCESS
2200
AERIAL VEHICLE OPERATION
2202
MEASURE SOUND
2204
GENERATE ANTI-SOUND?
2206
NO
STORE ENERGY FROM PROPELLER VIBRATIONS
2208
YES
GENERATE ANTI-SOUND
2210

FIG. 22

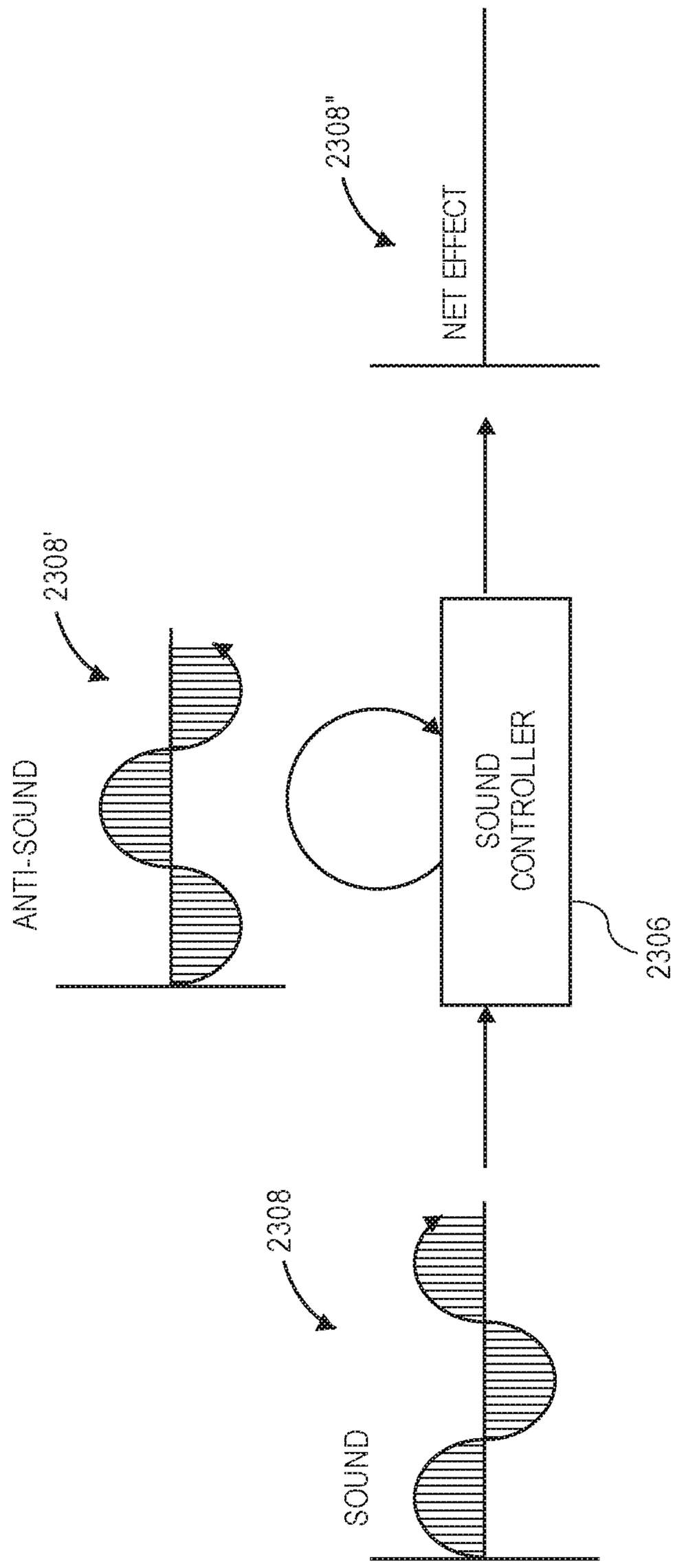
2308"
NET EFFECT
2308'
ANTI-SOUND
SOUND CONTROLLER
2306
2308
SOUND

FIG. 23A

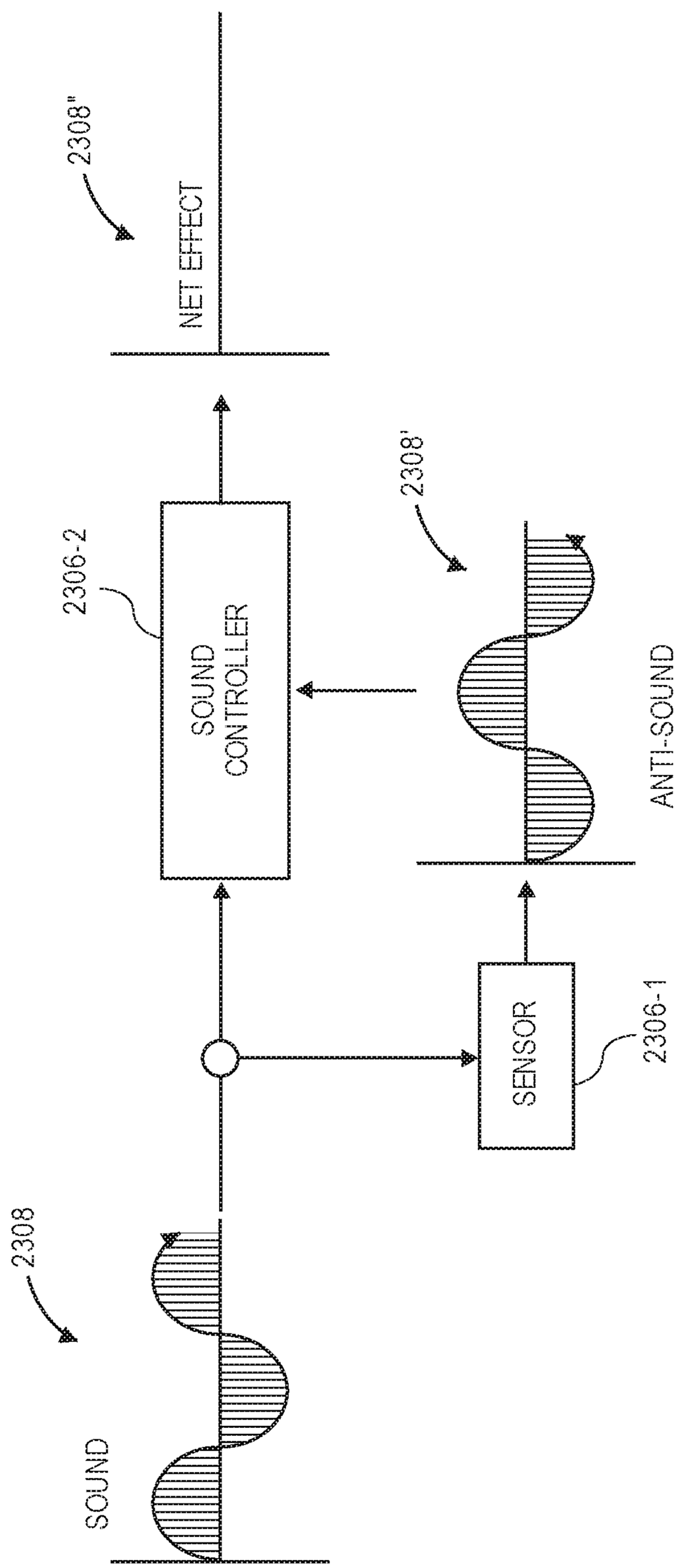
2308"
NET EFFECT
2306-2
SOUND CONTROLLER
2308'
ANTI-SOUND
SENSOR
2306-1
2308
SOUND

FIG. 23B

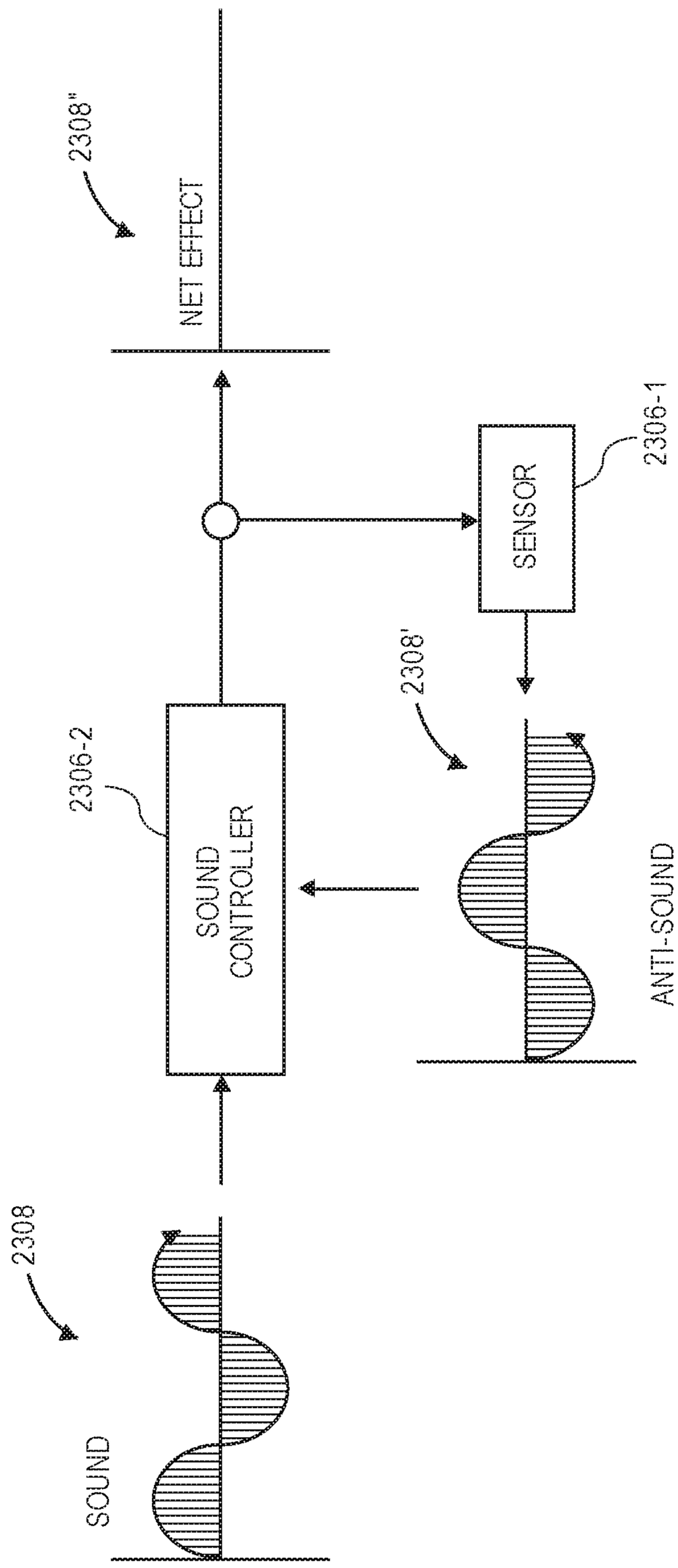
2308"
NET EFFECT
SENSOR
2306-1
2308'
2306-2
SOUND CONTROLLER
ANTI-SOUND
2308
SOUND

FIG. 23C

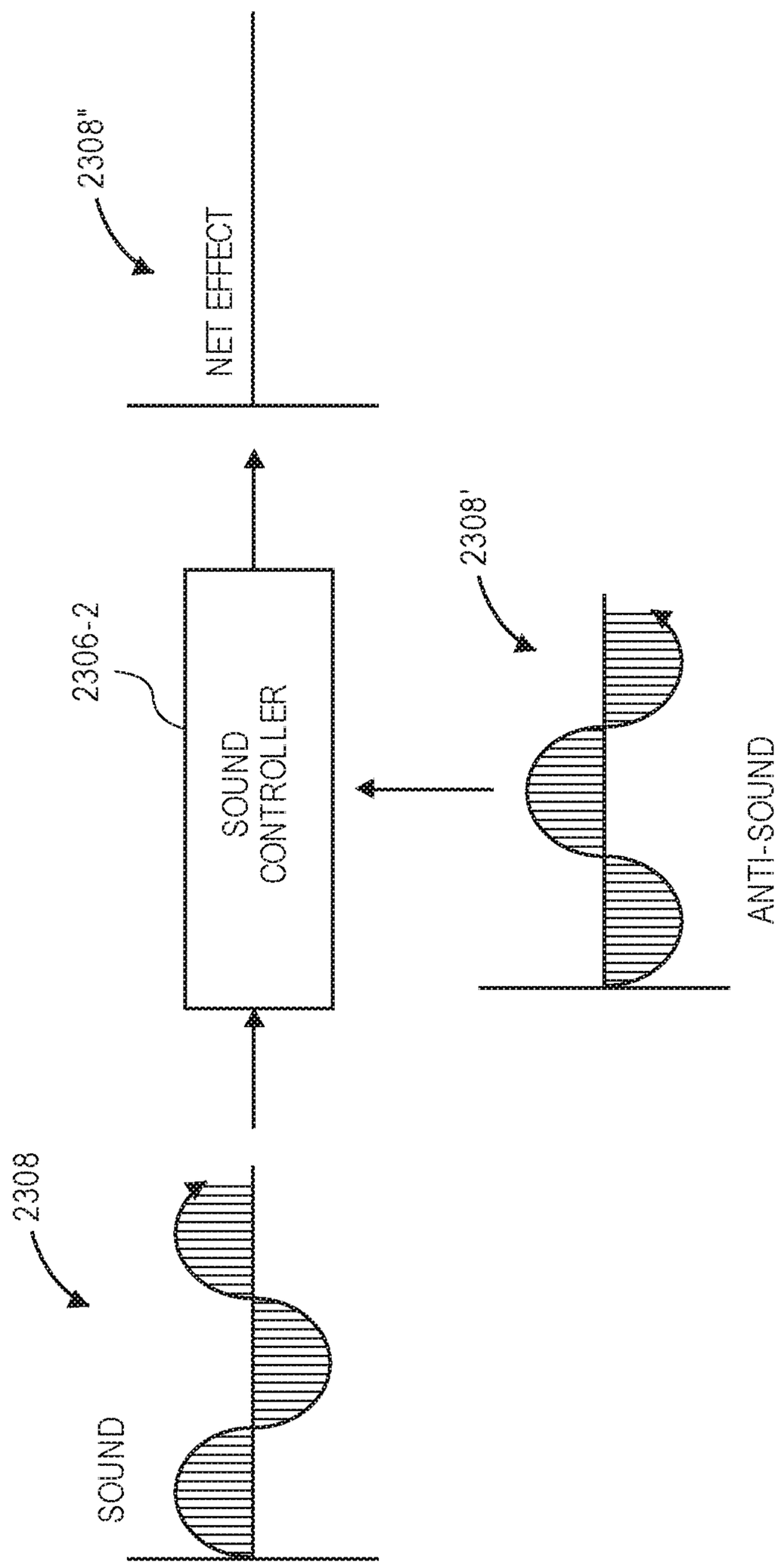
2308"
NET EFFECT
2306-2
SOUND CONTROLLER
2308'
ANTI-SOUND
2308
SOUND

FIG. 23D

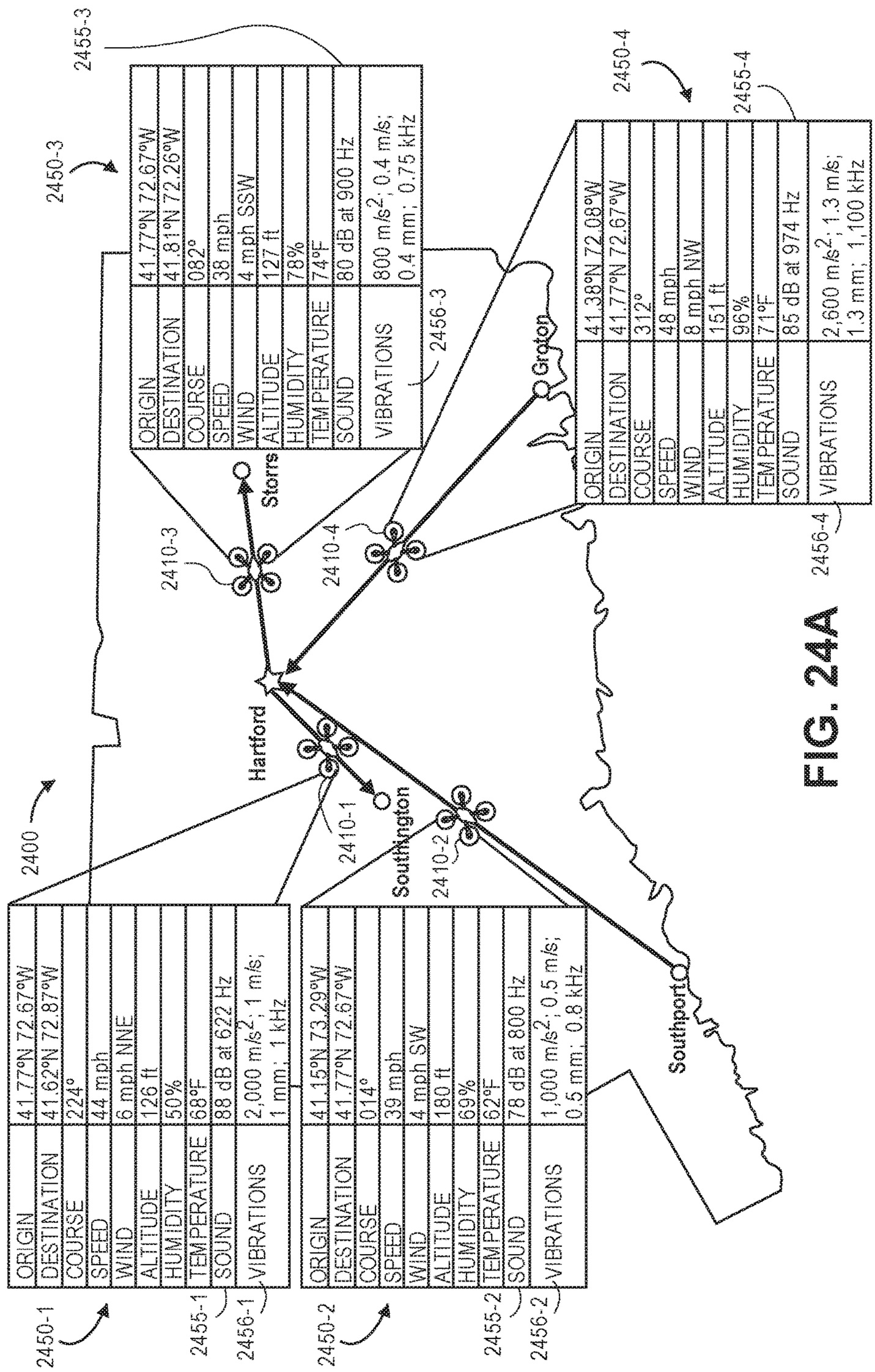
2400
2410-1
2410-2
2410-3
2410-4
Hartford
Southington
Storrs
Groton
Southport
2450-1
2455-1
2456-1
2450-2
2455-2
2456-2
2450-3
2455-3
2456-3
2450-4
2455-4
2456-4
ORIGIN 41.77°N 72.67°W
DESTINATION 41.62°N 72.87°W
COURSE 224°
SPEED 44 mph
WIND 6 mph NNE
ALTITUDE 126 ft
HUMIDITY 50%
TEMPERATURE 68°F
SOUND 88 dB at 622 Hz
VIBRATIONS 2,000 m/s2; 1 m/s; 1 mm; 1 kHz
ORIGIN 41.15°N 73.29°W
DESTINATION 41.77°N 72.67°W
COURSE 014°
SPEED 39 mph
WIND 4 mph SW
ALTITUDE 180 ft
HUMIDITY 69%
TEMPERATURE 62°F
SOUND 78 dB at 800 Hz
VIBRATIONS 1,000 m/s2; 0.5 m/s; 0.5 mm; 0.8 kHz
ORIGIN 41.77°N 72.67°W
DESTINATION 41.81°N 72.26°W
COURSE 082°
SPEED 38 mph
WIND 4 mph SSW
ALTITUDE 127 ft
HUMIDITY 78%
TEMPERATURE 74°F
SOUND 80 dB at 900 Hz
VIBRATIONS 800 m/s2; 0.4 m/s; 0.4 mm; 0.75 kHz
ORIGIN 41.38°N 72.08°W
DESTINATION 41.77°N 72.67°W
COURSE 312°
SPEED 48 mph
WIND 8 mph NW
ALTITUDE 151 ft
HUMIDITY 96%
TEMPERATURE 71°F
SOUND 85 dB at 974 Hz
VIBRATIONS 2,600 m/s2; 1.3 m/s; 1.3 mm; 1,100 kHz

FIG. 24A

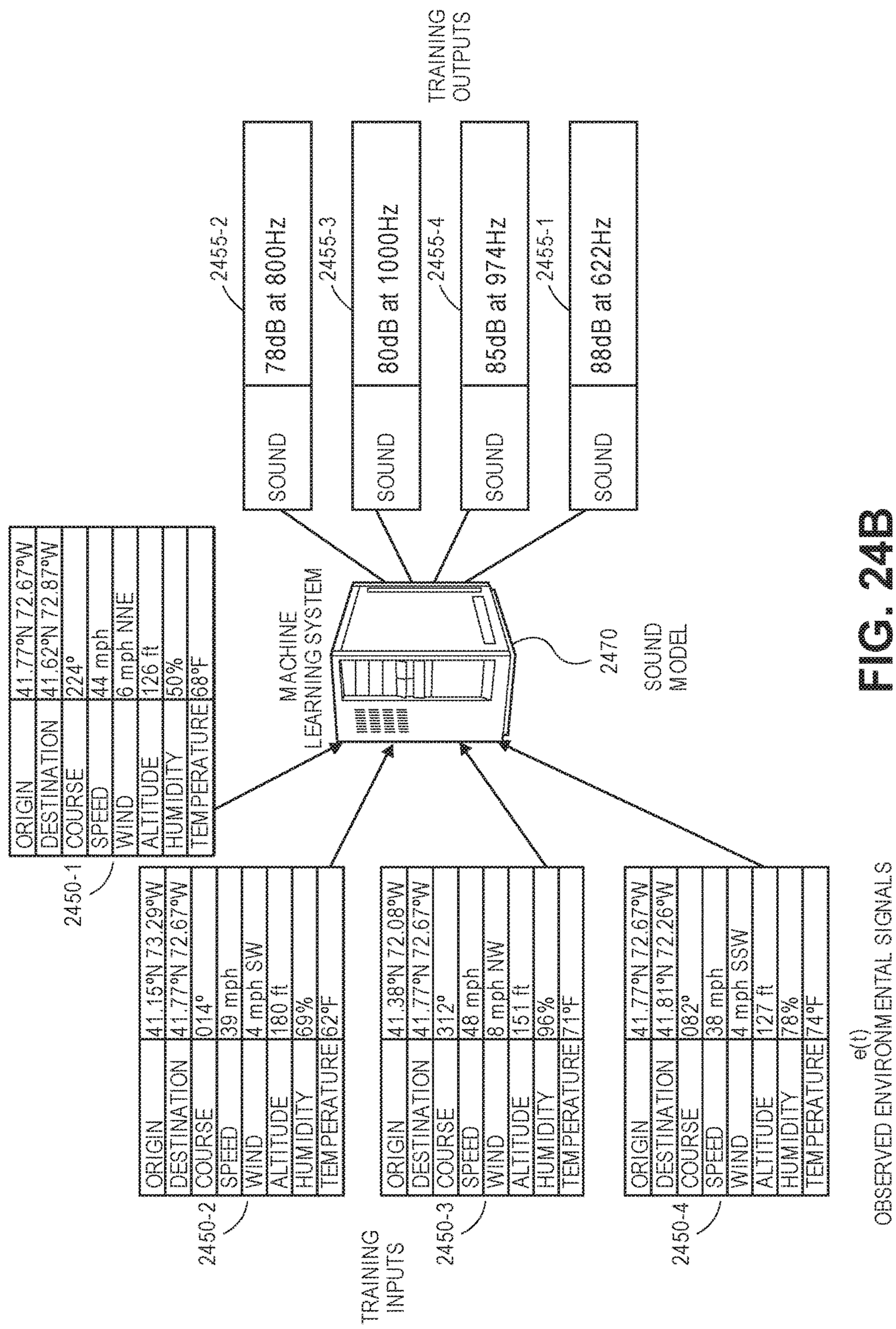
TRAINING OUTPUTS
2455-2
SOUND
78dB at 800Hz
2455-3
SOUND
80dB at 1000Hz
2455-4
SOUND
85dB at 974Hz
2455-1
SOUND
88dB at 622Hz
MACHINE LEARNING SYSTEM
2470
SOUND MODEL
ORIGIN 41.77°N 72.67°W
DESTINATION 41.62°N 72.87°W
COURSE 224°
SPEED 44 mph
WIND 6 mph NNE
ALTITUDE 126 ft
HUMIDITY 50%
TEMPERATURE 68°F
2450-1
ORIGIN 41.15°N 73.29°W
DESTINATION 41.77°N 72.67°W
COURSE 014°
SPEED 39 mph
WIND 4 mph SW
ALTITUDE 180 ft
HUMIDITY 69%
TEMPERATURE 62°F
2450-2
ORIGIN 41.38°N 72.08°W
DESTINATION 41.77°N 72.67°W
COURSE 312°
SPEED 48 mph
WIND 8 mph NW
ALTITUDE 151 ft
HUMIDITY 96%
TEMPERATURE 71°F
2450-3
ORIGIN 41.77°N 72.67°W
DESTINATION 41.81°N 72.26°W
COURSE 082°
SPEED 38 mph
WIND 4 mph SSW
ALTITUDE 127 ft
HUMIDITY 78%
TEMPERATURE 74°F
2450-4
TRAINING INPUTS
e(t)
OBSERVED ENVIRONMENTAL SIGNALS

FIG. 24B

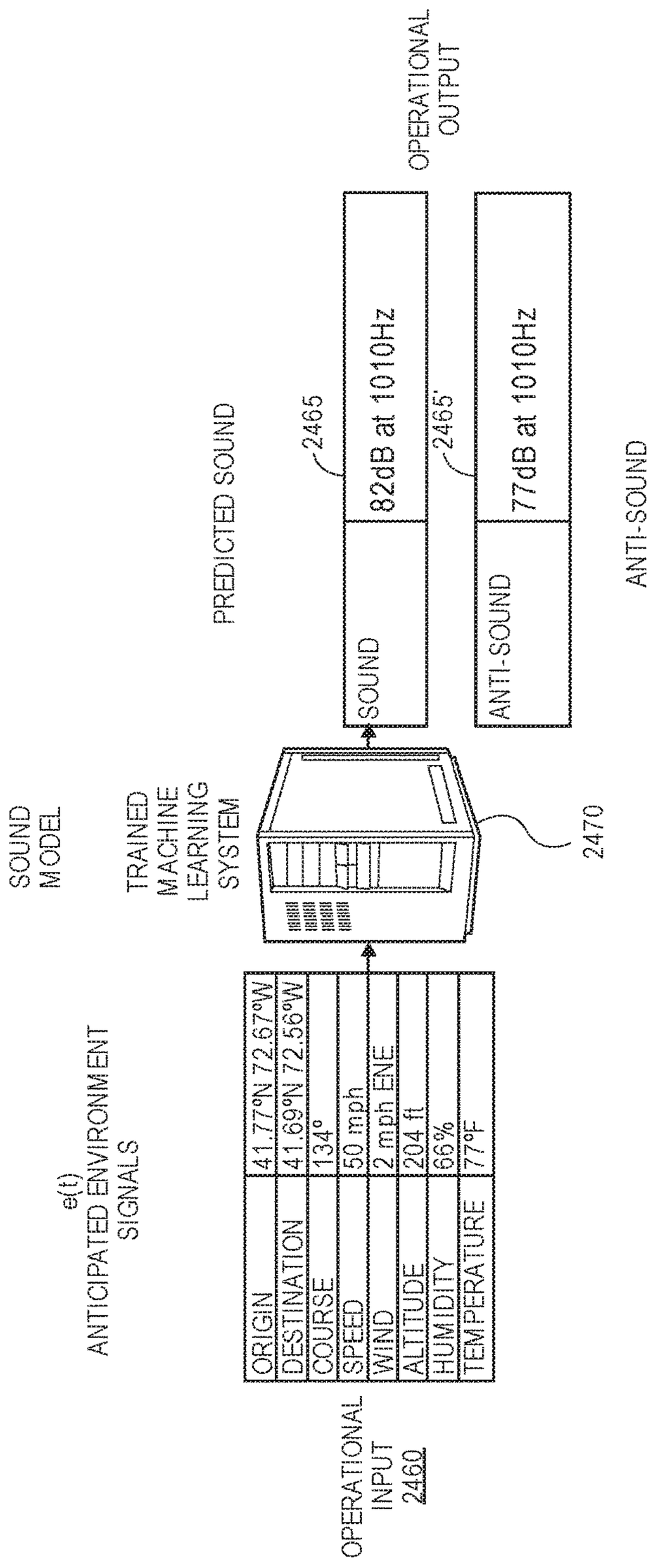
OPERATIONAL INPUT 2460
e(t)
ANTICIPATED ENVIRONMENT SIGNALS
ORIGIN 41.77°N 72.67°W
DESTINATION 41.69°N 72.56°W
COURSE 134°
SPEED 50 mph
WIND 2 mph ENE
ALTITUDE 204 ft
HUMIDITY 66%
TEMPERATURE 77°F
SOUND MODEL
TRAINED MACHINE LEARNING SYSTEM
2470
PREDICTED SOUND
2465
SOUND
82dB at 1010Hz
2465'
ANTI-SOUND
77dB at 1010Hz
ANTI-SOUND
OPERATIONAL OUTPUT

FIG. 24C

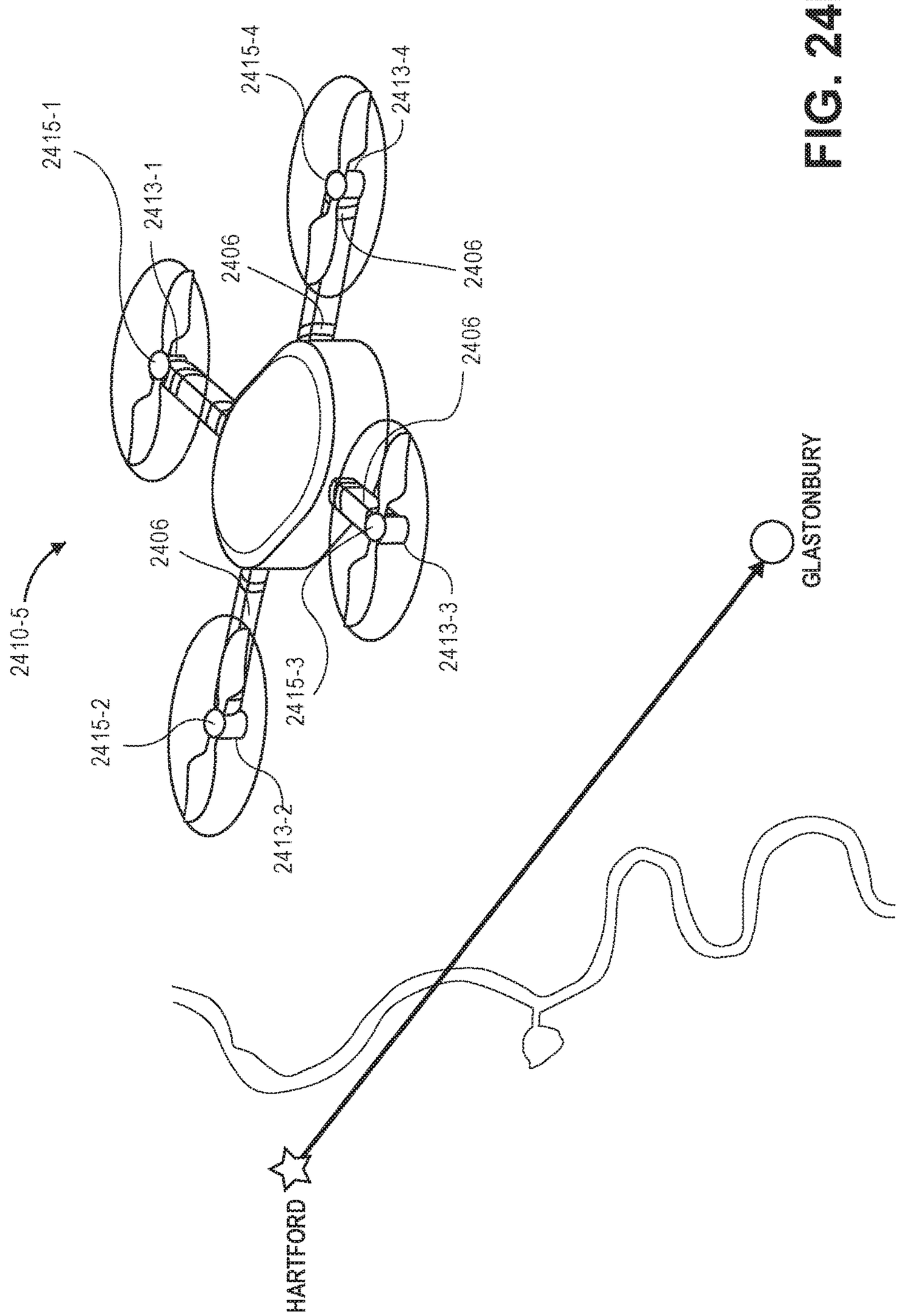
2410-5
2415-1
2413-1
2415-4
2413-4
2406
2406
2406
2406
2415-2
2413-2
2415-3
2413-3
GLASTONBURY
HARTFORD

FIG. 24D

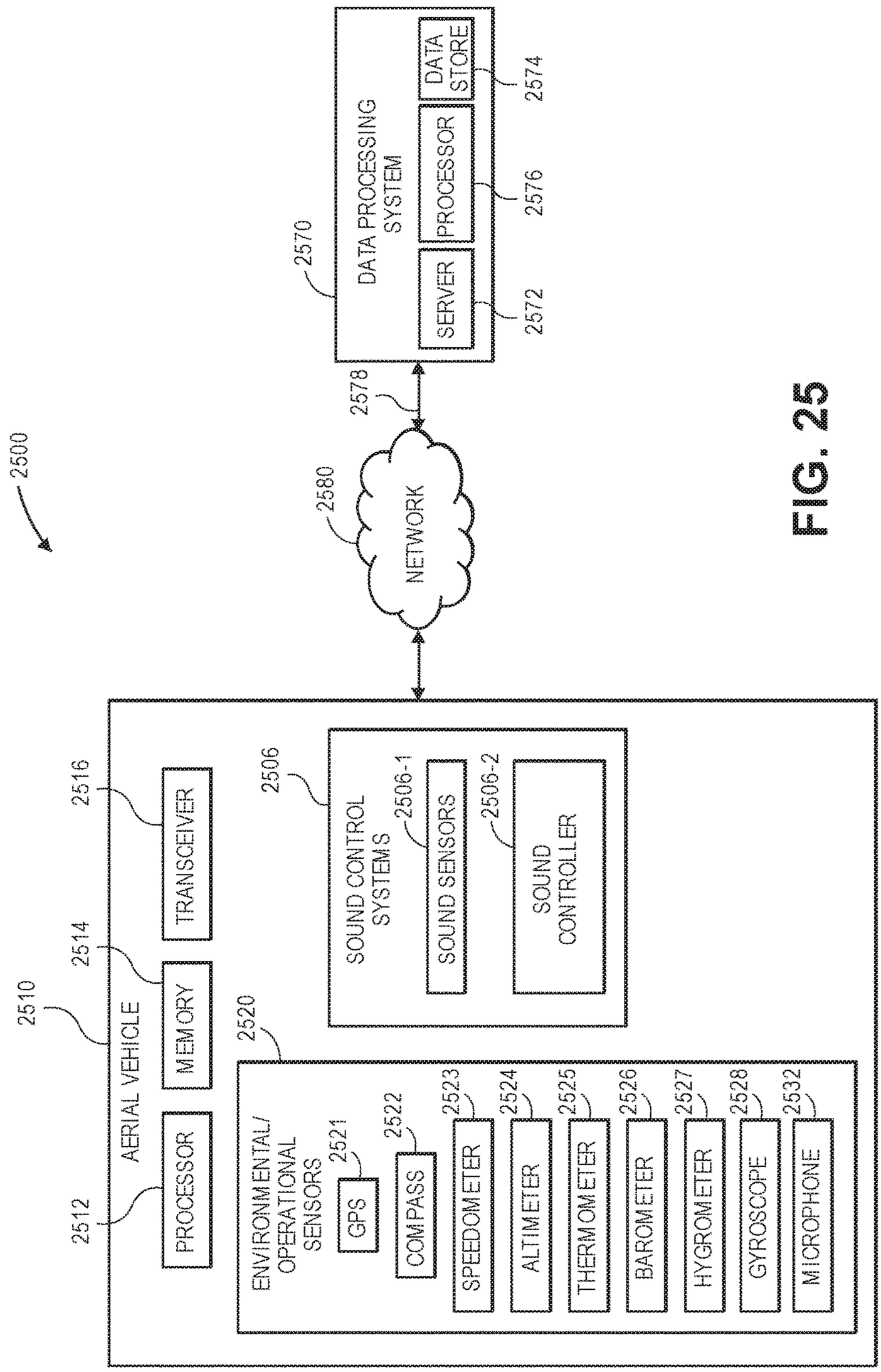
2500
2570
DATA PROCESSING SYSTEM
SERVER
PROCESSOR
DATA STORE
2572
2576
2574
2578
2580
NETWORK
2510
AERIAL VEHICLE
2512
PROCESSOR
2514
MEMORY
2516
TRANSCEIVER
2506
SOUND CONTROL SYSTEMS
2506-1
SOUND SENSORS
2506-2
SOUND CONTROLLER
2520
ENVIRONMENTAL/ OPERATIONAL SENSORS
2521
GPS
2522
COMPASS
2523
SPEEDOMETER
2524
ALTIMETER
2525
THERMOMETER
2526
BAROMETER
2527
HYGROMETER
2528
GYROSCOPE
2532
MICROPHONE

FIG. 25

FIG. 26

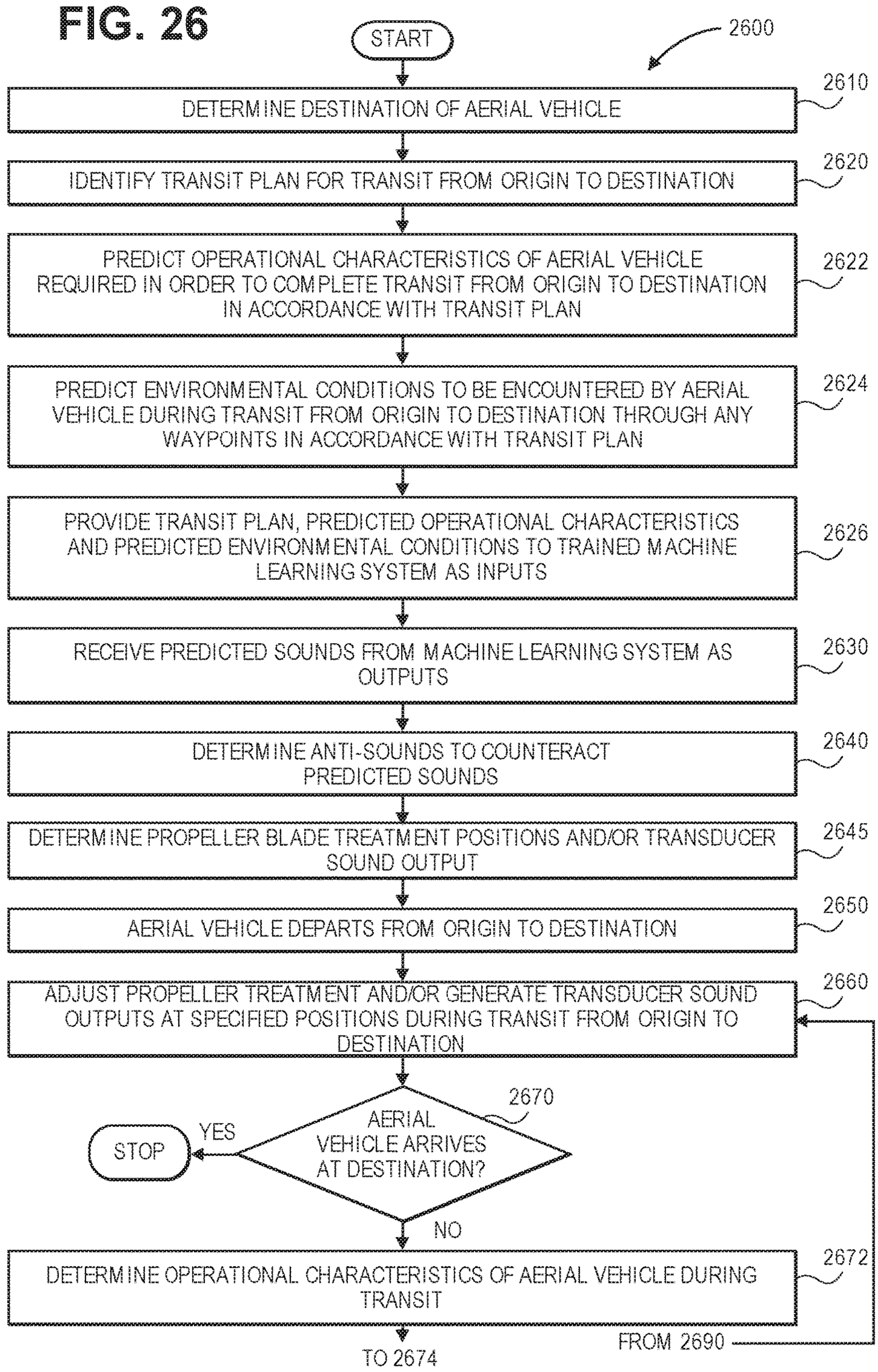
START
2600
DETERMINE DESTINATION OF AERIAL VEHICLE
2610
IDENTIFY TRANSIT PLAN FOR TRANSIT FROM ORIGIN TO DESTINATION
2620
PREDICT OPERATIONAL CHARACTERISTICS OF AERIAL VEHICLE REQUIRED IN ORDER TO COMPLETE TRANSIT FROM ORIGIN TO DESTINATION IN ACCORDANCE WITH TRANSIT PLAN
2622
PREDICT ENVIRONMENTAL CONDITIONS TO BE ENCOUNTERED BY AERIAL VEHICLE DURING TRANSIT FROM ORIGIN TO DESTINATION THROUGH ANY WAYPOINTS IN ACCORDANCE WITH TRANSIT PLAN
2624
PROVIDE TRANSIT PLAN, PREDICTED OPERATIONAL CHARACTERISTICS AND PREDICTED ENVIRONMENTAL CONDITIONS TO TRAINED MACHINE LEARNING SYSTEM AS INPUTS
2626
RECEIVE PREDICTED SOUNDS FROM MACHINE LEARNING SYSTEM AS OUTPUTS
2630
DETERMINE ANTI-SOUNDS TO COUNTERACT PREDICTED SOUNDS
2640
DETERMINE PROPELLER BLADE TREATMENT POSITIONS AND/OR TRANSDUCER SOUND OUTPUT
2645
AERIAL VEHICLE DEPARTS FROM ORIGIN TO DESTINATION
2650
ADJUST PROPELLER TREATMENT AND/OR GENERATE TRANSDUCER SOUND OUTPUTS AT SPECIFIED POSITIONS DURING TRANSIT FROM ORIGIN TO DESTINATION
2660
AERIAL VEHICLE ARRIVES AT DESTINATION?
2670
YES
STOP
NO
DETERMINE OPERATIONAL CHARACTERISTICS OF AERIAL VEHICLE DURING TRANSIT
2672
TO 2674
FROM 2690

FIG. 26 (CONT.)

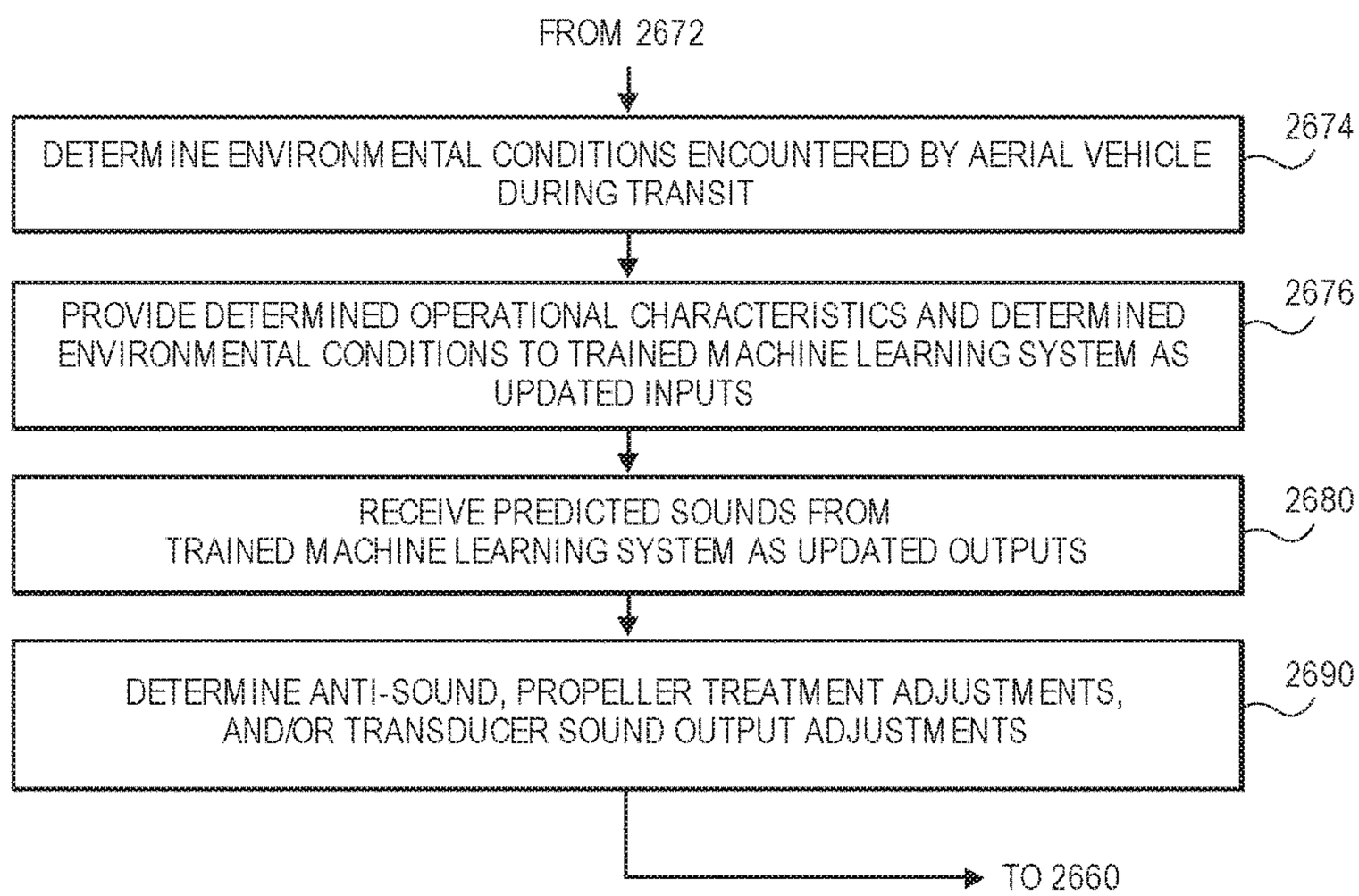
FROM 2672
DETERMINE ENVIRONMENTAL CONDITIONS ENCOUNTERED BY AERIAL VEHICLE DURING TRANSIT
2674
PROVIDE DETERMINED OPERATIONAL CHARACTERISTICS AND DETERMINED ENVIRONMENTAL CONDITIONS TO TRAINED MACHINE LEARNING SYSTEM AS UPDATED INPUTS
2676
RECEIVE PREDICTED SOUNDS FROM TRAINED MACHINE LEARNING SYSTEM AS UPDATED OUTPUTS
2680
DETERMINE ANTI-SOUND, PROPELLER TREATMENT ADJUSTMENTS, AND/OR TRANSDUCER SOUND OUTPUT ADJUSTMENTS
2690
TO 2660

CARBON NANOTUBE TRANSDUCERS ON PROPELLER BLADES FOR SOUND CONTROL

CROSS-REFERENCE TO RELATED APPLICATION

This application is a Continuation-In-Part of U.S. patent application Ser. No. 14/975,291, filed Dec. 18, 2015, entitled "Propeller Blade Protrusions For Improved Aerodynamic Performance And Sound Control," which is incorporated herein by reference in its entirety.

BACKGROUND

Vehicle traffic around residential areas continues to increase. Historically, vehicle traffic around homes and neighborhoods was primarily limited to automobile traffic. However, the recent development of aerial vehicles, such as unmanned aerial vehicles, has resulted in a rise of other forms of vehicle traffic. For example, hobbyists may fly unmanned aerial vehicles in and around neighborhoods, often within a few feet of a home. Likewise, there is discussion of electronic-commerce retailers, and other entities, delivering items directly to a user's home using unmanned aerial vehicles. As a result, such vehicles may be invited to navigate into a backyard, near a front porch, balcony, patio, and/or other locations around the residence to complete delivery of packages.

BRIEF DESCRIPTION OF THE DRAWINGS

FIG. **1** is a view of an aerial vehicle, according to an implementation.

FIG. **2**A is a top-down view of a propeller blade with propeller blade treatments, according to an implementation.

FIG. **2**B is a side-view of a propeller blade with propeller blade treatments, according to an implementation.

FIG. **3**A is a top-down view of a propeller blade with propeller blade treatments, according to an implementation.

FIG. **3**B is a side-view of a propeller blade with propeller blade treatments, according to an implementation.

FIGS. **4**A-**4**B are top-down views of a propeller blade with propeller blade treatments, according to an implementation.

FIGS. **5**A-**5**D are top-down views of a propeller blade with propeller blade treatments, according to an implementation.

FIG. **6**A is a top-down view of a propeller blade with propeller blade treatments, according to an implementation.

FIG. **6**B is a view of a lower or underneath side of a propeller blade with propeller blade treatments, according to an implementation.

FIG. **6**C is a top-down view of a propeller blade with propeller blade treatments, according to an implementation.

FIG. **7** is a top-down view of a propeller blade with propeller blade treatments, according to an implementation.

FIGS. **8**A-**8**C are top-down views of a propeller blade with propeller blade treatments, according to an implementation.

FIG. **9**A is a top-down view of a propeller blade with propeller blade treatments, according to an implementation.

FIGS. **9**B-**9**C are side-views of a propeller blade with propeller blade treatments, according to an implementation.

FIG. **10** is another view of a propeller blade with propeller blade treatments, according to an implementation.

FIG. **11**A is a top-down and side-view of a propeller blade with propeller blade treatments, according to an implementation.

FIG. **11**B is a top-down and side-view of a propeller blade with propeller blade treatments, according to an implementation.

FIGS. **12**A-**12**B are top-down views of a propeller blade, according to an implementation.

FIGS. **13**A-**13**C are side-views of a propeller blade, according to an implementation.

FIG. **14** is a flow diagram of a sound control process, according to an implementation.

FIG. **15** is a view of an aerial vehicle, according to an implementation.

FIG. **16** is a view of a propeller blade with piezoelectric transducers, according to an implementation.

FIG. **17** is another view of a propeller blade with piezoelectric transducers, according to an implementation.

FIG. **18** is another view of a propeller blade with piezoelectric transducers, according to an implementation.

FIG. **19** is a view of a propeller blade with carbon nanotube transducers, according to an implementation.

FIGS. **20**A and **20**B are views of a motor, a propeller blade with transducers, and a power source, according to an implementation.

FIG. **21** is a view of an aerial vehicle with ducted propellers, the ducts including transducers, according to an implementation.

FIG. **22** is a flow diagram of a sound control process, according to an implementation.

FIGS. **23**A-**23**D are block diagrams illustrating active airborne sound control, according to an implementation.

FIGS. **24**A-**24**D are views of aspects of one system for active airborne sound control, according to an implementation.

FIG. **25** is a block diagram of one system for active airborne sound control, according to an implementation.

FIG. **26** is a flow diagram illustrating an example process for active airborne sound control, according to an implementation.

DETAILED DESCRIPTION

The present disclosure is directed to controlling, reducing, and/or altering sound generated by an aerial vehicle, such as an unmanned aerial vehicle ("UAV"), while the aerial vehicle is airborne. For example, one or more propellers of the aerial vehicle include propeller blade treatments that alter the sound generated by the propeller. For example, the propeller blade treatments may disrupt the airflow around the propeller blades as they rotate and/or absorb sound generated by the propeller blade as it rotates. By using propellers with different propeller blade treatments on the same aerial vehicle, the propellers may generate sounds that destructively interfere with each other, thereby reducing or altering the overall sound generated by the aerial vehicle. Likewise, some of the propeller blade treatments, in addition to altering the sound, reduce and/or otherwise alter the total sound generated by a propeller.

A propeller blade may include propeller blade treatments along one or more portions of the propeller blade. For example, the propeller blade may only include propeller blade treatments along the leading edge of the propeller blade. In other implementations, the propeller blade treatments may be along the leading edge, on an upper surface area of the propeller blade, on a lower surface area of the

propeller blade, on a trailing edge of the propeller blade, on the tip of the propeller blade, or any combination thereof.

The propeller blade treatments may be of any variety of sizes and/or shapes, and may extend from or conform to the propeller blade in a variety of manners. For example, some propeller blade treatments may extend from the propeller blade in a direction that includes a vertical component and/or a horizontal component with respect to the surface area of the propeller blade. Alternatively, or in addition thereto, some of the propeller blade treatments may extend into the propeller blade. In some implementations, some or all of the propeller blade treatments may be moved or activated while the propeller is rotating. For example, the propeller may include a sound controller that retracts and/or extends one or more of the propeller blade treatments. When one or more propeller blade treatments are moved, the sound generated by the rotating propeller is altered. Propeller blade treatments that may be moved (e.g., retracted, extended, shifted, or rotated) are sometimes referred to herein as active propeller blade treatments.

In some implementations, one or more sensors may be positioned on the aerial vehicle that measure sound generated by or around the aerial vehicle. Based on the measured sound, the position of the one or more of the propeller blade treatments of a propeller blade on the aerial vehicle may be altered to generate an anti-sound that, when combined with the sound generated by the aerial vehicle, alters the sound generated by the aerial vehicle. For example, a processor of the aerial vehicle may maintain information relating to the different sounds generated by different propeller blade treatment positions. Based on the measured sound and the desired rotational speed of the propeller, propeller blade treatment positions are selected that will result in the propeller generating an anti-sound as it rotates that will cancel out, reduce, and/or otherwise alter the measured sound when the propeller is rotating at the desired rotational speed.

In another example, some propeller blade treatments, rather than being designed to generate a specific anti-sound, may dampen, reduce, and/or otherwise alter the sound generated by the propeller blade as it rotates. For example, the propeller blade may include fringes (a type of propeller blade treatment) that can be retracted or extended from the trailing edge of the propeller blade. When the fringes are extended, the fringes alter the airflow and dampen, reduce, and/or otherwise alter the sound generated by the propeller blade as the propeller passes through the air.

In still other implementations, one or more transducers, such as piezoelectric thin-film transducers, or carbon nanotube transducers may be applied or incorporated into or on the surface of propeller blades that are used to aerially navigate the aerial vehicle. As the propeller blade rotates and generates sound, the transducers may be activated at defined frequencies to generate one or more transducer output sounds, also referred to herein an anti-sound, that cancel, reduce, or otherwise modify the sound generated by the rotation of the propeller blade. The anti-sound combines with the sound and causes interference such that the combined, or net-effect, is an overall cancellation, reduction, or other modification of the sound.

A propeller blade may include one or more transducers along one or more portions of the propeller blade. For example, the propeller blade may only include transducers along the leading edge of the propeller blade. In other implementations, the transducers may be along the leading edge, on an upper surface area of the propeller blade, on a lower surface area of the propeller blade, on a trailing edge of the propeller blade, on the tip of the propeller blade, or any combination thereof. The transducers may be used alone or in conjunction with one or more of the other propeller blade treatments discussed herein.

The transducers may be of any variety of sizes and/or shapes, may be piezoelectric transducers, such as piezoelectric thin-film speakers, and/or nanotube transducers, such as carbon nanotube speakers. In some implementations, larger transducers may be included on one portion of the propeller blade and smaller transducers may be included on a second portion of the propeller blade. Alternatively, or in addition thereto, a first type of transducer (e.g., piezoelectric thin-film speakers) may be included on a first portion of a propeller blade and a second type of transducer (e.g., carbon nanotube speakers) may be included on a second portion of the propeller blade. In some implementations, some or all of the transducers may be activated while the propeller is rotating. For example, the propeller, or the aerial vehicle, may include a sound controller that can independently address each of the transducers, causing each transducer to activate or deactivate. Likewise, the sound controller can send electricity at different pulses or frequencies to cause different transducers to generate different anti-sounds.

In some implementations, one or more sensors may be positioned on the aerial vehicle that measure sound generated by or around the aerial vehicle. For example, a sensor, such as a microphone, may be positioned on a hub of a propeller to measure sound generated by a rotation of the propeller. Based on the measured sound, a transducer sound output may be determined and output by one or more transducers positioned on the propeller blade. An "anti-sound," as used herein, refers to sounds having amplitudes and frequencies that are approximately but not exclusively opposite and/or approximately but not exclusively out-of-phase with a predicted or measured sound (e.g., having polarities that are reversed with respect to polarities of the predicted sounds). During airborne operation of the aerial vehicle, the transducers and/or propeller blade adjustments are controlled to generate the anti-sound. When the anti-sound is generated, such anti-sound interferes with the sound generated by the rotation of the propeller blade. In this regard, the apparatus, systems, and methods described herein may be utilized to effectively control, reduce, and/or otherwise alter the sounds generated by aerial vehicles during flight.

In some implementations, sounds generated by a propeller at different revolutions per minute ("RPM") and/or with different propeller blade adjustment positions may be measured and stored in a data store of the aerial vehicle. During operation, the sound controller may receive RPM information from a motor controller, select a propeller blade adjustment, determine a predicted or anticipated sound that the propeller will generate at the RPM, and cause the transducer (s) on that propeller to generate an anti-sound that will interfere with the generated sound. In such a configuration, a sensor may not be needed to measure the sound generated by the propeller. However, in some implementations, a sensor may also be included to measure the net-effect resultant from the combination of the generated sound and the output anti-sound. Based on the measured net-effect, the anti-sound may be further altered to increase or decrease the interference between the sound and the anti-sound and/or to otherwise further alter the sound.

In some implementations, measured sounds may be recorded along with and/or independently of other operational and/or environmental data. Such information or data may include, but is not limited to, extrinsic information or data, e.g., information or data not directly relating to the

aerial vehicle, or intrinsic information or data, e.g., information or data relating to the aerial vehicle itself. For example, extrinsic information or data may include, but is not limited to, environmental conditions (e.g., temperature, pressure, humidity, wind speed, and wind direction), times of day or days of a week, month or year when an aerial vehicle is operating, measures of cloud coverage, sunshine, surface conditions or textures (e.g., whether surfaces are wet, dry, covered with sand or snow or have any other texture) within a given environment, a phase of the moon, ocean tides, the direction of the earth's magnetic field, a pollution level in the air, a particulates count, or any other factors within the given environment. Intrinsic information or data may include, but is not limited to, operational characteristics (e.g., dynamic attributes such as altitudes, courses, speeds, rates of climb or descent, turn rates, or accelerations; or physical attributes such as dimensions of structures or frames, numbers of propellers or motors, operating speeds of such motors) or tracked positions (e.g., latitudes and/or longitudes) of the aerial vehicles. In accordance with the present disclosure, the amount, the type and the variety of information or data that may be captured and collected regarding the physical or operational environments in which aerial vehicles are operating and correlated with information or data regarding measured sounds is theoretically unbounded.

The extrinsic information or data and/or the intrinsic information or data captured by aerial vehicles during flight may be used to train a machine learning system to associate an aerial vehicle's operations or locations, or conditions in such locations, with sounds generated by propellers of the aerial vehicle during operation. The trained machine learning system, or a sound model developed using such a trained machine learning system, may then be used to predict sounds that may be expected when an aerial vehicle operates in a predetermined location, or subject to a predetermined set of conditions, at given velocities or positions, or in accordance with any other characteristics. Once such sounds are predicted, propeller blade treatment positions and/or transducer output sounds may be determined that will result in an anti-sound to be produced by the propeller blades of the aerial vehicle when the same or similar conditions are encountered.

FIG. **1** is a view of an aerial vehicle **101** configured for sound control including propeller blade treatments on one or more of the propellers **102-1**, **102-2**, **102-3**, and **102-4**. The propellers **102-1**, **102-2**, **102-3**, and **102-4** are powered by propeller motors and spaced about a body **104** of the aerial vehicle **101** as part of a propulsion system. A control system (not shown), which may be positioned within the body **104**, is utilized for controlling the propeller motors for flying the aerial vehicle **101**, as well as controlling other operations of the aerial vehicle **101**. Each of the propeller motors may be rotated at different speeds, thereby generating different lifting forces by the different propellers **102**.

The motors may be of any type and of a size sufficient to rotate the propellers **102** at speeds sufficient to generate enough lift to aerially propel the aerial vehicle **101** and any items engaged by the aerial vehicle **101** so that the aerial vehicle **101** can navigate through the air, for example, to deliver an item to a location. As discussed further below, the outer body or surface area of each propeller **102** may be made of one or more suitable materials, such as graphite, carbon fiber, etc. While the example of FIG. **1** includes four motors and propellers, in other implementations, more or fewer motors and/or propellers may be utilized for the propulsion system of the aerial vehicle **101**. Likewise, in some implementations, the motors and/or propellers may be positioned at different locations and/or orientations on the aerial vehicle **101**. Alternative methods of propulsion may also be utilized in addition to the propellers and propeller motors. For example, engines, fans, jets, turbojets, turbo fans, jet engines, and the like may be used in combination with the propellers and propeller motors to propel the aerial vehicle.

The body **104** or frame of the aerial vehicle **101** may be of any suitable material, such as graphite, carbon fiber, and/or aluminum. In this example, the body **104** of the aerial vehicle **101** includes four motor arms **108-1**, **108-2**, **108-3**, and **108-4** that are coupled to and extend from the body **104** of the aerial vehicle **101**. The propellers **102** and corresponding propeller motors are positioned at the ends of each motor arm **108**. In some implementations, all of the motor arms **108** may be of approximately the same length while, in other implementations, some or all of the motor arms may be of different lengths. Likewise, the spacing between the two sets of motor arms may be approximately the same or different.

In some implementations, one or more sensors **106** configured to measure sound at the aerial vehicle are included on the aerial vehicle **101**. The sensors **106** may be at any location on the aerial vehicle **101**. For example, a sensor **106** may be positioned on each motor arm **108** and adjacent to the propeller **102** and/or propeller motor so that different sensors can measure different sounds generated at or near the different propellers **102**. In another example, one or more sensors may be positioned on the body **104** of the aerial vehicle **101**. The sensors **106** may be any type of sensors capable of measuring sound and/or sound waves. For example, the sensor may be a microphone, transducer, piezoelectric sensor, an electromagnetic pickup, an accelerometer, an electro-optical sensor, an inertial sensor, etc.

As discussed in further detail below, one or more of the propellers **102** may include propeller blade treatments. In some implementations, some or all of the propeller blade treatments may be adjustable during operation of the aerial vehicle (i.e., active propeller blade treatments). As the position of the propeller blade treatments changes, different sounds are generated by the propeller as it rotates. In other implementations, the propeller blade treatments may be part of the propeller blade. In such implementations, the overall shape of the propeller blade and included propeller blade treatments may be designed such that the propeller will generate a particular sound when the propeller is rotating. In such a configuration, the different propellers of the aerial vehicle may be designed to generate different sounds. The different sounds generated by the different propellers may be selected such that they cause destructive or constructive interference with other sounds generated by other propellers and/or the aerial vehicle such that, when the sounds combine, the net effect is no sound, reduced sound, and/or otherwise altered sound.

In some implementations, some or all of the propellers may include propeller blade treatments. Likewise, some or all of the propeller blade treatments may be affixed to the propellers. Alternatively, some or all of the propeller blade treatments may be moveable or otherwise adjusted during operation of the aerial vehicle and rotation of the propeller blade.

In some implementations, by measuring sounds at or near each propeller **102** and altering the position of propeller blade treatments of each respective propeller **102** to generate anti-sounds, the measured sounds and anti-sounds at each propeller are independent. Accordingly, each sensor and propeller may operate independent of other sensors and

propellers on the aerial vehicle and each may include its own processing and/or memory for operation. Alternatively, one or more sensors **106** positioned on the body **104** of the aerial vehicle may measure generated sounds and a sound controller may send instructions to different propellers to cause the positions of different propeller blade treatments to be altered, thereby generating different anti-sounds.

While the implementations of the aerial vehicle discussed herein utilize propellers to achieve and maintain flight, in other implementations, the aerial vehicle may be configured in other manners. For example, the aerial vehicle may be a combination of both propellers and fixed wings. In such configurations, the aerial vehicle may utilize one or more propellers to enable takeoff, landing, and anti-sound generation and a fixed wing configuration or a combination wing and propeller configuration to sustain flight while the aerial vehicle is airborne. In some implementations, one or more of the propulsion mechanisms (e.g., propellers and motors) may have a variable axis such that it can rotate between vertical and horizontal orientations.

FIG. **2**A illustrates a top-down view of a propeller blade **200** that includes propeller blade treatments **202** along the leading edge of the propeller blade, according to an implementation. The propeller blade includes a hub **201**, a tip **203**, a leading edge **205**, a trailing edge **207**, and a surface area **209** that extends between the hub **201**, the tip **203**, the leading edge **205**, and the trailing edge **207**. As used herein, the term "hub" (e.g., **201**) refers to the portion of the blade (e.g., **200**) opposite the tip (e.g., **203**) where the blade is mounted to a motor or other propulsion device (not shown). The term hub shall not be limited to any particular mounting structure, circular or otherwise. The surface area includes an upper or top surface area, which is viewable in the example illustrated in FIG. **2**A, and a lower or bottom surface area that is opposite the upper surface area.

In this implementation, the propeller blade treatments **202** extend along the leading edge **205** and may be adjusted in a direction that includes a horizontal component and/or a vertical component with respect to a surface area **209** of the propeller blade **200**. For example, the propeller blade may include a sound controller **211**, which includes an actuator **210**, also referred to as an adjustment arm. The components of the sound controller **211** may be incorporated into the propeller blade **200** and positioned such that the actuator **210** contacts one or more of the propeller blade treatments and is configured to move or reposition the propeller blade treatments **202**. For example, the sound controller **211** may include a drive mechanism **204**, such as a servo motor, that moves the actuator **210**. As illustrated in the expanded view, the actuator may include one or more protrusions **210-1** that move as the actuator is moved by the drive mechanism. As the protrusions **210-1** move, they contact one or more ridges **202-1** of the propeller blade treatments **202**, thereby causing the propeller blade treatments **202** to move from a first position to a second position. As each propeller blade treatment moves positions, the sound generated by the propeller as it rotates is altered because the airflow is disrupted.

In some implementations, movement of the actuator **210** may be based on the rotational speed of the propeller. For example, the drive mechanism may be a counterweight that moves with an increase in the centrifugal force generated by the rotation of the propeller blade **200**. As the counterweight moves, it causes the actuator **210** to move, thereby altering the position of one or more propeller blade treatments. In other implementations, the sound controller **211** may be powered by one or more power supplies **206** and the drive mechanism **204** may adjust the position of the actuator based on instructions received from the sound controller **211**. For example, the sound controller **211** may include a processor and memory that includes a table of different propeller blade treatment positions and resultant sounds that are generated when the propeller is rotated. The sound controller **211** may also receive information and/or instructions through a wireless communication component **208**, such as an antenna, and determine positions for each of the propeller blade treatments of the propeller blade. For example, the sound controller **211** may receive position information, environmental information, and/or operational information and determine a predicted sound that is expected based on that information. For the predicted sound, propeller blade treatment positions are determined that will cause the propeller to generate an anti-sound when rotated. In another example, the position of propeller blade treatments may be selected that will dampen, reduce, and/or otherwise alter the sound, such as by altering the relative and/or absolute amplitudes of various frequency components of the sound.

In other implementations, the sound controller **211** may receive additional or less information and determine positions for propeller blade treatments. In some implementations, the sound controller **211** may receive instructions for each propeller blade treatment position. In still another example, the sound controller **211** may receive a predicted sound, for example, from a sensor positioned on the aerial vehicle, determine an anti-sound, and select propeller blade treatment positions that will cause the propeller to generate the anti-sound when rotated and/or dampen or alter the predicted sound.

While the illustrated example shows the sound controller controlling a single drive mechanism and actuator of a propeller blade **200**, in some implementations, the sound controller may be coupled to and control multiple drive mechanisms, sound controllers, and corresponding propeller blade treatments for multiple propeller blades. For example, a propeller of an aerial vehicle may include one, two, three, four, five, or any number and/or shape of propeller blades. One or more of the propeller blades may include a drive mechanism **204**, actuator **210**, and propeller blade treatments, all of which may be controlled by the sound controller. Likewise, one or more of the propeller blades **200** may include a power supply **206** and/or a power source. In this example, the power source is a series of solar panels **212** that collect solar energy for use in powering the sound controller **211** and drive mechanism **204**. Likewise, the energy collected by the solar panels **212** may be stored in one or more power supplies **206**, such as a battery.

While the example illustrated in FIG. **2**A includes a drive mechanism **204** and actuator **210** in the form of an adjustable arm that may be moved by the drive mechanism, it will be appreciated that any variety of techniques may be used to alter the positions of the adjustable propeller blade treatments. For example, an actuator, such as a piezoelectric actuator, servo motor, pneumatics, solenoid, etc., may be positioned at or coupled to each propeller blade treatment and configured to receive instructions from the sound controller **211** as to a position for the propeller blade treatment. For example, if the actuator **210** is a piezoelectric actuator positioned adjacent a propeller blade treatment, when activated, it may cause the propeller blade treatment to move in a direction that includes a horizontal component and/or a vertical component with respect to the surface area of the propeller blade.

It will be appreciated that, in some implementations, the sound controller may be fully or partially contained within

the surface area or outer body of the propeller blade and may not be externally visible, except for the propeller blade treatments that protrude from the propeller blade.

The propeller blade treatments **202** may be formed of any material, may be of any size, and/or of any shape. Likewise, the propeller blade treatments **202** may be positioned anywhere on the propeller blade **200** and may extend in any direction. For example, referring to FIG. **2**B, illustrated is a side-view of the propeller blade **200** that includes a plurality of propeller blade treatments **202**. As can be seen, the propeller blade treatments **202** vary in size, shape, and position along the leading edge of the propeller blade **200**. For example, propeller blade treatment **202-7** is substantially rectangular in shape, protrudes in a direction vertically above and below the leading edge of the propeller blade, and extends out beyond the leading edge of the propeller blade **200**. In comparison, propeller blade treatment **202-2** is substantially triangular in shape and only protrudes above the upper surface area of the propeller blade **200** and does not extend below the propeller blade **200** or protrude out beyond the leading edge of the propeller blade. Likewise, propeller blade treatment **202-3** is substantially triangular in shape but only extends below the lower surface area of the propeller blade **200** and does not protrude beyond the leading edge of the propeller blade. As further examples, propeller blade treatment **202-4** is approximately a half-circle that protrudes above the upper surface area of the propeller blade, and propeller blade treatment **202-5** is an irregular shape that protrudes above the upper surface area of the propeller blade **200**.

As will be appreciated, a propeller blade may include any number, size, shape, and/or position of propeller blade treatments. Likewise, some or all of the propeller blade treatments may be stationary and some or all of the propeller blade treatments may be adjustable. In some implementations, a propeller may be fabricated that includes a plurality of propeller blade treatments on one or more of each of the propeller blades. Upon fabrication, the propeller may be tested to determine the different sounds generated by the propeller as it rotates and those sounds may be stored in a sound table associated with the propeller. If some of the propeller blade treatments are adjustable, the different sounds for each different configuration of positions of the adjustable propeller blade treatments may also be determined and stored in a sound table associated with the propeller, along with the corresponding positions of each adjustable propeller blade treatment.

Likewise, as discussed further below, while the propeller blade treatments discussed above with respect to FIG. **2**A and FIG. **2**B are positioned on the leading edge of the propeller blade, in other implementations, the propeller blade treatments may also be on the surface area, the hub, the tip, the trailing edge, or any combination thereof in addition to or as an alternative to positioning the propeller blade treatments on the leading edge of the propeller blade.

FIG. **3**A is a top-down view of a propeller blade **300** with a plurality of propeller blade treatments **302**, according to an implementation. The propeller blade **300** may be configured in a manner similar to that discussed above with respect to FIG. **2**A. For example, the propeller blade **300** may include a hub **301**, a tip **303**, a leading edge **305**, a trailing edge **307**, and a surface area **309**. Likewise, the propeller blade **300** may include a sound controller **311** that controls a drive mechanism **304** and an actuator **310**, all of which may be powered by a power supply **306** and/or a solar panel **312** positioned on the surface area of the propeller blade. Likewise, a wireless communication component **308** may be included to enable wireless communication to and from the sound controller **311**.

In this example, a flexible material **314** is positioned over the propeller blade treatments and moves with the adjustment of the propeller blade treatments. The flexible material may be fabricated of any flexible material, such as rubber, polyethylene, polypropylene, nylon, polyester, laminate, fabric, Kevlar, carbon fiber, etc. When the propeller blade treatments are moved in a direction that includes a horizontal and/or vertical component with respect to the surface area, the flexible material **314** expands or contracts in response to the movement, thereby altering the shape of the flexible material and, thus, the shape of the propeller blade **300**. The flexible material may encompass the entire propeller blade or may only be formed over the propeller blade treatments. Regardless, as the propeller blade treatment positions are adjusted, the flexible material adjusts, thereby altering the airflow over the propeller blade as the propeller rotates. The altered airflow changes the sound generated by the propeller when rotating.

FIG. **3**B illustrates a side-view of a propeller blade **300** that includes a plurality of propeller blade treatments **302** covered with a flexible material **314**, according to an implementation. As illustrated, as the propeller blade treatments **302** protrude from the surface area of the propeller blade, the flexible material **314** stretches around the propeller blade treatment **302**, thereby altering the overall shape and resulting sound generated by the propeller blade.

FIG. **4**A is another top-down view of a propeller blade **400** with propeller blade treatments, according to an implementation. Similar to the discussion above with respect to FIG. **2**A, the propeller blade includes a hub **401**, a tip **403**, a leading edge **405**, a trailing edge **407** and a surface area **409** that extends between the hub **401**, the tip **403**, the leading edge **405**, and the trailing edge **407**. The surface area includes an upper surface area, which is viewable in the example illustrated in FIG. **4**A, and a lower surface area that is opposite the upper surface area.

In this implementation, the propeller blade treatments are in the form of serrations **402** that extend along the leading edge **405**. The serrations may be of any size, shape, diameter, and/or curvature. Likewise, spacing between the serrations **402** along the leading edge may vary. As illustrated in the expanded view, the serrations may be less than one millimeter ("mm") apart and range between 0.5-2.3 mm in length. In other implementations, the spacing and/or size of the serrations may be greater or less than the spacing and size illustrated in FIG. **4**A. Likewise, the curvature of the serrations may vary between serrations and/or between propeller blades.

The serrations **402** may be adjusted in a direction that includes a horizontal component and/or a vertical component with respect to a surface area **409** of the propeller blade **400**. For example, the propeller blade may include a sound controller **411**, which includes an actuator **410**. The components of the sound controller **411** may be incorporated into the propeller blade **400** and positioned such that the actuator **410** contacts one or more of the propeller blade treatments and is configured to move or reposition the serrations **402**. For example, the sound controller **411** may include a drive mechanism **404**, such as a servo motor, solenoid, etc., that moves the actuator **410**. As illustrated in the expanded view, the actuator may include one or more protrusions **410-1** that move as the actuator is moved by the drive mechanism. As the protrusions **410-1** move, they contact one or more ridges

402-1 of the serrations 402, thereby causing the serrations 402 to move from a first position to a second position.

As each serration 402 moves positions, the sound generated by the propeller blade as it rotates is altered because the airflow is disrupted by the serrations 402. For example, the serrations, when extended from the leading edge 405 of the propeller blade 400, may disrupt the airflow such that the airflow creates small vortices and/or turbulent flows between the serrations. The small vortices and/or turbulent flows may produce varying sounds (e.g., different amplitudes, frequencies, etc.), resulting in a total sound that is dampened and/or that generates a broadband noise that is similar to white noise. White noise refers to a sound containing equal amplitudes at all frequencies. Broadband noise is generally more acceptable to humans than other sounds with larger tonal components typically generated by rotating propellers. In contrast, when the serrations 402 are retracted into the propeller blade 400 such that they do not extend beyond the leading edge 405 of the propeller blade 400, the air passing over the propeller blade 400 as it rotates creates less turbulence, and the overall sound has more tonal prominence at harmonics of the blade-passing frequency and less broadband character.

In some implementations, movement of the actuator 410 may be based on the rotational speed of the propeller, the sound measured by one or more sensors, and/or based on the altitude of the aerial vehicle. For example, the drive mechanism may be a counterweight that moves with an increase in the centrifugal force generated by the rotation of the propeller blade 400. As the counterweight moves, it causes the actuator 410 to move, thereby altering the position of one or more serrations 402. In other implementations, the sound controller 411 may be powered by one or more power supplies 406 and the drive mechanism 404 may adjust the position of the actuator based on instructions received from the sound controller 411. For example, the sound controller 411 may include a processor and memory that includes a table of different propeller blade serration 402 positions and resultant sounds that are generated when the propeller is rotated with the serrations in those positions. The sound controller 411 may also receive information and/or instructions through a wireless communication component 408, such as an antenna, and determine positions for each of the serrations 402. For example, the sound controller 411 may receive position information, environmental information, and/or operational information and determine a predicted sound that is expected based on that information. For the predicted sound, serration positions are determined that will cause the propeller to generate an anti-sound when rotated. In another example, the position of propeller blade treatments may be selected to dampen, reduce, and/or otherwise alter the sound generated by the rotation of the propeller, such as by altering the relative and/or absolute amplitudes of various frequency components of the sound.

In other implementations, the sound controller 411 may receive additional or less information and determine positions for serrations 402. In some implementations, the sound controller 411 may receive instructions for each serration position, and/or instructions for sets of serrations. As discussed further below with respect to FIG. 4B, serrations may be grouped into sets, each set including at least one serration.

While the illustrated example shows the sound controller controlling a single drive mechanism and actuator of a propeller blade 400, in some implementations, the sound controller may be coupled to and control multiple drive mechanisms, sound controllers, and corresponding serrations for multiple propeller blades. For example, a propeller of an aerial vehicle may include one, two, three, four, five, or any number and/or shape of propeller blades. One or more of the propeller blades may include a drive mechanism 404, actuator 410, serrations 402, and/or other types of propeller blade treatments. All of the propeller blade treatments of the different propeller blades, including the serrations 402, may be controlled by the sound controller. Likewise, one or more of the propeller blades 400 may include a power supply 406 and/or a power source. In this example, the power source is a series of solar panels 412 that collect solar energy for use in powering the sound controller 411 and drive mechanism 404. Likewise, the energy collected by the solar panels 412 may be stored in one or more power supplies 406, such as a battery.

While the example illustrated in FIG. 4A includes a drive mechanism 404 and actuator 410 in the form of an adjustable arm that may be moved by the drive mechanism, it will be appreciated that any variety of techniques may be used to alter the positions of the serrations 402. As discussed above, the actuator may be any type of device or component (e.g., piezoelectric actuator, solenoid, pneumatics, etc.) that can move the propeller blade treatments (e.g., serrations). For example, referring to FIG. 4B, illustrated is a top-down view of a propeller blade 450 in which the actuator 460 that moves the serrations 452 along the leading edge 465 is in the form of multiple piezoelectric actuators. In such a configuration, the sound controller 461 can individually control each actuator, thereby causing different sets of serrations along the leading edge to be adjusted independent of other sets of serrations.

Referring to the expanded view 470, illustrated are three sets of serrations 452-1, 452-2, 452-3, each set affixed to a separate actuator 460-1, 460-2, and 460-3. As illustrated, the serrations 452 may be different sizes, shapes, lengths, diameters, have different curvatures, and/or be formed of different materials. Each set of serrations includes one or more serrations. For example, the third set of serrations 452-3 includes a single serration. In comparison, the first set of serrations 452-1 includes two serrations and the second set of serrations 452-2 includes three serrations. In some implementations, the serrations are formed of a fibrous material that flexes during rotation of the propeller. In other implementations, the serrations may be formed of, for example, ceramic, plastic, rubber, composites, metal, carbon fiber, etc.

Referring to the expanded view 472, in some implementations, when an actuator is not activated, such as actuator 460A, the set of serrations 452 coupled to the actuator may be in a retracted position in which the serrations 452 do not extend beyond the leading edge 465 of the propeller blade. When the sound controller sends a signal to activate the actuator, and the actuator activates, as illustrated by actuator 460B, the serration 452 is moved to an extended position in which at least a portion of the serration extends beyond the leading edge 465 of the propeller blade. As the propeller rotates, different actuators 460 may be activated or deactivated such that different sets of serrations move between extended positions and retracted positions, thereby altering the sound generated by the rotation of the propeller blade.

In addition to including serrations along the leading edge 465 of the propeller, serrations may be included on other portions of the propeller. For example, FIG. 4B illustrates serrations extending from the leading edge 465 of the propeller, serrations extending from the trailing edge 457, serrations extending from the tip 453, and serrations extending from the surface area 459. Similar to the serrations 452 along the leading edge, serrations on other portions of the propeller may be stationary or actively moved between two

or more positions. For example, the serrations **452** along the trailing edge **457** of the propeller may be actively adjusted between a retracted position and an extended position. In some implementations, the serrations **452** may be moved using any of the examples discussed above (e.g., mechanical adjustment arm, piezoelectric actuators, pneumatics, and solenoids). The actuator **463** that moves the serrations **452** along the trailing edge **457** is in the form of multiple solenoids. In such a configuration, the sound controller **461** can individually control each actuator **463**, thereby causing different sets of serrations along the trailing edge to be adjusted independent of other sets of serrations.

Referring to the expanded view **474**, in some implementations, when an actuator is not activated, such as actuator **463**A, the set of serrations **452** coupled to the actuator may be in a retracted position in which the serrations **452** do not extend beyond the trailing edge **457** of the propeller blade. When the sound controller sends a signal to activate the actuator, and the actuator activates, as illustrated by actuator **463**B, and the serration **452** is moved to an extended position in which at least a portion of the serration extends beyond the leading edge **465** of the propeller blade. As the propeller rotates, different actuators **463** may be activated or deactivated such that different sets of serrations move between extended positions and retracted positions along the trailing edge of the propeller blade **450**, thereby altering the sound generated by the rotation of the propeller blade.

The serrations **452** influence the airflow around the propeller blade, inducing vortices, turbulence, and/or other flow characteristics that can reduce, dampen, and/or otherwise alter the sound generated by the rotation of the propeller. For example, the air may be disrupted because the serrations generate small channels between each serration and the air passes through the small channels as the propeller blade rotates. These small channels of air generate smaller vortices and/or turbulent flows as the propeller blade passes through the air, along with larger vortices and/or turbulent flows being generated. The smaller vortices and/or turbulent flows generate less and/or different sounds than larger vortices, and some of the sounds generated by the smaller vortices and/or turbulent flows have relatively high amplitudes at different frequencies. By disrupting the sound and generating smaller vortices and/or turbulent flows, the total sound generated from the propeller blade is dampened, reduced, and/or otherwise altered. For example, the frequency of the sounds that are generated may be more representative of white noise.

FIG. **5**A is a top-down view of a propeller blade **500** with propeller blade treatments, according to an implementation. In this example, the propeller blade treatments are in the form of fringes **503**, **505** that extend from the trailing edge **507** of the propeller blade **500**A. The fringes may be formed of any variety of materials and some fringes may be formed from materials that are different than other fringes. For example, the fringes may be formed of an elastic material, a rigid material like a ceramic or carbon composite, a porous material, fabric material, feathers, a fibrous material, leather, fur, synthetic-fabric materials, fibers, etc.

As illustrated, the length, size, and/or shape of the fringes **503**, **505** may vary. For example, longer and/or narrower fringes **505**A may be positioned toward the hub **501** of the propeller blade **500**A, larger and/or wider fringes **505**AA may be positioned toward a center of the trailing edge of the propeller blade **500**A, and smaller fringes **503**A may be positioned toward a tip of the propeller blade **500**. Likewise, in some implementations, the density or number of fringes may vary along the length of the propeller blade **500**. Referring to the expanded view **513**, the fringes may be formed of numerous fibers that extend from the trailing edge **507** of the propeller blade **500**. The fibers may be frayed or diffused at the end of each fiber, in a manner similar to that illustrated in the expanded view **513**.

The fringes, such as the fibers, can move in the air as the propeller rotates, disrupting and/or smoothing the flow of air as the propeller blade **500**A passes through the air. The disrupted and/or smoothed air results in less and/or different sound being generated by the propeller as it rotates. Likewise, the fringes and/or the frays extending from the end of the fringes **505** also absorb some of the sound generated by the propeller rotating through the air, thereby decreasing the total sound generated by the propeller blade. In some implementations, the fringes may be formed such that they can move in a vertical direction as the propeller rotates but the horizontal direction of the fringes may be limited. For example, the fibers of a fringe may be configured to flex in a vertical direction with a rotation of the propeller blade and flex in a horizontal direction to a position in which the fringes are aligned with a rotational direction of the propeller blade.

The fringes **505**, when extended beyond the trailing edge of the propeller blade, may create additional drag as the propeller rotates, requiring additional power to rotate the propeller at a commanded speed. Accordingly, in some implementations, the fringes **505** may be adjustable such that they can be moved between an extended position in which the fringes extend beyond the trailing edge **507** of the propeller blade and a retracted position in which the fringes are retracted, at least partially, into the propeller blade. Likewise, in some implementations, some fringes may be moved independently of other fringes on the propeller blade **500**.

In one implementation, the sound controller **511** may be configured to adjust the position of the fringes **503**, **505**. For example, the sound controller **511** may include a drive mechanism, such as a servo motor, that can rotate or adjust a position of an adjustment component **512** that extends along the trailing edge **507** of the propeller blade **500**. The adjustment component **512** may be internal to the propeller blade **500**. In some implementations, the adjustment component may be a cylinder or a series of cylinders that can be rotated in either direction. The internal ends of the fringes may be attached to a cylinder and the sound controller **511** may utilize the drive mechanism to rotate one or more of the cylinders to either extend or retract the fringes **503**, **505**. When the cylinders are rotated in a first direction, the fringes roll-up or wrap around the cylinders into a retracted position within the propeller blade. When the cylinders are rotated in a second direction, the fringes **503**, **505** extend or unwrap from the cylinders into an extended position beyond the trailing edge of the propeller blade **500**.

In FIG. **5**A, all of the fringes **503**A, **505**A, **505**AA are in an extended position. When in the extended position, the sound generated by the propeller blade may be dampened by the fringes, but the power required to rotate the propeller blade may be increased due to the added drag from the extended fringes. In comparison, referring to FIG. **5**B, the fringes **505**B and fringes **505**BB that are closer toward the hub of the propeller blade and the center of the propeller blade are retracted into the propeller blade **500**B and the fringes **503**B remain in the extended position. In such a configuration, the sound generated by the tip vortices and/or turbulent flows that are shed from the tip of the blade are

dampened by the extended fringes **503**B but the drag resulting from extended fringes is reduced by retracting the fringes **505**B, **505**BB.

Referring now to FIG. **5**C, all three sets of fringes **505**C, **505**CC, and **503**C of the propeller blade **500**C are in the retracted position. By retracting all of the fringes **503**C, **505**C, and **505**CC, the drag on the propeller blade **500**C is further reduced, thereby reducing the power required to rotate the propeller. However, the sound generated by the propeller blade **500**C may be louder because the fringes are not extended to dampen the sound generated as the propeller passes through the air.

In comparing the configurations of FIGS. **5**A, **5**B, and **5**C, assuming the propeller blades **500**A, **500**B, **500**C are rotating at the same speed (and all other factors being equal—wind, air pressure, etc.), the total sound generated by the rotation of propeller blade **500**A (FIG. **5**A) is less than and/or different than the total sound generated by the rotation of propeller blade **500**B (FIG. **5**B). Likewise, the sound generated by the rotation of propeller blade **500**B is less than and/or different than the sound generated by the rotation of propeller blade **500**C (FIG. **5**C). However, the power needed to rotate propeller blade **500**A to generate a desired lift and/or thrust is higher than the power needed to rotate propeller blade **500**B to generate the same desired lift and/or thrust. Likewise, the power needed to rotate propeller **500**B to generate the desired lift and/or thrust is higher than the power needed to rotate propeller blade **500**C to generate the same desired lift and/or thrust.

FIG. **5**D illustrates a top-down view of a propeller blade **580** that includes both serrations **582** along the leading edge **595** of the propeller blade **580** and fringes **583**, **585** extending from the trailing edge of the propeller blade **500**D. Depending on the configuration, the propeller blade **580** may also include one or more of a sound controller **581**, power supply **586**, solar panels **593**, wireless communication component **588**, a drive mechanism **584**, an adjustment arm **590** that may be used to adjust and/or extend or retract the serrations **582**, and/or a sound controller **592** that may be used to extend or retract the fringes **583**, **585**.

In the described implementations, the aerial vehicle can determine when efficiency of power is of higher importance and when reduction or alteration of sound is of higher importance and adjust the serrations **582**, and/or the fringes **583**, **585** accordingly. For example, when the aerial vehicle is at a high altitude (e.g., in transit between two locations), power efficiency may be more important than sound dampening or other alteration, and the aerial vehicle control system may cause the serrations **582** and/or the fringes **583**, **585** to be retracted. In comparison, when the UAV is below a defined altitude (e.g., 50 feet), it may determine that sound dampening or other alteration is more important and cause the serrations **582** and/or the fringes **583**, **585** to extend, thereby reducing and/or otherwise altering the sound generated by the rotation of the propellers but increasing the power needed to rotate the propellers and generate the required thrust or lift. Sound dampening or alteration may be of higher importance at lower altitudes because the UAV may be entering areas that are populated by humans, such as to deliver a package to a human's residence.

In some implementations, the serrations **582**, and/or fringes **583**, **585** may be adjusted as the aerial vehicle changes altitude. For example, as the aerial vehicle begins to descend, the serrations **582** may be extended first to initially dampen, reduce, and/or otherwise alter the sound generated by the rotation of the propeller. As the aerial vehicle continues to descend, the fringes **583** toward the tip of the propeller blade may be extended to dampen, reduce, and/or otherwise alter the sound generated by the shed tip vortices and/or turbulent flows. Finally, as the aerial vehicle continues to descend, the fringes **585** may be extended to dampen, reduce, and/or otherwise alter the sound generated as the propeller blade passes through the air. By progressively extending the serrations **582** and fringes **583**, **585**, the power to sound alteration ratio is adjusted as the aerial vehicle approaches lower altitudes, thereby conserving power while altering sound as needed. In a similar manner, the fringes **583**, **585** and serrations **582** may be retracted as the aerial vehicle ascends to higher altitudes, thereby reducing the power needed to rotate the propellers and generate the desired lift or thrust.

In some implementations, as discussed below, one or more sensors positioned on the propeller or the aerial vehicle may measure sound generated at or around the aerial vehicle and the serrations **582** and/or fringes **583**, **585** may be extended or retracted based on the measured sounds. For example, an allowable sound level and/or frequency spectrum for the aerial vehicle may be defined. As the sound measured by the aerial vehicle reaches the allowable sound level or frequency spectrum, the serrations **582**, and/or fringes **583**, **585** may be extended to dampen, reduce, and/or otherwise alter the sound generated by the aerial vehicle, such as by altering the frequency spectrum of the produced sound. In some implementations, the allowable sound level or frequency spectrum may vary depending on, for example, the altitude of the aerial vehicle, and/or the position of the aerial vehicle. For example, when the aerial vehicle is at lower altitudes and/or in areas populated by humans, the allowable sound level may be lower than when the aerial vehicle is at higher altitudes and/or in areas not populated by humans.

FIG. **6**A is a top-down view of an upper side of propeller blade **600**A with propeller blade treatments, according to an implementation. Likewise, FIG. **6**B is a view of a lower side of a propeller blade **600**B with propeller blade treatments, according to an implementation. In the examples illustrated in FIGS. **6**A and **6**B, the propeller blade treatments are sound dampening materials **615**, **617** affixed to the surface area of the propeller blade. In some implementations, the sound dampening material **615** may only be affixed to the upper side of the propeller blade **600**A, as illustrated in FIG. **6**A. In other implementations, the sound dampening material **617** may only be affixed to the lower side of the propeller blade **600**B. In still other implementations, the sound dampening material may be affixed to both the upper side of the propeller blade **600**A and the lower side of the propeller blade **600**B.

In some implementations, the sound dampening material may be affixed to only a portion of the upper side of the propeller blade **600**A and/or affixed to only a portion of the lower side of the propeller blade **600**B. Likewise, different types of sound dampening materials may be affixed to different portions of the surface areas of the propeller blade. For example, one type of sound dampening material **615** may be affixed to some or all of the upper side of the propeller blade **600**A and another type of sound dampening material **617** may be affixed to some or all of the lower side of the propeller blade **600**B. In still other implementations, multiple types of sound dampening materials may be affixed to either, or both, the upper side of the propeller blade **600**A or the lower side of the propeller blade **600**B. Finally, in some implementations, the sound dampening material may extend between the upper side of the propeller blade **600**A and the lower side of the propeller blade **600**B covering all

or a portion of the leading edge **605**, covering all or a portion of the trailing edge **607**, and/or covering all or a portion of the hub **601**. The sound dampening material may be the only propeller blade treatment utilized. In other implementations, the sound dampening material may be used in conjunction with other propeller blade treatments.

Any size, type, density, or variation of sound dampening material may be utilized with the implementations discussed herein. For example, the sound dampening materials **615**, **617** may be feathers, flocking, velvet, satin, cotton, rayon, nylon, suede, synthetic fibers, rope, hemp, silk, etc. In general, the sound dampening material may be any form of material that dampens, reduces, absorbs, and/or otherwise alters sound generated by the rotation of the propeller blade as it passes through the air.

In the example illustrated in FIGS. **6**A and **6**B, the sound dampening material **615** affixed to the upper side of the propeller blade **600**A is a first type of sound dampening material and the sound dampening material **617** affixed to the lower side of the propeller blade **600**B is a second type of sound dampening material. For example, the sound dampening material **615** may be fibrous material and the sound dampening material **617** on the lower side of the propeller blade are down feathers. The down feather sound dampening material **617** may include actual down feathers. Alternatively, some or all of the sound dampening material **617** may be a synthetic material that has sound dampening properties similar to that of down feathers. Likewise, as illustrated, the size and/or shape of the sound dampening material may vary over the surface area of the propeller blade **600**. The sound dampening material may be affixed to the propeller blade and/or otherwise incorporated into the propeller blade.

FIG. **6**C is a top-down view of a propeller blade **600**C that includes multiple types of propeller blade treatments, according to an implementation. In this example, the propeller blade **600**C includes propeller blade treatments in the form of serrations **602** extending along the leading edge of the propeller blade **600**C, fringes **613** extending from the trailing edge **607**, and sound dampening material **615** affixed to the surface area **609** of the propeller blade **600**C.

As discussed above, either or both of the serrations **602** and the fringes **613** may be active such that a sound controller can extend, retract, or otherwise alter the position of the serrations **602** and/or the fringes **613**. In some implementations, when the serrations **602** are extended, as discussed above, the air is separated in the channels passing between the serrations **602** and forms smaller vortices and/or turbulent flows that move along the surface area **609** of the propeller blade **600**C. These smaller vortices and/or turbulent flows produce a softer, less tonal, whiter total sound than larger vortices and/or turbulent flows formed when the serrations are retracted (or non-existent). Likewise, the smaller vortices and/or turbulent flows vary in frequency generating a total sound that is more representative of white noise, or other broadband noise.

Likewise, the sound dampening material **615** affixed to the surface area (the upper surface area and/or the lower surface area) of the propeller blade **600**C absorbs, scatters, and/or otherwise alters some of the sound generated by the smaller vortices, especially those having a higher frequency. The absorption and/or other alteration of sound generated by the smaller vortices and/or turbulent flows further dampens, reduces, and/or otherwise alters the total sound generated by the propeller as the propeller passes through the air. Finally, the fringes **613** further disrupt the air, breaking down the smaller vortices and/or smoothing turbulent flows of the air as the propeller passes through the air. The disruption and/or smoothing of the air by the fringes **613** still further dampens, reduces, and/or otherwise alters the sound generated by the propeller blade as it rotates through the air.

FIG. **7** is a top-down view of a propeller blade **700** with still another configuration of propeller blade treatments, according to an implementation. In FIG. **7**, the propeller blade includes serrations **702** extending along the leading edge **705** of the propeller blade, fringes **713** extending from the trailing edge **707** of the propeller blade and multiple types of sound dampening materials **715**, **717**, **719** affixed to the surface area of the propeller blade **700**, which includes either or both the upper side or the lower side of the propeller blade. Like the other examples, in some implementations, either or both of the serrations **702** and/or the fringes **713** may be adjustable between an extended position and a retracted position, or otherwise altered.

The different sound dampening materials **715**, **717**, **719** may be selected based on characteristics of the propeller, such as the total sound spectrum, the size, and/or shape of the propeller, the pitch of the propeller blade, etc. In this example, a first sound dampening material **715** is affixed to a first portion of the surface area of the propeller blade **700** nearest the hub **701** of the propeller blade. A second sound dampening material **717** is affixed to the central portion of the surface area of the propeller blade, and a third sound dampening material **719** is affixed to the surface area nearest the tip of the propeller blade **700**. In this configuration, the third sound dampening material **719** may have the highest sound dampening properties but cause the greatest amount of additional drag on the propeller, thereby requiring additional power to rotate the propeller. The second sound dampening material **717** may have the second highest sound dampening properties and the second highest amount of drag. Finally, the first sound dampening material **715** may have the least amount of sound dampening material and the least amount of drag.

By selecting different sound dampening materials for different portions of the surface area, the power requirements and sound dampening properties may be balanced or otherwise tailored. For example, the sound generated from the area near the tip of the propeller blade is generally louder than the sound generated from the area of the propeller blade nearest the hub **701**, because the tip of the propeller blade is rotating faster. As such, sound dampening materials with higher dampening properties may be placed toward the tip of the propeller blade to dampen the sound to a desired level. In comparison, a sound dampening material **715** may be used closer to the hub that will generate less drag but still dampen, reduce, and/or otherwise alter the sound generated from that portion of the propeller blade to a desirable level.

As will be appreciated, any number, type, and/or combination of propeller blade treatments, from serrations, sound dampening materials, to fringes may be used alone or in combination to dampen or otherwise alter sound generated by rotation of a propeller blade. As discussed above, altering the sound may include, but is not limited to, altering a frequency spectrum of the sound, generating an anti-sound, dampening the sound, etc.

FIG. **8**A is a top-down view of a propeller blade **800** with a plurality of propeller blade treatments, according to an implementation. In this example, the propeller blade treatments are incorporated into the propeller blade in the form of dimples or indentations **802** into the surface area of the propeller blade. The indentations **802** on the propeller blade **800** may be positioned on the leading edge **805** of the propeller blade **800**, on the trailing edge **807**, on the tip **803**,

and/or on the upper side and/or lower side of the surface area **809** of the propeller blade **800**. The indentations **802** may be of any shape, size, pattern, and/or density. For example, the indentations **802** may be more densely positioned at the tip of the propeller blade and less dense toward the middle of the propeller blade **800**. In other implementations, the indentations **802** may be larger in size and/or depth toward the tip **803** of the propeller blade **800** than toward the middle of the propeller blade **800**. Alternatively, as illustrated, the indentations **802** may be smaller in size and/or depth toward the tip of the propeller blade than toward the central portion of the propeller blade **800**. For example, as illustrated in the expanded view, in one implementation, the indentations **802-2** toward the tip of the propeller blade may have a width of approximately 1.0 mm and a depth of approximately 0.5 mm. In comparison, the indentations **802-1** toward the central portion of the propeller blade may have a width of approximately 5.0 mm and a depth of approximately 1.0 mm.

In addition to varying the size of the indentations, the shape of the indentations may likewise vary. For example, as illustrated in the expanded view, the indentations may be in the shape of an octagon **802-3**, a triangle **802-4**, a hexagon **802-5**, a parallelogram **802-6**, a semi-circle **802-7**, an irregular shape **802-8**, an oval **802-9**, a circle **802-10**, a trapezoid, a parallelogram, a rhomboid, a square, a rectangle, or a general quadrilateral, or any other shape, such as a polygon shape, that can be formed into the surface area of the propeller blade **800**.

In some implementations, the indentations **802** may be randomly positioned along the surface area of the propeller blade **800**. In other implementations, some or all of the indentations **802** may be positioned to form one or more regular or irregular patterns. For example, a first set **811-1** of indentations **802** are aligned to form a first pattern, a second set **811-2** of indentations **802** are aligned to form a second pattern, and a third set **811-3** of indentations **802** are aligned to form a third pattern along the surface area of the propeller blade. In this example, the sets **811-1-811-3** of indentations arranged in patterns are designed to create air-flow channels that route air over the indentations as the propeller passes through the air. The channeled air creates a first predictable sound. In a similar manner, indentations on another propeller blade of the aerial vehicle may be arranged in different patterns to create a second predictable sound. The second sound may be an anti-sound to the first sound such that when the first sound and the second sound combine they cause destructive interference and cancel each other out, thereby reducing and/or otherwise altering the total sound generated by the aerial vehicle. In other implementations, the designs of the indentations may also be formed to generate other predicted sounds that may be used as anti-sounds for other aerial vehicle created sounds, such as sounds created by a motor of the aerial vehicle.

The indentations **802** on the propeller blade **800** alter the airflow over the blade and/or cause turbulence. Specifically, the indentations **802** cause the air to remain attached to the surface area of the propeller blade **800** for a longer period of time, thereby reducing and/or otherwise altering the wake and tip vortices caused by the rotation of the propeller through the air. Altering the wake and tip vortices, and the created turbulence, alters the sound generated by the propeller as it rotates and passes through the air. Likewise, the improved airflow and attachment of the air to the propeller blade allows the aerial vehicle to operate a higher angles of attack and/or higher speeds before the performance of the propeller blade is impacted.

FIG. **8**B is a top-down view of a propeller blade **850** with a plurality of propeller blade treatments, according to an implementation. In this example, the propeller blade treatments are incorporated into the propeller blade in the form of protrusions **852** or bumps on the surface of the propeller blade **850**. The protrusions **852** on the propeller blade **850** may be positioned on the leading edge **855** of the propeller blade **850**, on the trailing edge **857**, on the tip **853**, and/or on the upper and/or lower surface area **859** of the propeller blade **850**. In this example, the protrusions **852** on the propeller blade **850** may be of any shape, size, pattern, and/or density. For example, the propeller blade treatments may be more densely positioned at the tip of the propeller blade and less dense toward the middle of the propeller blade **850**. The propeller blade treatments may be larger in size and/or height toward the tip **853** of the propeller blade **850** than toward the middle of the propeller blade **850**. Alternatively, as illustrated, the protrusions **852** may be smaller in size and/or height toward the tip of the propeller blade than toward the central portion of the propeller blade **850**. For example, as illustrated in the expanded view, in one implementation, the protrusions **852-2** toward the tip of the propeller blade may have a width of approximately 1 mm and a height above the surface area **859** of approximately 0.5 mm. In comparison, the protrusions **852-1** toward the central portion of the propeller blade **850** may have a width of approximately 5.0 mm and a height of approximately 1.0 mm.

In addition to varying the size of the protrusions, the shape of the protrusions may likewise vary. For example, as illustrated in the expanded view, the protrusions may be in the shape of an octagon **852-3**, a triangle **852-4**, a hexagon **852-5**, a parallelogram **852-6**, a semi-circle **852-7**, an irregular shape **852-8**, an oval **852-9**, a circle **852-10**, a trapezoid, a parallelogram, a rhomboid, a square, a rectangle, or a general quadrilateral, and/or any other shape, such as a polygon shape, that can be formed on the surface area of the propeller blade **850**.

In some implementations, the protrusions **852** may be randomly positioned along the surface area of the propeller blade **850**. In other implementations, some or all of the protrusions **852** may be positioned to form one or more regular or irregular patterns. The protrusions **852** on the propeller blade **850** alter the airflow over the blade and cause turbulence.

Similar to the other examples of propeller blades with propeller blade treatments, the propeller blades **800**, **850** may be fabricated and tested to generate particular sound profiles when rotating. Different propellers may be used on the same aerial vehicle and selected such that the sounds generated by the rotation of the propellers cause destructive interface with each other and/or with other sounds generated by or near the aerial vehicle. The resulting net effect of the sounds is thus dampened, reduced, and/or otherwise altered.

FIG. **8**C is a top-down view of a propeller blade **800**C with multiple propeller blade treatments, according to an implementation. In this example, the propeller blade **800**C includes propeller blade treatments in the form of serrations **862** extending along the leading edge of the propeller blade **800**C, fringes **863**, **865** extending from the trailing edge of the propeller blade, protrusions **869**, a first set **861-1** of indentations arranged in a first pattern, a first sound dampening material **867**, a second set **861-2** of indentations arranged in a second pattern, a second sound dampening material **875**, a third set **861-3** of indentations arranged in a third pattern, and a third sound dampening material **877**.

Similar to the above discussion, some or all of the propeller blade treatments, such as the serrations, fringes, etc., may be fixed or adjustable. In this example, the serrations **862** extend along the leading edge of the propeller blade and may be extended or retracted under the control of a sound controller. The fringes **865**, **863** extend along the trailing edge of the propeller blade and may likewise be extended or retracted under control of the sound controller. The three sets, **861-1**, **861-2**, **861-3**, of indentations arranged in patterns are positioned in-line with a rotation of the propeller blade **800**C and spaced a defined distance apart along the propeller blade **800**C. The protrusions are positioned between the hub **860** and the first set **861-1** of indentations. The first sound dampening material is affixed to the surface area between the first set **861-1** of indentations and the second set **861-2** of indentations. The second sound dampening material **875** is affixed to the surface area between the second set **861-2** of indentations and the third set **861-3** of indentations. The third sound dampening material **877** is positioned between the third set **861-3** of indentations and the tip of the propeller blade.

While the example illustrated in FIG. **8**C shows an upper side of the propeller blade **800**C, it will be appreciated that a similar, or different, arrangement of propeller blade treatments may be affixed to the lower side of the propeller blade. Alternatively, the lower side of the propeller blade may not include any propeller blade treatments or it may only include one type of propeller blade treatment, such as a sound dampening material. Any type, number, and/or arrangement of propeller blade treatments may be affixed to any portion of the propeller blade to generate different sounds, alter frequency spectra, dampen sound, and/or generate anti-sounds. Likewise, while the discussion above has described that the serrations and/or the fringes may be active, in some implementations, other types of propeller blade treatments may also be active.

For example, FIG. **9**A is a top-down view of a propeller blade **900** that includes a plurality of propeller blade treatments **902**, according to an implementation. In this example, the propeller blade treatments may be actuated and moved from a first position to a second position. For example, each of the propeller blade treatments may include piezoelectric actuators that are individually addressable by the sound controller **911** such that the actuators can be activated or deactivated by instructions from the sound controller **911**. When a propeller blade treatment is activated, the actuator expands causing the propeller blade treatment **902** to protrude from the surface of the propeller blade **900**, forming a protrusion, as discussed above. When the propeller blade treatment **902** is deactivated, the actuator retracts causing the propeller blade treatment **902** to contract toward the surface of the propeller blade **900**.

The propeller blade treatments **902** on the propeller blade **900** may be positioned on the leading edge **905**, the trailing edge **907**, the tip **903**, and/or on the upper and/or lower surface area **909** of the propeller blade **900**. Likewise, the propeller blade treatments may be of any shape, size, pattern, and/or density. For example, the propeller blade treatments may be more densely positioned at the tip of the propeller blade and less dense toward the middle of the surface area of the propeller blade **900**. In other implementations, the propeller blade treatments **902** may be larger and/or protrude further from the surface area near the tip **903** of the propeller blade **900** than toward the middle of the propeller blade **900**. In still other implementations, the propeller blade treatments **902**, when activated, may move inward forming indentations, such as those discussed above.

FIG. **9**B illustrates a side-view of a portion of a propeller blade illustrating a first position when the propeller blade treatments **902-1**, **902-2**, **902-3** are not activated and are approximately in a same plane as the surface of the propeller blade. In a second mode, the actuators of propeller blade treatments **902-2** and **902-3** have been activated causing the propeller blade treatments to protrude from the surface area of the propeller blade **900**, while propeller blade treatment **902-1** has not been activated and remains approximately in the same plane as the surface area of the propeller blade **900**. In some implementations, as illustrated in FIG. **9**B, the propeller blade treatments may be aligned in a pattern on the upper side of the surface area of the propeller blade and/or on the lower side of the propeller blade. In other implementations, as illustrated in FIG. **9**C, the positioning of the propeller blade treatments on the upper side of the propeller blade **900** may be offset with respect to the position of the propeller blade treatments on the lower side of the propeller blade **900**. For example, FIG. **9**C illustrates the propeller blade treatments **902-4**, **902-5**, **902-6**, **902-7**, and **902-8** positioned in an offset matter. When the propeller blade treatments **902-4**, **902-5**, **902-6**, **902-7**, and **902-8** are in a first position and retracted, they are approximately in a same plane as the propeller blade. However, as illustrated, when propeller blade treatments **902-4**, **902-5**, and **902-6** are activated, they protrude from the surface area of the propeller blade. Likewise, as illustrated, the propeller blade treatments **902-4**, **902-5**, and **902-8** on the upper side of the propeller blade are offset with respect to the propeller blade treatments **902-6** and **902-7** positioned on the underneath side of the propeller blade **900**.

By individually activating and deactivating the propeller blade treatments, a multitude of different surface area patterns, and thus resulting sounds, may be generated by the same propeller. Likewise, by activating certain propeller blade treatments and not activating others, different patterns may be formed on the propeller blade to control or channel the airflow over the blade, thereby altering the sound generated by the propeller blade as the propeller is rotating. For example, referring to FIG. **10**, illustrated is a partial view of an upper side of the surface area of a propeller blade **1000**, according to an implementation. Continuing with the example discussed with respect to FIGS. **9**A-**9**C, the propeller blade treatments **1002** include piezoelectric actuators that may be individually activated or deactivated to alter the shape of the propeller blade treatments. In this example, by activating the propeller blade treatments in the row aligned with propeller blade treatment **1002-10**, activating the propeller blade treatments in the row aligned with propeller blade treatment **1002-11**, and not activating the propeller blade treatments in the row aligned with propeller blade treatment **1002-9**, a channel is formed between the two rows of activated propeller blade treatments. This pattern results in increased airflow passing through the channel, thereby altering the sound generated by the propeller blade as it rotates.

FIG. **11**A is a top-view and a side-view of a propeller blade **1100** that includes a propeller blade treatment **1102-1**, according to an implementation. In this example, the propeller blade treatment **1102-1** is an inflatable bladder that extends along the leading edge **1105** of the propeller blade. When the propeller blade treatment **1102-1** is in a first position, it is deflated and retracted against the leading edge **1105** of the propeller blade such that it is substantially in line with the propeller blade, as illustrated in FIG. **11**A.

To alter the position of the propeller blade treatment **1102** from the first position, illustrated in FIG. **11**A, to a second

position, illustrated in FIG. **11**B, the sound controller **1111** causes the propeller blade treatment **1102-1** to inflate. When the propeller blade treatment inflates, it expands in a direction that includes a vertical and/or horizontal component with respect to the surface area **1109** of the propeller blade **1100**. For example, as illustrated in the side view of FIG. **11**B, the propeller blade treatment **1102-1** expands out of the plane of the surface area **1109** of the propeller blade **1100**. This altered shape of the propeller blade disrupts the airflow as it passes over the propeller blade, thereby changing the sound generated by the propeller blade as the propeller rotates.

The propeller blade treatment **1102** illustrated in FIG. **11**A and FIG. **11**B may be of any type of expandable or flexible material. Likewise, while this example illustrates the propeller blade treatment **1102** extending along the leading edge, in other implementations, the propeller blade treatment **1102** may be at other positions and/or orientations along the propeller blade. Similar to the other propeller blades discussed herein in which the propeller blade treatment may be moved between a first position and a second position, the propeller will generate different sounds when the propeller blade treatments are at different positions. In this example, the propeller blade may be capable of generating multiple different sounds as it rotates, depending on the amount of inflation of the propeller blade treatment **1102-1**. For example, the propeller blade **1100** may generate a first sound when rotating and the propeller blade treatment **1102-1** is in a first position (e.g., not inflated), generate a second sound when rotating and the propeller blade treatment **1102-1** is in a second position (e.g., 50% inflated), and generate a third sound when the propeller is rotating and the propeller blade treatment **1102-1** is in a third position (e.g., 100% inflated). By varying the amount of inflation, and thus the shape of the propeller blade treatment, different sounds may be generated by the propeller blade **1100** as the propeller rotates.

FIGS. **12**A and **12**B are top-down views of a propeller blade **1200**, **1250**, according to an implementation. In the examples illustrated in FIGS. **12**A and **12**B, a portion of the surface area of the propeller blades has been removed. Referring first to FIG. **12**A, the propeller blade includes a hub **1201**, a tip **1203**, a leading edge **1205** that extends between the hub **1201** and the tip, and a trailing edge **1207** that extends between the hub **1201** and the tip. With the exception of the segments **1212-1**, **1212-2**, and **1212-3**, the surface area of the propeller blade has been removed. With the removed surface area, air is able to pass through the propeller blade as it rotates and the weight of the propeller blade is reduced. The leading edge **1205**, trailing edge **1207**, and remaining segments **1212-1**, **1212-2**, and **1212-3** produce the commanded lift.

As illustrated in FIG. **12**B, one or more propeller blade treatments may be included on the propeller blade **1250** to alter the sound generated when the propeller blade is rotating. For example, serrations **1252** may be included in the leading edge **1205** of the propeller blade, along the leading edge of the segment **1212-1** and/or along the edges of segments **1212-2**, **1212-3**. Likewise, fringes may be included that extend from the trailing edge **1207** and/or from the trailing edge of segment **1212-1**. Sound dampening material may be included on the surface area of segments **1212-1**, **1212-2**, and **1212-3**, which may include either or both the upper surface area or the lower surface area of the segments **1212-1**, **1212-2**, and **1212-3**.

Eliminating portions of the surface area of the propeller blade **1250** and including additional propeller blade treatments on the remaining segments of the propeller blade **1250** further alters the sound profile of the propeller blade. For example, when the propeller is rotating, the air is channeled through the serrations **1252** on the leading edge of the propeller and forms small vortices and/or turbulent flows. Rather than small vortices and/or turbulent flows traveling across the surface area of the propeller, some of the vortices and/or turbulent flows pass through the opening in the surface area and are channeled through the serrations **1252** extending from the leading edge of the segment **1212-1**. The smaller vortices and/or turbulent flows passing through the serrations on the leading edge of the segment **1212-1** of the surface area are further disrupted by the serrations and then absorbed by the sound dampening material affixed to the surface area of the segment **1212-1**. Similar disruptions and/or absorptions are realized on the segments **1212-2**, **1212-3**. Finally, vortices and/or turbulent flows that are not absorbed are smoothed by the fringes **1253** extending from the trailing edge of the propeller. The combined effects of the opening in the propeller blade and the propeller blade treatment dampens, reduces, and/or otherwise alters the total sound generated by the propeller blade as the propeller blade rotates through the air.

FIGS. **13**A-**13**C are side-views of a propeller blade, according to an implementation. In these examples, rather than the propeller blade being linearly designed, the propeller blades include one or more deviations, bends, or joints. By altering the plane or shape of the propeller blade, the sound generated by the propeller when rotating is altered. For example, a propeller blade having a first shape, such as that illustrated in FIG. **13**A, will generate a sound at a first most prominent frequency. A propeller blade having a second shape, such as that illustrated in FIG. **13**B, will generate a sound at a second most prominent frequency. A propeller blade having a third shape, such as that illustrated in FIG. **13**C, will generate a sound at a third most prominent frequency. By utilizing combinations of different shaped propellers having the same or different propeller blade treatments on the same aerial vehicle, some of the sounds generated by some of the propeller blades will cause destructive interference with sounds generated by other propeller blades, thereby reducing and/or otherwise altering the total sound generated by operation of the aerial vehicle. Likewise, some of the propeller blades may generate sounds that act as anti-sounds with respect to other sounds (e.g., motor sounds) generated during operation of the aerial vehicle.

In FIG. **13**A the propeller blade **1300** includes a bend in the Y direction out of the plane of the propeller blade **1300** in an upward direction. As such, the propeller blade **1300** includes a first segment **1301** and a second segment **1304** that form a peak **1305** between the hub of the propeller blade and the tip **1303** of the propeller blade.

In FIG. **13**B, the propeller blade **1310** includes a bend in the Y direction out of the plane of the propeller blade **1300** in a downward direction. As such, the propeller blade **1310** includes a first segment **1311** and a second segment **1314** that form a valley **1315** between the hub of the propeller blade and the tip **1313** of the propeller blade.

In FIG. **13**C, the propeller blade **1320** includes a first bend in the Y direction out of the plane of the propeller blade **1320** in an upward direction and a second bend in the Y direction out of plane in a downward direction. As such, the propeller blade **1320** includes a first segment **1321** and a second segment **1324** that form a peak **1325** between the hub of the propeller blade and the tip **1323** of the propeller blade. In this example, the propeller blade **1320** also includes a first

joint **1327** at which the propeller blade **1320** is altered to form a valley between the second segment **1324** and a third segment **1326** and a second joint **1329** that alters the angle of the propeller blade between the third segment **1326** and a fourth segment **1328**.

While the examples illustrated in FIGS. **13A-13C** describe altering the shape of the propeller blade in a Y direction, in other implementations, the propeller blade shape may be altered in the X direction, the Z direction, and/or any combination of the X, Y, and Z directions to generate different sounds and/or different frequency spectra. As discussed above, when a propeller blade is fabricated, it may be tested to determine a sound profile. Different shaped propellers with different sound profiles may be used on the same aerial vehicle to generate different sounds that dampen, reduce, and/or otherwise alter a total sound of the aerial vehicle.

In some implementations, different shaped propeller blades may also be combined with one or more of the propeller blade treatments discussed above. For example, if a propeller includes two propeller blades, each propeller blade may have a different shape and/or different types of propeller blade treatments. For example, one of the propeller blades may have a first propeller blade shape and include propeller blade treatments that generate a first sound. The second propeller blade, which may have a different propeller blade shape and/or include different propeller blade treatments, may generate a second sound that will cause destructive or constructive interference with the first sound (i.e., an anti-sound).

As discussed, propeller blades with different propeller blade treatments and/or different shapes generate different sounds at different rotational speeds because the airflow over the propeller blade is disrupted by the different propeller blade treatments and/or shapes. Lifting forces generated by the propeller blade may also vary depending on the size, shape, number, and/or position of the propeller blade treatments and/or the shape of the propeller blade. Likewise, the power required to rotate the propeller to generate a commanded lifting force may also vary depending on the size, shape, number, and/or position of the propeller blade treatments and/or the shape of the propeller blade. For example, if there are multiple propeller blade treatments on the leading edge of the propeller blade, the power required to rotate the propeller to generate a desired lift and/or thrust may be increased or decreased due to the additional drag caused by the propeller blade treatments.

The sound controller may consider the lifting force to be generated, the anti-sound to be generated, the allowable sound level for the aerial vehicle, and the corresponding power requirements, to determine positions for adjustable propeller blade treatments. For example, a propeller rotating at a first speed with adjustable propeller blade treatments in a first position may generate a first sound, a first lifting force, and draw a first amount of power. Likewise, the same propeller blade with the propeller blade treatments in a second position and rotating at the same speed may generate a second sound, generate the same lifting force, but require a different amount of power. Likewise, placing the propeller blade treatments in a third position and rotating the propeller blade at the same speed may generate the third sound, a different lifting force, and require yet another amount of power. The combinations of propeller blade treatment positions, rotational speeds, resulting lifting forces, sounds, and power requirements that may be selected for use in aerially navigating the aerial vehicle and generating a desired sound are essentially unbounded.

FIG. **14** is a flow diagram illustrating an example process **1400** for active sound control, according to an implementation. This process, and each process described herein, may be implemented by the architectures described herein or by other architectures. The process is illustrated as a collection of blocks in a logical flow graph. Some of the blocks represent operations that can be implemented in hardware, software, or a combination thereof. In the context of software, the blocks represent computer-executable instructions stored on one or more computer readable media that, when executed by one or more processors, perform the recited operations. Generally, computer-executable instructions include routines, programs, objects, components, data structures, and the like that perform particular functions or implement particular abstract data types.

The computer readable media may include non-transitory computer readable storage media, which may include hard drives, floppy diskettes, optical disks, CD-ROMs, DVDs, read-only memories (ROMs), random access memories (RAMs), EPROMs, EEPROMs, flash memory, magnetic or optical cards, solid-state memory devices, or other types of storage media suitable for storing electronic instructions. In addition, in some implementations, the computer readable media may include a transitory computer readable signal (in compressed or uncompressed form). Examples of computer readable signals, whether modulated using a carrier or not, include, but are not limited to, signals that a computer system hosting or running a computer program can be configured to access, including signals downloaded through the Internet or other networks. Finally, the order in which the operations are described is not intended to be construed as a limitation, and any number of the described operations can be combined in any order and/or in parallel to implement the process.

The example process **1400** may operate independently at each propeller blade and/or may be performed by a central system and propeller adjustment instructions sent by the central system to each of the respective sound controllers. The example process **1400** begins when an aerial vehicle that includes one or more sound controllers is operational, as in **1402**. In some implementations, the example process **1400** may only operate when the aerial vehicle is airborne and/or the motors are rotating. In other implementations, the example process **1400** may be active at any time in which the aerial vehicle is powered.

When the aerial vehicle is operational, sound generated by and/or around the aerial vehicle is measured by a sensor of the aerial vehicle, as in **1404**. For example, a sensor, such as a microphone, may detect and measure sound generated by or around an aerial vehicle. As discussed above, sensors may be positioned at each propeller and independently measure sounds near those propellers. In other implementations, sensors may be positioned on the body of the aerial vehicle and measure all sounds around the aerial vehicle.

In addition to measuring sound, the example process determines the lift to be generated by each of the propellers, as in **1406**. The lift for each propeller may be determined based on the commanded flight path, navigation instructions, altitude, heading, wind, emergency maneuvers, etc. Likewise, the example process **1400** may determine an allowable sound level and/or frequency spectrum that may be generated by the aerial vehicle, as in **1407**. The allowable sound level and/or frequency spectrum may be defined for the aerial vehicle based on, for example, the position of the aerial vehicle, the altitude of the aerial vehicle, environmental conditions, operational conditions, etc. For example, the allowable sound level may be lower when the aerial vehicle

is at a low altitude and in an area populated by humans. In comparison, the allowable sound level may be higher when the aerial vehicle is at a high altitude and/or in an area that is not populated by humans. Similarly, the allowable frequency spectrum may be determined based on the area in which the aerial vehicle is located, other sounds around the aerial vehicle, etc.

Based on the measured sound, the determined lift for the propeller, and/or the allowable sound level, a position of one or more propeller blade treatments and a rotational speed are selected that will generate a sound and produce the desired amount of lift, as in **1408**. For example, the sound may be an anti-sound that is the measured sound with a 180-degree phase shift, which is effectively an inverse of the measured sound. Alternatively, or in addition to positioning the propeller blade treatments to generate an anti-sound, some propeller blade treatment positions may be selected that will dampen or otherwise alter a sound generated by the propeller blade. For example, one or more propeller blade treatments, such as serrations on the leading edge of the propeller blade and/or fringes on the trailing edge, may be moved into an extended position that will dampen, reduce, and/or otherwise alter the total sound generated by the rotation of the propeller blade.

As discussed above, there may be multiple positions for propeller blade treatments of a propeller blade, multiple propeller blade shapes, and/or multiple rotational speeds that will generate the desired lift and sounds. For example, the aerial vehicle may maintain or be provided a table, similar to Table 1 below, that includes different positions for adjustable propeller blade treatments, sounds profiles, rotational speeds, and corresponding lifting forces. Because there are potentially multiple configurations of propeller blade treatment positions and/or propeller blade shapes that will generate a similar sound, the example process may also consider a power draw for the different positions of the propeller blade treatments and/or propeller blade shapes that will generate the same lifting force at a rotational speed and select propeller blade treatment positions and/or propeller blade shapes that will generate a particular sound and a commanded lifting force that requires the least amount of power. In selecting positions for adjustable propeller blade treatments and/or propeller blade shapes, the aerial vehicle may query one or more stored tables, such as Table 1 below, to select a desired configuration of positions for the propeller blade treatments, propeller blade shapes, and rotational speed to generate the desired sound and lift.

TABLE 1

PBT-1	PBT-2	PBT-N	Propeller RPM	Lift	Power	Sound
P1	P1	P1	4,500	120N	1,000 W	88 dB at 622 Hz
P1	P1	P2	2,800	80N	800 W	78 dB at 800 Hz
P1	P2	P1	4,000	100N	900 W	80 dB at 900 Hz
P1	P2	P2	4,300	110N	950 W	85 dB at 974 Hz
P2	P1	P1	3,000	110N	950 W	88 dB at 622 Hz
P2	P1	P2	2,500	55N	750 W	78 dB at 800 Hz

TABLE 1-continued

PBT-1	PBT-2	PBT-N	Propeller RPM	Lift	Power	Sound
P2	P2	P1	2,800	60N	775 W	80 dB at 900 Hz
P2	P2	P2	2,900	65N	800 W	85 dB at 974 Hz
. . .			. . .	. . .		. . .
PN	PN	PN	. . .	. . .	. . .	. . .

Instructions are then sent to cause the positions of the propeller blade treatments and/or the shape of the propeller blade to be adjusted based on the selected sound profile and the rotational speed of the propeller motor to be adjusted so that the desired sound and lift are generated by the propeller, as in **1410**. Upon adjustment of the positions of the propeller blade treatments, the propeller blade shape, and/or the rotational speed, and while the aerial vehicle is operational, the example process **1400** returns to block **1404** and continues.

FIG. **15** is a view of an aerial vehicle **1501** configured for sound control including transducers **1503**, **1505** on one or more of the propellers **1502-1**, **1502-2**, **1502-3**, and **1502-4**. Similar to the discussion with respect to FIG. **1**, the propellers **1502-1**, **1502-2**, **1502-3**, and **1502-4** are powered by propeller motors and spaced about a body **1504** of the aerial vehicle **1501** as part of a propulsion system. A control system, which may be positioned within the body **1504**, is utilized for controlling the propeller motors for flying the aerial vehicle **1501**, as well as controlling other operations of the aerial vehicle **1501**. Each of the propeller motors may be rotated at different RPMs, thereby generating different lifting forces by the different propellers **1502**.

The motors may be of any type and of a size sufficient to rotate the propellers **1502** at RPMs sufficient to generate enough lift to aerially propel the aerial vehicle **1501** and any items engaged by the aerial vehicle **1501** so that the aerial vehicle **1501** can navigate through the air, for example, to deliver an item to a location. Each propeller **1502** may be formed of one or more suitable materials, such as graphite, carbon fiber, etc., and may include one or more transducers **1503**, **1505** positioned on or incorporated into the surface of the propeller blades. While the example of FIG. **15** includes four motors and propellers, in other implementations, more or fewer motors and/or propellers may be utilized for the propulsion system of the aerial vehicle **1501**. Likewise, in some implementations, the motors and/or propellers may be positioned at different locations and/or orientations on the aerial vehicle **1501**. Alternative methods of propulsion may also be utilized in addition to the propellers and propeller motors. For example, engines, fans, jets, turbojets, turbo fans, jet engines, and the like may be used in combination with the propellers and propeller motors to propel the aerial vehicle.

The body **1504** or frame of the aerial vehicle **1501** may be of any suitable material, such as graphite, carbon fiber, and/or aluminum. In this example, the body **1504** of the aerial vehicle **1501** includes four motor arms **1508-1**, **1508-2**, **1508-3**, and **1508-4** that are coupled to and extend from the body **1504** of the aerial vehicle **1501**. The propellers **1502** and corresponding propeller motors are positioned at the ends of each motor arm **1508**. In some implementations, all of the motor arms **1508** may be of approximately the same length while, in other implementations, some or all of

the motor arms may be of different lengths. Likewise, the spacing between the two sets of motor arms may be approximately the same or different.

In some implementations, one or more sensors **1506** configured to measure sound at the aerial vehicle are included on the aerial vehicle **1501**. The sensors **1506** may be at any location on the aerial vehicle **1501**. For example, a sensor **1506** may be positioned on each motor arm **1508** and adjacent to the propeller **1502** and/or propeller motor so that different sensors can measure different sounds generated at or near the different propellers **1502**. In another example, one or more sensors may be positioned on the body **1504** of the aerial vehicle **1501**. In still another example, one or more sensors may be positioned on the hub of the propeller and rotate with a rotation of the propeller. The sensors **1506** may be any type of sensors capable of measuring sound and/or sound waves. For example, the sensor may be a microphone, transducer, piezoelectric sensor, an electromagnetic pickup, an accelerometer, an electro-optical sensor, an inertial sensor, etc.

As discussed in further detail below, one or more of the propellers **1502** may include a transducer that is operable to output an anti-sound. As illustrated in the expanded view of propeller blade **1502-4**, different types, shapes, and/or positions of transducers **1503**, **1505** may be included on a propeller blade. For example, transducers **1503**, illustrated as lines on the propeller blade, may be carbon nanotube speakers, and transducers **1505**, illustrated as circles, may be piezoelectric thin-film speakers. Different anti-sounds may be generated by different transducers and/or by different groups, or types of transducers so that the anti-sound(s) cause destructive or constructive interference with other sounds generated by other propellers and/or the aerial vehicle such that, when the sounds combine, the net-effect is no sound, reduced sound, and/or an otherwise altered sound.

In some implementations, some or all of the propellers may include sound controllers. Likewise, some or all of the sound controllers may be affixed to the propellers. Alternatively, some or all of the sound controllers may be included in the aerial vehicle control system and be configured to communicate with one or more of the transducers. For example, there may be a single sound controller that is included in the aerial vehicle controller that is configured to communicate with and control the operation of each transducer on each propeller blade of the aerial vehicle **1501**.

In some implementations, by measuring sounds at or near each propeller **1502** and generating anti-sounds from transducers included on each respective propeller, the measured sounds and anti-sounds at each propeller are independent. Accordingly, each sensor and propeller may operate independent of other sensors and propellers on the aerial vehicle and each may include its own processing and/or memory for operation. Alternatively, one or more sensors **1506** positioned on the body **1504** of the aerial vehicle may measure generated sounds and a sound controller may send electricity at different frequencies or pulses to different transducers on different propellers to cause generation of different anti-sounds.

While the example illustrated in FIG. **15** and discussed below with respect to FIGS. **16-20**B describe the use of transducers on propeller blades to generate an output sound that causes interference with a sound generated by the propeller, in some implementations, the transducers may be used in conjunction with one or more of the other propeller blade treatments discussed herein, including but not limited to those discussed above with respect to FIGS. **1-14**. For example, one or more propeller blades of an aerial vehicle may include both propeller blade treatments and transducers that may be engaged, positioned, or otherwise activated to collectively generated a determined anti-sound that will cause interference with a sound generated by the propeller. Such interference may be destructive or constructive.

FIG. **16** is a view of a propeller blade **1600** with piezoelectric thin-film transducers **1602**, according to an implementation. While the size and shape of piezoelectric thin-film transducers may vary, in some implementations, the transducers are less than one-millimeter-thick and formed of a material that can be activated to generate an anti-sound in an audible range that will cause interference with sound generated by the propeller. Generally described, transducer output sound is generated by a piezoelectric transducer in response to an alternating voltage being applied to the piezoelectric transducer which causes mechanical motion of the transducer that is converted into an audible sound. By varying the amount and/or frequency of the voltage the resulting sound frequency and/or amplitude is varied. By utilizing different sizes and/or shapes of piezoelectric transducers and/or utilizing different materials in the transducers, different sounds can be generated with different alternating voltages.

As illustrated in this example, the piezoelectric transducers may be arranged in different patterns and/or on different positions of the aerial vehicle. In this example, the largest piezoelectric transducers **1602-3** are positioned toward a tip of the propeller blade **1600** and are configured to generate anti-sounds that will cause interference with sounds generated at or near that portion of the propeller blade during rotation of the propeller blade. Smaller piezoelectric transducers **1602-2** are arranged toward a middle of the propeller blade to generate an anti-sound that will cause interference with sounds generated from that portion of the propeller blade. Finally, mid-sized piezoelectric transducers **1602-1** are arranged toward a hub **1610** of the propeller blade **1600** to generate an anti-sound that will cause interference with sound generated by that portion of the propeller blade.

In some implementations, a propeller blade may be segmented into different regions and sounds measured during operation to determine different sounds generated by different regions of the propeller blade. For example, sensors may be positioned at or near each segment of a propeller blade to measure sounds generated by those segments at different RPM of the propeller blade. Information regarding the measured sounds may be recorded in a memory and associated with the propeller blade. As discussed further below, during operation of the propeller blade, the RPM of the propeller may be determined, the stored sound information obtained, and anti-sounds generated by the transducers that will cause interference with sounds anticipated to be generated by each of the different segments of the propeller blade.

The propeller blade **1600** may also include a sound controller **1611**. The sound controller determines the anti-sound to be generated by each of the transducers **1602** and sends a corresponding alternating voltage to the respective transducer **1602** that causes the anti-sound to be generated by that transducer. Referring to the expanded view of the sound controller **1611**, the sound controller **1611** may include a communication component **1611-3**, which may be wired and/or wireless, a transducer controller **1611-1**, and a power supply **1611-2**. The communication component **1611-3** is configured to communicate with the aerial vehicle control system (discussed below) to obtain information relating to the operation of the aerial vehicle. For example, the communication component **1611-3** may periodically or

continuously receive RPM information for the propeller. As another example, the communication component **1611-3** may be configured to communicate with a sensor positioned on the aerial vehicle (e.g., on a hub of the propeller) to receive an indication of sound being generated by the rotation of the propeller.

The transducer controller **1611-1** receives the information from the aerial vehicle control system and/or the sensor and determines an anti-sound, or anti-sounds that are to be generated by the transducer(s) positioned on the propeller blade **1600**. For example, the transducer controller may maintain in a memory a table indicating sounds and/or anti-sounds that are predicted or anticipated for different RPMs of the propeller. As another example, the sound measured by the sensor may be received and used to determine an anti-sound to be generated by the transducer(s) of the propeller blade **1600**. Upon determining an anti-sound, the transducer controller sends an alternating voltage to one or more of the transducers of the propeller **1600** to cause the transducer(s) to generate the anti-sound.

In some implementations, the voltage may be provided by an electrical energy storage element **1611-2**, such as a capacitor, a battery, an actively controlled diode, etc. The electrical energy storage element may store energy obtained from the aerial vehicle and/or may store energy generated by the transducers when they are not operating. For example, if a transducer is not receiving a voltage and generating an anti-sound, it may generate energy in response to vibrations of the propeller during operation. That energy may be provided to and stored in the electrical energy storage element **1611-2**.

FIG. **17** is another view of a propeller blade **1700** with piezoelectric transducers **1702**, according to an implementation. In this example, the piezoelectric transducers **1702** are periodically spaced along a surface near a leading edge **1700-1** of the propeller blade and near a trailing edge **1700-2** of the propeller blade **1700**. As discussed above, one, some, or all of the transducers **1702** may be independently controlled by the sound controller **1711** to activate and generate one or more anti-sounds. By arranging the transducers **1702-1** along the leading edge **1700-1** of the propeller blade **1700**, sounds generated as the propeller travels into the airflow (the leading edge) can be interfered with by anti-sounds generated by the transducers **1702-1** positioned along the leading edge **1700-1** of the propeller blade **1700**. In a similar manner, sounds generated as the airflow moves toward the rear and off of the trailing edge **1700-2** of the propeller blade **1700** can be interfered with by anti-sounds generated by the transducers **1702-2** positioned along the trailing edge **1700-2** of the propeller blade **1700**.

FIG. **18** is another view of a propeller blade **1800** with piezoelectric transducers **1802**, according to an implementation. In this example, the entire surface area of the propeller blade **1800** is covered with piezoelectric transducers **1802**. While this example illustrates the transducers **1802** all having a similar size and shape, in other implementations, the piezoelectric transducers may vary in size and/or shape.

As will be appreciated, the configurations discussed above with respect to FIGS. **16-18** are examples only and any other size, shape, position, and/or quantity of piezoelectric transducers may be positioned on or in any portion of a propeller blade. For example, the examples discussed with respect to FIGS. **16-18** may correspond to an upper surface area of the propeller blade, a lower surface area of the propeller blade, or both the lower surface area and the upper surface area. Likewise, in some configurations, different sizes, shapes, quantity and/or arrangement of piezoelectric transducers may be included on the upper surface area and/or the lower surface area.

FIG. **19** is a view of a propeller blade **1900** with carbon nanotube transducers **1902**, according to an implementation. While the size and shape of carbon nanotube transducers may vary, in some implementations, the transducers are less than one-millimeter-thick and formed of a material that generates heat. A sound controller may send a signal, such as an anti-sound signal to the carbon nanotube transducers and the carbon nanotube transducers convert the signals to heat according to the variations of the signal strength. The heating and cooling of the carbon nanotubes causes the adjacent air to expand and contract, which pushes air molecules around and creates sound waves—e.g., anti-sounds.

As illustrated in this example, the carbon nanotube transducers may be arranged in different patterns and/or on different positions of the aerial vehicle. In this example, a first sheet or area of carbon nanotube transducers **1902-3** are positioned toward a tip of the propeller blade **1900** and are configured to generate anti-sounds that will cause interference with sounds generated at or near that portion of the propeller blade during rotation of the propeller blade. A second sheet of carbon nanotube transducers **1902-2** are arranged toward a middle of the propeller blade to generate an anti-sound that will cause interference with sounds generated from that portion of the propeller blade. Finally, a third sheet of carbon nanotube transducers **1902-1** is arranged toward a hub **1910** of the propeller blade **1900** to generate an anti-sound that will cause interference with sound generated by that portion of the propeller blade.

As discussed above, a propeller blade may be segmented into different regions and sounds measured during operation to determine different sounds generated by different segments of the propeller blade. For example, sensors may be positioned at or near each segment of a propeller blade to measure sounds generated by those segments at different RPM of the propeller blade. Information regarding the measured sounds may be recorded in a memory and associated with the propeller blade. As discussed further below, during operation of the propeller blade, the RPM of the propeller may be determined, the stored sound information obtained, and anti-sounds generated by the transducers that will cause interference with sounds anticipated to be generated by each of the different segments of the propeller blade.

The propeller blade **1900** may also include a sound controller **1911**. The sound controller determines the anti-sound to be generated by each of the carbon nanotube transducers **1902** and sends the anti-sound signal to the carbon nanotube transducers. Similar to the above discussion, the sound controller may receive RPM information from the aerial vehicle control system and determine a corresponding anti-sound that is to be output when the propeller is rotating at that RPM. Alternatively, or in addition thereto, the sound controller may receive sound information from a sensor that is measuring sounds generated by the propeller and determine a corresponding anti-sound.

FIG. **20**A is a view of a motor **2004**, a propeller blade **2000** with transducers **2002-1**, **2002-2**, and a power source **2012**, according to an implementation. Referring to the expanded view of the sound controller **2011**, the sound controller **2011** may include a communication component **2011-3**, which may be wired and/or wireless, a transducer controller **2011-1**, and a power storage component **2011-2**. The communication component **2011-3** is configured to communicate with the aerial vehicle control system (discussed below) to obtain information relating to the operation

of the aerial vehicle. For example, the communication component **2011-3** may periodically or continuously receive RPM information for the propeller. As another example, the communication component **2011-3** may be configured to communicate with a sensor positioned on the aerial vehicle (e.g., on a hub of the propeller) to receive an indication of sound being generated by the rotation of the propeller.

The transducer controller **2011-1** receives the information from the aerial vehicle control system and/or the sensor and determines an anti-sound, or anti-sounds that are to be generated by the transducer(s) positioned on the propeller blade **2000**. For example, the transducer controller may maintain in a memory a table indicating sounds and/or anti-sounds that are predicted or anticipated for different RPMs of the propeller. As another example, the sound measured by the sensor **2006** may be received and used to determine an anti-sound to be generated by the transducer(s) of the propeller blade **2000**. Upon determining an anti-sound, the transducer controller sends the anti-sound signal to one or more of the carbon nanotube transducers **2002-1** of the propeller **2000** to cause the carbon nanotube transducer (s) to generate the anti-sound. In some implementations, the propeller blade **2000** may also include other forms of transducers, such as piezoelectric transducers **2002-2**. In such an example, those transducers may likewise be controlled by the sound controller **2011** and receive signals and/or alternating voltages to cause the piezoelectric transducers to generate a determined anti-sound.

In some implementations, the voltage or power to drive the transducers may be provided by an electrical energy storage element **2011-2**, such as a capacitor, a battery, an actively controlled diode, etc. The electrical energy storage element may store energy obtained from the aerial vehicle, such as from a power source **2012** and/or may store energy generated by the piezoelectric transducers **2002-2** when they are not operating. For example, if a piezoelectric transducer is not receiving a voltage and generating an anti-sound, it may generate energy in response to vibrations of the propeller duration operation. That energy may be provided to and stored in the electrical energy storage element **2011-2**.

In some implementations, a power source **2012** may be provided that generates power that is supplied to the sound controller via connection **2011-4**. For example, the power source **2012** may include an electromagnetic **2013** that is wound around the motor **2004** and positioned adjacent to magnets **2010** that have alternating polarities. For example, the magnets **2010** may be affixed to a motor arm **2008** of the aerial vehicle and arranged in alternating polarities. As the motor rotates, the windings of the electromagnetic **2013** rotate with the motor and the alternating polarities of the magnets produce an electric current that is provided to the power supply **2011-2**, which may be used to power the sound controller **2011** and/or the transducers **2002**.

FIG. **20**B is an alternative view of the motor **2004**, the propeller blade **2000** with transducers **2002-1**, **2002-2**, and the power source **2012** in which the electromagnetic **2015** is coiled and wound around the motor **2004**, according to an implementation. Similar to the electromagnet **2013** (FIG. **20**A), the coils of the electromagnetic **2015** are wound around the motor and rotate with the motor. The alternating polarities of the magnets **2010** produce an electric current in the coils of the electromagnet **2015** that is provided to the power supply, which may be used to power the sound controller **2011** and/or the transducers **2002**. In still other examples, power may be provided to the controller **2011** and/or the transducers **2002** through inductive coupling. For example, rather than including magnets **2010**, a second coil of wire may be positioned on the motor arm **2008**. When the coil of wire is charged it inductively couples with the coil **2015** thereby providing current that can be used to power the controller **2011** and/or the transducers. As will be appreciated, other forms of current transfer may likewise be utilized to power the controller **2011** and/or the transducers **2002**.

FIG. **21** is a view of an aerial vehicle **2101** with ducted propellers, the ducts including transducers, according to an implementation. In the example illustrated in FIG. **21**, the aerial vehicle is a UAV. As illustrated, the aerial vehicle **2101** includes a frame **2104**. The frame **2104** or body of the aerial vehicle **2101** may be formed of any suitable material, such as graphite, carbon fiber, aluminum, titanium, etc., or any combination thereof. In this example, the frame **2104** of the aerial vehicle **2101** is a single carbon fiber frame. The frame **2104** includes a hub **2107** and four ducts **2100-1**, **2100-2**, **2100-3**, and **2100-4** with transducers positioned at least on the exit **2105** end of the ducts **2100**. A lifting motor and lifting propeller are also positioned within each duct **2100**, and encompassed by each duct **2100**. In this example, there is a single hub **2107**, four ducts **2100**, and a perimeter protective barrier **2114** that extends around the ducts **2100**.

Lifting motors and corresponding lifting propellers are within each of the ducts **2100** and, in this example, are approximately in-line with the frame **2104**. In this example, the length of each duct **2100** above the frame is less than the length below the frame **2104**. In other implementations, the ducts may be positioned so that the length of the duct is approximately the same above and below the frame **2104**. In still other implementations, the ducts may be positioned so that the length above the frame **2104** is greater than the length of each duct below the frame **2104**. Similarly, rather than having the lifting propellers and lifting motors approximately in-line with the frame **2104**, the lifting motors and lifting propellers may be positioned above or below the frame **2104** within each duct **2100**.

The ducts may be of any size or shape around the propellers and motors. In some implementations, the circumference of the ducts may be substantially cylindrical and a defined amount larger in diameter than the propeller they surround. For example, the distance between the inner surface of the duct and the tips of the propeller blades of the propeller(s) positioned within the duct may be approximately 5 millimeters. In other implementations, the distance between the tips of the propeller blades and the inner surface of the duct may be greater or less than approximately 5 millimeters.

In some implementations, the diameter of the duct may change along the length of the duct. For example, the inlet **2102-1**, **2102-2**, **2102-3**, and **2102-4** of each duct may have a greater diameter than the area of the duct near the propeller blades. Likewise, the exit **2105-1**, **2105-2**, **2105-3**, and **2105-4** of each duct **2100** may have a larger diameter than the area of the duct near the propeller blades. Alternatively, the entrance **2102** and/or exit **2105** of a duct may have a smaller diameter than the area of the duct near the propeller blades.

While the illustration of FIG. **21** shows the ducts **2100** of the lifting propellers all of a same size, in some implementations, one or more of the ducts **2100** may be different sizes, dimensions, and/or positioned differently with respect to the frame **2104**. Likewise, the lifting propellers and/or lifting motors within the ducts may be the same or different sizes. While this example includes four ducted lifting propellers, in other implementations, more or fewer propellers may be utilized as lifting propellers and more or fewer lifting propellers may be ducted. Likewise, in some implementa-

tions, the ducts **2100** with lifting propellers may be positioned at different locations on the aerial vehicle **2101**.

The ducts **2100** channel and/or contain sound generated by rotation of the propellers and provide safety for objects foreign to the aerial vehicle by encompassing the rotating propellers. In this configuration, in addition to, or as an alternative to, including transducers on the propeller blades that are used to generate anti-sounds, transducers **2112**, such as piezoelectric thin-filmed transducers and/or carbon nanotube transducers may be included on some or all of the ducts **2100**. For example, a layer of transducers **2112** may be positioned toward an exit **2105** end of each duct and used to generate an anti-sound that causes interference with the sound generated by the propellers as the sound exits the exit **2105** end of the duct **2100**. In another example, all or a portion of the interior of the duct **2100** may include transducers that are used to generate sounds that interfere with the sound generated by the propeller rotating within the duct.

In some implementations, transducers may also be positioned along an entrance **2102** end of the duct to generate anti-sounds that interfere with the sound generated by the propeller. As will be appreciated, any arrangement, type or configuration of transducers may be positioned on any portion of all of one or more ducts of an aerial vehicle.

Similar to the discussions above, the transducers included on or in a duct **2100** may be controlled by a sound controller that determines an anti-sound that is to be generated by the transducers. For example, a sensor **2106** may be positioned near an exit **2105** end of a duct and measure sound generated by the propeller rotating within the duct. The measured sound may be provided to the sound controller and the sound controller may determine an anti-sound that is to be produced by the transducers positioned on the duct. The sound controller then sends signals to the transducers that cause the transducers to generate the determined anti-sound which causes interference with the sound generated by the propeller as the sound exits the duct.

In some implementations, carbon nanotube transducers may be formed in a mesh material that is positioned over one or more of the openings at the entrance **2102** of the duct **2100** or the exit **2105** of the duct. The mesh material provides further protection to foreign objects so they do not enter the duct and potentially impact the propeller. Likewise, the carbon nanotube transducers may be utilized to generate an anti-sound that interferes with the sound as the sound passes through the mesh material, thereby reducing, cancelling or otherwise altering the sound generated by the propeller.

FIG. **22** is a flow diagram illustrating an example process **2200** for active sound control, according to an implementation. The example process **2200** may operate independently at each propeller blade and/or may be performed by a central sound controller that sends signals/instructions to each transducer positioned on each of the propeller blades of an aerial vehicle. The example process **2200** begins when an aerial vehicle that includes one or more transducers for generating an anti-sound is operational, as in **2202**. In some implementations, the example process **2200** may only operate when the aerial vehicle is airborne and/or the motors are rotating. In other implementations, the example process **2200** may be active at any time in which the aerial vehicle is powered.

When the aerial vehicle is operational, sound generated by and/or around the aerial vehicle is measured by a sensor of the aerial vehicle, as in **2204**. For example, a sensor, such as a microphone, may detect and measure sound generated by or around an aerial vehicle. As discussed above, sensors may be positioned at each propeller, for example on the hub of each propeller, and independently measure sounds near those propellers. In other implementations, sensors may be positioned on the body of the aerial vehicle and measure all sounds around the aerial vehicle. In still other examples, sensors may not be utilized and a predicted sound may be determined based on the RPMs of each propeller.

Based on the measured and/or determined sound generated at a propeller, a determination is made as to whether an anti-sound is to be generated, as in **2206**. In some implementations, it may be determined that an anti-sound is to be generated at any time the aerial vehicle is operational. In other implementations, it may be determined that an anti-sound is only to be generated when the measured or predicted sound is above a determined sound threshold. The sound threshold may vary, for example, based on the location of the aerial vehicle, the altitude of the aerial vehicle, the time of day, etc. In still other examples, it may be determined that an anti-sound is only to be generated when the aerial vehicle is below a defined altitude.

If it is determined that an anti-sound is not to be generated, energy from the transducers that is generated in response to propeller vibrations is stored in an electrical energy storage element, such as a capacitor, a battery, an actively controlled diode, etc., as in **2208**. As discussed above, a piezoelectric thin-film transducer may generate power due to vibrations resulting from rotation of the propeller blade. As power is generated and stored, the example process **2200** returns to block **2204** and continues.

If it is determined than an anti-sound is to be generated, the anti-sound is determined and a signal or voltage is sent to one or more transducers that cause the transducer to generate the determined anti-sound, as in **2210**.

FIGS. **23**A-**23**D are block diagrams illustrating sound control system configurations in which propeller blades with propeller blade treatments and/or transducers are used to generate an anti-sound and/or propeller blades with adjustable propeller blade treatments and/or transducers are used in which the positions of the propeller blade treatments are adjusted to generate different anti-sounds, according to an implementation. Turning first to FIG. **23**A, illustrated is a block diagram in which the sound control system includes only a propeller blade with a sound controller **2306** that can cause the propeller blade to generate an anti-sound **2308'** when rotated. The propeller blade treatments may be stationary, adjustable, or a combination thereof. In other implementations, the propeller blade treatments may be, for example, a piezoelectric thin-film transducer and/or a carbon nanotube transducer, either or both of which may be included on or in a propeller blade and/or a duct that surrounds a propeller blade. In the illustrated configuration, sound may not be measured and the anti-sound generated based on the anticipated or predicted sound **2308** at or near the aerial vehicle.

In such a configuration, aerial vehicle sounds may be generated and measured over a period of time and propeller blades with propeller blade treatments selected such that the sounds generated by the rotation of the propeller blade will dampen, reduce, and/or otherwise alter the sound **2308**.

As discussed above, the sound controller may maintain in a memory an indication of different sounds that are predicted to be generated by a propeller based on the RPM of the propeller and the configuration of one or more propeller blade treatments. By knowing the anticipated sounds of the aerial vehicle at different RPM, the positions of the propeller blade adjustments may be selected so that the propeller will generate anti-sounds **2308'** that combine with or alter the

generated sound **2308** during aerial vehicle operation. Likewise, the transducers may be utilized in addition to or as an alternative to the propeller blade adjustments to generate the anti-sound **2308'**. The anti-sound **2308'**, when combined with the generated sound **2308**, results in a net effect **2308"** of reduced and/or otherwise altered sound generated from that portion of the aerial vehicle. While the example illustrated in FIG. **23**A shows a net effect **2308"** of no sound, in some implementations, the sound may only be reduced or partially suppressed, or otherwise altered, such that the net effect **2308"** is an altered sound. In other implementations, the sound may be otherwise modified. For example, rather than suppressing or just reducing the sound, the anti-sound **2308'** may combine with the sound **2308** to generate a net effect **2308"** that results in an audible sound that is more desirable (e.g., has a different frequency spectrum or most prominent tonal frequency component). During operation of the aerial vehicle, the position of one or more of the propeller blade treatments may periodically change so that the resulting anti-sound can be altered or adjusted to account for changes in the sound. For example, as the aerial vehicle descends, the generated sound may change and/or the lift to be generated by the propeller may be reduced. To account for the changes, the position of one or more of the propeller blade treatments may be changed as the rotation of the propeller blade decreases, thereby generating an altered anti-sound.

FIG. **23**B illustrates a block diagram in which the sound control systems include a sensor **2306-1** and a sound controller **2306-2**. In this illustrated configuration, the sound control system utilizes a feed-forward control. In feed-forward, the sensor measures the sound generated by or around the aerial vehicle and/or a propeller blade of the aerial vehicle and feeds that sound or the anti-sound forward so that the sound controller **2306-2** can determine and select propeller blade treatment positions, a rotational speed, and/or a transducer output that will generate a desired anti-sound **2308'**. This is done without considering the net effect or output from the combined measured sound and anti-sound.

Upon receiving the measured sound **2308** or anti-sound **2308'**, and determining positions for each of the adjustable propeller blade treatments, RPM, and/or transducer outputs, the sound controller **2306-2** alters the positions of the propeller blade treatments, changes the rotational speed of the propeller, and/or sends a signal or voltage to the corresponds transducers to generate the determined anti-sound. Similar to FIG. **23**A, the anti-sound **2308'**, which may be the measured sound phase shifted 180 degrees, when combined with the sound **2308**, results in a net effect **2308"** of damped, reduced, or otherwise altered sound (e.g., no sound) from the area of the UAV where the propeller and sensor are positioned.

While the example illustrated in FIG. **23**B describes that the sensor measures the sound and provides it to the sound controller **2306-2**, in other implementations, the sensor **2306-1** may provide the measured sound to another computing component that determines positions for the propeller blade treatments, RPM, and/or sounds to be generated by the transducers that are to be used to generate a desired anti-sound. That computing component may then provide instructions to the sound controller **2306-2** to alter the positions of one or more propeller blade treatments, alter the RPM of the propeller, and/or cause the transducer(s) to generate a sound so that the desired anti-sound is generated. Likewise, while the example illustrated in FIG. **23**B shows a net effect **2308"** of no sound, in some implementations, the sound may only be reduced, partially suppressed, and/or otherwise altered.

FIG. **23**C illustrates a block diagram in which the sound control system includes a sensor **2306-1** and a sound controller **2306-2**. In this illustrated configuration, the sound control system utilizes a feedback control. In feedback, the sensor **2306-1** measures the output or net effect **2308"** resulting from a combination of the sound **2308** and the anti-sound **2308'** generated by the propeller in which the propeller blade treatments have been adjusted and/or transducers activated according to the sound controller **2306-2**. The measured sound or anti-sound is fed back to the sound controller. Based on the updated anti-sound, positions of one or more propeller blade treatments, RPM, and/or output from the transducer(s) may be altered so that the propeller will generate the desired anti-sound. With a feedback control, the net effect **2308"** is considered and utilized to generate or update the anti-sound **2308'** that is used to select positions for the propeller blade treatments, the propeller rotational speed, and/or the output to be generated from transducer(s). Upon determining the updated positions for the propeller blade treatments, the rotational speed needed to generate the updated anti-sound, and/or the sound output to be generated by the transducer(s), the sound controller adjusts the position of one or more propeller blade treatments, alters the rotational speed of the propeller, and/or sends a signal to the transducer(s) to alter the output sound from the transducer(s) so that the updated anti-sound is generated.

While the example illustrated in FIG. **23**C describes that the sensor **2306-1** feeds back the measured net effect **2308"** to the sound controller **2306-2**, in other implementations, the sensor **2306-1** may provide the measured net effect **2308"** to another computing system that determines an anti-sound, positions for the propeller blade treatments, a rotational speed to generate the anti-sound and commanded lift from the propeller, and/or an output sound to be generated by the transducer(s). That computing system may then provide the positions of the propeller blade treatments, the determined rotational speed, and/or an indication of the output sound to be generated by the transducer(s) to the sound controller for use in causing the position of one or more of the propeller blade treatments to be adjusted, the rotational speed of the propeller to be adjusted, and/or sending a signal to the transducer(s) to alter an output sound so that the propeller will generate the anti-sound **2308'**. Likewise, while the example illustrated in FIG. **23**C shows a net effect **2308"** of no sound, in some implementations, the sound may only be reduced, partially suppressed, or otherwise altered.

FIG. **23**D illustrates a block diagram in which the sound control system only includes a sound controller **2306-2** and does not include a sensor. In this configuration, the anti-sound, corresponding positions for the propeller blade treatments, the rotational speed of the propeller that will generate the desired anti-sound and commanded lift, and/or the output sound to be generated by the transducer(s) may be determined based on a machine-learned model that considers the operational and/or environmental conditions of the aerial vehicle. Based on the operational and/or environmental conditions, a predicted sound is determined and a corresponding anti-sound **2308'** is provided to the sound controller **2306-2**. Upon receiving or determining the anti-sound, the sound controller **2306-2** selects positions for the propeller blade treatments, a rotational speed that will generate the desired anti-sound **2308'**, and/or an output sound to be generated by the transducer(s) and causes the positions of

one or more propeller blade treatments to be adjusted, the rotational speed to be adjusted, and/or sends a signal to the transducer(s) that cause the transducer(s) to generate the determined output sound. Like the other examples, the sound **2308** and the generated anti-sound **2308'** combine to produce a net effect **2308"** that is either no sound at or near the propeller, a reduced sound at or near the propeller, and/or a sound that is otherwise altered at or near the propeller.

While the example illustrated in FIG. **23**D describes that an anti-sound signal is determined from a predicted sound and provided to the sound controller **2306-2**, in other implementations, the predicted sound may be provided to another computing component and that computing component may determine positions for the propeller blade treatments, the rotational speed that will generate the desired anti-sound and commanded lift, and/or an output sound to be produced from the transducer(s) to generate the desired anti-sound. Likewise, while the example illustrated in FIG. **23**D shows a net effect **2308"** of no sound, in some implementations, the sound may only be reduced, partially suppressed, and/or otherwise altered.

The positions of the propeller blade treatments that may be determined with respect to the examples illustrated in FIGS. **23**A-**23**D may include position alterations in the horizontal (x) direction, vertical (y) direction, rotational (z) direction, and/or any combination thereof. Likewise, any sound may be generated and output by the transducers. Likewise, the anti-sound may be generated based on the positions of the propeller blade treatments alone, the sound output by the transducer(s) alone, or a combination of both the propeller blade treatments and sound output by the transducer(s).

While the examples and configurations discussed above with respect to FIGS. **23**A-**23**D describe selection of propeller blade treatment positions and/or a transducer output sound to generate an anti-sound that will combine with and cancel, reduce, and/or otherwise alter the sound generated by the propeller, in other implementations, the discussed configurations may be utilized to select propeller blade treatment positions that will reduce, dampen, and/or otherwise alter the sound generated by the aerial vehicle collectively. For example, referring again to FIG. **23**C, the sensor **2306-1** may feedback a measured net effect **2308"** and it may be determined from the fed back net effect **2308"** whether additional propeller blade treatments and/or transducer sound outputs are to be made that will dampen or otherwise alter the resulting sound generated by the rotation of the propeller blade. Likewise, in addition to altering the position of one or more propeller blade treatments, the examples may likewise alter the shape of one or more of the propeller blades in addition to, or as an alternative to altering the position of one or more propeller blade treatments.

Referring to FIGS. **24**A-**24**D, views of aspects of one system **2400** for active sound control in accordance with an implementation are shown. The illustration corresponding to FIGS. **24**A-**24**D provides additional details of an example implementation for predicting an anti-sound and determining positions for one or more propeller blade treatments, propeller blade shapes, rotational speed of the propeller, and/or output sounds to be produced by transducer(s) of the propeller that will generate the anti-sound and/or dampen or otherwise alter the sound, as illustrated in FIG. **23**D.

FIG. **24**A illustrates a plurality of aerial vehicles **2410-1**, **2410-2**, **2410-3**, **2410-4** that are engaged in flight between origins and destinations. For example, the aerial vehicle **2410-1** is shown en route between Hartford, Conn., and Southington, Conn., while the aerial vehicle **2410-2** is shown en route between Southport, Conn., and Hartford. The aerial vehicle **2410-3** is shown en route between Storrs, Conn., and Hartford, while the aerial vehicle **2410-4** is shown en route between Hartford and Groton, Conn. The aerial vehicles **2410-1**, **2410-2**, **2410-3**, **2410-4** are configured to capture extrinsic or intrinsic information or data **2450-1**, **2450-2**, **2450-3**, **2450-4** regarding the aerial vehicles **2410-1**, **2410-2**, **2410-3**, and **2410-4** and the environments in which the aerial vehicles **2410-1**, **2410-2**, **2410-3**, **2410-4** are operating, including but not limited to information or data regarding locations, altitudes, courses, speeds, climb or descent rates, turn rates, accelerations, wind velocities, humidity levels and temperatures, sounds, etc., using one or more sensors. The aerial vehicles **2410-1**, **2410-2**, **2410-3**, **2410-4** are also configured to capture sounds **2455-1**, **2455-2**, **2455-3**, and **2455-4**, and vibrations **2456-1**, **2456-2**, **2456-3**, and **2456-4** generated by the aerial vehicles during their respective flights.

For example, as is shown in the information or data **2450-1** of FIG. **24**A, the aerial vehicle **2410-1** is traveling on a course of 224° and at a speed of 44 miles per hour (mph), in winds of 6 mph out of the north northeast, at an altitude of 126 feet, in air having 50 percent humidity and a temperature of 68 degrees Fahrenheit (° F.), and the sound measured around the aerial vehicle **2410-1** is 88 decibels ("dB") at 622 Hz. The information or data **2450-2** of FIG. **24**A indicates that the aerial vehicle **2410-2** is traveling on a course of 014° and at a speed of 39 mph, in winds of 4 mph out of the southwest, at an altitude of 180 feet, in air having 69 percent humidity and a temperature of 62° F., and that the sound around the aerial vehicle **2410-2** is 78 dB at 800 Hz. The information or data **2450-3** of FIG. **24**A indicates that the aerial vehicle **2410-3** is traveling on a course of 082° and at a speed of 38 mph, in winds of 4 mph out of the south southwest, at an altitude of 127 feet and in air having 78% humidity, a temperature of 74° F., and that the sound measured around the aerial vehicle **2410-3** is 80 dB at 900 Hz. Finally, the information or data **2450-4** of FIG. **24**A indicates that the aerial vehicle **2410-4** is traveling on a course of 312° and at a speed of 48 mph, in winds of 8 mph out of the northwest, at an altitude of 151 feet and in air having 96 percent humidity and a temperature of 71° F., and that the sound measured around the aerial vehicle **2410-4** is 85 dB at 974 Hz. While the illustration in FIG. **24**A only shows sound measurements for a single location on the aerial vehicle, it will be appreciated that the information or data **2455** may include sounds measured adjacent or near each propeller of each aerial vehicle. For example, if aerial vehicle **2410-1** includes eight propellers, it may also include eight sensors that measure sound data at each respective propeller **2455**. The operational information may also indicate the position for one or more propeller blade treatments of each propeller blade, the rotational speed, and/or the power draw required to generate the commanded lifting to aerially navigate the aerial vehicle.

In accordance with the present disclosure, the aerial vehicles **2410-1**, **2410-2**, **2410-3**, **2410-4** may be configured to provide both the extrinsic and intrinsic information or data **2450-1**, **2450-2**, **2450-3**, **2450-4** (e.g., information or data regarding environmental conditions, operational characteristics or tracked positions of the aerial vehicles **2410-1**, **2410-2**, **2410-3**, **2410-4**), and also the information or data **2455-1**, **2455-2**, **2455-3**, **2455-4** regarding the sounds recorded during the transits of the aerial vehicles **2410-1**, **2410-2**, **2410-3**, **2410-4**, to a data processing system. The information or data **2450-1**, **2450-2**, **2450-3**, **2450-4** and the information or data **2455-1**, **2455-2**, **2455-3**, **2455-4** may be

provided to the data processing system either in real time or in near-real time while the aerial vehicles **2410-1**, **2410-2**, **2410-3**, **2410-4** are in transit, or upon their arrival at their respective destinations. Referring to FIG. **24**B, the extrinsic and intrinsic information or data **2450-1**, **2450-2**, **2450-3**, **2450-4**, e.g., observed environmental signals e(t), is provided to a machine learning system **2470** as a set of training inputs, and the information or data **2455-1**, **2455-2**, **2455-3**, **2455-4**, e.g., measured sound data, regarding the sounds recorded by each of the sensors during the transits of the aerial vehicles **2410-1**, **2410-2**, **2410-3**, **2410-4** is provided to the machine learning system **2470** as a set of training outputs for each of the sound control systems of the aerial vehicle. As discussed above, the sound data may be included for each propeller and/or sound controller of the aerial vehicle.

The machine learning system **2470** may be fully trained using a substantial corpus of observed environmental signals e(t) correlated with measured sounds that are obtained using each of the sensors of one or more of the aerial vehicles **2410-1**, **2410-2**, **2410-3**, **2410-4**, and others, to develop sound models for each propeller sound controller dependent on the location of the sensors on the aerial vehicles. After the machine learning system **2470** has been trained, and the sound models developed, the machine learning system **2470** may be provided with a set of extrinsic or intrinsic information or data (e.g., environmental conditions, operational characteristics, or positions) that may be anticipated in an environment in which an aerial vehicle is operating or expected to operate and the machine learning system **2470** will provide predicted sounds for each sound controller of the aerial vehicle. In some implementations, the machine learning system **2470** may reside and/or be operated on one or more computing devices or machines provided onboard one or more of the aerial vehicles **2410-1**, **2410-2**, **2410-3**, and **2410-4**. The machine learning system **2470** may receive information or data regarding the corpus of sound signals observed and the sounds measured by sensors of the other aerial vehicles **2410-1**, **2410-2**, **2410-3**, **2410-4**, for training purposes and, once trained, the machine learning system **2470** may receive extrinsic or intrinsic information or data that is actually observed by the aerial vehicle, e.g., in real time or in near-real time, as inputs and may generate outputs corresponding to predicted sounds based on the information or data.

In other implementations, the machine learning system **2470** may reside and/or be operated on one or more centrally located computing devices or machines. The machine learning system **2470** may receive information or data regarding the corpus of sounds measured by sensors of each of the aerial vehicles **2410-1**, **2410-2**, **2410-3**, and **2410-4**. Once the machine learning system **2470** is trained, the machine learning system **2470** may be used to program computing devices or machines of the aerial vehicles in a fleet with sound models that predict sounds at different sound controllers during operation of the aerial vehicle, based on extrinsic or intrinsic information or data that is actually observed by the respective aerial vehicle. In still other implementations, the machine learning system **2470** may be programmed to receive extrinsic or intrinsic information or data from operating aerial vehicles, e.g., via wireless means, as inputs. The machine learning system **2470** may then generate outputs corresponding to predicted sounds at different sound controllers on the aerial vehicle based on the received information or data and return such predicted sounds to the aerial vehicles. For example, the aerial vehicle and the machine learning system **2470** may exchange batches of information that is collected over a period of time. For example, an aerial vehicle may measure extrinsic and/or intrinsic information or data for a period of three seconds (or any other period of time) and transmit that measured information or data to the machine learning system **2470**. The machine learning system, upon receiving the information or data, generates outputs corresponding to predicted sounds at different sound controllers on the aerial vehicle based on the received information or data and transmits those outputs to the aerial vehicle. The aerial vehicle may then use the received outputs to determine positions for one or more propeller blade treatments, and/or transducer(s) sound outputs that will cause the propeller blade to generate a corresponding anti-sound and produce a commanded lift when the propeller is rotated. Alternatively, or in addition thereto, the received outputs may be used by the aerial vehicle to determine positions for one or more propeller blade treatments and/or transducer sound outputs that will result in the sound being dampened or otherwise altered (e.g., frequency spectrum changed). Likewise, in addition to altering propeller blade treatments and/or generating different output sounds from the transducer(s), the shape of the propeller blade may also be adjusted. This process may continue while the aerial vehicle is in-flight or operational.

For example, when variables such as an origin, a destination, a speed and/or a planned altitude for the aerial vehicle **2410** (e.g., a transit plan for the aerial vehicle) are known, and where variables such as environmental conditions and operational characteristics may be known or estimated, such variables may be provided as inputs to the trained machine learning system **2470**. Subsequently, sounds that may be predicted at each propeller and/or sound controller of the aerial vehicle **2410** as the aerial vehicle **2410** travels from the origin to the destination within such environmental conditions and according to such operational characteristics may be received from the trained machine learning system **2470** as outputs. From such outputs, positions of one or more propeller blade treatments, propeller blade shapes, rotational speeds, and/or transducer(s) output sounds may be determined that will alter the generated sound, e.g., generate an anti-sound, and/or dampen the generated sound. The adjustments may be determined and implemented in real time or near-real time as the aerial vehicle **2410** is en route from the origin to the destination.

Referring to FIG. **24**C, an operational input **2460** in the form of environmental signals e(t) is provided to the trained machine learning system **2470**, and an operational output **2465** in the form of predicted sound is produced by the sound model and received from the trained machine learning system **2470**. For example, the operational input **2460** may include extrinsic or intrinsic information or data regarding a planned transit of an aerial vehicle (e.g., predicted environmental or operational conditions), or extrinsic or intrinsic information or data regarding an actual transit of the aerial vehicle (e.g., actually observed or determined environmental or operational conditions), including but not limited to coordinates of an origin, a destination, or of any intervening points, as well as a course and a speed of the aerial vehicle, a wind velocity in a vicinity of the origin, the destination or one or more of the intervening points, an altitude at which the aerial vehicle is expected to travel, and a humidity level and a temperature in a vicinity of the origin, the destination or one or more of the intervening points. The operational output **2465** may include information regarding sounds at various propellers of the aerial vehicle that are expected to occur when the aerial vehicle operates in a manner consistent with the operational input **2460**, e.g., when the aerial

vehicle travels along a similar course or speed, or at a similar altitude, or encounters a similar wind velocity, humidity level, or temperature.

Based at least in part on the operational output **2465** that was determined based on the operational input **2460**, an anti-sound **2465'**, e.g., a sound having an amplitude and frequency that is approximately one hundred eighty degrees out-of-phase with the operational output **2465**, is determined. In some implementations, the intensity of the anti-sound **2465'** may be selected to completely cancel out or counteract the effects of the sounds associated with the operational output **2465**, e.g., such that the intensity of the anti-sound **2465'** equals the intensity of the predicted sound during operation of the aerial vehicle **2410**, or of the sounds that actually occur. Alternatively, in some implementations, as illustrated in FIG. **24**C, the intensity of the anti-sound **2465'** may be selected to otherwise modify or counteract the effects of sound associated with the operational output **2465**, e.g., such that the intensity of the anti-sound **2465'** is less than the intensity of the predicted sound. In still other examples, rather than selecting propeller blade treatment positions, propeller blade shapes, and/or transducer sound outputs to generate an anti-sound, propeller blade treatment positions, propeller blade shapes, and/or transducer sound outputs may be selected to reduce and/or otherwise alter the generated sound.

Those of ordinary skill in the pertinent arts will recognize that any type or form of machine learning system (e.g., hardware and/or software components or modules) may be utilized in accordance with the present disclosure. For example, a sound may be associated with one or more of an environmental condition, an operating characteristic or a physical location or position of an aerial vehicle according to one or more machine learning algorithms or techniques, including but not limited to nearest neighbor methods or analyses, artificial neural networks, conditional random fields, factorization methods or techniques, K-means clustering analyses or techniques, similarity measures such as log likelihood similarities or cosine similarities, latent Dirichlet allocations or other topic models, or latent semantic analyses. Using any of the foregoing algorithms or techniques, or any other algorithms or techniques, a relative association between measured sound and such environmental conditions, operating characteristics or locations of aerial vehicles may be determined.

In some implementations, a machine learning system may identify not only a predicted sound but also a confidence interval, confidence level or other measure or metric of a probability or likelihood that the predicted sound will occur at a propeller or other location on the frame of the aerial vehicle in a given environment that is subject to given operational characteristics at a given position. Where the machine learning system is trained using a sufficiently large corpus of recorded environmental signals and sounds, and a reliable sound model is developed, the confidence interval associated with an anti-sound or dampened sound identified thereby may be substantially high.

Although one variable that may be associated with sounds occurring at various propellers or other locations on a frame of an aerial vehicle is a position of the aerial vehicle (e.g., a latitude or longitude), and that extrinsic or intrinsic information or data associated with the position may be used to predict sounds occurring at propellers or other locations on the frame of the aerial vehicle at that position, those of ordinary skill in the pertinent arts will recognize that the systems and methods of the present disclosure are not so limited. Rather, sounds may be predicted for areas or locations having similar environmental conditions or requiring aerial vehicles to exercise similar operational characteristics. For example, because environmental conditions in Vancouver, British Columbia, and in London, England, are known to be generally similar to one another, information or data gathered regarding the sounds occurring at various propellers or other locations on the frame of aerial vehicles operating in the Vancouver area may be used to predict sounds that may occur at propellers or other locations on the frame of aerial vehicles operating in the London area, or to generate anti-sounds to be output by different propellers having different positions of propeller blade treatments, rotating at different speeds, and/or outputting different sounds from the transducer(s) when operating in the London area. Likewise, information or data gathered regarding the sounds occurring at propellers or other locations on the frame of aerial vehicles operating in the London area may be used to predict sounds occurring at propellers or other locations on the frame of aerial vehicles operating in the Vancouver area, or to generate anti-sounds or dampened sounds to be output by different propellers having different positions of propeller blade treatments, rotating at different speeds, and/or outputting different sounds from the transducer(s) when operating in the Vancouver area.

In accordance with the present disclosure, a trained machine learning system may be used to develop sound profiles for different propeller blades having different propeller blade treatments, for different positions of adjustable propeller blade treatments, different propeller blade shapes, and/or different transducer outputs, and when operating at different rotational speeds for different aerial vehicles based on the sizes, shapes, or configurations of the aerial vehicles, and with respect to environmental conditions, operational characteristics, and/or locations of such aerial vehicles. Based on such sound profiles, anti-sounds may be determined for sound controllers located on such aerial vehicles as a function of the respective environmental conditions, operational characteristics or locations and output on an as-needed basis. The sound controllers may utilize the determined anti-sounds and commanded lift for a propeller to select positions of one or more propeller blade treatments, rotational speed, and/or transducer sound output that will generate the determined anti-sound and corresponding commanded lift.

Referring to FIG. **24**D, an aerial vehicle **2410-5**, including a plurality of propellers **2413-1**, **2413-2**, **2413-3**, **2413-4** and a plurality of motors **2415-1**, **2415-2**, **2415-3**, **2415-4** is shown en route from Hartford to Glastonbury, Conn. Each propeller **2413** may generate the same or different sounds and sounds measured by sensors **2406** at different locations on the aerial vehicle may be similar or different. To cancel out, reduce, and/or otherwise alter the measured sounds, an anti-sound is determined and positions for one or more propeller blade treatments, a corresponding propeller speed, and/or transducer sound outputs are determined that will cause the propeller to generate the determined anti-sound when the propeller is rotated. As discussed above, the anti-sound may be determined based on actual sound measurements determined by sensors positioned on the aerial vehicle and/or the anti-sounds may be predicted based on intrinsic or extrinsic information or data. Likewise, the propeller blade treatments on each propeller **2413-1**, **2413-2**, **2413-3**, **2413-4** and/or transducer sound outputs from transducers on each propeller may be adjusted independently, may be adjusted differently, the propellers may rotate at different speeds, and/or generate different anti-sounds. In some implementations, rather than, or in addition to select-

ing propeller blade treatment positions and/or transducer sound outputs to generate an anti-sound, propeller blade treatment positions and/or transducer sound outputs may be elected to dampen or otherwise alter (e.g., alter the frequency spectrum) the predicted and/or measured sounds. Likewise, the propeller shape may be adjusted to generate an anti-sound and/or to dampen or otherwise alter a generated sound.

Referring to FIG. **25**, illustrated is a block diagram of components of one system **2500** for active sound control, in accordance with an implementation. The system **2500** of FIG. **25** includes an aerial vehicle **2510** and a data processing system **2570** connected to one another over a network **2580**. The aerial vehicle **2510** includes a processor **2512**, a memory **2514** and a transceiver **2516**, as well as a plurality of environmental or operational sensors **2520** and a plurality of sound control systems **2506**. Each sound control system may include a sound controller **2506-2** and optionally a sound sensor **2506-1**.

The processor **2512** may be configured to perform any type or form of computing function, including but not limited to the execution of one or more machine learning algorithms or techniques. For example, the processor **2512** may control any aspects of the operation of the aerial vehicle **2510** and the one or more computer-based components thereon, including but not limited to the transceiver **2516**, the environmental or operational sensors **2520**, and/or the sound control systems **2506**. The aerial vehicle **2510** may likewise include one or more control systems (not shown) that may generate instructions for conducting operations thereof, e.g., for operating one or more rotors, motors, rudders, ailerons, flaps or other components provided thereon. Such control systems may be associated with one or more other computing devices or machines, and may communicate with the data processing system **2570** or one or more other computer devices (not shown) over the network **2580**, through the sending and receiving of digital data. The aerial vehicle **2510** further includes one or more memory or storage components **2514** for storing any type of information or data, e.g., instructions for operating the aerial vehicle, predicted propeller sounds, or information or data captured by one or more of the environmental or operational sensors **2520** and/or the sound sensors **2506-1**.

The transceiver **2516** may be configured to enable the aerial vehicle **2510** to communicate through one or more wired or wireless means, e.g., wired technologies such as Universal Serial Bus (or "USB") or fiber optic cable, or standard wireless protocols, such as Bluetooth® or any Wireless Fidelity (or "Wi-Fi") protocol, such as over the network **2580** or directly.

The environmental or operational sensors **2520** may include any components or features for determining one or more attributes of an environment in which the aerial vehicle **2510** is operating, or may be expected to operate, including extrinsic information or data or intrinsic information or data. As is shown in FIG. **25**, the environmental or operational sensors **2520** may include, but are not limited to, a Global Positioning System ("GPS") receiver or sensor **2521**, a compass **2522**, a speedometer **2523**, an altimeter **2524**, a thermometer **2525**, a barometer **2526**, a hygrometer **2527**, a gyroscope **2528**, and/or a microphone **2532**. The GPS sensor **2521** may be any device, component, system or instrument adapted to receive signals (e.g., trilateration data or information) relating to a position of the aerial vehicle **2510** from one or more GPS satellites of a GPS network (not shown). The compass **2522** may be any device, component, system, or instrument adapted to determine one or more directions with respect to a frame of reference that is fixed with respect to the surface of the Earth (e.g., a pole thereof). The speedometer **2523** may be any device, component, system, or instrument for determining a speed or velocity of the aerial vehicle **2510**, and may include related components (not shown) such as pitot tubes, accelerometers, or other features for determining speeds, velocities, or accelerations.

The altimeter **2524** may be any device, component, system, or instrument for determining an altitude of the aerial vehicle **2510**, and may include any number of barometers, transmitters, receivers, range finders (e.g., laser or radar) or other features for determining heights. The thermometer **2525**, the barometer **2526** and the hygrometer **2527** may be any devices, components, systems, or instruments for determining local air temperatures, atmospheric pressures, or humidities within a vicinity of the aerial vehicle **2510**. The gyroscope **2528** may be any mechanical or electrical device, component, system, or instrument for determining an orientation, e.g., the orientation of the aerial vehicle **2510**. For example, the gyroscope **2528** may be a traditional mechanical gyroscope having at least a pair of gimbals and a flywheel or rotor. Alternatively, the gyroscope **2528** may be an electrical component such as a dynamically tuned gyroscope, a fiber optic gyroscope, a hemispherical resonator gyroscope, a London moment gyroscope, a microelectromechanical sensor gyroscope, a ring laser gyroscope, or a vibrating structure gyroscope, or any other type or form of electrical component for determining an orientation of the aerial vehicle **2510**. The microphone **2532** may be any type or form of transducer (e.g., a dynamic microphone, a condenser microphone, a ribbon microphone, a crystal microphone) configured to convert acoustic energy of any intensity and across any or all frequencies into one or more electrical signals, and may include any number of diaphragms, magnets, coils, plates, or other like features for detecting and recording such energy. The microphone **2532** may also be provided as a discrete component, or in combination with one or more other components, e.g., an imaging device, such as a digital camera. Furthermore, the microphone **2532** may be configured to detect and record acoustic energy from any and all directions.

Those of ordinary skill in the pertinent arts will recognize that the environmental or operational sensors **2520** may include any type or form of device or component for determining an environmental condition within a vicinity of the aerial vehicle **2510** in accordance with the present disclosure. For example, the environmental or operational sensors **2520** may include one or more air monitoring sensors (e.g., oxygen, ozone, hydrogen, carbon monoxide or carbon dioxide sensors), infrared sensors, ozone monitors, pH sensors, magnetic anomaly detectors, metal detectors, radiation sensors (e.g., Geiger counters, neutron detectors, alpha detectors), altitude indicators, depth gauges, accelerometers or the like, as well as one or more imaging devices (e.g., digital cameras), and are not limited to the sensors **2521**, **2522**, **2523**, **2524**, **2525**, **2526**, **2527**, **2528**, **2532** shown in FIG. **25**.

The data processing system **2570** includes one or more physical computer servers **2572** having a plurality of data stores **2574** associated therewith, as well as one or more computer processors **2576** provided for any specific or general purpose. For example, the data processing system **2570** of FIG. **25** may be independently provided for the exclusive purpose of receiving, analyzing or storing sounds, propeller blade treatment positions, corresponding lifting forces, anti-sounds, and/or other information or data received from the aerial vehicle **2510** or, alternatively,

provided in connection with one or more physical or virtual services configured to receive, analyze or store such sounds, information or data, as well as one or more other functions. The servers **2572** may be connected to or otherwise communicate with the data stores **2574** and the processors **2576**. The data stores **2574** may store any type of information or data, including but not limited to sound information or data, and/or information or data regarding environmental conditions, operational characteristics, or positions, for any purpose. The servers **2572** and/or the computer processors **2576** may also connect to or otherwise communicate with the network **2580**, as indicated by line **2578**, through the sending and receiving of digital data. For example, the data processing system **2570** may include any facilities, stations or locations having the ability or capacity to receive and store information or data, such as media files, in one or more data stores, e.g., media files received from the aerial vehicle **2510**, or from one another, or from one or more other external computer systems (not shown) via the network **2580**. In some implementations, the data processing system **2570** may be provided in a physical location. In other such implementations, the data processing system **2570** may be provided in one or more alternate or virtual locations, e.g., in a "cloud"-based environment. In still other implementations, the data processing system **2570** may be provided onboard one or more aerial vehicles, including but not limited to the aerial vehicle **2510**.

The network **2580** may be any wired network, wireless network, or combination thereof, and may comprise the Internet in whole or in part. In addition, the network **2580** may be a personal area network, local area network, wide area network, cable network, satellite network, cellular telephone network, or combination thereof. The network **2580** may also be a publicly accessible network of linked networks, possibly operated by various distinct parties, such as the Internet. In some implementations, the network **2580** may be a private or semi-private network, such as a corporate or university intranet. The network **2580** may include one or more wireless networks, such as a Global System for Mobile Communications (GSM) network, a Code Division Multiple Access (CDMA) network, a Long Term Evolution (LTE) network, or some other type of wireless network. Protocols and components for communicating via the Internet or any of the other aforementioned types of communication networks are well known to those skilled in the art of computer communications and, thus, need not be described in more detail herein.

The computers, servers, devices and the like described herein have the necessary electronics, software, memory, storage, databases, firmware, logic/state machines, microprocessors, communication links, displays or other visual or audio user interfaces, printing devices, and any other input/output interfaces to provide any of the functions or services described herein and/or achieve the results described herein. Also, those of ordinary skill in the pertinent art will recognize that users of such computers, servers, devices and the like may operate a keyboard, keypad, mouse, stylus, touch screen, or other device (not shown) or method to interact with the computers, servers, devices and the like, or to "select" an item, link, node, hub or any other aspect of the present disclosure.

The aerial vehicle **2510** or the data processing system **2570** may use any web-enabled or Internet applications or features, or any other client-server applications or features including E-mail or other messaging techniques, to connect to the network **2580**, or to communicate with one another, such as through short or multimedia messaging service (SMS or MMS) text messages. For example, the aerial vehicle **2510** may be adapted to transmit information or data in the form of synchronous or asynchronous messages to the data processing system **2570** or to any other computer device in real time or in near-real time, or in one or more offline processes, via the network **2580**. The protocols and components for providing communication between such devices are well known to those skilled in the art of computer communications and need not be described in more detail herein.

The data and/or computer executable instructions, programs, firmware, software and the like (also referred to herein as "computer executable" components) described herein may be stored on a computer-readable medium that is within or accessible by computers or computer components such as the processor **2512** or the processor **2576**, or any other computers or control systems utilized by the aerial vehicle **2510** or the data processing system **2570**, and having sequences of instructions which, when executed by a processor (e.g., a central processing unit, or "CPU"), cause the processor to perform all or a portion of the functions, services and/or methods described herein. Such computer executable instructions, programs, software, and the like may be loaded into the memory of one or more computers using a drive mechanism associated with the computer readable medium, such as a floppy drive, CD-ROM drive, DVD-ROM drive, network interface, or the like, or via external connections.

Some implementations of the systems and methods of the present disclosure may also be provided as a computer-executable program product including a non-transitory machine-readable storage medium having stored thereon instructions (in compressed or uncompressed form) that may be used to program a computer (or other electronic device) to perform processes or methods described herein. The machine-readable storage media of the present disclosure may include, but is not limited to, hard drives, floppy diskettes, optical disks, CD-ROMs, DVDs, ROMs, RAMs, erasable programmable ROMs ("EPROM"), electrically erasable programmable ROMs ("EEPROM"), flash memory, magnetic or optical cards, solid-state memory devices, or other types of media/machine-readable medium that may be suitable for storing electronic instructions. Further, implementations may also be provided as a computer executable program product that includes a transitory machine-readable signal (in compressed or uncompressed form). Examples of machine-readable signals, whether modulated using a carrier or not, may include, but are not limited to, signals that a computer system or machine hosting or running a computer program can be configured to access, or include signals that may be downloaded through the Internet or other networks.

FIG. **26** illustrates an example process **2600** for active airborne sound control, according to an implementation. The example process **2600** begins by determining a destination of an aerial vehicle, as in **2610**. A transit plan may then be determined for transit of the aerial vehicle from an origin to the destination, as in **2620**. For example, the transit plan may specify an estimated time of departure from the origin, locations of any waypoints between the origin and the destination, a desired time of arrival at the destination, or any other relevant geographic or time constraints associated with the transit. Operational characteristics of the aerial vehicle that are required in order to complete the transit from the origin to the destination in accordance with the transit plan, e.g., courses or speeds of the aerial vehicle, and corresponding instructions to be provided to such motors,

rotors, rudders, ailerons, flaps or other features of the aerial vehicle in order to achieve such courses or speeds, may be predicted, as in **2622**. Environmental conditions expected to be encountered during the transit from the origin to the destination in accordance with the transit plan may also be predicted, as in **2624**. For example, weather forecasts for the times or dates of the departure or the arrival of the aerial vehicle, and for the locations of the origin or the destination, may be identified on any basis.

The transit plan identified, the predicted operational characteristics, and the predicted environmental conditions are provided to a trained machine learning system as initial inputs, as in **2626**. The machine learning system may utilize one or more algorithms or techniques, such as nearest neighbor methods or analyses, factorization methods or techniques, K-means clustering analyses or techniques, similarity measures, such as log likelihood similarities or cosine similarities, latent Dirichlet allocations or other topic models, or latent semantic analyses, and may be trained to associate environmental, operational or location-based information with sounds at the propellers or other locations on the frame of the aerial vehicle. In some implementations, the trained machine learning system resides and/or operates on one or more computing devices or machines provided onboard the aerial vehicle. In some other implementations, the trained machine learning system resides in one or more alternate or virtual locations, e.g., in a "cloud"-based environment accessible via a network.

The predicted sounds are received from the machine learning system as outputs for each respective sound controller located at the propellers or other locations on the frame of the aerial vehicle, as in **2630**. Such sounds may be average or general sounds anticipated at each propeller for the entire transit of the aerial vehicle from the origin to the destination in accordance with the transit plan, or may change or vary based on the predicted location of the aerial vehicle, a time between the departure of the aerial vehicle from the origin and an arrival of the aerial vehicle at the destination, and/or based on the position of the sensor on the frame of the aerial vehicle. Alternatively, or additionally, the machine learning system may also determine a confidence interval, a confidence level or another measure or metric of a probability or likelihood that the predicted sound for each sound controller will occur in a given environment that is subject to given operational characteristics at a given position.

Based on the predicted sound, anti-sounds intended to counteract the predicted sound at each sound controller are determined, as in **2640**. Based on the anti-sound, positions of one or more propeller blade treatments, a rotational speed, and/or a transducer output sound are determined that will cause the propeller blade adjacent the sound controller to generate the anti-sound and satisfy the operational characteristics when the aerial vehicle is within a vicinity of the given location in accordance with the transit plan, as in **2645**. In some implementations, the power draw for different configurations of propeller blade treatment positions that will generate the same lifting force and anti-sound may be considered in determining positions for the propeller blade treatments for use in generating the anti-sound.

In some implementations, the predicted sound may be compared to an allowable sound level and/or allowable frequency spectrum of amplitudes defined for the aerial vehicle at each given location and a determination made as to whether the predicted sound needs to be altered such that it is below the allowable sound level and/or within an allowable frequency range. If it is determined that the predicted sound is to be altered, propeller blade treatment positions that will generate an appropriate anti-sound and/or transducer output sounds may be determined, as discussed above. Alternatively, or in addition thereto, propeller blade treatment positions and/or transducer output sounds that will result in the predicted sound being dampened to a point below the allowable sound level and/or the frequency spectrum being adjusted such that amplitudes within the allowable frequency range may be determined.

The aerial vehicle departs from the origin to the destination, as in **2650**, and each sound controller of the aerial vehicle adjusts the position of one or more propeller blade treatments of a corresponding propeller and/or sends a signal to transducer(s) of the corresponding propeller to generate the anti-sounds at specific positions during the transit from the origin to the destination. For example, the aerial vehicle may monitor its position during the transit using one or more GPS receivers or sensors and send instructions or provide position information to each sound controller. In response, each sound controller will cause the position of one or more propeller blade treatments to be altered to generate an anti-sound corresponding to each position and/or send a signal to transducers to cause the transducers to generate a determined output sound that is included in the anti-sound. The anti-sound interferences with an alters the sound generated by the propeller, as in **2660**. A determination is then made as to whether the aerial vehicle has arrived at the destination, as in **2670**. If the aerial vehicle has arrived at the destination, the example process **2600** completes.

If the aerial vehicle has not yet arrived at the destination, however, then the example process **2600** determines the actual operational characteristics of the aerial vehicle during the transit, as in **2672**. For example, information or data regarding the actual courses or speeds of the aerial vehicle, and the operational actions, events or instructions that caused the aerial vehicle to achieve such courses or speeds, may be captured and recorded in at least one data store, which may be provided onboard the aerial vehicle, or in one or more alternate or virtual locations, e.g., in a cloud-based environment accessible via a network. Environmental conditions encountered by the aerial vehicle during the transit are also determined, as in **2674**. For example, information or data regarding the actual wind velocities, humidity levels, temperatures, precipitation or any other environmental events or statuses within the vicinity of the aerial vehicle may also be captured and recorded in at least one data store.

The information or data regarding the determined operational characteristics and environmental conditions are provided to the trained machine learning system as updated inputs, in real time or in near-real time, as in **2676**. In some implementations, values corresponding to the operational characteristics or environmental conditions are provided to the trained machine learning system. In some other implementations, values corresponding to differences or differentials between the determined operational characteristics or the determined environmental conditions and the predicted operational characteristics or the predicted environmental conditions may be provided to the trained machine learning system.

Based on the determined operational characteristics and/or determined environmental conditions, predicted sounds for each sound controller are received from the trained machine learning system as updated outputs, as in **2680**. As discussed above, sounds predicted to occur at each sound controller may be predicted in accordance with a transit plan for the aerial vehicle, and anti-sounds determined based on such predicted sounds may be determined based on the

transit plan, as well as any other relevant information or data regarding the transit plan, including attributes of an origin, a destination or any intervening waypoints, such as locations, topography, population densities or other criteria. Anti-sounds for counteracting the predicted sounds received from the trained machine learning system based on the updated outputs are determined before the process returns to box **2660**, where the position of one or more propeller blade treatments may be adjusted and/or a transducer output sound altered so that the updated anti-sounds are generated by the propellers, as in **2690**. As discussed above, rather than, or in addition to generating anti-sounds, propeller blade treatment positions and/or transducer output sounds may be determined that will dampen or otherwise alter the updated predicted sounds.

Although the disclosure has been described herein using exemplary techniques, components, and/or processes for implementing the systems and methods of the present disclosure, it should be understood by those skilled in the art that other techniques, components, and/or processes or other combinations and sequences of the techniques, components, and/or processes described herein may be used or performed that achieve the same function(s) and/or result(s) described herein and which are included within the scope of the present disclosure.

For example, although some of the implementations disclosed herein reference the use of unmanned aerial vehicles to deliver payloads from warehouses or other like facilities to customers, those of ordinary skill in the pertinent arts will recognize that the systems and methods disclosed herein are not so limited, and may be utilized in connection with any type or form of aerial vehicle (e.g., manned or unmanned) having fixed or rotating wings for any intended industrial, commercial, recreational or other use.

It should be understood that, unless otherwise explicitly or implicitly indicated herein, any of the features, characteristics, alternatives or modifications described regarding a particular implementation herein may also be applied, used, or incorporated with any other implementation described herein, and that the drawings and detailed description of the present disclosure are intended to cover all modifications, equivalents and alternatives to the various implementations as defined by the appended claims. Also, the drawings herein are not drawn to scale.

Conditional language, such as, among others, "can," "could," "might," or "may," unless specifically stated otherwise, or otherwise understood within the context as used, is generally intended to convey in a permissive manner that certain implementations could include, or have the potential to include, but do not mandate or require, certain features, elements and/or steps. In a similar manner, terms such as "include," "including" and "includes" are generally intended to mean "including, but not limited to." Thus, such conditional language is not generally intended to imply that features, elements and/or steps are in any way required for one or more implementations or that one or more implementations necessarily include logic for deciding, with or without user input or prompting, whether these features, elements and/or steps are included or are to be performed in any particular implementation.

Disjunctive language, such as the phrase "at least one of X, Y, or Z," or "at least one of X, Y and Z," unless specifically stated otherwise, is otherwise understood with the context as used in general to present that an item, term, etc., may be either X, Y, or Z, or any combination thereof (e.g., X, Y, and/or Z). Thus, such disjunctive language is not generally intended to, and should not, imply that certain implementations require at least one of X, at least one of Y, or at least one of Z to each be present.

Unless otherwise explicitly stated, articles such as "a" or "an" should generally be interpreted to include one or more described items. Accordingly, phrases such as "a device configured to" are intended to include one or more recited devices. Such one or more recited devices can also be collectively configured to carry out the stated recitations. For example, "a processor configured to carry out recitations A, B and C" can include a first processor configured to carry out recitation A working in conjunction with a second processor configured to carry out recitations B and C.

Language of degree used herein, such as the terms "about," "approximately," "generally," "nearly" or "substantially," as used herein, represent a value, amount, or characteristic close to the stated value, amount, or characteristic that still performs a desired function or achieves a desired result. For example, the terms "about," "approximately," "generally," "nearly" or "substantially" may refer to an amount that is within less than 10% of, within less than 5% of, within less than 1% of, within less than 0.1% of, and within less than 0.01% of the stated amount.

Although the invention has been described and illustrated with respect to illustrative implementations thereof, the foregoing and various other additions and omissions may be made therein and thereto without departing from the spirit and scope of the present disclosure.

What is claimed is:

1. An aerial vehicle comprising:

a first motor configured to rotate a propeller such that the propeller generates a lifting force;

the propeller including:

a hub that is coupled to the first motor so that the first motor can rotate the propeller; and

a propeller blade extending from the hub, the propeller blade including an upper surface and a lower surface;

a propeller duct positioned around the propeller;

a plurality of carbon nanotube transducers formed as a mesh material and positioned over an exit of the propeller duct; and

a sound controller in communication with the plurality of carbon nanotube transducers to provide a signal to the plurality of carbon nanotube transducers to cause the plurality of carbon nanotube transducers to activate, wherein the signal causes the plurality of carbon nanotube transducers to generate an anti-sound that interferes with a sound generated by a rotation of the propeller blade.

2. The aerial vehicle of claim **1**, further comprising:

a sensor in communication with the sound controller to measure the sound generated by the rotation of the propeller blade; and

wherein the anti-sound is determined by the sound controller based at least in part on the measured sound.

3. The aerial vehicle of claim **1**, further comprising:

a motor controller in communication with the first motor, the motor controller causing the first motor to rotate the propeller blade at a defined revolutions per minute ("RPM"); and

wherein the anti-sound is determined based at least in part on a sound anticipated to be generated by the rotation of the propeller blade at the defined RPM.

4. The aerial vehicle of claim **1**, further comprising:

an electromagnetic coil wound around the first motor and coupled to the sound controller; and

a plurality of magnets arranged adjacent to the electromagnetic coil and in an alternating polarity such that an

electrical current is generated by the electromagnetic coil in response to a rotation of the first motor and the electromagnetic coil moving with respect to the plurality of magnets.

5. The aerial vehicle of claim **4**, wherein the sound controller utilizes the electrical current.

6. An aerial vehicle, comprising:

a motor;

a propeller coupled to and rotated by the motor, the propeller including a surface area having an upper side, a lower side, a leading edge, and a trailing edge;

a propeller duct positioned around the propeller;

a carbon nanotube transducer formed in a mesh material and positioned over at least a portion of at least one of an entrance or an exit of the propeller duct; and

a sound controller in communication with the carbon nanotube transducer to provide a signal to the carbon nanotube transducer to cause the carbon nanotube transducer to activate, wherein the signal causes the carbon nanotube transducer to generate an anti-sound that interferes with a sound generated by a rotation of the propeller.

7. The aerial vehicle of claim **6**, further comprising:

a piezoelectric thin-film transducer in communication with the sound controller, the piezoelectric thin-film transducer receiving the signal and generating the anti-sound.

8. The aerial vehicle of claim **6**, wherein:

a second carbon nanotube transducer is positioned on the upper side of the propeller; and

a piezoelectric thin-film transducer is positioned on the lower side of the propeller.

9. The aerial vehicle of claim **8**, wherein the sound controller is in communication with the piezoelectric thin-film transducer to provide the signal to the piezoelectric thin-film transducer to cause the piezoelectric thin-film transducer to activate.

10. The aerial vehicle of claim **6**, further comprising:

a sensor configured to measure a sound generated by the aerial vehicle; and

wherein at least one of a frequency or an amplitude of the anti-sound is determined based at least in part on the measured sound.

11. The aerial vehicle of claim **10**, wherein the sensor is coupled to a hub of the propeller.

12. The aerial vehicle of claim **10**, the sound controller including:

a communication component configured to receive a wireless communication that indicates the anti-sound to be generated by the carbon nanotube transducer, wherein the anti-sound is determined based at least in part on a revolutions per minute (RPM) of the propeller or a position of the aerial vehicle.

13. The aerial vehicle of claim **6**, wherein the sound controller includes:

an anti-sound table indicating anti-sounds to be generated by the carbon nanotube transducer, wherein anti-sounds of the anti-sound table correspond to a revolutions per minute (RPM) of the propeller.

14. The aerial vehicle of claim **6**,

wherein at least a portion of the propeller duct includes a transducer configured to generate the anti-sound.

15. A method for altering a sound generated by a rotation of a propeller blade, the method comprising:

determining a revolutions per minute (RPM) of the propeller blade;

obtaining from a memory, an indication of a sound anticipated to be generated by the propeller blade when rotating at the RPM;

determining an anti-sound that will cause interference with the sound; and

sending a signal to a carbon nanotube transducer included in a mesh material that is positioned over at least a portion of at least one of an entrance or an exit of a propeller duct around the propeller blade to cause the carbon nanotube transducer to generate the anti-sound such that the anti-sound causes interference with the sound.

16. The method of claim **15**, further comprising;

determining additional sound generated by an aerial vehicle as the aerial vehicle is operating and rotating the propeller blade; and

wherein the anti-sound is determined to cause interference with the sound and the additional sound.

17. The method of claim **15**, further comprising:

measuring with a sensor coupled to an aerial vehicle a net-effect resulting from a combination of the sound and the anti-sound; and

altering the anti-sound based at least in part on the net-effect.

18. The method of claim **15**, wherein the anti-sound is determined based at least in part on a machine learning system that considers at least one of the RPM of the propeller blade, a position of an aerial vehicle, an operational condition, or an environmental condition.

19. The method of claim **15**, wherein sending includes sending the signal to a plurality of carbon nanotube transducers included in the mesh material that is positioned over at least a portion of at least one of the entrance or the exit of the propeller duct around the propeller blade to cause each of the plurality of carbon nanotube transducers to generate the anti-sound such that the anti-sound causes interference with the sound.

20. The method of claim **17**, wherein the anti-sound is determined based at least in part on an environment in which the aerial vehicle is operating.

* * * * *