US010462891B2

(12) **United States Patent**
Zhang et al.

(10) **Patent No.: US 10,462,891 B2**
(45) **Date of Patent: Oct. 29, 2019**

(54) **COST EFFECTIVE CARTRIDGE FOR A PLASMA ARC TORCH**

(71) Applicant: **Hypertherm, Inc.**, Hanover, NH (US)

(72) Inventors: **Yu Zhang**, Hanover, NH (US); **Zheng Duan**, Hanover, NH (US); **Mahyar Esmaili**, Wilmot, NH (US); **Mike Kornprobst**, Lebanon, NH (US); **Brett Hansen**, Mapleton, UT (US); **Garrett Quillia**, Enfield, NH (US)

(73) Assignee: **Hypertherm, Inc.**, Hanover, NH (US)

(*) Notice: Subject to any disclaimer, the term of this patent is extended or adjusted under 35 U.S.C. 154(b) by 456 days.

(21) Appl. No.: **15/043,044**

(22) Filed: **Feb. 12, 2016**

(65) **Prior Publication Data**

US 2016/0165712 A1 Jun. 9, 2016

Related U.S. Application Data

(63) Continuation-in-part of application No. 14/824,946, filed on Aug. 12, 2015.

(60) Provisional application No. 62/036,393, filed on Aug. 12, 2014.

(51) **Int. Cl.**

H05B 1/02	(2006.01)
H05H 1/34	(2006.01)
B23K 10/02	(2006.01)

(52) **U.S. Cl.**

CPC ***H05H 1/34*** (2013.01); ***B23K 10/02*** (2013.01); *H05H 2001/3457* (2013.01); *H05H 2001/3468* (2013.01); *H05H 2001/3489* (2013.01)

(58) **Field of Classification Search**

CPC H05B 1/34; H05B 2001/3457; H05B 2001/3468; H05B 2001/3489; B23K 10/02; B23K 10/006

USPC 219/121.5, 121.51, 121.52, 121.48, 219/121.54, 121.57

See application file for complete search history.

(56) **References Cited**

U.S. PATENT DOCUMENTS

2,985,050	A	5/1961	Schwacha
3,018,360	A	1/1962	Engel
3,153,133	A	10/1964	Ducati
3,279,177	A	10/1966	Ducati
3,294,953	A	12/1966	Spies
3,518,401	A	6/1970	Mathews

(Continued)

FOREIGN PATENT DOCUMENTS

DE	202013010576		2/2014
EP	0242023	A2	10/1987

(Continued)

OTHER PUBLICATIONS

U.S. Appl. No. 15/043,028, Zhang et al., filed Feb. 12, 2016.

(Continued)

Primary Examiner — Mark H Paschall

(74) *Attorney, Agent, or Firm* — Proskauer Rose LLP

(57) **ABSTRACT**

A crown for a plasma arc torch is provided. The crown includes a body defining a proximal and a distal end. The body includes an electrically conductive material. The crown also includes at least one raised feature at the proximal end of the body. The raised feature is adapted to activate a consumable sensor inside of the plasma arc torch. The crown further includes a biasing surface at the proximal end of the body for physically contacting a resilient element.

26 Claims, 23 Drawing Sheets

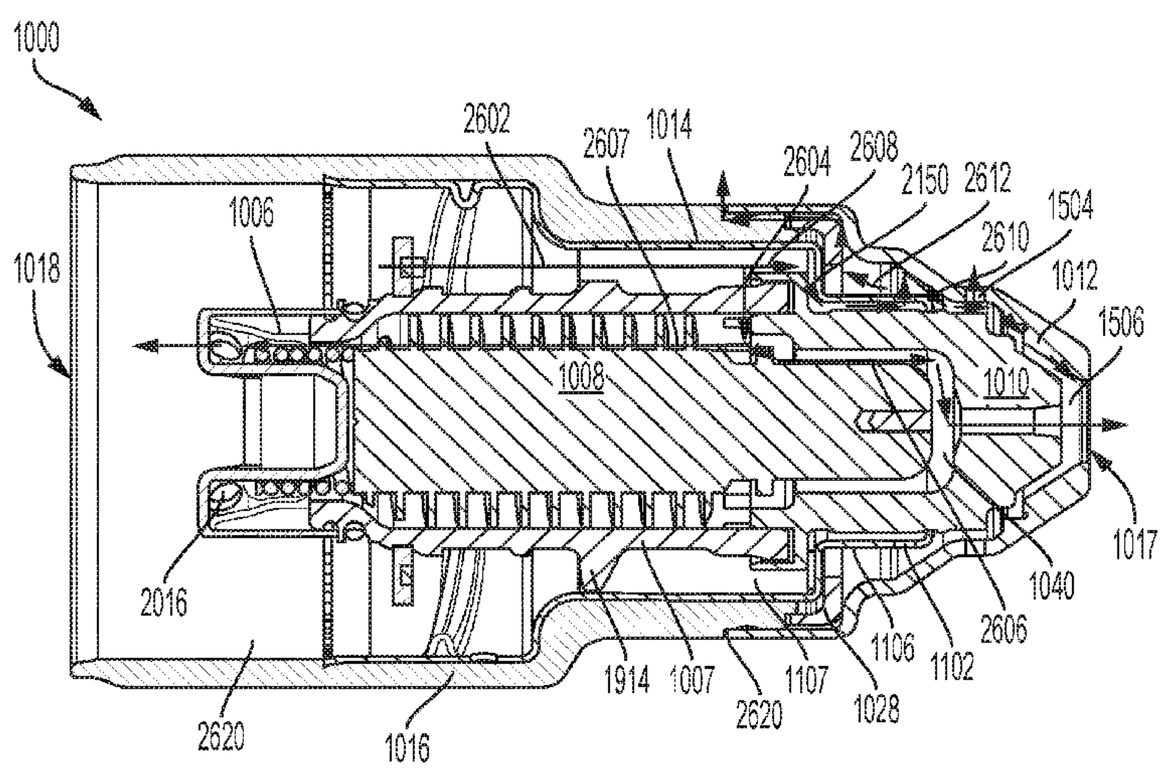

(56) **References Cited**

U.S. PATENT DOCUMENTS

3,684,911 A 8/1972 Perugini et al.
4,011,996 A 3/1977 Tsuji et al.
4,034,250 A 7/1977 Kiselev et al.
4,087,050 A 5/1978 Tsuji et al.
4,311,897 A 1/1982 Yerushalmy
4,355,262 A 10/1982 Chan et al.
4,519,835 A 5/1985 Gauvin et al.
4,570,048 A 2/1986 Poole
4,620,080 A 10/1986 Arata et al.
4,682,005 A 7/1987 Marhic
4,687,139 A 8/1987 Lockwood
4,733,052 A 3/1988 Nilsson et al.
4,783,004 A 11/1988 Lockwood
4,896,016 A 1/1990 Broberg et al.
4,914,271 A 4/1990 Delzenne et al.
4,924,060 A 5/1990 Delzenne
4,929,811 A 5/1990 Blankenship
4,940,877 A 7/1990 Broberg
4,948,485 A 8/1990 Wallsten et al.
4,967,055 A 10/1990 Raney et al.
4,982,067 A 1/1991 Marantz et al.
5,018,670 A 5/1991 Chalmers
5,023,425 A 6/1991 Severance, Jr.
5,132,512 A 7/1992 Sanders et al.
5,144,110 A 9/1992 Marantz et al.
5,183,646 A 2/1993 Anderson et al.
5,200,595 A 4/1993 Boulos et al.
5,208,441 A 5/1993 Broberg
5,239,161 A 8/1993 Lang
5,309,683 A 5/1994 Rockett
5,317,126 A 5/1994 Couch, Jr. et al.
5,390,964 A 2/1995 Gray, Jr.
5,409,164 A 4/1995 Delzenne et al.
5,440,477 A 5/1995 Rohrberg et al.
5,502,245 A 3/1996 Dassel et al.
5,518,221 A 5/1996 Zurecki et al.
5,556,562 A 9/1996 Sorenson
5,558,842 A 9/1996 Vassiliou et al.
5,560,844 A 10/1996 Boulos et al.
5,580,531 A 12/1996 Vassiliou et al.
5,695,662 A 12/1997 Couch, Jr. et al.
5,717,187 A 2/1998 Rogozinski et al.
5,796,067 A 8/1998 Enyedy et al.
5,801,282 A 9/1998 Dassel et al.
5,841,095 A 11/1998 Lu et al.
5,844,196 A 12/1998 Oakley
5,860,849 A 1/1999 Miller
5,874,707 A 2/1999 Iida et al.
5,897,795 A 4/1999 Lu et al.
5,968,379 A 10/1999 Zhao et al.
5,994,663 A 11/1999 Lu
6,084,199 A 7/2000 Lindsay et al.
6,096,993 A 8/2000 Marhic et al.
6,133,542 A 10/2000 Dvorak et al.
6,147,318 A 11/2000 Marhic
6,163,008 A 12/2000 Roberts et al.
6,169,264 B1 1/2001 Marhic
6,256,873 B1 7/2001 Tiffany et al.
6,320,156 B1 11/2001 Yamaguchi et al.
6,337,460 B2 1/2002 Kelkar et al.
6,365,867 B1 4/2002 Hooper
6,444,945 B1 9/2002 Maschwitz et al.
6,525,292 B1 2/2003 Girold
6,616,767 B2 9/2003 Zhao et al.
6,657,162 B1 12/2003 Jung et al.
6,703,581 B2 3/2004 Jones et al.
6,713,711 B2 3/2004 Conway et al.
6,717,096 B2 4/2004 Hewett et al.
6,800,336 B1 10/2004 Fornsel et al.
6,881,921 B2 4/2005 Horner-Richardson et al.
6,888,092 B2 5/2005 Walters
6,903,301 B2 6/2005 Jones et al.
6,919,526 B2 7/2005 Kinerson et al.
6,936,786 B2 8/2005 Hewett et al.
6,946,616 B2 9/2005 Kinerson et al.
6,989,505 B2 1/2006 MacKenzie et al.
7,030,337 B2 4/2006 Baker et al.
7,161,111 B2 1/2007 Schneider
7,196,283 B2 3/2007 Buchberger et al.
7,202,440 B2 4/2007 Hewett et al.
7,220,937 B2 5/2007 Hofman et al.
7,375,302 B2 5/2008 Twarog et al.
7,411,149 B2 8/2008 Schneider
7,423,235 B2 9/2008 Severance, Jr.
7,598,473 B2 10/2009 Cook et al.
7,615,720 B2 11/2009 Sanders
7,622,693 B2 11/2009 Foret
7,671,294 B2 3/2010 Belashchenko et al.
7,759,599 B2 7/2010 Hawley et al.
7,927,094 B2 4/2011 Fong et al.
8,030,592 B2 10/2011 Weidman
8,035,055 B2 10/2011 Twarog et al.
8,089,025 B2 1/2012 Sanders
8,097,828 B2 1/2012 Roberts et al.
8,115,136 B2 2/2012 Mather et al.
8,203,095 B2 6/2012 Storm et al.
8,373,084 B2 2/2013 Salsich
8,389,887 B2 3/2013 Liebold et al.
8,395,076 B2 3/2013 Matus
8,395,077 B2 3/2013 Duan et al.
8,455,786 B2 6/2013 Fang
8,546,719 B2 10/2013 Warren, Jr. et al.
8,575,510 B2 11/2013 Laurish et al.
8,581,139 B2 11/2013 Severance, Jr.
8,624,150 B2 * 1/2014 Simek B23K 10/00 219/121.48
8,698,036 B1 4/2014 Zhang et al.
8,698,306 B2 4/2014 Yu et al.
8,759,715 B2 6/2014 Narayanan et al.
8,790,447 B2 7/2014 Bieri et al.
8,921,731 B2 12/2014 Krink et al.
9,157,360 B2 10/2015 Hoy-Peterson et al.
9,398,679 B2 7/2016 Namburu
9,550,251 B2 1/2017 Guilotta
9,609,733 B2 3/2017 Severance
2002/0012756 A1 1/2002 Kuckertz et al.
2002/0117482 A1 8/2002 Hewett et al.
2002/0117483 A1 8/2002 Jones et al.
2002/0117484 A1 8/2002 Jones et al.
2003/0085205 A1 5/2003 Lai et al.
2003/0148709 A1 8/2003 Anand et al.
2004/0177807 A1 9/2004 Pui et al.
2004/0195217 A1 10/2004 Conway et al.
2005/0061784 A1 * 3/2005 Matus B23K 9/0956 219/121.54
2006/0016789 A1 1/2006 Mackenzie et al.
2006/0163216 A1 * 7/2006 Brandt H05H 1/34 219/121.39
2006/0289397 A1 12/2006 Mahawill
2006/0289398 A1 12/2006 Cook et al.
2006/0289406 A1 12/2006 Helenius et al.
2007/0044449 A1 3/2007 O'brien et al.
2007/0045241 A1 3/2007 Schneider et al.
2007/0082532 A1 4/2007 Morris
2007/0082533 A1 4/2007 Currier et al.
2007/0090168 A1 4/2007 Snow et al.
2007/0154306 A1 7/2007 Anderson et al.
2007/0181540 A1 8/2007 Lindsay et al.
2007/0210034 A1 9/2007 Mather et al.
2007/0262060 A1 11/2007 Roberts et al.
2008/0083711 A1 * 4/2008 Twarog H05H 1/34 219/121.48
2008/0217305 A1 9/2008 Sanders
2008/0210669 A1 10/2008 Yang et al.
2008/0237356 A1 10/2008 Singleton et al.
2008/0308535 A1 12/2008 Rego et al.
2009/0026180 A1 1/2009 Yang et al.
2009/0027782 A1 1/2009 Takahashi et al.
2009/0045174 A1 2/2009 Haberler et al.
2009/0152255 A1 6/2009 Ma et al.
2009/0206721 A1 8/2009 Foret
2009/0230095 A1 9/2009 Liebold et al.
2009/0230097 A1 9/2009 Liebold et al.
2009/0277882 A1 11/2009 Bornemann

(56) **References Cited**

U.S. PATENT DOCUMENTS

2010/0078408	A1	4/2010	Liebold et al.	
2010/0084381	A1	4/2010	Indraczek et al.	
2010/0133241	A1	6/2010	Wilhelm et al.	
2010/0264120	A1	10/2010	Reinke et al.	
2011/0042358	A1	2/2011	Albanese et al.	
2012/0012560	A1	1/2012	Roberts et al.	
2012/0012565	A1	1/2012	Zhang et al.	
2012/0036832	A1	2/2012	Hoy-Petersen et al.	
2012/0055907	A1	3/2012	Allimant et al.	
2012/0058649	A1	3/2012	Okumura et al.	
2012/0060691	A1	3/2012	Bieri et al.	
2012/0103946	A1	5/2012	Krink et al.	
2012/0152913	A1	6/2012	Mather et al.	
2012/0181257	A1	7/2012	Mather et al.	
2012/0246922	A1	10/2012	Hussary et al.	
2012/0248073	A1	10/2012	Conway et al.	
2012/0261392	A1	10/2012	Barnett et al.	
2013/0043222	A1	2/2013	Leiteritz et al.	
2013/0043224	A1	2/2013	Leiteritz et al.	
2013/0087535	A1	4/2013	Barnett et al.	
2013/0103466	A1	4/2013	Fisher	
2013/0126487	A1	5/2013	Crowe	
2013/0153545	A1	6/2013	Kim et al.	
2013/0248497	A1	9/2013	Stoeger et al.	
2014/0021172	A1	1/2014	Sanders et al.	
2014/0023856	A1	1/2014	Bisges et al.	
2014/0069895	A1*	3/2014	Brine	B23K 10/00 219/121.44
2014/0076861	A1	3/2014	Cornelius et al.	
2014/0113527	A1*	4/2014	Lindsay	B23K 5/00 451/5
2014/0217070	A1	8/2014	Pikus et al.	
2015/0076819	A1	3/2015	Mather et al.	
2015/0129562	A1	5/2015	Severance, Jr.	
2015/0181686	A1	6/2015	Schulze et al.	
2015/0273617	A1	10/2015	Gullotta	
2015/0319835	A1	11/2015	Sanders et al.	
2015/0319836	A1	11/2015	Sanders et al.	
2015/0332071	A1*	11/2015	Hoffa	B23K 5/00 340/10.2
2016/0120015	A1	4/2016	Crowe	
2016/0174353	A1	6/2016	Mitra et al.	
2016/0221108	A1*	8/2016	Hoffa	B23K 10/006
2016/0314938	A1	10/2016	Park	

FOREIGN PATENT DOCUMENTS

EP	0875329		11/1998
EP	1 006 760		6/2000
EP	1117279		7/2001
EP	2175702	A1	4/2010
JP	5744467	A	3/1982
JP	2011014459	A	1/2011
JP	4688450		5/2011
JP	4707108	B2	6/2011
RU	2066263	C1	9/1996
RU	95105277	A	4/1997
RU	2354460	C2	10/2008
WO	9621339	A1	7/1996
WO	99/07193		2/1999
WO	03/089183	A1	10/2003
WO	2015073522	A1	5/2015

OTHER PUBLICATIONS

Centricut catalog "2013-2014 Plasma torches and consumables", 68 pages.

Drawing of Hypertherm Part No. 120934, 2000 (redacted).

Thermal Dynamics XT™-300 Brochure, May 7, 2007, 6 pages; http://wv, 'W-.mitaustccl.lv/wn-contcnt/uploads/2013/I I/V- XT300-Torch.pdf.

Thermal Dynamics, "XT-301 Automated Plasma Cutting Torch",Thermadyne, Nov. 2005, 4 pages, retrieved from the Internet at: http://victortechnologies.com/IM_Uploads/DocLib_5849_XT-301%20Torch%20for%20use%20w%20Merlin%201000%20Brochure%20(63-2524)_Nov2005.pdf.

Welding Magazine, "Plasma cutting system for mild steel",Oct. 2008, p. 34, retrieved from the Internet at: http://search.proquest.com/professional/printviewfile?accountid=157282.

Welding Magazine, "Plasma cutting systems and products: new and or upgraded plasma cutting systems and torches have been designed to offer increased flexibility and to boost performance and productivity", Apr. 2007, pp. 36-38, retrieved from the internet at: http://search.proquest.com/professional/printviewfile?accountid=157282.

Amada America Inc.,"Amada WACS System", Retrieved from the Internet at: http://www.amada.de/en/laser/wacs-system.html, printed Oct. 27, 2016, 2 pages.

Komatsu America Industries, LLC: "Next Generation Twister TFP6062-300A Power Supply Units", Retrieved from the Internet at: http://www.komatsuplasma.com/kai/ctd/en/ffp6062/pdf/TFP6062_Brochure.pdf, printed Oct. 27, 2016, 2 pages.

Komatsu America Industries, LLC: "TFPL Twister Series", Retrieved from the internet at: http://fineplasma.com/kai/ctd/en/tfp/pdf/eTFP.pdf, printed Oct. 27, 2016, 6 pages.

Trumpf Inc.,"TruLaser: Cost-effective cutting through thick and thin", Retrieved from the internet at: http://www.us.trumpf.com/fileadmin/DAM/us.trumpf.com/Brochures/2D_Laser/TruLaser_US_10-12.pdf, printed Oct. 26, 2016, 32 pages.

International Search Report and Written Opinion to corresponding PCT Application No. PCT/US2015/044884, dated Dec. 9, 2015, 15 pages.

* cited by examiner

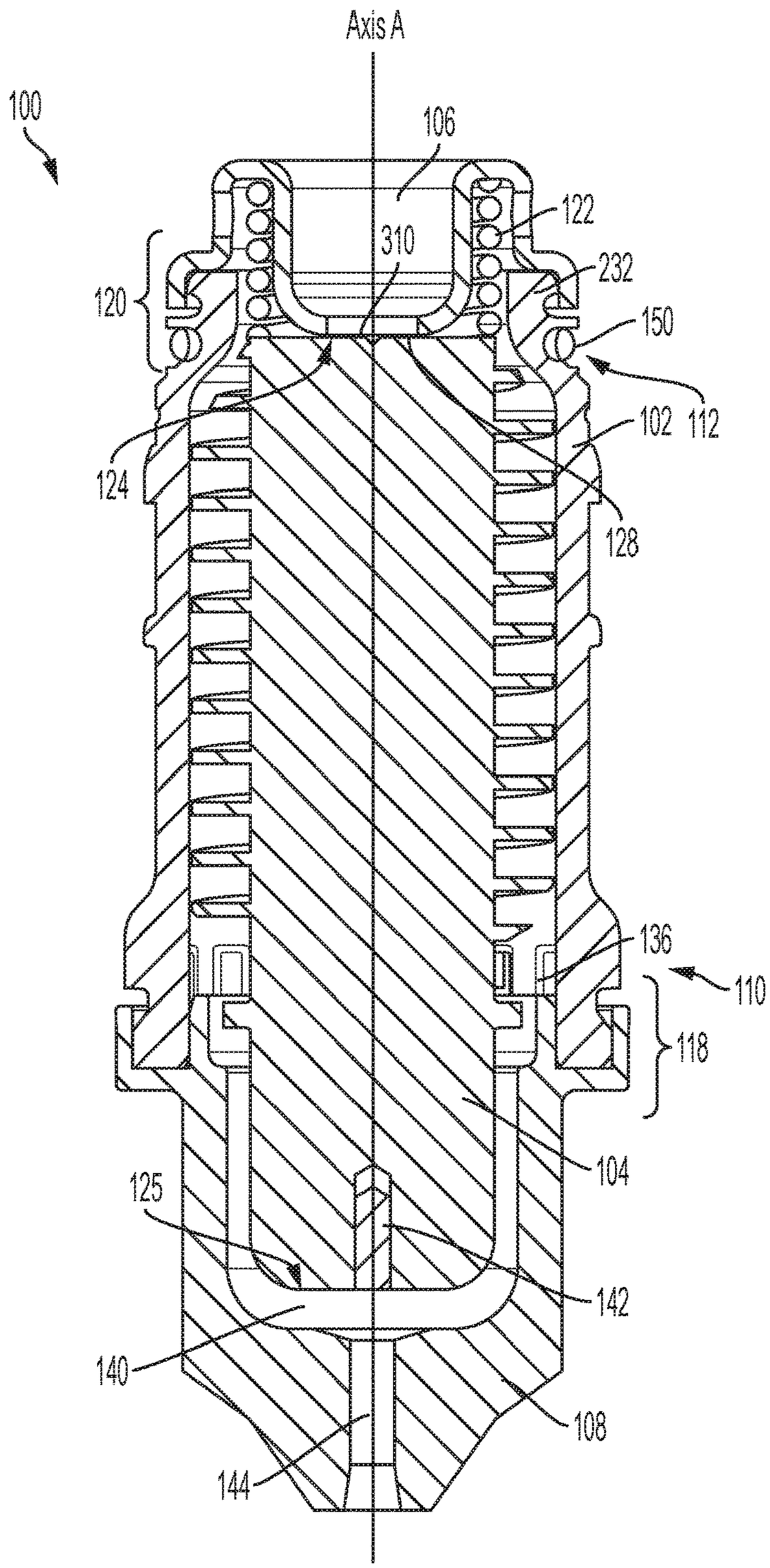
Axis A
100
106
122
310
232
120
150
124
102
112
128
136
110
118
104
125
142
140
108
144

FIG. 1

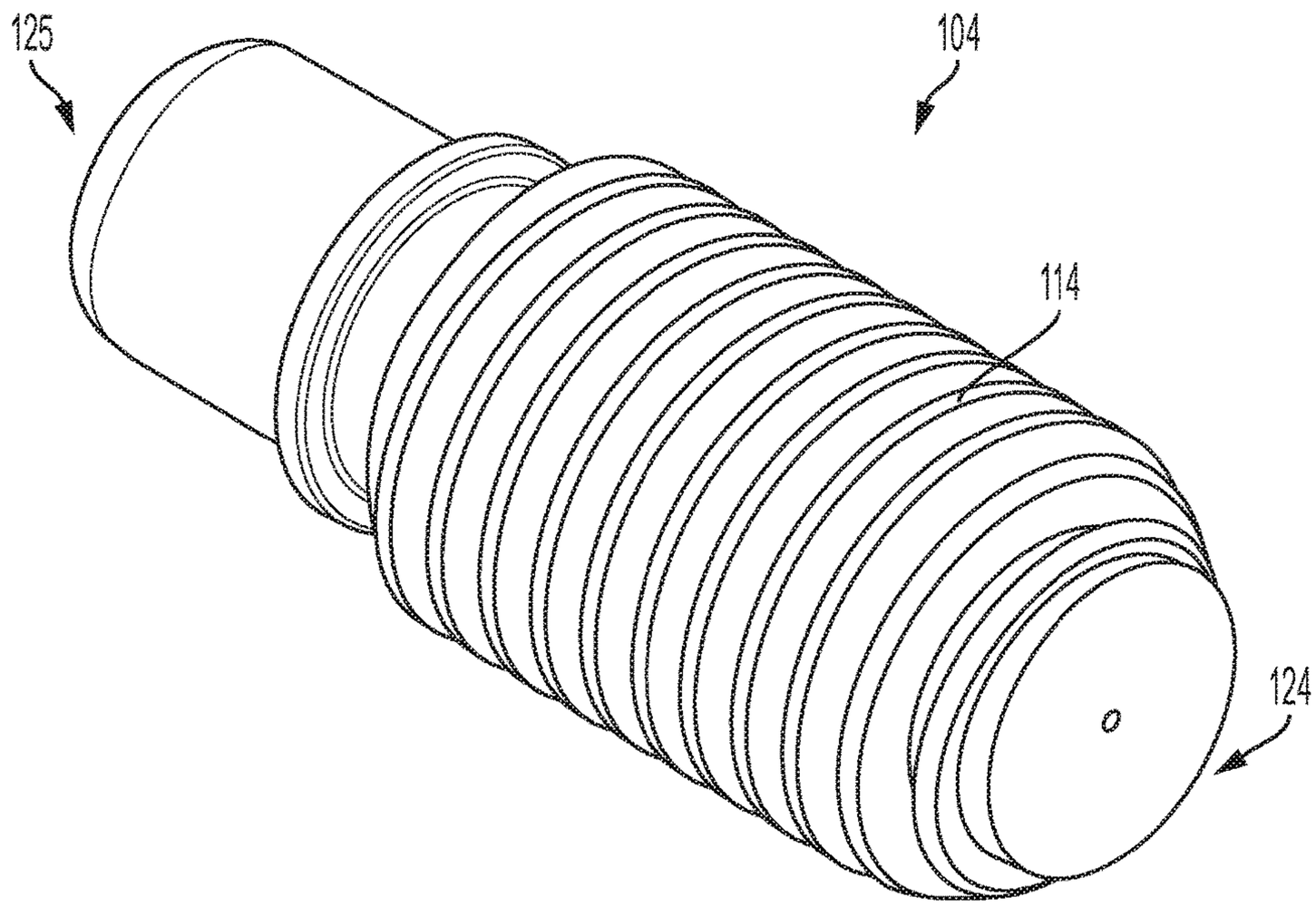

FIG. 2

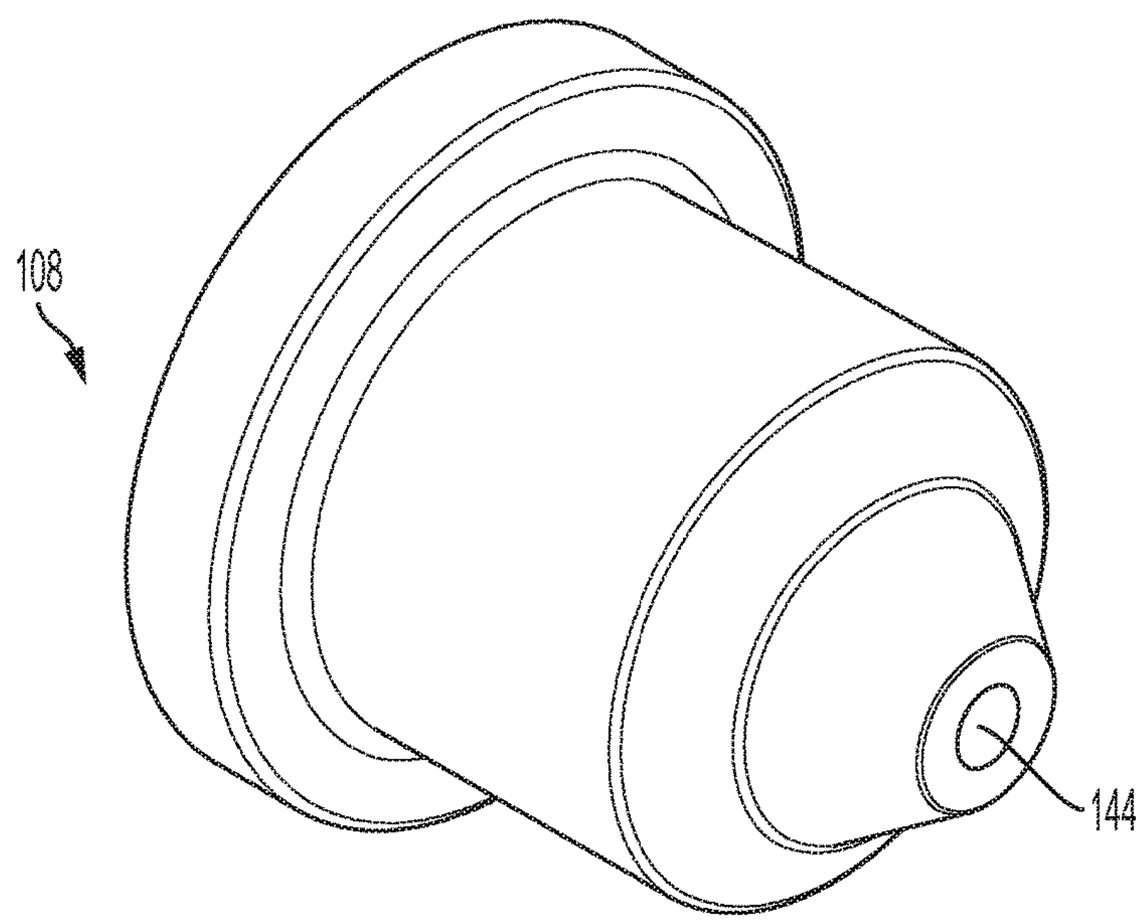

FIG. 3

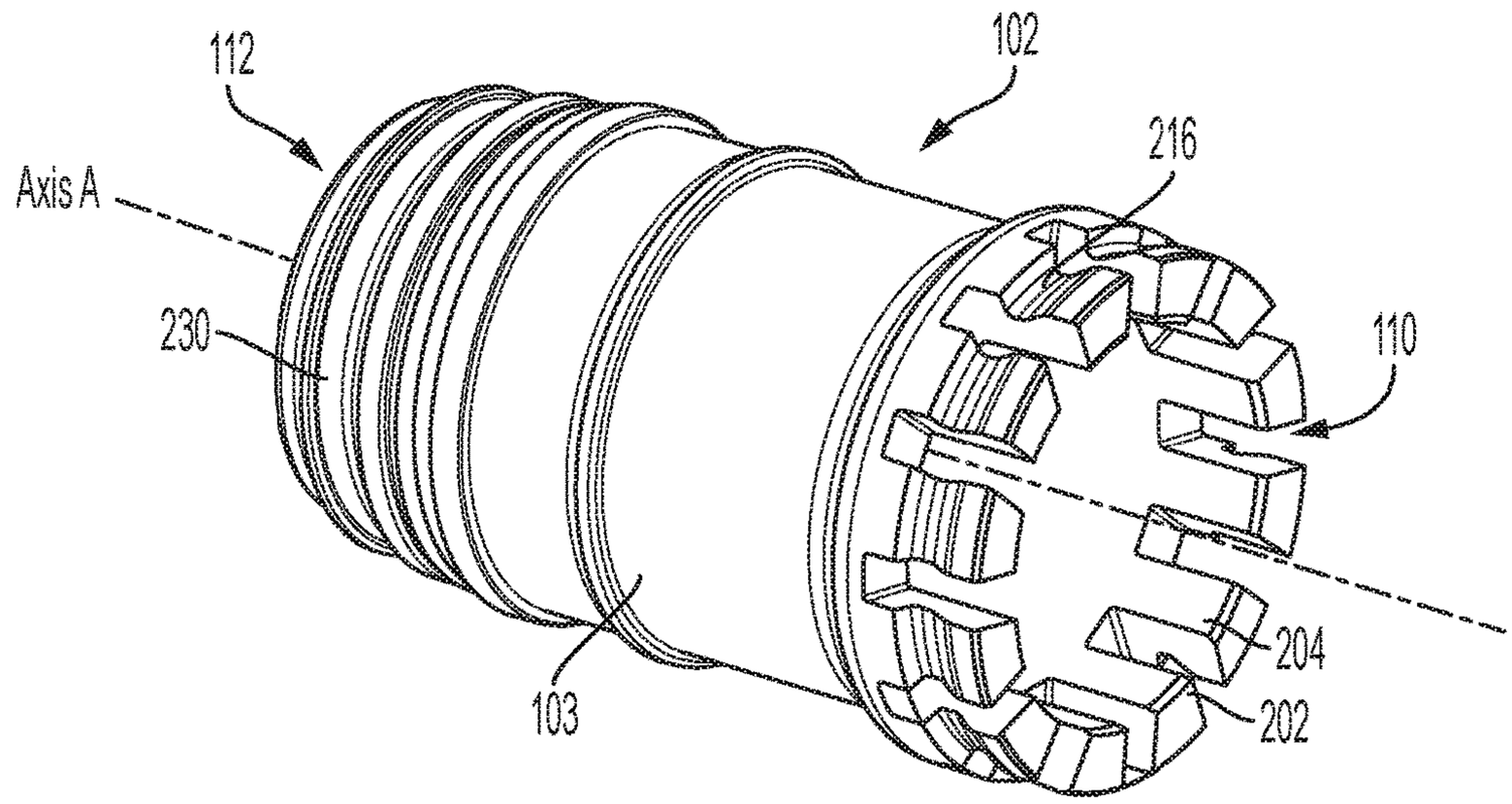
112
102
Axis A
216
230
110
204
103
202

FIG. 4a

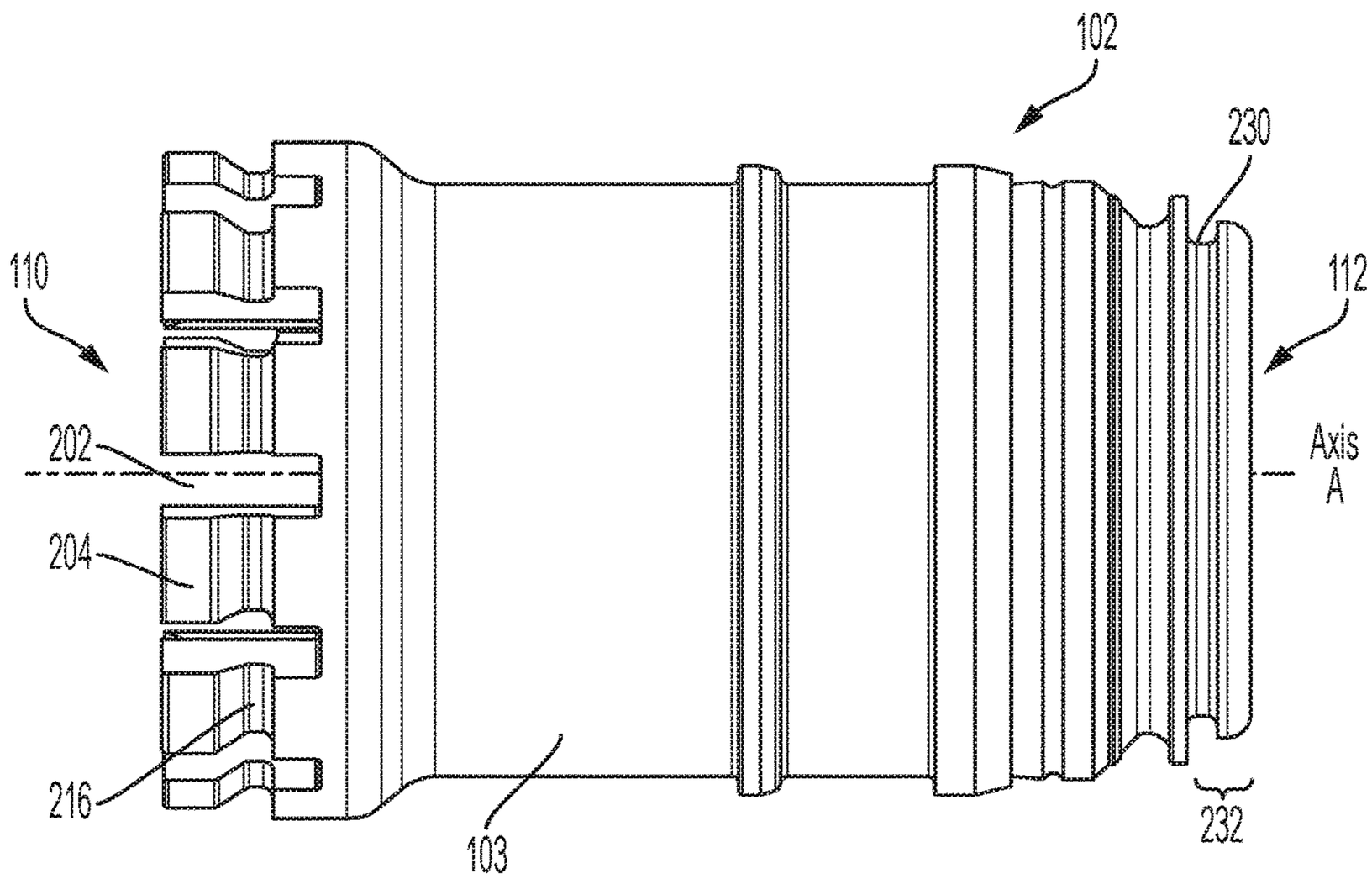
102
230
110
112
202
Axis A
204
216
103
232

FIG. 4b

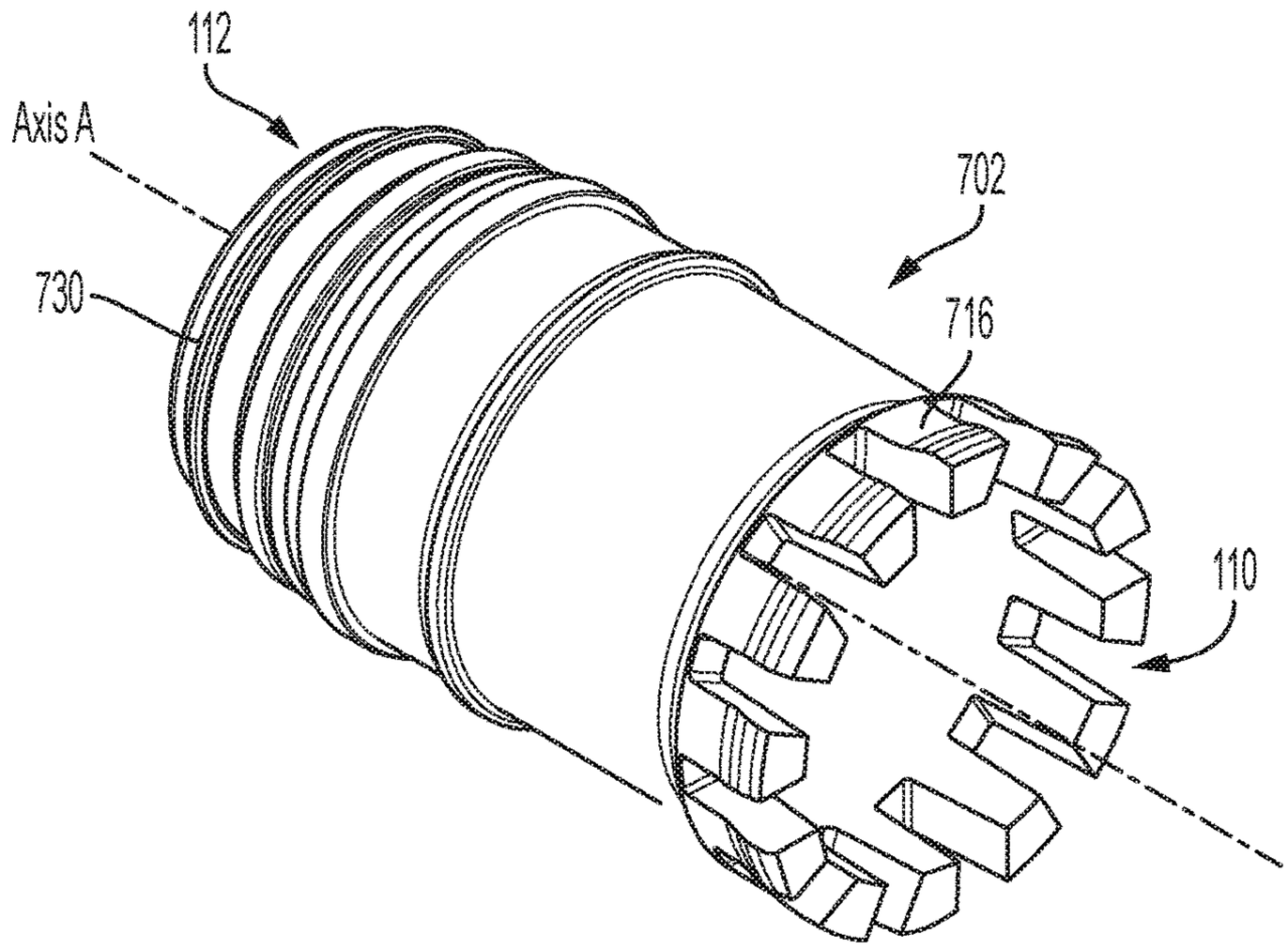

FIG. 5a

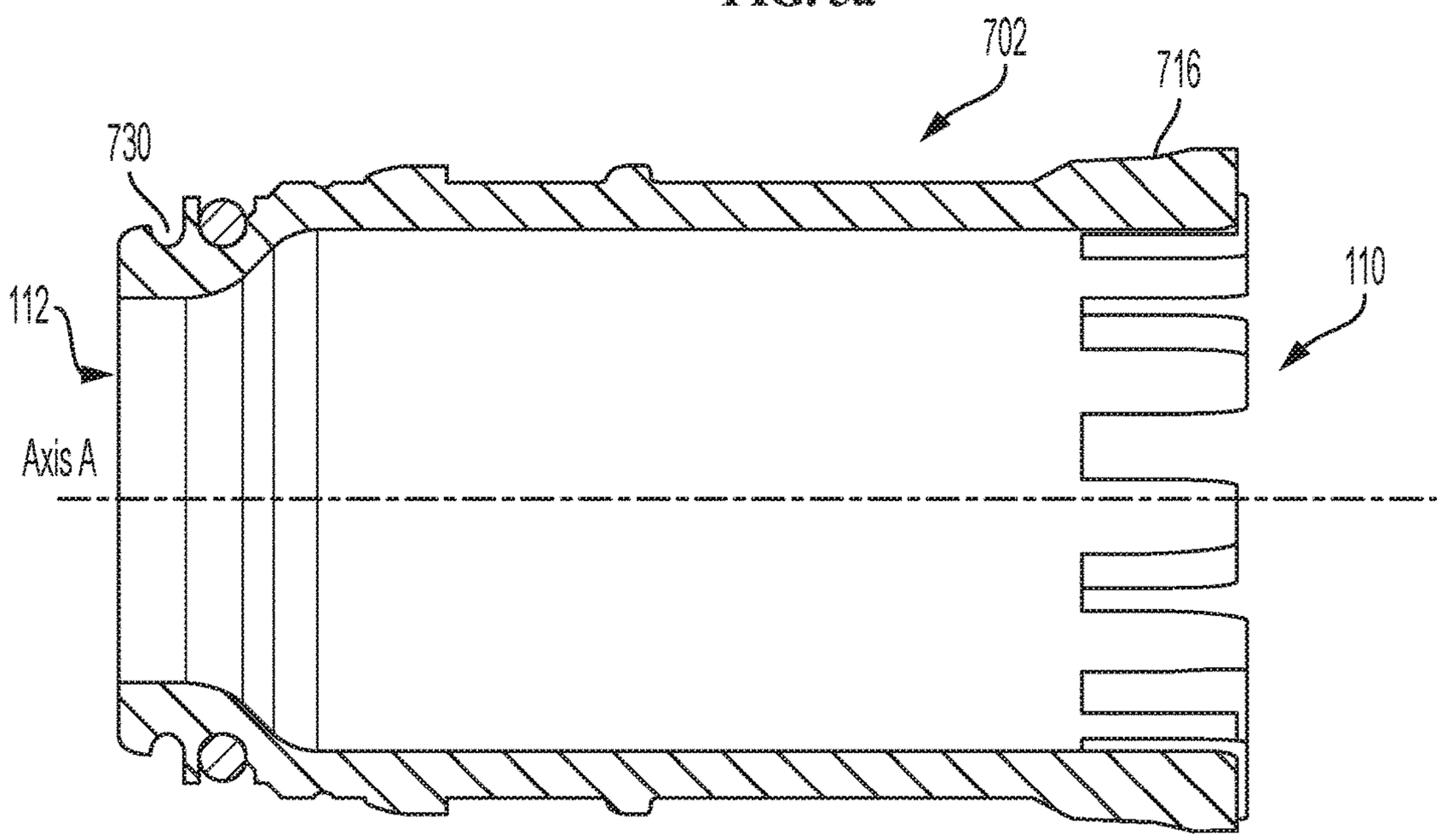

FIG. 5b

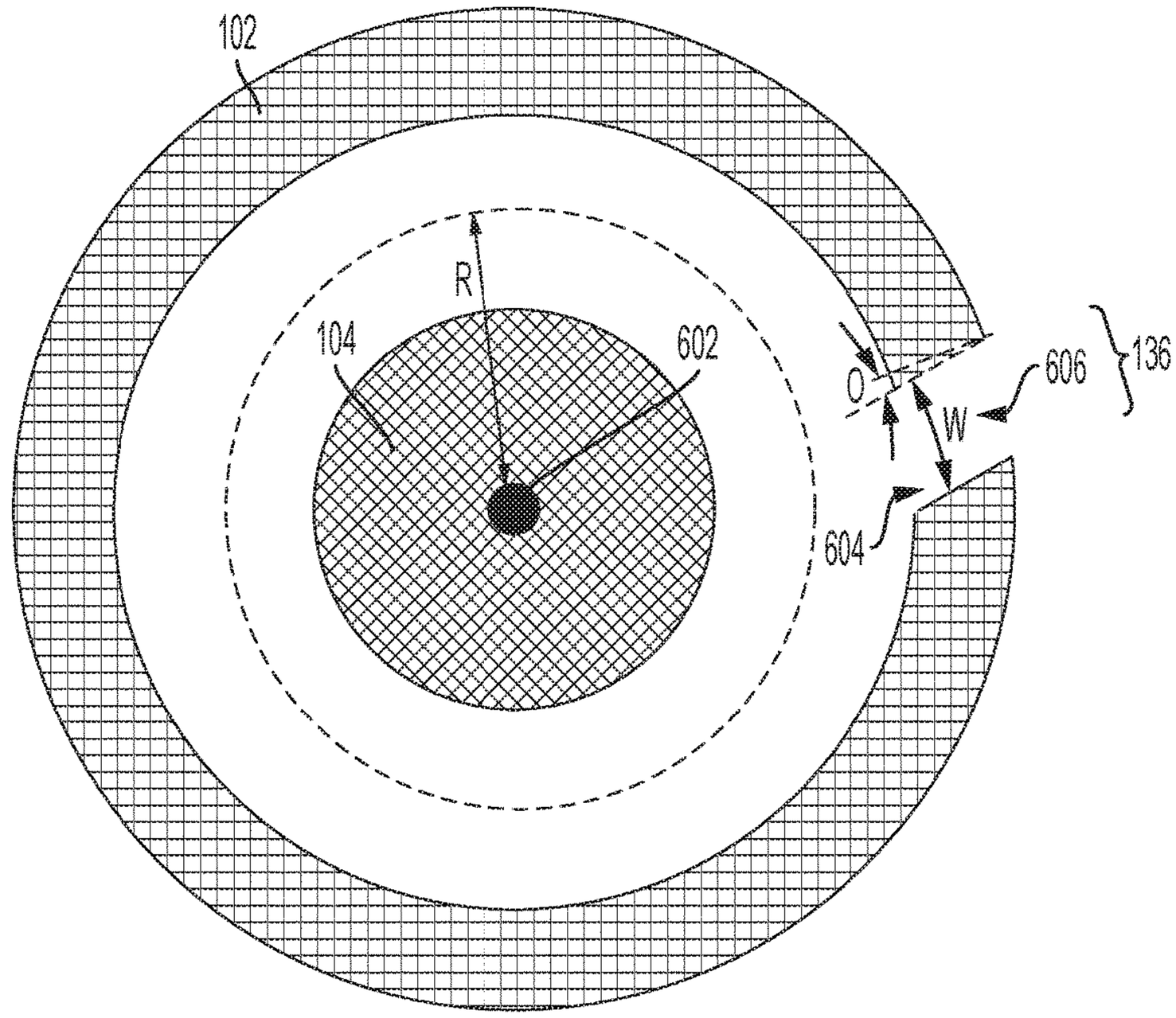

FIG. 6

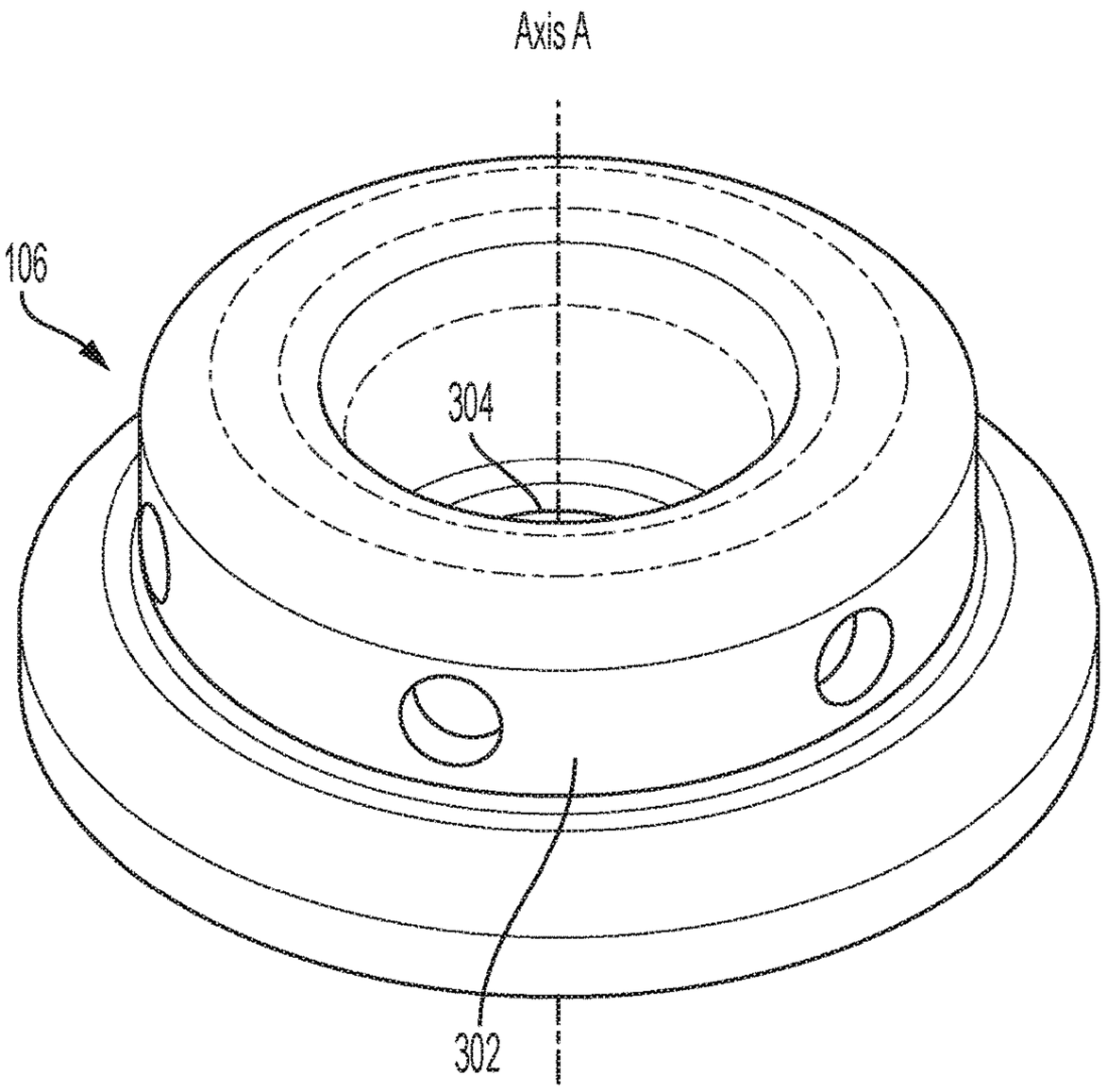

FIG. 7a

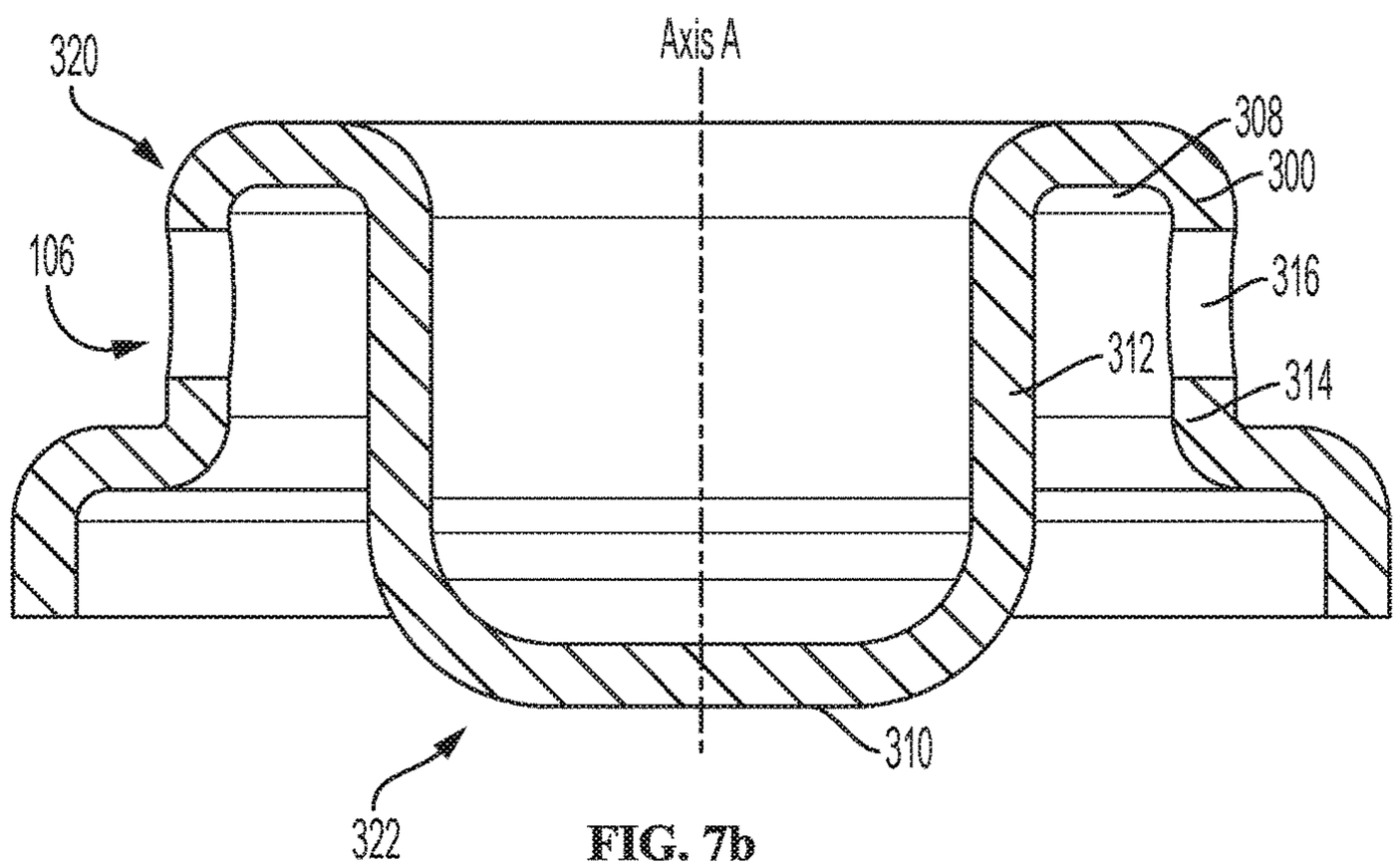

FIG. 7b

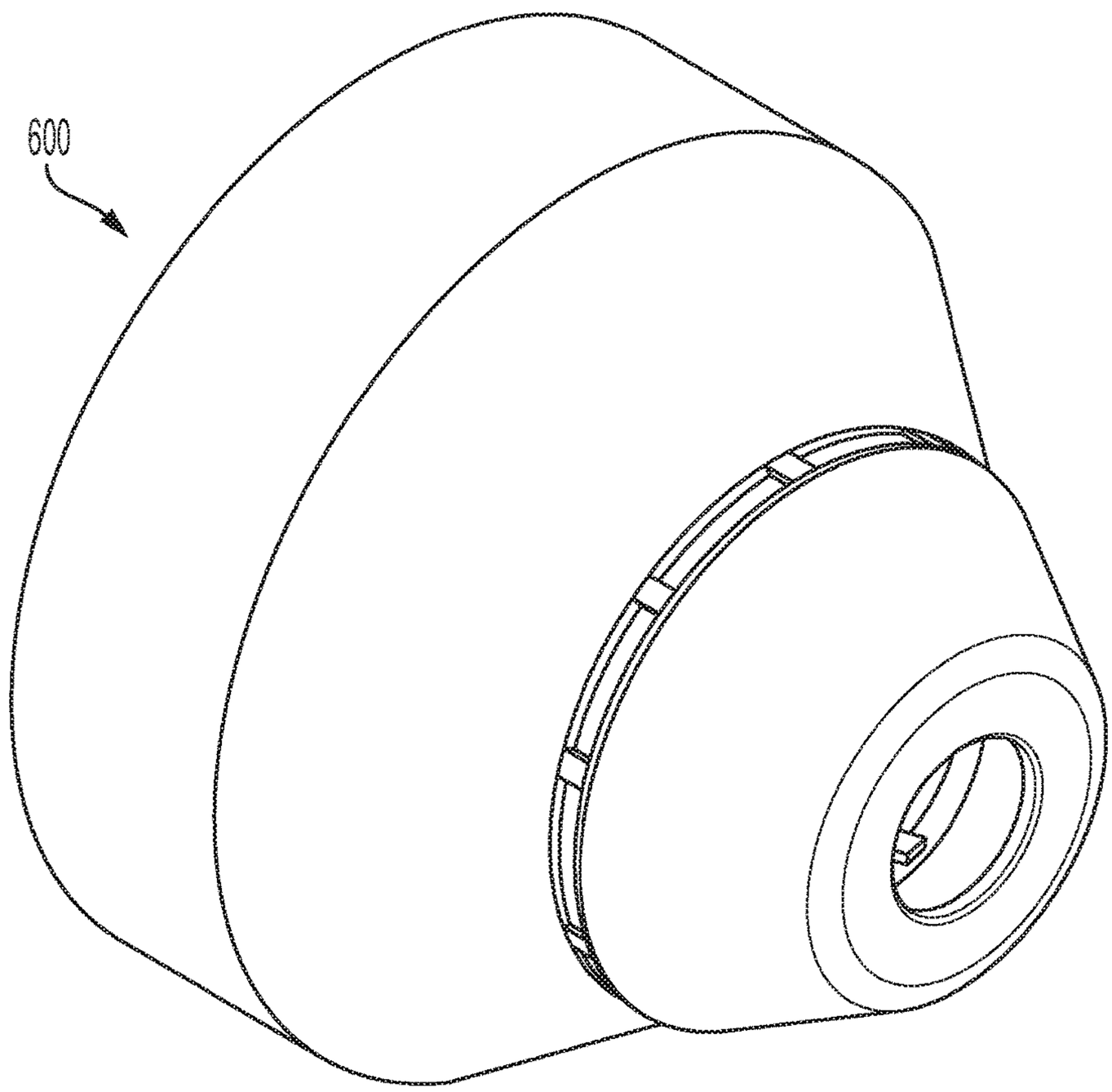

FIG. 8

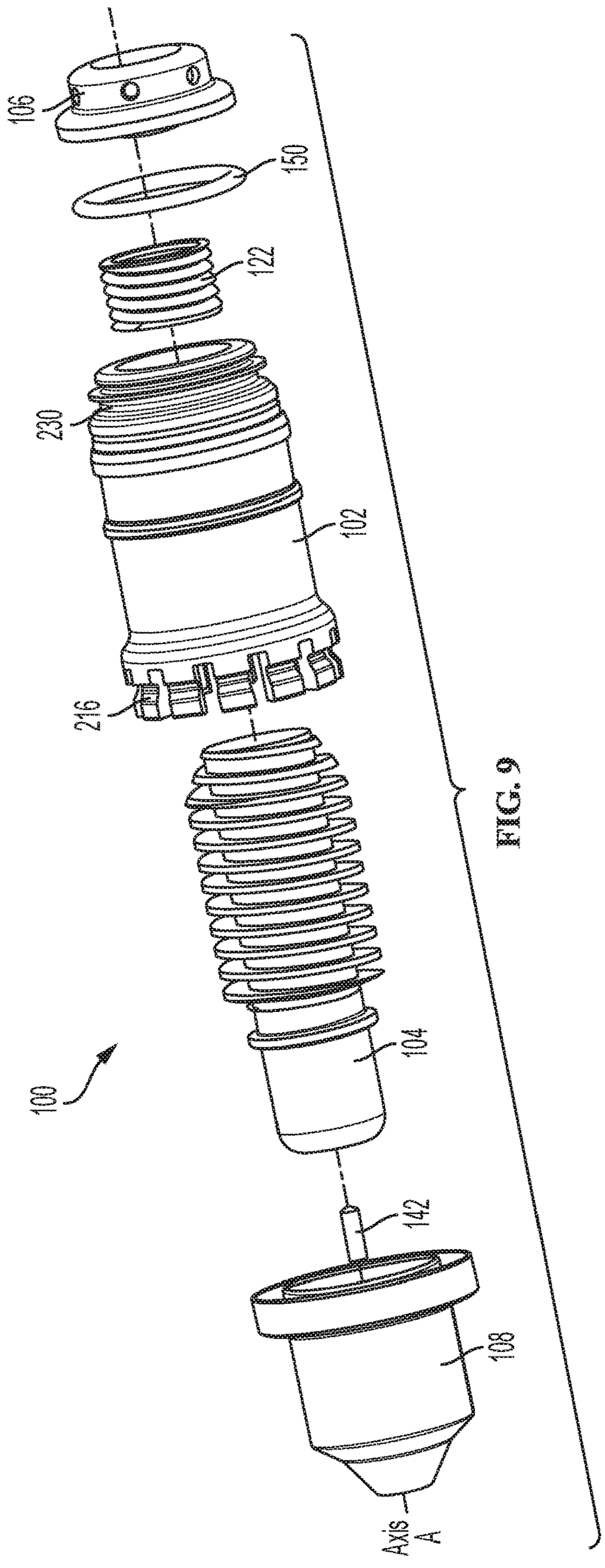

FIG. 9

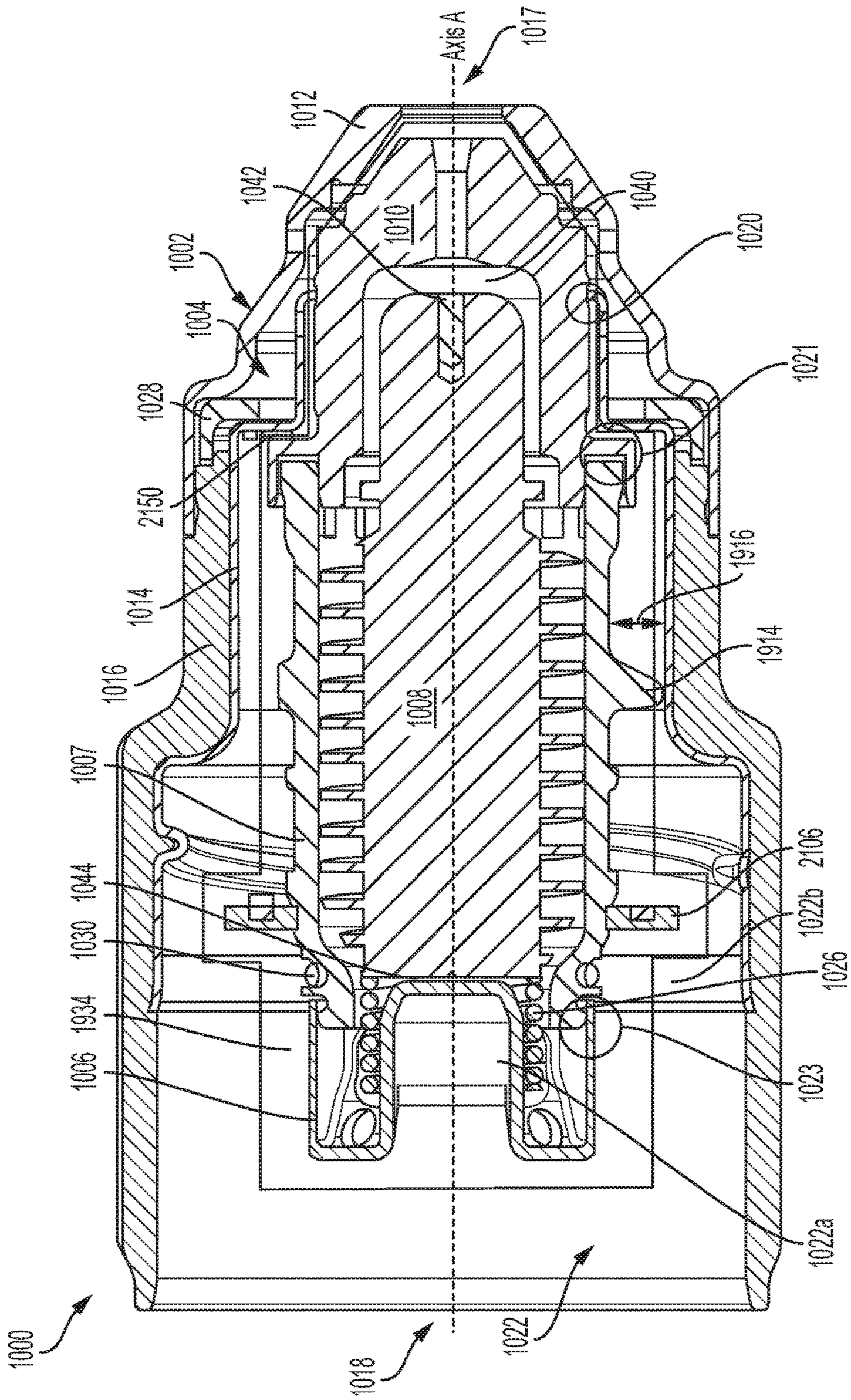
Axis A
1017
1012
1042
1040
1010
1020
1002
1004
1021
1028
2150
1916
1014
1914
1016
1008
1007
2106
1044
1022b
1030
1026
1934
1023
1006
1022a
1000
1018
1022

FIG. 10

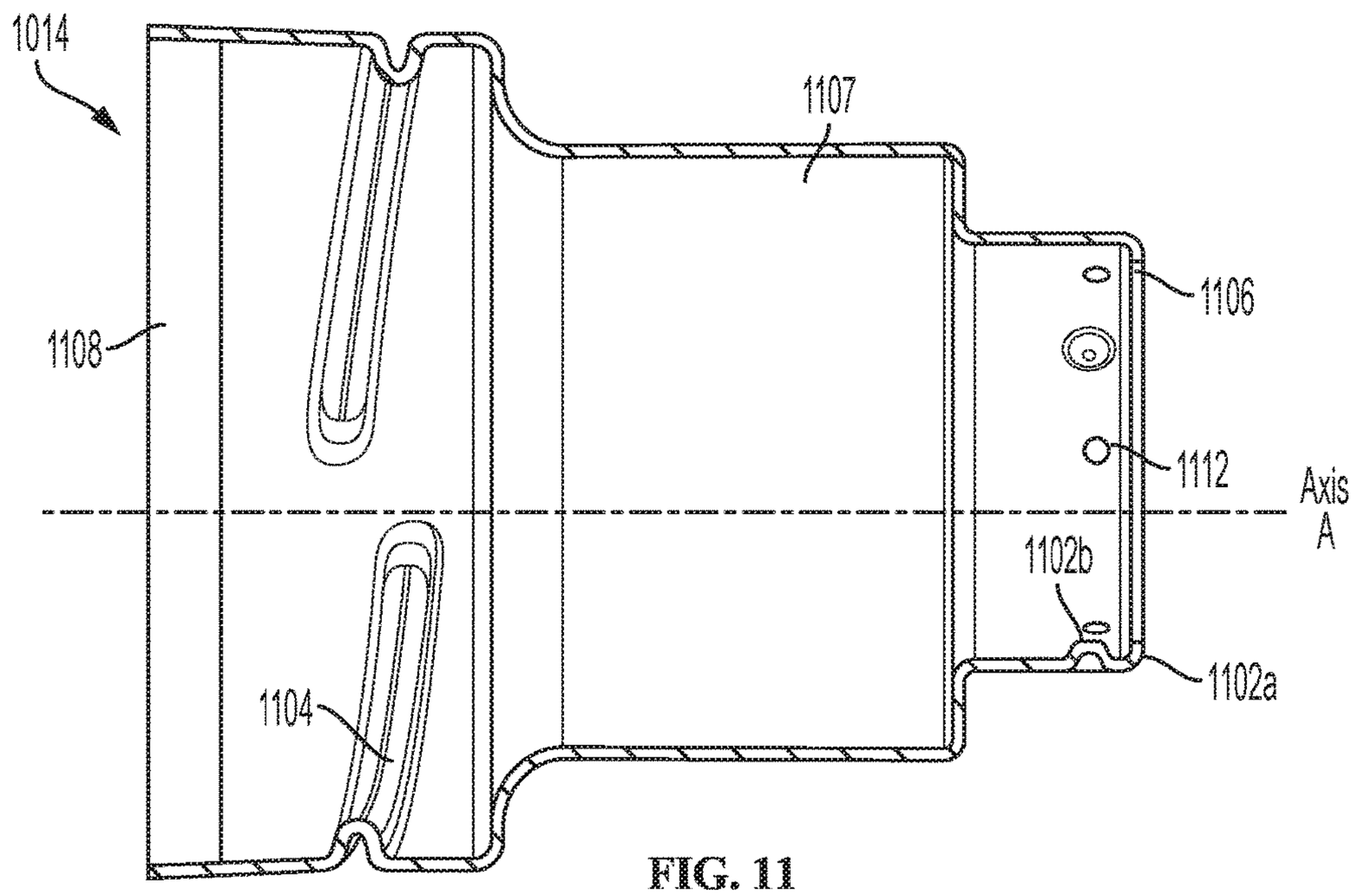

FIG. 11

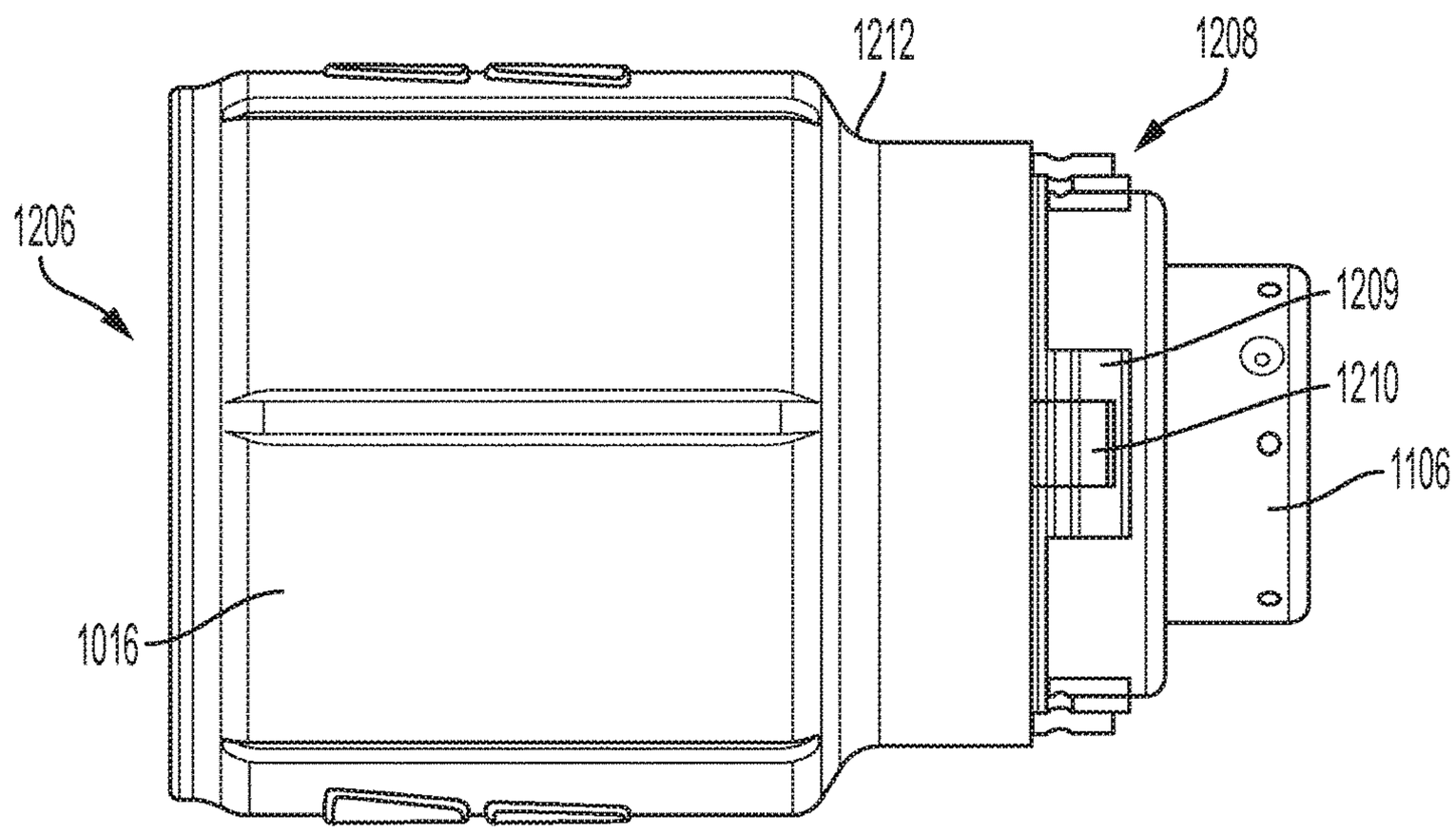

FIG. 12a

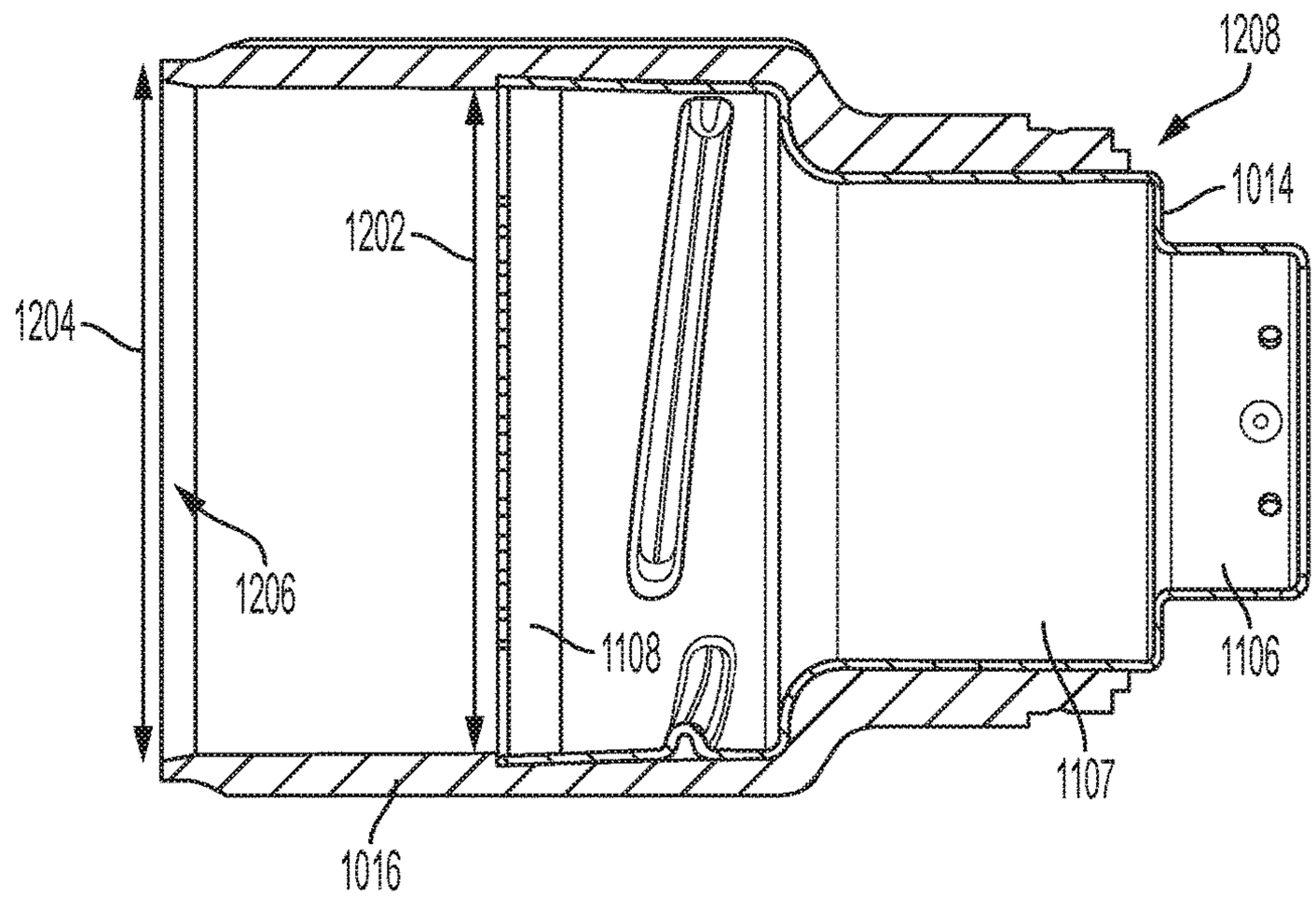

FIG. 12b

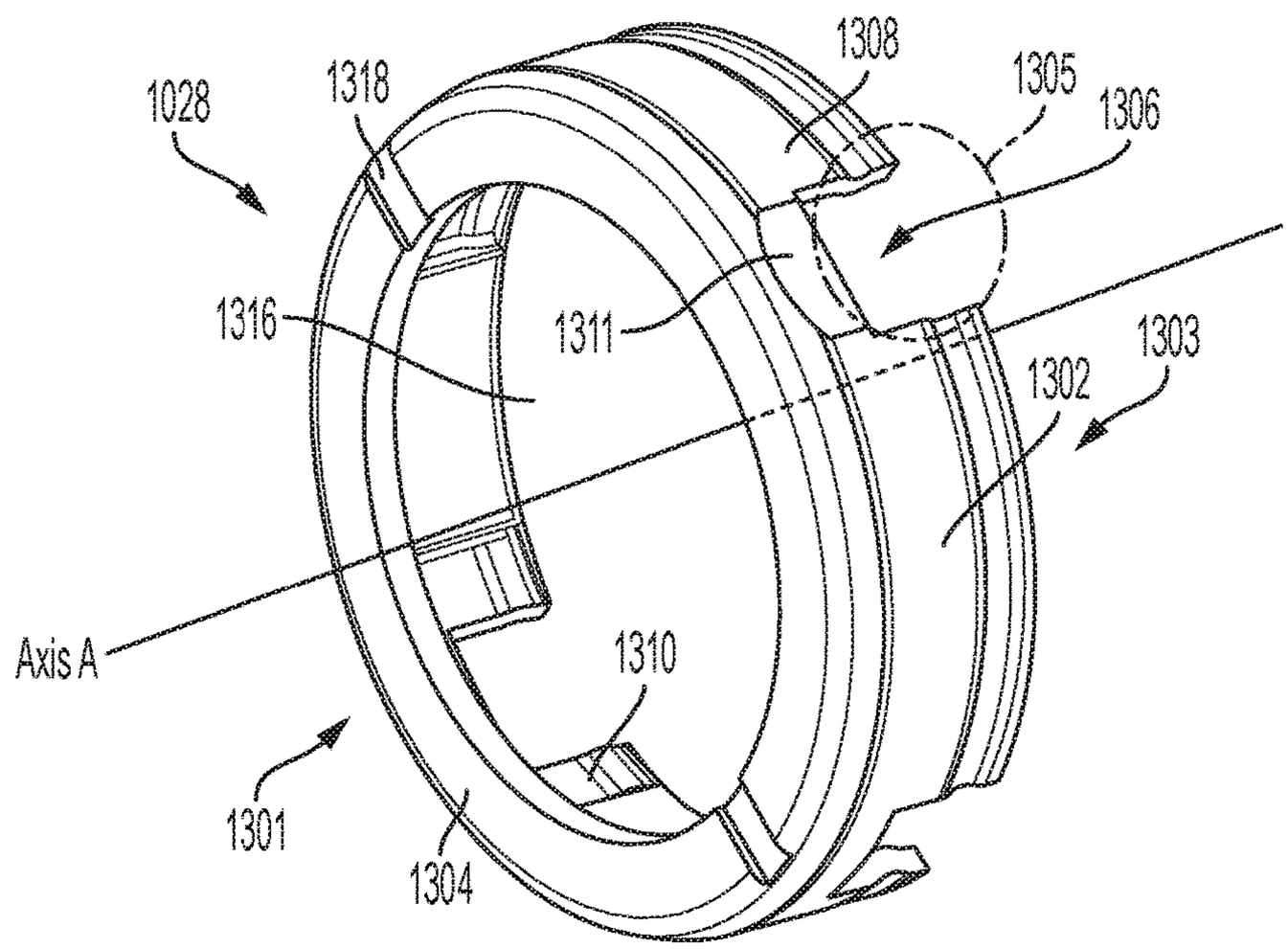

FIG. 13

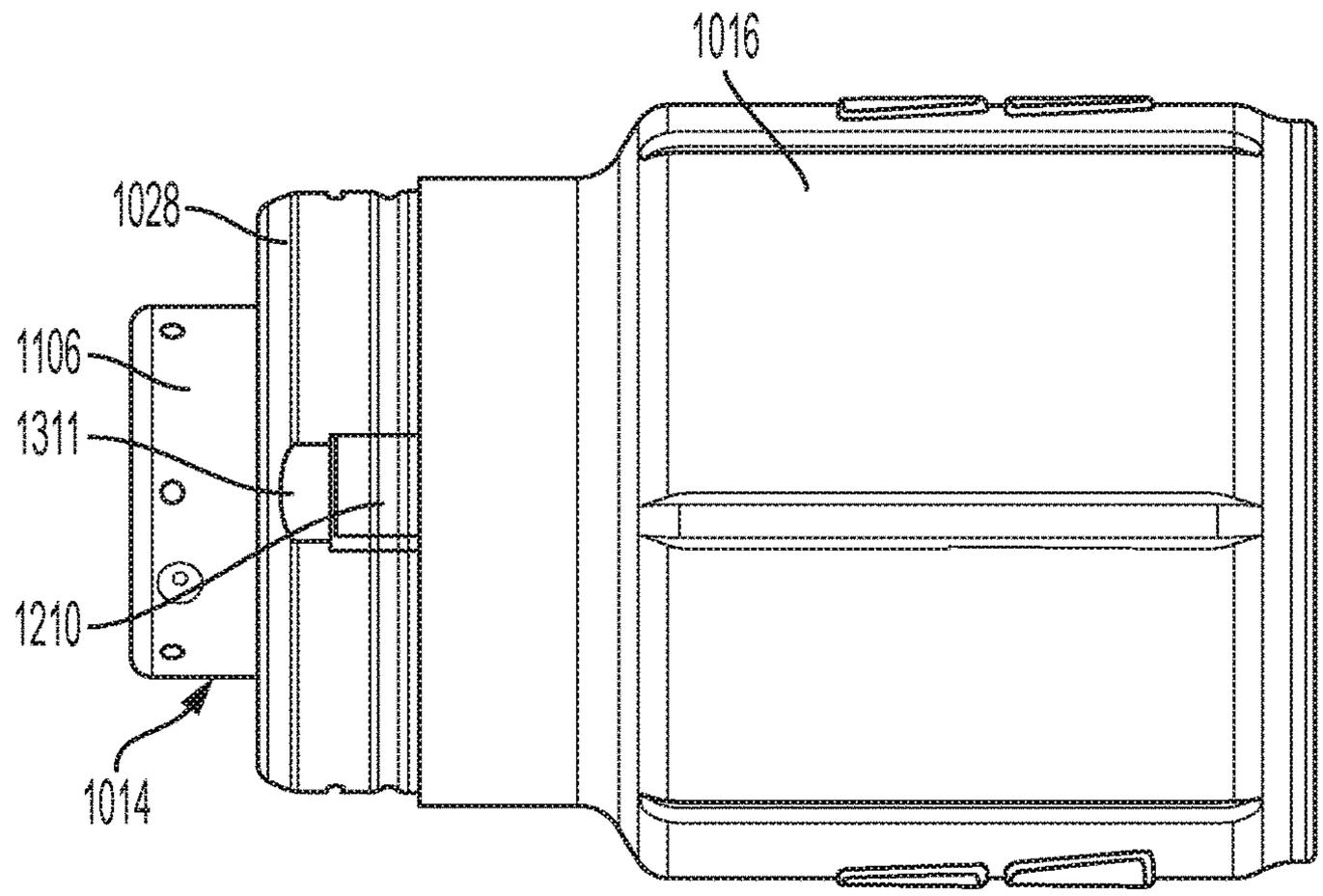

FIG. 14a

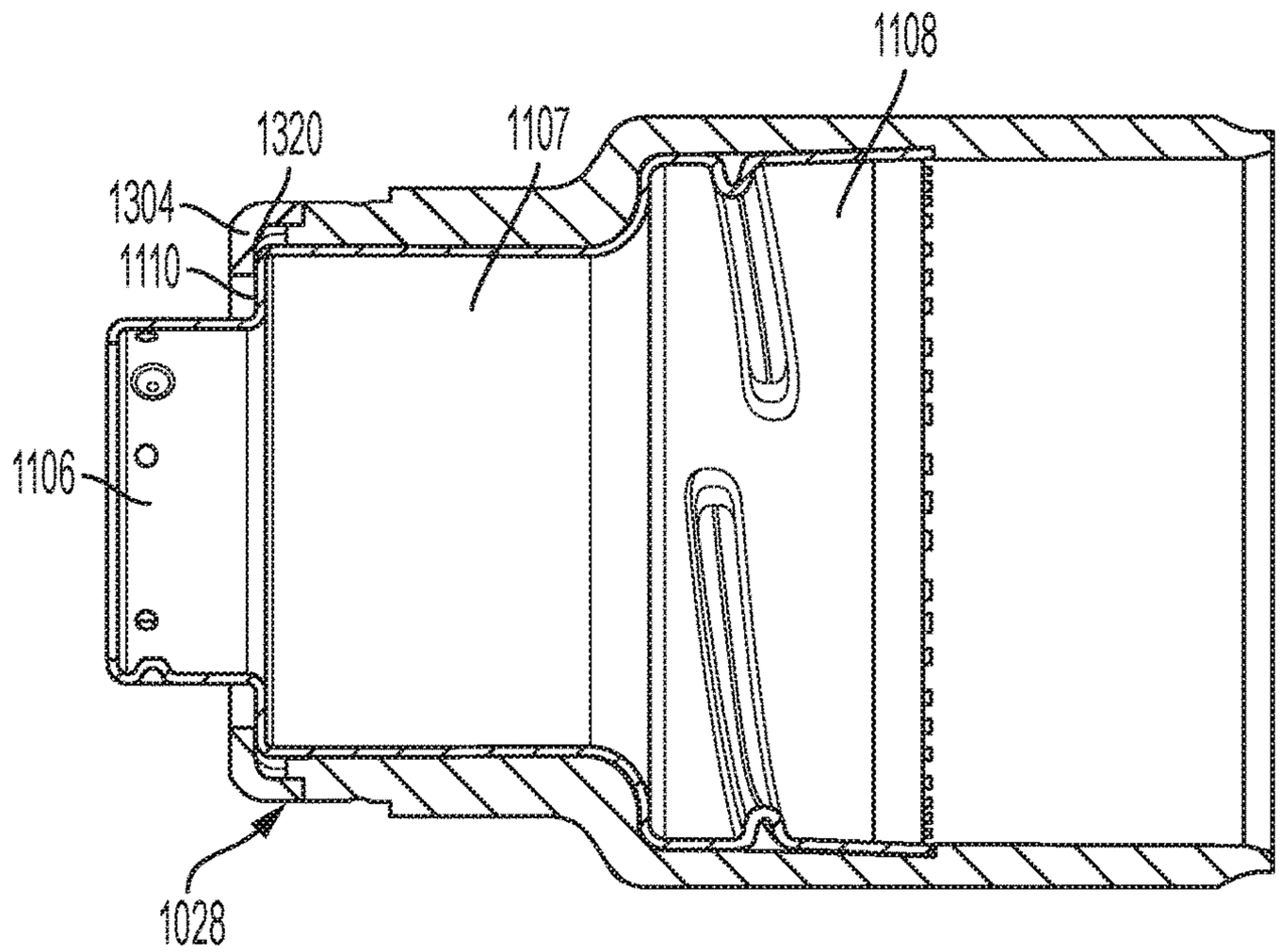

FIG. 14b

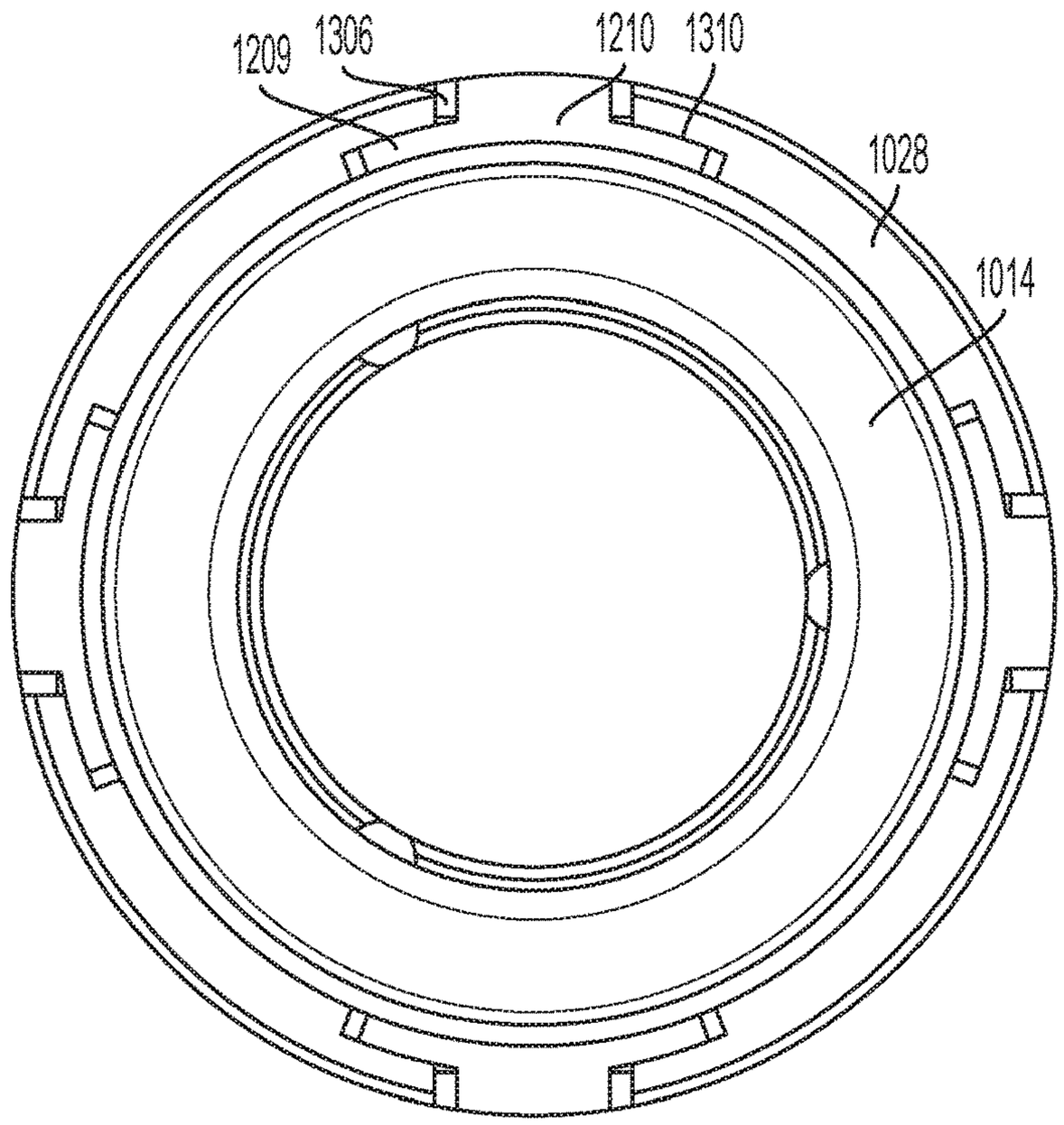

FIG. 14c

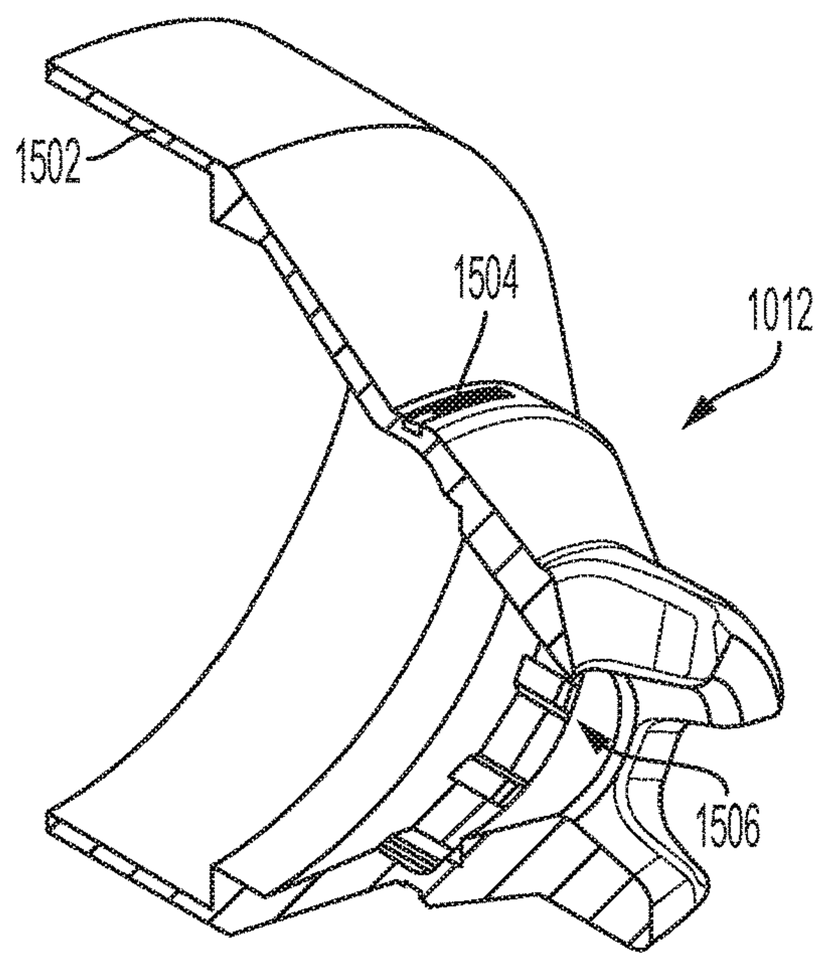

FIG. 15

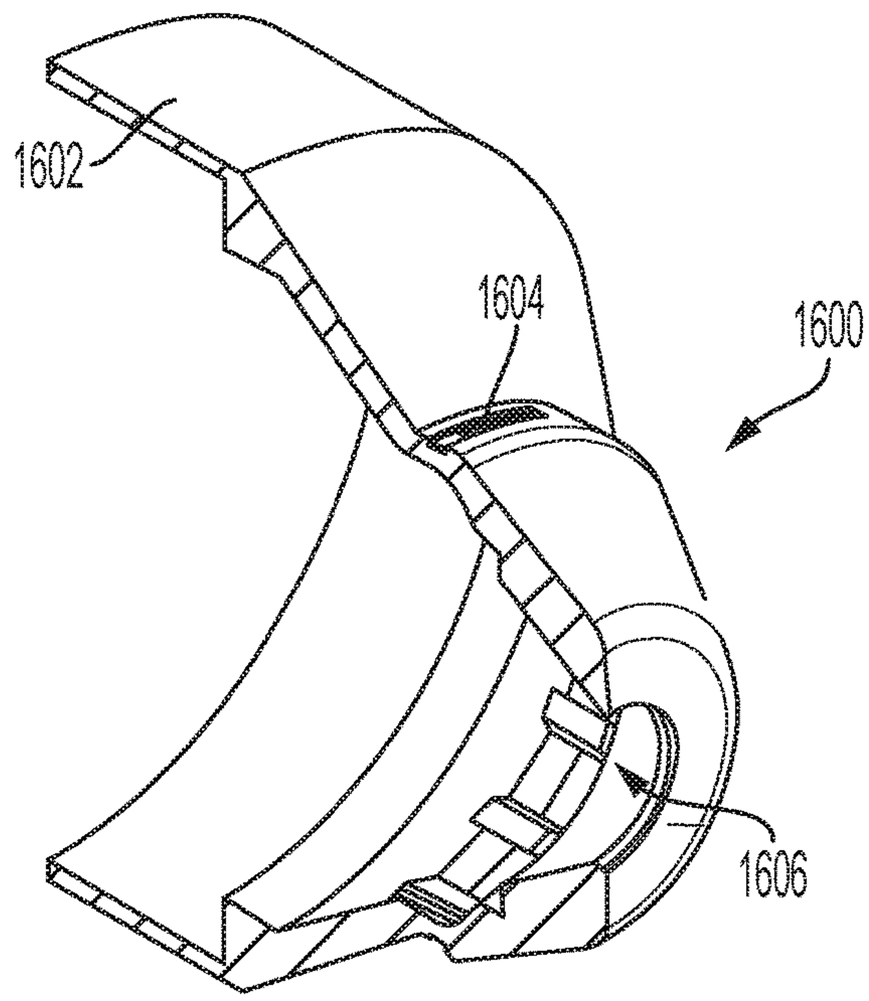
1602
1604
1600
1606

FIG. 16

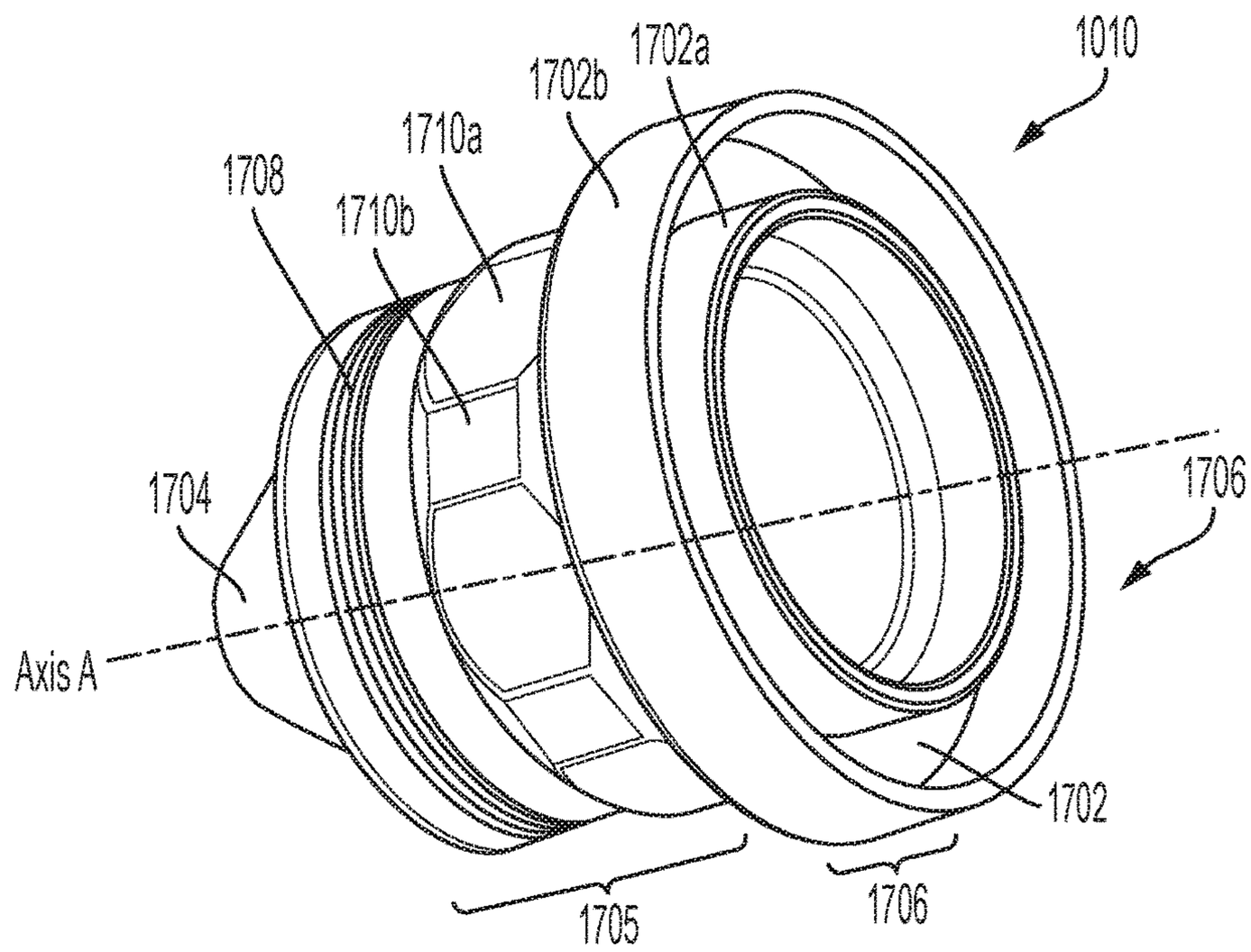
1010
1702a
1702b
1710a
1708
1710b
1704
1706
Axis A
1702
1705
1706

FIG. 17

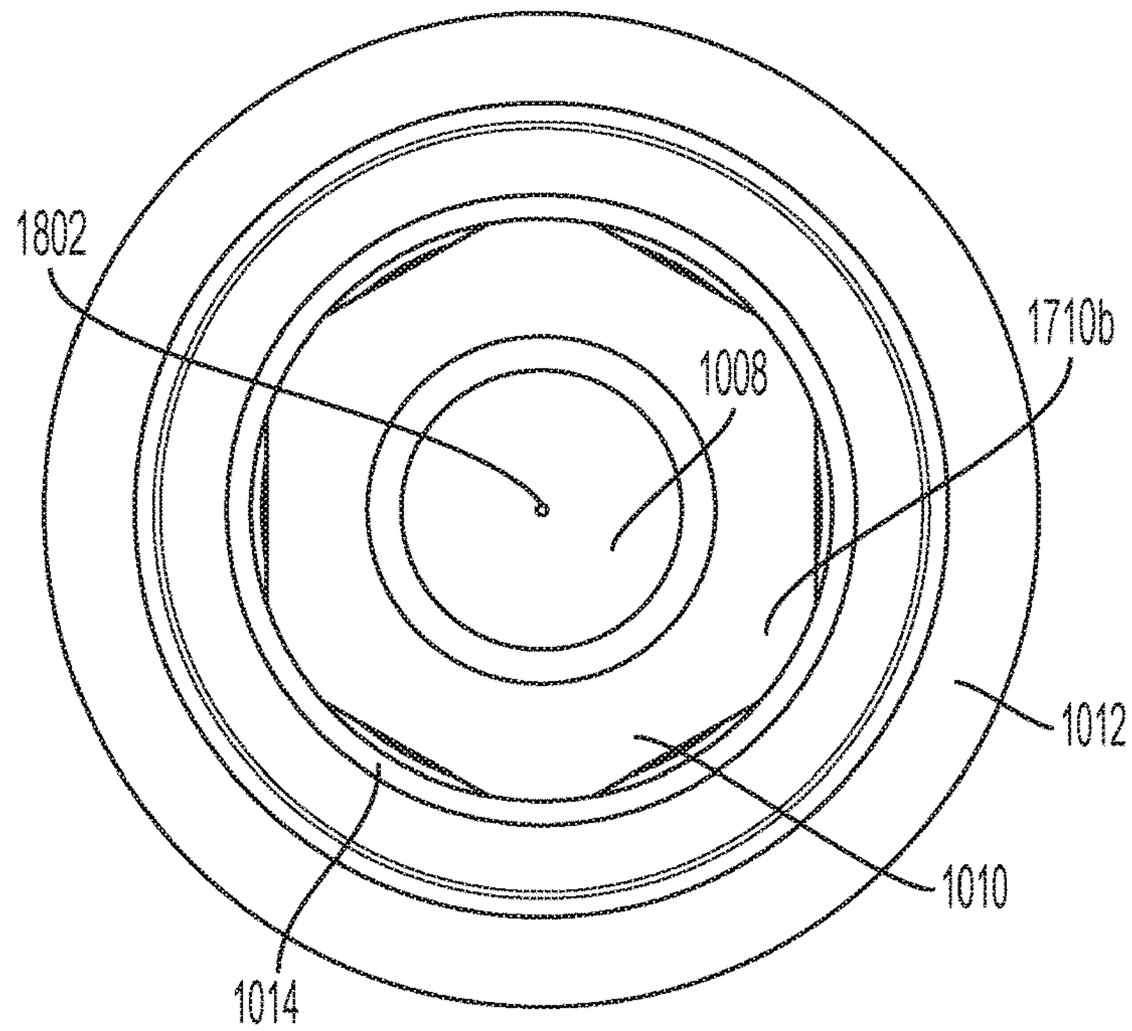

FIG. 18

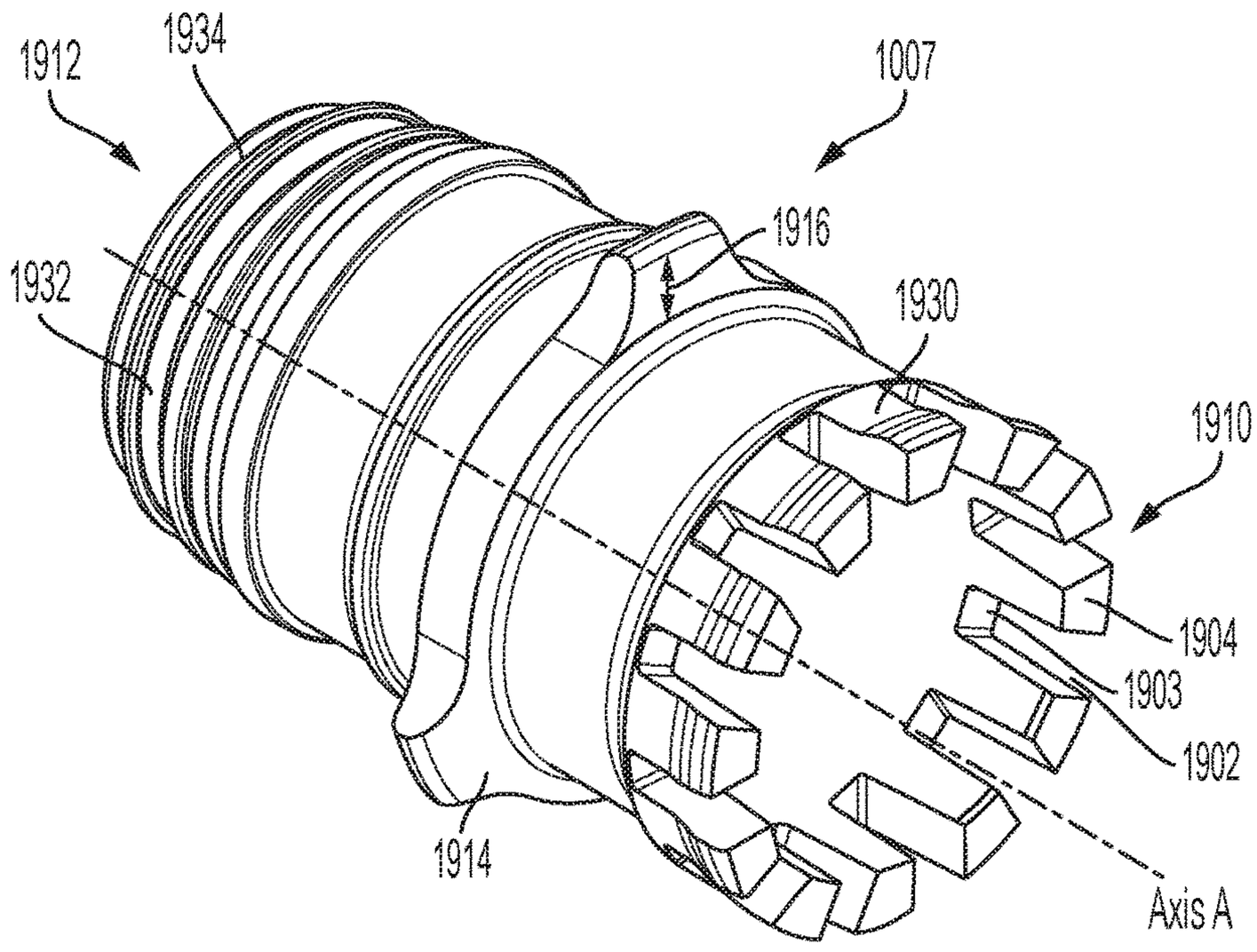

FIG. 19a

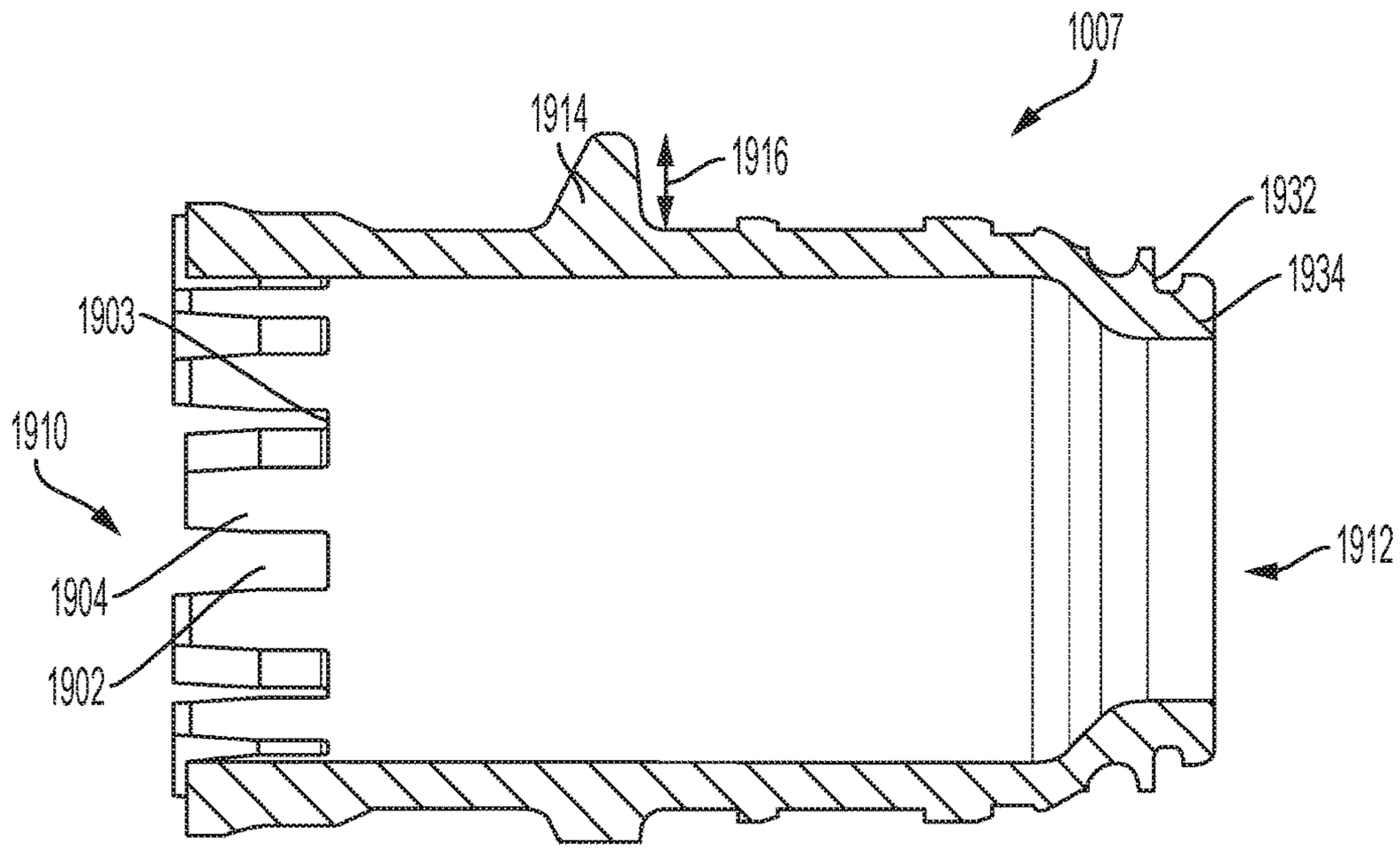

FIG. 19b

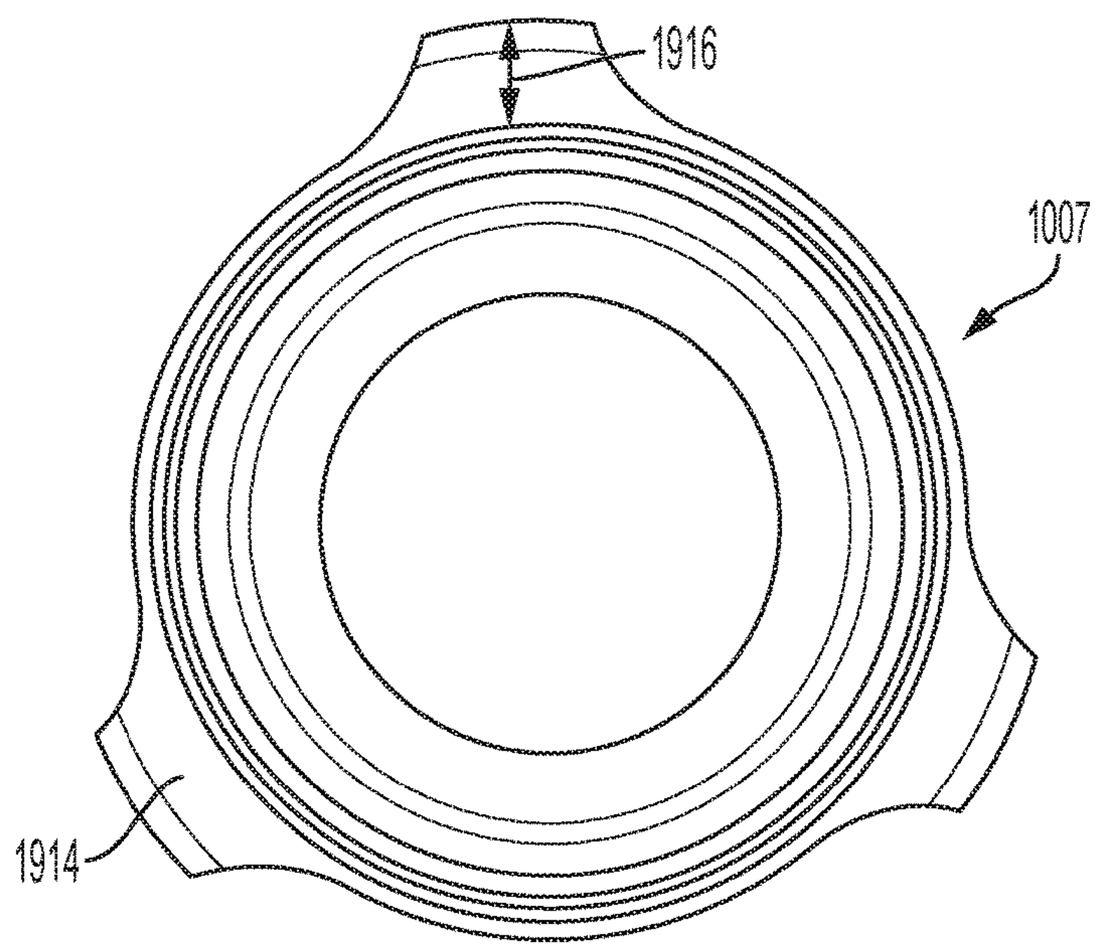

FIG. 19c

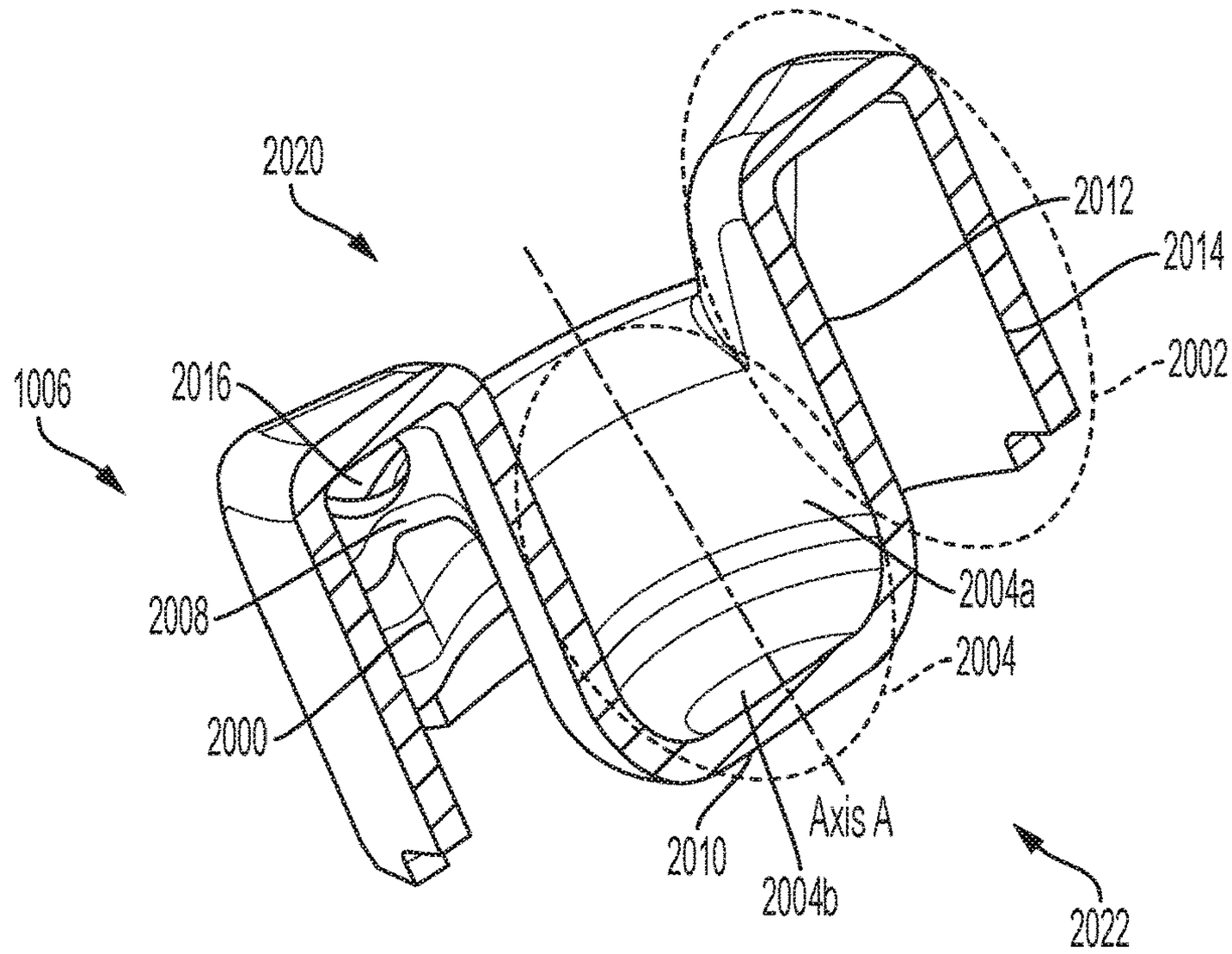

FIG. 20a

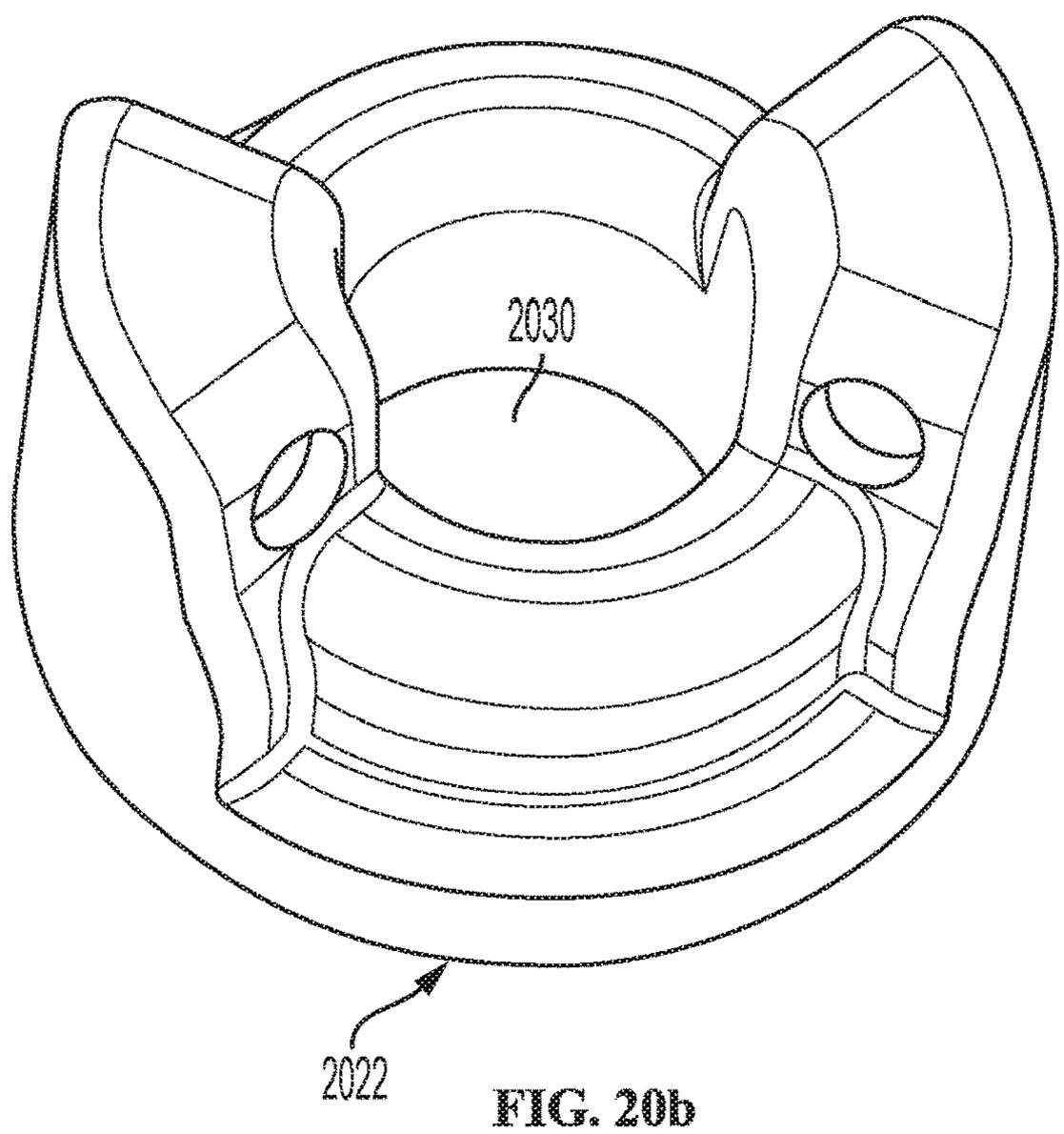

FIG. 20b

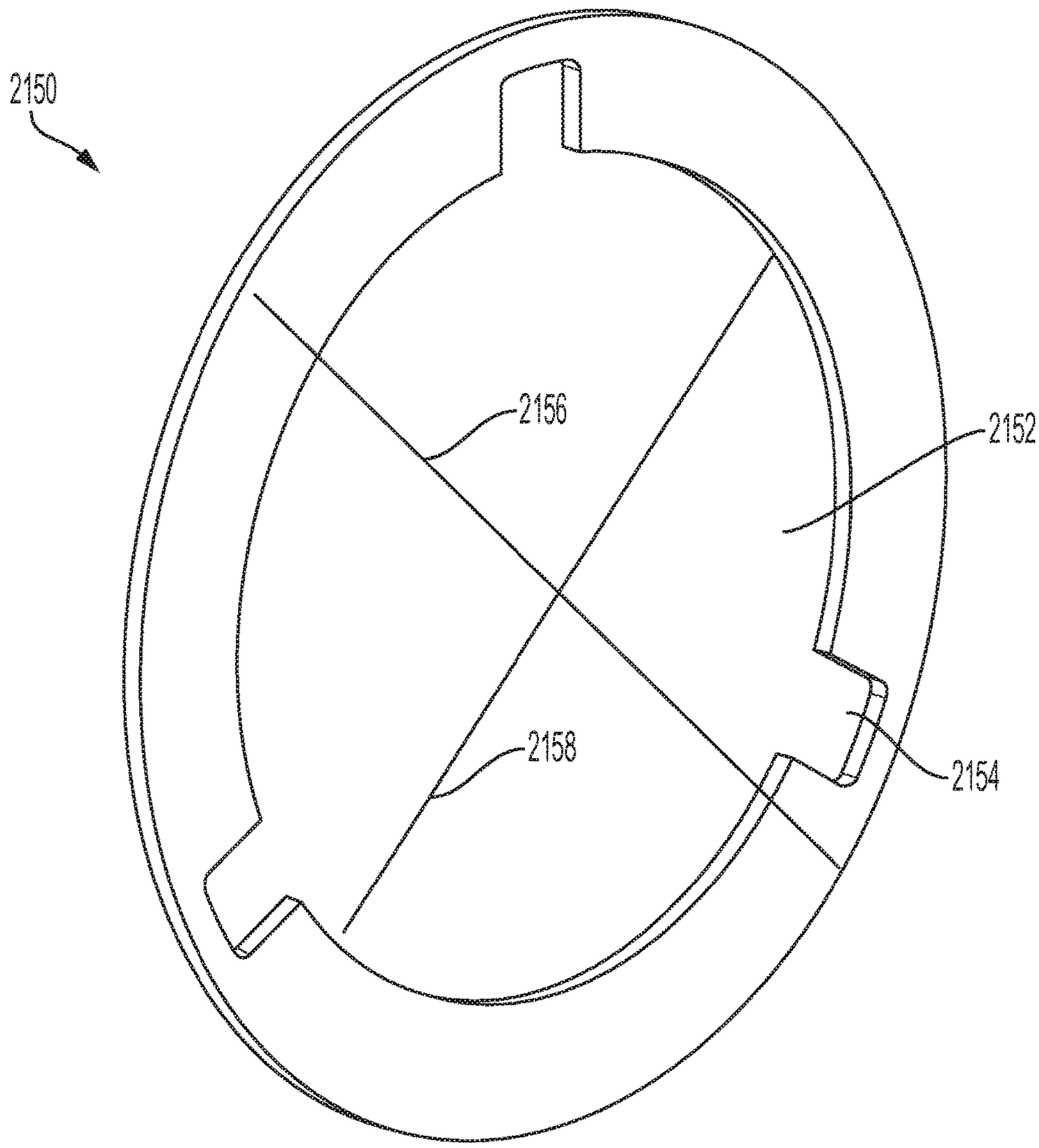

FIG. 21

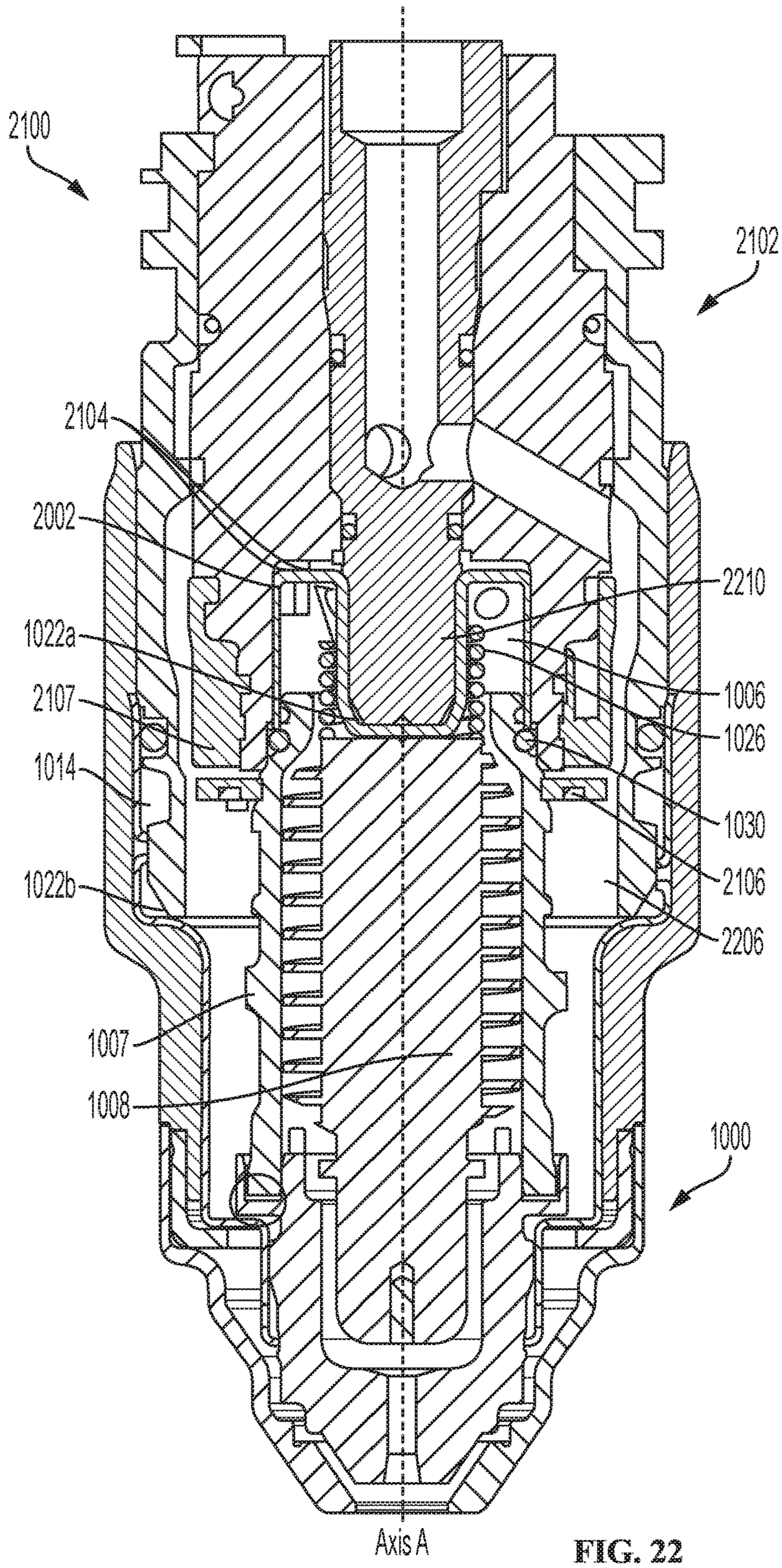
2100
2102
2104
2002
2210
1022a
1006
2107
1026
1014
1030
2106
1022b
2206
1007
1008
1000
Axis A

FIG. 22

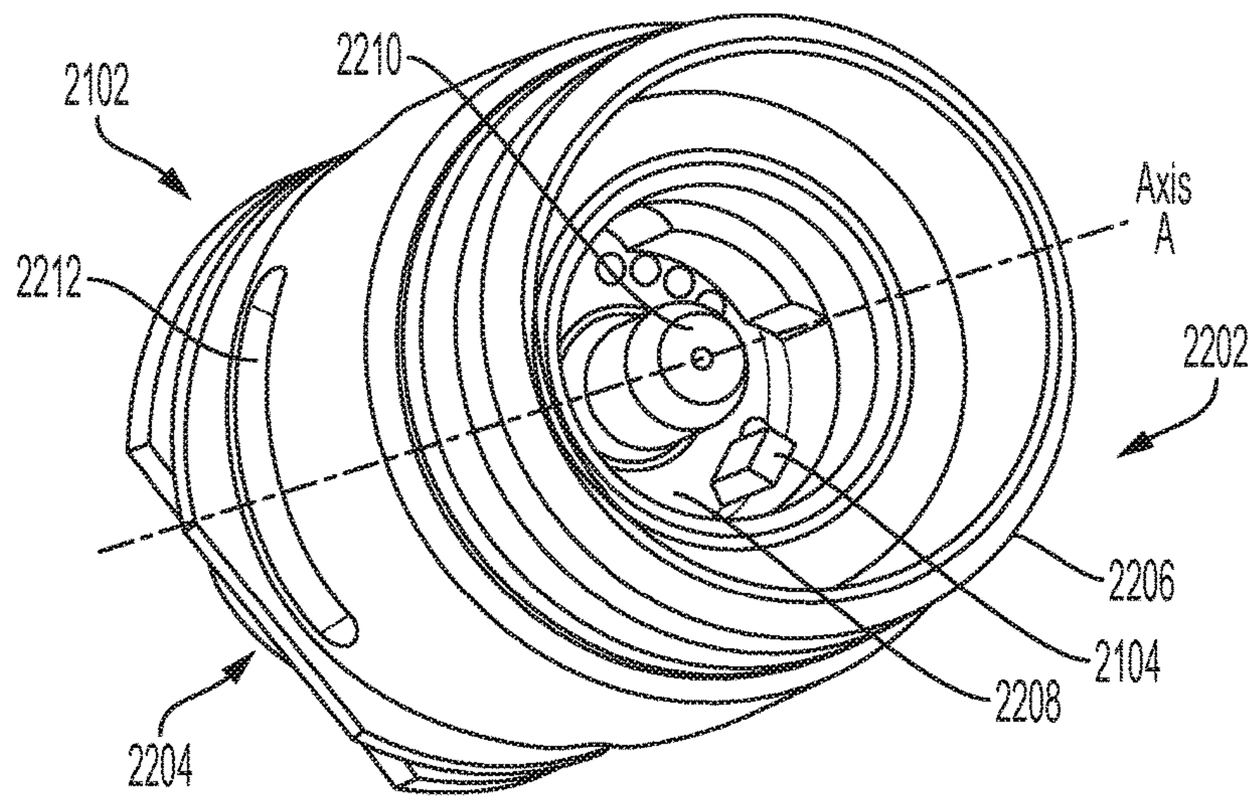

FIG. 23

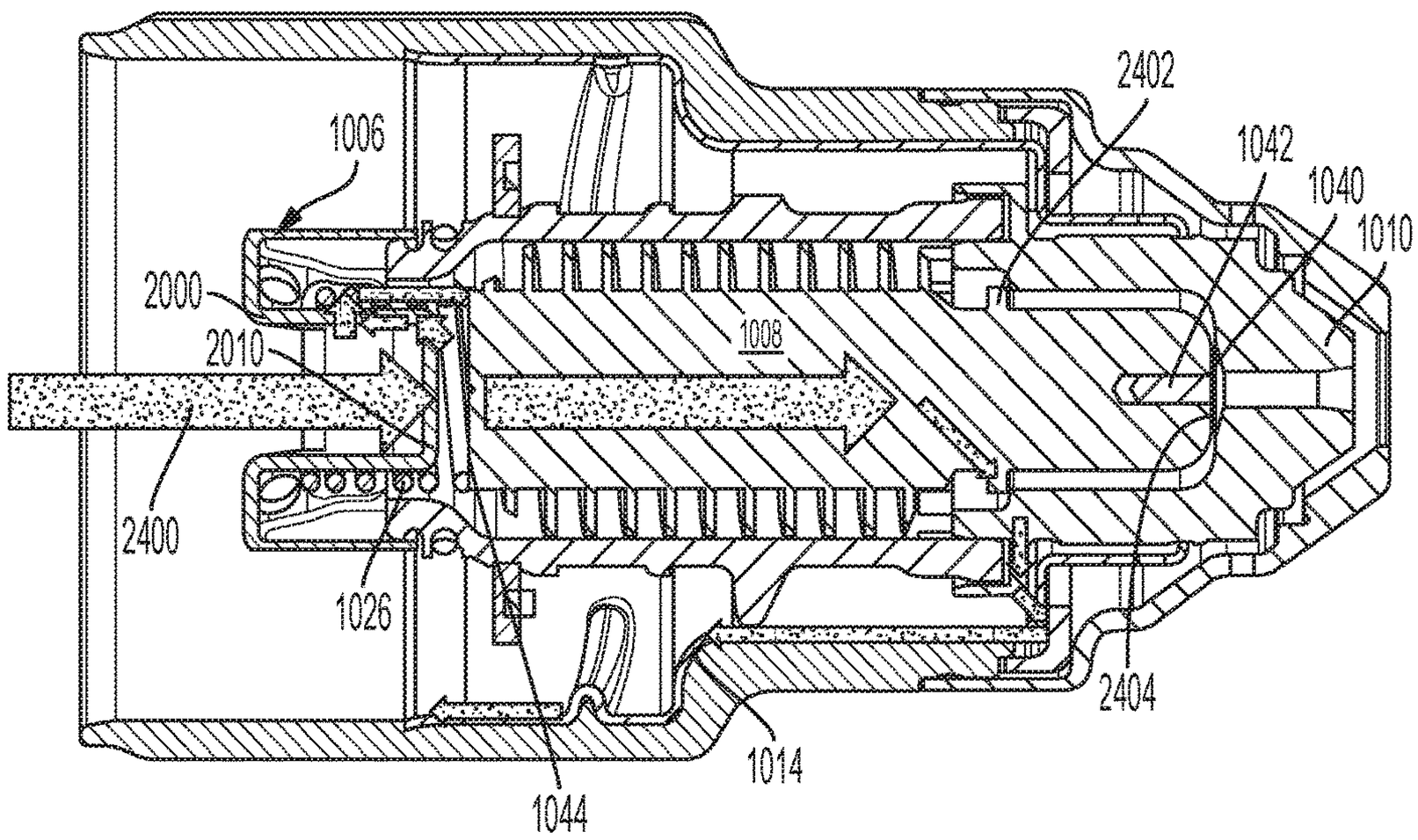

FIG. 24a

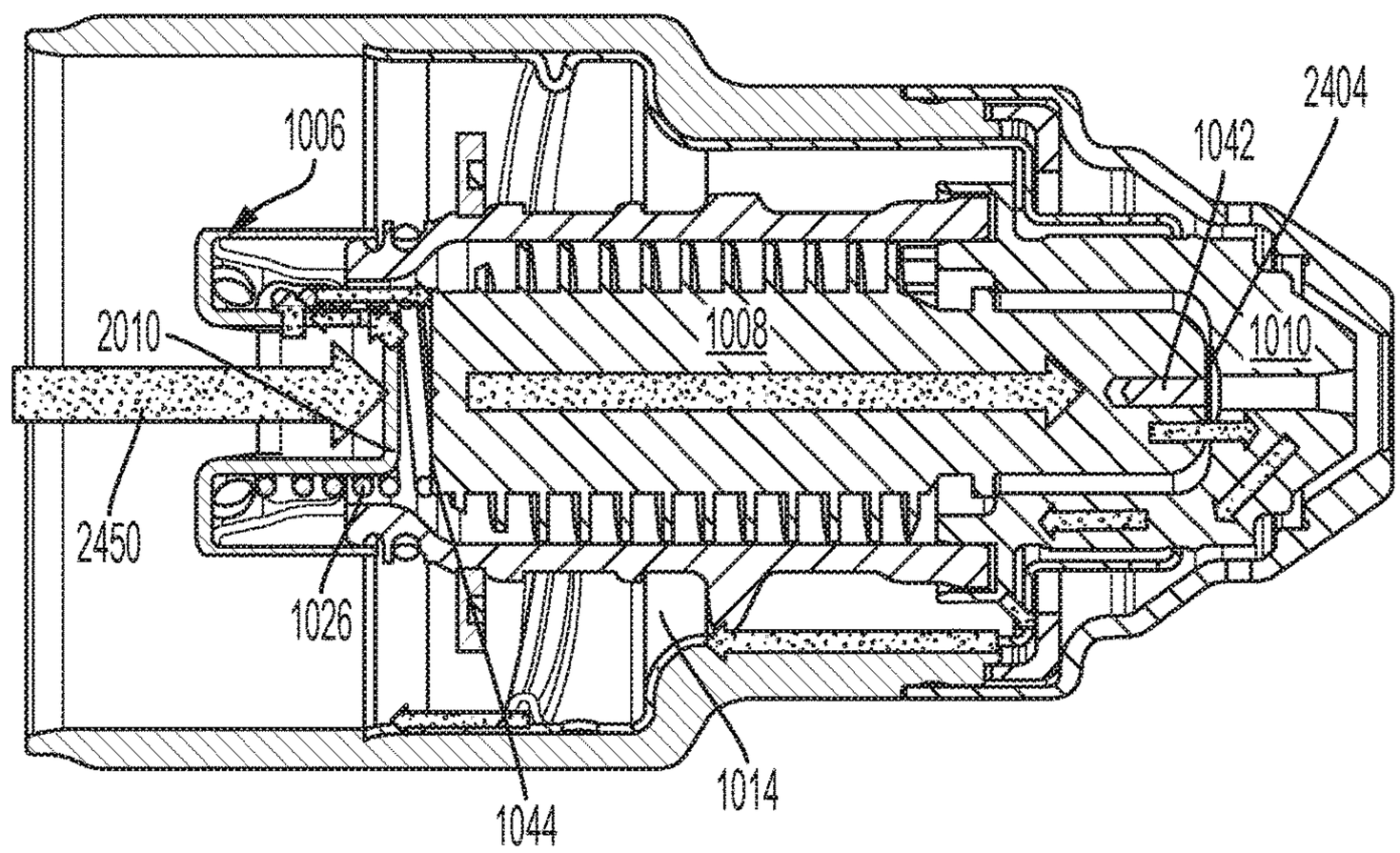

FIG. 24b

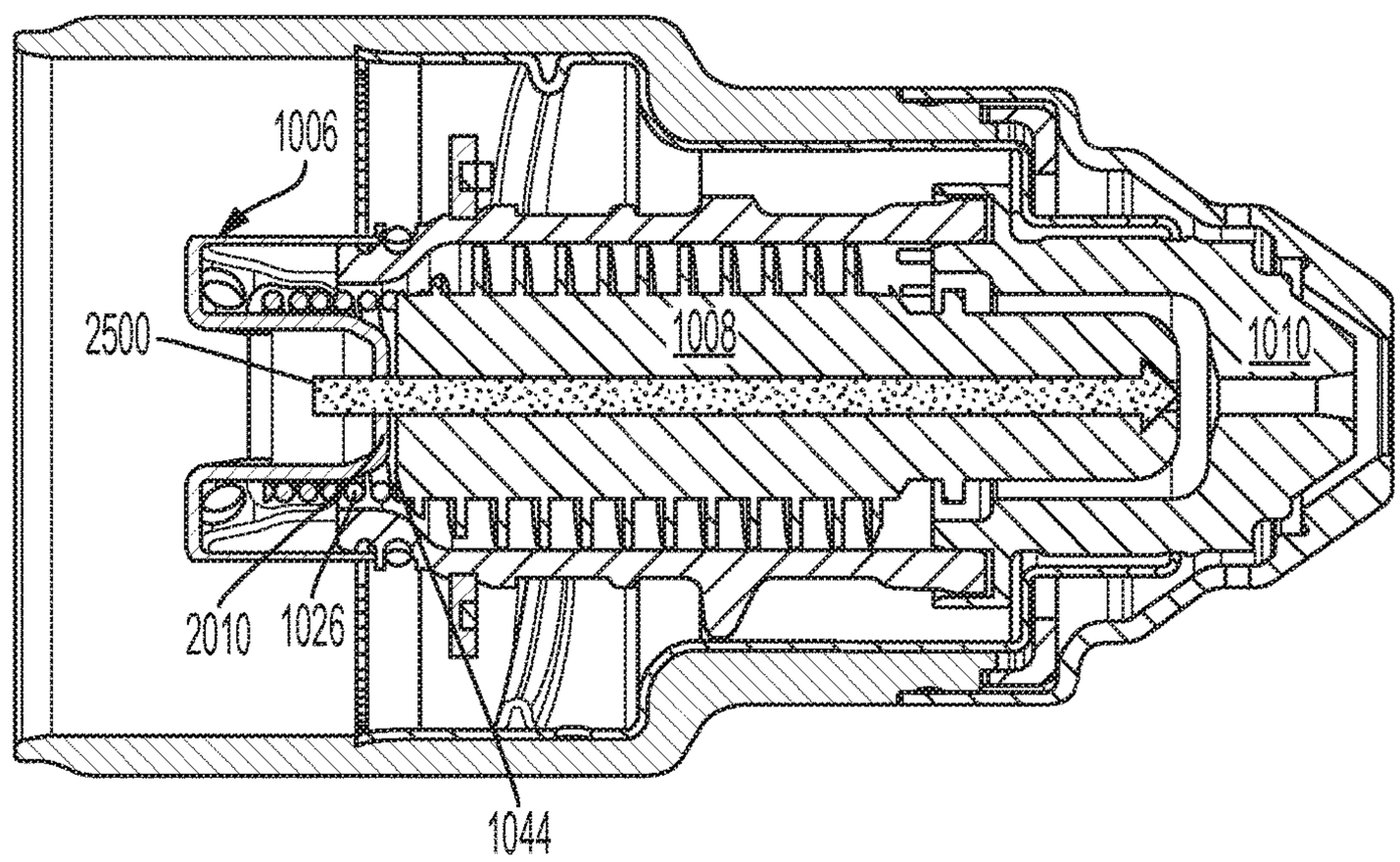

FIG. 25

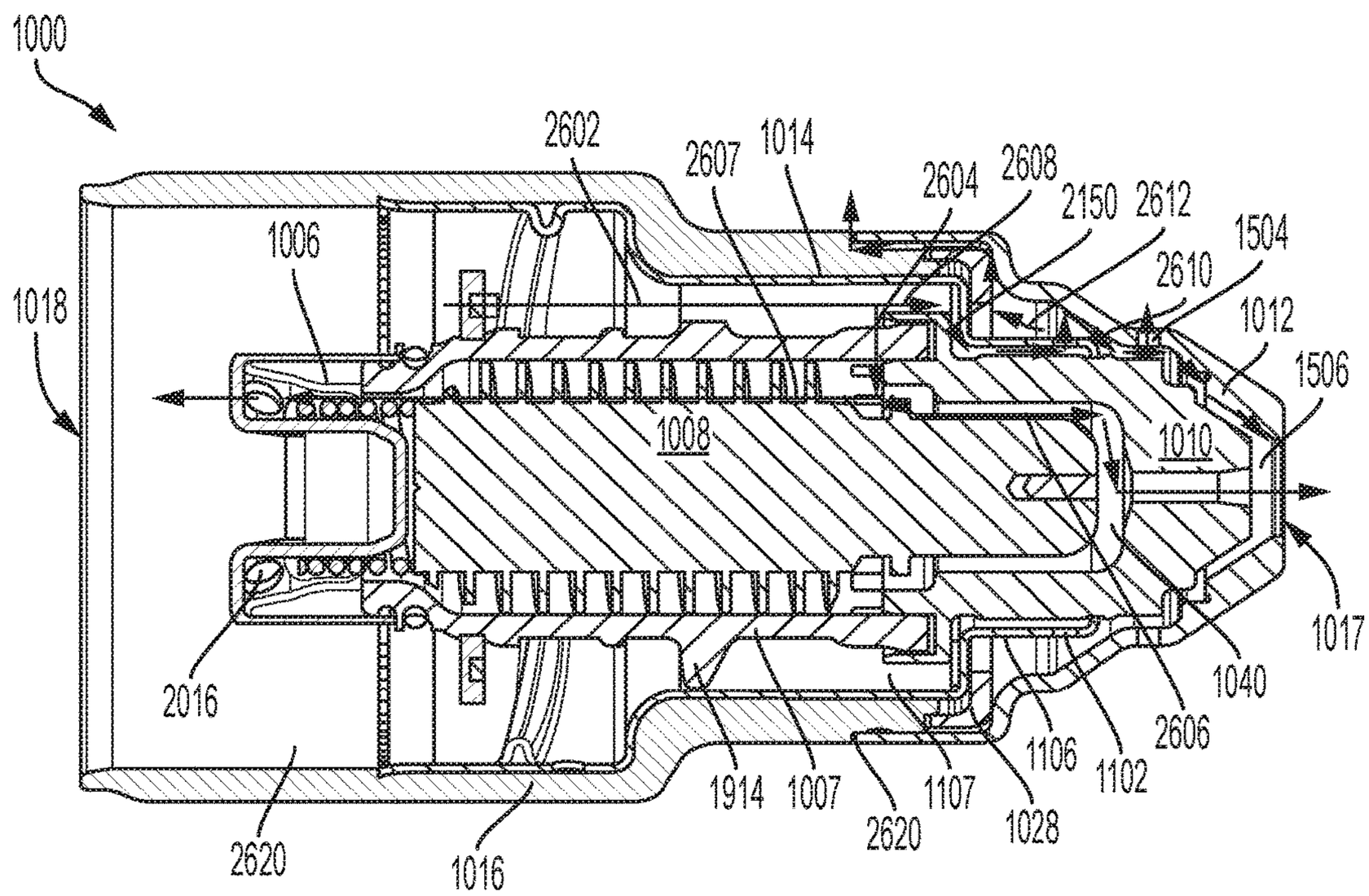
1000
2602
2607
1014
2604
2608
2150
2612
1504
2610
1012
1506
1006
1018
1008
1010
1017
1040
2606
1102
1106
1028
2620
1107
1007
1914
1016
2620
2016

FIG. 26

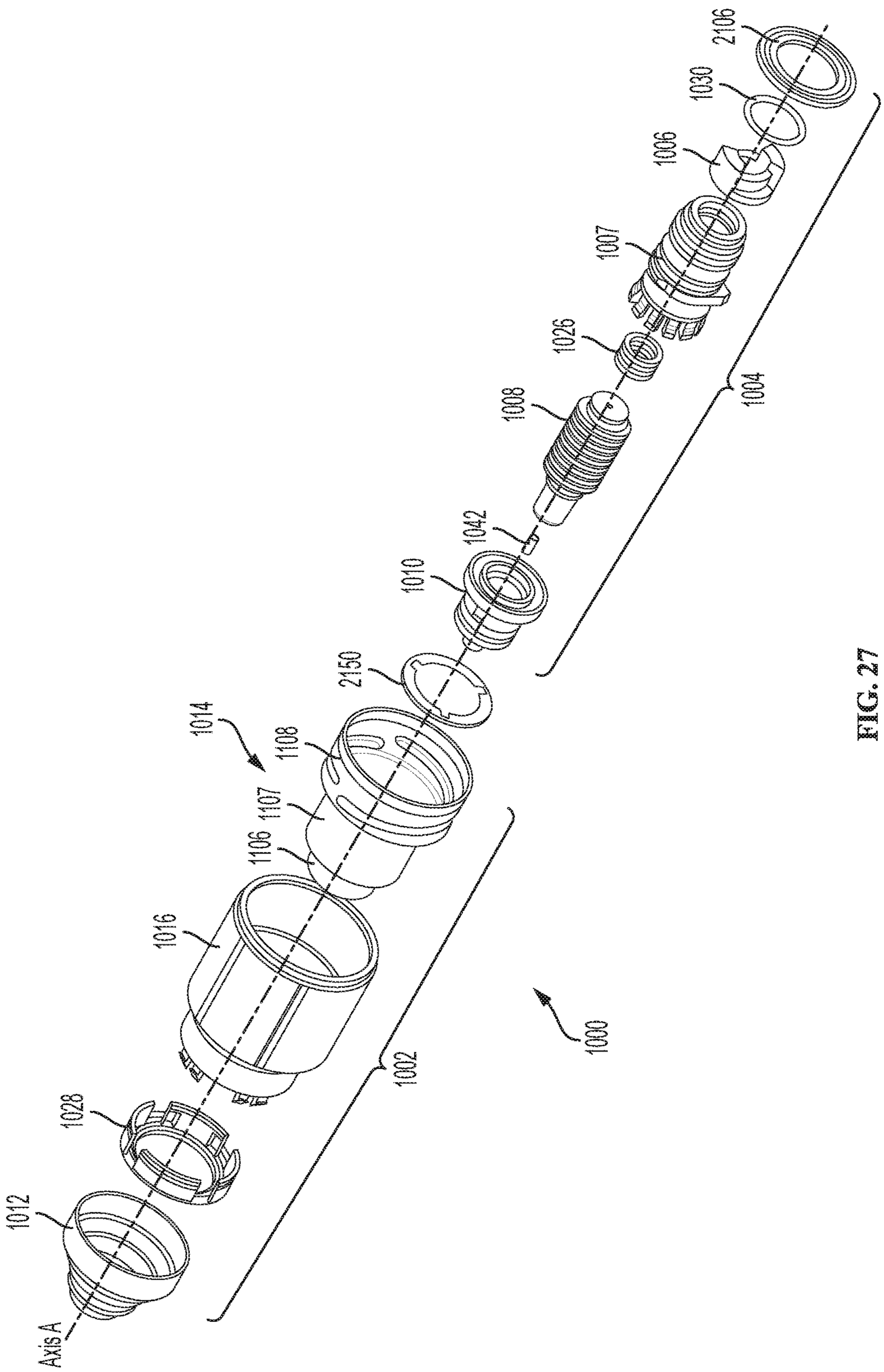
2106
1030
1006
1007
1026
1008
1004
1042
1010
2150
1014
1108
1107
1106
1016
1028
1012
Axis A
1002
1000

FIG. 27

COST EFFECTIVE CARTRIDGE FOR A PLASMA ARC TORCH

CROSS REFERENCE TO RELATED APPLICATION

This application is a continuation-in-part of U.S. Ser. No. 14/824,946, filed Aug. 12, 2015, which claims the benefit of and priority to U.S. Provisional Patent Application No. 62/036,393, filed Aug. 12, 2014. The entire contents of these applications are owned by the assignee of the instant application and incorporated herein by reference in their entirety.

TECHNICAL FIELD

The present invention generally relates to cartridges for a contact start plasma arc torch, and more particularly, to one or more replaceable, low-cost cartridges, each having multiple integrated components.

BACKGROUND

Thermal processing torches, such as plasma arc torches, are widely used for high temperature processing (e.g., heating, cutting, gouging and marking) of materials. A plasma arc torch generally includes a torch body, an electrode mounted within the torch body, an emissive insert disposed within a bore of the electrode, a nozzle with a central exit orifice mounted within the torch body, a shield, electrical connections, passages for cooling, passages for arc control fluids (e.g., plasma gas) and a power supply. A swirl ring can be used to control fluid flow patterns in the plasma chamber formed between the electrode and the nozzle. In some torches, a retaining cap is used to maintain the nozzle and/or swirl ring in the plasma arc torch. In operation, the torch produces a plasma arc, which is a constricted jet of an ionized gas with high temperature and sufficient momentum to assist with removal of molten metal. Gases used in the torch can be non-reactive (e.g., argon or nitrogen), or reactive (e.g., oxygen or air).

One method for producing a plasma arc in a plasma arc torch is the contact start method. The contact start method involves establishing physical contact and electrical communication between the electrode and the nozzle to create a current path between them. The electrode and the nozzle can cooperate to create a plasma chamber within the torch body. An electrical current is provided to the electrode and the nozzle, and a gas is introduced to the plasma chamber. Gas pressure builds up until the pressure is sufficient to separate the electrode and the nozzle. The separation causes an arc to be formed between the electrode and the nozzle in the plasma chamber. The arc ionizes the introduced gas to produce a plasma jet that can be transferred to the workpiece for material processing. In some applications, the power supply is adapted to provide a first electrical current known as a pilot current during generation of the arc and a second current known as a transferred arc current when the plasma jet has been transferred to the workpiece.

Various configurations are possible for generating the arc. For example, the electrode can move within the torch body away from the stationary nozzle. Such a configuration is referred to as the "blow-back" contact start method because the gas pressure causes the electrode to move away from the workpiece. A problem with such systems relates to precise alignment of the nozzle and electrode consumables, which significantly impacts life expectancy of the consumables and material processing/cut quality. In another configuration, the nozzle can move away from the relatively stationary electrode. Such a configuration is referred to as the "blow-forward" contact start method because the gas pressure causes the nozzle to move toward the workpiece.

Existing plasma cutting systems include a large array of separate consumables available for use with different currents and/or operating modes. The large number of consumable options requires large part counts and inventories for users, and can confuse users and increase the possibility of installing incorrect consumables. The large number of consumable options can also cause lengthy torch setup time(s) and make it difficult to transition among cutting processes that require different arrangements of consumables in the torch, arrangement and installation of which is often performed in the field one component at a time. For example, before a cutting operation, selecting and installing the correct set of consumables for a particular cutting task can be burdensome and time-consuming. Furthermore, selection, assembly, and installation of these components in the field can cause alignment issues or compatibility issues when old components are used with new components. During torch operation, existing consumables can experience performance issues such as failing to maintain proper consumable alignment and spacing. Furthermore, current consumables include substantial amounts of expensive materials (e.g., Vespel™) and often require a relatively complex manufacturing process, which leads to significant manufacturing costs and inhibits their widespread commercialization, production and adoption. What is needed is a new and improved consumable platform that decreases manufacturing costs and time, decreases part count, increases system performance (e.g., component alignment, cut quality, consumable life, variability/versatility, etc.), and eases installation and use of consumables by end users.

SUMMARY

The present invention provides one or more integrated, cost-effective cartridge designs for a plasma arc torch, such as for a manually-operated, air-cooled plasma arc torch. Generally, because a cartridge includes a suite of two or more consumable components, it provides ease of use and shortens the time for installation into a plasma arc torch in comparison to installing each consumable component individually. In addition, the use of a cartridge in a torch improves component alignment and cut consistency. However, manufacturing and material costs can prohibit the widespread commercialization and production of cartridges. The present invention solves this problem by providing one or more cost effective cartridge designs that facilitate cartridge commercialization and production and improve their installation.

The invention, in one aspect, features a cartridge for an air-cooled plasma arc torch. The cartridge comprises a swirl ring and a crown. The swirl ring includes a molded thermoplastic elongated body having a substantially hollow portion, the molded thermoplastic elongated body having a distal end and a proximal end and configured to receive an electrode within the hollow portion. The swirl ring also includes a plurality of gas flow openings defined by the distal end of the elongated body and configured to impart a swirling motion to a plasma gas flow for the plasma arc torch. The swirl ring further includes a nozzle retention feature on a surface of the elongated body at the distal end for retaining a nozzle to the elongated body. The crown is

affixed to the proximal end of the elongated body of the swirl ring. The crown substantially encloses the proximal end of the elongated body.

In some embodiments, the crown is formed of an electrically conductive material. The crown can be configured to retain the electrode within the cartridge and pass an electrical current to the electrode. The crown can comprise a biasing surface for physically contacting a resilient element that biases against a proximal end of the electrode. Additionally, the crown can comprise a substantially hollow body configured to retain the resilient element between the biasing surface and the proximal end of the electrode.

In some embodiments, the body of the crown has a substantially uniform thickness. In some embodiments, the crown includes at least one vent hole.

In some embodiments, the crown comprises a contact surface for facilitating electrical contact with a corresponding contact surface of the electrode when the plasma arc torch is operated in a transferred arc mode. The contact surface of the crown is characterized by the absence of contact with the corresponding contact surface of the electrode during initiation of a pilot arc. The contact surface can be configured to physically contact the corresponding contact surface of the electrode when the torch is operated in the transferred arc mode.

In some embodiments, the plurality of gas flow openings of the swirl ring include slots defined by a plurality of extensions disposed about the distal end of the elongated body of the swirl ring, each slot situated between a pair of the extensions.

In some embodiments, the nozzle retention feature includes a groove located on an external surface of the extensions. Retention of the nozzle to the swirl ring can be via one of snap fit, threading or crimping. In some embodiments, engagement between the crown and the swirl ring is by one of crimping, snap fit, or threading.

In some embodiments, the elongated body of the swirl ring is molded from a thermoplastic material comprising a polymer formed of ether and ketone molecules. The thermoplastic material can have one or more properties comprising (i) a glass transition temperature (Tg) of greater than about 320 Fahrenheit (F), (ii) a coefficient of linear thermal expansion (CLTE) of less than about 22 micro-inch/inch-Fahrenheit (micro.in/in.F) below Tg, (iii) a CLTE of less than about 55 micro.in/in.F above Tg, (iv) a melting point of greater than about 720 Fahrenheit, and (v) a dielectric strength of greater than about 480 kilo-volt/inch.

In some embodiments, the ratio of an axial length (L) of each gas flow opening to an average radius (R) between the radius of the electrode and the radius of an inner wall of the swirl ring is less than about 0.5. In some embodiments, the plurality of gas flow openings are disposed in a single layer about the distal end of the elongated body, each gas flow opening having an offset of about 0.040 inches between an opening in an inner wall of the swirl ring and an opening on an outer wall of the swirl ring.

In another aspect, a molded swirl ring for an air-cooled plasma arc torch is provided. The molded swirl ring comprises a molded thermoplastic elongated body comprising a substantially hollow portion. The molded thermoplastic elongated body has a distal end and a proximal end and configured to receive an electrode within the hollow portion. The molded swirl ring also includes a plurality of molded gas flow openings each extending from an interior surface to an exterior surface of the elongated body. The molded gas flow openings are disposed about the distal end of the elongated body and configured to impart a swirl to a plasma gas flow of the plasma arc torch. The molded swirl ring further includes a nozzle retention surface on the body for retaining a nozzle at the distal end of the elongated body.

In some embodiments, the plurality of gas flow openings include slots defined by a plurality of extensions disposed about the distal end of the elongated body, each slot situated between a pair of the extensions. The distal end of the elongated body of the swirl ring and the nozzle can cooperatively define the plurality of gas flow openings.

In some embodiments, the nozzle retention surface includes a nozzle retention feature located on an external surface of the extensions. The nozzle retention feature can comprise a groove configured to receive a portion of the nozzle via crimping. In some embodiments, the nozzle retention surface comprises a sloped surface configured to receive a portion of the nozzle via crimping.

In some embodiments, the swirl ring is configured to engage the nozzle via one of snap fit or threading. In some embodiments, the swirl ring is configured to engage the nozzle via crimping.

In some embodiments, the elongated body is molded from a thermoplastic material comprising a polymer formed of ether and ketone molecules. The thermoplastic material can further comprise one or more additives.

In another aspect, an assembly for an air-cooled plasma arc torch is provided. The assembly comprises an electrode, a swirl ring molded from a thermoplastic material, a nozzle, and a crown. The swirl ring comprises a nozzle retention surface at a distal end and a crown retention element at a proximal end. The nozzle is fixedly secured to the distal end of the swirl ring via the nozzle retention surface, where the nozzle includes an exit orifice at a distal end of the nozzle. The crown is fixedly secured to the proximal end of the swirl ring via the crown retention element. The crown is configured to enclose the swirl ring at the proximal end. The securement of the swirl ring, the nozzle and the crown creates a chamber in which the electrode is permanently disposed and aligned relative to the nozzle.

In some embodiments, the nozzle retention surface comprises a sloped surface and the nozzle is secured to the distal end of the swirl ring by crimping at least a portion of the nozzle against the sloped surface. The crimping of the nozzle to the nozzle retention can establish (1) a radial centering of the nozzle exit orifice within the chamber with respect to a distal end of the electrode to within 0.005 inches, and (2) a longitudinal positioning of the electrode within the chamber between the distal end of the electrode and the nozzle exit orifice during a transferred arc operation of the assembly to within 0.030 to 0.060 inches.

In some embodiments, the crown retention element comprises a groove configured to secure the swirl ring by at least one of crimping, threading, or snap fit. The securement of the crown to the swirl ring via the crown retention element can establish a longitudinal positioning of the electrode within the chamber between a distal end of the electrode and the nozzle exit orifice during a transferred arc operation of the assembly to within 0.030 to 0.060 inches.

In some embodiments, the assembly further comprises a resilient element between a biasing surface of the crown and the electrode, the resilient element physically contacting the electrode and imparting a separation force upon the electrode. The resilient element can pass substantially all of a pilot arc current to the electrode when the plasma arc torch is operated in a pilot arc mode. The crown can comprise a hollow body for maintaining the resilient element substantially therein. In some embodiments, the resilient element comprises at least one of a spring or wire.

In some embodiments, the assembly further comprises an o-ring configured to substantially surround the proximal end of the swirl ring to seal the swirl ring against a body of the plasma arc torch.

In another aspect, a crown is provided for a contact start plasma arc torch configured for electrical communication with an electrode. The crown comprises a substantially hollow body, formed from an electrically conductive material, configured to receive a resilient element. The hollow body has a substantially uniform thickness. The crown also includes a biasing surface at a proximal end of the crown for physically contacting the resilient element. The crown further includes an interior contact surface at the distal end for physically contacting, during a transferred arc mode of the plasma arc torch, a corresponding surface at the proximal end of the electrode. The contact surface is characterized by an absence of contact with the corresponding surface of the electrode during a pilot arc mode of the plasma arc torch.

In some embodiments, the contact surface is configured to pass at least a portion of a transferred arc current from the power supply to the electrode during the transferred arc mode. Additionally, the resilient element can be configured to pass substantially all of a pilot arc current from the power supply to the electrode during the pilot arc mode.

In some embodiments, the crown further includes a retention element for connection to a swirl ring via one of crimping, snap fit or threading. In some embodiments, the crown further includes at least one vent hole. In some embodiments, the crown further comprises a circular tunnel portion that includes the biasing surface and is configured to house at least a portion of the resilient element. In some embodiments, the crown further comprises a depressed center extending away from the proximal end that includes the contact surface.

In some embodiments, the crown is formed via a stamping process.

In another aspect, a method for aligning a plurality of components in a cartridge is provided. The method includes molding a thermoplastic material to form a swirl ring comprising a distal end, a proximal end and a hollow body. The method also includes disposing an electrode inside of the hollow body of the swirl ring and retaining the electrode to the cartridge by fixedly securing the nozzle to the distal end of the swirl ring. The method further includes longitudinally aligning the electrode relative to the nozzle by fixedly securing a crown to the proximal end of the swirl ring, thereby establishing the longitudinal alignment during a transferred arc operation of the cartridge when a gas flow is used to bias the electrode into contact with the crown.

In some embodiments, the method further comprises forming the crown via a stamping process. In some embodiments, the method further comprises radially aligning the electrode by restraining a radial motion of the electrode within the hollow body of the swirl ring.

In some embodiments, the longitudinal alignment comprises restraining a longitudinal motion of the electrode to within a blow-back distance defined by a distal end of the electrode and an exit orifice of the nozzle during the transferred arc operation.

In some embodiments, fixed securing the nozzle to the distal end of the swirl ring comprises crimping a portion of the nozzle into a retention surface on the distal end of the swirl ring.

In another aspect, a consumable cartridge for a plasma arc torch is provided. The consumable cartridge includes an outer component defining a substantially hollow body, an inner component disposed substantially within the hollow body of the outer component, and a hollow region between the rear portion of the inner component and the outer component. The inner component includes a forward portion configured to axially secure and rotatatably engage the outer component to the inner component and a rear portion substantially suspended within the hollow body of the outer component. The rear portion is axially secured and rotatably engaged with the outer component via the forward portion. The hollow region is configured to receive a torch head to enable mating between the rear portion of the inner component and a cathode of the torch head.

In some embodiments, the forward portion of the inner component includes a means for enabling axial securement and rotatable engagement of the outer component thereto. This means for enabling is dimensioned to permit independent rotation of the inner and outer components relative to each other. In some embodiments, the rear portion of the inner component has no means for enabling axial securement and rotatable engagement with the outer component. The axial securing and rotatable engaging of the outer component to the inner component can be by one of crimping, snap fitting, frictional fitting or threading.

In some embodiments, the outer component comprises at least one of a shield, an insulating component, a retaining cap or a cap sleeve. In some embodiments, the inner component comprises at least one of a crown, a swirl ring, an electrode or a nozzle.

In some embodiments, the rear portion of the inner component is configured to substantially surround and physically contact at least a portion of the cathode. The rear portion of the inner component can comprise a cavity configured to receive the at least a portion of the cathode extending into the cartridge. In some embodiments, at least one of the rear portion of the inner component or the outer component comprises at least one thread for engaging the torch head.

In some embodiments, the inner component further comprises one or more fins disposed on an external surface of the inner component. The outer component can also comprise one or more fins disposed on an internal surface of the outer component.

In some embodiments, the outer component provides an electrical path for a pilot arc current of the plasma arc torch.

In another aspect, a cartridge consumable for a plasma arc torch is provided. The cartridge consumable comprises (i) an outer component defining a substantially hollow body, (ii) an inner component, comprising at least an electrode, disposed within the hollow body of the outer component; and (iii) an engagement feature disposed on the inner component. The engagement feature is adapted to axially constrain the outer component relative to the inner component while permitting independent rotation of the inner and outer components relative to each other.

In some embodiments, the inner component further comprises a crown that is substantially locked into position upon assembly into the plasma arc torch. A swirl ring can be connected to the outer component via a nozzle of the inner component. The electrode can be disposed within a hollow enclosure defined by the swirl ring and the nozzle. At least one of the swirl ring or the electrode can be a part of the inner component.

In some embodiments, the outer component comprises a metallic retaining cap and an electrically insulative cap sleeve overmolded onto the retaining cap. A shield can be connected to the inner component via the outer component. The shield can be a part of the outer component.

In some embodiments, the cartridge consumable further comprises a hollow region between the outer component and the inner component. The hollow region is configured to matingly engage a head of the plasma arc torch. The cartridge consumable can further include a washer located between the outer component and a nozzle of the inner component. The washer comprises one or more cooling channels configured to regulate a gas flow therethrough.

In yet another aspect, a method of assembling a multi-piece cartridge consumable is provided, where the cartridge consumable comprises an outer component and an inner component for installation into a plasma arc torch. The method includes disposing the inner component within a hollow body of the outer component. The method also includes axially restraining the outer component relative to a forward portion of the inner component while permitting independent rotation of the inner and outer components relative to each other. The method further includes substantially suspending and radially orienting, by the axial restraining, a rear portion of the inner component within the hollow body of the outer component.

In some embodiments, the method further includes installing the multi-piece cartridge consumable into a torch head by disposing the torch head in a hollow region between the rear portion of the inner component and the outer component. The installing can enable physical mating between a cathode of the torch head and a recess in the rear portion of the inner component. In some embodiments, the method further includes rotating the outer component independent of the inner component to secure the torch head to the multi-piece cartridge consumable.

In some embodiments, the method further includes assembling the inner component of the multi-piece cartridge, which comprises disposing an electrode inside of a hollow body of a swirl ring, retaining the electrode within the hollow body by fixedly securing a nozzle to a distal end of the swirl ring, and fixedly securing a crown to a proximal end of the swirl ring. In some embodiments, the method further includes assembling the outer component of the multi-piece cartridge, which comprises over-molding an insulative cap sleeve onto a retaining cap and fixedly connecting a shield to the cap sleeve.

In some embodiments, the method further includes radially aligning the inner component with respect to the outer component by one or more fins disposed on a surface of at least one of the inner or outer component.

In yet another aspect, a crown for a plasma arc torch is provided. The crown includes a body defining a proximal and a distal end, the body including an electrically conductive material and at least one raised feature at the proximal end of the body. The raised feature adapted to activate a consumable sensor inside of the plasma arc torch. The crown can also include a biasing surface at the proximal end of the body for physically contacting a resilient element.

In some embodiments, the crown further includes a contact surface at the distal end of the body for physically contacting, during a transferred arc mode of the plasma arc torch, a corresponding surface of an electrode. The at least one raised feature is configured to activate the consumable sensor by pressing against the consumable sensor upon installation of the crown into the plasma arc torch, thereby permitting a flow of electrical current through one of (i) the biasing surface to the resilient element during a pilot arc mode of the plasma arc torch or (ii) the contact surface to the electrode during the transferred arc mode.

In some embodiments, the body of the crown is substantially hollow and is configured to retain the resilient element between the biasing surface and the electrode. The body of the crown can have a substantially uniform thickness.

In some embodiments, the body of the crown defines a cavity configured to receive at least a portion of a cathode of the plasma arc torch. The contact surface can be located in an interior surface of the crown body defining the cavity.

In yet another aspect, an inner cartridge consumable of a multi-piece cartridge consumable for a plasma arc torch is provided. The inner cartridge consumable includes a crown including (i) a recess about a central axis shaped to receive at least a portion of a cathode of the plasma arc torch and (ii) a protrusion region surrounding the recess about the central axis shaped to house a spring component. The inner cartridge consumable also includes a swirl ring defining a distal end and a proximal end. The swirl ring is fixedly connected to the crown at the proximal end of the swirl ring. The inner cartridge consumable further includes a nozzle fixedly connected to the swirl ring at the distal end of the swirl ring and an electrode disposed in a chamber defined within the fixed connection of the crown, the swirl ring and the nozzle.

In some embodiments, the the crown physically contacts the cathode and is disposed between the cathode and the electrode. In some embodiments, the crown defines an opening to allow at least a portion of the cathode to pass therethrough to physically contact the electrode in a transferred arc mode of operating the plasma arc torch. The recess of the crown can be configured to permit the cathode to extend within the inner cartridge consumable.

In some embodiments, the protrusion region of the crown is adapted to activate a consumable sensor inside of the plasma arc torch. In some embodiments, a portion of the swirl ring is adapted to extend through an opening in the crown to activate a consumable sensor inside of the plasma arc torch.

In some embodiments, the inner cartridge consumable is substantially conductive. In some embodiments, the spring component is adapted to extend longitudinally and substantially parallel to the cathode upon installation of the multi-piece cartridge consumable in the plasma arc torch.

In some embodiments, the inner cartridge consumable further comprises a retention feature disposed on a surface of the inner cartridge consumable for rotationally engaging and axially securing an outer cartridge consumable of the multi-piece cartridge consumable. The retention feature can be disposed on a surface of at least one of the nozzle or the swirl ring.

In yet another aspect, a method of installing a cartridge into a plasma arc torch is provided. The method includes assembling an inner component of the cartridge including disposing an electrode inside of a hollow body of a swirl ring that includes a distal end and a proximal end, capturing the electrode within the swirl ring by fixedly securing a nozzle at the distal end of the swirl ring, and fixedly securing a crown to the proximal end of the swirl ring. The method also includes securing a torch head to the cartridge that includes the inner component and an outer component, and depressing, by at least one raised feature, a consumable sensor inside of a torch head of the plasma arc torch. The method further includes establishing an electrical current flow path from a source of power through the torch head and to the cartridge based on the depressing.

In some embodiments, the method further includes positioning the crown between a cathode of the torch head and the electrode and radially and longitudinally aligning the cathode, the crown and the electrode. The method can further include enabling physical mating between the cathode and a recess of the crown. The method can further

include enabling physical contact between the cathode and the electrode via an opening of the crown during a transferred mode operation of the plasma arc torch.

In some embodiments, the method further includes physically contacting, by a biasing surface at the proximal end of the crown, a resilient element and physically contacting, by a contact surface at the distal end of the crown, a corresponding surface of the electrode during a transferred arc mode of the plasma arc torch. The method can further include permitting a flow of electrical current in the electrical current flow path through one of (i) the biasing surface to the resilient element during a pilot arc mode of the plasma arc torch or (ii) the contact surface to the electrode during the transferred arc mode.

In some embodiments, the method further includes disposing the inner component within a hollow body of the outer component and axially restraining the inner component relative to the outer component while permitting independent rotation of the inner and outer components relative to each other. The method can further include substantially suspending and radially orienting, by the axial restraining, a rear portion of the inner component within the hollow body of the outer component. The method can further include radially aligning the inner component with respect to the outer component by one or more fins disposed on a surface of at least one of the inner or outer component.

In some embodiments, the raise feature is disposed on the crown or the swirl ring.

BRIEF DESCRIPTION OF THE DRAWINGS

The advantages of the invention described above, together with further advantages, may be better understood by referring to the following description taken in conjunction with the accompanying drawings. The drawings are not necessarily to scale, emphasis instead generally being placed upon illustrating the principles of the invention.

FIG. **1** is a cross-sectional view of an exemplary cartridge for a plasma arc torch, according to an illustrative embodiment of the invention.

FIG. **2** is an isometric view of the electrode of the cartridge of FIG. **1**, according to an illustrative embodiment of the invention.

FIG. **3** is an isometric view of the nozzle of the cartridge of FIG. **1**, according to an illustrative embodiment of the invention.

FIGS. **4***a* and **4***b* are isometric and profile views of the swirl ring of the cartridge of FIG. **1**, respectively, according to an illustrative embodiment of the invention.

FIGS. **5***a* and **5***b* are isometric and sectional views of another swirl ring design compatible with the cartridge of FIG. **1**, respectively, according to an illustrative embodiment of the invention.

FIG. **6** is a sectional view of the swirl ring of the cartridge of FIG. **1** with the electrode aligned within the swirl ring and illustrating an exemplary gas flow opening.

FIGS. **7***a* and **7***b* are isometric and sectional views of the crown of the cartridge of FIG. **1**, respectively, according to an illustrative embodiment of the invention.

FIG. **8** is an exemplary shield design compatible with the cartridge of FIG. **1**, according to an illustrative embodiment of the invention.

FIG. **9** is an exploded view of the cartridge of FIG. **1**, according to an illustrative embodiment of the invention.

FIG. **10** is a sectional view of another exemplary cartridge for a plasma arc torch, according to an illustrative embodiment of the invention.

FIG. **11** is an exemplary configuration of the retaining cap of the cartridge of FIG. **10**, according to an illustrative embodiment of the invention.

FIGS. **12***a* and **12***b* are sectional and exterior profile views, respectively, of an exemplary cap sleeve overmolded onto the retaining cap of FIG. **11**, according to an illustrative embodiment of the invention.

FIG. **13** is an exemplary configuration of the insulator component, which can be a part of the outer component of the cartridge of FIG. **10**, according to an illustrative embodiment of the invention.

FIGS. **14***a-c* are various views of the insulator component of FIG. **13** fixedly secured to the cap sleeve and the retaining cap, according to an illustrative embodiment of the invention.

FIG. **15** is an exemplary configuration of the shield that can be a part of the outer component of the cartridge of FIG. **10**, according to an illustrative embodiment of the invention.

FIG. **16** is another exemplary shield that is compatible with the cartridge of FIG. **10**, according to an illustrative embodiment of the invention.

FIG. **17** is an exemplary configuration of the nozzle of the cartridge of FIG. **10**, according to an illustrative embodiment of the invention.

FIG. **18** is cross-sectional view of an assembly comprising the nozzle, the retaining cap and the shield of the cartridge of FIG. **10**, according to an illustrative embodiment of the invention.

FIGS. **19***a-c* are various views of another exemplary configuration of the swirl ring **1007** of the cartridge **1000** of FIG. **10**, according to an illustrative embodiment of the invention.

FIGS. **20***a* and *b* are exemplary configurations of the crown of the cartridge of FIG. **10**, according to an illustrative embodiment of the invention.

FIG. **21** shows an exemplary insert between the nozzle and the outer component of the cartridge of FIG. **10** to control gas flow, according to an illustrative embodiment of the invention.

FIG. **22** shows an exemplary plasma arc torch including the cartridge of FIG. **10** and a torch head, according to an illustrative embodiment of the invention.

FIG. **23** is an exemplary configuration of the torch head of FIG. **22**, according to an illustrative embodiment of the invention.

FIGS. **24***a* and *b* show exemplary pilot arc current flow paths through the cartridge of FIG. **10** during pilot arc initiation, according to an illustrative embodiment of the invention.

FIG. **25** shows an exemplary transferred arc current flow path through the cartridge of FIG. **10** during transferred arc mode of torch operation, according to an illustrative embodiment of the invention.

FIG. **26** is an exemplary gas flow path through the cartridge of FIG. **10**, according to an illustrative embodiment of the invention.

FIG. **27** is an exploded view of the cartridge of FIG. **10**, according to an illustrative embodiment of the invention.

DETAILED DESCRIPTION

FIG. **1** is a cross-sectional view of an exemplary cartridge **100** for a plasma arc torch, according to an illustrative embodiment of the invention. As shown, the cartridge **100** includes an end cap **106** (e.g., a crown), a swirl ring **102**, an electrode **104**, and a nozzle **108** oriented substantially symmetrically about the longitudinal axis A. The cartridge **100**

can additionally include a resilient element **122** and/or a sealing device **150**. The cartridge **100** can use a blow-back contact starting mechanism for contact starting the plasma arc torch upon assembly into the torch. Specifically, the electrode **104** can be a spring-forward electrode, which means that the resilient element **122** (e.g., a spring) can exert a separating force on the proximal end **124** of the electrode **104** to bias the electrode **104** away from the end cap **106** and toward the nozzle **108**.

FIG. **2** is an isometric view of the electrode **104**, according to an illustrative embodiment of the invention. As shown, the electrode **104** includes a set of spiral-shaped fins **114** for directing a gas flow and facilitating cooling of the cartridge **100**. An emissive insert **142** (i.e., emitter), as shown in FIG. **1**, can be disposed in the distal end **125** of the electrode **104** so that an emission surface is exposed. The insert **142** can be made of hafnium or other materials that possess suitable physical characteristics, including corrosion resistance and a high thermionic emissivity. Forging, impact extrusion, or cold forming can be used to initially form the electrode **104** prior to finish machining the component.

The nozzle **108** can be spaced from the distal end **125** of the electrode **104** and define, in relation to the electrode **104**, a plasma chamber **140**. FIG. **3** is an isometric view of the nozzle **108**, according to an illustrative embodiment of the invention. The nozzle **108** includes a centrally-located exit orifice **144** for introducing a plasma arc, such as an ionized gas jet, to a workpiece (not shown) to be cut.

In some embodiments, the swirl ring **102** has a set of radially spaced gas flow openings **136** configured to impart a tangential velocity component to a gas flow for the plasma arc torch, causing the gas flow to swirl. This swirl creates a vortex that constricts the arc and stabilizes the position of the arc on the insert **142**. In some embodiments, the sealing device **150**, such as an o-ring, can be located on an external surface of the swirl ring **102** at its proximal end **112** to engage an internal surface of the plasma arc torch body (not shown) when the the cartridge **100** is installed into the plasma arc torch body. The sealing device **150** is configured to provide a leak-proof seal of fluids (e.g., gases) between the cartridge **100** and the plasma arc torch body at that location.

FIGS. **4***a* and **4***b* are isometric and profile views of the swirl ring **102** of the cartridge **100** of FIG. **1**, respectively, according to an illustrative embodiment of the invention. As shown, the swirl ring **102** can be defined by a substantially hollow, elongated body **103** having the distal end **110** and the proximal end **112** along the longitudinal axis A. The distal end **110** of the swirl ring **102** is characterized as the end that is closest to a workpiece when operating the cartridge **100** within the plasma arc torch, and the proximal end **112** is the opposite of the distal end **110** along the longitudinal axis A. In some embodiments, the hollow body **103** of the swirl ring **102** is dimensioned to receive the electrode **104** and substantially extend over the length of the electrode **104** along the longitudinal axis A. The inner wall of the the swirl ring **102** can thus radially align the electrode **104** by limiting a radial movement of the electrode **104**. An interface **118** can be formed between the distal end **110** of the swirl ring **102** and the nozzle **108** to join the two consumable components together as a part of the cartridge **100**. Another interface **120** can be formed between the proximal end **112** of the swirl ring **102** and the end cap **106** to join the two consumable components together as a part of the cartridge **100**. In general, the interface **118** and/or the interface **120** form a chamber in which the electrode **104** is permanently disposed and aligned (longitudinally and radially) relative to the nozzle **108** and the end cap **106**.

In some embodiments, the one or more gas flow openings **136** of the swirl ring **102** are disposed about the distal end **110** of its elongated body **103**, such as around a circumference of its distal end **110**. In some embodiments, the one or more gas flow openings **136** are molded. Each gas flow opening **136** can extend from an interior surface to an exterior surface of the elongated body **103** and is oriented to impart a swirling motion relative to the axis A to the gas (e.g., air) flowing therethrough. Each gas flow opening **136** can be circular or non-circular (e.g., rectangular, squared and/or square-cornered) in geometry. In some embodiments, the gas flow openings **136** have substantially uniform dimensions. In some embodiments, as shown in FIGS. **4***a* and **4***b*, the gas flow openings **136** are at least partially defined by slots **202** at the distal end **110** of the elongated body **103** of the swirl ring **102**. These gas flow slots **202** are formed by a plurality of extensions **204** spaced apart at regular or non-regular intervals around the circumference of the distal end **110**, where each slot **202** is situated between a pair of the extensions **204**. Upon the swirl ring **102** being securely affixed to the nozzle **108**, the slots **202** are closed off by the proximal end of the nozzle **108** to create bounded holes. Hence, each gas flow opening **136** can be a two-piece composite opening cooperatively defined by the nozzle **108** and the swirl ring **102**.

In some embodiments, to form the interface **118** between the swirl ring **102** and the nozzle **108**, the swirl ring **102** can include a nozzle retention surface **216** (e.g., interior and/or exterior surface) of the elongated body **103** for securely attaching the nozzle **108** at its distal end **110**. In one example, as illustrated in FIGS. **4***a* and *b*, the nozzle retention surface **216** can be a feature, such as one or more grooves located on the external surface of the elongated body **103**, such as on the extensions **204**. The nozzle retention surface **216** can capture the nozzle **108** through one of snap fit, crimping, or threading to form the interface **118**. In a crimping example, a portion of the nozzle **108** can be crimped against and into the groove **216** to securely affix the nozzle **108** to the swirl ring **102**. Alternatively, a similar retention surface can be disposed on the nozzle **108** to retain the swirl ring **102** thereto. Other manufacturing and assembly options are available and viable to connect the two components. For example, the nozzle **108** can be overmolded onto the swirl ring **102** to form the interface **118**.

FIGS. **5***a* and *b* are isometric and sectional views of another swirl ring **702** compatible with the cartridge **100** of FIG. **1**, respectively. As shown, the swirl ring **702** is substantially similar to the swirl ring **102** except that the nozzle retention surface **716** of the swirl ring **702** comprises a sloped surface at a tapered angle relative to the longitudinal axis A. The sloped surface **716** can be adapted to capture the nozzle **108** through one of snap fit, crimping, or threading to form the interface **118** of FIG. **1**.

In some embodiments, as shown in FIGS. **4***a* and *b*, to form the interface **120** between the swirl ring **102** and the end cap **106**, the swirl ring can include a cap retention feature **230** located on a surface (e.g., interior and/or exterior surface) of the elongated body **103** for securely retaining the end cap **106** at its proximal end **112**. The cap retention feature **230** can be one or more grooves that capture the end cap **106** through one of snap fit, crimping, or threading to form the interface **120**. For example, a portion of the end cap **106** can be crimped into the groove(s) **230** to securely affix the end cap **106** to the swirl ring **102**. In some embodiments, as shown in FIGS. **1** and **4***b*, a lip portion **232** of the proximal

end **112** of the swirl ring **102** is inserted inside of the end cap **106** after the two components are coupled together. Alternatively, a similar retention feature can be disposed about the end cap **106** to join the swirl ring **102**. Other manufacturing and assembly options are available and viable to connect the two components. For example, the end cap **106** can be over-molded onto the swirl ring **102** to form the interface **120**. A similar cap retention feature **730** can be located on a surface of the swirl ring **702** of FIGS. **5***a* and *b* and provide substantially the same function as the cap retention feature **230**.

In general, each of the retention surfaces/elements **216**, **230** of FIGS. **4***a* and *b* simplifies alignment of the parts in the cartridge **100** in comparison to an operator having to perform alignment of individual components without any structural guidance. In some embodiments, the locking of the swirl ring **102** to the nozzle **108** at the interface **118** via the retention element **216** aligns the two components relative to each other and further retains the electrode **104** in the chamber formed by the locking of the swirl ring **102** and the nozzle **108**. The inner wall of the swirl ring **102** can radially align the electrode **104** such that there is a relatively small gap between the inner wall of the swirl ring **102** and the radial fins **114** of the electrode **104**, thereby limiting a radial motion of the electrode **104**. This thus establishes a radial centering of the nozzle exit orifice **144** with respect to the distal end **125** of the electrode **104** within the chamber, such as within a tolerance of about 0.005 inches. In some embodiments, the locking of the swirl ring **102** to the end cap **106** at the interface **120** via the retention element **230** aligns the two components relative to each other and further longitudinally aligns the electrode **104** in the chamber. For example, after the swirl ring **102** and the end cap **106** are joined, the depth of the depressed center **304** of the end cap **106** controls how far back the electrode **104** can move longitudinally toward the proximal end **124** in relation to the nozzle **108** during a transferred arc mode (e.g., when a gas flow is used to bias the electrode **104** into contact with the end cap **106**), such as within a blow-back distance of 0.02 to 0.12 inches. The locking of the swirl ring **102** to the end cap **106** at the interface **120** via the retention element **230** also secures the resilient element **122** within the cartridge **100** while accurately positioning the resilient element **122** relative to the proximal end **124** of the electrode **104**. In addition, the joining of the nozzle **108** to the swirl ring **102** helps to define the longitudinal motion of the electrode **104** to within the blow-back distance between the distal end **125** of the electrode **104** and the nozzle exit orifice **144** during the transferred arc operation. Such restraint on the longitudinal motion of the electrode **104** promotes accuracy and repeatability of plasma arc initiation in torch operations. Similarly, each of the retention surfaces/elements **716**, **730** of FIGS. **5***a* and *b* simplifies alignment of the parts in the cartridge **100** upon assembly of the swirl ring **702** into the cartridge **100**.

In some embodiments, the gas flow openings **136** of the swirl ring **102** are suitably shaped and dimensioned to enhance swirling of a gas flow therethrough. FIG. **6** is a sectional view of the swirl ring **102** of the cartridge **100** of FIG. **1** with the electrode **104** radially aligned within the swirl ring **102** and illustrating an exemplary gas flow opening **136**.

As shown, the swirl ring **102** and the electrode **104** have a shared center **602**. Width W represents the curved axial width of each gas flow opening **136** (only one gas flow opening is shown). Length R represents the average distance (radius) between the center of the electrode **104** and the radius of the annular space between the exterior of the electrode body and the inner wall of the swirl ring **102**, as measured from the shared center **602**. In some embodiments, the W/R ratio is less than about 0.5. This value allows a gas flow entering a gas flow opening **136** to impinge somewhat perpendicularly on surface of the electrode **104**, increasing gas turbulence and enhancing electrode cooling. In contrast, a traditional gas flow opening design has a W/R ratio of about 1.0, which causes a gas to impinge at most tangentially relative to a surface of the electrode **104**. The substantial perpendicular impingement (as opposed to the tangential impingement) generates more flow distribution, more uniform gas flow swirling, and better cooling of the electrode **104**. In some embodiments, the life of the electrode **104** is extended by 25% when the W/R ratio is less than about 0.5. This design ratio is applicable to gas flow openings **136** represented by slots **202** molded at the distal end **110** of the swirl ring **102** or by enclosed holes (not shown) formed, molded, or drilled into the distal end **110**.

In some embodiments, only one row of gas flow openings **136** is disposed around the distal end **110** of the swirl ring **102**. For example, one row of twelve gas flow openings **136** can be disposed symmetrically about the swirl ring **102**. In contrast, traditional swirl ring designs have two or more rows (layers) of gas flow openings, with some traditional swirl rings having eighteen openings per row. Due to the reduced number of gas flow openings **136** in the present design, the width W of individual gas flow openings **136** is increased to generate the same gas flow swirl force and maintain the same overall cross-sectional area of the gas flow openings **136** combined in comparison to the traditional designs. In addition, for each gas flow opening **136**, the offset **0** between the opening **604** in the inner wall of the swirl ring **102** and the opening **606** on the outer wall of the swirl ring **102** is reduced (e.g., to about less than or equal to about 0.040 inches) whereas such an offset associated with a gas flow opening of a traditional swirl ring design is larger (e.g., about 0.12 inches) In general, reducing the number of gas flow openings **136**, coupled with locating the openings **136** on a single row, simplifies manufacturing cycle time, reduces material cost, and is more compatible with an injection molding approach for manufacturing the swirl ring **102**. The gas flow opening design described with respect to the swirl ring **102** can also be applied to the swirl ring **702** of FIGS. **5***a* and *b*.

In some embodiments, the swirl ring **102** or **702** is manufactured through injection molding of one or more high-temperature thermoplastic materials comprising a polymer formed of ether and ketone molecules (e.g., ether ketone based compounds), such as polyetheretherketone (PEEK), polyaryletherketone (PAKE), polyetherketoneketone (PEKK), polyetherketoneetherketone-ketone (PEKEKK) and variants thereof. Exemplary thermoplastic materials also include polyamide-imide (PAI), polyetherimide (PEI), and/or polytetrafluoroethylene (PTFE). In some embodiments, properties associated with suitable thermoplastic materials for the invention have a glass transition temperature (Tg) of greater than about 320 Fahrenheit, a coefficient of linear thermal expansion (CLTE) of less than about 22 micro-inch/inch-Fahrenheit below Tg, a CLTE of less than about 55 micro-inch/inch-Fahrenheit above Tg, a melting point of greater than about 720 Fahrenheit, and/or a dielectric strength of greater than about 480 kilo-volt/inch. The use of thermoplastics to manufacture swirl rings reduces cartridge cost in comparison to, for example, Vespel™, Torlon, Celazole or Phenolic compounds or other thermal-set plastics, which are materials currently used to manufac-

ture swirl rings, but are comparatively more expensive to obtain and difficult to use. However, it is known that thermoplastics have operating temperatures that are lower than thermos-set Vespel™, which can potentially impact the integrity of swirl rings and electrode life in general. To resolve the high temperature performance issues, the swirl ring **102** or **702** can be made from thermoplastic resins having one or more fortifying additives to provide the desired thermal resistance and/or thermal conductivity, thus enabling effective use of thermoplastic material(s) in cartridges and/or swirl rings. Exemplary fortifying additives include glass fibers, minerals, boron nitride (BN), Cubic BN and/or Vespel™ particles. As an example, the material polymide/polyetheretherketone (PI/PEEK), a heat resistant material that can include about 50% recycled Vespel™ particles, can be used to manufacture the swirl ring **102** or **702**. In addition, the swirl ring **102** or **702** is positioned in such a location in the cartridge **100** that it avoids exposure to the highest operating temperatures during torch operation. Thus, in practice, using a thermoplastic material to manufacture the swirl ring **102** is unlikely to affect the integrity of the swirl ring **102** or **702**. Furthermore, when the electrode **104** experiences an end-of-life event, which is also the end of life of the cartridge **100**, the plastic material melts, which does not affect the cutting operation during the consumable life. In contrast, known thermal-set based swirl rings, which are reused repeatedly with various sets of electrodes and nozzles, commonly have lifecycles of 20 to 30 times that of electrodes and nozzles. These lifecycles place requirements and demands on the swirl rings, which can lead to over design and also inconsistent performance as the swirl rings can thermally warp (e.g., expand and/or shrink) over their lifecycles, providing different fits, interfaces, and performance based on lifecycle position.

In some embodiments, the elongated body **103** of the swirl ring **102** is formed using an injection molding technique (e.g., thermoplastic injection molding). In some embodiments, if the gas flow openings **136** include slots **202** defined by the distal end **110** of the swirl ring **102**, the slots **202** can be formed at the same time as the elongated body **103** via the same thermoplastic injection molding process. In general, the gas flow slots **202**, in contrast to drilled holes in accordance with traditional designs for creating gas flow passageways, are more compatible with the injection molding technique for forming the swirl ring **102**. Thus, molding the gas flow slots **202** into the swirl ring body **103** eliminates the additional step of drilling holes into the body **103**. Using gas flow slots **202** instead of drilled holes in a swirl ring design also reduces material cost and the cost of long cycle time associated with drilling operations. The nozzle retention feature **216** and/or the cap retention feature **230** can also be formed at the same time as the elongated body **103** via the same thermoplastic injection molding process. Therefore, most, if not all, of the swirl ring **102** can be manufactured using a cost-effective single injection molding process. Overall, a molded thermoplastic process for forming the swirl ring **102** provides a faster and cheaper manufacturing approach in comparison to the traditional processes. Processes and materials for manufacturing the swirl ring **102** of FIGS. **4***a* and *b* can also be used to manufacture the swirl ring **702** of FIGS. **5***a* and *b*.

FIGS. **7***a* and *b* are isometric and sectional views of the end cap **106** (e.g., a crown) of the cartridge **100** of FIG. **1**, respectively, according to an illustrative embodiment of the invention. The end cap **106** provides at least one of the following functions: (i) securely engaging the swirl ring **102** or **702** at its proximal end **112** to form the interface **120**, thereby aligning the electrode **104**; (ii) providing a holder for the resilient element **122**; and (iii) passing an electrical current to the electrode **104** in a blow-back contact-start configuration. As illustrated, the end cap **106** has a substantially hollow body **300** defining a proximal end **320** and a distal end **322**. The hollow body **300** includes a circular tunnel portion **302** and a depressed center **304** extending away from the proximal end **320** of the end cap **106**. In some embodiments, the body **300** of the end cap **306** has a substantially uniform thickness, thereby promoting efficient and uniform current passage and assisting with the establishment of precise consumables alignment. Uniform thickness of the end cap **106**, coupled with a stamp manufacturing technique, also simplifies manufacturing and minimizes manufacturing cycle time, consumable weight, and material usage.

In some embodiments, an interior surface **308** of the circular tunnel portion **302** at the proximal end **320** defines a biasing surface for physically contacting and electrically communicating with the resilient element **122**. The resilient element **122** can bias against the proximal end **124** of the electrode **104** so as to move the electrode **104** away from the end cap **106**. That is, the resilient element **122** is situated between and physically contacts the biasing surface **308** of the end cap **106** and the proximal end **124** of the electrode **104** such that the resilient element **122** imparts a separation force between the electrode **104** and the biasing surface **308**.

In some embodiments, an interior surface **310** of the depressed center **304** of the end cap **106** at the distal end **322** defines a contact surface that is configured for physical contact and electrical communication with a corresponding contact surface **128** of the electrode **104** at its proximal end **124**. During the transferred arc mode, the contact surface **310** of the end cap **106** is in an abutting relationship with the corresponding contact surface **128** of the electrode **104**. However, during the initiation of a pilot arc in the pilot arc mode, the contact surface **310** is in a spaced relationship with the corresponding contact surface **128** that is defined by an absence of contact between the two surfaces.

The resilient element **122** is generally maintained inside of the cartridge **100** between the end cap **106** and the electrode **104**. In some embodiments, the resilient element **122** is secured to either the end cap **106** or the electrode **104**. In other embodiments, the resilient element **122** is secured to both the electrode **104** and the end cap **106**. For example, the resilient element **122** can be secured by welding, soldering, bonding, fastening, a diametral interference fit or another type of friction fit to the end cap **106** and/or the electrode **104**. In some embodiments, the substantially hollow body **300** of the end cap **106** is configured to house the resilient element **122** between its biasing surface **308** and the proximal end **124** of the electrode **104**. For example, the circular tunnel portion **302** of the end cap **106** can function as a holder of the resilient element **122**. Specifically, the resilient element **122** can be held in place by the biasing surface **308**, an inner interior surface **312** and an outer interior surface **314** of the tunnel portion **302**, where the diameter of the inner interior surface **312** with respect to the longitudinal Axis A is slightly smaller than the inner diameter of the resilient element **122**, and the the diameter of the outer interior surface **314** with respect to the longitudinal Axis A is slightly larger than the outer diameter of the resilient element **122**.

In some embodiments, radial movement of the resilient element **122** is further restrained by the proximal end **112** of the swirl ring **102** or **702** after the swirl ring **102** or **702** is affixed to the end cap **106**. As shown in FIG. **1**, after the end

cap **106** is coupled to the swirl ring **102** (e.g., by being crimped into the cap engagement groove **230**), the lip portion **232** of the swirl ring **102** can extend into the interior of the circular tunnel portion **302** of the end cap **106**. Therefore, the lip portion **232** can further restrain and guide the positioning of the resilient element **122** inside of the end cap **106**.

In some embodiments, the end cap **106** is configured to be in electrical communication with a power supply (not shown) when the cartridge **100** is installed within a torch. This enables a flow of current from the power supply to the electrode **104** via the resilient element **122** and/or the contact surface **310**, depending on the mode of torch operation. In some embodiments, at least one vent hole **316** (or gas exit orifice) is disposed in the end cap **106**, extending from an interior surface to an exterior surface of the body **300** to cool the cartridge **100**. For example, a vent hole **316** can be located on the circular portion **302**. Alternatively, vent hole(s) **316** are absent from the end cap **106**.

In one exemplary operation, during pilot arc initiation, the power supply provides a pilot arc current to the end cap **106** and the pilot arc current is passed to the electrode **104** through the resilient element **122** that biases the electrode **104** against nozzle **108**. As the resilient element **122** urges the electrode **104** into abutting relation with the nozzle **108**, there is an absence of physical contact and electrical communication between the contact surface **310** of the end cap **106** and the corresponding contact surface **128** of the electrode **104**. The resilient element **122** can be configured to pass substantially all of the pilot arc current from the end cap **106** to the electrode **104**.

During pilot arc initiation, a gas is introduced into the plasma chamber **140** between the electrode **104** and the nozzle **108**. Gas pressure can build within the plasma chamber **140** until the pressure is sufficient to overcome the separation force exerted by the resilient element **122**. At that point, the gas pressure moves the electrode **104** toward the end cap **106** and away from the nozzle **108** along the longitudinally axis A (while compressing the resilient element **122**) until the corresponding contact surface **128** of the electrode **104** comes into physical contact with the contact surface **310** of the end cap **106**. As the electrode **104** is moved away from the nozzle **108** by gas pressure, an arc is generated or initiated in the plasma chamber **140** to form a plasma arc or jet that can be transferred to a workpiece (not shown).

During transferred arc mode, the corresponding contact surface **128** of the electrode **104** engages in substantially planar physical contact with the contact surface **310** of the end cap **106** to establish electrical communication (e.g., electrical current passes between the end cap **106** and the electrode **104** at the interface of the contact surface **310** and the corresponding surface **128**). When the contact surface **310** of the end cap **106** abuts the corresponding surface **128** of the electrode **104**, a current path is established such that at least a portion of a current passes directly between the two components. When the arc has been transferred to the workpiece, a cutting current is supplied to the torch (e.g., during transferred arc mode). The cutting current can be passed from the end cap **106** to the electrode **104** during transferred arc operation via (1) the resilient element **122** and/or (2) the interface between the contact surfaces **310**, **128**. In some embodiments, the current path directly between the end cap **106** and the electrode **104** has lower resistance and/or higher conductance than the current path from the end cap **106** through the resilient element **122** to the electrode **104**. Hence, substantially all of the electrical current for sustaining a plasma arc (in transferred arc mode) can be passed directly between the contact surfaces **128**, **310**.

In some embodiments, the resilient element **122** is formed from a material that facilitates both carrying an electrical current and dissipating thermal heat associated with the current to prevent the resilient element **122** from melting. For example, the material of the resilient element **122** can be selected based on the current rating of the material. In some embodiments, the resilient element **122** comprises a helical compression spring, wire, or metal strip. For example, different types of resilient element **122** configurations are described in U.S. Ser. No. 13/344,860, assigned to Hypertherm, Inc., of Hanover, N.H., the contents of which are hereby incorporated herein by reference in their entirety.

In some embodiments, the end cap **106** is fabricated from an electrically conductive material, such as copper, copper alloy, brass, or other materials suitable for passing current both during pilot arc operation and transferred arc operation. The end cap **106** can be formed using a stamping approach from a material blank.

In another aspect, the cartridge **100** can additional include a shield. FIG. **8** shows an exemplary shield **600** compatible with the cartridge **100** of FIG. **1**, according to an illustrative embodiment of the invention. The shield **600** can be made from a conductive material, such as copper or silver. The shield **600** can be affixed to the nozzle **108** via one of crimping, threading and snap-fit. In some embodiments, a flow passageway (not shown) is disposed in the nozzle **108** to allow a gas (e.g., a shield gas) to flow through/by the nozzle **108** to the shield **600**.

FIG. **9** is an exploded view of the cartridge **100** of FIG. **1**, according to an illustrative embodiment of the invention. FIG. **9** shows the nozzle **108**, the electrode **104**, the swirl ring **102**, the resilient element **122**, the sealing device **150**, and the end cap **106** in an unassembled state before forming the cartridge **100**. In some embodiments, the insert **142** is also a part of the cartridge **100**. During assembly, the electrode **104** is housed in the chamber formed by the coupling of the nozzle **108** to the distal end **110** of the swirl ring **102**. The nozzle **108** can be securely affixed to the outer wall of the swirl ring **102** through the retention element **216** (e.g., a groove disposed on the swirl ring **102** against which the nozzle **108** is crimped or a thread to which the nozzle **108** is threaded). This interconnection secures the electrode **104** within the cartridge **100** while the inner wall of the swirl ring axially aligns the electrode **104** about the longitudinal axis A with respect to the nozzle **108** such that the electrode **104** is limited in its axial motion. The resilient element **122** is inserted into the swirl ring **102** from its proximal end **112** until it contacts the proximal end **124** of the electrode **104** within the swirl ring **102**. The end cap **106** is then securely affixed to the proximal end **112** of the swirl ring **102** while substantially confining the resilient element **122** in the circular portion **304** of the end cap **106** and axially aligning the resilient element relative to the end cap **106**. The end cap **106** can be connected to the swirl ring **102** through the retention element **230** (e.g., a groove disposed on the swirl ring **102** against which the end cap **106** is crimped or a thread to which the end cap **106** is threaded). This interconnection enables the biasing surface **308** of the end cap **106** to bias the resilient element **122** against the proximal end of the electrode **104**, thereby urging it into an abutting position with the nozzle **108**. This interconnection also longitudinally aligns the electrode **104** with respect to the end cap **106** such that during the transferred arc mode, the electrode **104** is only able to retract from the nozzle **108** far enough until it

abuts the contact surface **310** of the depressed portion **304** of the end cap **106**. Furthermore, the sealing device **150** can be disposed around an exterior surface of the proximal end **112** of the swirl ring **102** either before or after the end cap **106** is affixed to the swirl ring **102**. In some embodiments, the swirl ring **702** of FIGS. **5***a* and *b* are used in the cartridge **100** in place of the swirl ring **102**.

In some embodiments, a method is provided to assemble the cartridge **100** of FIG. **1**. First, a thermoplastic material is molded to form the swirl ring **102** or **702**. Various features of the swirl ring **102** or **702** can be created during the same molding process, such as the gas flow openings **136** and/or the nozzle retention surface **216** molded at the distal end **110** of the swirl ring **102**. Similar features can be molded onto the swirl ring **702**. During assembly, the electrode **104** can be disposed inside of the hollow body of the swirl ring **102** or **702**. The inside wall of the swirl ring **102** or **702** can radially align the electrode **104**. The electrode can be retained within the swirl ring **102** or **702** by fixedly securing the nozzle **108** to the distal end **110** of the swirl ring **102** or **702** via the nozzle retention surface **216** or **716**, respectively. For example, the fixedly securing can be achieved through one of crimping, threading or snap-fitting with respect to the nozzle retention surface **216** or **716**. Upon affixing the nozzle **108** to the swirl ring **102** or **702**, a radial centering of the nozzle exit orifice **144** with respect to the distal end **125** of the electrode **104** is established. The electrode **104** can be longitudinally aligned relative to the nozzle **108** by fixedly securing an end cap **106** to the proximal end **112** of the swirl ring **102** or **702** via the cap retention element **230** or **730**, respectively, thereby establishing the longitudinal alignment during a transferred arc operation of the cartridge **100** when a gas flow is used to bias the electrode **104** into contact with the end cap **106**. Specifically, during the transferred arc mode, the longitudinal alignment includes restraining a longitudinal motion of the electrode **104** to within a blow-back distance defined by the distal end **125** of the electrode **104** and the exit orifice **144** of the nozzle **108**. In some embodiments, the resilient element **122** is inserted into the end cap **106** and housed in the tunnel portion **302** of the end cap **106** prior to affixing the end cap to the swirl ring **102** or **702**. In some embodiments, the sealing device **150**, such as in the form of an o-ring, can be located on an external surface of the swirl ring **102** or **702** at its proximal end **112** to engage an internal surface of the plasma arc torch body (not shown) when the the cartridge **100** is installed into the plasma arc torch body.

Test results have shown that the cartridge design **100** of FIG. **1**, operating at a current of 105 amps, can have the same or better performance than that of individual consumables (e.g., a nozzle, electrode, and swirl ring) assembled into a PMX 105 Amp plasma arc torch (operated at 105 amps), and at a lower manufacturing cost. Table 1 shows a comparison of performance and cost between the cartridge **100** and the individual consumables for a PMX 105 Amp plasma arc torch.

	Cartridge 100	PMX 105 Amp Torch
Anode life at 105 A (hours)	2.5	2.2
Max cut speed at ½" mild steel (in per minute)	95	95

The cost of the cartridge **100**, which represents the combined cost of a swirl ring, electrode and nozzle (i.e., without an end cap), is lower than the total cost of the individual consumables in a PMX 105 Amp torch, which includes the cost of just a nozzle and an electrode (i.e., when a swirl ring is not even considered). In term of performance, a torch having the cartridge **100** installed therein has comparable maximum cut speed as compared to a PMX 105 Amp torch that contains individual consumable components. Performance of a torch containing the cartridge **100** is also better in terms of anode life.

In addition to the benefits described above, there are many others benefits associated with using the cartridge **100** in a plasma arc torch. First, such a design promotes ease of use through quick change capabilities, short setup time and ease of consumable selection for an end user. It also provides consistent cut performance because a suite of consumables are changed at once when the cartridge is changed, where the cartridge promotes easy component alignment, thus accuracy and repeatability of torch operation. In contrast, variation in performance is introduced when components are changed individually at different times. For example, there is more room to make an error when an operator has to align and orient individual torch components relative to each other. In another example, long term re-use of the same component (e.g., a swirl ring) can cause dimensional alteration after each blow-out, thereby altering the performance quality even if all other components are changed regularly. In addition, since the manufacturing and/or installation cost of a cartridge is lower than the combined cost of a set of consumables, there is a lower cost associated with per cartridge change than per change of a set of consumables. Furthermore, different cartridges can be designed to optimize torch operation with respect to different applications, such as marking, cutting, maintaining long life, etc.

In some embodiments, the cartridge **100** is single use, meaning that disassembly and replacement of individual components at the end of the life of the cartridge is not practical or cost effective. The entire cartridge **100** is discarded and/or disposed (e.g., recycled), without replacing individual particular parts. If the cartridge **100** is recycled, in addition to recovering the copper, a benefit of constructing the swirl ring **102** of a thermoplastic material is that the material can be reheated, reshaped, and frozen repeatedly, thus making it easily recyclable. In contrast, Vespel™ and other thermal-set materials lack these characteristics that promote recyclability.

FIG. **10** is a sectional view of another exemplary consumable cartridge for a contact start plasma arc torch, according to an illustrative embodiment of the invention. As shown, the consumable cartridge **1000** has an inner component **1004** and an outer component **1002**. The outer component **1002** can include at least one of a shield **1012**, a retaining cap **1014**, a cap sleeve **1016** or an insulator component **1028**. In some embodiments, the outer component **1002** comprises two or more of these components fixedly secured to one another. The inner component **1004** can include at least one of a crown **1006**, a swirl ring **1007**, an electrode **1008**, or a nozzle **1010**. For example, the inner component **1004** can comprise all these components, as illustrated by the irregular box of FIG. **10**. The inner component **1004** can additionally include a resilient element **1026**, which can be substantially the same as the resilient element **122** of FIG. **1**, a sealing device **1030** and/or a signal device **2106**. The electrode **1008** of the cartridge **1000** can be substantially the same as the electrode **104** of FIG. **1**. For example, the electrode **1008** can include an emissive insert **1042** (e.g., same as the insert **142**).

Generally, the cartridge **1000** can include multiple consumable pieces that are assembled together as an integrated,

unitary device. In some embodiments, if any one of the elements in the cartridge **1000** needs replacement, the entire cartridge **1000** is replaced. The cartridge **1000** can use a blow-back contact starting mechanism for contact starting a plasma arc torch upon assembly into the torch. For example, the electrode **1008** can be a spring-forward electrode, which means that the resilient element **1026** (e.g., a spring) can exert a separating force on the proximal end of the electrode **1008** to bias the electrode **1008** away from the crown **1006** and toward the nozzle **1010**.

The outer component **1002** includes a substantially hollow body that defines a longitudinal axis A, a distal end **1017** (i.e., the end closest to a workpiece during operation of a plasma arc torch incorporating the cartridge **1000**), and a proximal end **1018** (i.e., the end opposite of the distal end **1017**). The inner component **1004** is adapted to be disposed substantially within the hollow body of the outer component **1002** with at least a portion of the inner component **1004** surrounded by the hollow body. The inner component **1004** can include an engagement feature disposed on an inner or outer surface to engage the outer component **1002** by longitudinally constraining (i.e., axially securing) the outer component **1002** relative to the inner component **1004** while permitting independent rotation of the components relative to each other (i.e., enabling rotatable engagement) when the cartridge **1000** is not assembled in a plasma arc torch. Such rotatable engagement and axial securement can be accomplished by one of crimping, snap fitting, frictional fitting or threading.

The inner component **1004** can include the nozzle **1010**, the swirl ring **1007**, the electrode **1008** and the crown **1006**. In some embodiments, the rotatable engagement and axial securement between the outer and inner components occurs between the nozzle **1010** of the inner component **1004** and the retaining cap **1014** of the outer component **1002** at the interface **1020** by one of a frictional fit, crimping, snap fit or threading connection. For example, the nozzle **1010** can include an engagement feature, such as a groove, circumferentially disposed on an external surface that allows a distal tip of the retaining cap **1014** to frictionally fit into the groove. In some embodiments, the nozzle **1010** is fixedly secured to (i.e., axially and radially restrains) the retaining cap **1014** at the interface **1020**. In this case, the rotatable engagement and axial securement between the outer and inner components can be indirectly accomplished by rotatable engagement and axial securement between the swirl ring **1007** and the nozzle **1010** of the inner component **1004** at the interface **1021**, where the nozzle **1010** is fixedly secured to the outer component **1002**. In some embodiments, the nozzle **1010** is fixedly secured to the retaining cap **1014** at the interface **1020**, and the swirl ring **1007** is fixedly secured to the nozzle **1010** at the interface **1021**. In this case, the rotatable engagement and axial securement between the outer and inner components can be indirectly accomplished by rotatable engagement and axial securement between the crown **1006** and the swirl ring **1007** of the inner component **1004** at the interface **1023**, where the swirl ring **1007** is fixedly secured to the outer component **1002** via its connection to the nozzle **1010**.

Generally, the inner component **1004** can be divided into a forward portion and a rear portion with respect to the location of the rotatable engagement and axial securement feature. For example, the forward portion includes the rotatable engagement and axial securement feature while the rear portion does not. That is, the rear portion can have no means for enabling axial securement and rotatable engagement with the outer component **1004**. As an example, if the rotatable engagement and axial securement feature is disposed on the nozzle **1010**, the forward portion of the inner component **1004** includes the nozzle **1010** and the rear portion includes the electrode **1008**, swirl ring **1007** and/or crown **1006**. As another example, if the rotatable engagement and axial securement feature is between the swirl ring **1007** and the nozzle **1010**, the forward portion of the inner component **1004** includes the swirl ring **1007** and the nozzle **1010**, while the rear portion includes the electrode **1008** and the crown **1006**. Upon rotatable engagement and axial securement of the inner and outer components at the forward portion of the inner component **1004**, the rear portion of the inner component **1004** is adapted to be substantially suspended within the hollow body of the outer component **1002**. Thus, via the rotatable engagement and axial securement of the inner and outer components at the forward portion, the rear portion can have little to no direct physical contact with the inner surface of the hollow body of the outer component **1002** while remaining substantially radially centered within the hollow body of the outer component **1002**.

In some embodiments, the cartridge **1000** includes a hollow region **1022** between the rear portion of the inner component **1004** and the proximal end **1018** of the outer component **1004**. As shown, the hollow region **1022** can include (i) a center cavity portion **1022*a*** in the recess of the crown **1006** and (ii) a tubular portion **1022*b*** between the outer surface of the crown **1006** and swirl ring **1007** and the inner surface of the retaining cap **1014** and cap sleeve **1016**. The tubular portion **1022*b*** can substantially surround the center cavity portion **1022*a*** and extend further into the cartridge **1000** than the center cavity portion **1022*a***. The hollow region **1022** is configured to receive a torch head (not shown) to enable mating between the rear portion of the inner component **1004** (e.g., the crown **1006**) and certain components of the torch head (e.g., a cathode), as described below in detail with reference to FIGS. **21** and **22**.

As described above, the outer component **1002** can include at least one of the shield **1012**, retaining cap **1014** or cap sleeve **1016** oriented substantially symmetrically about the longitudinal axis A. In some embodiments, the outer component **1002** also includes an insulator component **1028**. The retaining cap **1014** and/or the shield **1012** can be constructed from an electrically and/or thermally conductive material, such as copper or brass. The two components can be made of the same material or different materials (e.g., the shield **1012** can be made of copper and the retaining cap **1014** can be made of brass). The cap sleeve **1016** and/or the insulator component **1028** can be manufactured through injection molding of a plastic material (e.g., nylon resin) or a high-temperature thermoplastic material comprising a polymer formed of ether and ketone molecules (e.g., ether ketone based compounds), such as polyetheretherketone (PEEK). In some embodiments, at least one of the cap sleeve **1016** or insulator component **1028** is manufactured from the same or similar material as the swirl ring **102** or **702**. In some embodiments, the insulator component **1028** is manufactured from an electrically insulating material (e.g., plastic) that can withstand a higher temperature than that of the cap sleeve **1016**. Generally, each of the interfaces among various elements of the outer component **1002** can be formed by one of crimping, snap fit, frictional fit, or threading.

FIG. **11** is an exemplary configuration of the retaining cap **1014** of the cartridge **1000** of FIG. **10**. The retaining cap **1014** can have a substantially hollow body with a substantially uniform thickness. Uniform thickness of the retaining cap **1014**, coupled with a stamp technique for manufactures

the component, simplifies manufacturing procedure and minimizes manufacturing cycle time, consumable weight, and material usage. Generally, the retaining cap **1014** can include three substantially hollow, cylindrical portions—a distal portion **1106**, a middle portion **1107**, and a proximal portion **1108**. The portions can stack together along the longitudinal axis A and form a stepped configuration where the distal portion **1106** can have a smaller diameter in the radial direction (i.e., perpendicular to the axis A) than that of the middle portion **1107**, which can have a smaller diameter than that of the proximal portion **1108**.

In some embodiments, an interior surface the distal portion **1106** of the retaining cap **1014** includes a retention feature **1102** (e.g., a protrusion, tab or flange) configured to rotatably engage and axially secure to the forward portion of the inner component **1004** (e.g. at the nozzle **1010** of the inner component **1004**) via one of snap fit, frictional fit, crimping or threading, when the forward portion is disposed in the hollow body of the retaining cap **1014**. As shown, the retention feature **1102** comprises a protrusion **1102***a*, which can be generated by bending a portion of the wall of the retaining cap **1014**. The protrusion **1102***a* is adapted to snap fit into a groove on the nozzle **1010**. In addition, the retention feature **1102** includes a bumper **1102***b* adjacent to the protrusion **1102***a* to generate friction between the retaining cap **1014** and the nozzle **1010** upon engagement via frictional fit. The protrusion **1102***a* and the bumper **1102***b* are dimensioned as such that they permit the components to independently rotate relative to each other after engagement. Alternatively, the retention feature **1102** can be suitably configured to fixedly engage (i.e., axially and radially secure) the forward portion of the inner component **1004**. In some embodiments, a section of the retaining cap **1014**, such as the distal portion **1106** of the retaining cap **1014**, includes at least one vent hole **1112** extending from an interior surface to an exterior surface of the retaining cap **1014** to permit a flow of gas therethrough.

In some embodiments, the proximal portion **1108** of the retaining cap **1014** includes one or more threads **1104** to engage a torch head (not shown) of a plasma arc torch when the cartridge **1000** is installed into the torch. In some embodiments, two or more discrete threads **1104** (e.g., three threads) can be disposed circumferentially around an interior surface of the proximal portion **1108** of the retaining cap **1014** to engage a set complementary threads on the torch head, when at least a portion of the torch head is disposed in the hollow body of the proximal portion **1108**. Locking between the torch head and the retaining cap **1014** requires rotation of one component relative to the other by a degree depending on the number of discrete threads **1104** disposed on the retaining cap **1014**. For example, if there are three discrete threads **1104**, a rotation of only about 120 degrees is needed to lock the components to each other. This facilitates quick installation of the cartridge **1000** onto a plasma arc torch. In general, the retaining cap **1014** has sufficient material thickness and/or strength to retain the cartridge **1000** to the torch head via the threaded engagement.

FIGS. **12***a* and **12***b* are sectional and exterior profile views, respectively, of an exemplary cap sleeve **1016** overmolded onto the metallic retaining cap **1014** of FIG. **11**, which can form at least a portion of the outer component **1002**. As shown in FIG. **12***a*, the cap sleeve **1016** has a substantially hollow body, at least a portion of which is overmolded onto the external surfaces of the middle and proximal portions **1107**, **1108** of the retaining cap **1014**. In some embodiments, only the distal portion **1106** of the retaining cap **1014** is fully exposed. The cap sleeve **1016** can include a proximal end **1206** and a distal end **1208** along the longitudinal axis A. In some embodiments, the distal end **1208** of the cap sleeve **1016** includes one or more retention features for engaging the insulator component **1028**. For example, the distal end **1208** of the cap sleeve **1016** can be molded over the middle portion **1107** of the retaining cap **1014** as one or more tabs **1209**. A raised feature **1210** can be disposed on each the tabs **1209**. The combination of the tabs **1209** and the raised features **1210** can be used to engage the insulator component **1028**, as explained below in detail with reference to FIGS. **14***a-c*. In some embodiments, the cap sleeve **1016** includes one or more retention features for engaging the shield **1012**. For example, the cap sleeve **1016** can include at least one groove **1212** disposed on an external surface, against which a portion of the shield **1012** can be crimped to secure the two components together.

As shown in FIG. **12***b*, the cap sleeve **1016** substantially surrounds the retaining cap **1014** at its middle and proximal portions **1107**, **1108** and can extend proximally beyond the retaining cap **1014** in the longitudinal direction. In some embodiments, the interior diameter **1202** of the cap sleeve **1016** near where the cap sleeve **1016** overlaps with the proximal portion **1108** of the retaining cap **1014** is smaller than the interior diameter **1204** of the cap sleeve **1016** at the proximal end **1206** of the cap sleeve **1016**, such as by a draft of 0.5 degrees. This varying inner diameter along the length of the cap sleeve **1016** helps to guide insertion of the torch head (not shown) into the retaining cap **1014** and facilitates their relative alignment prior to rotation of one component relative to the other to achieve engagement at the discrete threads **1104** of the retaining cap **1014**.

FIG. **13** is an exemplary configuration of the insulator component **1028**, which can be a part of the outer component **1002** of the cartridge **1000** of FIG. **10** or a stand-alone element. The insulator component **1028** is generally circular in shape and constructed from an electrically non-conductive material. The insulator component **1028** can be located between the shield **1012** and the retaining cap **1014**/cap sleeve **1016** combination of the outer component **1002** to space the majority of the outer component **1002** (e.g., the retaining cap **1014** and the cap sleeve **1016**) from the shield **1012** and to electrically insulate the retaining cap **1014** from the shield **1012**. The insulator component **1028** includes a shoulder **1304**, also referred to as a contour, step, or flange, located at the distal end **1301** of the insulator component **1028**. The shoulder **1304** is oriented substantially perpendicularly to the longitudinal axis A. The shoulder **1304** defines an opening **1316** that complements the shape of the distal portion **1106** of the retaining cap **1014** and permits the distal portion **1106** therethrough. In some embodiments, the opening **1316** has a diameter that is substantially the same as or larger than the diameter of the distal portion **1106** of the retaining cap **1014**, but smaller than the diameter of the middle portion **1107** of the retaining cap **1014**, such that the middle portion **1107** cannot pass through the opening **1316**. An external surface of the shoulder **1304** can include one or more channels **1318** dispersed about the opening **1316** to provide a gas flow path such that a portion of a gas flowing to the shield **1012** can travel through the channels **1318** to cool the insulator component **1028** and the shield **1012**.

The insulator component **1028** also includes a substantially hollow cylindrical body **1302** located at the proximal end **1303** of the insulator component **1028**. The cylindrical body **1302** is disposed about the longitudinal axis A and extends along the longitudinal axis. In some embodiments, retention features are provided on the cylindrical body **1302**

to engage the insulator component **1028** with the shield **1012** and/or the cap sleeve **1016**. For example, a cap sleeve retention feature **1305** can include a slot **1306** extending from an interior surface to an exterior surface of the cylindrical body **1302**. The slots **1306** are defined by a plurality of extensions **1308** disposed about the cylindrical body **1302**, where each slot **1306** is situated between a pair of the extensions **1308**. The cap sleeve retention feature **1305** can also include at least one groove **1310** on an internal surface of the cylindrical body **1302** centered around a corresponding slot **1306** and on the extensions **1308**. The grooves **1310** and the slots **1306**, which made up the cap sleeve retention features **1305**, are configured to cooperatively engage the cap sleeve **1016** by one of frictional fit, snap fit, threading or crimping. A shield retention feature **1311** can include at least one groove disposed on an external surface of the cylindrical body **1302**, such as adjacent to a slot **1306**. The grooves **1311** are configured to engage the shield **1012** via crimping, for example.

FIGS. **14***a-c* are various views of the insulator component **1028** of FIG. **13** fixedly secured to the cap sleeve **1016** and the retaining cap **1014**. The three components **1028**, **1016**, **1014** can form at least a portion of the outer component **1002**. During assembly, the distal portion **1106** of the retaining cap **1014** can slide through the opening **1316** defined by the shoulder **1304** of the insulator component **1028** until an interior surface **1320** of the shoulder **1304** abuts against an exterior surface **1110** of the middle portion **1107** of the retaining cap **1014** and no further advancement is possible. At this point, the combination of the retaining cap **1014** and the cap sleeve **1016** are securely seated against the insulator component **1028**, with the insulator component **1028** substantially surrounding the exterior surface **1110** of the middle portion **1107** of the retaining cap **1014**. The grooves **1310** and the slots **1306** of the cap sleeve retention feature **1305** of the insulator component **1028** can engage the retention feature **1210** of the cap sleeve **1016** via frictional fit, for example, to connect the insulator component **1028** to the cap sleeve **1016**. The friction for the frictional fit can be supplied by the crimping force of the shield **1012** when it is attached to the insulator component **1028**. Specifically, the grooves **1311** of the insulator component **1028** can provide a surface to which the shield **1012** is crimped against to fixedly connect the insulator component **1028** to the shield **1012**. In addition, the connection between the insulator component **1028** and the cap sleeve **1016** also fixedly engages the insulator component **1028** to the retaining cap **104** via its fixed connection to the cap sleeve **1016** (i.e., the cap sleeve **1014** is overmolded onto the middle portion **1107** of the retaining cap **1014**).

FIG. **14***c* illustrates a cross-sectional view of the assembly comprising the insulator component **1028**, the cap sleeve **1016** and the retaining cap **1014**, where the cross-sectional view is in the radial plane and from the perspective of a viewer at the distal end of the assembly. As shown, upon abutment of the insulator component **1028** against the retaining cap **1014**, the one or more grooves **1310** in the interior surface of the insulator component **1028** can snap fit with the tabs **1209** of the cap sleeve **1014**, while the raised regions **1210** of the cap sleeve **1014** can be inserted into the slots **1306** of the insulator component **1028**. Such snap fit connection can fixedly join the insulator component **1028** with the cap sleeve **1016** (and also to the retain cap **1014** through the overmolded cap sleeve **1016**). Because the cross-sectional dimension of each raised region **1210** is less than that of each slot **1306**, each raised region **1210** is adapted to leave at least a portion of each slot **1306** unobstructed, thus permitting gas flow therethrough. As shown in FIG. **14***c*, the cap sleeve **1016** and the insulator component **1028** can engage at four locations radially disposed around the longitudinal axis A. In other embodiments, fewer or more engagement locations are constructed.

FIG. **15** is an exemplary configuration of the shield **1012**, which can be a part of the outer component **1002** of the cartridge **1000** of FIG. **10** or a stand-alone piece. The shield **1012** of FIG. **15** can be used in a hand-cutting plasma arc torch. The shield **1012** comprises a substantially hollow body. A section in a proximal portion **1502** of the hollow body can be crimped against one or more grooves **1212** on the distal end **1208** of the cap sleeve **1014** to securely connect the shield **1012** to the cap sleeve **1016**. Another section of the proximal portion **1502** can be crimped against the grooves **1311** of the insulator component **1028** to securely connect the shield **1012** to the insulator component **1028**. These connections also fixedly engage the shield **1012** to the retaining cap **1014** via their common connection (either directly or indirectly) to the cap sleeve **1016**. Other means for connecting the shield **1012** to the cap sleeve **1016** and/or the insulator component **1028** are also within the scope of the present invention, including threading or snap fit. The shield **1012** can also include a shield exit orifice **1506** and one or more gas vent holes **1504** disposed on a body of the shield **1012** extending from an interior surface to an exterior surface of the shield **1012**.

FIG. **16** is another exemplary shield **1600** that is compatible with the cartridge **1000** of FIG. **10**. The shield **1600** can be used in a mechanized plasma arc torch. The shield **1600** can also include a proximal portion **1602** that is substantially the same as the proximal portion **1502** of the shield **1012** of FIG. **15** to securely connect the shield **1600** to the cap sleeve **1016** and the insulator component **1028** by one of crimping, frictional/snap fit or threading. The shield **1600** can also include a shield exit orifice **1606** and one or more gas vent holes **1604**, similar to the shield **1012** of FIG. **15**.

In other embodiments, the shield **1012** can be substantially the same as the shield **800** described above with respect to FIG. **8**. In some embodiments, the insulator component **1028** is dimensioned to align and center the shield **1012** relative to the retaining cap **1014** and the cap sleeve **1016** in the radial direction. As clearly illustrated in FIG. **10**, the insulator component **1028** spaces the shield **1012** from the combination of retaining cap **1014** and cap sleeve **1016**. Thus, when the shield **1012** is fixedly connected to the cap sleeve **1016** and/or the insulator component **1028**, the tight tolerance among the components minimizes radial movement of the shield **1012** that can result in its radial misalignment.

As described above with reference to FIG. **10**, the inner component **1002** can include at least one of the crown **1006**, electrode **1008**, swirl ring **1007** or nozzle **1010** oriented substantially symmetrically about the longitudinal axis A. The inner component **1002** can additionally include the resilient element **1026**, the sealing device **1030** and/or the signal device **2106**. Generally, each of the interfaces among various elements of the inner component **1004** can be formed by one of crimping, snap fit, frictional fit, or threading to fixedly connect (i.e., axially and radially secure) or axially secure and rotatably engage the components. In some embodiments, the inner component **1004** is substantially the same or similar to the cartridge **100** described above with reference to FIG. **1**. For example, the electrode **1008** can be substantially the same as the electrode **104** of FIG. **2**. The electrode **1008** can be relatively flat near the proximal end

such that the electrode **1008** provides a stable surface for contacting the resilient element **1026**.

The nozzle **1010** can be a part of the inner component **1004** of the cartridge **1000** in FIG. **10**. The nozzle **1010** can define, in relation to the electrode **1008**, a plasma chamber **1040**. In some embodiments, the nozzle **1010** is substantially the same as the nozzle **108** of FIG. **3**. FIG. **17** shows another exemplary configuration of the nozzle **1010** of the cartridge **1000** of FIG. **10**. The nozzle **1010** defines a distal portion **1704**, a middle portion **1705**, and a proximal portion **1706** along the longitudinal axis A. The nozzle **1010** can include a retention feature at the proximal portion **1706**, such as an indent **1702** with an inner surface **1702***a* and an outer surface **1702***b*, configured to connect the nozzle **1010** to the distal end of the swirl ring **1007** at the interface **1021** (as shown in FIG. **10**). For example, the distal end of the swirl ring **1007** can be inserted into the indent **1702**, and at least one of the inner surface **1702***a* or the outer surface **1702***b* of the indent **1702** can be crimped against a groove on the distal end of the swirl ring **1007** to secure the two components together. Connection between the nozzle **1010** and the swirl ring **1007** at the interface **1021** can be one of (i) rotatable engagement and axial securing or (ii) fixed engagement (i.e., axial and radial securing) via one of snap fit, crimping, frictional fit or threading. As will be described below, the engagement between the nozzle **1010** and the swirl ring **1007** is adapted to control the swirl strength of a gas at the interface **1021** as the engagement defines the size and shape of the swirl holes of the swirl ring **1007** upon assembly.

The nozzle **1010** can also include a retention feature in the middle portion **1705**, such as one or more grooves **1708** circumferentially disposed on an outer surface of the nozzle **1010**, to rotatably engage and axially secure the retention feature **1102** of the retaining cap **1014** to form the interface **1020** (as shown in FIG. **10**) via one of snap fit, frictional fit, crimping or threading. Alternatively, the retention feature **1708** can be configured to fixedly secure (i.e., axial and radial secure) the retaining cap **1014** thereto to form the interface **1020**. Upon engagement, the retaining cap **1014** substantially surrounds the outer surface of at least the middle portion **1705** and the proximal portion **1706** of the nozzle **1010**. The nozzle **1010** can further include a series of flat elements **1710***a* interspersed among a series of raised elements **1710***b* circumferentially disposed on an external surface of the middle portion **1705**. The raised elements **1710***b* facilitates radial alignment and centering of the nozzle **1010** relative to the retaining cap **1014** and the flat elements **1710***a* provide spacing between the nozzle **1010** and the retaining cap **1014** to permit gas flow therethrough.

FIG. **18** is cross-sectional view of an assembly comprising the nozzle **1010**, the retaining cap **1014** and the shield **1012**, where the cross-sectional view is in the radial plane and from the perspective of a viewer at the proximal end of the assembly. The assembly also includes the electrode **1008**. As shown, these components can be radially aligned and concentrically positioned with a common center **1802**. At least a portion of the electrode **1008** is disposed within a cavity defined by the inner wall of the nozzle **1010** that can radially align the electrode **1008** by limiting a radial movement of the electrode **1008**. At least a portion of the nozzle **1010** can be disposed within a cavity defined by the inner wall of the retaining cap **1014** that radially aligns the nozzle **1010** by limiting a radial movement of the nozzle **1010**. Specifically, the raised elements **1710***b* on the external surface of the nozzle **1010** are configured to abut against the correspond inner surface of the retaining cap **1014** to radially orient the nozzle **1010** relative to the retaining cap **1014**. The flat elements **1710***a* on the external surface of the nozzle **1010** allow spacing between the nozzle **1010** and the retaining cap **1014** such that a gas can flow therethrough. At least a portion of the retaining cap **1014** is disposed within a cavity defined by the inner wall of the shield **1012** that can radially align the retaining cap **1014** by limiting a radial movement of the retaining cap **1014**.

As described above, the swirl ring **1007** can be a part of the inner component **1004** of the cartridge **1000** in FIG. **10**. In some embodiments, the swirl ring **1007** is substantially the same as the swirl ring **102** of FIGS. **4***a* and **4***b*. In some embodiments, the swirl ring **1007** is substantially the same as the swirl ring **702** of FIGS. **5***a* and **4***b*. FIGS. **19***a-c* are various views of another exemplary configuration of the swirl ring **1007** of the cartridge **1000** of FIG. **10**. The swirl ring **1002** can be made of the same material and/or from the same manufacturing process as the swirl **102** or **702**. As shown, the swirl ring **1002** can be defined by a substantially hollow, elongated body having a distal end **1910** and the proximal end **1912** along the longitudinal axis A. The hollow body of the swirl ring **1007** is dimensioned to receive the electrode **1008** and substantially extend over the length of the electrode **1008** along the longitudinal axis A. The inner wall of the swirl ring **1007** can thus radially align the electrode **1008** by limiting a radial movement of the electrode **1008**. In some embodiments, the fins of the electrode **1008** are wider than the opening of swirl ring **1007** at the proximal end **1912** such that the electrode **1008** is hindered from exiting the swirl ring **1007** from the proximal end **1912**.

The interface **1021** can be formed between the distal end **1910** of the swirl ring **1007** and the nozzle **1008** to join the two consumable components together. The joining can fixedly secure (i.e., axially and radially secure) the swirl ring **1007** to the nozzle **1008** via one of snap fit, crimping, frictional fitting or threading. Alternatively, the joining can rotatably engage and axially secure the swirl ring **1007** to the nozzle **1008** (e.g., via one of snap fit, crimping, or frictional fitting) that permits the components to independently rotate relative to each other after engagement. For example, the swirl ring **1007** can include a nozzle retention surface **1930** (e.g., interior and/or exterior surface) of the swirl ring **1007** for fixedly securing or rotatably engaging and axially securing the nozzle **1010** at its distal end **1910**. The nozzle retention surface **1930** can be a feature (e.g., one or more grooves) located on the external surface of the swirl ring **1007** (e.g., on the extensions **1904**) to capture the nozzle **1010** through crimping. Alternatively, a similar retention surface can be disposed on the nozzle **1010** to retain the swirl ring **1007** thereto.

Another interface **1023** can be formed between the proximal end **1912** of the swirl ring **1007** and the crown **1006** to join the two consumable components together. The joining can fixedly secure the crown **1006** and the the swirl ring **1007** via one of snap fit, crimping, frictional fitting or threading. Alternatively, the joining can rotatably engage and axially secure the swirl ring **1007** to the crown **1006** (e.g., via one of snap fit, crimping, or frictional fitting) that permits the components to independently rotate relative to each other after engagement. For example, the swirl ring **1007** can include a retention feature **1932** located on a surface (e.g., interior and/or exterior surface) of the swirl ring **1007** for fixedly securing or rotatably engage and axially securing the crown **1006** at its proximal end **1912**. The retention feature **1932** can be one or more grooves located around an external surface of the swirl ring **1007** to capture the crown **1006** through crimping, for example, to

form the interface **1023**. Alternatively, a similar retention feature can be disposed about crown **1006** to join the swirl ring **1007** thereto. In general, the interface **1021** and/or the interface **1023** form a chamber in which the electrode **1008** is disposed and aligned (longitudinally and radially) relative to the nozzle **1010** and the crown **1006**.

In some embodiments, the swirl ring **1007** has a set of radially spaced gas flow openings **1902** configured to impart a tangential velocity component to a gas flow for the plasma arc torch, causing the gas flow to swirl. This swirl creates a vortex that constricts the arc and stabilizes the position of the arc on the insert **1042**. The one or more gas flow openings **1902** are disposed about the distal end **1910** of its elongated body, such as around a circumference of its distal end **1910**. In some embodiments, the one or more gas flow openings **1902** are molded. Each gas flow opening **1902** can extend from an interior surface to an exterior surface of the elongated body and is oriented to impart a swirling motion relative to the axis A to the gas (e.g., air) flowing therethrough. Each gas flow opening **1902** can be circular or non-circular (e.g., rectangular, squared and/or square-cornered) in geometry. In some embodiments, the gas flow openings **1902** have substantially uniform dimensions. In some embodiments, as shown in FIG **19**, the gas flow openings **1902** are at least partially defined by slots **1903** at the distal end **1910** of the swirl ring **1007**. These gas flow slots **1903** are formed by a plurality of extensions **1904** spaced apart at regular or non-regular intervals around the circumference of the distal end **1910**, where each slot **1903** is situated between a pair of the extensions **1904**. Upon the swirl ring **1007** being engaged to the nozzle **1010**, the slots **1903** are closed off by the proximal portion **1706** of the nozzle **1010** to create bounded holes. Hence, each gas flow opening **1902** can be a two-piece composite opening cooperatively defined by the nozzle **1010** and the swirl ring **1007**. The nozzle **1010** can control the swirling strength of a gas therethrough by dimensioning the size and shape of the gas flow opening **1902** upon assembly.

In some embodiments, the swirl ring **1007** has a set of fins **1914** radially spaced around an external surface between the distal end **1910** and proximal end **1912**. As illustrated in FIG. **19**C, three fins **1914** are disposed around an external surface of the swirl ring **1007**. Fewer or more fins are possible. The fins **1914** are configured to radially align and center the swirl ring **1007** relative to the retaining cap **1014** upon assembly of the cartridge **1000**. As described above, when the inner component **1004** and the outer component **1002** are joined to form the cartridge **1000**, the rear portion of the inner component **1004**, which can include the swirl ring **1007**, can be substantially suspended within the hollow body of the outer component **1002** and can be relatively detached from the outer component **1002** other than at the point of engagement between the inner and outer components. The fins **1914** are configured to radially align the swirl ring **1007** within the hollow body of the outer component **1002** (i.e., within the cavity defined by the inner wall of the retaining cap **1014**) by limiting a radial movement of the swirl ring **1007** within the hollow body. Thus, each fin **1914** has a radial length **1916** that can be less than or equal to the radial distance between the external surface of the swirl ring **1007** (i.e., without the fins **1914**) and the inner surface of the retaining cap **1014** when the swirl ring **1007** is centered within the retaining cap **1014**. The fins **1914** can have substantially uniform dimensions. The fins **1914** can be a plurality of protrusions spaced apart at regular or non-regular intervals around an external circumference of the swirl ring **1007**. The radial spacing between the fins **1914** allows gas to flow therethrough. In addition, each fin **1914** can be constructed such that there is a clearance between the fin **1914** and the corresponding inner sidewall of the retaining cap **1014** when the swirl ring **1007** is centered within the retaining cap **1014** to allow a gas flow therethrough. Alternatively, the fins **1914** can be located on other components of the cartridge **1000** to accomplish the same radial alignment function. For example, the fins **1914** can be disposed in an internal surface of the outer component **1002**, such as on an internal surface of the retaining cap **1014**, to radially align the inner and outer components upon engagement. In some embodiments, the fins **1914** comprise a mechanism (not shown) for securing the swirl ring **1007** to the retaining cap **1014** via, for example, snap fit. This connection can replace the securement mechanism between the nozzle **1010** and the swirl ring **1007** at the interface **1021**.

As described above, the crown **1006** can be a part of the inner component **1004** of the cartridge **1000** in FIG. **10**. In some embodiments, the crown **1006** is substantially the same as the end cap **106** illustrated in FIGS. **7***a* and **7***b*. FIGS. **20***a* and *b* are exemplary configurations of the crown **1006** of the cartridge **1000** of FIG. **10**. The crown **1006** provides at least one of the following functions: (i) rotatably engaging and axially securing or fixedly securing the swirl ring **1006** at the proximal end **1912** of the swirl ring **1006** to form the interface **1023**, thereby aligning the electrode **1008**; (ii) mating with a cathode (not shown) of a torch head (not shown) upon assembly of the cartridge **1000** into a plasma arc torch (not shown); (iii) providing a holder for the resilient element **1026**; and (iii) passing an electrical current from the cathode (e.g., a power contact for directing current from a power supply) to the electrode **1008** in a blow-back contact-start configuration.

As illustrated in FIG. **20***a*, the crown **1006** has a substantially hollow body **2000** defining a proximal end **2020** and a distal end **2022**. The hollow body **2000** includes a circular raised portion **2002** and a depressed center **2004**. The circular raised portion **2002** defines a substantially hollow protrusion extending toward the proximal end **2020** of the crown **1006** and the depressed center **2004** defines a cavity extending away from the proximal end **2020**. The depressed center **2004** can be defined by a relatively cylindrical sidewall **2004***a* and a relatively flat bottom wall **2004***b*. In some embodiments, the body **2000** of the crown **1006** has a substantially uniform thickness, thereby promoting efficient and uniform current passage and assisting with the establishment of precise consumables alignment. Uniform thickness of the crown **1006**, coupled with a stamp manufacturing technique, also simplifies manufacturing and minimizes manufacturing cycle time, consumable weight, and material usage.

In some embodiments, similar to the crown **106**, an interior surface **2008** of the raised portion **2002** at the proximal end **2020** defines a biasing surface for physically contacting and electrically communicating with the resilient element **1026**. The resilient element **1026** can bias against the proximal end of the electrode **1008** so as to move the electrode **1008** away from the crown **1006**. That is, the resilient element **1026** is situated between and physically contacts the biasing surface **2008** of the crown **1006** and the proximal end of the electrode **1008** such that the resilient element **1026** imparts a separation force between the electrode **1008** and the biasing surface **2008**.

In some embodiments, similar to the crown **106**, an interior surface of the depressed center **2004** of the crown **1006** at the distal end **2022** defines a contact surface **2010** that is configured for physical contact and electrical com-

munication with a corresponding contact surface **1044** of the electrode **1008** at its proximal end. During the transferred arc mode, the contact surface **2010** of the crown **1006** is in an abutting relationship with the corresponding contact surface **1044** of the electrode **1008**. However, during the initiation of a pilot arc in the pilot arc mode, the contact surface **2010** is in a spaced relationship with the corresponding contact surface **1044** that is defined by an absence of contact between the two surfaces.

In some embodiments, similar to the crown **106**, the resilient element **1026** is generally maintained between the crown **1006** and the electrode **1008**. The resilient element **1026** can be a part of the inner component **1004** and can be secured to either the crown **1006** or the electrode **1008**. In other embodiments, the resilient element **1026** is secured to both the electrode **1008** and the crown **1006**. For example, the resilient element **1026** can be secured by welding, soldering, bonding, fastening, a diametral interference fit or another type of friction fit to the crown **1006** and/or the electrode **1008**. In some embodiments, the substantially hollow body **2000** of the crown **1006** is configured to house the resilient element **1026** between its biasing surface **2008** and the proximal end of the electrode **1008**. For example, the raised portion **2002** of the crown **1006** can function as a holder of the resilient element **1026**. Specifically, the resilient element **1026** can be held in place by the biasing surface **2008**, an inner interior surface **2012**, and an outer interior surface **2014** of the raised portion **2002**, where the diameter of the inner interior surface **2012** with respect to the longitudinal Axis A is slightly smaller than the inner diameter of the resilient element **1026**, and the diameter of the outer interior surface **2014** with respect to the longitudinal Axis A is slightly larger than the outer diameter of the resilient element **1026**.

In some embodiments, radial movement of the resilient element **1026** is further restrained by the proximal end **1912** of the swirl ring **1007** after the swirl ring **1007** is affixed to the crown **1006**. As shown in FIG. **10**, after the crown **1006** is coupled to the swirl ring **1007** (e.g., by being crimped into the engagement groove **1932** of the swirl ring **1007**), the lip portion **1934** of the swirl ring **1007** can extend into the interior of the raised portion **2002** of the crown **1006**. Therefore, the lip portion **1934** can further restrain and guide the positioning of the resilient element **1026** inside of the crown **1006**.

In some embodiments, the depressed center **2004** of the crown **1006** is configured to substantially surround and house a cathode (not shown) of a torch head (not shown) when the cartridge **1000** is coupled to the torch head. The cathode can physically mate with at least one of the side wall **2004***a* or bottom wall **2004***b* of the cavity defined by the depressed center **2004**. Upon mating with the cathode, the crown **1006** is adapted to pass an electrical current from the cathode to the electrode **1008** in a pilot mode or transferred arc mode of operation. For example, in a pilot mode of operation, an electrical current can be passed from the cathode, substantially through the side wall **2004***a* of the crown **1006**, to the resilient element **1026** and to the electrode **1008**. In a transferred arc mode of operation, an electrical current can be passed from the cathode, substantially through the bottom wall **2004***b* of the crown **1006**, and directly to the electrode **1008** via the contact surfaces **2010**, **1044**.

In some embodiments, the raised portion **2002** is configured to contact and activate a consumable sensor inside of the plasma arc torch upon installation of the cartridge **1000** onto a torch head. This function of the raised portion **2002** will be described in detail below with reference to FIG. **22**. In some embodiments, an opening (not shown) extending from an interior surface to an exterior surface of the crown **1006** is disposed on the tip of the raised portion **2002**. The lip portion **1934** of the swirl ring **1007** can extend proximally into the crown **1006** through the opening to contact and activate the consumable sensor inside of the torch. In some embodiments, at least one optional vent hole **2016** (or gas exit orifice) is disposed in the crown **1006**, extending from an interior surface to an exterior surface of the body **2000**, to cool the cartridge **1000** (e.g., cooling the resilient element **1026**). For example, the vent hole **2016** can be located at the proximal tip of the raised portion **2002**. In some embodiments, the lip portion **1934** of the swirl ring **1006** can extend through the vent hole **2016** to activate the consumable sensor. In some embodiments, the swirl ring **1007** is a part of the crown **1006**.

In an alternative embodiment, as illustrated in FIG. **20***b*, an opening **2030** extends from an interior surface to an exterior surface of the crown **1006** at the distal end **2022** of the crown **1006**. The opening **2030** thus replaces the bottom wall **2004***b* of the cavity defined by the depressed center **2004**. In this case, the cathode is adapted to extend through the opening **2030** and physically contact the electrode **1008** in the transferred arc mode.

In another aspect, a component can be inserted between the nozzle **1010** and the outer component **1002** to control gas flow therebetween. FIG. **21** shows an exemplary spacer component **2150** that can be generally located between an outer surface of the middle portion **1705** of the nozzle **1010** and an inner surface of the middle portion **1107** of the retaining cap **1014**. The spacer **2150**, which can be in the form of a washer, can be a part of the inner component **1004** (i.e., secured to the inner component **1004**), a part of the outer component **1002** (i.e., secured to the inner component **1002**), or a stand-alone piece. The spacer **2150** can be a thin, substantially circular disk with a circular opening **2152** disposed in the center that is configured to surround a circumference of an external surface of the nozzle **1010** at its middle portion **1705**. For example, the spacer **2150** can be dimensioned such that (i) its outer diameter **2156** is about the same as or smaller than the interior diameter of the middle portion **1107** of the retaining cap **1014**, but greater than that of the distal portion **1106** of the retaining cap **1014**; and (ii) the diameter **2158** of the circular opening **2152** is same as or greater than that of the middle portion **1705** of the nozzle **1010**, but less than that of the proximal portion **1706** of the nozzle **1010**. In some embodiments, the circular opening **2152** has a plurality of gas passageways **2154** (e.g., in the form of rectangular slots, half circles, irregular shapes, letters, etc) connected thereto. The gas passageways **2154** can be radially dispersed around the circular opening **2152** at regular or irregular intervals. In some embodiments, the size, number and/or shape of the gas passageways **2154** are adjustable for different processes to permit different amount and/or pattern of gas therethrough. The spacer **2150** can be made from an electrically conductive material, such as brass, copper or aluminum.

FIG. **22** shows an exemplary plasma arc torch **2100** including the cartridge **1000** of FIG. **10** and a torch head **2102**. Generally, the hollow region **1022** of the cartridge **1000** (as shown in FIG. **10**) is configured to receive the torch head **2102** and couple the torch head **2102** thereto. FIG. **23** is an exemplary configuration of the torch head **2102** of FIG. **22**. The torch head **2102** defines a distal end **2202** and a proximal end **2204** along the longitudinal axis A. As shown, the distal end **2202** of the torch head **2102** generally has an

outer circular portion **2206**, an inner cavity portion **2208** surrounded by the outer circular portion **2206**, and a cathode **2210** disposed in the cavity portion **2208**, all of which are concentrically aligned along the longitudinal axis A. A consumable sensor **2104** can also be disposed in the cavity **2208** inside of the torch head **2102** substantially parallel to the cathode **2210**. The outer circular portion **2206** can extend further distally along the longitudinal axis A than the cathode **2210**. In some embodiments, an external surface of the outer circular portion **2006** includes one or more threads **2212** configured to engage the cartridge **1000**. In some embodiments, the consumable sensor **2104** is a switch located in the interior of the torch head **2102**. The consumable sensor **2104** can be in the form of a plunger, such that when it is not activated, the plunger is in an extended position. Upon activation of the consumable sensor **2104**, the torch **2100** can provide a flow of current from the torch head **2102** to the cartridge **1000** to enable torch operations.

Referring to FIG. **22**, the hollow region **1022** of the cartridge **1000** is shaped and dimensioned to complement the distal end **2202** of the torch head **2102** such that (i) the center cavity portion **1022***a* of the hollow region **1022** is adapted to mate with the cathode **2210** of the torch head **2102** and (ii) the extended tubular portion **1022***b* of the hollow region **1022** is adapted to mate with the outer circular portion **2206** of the torch head **2102**. The center cavity portion **1022***a* (i.e., the cavity defined by the depressed center **2004** of the crown **1006**) substantially surrounds and physically contacts at least a portion of the cathode **2210** by physically receiving the cathode **2210** extending into the cartridge **1000**. Thus, the crown **1006** is disposed between the cathode **2210** and the electrode **1008**, and the crown **1006** is adapted to electrically communicate with the cathode **2210** and/or the electrode **1008**. Specifically, the depressed portion of the crown **1006** provides an interface that allows the cathode **2210** to maintain direct electrical communication with the electrode **1008** at least in a transferred arc mode operation. In some embodiments, if there is an opening **2030** at the bottom of the depressed portion of the crown **1006** (as shown in FIG. **20***b*), the cathode **2210** can be disposed through the opening **2030** to maintain direct electrical communication and physical contact with the electrode **1008** at least in a transferred arc mode operation. In some embodiments, the cathode **2210** can be adjacent to and extend substantially parallel to the resilient element **1026**.

In some embodiments, mating between the cathode **2210** and the center cavity portion **1022***a* of the hollow body **1022** prevents the inner component **1004** (or at least the crown **1006** of the inner component **1004**) from rotating in the radial plane, thereby radially locking the crown **1006** into position. Such mating also allows the raised portion **2002** of the crown **1006** to press against the consumable sensor **2104** (e.g., to push the plunger into a retracted position), thereby activating the sensor **2104** and permitting the torch to operate. In alternative embodiments, one or more raised features (not shown) in other elements of the cartridge **1000** (e.g., on the swirl ring **1007**) can extend proximally pass the crown **1006** to press against the consumable sensor **2104** and activate the sensor **2014**. For example, the lip portion **1934** of the swirl ring **1007** can extend pass the vent hole **2016** or another hole (not shown) of the crown **1006** to contact and activate the consumable sensor **2104**.

Because the inner component **1004** and the outer component **1002** of the cartridge **1000** are independently rotatable in the axial plane, radial locking of the inner component **1004** still permits the outer component **1002** to rotate axially. Hence, upon fixed engagement between the cathode **2210** and the inner component **1004**, an operator can rotate the outer component **1002** axially such that the threads **1104** disposed on an inner surface of the retaining cap **1014** fixedly engage the complementary threads **2212** on the outer surface of the torch head **2102** to further secure the torch head **2102** to the cartridge **1000**. Alternatively, threads can be disposed on the inner component **1004**, such as on an outer surface of the swirl ring **1007** to engage the torch head **2102**.

In some embodiments, the sealing device **1030**, such as an o-ring, is coupled to an external surface of the swirl ring **1007** near its proximal end **1912** to engage an internal surface of the torch head **2102** when the cartridge **1000** is coupled to the torch head **2102**. The sealing device **1030** is configured to provide a leak-proof seal of fluids (e.g., gases) between the cartridge **1000** and the torch head **2102** at that location.

In some embodiments, the signal device **2106**, such an electrically writable and/or readable device, is attached to the swirl ring **1007** of the cartridge **1000** to transmit information about the swirl ring **1007** and/or other cartridge components in the form of one or more signals. Exemplary information encoded on the signal device **2106** can include generic or fixed information, such as a consumable's name, trademark, manufacturer, serial number, and/or type. In some embodiments, the encoded information is unique to the consumable, such as metal composition of the consumable, weight of the consumable, date, time and/or location of when the consumable was manufactured, etc. Information encoded to the signal device **2106** can also specify operating parameters and/or data about the consumable that is independent of a detectable physical characteristic of the consumable. The signal device **2106** can be a radio-frequency identification (RFID) tag or card, bar code label or tag, integrated circuit (IC) plate, or the like. In some embodiments, the signal device **2106** is a circular RFID tag coupled around an external surface of the swirl ring **1007** (e.g., via snap fit) near its proximal end **1912**. Generally, the signal device **2106** can be a part of the cartridge **1000** and positioned at a location in the cartridge **1000** away from metallic components that can interfere with signal transmission and reception. In some embodiments, a receiver **2107** can be disposed in the torch head **2102** or the cartridge **1000** to receive information wirelessly transmitted by the signal device **2106**. The receiver **2107** is adapted to process these signals to extract the pertinent data and forward the data to a processor (not shown) for analysis.

FIGS. **24***a* and *b* show exemplary pilot arc current flow paths through the cartridge **1000** of FIG. **10** during pilot arc initiation. Specifically, FIG. **24***a* shows an exemplary pilot arc current flow path **2400** through the cartridge **1000** if the electrode **1008** has at least one flange **2402** disposed around a circumference of the electrode body. In a pilot arc mode of torch operation, the flange **2402** is adapted to make contact with the nozzle **1010** instead of the distal end **2404** of the electrode **1008**. In addition, there may be a clearance between the distal end **2404** of the electrode **1008** and the nozzle **1010** when the flange **2402** makes contact with the nozzle **1010**. As describe above, a pilot arc current **2400** can be provided by a power supply (not shown) from the torch head **2102** to the cartridge **1000** upon activation of the consumable sensor **2104**. As shown, the pilot arc current **2400** is adapted to travel from the cathode **2210** of the the torch head **2102**, via the body **2000** of the crown **1006** where it contacts the cathode **2210**, to the resilient element **1026** housed inside of the crown **1006**. The pilot arc current **2400**

can pass to the electrode **1008** through the resilient element **1026** that biases the electrode **1008** against the nozzle **1010**. As the resilient element **1026** urges the electrode **1008** into an abutting relation with the nozzle **1010** at the flange **2402**, there is an absence of physical contact and electrical communication between the contact surface **2010** of the crown **1006** and the corresponding contact surface **1044** of the electrode **1008**. The resilient element **1026** can be configured to pass substantially all of the pilot arc current **2400** from the crown **1006** to the electrode **1008**. The current **2400** continues to flow from the flange **2402** of the electrode **1008**, to the nozzle **1010** and return to the power supply via the retaining cap **1014** and the torch head (not shown).

FIG. **24***b* shows an exemplary pilot arc current flow path **2450** through the cartridge **1000** if the electrode **1008** does not have any nozzle-contacting feature (e.g., the flanges **2402**) other than the distal end **2404**, where the halfnium **1042** is located. In this configuration, the pilot arc current path **2450** is similar to the pilot arc current path **2400** except the distal end **2404** of the electrode **1008** is adapted to contact the nozzle **1010** as the resilient element **1026** urges the electrode **1008** into an abutting relation with the nozzle **1010**.

After pilot arc initiation, a gas is introduced into the plasma chamber **1040** between the electrode **1008** and the nozzle **1010**. Gas pressure can build within the plasma chamber **1040** until the pressure is sufficient to overcome the separation force exerted by the resilient element **1026**. At that point, the gas pressure moves the electrode **1008** toward the crown **1006** and away from the nozzle **1010** along the longitudinally axis A (while compressing the resilient element **1026**) until the corresponding contact surface **1044** of the electrode **1008** comes into physical contact with the contact surface **2010** of the crown **1006**. As the electrode **1008** is moved away from the nozzle **1010** by gas pressure, an arc is generated or initiated in the plasma chamber **1040** to form a plasma arc or jet that can be transferred to a workpiece (not shown).

FIG. **25** shows an exemplary transferred arc current flow path through the cartridge **1000** of FIG. **10** during transferred arc mode of torch operation. In this mode, the corresponding contact surface **1044** of the electrode **1008** engages in substantially planar physical contact with the contact surface **2010** of the crown **1006** to establish electrical communication (e.g., electrical current passes between crown **1006** and the electrode **1008** at the interface of the contact surface **2010** and the corresponding surface **1044**). When the contact surface **2010** of the crown **1006** abuts the corresponding surface **1044** of the electrode **1008**, a current path is established such that at least a portion of the current passes directly between the two components. When the arc has been transferred to the workpiece, a cutting current is supplied to the torch (e.g., during transferred arc mode). The cutting current can be passed from the cathode **2210**, through the crown **1006**, to the electrode **1008** during transferred arc operation via (1) the resilient element **1026** and/or (2) the interface between the contact surfaces **2010**, **1044**. In some embodiments, as illustrated in FIG. **25**, the current path **2500** that is directly from the cathode **2210** to the electrode **1008** via the crown **1006** has lower resistance and/or higher conductance than the current path from the cathode **2210**, to the crown **1006**, and through the resilient element **1026** to the electrode **1008**. The lower resistance in the current path **2500** is further enhanced by the fact that the crown **1006** physically contacts both the cathode **2210** and the electrode **1008** during the transferred arc mode. Hence, substantially all of the electrical current **2500** for sustaining a plasma arc (in transferred arc mode) can be passed directly between the contact surfaces **2010**, **1044**.

Generally, the inner component **1002** is substantially conductive to support both the pilot arc mode and the transferred arc mode of operations. In addition, the crown **1006** can maintain direct physical and electrical contact with the cathode **2210** in both the pilot arc mode and transferred arc mode. The crown **1006** can also maintain direct physical and electrical contact with the electrode **1008** in the transferred arc mode. In some embodiments, there is an opening in the bottom wall **2004***b* of the depressed center **2004** of the crown **2006** that allows the cathode **2210** to physically contact and electrically communicate with the electrode **1008** in the transferred arc mode. In the pilot arc mode, the cathode **2210** may be physically separated from the electrode **1008** due to the separation force applied by the resilient element **1026** on the electrode **1008**.

FIG. **26** is an exemplary gas flow path through the cartridge **1000** of FIG. **10**. A gas flow **2602** can be introduced into the cartridge **1000** and travel toward the distal end **1017** of the outer component **1002** in a channel between an interior surface of the retaining cap **1014** and an exterior surface of the swirl ring **1007**. The gas flow **2602** is adapted to move over the fins **1914** disposed in the channel, where the fins **1914** can be on an external surface of the swirl ring **1007** and/or on an internal surface of the retaining cap **1014**. The gas flow **2602** is bifurcated at the distal end **1910** of the swirl ring **1007**, with (i) an electrode cooling flow **2604** directed through the set of gas flow slots **1903** on the distal end **1910** of the swirl ring **1007** and (ii) a retaining cap flow **2608** generally directed between the nozzle **1010** and the retaining cap **1014**. As depicted, the electrode cooling flow **2604** can be further bifurcated into two portions, a plasma chamber flow **2606** and a vent flow **2607**. The plasma chamber flow **2606** travels distally between an external surface of the electrode **1008** and an internal surface of the nozzle **1010** to cool both the electrode **1008** and the nozzle **1010** before reaching the plasma chamber **1040** to constrict the plasma arc therein. The plasma chamber flow **2606** can exit the plasma chamber **1040** through a nozzle exit orifice of the nozzle **1010** and the shield exit orifice **1506** of the shield **1012**. The vent flow **2607** is adapted to travel in a reverse direction to the proximal end **1018** of the outer component **1002** and exit the cartridge **1000** through the vent hole **2016** in the crown **1006**.

The retaining cap flow **2608** is adapted to travel in a channel between an internal surface of the retaining cap **1014** and an external surface of the nozzle **1010**. In some embodiments, the retaining cap flow **2608** can travel through one or more gas passageways **2154** on the spacer component **2150** located between the middle portion **1107** of the retaining cap **1014** and the middle portion **1705** of the nozzle **1010**. These gas passageways **2154** can be sized and dimensioned to regulate the gas flows therethrough. The retaining cap flow **2608** can continue to the section of the channel between the distal portion **1106** of the retaining cap **1014** and the middle portion **1705** of the nozzle **1010**. In some embodiments, the flat elements **1710***a* on the external surface of the nozzle **1010** provide spacing between the nozzle **1010** and the retaining cap **1014** to permit gas flow therethrough. At the distal portion **1106** of the retaining cap **1014**, one or more vent holes **1102** disposed on the retaining cap **1014** allows the retaining cap flow **2608** to flow out of the channel between the retaining cap **1014** and the nozzle **1010** and bifurcate into two portions—a distal shield flow **2610** and a proximal shield flow **2612**. The distal shield flow **2610** can travel toward the distal end **1017** of the outer component

1002 between the nozzle 1010 and the shield 1012 and exit the cartridge 1000 through either the shield exit orifice 1506 of the shield 1012 or the one or more vent holes 1504 on the shield 1012. The distal shield flow 2610 can cool the nozzle 1010 and the shield 1012. The proximal shield flow 2612 can flow proximally to pass through the slots 1306 and the gas channels 1318 of the insulator component 1028 disposed between the shield 1012 and the retaining cap 1014/cap sleeve 1016 assembly. The proximal shield flow 2612 can exit the cartridge 1000 via at least one vent hole 2620 located between the cap sleeve 1016 and the shield 1012. The proximal shield flow 2612 is adapted to cool the insulator component 1028 and the shield 1012.

In some embodiments, swirling and/or mixing of the gas flows (i.e., characterized by the presence of axial, radial, and circumferential components in the gas flows) can occurs at several locations throughout the cartridge 1000, such as at locations where the flow channels are relatively straight. For example, swirling and/or mixing of the vent flow 2607 can occur as it travels through the crown 1006. As another example, swirling and/or mixing of the retaining cap flow 2608 can occur as it travels in the channel between the interior surface of the distal portion 1106 of the retaining cap 1014 and the exterior surface of the middle portion 1705 of the nozzle 1010. As yet another example, swirling and/or mixing of the proximal shield flow 2612 can occur as it flows proximally through the insulator component 1028.

FIG. 27 is an exploded view of the cartridge 1000 of FIG. 10. FIG. 27 shows the shield 1012, the insulator component 1028, the cap sleeve 1016, the retaining cap 1014, the spacer component 2150, the nozzle 1010, the insert 1042, the electrode 1008, the resilient element 1026, the swirl ring 1007, the crown 1006, the sealing device 1030, and the signal device 2106. During assembly of the outer component 1002, the cap sleeve 1016 can be overmolded onto the retaining cap 1014 to substantially surround at least the middle portion 1107 and the proximal portion 1108 of the retaining cap 1014. The distal portion 1106 of the retaining cap 1014 can be substantially exposed. The insulator component 1028 can be fixed secured to the distal end 1208 of the cap sleeve 1016 (e.g., via snap fit) such that the distal portion 1106 of the retaining cap 1014 also passes through the opening 1316 of the insulator component 1028 and is substantially exposed. FIGS. 14*a-c* show an exemplary assembly of the retaining cap 1014, the cap sleeve 1016 and the insulator component 1028. The shield 1012 can be fixedly secured to the cap sleeve 1016 and the insulator component 1028 (e.g., via crimping). In some embodiments, at least one of the shield 1012, the insulator component 1028, the cap sleeve 1016 and the retaining cap 1014 (such as all of these components) form the outer component 1002. Upon assembly, the elements of the outer component 1002 are radially and concentrically aligned with respect to the longitudinal axis A.

During assembly of the inner component 1002, the electrode 1008 is housed in the chamber formed by the coupling of the nozzle 1010 to the distal end 1910 of the swirl ring 1007. The nozzle 1010 can be securely affixed to the swirl ring 1007 (e.g., via crimping). This interconnection secures the electrode 1008 within the inner component 1002 while the inner wall of the swirl ring axially aligns the electrode 1008 about the longitudinal axis A with respect to the nozzle 1010 such that the electrode 1008 is limited in its axial motion. The resilient element 1026 is inserted into the swirl ring 1007 from its proximal end 1912 until it contacts the relatively flat proximal end of the electrode 1008 within the swirl ring 1007. The crown 1006 is then securely affixed to the proximal end 1912 of the swirl ring 1007 while substantially confining the resilient element 1026 in the raised portion 2002 of the crown 1006 and axially aligning the resilient element 1026 relative to the crown 1006. The crown 1006 can be connected to the swirl ring 1007 through crimping, for example. This interconnection enables the biasing surface 2008 of the crown 1006 to bias the resilient element 1026 against the proximal end of the electrode 1008, thereby urging it into an abutting position with the nozzle 1010. This interconnection also longitudinally aligns the electrode 1008 with respect to the crown 1006 such that during the transferred arc mode, the electrode 1008 is only able to retract from the nozzle 1010 far enough until it abuts the contact surface 2010 of the depressed center 2004 of the crown 1006.

In some embodiments, the sealing device 1030 is disposed around an exterior surface of the swirl ring 1007 either before or after the crown 1006 is affixed to the swirl ring 1007. In some embodiments, the signal device 2106 is disposed around an exterior surface of the swirl ring 1007 to store and transmit information about one or more components of the cartridge 1000.

To assemble the cartridge 1000, the optional spacer 2150 can be first disposed into the substantially hollow body of the outer component 1002 from the proximal end 1206 of the cap sleeve 1016. The spacer 2150 can distally advance within the hollow body of the outer component 1002 until it reaches the distal end of the middle portion 1107 of the retaining cap 1014 and cannot advance further to move into the distal portion 1106 of the retaining cap 1014. At this point, the spacer 2150 is adapted to fit around and radially align with an interior circumference of the middle portion 1107 of the retaining cap 1014. The inner component 1004 can also be disposed into the hollow body of the outer component 1002 from the proximal end 1206 of the cap sleeve 1016. The distal end 1704 of the nozzle 1010 is adapted to move through the opening 2152 of the spacer 2150 and the opening in the distal portion 1106 of the retaining cap 1014. Such distal advancement of the inner component 1004 stops when the proximal portion 1706 of the nozzle 1010 contacts the spacer 2150 and the nozzle 1010 can no longer move through the opening 2152 of the spacer 2150. At this point, an operator can couple the outer component 1002 to the inner component 1004 to form the interface 1020 by rotatably engaging and axially securing the retention feature 1102 of the retaining cap 1014 with the retention feature 1708 on the nozzle 1010 (e.g., via snap fit) such that the two components are permitted to rotate independently relative to each other upon engagement.

In some embodiments, the engagement between nozzle 1010 and the retaining cap 1014 at the interface 1020 is fixed both axially and radially. Instead, rotational engagement and axial securement can occur at one of the interfaces 1021 or 1023. For example, the nozzle 1010 can be fixedly secured to the retaining cap 1014 at the interface 1020. Rotational engagement and axial securing between the inner and outer components occurs instead at the interface 1021 between the swirl ring 1007 and the nozzle 1010. As another example, the nozzle 1010 and the swirl ring 1007 can both be fixedly secured at the interfaces 1020 and 1021. Rotational engagement and axial securement between the inner and outer components occurs instead at the interface 1023 between the crown 1006 and the swirl ring 1007.

In some embodiments, a method is provided to assemble the cartridge 1000 of FIG. 10. The method can include disposing the inner component 1004 within a hollow body of the outer component 1002. In some embodiments, the spacer

2150 can be first disposed in the hollow body of the outer component **1002** prior to disposing the inner component **1004** within the hollow body. The method includes rotatably engaging and axially coupling the inner and outer components together by axially restraining the outer component **1002** relative to a forward portion of the inner component **1004** (e.g., at the nozzle **1010** of the inner component **1004**) while permitting independent rotation of the inner and outer components relative to each other. After such engagement, a rear portion of the inner component **1004** (e.g., the swirl ring **1007**, the electrode **1008**, the crown **1006** and the resilient element **1026**) can be substantially suspended and radially oriented within the hollow body of the outer component **1002**. Such radial alignment between the inner and outer components can be assisted by the fins **1914** that can be disposed on the surface of the swirl ring **1007** or another cartridge component (e.g., an inner surface of the retaining cap **1014**).

The inner component **1004** can be assembled by disposing the electrode **1008** inside of a hollow body of the swirl ring **1007**, retaining the electrode **1008** within the hollow body by fixedly securing the nozzle **1010** to the distal end **1910** of the swirl ring **1007**, and fixedly securing the crown **1006** to the proximal end **1912** of the swirl ring **1007**. The outer component **1002** can be assembled by over-molding the cap sleeve **1016** onto the retaining cap **1014**. In some embodiments, the outer component **1002** can further include the insulator component **1028** and/or the shield **1012** fixedly connected to the cap sleeve **1016** and/or the insulator component **1028**.

The cartridge **1000** can be coupled to the torch head **2102** of the plasma arc torch **2100** to enable torch operations. During assembly, the torch head **2102** can be inserted into the hollow body **1022** of the cartridge **1000** such that (i) the cathode **2210** of the torch head **2102** physically mates with the center cavity portion **1022***a* of the hollow body **1022** that is defined by the recess of the crown **1066**, and/or (ii) the extended outer circular portion **2206** of the torch head **2102** physically mates with the tubular portion **1022***b* of the hollow body **1022**. In this configuration, the crown **1006** is positioned between the cathode **2210** and the electrode **1008** and the three components are radially and longitudinally aligned. The crown **1006** is adapted to be aligned with the consumable sensor **2104**, at which position the inner component **1004** is radially fixed while the outer component **1002** of the cartridge **1000** is still independently rotatable. Thus, an operator can rotate the outer component **1002** to engage the threads **1104** on internal surface of the retaining cap **1014** of the cartridge **1000** with the complementary threads **2212** on the external surface of the outer circular portion **2206** of the torch head **2102**, thereby securing the torch head **2102** to the cartridge **1000**. Specifically, as the threads **1104** of the retaining cap **1014** are being rotated relative to the complementary threads **2212** of the torch head **2102**, the outer component **1002** moves both radially (rotation with the threads **1104**) and axially (advancement toward the torch head **2102**), and the inner component **1004** can move axially advancing toward the torch head **2102**, but not radially. When the threads **1104**, **2212** are engaged, the torch head **2102** is fully seated.

In some embodiments, after the engagement of the torch head **2102** and the cartridge **1000**, the raised portion **2002** of the crown **1006** or the extended lip **1934** of the swirl ring **1007** presses against the consumable sensor **2104** located in the interior of the torch head **2102** to activate a flow of electrical current from the cathode **2210** of the torch head **2102** to the cartridge **1000**. The flow of electrical current enables one of a pilot arc mode or a transferred arc mode of torch operation. In the pilot arc mode of operation, the electrical current flows from the cathode **2210** to the biasing surface **2008** at the proximal end **2020** of the crown **1006**, to the resilient element **1026** and to the electrode **1008** as a part of the current path. In the transferred arc mode of operation, the electrical current flows from the cathode **2210** to the contact surface **2010** at the distal end **2022** of the crown **1006**, and to the corresponding contact surface **1044** of the electrode **1008** as a part of the current path. Alternatively, in the transferred arc mode, the electrical current can flow directly from the cathode **2210** to the electrode **1008** as the two components physically contact each other.

It should be understood that various aspects and embodiments of the invention can be combined in various ways. Based on the teachings of this specification, a person of ordinary skill in the art can readily determine how to combine these various embodiments. Modifications may also occur to those skilled in the art upon reading the specification.

What is claimed is:

1. A crown for a plasma arc torch, the crown comprising:

a body defining a distal end that is closest to a workpiece during an operation of the plasma arc torch and a proximal end opposite of the distal end, the distal end of the body disposed adjacent to and aligned with a proximal end of an electrode of the plasma arc torch;

at least one raised feature at the proximal end of the body, the raised feature adapted to depress a consumable sensor inside of the plasma arc torch to permit a flow of electrical current from a power supply; and

a surface of the body having one of (i) a depressed center to conduct the electrical current through the body, or (ii) an opening adapted to provide the electrical current to the electrode.

2. The crown of claim **1**, wherein the surface comprises the depressed center and the crown further comprises:

a contact surface of the depressed center at the distal end of the body for physically contacting, during a transferred arc mode of the plasma arc torch, a corresponding surface of the electrode,

wherein the at least one raised feature is configured to activate the consumable sensor by pressing against the consumable sensor upon installation of the crown into the plasma arc torch, thereby permitting the flow of electrical current through the contact surface to the electrode during a transferred arc mode of the plasma arc torch.

3. The crown of claim **1**, wherein the body of the crown is substantially hollow and configured to retain a resilient element between a biasing surface of the body and the electrode.

4. The crown of claim **1**, wherein the body of the crown has a substantially uniform thickness.

5. The crown of claim **2**, wherein the body of the crown defines a cavity configured to receive at least a portion of a cathode of the plasma arc torch.

6. The crown of claim **5**, wherein the contact surface is located in an interior surface of the crown body defining the cavity.

7. A cartridge consumable of a multi-piece cartridge consumable for a plasma arc torch, the cartridge consumable comprising:

a crown defining a distal end that is closest to a workpiece during an operation of the plasma arc torch and a proximal end opposite of the distal end, the crown having one of a depressed center or an opening;

a swirl ring defining a distal end and a proximal end, the proximal end of the swirl ring disposed adjacent to and aligned with the distal end of the crown;

a nozzle fixedly connected to the swirl ring at the distal end of the swirl ring; and

an electrode disposed in a chamber defined by the crown, the swirl ring and the nozzle;

at least one of the crown, the electrode, the swirl ring or the nozzle comprising a raised feature extending proximally, the raised feature configured to depress a consumable sensor to permit a flow of electrical current from a power supply to the cartridge consumable.

8. The cartridge consumable of claim **7**, wherein the crown physically contacts a cathode of the plasma arc torch and is disposed between the cathode and the electrode.

9. The cartridge consumable of claim **8**, wherein the opening of the crown is configured to allow at least a portion of the cathode to pass therethrough to physically contact the electrode in a transferred arc mode of operating the plasma arc torch.

10. The cartridge consumable of claim **8**, wherein the depressed center of the crown defines a recess configured to permit the cathode to extend within the cartridge consumable and conduct the electrical current through the crown.

11. The cartridge consumable of claim **7**, wherein the cartridge consumable is substantially conductive.

12. The cartridge consumable of claim **7**, wherein a portion of the swirl ring is adapted to extend through an opening in the crown to depress the consumable sensor inside of the plasma arc torch.

13. The cartridge consumable of claim **8**, wherein a spring component is adapted to extend longitudinally and substantially parallel to the cathode upon installation of the multi-piece cartridge consumable in the plasma arc torch.

14. The cartridge consumable of claim **7**, further comprising a retention feature disposed on a surface of the cartridge consumable for rotationally engaging and axially securing an outer cartridge consumable of the multi-piece cartridge consumable.

15. The cartridge consumable of claim **14**, wherein the retention feature is disposed on a surface of at least one of the nozzle or the swirl ring.

16. The crown of claim **1** wherein the body includes an electrically conductive material.

17. A method of installing a cartridge into a plasma arc torch, the method comprising:

assembling the cartridge consumable of claim **7**;

securing a torch head to the cartridge that includes the cartridge consumable being at least a portion of an inner component and an outer component;

depressing, by the raised feature, the consumable sensor that is located inside of the torch head of the plasma arc torch; and

establishing an electrical current flow path, including providing the flow of electrical current, from the power supply through the torch head and to the cartridge based on the depressing.

18. The method of claim **17**, further comprising:

positioning the crown between a cathode of the torch head and the electrode; and

radially and longitudinally aligning the cathode, the crown and the electrode.

19. The method of claim **18**, further comprising enabling physical mating between the cathode and a recess of the crown.

20. The method of claim **18**, further comprising enabling physical contact between the cathode and the electrode via an opening of the crown during a transferred mode operation of the plasma arc torch.

21. The method of claim **17**, further comprising:

physically contacting, by a biasing surface at the proximal end of the crown, a resilient element; and

physically contacting, by a contact surface at the distal end of the crown, a corresponding surface of the electrode during a transferred arc mode of the plasma arc torch.

22. The method of claim **21**, further comprising permitting the flow of electrical current in the electrical current flow path through one of (i) the biasing surface to the resilient element during a pilot arc mode of the plasma arc torch or (ii) the contact surface to the electrode during the transferred arc mode.

23. The method of claim **17**, further comprising:

disposing the cartridge consumable within a hollow body of an outer component, the cartridge consumable being at least a portion of an inner component; and

axially restraining the inner component relative to the outer component while permitting independent rotation of the inner and outer components relative to each other.

24. The method of claim **23**, further comprising substantially suspending and radially orienting, by the axial restraining, a rear portion of the inner component within the hollow body of the outer component.

25. The method of claim **23**, further comprising radially aligning the inner component with respect to the outer component by one or more fins disposed on a surface of at least one of the inner or outer component.

26. The method of claim **17**, wherein the raised feature is disposed on the crown or the swirl ring.

* * * * *