US 20190332039A1

(19) United States
(12) Patent Application Publication
GIMA
(10) Pub. No.: US 2019/0332039 A1
(43) Pub. Date: Oct. 31, 2019

(54) **IMAGE FORMING APPARATUS**

(71) Applicant: **Oki Data Corporation**, Tokyo (JP)

(72) Inventor: **Satoshi GIMA**, Tokyo (JP)

(21) Appl. No.: **16/280,302**

(22) Filed: **Feb. 20, 2019**

(30) **Foreign Application Priority Data**

Feb. 27, 2018 (JP) 2018-033535

Publication Classification

(51) **Int. Cl.**

G03G 15/16	(2006.01)
G03G 21/12	(2006.01)
G03G 15/00	(2006.01)

(52) **U.S. Cl.**
CPC ... ***G03G 15/161*** (2013.01); *G03G 2215/1661* (2013.01); ***G03G 15/6517*** (2013.01); ***G03G 21/12*** (2013.01)

(57) **ABSTRACT**

An image forming apparatus includes a first conveyor, a cutter, a second conveyor, a detection image forming section, a detector, and a controller. The first conveyor conveys a print medium. The cutter cuts the conveyed print medium. The second conveyor conveys, in a first direction, the print medium cut by the cutter. The detection image forming section forms a detection image on the print medium and the second conveyor. The detector detects, at two positions in a second direction, the detection image formed on the print medium or the detection image formed on the second conveyor. The controller varies one or both of a conveying speed of the print medium to be conveyed by the first conveyor and a cutting speed of the print medium to be cut by the cutter, on the basis of a comparison of the detection image detected at the two positions.

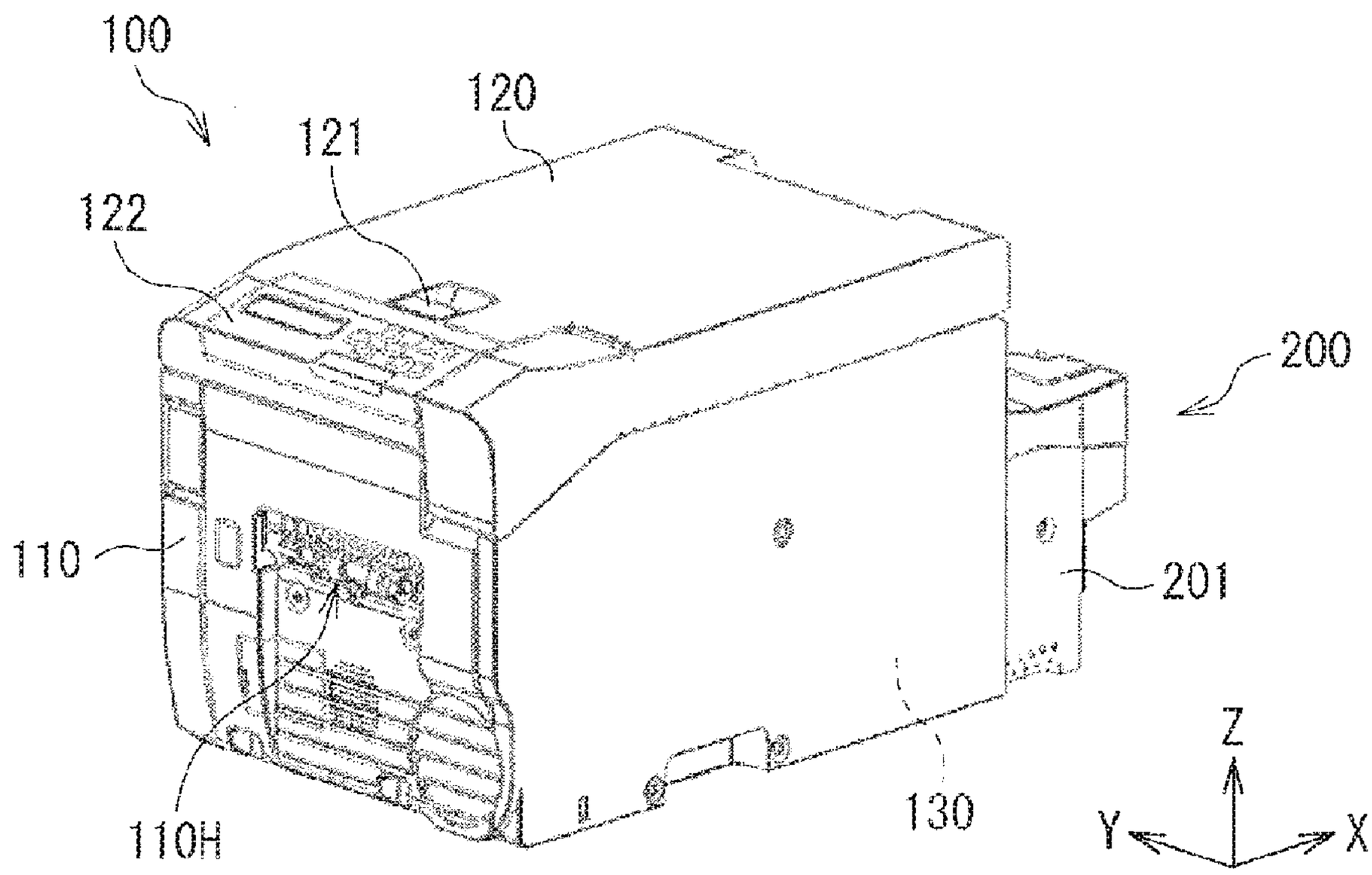

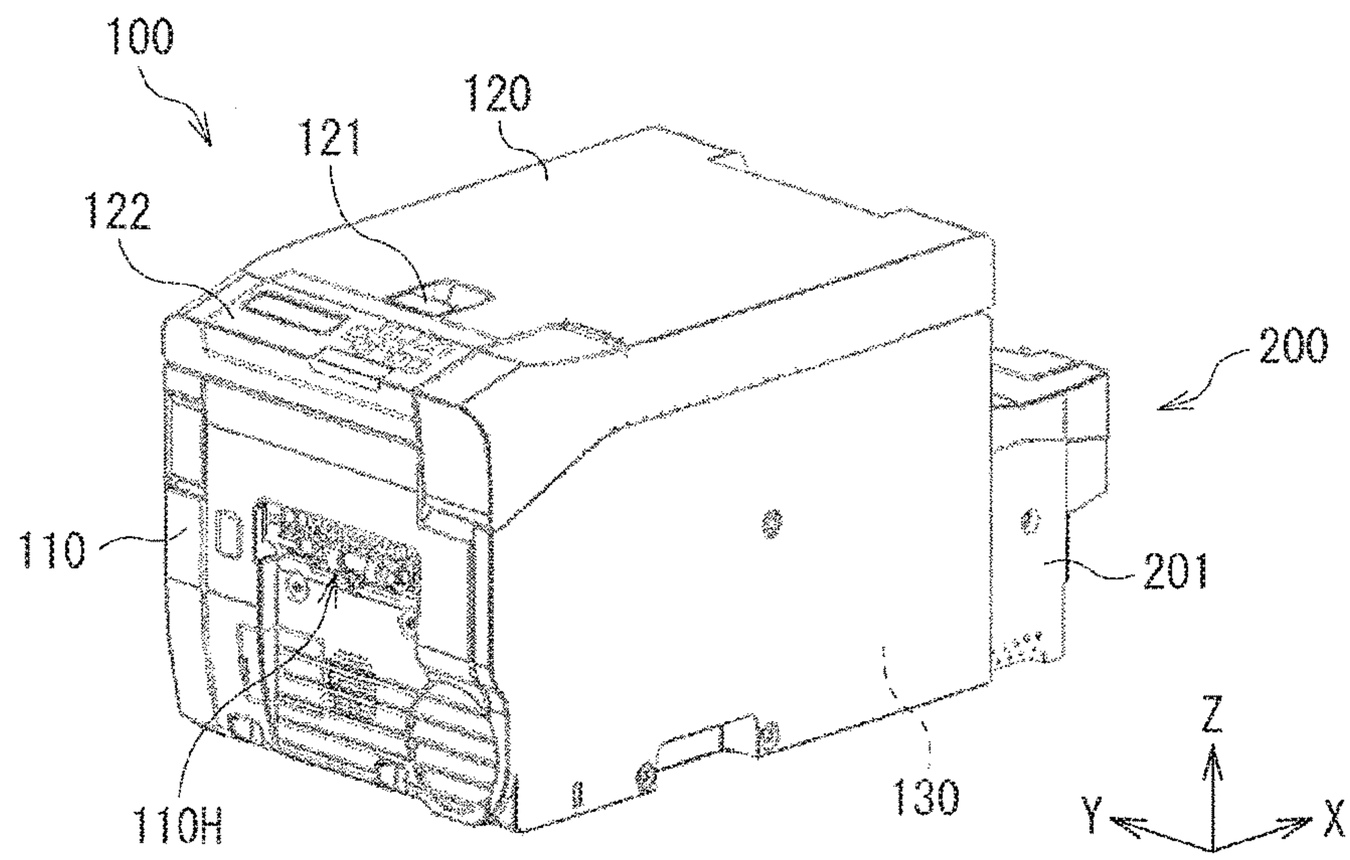
100
120
121
122
200
110
201
110H
130
Z
Y
X

FIG. 1

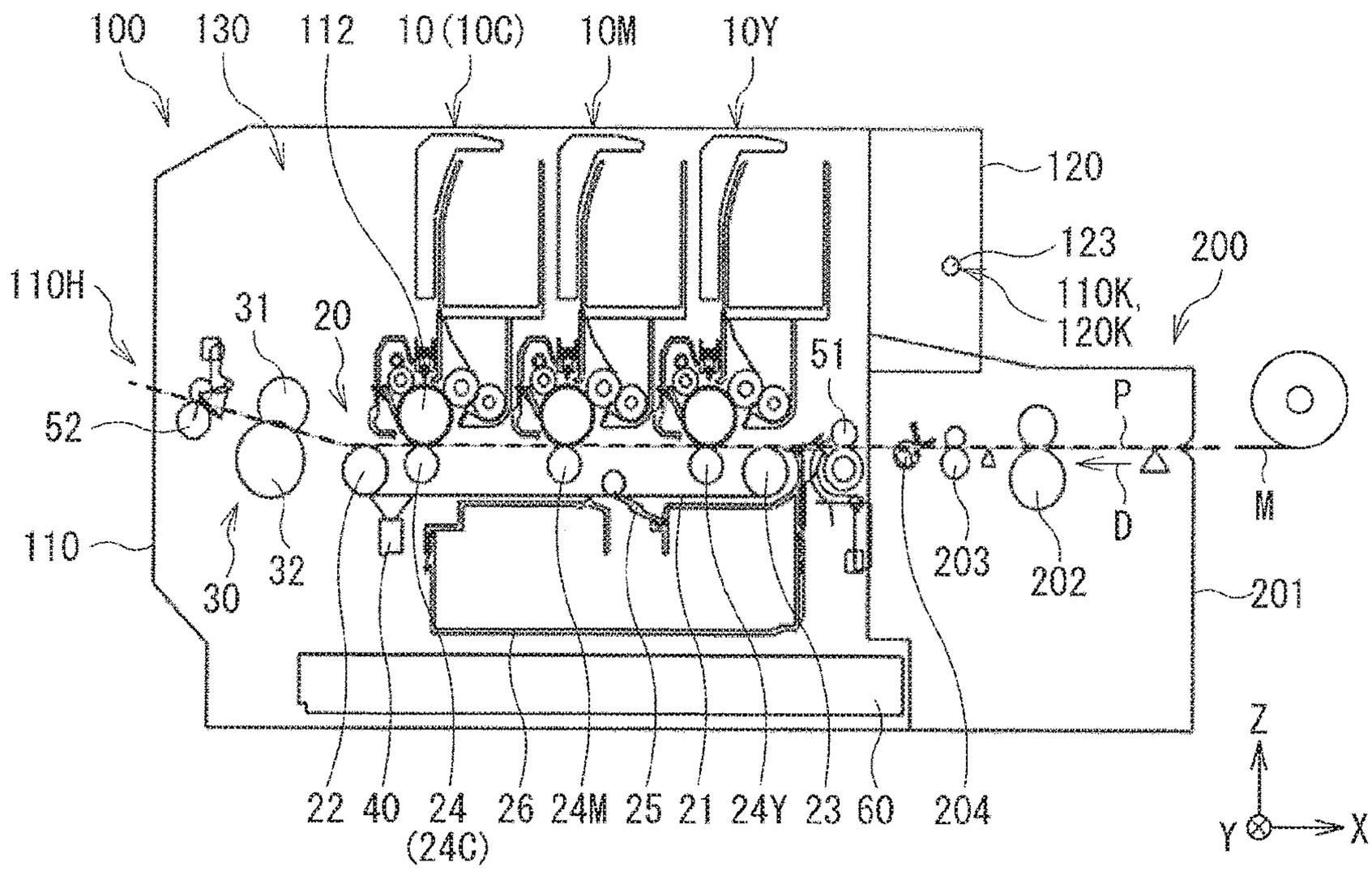
100
130
112
10(10C)
10M
10Y
120
123
110K,
120K
200
110H
31
20
51
52
P
M
D
110
30
32
203
202
201
22
40
24
(24C)
26
24M
25
21
24Y
23
60
204
Z
Y
X

FIG. 2

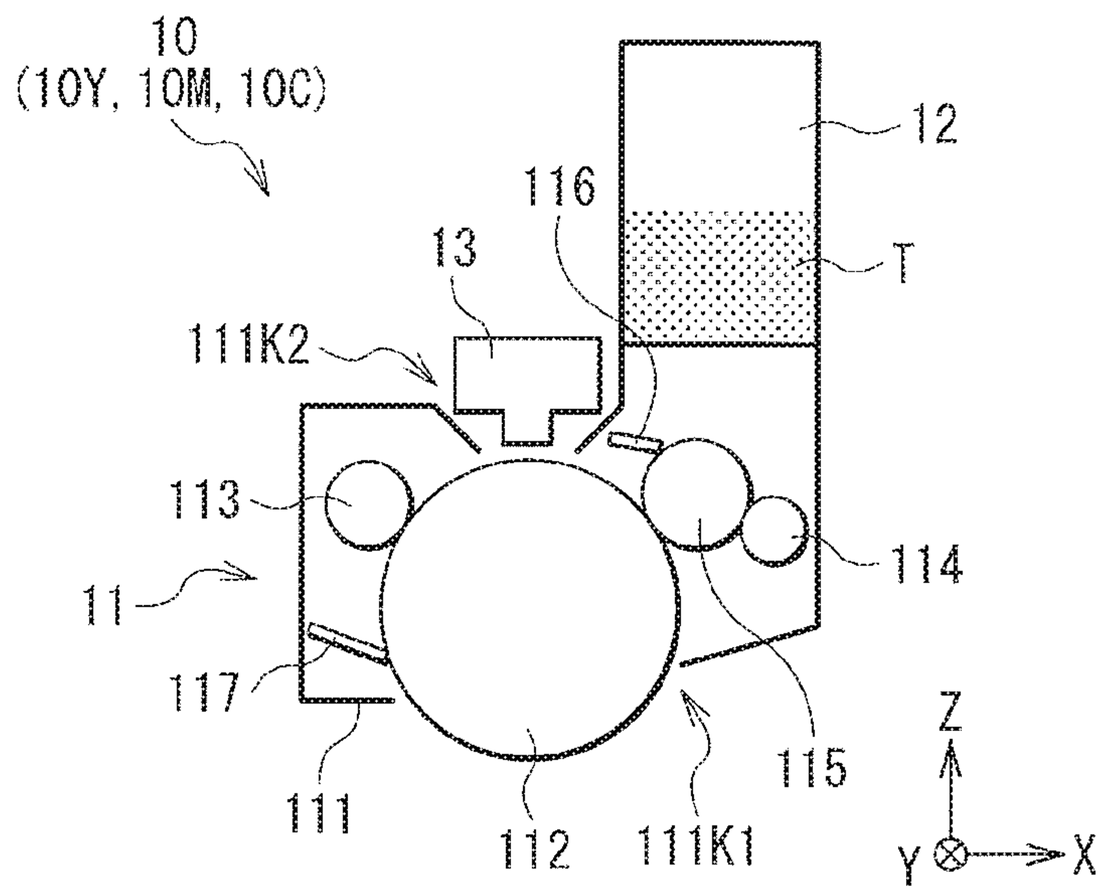
10
(10Y, 10M, 10C)
12
116
13
T
111K2
113
114
11
117
115
111
112
111K1
Z
Y
X

FIG. 3

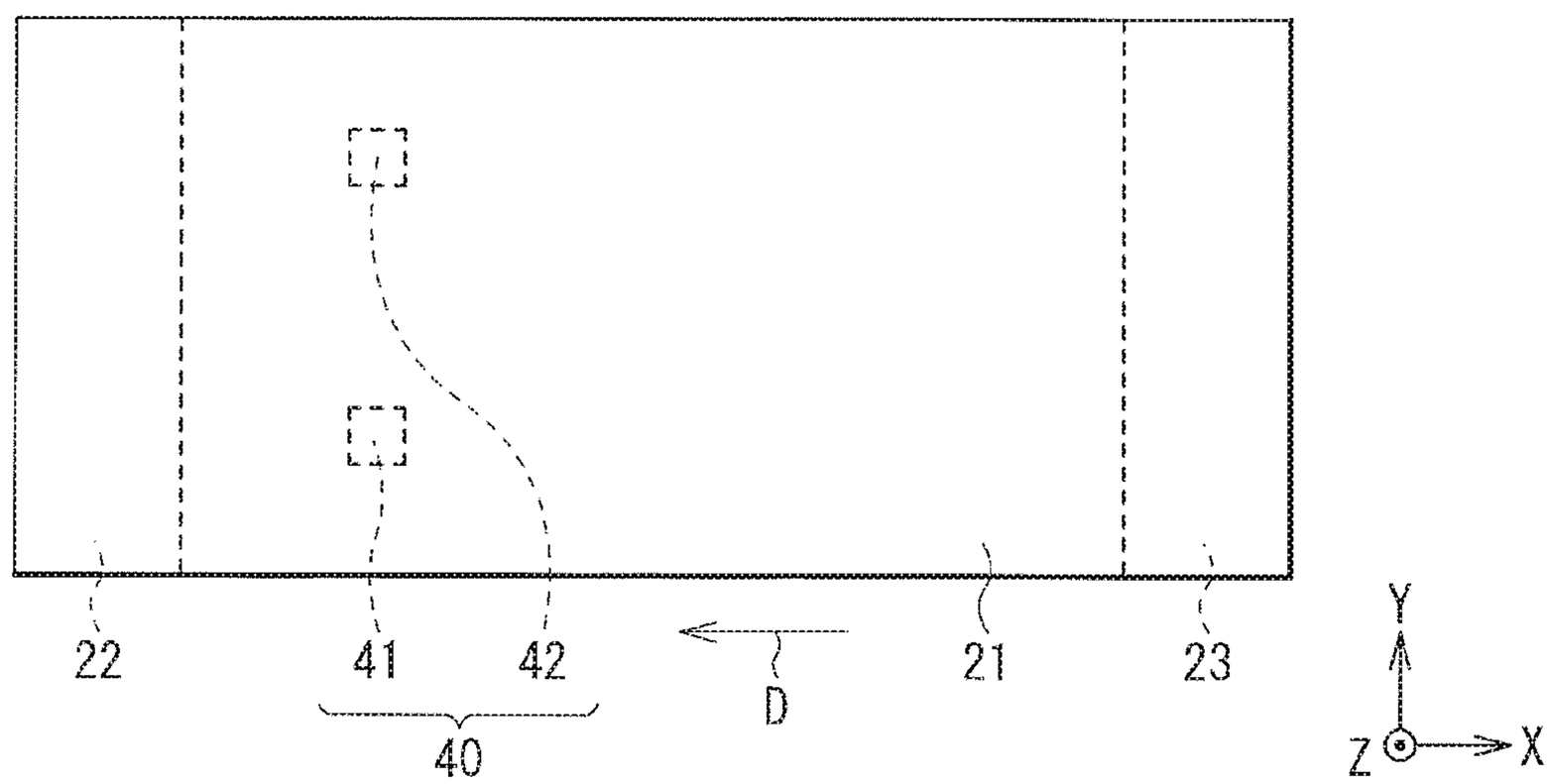
22
41
42
40
D
21
23
Y
Z
X

FIG. 4

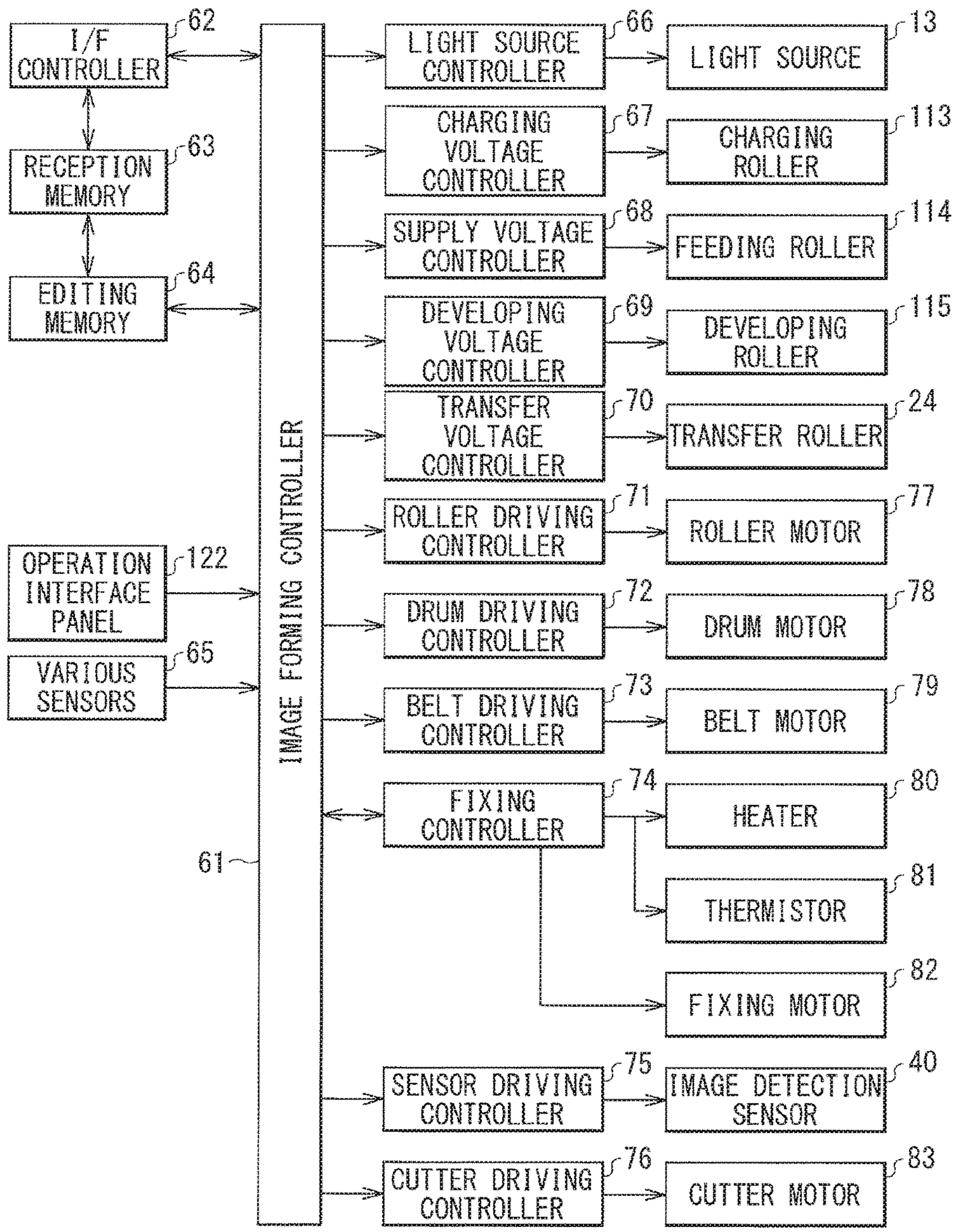
I/F CONTROLLER
62
RECEPTION MEMORY
63
EDITING MEMORY
64
OPERATION INTERFACE PANEL
122
VARIOUS SENSORS
65
61
IMAGE FORMING CONTROLLER
LIGHT SOURCE CONTROLLER
66
LIGHT SOURCE
13
CHARGING VOLTAGE CONTROLLER
67
CHARGING ROLLER
113
SUPPLY VOLTAGE CONTROLLER
68
FEEDING ROLLER
114
DEVELOPING VOLTAGE CONTROLLER
69
DEVELOPING ROLLER
115
TRANSFER VOLTAGE CONTROLLER
70
TRANSFER ROLLER
24
ROLLER DRIVING CONTROLLER
71
ROLLER MOTOR
77
DRUM DRIVING CONTROLLER
72
DRUM MOTOR
78
BELT DRIVING CONTROLLER
73
BELT MOTOR
79
FIXING CONTROLLER
74
HEATER
80
THERMISTOR
81
FIXING MOTOR
82
SENSOR DRIVING CONTROLLER
75
IMAGE DETECTION SENSOR
40
CUTTER DRIVING CONTROLLER
76
CUTTER MOTOR
83

FIG. 5

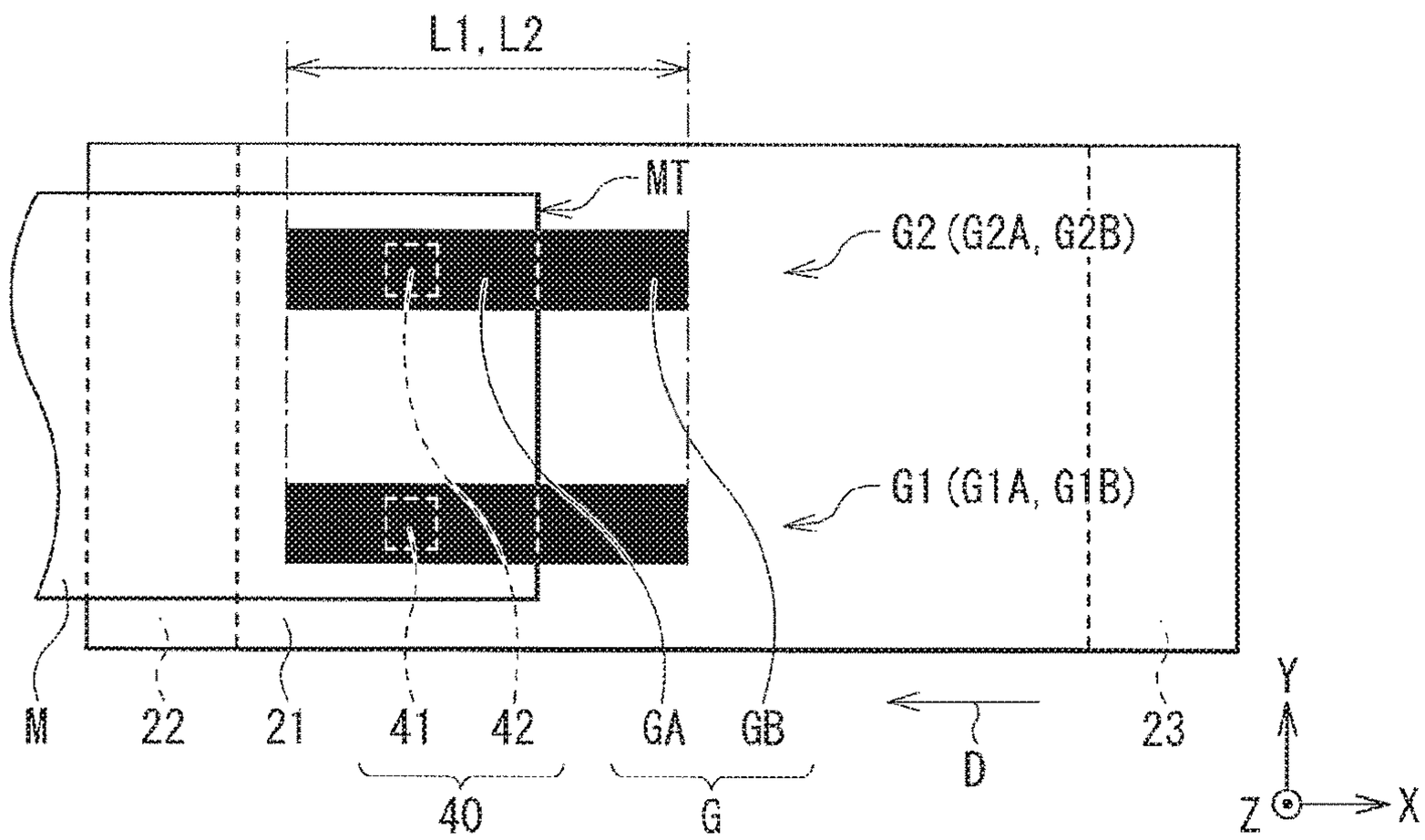
L1, L2
MT
G2 (G2A, G2B)
G1 (G1A, G1B)
M
22
21
41
42
GA
GB
D
23
40
G
Y
Z
X

FIG. 6

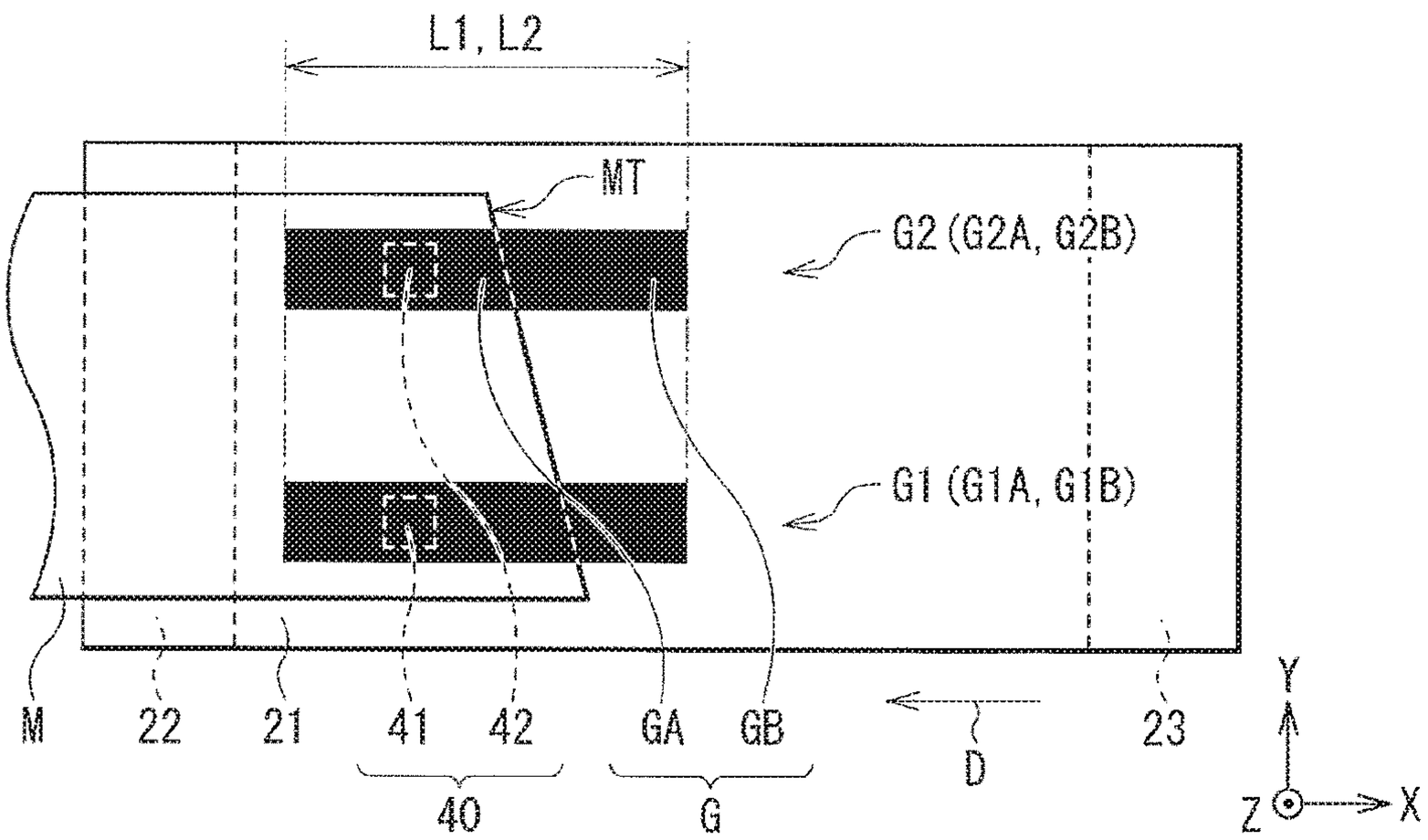
L1, L2
MT
G2 (G2A, G2B)
G1 (G1A, G1B)
M
22
21
41
42
GA
GB
D
23
40
G
Y
Z
X

FIG. 7

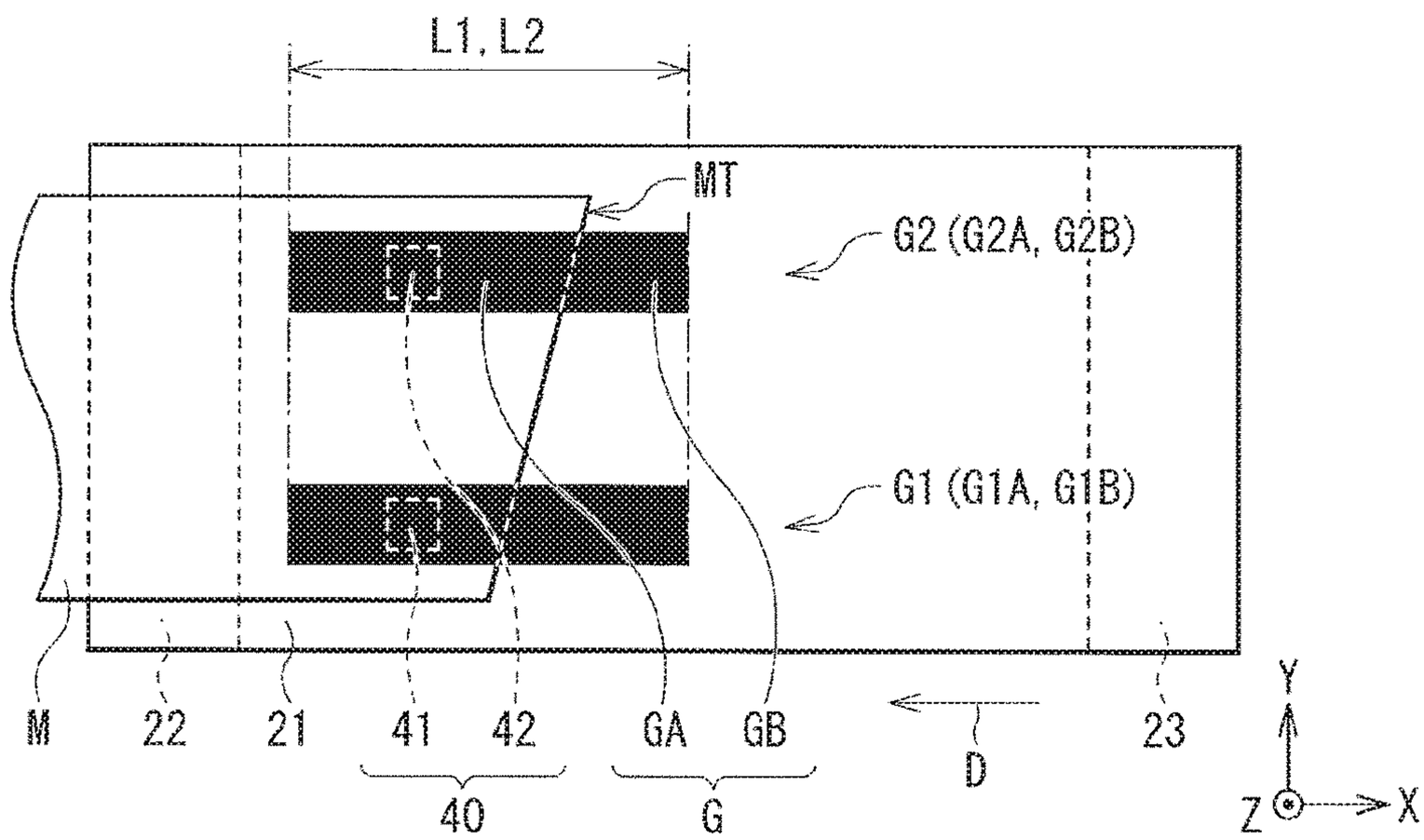
L1, L2
MT
G2 (G2A, G2B)
G1 (G1A, G1B)
M
22
21
41
42
GA
GB
D
23
40
G
Y
Z
X

FIG. 8

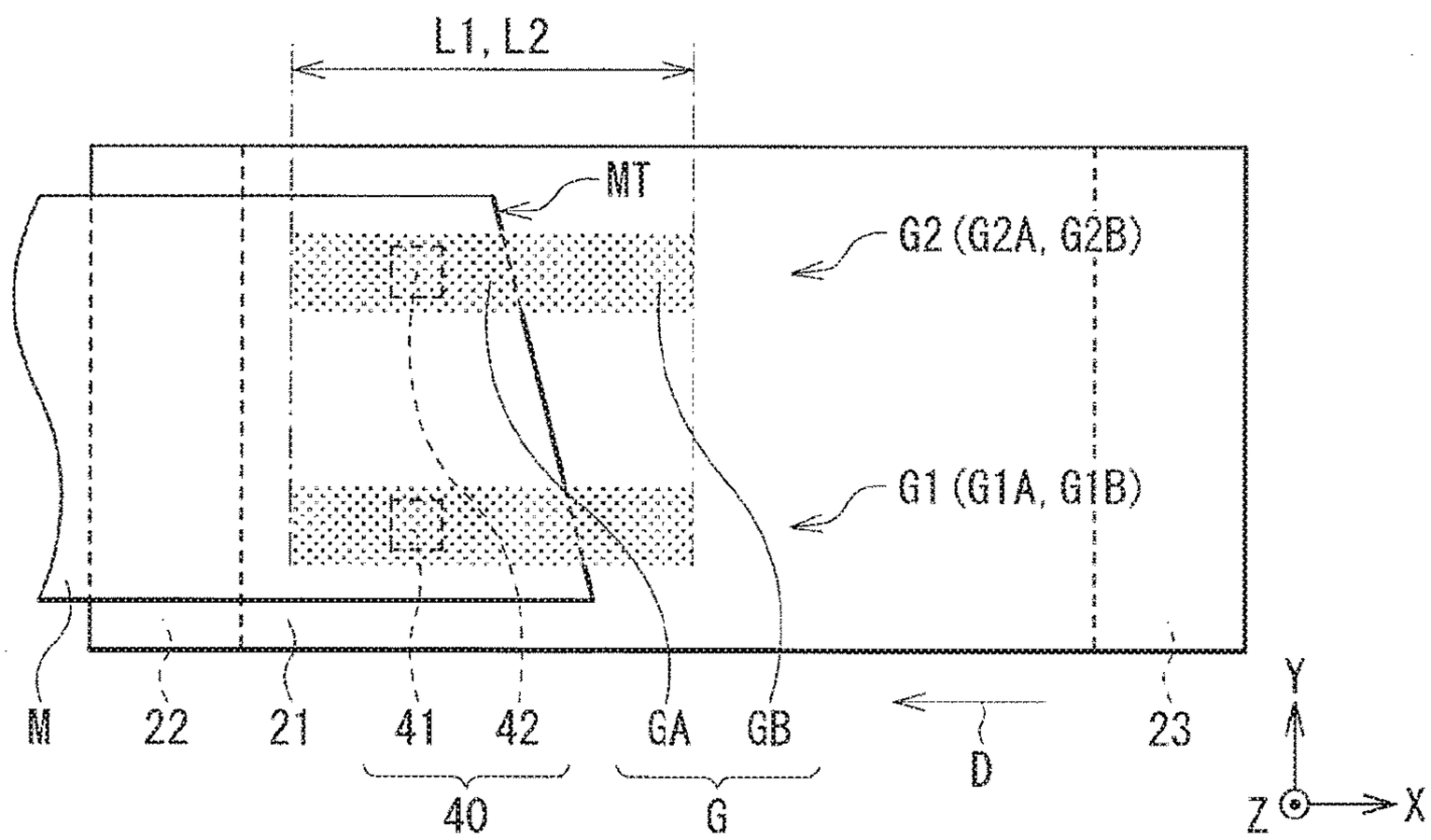
L1, L2
MT
G2 (G2A, G2B)
G1 (G1A, G1B)
M
22
21
41
42
GA
GB
D
23
40
G
Y
Z
X

FIG. 9

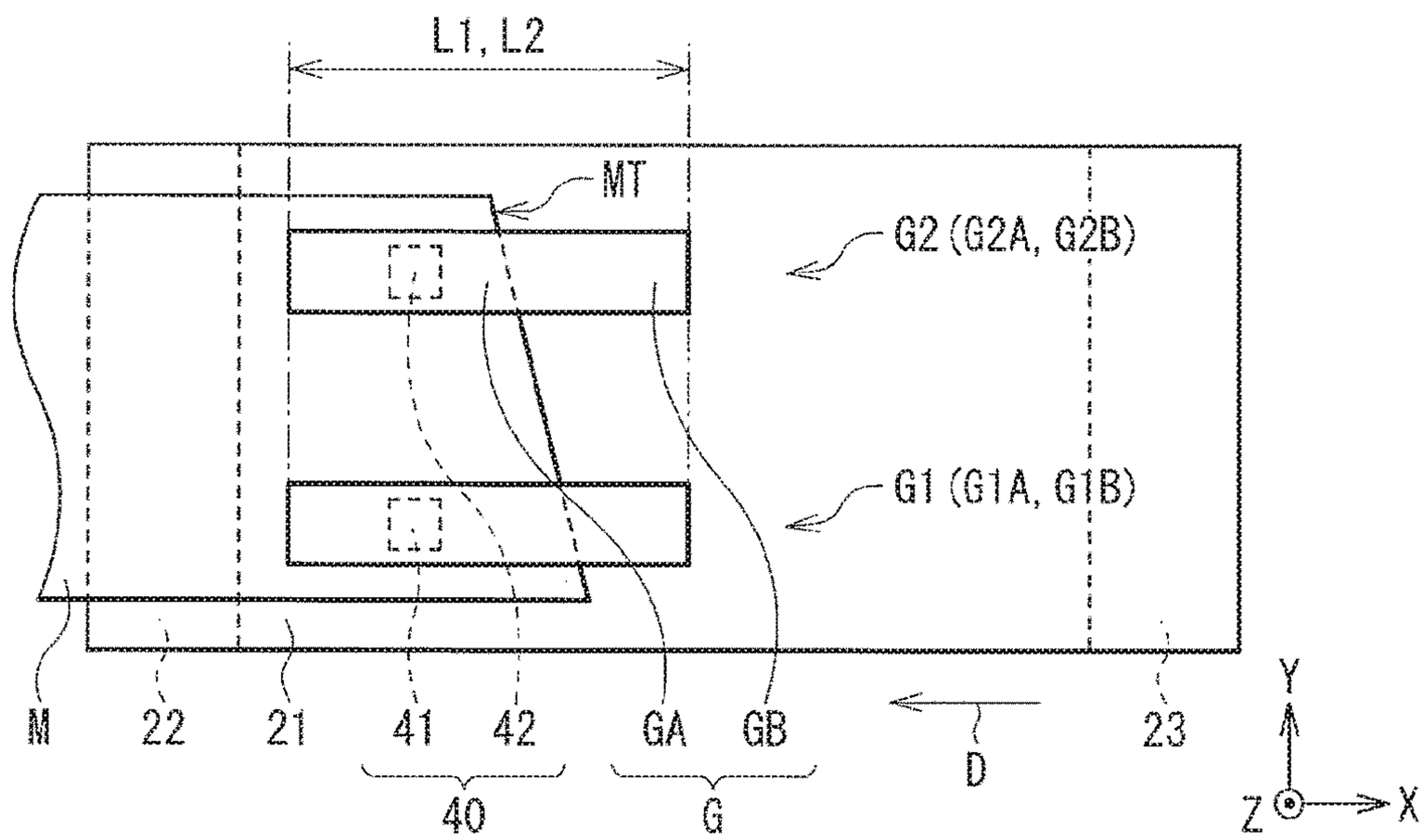
L1, L2
MT
G2 (G2A, G2B)
G1 (G1A, G1B)
M
22
21
41
42
GA
GB
23
D
40
G
Y
Z
X

FIG. 10

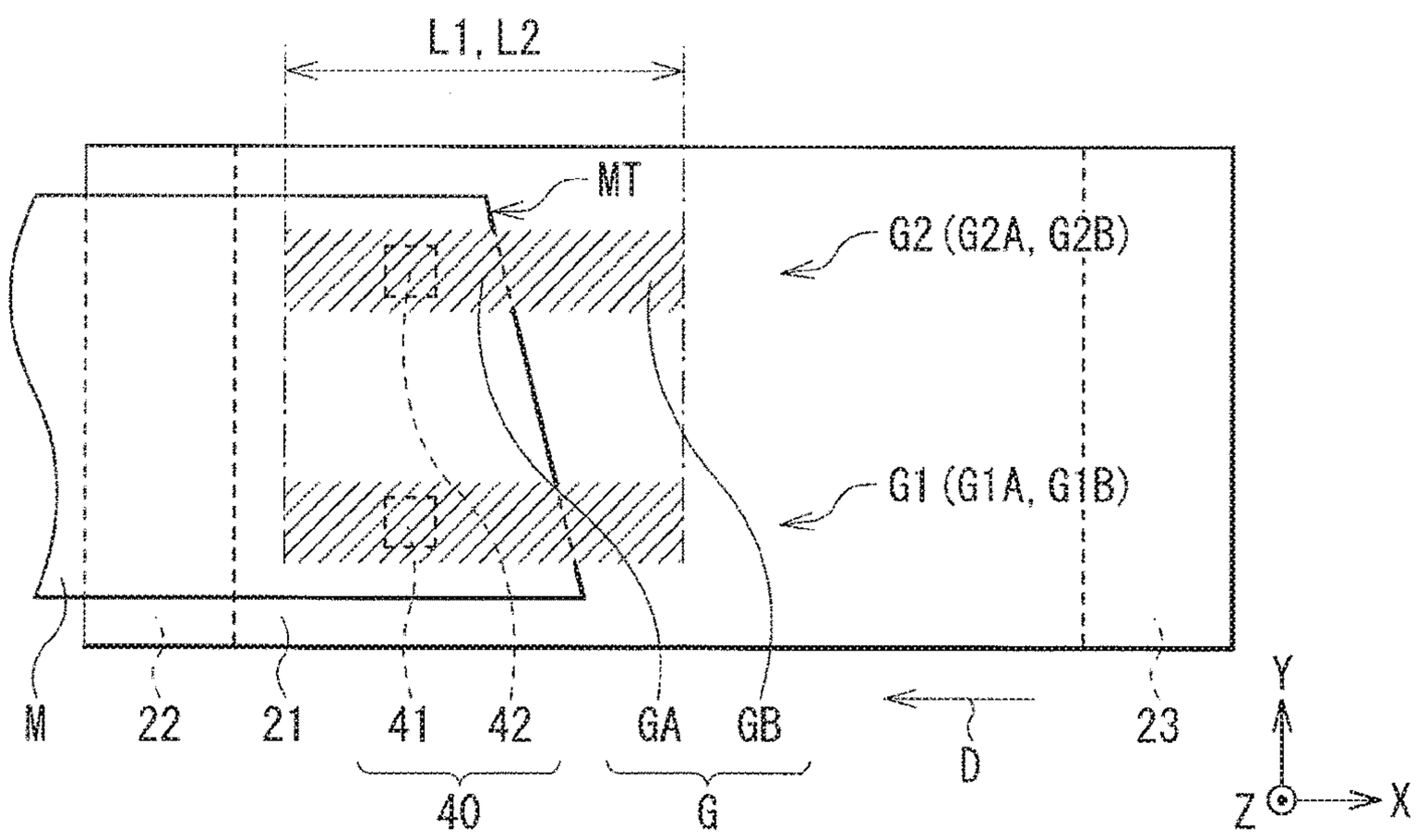
L1, L2
MT
G2 (G2A, G2B)
G1 (G1A, G1B)
M
22
21
41
42
GA
GB
23
D
40
G
Y
Z
X

FIG. 11

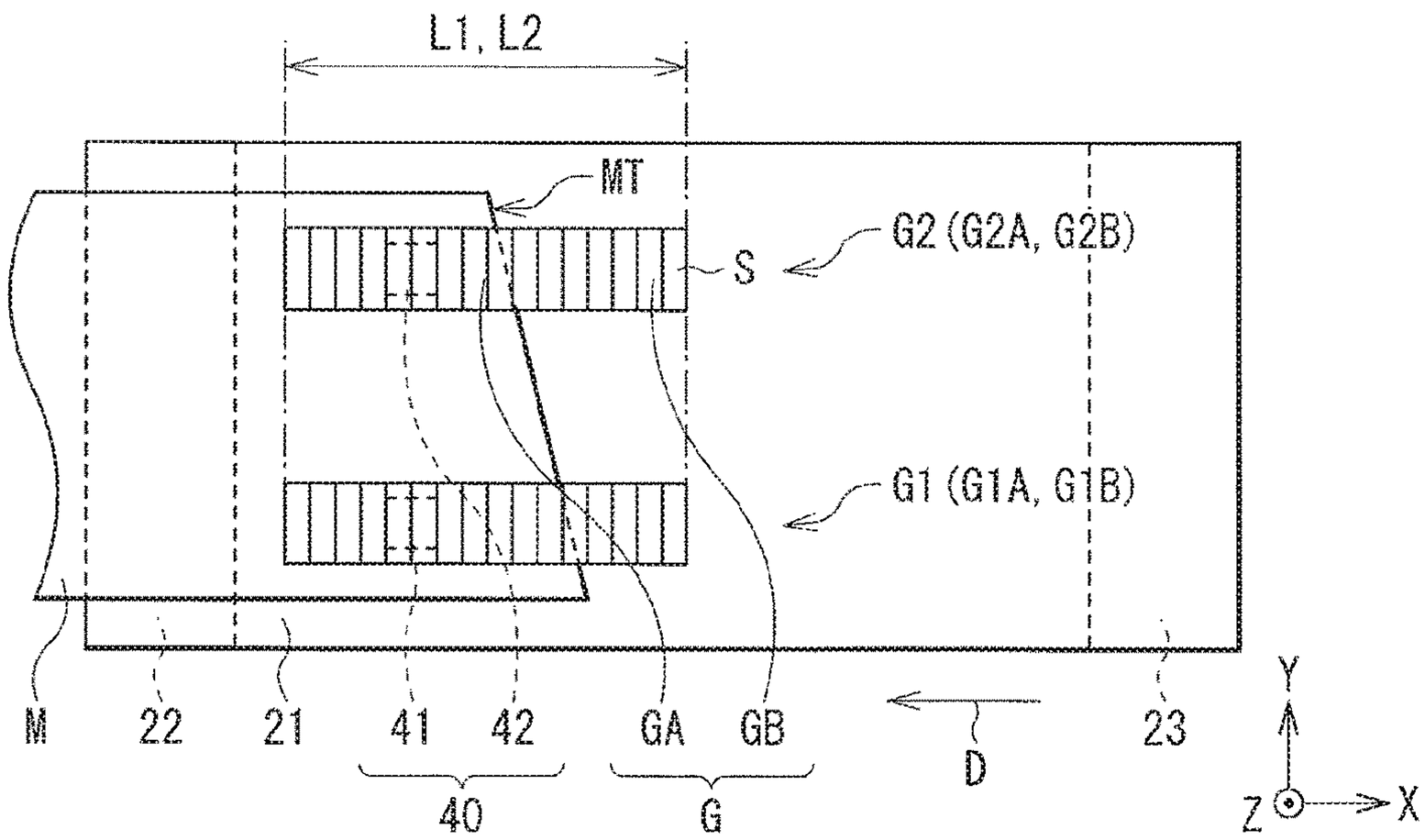
L1, L2
MT
G2 (G2A, G2B)
S
G1 (G1A, G1B)
M
22
21
41
42
GA
GB
D
23
40
G
Y
Z
X

FIG. 12

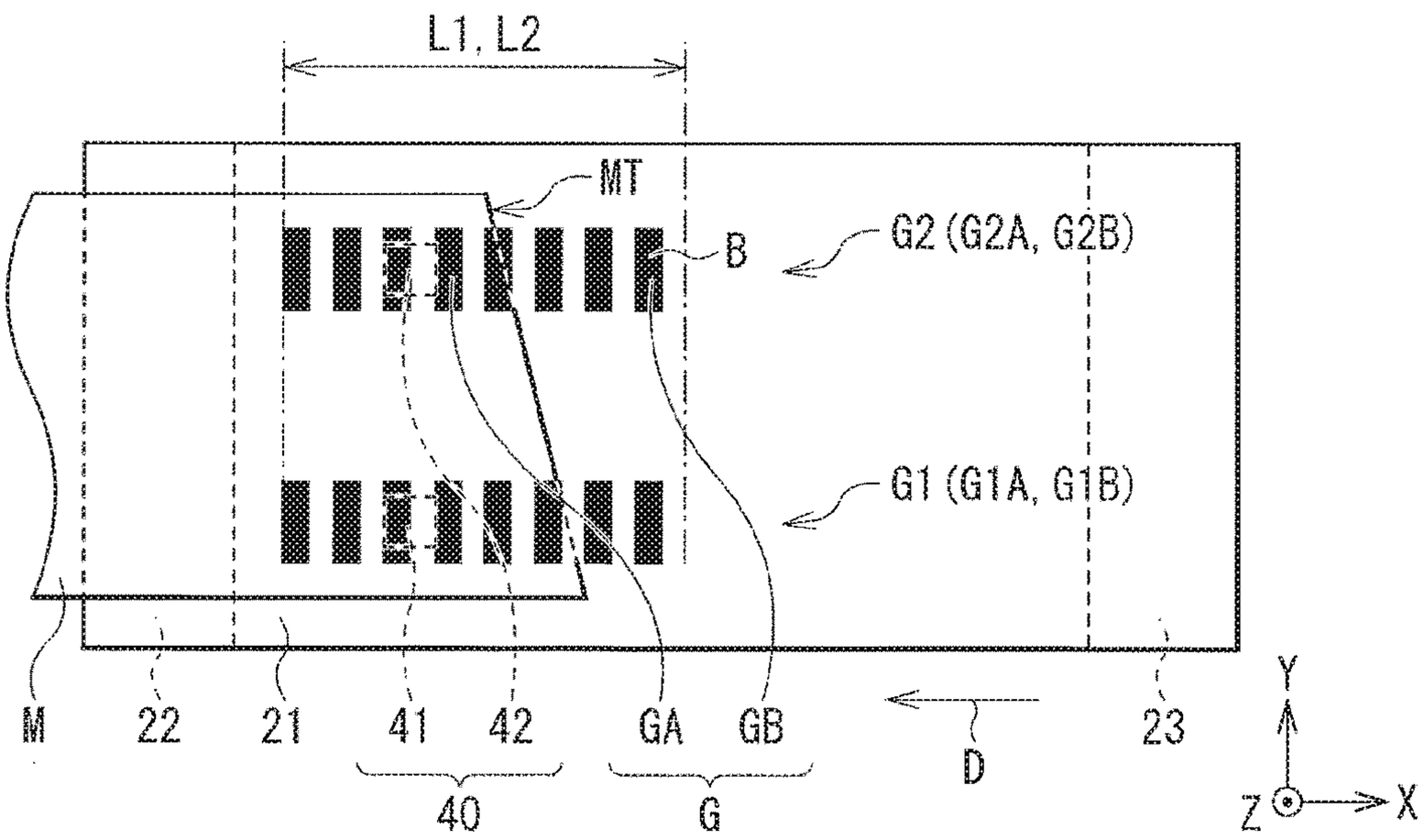
L1, L2
MT
G2 (G2A, G2B)
B
G1 (G1A, G1B)
M
22
21
41
42
GA
GB
D
23
40
G
Y
Z
X

FIG. 13

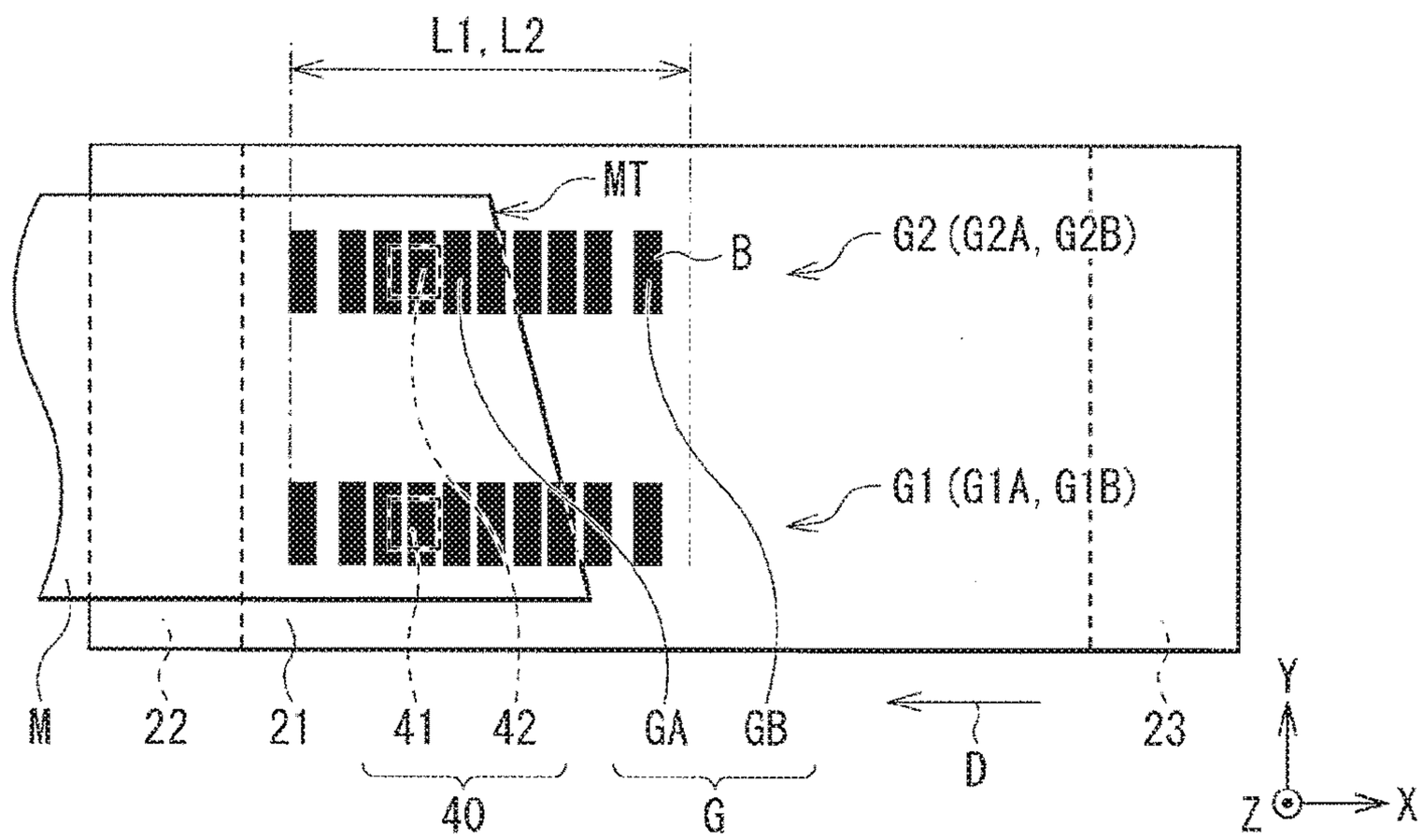
L1, L2
MT
B
G2 (G2A, G2B)
G1 (G1A, G1B)
M
22
21
41
42
GA
GB
D
23
40
G
Y
Z
X

FIG. 14

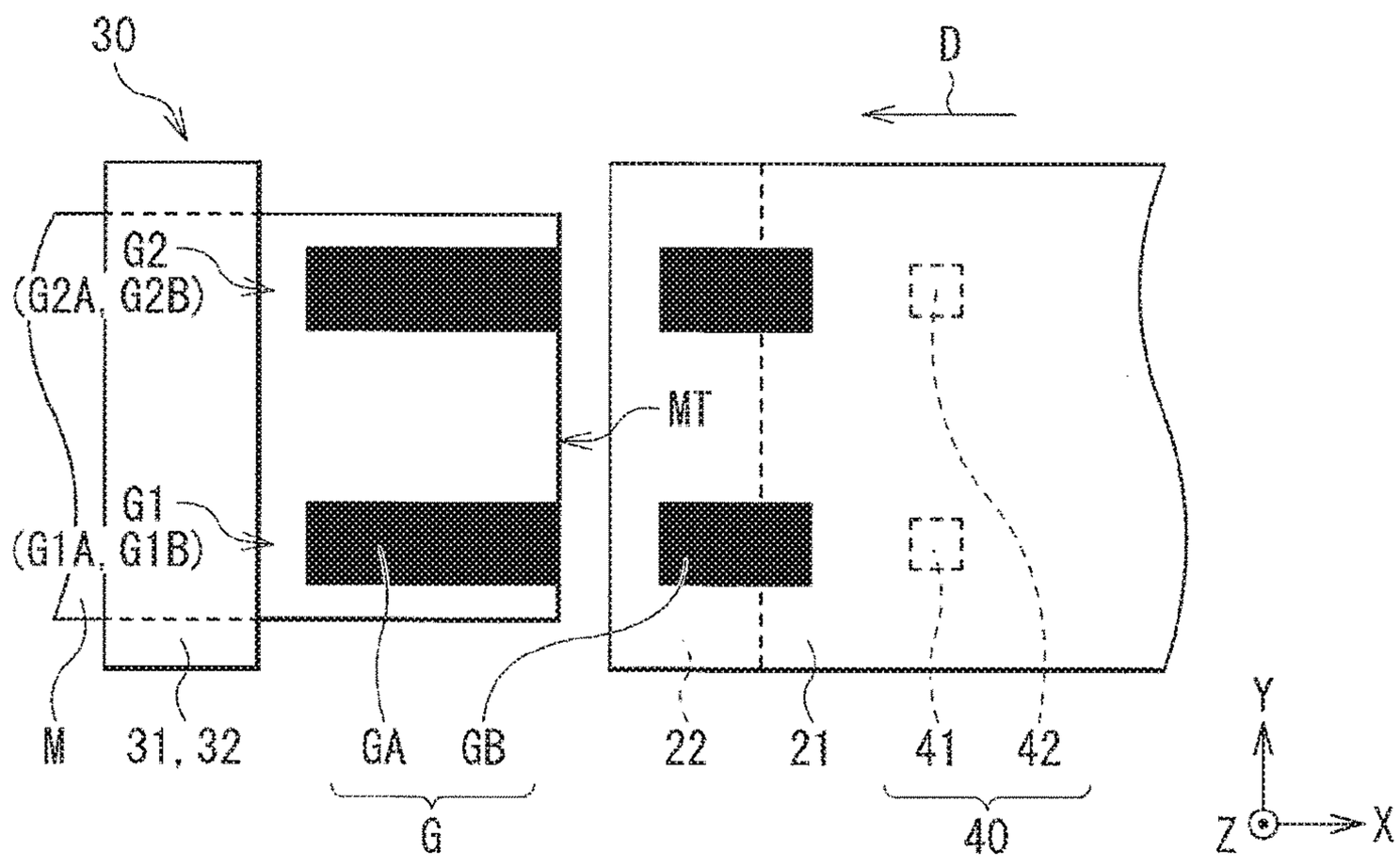
30
D
G2
(G2A, G2B)
MT
G1
(G1A, G1B)
M
31, 32
GA
GB
22
21
41
42
G
40
Y
Z
X

FIG. 15

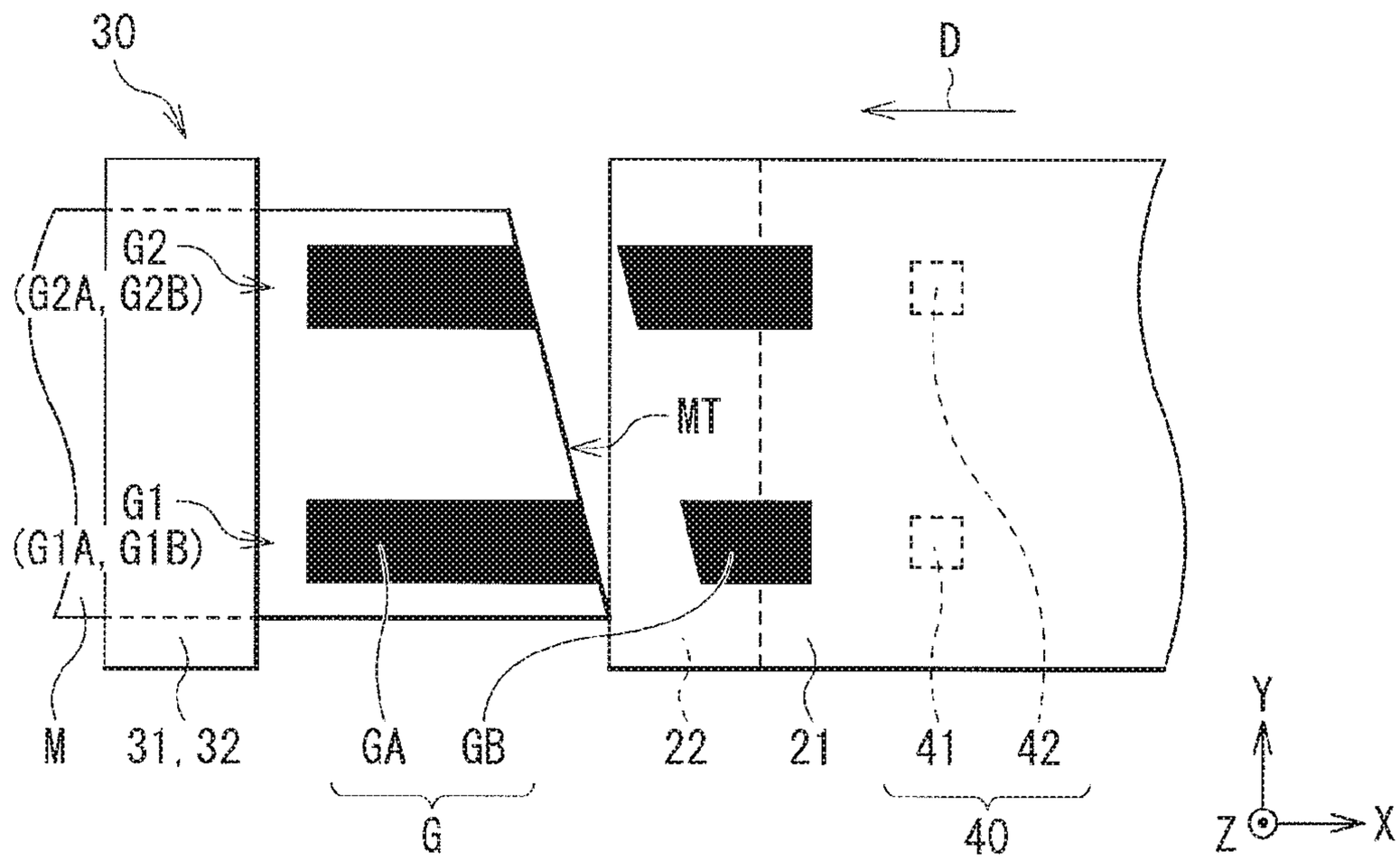
30
D
G2
(G2A, G2B)
MT
G1
(G1A, G1B)
M
31, 32
GA
GB
22
21
41
42
G
40
Y
Z
X

FIG. 16

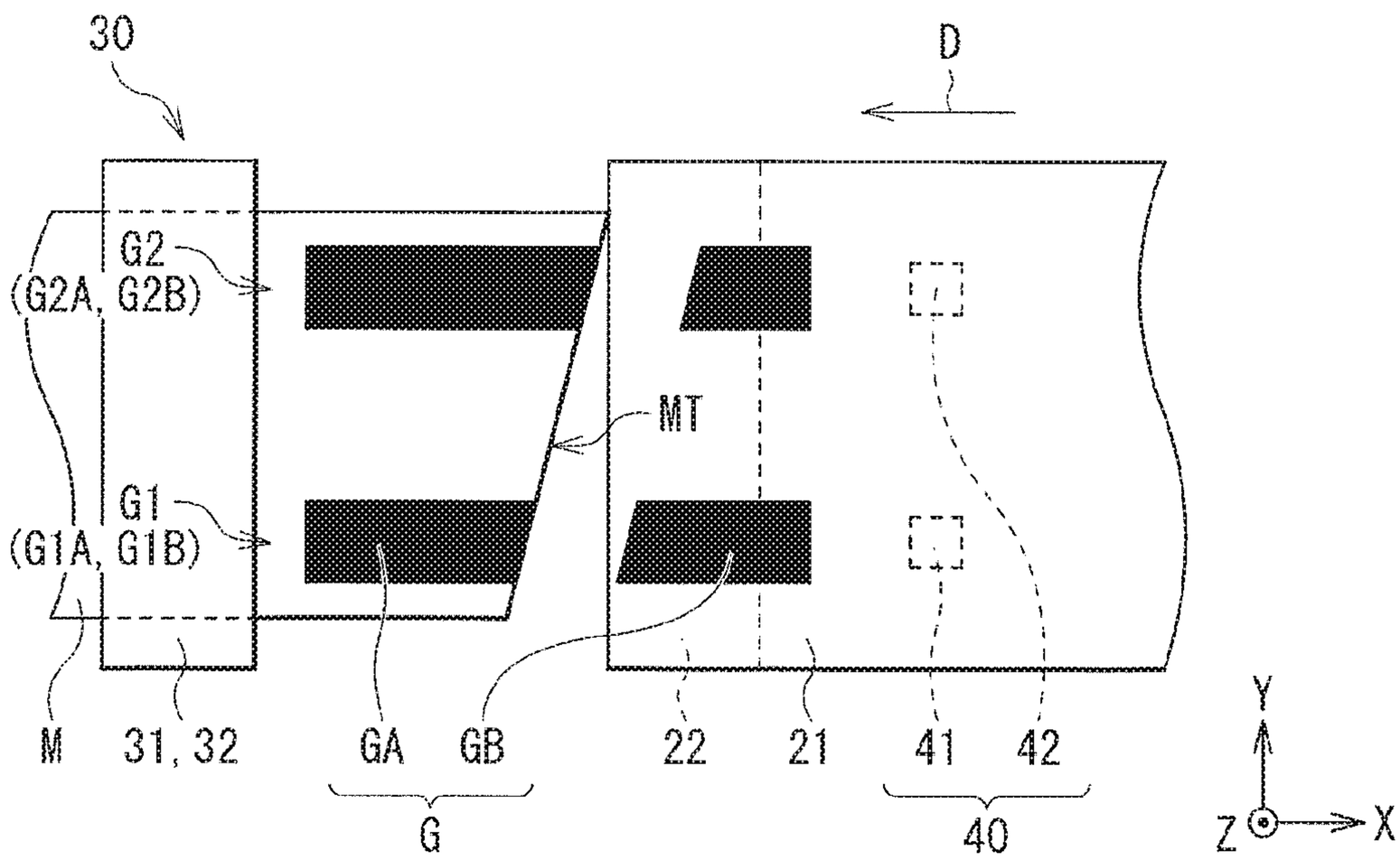
30
D
G2
(G2A, G2B)
MT
G1
(G1A, G1B)
M
31, 32
GA
GB
22
21
41
42
G
40
Y
Z
X

FIG. 17

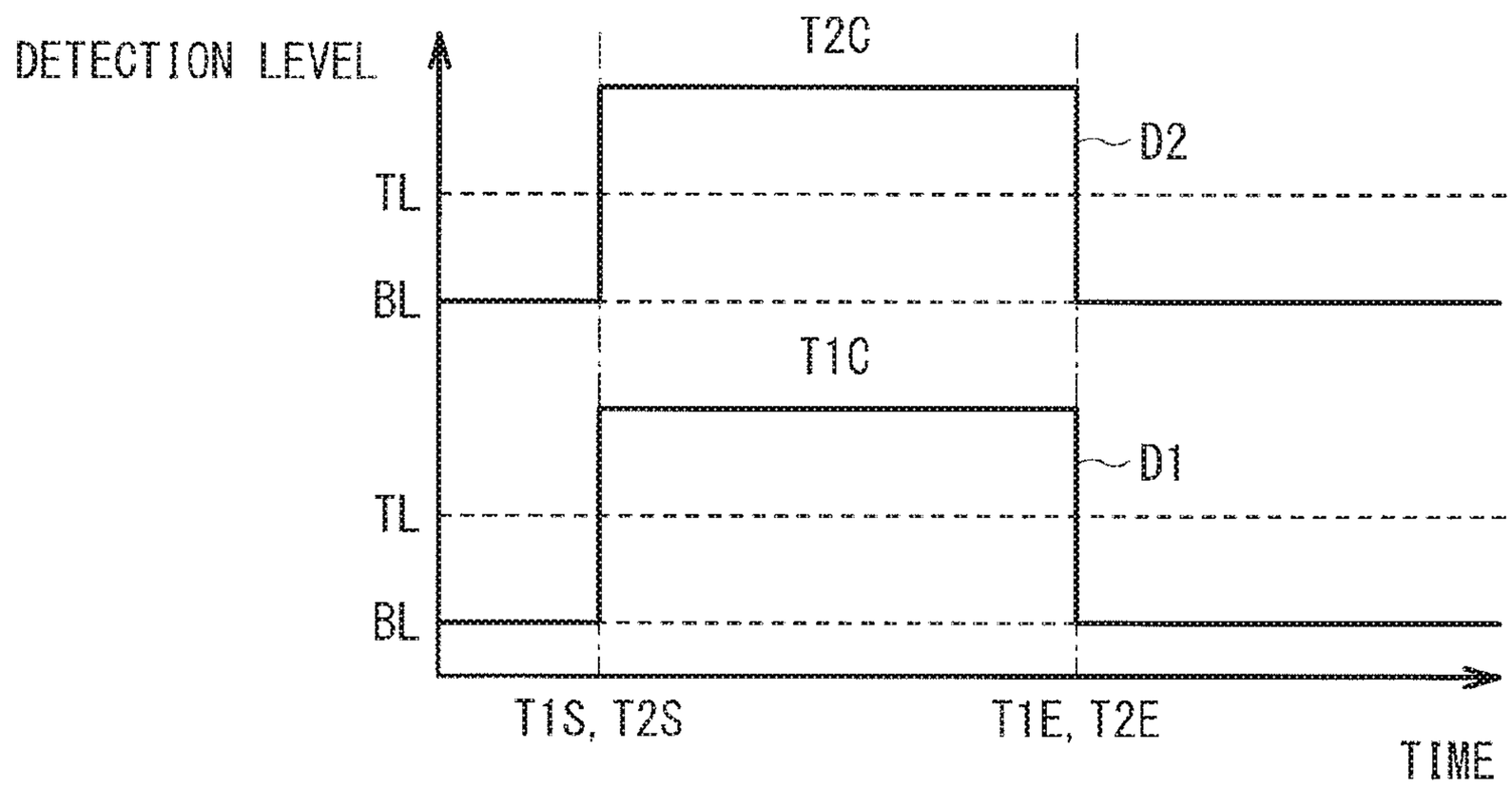
DETECTION LEVEL
T2C
D2
TL
BL
T1C
D1
TL
BL
T1S, T2S
T1E, T2E
TIME

FIG. 18

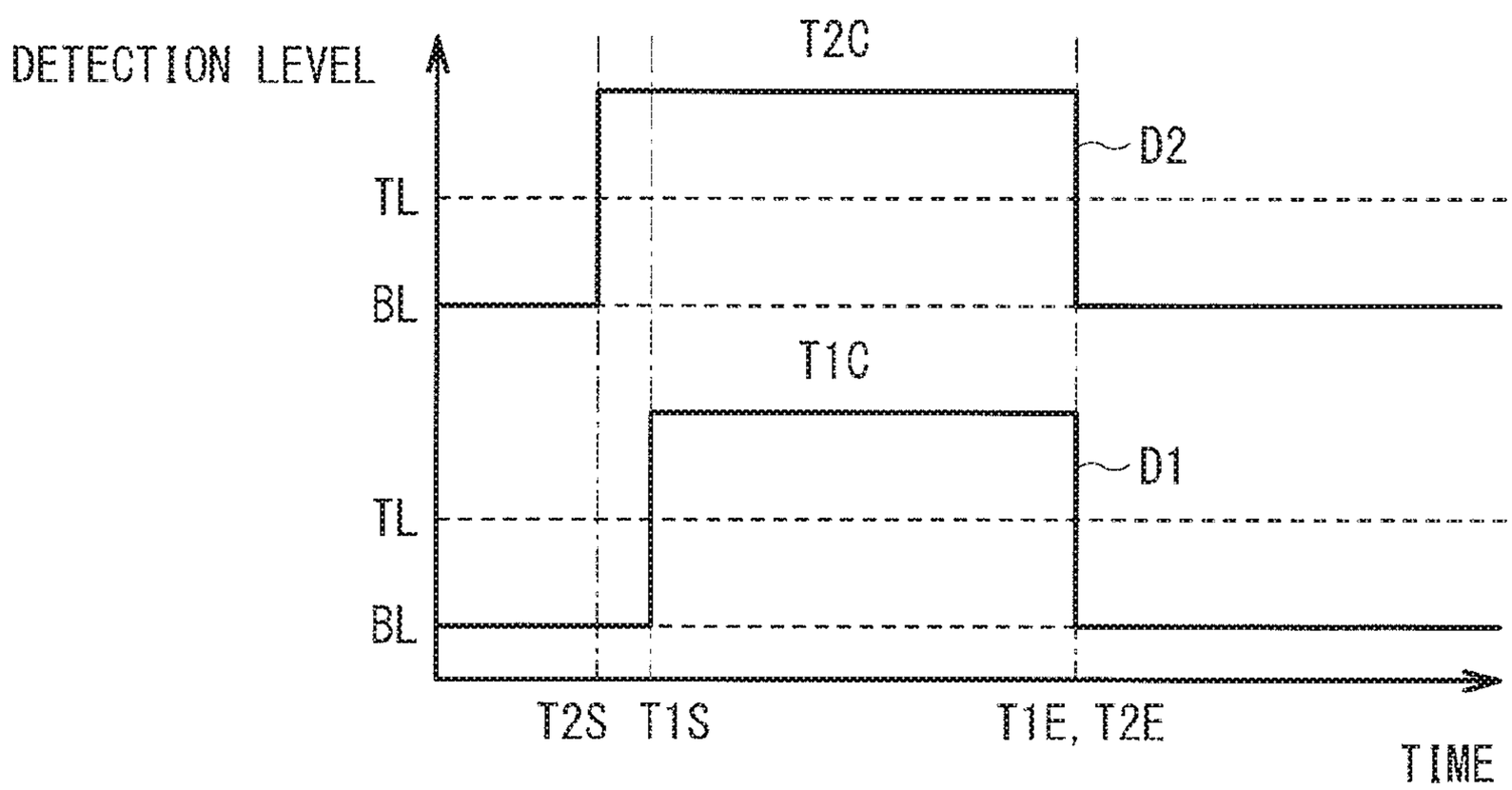
DETECTION LEVEL
T2C
D2
TL
BL
T1C
D1
TL
BL
T2S T1S
T1E, T2E
TIME

FIG. 19

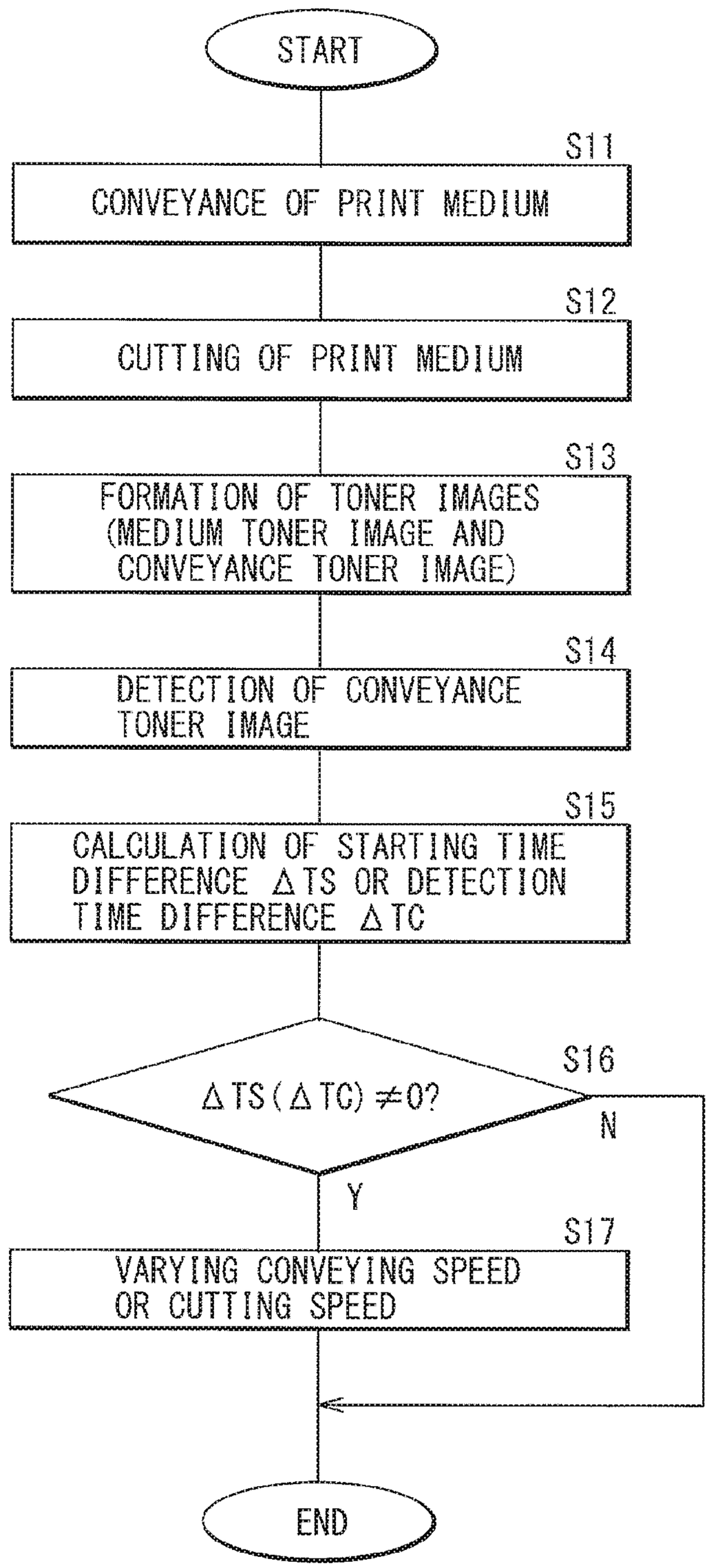
START
S11
CONVEYANCE OF PRINT MEDIUM
S12
CUTTING OF PRINT MEDIUM
S13
FORMATION OF TONER IMAGES (MEDIUM TONER IMAGE AND CONVEYANCE TONER IMAGE)
S14
DETECTION OF CONVEYANCE TONER IMAGE
S15
CALCULATION OF STARTING TIME DIFFERENCE ΔTS OR DETECTION TIME DIFFERENCE ΔTC
S16
ΔTS(ΔTC)≠0?
N
Y
S17
VARYING CONVEYING SPEED OR CUTTING SPEED
END

FIG. 20

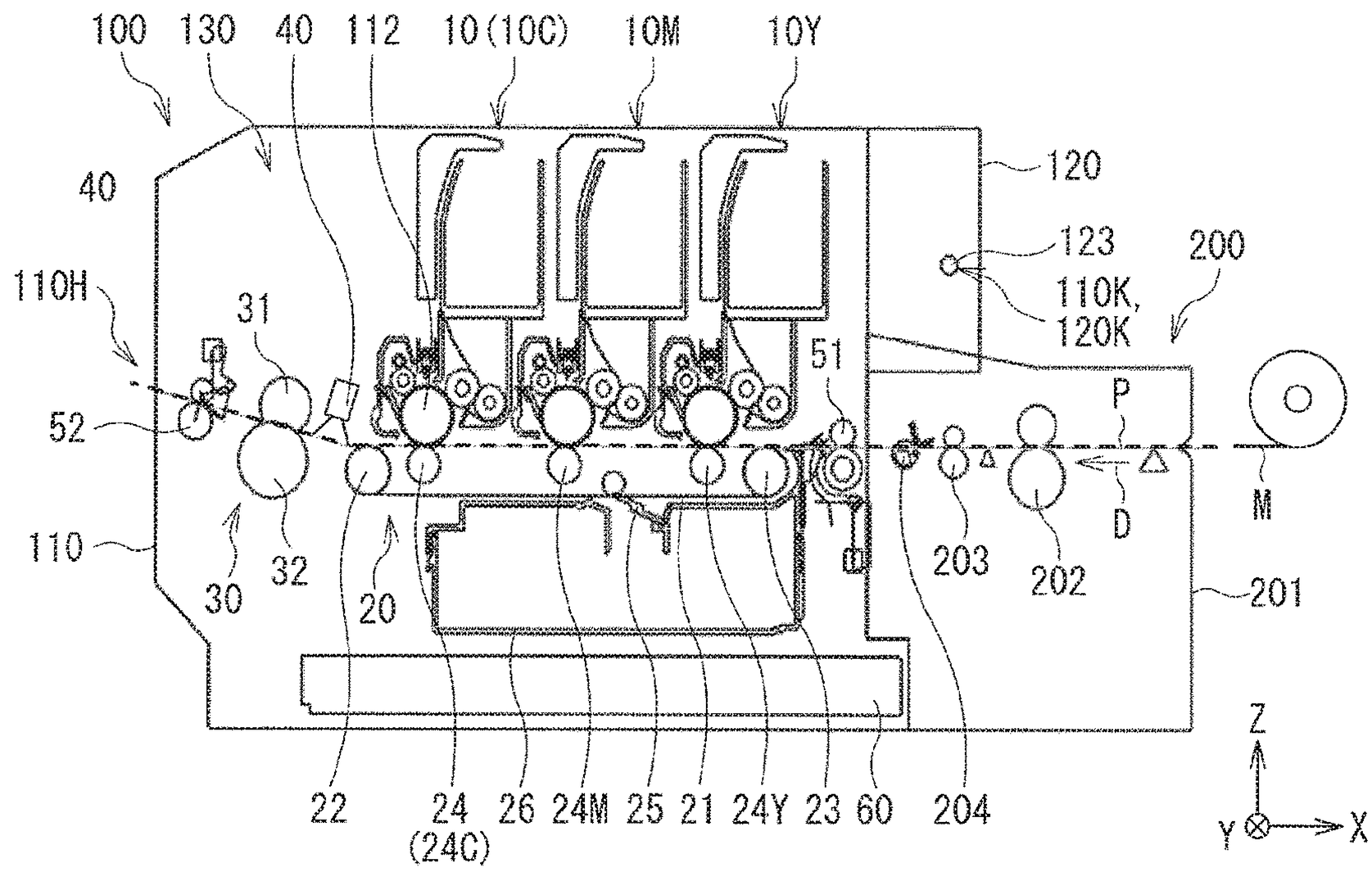
100
130
40
112
10(10C)
10M
10Y
120
123
200
110K,
120K
110H
31
51
52
P
M
D
110
30
32
20
203
202
201
22
24
(24C)
26
24M
25
21
24Y
23
60
204
Z
Y
X

FIG. 21

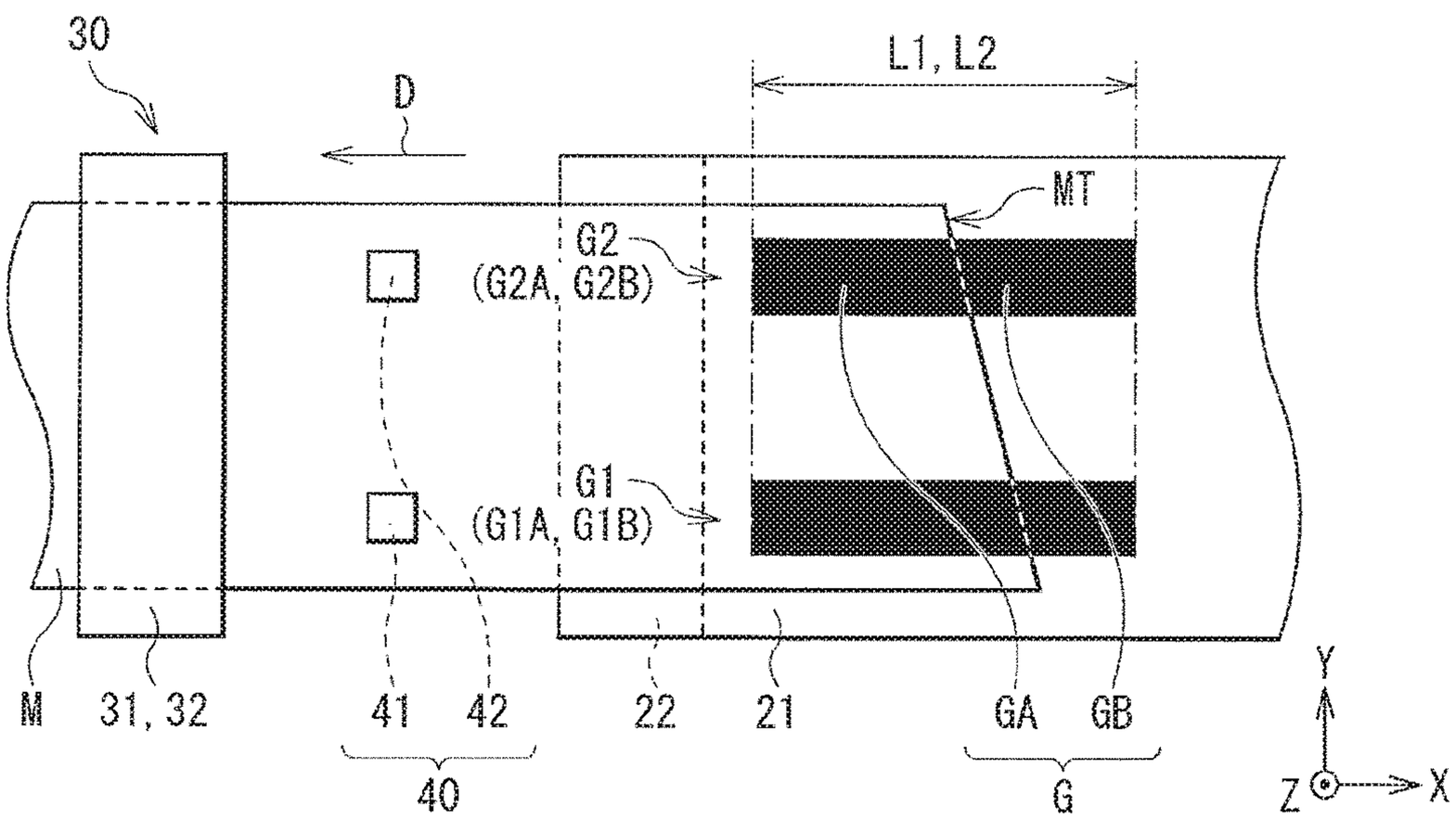
30
D
L1, L2
MT
G2
(G2A, G2B)
G1
(G1A, G1B)
M
31, 32
41
42
22
21
GA
GB
40
G
Y
Z
X

FIG. 22

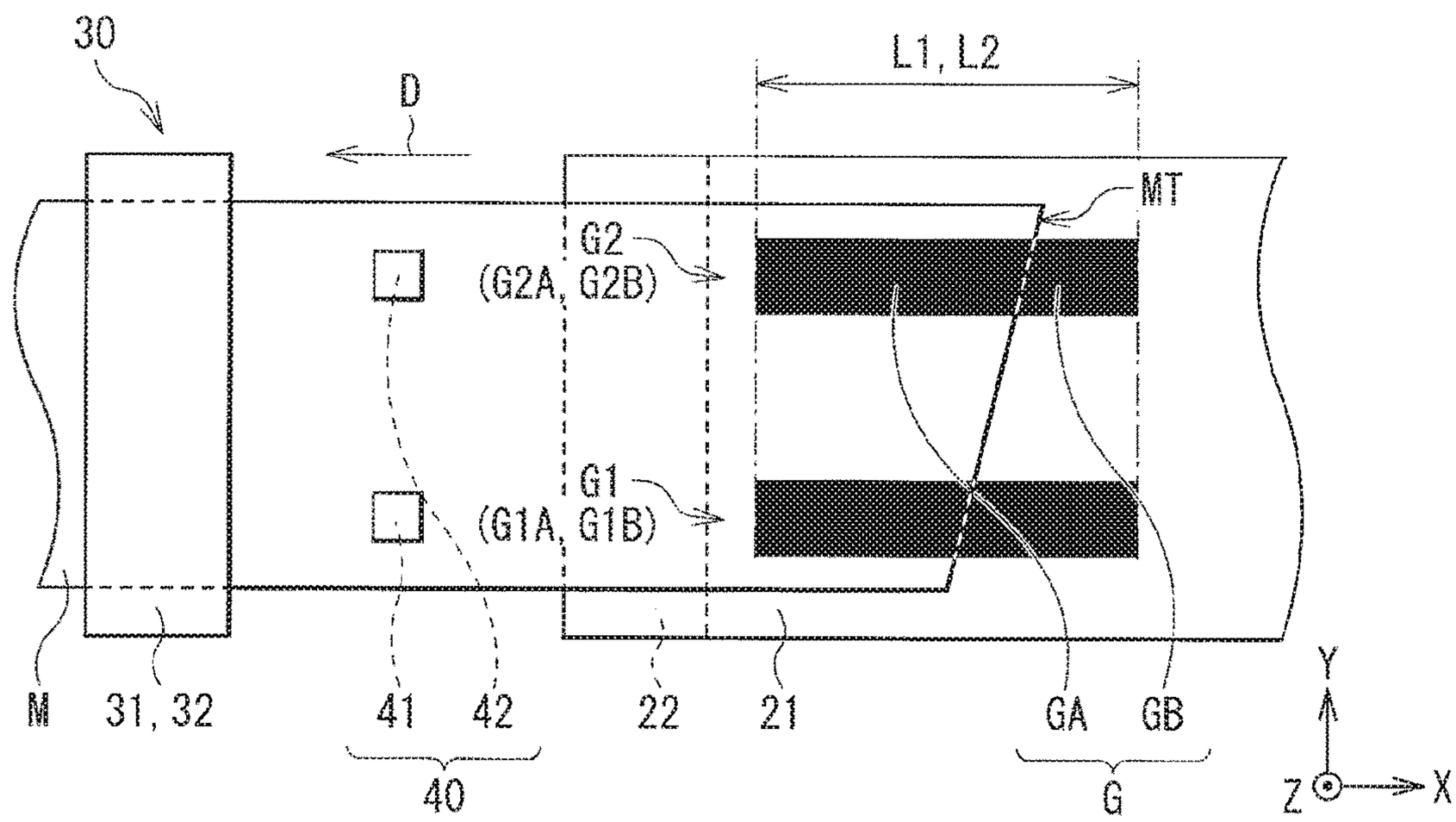
30
D
L1, L2
MT
G2
(G2A, G2B)
G1
(G1A, G1B)
M
31, 32
41
42
22
21
GA
GB
40
G
Y
Z
X

FIG. 23

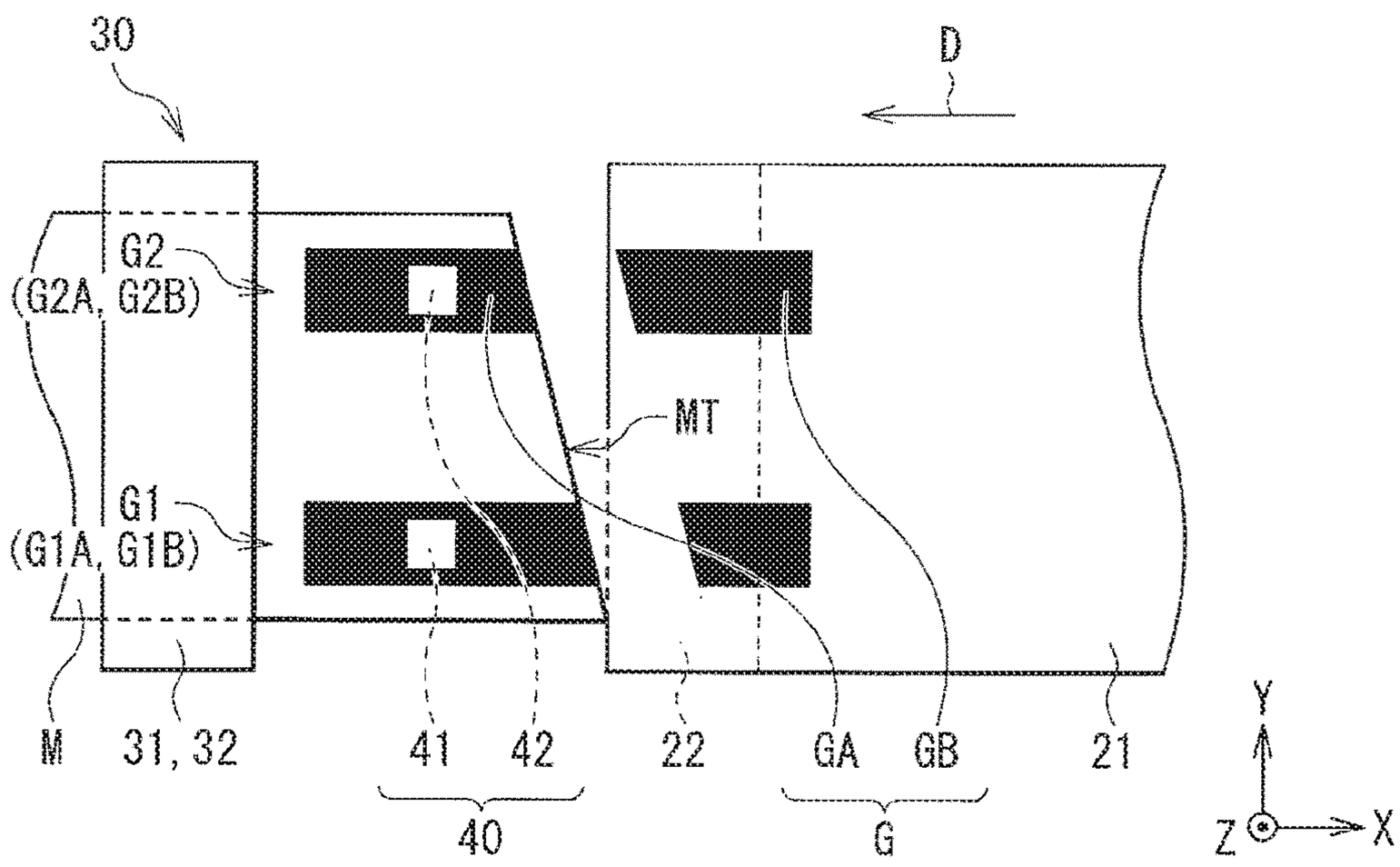
30
D
G2
(G2A, G2B)
MT
G1
(G1A, G1B)
M
31, 32
41
42
22
GA
GB
21
40
G
Y
Z
X

FIG. 24

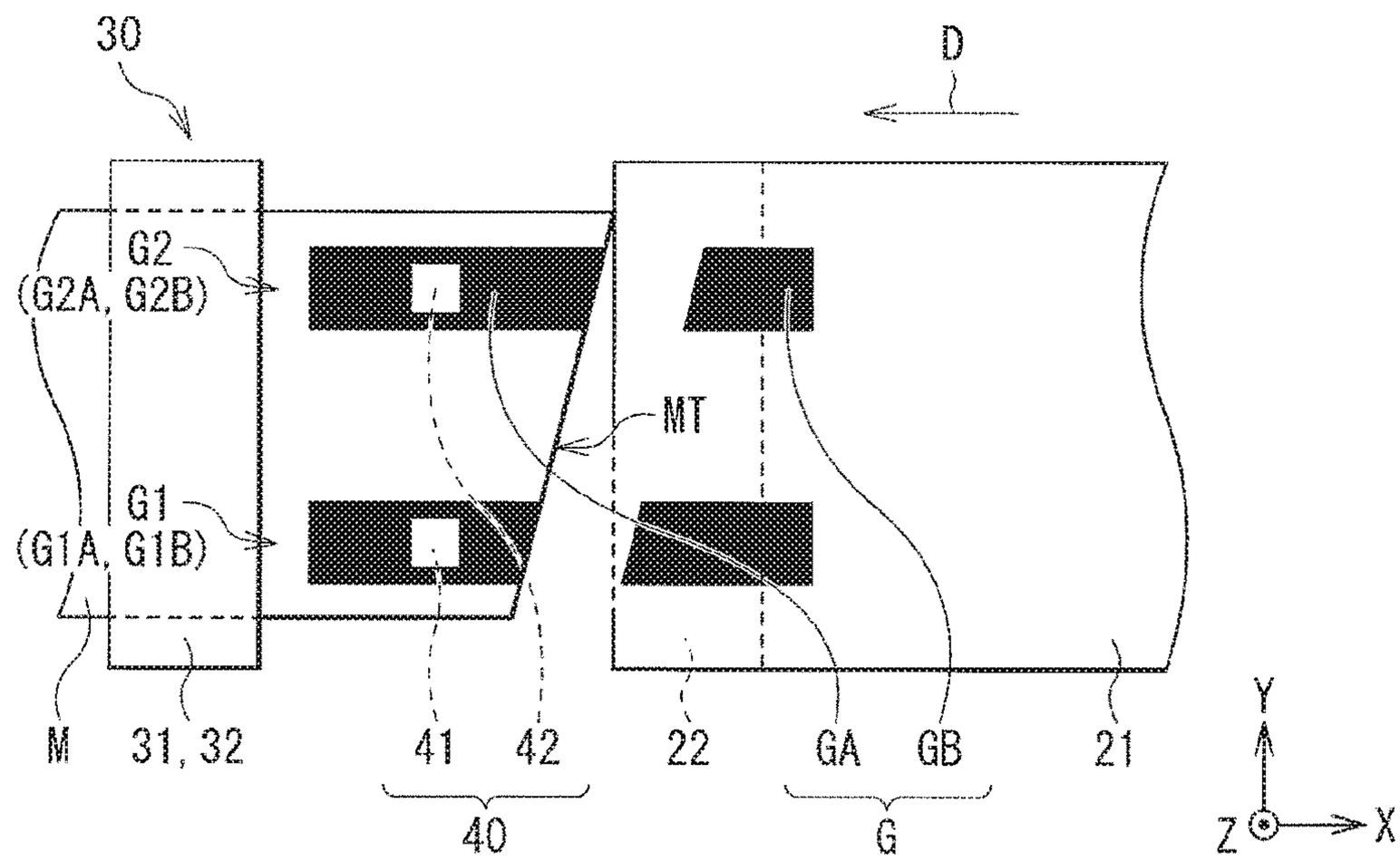
30
D
G2
(G2A, G2B)
MT
G1
(G1A, G1B)
M
31, 32
41
42
22
GA
GB
21
40
G
Y
Z
X

FIG. 25

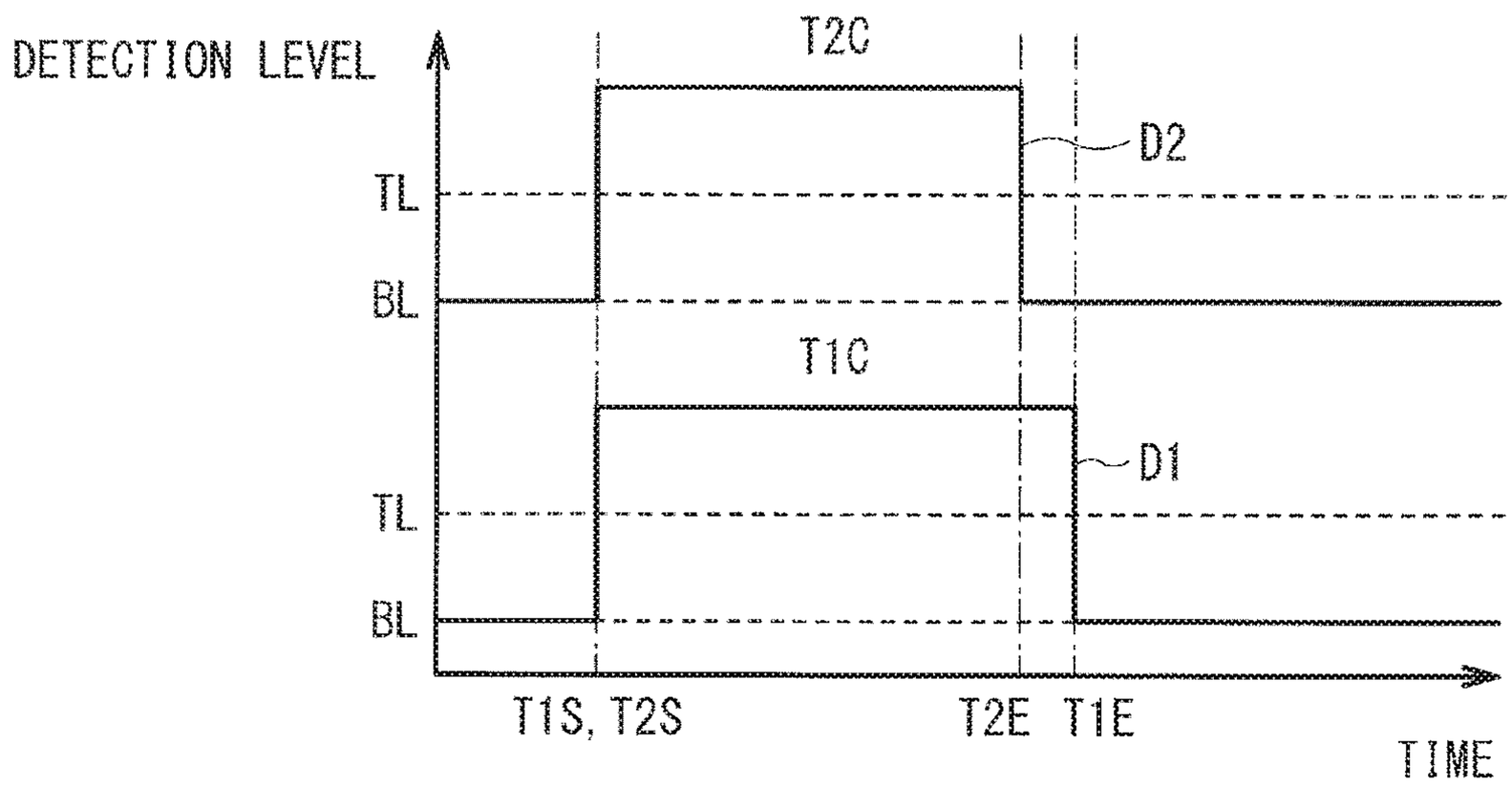
DETECTION LEVEL
T2C
D2
TL
BL
T1C
D1
TL
BL
T1S, T2S
T2E
T1E
TIME

FIG. 26

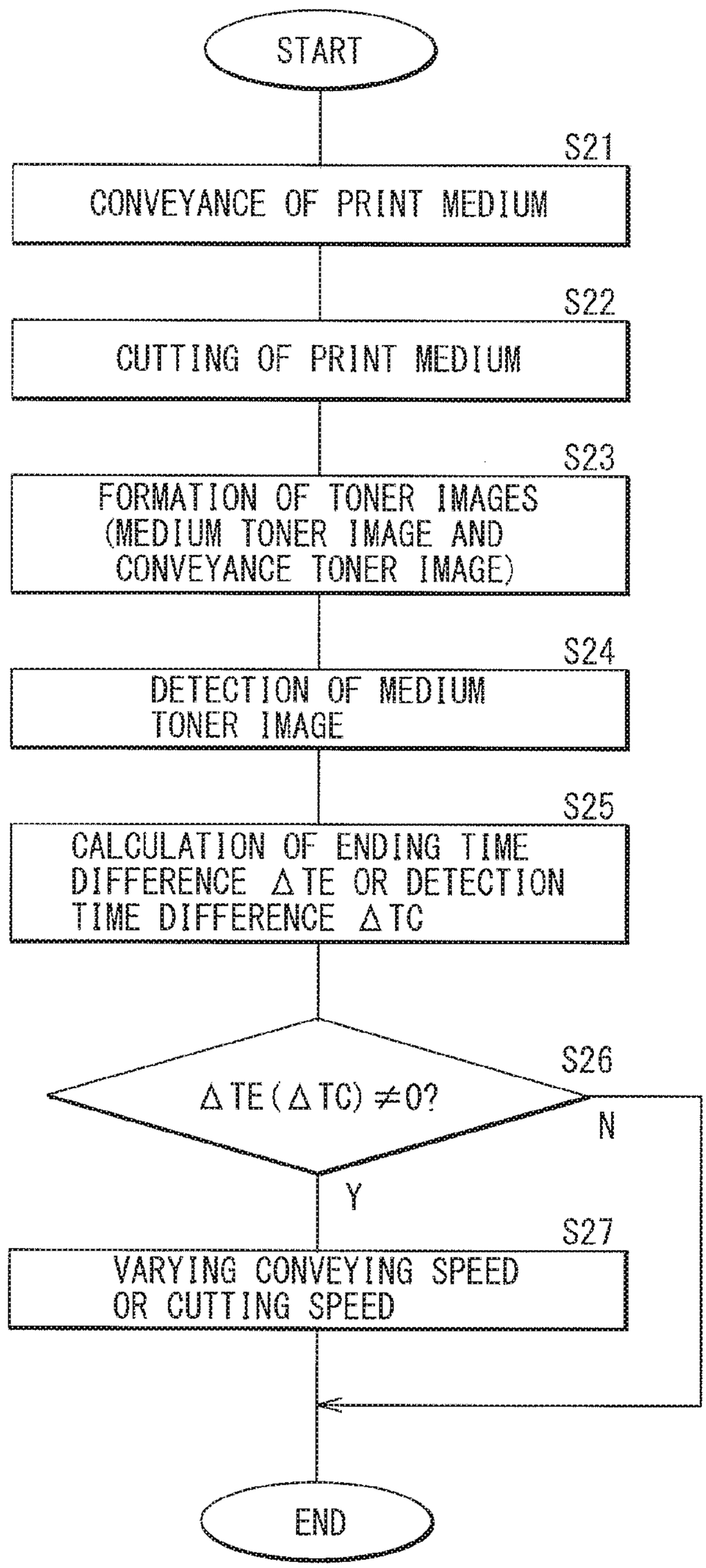
START
S21
CONVEYANCE OF PRINT MEDIUM
S22
CUTTING OF PRINT MEDIUM
S23
FORMATION OF TONER IMAGES (MEDIUM TONER IMAGE AND CONVEYANCE TONER IMAGE)
S24
DETECTION OF MEDIUM TONER IMAGE
S25
CALCULATION OF ENDING TIME DIFFERENCE ΔTE OR DETECTION TIME DIFFERENCE ΔTC
S26
ΔTE(ΔTC)≠0?
N
Y
S27
VARYING CONVEYING SPEED OR CUTTING SPEED
END

FIG. 27

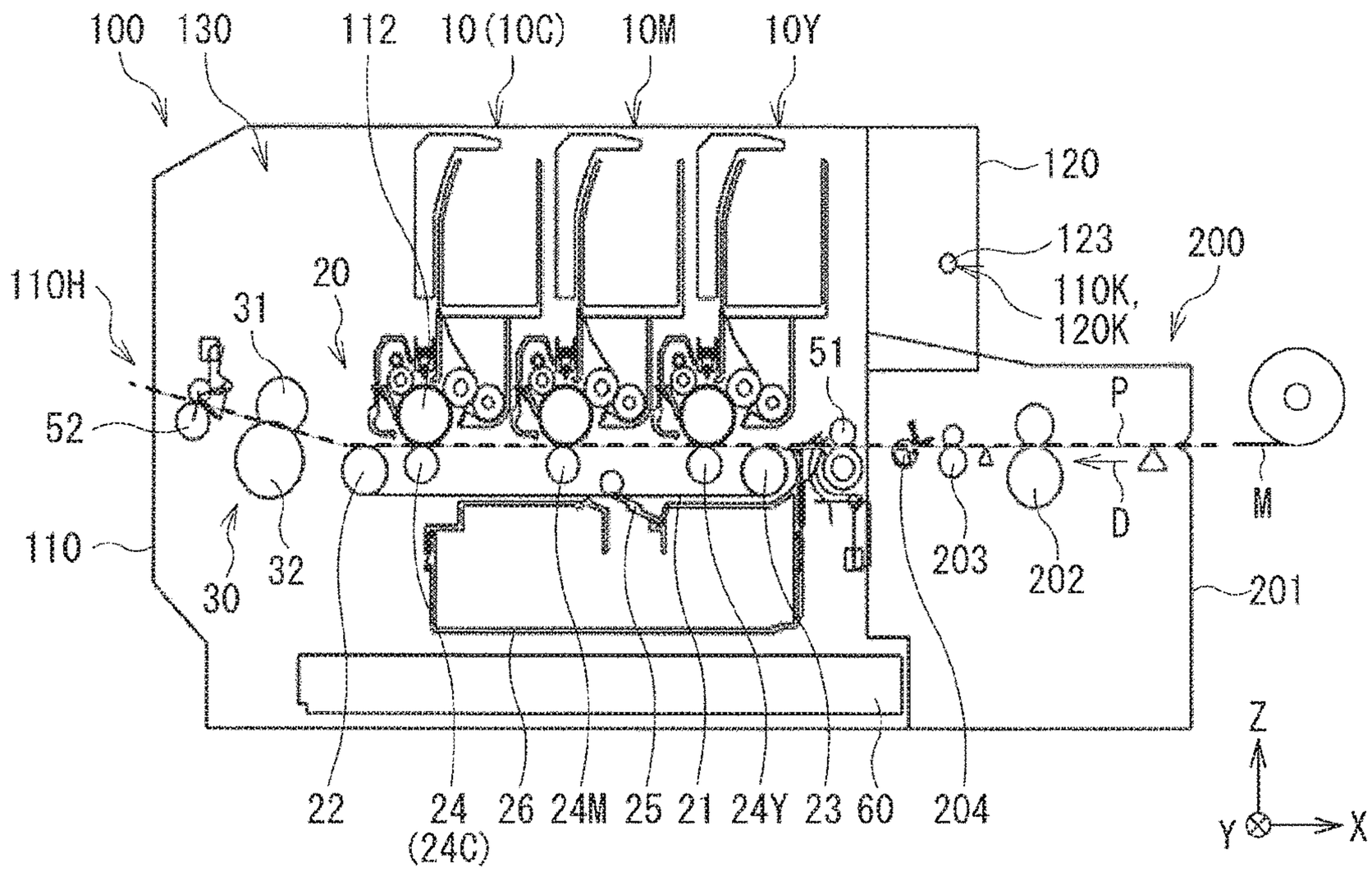
100
130
112
10(10C)
10M
10Y
120
123
200
110K,
120K
110H
20
31
51
52
P
M
D
110
30
32
203
202
201
22
24
(24C)
26
24M
25
21
24Y
23
60
204
Z
Y
X

FIG. 28

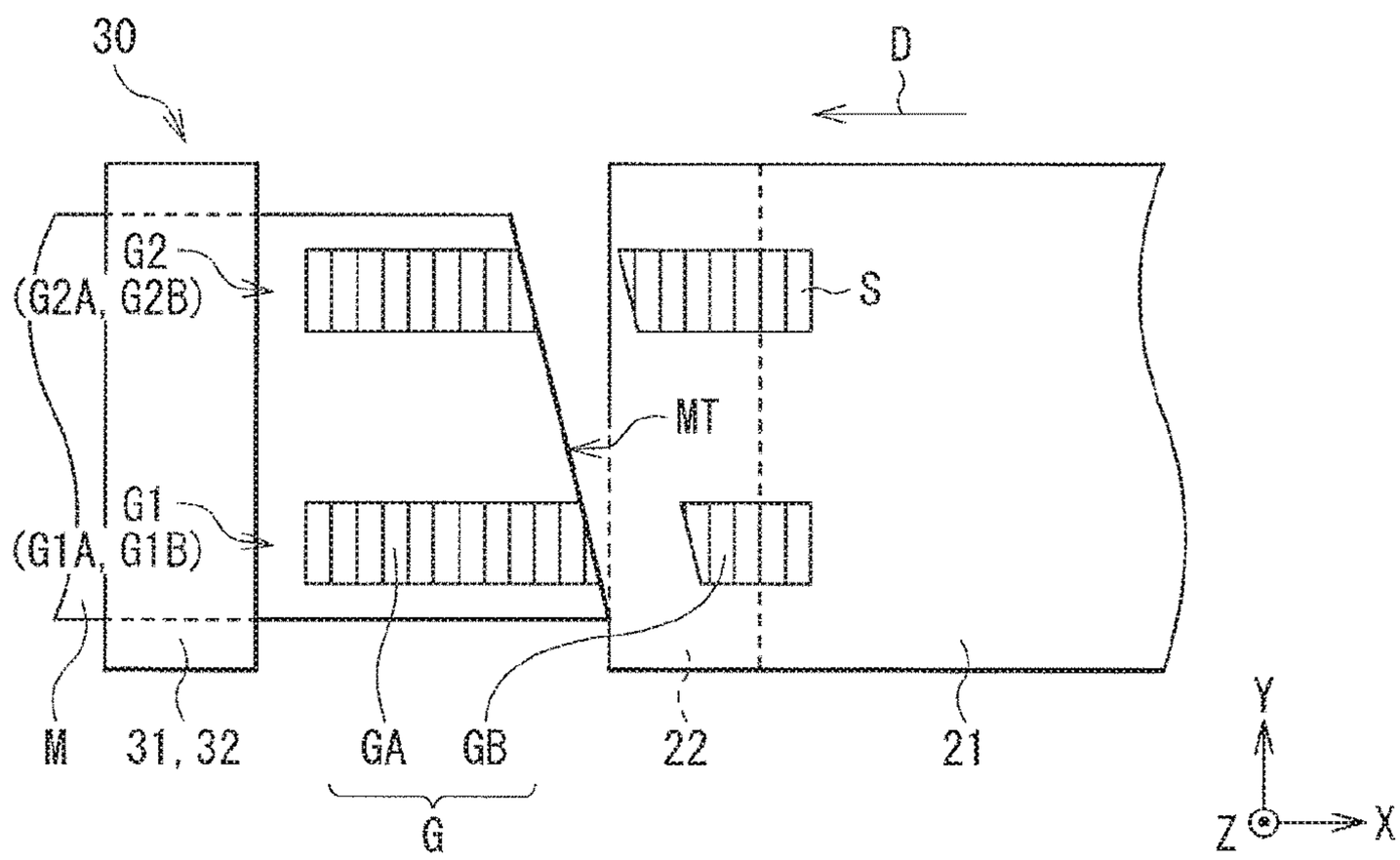
30
D
G2
(G2A, G2B)
S
MT
G1
(G1A, G1B)
M
31, 32
GA
GB
22
21
G
Y
Z
X

FIG. 29

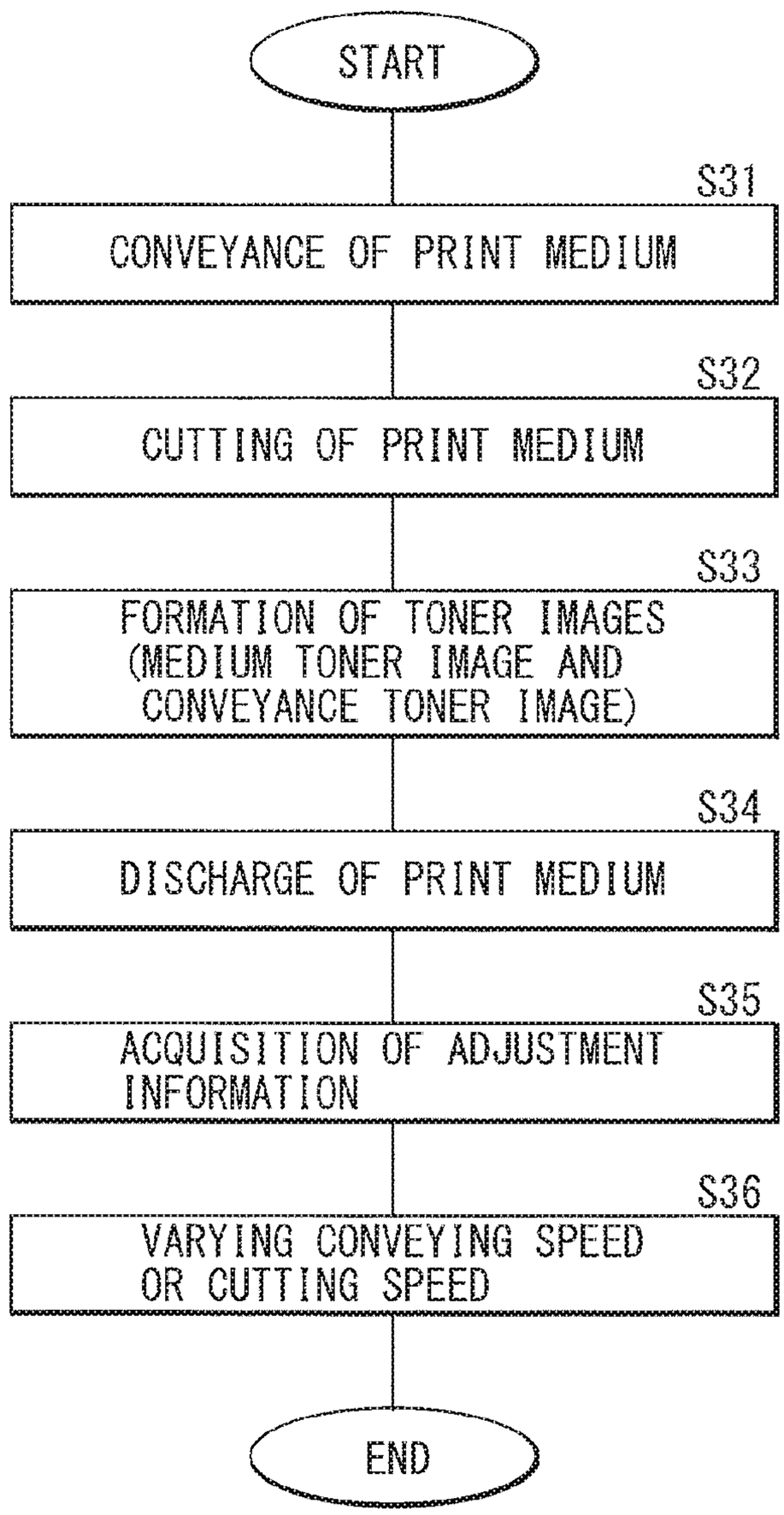
START
S31
CONVEYANCE OF PRINT MEDIUM
S32
CUTTING OF PRINT MEDIUM
S33
FORMATION OF TONER IMAGES (MEDIUM TONER IMAGE AND CONVEYANCE TONER IMAGE)
S34
DISCHARGE OF PRINT MEDIUM
S35
ACQUISITION OF ADJUSTMENT INFORMATION
S36
VARYING CONVEYING SPEED OR CUTTING SPEED
END

FIG. 30

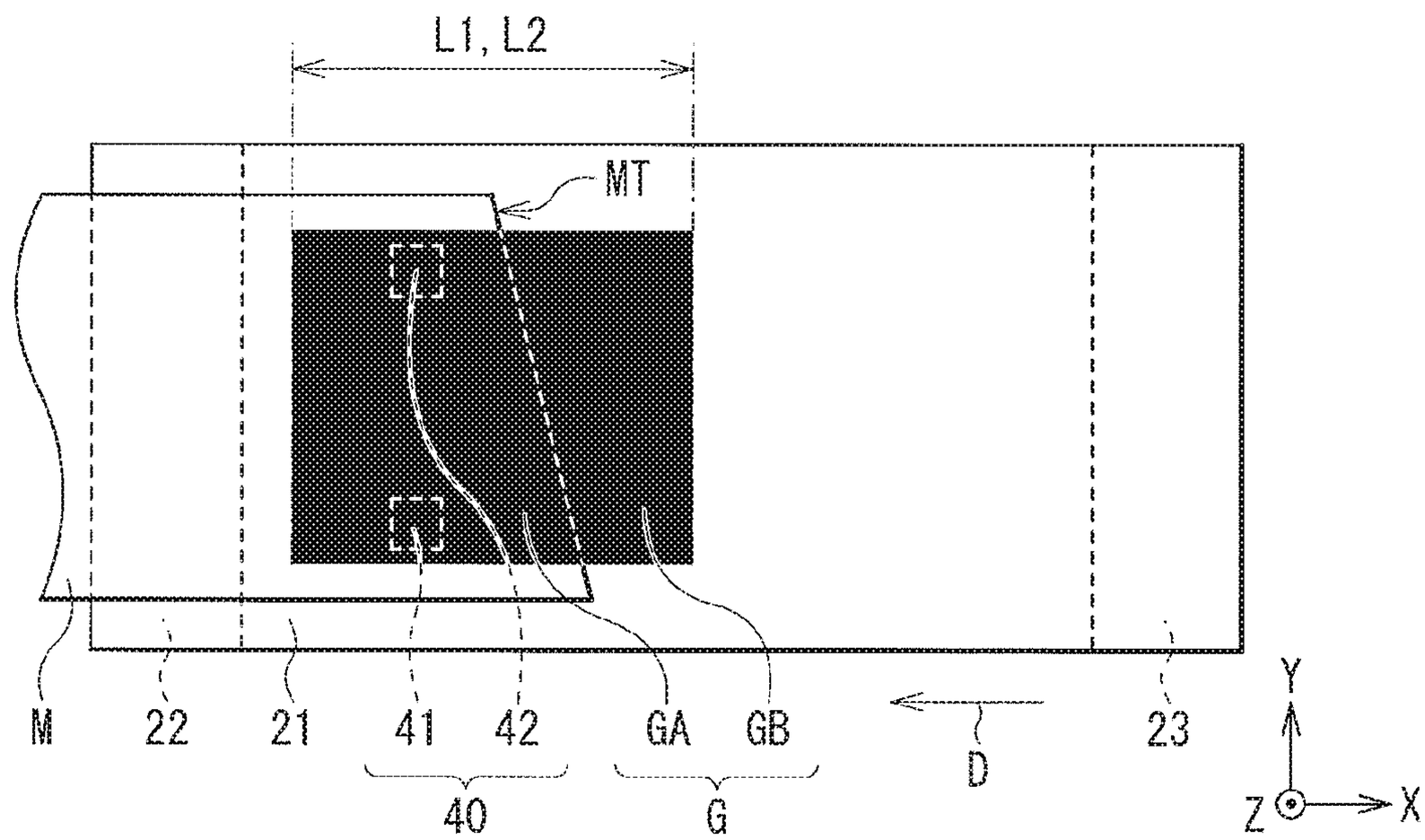
L1, L2
MT
M
22
21
41
42
GA
GB
D
23
40
G
Y
Z
X

FIG. 31

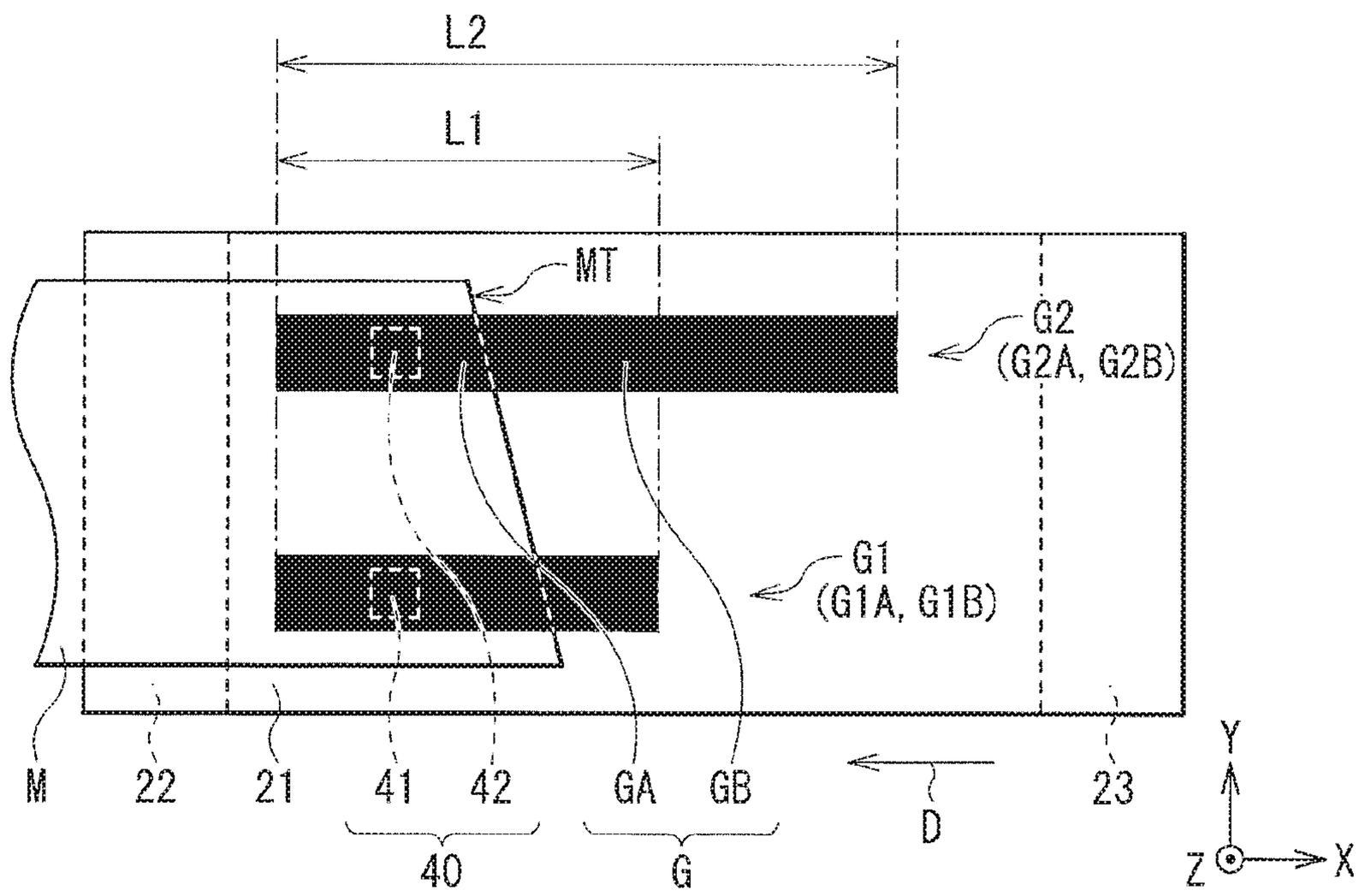
L2
L1
MT
G2
(G2A, G2B)
G1
(G1A, G1B)
M
22
21
41
42
GA
GB
D
23
40
G
Y
Z
X

FIG. 32

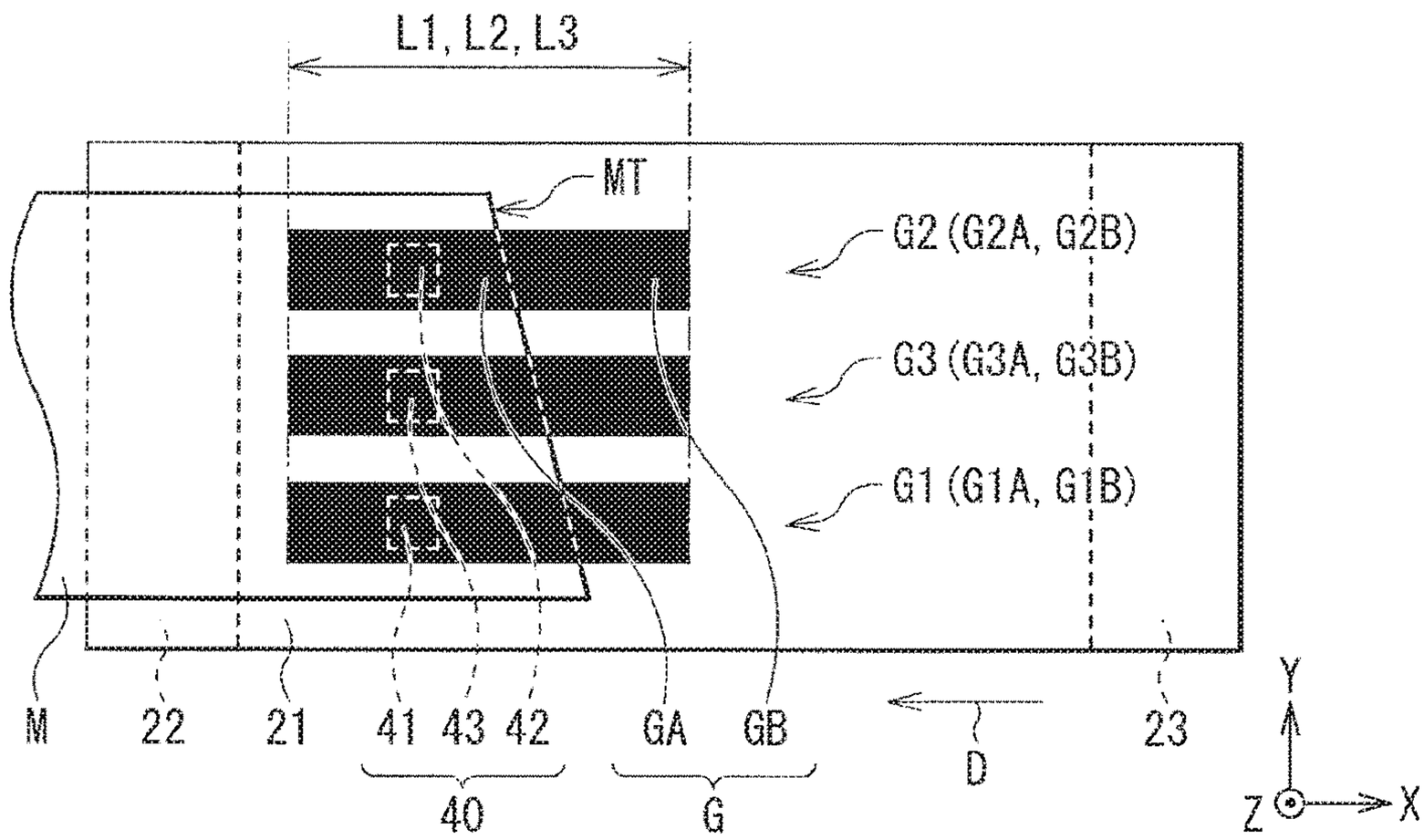
L1, L2, L3
MT
G2 (G2A, G2B)
G3 (G3A, G3B)
G1 (G1A, G1B)
M
22
21
41
43
42
GA
GB
23
D
40
G
Y
Z
X

FIG. 33

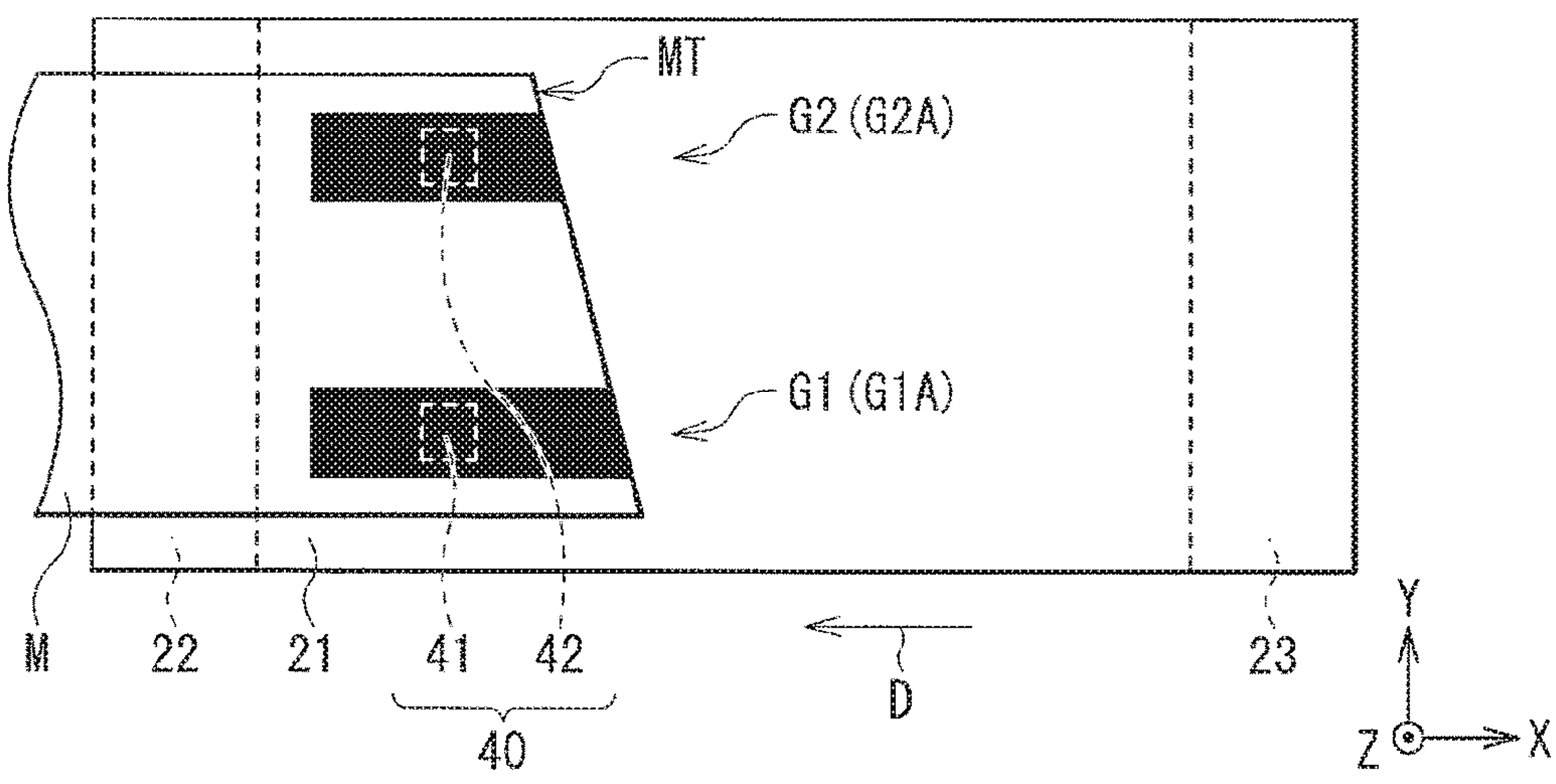
MT
G2 (G2A)
G1 (G1A)
M
22
21
41
42
23
D
40
Y
Z
X

FIG. 34

IMAGE FORMING APPARATUS

CROSS REFERENCE TO RELATED APPLICATIONS

[0001] The present application claims priority from Japanese Patent Application No. 2018-033535 filed on Feb. 27, 2018, the entire contents of which are hereby incorporated by reference.

BACKGROUND

[0002] The technology relates to an image forming apparatus that cuts a print medium and forms an image on a surface of the cut print medium.

[0003] An image forming apparatus based on an electrophotographic method is in widespread use. The image forming apparatus based on the electrophotographic method forms an image on a surface of a print medium, and is able to achieve a higher-quality image in a shorter time as compared with an image forming apparatus based on any other method such as an inkjet method.

[0004] Some proposals have been made on a configuration of the image forming apparatus based on the electrophotographic method, such as an image forming apparatus provided with a cutter in order to cut a print medium. For example, reference is made to Japanese Unexamined Patent Application Publication No. 2017-215365. The image forming apparatus provided with the cutter cuts a print medium by means of the cutter while conveying the print medium, and thus forms an image on a surface of the print medium cut by the cutter.

SUMMARY

[0005] Various proposals have been made on a configuration of an image forming apparatus provided with a cutter. However, a configuration of such an image forming apparatus has not been sufficient in terms of stably forming an image on a print medium while utilizing the cutter, which still leaves room for improvement.

[0006] It is desirable to provide an image forming apparatus that makes it possible to stably forms an image on a print medium.

[0007] An image forming apparatus according to one embodiment of the technology includes: a first conveyor that conveys a print medium, a cutter that cuts the print medium conveyed by the first conveyor; a second conveyor that conveys, in a first direction, the print medium cut by the cutter; a detection image forming section that forms a detection image on each of the print medium cut by the cutter and the second conveyor; a detector that detects, at two positions that are in a second direction, one of the detection image formed on the print medium cut by the cutter and the detection image formed on the second conveyor, in which the second direction is substantially orthogonal to the first direction; and a controller that varies one or both of a conveying speed of the print medium to be conveyed by the first conveyor and a cutting speed of the print medium to be cut by the cutter, on a basis of a comparison of the detection image detected at the two positions by the detector.

[0008] An image forming apparatus according to one embodiment of the technology includes: a first conveyor that conveys a print medium; a cutter that cuts the print medium conveyed by the first conveyor; a second conveyor that conveys, in a first direction, the print medium cut by the cutter; a detection image forming section that forms a detection image on the print medium cut by the cutter; a detector that detects, at two positions that are in a second direction, the detection image, in which the second direction is substantially orthogonal to the first direction; and a controller that varies one or both of a conveying speed of the print medium to be conveyed by the first conveyor and a cutting speed of the print medium to be cut by the cutter, on a basis of a comparison of the detection image detected at the two positions by the detector.

BRIEF DESCRIPTION OF DRAWINGS

[0009] FIG. **1** is a perspective view of an example of a configuration of an image forming apparatus according to one embodiment of the technology.

[0010] FIG. **2** is a schematic plan view of an example of a configuration of the image forming apparatus illustrated in FIG. **1**.

[0011] FIG. **3** is an enlarged plan view of an example of a configuration of a developing unit illustrated in FIG. **2**.

[0012] FIG. **4** is an enlarged plan view of an example of a configuration of a transfer section illustrated in FIG. **2**.

[0013] FIG. **5** is a block diagram illustrating an example of a configuration of the image forming apparatus illustrated in FIG. **2**.

[0014] FIG. **6** is a plan view for describing a configuration of a toner image according to a first configuration example.

[0015] FIG. **7** is another plan view for describing the configuration of the toner image according to the first configuration example.

[0016] FIG. **8** is yet another plan view for describing the configuration of the toner image according to the first configuration example.

[0017] FIG. **9** is a plan view for describing a configuration of the toner image according to a second configuration example.

[0018] FIG. **10** is a plan view for describing a configuration of the toner image according to a third configuration example.

[0019] FIG. **11** is a plan view for describing a configuration of the toner image according to a fourth configuration example.

[0020] FIG. **12** is a plan view for describing a configuration of the toner image according to a fifth configuration example.

[0021] FIG. **13** is a plan view for describing a configuration of the toner image according to a sixth configuration example.

[0022] FIG. **14** is a plan view for describing a configuration of the toner image according to a seventh configuration example.

[0023] FIG. **15** is a plan view for describing an example of one principle of controlling a conveying speed and a cutting speed.

[0024] FIG. **16** is another plan view for describing one example of the principle of controlling the conveying speed and the cutting speed.

[0025] FIG. **17** is yet another plan view for describing the example of one principle of controlling the conveying speed and the cutting speed.

[0026] FIG. **18** is a diagram illustrating an example of detection results obtained by image detection sensors.

[0027] FIG. **19** is a diagram illustrating another example of the detection results obtained by the image detection sensors.
[0028] FIG. **20** is a flowchart illustrating an example of a flow of an adjustment operation of a cutting process.
[0029] FIG. **21** is a schematic plan view of an example of a configuration of an image forming apparatus according to one embodiment of the technology.
[0030] FIG. **22** is a plan view for describing an example of one principle of controlling the conveying speed and the cutting speed.
[0031] FIG. **23** is another plan view for describing one example of the principle of controlling the conveying speed and the cutting speed.
[0032] FIG. **24** is yet another plan view for describing one example of the principle of controlling the conveying speed and the cutting speed.
[0033] FIG. **25** is yet another plan view for describing one example of the principle of controlling the conveying speed and the cutting speed.
[0034] FIG. **26** is a diagram illustrating an example of the detection results obtained by the image detection sensors.
[0035] FIG. **27** is a flowchart illustrating an example of a flow of the adjustment operation of the cutting process.
[0036] FIG. **28** is a schematic plan view of an example of a configuration of an image forming apparatus according to one embodiment of the technology.
[0037] FIG. **29** is a plan view for describing an example of an adjustment procedure in the cutting process.
[0038] FIG. **30** is a flowchart illustrating an example of a flow of the adjustment operation of the cutting process.
[0039] FIG. **31** is a plan view of a configuration of the toner image according to a modification example.
[0040] FIG. **32** is a plan view of a configuration of the toner image according to another modification example.
[0041] FIG. **33** is a plan view of a configuration of the toner image according to yet another modification example.
[0042] FIG. **34** is a plan view of a configuration of the toner image according to yet another modification example.

DETAILED DESCRIPTION

[0043] Hereinafter, some example embodiments of the technology will be described in detail with reference to the drawings. Note that the following description is directed to illustrative examples of the technology and not to be construed as limiting to the technology. Factors including, without limitation, numerical values, shapes, materials, components, positions of the components, and how the components are coupled to each other are illustrative only and not to be construed as limiting to the technology. Further, elements in the following example embodiments which are not recited in a most-generic independent claim of the technology are optional and may be provided on an as-needed basis. The drawings are schematic and are not intended to be drawn to scale. Note that the like elements are denoted with the same reference numerals, and any redundant description thereof will not be described in detail. The description will be given in the following order.

1. Image Forming Apparatus (First Example Embodiment)

[0044] 1-1. General Configuration
[0045] 1-2. Block Configuration
[0046] 1-3. Configurations of Toner Image
[0047] 1-4. Principle of Controlling Conveying Speed and Cutting Speed
[0048] 1-5. Operation
[0049] 1-6. Example Workings and Example Effects

2. Image Forming Apparatus (Second Example Embodiment)

[0050] 2-1. Configuration
[0051] 2-2. Operation
[0052] 2-3. Example Workings and Example Effects

3. Image Forming Apparatus (Third Example Embodiment)

[0053] 3-1. Configuration
[0054] 3-2. Operation
[0055] 3-3. Example Workings and Example Effects

4. Image Forming Apparatus (Fourth Example Embodiment)

5. Modification Examples

1. IMAGE FORMING APPARATUS (FIRST EXAMPLE EMBODIMENT)

[0056] A description is given below of an image forming apparatus according to a first example embodiment of the technology.
[0057] The image forming apparatus according to the first example embodiment may form an image on a print medium M with the use of a toner T illustrated in FIG. **3**. The print medium M will be described later with reference to FIG. **2**. The image forming apparatus may be, for example, a full-color printer based on a so-called electrophotographic method.
[0058] The image forming apparatus cuts the print medium M, and forms an image on a surface of the cut print medium M. In an example embodiment, the print medium M may be a roll of print medium M. However, the print medium M does not necessarily have to be rolled in the form of the roll as long as the print medium M is subjected to a cutting process.
[0059] It is to be noted that any type of print medium M may be used and hence the print medium M is not particularly limited in its type accordingly. In a specific but non-limiting embodiment, the print medium M may include one or more of materials such as paper or a film.

[1-1. General Configuration]

[0060] A description is given first of an example of a general configuration of the image forming apparatus according to the first example embodiment.
[0061] FIG. **1** illustrates an example of a perspective configuration of the image forming apparatus according to the first example embodiment. FIG. **2** schematically illustrates an example of a plan configuration of the image forming apparatus illustrated in FIG. **1**. FIG. **3** illustrates, in an enlarged fashion, an example of a plan configuration of a developing unit **10** illustrated in FIG. **2**. FIG. **4** illustrates, in an enlarged fashion, an example of a configuration of a transfer section **20** illustrated in FIG. **2**, together with image detection sensors **40**.
[0062] In the following description, the upper side, the lower side, the left side, and the right side of the image forming apparatus illustrated in FIG. **1** are respectively

referred to as upper (or the upper side), lower (or the lower side), front (or the front side), and rear (or the rear side).

[0063] Referring to FIGS. **1** and **2**, the image forming apparatus may include an image forming unit **100** and a medium feeding unit **200**, for example.

[Image Forming Unit]

[0064] The image forming unit **100** may form an image on the surface of the print medium M fed from the medium feeding unit **200**.

[0065] The image forming unit **100** may have an image forming device **130** provided in a housing **110**. For example, the housing **110** may be attached with a top cover **120**.

[0066] The housing **110** may contain the image forming device **130**. For example, the housing **110** may be a box-shaped member having an opening at an upper part of the housing **110** as illustrated in FIGS. **1** and **2**. The housing **110** may have a discharge opening **110**H at a front face of the housing **110**. For example, the discharge opening **110**H may discharge the print medium M on which an image has been formed.

[0067] The top cover **120** may cover the opening of the housing **110** in which the image forming device **130** is disposed. For example, the top cover **120** may be a plate-shaped member as illustrated in FIGS. **1** and **2**, and may be openable on an as-needed basis. The top cover **120** may have an upper face that is provided with an opening-closing lever **121**, for example. The opening-closing lever **121** may serve as a holding member that allows the top cover **120** to be opened or closed. The top cover **120** may have a front face that is provided with an operation interface panel **122**, for example. The operation interface panel **122** may be operated by a user upon using the image forming apparatus, and will be described later in greater detail.

[0068] The housing **110** may have a through hole **110**K provided at a rear part of the housing **110**. The top cover **120** may also have a through hole **120**K provided at a rear part of the top cover **120**. For example, the through holes **110**K and **120**K each may extend in a Y-axis direction. A shaft **123** may be inserted into the through holes **110**K and **120**K. For example, the shaft **123** may be a rod-shaped member, and may extend in the Y-axis direction. With this example configuration, the top cover **120** may be pivotable around the shaft **123** and may be openable and closable accordingly.

[Image Forming Device]

[0069] The image forming device **130** may form an image on the surface of the print medium M with use of the toner T. Referring to FIG. **2**, the image forming device **130** may include a developing unit **10**, a transfer section **20**, a fixing section **30**, the image detection sensors **40**, conveying rollers **51** and **52**, and a control board **60**, for example. The print medium M to be fed from the medium feeding unit **200** to the image forming unit **100**, e.g., to the image forming device **130**, may be conveyed in a conveyance direction D along a conveyance route P. For example, the print medium M may be conveyed in an X-axis direction along the conveyance route P that is denoted by a broken line in FIG. **2**. The X-axis direction may correspond to a specific but non-limiting example of a "first direction" in one embodiment of the technology. The image detection sensor **40** may correspond to a specific but non-limiting example of a "detector" in one embodiment of the technology.

[Developing Unit]

[0070] The developing unit **10** may perform a developing process, i.e., a process of attaching the toner T to an electrostatic latent image. For example, the developing unit **10** may form the electrostatic latent image, and attach the toner T to the electrostatic latent image by utilizing Coulomb force.

[0071] As described later in greater detail, the developing unit **10**, when the print medium M is cut by a cutter **204**, forms a toner image G on the surface of the print medium M cut by the cutter **204** and on a surface of a conveyance belt **21**. In other words, the toner image G may include a medium toner image GA and a conveyance toner image GB. In an example embodiment, the developing unit **10** may form the medium toner image GA on the surface of the print medium M. and form the conveyance toner image GB on the surface of the conveyance belt **21**. The medium toner image GA and the conveyance toner image GB each may correspond to a specific but non-limiting example of a "detection image" in one embodiment of the technology.

[0072] For example, the developing unit **10** may cause, by means of a transfer roller **24**, the toner T to be transferred from the surface of the print medium M through a cut edge MT to the surface of the conveyance belt **21** in the conveyance direction D, upon conveyance by the conveyance belt **21** of the print medium M cut by the cutter **204**. By performing such a transfer operation, the developing unit **10** may form the toner image G as illustrated in FIGS. **6** to **14**. The thus-formed toner image G may include the medium toner image GA formed on the surface of the print medium M and the conveyance toner image GB formed on the surface of the conveyance belt **21** as described above. A configuration of the toner image G, including the medium toner image GA and the conveyance toner image GB, will be described later in greater detail.

[0073] Any number of developing units **10** may be provided and hence the number of developing units **10** is not particularly limited. In an illustrated example embodiment, the image forming device **130** may include three developing units **10**, i.e., developing units **10**Y, **10**M, and **10**C. The developing units **10**Y, **10**M, and **10**C each may be attached detachably to the housing **110**, and may be disposed in this order from upstream toward downstream along the conveyance route P.

[0074] Referring to FIG. **3**, the developing units **10**Y, **10**M, and **10**C each may include a developing process unit **11** and a toner cartridge **12**, for example. The toner cartridge **12** may be attached detachably to the developing process unit **11**, for example. The developing process unit **11** may be provided with a light source **13**, for example. In an example embodiment, the developing units **10**Y. **10**M, and **10**C may have configurations same as or similar to each other except for the toners T contained in the respective toner cartridges **12**. For example, the toners T may be different in type (e.g., color) from each other.

[0075] The developing process unit **11** may perform the developing process with the use of the toner T fed from the toner cartridge **12**. The developing process unit **11** may include a photosensitive drum **112**, a charging roller **113**, a feeding roller **114**, a developing roller **115**, a developing blade **116**, and a cleaning blade **117** that are provided in the housing **111**, for example.

[0076] The housing **111** may have an opening **111**K1 from which the photosensitive drum **112** is partially exposed, for

example. The housing **111** may also have an opening **111K2** that allows light outputted from the light source **13** to be guided to the photosensitive drum **112**. The light source **13** may be disposed outside of the housing **111**, for example.

[0077] The photosensitive drum **112** may be a cylindrical member including an organic photoreceptor that supports the electrostatic latent image. The photosensitive drum **112** may extend in the Y-axis direction, and be rotatable around a rotation axis that extends in the Y-axis. The charging roller **113** may be so pressed against the photosensitive drum **112** as to be in contact with the photosensitive drum **112**. The charging roller **113** may electrically charge a surface of the photosensitive drum **112**. The feeding roller **114** may be so pressed against the developing roller **115** as to be in contact with the developing roller **115**. The feeding roller **114** may feed the toner T to a surface of the developing roller **115**. The developing roller **115** may be so pressed against the photosensitive drum **112** as to be in contact with the photosensitive drum **112**. The developing roller **115** may support the toner T that is fed from the feeding roller **114**, and attach the fed toner T onto the electrostatic latent image formed on the surface of the photosensitive drum **112**.

[0078] Note that, among the components of the image forming apparatus, any component referred to by the name that contains the term "roller", such as the charging roller **113** described above, may be a cylindrical member that extends in the Y-axis direction and is rotatable around the rotation axis that extends in the Y-axis. The same holds true in the following description for any component referred to by the name that contains the term "roller".

[0079] The developing blade **116** may be a plate-like member that controls a thickness of the toner T fed to the surface of the developing roller **115**. The developing blade **116** may be disposed at a position away from the developing roller **115** with a predetermined distance, i.e., predetermined spacing, in between, for example. The thickness of the toner T may be controlled on the basis of the distance, i.e., the spacing, between the developing roller **115** and the developing blade **116**.

[0080] The cleaning blade **117** may be a plate-like elastic member that scrapes off an extraneous material such as unnecessary remains of the toner T that are present on the surface of the photosensitive drum **112**. The cleaning blade **117** may extend in a direction substantially parallel to a direction in which the photosensitive drum **112** extends, for example. The cleaning blade **117** may be so pressed against the photosensitive drum **112** as to be in contact with the photosensitive drum **112**.

[0081] The toner cartridge **12** may contain the toner T. The toner cartridge **12** provided in the developing unit **10**Y may contain a yellow toner, for example. The toner cartridge **12** provided in the developing unit **10**M may contain a magenta toner, for example. The toner cartridge **12** provided in the developing unit **10**C may contain a cyan toner, for example.

[0082] The light source **13** may be an exposure device that performs exposure on the surface of the photosensitive drum **112** to thereby form the electrostatic latent image on the surface of the photosensitive drum **112**. The light source **13** may be, for example, a light-emitting diode (LED) head that has components including an LED element and a lens array. The LED element and the lens array may be so disposed that the light outputted from the LED element forms an image on the surface of the photosensitive drum **112**, for example.

[Transfer Section]

[0083] The transfer section **20** may perform a transfer process of the toner T that has been subjected to the developing process by the developing unit **10**. For example, the transfer section **20** may transfer, onto the print medium M, the toner T that has been attached to the electrostatic latent image by the developing unit **10**.

[0084] The transfer section **20** may include the conveyance belt **21**, a driving roller **22**, a driven roller **23**, the transfer roller **24**, a cleaning blade **25**, and a collection box **26**, for example. Note that FIG. **4** illustrates only the conveyance belt **21**, the driving roller **22**, and the driven roller **23**. The developing unit **10** and the transfer roller **24** may correspond to a specific but non-limiting example of a "detection image forming section" in one embodiment of the technology. The conveyance belt **21** may correspond to a specific but non-limiting example of a "second conveyor" in one embodiment of the technology.

[0085] The conveyance belt **21** may convey, in the conveyance direction D, the print medium M cut by the later-described cutter **204**. The conveyance belt **21** may be an elastic endless belt, for example. The conveyance belt **21** may be able to travel in accordance with rotation of the driving roller **22**, while lying on the driving roller **22** and the driven roller **23** in a stretched state, for example. The driving roller **22** may be rotatable, for example, by utilizing power of a device such as a motor. The driven roller **23** may be rotatable in accordance with the rotation of the driving roller **22**, for example.

[0086] The transfer roller **24** may transfer, onto the print medium M, the toner T attached to the electrostatic latent image. The transfer roller **24** may be so pressed against the photosensitive drum **112** as to be in contact with the photosensitive drum **112** with the conveyance belt **21** in between. The number of transfer rollers **24** is not particularly limited. For example, the number of transfer rollers **24** may correspond to the number of developing units **10**. In an illustrated example embodiment, the image forming apparatus may include three transfer rollers **24** including transfer rollers **24**Y, **24**M, and **24**C, corresponding to the three developing units **10** including the developing units **10**Y, **10**M, and **10**C.

[0087] The cleaning blade **25** may be so pressed against the conveyance belt **21** as to be in contact with the conveyance belt **21**. The cleaning blade **25** may scrape off an extraneous material such as unnecessary remains of the toner T on the surface of the conveyance belt **21**. The collection box **26** may collect the extraneous material scraped by the cleaning blade **25**.

[Fixing Section]

[0088] The fixing section **30** may perform a fixing process of the toner T that has been transferred onto the print medium M by the transfer section **20**. For example, the fixing section **30** may apply a pressure onto the print medium M onto which the toner T has been transferred by the transfer section **20**, while heating the print medium M. The fixing section **30** may thereby fix the toner T to the print medium M.

[0089] The fixing section **30** may include a heating roller **31** and a pressure applying roller **32**, for example. The heating roller **31** may heat the toner T having been transferred onto the print medium M. The heating roller **31** may

have a heating source such as a heater **80** (see FIG. **5**) disposed inside the heating roller **31**, for example. A temperature measuring device such as a later-described thermistor (see FIG. **5**) may be so disposed in the vicinity of the heating roller **31** that the heating roller **31** and the temperature measuring device such as the thermistor may be spaced apart from each other, for example. The pressure applying roller **32** may be so pressed against the heating roller **31** as to be in contact with the heating roller **31**. The pressure applying roller **32** may apply a pressure onto the toner T transferred onto the print medium M.

[Image Detection Sensor]

[0090] The image detection sensors **40** may be disposed away from each other in a width direction that intersects the conveyance direction D. For example, the image detection sensors **40** may be disposed in the width direction (e.g., the Y-axis direction) that is substantially orthogonal to the conveyance direction D. The Y-axis direction may correspond to a specific but non-limiting example of a "second direction" in one embodiment of the technology. In the present example embodiment, for example, the width direction may be orthogonal to the conveyance direction D. The image detection sensors **40** may detect the toner image G at two positions that are different from each other in the width direction.

[0091] In an example embodiment, the image detection sensors **40** may detect the conveyance toner image GB formed on the conveyance belt **21**, out of the above-described toner image G including the medium toner image GA and the conveyance toner image GB. For example, the image detection sensors **40** may be disposed below the conveyance belt **21**. In a specific but non-limiting embodiment, the image detection sensors **40** each may be disposed at a position that is upstream of a position at which formation of the toner image G starts and that is downstream of a position at which the formation of the toner image G ends, in a traveling direction of the conveyance belt **21**. Accordingly, the conveyance belt **21** may be disposed in a region between the developing unit **10** and the image detection sensors **40**, for example.

[0092] The image detection sensors **40** may be disposed away from each other in the width direction as described above. Hence, in an example embodiment, the image detection sensors **40** may detect, on the basis of the conveyance toner image GB, positions of the conveyance toner image GB at two positions that are different from each other in the width direction. In such an example embodiment, the image detection sensors **40** may detect, at the respective two positions, timings at which the detection of the conveyance toner image GB is started. In an alternative example embodiment, the image detection sensors **40** may detect, at the respective two positions, formation sizes of the conveyance toner image GB, on the basis of the conveyance toner image GB. For example, the image detection sensors **40** may detect, as a non-limiting example of the formation size, lengths of the conveyance toner image GB in the conveyance direction D. In such an alternative example embodiment, the image detection sensors **40** may detect, at the respective two positions, timings at which the detection of the conveyance toner image GB is started and timings at which the detection of the conveyance toner image GB is ended. Some non-limiting examples of the detection to be performed by the image detection sensors **40** will be described later in greater detail.

[0093] The number of image detection sensors **40** are not particularly limited as long as two or more image detection sensors **40** are provided. In an illustrated example embodiment, the number of image detection sensors **40** may be two, i.e., the image detection sensors **40** may include image detection sensors **41** and **42** as illustrated in FIG. **4**. For example, the image detection sensors **40** may include image detection sensors **41** and **42** that are disposed away from each other in the width direction. The image detection sensor **41** and the image detection sensor **42** may respectively detect a later-described toner image G**1** (e.g., the conveyance toner image GB) and a later-described toner image G**2** (e.g., the conveyance toner image GB) as illustrated by way of example in FIGS. **6** to **14**, for example. A distance or an interval between the image detection sensor **41** and the image detection sensor **42** is not particularly limited. However, in an example embodiment, the interval between the image detection sensor **41** and the image detection sensor **42** may be sufficiently large to allow for easier calculation, with high accuracy, of a starting time difference ΔTS, an ending time difference ΔTE, and a detection time difference ΔTC that are described later in greater detail. The image detection sensor **41** may correspond to a specific but non-limiting example of a "first detector" in one embodiment of the technology. The image detection sensor **42** may correspond to a specific but non-limiting example of a "second detector" in one embodiment of the technology.

[0094] The image detection sensors **40** are each not limited in its kind as long as the image detection sensors **40** are able to detect the toner image G, e.g., the conveyance toner image GB. In an example embodiment, the image detection sensors **40** each may include an optical device that is able to detect presence of the toner image G by means of a reflection phenomenon of light. For example, the image detection sensors **40** each may include a photosensor. The photosensor may be able to output an output value that corresponds to a concentration of the toner image G, in order to allow for the detection of the presence of the toner image G that serves as a detection target, for example.

[Conveying Rollers]

[0095] The conveying roller **51** and the conveying roller **52** may convey the print medium M in the conveyance direction D along the conveyance route P as with the conveyance belt **21**. For example, the conveying rollers **51** and **52** each may include a pair of rollers that face each other with the conveyance route P in between. The conveyance belt **21** may be disposed between the conveying rollers **51** and **52**, for example.

[Control Board]

[0096] The control board **60** may have a central processing unit (CPU), for example. The control board **60** may control the image forming apparatus as a whole. A configuration of the control board **60**, including a block configuration, will be described later in greater detail with reference to FIG. **5**.

[Medium Feeding Unit]

[0097] The medium feeding unit **200** may feed the print medium M to the image forming unit **100**. In an example embodiment, the medium feeding unit **200** may cut the

rolled print medium M, and may thereafter convey the cut medium M along the conveyance route P, thereby feeding the print medium M, having been subjected to the cutting, from the medium feeding unit **200** to the image forming unit **100**. For example, the medium feeding unit **200** may be attached at a rear part of the image forming unit **100**.

[0098] The medium feeding unit **200** in an example embodiment may have a conveying roller **202**, a conveying roller **203**, and the cutter **204** that are disposed in a housing **201**, for example. The conveying rollers **202** and **203** and the cutter **204** may be disposed in this order from upstream to downstream of the conveyance route P. The conveying rollers **202** and **203** may correspond to a specific but non-limiting example of a "first conveyor" in one embodiment of the technology. The cutter **204** may correspond to a specific but non-limiting example of a "cutter" in one embodiment of the technology.

[Conveying Rollers]

[0099] The conveying roller **202** and the conveying roller **203** may convey the rolled print medium M along the conveyance route P and thereby convey the rolled print medium M to the cutter **204**. For example, the conveying rollers **202** and **203** each may include a pair of rollers that face each other with the conveyance route P in between, as with the conveying rollers **51** and **52**.

[Cutter]

[0100] The cutter **204** may so cut the rolled print medium M conveyed by the conveying rollers **202** and **203** as to cause the cut print medium M to have a predetermined size, e.g., a predetermined length. In an example embodiment, the cutter **204** may include a rotary cutter. The rotary cutter may extend in the Y-axis direction, and may be rotatable around a rotation axis that extends in the Y-axis direction. For example, the rotary cutter may be rotatable and cut the print medium M upon the conveyance of the rolled print medium M by the conveying rollers **202** and **203**. Thus, the cutter **204**, including the rotary cutter in an example embodiment, may be able to cut the rolled print medium M while conveying the rolled print medium M. The print medium M following the cutting by the cutter **204** may thus have the cut edge MT, as described later in greater detail with reference to FIGS. **6** to **14**.

[1-2. Block Configuration]

[0101] A description is given next of an example of a block configuration of the image forming apparatus according to an example embodiment.

[0102] FIG. **5** illustrates an example of the block configuration of the image forming apparatus illustrated in FIG. **2**, together with some of the components of the image forming apparatus that are already described above.

[0103] Referring to FIG. **5**, the image forming apparatus, or the control board **60**, may have an image forming controller **61**, an interface (I/F) controller **62**, a reception memory **63**, an editing memory **64**, various sensors **65**, a light source controller **66**, a charging voltage controller **67**, a supply voltage controller **68**, a developing voltage controller **69**, a transfer voltage controller **70**, a roller driving controller **71**, a drum driving controller **72**, a belt driving controller **73**, a fixing controller **74**, a sensor driving controller **75**, and a cutter driving controller **76**, for example.

[Image Forming Controller]

[0104] The image forming controller **61** may control an operation of the image forming apparatus as a whole. The image forming controller **61** may have one or more of electronic components including, but not limited to, a control circuit, a memory, an input/output port, and a timer. For example, the control circuit may include a device such as CPU. For example, the memory may include one or more of memory devices including, but not limited to, a read-only memory (ROM) and a random-access memory (RAM). The image forming controller **61** may correspond to a specific but non-limiting example of a "controller" in one embodiment of the technology.

[0105] The image forming controller **61** varies one or both of a conveying speed of the print medium M to be conveyed by the conveying rollers **202** and **203** and a cutting speed of the print medium M to be cut by the cutter **204**. The image forming controller **61** varies one or both of the conveying speed and the cutting speed on the basis of a comparison of the conveyance toner image GB detected, at the two positions that are different from each other in the width direction, by the image detection sensors **40**, e.g., by the image detection sensors **41** and **42**. Some non-limiting examples of a principle of controlling the conveying speed and the cutting speed to be performed by the image forming controller **61** will be described later in greater detail with reference to FIGS. **15** to **19**.

[I/F Controller]

[0106] The I/F controller **62** may receive information such as data transmitted from an external apparatus to the image forming apparatus. For example, the external apparatus may be any device usable by a user of the image forming apparatus, such as a personal computer. The information to be transmitted from the external apparatus to the image forming apparatus may be any data directed to formation of an image, such as image data.

[Reception Memory and Editing Memory]

[0107] The reception memory **63** may store information such as data received by the image forming apparatus. For example, the data may be the above-described image data. The editing memory **64** may store information such as image data having been subjected to an editing process.

[Operation Interface Panel]

[0108] The operation interface panel **122** may serve both as a display and an input device, for example. The display may display any information necessary for the user to operate the image forming apparatus. The input device may be used by the user to operate the image forming apparatus. The operation interface panel **122** may include members including a display panel and an operation button. The display panel may be a liquid crystal panel having a touch panel functionality, although a kind of the display panel is not particularly limited.

[Various Sensors]

[0109] The various sensors **65** may include one or more of sensors including, but not limited to, a temperature sensor, a humidity sensor, an image density sensor, a medium position detection sensor, a toner remaining level detection

sensor, and a human sensor. It is to be noted that the various sensors **65** do not encompass the image detection sensors **40**.

[Light Source Controller, Charging Voltage Controller, Supply Voltage Controller, Developing Voltage Controller, and Transfer Voltage Controller]

[0110] The light source controller **66** may control an operation related to the light source **13**, such as an exposure operation of the light source **13**, for example. The charging voltage controller **67** may control a voltage, such as a voltage to be applied to the charging roller **113**, for example. The supply voltage controller **68** may control a voltage, such as a voltage to be applied to the feeding roller **114**, for example. The developing voltage controller **69** may control a voltage, such as a voltage to be applied to the developing roller **115**, for example. The transfer voltage controller **70** may control a voltage, such as a voltage to be applied to the transfer roller **24**, for example. For example, these voltages may be set in accordance with instructions issued from the image forming controller **61**.

[0111] In an illustrated example embodiment, the image forming apparatus may include three light source controllers **66** corresponding to the respective three developing units **10** including the developing units **10**Y, **10**M, and **10**C. Note that those three light source controllers **66** are not illustrated in FIG. **5** for simplification purpose. For example, the three light source controllers **66** may be the light source controller **66** that controls the light source **13** provided in the developing unit **10**Y, the light source controller **66** that controls the light source **13** provided in the developing unit **10**M, and the light source controller **66** that controls the light source **13** provided in the developing unit **10**C.

[0112] In an illustrated example embodiment, what has been described above in relation to the light source controllers **66** may apply, for example, to the charging voltage controller **67**, the supply voltage controller **68**, the developing voltage controller **69**, and the transfer voltage controller **70** as well. For example, the image forming apparatus according to an illustrated example embodiment may include three charging voltage controllers **67**, three supply voltage controllers **68**, three developing voltage controllers **69**, and three transfer voltage controllers **70** that are provided corresponding to the three developing units **10**, for example.

[Roller Driving Controller, Drum Driving Controller. Belt Driving Controller. Fixing Controller. Sensor Driving Controller, and Cutter Driving Controller]

[0113] The roller driving controller **71** may control an operation related to the rollers. For example, the roller driving controller **71** may control, through the use of the roller motors **77**, an operation of rotating a series of rollers including the conveying rollers **51**, **52**, **202**, and **203**, the charging roller **113**, the feeding roller **114**, the developing roller **115**, and the transfer roller **24**. The drum driving controller **72** may control an operation related to the photosensitive drum **112**. For example, the drum driving controller **72** may control, through the use of a drum motor **78**, an operation of rotating the photosensitive drum **112**. The belt driving controller **73** may control an operation related to the conveyance belt **21**. For example, the belt driving controller **73** may control, through the use of a belt motor **79**, an operation of causing the conveyance belt **21** to travel. The fixing controller **74** may control an operation related to a fixing operation. For example, the fixing controller **74** may control an operation of the heater **80** on the basis of a temperature measured by the thermistor **81**, and may also control, through the use of fixing motors **82**, an operation of rotating each of the heating roller **31** and the pressure applying roller **32**. The sensor driving controller **75** may control an operation related to the image detection sensors **40**. For example, the sensor driving controller **75** may control a detection operation to be performed by the image detection sensors **40**. The sensor driving controller **75** may output, to the image forming controller **61**, detection results obtained by the image detection sensors **40**. The cutter driving controller **76** may control an operation related to the cutter **204**. For example, the cutting driving controller **76** may control, through the use of a cutter motor **83**, a cutting operation to be performed by the cutter **204**.

[0114] In an illustrated example embodiment, what has been described above in relation to the light source controllers **66** may apply, for example, to the roller driving controller **71** and the drum driving controller **72** as well. For example, the image forming apparatus according to an illustrated example embodiment may include three roller driving controllers **71** and three drum driving controllers **72** that are provided corresponding to the three developing units **10**, for example. The three roller driving controllers **71** each may control the operation that involves the use of roller motors **77**. For example, the three roller driving controllers **71** may control the respective operations of rotating the rollers including the three transfer rollers **24**, i.e., the transfer rollers **24**Y, **24**M, and **24**C.

[1-3. Configurations of Toner Image]

[0115] A description is given next of some non-limiting examples of a configuration of the toner image G to be formed by the image forming apparatus according to an example embodiment.

[0116] FIGS. **6** to **14** each illustrate an example of a plan configuration of elements including the print medium M and the conveyance belt **21** for describing an example configuration of the toner image G and each correspond to FIG. **4**.

[0117] It is to be noted that FIGS. **6** to **14** each illustrate a state in which the print medium M, having been subjected to the cutting of the rolled print medium M by the cutter **204**, is conveyed by the conveyance belt **21**.

[0118] It is to be also noted that FIG. **6** illustrates a state in which the print medium M has been cut by the cutter **204** normally and the cut edge MT formed on the print medium M extends in the width direction, accordingly. FIGS. **7** to **14** each illustrate a state in which the print medium M has not been cut by the cutter **204** normally, e.g., cut obliquely by the cutter **204**, and the cut edge MT extends obliquely relative to the width direction, accordingly.

[0119] As described previously, the image forming apparatus may form the toner image G e.g., the medium toner image GA and the conveyance toner image GB, on the surface of the print medium M and the surface of the conveyance belt **21** upon the conveyance, by the conveyance belt **21**, of the print medium M cut by the cutter **204**, for example.

[0120] The toner image G is not particularly limited in its configuration as long as the toner T is transferred from the surface of the print medium M through the cut edge MT to the surface of the conveyance belt **21** in the conveyance direction D as described above. Non-limiting examples of the configuration of the toner image G may include the

number of toner images G, a length of the toner image G (e.g., a formation size in the conveyance direction D), and a shape of a pattern of the toner image G.

[0121] In an illustrated example embodiment, the number of toner images G may be two, i.e., may include two toner images G**1** and G**2**, as illustrated in FIGS. **6** to **14**. For example, the toner image G may include the toner image G**1** and the toner image G**2** that are disposed away from each other in the width direction. Accordingly, the toner image G**1** may include a medium toner image G**1**A and a conveyance toner image G**1**B, for example, whereas the toner image G**2** may include a medium toner image G**2**A and a conveyance toner image G**2**B, for example. In an example embodiment, a length L**1** of the toner image G**1** and a length L**2** of the toner image G**2** may be equal to each other, for example. The medium toner image G**1**A may correspond to a specific but non-limiting example of a "first detection image" in one embodiment of the technology. The medium toner image G**2**A may correspond to a specific but non-limiting example of a "second detection image" in one embodiment of the technology. The conveyance toner image G**1**B may correspond to a specific but non-limiting example of the "first detection image" in one embodiment of the technology. The conveyance toner image G**2**B may correspond to a specific but non-limiting example of the "second detection image" in one embodiment of the technology.

[0122] In an example embodiment, the toner image G may extend continuously from the surface of the print medium M through the cut edge MT to the surface of the conveyance belt **21** in the conveyance direction D. In an alternative example embodiment, the toner image G may extend discontinuously, e.g., intermittently, from the surface of the print medium M through the cut edge MT to the surface of the conveyance belt **21** in the conveyance direction D. For example, the toner image G may have any of a series of pattern shapes as illustrated by way of example in FIGS. **6** to **14** as the pattern shape of the toner image G In an example embodiment, the toner image G**1** and the toner image G**2** may have their respective pattern shapes that are same as each other. Note that, in an alternative example embodiment, two or more of the series of patterns illustrated by way of example in FIGS. **6** to **14** may be combined in any combination.

[0123] FIGS. **6** to **8** each illustrate an example embodiment in which the toner image G has, as the pattern shape, a rectangular solid pattern that extends continuously in the conveyance direction D. FIG. **9** illustrates an example embodiment in which the toner image G has, as the pattern shape, a rectangular pattern having dots that extends continuously in the conveyance direction D. FIG. **10** illustrates an example embodiment in which the toner image G has, as the pattern shape, a rectangular frame pattern that extends continuously in the conveyance direction D. FIG. **11** illustrates an example embodiment in which the toner image G has, as the pattern shape, a rectangular ruled pattern that extends continuously in the conveyance direction D. FIG. **12** illustrates an example embodiment in which the toner image G has, as the pattern shape, a rectangular scaled pattern that extends continuously in the conveyance direction D. For example, the toner image G in the example embodiment illustrated in FIG. **12** may have a plurality of frame-shaped scales S that are so arrayed as to be adjacent to each other in the conveyance direction D.

[0124] FIGS. **13** and **14** each illustrate an example embodiment in which the toner image G has, as the pattern shape, a rectangular solid pattern that extends intermittently in the conveyance direction D. For example, the toner images G in the respective example embodiments illustrated in FIGS. **13** and **14** each may have a plurality of boxes B that are so arrayed as to be separated away from each other in the conveyance direction D. In the example embodiment illustrated in FIG. **13**, a distance or an interval between the two mutually-adjacent boxes B may be fixed in the plurality of boxes B, whereas, in the example embodiment illustrated in FIG. **14**, the distance or the interval between the two mutually-adjacent boxes B may be varied in the plurality of boxes B. For example, the intervals positioned upstream and downstream in the conveyance direction D may be made relatively larger, and the plurality of intervals positioned in the middle between the relatively larger intervals may be made smaller.

[1.4 Principle of Controlling Conveying Speed and Cutting Speed]

[0125] A description is given next of an example of a principle of controlling the conveying speed and the cutting speed performed by the image forming apparatus, e.g., performed by the image forming controller **61**.

[0126] In the following, one principle of controlling the conveying speed and the cutting speed according to an example embodiment will be described by referring to a non-limiting example where; the number of image detection sensors **40** is two, i.e., the image detection sensors **40** include the image detection sensors **41** and **42**; the number of toner images G is two, i.e., the toner images G include the toner images G**1** and G**2**; the toner image G has the continuous solid pattern as its configuration as illustrated in FIGS. **6** to **8**; and the cutter **204** includes the rotatable rotary cutter.

[0127] FIGS. **15** to **17** illustrate plan configurations corresponding to the respective configurations illustrated in FIGS. **6** to **8** for describing one example of the principle of controlling the conveying speed and the cutting speed. Note that FIGS. **15** to **17** each illustrate a state in which the print medium M has been conveyed more in the conveyance direction D than that in the example case illustrated in each of FIGS. **6** to **8**, and each illustrate the fixing section **30** including the heating roller **31** and the pressure applying roller **32** as well.

[0128] FIGS. **18** and **19** each illustrate an example of detection results obtained by the image detection sensors **41** and **42**. FIG. **18** illustrates the detection result corresponding to the example case illustrated in FIG. **15**, and FIG. **19** illustrates the detection result corresponding to the example case illustrated in FIG. **16**.

[0129] FIGS. **18** and **19** each also illustrate a detection result D**1** obtained by the image detection sensor **41**, a detection result D**2** obtained by the image detection sensor **42**, a base value BL, and a detection threshold TL. The base value BL is a value of a detection level obtained where the image detection sensor **41** or **42** does not detect the corresponding conveyance toner image G**1**B or G**2**B. The detection threshold TL is a value of the detection level (i.e., a threshold) serving as a reference used for discriminating between presence and absence of the detection of the conveyance toner image G**1**B or G**2**B.

[0130] As described previously, after the toner images G**1** and G**2** (e.g., the medium toner image GA and the conveyance toner image GB) are formed, the image forming controller **61** may vary one or both of the conveying speed and the cutting speed on the basis of the detection results related to the conveyance toner images G**1**B and G**2**B obtained by the image detection sensors **41** and **42**, for example.

[0131] For example, the rolled print medium M may be cut by the cutter **204** in the medium feeding unit **200** as illustrated in FIG. **2**, following which the print medium M thus having the cut edge MT may be fed to the image forming unit **100** as illustrated in FIGS. **6** to **8**.

[0132] The rolled print medium M may be cut by the cutter **204** upon the conveyance by the conveying rollers **202** and **203**. Accordingly, a cut state of the print medium M by the cutter **204** may possibly vary depending on a relationship between the conveyance speed of the print medium M to be conveyed by the conveying rollers **202** and **203** and the cutting speed of the print medium M to be cut by the cutter **204**, meaning that an extending direction of the cut edge MT may possibly vary as well. The cutting speed may correspond to a rotation speed of the cutter **204**. e.g., the rotation speed of the rotary cutter.

[0133] For example, the relationship between the conveying speed and the cutting speed may be appropriate in a case where the conveying speed and the cutting speed are substantially coincident with each other. In this case, the print medium M may be cut in such a manner that the extending direction of the cut edge MT follows along the width direction as illustrated by way of example in FIG. **6** and the print medium M may be thus cut normally.

[0134] In contrast, the relationship between the conveying speed and the cutting speed may be inappropriate in a case where a mismatch occurs between the conveying speed and the cutting speed. In this case, the print medium M may be cut in such a manner that the extending direction of the cut edge MT becomes oblique relative to the width direction as illustrated by way of example in FIGS. **7** and **8** and the print medium M may be thus not cut normally. Such improper cutting of the print medium M not only affects a quality of external appearance (e.g., presentation) of the print medium M but also possibly affects a formation accuracy of an image, such as an accuracy of transferring the toner T onto the print medium M. Accordingly, the print medium M not having been cut normally is undesirable in terms of stably forming an image on a surface of the print medium M.

[0135] After the toner images G**1** and G**2**, e.g., the medium toner image GA and the conveyance toner image GB, are formed on the surface of the print medium M and the surface of the conveyance belt **21** as illustrated in FIGS. **6** to **8**, the print medium M may be further conveyed in the conveyance direction D by the conveyance belt **21**. Hence, the print medium M, having been formed with the medium toner images G**1**A and G**2**A, may be separated from the conveyance belt **21** having been formed with the conveyance toner images G**1**B and G**2**B, following which the print medium M may be further conveyed in the conveyance direction D to thereby enter the fixing section **30**, i.e., enter the heating roller **31** and the pressure applying roller **32**, as illustrated in FIGS. **15** to **17**.

[0136] The conveyance belt **21** having been formed with the conveyance toner images G**1**B and G**2**B, on the other hand, may be caused to travel further after the print medium M, having been formed with the medium toner images G**1**A and G**2**A, are separated from the conveyance belt **21**. As a result, the conveyance toner images G**1**B and G**2**B may pass through regions detectable by the respective image detection sensors **41** and **42**, allowing the image detection sensors **41** and **42** to respectively detect the conveyance toner images G**1**B and G**2**B.

[0137] The image forming controller **61** may be based on one of the following two non-limiting control principles to vary one or both of the conveying speed and the cutting speed on the basis of the detection results obtained by the respective image detection sensors **41** and **42**.

[First Control Principle]

[0138] For example, in order to detect, at the two positions that are different from each other in the width direction, the positions of the respective conveyance toner images G**1**B and G**2**B on the basis of the conveyance toner images G**1**B and G**2**B, the image detection sensors **41** and **42** may detect, at the respective two positions, the timings at which the detections of the respective conveyance toner images G**1**B and G**2**B are started. When the timings at which the detections of the respective conveyance toner images G**1**B and G**2**B are started are detected, the image detection sensors **41** and **42** may output results of the respective detections to the image forming controller **61**. When the detection results are received from the respective image detection sensors **41** and **42**, the image forming controller **61** may compare the positions of the respective conveyance toner images G**1**B and G**2**B at the two positions. In other words, the image forming controller **61** may compare the timings at which the detections of the respective conveyance toner images G**1**B and G**2**B are started. Through performing the comparison, the image forming controller **61** may calculate a difference between the positions (e.g., the timings) of the respective conveyance toner images G**1**B and G**2**B. In other words, the image forming controller **61** may calculate a difference between the timing at which the detection of the conveyance toner image G**1**B is started and the timing at which the detection of the conveyance toner image G**2**B is started. Through performing the above example process, the image forming controller **61** may determine whether the extending direction of the cut edge MT is oblique relative to the width direction.

[0139] For example, as illustrated in FIGS. **18** and **19**, the image detection sensor **41** may detect a time at which the detection of the conveyance toner image G**1**B is started (i.e., a detection starting time T**1**S), and the image detection sensor **42** may detect a time at which the detection of the conveyance toner image G**2**B is started (i.e., a detection starting time T**2**S).

[0140] Through the use of the detection starting time T**1**S and the detection starting time T**2**S, the image forming controller **61** may calculate a difference between the detection starting time T**1**S and the detection starting time T**2**S as the starting time difference ΔTS (e.g., ΔTS=T**1**S−T**2**S). The starting time difference ΔTS may serve as an index that indicates the mismatch (e.g., a difference in speed) between the conveying speed and the cutting speed.

[0141] The starting time difference ΔTS may be 0 (zero) as illustrated in FIG. **18** in a case where the print medium M is cut in such a manner that the extending direction of the cut edge MT follows along the width direction as illustrated by way of example in FIG. **15**. The starting time difference

ΔTS, however, may take a value other than 0 in a case where the print medium M is cut in such a manner that the extending direction of the cut edge MT becomes oblique relative to the width direction as illustrated by way of example in FIGS. **16** and **17**. For example, the starting time difference ΔTS may take a negative value in each of the example cases illustrated in FIGS. **16** and **19**, whereas the starting time difference ΔTS may take a positive value in the example case illustrated in FIG. **17**. Thus, the image forming controller **61** may be able to determine whether the print medium M is cut in such a manner that the extending direction of the cut edge MT becomes oblique relative to the width direction on the basis of the value of the starting time difference ΔTS, e.g., on the basis of whether the value of the starting time difference ΔTS is 0.

[0142] The image forming controller **61** may determine that the print medium M is cut normally in the example case where the starting time difference ΔTS is 0, because in this case the print medium M is cut in such a manner that the extending direction of the cut edge MT follows along the width direction. Accordingly, the image forming controller **61** does not vary one or both of the conveying speed and the cutting speed.

[0143] The image forming controller **61** may determine that the print medium M is not cut normally in the example case where the starting time difference ΔTS takes the value other than 0 (e.g., the starting time difference ΔTS takes the negative value or the positive value), because in this case the print medium M is cut in such a manner that the extending direction of the cut edge MT becomes oblique relative to the width direction. Accordingly, the image forming controller **61** may vary one or both of the conveying speed and the cutting speed.

[0144] For example, the image forming controller **61** may so vary one or both of the conveying speed and the cutting speed as to cause the value of the starting time difference ΔTS to be closer to 0. In an example embodiment, the image forming controller **61** may vary the conveying speed through causing the roller driving controller **71** to vary a rotation speed of the roller motor **77**. In an alternative example embodiment, the image forming controller **61** may vary the cutting speed through causing the cutter driving controller **76** to vary a rotation speed of the cutter motor **83**. e.g., through varying the rotation speed of the rotary cutter. Thus, the image forming controller **61** may so adjust the cutting process of the print medium M as to cause the extending direction of the cut edge MT to follow along the width direction.

[0145] For example, in the example case illustrated in FIG. **16**, the image forming controller **61** may increase the conveying speed because the conveying speed is relatively smaller than the cutting speed, or may decrease the cutting speed because the cutting speed is relatively larger than the conveying speed. In the example case illustrated in FIG. **17**, the image forming controller **61** may decrease the conveying speed because the conveying speed is relatively larger than the cutting speed, or may increase the cutting speed because the cutting speed is relatively smaller than the conveying speed.

[0146] A level of decreasing the starting time difference ΔTS is not particularly limited. For example, a value of the starting time difference ΔTS after controlling one or both of the conveying speed and the cutting speed may be 0 or any value other than 0, as long as the starting time difference ΔTS after the control takes a value that is closer to 0 than an initial value of the starting time difference ΔTS, i.e., than the value of the starting time difference ΔTS that is prior to the control of one or both of the conveying speed and the cutting speed.

[Second Control Principle]

[0147] For example, the image detection sensors **41** and **42** may detect, at the respective two positions that are different from each other in the width direction, the lengths of the respective conveyance toner images G**1**B and G**2**B on the basis of the conveyance toner images G**1**B and G**2**B. When the lengths of the respective conveyance toner images G**1**B and G**2**B are detected, the image detection sensors **41** and **42** may output results of the respective detections to the image forming controller **61**. When the detection results are received from the respective image detection sensors **41** and **42**, the image forming controller **61** may compare the lengths of the respective conveyance toner images G**1**B and G**2**B at the two positions. Through performing the comparison, the image forming controller **61** may calculate a difference between the lengths of the respective conveyance toner images G**1**B and G**2**B. In other words, the image forming controller **61** may calculate a difference between the length of the conveyance toner image G**1**B and the length of the conveyance toner image G**2**B. Through performing the above example process, the image forming controller **61** may determine whether the extending direction of the cut edge MT is oblique relative to the width direction.

[0148] For example, as illustrated in FIGS. **18** and **19**, the image detection sensor **41** may detect the time at which the detection of the conveyance toner image G**1**B is started (i.e., the detection starting time T**1**S) and a time at which the detection of the conveyance toner image G**1**B is ended (i.e., a detection ending time T**1**E). Further, for example, the image detection sensor **42** may detect the time at which the detection of the conveyance toner image G**2**B is started (i.e., the detection starting time T**2**S) and a time at which the detection of the conveyance toner image G**2**B is ended (i.e., a detection ending time T**2**E).

[0149] Through the use of the detection starting time T**1**S, the detection ending time T**1**E, the detection starting time T**2**S, and the detection ending time T**2**E, the image forming controller **61** may calculate a detection time T**1**C and a detection time T**2**C. The detection time T**1**C may be used to identify the length of the conveyance toner image G**1**B, and may be defined as a resultant of subtraction of the detection starting time T**1**S from the detection ending time T**1**E (i.e., T**1**C=T**1**E−T**1**S). The detection time T**2**C may be used to identify the length of the conveyance toner image G**2**B, and may be defined as a resultant of subtraction of the detection starting time T**2**S from the detection ending time T**2**E (T**2**C=T**2**E−T**2**S). After calculating the detection time T**1**C and the detection time T**2**C, the image forming controller **61** may calculate a difference between the detection time T**1**C and the detection time T**2**C as the detection time difference ΔTC (e.g., ΔTC=T**1**C−T**2**C). The detection time difference ΔTC may serve as another index that indicates the mismatch (e.g., a difference in speed) between the conveying speed and the cutting speed.

[0150] The detection time difference ΔTC may be 0 (zero) as illustrated in FIG. **18** in a case where the print medium M is cut in such a manner that the extending direction of the cut edge MT follows along the width direction as illustrated by

way of example in FIG. **15**. The detection time difference ΔTC, however, may take a value other than 0 in a case where the print medium M is cut in such a manner that the extending direction of the cut edge MT becomes oblique relative to the width direction as illustrated by way of example in FIGS. **16** and **17**. For example, the detection time difference ΔTC may take a negative value in each of the example cases illustrated in FIGS. **16** and **19**, whereas the detection time difference ΔTC may take a positive value in the example case illustrated in FIG. **17**. Thus, the image forming controller **61** may be able to determine whether the print medium M is cut in such a manner that the extending direction of the cut edge MT becomes oblique relative to the width direction on the basis of the value of the detection time difference ΔTC, e.g., on the basis of whether the value of the detection time difference ΔTC is 0.

[0151] The image forming controller **61** may determine that the print medium M is cut normally in the example case where the detection time difference ΔTC is 0 and does not vary one or both of the conveying speed and the cutting speed accordingly, as with the example case where the starting time difference ΔTS is 0. The image forming controller **61** may determine that the print medium M is not cut normally in the example case where the detection time difference ΔTC take the value other than 0 (e.g., the detection time difference ΔTC take the negative value or the positive value) and may vary one or both of the conveying speed and the cutting speed accordingly, as with the example case where the starting time difference ΔTS takes the value other than 0. Note that a method of controlling one or both of the conveying speed and the cutting speed to be performed here is as described in detail above. It is to be also noted that a level of decreasing the detection time difference ΔTC may be the same or similar to what has been described in detail above with respect to the level of decreasing the starting time difference ΔTS.

[0152] In an example embodiment, the image forming controller **61** may select to vary the conveying speed instead of selecting to vary the cutting speed in each of the first and the second control principles. One reason is that this readily improves an accuracy of varying the speed and thereby makes it easier to adjust the cutting operation of the print medium M such that the extending direction of the cut edge MT follows along the width direction.

[0153] More specifically, the cutter **204** may be directly coupled to the cutter motor **83** and hence the cutting speed, determined in accordance with a rotation operation of the cutter motor **83**, is less susceptible to a change in kind of the print medium M, in an environmental condition, or in any other factor. In contrast, the conveying rollers **202** and **203** come into contact with the print medium M upon the conveyance and hence the conveying speed, determined in accordance with a rotation operation of each of the conveying rollers **202** and **203**, is more susceptible to the change in kind of the print medium M, in the environmental condition, or in any other factor. Accordingly, varying the conveying speed (which is more susceptible to kind of the print medium M, the environmental condition, etc.) while using the cutting speed (which is less susceptible to kind of the print medium, the environmental condition, etc.) as a reference makes it possible to adjust, easily and with high accuracy, the cutting operation of the print medium M such that the extending direction of the cut edge MT follows along the width direction. For example, the image forming controller **61** may vary the conveying speed while setting the cutting speed to be constant.

[1-5. Operation]

[0154] A description is given below of an example operation of the image forming apparatus, in which an example of a formation process of an image is described first followed by an example of an adjustment operation of the cutting process. In the following description, a reference is made to the foregoing FIGS. **1** to **8** and **15** to **17** as necessary.

[Formation Operation of Image]

[0155] Upon forming an image on the print medium M, the image forming apparatus may perform a developing process, a transfer process, and a fixing process in this order as will be described below, for example. Further, the image forming apparatus may perform a cleaning process on an as-needed basis. For example, such a series of processes may be controlled by the control board **60**, e.g., by the image forming controller **61**.

[Developing Process]

[0156] The medium feeding unit **200** may cut the rolled print medium M by the cutter **204** while conveying the rolled print medium M by the conveying rollers **202** and **203**. Thereafter, the medium feeding unit **200** may feed the print medium M cut by the cutter **204** to the image forming unit **100**.

[0157] Upon the developing process in the developing unit **10** (e.g., in the developing process unit **11**), the charging roller **113** may apply a direct-current voltage to the surface of the photosensitive drum **112** while rotating in accordance with the rotation of the photosensitive drum **112**. The surface of the photosensitive drum **112** may be thereby electrically charged evenly. Thereafter, the light source **13** may apply light to the surface of the photosensitive drum **112** on the basis of image data. A surface potential in a region, of the surface of the photosensitive drum **112**, on which the light is applied is thereby attenuated. In other words, optical attenuation occurs. An electrostatic latent image may be thus formed on the surface of the photosensitive drum **112**. It is to be noted that the image data described above may be supplied to the image forming apparatus from the external apparatus such as a personal computer, for example.

[0158] In the developing process unit **11**, the feeding roller **114** and the developing roller **115** may rotate when receiving application of the voltage. The toner T may be thereby fed from the feeding roller **114** to the developing roller **115**. Further, the toner T may move from the developing roller **115** to the photosensitive drum **112** upon the rotation of the photosensitive drum **112**. The toner T may be thereby attached to the photosensitive drum **112**, i.e., to the electrostatic latent image. In this case, the toner T attached to the developing roller **115** may be partially removed by the developing blade **116**, whereby the toner T attached to the developing roller **115** may be caused to have an even thickness.

[0159] Further, the toner T may be stirred in the developing unit **10** (e.g., in the toner cartridge **12**) to thereby feed the toner T from the toner cartridge **12** to the developing process unit **11**.

[Transfer Process]

[0160] When the driving roller **22** rotates in the transfer section **20**, the driven roller **23** may rotate in accordance with the rotation of the driving roller **22**. This may cause the conveyance belt **21** to travel. In the transfer process, the transfer roller **24** may be so pressed against the photosensitive drum **112** as to be in contact with the photosensitive drum **112** with the conveyance belt **21** in between. Hence, the toner T that has been attached to the photosensitive drum **112** in the foregoing developing process may be transferred onto the print medium M upon application of the voltage to the transfer roller **24**.

[Fixing Process]

[0161] In the fixing process, the print medium M may be so conveyed as to pass through a region between the heating roller **31** and the pressure applying roller **32** in the fixing section **30**. The toner T that has been transferred onto the print medium M may be thereby heated, which may cause the toner T to melt. Further, the molten toner T may be so pressed against the print medium M while being applied with a pressure. This may cause the toner T to be so attached to the print medium M as to be in close contact with the print medium M.

[0162] As a result, the toner T may be fixed to the print medium M, resulting in formation of an image on the print medium M. The print medium M thus formed with the image may be discharged from the discharge opening **110**H. Incidentally, the kind of toner T and the number of toners T to be used for formation of an image may be determined on the basis of a combination of colors necessary for the formation of such an image.

[Cleaning Process]

[0163] In the developing unit **10**, the photosensitive drum **112** may rotate while being so pressed against the cleaning blade **117** as to be in contact with the cleaning blade **117**. This may cause an extraneous material such as the unnecessary remains of the toner T present on the surface of the photosensitive drum **112** to be scraped off by the cleaning blade **117**. As a result, the extraneous material may be removed from the surface of the photosensitive drum **112**.

[0164] Further, in the transfer section **20**, the cleaning blade **25** may scrape off an extraneous material such as the unnecessary remains of the toner T present on the surface of the conveyance belt **21** upon traveling of the conveyance belt **21**. As a result, unnecessary remains of the toner T may be removed from the surface of the conveyance belt **21** and may be collected by the collection box **26**.

[Adjustment Operation of Cutting Process]

[0165] The image forming apparatus, i.e., the image forming controller **61**, may perform the adjustment operation of the cutting process at any timing as described below, on the basis of any of the foregoing first and second principles of controlling the conveying speed and the cutting speed.

[0166] In an example embodiment, the timing at which the adjustment operation of the cutting process is performed may be made settable on an as-necessary basis, as long as the timing is other than a timing at which the formation of the print medium M is carried out in accordance with the use of the image forming apparatus by the user, i.e., other than a timing upon the regular use of the image forming apparatus. For example, the timing at which the adjustment operation of the cutting process is performed may be a timing at which a predetermined time is elapsed from the initial use of the image forming apparatus, or may be a timing at which the predetermined number of image formation times is performed from the initial use of the image forming apparatus.

[0167] FIG. **20** illustrates an example of a flow of the adjustment operation of the cutting process for describing the example adjustment operation of the cutting process. Note that step numbers in parentheses described below correspond to those illustrated in FIG. **20**.

[Conveyance of Print Medium]

[0168] Upon performing the adjustment operation of the cutting process, the image forming controller **61** may first cause the roller driving controller **71** (i.e., may first use the roller motors **77**) to rotate the conveying rollers **202** and **203** to thereby convey the rolled print medium M in the conveyance direction D along the conveyance route P at any timing described above (step S**11**). Thus, the rolled print medium M may be fed to the cutter **204**.

[Cutting of Print Medium]

[0169] Thereafter, the image forming controller **61** may cause the cutter driving controller **76** (i.e., may use the cutter motor **83**) to operate the cutter **204** and may thereby cut the rolled print medium M (step S**12**). In an example embodiment where the cutter **204** includes the rotary cutter, the rotary cutter may cut the rolled print medium M upon its rotation. The print medium M thus cut by the cutter **204** may be continuously conveyed in the conveyance direction D along the conveyance route P by the conveying rollers **202** and **203** so as to be fed from the medium feeding unit **200** to the image forming unit **100**. The print medium M may be further conveyed in the conveyance direction D along the conveyance route P by the conveyance belt **21** and the conveying rollers **51** and **52**.

[Formation of Toner Images (Medium Toner Image and Conveyance Toner Image)]

[0170] Thereafter, the image forming controller **61** may cause, upon conveying the print medium M in the conveyance direction D, the toner T to be transferred onto the surface of the print medium M and the surface of the conveyance belt **21** through the use of the developing unit **10** and the transfer roller **24**, and may thereby form the toner images G**1** and G**2**, i.e., may thereby form the medium toner image GA and the conveyance toner image GB (step S**13**). The print medium M having been formed with the toner images G**1** and G**2** may be further conveyed in the conveyance direction D so that the conveyance belt **21** having been formed with the conveyance toner images G**1**B and G**2**B is separated from the print medium M having been formed with the medium toner images G**1**A and G**2**A. The print medium M having been formed with the medium toner images G**1**A and G**2**A may enter the fixing section **30**, whereas the conveyance belt **21** having been formed with the conveyance toner images G**1**B and G**2**B may be caused to further travel in accordance with the rotation of each of the driving roller **22** and the driven roller **23**.

[Detection of Conveyance Toner Images]

[0171] Thereafter, the image forming controller **61** may cause the sensor driving controller **75** to operate the image detection sensors **41** and **42** and thereby detect the conveyance toner images G**1**B and G**2**B formed on the surface of the conveyance belt **21** (step S**14**). The detection results obtained by the respective image detection sensors **41** and **42** may include the detection starting times T**1**S and T**2**S and the detection ending times T**1**E and T**2**E as described above, and may be supplied to the image forming controller **61**.

[Calculation of Starting Time Difference]

[0172] Thereafter, the image forming controller **61** may calculate the starting time difference ΔTS on the basis of the detection results obtained by the respective image detection sensors **41** and **42**, e.g., on the basis of the comparison between the conveyance toner images G**1**B and G**2**B respectively detected by the image detection sensors **41** and **42** at the two positions that are different from each other in the width direction (step S**15**). A non-limiting example of a procedure for calculating the starting time difference ΔTS is as described above.

[Determination on Starting Time Difference]

[0173] Thereafter, the image forming controller **61** may determine, on the basis of a result of the calculation of the starting time difference ΔTS, whether the starting time difference ΔTS takes a value other than 0 (step S**16**).

[0174] In a case where the starting time difference ΔTS is 0 (step S**16**: N), the image forming controller **61** may determine that the print medium M has been cut normally, because the print medium M has been cut in such a manner that the extending direction of the cut edge MT follows along the width direction. In this case, the image forming controller **61** may end the adjustment operation of the cutting process, because it is not necessary to perform the adjustment operation of the cutting process.

[Varying Conveying Speed]

[0175] In a case where the starting time difference ΔTS takes the value other than 0 (step S**16**: Y), the image forming controller **61** may determine that the print medium M has not been cut normally, because the print medium M has been cut in such a manner that the extending direction of the cut edge MT becomes oblique relative to the width direction. In this case, the image forming controller **61** may perform the adjustment operation of the cutting process, because it is necessary to perform the adjustment operation of the cutting process. For example, the image forming controller **61** may so vary the conveying speed through the use of the roller driving controller **71**, i.e., the roller motors **77**, as to cause the value of the starting time difference ΔTS to be closer to 0 (step S**17**). A non-limiting example of a procedure for varying the conveying speed is as described above. Thus, the conveying speed may be made appropriate with respect to the cutting speed, allowing the print medium M to be cut in such a manner that the extending direction of the cut edge MT follows along the width direction when the rolled print medium M is to be cut by the cutter **204** next time and after, and thereby completing the adjustment operation of the cutting process.

[0176] For example, the toner T having been transferred onto the surface of the conveyance belt **21** for the formation of the conveyance toner image GB may be scraped off by the cleaning blade **25** as a result of further traveling of the conveyance belt **21**. Thus, the toner T may be removed from the surface of the conveyance belt **21** and may be collected by the collection box **26**.

[Calculation of Detection Time Difference. Determination on Detection Time Difference, and Varying Conveying Speed]

[0177] Upon performing the adjustment operation of the cutting process, the image forming controller **61** may calculate the detection time difference ΔTC on the basis of the detection results obtained by the respective image detection sensors **41** and **42** (step S**15**) instead of calculating the starting time difference ΔTS. Through calculating the detection time difference ΔTC instead of the starting time difference ΔTS, the image forming controller **61** may determine whether the detection time difference ΔTC takes a value other than 0 (step S**16**). A non-limiting example of a procedure for calculating the detection time difference ΔTC is as described above. Accordingly, the image forming controller **61** may end the adjustment operation of the cutting process in a case where the detection time difference ΔTC is 0 (step S**16**; N), and may so vary the conveying speed as to cause the value of the detection time difference ΔTC to be closer to 0 (step S**17**) in a case where the detection time difference ΔTC takes the value other than 0 (step S**16**: Y). Here, in an alternative example embodiment, the image forming controller **61** may use both of the starting time difference ΔTS and the detection time difference ΔTC upon performing the adjustment operation of the cutting process.

[Varying Cutting Speed]

[0178] The image forming controller **61** may vary the cutting speed (step S**17**) instead of varying the conveying speed upon performing the adjustment operation of the cutting process. A non-limiting example of a procedure for varying the cutting speed is as described above. Here, in an alternative example embodiment, the image forming controller **61** may vary both of the conveying speed and the cutting speed upon performing the adjustment operation of the cutting process.

[1-6. Example Workings and Example Effects]

[0179] In the image forming apparatus according to an example embodiment, the conveying rollers **202** and **203** conveys the print medium M, and the cutter **204** cuts the print medium M. Further, the developing unit **10** and the transfer roller **24** form the toner image G e.g., the medium toner image GA and the conveyance toner image GB, on the print medium M and the conveyance belt **21**. Thereafter, the image detection sensors **40** detects, at the two positions, the conveyance toner image GB, and the image forming controller **61** varies one or both of the conveying speed and the cutting speed on the basis of the comparison of the conveyance toner image GB detected at the two positions by the image detection sensors **40**.

[0180] In such an example embodiment, a determination may be made, on the basis of the detection results obtained by the image detection sensors **40**, as to whether the print medium M is cut in such a manner that the extending direction of the cut edge MT becomes oblique relative to the

width direction. In a case where the print medium M has been cut in such a manner that the extending direction of the cut edge MT becomes oblique relative to the width direction, one or both of the conveying speed and the cutting speed may be varied to thereby adjust the cutting process of the print medium M such that the extending direction of the cut edge MT follows along the width direction. This configuration makes it easier to cut the print medium M by the cutter **204** in such a manner that the extending direction of the cut edge MT follows along the width direction and thereby makes it easier to cut the print medium M normally. Hence, it is possible to stably forms an image on the print medium M.

[0181] In addition, in an example embodiment, the image detection sensors **40** may detect, at the two positions, the position of the conveyance toner image GB, and the image forming controller **61** may vary one or both of the conveying speed and the cutting speed on the basis of the comparison between the positions of the conveyance toner image GB detected at the two positions. Such an example embodiment makes it easier to cut the print medium M such that the extending direction of the cut edge MT follows along the width direction. Further, in an example embodiment, the image detection sensors **40** may detect the detection starting time (e.g., the detection starting time T**1**S and the detection starting time T**2**S) at the two positions on the basis of the conveyance toner image GB, and the image forming controller **61** may calculate the starting time difference ΔTS and may so vary one or both of the conveying speed and the cutting speed as to cause the value of the starting time difference ΔTS to be closer to 0. This configuration makes it easier to cut, stably and with high accuracy, the print medium M in such a manner that the extending direction of the cut edge MT follows along the width direction, and thereby makes it easier to adjust the cutting process of the print medium M. Hence, it is possible to achieve higher effects.

[0182] Alternatively, in an example embodiment, the image detection sensors **40** may detect, at the two positions, the lengths of the conveyance toner image GB, and the image forming controller **61** may vary one or both of the conveying speed and the cutting speed on the basis of the comparison between the lengths of the conveyance toner image GB detected at the two positions. Such an example embodiment makes it easier to cut the print medium M such that the extending direction of the cut edge MT follows along the width direction. Further, in an example embodiment, the image detection sensors **40** may detect the detection starting time (e.g., the detection starting time T**1**S and the detection starting time T**2**S) at the two positions and the detection ending time (e.g., the detection ending time T**1**E and the detection ending time T**2**E) at the two positions on the basis of the conveyance toner image GB, and the image forming controller **61** may calculate the detection time difference ΔTC and may so vary one or both of the conveying speed and the cutting speed as to cause the value of the detection time difference ΔTC to be closer to 0. This configuration makes it easier to cut, stably and with high accuracy, the print medium M in such a manner that the extending direction of the cut edge MT follows along the width direction, and thereby makes it easier to adjust the cutting process of the print medium M. Hence, it is possible to achieve higher effects.

[0183] In any of such example embodiments, the image forming controller **61** may vary the conveying speed. This configuration readily improves an accuracy of varying the speed and thereby makes it easier to adjust the cutting operation of the print medium M such that the extending direction of the cut edge MT follows along the width direction. Hence, it is possible to achieve higher effects.

[0184] In any of such example embodiments, the cutter **204** may include the rotary cutter that is rotatable and cut the print medium M upon the conveyance of the print medium M, and the image forming controller **61** may vary the cutting speed on the basis of the rotation speed of the rotary cutter. This configuration makes it easier to vary the cutting speed in accordance with the rotation speed of the rotary cutter. Hence, it is possible to achieve higher effects.

[0185] In any of such example embodiments, the developing unit **10** and the transfer roller **24** may form the two toner images G (e.g., the toner images G**1** and G**2**) that are disposed away from each other in the width direction, and the two image detection sensors **40** (the image detection sensors **41** and **42**) disposed away from each other in the width direction may be used to detect the respective toner images G**1** and G**2**. This configuration makes it easier to cut, on the basis of the starting time difference ΔTS or the detection time difference ΔTC, the print medium M in such a manner that the extending direction of the cut edge MT follows along the width direction, and thereby makes it easier to adjust the cutting process of the print medium M. Hence, it is possible to achieve higher effects.

[0186] In any of such example embodiments, the toner image G may extend, in the conveyance direction D, continuously from the surface of the print medium M through the cut edge MT to the surface of the conveyance belt **21**. This configuration makes it easier to calculate the starting time difference ΔTS or the detection time difference ΔTC on the basis of the toner image G that extends continuously and thereby to cut the print medium M in such a manner that the extending direction of the cut edge MT follows along the width direction, which in turn makes it easier to adjust the cutting process of the print medium M. Hence, it is possible to achieve higher effects. Note that the example workings and the example effects described above are obtainable as well in any embodiment where the toner image G extends intermittently from the surface of the print medium M through the cut edge MT to the surface of the conveyance belt **21** in the conveyance direction D.

2. IMAGE FORMING APPARATUS (SECOND EXAMPLE EMBODIMENT)

[0187] A description is given below of an image forming apparatus according to a second example embodiment of the technology.

[2-1. Configuration]

[0188] FIG. **21** illustrates an example of a perspective configuration of the image forming apparatus according to the second example embodiment, and corresponds to FIG. **1**. FIGS. **22** to **25** illustrate examples of plan configurations corresponding to those illustrated in FIGS. **7**, **8**, **16**, and **17** for describing one example of the principle of controlling the conveying speed and the cutting speed. FIG. **26** illustrates an example of detection results obtained by the image detection sensors **41** and **42**, and corresponds to FIG. **19**.

[0189] The image forming apparatus according to the second example embodiment may have a configuration similar to the configuration of the image forming apparatus according to the first example embodiment, with the exception that targets to be detected by the image detection sensors **40** (the image detection sensors **41** and **42**) are different from the targets to be detected in the first example embodiment and hence locations at which the image detection sensors **40** are disposed are different from the locations in the first example embodiment. For example, referring to FIG. **21**, the image detection sensors **41** and **42** may detect the medium toner image GA (e.g., the medium toner images G**1**A and G**2**A) formed on the surface of the print medium M instead of detecting the conveyance toner image GB (e.g., the conveyance toner images G**1**B and G**2**B) formed on the surface of the conveyance belt **21**. Further, in order to detect the medium toner image GA (e.g., the medium toner images G**1**A and G**2**A) formed on the surface of the print medium M, the image detection sensors **41** and **42** may be disposed above the conveyance route P in a region between the conveyance belt **21** and the fixing section **30**, for example.

[0190] Further, the image forming apparatus may be based on any of the first and the second control principles in order to vary one or both of the conveying speed and the cutting speed. For example, the first and the second control principles may be similar to those of the first example embodiment, with the exception that the image detection sensors **41** and **42** detect the medium toner image GA (e.g., the medium toner images G**1**A and G**2**A) instead of the conveyance toner image GB (e.g., the conveyance toner images G**1**B and G**2**B) as illustrated in FIGS. **22** to **25**. For example, the first and the second control principles may also differ from those of the first example embodiment in that the image forming controller **61** calculates, instead of the starting time difference ΔTS, the ending time difference ΔTE on the basis of the detection ending time T**1**E and the detection ending time T**2**E.

[0191] For example, after the toner image G, e.g., the toner images G**1** and G**2**, are formed on the print medium M and the conveyance belt **21** as illustrated in FIGS. **22** and **23** and the print medium M is separated from the conveyance belt **21** as illustrated in FIGS. **24** and **25**, the image forming controller **61** may vary one or both of the conveying speed and the cutting speed on the basis of the detection results related to the medium toner images G**1**A and G**2**A obtained by the image detection sensors **41** and **42**.

[0192] In the first control principle, the image forming controller **61** may calculate the ending time difference ΔTE instead of the starting time difference ΔTS as described above. For example, the image detection sensors **41** and **42** may respectively detect the detection ending time T**1**E and the detection ending time T**2**E, in order to detect, at the two positions that are different from each other in the width direction, the positions of the respective medium toner images G**1**A and G**2**A as illustrated by way of example in FIG. **26**. Thereafter, the image forming controller **61** may compare the positions of the respective medium toner images G**1**A and G**2**A at the two positions. In other words, the image forming controller **61** may compare the detection ending time T**1**E and the detection ending time T**2**E. Through performing the comparison, the image forming controller **61** may calculate a difference between the positions of the medium toner images G**1**A and G**2**A at the two positions. In other words, the image forming controller **61** may calculate a difference between the detection ending time T**1**E and the detection ending time T**2**E as the ending time difference ΔTE (e.g., ΔTE=T**1**E−T**2**E). The ending time difference ΔTE may be 0 (zero) in a case where the print medium M is cut in such a manner that the extending direction of the cut edge MT follows along the width direction. The ending time difference ΔTE, however, may take a value other than 0 in a case where the print medium M is cut in such a manner that the extending direction of the cut edge MT becomes oblique relative to the width direction as illustrated by way of example in FIGS. **24** to **26**. Thus, the image forming controller **61** may be able to determine whether the print medium M is cut in such a manner that the extending direction of the cut edge MT becomes oblique relative to the width direction on the basis of the value of the ending time difference ΔTE, e.g., on the basis of whether the value of the ending time difference ΔTE is 0.

[0193] The image forming controller **61** may determine that the print medium M is cut normally in the example case where the ending time difference ΔTE is 0, because in this case the print medium M is cut in such a manner that the extending direction of the cut edge MT follows along the width direction. Accordingly, the image forming controller **61** does not vary one or both of the conveying speed and the cutting speed. The image forming controller **61** may determine that the print medium M is cut obliquely in the example case where the ending time difference ΔTE takes the value other than 0 (e.g., the ending time difference ΔTE takes the negative value or the positive value), because in this case the print medium M is cut in such a manner that the extending direction of the cut edge MT becomes oblique relative to the width direction. Accordingly, the image forming controller **61** may vary one or both of the conveying speed and the cutting speed.

[0194] For example, the image forming controller **61** may so vary one or both of the conveying speed and the cutting speed as to cause the value of the ending time difference ΔTE to be closer to 0. Note that a method of controlling one or both of the conveying speed and the cutting speed to be performed here is as described in detail in the first example embodiment. It is to be also noted that a level of decreasing the ending time difference ΔTE may be the same or similar to what has been described in detail in the first example embodiment with respect to the level of decreasing the starting time difference ΔTS.

[0195] In the second control principle, in order to detect, at the two positions that are different from each other in the width direction, the lengths of the respective medium toner images G**1**A and G**2**A as illustrated by way of example in FIG. **26**, the image detection sensors **41** and **42** may respectively detect the detection starting times T**1**S and T**2**S as well as the detection ending times T**1**E and T**2**E on the basis of the medium toner images G**1**A and G**2**A, instead of detecting the detection starting times T**1**S and T**2**S and the detection ending times T**1**E and T**2**E on the basis of the conveyance toner images G**1**B and G**2**B. Thus, for example, the image forming controller **61** may calculate the detection time difference ΔTC on the basis of the detection results related to the medium toner images G**1**A and G**2**A instead of the detection results related to the conveyance toner images G**1**B and G**2**B. Further, for example, the image forming controller **61** may so vary, on the basis of the detection results that are based on the detection time difference ΔTC,

one or both of the conveying speed and the cutting speed as to cause the value of the detection time difference ΔTC to be closer to 0.

[2-2. Operation]

[0196] FIG. **27** illustrates an example of a flow of the adjustment operation of the cutting process for describing the example adjustment operation of the cutting process. Note that step numbers in parentheses described below correspond to those illustrated in FIG. **27**.

[0197] Operations of forming an image performed by the image forming apparatus according to the second example embodiment may be similar to the example operations to be performed by the image forming apparatus according to the first example embodiment. Further, the image forming apparatus according to the second example embodiment may perform the adjustment operation of the cutting process in accordance with an example procedure to be described below. In the following description, any operation similar to that performed in the first example embodiment will be described in a simplified fashion as necessary.

[0198] Upon performing the adjustment operation of the cutting process, the image forming controller **61** may first rotate the conveying rollers **202** and **203** to thereby convey the rolled print medium M in the conveyance direction D along the conveyance route P (step S**21**). During the conveyance of the rolled print medium M, the image forming controller **61** may operate the cutter **204** and thereby cut the rolled print medium M (step S**22**). Thereafter, the image forming controller **61** may cause, upon conveying the print medium M in the conveyance direction D, the toner T to be transferred onto the surface of the print medium M and the surface of the conveyance belt **21**, and may thereby so form the toner images G**1** and G**2** as to include the medium toner image GA and the conveyance toner image GB (step S**23**).

[0199] Thereafter, the print medium M may be separated from the conveyance belt **21** owing to the further conveyance of the print medium M, following which the image forming controller **61** may operate the image detection sensors **41** and **42** and thereby detect the medium toner images G**1**A and G**2**A formed on the surface of the print medium M (step S**24**). Thereafter, the image forming controller **61** may calculate the ending time difference ΔTE on the basis of the detection results obtained by the respective image detection sensors **41** and **42** (step S**25**). Thereafter, the image forming controller **61** may determine whether the ending time difference ΔTE takes a value other than 0 (step S**26**).

[0200] In a case where the ending time difference ΔTE is 0 (step S**26**: N), the image forming controller **61** may end the adjustment operation of the cutting process, because the print medium M has been cut normally and it is not necessary to perform the adjustment operation of the cutting process accordingly. In a case where the ending time difference ΔTE takes the value other than 0 (step S**26**: Y), the image forming controller **61** may perform the adjustment operation of the cutting process, because the print medium M has not been cut normally and it is necessary to perform the adjustment operation of the cutting process accordingly. Hence, the image forming controller **61** may so vary one or both of the conveying speed and the cutting speed as to cause the value of the ending time difference ΔTE to be closer to 0 (step S**27**). Thus, the conveying speed or the cutting speed may be made appropriate, allowing the print medium M to be cut in such a manner that the extending direction of the cut edge MT follows along the width direction when the rolled print medium M is to be cut by the cutter **204** next time and after, and thereby completing the adjustment operation of the cutting process.

[0201] Upon performing the adjustment operation of the cutting process, the image forming controller **61** may calculate the detection time difference ΔTC instead of calculating the ending time difference ΔTE. Through calculating the detection time difference ΔTC instead of the ending time difference ΔTE, the image forming controller **61** may vary the conveying speed or the cutting speed on the basis of the detection time difference ΔTC and in accordance with a procedure similar to the example procedure in the first example embodiment (steps S**25** to S**27**). Here, in an alternative example embodiment, the image forming controller **61** may use both of the ending time difference ΔTE and the detection time difference ΔTC upon performing the adjustment operation of the cutting process. Further, in an alternative example embodiment, the image forming controller **61** may vary both of the conveying speed and the cutting speed upon performing the adjustment operation of the cutting process.

[2-3. Example Workings and Example Effects]

[0202] In the image forming apparatus according to an example embodiment, the conveying rollers **202** and **203** conveys the print medium M, and the cutter **204** cuts the print medium M. Further, the developing unit **10** and the transfer roller **24** form the toner image G. e.g., the medium toner image GA and the conveyance toner image GB, on the print medium M and the conveyance belt **21**. Thereafter, the image detection sensors **40** detects, at the two positions, the medium toner image GA, and the image forming controller **61** varies one or both of the conveying speed and the cutting speed on the basis of the comparison of the medium toner image GA detected at the two positions by the image detection sensors **40**. In such an example embodiment, for one reason similar to that described in the first example embodiment, a determination may be made as to whether the print medium M is cut in such a manner that the extending direction of the cut edge MT becomes oblique relative to the width direction, and the cutting process of the print medium M may be adjusted as necessary such that the extending direction of the cut edge MT follows along the width direction. This configuration makes it easier to cut the print medium M by the cutter **204** in such a manner that the extending direction of the cut edge MT follows along the width direction. Hence, it is possible to stably forms an image on the print medium M.

[0203] In addition, in an example embodiment, the image detection sensors **40** may detect, at the two positions, the position of the medium toner image GA, and the image forming controller **61** may vary one or both of the conveying speed and the cutting speed on the basis of the comparison between the positions of the medium toner image GA detected at the two positions. Such an example embodiment makes it easier to cut the print medium M such that the extending direction of the cut edge MT follows along the width direction. Further, in an example embodiment, the image detection sensors **40** may detect the detection ending time (e.g., the detection ending time T**1**E and the detection ending time T**2**E) at the two positions on the basis of the medium toner images GA, and the image forming controller

61 may calculate the ending time difference ΔTE and may so vary one or both of the conveying speed and the cutting speed as to cause the value of the ending time difference ΔTE to be closer to 0. This configuration makes it easier to cut, stably and with high accuracy, the print medium M in such a manner that the extending direction of the cut edge MT follows along the width direction, and thereby makes it easier to adjust the cutting process of the print medium M. Hence, it is possible to achieve higher effects.

[0204] Alternatively, in an example embodiment, the image detection sensors **40** may detect, at the two positions, the lengths of the medium toner image GA, and the image forming controller **61** may vary one or both of the conveying speed and the cutting speed on the basis of the comparison between the lengths of the medium toner image GA detected at the two positions. Such an example embodiment makes it easier to cut the print medium M such that the extending direction of the cut edge MT follows along the width direction. Further, in an example embodiment, the image detection sensors **40** may detect the detection starting time (e.g., the detection starting time T**1**S and the detection starting time T**2**S) at the two positions and the detection ending time (e.g., the detection ending time T**1**E and the detection ending time T**2**E) at the two positions on the basis of the medium toner image GA, and the image forming controller **61** may calculate the detection time difference ΔTC and may so vary one or both of the conveying speed and the cutting speed as to cause the value of the detection time difference ΔTC to be closer to 0. This configuration makes it easier to cut, stably and with high accuracy, the print medium M in such a manner that the extending direction of the cut edge MT follows along the width direction, and thereby makes it easier to adjust the cutting process of the print medium M. Hence, it is possible to achieve higher effects.

[0205] Other example workings and example effects of the image forming apparatus according to the second example embodiment may be the same as or similar to those of the image forming apparatus according to the first example embodiment.

3. IMAGE FORMING APPARATUS (THIRD EXAMPLE EMBODIMENT)

[0206] A description is given below of an image forming apparatus according to a third example embodiment of the technology.

[3-1. Configuration]

[0207] FIG. **28** illustrates an example of a perspective configuration of the image forming apparatus according to the third example embodiment, and corresponds to FIGS. **1** and **21**. The image forming apparatus according to the third example embodiment may have a configuration similar to the configuration of each of the first and the second example embodiments, with the exception that the image forming apparatus according to the third example embodiment does not include the image detection sensors **40** as illustrated in FIG. **28**.

[0208] The image forming apparatus according to each of the first and the second example embodiments includes the image detection sensors **40** for the image forming controller **61** to perform the adjustment operation of the cutting process, i.e., for the image forming apparatus to automatically perform the adjustment operation of the cutting process without any intervention of human-induced operation. In contrast, the image forming apparatus according to the third example embodiment does not include the image detection sensors **40** to thereby allow for the adjustment operation of the cutting process through a human-induced operation, i.e., to thereby allows a user who uses the image forming apparatus to manually perform the adjustment operation of the cutting process as described below.

[3-2. Operation]

[0209] FIG. **29** illustrates an example of a plan configuration corresponding to FIG. **16** for describing an example of an adjustment procedure in the cutting process. FIG. **30** illustrates an example of a flow of the adjustment operation of the cutting process for describing the example adjustment operation of the cutting process. It is to be noted that FIG. **29** illustrates a non-limiting example in which an example configuration of the toner image G illustrated in FIG. **12** is applied. In other words, in this example case, the toner image G includes the scaled pattern having the plurality of frame-shaped scales S. It is to be also noted that step numbers in parentheses described below correspond to those illustrated in FIG. **30**.

[0210] Operations of forming an image performed by the image forming apparatus according to the third example embodiment may be similar to the example operations to be performed by the image forming apparatus according to the first example embodiment. Further, the image forming apparatus according to the third example embodiment may perform the adjustment operation of the cutting process in accordance with an example procedure to be described below. In the following description, any operation similar to that performed in each of the first and the second example embodiments will be described in a simplified fashion as necessary.

[0211] Upon performing the adjustment operation of the cutting process, the image forming controller **61** may first rotate the conveying rollers **202** and **203** to thereby convey the rolled print medium M (step S**31**). During the conveyance of the rolled print medium M, the image forming controller **61** may cut the rolled print medium M by means of the cutter **204** (step S**32**). Thereafter, the image forming controller **61** may cause the toner T to be transferred onto the surface of the print medium M and the surface of the conveyance belt **21**, and may thereby form the toner images G**1** and G**2**, e.g., the medium toner image GA and the conveyance toner image GB (step S**33**). Thereafter, the print medium M may be further conveyed in the conveyance direction D and may be thus separated from the conveyance belt **21**, following which the print medium M may be discharged from the discharge opening **110**H (step S**34**).

[0212] For example, when the user obtains the print medium M on which the medium toner images G**1**A and G**2**A are formed, the user may operate the operation interface panel **122** on the basis of those medium toner images G**1**A and G**2**A to thereby input adjustment information. The adjustment information may be information equivalent to the starting time difference ΔTS, the ending time difference ΔTE, and the detection time difference ΔTC which are described above. In other words, the adjustment information may be any information necessary for the image forming apparatus, e.g., for the image forming controller **61**, to perform the adjustment operation of the cutting process. The

adjustment information may include any content and hence the content of the adjustment information is not particularly limited, as long as the image forming controller **61** is able to execute the adjustment operation of the cutting process on the basis of the adjustment information.

[0213] In an example embodiment, the adjustment information may be directed to a difference (i.e., a number difference) between the number of scales S included in the medium toner image G**1**A and the number of scales S included in the medium toner image G**2**A in a non-limiting example where the toner image G has the scaled pattern as illustrated in FIG. **29**. Note that the number of scales S here refers to the number of complete scales S included in each of the medium toner images G**1**A and G**2**A, and that the number of partial scales S included in each of the medium toner images G**1**A and G**2**A is uncounted, for example.

[0214] For example, in an example case illustrated in FIG. **29**, the medium toner image G**1**A includes ten scales S whereas the medium toner image G**2**A includes eight scales S. Hence, the number difference (=the number of scales S included in the medium toner image G**1**A–the number of scales S included in the medium toner image G**2**A) is two (10–8). Note that the number difference is not necessarily limited to a positive number and can be a negative number in some cases.

[0215] In an alternative example embodiment where an example configuration of the toner image G illustrated in any of FIGS. **7** and **8** is applied (i.e., the toner image G includes the solid pattern), the adjustment information may be directed to a difference (i.e., a length difference) between the length of the medium toner image G**1**A and the length of the medium toner image G**2**A. For example, to determine the length difference, the lengths of the respective medium toner images G**1**A and G**2**A each may be measured using any measuring instrument such as a ruler, and the length difference may be calculated thereafter on the basis of a result of the length measurement of each of the medium toner images G**1**A and G**2**A.

[0216] Thereafter, the image forming controller **61** may acquire the adjustment information inputted from the user through the operation interface panel **122** (step S**35**). Upon receiving the adjustment information, the image forming controller **61** may vary the conveying speed on the basis of the adjustment information (step S**36**). For example, in an example case where the image forming controller **61** has acquired the number difference inputted by the user, the image forming controller **61** may so vary the conveying speed as to cause the value of the number difference to be closer to 0, because the print medium M has been cut in such a manner that the extending direction of the cut edge MT becomes oblique, relative to the width direction, by a magnitude corresponding to the number difference and it is necessary to perform the adjustment operation of the cutting process accordingly. Note that a level of decreasing the number difference may be the same or similar to what has been described in detail in the first example embodiment with respect to the level of decreasing the starting time difference ΔTS. Thus, the print medium M is cut in such a manner that the extending direction of the cut edge MT follows along the width direction, thereby completing the adjustment operation of the cutting process.

[0217] Upon performing the adjustment operation of the cutting process, the image forming controller **61** may vary the cutting speed (step S**36**) instead of varying the conveying speed. Further, the image forming controller **61** may vary both of the conveying speed and the cutting speed upon performing the adjustment operation of the cutting process.

[3-3. Example Workings and Example Effects]

[0218] In the image forming apparatus according to the third example embodiment, the conveying rollers **202** and **203** conveys the print medium M, and the cutter **204** cuts the print medium M. Further, the developing unit **10** and the transfer roller **24** form the toner image G including the medium toner image GA and the conveyance toner image GB, on the print medium M and the conveyance belt **21**. Thereafter, upon the acquisition by the image forming controller **61** of the adjustment information inputted by the user on the basis of the medium toner image GA, the image forming controller **61** varies one or both of the conveying speed and the cutting speed on the basis of the adjustment information. In such an example embodiment as well, for one reason similar to that described in the first and the second example embodiments, a determination may be made as to whether the print medium M is cut in such a manner that the extending direction of the cut edge MT becomes oblique relative to the width direction, and the cutting process of the print medium M may be adjusted as necessary such that the extending direction of the cut edge MT follows along the width direction. This configuration makes it easier to cut the print medium M by the cutter **204** in such a manner that the extending direction of the cut edge MT follows along the width direction. Hence, it is possible to stably forms an image on the print medium M.

[0219] Other example workings and example effects may be the same as or similar to those of the image forming apparatus according to the first example embodiment, except for example workings and example effects which are derived from the utilization of the detection results obtained by the image detection sensors **40**.

4. IMAGE FORMING APPARATUS (FOURTH EXAMPLE EMBODIMENT)

[0220] A description is given below of an image forming apparatus according to a fourth example embodiment of the technology.

[0221] In the third example embodiment, the user inputs the adjustment information on the basis of the medium toner image GA (e.g., the medium toner images G**1**A and G**2**A), and the image forming controller **61** varies one or both of the conveying speed and the cutting speed on the basis of the adjustment information. In the fourth example embodiment, the user may input the adjustment information on the basis of the conveyance toner image GB (e.g., the conveyance toner images G**1**B and G**2**B) instead of inputting the adjustment information on the basis of the medium toner image GA (e.g., the medium toner images G**1**A and G**2**A), and the image forming controller **61** may vary one or both of the conveying speed and the cutting speed on the basis of such adjustment information.

[0222] A configuration and an operation of the image forming apparatus according to the fourth example embodiment may be similar to those of the image forming apparatus according to the third example embodiment, except for the following respects.

[0223] For example, upon inputting by the user of the adjustment information on the basis of the conveyance toner

images G1B and G2B, the toner image G including the medium toner image GA and the conveyance toner image GB may be formed, following which the user may open the top cover **120** and may visually confirm the conveyance toner images G1B and G2B formed on the surface of the conveyance belt **21**. Note that the adjustment information in the fourth example embodiment may be the same or similar to what has been described in detail with respect to the adjustment information in the third example embodiment, except for the use of the conveyance toner images G1B and G2B instead of the medium toner images G1A and G2A. The fourth example embodiment thus makes it possible for the user to input the adjustment information even in an example case where the user has lost the print medium M that is formed with the medium toner images G1A and G2A and discharged from the discharge opening **110**H.

[0224] In the image forming apparatus according to the fourth example embodiment, the conveying rollers **202** and **203** conveys the print medium M. and the cutter **204** cuts the print medium M. Further, the developing unit **10** and the transfer roller **24** form the toner image G including the medium toner image GA and the conveyance toner image GB, on the print medium M and the conveyance belt **21**. Thereafter, upon the acquisition by the image forming controller **61** of the adjustment information inputted by the user on the basis of the conveyance toner image GB, the image forming controller **61** varies one or both of the conveying speed and the cutting speed on the basis of the adjustment information. Thus, for one reason similar to that described in the third example embodiment, the cutting process of the print medium M may be adjusted as necessary such that the extending direction of the cut edge MT follows along the width direction. Hence, it is possible to stably forms an image on the print medium M.

[0225] Other example workings and example effects may be the same as or similar to those of the image forming apparatus according to the third example embodiment.

5. MODIFICATION EXAMPLES

[0226] The configuration of the image forming apparatus according to any of the foregoing example embodiments may be variously modified as necessary as an example embodiment of the technology.

First Modification Example

[0227] In the first example embodiment, the image forming controller **61** performs the adjustment operation of the cutting process, on the basis of the detection results related to the conveyance toner image GB obtained by the image detection sensors **40**. In the second example embodiment, the image forming controller **61** performs the adjustment operation of the cutting process, on the basis of the detection results related to the medium toner image GA obtained by the image detection sensors **40**.

[0228] In the first modification example, however, the image detection sensor **40** directed to the detection of the conveyance toner image GB and the image detection sensor **40** directed to the detection of the medium toner image GA may be used in combination. Further, the image forming controller **61** may perform the adjustment operation of the cutting process, on the basis of both the detection result on the conveyance toner image GB and the detection result on the medium toner image GA. This configuration according to the first modification example also makes it easier to cut the print medium M by the cutter **204** in such a manner that the extending direction of the cut edge MT follows along the width direction. Hence, it is possible to achieve example effects similar to those described above.

Second Modification Example

[0229] Some non-limiting examples of the configuration of the toner image G have been described above with reference to FIGS. **6** to **14**. However, the toner image G may have any configuration and hence the configuration of the toner image G is not particularly limited, as long as a difference in configuration of the toner image G is detectable or visually recognizable at positions that are different from each other in the width direction and as long as it is possible to perform the adjustment operation of the cutting process on the basis of a result of such detection or visual recognition.

[0230] For example, only one toner image G may be formed as illustrated by way of example in FIG. **31** that corresponds to FIG. **6**. In such an example embodiment where the number of toner images G is one, a width (e.g., a size in the Y-axis direction) of the toner image G may be sufficiently large such that the image detection sensor **40** or the image detection sensors **40** is/are able to detect the toner image G at two or more positions that are different from each other in the width direction.

[0231] Further, for example, the length L**1** of the toner image G**1** and the length L**2** of the toner image G**2** may be different from each other as illustrated by way of example in FIG. **32** that corresponds to FIG. **6**. FIG. **32** illustrates an example embodiment in which the length L**2** is larger than the length L**1**. In an unillustrated alternative example embodiment, the length L**1** may be larger than the length L**2**.

[0232] Note that a region in which the toner image G**2** is formed extends toward the upstream side in the conveyance direction D in the example embodiment illustrated in FIG. **32**. In an alternative example embodiment, however, the region in which the toner image G**2** is formed may extend toward the downstream side in the conveyance direction D, or may extend toward each of the upstream and the downstream sides. Hence, a direction or directions of the extension of the formation region is/are not particularly limited. This applies similarly to a region in which the toner image G**1** is formed as well, where the length L**1** is larger than the length L**2**.

[0233] In addition, for example, three or more toner images G may be formed as illustrated by way of example in FIG. **33** that corresponds to FIG. **6**. FIG. **33** illustrates an example embodiment in which three toner images G (toner images G**1** to G**3**) and three image detection sensors **40** (image detection sensors **41** to **43**) corresponding to the number of such toner images G**1** to G**3** are provided. In other words, the number of image detection sensors **40** is not limited to two and can be three or more.

[0234] In such example embodiments as well, the adjustment operation of the cutting process similar to an example embodiment illustrated by way of example in FIG. **6** is performed. Hence, it is possible to achieve example effects that are similar to those of any example embodiment.

Third Modification Example

[0235] The image forming controller **61** automatically performs the adjustment operation of the cutting process at

any timing in each of the first and the second example embodiments. In a third modification example, however, the image forming controller **61** may perform the adjustment operation of the cutting process when the user has instructed to execute the adjustment operation through the operation interface panel **122**. In such an example embodiment, for example, the image detection sensors **40** may perform the detection of the toner image G and the image forming controller **61** may perform the adjustment operation of the cutting process, when the user has inputted the instructions on the execution of the adjustment operation. Alternatively, for example, the image forming controller **61** may perform the adjustment operation of the cutting process, on a condition that the image detection sensors **40** have already performed the detection of the toner image G at any timing and when the user has inputted the instructions on the execution of the adjustment operation.

[0236] In such example embodiments as well, the adjustment operation of the cutting process is performed on the basis of the detection results obtained by the image detection sensors **40**. Hence, it is possible to achieve example effects that are similar to those of any example embodiment.

Fourth Modification Example

[0237] In each of the second and the third example embodiments, the toner T is transferred from the surface of the print medium M through the cut edge MT to the surface of the conveyance belt **21** to thereby so form the toner image G as to include the medium toner image GA and the conveyance toner image GB as illustrated in FIGS. **6** and **29**.

[0238] In a fourth modification example, however, the toner T may be transferred from an inner side of the surface of the print medium M to an edge of the surface of the print medium M (e.g., the cut edge MT) in the conveyance direction D to thereby form the toner image G (e.g., the medium toner image GA) only on the print medium M, as illustrated by way of example in FIG. **34** that corresponds to FIG. **6**. In such an example embodiment as well, the adjustment operation of the cutting process is performed on the basis of the medium toner image GA as with each of the second and the third example embodiments. Hence, it is possible to achieve example effects that are similar to those of any example embodiment.

Fifth Modification Example

[0239] The width direction in which the image detection sensors **40** are disposed away from each other is not limited to the direction orthogonal to the conveyance direction D. In a fifth modification example, the width direction may be at an angle relative to the conveyance direction D. For example, the image detection sensors **40** may perform the detection at respective positions that are shifted from each other in the conveyance direction D. The fifth modification example also varies one or both of the conveying speed and the cutting speed while taking into consideration the shift in the positions at which the respective image detection sensors **40** perform the detection. Hence, it is possible to achieve example effects similar to those described above.

[0240] Some example embodiments and the modification examples thereof of the technology have been described above; however, embodiments of the technology are not limited to the example embodiments and the modification examples described above, and is modifiable in various ways. For example, the image forming apparatus according to an example embodiment of the technology may include no medium feeding unit. In such an example embodiment where no medium feeding unit is provided, the image forming apparatus may contain a plurality of print media that have been so cut in advance as to have a predetermined size. Further, for example, the image forming apparatus according to any embodiment of the technology is not limited to a printer, and may be any other apparatus such as a copying machine, a facsimile, a multi-functional peripheral, or any other apparatus having an image-forming functionality.

[0241] Furthermore, the technology encompasses any possible combination of some or all of the various embodiments and the modifications described herein and incorporated herein.

[0242] It is possible to achieve at least the following configurations from the above-described example embodiments and the modification examples of the technology.

(1) An image forming apparatus including:

[0243] a first conveyor that conveys a print medium;

[0244] a cutter that cuts the print medium conveyed by the first conveyor;

[0245] a second conveyor that conveys, in a first direction, the print medium cut by the cutter;

[0246] a detection image forming section that forms a detection image on each of the print medium cut by the cutter and the second conveyor;

[0247] a detector that detects, at two positions that are in a second direction, one of the detection image formed on the print medium cut by the cutter and the detection image formed on the second conveyor, the second direction being substantially orthogonal to the first direction; and

[0248] a controller that varies one or both of a conveying speed of the print medium to be conveyed by the first conveyor and a cutting speed of the print medium to be cut by the cutter, on a basis of a comparison of the detection image detected at the two positions by the detector.

(2) The image forming apparatus according to (1), in which

[0249] the detector detects, at the respective two positions, positions of the detection image on a basis of the detection image formed on the second conveyor, and

[0250] the controller varies one or both of the conveying speed and the cutting speed, on the basis of the comparison between the positions, detected at the respective two positions by the detector, of the detection image.

(3) The image forming apparatus according to (2), in which

[0251] the detector detects, at the respective two positions, timings at which the detection of the detection image is started, and

[0252] the controller calculates a difference between the timings at which the detection, at the respective two positions, of the detection image is started, and varies one or both of the conveying speed and the cutting speed to thereby cause the difference to be closer to zero.

(4) The image forming apparatus according to (1), in which

[0253] the detector detects, at the respective two positions, formation sizes, in the first direction, of the detection image on a basis of the detection image formed on the second conveyor, and

[0254] the controller calculates a difference between the formation sizes at the respective two positions of the detec-

tion image, and varies one or both of the conveying speed and the cutting speed to thereby cause the difference to be closer to zero.

(5) The image forming apparatus according to (1), in which

[0255] the detector detects, at the respective two positions, positions of the detection image on a basis of the detection image formed on the print medium cut by the cutter, and

[0256] the controller varies one or both of the conveying speed and the cutting speed, on the basis of the comparison between the positions, detected at the respective two positions by the detector, of the detection image.

(6) The image forming apparatus according to (5), in which

[0257] the detector detects, at the respective two positions, timings at which the detection of the detection image is ended, and

[0258] the controller calculates a difference between the timings at which the detection, at the respective two positions, of the detection image is ended, and varies one or both of the conveying speed and the cutting speed to thereby cause the difference to be closer to zero.

(7) The image forming apparatus according to (1), in which

[0259] the detector detects, at the respective two positions, formation sizes, in the first direction, of the detection image on a basis of the detection image formed on the print medium cut by the cutter, and

[0260] the controller calculates a difference between the formation sizes at the respective two positions of the detection image, and varies one or both of the conveying speed and the cutting speed to thereby cause the difference to be closer to zero.

(8) The image forming apparatus according to any one of (1) to (7), in which the controller varies the conveying speed.

(9) The image forming apparatus according to any one of (1) to (8), in which

[0261] the cutter includes a rotary cutter that is rotatable and cuts the print medium upon the conveyance of the print medium by the first conveyor, and

[0262] the controller varies a rotation speed of the rotary cutter and thereby varies the cutting speed.

(10) The image forming apparatus according to any one of (1) to (9), in which

[0263] the detection image includes a first detection image and a second detection image that are separated away from each other in the second direction, and

[0264] the detector includes a first detector that detects the first detection image and a second detector that detects the second detection image.

(11) The image forming apparatus according to any one of (1) to (10), in which the detection image extends continuously from the print medium cut by the cutter to the second conveyor.

(12) The image forming apparatus according to any one of (1) to (0), in which the detection image extends intermittently from the print medium cut by the cutter to the second conveyor.

(13) An image forming apparatus including:

[0265] a first conveyor that conveys a print medium;

[0266] a cutter that cuts the print medium conveyed by the first conveyor:

[0267] a second conveyor that conveys the print medium cut by the cutter:

[0268] a detection image forming section that forms a detection image on each of the print medium cut by the cutter and the second conveyor; and

[0269] a controller that varies one or both of a conveying speed of the print medium to be conveyed by the first conveyor and a cutting speed of the print medium to be cut by the cutter.

(14) An image forming apparatus including:

[0270] a first conveyor that conveys a print medium:

[0271] a cutter that cuts the print medium conveyed by the first conveyor;

[0272] a second conveyor that conveys, in a first direction, the print medium cut by the cutter;

[0273] a detection image forming section that forms a detection image on the print medium cut by the cutter;

[0274] a detector that detects, at two positions that are in a second direction, the detection image, the second direction being substantially orthogonal to the first direction; and

[0275] a controller that varies one or both of a conveying speed of the print medium to be conveyed by the first conveyor and a cutting speed of the print medium to be cut by the cutter, on a basis of a comparison of the detection image detected at the two positions by the detector.

[0276] The image forming apparatus according to one embodiment of the technology includes the first conveyor that conveys the print medium and the cutter that cuts the print medium. Further, the detection image forming section forms the detection image on each of the print medium cut by the cutter and the second conveyor, and the detector detects, at the two positions, one of the detection image formed on the print medium and the detection image formed on the second conveyor. The controller varies one or both of the conveying speed of the print medium and the cutting speed of the print medium, on the basis of the comparison of the detection image detected at the two positions by the detector. Hence, it is possible to stably form an image on the print medium.

[0277] The image forming apparatus according to one embodiment of the technology includes the first conveyor that conveys the print medium and the cutter that cuts the print medium. Further, the detection image forming section forms the detection image on each of the print medium cut by the cutter and the second conveyor, and the controller varies one or both of the conveying speed of the print medium and the cutting speed of the print medium. Hence, it is possible to stably form an image on the print medium.

[0278] The image forming apparatus according to one embodiment of the technology includes the first conveyor that conveys the print medium and the cutter that cuts the print medium. Further, the detection image forming section forms the detection image on the print medium cut by the cutter, and the detector detects, at the two positions, the detection image formed on the print medium. The controller varies one or both of the conveying speed of the print medium and the cutting speed of the print medium, on the basis of the comparison of the detection image detected at the two positions by the detector. Hence, it is possible to stably form an image on the print medium.

[0279] Although the technology has been described in terms of exemplary embodiments, it is not limited thereto. It should be appreciated that variations may be made in the described embodiments by persons skilled in the art without departing from the scope of the technology as defined by the following claims. The limitations in the claims are to be interpreted broadly based on the language employed in the claims and not limited to examples described in this specification or during the prosecution of the application, and the

examples are to be construed as non-exclusive. For example, in this disclosure, the term "preferably", "preferred" or the like is non-exclusive and means "preferably", but not limited to. The use of the terms first, second, etc. do not denote any order or importance, but rather the terms first, second, etc. are used to distinguish one element from another. The term "substantially" and its variations are defined as being largely but not necessarily wholly what is specified as understood by one of ordinary skill in the art. The term "about" or "approximately" as used herein can allow for a degree of variability in a value or range. Moreover, no element or component in this disclosure is intended to be dedicated to the public regardless of whether the element or component is explicitly recited in the following claims.

What is claimed is:

1. An image forming apparatus comprising:

a first conveyor that conveys a print medium;

a cutter that cuts the print medium conveyed by the first conveyor;

a second conveyor that conveys, in a first direction, the print medium cut by the cutter;

a detection image forming section that forms a detection image on each of the print medium cut by the cutter and the second conveyor;

a detector that detects, at two positions that are in a second direction, one of the detection image formed on the print medium cut by the cutter and the detection image formed on the second conveyor, the second direction being substantially orthogonal to the first direction; and

a controller that varies one or both of a conveying speed of the print medium to be conveyed by the first conveyor and a cutting speed of the print medium to be cut by the cutter, on a basis of a comparison of the detection image detected at the two positions by the detector.

2. The image forming apparatus according to claim **1**, wherein

the detector detects, at the respective two positions, positions of the detection image on a basis of the detection image formed on the second conveyor, and

the controller varies one or both of the conveying speed and the cutting speed, on the basis of the comparison between the positions, detected at the respective two positions by the detector, of the detection image.

3. The image forming apparatus according to claim **2**, wherein

the detector detects, at the respective two positions, timings at which the detection of the detection image is started, and

the controller calculates a difference between the timings at which the detection, at the respective two positions, of the detection image is started, and varies one or both of the conveying speed and the cutting speed to thereby cause the difference to be closer to zero.

4. The image forming apparatus according to claim **1**, wherein

the detector detects, at the respective two positions, formation sizes, in the first direction, of the detection image on a basis of the detection image formed on the second conveyor, and

the controller calculates a difference between the formation sizes at the respective two positions of the detection image, and varies one or both of the conveying speed and the cutting speed to thereby cause the difference to be closer to zero.

5. The image forming apparatus according to claim **1**, wherein

the detector detects, at the respective two positions, positions of the detection image on a basis of the detection image formed on the print medium cut by the cutter, and

the controller varies one or both of the conveying speed and the cutting speed, on the basis of the comparison between the positions, detected at the respective two positions by the detector, of the detection image.

6. The image forming apparatus according to claim **5**, wherein

the detector detects, at the respective two positions, timings at which the detection of the detection image is ended, and

the controller calculates a difference between the timings at which the detection, at the respective two positions, of the detection image is ended, and varies one or both of the conveying speed and the cutting speed to thereby cause the difference to be closer to zero.

7. The image forming apparatus according to claim **1**, wherein

the detector detects, at the respective two positions, formation sizes, in the first direction, of the detection image on a basis of the detection image formed on the print medium cut by the cutter, and

the controller calculates a difference between the formation sizes at the respective two positions of the detection image, and varies one or both of the conveying speed and the cutting speed to thereby cause the difference to be closer to zero.

8. The image forming apparatus according to claim **1**, wherein the controller varies the conveying speed.

9. The image forming apparatus according to claim **1**, wherein

the cutter comprises a rotary cutter that is rotatable and cuts the print medium upon the conveyance of the print medium by the first conveyor, and

the controller varies a rotation speed of the rotary cutter and thereby varies the cutting speed.

10. The image forming apparatus according to claim **1**, wherein

the detection image comprises a first detection image and a second detection image that are separated away from each other in the second direction, and

the detector comprises a first detector that detects the first detection image and a second detector that detects the second detection image.

11. The image forming apparatus according to claim **1**, wherein the detection image extends continuously from the print medium cut by the cutter to the second conveyor.

12. The image forming apparatus according to claim **1**, wherein the detection image extends intermittently from the print medium cut by the cutter to the second conveyor.

13. An image forming apparatus comprising:

a first conveyor that conveys a print medium;

a cutter that cuts the print medium conveyed by the first conveyor;

a second conveyor that conveys, in a first direction, the print medium cut by the cutter;

a detection image forming section that forms a detection image on the print medium cut by the cutter;

a detector that detects, at two positions that are in a second direction, the detection image, the second direction being substantially orthogonal to the first direction; and

a controller that varies one or both of a conveying speed of the print medium to be conveyed by the first conveyor and a cutting speed of the print medium to be cut by the cutter, on a basis of a comparison of the detection image detected at the two positions by the detector.

* * * * *