US 20190332406A1

(19) United States
(12) Patent Application Publication
Lawrence
(10) Pub. No.: US 2019/0332406 A1
(43) Pub. Date: Oct. 31, 2019

(54) **COMPUTER ARCHITECTURE FOR ESTABLISHING DYNAMIC CORRELITHM OBJECT COMMUNICATIONS IN A CORRELITHM OBJECT PROCESSING SYSTEM**

(71) Applicant: **BANK OF AMERICA CORPORATION**, CHARLOTTE, NC (US)

(72) Inventor: **Patrick N. Lawrence**, Plano, TX (US)

(21) Appl. No.: **15/967,347**

(22) Filed: **Apr. 30, 2018**

Publication Classification

(51) **Int. Cl.**
G06F 9/455 (2006.01)

(52) **U.S. Cl.**
CPC ***G06F 9/45508*** (2013.01)

(57) **ABSTRACT**

A system that includes a first device and a second device. The first device is configured to send correlithm objects having a first bit having a first bit string length and to send a test correlithm object having the first bit string length to the second device. The second device is configured to receive the test correlithm object, to determine a distance between the test correlithm object and a reference correlithm object, and to send the switch command to the first device in response to determining the distance between the test correlithm object and the reference correlithm object exceeds a distance threshold value. The first device is further configured to receive a switch command, and to send correlithm objects having a second bit string length that is greater than the first bit string length to the second device in response to receiving the switch command.

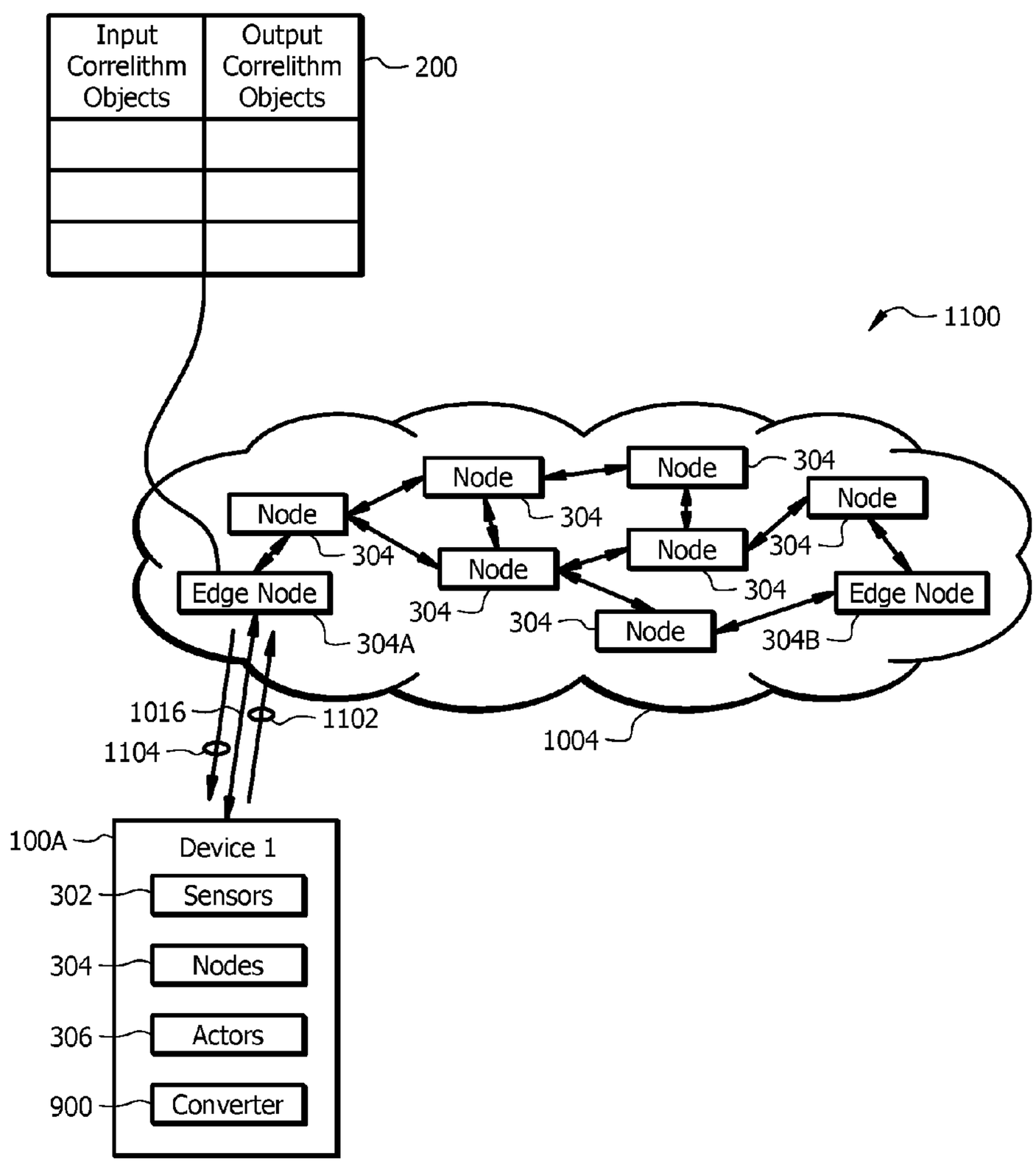

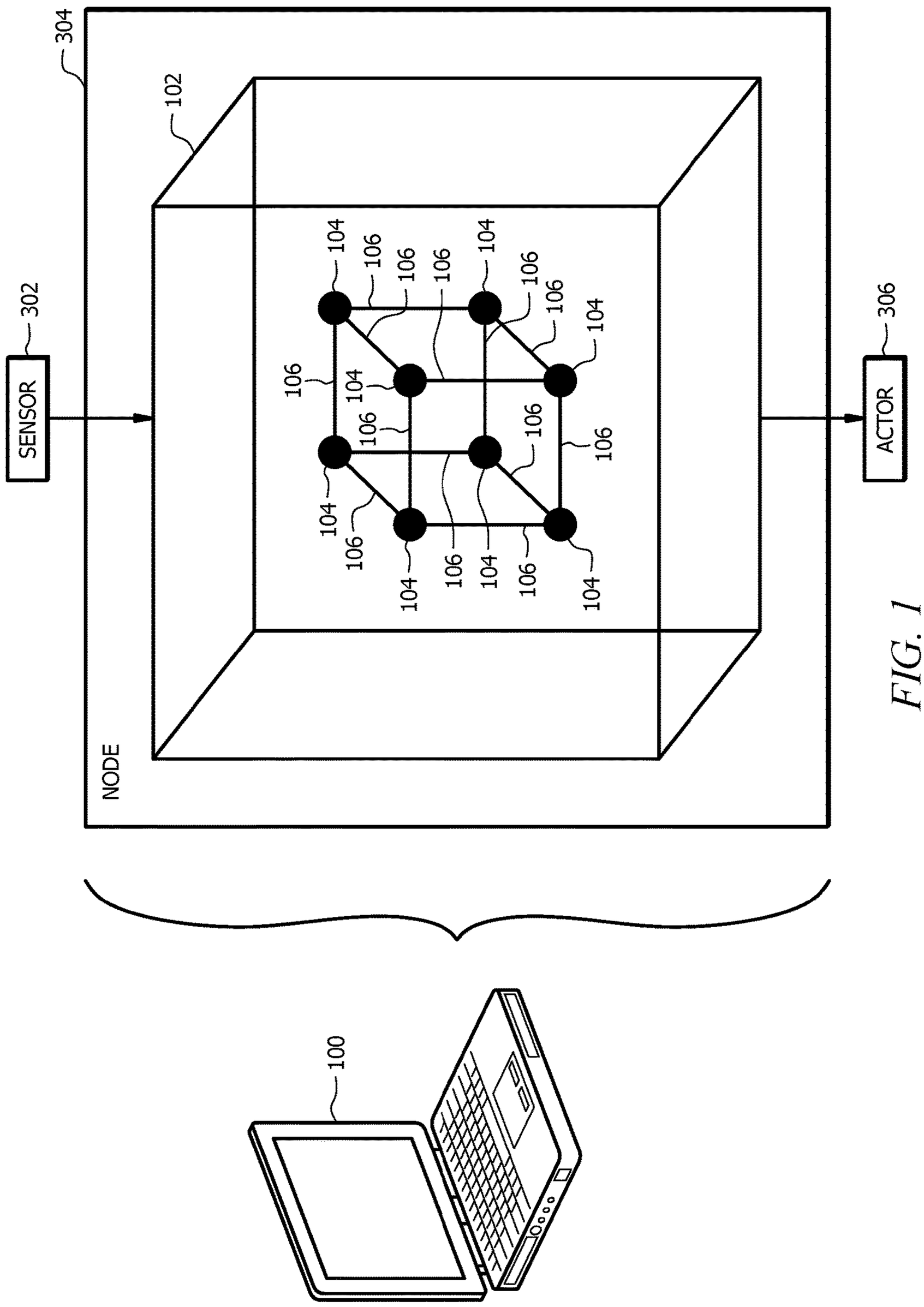

FIG. 1

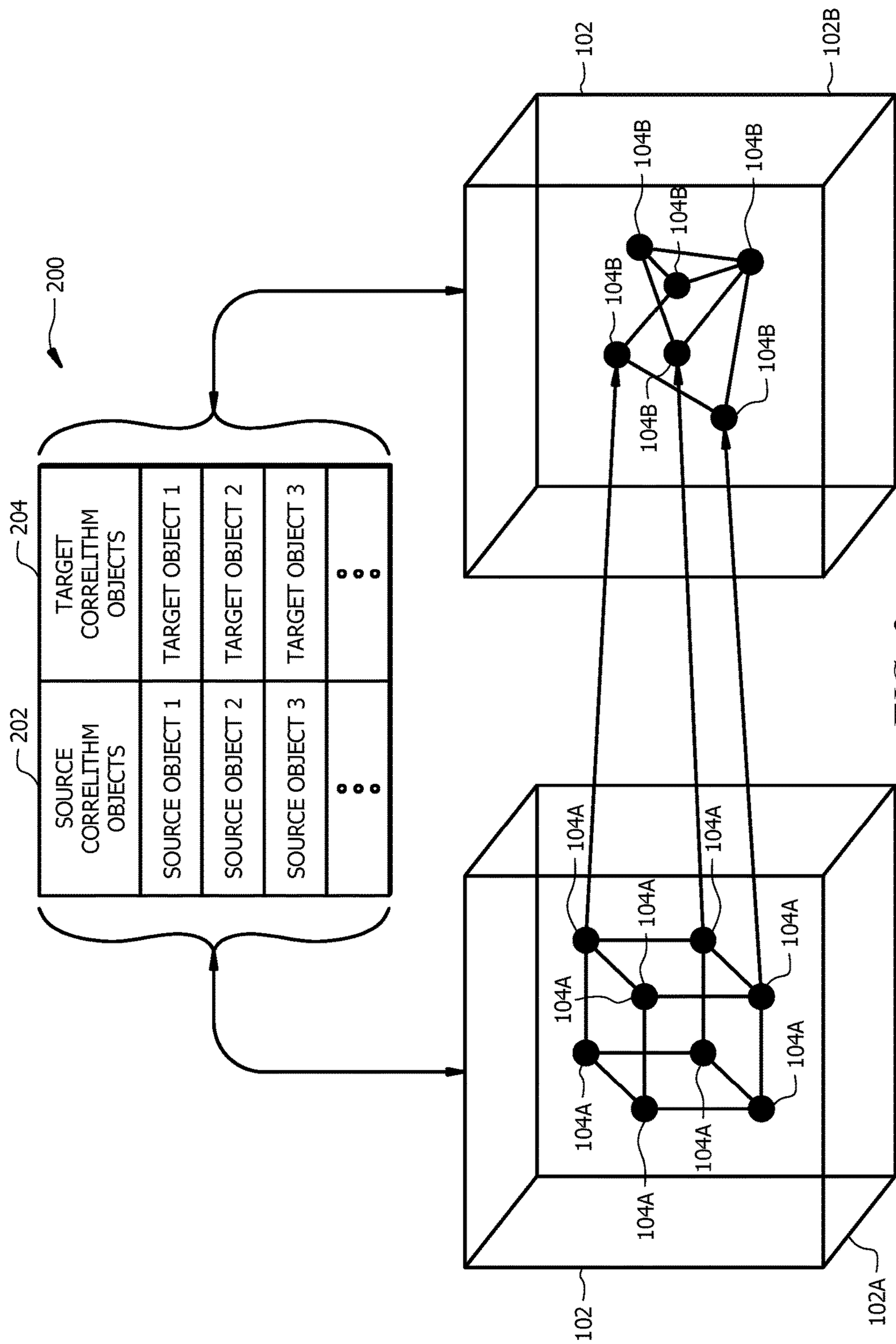
200
202
SOURCE CORRELITHM OBJECTS
SOURCE OBJECT 1
SOURCE OBJECT 2
SOURCE OBJECT 3
204
TARGET CORRELITHM OBJECTS
TARGET OBJECT 1
TARGET OBJECT 2
TARGET OBJECT 3
102
102B
104B
104A
102A

FIG. 2

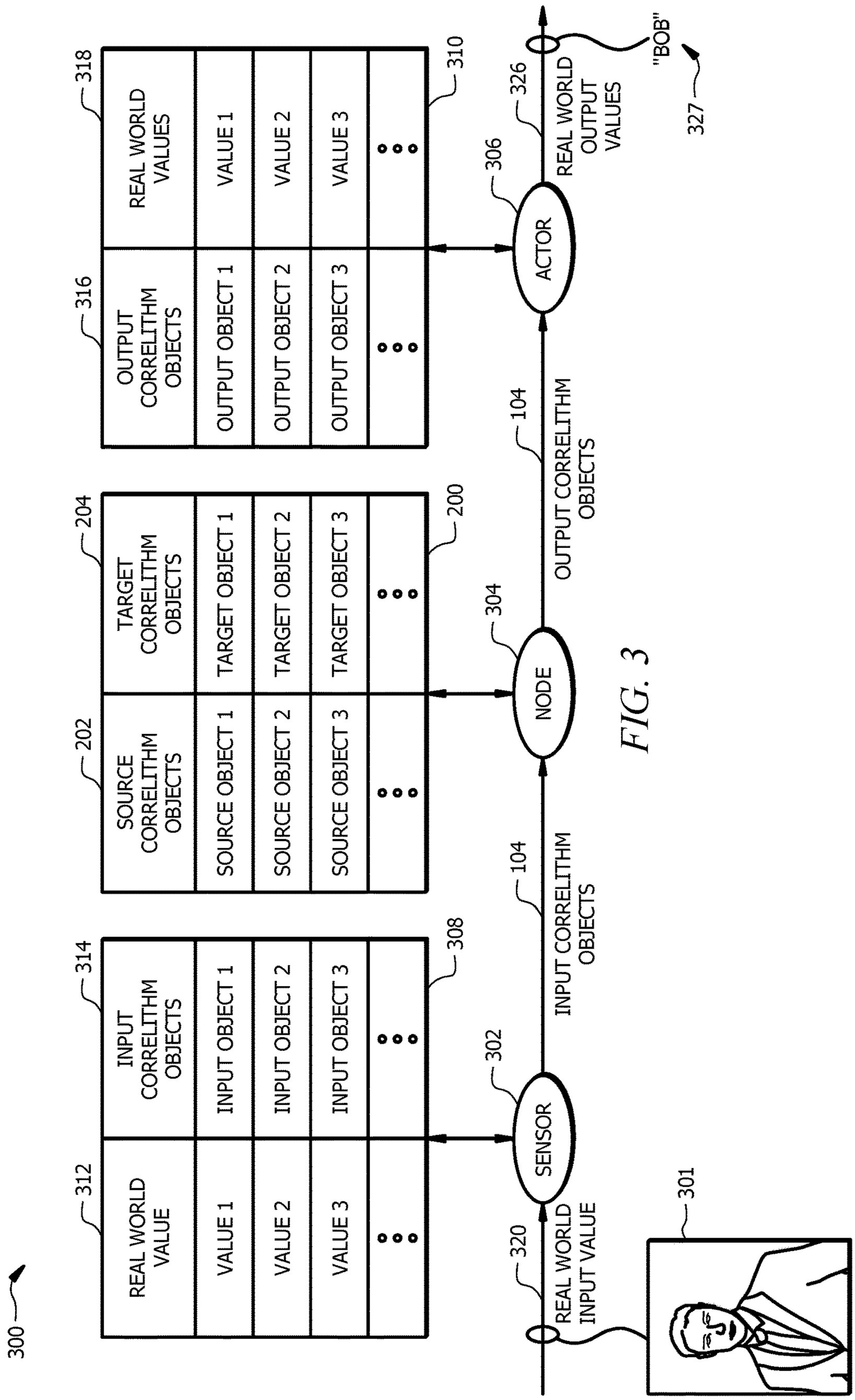
300
REAL WORLD VALUE
VALUE 1
VALUE 2
VALUE 3
312
INPUT CORRELITHM OBJECTS
INPUT OBJECT 1
INPUT OBJECT 2
INPUT OBJECT 3
314
308
SOURCE CORRELITHM OBJECTS
SOURCE OBJECT 1
SOURCE OBJECT 2
SOURCE OBJECT 3
202
TARGET CORRELITHM OBJECTS
TARGET OBJECT 1
TARGET OBJECT 2
TARGET OBJECT 3
204
200
OUTPUT CORRELITHM OBJECTS
OUTPUT OBJECT 1
OUTPUT OBJECT 2
OUTPUT OBJECT 3
316
REAL WORLD VALUES
VALUE 1
VALUE 2
VALUE 3
318
310
SENSOR
302
NODE
304
ACTOR
306
REAL WORLD INPUT VALUE
320
INPUT CORRELITHM OBJECTS
104
OUTPUT CORRELITHM OBJECTS
104
REAL WORLD OUTPUT VALUES
326
"BOB"
327
301

FIG. 3

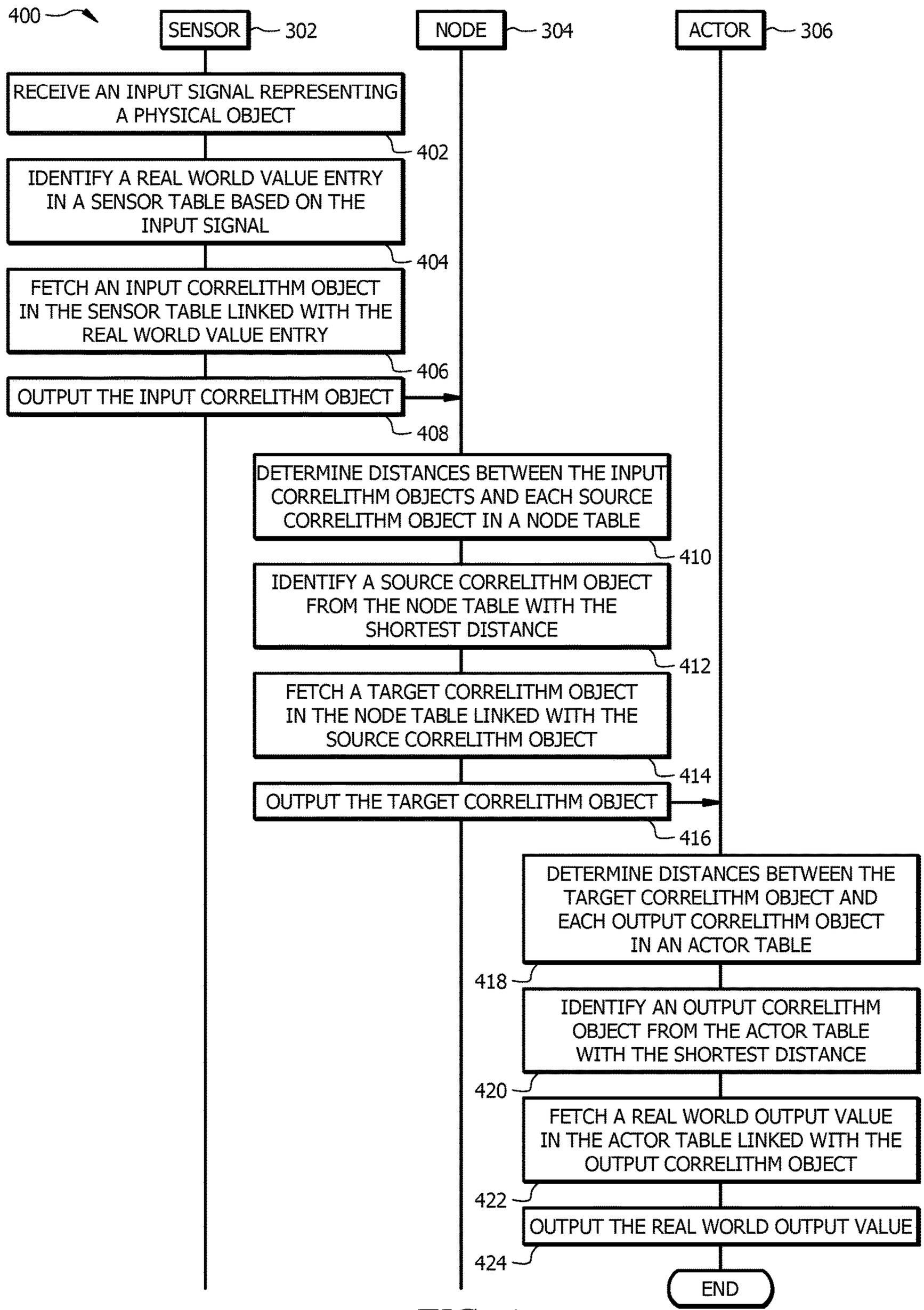
400
SENSOR
302
NODE
304
ACTOR
306
RECEIVE AN INPUT SIGNAL REPRESENTING A PHYSICAL OBJECT
402
IDENTIFY A REAL WORLD VALUE ENTRY IN A SENSOR TABLE BASED ON THE INPUT SIGNAL
404
FETCH AN INPUT CORRELITHM OBJECT IN THE SENSOR TABLE LINKED WITH THE REAL WORLD VALUE ENTRY
406
OUTPUT THE INPUT CORRELITHM OBJECT
408
DETERMINE DISTANCES BETWEEN THE INPUT CORRELITHM OBJECTS AND EACH SOURCE CORRELITHM OBJECT IN A NODE TABLE
410
IDENTIFY A SOURCE CORRELITHM OBJECT FROM THE NODE TABLE WITH THE SHORTEST DISTANCE
412
FETCH A TARGET CORRELITHM OBJECT IN THE NODE TABLE LINKED WITH THE SOURCE CORRELITHM OBJECT
414
OUTPUT THE TARGET CORRELITHM OBJECT
416
DETERMINE DISTANCES BETWEEN THE TARGET CORRELITHM OBJECT AND EACH OUTPUT CORRELITHM OBJECT IN AN ACTOR TABLE
418
IDENTIFY AN OUTPUT CORRELITHM OBJECT FROM THE ACTOR TABLE WITH THE SHORTEST DISTANCE
420
FETCH A REAL WORLD OUTPUT VALUE IN THE ACTOR TABLE LINKED WITH THE OUTPUT CORRELITHM OBJECT
422
OUTPUT THE REAL WORLD OUTPUT VALUE
424
END

FIG. 4

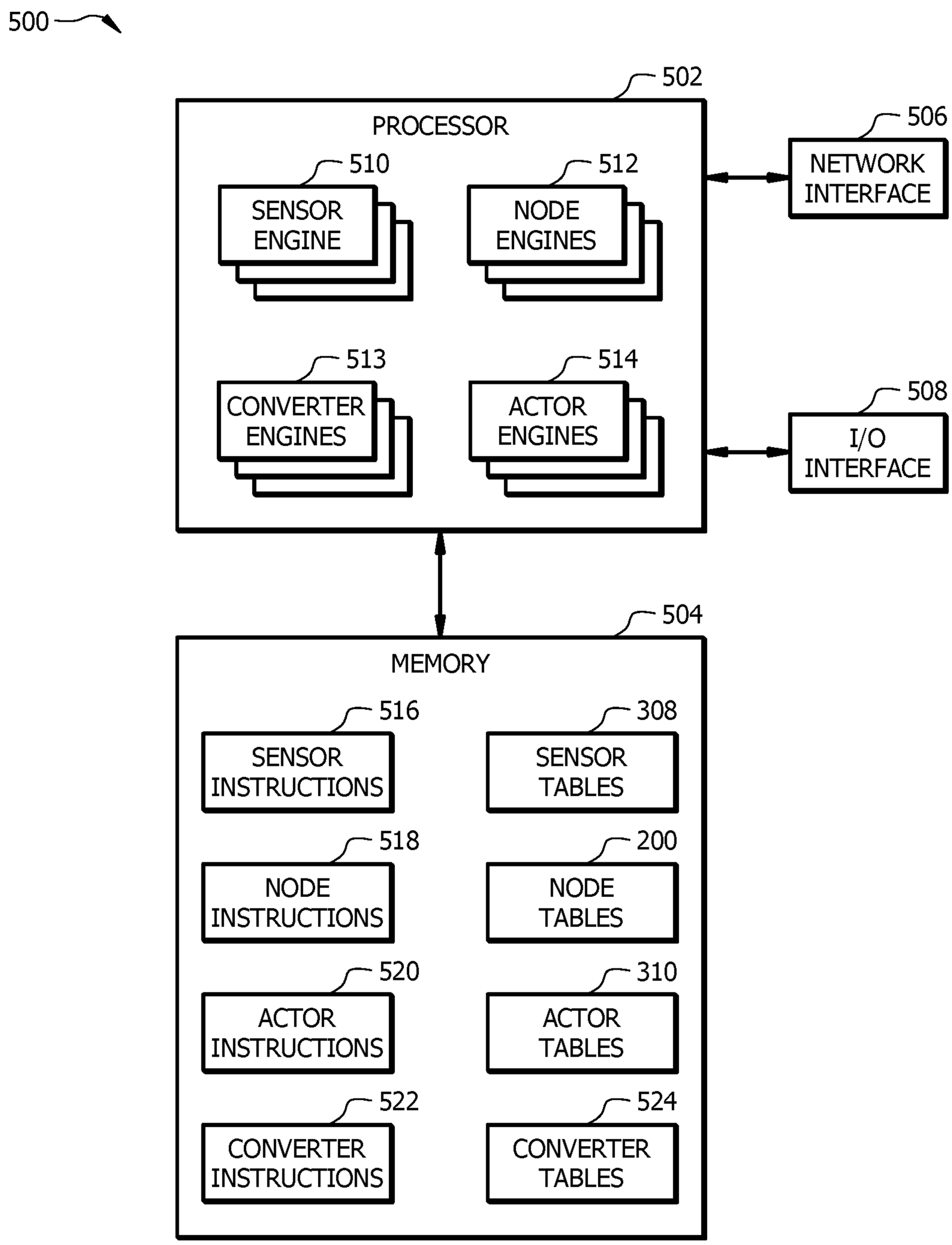
500
502
PROCESSOR
510
SENSOR ENGINE
512
NODE ENGINES
513
CONVERTER ENGINES
514
ACTOR ENGINES
506
NETWORK INTERFACE
508
I/O INTERFACE
504
MEMORY
516
SENSOR INSTRUCTIONS
308
SENSOR TABLES
518
NODE INSTRUCTIONS
200
NODE TABLES
520
ACTOR INSTRUCTIONS
310
ACTOR TABLES
522
CONVERTER INSTRUCTIONS
524
CONVERTER TABLES

FIG. 5

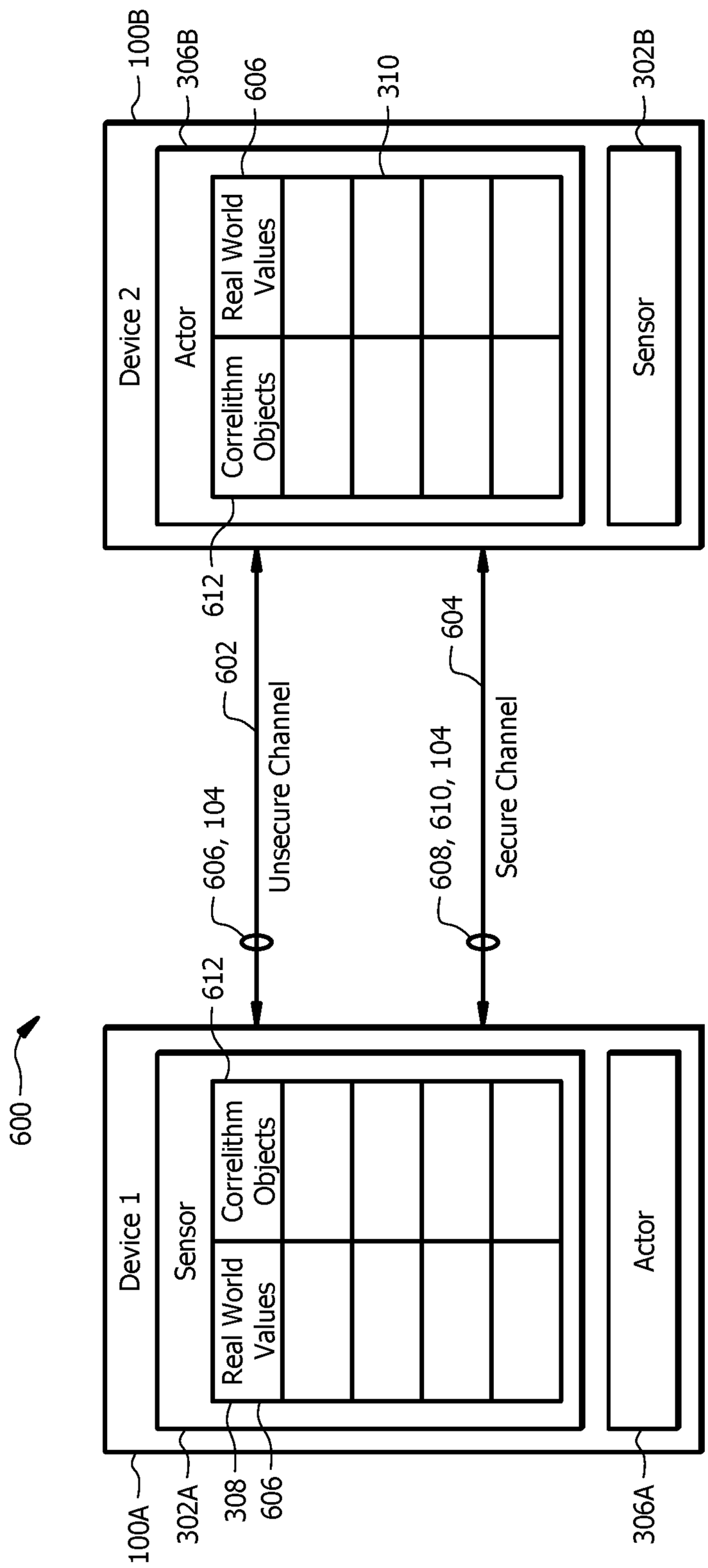
600
Device 1
100A
Sensor
302A
Real World Values
308
Correlithm Objects
606
612
Actor
306A
606, 104
Unsecure Channel
602
612
608, 610, 104
Secure Channel
604
Device 2
100B
Actor
306B
Real World Values
606
Correlithm Objects
310
612
Sensor
302B

FIG. 6

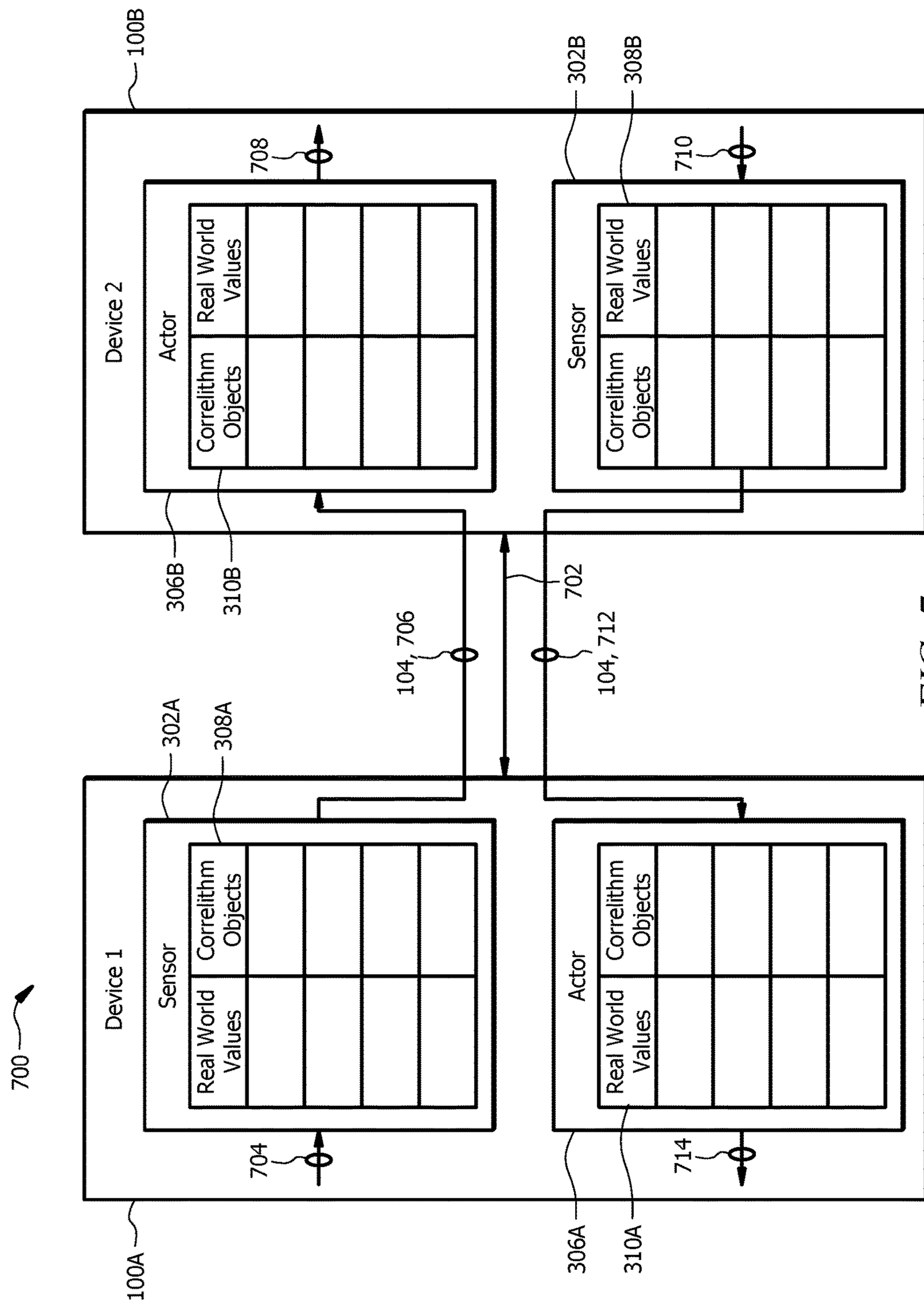
700
Device 1
Sensor
Real World Values
Correlithm Objects
Actor
Real World Values
Correlithm Objects
100A
302A
308A
306A
310A
704
714
104, 706
104, 712
702
Device 2
Actor
Real World Values
Correlithm Objects
Sensor
Real World Values
Correlithm Objects
100B
302B
308B
306B
310B
708
710

FIG. 7

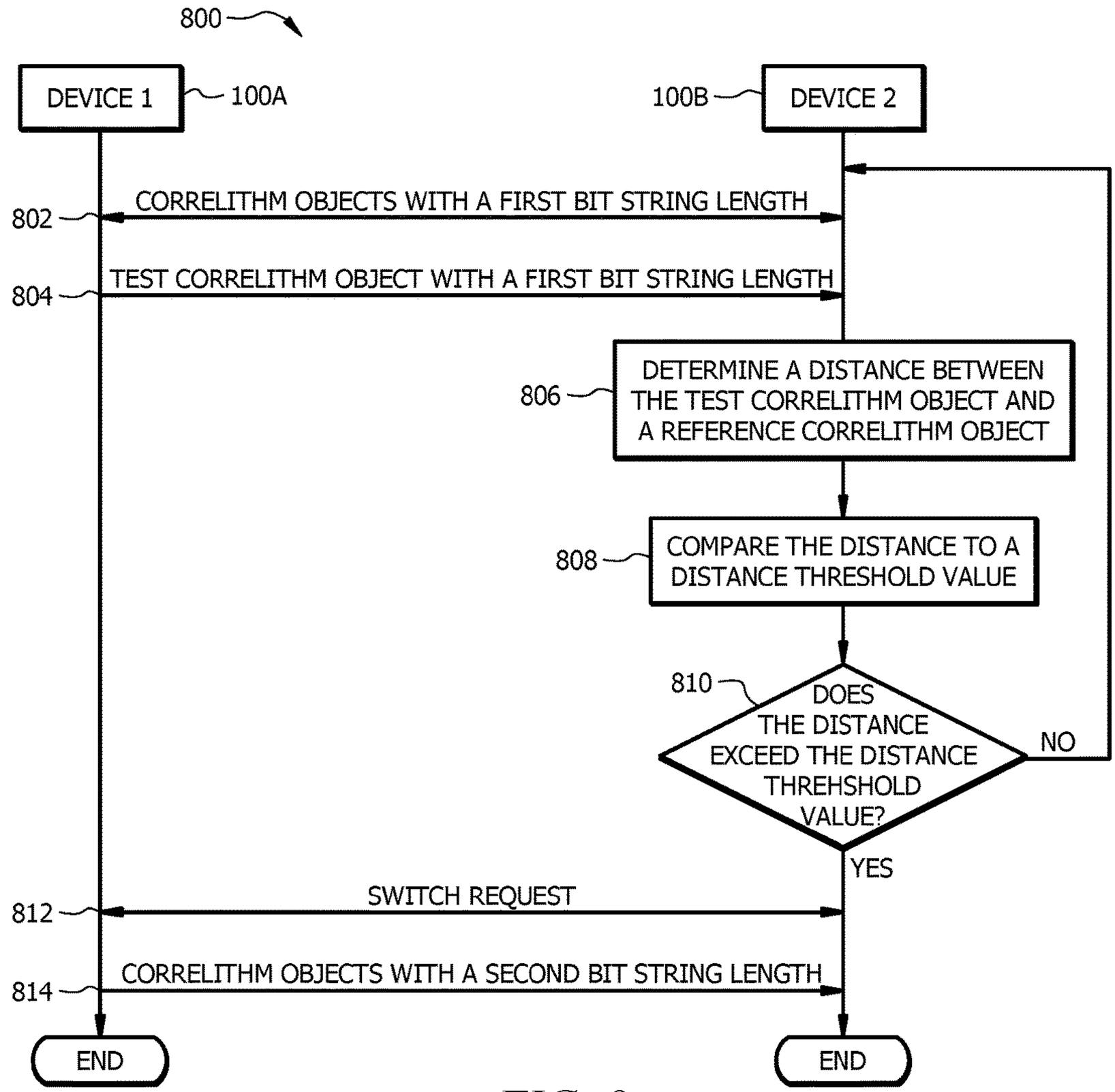
800
DEVICE 1
100A
100B
DEVICE 2
802
CORRELITHM OBJECTS WITH A FIRST BIT STRING LENGTH
804
TEST CORRELITHM OBJECT WITH A FIRST BIT STRING LENGTH
806
DETERMINE A DISTANCE BETWEEN THE TEST CORRELITHM OBJECT AND A REFERENCE CORRELITHM OBJECT
808
COMPARE THE DISTANCE TO A DISTANCE THRESHOLD VALUE
810
DOES THE DISTANCE EXCEED THE DISTANCE THREHSHOLD VALUE?
NO
YES
812
SWITCH REQUEST
814
CORRELITHM OBJECTS WITH A SECOND BIT STRING LENGTH
END
END

FIG. 8

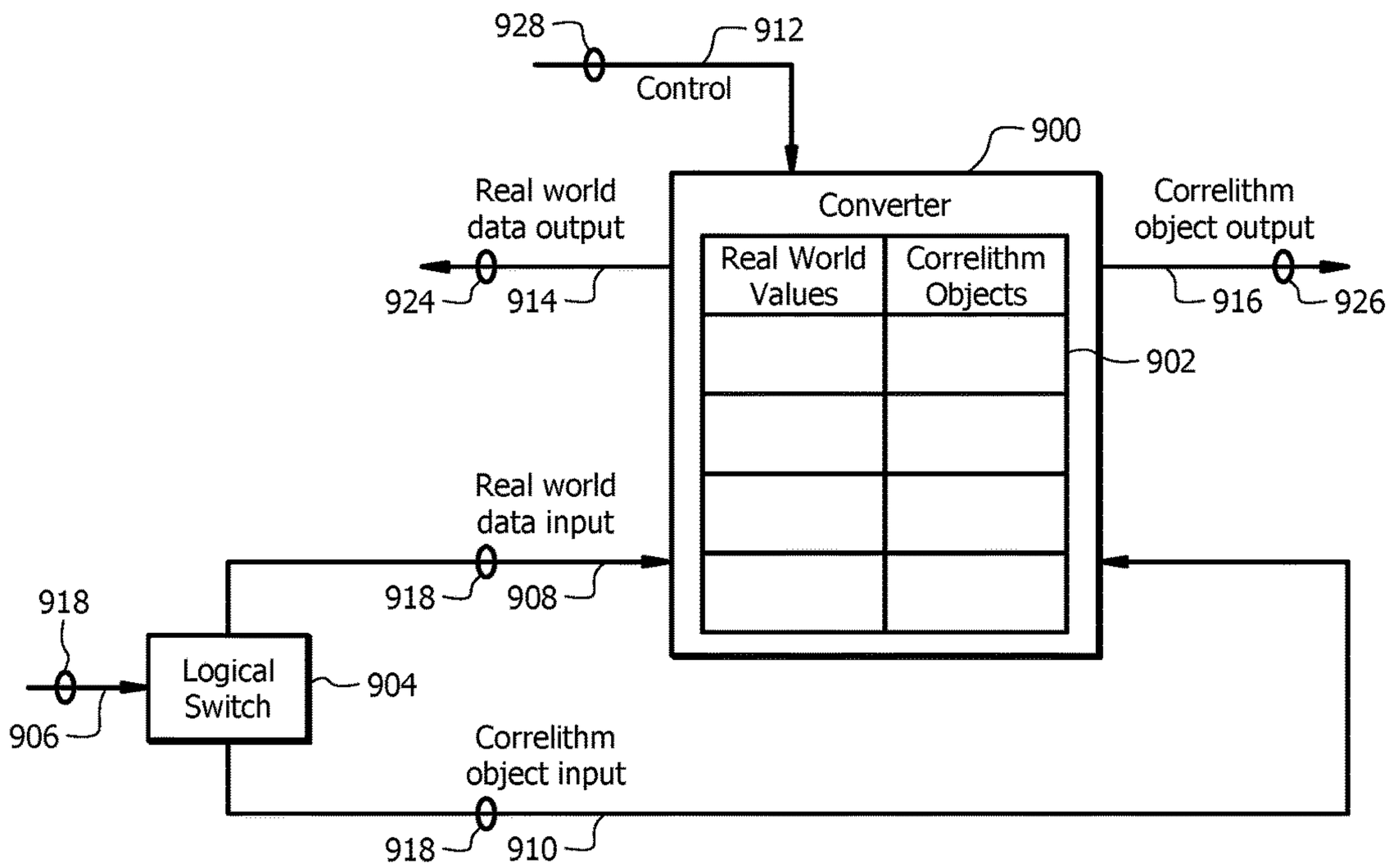
928
912
Control
900
Converter
Real world
data output
Correlithm
object output
Real World
Values
Correlithm
Objects
924
914
916
926
902
Real world
data input
918
908
918
Logical
Switch
904
906
Correlithm
object input
918
910

FIG. 9

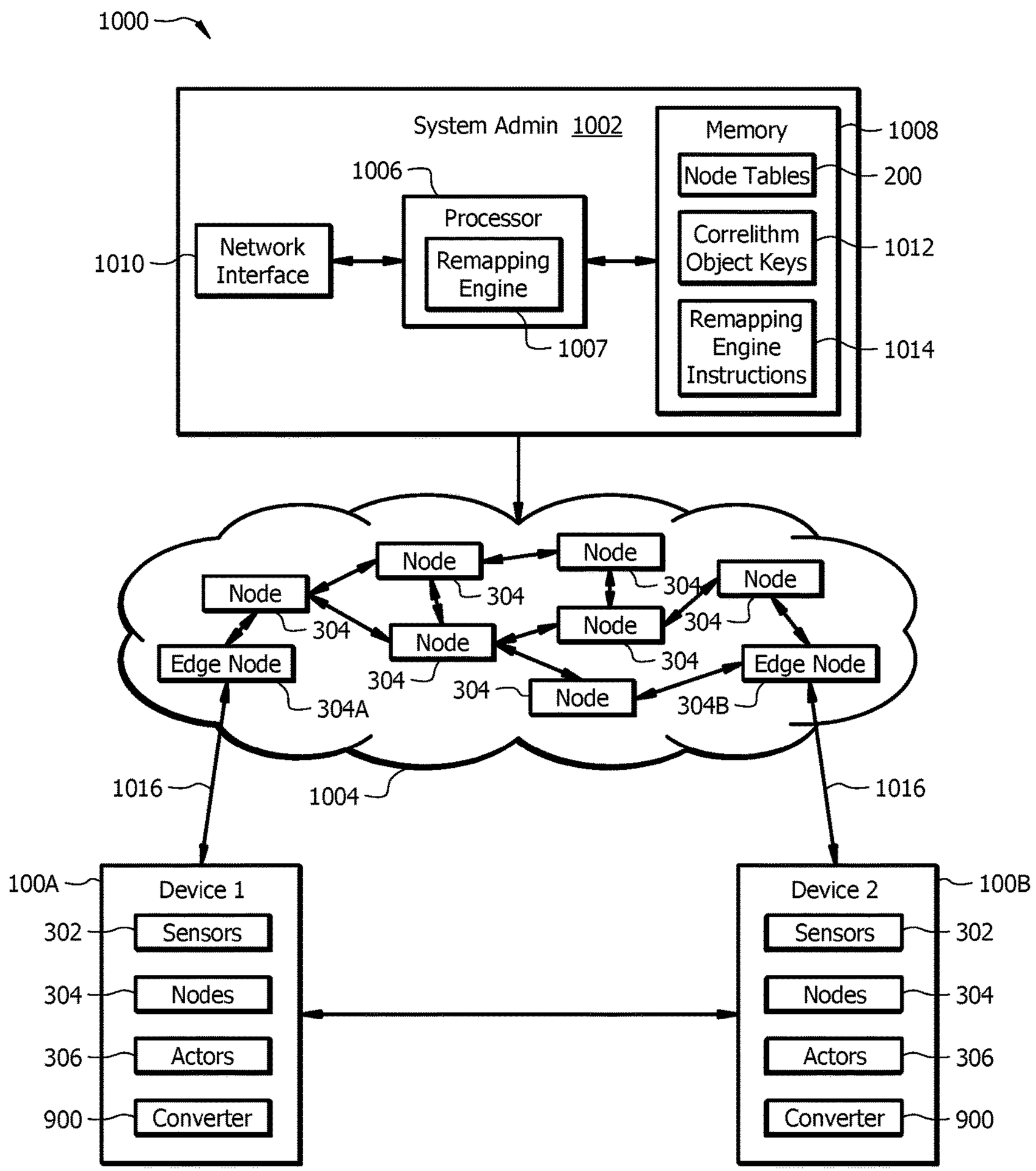
1000
System Admin 1002
Memory
1008
Node Tables
200
1006
Processor
Remapping Engine
1007
Correlithm Object Keys
1012
1010
Network Interface
Remapping Engine Instructions
1014
Node
304
Edge Node
304A
304B
1004
1016
100A
Device 1
302
Sensors
304
Nodes
306
Actors
900
Converter
Device 2
100B

FIG. 10

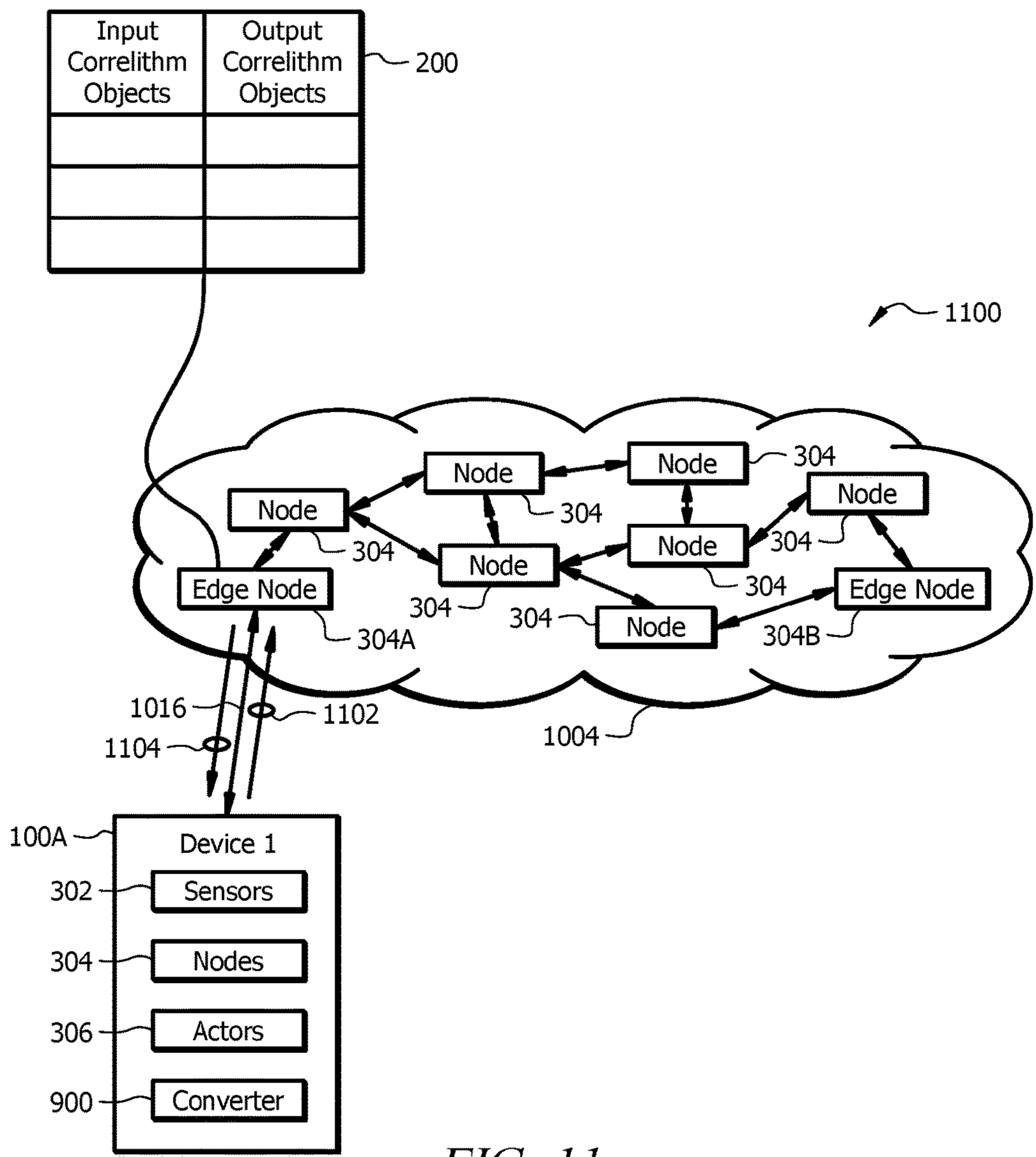
Input Correlithm Objects
Output Correlithm Objects
200
1100
Node
Node
304
Node
Node
304
Node
304
Node
304
Edge Node
304A
304
Node
304
Node
Edge Node
304B
1016
1102
1104
1004
100A
Device 1
302
Sensors
304
Nodes
306
Actors
900
Converter

FIG. 11

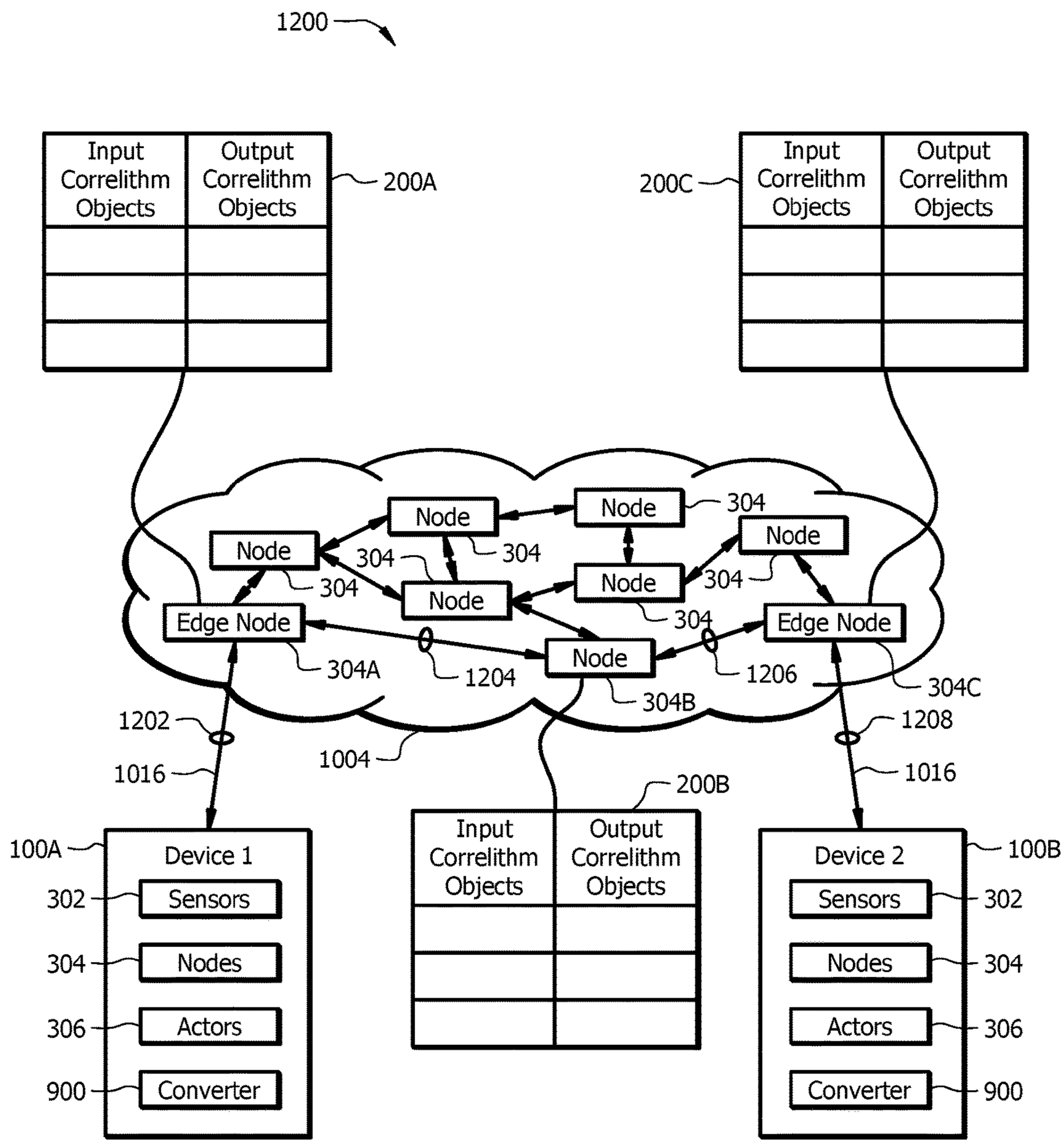
1200
Input Correlithm Objects
Output Correlithm Objects
200A
200C
Input Correlithm Objects
Output Correlithm Objects
Node
Node
304
Node
Node
304
304
Node
304
Node
304
Edge Node
Node
304
Edge Node
304A
1204
1206
304C
304B
1202
1208
1004
1016
1016
200B
Input Correlithm Objects
Output Correlithm Objects
100A
Device 1
302
Sensors
304
Nodes
306
Actors
900
Converter
Device 2
100B
Sensors
302
Nodes
304
Actors
306
Converter
900

FIG. 12

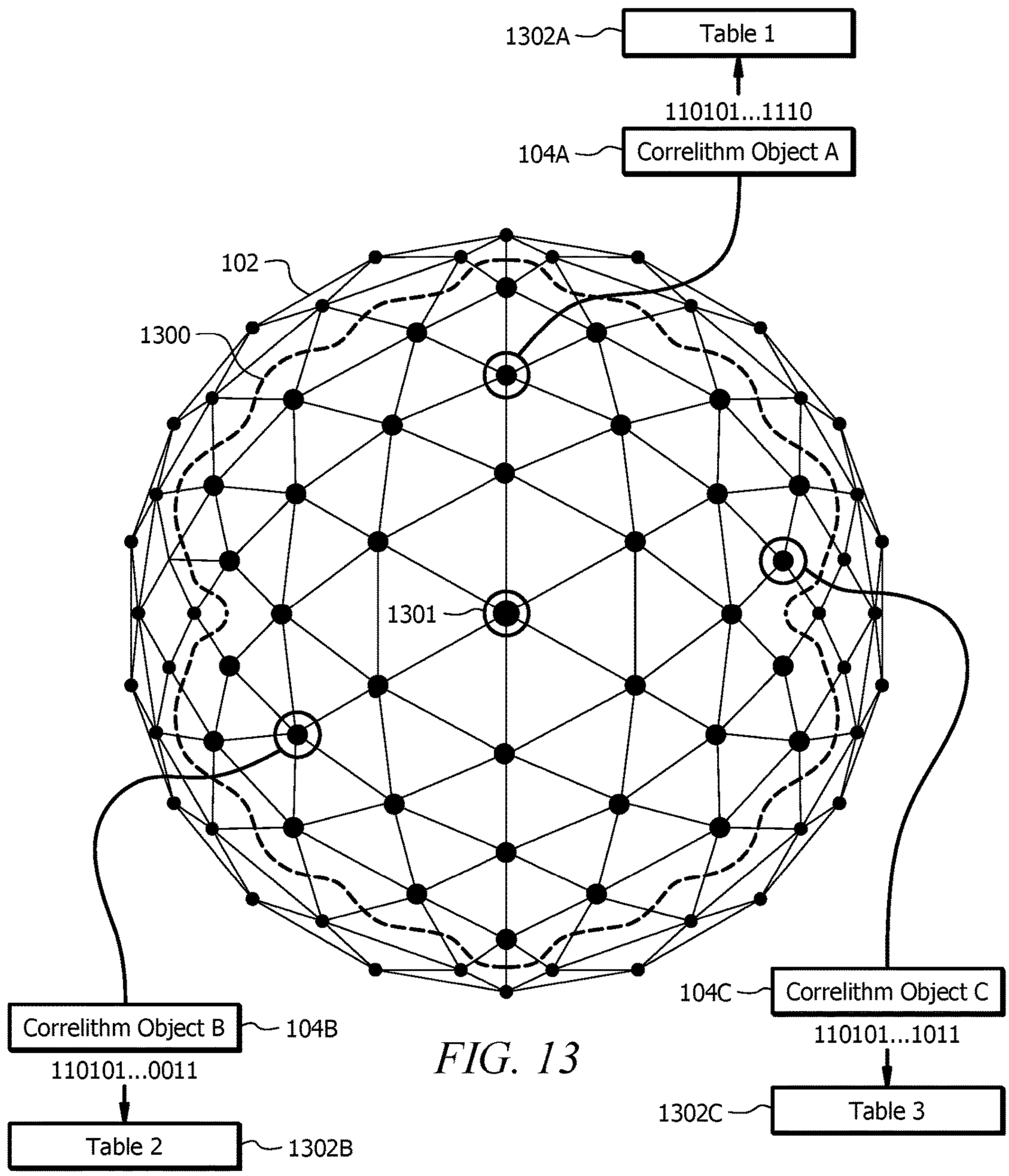
1302A
Table 1
110101...1110
104A
Correlithm Object A
102
1300
1301
Correlithm Object B
104B
110101...0011
Table 2
1302B
104C
Correlithm Object C
110101...1011
1302C
Table 3

FIG. 13

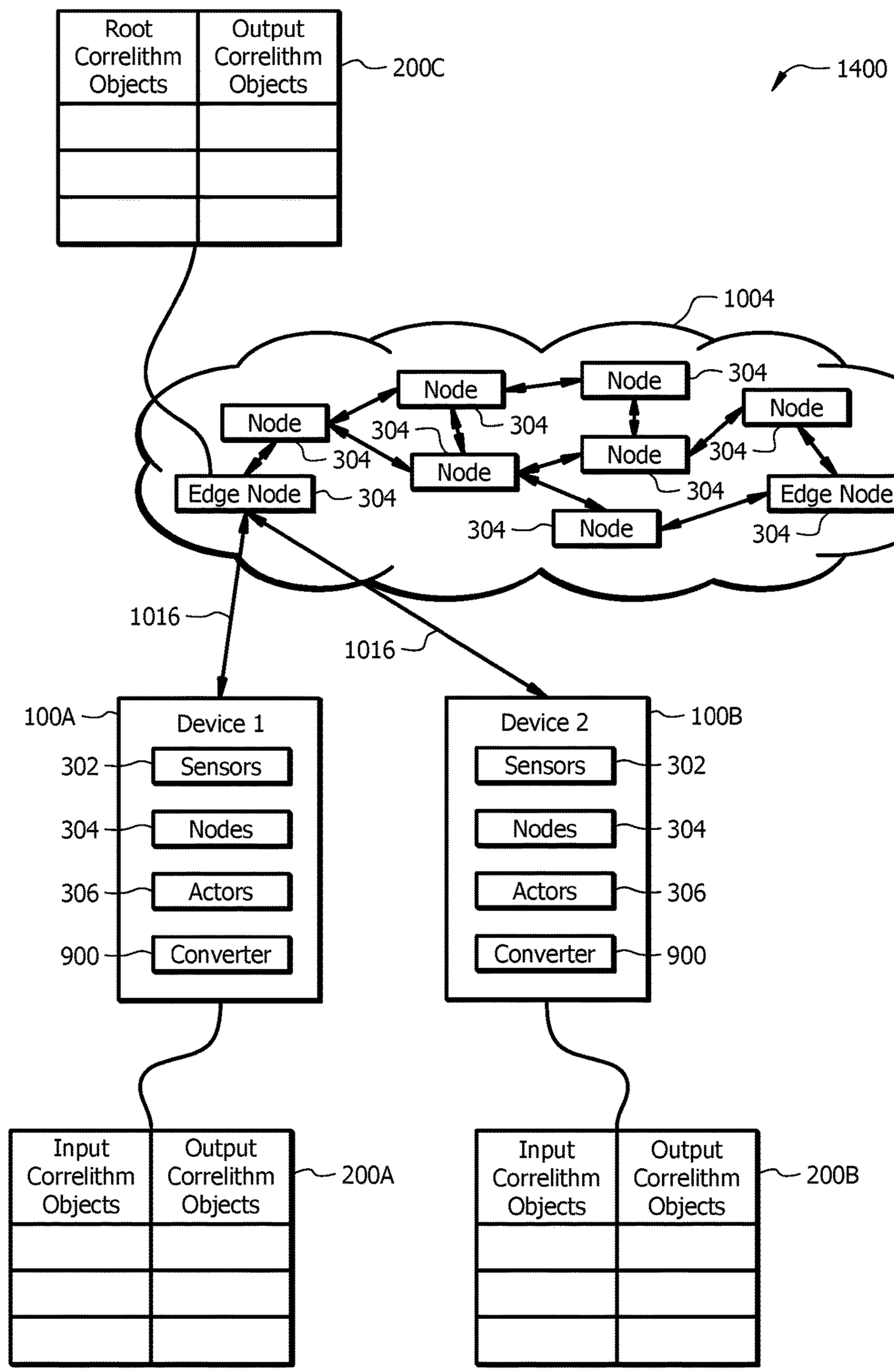
Root Correlithm Objects
Output Correlithm Objects
200C
1400
1004
Node
Node
304
Node
Node
304
304
Node
304
Node
304
Edge Node
304
304
Node
Edge Node
304
1016
1016
100A
Device 1
302
Sensors
304
Nodes
306
Actors
900
Converter
Device 2
100B
Sensors
302
Nodes
304
Actors
306
Converter
900
Input Correlithm Objects
Output Correlithm Objects
200A
Input Correlithm Objects
Output Correlithm Objects
200B

FIG. 14

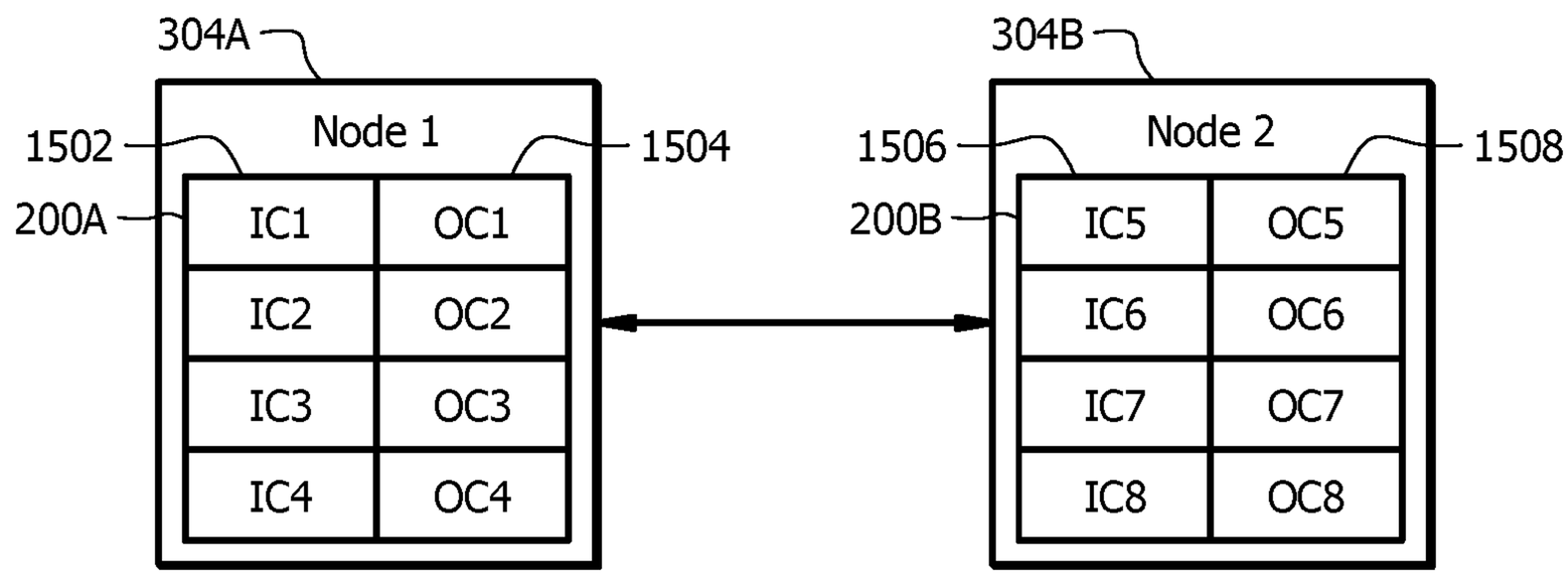

FIG. 15A

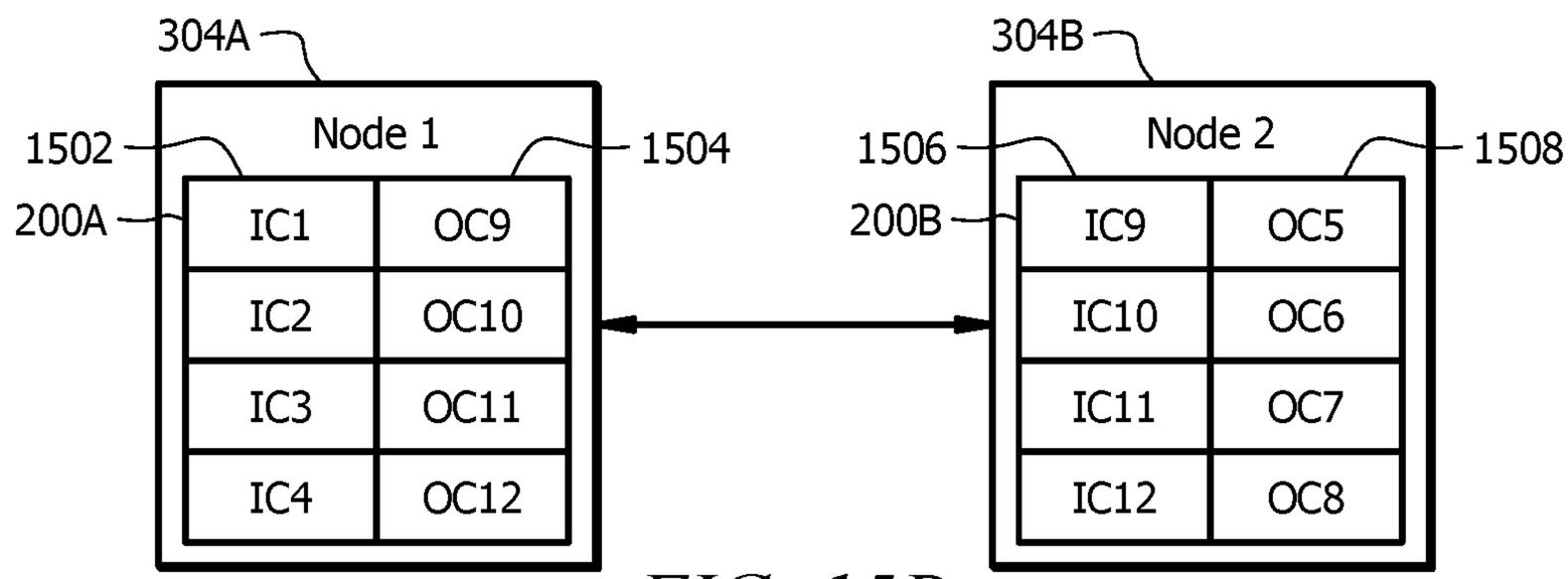

FIG. 15B

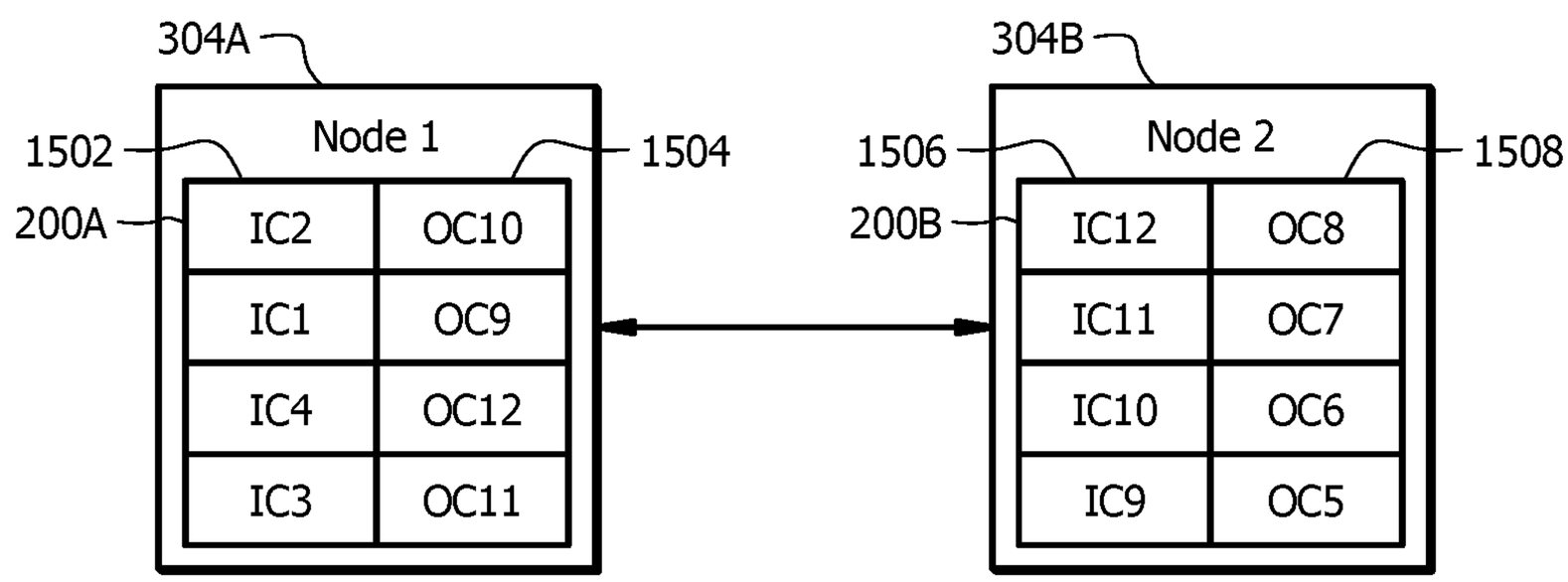

FIG. 15C

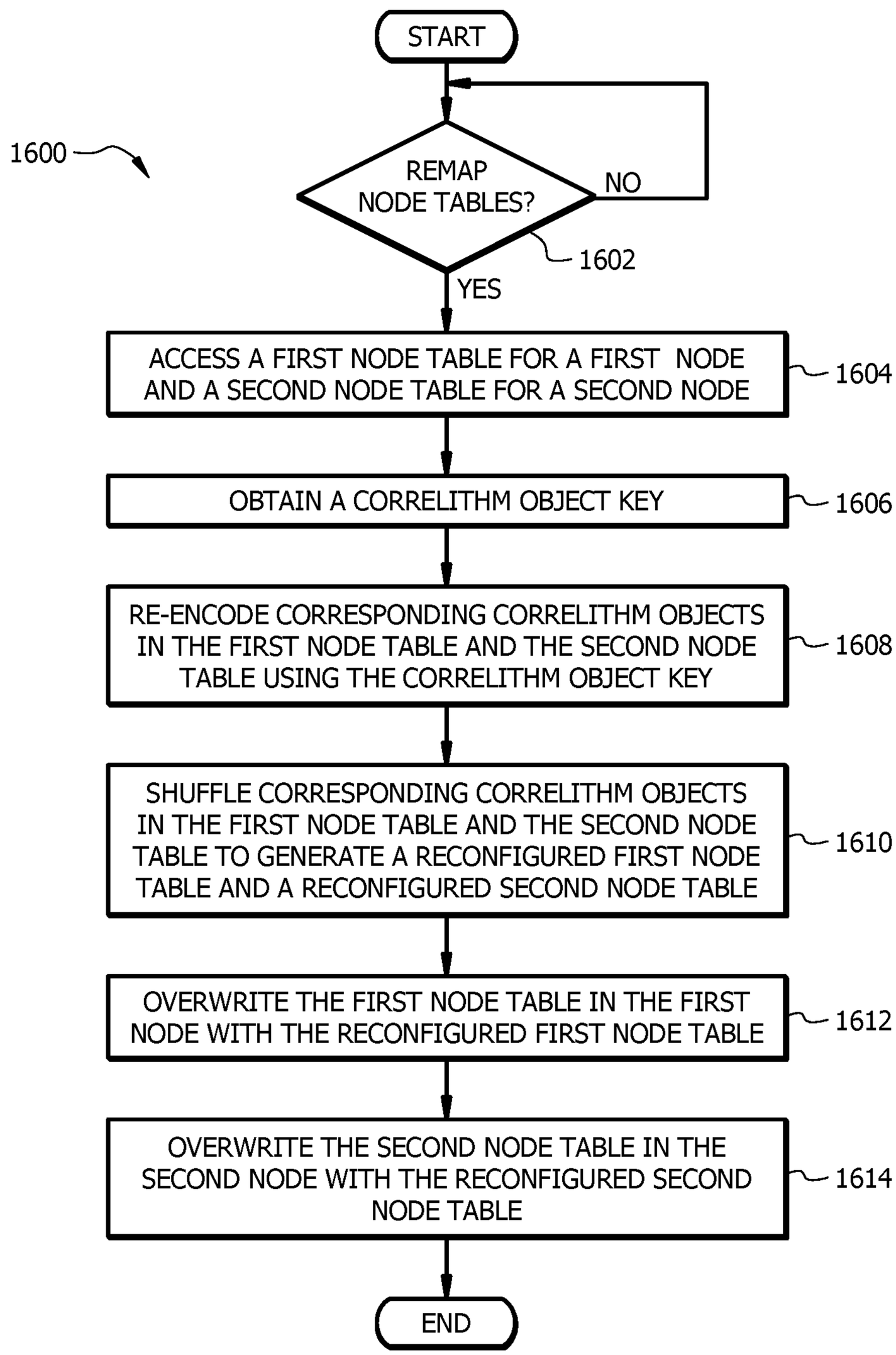
1600
START
REMAP NODE TABLES?
NO
1602
YES
ACCESS A FIRST NODE TABLE FOR A FIRST NODE AND A SECOND NODE TABLE FOR A SECOND NODE
1604
OBTAIN A CORRELITHM OBJECT KEY
1606
RE-ENCODE CORRESPONDING CORRELITHM OBJECTS IN THE FIRST NODE TABLE AND THE SECOND NODE TABLE USING THE CORRELITHM OBJECT KEY
1608
SHUFFLE CORRESPONDING CORRELITHM OBJECTS IN THE FIRST NODE TABLE AND THE SECOND NODE TABLE TO GENERATE A RECONFIGURED FIRST NODE TABLE AND A RECONFIGURED SECOND NODE TABLE
1610
OVERWRITE THE FIRST NODE TABLE IN THE FIRST NODE WITH THE RECONFIGURED FIRST NODE TABLE
1612
OVERWRITE THE SECOND NODE TABLE IN THE SECOND NODE WITH THE RECONFIGURED SECOND NODE TABLE
1614
END

FIG. 16

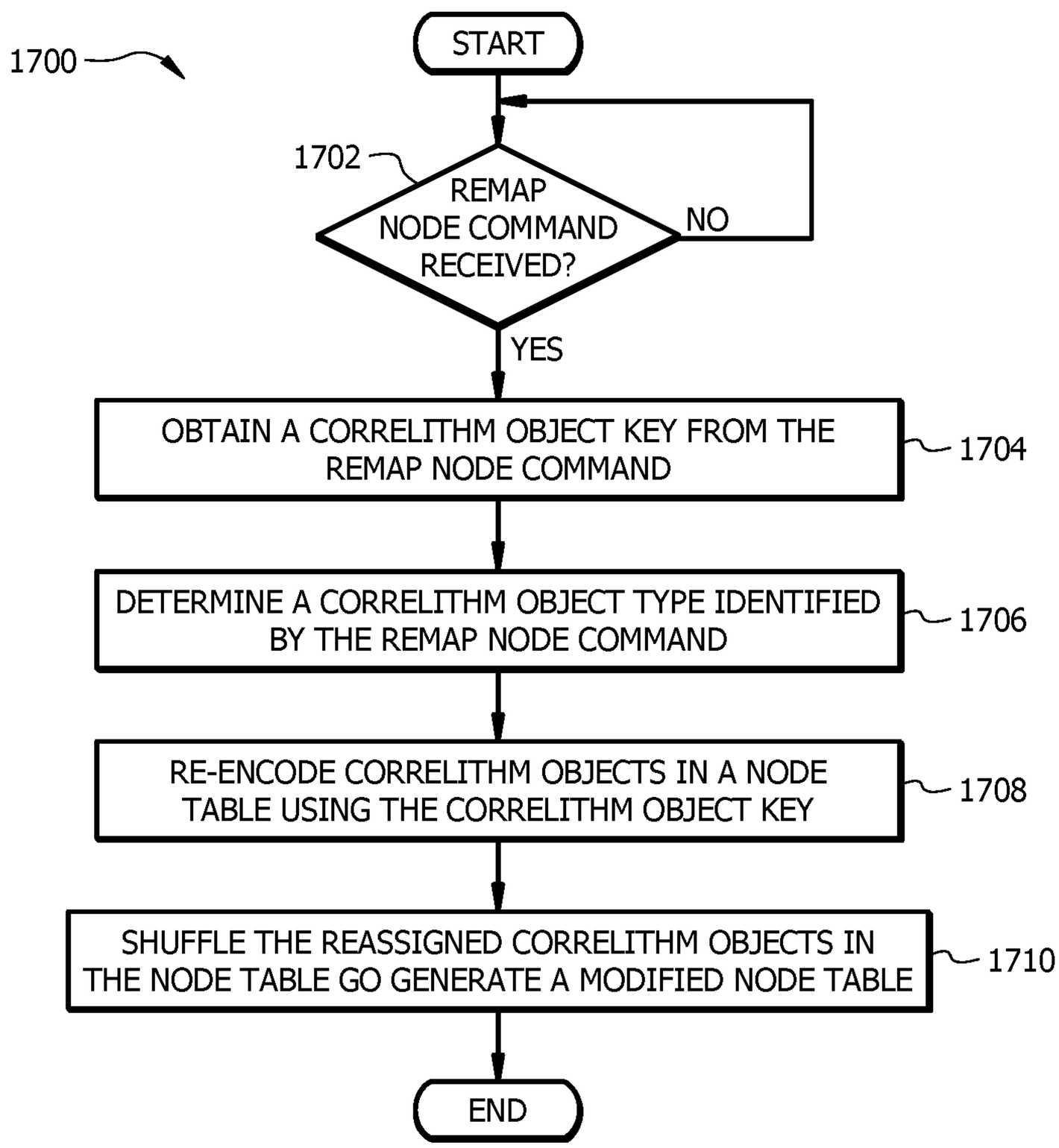
1700
START
1702
REMAP NODE COMMAND RECEIVED?
NO
YES
OBTAIN A CORRELITHM OBJECT KEY FROM THE REMAP NODE COMMAND
1704
DETERMINE A CORRELITHM OBJECT TYPE IDENTIFIED BY THE REMAP NODE COMMAND
1706
RE-ENCODE CORRELITHM OBJECTS IN A NODE TABLE USING THE CORRELITHM OBJECT KEY
1708
SHUFFLE THE REASSIGNED CORRELITHM OBJECTS IN THE NODE TABLE GO GENERATE A MODIFIED NODE TABLE
1710
END

FIG. 17

COMPUTER ARCHITECTURE FOR ESTABLISHING DYNAMIC CORRELITHM OBJECT COMMUNICATIONS IN A CORRELITHM OBJECT PROCESSING SYSTEM

TECHNICAL FIELD

[0001] The present disclosure relates generally to computer architectures for emulating a processing system, and more specifically to computer architectures for emulating a correlithm object processing system.

BACKGROUND

[0002] Conventional computers are highly attuned to using operations that require manipulating ordinal numbers, especially ordinal binary integers. The value of an ordinal number corresponds with its position in a set of sequentially ordered number values. These computers use ordinal binary integers to represent, manipulate, and store information. These computers rely on the numerical order of ordinal binary integers representing data to perform various operations such as counting, sorting, indexing, and mathematical calculations. Even when performing operations that involve other number systems (e.g. floating point), conventional computers still resort to using ordinal binary integers to perform any operations.

[0003] Ordinal based number systems only provide information about the sequence order of the numbers themselves based on their numeric values. Ordinal numbers do not provide any information about any other types of relationships for the data being represented by the numeric values such as similarity. For example, when a conventional computer uses ordinal numbers to represent data samples (e.g. images or audio signals), different data samples are represented by different numeric values. The different numeric values do not provide any information about how similar or dissimilar one data sample is from another. Unless there is an exact match in ordinal number values, conventional systems are unable to tell if a data sample matches or is similar to any other data samples. As a result, conventional computers are unable to use ordinal numbers by themselves for comparing different data samples and instead these computers rely on complex signal processing techniques. Determining whether a data sample matches or is similar to other data samples is not a trivial task and poses several technical challenges for conventional computers. These technical challenges result in complex processes that consume processing power which reduces the speed and performance of the system. The ability to compare unknown data samples to known data samples is crucial for many security applications such as face recognition, voice recognition, and fraud detection.

[0004] Thus, it is desirable to provide a solution that allows computing systems to efficiently determine how similar different data samples are to each other and to perform operations based on their similarity.

SUMMARY

[0005] Conventional computers are highly attuned to using operations that require manipulating ordinal numbers, especially ordinal binary integers. The value of an ordinal number corresponds with its position in a set of sequentially ordered number values. These computers use ordinal binary integers to represent, manipulate, and store information. These computers rely on the numerical order of ordinal binary integers representing data to perform various operations such as counting, sorting, indexing, and mathematical calculations. Even when performing operations that involve other number systems (e.g. floating point), conventional computers still resort to using ordinal binary integers to perform any operations.

[0006] Ordinal based number systems only provide information about the sequence order of the numbers themselves based on their numeric values. Ordinal numbers do not provide any information about any other types of relationships for the data being represented by the numeric values such as similarity. For example, when a conventional computer uses ordinal numbers to represent data samples (e.g. images or audio signals), different data samples are represented by different numeric values. The different numeric values do not provide any information about how similar or dissimilar one data sample is from another. Unless there is an exact match in ordinal number values, conventional systems are unable to tell if a data sample matches or is similar to any other data samples. As a result, conventional computers are unable to use ordinal numbers by themselves for comparing different data samples and instead these computers rely on complex signal processing techniques. Determining whether a data sample matches or is similar to other data samples is not a trivial task and poses several technical challenges for conventional computers. These technical challenges result in complex processes that consume processing power which reduces the speed and performance of the system. The ability to compare unknown data samples to known data samples is crucial for many applications such as security application (e.g. face recognition, voice recognition, and fraud detection).

[0007] The system described in the present application provides a technical solution that enables the system to efficiently determine how similar different objects are to each other and to perform operations based on their similarity. In contrast to conventional systems, the system uses an unconventional configuration to perform various operations using categorical numbers and geometric objects, also referred to as correlithm objects, instead of ordinal numbers. Using categorical numbers and correlithm objects on a conventional device involves changing the traditional operation of the computer to support representing and manipulating concepts as correlithm objects. A device or system may be configured to implement or emulate a special purpose computing device capable of performing operations using correlithm objects. Implementing or emulating a correlithm object processing system improves the operation of a device by enabling the device to perform non-binary comparisons (i.e. match or no match) between different data samples. This enables the device to quantify a degree of similarity between different data samples. This increases the flexibility of the device to work with data samples having different data types and/or formats, and also increases the speed and performance of the device when performing operations using data samples. These technical advantages and other improvements to the device are described in more detail throughout the disclosure.

[0008] In one embodiment, the system is configured to use binary integers as categorical numbers rather than ordinal numbers which enables the system to determine how similar a data sample is to other data samples. Categorical numbers

provide information about similar or dissimilar different data samples are from each other. For example, categorical numbers can be used in facial recognition applications to represent different images of faces and/or features of the faces. The system provides a technical advantage by allowing the system to assign correlithm objects represented by categorical numbers to different data samples based on how similar they are to other data samples. As an example, the system is able to assign correlithm objects to different images of people such that the correlithm objects can be directly used to determine how similar the people in the images are to each other. In other words, the system is able to use correlithm objects in facial recognition applications to quickly determine whether a captured image of a person matches any previously stored images without relying on conventional signal processing techniques.

[0009] Correlithm object processing systems use new types of data structures called correlithm objects that improve the way a device operates, for example, by enabling the device to perform non-binary data set comparisons and to quantify the similarity between different data samples. Correlithm objects are data structures designed to improve the way a device stores, retrieves, and compares data samples in memory. Correlithm objects also provide a data structure that is independent of the data type and format of the data samples they represent. Correlithm objects allow data samples to be directly compared regardless of their original data type and/or format.

[0010] A correlithm object processing system uses a combination of a sensor table, a node table, and/or an actor table to provide a specific set of rules that improve computer-related technologies by enabling devices to compare and to determine the degree of similarity between different data samples regardless of the data type and/or format of the data sample they represent. The ability to directly compare data samples having different data types and/or formatting is a new functionality that cannot be performed using conventional computing systems and data structures.

[0011] In addition, correlithm object processing system uses a combination of a sensor table, a node table, and/or an actor table to provide a particular manner for transforming data samples between ordinal number representations and correlithm objects in a correlithm object domain. Transforming data samples between ordinal number representations and correlithm objects involves fundamentally changing the data type of data samples between an ordinal number system and a categorical number system to achieve the previously described benefits of the correlithm object processing system.

[0012] Using correlithm objects allows the system or device to compare data samples (e.g. images) even when the input data sample does not exactly match any known or previously stored input values. For example, an input data sample that is an image may have different lighting conditions than the previously stored images. The differences in lighting conditions can make images of the same person appear different from each other. The device uses an unconventional configuration that implements a correlithm object processing system that uses the distance between the data samples which are represented as correlithm objects and other known data samples to determine whether the input data sample matches or is similar to the other known data samples. Implementing a correlithm object processing system fundamentally changes the device and the traditional data processing paradigm. Implementing the correlithm object processing system improves the operation of the device by enabling the device to perform non-binary comparisons of data samples. In other words, the device is able to determine how similar the data samples are to each other even when the data samples are not exact matches. In addition, the device is able to quantify how similar data samples are to one another. The ability to determine how similar data samples are to each other is unique and distinct from conventional computers that can only perform binary comparisons to identify exact matches.

[0013] The problems associated with comparing data sets and identifying matches based on the comparison are problems necessarily rooted in computer technologies. As described above, conventional systems are limited to a binary comparison that can only determine whether an exact match is found. Emulating a correlithm object processing system provides a technical solution that addresses problems associated with comparing data sets and identifying matches. Using correlithm objects to represent data samples fundamentally changes the operation of a device and how the device views data samples. By implementing a correlithm object processing system, the device can determine the distance between the data samples and other known data samples to determine whether the input data sample matches or is similar to the other known data samples. In addition, the device is able to determine a degree of similarity that quantifies how similar different data samples are to one another.

[0014] Using correlithm objects to transmit data also provides several technical advantages over conventional systems that are not configured to use correlithm objects. Data transmitted over a network is vulnerable to attacks by bad actors trying to intercept the data. This vulnerability to unauthorized access to data is a technical problem inherent in any system communicating data over a network. The disclosed correlithm object processing system provides a technical solution to these problems associated with unauthorized data access. In a correlithm object processing system, real world data is obfuscated when its converted into correlithm objects. This obfuscation provides a level of encryption that protects the data from unauthorized access to the data. In the event that a bad actor obtains a correlithm object, the bad actor will be unable to recover the original real world data value without an appropriate conversion table (e.g. sensor table, node table, or actor table). A correlithm object processing system can leverage this property of correlithm objects to facilitate secure data communications with or without using a secure connection. In one example, data can be transmitted as correlithm objects using an unsecure connection. In this case, the data will appear obfuscated to anyone who intercepts the data. In this example, the encryption provided by using correlithm objects allows the data to be securely transmitted even though the connection is unsecure. As another example, data can be transmitted as correlithm objects using a secure connection. In this example, the encryption provided by using correlithm objects adds an addition layer of security for the data being transmitted. Thus, using a correlithm object processing system provides increased information security compared to conventional systems.

[0015] Another technical advantage provided by using correlithm objects to communicate data is their immunity to noise. Noise communication channels and bit errors are

technical problems inherent to any digital computing system. In conventional systems, data becomes corrupt and unusable when bit errors occur. This means that when data is transmitted over a noisy channel, the receiving system may be unable to interpret the received data due to bit errors. In this example, the data may need to be retransmitted which introduces delays in the system. Resending the data may also require increasing the transmission power of the sending device to overcome the noisy channel, which consumes more resources. In contrast to these conventional systems, a correlithm object processing system provides a technical solution that is able to recover data even in the presence of bit errors. For example, when a correlithm object is received, the receiving device compares the received correlithm object to a set of stored correlithm objects and identifies the most similar correlithm object based on the number of similar bits. This means that the receiving device does not need to have an exact match in order to identify and interpret a received correlithm object. Conventional systems are unable to implement this feature. In conventional systems, each digital word has a unique value and a single bit error changes the value of the digital word. The noise immunity provided by using correlithm objects allows data to be transmitted even over noisy channels. When a bit error occurs, a receiving device is able to interpret and process the received data without having the data resent. This improves the operation of the system by increasing the throughput of the system and avoiding delays caused by resending data.

[0016] The level of noise immunity can be further increased by increasing the bit string length of the correlithm objects being transmitted. In other words, as the length of a correlithm object used by a correlithm object processing system increases, the correlithm object processing system becomes more immune to noise. This means that when a correlithm object processing system determines the quality of a communication channel is noise or poor, the correlithm object processing system can use longer correlithm objects to mitigate the effects of a noisy communication channel. Using longer correlithm objects simply increases the number of bits used to represent correlithm objects and does not change the baud rate or transmission rate being used to communicate the correlithm objects. This functionality is counter-intuitive to conventional systems. In conventional systems, when the bit error rate of channel becomes too high, the transmitting device typically reduces the transmission rate of the data being transmitted. In contrast to these systems, correlithm objects are able to continue communicating data without reducing the transmission rate, which provides further improved performance over conventional systems.

[0017] Another technical advantage of a correlithm object processing system is their ability to be adapted to implement a cloud based architecture that allows correlithm objects to be processed remotely as cloud services. For example, a device may send correlithm objects to a cloud based correlithm object processing system to offload the resources used for processing the correlithm objects. In this example, the device is able to receive processed correlithm objects from the cloud based correlithm object processing system without having to consume the device's processing resources. The cloud based correlithm object processing system allows devices to utilize the benefits of correlithm objects (e.g. noise immunity and information security) while offloading the computing resources.

[0018] Certain embodiments of the present disclosure may include some, all, or none of these advantages. These advantages and other features will be more clearly understood from the following detailed description taken in conjunction with the accompanying drawings and claims.

BRIEF DESCRIPTION OF THE DRAWINGS

[0019] For a more complete understanding of this disclosure, reference is now made to the following brief description, taken in connection with the accompanying drawings and detailed description, wherein like reference numerals represent like parts.

[0020] FIG. **1** is a schematic view of an embodiment of a special purpose computer implementing correlithm objects in an n-dimensional space;

[0021] FIG. **2** is a perspective view of an embodiment of a mapping between correlithm objects in different n-dimensional spaces;

[0022] FIG. **3** is a schematic view of an embodiment of a correlithm object processing system;

[0023] FIG. **4** is a protocol diagram of an embodiment of a correlithm object process flow;

[0024] FIG. **5** is a schematic diagram of an embodiment a computer architecture for emulating a correlithm object processing system;

[0025] FIG. **6** is a schematic diagram of an embodiment of a computer architecture for establishing encrypted data communications in a correlithm object processing system;

[0026] FIG. **7** is a schematic diagram of an embodiment of two devices configured to employ encrypted data communication using a correlithm object processing system;

[0027] FIG. **8** is a flowchart of an embodiment of a dynamic correlithm object communication method for a correlithm object processing system;

[0028] FIG. **9** is a schematic diagram of an embodiment of a correlithm object converter for a correlithm object processing system;

[0029] FIG. **10** is a schematic diagram of an embodiment of a cloud based correlithm object processing system;

[0030] FIG. **11** is a schematic diagram of an embodiment of a device utilizing a cloud based correlithm object processing system;

[0031] FIG. **12** is a schematic diagram of an embodiment of devices communicating data using a cloud based correlithm object processing system;

[0032] FIG. **13** is a schematic diagram of an embodiment of a correlithm object core used for implementing correlithm object diversity in a correlithm object processing system;

[0033] FIG. **14** is a schematic diagram of an embodiment of a correlithm object processing system implementing correlithm object diversity;

[0034] FIG. **15**A is a schematic diagram of an embodiment of a first phase of a node table remapping;

[0035] FIG. **15**B is a schematic diagram of an embodiment of a second phase of a node table remapping;

[0036] FIG. **15**C is a schematic diagram of an embodiment of a third phase of a node table remapping;

[0037] FIG. **16** is a flowchart of an embodiment of an offline node remapping method for a correlithm object processing system; and

[0038] FIG. **17** is a flowchart of an embodiment of an online node remapping method for a correlithm object processing system.

DETAILED DESCRIPTION

[0039] FIGS. **1-5** describe various embodiments of how a correlithm object processing system may be implemented or emulated in hardware, such as a special purpose computer.

[0040] FIG. **1** is a schematic view of an embodiment of a user device **100** implementing correlithm objects **104** in an n-dimensional space **102**. Examples of user devices **100** include, but are not limited to, desktop computers, mobile phones, tablet computers, laptop computers, or other special purpose computer platform. The user device **100** is configured to implement or emulate a correlithm object processing system that uses categorical numbers to represent data samples as correlithm objects **104** in a high-dimensional space **102**, for example a high-dimensional binary cube. Additional information about the correlithm object processing system is described in FIG. **3**. Additional information about configuring the user device **100** to implement or emulate a correlithm object processing system is described in FIG. **5**.

[0041] Conventional computers rely on the numerical order of ordinal binary integers representing data to perform various operations such as counting, sorting, indexing, and mathematical calculations. Even when performing operations that involve other number systems (e.g. floating point), conventional computers still resort to using ordinal binary integers to perform any operations. Ordinal based number systems only provide information about the sequence order of the numbers themselves based on their numeric values. Ordinal numbers do not provide any information about any other types of relationships for the data being represented by the numeric values, such as similarity. For example, when a conventional computer uses ordinal numbers to represent data samples (e.g. images or audio signals), different data samples are represented by different numeric values. The different numeric values do not provide any information about how similar or dissimilar one data sample is from another. In other words, conventional computers are only able to make binary comparisons of data samples which only results in determining whether the data samples match or do not match. Unless there is an exact match in ordinal number values, conventional systems are unable to tell if a data sample matches or is similar to any other data samples. As a result, conventional computers are unable to use ordinal numbers by themselves for determining similarity between different data samples, and instead these computers rely on complex signal processing techniques. Determining whether a data sample matches or is similar to other data samples is not a trivial task and poses several technical challenges for conventional computers. These technical challenges result in complex processes that consume processing power which reduces the speed and performance of the system.

[0042] In contrast to conventional systems, the user device **100** operates as a special purpose machine for implementing or emulating a correlithm object processing system. Implementing or emulating a correlithm object processing system improves the operation of the user device **100** by enabling the user device **100** to perform non-binary comparisons (i.e. match or no match) between different data samples. This enables the user device **100** to quantify a degree of similarity between different data samples. This increases the flexibility of the user device **100** to work with data samples having different data types and/or formats, and also increases the speed and performance of the user device **100** when performing operations using data samples. These improvements and other benefits to the user device **100** are described in more detail below and throughout the disclosure.

[0043] For example, the user device **100** employs the correlithm object processing system to allow the user device **100** to compare data samples even when the input data sample does not exactly match any known or previously stored input values. Implementing a correlithm object processing system fundamentally changes the user device **100** and the traditional data processing paradigm. Implementing the correlithm object processing system improves the operation of the user device **100** by enabling the user device **100** to perform non-binary comparisons of data samples. In other words, the user device **100** is able to determine how similar the data samples are to each other even when the data samples are not exact matches. In addition, the user device **100** is able to quantify how similar data samples are to one another. The ability to determine how similar data samples are to each others is unique and distinct from conventional computers that can only perform binary comparisons to identify exact matches.

[0044] The user device's **100** ability to perform non-binary comparisons of data samples also fundamentally changes traditional data searching paradigms. For example, conventional search engines rely on finding exact matches or exact partial matches of search tokens to identify related data samples. For instance, conventional text-based search engine are limited to finding related data samples that have text that exactly matches other data samples. These search engines only provide a binary result that identifies whether or not an exact match was found based on the search token. Implementing the correlithm object processing system improves the operation of the user device **100** by enabling the user device **100** to identify related data samples based on how similar the search token is to other data sample. These improvements result in increased flexibility and faster search time when using a correlithm object processing system. The ability to identify similarities between data samples expands the capabilities of a search engine to include data samples that may not have an exact match with a search token but are still related and similar in some aspects. The user device **100** is also able to quantify how similar data samples are to each other based on characteristics besides exact matches to the search token. Implementing the correlithm object processing system involves operating the user device **100** in an unconventional manner to achieve these technological improvements as well as other benefits described below for the user device **100**.

[0045] Computing devices typically rely on the ability to compare data sets (e.g. data samples) to one another for processing. For example, in security or authentication applications a computing device is configured to compare an input of an unknown person to a data set of known people (or biometric information associated with these people). The problems associated with comparing data sets and identifying matches based on the comparison are problems necessarily rooted in computer technologies. As described above, conventional systems are limited to a binary comparison that can only determine whether an exact match is found. As an example, an input data sample that is an image of a person may have different lighting conditions than previously stored images. In this example, different lighting conditions can make images of the same person appear different from each other. Conventional computers are unable to distinguish between two images of the same person with different

lighting conditions and two images of two different people without complicated signal processing. In both of these cases, conventional computers can only determine that the images are different. This is because conventional computers rely on manipulating ordinal numbers for processing.

[0046] In contrast, the user device **100** uses an unconventional configuration that uses correlithm objects to represent data samples. Using correlithm objects to represent data samples fundamentally changes the operation of the user device **100** and how the device views data samples. By implementing a correlithm object processing system, the user device **100** can determine the distance between the data samples and other known data samples to determine whether the input data sample matches or is similar to the other known data samples, as explained in detail below. Unlike the conventional computers described in the previous example, the user device **100** is able to distinguish between two images of the same person with different lighting conditions and two images of two different people by using correlithm objects **104**. Correlithm objects allow the user device **100** to determine whether there are any similarities between data samples, such as between two images that are different from each other in some respects but similar in other respects. For example, the user device **100** is able to determine that despite different lighting conditions, the same person is present in both images.

[0047] In addition, the user device **100** is able to determine a degree of similarity that quantifies how similar different data samples are to one another. Implementing a correlithm object processing system in the user device **100** improves the operation of the user device **100** when comparing data sets and identifying matches by allowing the user device **100** to perform non-binary comparisons between data sets and to quantify the similarity between different data samples. In addition, using a correlithm object processing system results in increased flexibility and faster search times when comparing data samples or data sets. Thus, implementing a correlithm object processing system in the user device **100** provides a technical solution to a problem necessarily rooted in computer technologies.

[0048] The ability to implement a correlithm object processing system provides a technical advantage by allowing the system to identify and compare data samples regardless of whether an exact match has been previous observed or stored. In other words, using the correlithm object processing system the user device **100** is able to identify similar data samples to an input data sample in the absence of an exact match. This functionality is unique and distinct from conventional computers that can only identify data samples with exact matches.

[0049] Examples of data samples include, but are not limited to, images, files, text, audio signals, biometric signals, electric signals, or any other suitable type of data. A correlithm object **104** is a point in the n-dimensional space **102**, sometimes called an "n-space." The value of represents the number of dimensions of the space. For example, an n-dimensional space **102** may be a 3-dimensional space, a 50-dimensional space, a 100-dimensional space, or any other suitable dimension space. The number of dimensions depends on its ability to support certain statistical tests, such as the distances between pairs of randomly chosen points in the space approximating a normal distribution. In some embodiments, increasing the number of dimensions in the n-dimensional space **102** modifies the statistical properties of the system to provide improved results. Increasing the number of dimensions increases the probability that a correlithm object **104** is similar to other adjacent correlithm objects **104**. In other words, increasing the number of dimensions increases the correlation between how close a pair of correlithm objects **104** are to each other and how similar the correlithm objects **104** are to each other.

[0050] Correlithm object processing systems use new types of data structures called correlithm objects **104** that improve the way a device operates, for example, by enabling the device to perform non-binary data set comparisons and to quantify the similarity between different data samples. Correlithm objects **104** are data structures designed to improve the way a device stores, retrieves, and compares data samples in memory. Unlike conventional data structures, correlithm objects **104** are data structures where objects can be expressed in a high-dimensional space such that distance **106** between points in the space represent the similarity between different objects or data samples. In other words, the distance **106** between a pair of correlithm objects **104** in the n-dimensional space **102** indicates how similar the correlithm objects **104** are from each other and the data samples they represent. Correlithm objects **104** that are close to each other are more similar to each other than correlithm objects **104** that are further apart from each other. For example, in a facial recognition application, correlithm objects **104** used to represent images of different types of glasses may be relatively close to each other compared to correlithm objects **104** used to represent images of other features such as facial hair. An exact match between two data samples occurs when their corresponding correlithm objects **104** are the same or have no distance between them. When two data samples are not exact matches but are similar, the distance between their correlithm objects **104** can be used to indicate their similarities. In other words, the distance **106** between correlithm objects **104** can be used to identify both data samples that exactly match each other as well as data samples that do not match but are similar. This feature is unique to a correlithm processing system and is unlike conventional computers that are unable to detect when data samples are different but similar in some aspects.

[0051] Correlithm objects **104** also provide a data structure that is independent of the data type and format of the data samples they represent. Correlithm objects **104** allow data samples to be directly compared regardless of their original data type and/or format. In some instances, comparing data samples as correlithm objects **104** is computationally more efficient and faster than comparing data samples in their original format. For example, comparing images using conventional data structures involves significant amounts of image processing which is time consuming and consumes processing resources. Thus, using correlithm objects **104** to represent data samples provides increased flexibility and improved performance compared to using other conventional data structures.

[0052] In one embodiment, correlithm objects **104** may be represented using categorical binary strings. The number of bits used to represent the correlithm object **104** corresponds with the number of dimensions of the n-dimensional space **102** where the correlithm object **102** is located. For example, each correlithm object **104** may be uniquely identified using a 64-bit string in a 64-dimensional space **102**. As another example, each correlithm object **104** may be uniquely identified using a 10-bit string in a 10-dimensional space **102**. In

other examples, correlithm objects **104** can be identified using any other suitable number of bits in a string that corresponds with the number of dimensions in the n-dimensional space **102**.

[0053] In this configuration, the distance **106** between two correlithm objects **104** can be determined based on the differences between the bits of the two correlithm objects **104**. In other words, the distance **106** between two correlithm objects can be determined based on how many individual bits differ between the correlithm objects **104**. The distance **106** between two correlithm objects **104** can be computed using Hamming distance or any other suitable technique.

[0054] As an example using a 10-dimensional space **102**, a first correlithm object **104** is represented by a first 10-bit string (1001011011) and a second correlithm object **104** is represented by a second 10-bit string (1000011011). The Hamming distance corresponds with the number of bits that differ between the first correlithm object **104** and the second correlithm object **104**. In other words, the Hamming distance between the first correlithm object **104** and the second correlithm object **104** can be computed as follows:

```
1001011011
1000011011
0001000000
```

In this example, the Hamming distance is equal to one because only one bit differs between the first correlithm object **104** and the second correlithm object. As another example, a third correlithm object **104** is represented by a third 10-bit string (0110100100). In this example, the Hamming distance between the first correlithm object **104** and the third correlithm object **104** can be computed as follows:

```
1001011011
0110100100
1111111111
```

The Hamming distance is equal to ten because all of the bits are different between the first correlithm object **104** and the third correlithm object **104**. In the previous example, a Hamming distance equal to one indicates that the first correlithm object **104** and the second correlithm object **104** are close to each other in the n-dimensional space **102**, which means they are similar to each other. In the second example, a Hamming distance equal to ten indicates that the first correlithm object **104** and the third correlithm object **104** are further from each other in the n-dimensional space **102** and are less similar to each other than the first correlithm object **104** and the second correlithm object **104**. In other words, the similarity between a pair of correlithm objects can be readily determined based on the distance between the pair correlithm objects.

[0055] As another example, the distance between a pair of correlithm objects **104** can be determined by performing an XOR operation between the pair of correlithm objects **104** and counting the number of logical high values in the binary string. The number of logical high values indicates the number of bits that are different between the pair of correlithm objects **104** which also corresponds with the Hamming distance between the pair of correlithm objects **104**.

[0056] In another embodiment, the distance **106** between two correlithm objects **104** can be determined using a Minkowski distance such as the Euclidean or "straight-line" distance between the correlithm objects **104**. For example, the distance **106** between a pair of correlithm objects **104** may be determined by calculating the square root of the sum of squares of the coordinate difference in each dimension.

[0057] The user device **100** is configured to implement or emulate a correlithm object processing system that comprises one or more sensors **302**, nodes **304**, and/or actors **306** in order to convert data samples between real world values or representations and to correlithm objects **104** in a correlithm object domain. Sensors **302** are generally configured to convert real world data samples to the correlithm object domain. Nodes **304** are generally configured to process or perform various operations on correlithm objects in the correlithm object domain. Actors **306** are generally configured to convert correlithm objects **104** into real world values or representations. Additional information about sensors **302**, nodes **304**, and actors **306** is described in FIG. **3**.

[0058] Performing operations using correlithm objects **104** in a correlithm object domain allows the user device **100** to identify relationships between data samples that cannot be identified using conventional data processing systems. For example, in the correlithm object domain, the user device **100** is able to identify not only data samples that exactly match an input data sample, but also other data samples that have similar characteristics or features as the input data samples. Conventional computers are unable to identify these types of relationships readily. Using correlithm objects **104** improves the operation of the user device **100** by enabling the user device **100** to efficiently process data samples and identify relationships between data samples without relying on signal processing techniques that require a significant amount of processing resources. These benefits allow the user device **100** to operate more efficiently than conventional computers by reducing the amount of processing power and resources that are needed to perform various operations.

[0059] FIG. **2** is a schematic view of an embodiment of a mapping between correlithm objects **104** in different n-dimensional spaces **102**. When implementing a correlithm object processing system, the user device **100** performs operations within the correlithm object domain using correlithm objects **104** in different n-dimensional spaces **102**. As an example, the user device **100** may convert different types of data samples having real world values into correlithm objects **104** in different n-dimensional spaces **102**. For instance, the user device **100** may convert data samples of text into a first set of correlithm objects **104** in a first n-dimensional space **102** and data samples of audio samples as a second set of correlithm objects **104** in a second n-dimensional space **102**. Conventional systems require data samples to be of the same type and/or format in order to perform any kind of operation on the data samples. In some instances, some types of data samples cannot be compared because there is no common format available. For example, conventional computers are unable to compare data samples of images and data samples of audio samples because there is no common format. In contrast, the user device **100** implementing a correlithm object processing system is able to compare and perform operations using correlithm objects **104** in the correlithm object domain regardless of the type or format of the original data samples.

[0060] In FIG. **2**, a first set of correlithm objects **104**A are defined within a first n-dimensional space **102**A and a second set of correlithm objects **104**B are defined within a second n-dimensional space **102**B. The n-dimensional spaces may have the same number of dimensions or a different number of dimensions. For example, the first n-dimensional space **102**A and the second n-dimensional space **102**B may both be three dimensional spaces. As another example, the first n-dimensional space **102**A may be a three-dimensional space and the second n-dimensional space **102**B may be a nine dimensional space. Correlithm objects **104** in the first n-dimensional space **102**A and second n-dimensional space **102**B are mapped to each other. In other words, a correlithm object **104**A in the first n-dimensional space **102**A may reference or be linked with a particular correlithm object **104**B in the second n-dimensional space **102**B. The correlithm objects **104** may also be linked with and referenced with other correlithm objects **104** in other n-dimensional spaces **102**.

[0061] In one embodiment, a data structure such as table **200** may be used to map or link correlithm objects **104** in different n-dimensional spaces **102**. In some instances, table **200** is referred to as a node table. Table **200** is generally configured to identify a first plurality of correlithm objects **104** in a first n-dimensional space **102** and a second plurality of correlithm objects **104** in a second n-dimensional space **102**. Each correlithm object **104** in the first n-dimensional space **102** is linked with a correlithm object **104** is the second n-dimensional space **102**. For example, table **200** may be configured with a first column **202** that lists correlithm objects **104**A as source correlithm objects and a second column **204** that lists corresponding correlithm objects **104**B as target correlithm objects. In other examples, table **200** may be configured in any other suitable manner or may be implemented using any other suitable data structure. In some embodiments, one or more mapping functions may be used to convert between a correlithm object **104** in a first n-dimensional space and a correlithm object **104** is a second n-dimensional space.

[0062] FIG. **3** is a schematic view of an embodiment of a correlithm object processing system **300** that is implemented by a user device **100** to perform operations using correlithm objects **104**. The system **300** generally comprises a sensor **302**, a node **304**, and an actor **306**. The system **300** may be configured with any suitable number and/or configuration of sensors **302**, nodes **304**, and actors **306**. An example of the system **300** in operation is described in FIG. **4**. In one embodiment, a sensor **302**, a node **304**, and an actor **306** may all be implemented on the same device (e.g. user device **100**). In other embodiments, a sensor **302**, a node **304**, and an actor **306** may each be implemented on different devices in signal communication with each other for example over a network. In other embodiments, different devices may be configured to implement any combination of sensors **302**, nodes **304**, and actors **306**.

[0063] Sensors **302** serve as interfaces that allow a user device **100** to convert real world data samples into correlithm objects **104** that can be used in the correlithm object domain. Sensors **302** enable the user device **100** to compare and perform operations using correlithm objects **104** regardless of the data type or format of the original data sample. Sensors **302** are configured to receive a real world value **320** representing a data sample as an input, to determine a correlithm object **104** based on the real world value **320**, and to output the correlithm object **104**. For example, the sensor **302** may receive an image **301** of a person and output a correlithm object **322** to the node **304** or actor **306**. In one embodiment, sensors **302** are configured to use sensor tables **308** that link a plurality of real world values with a plurality of correlithm objects **104** in an n-dimensional space **102**. Real world values are any type of signal, value, or representation of data samples. Examples of real world values include, but are not limited to, images, pixel values, text, audio signals, electrical signals, and biometric signals. As an example, a sensor table **308** may be configured with a first column **312** that lists real world value entries corresponding with different images and a second column **314** that lists corresponding correlithm objects **104** as input correlithm objects. In other examples, sensor tables **308** may be configured in any other suitable manner or may be implemented using any other suitable data structure. In some embodiments, one or more mapping functions may be used to translate between a real world value **320** and a correlithm object **104** in an n-dimensional space. Additional information for implementing or emulating a sensor **302** in hardware is described in FIG. **5**.

[0064] Nodes **304** are configured to receive a correlithm object **104** (e.g. an input correlithm object **104**), to determine another correlithm object **104** based on the received correlithm object **104**, and to output the identified correlithm object **104** (e.g. an output correlithm object **104**). In one embodiment, nodes **304** are configured to use node tables **200** that link a plurality of correlithm objects **104** from a first n-dimensional space **102** with a plurality of correlithm objects **104** in a second n-dimensional space **102**. A node table **200** may be configured similar to the table **200** described in FIG. **2**. Additional information for implementing or emulating a node **304** in hardware is described in FIG. **5**.

[0065] Actors **306** serve as interfaces that allow a user device **100** to convert correlithm objects **104** in the correlithm object domain back to real world values or data samples. Actors **306** enable the user device **100** to convert from correlithm objects **104** into any suitable type of real world value. Actors **306** are configured to receive a correlithm object **104** (e.g. an output correlithm object **104**), to determine a real world output value **326** based on the received correlithm object **104**, and to output the real world output value **326**. The real world output value **326** may be a different data type or representation of the original data sample. As an example, the real world input value **320** may be an image **301** of a person and the resulting real world output value **326** may be text **327** and/or an audio signal identifying the person. In one embodiment, actors **306** are configured to use actor tables **310** that link a plurality of correlithm objects **104** in an n-dimensional space **102** with a plurality of real world values. As an example, an actor table **310** may be configured with a first column **316** that lists correlithm objects **104** as output correlithm objects and a second column **318** that lists real world values. In other examples, actor tables **310** may be configured in any other suitable manner or may be implemented using any other suitable data structure. In some embodiments, one or more mapping functions may be employed to translate between a correlithm object **104** in an n-dimensional space and a real world output value **326**. Additional information for implementing or emulating an actor **306** in hardware is described in FIG. **5**.

[0066] A correlithm object processing system **300** uses a combination of a sensor table **308**, a node table **200**, and/or an actor table **310** to provide a specific set of rules that improve computer-related technologies by enabling devices to compare and to determine the degree of similarity between different data samples regardless of the data type and/or format of the data sample they represent. The ability to directly compare data samples having different data types and/or formatting is a new functionality that cannot be performed using conventional computing systems and data structures. Conventional systems require data samples to be of the same type and/or format in order to perform any kind of operation on the data samples. In some instances, some types of data samples are incompatible with each other and cannot be compared because there is no common format available. For example, conventional computers are unable to compare data samples of images with data samples of audio samples because there is no common format available. In contrast, a device implementing a correlithm object processing system uses a combination of a sensor table **308**, a node table **200**, and/or an actor table **310** to compare and perform operations using correlithm objects **104** in the correlithm object domain regardless of the type or format of the original data samples. The correlithm object processing system **300** uses a combination of a sensor table **308**, a node table **200**, and/or an actor table **310** as a specific set of rules that provides a particular solution to dealing with different types of data samples and allows devices to perform operations on different types of data samples using correlithm objects **104** in the correlithm object domain. In some instances, comparing data samples as correlithm objects **104** is computationally more efficient and faster than comparing data samples in their original format. Thus, using correlithm objects **104** to represent data samples provides increased flexibility and improved performance compared to using other conventional data structures. The specific set of rules used by the correlithm object processing system **300** go beyond simply using routine and conventional activities in order to achieve this new functionality and performance improvements.

[0067] In addition, correlithm object processing system **300** uses a combination of a sensor table **308**, a node table **200**, and/or an actor table **310** to provide a particular manner for transforming data samples between ordinal number representations and correlithm objects **104** in a correlithm object domain. For example, the correlithm object processing system **300** may be configured to transform a representation of a data sample into a correlithm object **104**, to perform various operations using the correlithm object **104** in the correlithm object domain, and to transform a resulting correlithm object **104** into another representation of a data sample. Transforming data samples between ordinal number representations and correlithm objects **104** involves fundamentally changing the data type of data samples between an ordinal number system and a categorical number system to achieve the previously described benefits of the correlithm object processing system **300**.

[0068] FIG. **4** is a protocol diagram of an embodiment of a correlithm object process flow **400**. A user device **100** implements process flow **400** to emulate a correlithm object processing system **300** to perform operations using correlithm object **104** such as facial recognition. The user device **100** implements process flow **400** to compare different data samples (e.g. images, voice signals, or text) to each other and to identify other objects based on the comparison. Process flow **400** provides instructions that allows user devices **100** to achieve the improved technical benefits of a correlithm object processing system **300**.

[0069] Conventional systems are configured to use ordinal numbers for identifying different data samples. Ordinal based number systems only provide information about the sequence order of numbers based on their numeric values, and do not provide any information about any other types of relationships for the data samples being represented by the numeric values such as similarity. In contrast, a user device **100** can implement or emulate the correlithm object processing system **300** which provides an unconventional solution that uses categorical numbers and correlithm objects **104** to represent data samples. For example, the system **300** may be configured to use binary integers as categorical numbers to generate correlithm objects **104** which enables the user device **100** to perform operations directly based on similarities between different data samples. Categorical numbers provide information about how similar different data sample are from each other. Correlithm objects **104** generated using categorical numbers can be used directly by the system **300** for determining how similar different data samples are from each other without relying on exact matches, having a common data type or format, or conventional signal processing techniques.

[0070] A non-limiting example is provided to illustrate how the user device **100** implements process flow **400** to emulate a correlithm object processing system **300** to perform facial recognition on an image to determine the identity of the person in the image. In other examples, the user device **100** may implement process flow **400** to emulate a correlithm object processing system **300** to perform voice recognition, text recognition, or any other operation that compares different objects.

[0071] At step **402**, a sensor **302** receives an input signal representing a data sample. For example, the sensor **302** receives an image of person's face as a real world input value **320**. The input signal may be in any suitable data type or format. In one embodiment, the sensor **302** may obtain the input signal in real-time from a peripheral device (e.g. a camera). In another embodiment, the sensor **302** may obtain the input signal from a memory or database.

[0072] At step **404**, the sensor **302** identifies a real world value entry in a sensor table **308** based on the input signal. In one embodiment, the system **300** identifies a real world value entry in the sensor table **308** that matches the input signal. For example, the real world value entries may comprise previously stored images. The sensor **302** may compare the received image to the previously stored images to identify a real world value entry that matches the received image. In one embodiment, when the sensor **302** does not find an exact match, the sensor **302** finds a real world value entry that closest matches the received image.

[0073] At step **406**, the sensor **302** identifies and fetches an input correlithm object **104** in the sensor table **308** linked with the real world value entry. At step **408**, the sensor **302** sends the identified input correlithm object **104** to the node **304**. In one embodiment, the identified input correlithm object **104** is represented in the sensor table **308** using a categorical binary integer string. The sensor **302** sends the binary string representing to the identified input correlithm object **104** to the node **304**.

[0074] At step **410**, the node **304** receives the input correlithm object **104** and determines distances **106** between the input correlithm object **104** and each source correlithm object **104** in a node table **200**. In one embodiment, the distance **106** between two correlithm objects **104** can be determined based on the differences between the bits of the two correlithm objects **104**. In other words, the distance **106** between two correlithm objects can be determined based on how many individual bits differ between a pair of correlithm objects **104**. The distance **106** between two correlithm objects **104** can be computed using Hamming distance or any other suitable technique. In another embodiment, the distance **106** between two correlithm objects **104** can be determined using a Minkowski distance such as the Euclidean or "straight-line" distance between the correlithm objects **104**. For example, the distance **106** between a pair of correlithm objects **104** may be determined by calculating the square root of the sum of squares of the coordinate difference in each dimension.

[0075] At step **412**, the node **304** identifies a source correlithm object **104** from the node table **200** with the shortest distance **106**. A source correlithm object **104** with the shortest distance from the input correlithm object **104** is a correlithm object **104** either matches or most closely matches the received input correlithm object **104**.

[0076] At step **414**, the node **304** identifies and fetches a target correlithm object **104** in the node table **200** linked with the source correlithm object **104**. At step **416**, the node **304** outputs the identified target correlithm object **104** to the actor **306**. In this example, the identified target correlithm object **104** is represented in the node table **200** using a categorical binary integer string. The node **304** sends the binary string representing to the identified target correlithm object **104** to the actor **306**.

[0077] At step **418**, the actor **306** receives the target correlithm object **104** and determines distances between the target correlithm object **104** and each output correlithm object **104** in an actor table **310**. The actor **306** may compute the distances between the target correlithm object **104** and each output correlithm object **104** in an actor table **310** using a process similar to the process described in step **410**.

[0078] At step **420**, the actor **306** identifies an output correlithm object **104** from the actor table **310** with the shortest distance **106**. An output correlithm object **104** with the shortest distance from the target correlithm object **104** is a correlithm object **104** either matches or most closely matches the received target correlithm object **104**.

[0079] At step **422**, the actor **306** identifies and fetches a real world output value in the actor table **310** linked with the output correlithm object **104**. The real world output value may be any suitable type of data sample that corresponds with the original input signal. For example, the real world output value may be text that indicates the name of the person in the image or some other identifier associated with the person in the image. As another example, the real world output value may be an audio signal or sample of the name of the person in the image. In other examples, the real world output value may be any other suitable real world signal or value that corresponds with the original input signal. The real world output value may be in any suitable data type or format.

[0080] At step **424**, the actor **306** outputs the identified real world output value. In one embodiment, the actor **306** may output the real world output value in real-time to a peripheral device (e.g. a display or a speaker). In one embodiment, the actor **306** may output the real world output value to a memory or database. In one embodiment, the real world output value is sent to another sensor **302**. For example, the real world output value may be sent to another sensor **302** as an input for another process.

[0081] FIG. **5** is a schematic diagram of an embodiment of a computer architecture **500** for emulating a correlithm object processing system **300** in a user device **100**. The computer architecture **500** comprises a processor **502**, a memory **504**, a network interface **506**, and an input-output (I/O) interface **508**. The computer architecture **500** may be configured as shown or in any other suitable configuration.

[0082] The processor **502** comprises one or more processors operably coupled to the memory **504**. The processor **502** is any electronic circuitry including, but not limited to, state machines, one or more central processing unit (CPU) chips, logic units, cores (e.g. a multi-core processor), field-programmable gate array (FPGAs), application specific integrated circuits (ASICs), graphics processing units (GPUs), or digital signal processors (DSPs). The processor **502** may be a programmable logic device, a microcontroller, a microprocessor, or any suitable combination of the preceding. The processor **502** is communicatively coupled to and in signal communication with the memory **204**. The one or more processors are configured to process data and may be implemented in hardware or software. For example, the processor **502** may be 8-bit, 16-bit, 32-bit, 64-bit or of any other suitable architecture. The processor **502** may include an arithmetic logic unit (ALU) for performing arithmetic and logic operations, processor registers that supply operands to the ALU and store the results of ALU operations, and a control unit that fetches instructions from memory and executes them by directing the coordinated operations of the ALU, registers and other components.

[0083] The one or more processors are configured to implement various instructions. For example, the one or more processors are configured to execute instructions to implement sensor engines **510**, node engines **512**, converter engines **513**, and actor engines **514**. In an embodiment, the sensor engines **510**, the node engines **512**, and the actor engines **514** are implemented using logic units, FPGAs, ASICs, DSPs, or any other suitable hardware. The sensor engines **510**, the node engines **512**, converter engines **513**, and the actor engines **514** are each configured to implement a specific set of rules or process that provides an improved technological result.

[0084] In one embodiment, the sensor engine **510** is configured to receive a real world value **320** as an input, to determine a correlithm object **104** based on the real world value **320**, and to output the correlithm object **104**. Examples of the sensor engine **510** in operation are described in FIGS. **4**, **6**, and **7**.

[0085] In one embodiment, the node engine **512** is configured to receive a correlithm object **104** (e.g. an input correlithm object **104**), to determine another correlithm object **104** based on the received correlithm object **104**, and to output the identified correlithm object **104** (e.g. an output correlithm object **104**). The node engine **512** is also configured to compute distances between pairs of correlithm objects **104**. Examples of the node engine **512** in operation are described in FIGS. **4** and **10-17**.

[0086] In one embodiment, the actor engine **514** is configured to receive a correlithm object **104** (e.g. an output

correlithm object **104**), to determine a real world output value **326** based on the received correlithm object **104**, and to output the real world output value **326**. Examples of the actor engine **514** in operation are described in FIGS. **4**, **6**, and **7**.

[0087] In one embodiment, the converter engine **513** is configured to combine the functionality of the sensor engine **510** and the actor engine **514**. An example of the converter engine **513** in operation is described in FIG. **9**.

[0088] The memory **504** comprises one or more non-transitory disks, tape drives, or solid-state drives, and may be used as an over-flow data storage device, to store programs when such programs are selected for execution, and to store instructions and data that are read during program execution. The memory **504** may be volatile or non-volatile and may comprise read-only memory (ROM), random-access memory (RAM), ternary content-addressable memory (TCAM), dynamic random-access memory (DRAM), and static random-access memory (SRAM). The memory **504** is operable to store sensor instructions **516**, node instructions **518**, actor instructions **520**, converter instructions **522**, converter tables **524**, sensor tables **308**, node tables **200**, actor tables **310**, and/or any other data or instructions. The sensor instructions **516**, the node instructions **518**, converter instructions **513**, and the actor instructions **520** comprise any suitable set of instructions, logic, rules, or code operable to execute the sensor engine **510**, node engine **512**, converter engine **513**, and the actor engine **514**, respectively.

[0089] The sensor tables **308**, the node tables **200**, and the actor tables **310** may be configured similar to the sensor tables **308**, the node tables **200**, and the actor tables **310** described in FIG. **3**, respectively. The converter table **524** is configured as a hybrid combination of the previously described sensor table **308** and actor table **310**. An example of the converter table **524** is described in FIG. **9**.

[0090] The network interface **506** is configured to enable wired and/or wireless communications. The network interface **506** is configured to communicate data with any other device or system. For example, the network interface **506** may be configured for communication with a modem, a switch, a router, a bridge, a server, or a client. The processor **502** is configured to send and receive data using the network interface **506**.

[0091] The I/O interface **508** may comprise ports, transmitters, receivers, transceivers, or any other devices for transmitting and/or receiving data with peripheral devices as would be appreciated by one of ordinary skill in the art upon viewing this disclosure. For example, the I/O interface **508** may be configured to communicate data between the processor **502** and peripheral hardware such as a graphical user interface, a display, a mouse, a keyboard, a key pad, and a touch sensor (e.g. a touch screen).

[0092] Using correlithm objects **104** to transmit data provides several technical advantages over conventional systems that are not configured to use correlithm objects **104**. In a correlithm object processing system, real world data is obfuscated when its converted into correlithm objects **104**. This obfuscation provides a level of encryption that protects the data from unauthorized access to the data. In the event that a bad actor obtains a correlithm object **104**, the bad actor will be unable to recover the original real world data value without an appropriate conversion table (e.g. sensor table **308**, node table **200**, or actor table **310**). A correlithm object processing system can leverage this property of correlithm objects **104** to facilitate secure data communications with or without using a secure connection. In one example, data can be transmitted as correlithm objects **104** using an unsecure connection. In this example, the encryption provided by using correlithm objects **104** allows the data to be securely transmitted even though the connection is unsecure. In this case, the data will appear obfuscated to anyone who intercepts the data. As another example, data can be transmitted as correlithm objects **104** using a secure connection. In this example, the encryption provided by using correlithm objects **104** adds an addition layer of security for the data being transmitted. Thus, using a correlithm object processing system provides increased information security compared to conventional systems. FIG. **6** provides an example of a process for establishing encrypted communications using correlithm objects **104** and FIG. **7** provides an example of a process for communicating between different devices using correlithm objects **104**.

[0093] Another technical advantage provided by using correlithm objects **104** to communicate data is their noise immunity. Noisy communication channels and bit errors are technical problems inherent to any digital computing system. In conventional systems, data becomes corrupt and unusable when bit errors occur. This means that when data is transmitted over a noisy channel, the receiving system may be unable to interpret the received data due to bit errors. In this example, the data may need to be retransmitted which introduces delays in the system. Resending the data may also require increasing the transmission power of the sending device to overcome the noisy channel, which consumes more resources. In contrast to these conventional systems, a correlithm object processing system provides a technical solution that is able to recover data even in the presence of bit errors. For example, when a correlithm object is received, the receiving device compares the received correlithm object to a set of stored correlithm objects and identifies the most similar correlithm object based on the number of similar bits. This means that the receiving device does not need to have an exact match in order to identify and interpret a received correlithm object. Conventional systems are unable to implement this feature. In conventional systems, each digital word has a unique value and a single bit error changes the value of the digital word. The noise immunity provided by using correlithm objects **104** allows data to be transmitted even over noisy channels. When a bit error occurs, a receiving device is able to interpret and process the received data without having the data resent. This improves the operation of the system by increasing the throughput of the system and avoiding delays caused by resending data.

[0094] FIG. **6** is a schematic diagram of an embodiment of a computer architecture for establishing encrypted data communications in a correlithm object processing system **600**. In FIG. **6**, the computer architecture comprises a first device **100**A in signal communication with a second device **100**B. The first device **100**A and the second device **100**B are configured to work cooperatively to establish communications between the first device **100**A and the second device **100**B using correlithm objects **104**. The first device **100**A and the second device **100**B are in signal communication with each other using any suitable type of wired or wireless connection. For example, the first device **100**A and the second device **100**B may be signal communication with each other over a network connection. In one embodiment,

the first device **100**A and the second device **100**B are configured to use an unsecure channel **602** and a secure channel **604** to communicate with each other. The secure channel **604** is an encrypted or protected channel and the unsecure channel **604** is an unencrypted or unprotected channel. The secure channel **604** may be configured to use any suitable type of encryption or security protocol as would be appreciated by one of ordinary skill in the art.

[0095] The first device **100**A is configured to input a set of real world values **606** and a correlithm object key **608** into a correlithm object algorithm **610** to generate a set of correlithm objects **612**. Each correlithm object **104** in the set of correlithm objects **612** is an n-bit digital word of binary value. In one embodiment, the correlithm object algorithm **610** is configured to use a correlithm object key **608** and real world values as inputs. The correlithm object key **608** may be any suitable type of encryption or encoding key. In this example, the correlithm object algorithm **610** generates a unique correlithm object output based on the combination of the correlithm object key **608** and a real world value input.

[0096] In one embodiment, the first device **100**A is configured to link the set of real world values **606** with corresponding correlithm objects **104** in the generated set of correlithm objects **612** to generate a sensor table **308**. The first device **100**A may be further configured to shuffle the order of the real world value and correlithm object pairs in the sensor table **308** after generating the sensor table **308**. Shuffling the order of the real world value and correlithm object pairs in the sensor table **308** changes the locations of the pairs within the sensor table **308**, but does not change the association between a real world value its corresponding correlithm object **104**. The first device **100**A is further configured to link a sensor **302**A with the sensor table **308**.

[0097] In one embodiment, the first device **100**A is also configured to link the set of real world values **606** and the generated set of correlithm objects **612** to generate an actor table **310**. The first device **100**A may also be configured to shuffle the order of the real world value and correlithm object pairs in the actor table **310** after generating the actor table **310**. The first device **100**A is further configured to link an actor **306**A with the generated actor table **310**.

[0098] In some embodiments, the first device **100**A may be configured to generate a node table **200** using the correlithm object key **608** and the correlithm object algorithm **610**. For example, the first device **100**A may use the correlithm object key **608** and correlithm objects **104** as inputs to the correlithm object algorithm **610** to generate a new set of correlithm objects **104**. In this example, the correlithm object algorithm **610** generates a unique correlithm object output based on the combination of the correlithm object key **608** and a correlithm object input. The correlithm object algorithm **610** may any suitable type or encrypting algorithm, encoding algorithm, hashing algorithm, or any other suitable type of algorithm as would be appreciated by one of ordinary skill in the art.

[0099] In one embodiment, the first device **100**A is configured to send the set of real world values **606** to the second device **100**B using the unsecure channel **602** and to send the correlithm object key **608** and the correlithm object algorithm **610** to the second device **100**B using the secure channel **604**. In another embodiment, the first device **100**A may be configured to send the set of real world values **606** and the correlithm object algorithm **610** to the second device **100**B using the unsecure channel **602** and to send the correlithm object key **608** to the second device **100**B using the secure channel **604**. In another embodiment, the first device **100**A may be configured to send the correlithm object key **608**, the correlithm object algorithm **610**, and the set of real world values **606** using the secure channel **604**.

[0100] The second device **100**B is configured to input the set of real world values **606** and the correlithm object key **608** into the correlithm object algorithm **610** to generate the set of correlithm objects **612**. The generated set of correlithm objects **612** is the same as the set of correlithm objects **612** generated by the first device **100**A. The second device **100**B is configured to link the set of real world value **606** with corresponding correlithm objects **104** in the set of correlithm object **612** to generate an actor table **310**. In one embodiment, the second device **100**B is configured to shuffle the order of the real world value and correlithm object pairs in the actor table **310** after generating the actor table **310**. The second device **100**B is further configured to link an actor **306**B with the actor table **310**.

[0101] In one embodiment, the second device **100**B is also configured to link the set of real world value **606** and the generated set of correlithm objects **612** to generate a sensor table **308**. The second device **100**B may also be configured to shuffle the order of the real world value and correlithm object pairs in the sensor table **308** after generating the sensor table **308**. The second device **100**B is further configured to link a sensor **302**B with the sensor table **308**.

[0102] Once the first device **100**A and the second device **100**B have each generated a sensor table **308** and an actor table **310**, the first device **100**A and the second device **100**B may begin communication with each other using correlithm objects **104**. In other examples, the first device **100**A and the second device **100**B may be configured to use any combination of sensors **302**, nodes **304**, and actors **306** to communication with each other using correlithm objects **104**. An example of a process for communicating using correlithm objects **104** between the first device **100**A and the second device **100**B is described in FIG. **7**.

[0103] FIG. **7** is a schematic diagram of an embodiment of two devices configured to employ encrypted data communication using correlithm objects. In FIG. **7**, a first device **100**A and a second device **100**B are in signal communication with each other and form a correlithm object processing system **700**. The first device **100**A and the second device **100**B are configured to use a communication channel **702** to communicate with each other. The communication channel **702** may be an unsecure channel **602** and/or a secure channel **604**. The first device **100**A comprises a first sensor **302**A linked with a first sensor table **308**A and a first actor **306**A linked with a first actor table **310**A. Similarly, the second device **100**B comprises a second sensor **302**B linked with a second sensor table **308**B and a second actor **306**B linked with a second actor table **310**B. In one embodiment, the correlithm object processing system **700** implemented using a process similar to the process described in FIG. **6**.

[0104] In one embodiment, the set of correlithm objects in the first sensor table **308**A are the same as the set of correlithm objects in the first actor table **310**A. In another embodiment, at least some of the correlithm objects **104** in the set of correlithm objects in the first sensor table **308**A are different than the correlithm objects **104** in the set of correlithm objects in the first actor table **310**A. This configuration provides additional information security because the correlithm object processing system **700** uses a first set

of correlithm objects to communicate from the first device **100**A to the second device **100**B and a different set of correlithm objects to communicate from the second device **100**B to the first device **100**A.

[0105] As an example, the first device **100**A may provide an input real world value **704** to the first sensor **302**A. The first sensor **302**A may compare the input real world value **704** to the real world values in the first sensor table **308**A to identify a real world value from the first sensor table **308**A. The first sensor **302**A then fetches a correlithm object linked with the identified real world value from the first sensor table **308**A and outputs the identified correlithm object **706** to the second device **100**B. The first device **100**A may use either an unsecure channel **602** or a secure channel **604** to send the correlithm object **706** to the second device **100**B. Once again, correlithm objects **104** provide a level of obfuscation and encryption that protects the data being transmitted regardless of whether the data is being transmitted using a secure channel **604** or an unsecure channel **602**. Conventional systems lack this capability and typically data is sent over secure channels to provide data protection.

[0106] In this example, the second device **100**B receives the correlithm object **706** from the first device **100**A and provides the correlithm object **706** to the second actor **306**B. The second actor **306**B determines distances (e.g. Hamming distances) between the received correlithm object **706** and the correlithm objects in the second actor table **310**B and identifies a correlithm object from the second actor table **310**B with the shortest distance. The second actor **306**B then fetches a real world value **708** from the second actor table **310**B that is linked with the identified correlithm object. In this example, the real world value **708** obtained from the second actor table **310**B is the same as the original real world value **704** that was provided to the first sensor **302**A in the first device **100**A.

[0107] In one embodiment, the second device **100**B may send a new real world value **710** back to the first device **100**A. For example, the second device **100**B may perform one or more operations on the obtained real world value **708** to generate new real world values **710**. The first device **100**A and the second device **100**B may implement a similar process in the reverse direction to communicate data from the second device **100**B to the first device **100**A. For example, the second device **100**B may provide the new real world value **710** to the second sensor **302**B. The second sensor **302**B may compare the new real world value **710** the real world values in the second sensor table **308**B to identify a real world value from the second sensor table **308**B. The second sensor **302**B the fetches a correlithm object linked with the identified real world value from the second sensor table **308**B and outputs the identified correlithm object **712** to the first device **100**A. In this example, the first device **100**A receives the correlithm object **712** from the second device **100**B and provides the correlithm object **712** to the first actor **306**A. The first actor **306**A determines distances (e.g. Hamming distances) between the received correlithm object **712** and the correlithm objects in the first actor table **310**A and identifies a correlithm object from the first actor table **310**A with the shortest distance. The first actor **306**A then fetches a real world value **714** from the first actor table **310**A that is linked with the identified correlithm object. The real world value **714** obtained from the first actor table **310**A is the same as the real world value **710** that was provided to the second sensor **302**B in the second device **100**B.

[0108] FIG. **8** is a flowchart of an embodiment of a dynamic correlithm object communication method **800** for a correlithm object processing system. The dynamic correlithm object communication method **800** provides the ability for a correlithm object processing system to dynamically change the bit string length of the correlithm objects **104** that are used for data communications. As previously discussed, correlithm objects **104** provide noise immunity when communicating data. The level of noise immunity can be further increased by increasing the bit string length of the correlithm objects **104** being transmitted. In other words, as the length of a correlithm object **104** used by a correlithm object processing system increases, the correlithm object processing system becomes more immune to noise. This means that when a correlithm object processing system determines the quality of a communication channel is noise or poor, the correlithm object processing system can use longer correlithm objects **104** to mitigate the effects of the noise communication channel. Using longer correlithm objects **104** simply increases the number of bits used to represent correlithm objects **104** and does not change the baud rate or transmission rate being used to communicate the correlithm objects **104**. This functionality is counter-intuitive to conventional systems. In conventional systems, when the bit error rate of channel becomes too high, the transmitting device typically reduces the transmission rate of the data being transmitted. In contrast to these systems, correlithm objects are able to continue communicating data without reducing the transmission rate, which provides improved performance over conventional systems.

[0109] The correlithm object processing system may be configured to communicate between devices using any combination of sensors **302**, nodes **304**, and actors **306**. For example, the correlithm object processing system may be configured similar to the correlithm object processing systems described in FIGS. **6** and **7**.

[0110] At step **802**, a first device **100**A exchanges data with a second device **100**B using correlithm objects **104** that have a first bit string length. For example, the first device **100**B and the second device **100**B may communicate with each other using correlithm objects **104** that are 64-bit digital words. In other words, the correlithm objects **104** have a 64-bit string length. In other examples, the first device **100**A and the second device **100**B may communicate with each other using correlithm objects **104** having any other suitable but length. The first device **100**B and the second device **100**B may communicate correlithm objects **104** with each other using secure channels **604** and/or unsecure channels **602**.

[0111] At step **804**, the first device **100**A sends a test correlithm object to the second device **100**B. The test correlithm object has the first bit string length. The test correlithm object is a predetermined correlithm object **104** that is used by the first device **100**A and the second device **100**B to determine the quality (e.g. the signal to noise ratio (SNR)) of the communication channel being used to communicate correlithm objects **104**. The process for determining the quality of the communication channel is described below in steps **806-810**. In one embodiment, the first device **100**A is configured to send test correlithm objects to the second device **100**B at predetermined time intervals. For example, the first device **100**A may send test correlithm objects every thirty seconds, every minute, every five minutes, or after any suitable amount of time.

[0112] At step **806**, the second device **100**B determines the distance between the test correlithm object and a reference correlithm object. The distance between the test correlithm object and the reference correlithm object is the number of different bits between the digital word representing the test correlithm object and a digital word representing the reference correlithm object. The reference correlithm object has the same bit string length as the test correlithm object. Continuing with the previous example where the test correlithm object is a 64-bit digital word, the reference correlithm object is also a 64-bit digital word. The second device **100**B may use any of the previously described techniques for determining the distance between the test correlithm object and the reference correlithm object. For example, the second device **100**B may compute the Hamming distance between the test correlithm object and the reference correlithm object. As another example, the distance between the test correlithm object and the reference correlithm object can be determined by performing an XOR operation between the test correlithm object and the reference correlithm object and counting the number of logical high values in the binary string. The number of logical high values indicates the number of bits that are different between the test correlithm object and the reference correlithm object which also corresponds with the Hamming distance between the test correlithm object and the reference correlithm object. In other examples, the distance between the test correlithm object and the reference correlithm object can be determined using a Minkowski distance such as the Euclidean or "straight-line" distance between the test correlithm object and the reference correlithm object.

[0113] At step **808**, the second device **100**B compares the distance between the test correlithm object and the reference correlithm object to a distance threshold value. The distance threshold value indicates a maximum number of bits that can be different between the test correlithm object and the reference correlithm object. For example, the distance threshold may be set to 5 bits, 10 bits, 20 bits, 32 bits, 45 bits, or any suitable number of bits.

[0114] At step **810**, the second device **100**B determines whether the distance between the test correlithm object and the reference correlithm object exceeds the distance threshold value. The second device **100**B returns to step **802** in response to determining that the distance between the test correlithm object and the reference correlithm object does not exceed the distance threshold value. When the distance between the test correlithm object and the reference correlithm object does not exceed the distance threshold value, the second device **100**B determines that the SNR of the communication channel is within the tolerances for communicating correlithm objects **104** and continues to receive correlithm objects **104** having the first bit string length.

[0115] The second device **100**B proceeds to step **812** in response determining that the distance between the test correlithm object and the reference correlithm object exceeds the distance threshold value. When the distance between the test correlithm object and the reference correlithm object exceeds the distance threshold value, the second device **100**B determines that the SNR of the communication is not within the tolerances for communication correlithm objects **104**. In other words, the communication channel is too noisy and causing unsuitable bit error rate for communication using correlithm objects **104** having the first bit string length.

[0116] At step **812**, the second device **100**B sends a switch request to the first device **100**A. The switch request is a command or signal that triggers the first device **100**A to switch from sending correlithm object **104** having the first bit string length to sending correlithm objects **104** having a second bit string length that is longer than the first bit string length. The switch request may be any predetermined real world value or correlithm object **104**.

[0117] At step **814**, the first device **100**A receives the switch command and begins exchanging data with the second device **100**B using correlithm objects **104** that have the second bit string length in response to receiving the switch command. The second bit string length is longer than the first bit string length. For example, the first device **100**B and the second device **100**B may communicate with each other using correlithm objects **104** that are 128-bit digital words instead of 64-bit digital words. In other examples, the first device **100**A and the second device **100**B may communicate with each other using correlithm objects **104** having any other suitable bit string length. In one embodiment, the switch command may identify the number of bits for the second bit string length. For example, the switch command may comprise a bit string length value of 128 which indicates the second bit string length is 128 bits. As another example, the switch command may be a correlithm object linked with a real world value that identifies the second bit string length.

[0118] In another embodiment, the first device **100**A is configured to send a flag correlithm object to the second device **100**B before sending correlithm objects **104** having the second bit string length. The flag correlithm object corresponds with a real world value that identifies the number of bits in the second bit string length. For example, the second device **100**B may receive the flag correlithm object and use an actor **306** to convert the flag correlithm object to a real world value that identifies the second bit string length. As an example, the second device **100**B may determine the real world value corresponding with the flag correlithm object is 256, which indicates that the second bit string length is 256 bits. The flag correlithm object allows the second device **100**B to adjust its buffer to receive longer correlithm objects **104**. In some instances, the flag correlithm object may also be used for synchronization to indicate that the next transmission of correlithm objects **104** will have the second bit string length.

[0119] In one embodiment, switching from sending correlithm objects **104** having the first bit string length to the second bit string length does not change the baud rate of the signal being used to communicate correlithm objects **104** between the first device **100**A and the second correlithm object **100**B. In other words, the first device **100**A does not change (e.g. reduce) the transmission rate or speed when sending correlithm objects **104** having the second bit string length to the second device **100**B.

[0120] FIG. **9** is a schematic diagram of an embodiment of a correlithm object converter **900** for a correlithm object processing system. The correlithm object converter **900** provides the combined functionality of a sensor **302** and an actor **306**. For example, a correlithm object convert **900** may be used in place of the first sensor **302**A and the first actor **306**A in the first device **100**A of the correlithm object processing system **700** described in FIG. **7**. Using a corre-

lithm object converter **900** may use less system resources compared to implementing both a sensor **302** and an actor **304**.

[0121] The correlithm object converter **900** is linked with a converter table **902** that comprises a set of real world values and a set of correlithm objects. The correlithm object converter **900** is configured to receive real world value and correlithm objects **104** as inputs and to output corresponding correlithm objects **104** and real world values, respectively. For example, the correlithm object converter **900** may convert real world values to correlithm objects **104**. The correlithm object converter **900** may be configured to convert real world values to correlithm objects **104** in a manner similar to the previously described sensors **302**. As another example, the correlithm object converter **900** may convert correlithm objects **104** to real world values. The correlithm object converter **900** may be configured to convert correlithm objects **104** to real world values in a manner similar to the previous described actors **306**.

[0122] In one embodiment, the correlithm object converter **900** is configured with two inputs where a first input **908** is configured for receiving real world values and a second input **910** is configured for receiving correlithm objects **104**. In another embodiment, the correlithm object converter **900** may be configured with a single input (not shown) configured to receive both real world values and correlithm objects **104**. In one embodiment, the correlithm object converter **900** is configured with two outputs where a first output **914** is configured to output real world values as a first output signal and a second output **916** is configured to output correlithm objects as a second output signal. In another embodiment, the correlithm object converter **900** is configured to output both real world values and correlithm objects using a single common output (not shown).

[0123] In FIG. **9**, when a real world value is received as an input signal **918** at the first input **908** of the correlithm object converter **900**, the correlithm object converter **900** is configured to identify a real world value in the converter table **902** based on the input signal **918**. The correlithm object converter **900** is further configured to fetch a correlithm object linked with the identified real world value and to output the identified correlithm object as an output signal **926** on the first output **916** of the correlithm object converter **900**. When a correlithm object is received as the input signal **918** at the second input **910** of the correlithm object converter **900**, the correlithm object converter **900** is configured to determine distances between the received correlithm object and each of the correlithm objects in the converter table **902** and to identify a correlithm object from the converter table **902** with the shortest distance. The correlithm object converter **900** is further configured to fetch a real world value from the converter table **902** that is linked with the identified correlithm object and to output the identified real world value as an output signal **924** on the second output **914** of the correlithm object converter **900**.

[0124] In one embodiment, the correlithm object converter **900** is configured with a control input **912**. The control input **912** may be used to control the mode of operation for the correlithm object converter **900**. For example, the correlithm object converter **900** may receive a first control signal **928** that triggers the correlithm object converter **900** to operate like a sensor **302**. The correlithm object converter **900** may receive a second control signal **928** that triggers the correlithm object converter **900** to operate like an actor **306**. The control signal **928** may any suitable type of analog or digital signal as would be appreciated by one of ordinary skill in the art.

[0125] In one embodiment, the correlithm object converter **900** is operably coupled to a logical switch **904**. The logical switch **904** may be implement in any combination of hardware and software. The logical switch **904** is configured to receive an input signal **918**, to determine a data type for the input signal **918**, and to send the input signal **918** to one of the inputs of the correlithm object converter **900** based on the data type of the input signal **918**. For example, the logical switch **904** may receive an input signal **918** at its input **906** and may process the input signal **918** to determine its data type. The data types of the input signal **918** may be either a real world value or a correlithm object **104**. The logical switch **904** is configured to send the input signal **918** to the first input **908** of the correlithm object converter **900** when the input signal **918** has a real world value data type. The logical switch **904** is configured to send the input signal **918** to the second input **910** of the correlithm object converter **900** when the input signal **918** has a correlithm object data type.

[0126] FIG. **10** is a schematic diagram of an embodiment of a cloud based correlithm object processing system **1000**. A cloud based correlithm object processing system **1000** provides the architecture to allow correlithm objects **104** to be processed remotely as cloud services. For example, a device **100** may send correlithm objects **104** to the cloud based correlithm object processing system **1000** to offload the resources used for processing the correlithm objects **104**. In this example, the device **100** is able to receive processed correlithm objects **104** from the cloud based correlithm object processing system **1000** without having to consume the device's **100** processing resources. The cloud based correlithm object processing system **1000** allows devices **100** to utilize the benefits of correlithm objects **104** (e.g. noise immunity and information security) while offloading the computing resources.

[0127] In FIG. **10**, the correlithm object processing system **1000** comprises a system admin device **1002** in signal communication with a network **1004** of correlithm object nodes **304**. Examples of the system admin device **1002** include, but are not limited to, servers, access points, desktop computers, mobile phones, tablet computers, laptop computers, or other special purpose computer platform. In one embodiment, the system admin device **1002** comprises a processor **1006**, a memory **1008**, and a network interface **1010**. The processor **1106** may be configured similar to the processor **502** described in FIG. **5**. The processor **1006** is configured to execute instructions to implement a remapping engine **1007**. In an embodiment, the remapping engine **1007** is implemented using logic units, FPGAs, ASICs, DSPs, or any other suitable hardware. The remapping engine **1007** is configured to facilitate remapping node table **200** for nodes **304** in the network **1004**. Examples of node table **200** remapping are described in FIGS. **15**A-**15**C, **16**, and **17**.

[0128] The memory **1008** may be configured similar to the memory **504** described in FIG. **5**. The memory **1008** is operable to store node tables **200**, correlithm object keys **1012**, correlithm object algorithms **1013**, remapping engine instructions **1014**, and/or any other data or instructions. The remapping engine instructions **1014** may comprise any suitable set of instructions, logic, rules, or code operable to execute the remapping engine **1007**. The correlithm object

keys **1012** and the correlithm object algorithms **1013** may be similar to the correlithm object key **608** and the correlithm object algorithm **610** described in FIG. **6**.

[0129] The network interface **1010** may be configured similar to the network interface **506** described in FIG. **5**. The network interface **1010** is configured to communicate data between the system admin device **1002** and devices in the network **1004**. For example, the network interface **1010** is configured to allow the system admin device **1002** to exchanging node tables **200**, correlithm object keys **1112**, and/or any other type of data with the nodes **304** and devices in the network **1004**.

[0130] The network **1004** comprises one or more devices configured to implement or emulate nodes **304**. Examples of the devices implementing the network **1004** include, but are not limited to, servers, access points, desktop computers, mobile phones, tablet computers, laptop computers, or other special purpose computer platform. In one embodiment, devices implementing the network **1004** may be configured similar to the device **500** described in FIG. **5**. Typically, the network **1004** is implemented by devices that are in a different physical location than the devices **110**A and **100**B communicating with the network **1004**. Each node **304** in the network **1004** is in signal communication with one or more other nodes **304** in the network **1004**. The nodes **304** in the network **1004** are generally configured to receive correlithm objects **104**, to perform one or more operation on the correlithm objects **104** by identifying correlithm objects **104** based on the received correlithm objects **104**, and to output a resulting correlithm object **104** to one or more other nodes **304** and/or devices.

[0131] The network **1004** comprises interior nodes and edge nodes. Interior nodes are nodes **304** that are not in direct signal communication with devices outside of the network, for example devices **100**A and **100**B. Interior node **304** communication with devices outside of the network **1004** via edge nodes. Edge nodes are nodes **304** in the network **1004** that are in signal communication with devices external from the network **1004** of nodes **304**. For example, in FIG. **10**, a first edge node **304**A is in signal communication with a first device **100**A and a second edge node **304**B is in signal communication with a second device **100**B. Edge nodes **304** are configured to receive correlithm objects **104** from a device external from the network **1004** (e.g. device **100**A and device **100**B), to process the correlithm object **104**, and to send the resulting correlithm object **104** to one or more other nodes **304** (e.g. interior nodes) within the network **1004**. The edge nodes **304** are further configured to receive processed correlithm objects **104** from the network **1004** and to send the processed correlithm objects **104** back to devices outside of the network **1004**. Examples of using nodes **304** in the network **1004** to process correlithm objects **104** are described in FIGS. **11-14**.

[0132] In FIG. **10**, the first device **100**A may comprise any suitable number and combination of sensors **302**, nodes **304**, actors **306**, and/or converters **900**. Similarly, the second device **100**B may also comprise any suitable number and combination of sensors **302**, nodes **304**, actors **306**, and/or converters **900**. In this example, the first device **100**A and the second device **100**B are each in signal communication with at least one edge node **304** of the network **1004**. The first device **100**A and the second device **100**B may employ any suitable type of wired or wireless connection **1016** and protocol to connect with nodes **304** in the network **1004**. In some embodiments, the first device **100**A and the second device **100**B are in signal communication with each other and are configured to exchange data with each other. The first device **100**A and the second device **100**B may employ any suitable type of wired or wireless connection and protocol to connect with each other.

[0133] FIG. **11** is a schematic diagram of an embodiment of a device **100**A utilizing a cloud based correlithm object processing system **1100**. In one embodiment, the correlithm object processing system **1100** is configured similar to the correlithm object processing system **1000** described in FIG. **10**. In other embodiments, the correlithm object processing system **1100** may be in any other suitable configuration.

[0134] In FIG. **11**, the correlithm object processing system **1100** is configured to allow a device **100**A to send correlithm objects **104** to the network **1004** for processing. This allows the device **100**A to offload the resources used for processing correlithm objects **104** to the correlithm object processing system **1100**. In this example, an edge node **304**A receives a correlithm object **1102** from the device **100**A. The edge node **304**A is configured to process the received correlithm object **1102** to identify an output correlithm object and to send the output correlithm object to one or more other nodes **304** in the network **1004** for further processing. For example, the edge node **304**A is configured to determine distances between the received correlithm objects and input correlithm objects in its node table **200**. The edge node **304**A may use any of the previously described techniques for determining the distance between the received correlithm object and an input correlithm object. For example, the edge node **304**A may compute the Hamming distance between the received correlithm object and an input correlithm object. As another example, the distance between the received correlithm object and an input correlithm object can be determined by performing an XOR operation between the received correlithm object and an input correlithm object and counting the number of logical high values in the binary string. The number of logical high values indicates the number of bits that are different between the received correlithm object and an input correlithm object which also corresponds with the Hamming distance between the received correlithm object and an input correlithm object. In other examples, the distance between the received correlithm object and an input correlithm object can be determined using a Minkowski distance such as the Euclidean or "straight-line" distance between the received correlithm object and an input correlithm object.

[0135] The edge node **304**A is further configured to receive a processed correlithm object **1104** from a node **304** (e.g. an interior node) in the network **1004** and to send the processed correlithm object **1104** back to the device **100**A. In one embodiment, the edge node **304**A is configured to process the received correlithm object **1104** to identify an output correlithm object and to send the output correlithm object to the device **100**A.

[0136] FIG. **12** is a schematic diagram of an embodiment of devices **100**A and **100**B communicating data using a cloud based correlithm object processing system **1200**. In one embodiment, the correlithm object processing system **1200** is configures similar to the correlithm object processing system **1000** described in FIG. **10**. In other embodiments, the correlithm object processing system **1200** may be in any other suitable configuration.

[0137] In FIG. **12**, the correlithm object processing system **1200** is configured to allow a first device **100**A to send correlithm objects **104** to a second device **100**B via nodes **304** in the network **1004**. This configuration allows data to be simultaneously processed using correlithm objects **104** as its transmitted across the network **1004**. In this example, the first edge node **304**A receives a correlithm object **1202** from the first device **100**A. The first edge node **304**A is configured to process the received correlithm object **1202** to identify an output correlithm object **1204** in a first node table **200**A and to send the output correlithm object **1204** to one or more other nodes **304** in the network **1004** for further processing. The first edge node **304**A may process the received correlithm object **1202** using a process similar to the process described in FIG. **11**. In this example, the first edge node **304**A sends the output correlithm object **1204** to interior node **304**B in the network **1004**. The interior node **304**B is configured to receive the correlithm object **1204**, to process the received correlithm object **1204** to identify an output correlithm object **1206** in a second node table **200**B, and to send the output correlithm object **1206** to a second edge node **304**C. The interior node **304**B may process the received correlithm object **1204** using a process similar to the process described in FIG. **11**. The second edge node **304**C is configured to receive the correlithm object **1206**, to process the received correlithm object **1206** to identify an output correlithm object **1208** in a third node table **200**C, and to send the output correlithm object **1208** to the second device **100**B. The third edge node **304**C may process the received correlithm object **1206** using a process similar to the process described in FIG. **11**.

[0138] FIG. **13** is a schematic diagram of an embodiment of a correlithm object core **1300** used for implementing correlithm object diversity in a correlithm object processing system. A correlithm object core **1300** allows correlithm object components (e.g. sensors **302**, nodes **304**, and actors **306**) to use different correlithm objects **104** within a correlithm core **1300** that are all linked to a common root correlithm object **1301**. In other words, different correlithm object components can each use different correlithm objects **104** that all refer to the same root correlithm object **1301**. Using different correlithm objects for different devices provides information security for a correlithm object processing system because each device can use tables with different correlithm objects **104**. This means that a device **100** using correlithm objects **104** has no information about the correlithm objects **104** being used in another device **100** that is also using correlithm objects **104**. Each device **100** has its own set of tables (e.g. sensor table **308**, node table **200**, and actor **310**) with its own set of correlithm objects **104**. An example of using root correlithm objects to implement correlithm object diversity is described in FIG. **14**.

[0139] A correlithm object core **1300** comprises a root correlithm object **1301** that is linked with a set of correlithm objects **104**. The set of correlithm objects **104** are linked with only one root correlithm object **1301**. The set of correlithm objects **104** are correlithm objects **104** which are located within the core distance (shown as a dashed line perimeter) of the root correlithm object **1301**. The core distance defines the maximum number of bits that can be different between a correlithm object **104** and the root correlithm object **1301** to be considered within a correlithm object core for the root correlithm object **1301**. In other words, the core distance defines the maximum number of hops away a correlithm object **104** can be from a root correlithm object **1301** to be considered a part of the correlithm object core for the root correlithm object **1301**. When a correlithm object **104** is within the correlithm object core **1300**, it can be used to reference the root correlithm object.

[0140] In general, the average distance between correlithm objects in an n-dimensional space **102** is equal to about half the number of bits used to represent correlithm objects **104** in the n-dimensional space **102**. This value also corresponds with the average number of bits that are different between a random correlithm object **104** and a particular correlithm object **104**. As an example, the average distance between correlithm objects **104** in the 64-dimensional space **102** is equal to 32 bits. In one embodiment, a core distance may be defined in terms of a number of standard deviations away from the average distance between correlithm objects in an n-dimensional space **102**. For example, a core distance may be equal to six standard deviations away from the average distance between correlithm objects in an n-dimensional space **102**. In general, the standard deviation is equal to

$$\sqrt{\frac{n}{4}},$$

where 'n' is the number of dimensions in the n-dimensional space **102** which also corresponds with the number of bits in the n-bit digital word used to represent correlithm objects. Continuing with the previous example, the standard deviation of the 64-dimensional space **102** is equal to 4 bits. This means that a cutoff region for a correlithm object core **1300** is located 24 bits away from the average distance between correlithm objects which is 32 bits or 8 bits (i.e. 32 bits−24 bits) away from the root correlithm object **1301**. In other words, the core distance in this example is equal to 8 bits. This means that the cutoff region for a correlithm object core includes correlithm objects **104** that have up to 8 bits different than the root correlithm object or are up to 8 hops away from the root correlithm object **1301**. In other words, correlithm objects **104** within up to eight hops away from the root correlithm object **1301** are members of the correlithm object core **1300** for the root correlithm object **1301** and can be used to reference the root correlithm object. In other examples, the cutoff region that defines the core distance may be equal any other suitable value. For instance, the cutoff region for the correlithm object core **1300** may be set to 1, 2, 3, 4, 5, 8, 10, 12, or any other suitable number of standard deviations away from the average distance between correlithm objects **104** in the n-dimensional space **102**.

[0141] As an example, a first correlithm object component may use a first table **1302**A with a first correlithm object **104**A that is within the correlithm object core **1300** of the root correlithm object **1301**. A second correlithm object component may use a second table **1302**B with a second correlithm object **104**B that is within the correlithm object core **1300** of the root correlithm object **1301**. A third correlithm object component may use a third table **1302**C with a third correlithm object **104**C that is within the correlithm object core **1300** of the root correlithm object **1301**. In this example, the first correlithm object **104**A, the second correlithm object **104**B, and the third correlithm object **104**C all have different values. However, because all

three correlithm objects **104**A, **104**B, and **104**C are all within the correlithm object core **1300** of the root correlithm object **1301** they all can be used to reference the root correlithm object **1301**.

[0142] FIG. **14** is a schematic diagram of an embodiment of a correlithm object processing system **1400** implementing correlithm object diversity. The correlithm object processing system **1400** may be configured similar to the correlithm object processing system **1000** described in FIG. **10**. In this example, a device configured to implement a portion of the network **1004** comprises a memory and processor configured to emulate an edge node **304**. The memory is operable to store a node table **200** that links a set of root correlithm objects with a corresponding set of output correlithm objects. The memory may be configured similar to memory **504** described in FIG. **5**. The edge node **304** is in signal communication with a first device **100**A and a second device **100**B. In one embodiment, the first device **100**A and/or the second device **100**B are devices outside of the network **1004**. The first device **100**A and/or the second device **100**B may be in a different physical location than the device implementing the edge node **304**. In another embodiment, the first device **100**A and/or the second device **100**B may be devices configured to implement nodes **304** in the network **1004**.

[0143] The edge node **304** is configured to define a first set of correlithm objects for the first device **100**A. The first set of correlithm objects comprises at least a first correlithm object within a core distance of a root correlithm object from the set of root correlithm objects in the node table **200** of the edge node **304**. The first set of correlithm objects may further comprise any number of other correlithm objects **104** that are within a core distance of a root correlithm object from the set of root correlithm objects in the node table **200** of the edge node **304**. The edge node **304** is further configured to send the defined first set of correlithm objects **104** to the first device **100**A. Similarly, the edge node **304** is configured to define a second set of correlithm objects for the second device **100**B. The second set of correlithm objects comprises at least a second correlithm object within the core distance of the root correlithm object from the set of root correlithm objects in the node table **200** of the edge node **304**. The second set of correlithm objects may further comprise any other number of correlithm objects **104** that are within a core distance of a root correlithm object from the set of root correlithm objects in the node table **200** of the edge node **304**. In this example, the first correlithm object and the second correlithm object have different values but are both within the core distance of a common root correlithm object. This allows the edge node **304** to use different correlithm objects for the first device **100**A and the second device **100**B to reference the same common correlithm object (i.e. the root correlithm object). The edge node **304** is further configured to send the defined second set of correlithm objects to the second device **100**B.

[0144] The first device **100**A and the second device **100**B may use the first set of correlithm objects and the second set of correlithm objects, respectively, in a sensor table **308**, a node table **200**, and/or an actor table **310**. For example, in FIG. **14**, the first device **100**A uses the first set of correlithm objects as output correlithm objects in a first node table **200**A and the second device **100**B uses the second set of correlithm objects as output correlithm objects in a second node table **200**B. In this example, the first device **100**A is configured to use the first set of correlithm objects to communicate with the edge node **304**. Similarly, the second device **100**B is configured to uses the second set of correlithm objects to communicate with the edge node **304**.

[0145] FIGS. **15**A-**15**C, **16**, and **17** are examples of processes for changing correlithm objects **104** and changing values in tables storing correlithm objects **104**. In some embodiment, the correlithm objects **104** used in a correlithm object processing system may be periodically changed provided increased information security for the correlithm object processing system. Constantly changing the correlithm objects **104** that are being used increases the difficulty for a bad actor to extract information from a correlithm object processing system. Since the correlithm objects **104** are constantly changing a bad actor has no way of knowing whether extracted correlithm objects **104** are still valid. Correlithm objects **104** can be changed anytime without interfering with the performance of the correlithm object processing system. Conventional systems are unable to implement such a feature because changing values within a system would require the entire system to be remap which typically requires downtime for the system.

[0146] FIG. **15**A is a schematic diagram of an embodiment of a first phase of a node table remapping. In FIG. **15**A, a first node **304**A is configured to use a first node table **200**A and a second node **304**B is configured to use a second node table **304**B. The first node table **200**A comprises a first set of input correlithm objects **1502** (shown as IC1, IC2, IC3, and IC4) and a first set of output correlithm objects **1504** (shown as OC1, OC2, OC3, and OC4). Each of the input correlithm objects **1402** corresponds with one of the output correlithm objects **1504**. The second node table **200**B comprises a second set of input correlithm objects **1506** (shown as IC5, IC6, IC7, and IC8) and a second set of output correlithm objects **1508** (shown as OC5, OC6, OC7, and OC8). Each of the input correlithm objects **1506** corresponds with one of the output correlithm objects **1508**.

[0147] FIG. **15**B is a schematic diagram of an embodiment of a second phase of a node table remapping. In FIG. **15**B, the first set of output correlithm objects **1504** in the first node table **200**A and the second set of input correlithm objects **1506** in the second node table **200**B are re-encoded using a correlithm object algorithm with a correlithm object key. The correlithm object key and the correlithm object algorithm may be similar to the correlithm object key **608** and the correlithm object algorithm **610** described in FIG. **6**. For example, the first node **304**A may provide the correlithm object key and an existing correlithm object as inputs to the correlithm object algorithm to generate a new correlithm object. In this example, the first node **304**A may input a correlithm object (e.g. OC1) with the correlithm object key into the correlithm object algorithm to generate a new correlithm object (e.g. OC9). This process may be repeated for all of the correlithm objects **104** in the first set of output correlithm objects **1504**. The second node **304**B may perform a similar process for the correlithm objects **104** in the second set of input correlithm objects **1506**. Re-encoding the first set of input correlithm objects **1504** and the second set of input correlithm objects **1506** changes the values of the output correlithm objects **1504** (shown as OC9, OC10, OC11, and OC12) and the values of the input correlithm objects **1506** (shown as IC9, IC10, IC11, and IC12). In this example, the values of the input correlithm objects **1502** that are linked with the output correlithm objects **1504** do not

change. Similarly, the values of the output correlithm objects **1508** that are linked with the input correlithm objects **1506** do not change. Examples of techniques for re-encoding correlithm objects **104** in a node table **200** are described in FIGS. **16** and **17**.

[0148] FIG. **15**C is a schematic diagram of an embodiment of a third phase of a node table remapping. In FIG. **15**C, the order of the first set of input correlithm objects **1502** and the first set of output correlithm objects **1504** is shuffled. The relationship between the first set of input correlithm objects **1502** and the first set of output correlithm objects **1504** does not change when the order is shuffled. In other words, when an input correlithm object and a corresponding output correlithm object are shuffled their location within the first node table **200**A changes, but the input correlithm object and the output correlithm object remain linked together. Similarly, the order of the second set of input correlithm objects **1506** and the second set of correlithm objects **1508** is shuffled. The ordering of the correlithm objects in the first node table **200**A may be independent of the ordering of the correlithm objects in the second node table **200**B. In other words, the correlithm objects in first node table **200**A do not have to be in the same order as the correlithm objects in the second node table **200**B. This means that correlithm objects in the first node table **200**A can be shuffled independently from the correlithm objects in the second node table **200**B. Examples of techniques for shuffling correlithm objects in a node table **200** are described in FIGS. **16** and **17**.

[0149] FIG. **16** is a flowchart of an embodiment of an offline node remapping method **1600** for a correlithm object processing system. For example, the correlithm object processing system may be configured similar to the correlithm object processing system **1000** described in FIG. **10**. The offline node remapping method **1600** may be employed by the correlithm object processing system to periodically remap node tables **200** for nodes **304** in the network **1004**. The offline node remapping method **1600** allows the system admin device **1002** to modify or generate new node tables **200** for nodes **304** by re-encoding and shuffling the correlithm objects in their node tables **200**.

[0150] At step **1602**, a system admin device **1002** determines whether to remap a set of node tables **200**. In one embodiment, the system admin device **1002** is configured to monitor a timer for reconfiguring node tables **200**. The system admin device **1002** may remap a set of node tables **200** in response to determining the timer has lapsed. The system admin device **1002** proceeds to step **1604** in response to determining to remap the set of node tables **200**. Otherwise, the system admin device **1002** remains at step **1602**.

[0151] At step **1604**, a system admin device **1002** accesses a first node table **200** for a first node **304** and a second node table **200** for a second node **304**. In one embodiment, accessing the node tables **200** comprises downloading the first node table **200** from the first node **304** and downloading the second node table from the second node **304**. In another embodiment, the system admin device **1002** is configured to store copies of node tables **200** in a memory (e.g. memory **1008**). In this example, accessing the node tables **200** comprises retrieving copies of the first node table **200** and the second node table **200** from the memory.

[0152] At step **1606**, a system admin device obtains a correlithm object key. In one embodiment, the system admin device **1002** is configured to store correlithm object keys in a memory (e.g. memory **1008**). In this example, accessing the correlithm object key comprises retrieving the correlithm object key from the memory. The correlithm object key is similar to the correlithm object key **608** described in FIG. **6**.

[0153] At step **1608**, a system admin device **1002** re-encodes corresponding correlithm objects in the first node table **200** and the second node table **200** using the correlithm object key. In one embodiment, the system admin device **1002** may re-encode the correlithm objects in the first node table **200** and the second node table **200** using a process similar to the process described in FIG. **15**B. As an example, the system admin device **1002** may input the correlithm object key with a set of output correlithm objects from the first node table **200** into a correlithm object algorithm to generate a new set of output correlithm objects for the first node table **200**. Similarly, the system admin device **1002** may input the correlithm object key with a set of input correlithm objects from the second node table **200** into the correlithm object algorithm to generate a new set of input correlithm objects for the second node table **200**.

[0154] In one embodiment, re-encoding correlithm objects in the first node table **200** and the second node table **200** changes the number of bits used to represent the re-encoded correlithm objects. For example, an existing set of output correlithm objects may originally be represented by a 64-bit binary word. After re-encoding the output correlithm objects, the new set of output correlithm objects may be represented by a 128-bit binary word. As another example, after re-encoding the output correlithm objects, the new set of output correlithm objects may be represented by a 32-bit binary word. The re-encoding process may change the number of bit used to represent the correlithm objects to any suitable number of bits. In one embodiment, changing the number of bits used to represent the re-encoded correlithm objects only affects a portion of the node table. For example, the number of bits used to represent the re-encoded output correlithm objects in the first node table **200** may change, but the number of bits used to represent corresponding input correlithm objects in the first node table **200** may not change.

[0155] At step **1610**, a system admin device **1002** shuffles corresponding correlithm objects in the first node table **200** and the second node table **200** to generate a reconfigured first node table **200** and a reconfigured second node table **200**. In one embodiment, the system admin device **1002** may shuffle the correlithm objects in the first node table **200** and the second node table **200** using a process similar to the process described in FIG. **15**C. Shuffling the order of the re-encoded correlithm objects changes the location of the correlithm objects within the first node table, but maintains the link between the first set of input correlithm objects and the first set of output correlithm objects in the first node table **200**. In one embodiment, the system admin device **1002** shuffles the correlithm objects in the first node **200** to be in a different order than the correlithm objects in the second node table **200**.

[0156] At step **1612**, a system admin device **1002** overwrites the first node table **200** in the first node **304** with the reconfigured first node table **200**. In one embodiment, overwriting the first node table **200** comprises sending the reconfigured node table **200** to the device implementing the first node **304**. The device links the reconfigured node table **200** with the first node **304** in response to receiving the reconfigured node table **200**. Once the first node **304** is

linked with the reconfigured node table **200**, the first node **304** may begin processing correlithm objects using the reconfigured node table **200**.

[0157] At step **1614**, a system admin device **1002** overwrites the second node table **200** in the second node **304** with the reconfigured second node table **200**. In one embodiment, overwriting the second node table **200** comprises sending the reconfigured node table **200** to the device implementing the second node **304**. The device links the reconfigured node table **200** with the second node **304** in response to receiving the reconfigured node table **200**. Once the second node **304** is linked with the reconfigured node table **200**, the second node **304** may begin processing correlithm objects using the reconfigured node table **200**.

[0158] FIG. **17** is a flowchart of an embodiment of an online node remapping method **1700** for a correlithm object processing system. For example, the correlithm object processing system may be configured similar to the correlithm object processing system **1000** described in FIG. **10**. The online node remapping method **1700** may be employed by the correlithm object processing system to periodically remap node tables **200** for nodes **304** in the network **1004**. The online node remapping method **1700** allows the nodes **304** in the network **1004** to remap their node tables **200** instead of having a system admin device **1002** remap the nodes tables **200** like the offline node remapping node method **1600** described in FIG. **16**.

[0159] As an example, a system admin device **1002** may periodically send a remap node command to the node **304**. In one embodiment, the system admin device **1002** is configured to monitor a timer for reconfiguring node tables **200**. The system admin device **1002** may send a remap node command to the node **304** in response to determining the timer has lapsed. In one embodiment, the system admin device **1002** sends the remap node command using a secure connection (e.g. secure connection **604**). The remap node command is used to trigger the node **304** to remap its node table **200**. In one embodiment, the remap node command is an encrypted message that comprises a correlithm object key and identifies a correlithm object type. The correlithm object type identifies the type of correlithm objects **104** in the node table **200** that are to be remapped. For example, the correlithm object type may indicate either an input correlithm object type or an output correlithm object type. Any suitable identifier or flag bits may be used to indicate the correlithm object type. As an example, setting a flag bit with a binary value of one may indicate an input correlithm object type and setting a flag bit with a binary value of zero may indicate an output correlithm object type. In other examples, the correlithm object type may be identified using an alphanumeric string. In other embodiments, the remap node command may further comprise a correlithm object algorithm or an identifier for a correlithm object algorithm that is to be used when re-encoding the correlithm objects. In other embodiments, the remap node command may further comprise any other suitable information for remapping a node table **200**. The remap node command may be sent as any suitable type of message or command as would be appreciated by one of ordinary skill in the art.

[0160] At step **1702**, a node **304** determines whether a remap node command has been received. The node **304** proceeds to step **1704** in response to determining the remap node command has been received. Otherwise, the node **304** remains at step **1702** to wait for a remap node command. At step **1704**, the node **304** obtains a correlithm object key from the remap node command. The node **304** may process (e.g. decrypt) the remap node command to extract the correlithm object key and any other information from the remap node command. The correlithm object key is similar to the correlithm object key **608** described in FIG. **6**. In one embodiment, the node **304** is configured to suspend operations (e.g. sending, receiving, and/or processing correlithm objects **104**) in response to receiving the remap node command. In this case, the node **304** may resume operations after the node table **200** has been remapped.

[0161] At step **1706**, the node **304** determines a correlithm object type identified by the remap node command. In one embodiment, the correlithm object type identifies an input correlithm object type. In this example, the node **304** will re-encode a set of input correlithm objects in a node table **200** when the correlithm object type identifies an input correlithm object type. In another embodiment, the correlithm object type identifies an output correlithm object type. In this example, the node **304** will re-encode a set of output correlithm objects in a node table **200** when the correlithm object type identifies an output correlithm object type.

[0162] At step **1708**, the node **304** re-encodes correlithm objects in a node table **200** using the correlithm object key and a correlithm object algorithm. In one embodiment, the node **304** may re-encode the correlithm objects in the node table **200** using a process similar to the process described in FIG. **15**B. For example, the node **304** may input the correlithm object key obtained from the remap node command with the set of correlithm objects identified by the correlithm object type in the remap node command into a correlithm object algorithm to generate a new set of correlithm objects. In one embodiment, the node **304** obtains the correlithm object algorithm from the remap node command. In another embodiment, the remap node command identifies a correlithm object algorithm and the node **304** obtains the identified correlithm object algorithm from a memory.

[0163] In one embodiment, re-encoding correlithm objects in the node table **200** changes the number of bits used to represent the re-encoded correlithm objects. For example, an existing set of output correlithm objects may originally be represented by a 64-bit binary word. After re-encoding the output correlithm objects, the new set of output correlithm objects may be represented by a 128-bit binary word. As another example, after re-encoding the output correlithm objects, the new set of output correlithm objects may be represented by a 32-bit binary word. The re-encoding process may change the number of bit used to represent the correlithm objects to any suitable number of bits.

[0164] At step **1710**, the node **304** shuffles the reassigned correlithm objects in the node table **200** to generate a modified node table. In one embodiment, the node **304** may shuffle the correlithm objects in the node table **200** using a process similar to the process described in FIG. **15**C. Shuffling the order of the re-encoded correlithm objects maintains the link between the first set of input correlithm objects and the first set of output correlithm objects in the node table **200**.

[0165] While several embodiments have been provided in the present disclosure, it should be understood that the disclosed systems and methods might be embodied in many other specific forms without departing from the spirit or scope of the present disclosure. The present examples are to be considered as illustrative and not restrictive, and the

intention is not to be limited to the details given herein. For example, the various elements or components may be combined or integrated in another system or certain features may be omitted, or not implemented.

[0166] In addition, techniques, systems, subsystems, and methods described and illustrated in the various embodiments as discrete or separate may be combined or integrated with other systems, modules, techniques, or methods without departing from the scope of the present disclosure. Other items shown or discussed as coupled or directly coupled or communicating with each other may be indirectly coupled or communicating through some interface, device, or intermediate component whether electrically, mechanically, or otherwise. Other examples of changes, substitutions, and alterations are ascertainable by one skilled in the art and could be made without departing from the spirit and scope disclosed herein.

[0167] To aid the Patent Office, and any readers of any patent issued on this application in interpreting the claims appended hereto, applicants note that they do not intend any of the appended claims to invoke 35 U.S.C. § 112(f) as it exists on the date of filing hereof unless the words "means for" or "step for" are explicitly used in the particular claim.

1. A system configured to emulate a correlithm object processing system, comprising:
- a first device comprising:
  - a first network interface configured to communicate data using a network connection; and
  - a first processor operably coupled to the first network interface, configured to implement a first correlithm object engine configured to:
    - send correlithm objects having a first bit having a first bit string length to a second device, wherein each correlithm object is an n-bit digital word of binary values;
    - send a test correlithm object having the first bit string length to the second device;
    - receive a switch command in response to sending the test correlithm object; and
    - send correlithm objects having a second bit string length to the second device in response to receiving the switch command, wherein the second bit string length is greater than the first bit string length; and
- the second device in signal communication with the first device via the network connection, comprising:
  - a second network interface configured to communicate data using the network connection; and
  - a second processor operably coupled to the second network interface, configured to implement a second correlithm object engine configured to:
    - receive the test correlithm object;
    - determine a distance between the test correlithm object and a reference correlithm object, wherein the distance between the test correlithm object and the reference correlithm object is the number of different bits between a digital word representing the test correlithm object and a digital word representing the reference correlithm object;
    - compare the distance between the test correlithm object and the reference correlithm object to a distance threshold value; and
    - send the switch command to the first device in response to determining the distance between the test correlithm object and the reference correlithm object exceeds the distance threshold value.

2. The system of claim **1**, wherein:
- sending correlithm objects having the first bit string length comprises sending correlithm objects at a predetermined baud rate; and
- sending correlithm objects having the second bit string length comprises sending correlithm objects at the predetermined baud rate.

3. The system of claim **1**, wherein:
- the first device comprises a memory operable to store a sensor table that identifies:
  - a set of real world values; and
  - a set of correlithm objects corresponding with the set of real world values, wherein each correlithm object in the set of correlithm objects is an n-bit digital word of binary values; and
- sending correlithm objects having the first bit string length comprises:
  - receiving a real world value input;
  - identifying a real world value entry in the sensor table that matches the real world input value;
  - fetching a correlithm object from among the first set of correlithm objects that is linked with the identified real world value entry; and
  - sending the identified correlithm object.

4. The system of claim **1**, wherein:
- the first device comprises a memory operable to store a node table that identifies:
  - a set of input correlithm objects, wherein each input correlithm object in the set of input correlithm objects is an n-bit digital word of binary values; and
  - a set of output correlithm objects corresponding with the set of input correlithm objects, wherein each output correlithm object in the set of output correlithm objects is an n-bit digital word of binary values; and
- sending correlithm objects having the first bit string length comprises:
  - receiving a first correlithm object;
  - determining distances between the first correlithm object and each input correlithm object in the node table, wherein the distance between the first correlithm object and an input correlithm object is based on differences between a digital word representing the first correlithm object and digital words representing each of the input correlithm objects;
  - identifying an input correlithm object from the node table with the shortest distance;
  - fetching a second correlithm object from the node table linked with the identified input correlithm object; and
  - sending the second correlithm object.

5. The system of claim **1**, wherein determining the distance between the test correlithm object and the reference correlithm object comprises determining a Hamming distance between the test correlithm object and the reference correlithm object.

6. The system of claim **1**, wherein determining distance between the test correlithm object and the reference correlithm object comprises:
- performing an XOR operation between the test correlithm object and the reference correlithm object to generate a binary string; and

counting the number of logical high values in the binary string, wherein the number of logical high values corresponds with the distance between the test correlithm object and the reference correlithm object.

7. The system of claim **1**, wherein:

sending correlithm objects having the second bit string length comprises sending a flag correlithm object that corresponds with a real world value entry identifying the number of bits in the second bit string length; and

the flag correlithm object is sent before sending correlithm objects having the second bit string length.

8. The system of claim **1**, wherein:

the switch command comprises a correlithm object; and

the first device is configured to:

determine distances between the received correlithm object and each input correlithm object in a node table, wherein the distance between the received correlithm object and an input correlithm object is based on differences between a digital word representing the received correlithm object and digital words representing each of the input correlithm objects;

identify an input correlithm object from the node table with the shortest distance;

fetching a second correlithm object from the node table linked with the identified input correlithm object, wherein the second correlithm object has the second bit length; and

sending the second correlithm object to the second device.

9. A communication method, comprising:

sending, by a first device, correlithm objects having a first bit string length to a second device, wherein each correlithm object is an n-bit digital word of binary values;

sending, by the first device, a test correlithm object having the first bit string length to the second device;

receiving, by the second device, the test correlithm object;

determining, by the second device, a distance between the test correlithm object and a reference correlithm object, wherein the distance between the test correlithm object and the reference correlithm object is the number of different bits between a digital word representing the test correlithm object and a digital word representing the reference correlithm object;

comparing, by the second device, the distance between the test correlithm object and the reference correlithm object to a distance threshold value;

sending, by the second device, a switch command to the first device in response to determining the distance between the test correlithm object and the reference correlithm object exceeds the distance threshold value;

sending, by the first device, correlithm objects having a second bit string length to the second device in response to receiving the switch command, wherein the second bit string length is greater than the first bit string length.

10. The method of claim **9**, wherein:

sending correlithm objects having the first bit string length comprises sending correlithm objects at a predetermined baud rate; and

sending correlithm objects having the second bit string length comprises sending correlithm objects at the predetermined baud rate.

11. The method of claim **9**, wherein sending correlithm objects having the first bit string length comprises:

receiving a real world value input;

identifying a real world value entry in a sensor table that matches the real world input value, wherein the sensor table identifies:

a set of real world values; and

a set of correlithm objects corresponding with the set of real world values, wherein each correlithm object in the set of correlithm objects is an n-bit digital word of binary values;

fetching a correlithm object from among the first set of correlithm objects that is linked with the identified real world value entry; and

sending the identified correlithm object.

12. The method of claim **9**, wherein sending correlithm objects having the first bit string length comprises:

receiving a first correlithm object;

determining distances between the first correlithm object and each input correlithm object in a node table, wherein:

the node table that identifies:

a set of input correlithm objects, wherein each input correlithm object in the set of input correlithm objects is an n-bit digital word of binary values; and

a set of output correlithm objects corresponding with the set of input correlithm objects, wherein each output correlithm object in the set of output correlithm objects is an n-bit digital word of binary values; and

the distance between the first correlithm object and an input correlithm object is based on differences between a digital word representing the first correlithm object and digital words representing each of the input correlithm objects;

identifying an input correlithm object from the node table with the shortest distance;

fetching a second correlithm object from the node table linked with the identified input correlithm object; and

sending the second correlithm object.

13. The method of claim **9**, wherein determining the distance between the test correlithm object and the reference correlithm object comprises determining a Hamming distance between the test correlithm object and the reference correlithm object.

14. The method of claim **9**, wherein determining distance between the test correlithm object and the reference correlithm object comprises:

performing an XOR operation between the test correlithm object and the reference correlithm object to generate a binary string; and

counting the number of logical high values in the binary string, wherein the number of logical high values corresponds with the distance between the test correlithm object and the reference correlithm object.

15. The method of claim **9**, wherein:

sending correlithm objects having the second bit string length comprises sending a flag correlithm object that corresponds with a real world value entry identifying the number of bits in the second bit string length; and

the flag correlithm object is sent before sending correlithm objects having the second bit string length.

16. A device configured to emulate a correlithm object processing system, comprising:

a network interface configured to communicate data with a second device using a network connection; and

a processor operably coupled to the network interface, configured to implement a correlithm object engine configured to:

receive correlithm objects having a first bit string length, wherein each correlithm object is an n-bit digital word of binary values;

receive a test correlithm object having the first bit string length;

determine a distance between the test correlithm object and a reference correlithm object, wherein the distance between the test correlithm object and the reference correlithm object is the number of different bits between a digital word representing the test correlithm object and a digital word representing the reference correlithm object;

compare the distance between the test correlithm object and the reference correlithm object to a distance threshold value; and

send a switch command to the second device in response to determining the distance between the test correlithm object and the reference correlithm object exceeds the distance threshold value; and

receive correlithm objects having a second bit string length in response to sending the switch command, wherein the second bit string length is greater than the first bit string length.

17. The device of claim **16**, wherein:

sending correlithm objects having the first bit string length comprises sending correlithm objects at a predetermined baud rate; and

sending correlithm objects having the second bit string length comprises sending correlithm objects at the predetermined baud rate.

18. The device of claim **16**, further comprising a memory operable to store a sensor table that identifies:

a set of real world values; and

a set of correlithm objects corresponding with the set of real world values, wherein each correlithm object in the set of correlithm objects is an n-bit digital word of binary values; and

wherein sending correlithm objects having the first bit string length comprises:

receiving a real world value input;

identifying a real world value entry in the sensor table that matches the real world input value;

fetching a correlithm object from among the first set of correlithm objects that is linked with the identified real world value entry; and

sending the identified correlithm object.

19. The device of claim **16**, further comprising a memory operable to store a node table that identifies:

a set of input correlithm objects, wherein each input correlithm object in the set of input correlithm objects is an n-bit digital word of binary values; and

a set of output correlithm objects corresponding with the set of input correlithm objects, wherein each output correlithm object in the set of output correlithm objects is an n-bit digital word of binary values; and

wherein sending correlithm objects having the first bit string length comprises:

receiving a first correlithm object;

determining distances between the first correlithm object and each input correlithm object in the node table, wherein the distance between the first correlithm object and an input correlithm object is based on differences between a digital word representing the first correlithm object and digital words representing each of the input correlithm objects;

identifying an input correlithm object from the node table with the shortest distance;

fetching a second correlithm object from the node table linked with the identified input correlithm object; and

sending the second correlithm object.

20. The device of claim **16**, wherein determining the distance between the test correlithm object and the reference correlithm object comprises determining a Hamming distance between the test correlithm object and the reference correlithm object.

* * * * *