US010583336B2

(12) **United States Patent**
Parsons et al.

(10) **Patent No.: US 10,583,336 B2**
(45) **Date of Patent: *Mar. 10, 2020**

(54) **GOLF CLUB HEADS AND METHODS TO MANUFACTURE GOLF CLUB HEADS**

(71) Applicant: **Parsons Xtreme Golf, LLC**, Scottsdale, AZ (US)

(72) Inventors: **Robert R. Parsons**, Scottsdale, AZ (US); **Bradley D. Schweigert**, Anthem, AZ (US); **Michael R. Nicolette**, Scottsdale, AZ (US)

(73) Assignee: **PARSONS XTREME GOLF, LLC**, Scottsdale, AZ (US)

(*) Notice: Subject to any disclaimer, the term of this patent is extended or adjusted under 35 U.S.C. 154(b) by 0 days.

This patent is subject to a terminal disclaimer.

(21) Appl. No.: **16/179,406**

(22) Filed: **Nov. 2, 2018**

(65) **Prior Publication Data**

US 2019/0126108 A1 May 2, 2019

Related U.S. Application Data

(63) Continuation-in-part of application No. 15/875,416, filed on Jan. 19, 2018, which is a continuation of

(Continued)

(51) **Int. Cl.**

A63B 53/04	(2015.01)
A63B 60/02	(2015.01)

(Continued)

(52) **U.S. Cl.**

CPC ***A63B 53/0466*** (2013.01); ***A63B 1/00*** (2013.01); ***A63B 53/04*** (2013.01); ***A63B 60/02*** (2015.10);

(Continued)

(58) **Field of Classification Search**

CPC ... A63B 53/0466; A63B 53/04; A63B 53/075; A63B 60/54; A63B 2053/0433;

(Continued)

(56) **References Cited**

U.S. PATENT DOCUMENTS

1,133,129	A	3/1915	Govan
1,269,745	A	6/1918	Robertson

(Continued)

OTHER PUBLICATIONS

Spotted: Three New PXG Drivers Appear on the USGA Conforming List (GOLFWRX). Dec. 18, 2017. Retrieved From the Internet on Jan. 16, 2019. URL: <http://www.golfwrx.com/482592/spotted-three-new-pxg-drivers-appear-on-the-usga- conforming-list/>.

(Continued)

Primary Examiner — Benjamin Layno

(57) **ABSTRACT**

Embodiments of golf club heads and methods to manufacture golf club heads are generally described herein. In one example, a golf club head may include a hollow body portion having a front portion, a rear portion, a toe portion, a heel portion, a bottom portion, a top portion, a first interior cavity portion, and a second interior cavity portion. The first interior cavity portion may be at least partially filled with a polymer material. Other examples and embodiments may be described and claimed.

17 Claims, 33 Drawing Sheets

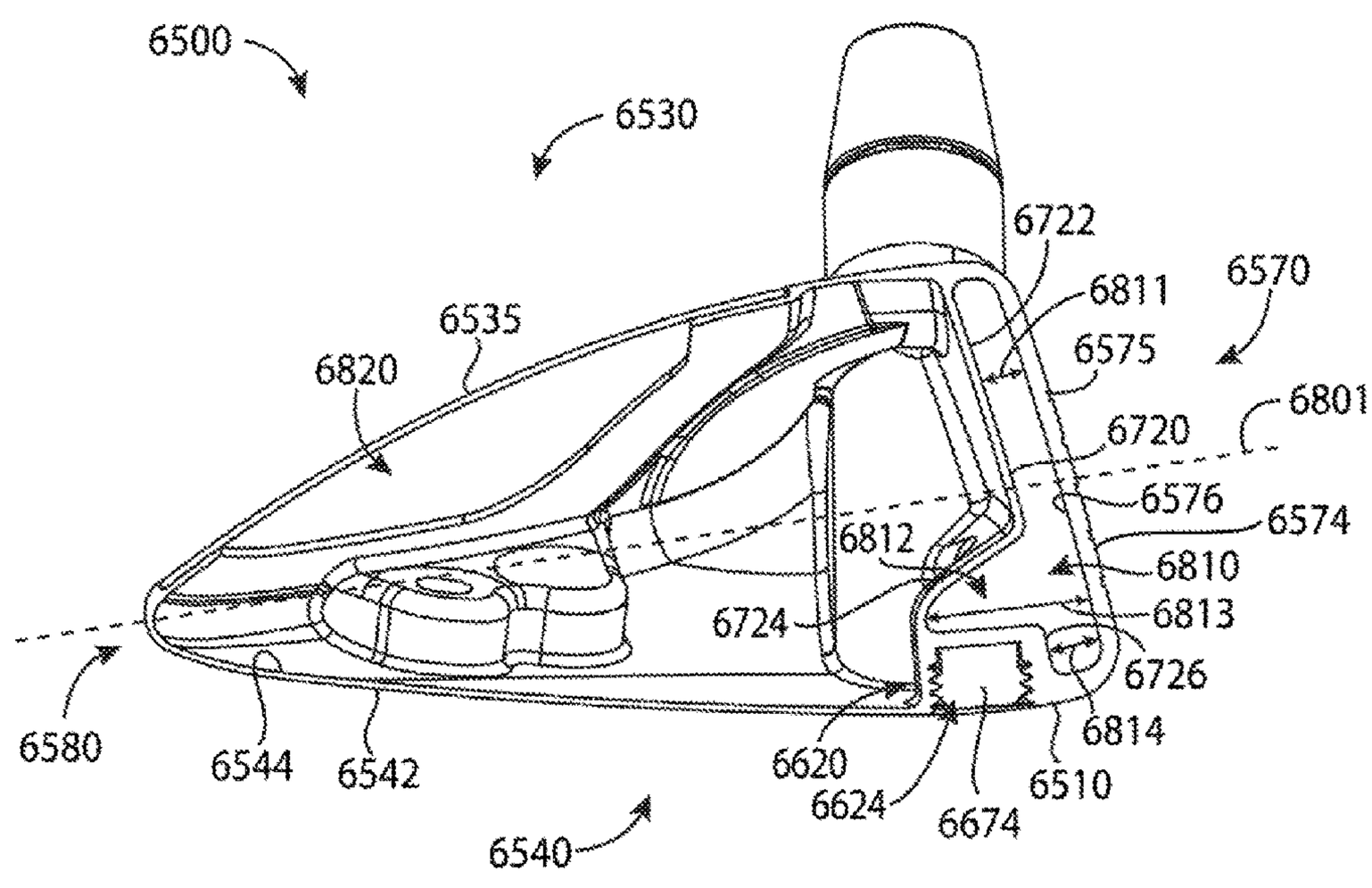

Related U.S. Application Data

application No. 15/446,842, filed on Mar. 1, 2017, now Pat. No. 9,895,582, which is a continuation of application No. 15/377,120, filed on Dec. 13, 2016, now Pat. No. 9,802,087, which is a continuation of application No. 14/939,849, filed on Nov. 12, 2015, now Pat. No. 9,555,295, which is a continuation of application No. 14/615,606, filed on Feb. 6, 2015, now Pat. No. 9,199,140, application No. 16/179,406, which is a continuation-in-part of application No. 15/875,496, filed on Jan. 19, 2018, which is a continuation of application No. 15/457,627, filed on Mar. 13, 2017, now Pat. No. 9,895,583, which is a continuation of application No. 15/189,806, filed on Jun. 22, 2016, now Pat. No. 9,636,554, which is a continuation of application No. 14/667,546, filed on Mar. 24, 2015, now Pat. No. 9,399,158, which is a continuation-in-part of application No. 14/615,606, filed on Feb. 6, 2015, now Pat. No. 9,199,140, application No. 16/179,406, which is a continuation-in-part of application No. 15/967,117, filed on Apr. 30, 2018, which is a continuation of application No. 15/457,618, filed on Mar. 13, 2017, now Pat. No. 9,987,526, which is a continuation of application No. 15/163,393, filed on May 24, 2016, now Pat. No. 9,662,547, which is a continuation of application No. 14/667,541, filed on Mar. 24, 2015, now Pat. No. 9,352,197, application No. 16/179,406, which is a continuation-in-part of application No. 15/803,157, filed on Nov. 3, 2017, which is a continuation of application No. 15/290,859, filed on Oct. 11, 2016, now Pat. No. 9,814,945, which is a continuation of application No. 15/040,892, filed on Feb. 10, 2016, now Pat. No. 9,550,096, application No. 16/179,406, which is a continuation-in-part of application No. 16/035,268, filed on Jul. 13, 2018, which is a continuation of application No. 15/725,900, filed on Oct. 5, 2017, now Pat. No. 10,052,532, which is a continuation of application No. 15/445,253, filed on Feb. 28, 2017, now Pat. No. 9,795,843, which is a continuation of application No. 15/227,281, filed on Aug. 3, 2016, now Pat. No. 9,782,643, application No. 16/179,406, which is a continuation-in-part of application No. 15/583,756, filed on May 1, 2017, now Pat. No. 10,143,899, which is a continuation of application No. 15/271,574, filed on Sep. 21, 2016, now Pat. No. 9,669,270, application No. 16/179,406, which is a continuation-in-part of application No. 16/129,526, filed on Sep. 12, 2018, which is a continuation of application No. 15/808,552, filed on Nov. 9, 2017, now Pat. No. 10,099,093, which is a continuation of application No. 15/492,711, filed on Apr. 20, 2017, now Pat. No. 9,821,201, application No. 16/179,406, which is a continuation-in-part of application No. 15/994,860, filed on May 31, 2018, which is a continuation of application No. 15/807,201, filed on Nov. 8, 2017, now Pat. No. 10,010,770, which is a continuation of application No. 15/463,306, filed on Mar. 20, 2017, now Pat. No. 9,821,200, which is a continuation of application No. 15/249,857, filed on Aug. 29, 2016, now Pat. No. 9,630,070, application No. 16/179,406, which is a continuation-in-part of application No. 15/831,148, filed on Dec. 4, 2017, now Pat. No. 10,195,501, which is a continuation of application No. 15/453,701, filed on Mar. 8, 2017, now Pat. No. 9,833,667, application No. 16/179,406, which is a continuation-in-part of application No. 15/967,098, filed on Apr. 30, 2018, which is a continuation of application No. 15/687,273, filed on Aug. 25, 2017, now Pat. No. 9,981,160, application No. 16/179,406, which is a continuation-in-part of application No. 15/910,747, filed on Mar. 2, 2018, which is a continuation of application No. 15/477,972, filed on Apr. 3, 2017, now Pat. No. 9,914,029, which is a continuation of application No. 15/406,408, filed on Jan. 13, 2017, now Pat. No. 9,861,867, application No. 16/179,406, which is a continuation-in-part of application No. 15/981,094, filed on May 16, 2018, which is a continuation of application No. 15/724,035, filed on Oct. 3, 2017, now Pat. No. 9,999,814, which is a continuation of application No. 15/440,968, filed on Feb. 23, 2017, now Pat. No. 9,795,842, application No. 16/179,406, which is a continuation-in-part of application No. 15/970,665, filed on May 3, 2018, which is a continuation of application No. 15/667,343, filed on Aug. 2, 2017, application No. 16/179,406, which is a continuation-in-part of application No. 16/030,403, filed on Jul. 9, 2018.

(60) Provisional application No. 62/042,155, filed on Aug. 26, 2014, provisional application No. 62/048,693, filed on Sep. 10, 2014, provisional application No. 62/101,543, filed on Jan. 9, 2015, provisional application No. 62/105,123, filed on Jan. 19, 2015, provisional application No. 62/109,510, filed on Jan. 29, 2015, provisional application No. 62/115,024, filed on Feb. 11, 2015, provisional application No. 62/120,760, filed on Feb. 25, 2015, provisional application No. 62/138,918, filed on Mar. 26, 2015, provisional application No. 62/184,757, filed on Jun. 25, 2015, provisional application No. 62/194,135, filed on Jul. 17, 2015, provisional application No. 62/195,211, filed on Jul. 21, 2015, provisional application No. 62/281,639, filed on Jan. 21, 2016, provisional application No. 62/296,506, filed on Feb. 17, 2016, provisional application No. 62/301,756, filed on Mar. 1, 2016, provisional application No. 62/362,491, filed on Jul. 14, 2016, provisional application No. 62/291,793, filed on Feb. 5, 2016, provisional application No. 62/329,662, filed on Apr. 29, 2016, provisional application No. 62/337,184, filed on May 16, 2016, provisional application No. 62/361,988, filed on Jul. 13, 2016, provisional application No. 62/356,539, filed on Jun. 30, 2016, provisional application No. 62/360,802, filed on Jul. 11, 2016, provisional application No. 62/380,727, filed on Aug. 29, 2016, provisional application No. 62/406,856, filed on Oct. 11, 2016, provisional application No. 62/412,389, filed on Oct. 25, 2016, provisional application No. 62/419,242, filed on Nov. 8, 2016, provisional application No. 62/444,671, filed on Jan. 10, 2017, provisional application No. 62/445,878, filed on Jan. 13, 2017, provisional application No. 62/512,275, filed on May 30, 2017, provisional application No. 62/530,734, filed on Jul. 10, 2017, provisional application No. 62/624,294, filed on Jan. 31, 2018, provisional application No. 62/581,456, filed on Nov. 3, 2017.

(51) **Int. Cl.**
A63B 1/00 (2006.01)
A63B 60/00 (2015.01)
A63B 60/54 (2015.01)

(52) **U.S. Cl.**
CPC *A63B 60/54* (2015.10); *A63B 2053/045* (2013.01); *A63B 2053/0408* (2013.01); *A63B 2053/0412* (2013.01); *A63B 2053/0433* (2013.01); *A63B 2053/0491* (2013.01); *A63B 2060/002* (2015.10); *A63B 2209/00* (2013.01)

(58) **Field of Classification Search**
CPC A63B 2053/0491; A63B 2060/002; A63B 2209/00; A63B 2053/0408; A63B 2053/045
USPC 273/329, 332, 334–339, 345, 346, 349, 273/350; 473/329, 332, 334–339, 345, 473/346, 347, 349, 350
See application file for complete search history.

(56) **References Cited**

U.S. PATENT DOCUMENTS

1,306,029 A 6/1919 Robertson
D55,867 S 7/1920 Mattern
1,534,600 A 4/1925 Mattern
1,538,312 A 5/1925 Beat
D138,437 S 8/1944 Link
D138,438 S 8/1944 Link
D138,442 S 8/1944 Link
3,556,533 A 1/1971 Hollis
3,652,094 A 3/1972 Glover
D240,748 S 7/1976 Bock
4,085,934 A 4/1978 Churchward
D253,778 S 12/1979 Madison
4,754,977 A 7/1988 Sahm
D307,783 S 5/1990 Linuma
5,106,094 A * 4/1992 Desbiolles A63B 53/04 473/342
D326,885 S 6/1992 Paul
5,219,408 A 6/1993 Sun
D351,883 S 10/1994 Solheim et al.
5,447,311 A 9/1995 Viollaz
5,518,243 A * 5/1996 Redman A63B 53/04 473/334
D378,111 S 2/1997 Parente et al.
D384,120 S 9/1997 De La Cruz et al.
5,788,584 A 8/1998 Parente
D400,625 S 11/1998 Kubica et al.
D400,627 S 11/1998 Kubica et al.
D405,489 S 2/1999 Kubica et al.
D405,492 S 2/1999 Kubica et al.
5,997,415 A 12/1999 Wood
D444,830 S 7/2001 Kubica et al.
6,290,609 B1 9/2001 Takeda
6,306,048 B1 10/2001 McCabe
6,409,612 B1 6/2002 Evans
D478,140 S 8/2003 Burrows
6,638,182 B2 10/2003 Kosmatka
6,773,360 B2 8/2004 Willett
6,811,496 B2 11/2004 Wahl
D508,969 S 8/2005 Hasebe
D513,051 S 12/2005 Barez et al.
D514,179 S 1/2006 Chen et al.
D514,185 S 1/2006 Barez et al.
D520,586 S 5/2006 Bingman
D522,077 S 5/2006 Schweigert et al.
D522,601 S 6/2006 Schweigert et al.
D523,498 S 6/2006 Chen et al.
D526,694 S 8/2006 Schweigert et al.
7,083,530 B2 8/2006 Wahl
7,121,956 B2 10/2006 Lo
D534,599 S 1/2007 Barez et al.
7,166,040 B2 1/2007 Hoffman
D536,401 S 2/2007 Kawami
D536,403 S 2/2007 Kawami
7,186,190 B1 3/2007 Beach
7,223,180 B2 5/2007 Willett
7,261,646 B2 8/2007 De Shiell
7,303,486 B2 12/2007 Imamoto
D563,498 S 3/2008 Jertson et al.
D564,054 S 3/2008 Jertson et al.
D564,055 S 3/2008 Jertson et al.
7,338,388 B2 3/2008 Schweigert
7,347,794 B2 3/2008 Schweigert
D567,317 S 4/2008 Jertson et al.
D569,933 S 5/2008 Jertson et al.
D569,934 S 5/2008 Jertson et al.
D569,935 S 5/2008 Jertson et al.
D569,936 S 5/2008 Jertson et al.
D569,942 S 5/2008 Jertson et al.
D570,937 S 6/2008 Schweigert et al.
D570,938 S 6/2008 Jertson et al.
7,407,447 B2 8/2008 Beach
7,410,425 B2 8/2008 Willett
7,410,426 B2 8/2008 Willett
7,419,441 B2 9/2008 Hoffman
7,448,963 B2 11/2008 Beach
7,448,964 B2 11/2008 Schweigert
7,494,425 B2 2/2009 De Shiell
7,530,904 B2 5/2009 Beach
D594,520 S 6/2009 Schweigert et al.
D594,521 S 6/2009 Jertson et al.
D594,919 S 6/2009 Schweigert et al.
7,540,811 B2 6/2009 Beach
D597,620 S 8/2009 Taylor et al.
7,568,985 B2 8/2009 Beach
7,578,753 B2 8/2009 Beach
D600,297 S 9/2009 Jertson et al.
7,584,531 B2 9/2009 Schweigert
7,588,502 B2 9/2009 Nishino
7,591,738 B2 9/2009 Beach
D603,472 S 11/2009 Schweigert et al.
7,611,424 B2 11/2009 Nagai
7,621,823 B2 11/2009 Beach
D605,715 S 12/2009 Barez et al.
7,632,194 B2 12/2009 Beach
7,658,686 B2 2/2010 Soracco
7,713,142 B2 5/2010 Hoffman
7,717,804 B2 5/2010 Beach
7,717,805 B2 5/2010 Beach
D618,746 S 6/2010 Jertson et al.
D618,747 S 6/2010 Schweigert et al.
D618,753 S 6/2010 Jertson et al.
D618,754 S 6/2010 Schweigert et al.
7,744,484 B1 6/2010 Chao
7,798,203 B2 9/2010 Schweigert
7,846,041 B2 12/2010 Beach
D635,626 S 4/2011 Nicolette
7,927,229 B2 4/2011 Jertson
D638,893 S 5/2011 Schweigert et al.
D638,896 S 5/2011 Schweigert et al.
7,963,861 B2 6/2011 Beach
8,012,038 B1 9/2011 Beach
D647,585 S 10/2011 Jertson et al.
8,088,025 B2 1/2012 Wahl
8,096,896 B2 1/2012 De Schiell
D661,751 S 6/2012 Nicolette et al.
D661,756 S 6/2012 Nicolette et al.
8,257,196 B1 9/2012 Abbott
8,257,197 B2 9/2012 Schweigert
8,262,506 B2 9/2012 Watson
8,287,402 B2 10/2012 De Shiell
D673,630 S 1/2013 Schweigert
D673,632 S 1/2013 Schweigert et al.
8,371,957 B2 2/2013 Schweigert
D680,179 S 4/2013 Solheim et al.
8,414,422 B2 4/2013 Peralta
8,485,919 B2 7/2013 Rice
D691,230 S 10/2013 Chen et al.
8,562,457 B2 10/2013 Beach
8,608,587 B2 12/2013 Henrikson
8,628,431 B2 1/2014 Schweigert
8,651,975 B2 2/2014 Soracco

(56) **References Cited**

U.S. PATENT DOCUMENTS

8,663,026	B2	3/2014	Blowers	
8,777,778	B2	7/2014	Solheim	
8,784,232	B2	7/2014	Jertson	
8,790,196	B2	7/2014	Solheim	
8,808,108	B2	8/2014	Schweigert	
D712,989	S	9/2014	Gillig	
8,826,512	B2	9/2014	Schweigert	
8,858,362	B1	10/2014	Leposky	
8,961,336	B1	2/2015	Parsons	
D724,164	S	3/2015	Schweigert et al.	
8,979,671	B1	3/2015	Demille	
D729,892	S	5/2015	Nicolette et al.	
D733,234	S	6/2015	Nicolette	
9,199,140	B1	12/2015	Schweigert	
9,199,143	B1	12/2015	Parsons	
D753,251	S	4/2016	Schweigert et al.	
D756,471	S	5/2016	Nicolette et al.	
9,352,197	B2	5/2016	Parsons	
D760,334	S	6/2016	Schweigert et al.	
9,399,352	B2	7/2016	Mizutani	
9,427,634	B2	8/2016	Parsons	
9,452,325	B2	9/2016	Deshiell	
9,550,096	B2	1/2017	Parsons	
9,630,070	B2	4/2017	Parsons	
9,795,842	B1	10/2017	Parsons	
9,839,821	B2	12/2017	Deshiell	
2003/0104878	A1	6/2003	Yabu	
2003/0148818	A1	8/2003	Myrhum	
2004/0033846	A1	2/2004	Caldwell	
2004/0043833	A1*	3/2004	Galloway	A63B 53/02 473/345
2004/0087388	A1	5/2004	Beach	
2006/0015049	A1	1/2006	Suarez	
2006/0105856	A1	5/2006	Lo	
2006/0111200	A1	5/2006	Poynor	
2007/0004527	A1	1/2007	Helmstetter	
2007/0129161	A1	6/2007	Matsunaga	
2007/0238551	A1	10/2007	Yokota	
2007/0293344	A1	12/2007	Davis	
2008/0004133	A1	1/2008	Schweigert	
2008/0015049	A1	1/2008	Imamoto	
2008/0188322	A1	8/2008	Anderson	
2009/0029795	A1	1/2009	Schweigert	
2010/0144461	A1	6/2010	Ban	
2010/0167837	A1	7/2010	Ban	
2010/0331102	A1	12/2010	Golden	
2011/0143858	A1	6/2011	Peralta	
2012/0142445	A1	6/2012	Burnett	
2012/0190479	A1	7/2012	Rice	
2012/0202615	A1	8/2012	Beach	
2012/0220387	A1	8/2012	Beach	
2013/0210542	A1	8/2013	Harbert	
2013/0303304	A1	11/2013	Sato	
2013/0318772	A1	12/2013	Wahl	
2014/0187346	A1*	7/2014	Beno	A63B 60/00 473/332
2014/0235369	A1	8/2014	Willett	
2014/0349779	A1	11/2014	Mizutani	
2015/0231454	A1	8/2015	Parsons	
2015/0231458	A1	8/2015	Petersen	
2015/0231806	A1	8/2015	Parsons	
2015/0360098	A1	12/2015	Parsons	
2016/0059090	A1	3/2016	Parsons	
2016/0339308	A1	11/2016	Parsons	
2018/0056144	A1*	3/2018	Parsons	A63B 53/0466

OTHER PUBLICATIONS

International Search Report and Written Opinion Received in Connection With the Corresponding Application No. PCT/US2015/016666, dated May 14, 2015 (10 Pages).

International Search Report and Written Opinion Issued in Connection With Corresponding Application No. PCT/US2015/42484 dated Oct. 19, 2015 (12 Pages).

International Search Report and Written Opinion Issued in Connection With Corresponding Application No. PCT/US2015/042282 dated Oct. 13, 2015 (12 Pages).

U.S. Appl. No. 29/512,313, Nicolette, "Golf Club Head," filed Dec. 18, 2018.

Wall, Jonathan, "Details: Phil's Prototype Mack Daddy PM-Grind Wedge," (http://www.pgatour.com/equipmentreport/2015/01/21/callaway-wedge.html), www.pgatour.com, PGA Tour, Inc., Published Jan. 21, 2015.

International Search Report and Written Opinion Received in Connection With the Corresponding Application No. PCT/US2016/17474, dated May 12, 2016 (13 Pages).

International Search Report and Written Opinion Received in Connection With the Corresponding Application No. PCT/US2017/013513, dated Mar. 17, 2017 (10 Pages).

International Search Report and Written Opinion Received in Connection With the Corresponding Application No. PCT/US2017/28402, dated Jul. 18, 2017 (9 Pages).

* cited by examiner

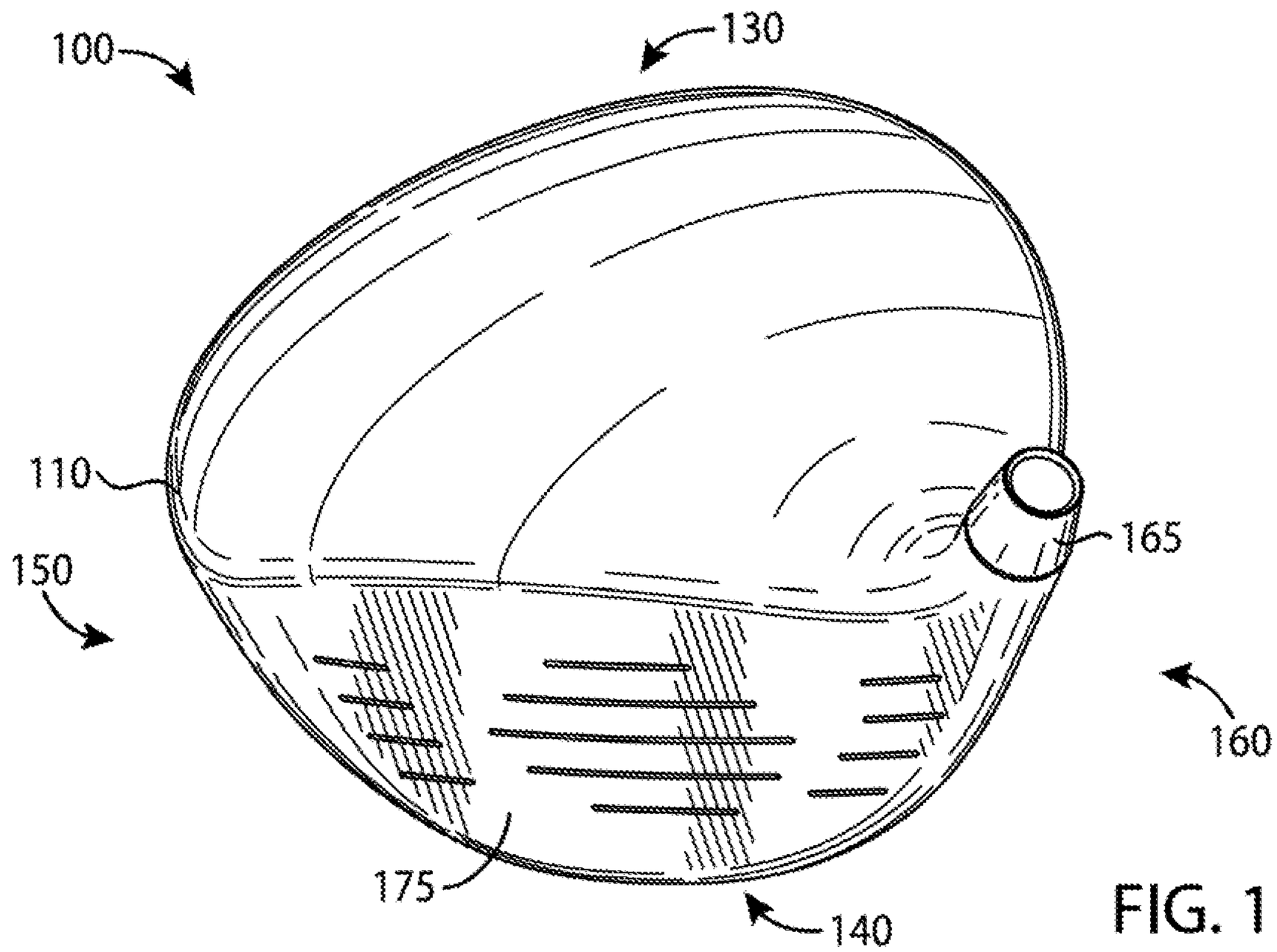
100
130
110
150
165
160
175
140

FIG. 1

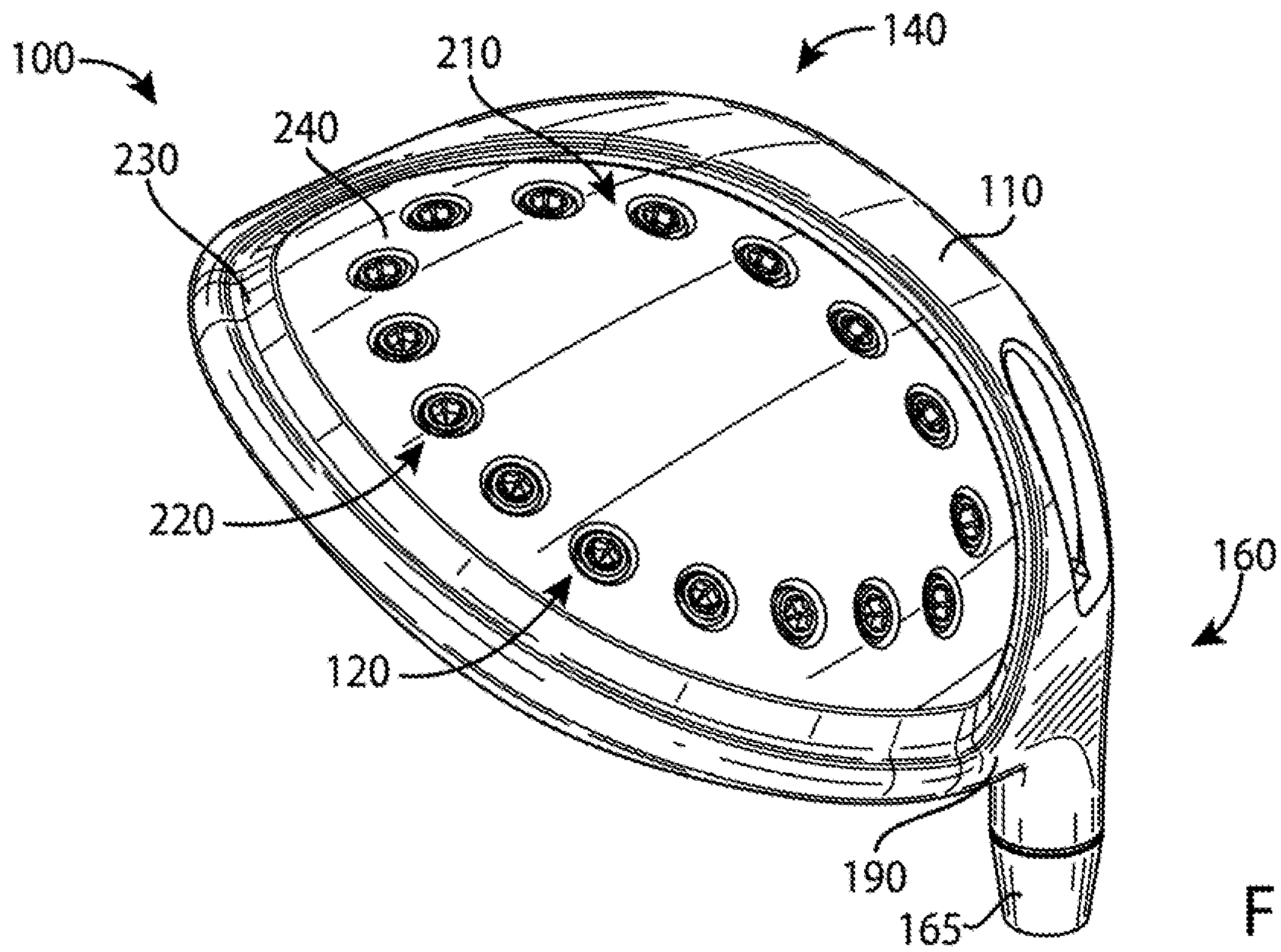
100
210
140
240
230
110
220
160
120
190
165

FIG. 2

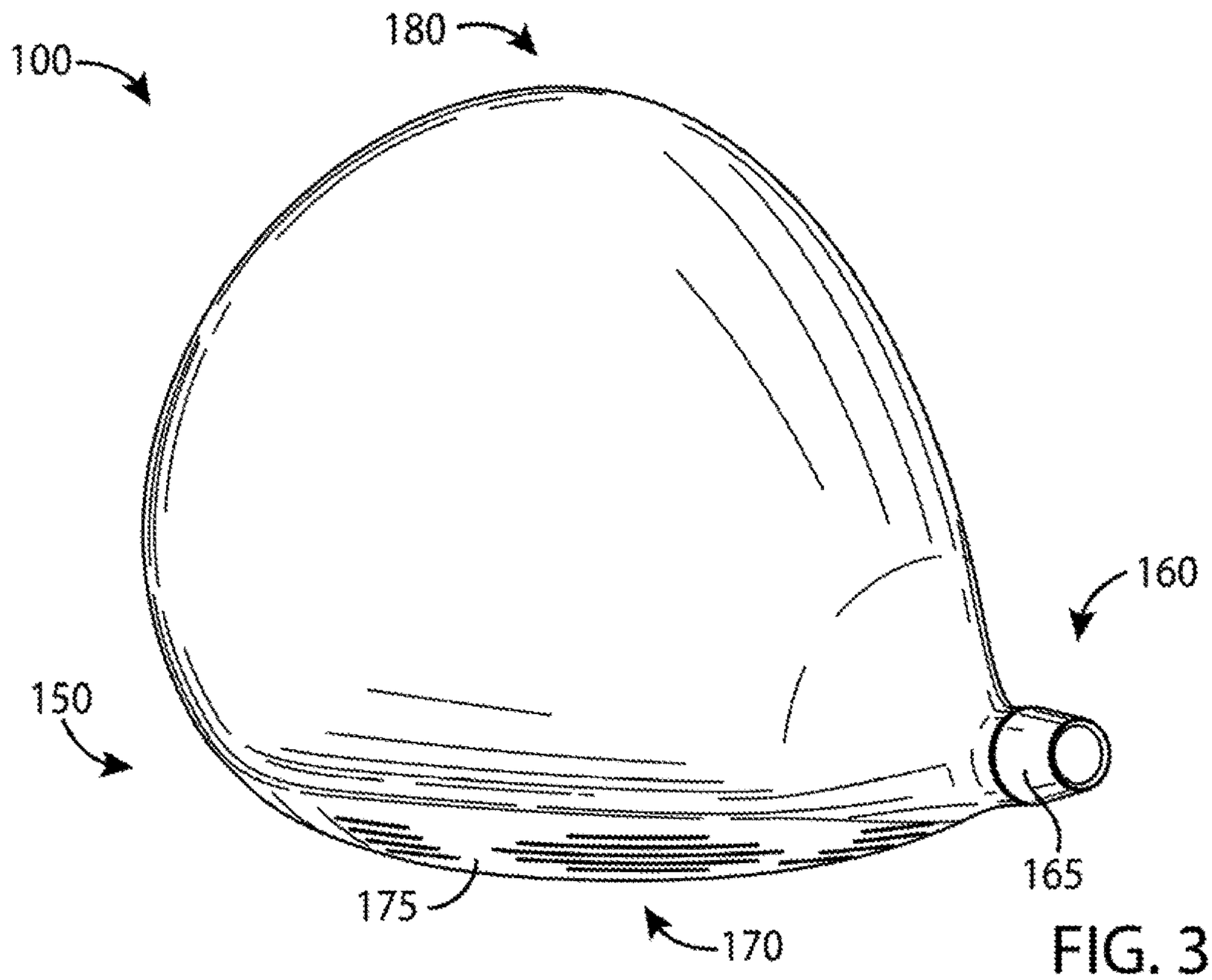
100
180
160
150
165
175
170

FIG. 3

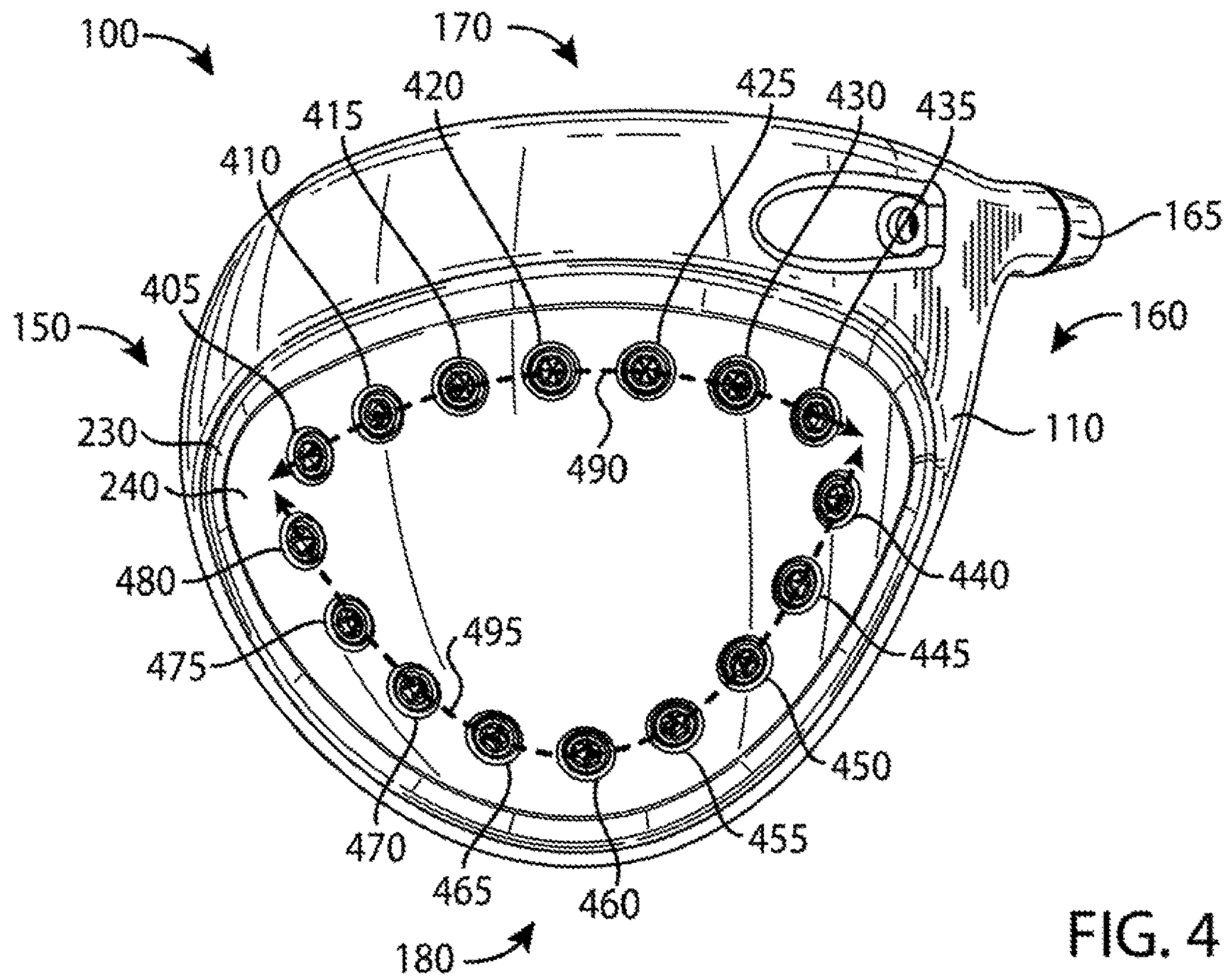
100
170
420
425
430
435
415
410
165
405
150
160
230
110
490
240
440
480
495
445
475
450
470
455
465
460
180

FIG. 4

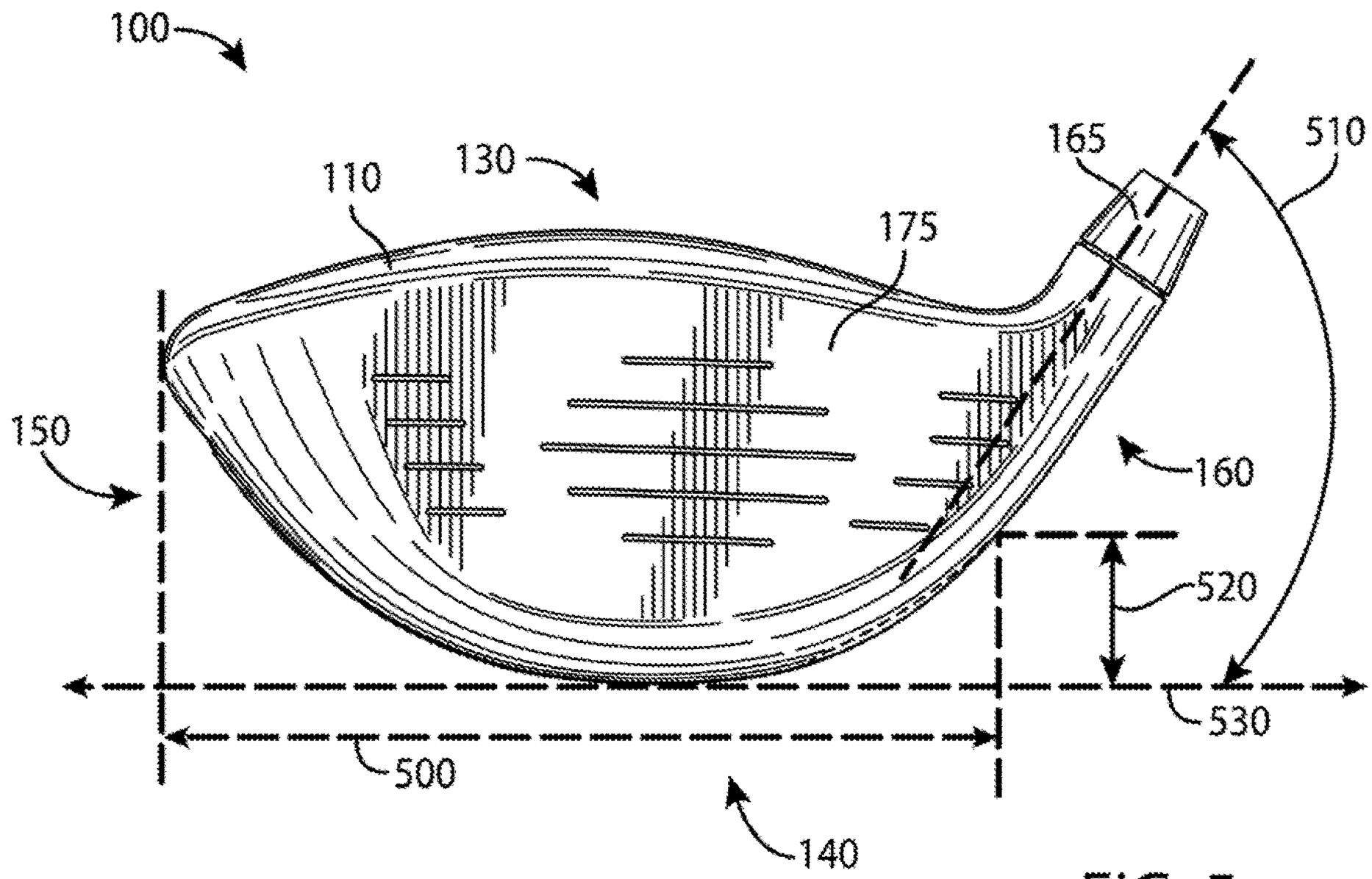
100
110
130
165
510
175
150
160
520
530
500
140

FIG. 5

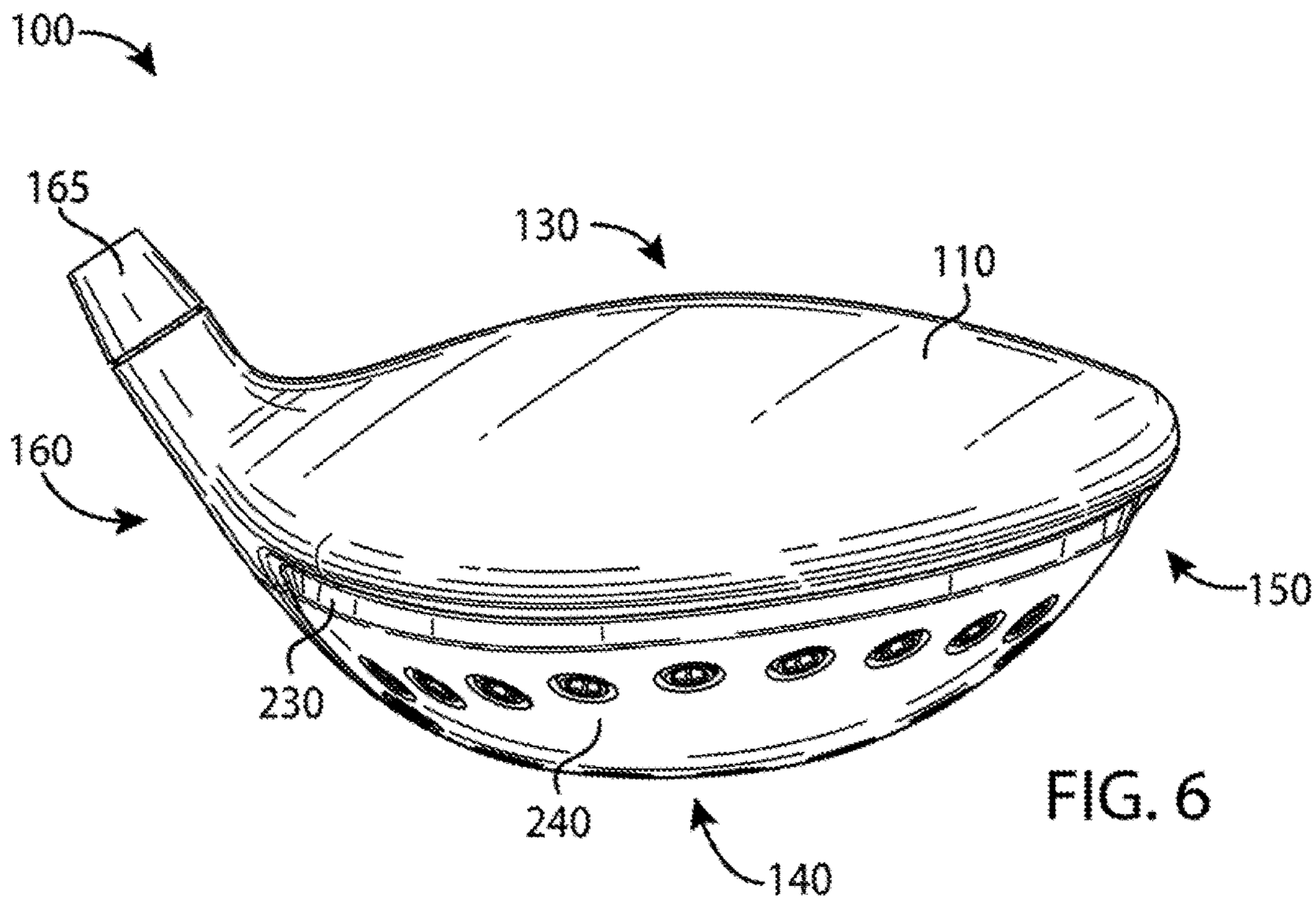
100
165
130
110
160
150
230
240
140

FIG. 6

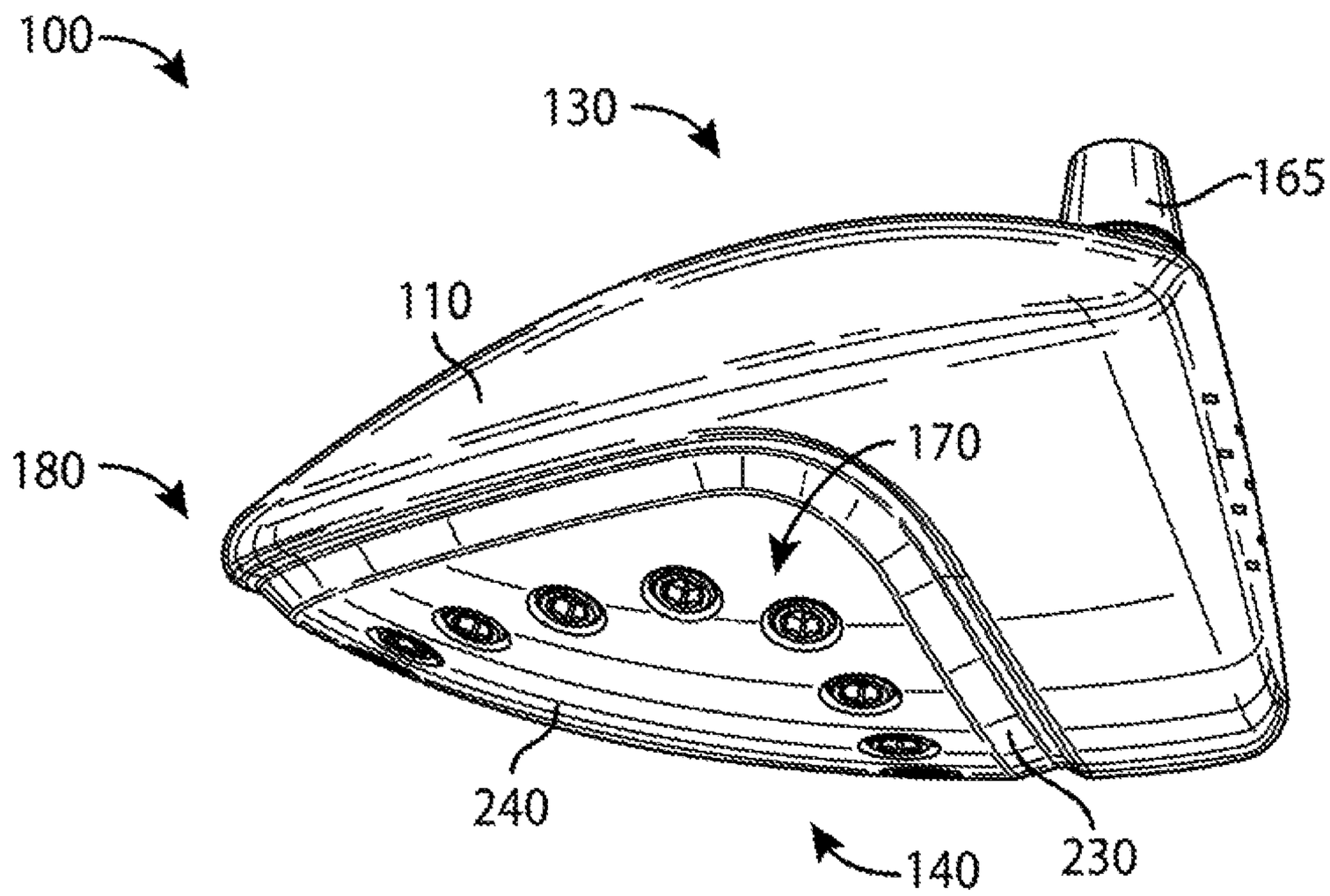
100
130
165
110
180
170
240
140
230

FIG. 7

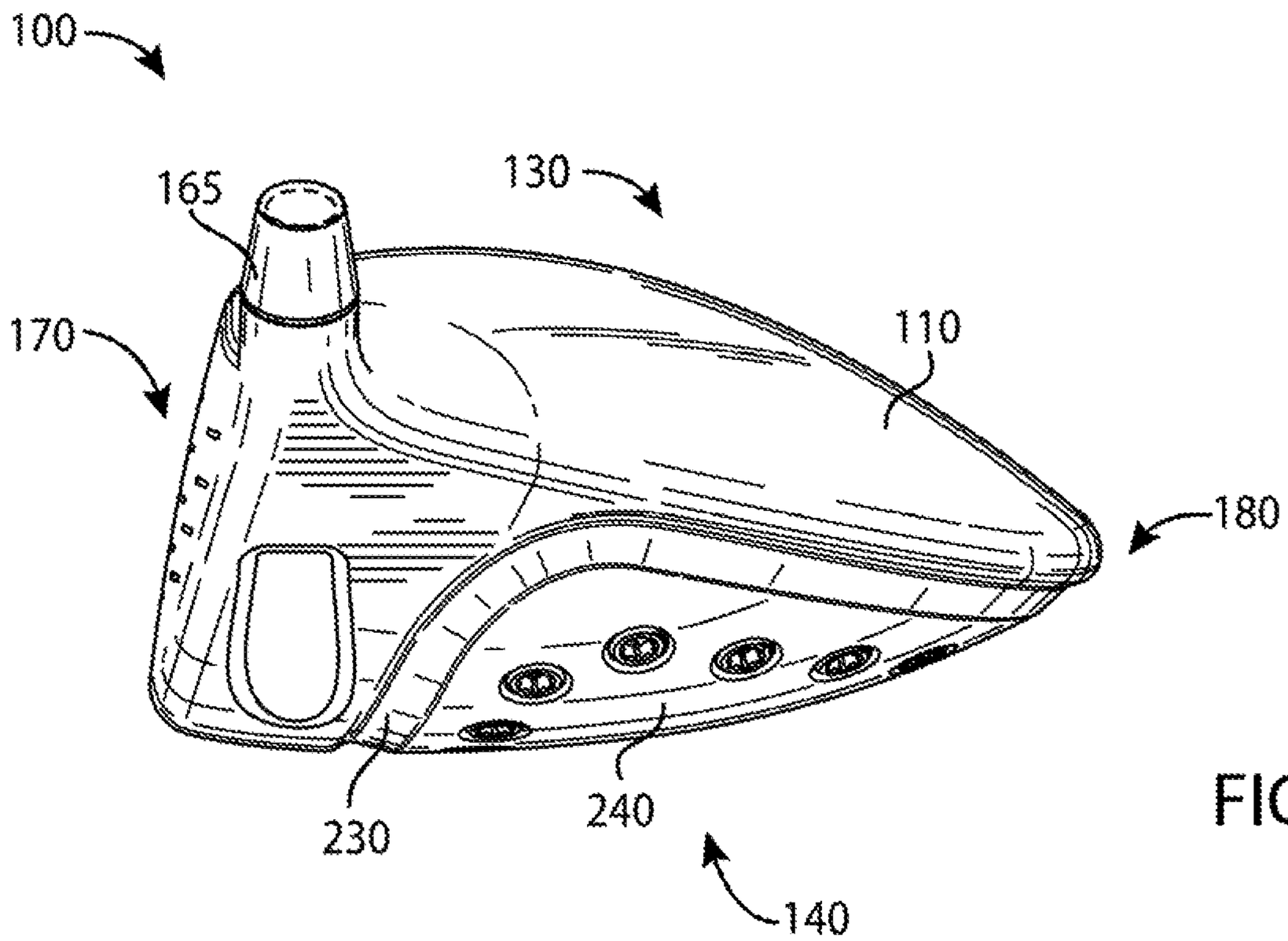
100
165
130
170
110
180
230
240
140

FIG. 8

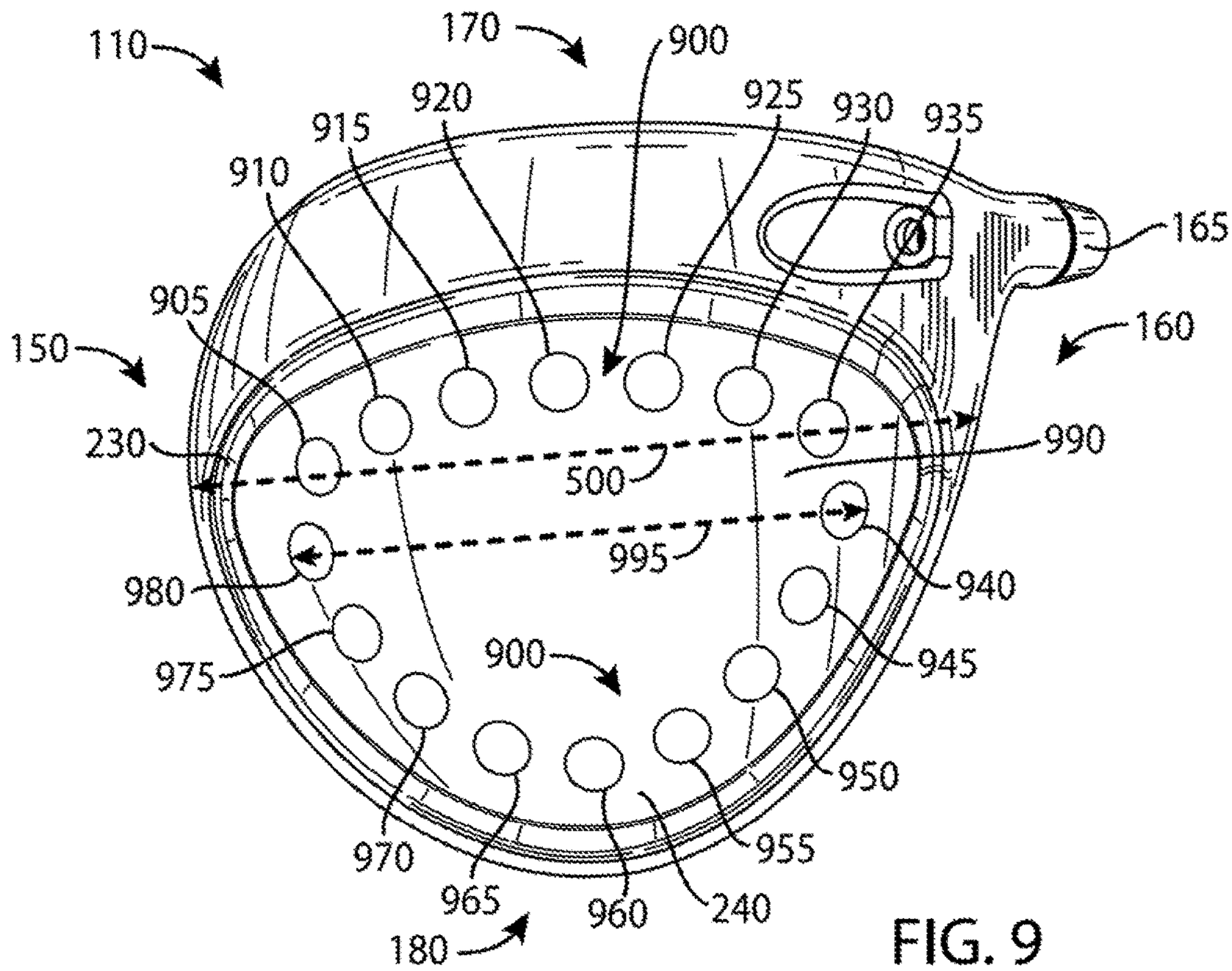

FIG. 9

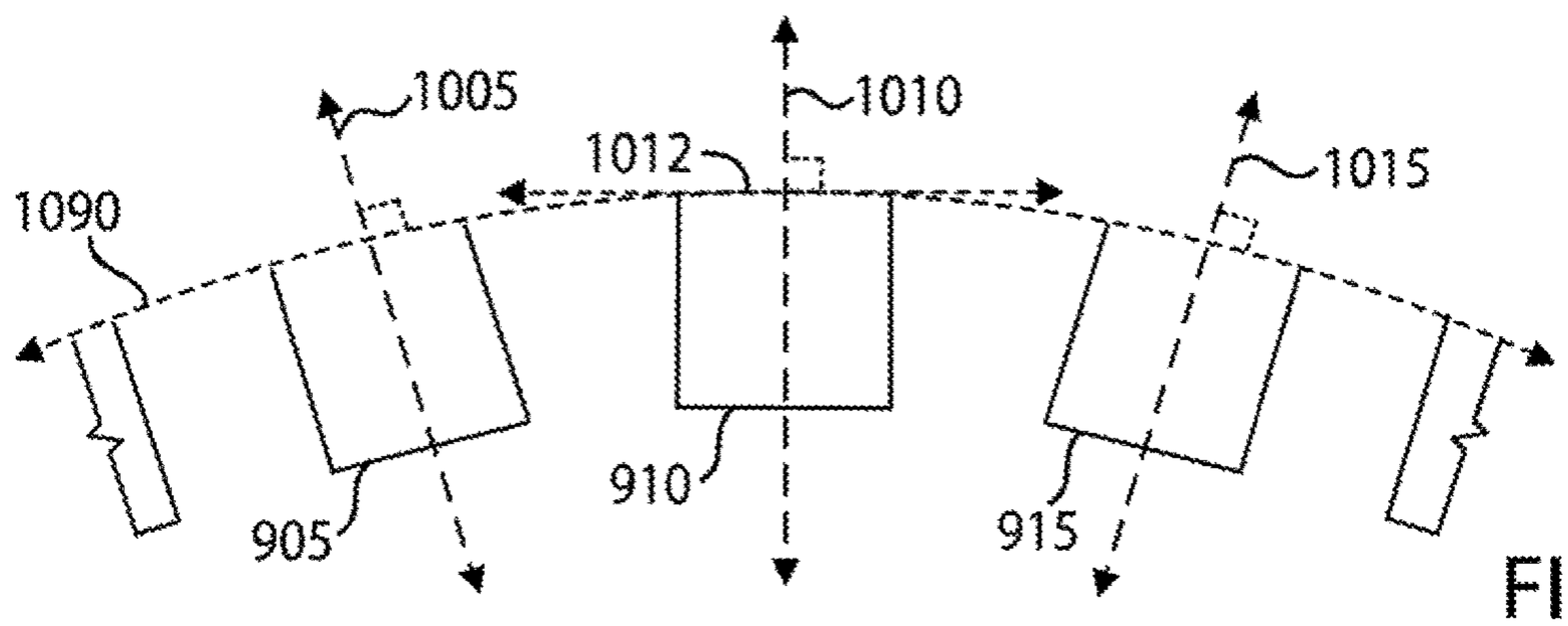

FIG. 10

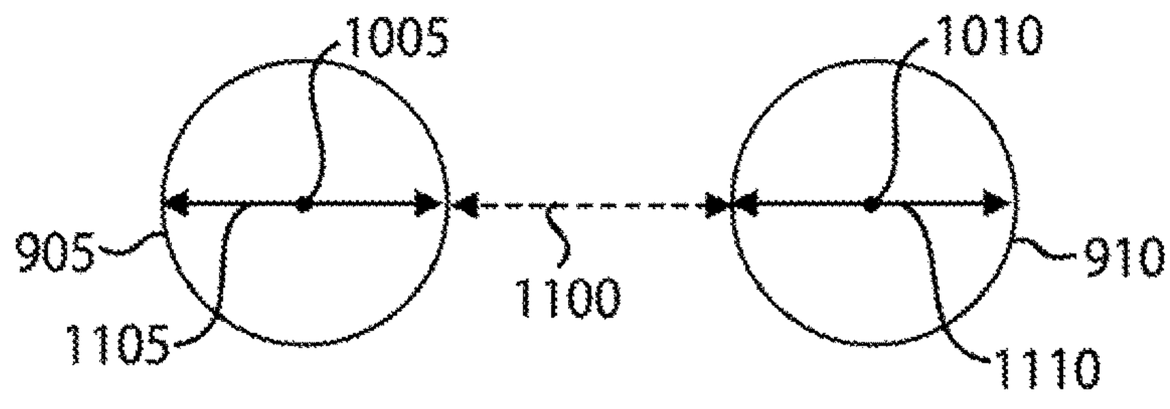

FIG. 11

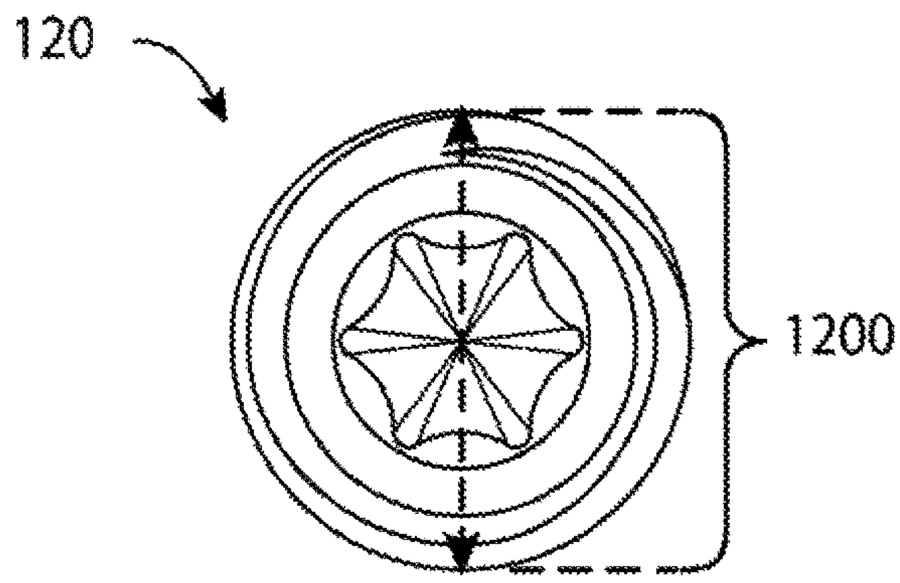

FIG. 12

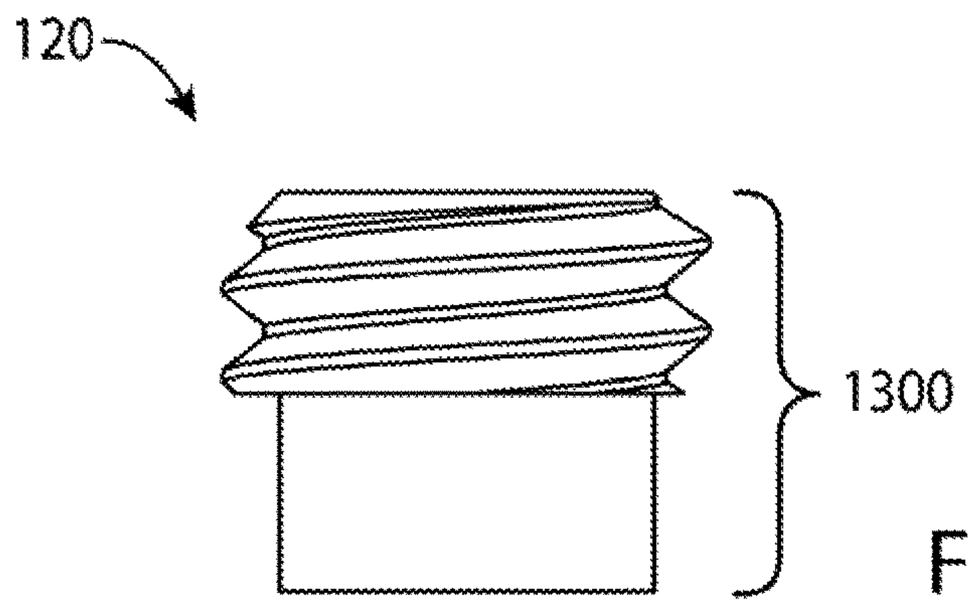

FIG. 13

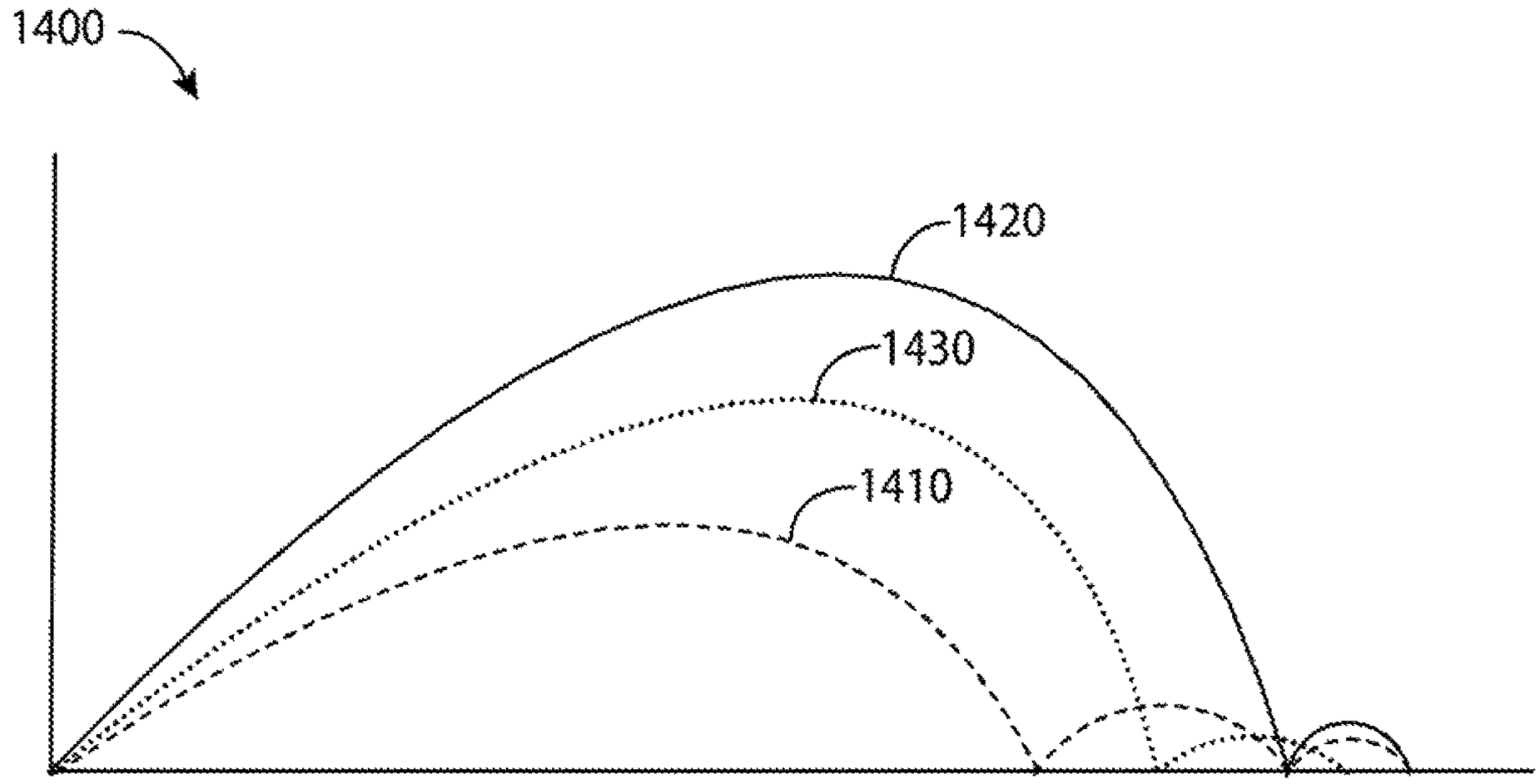

FIG. 14

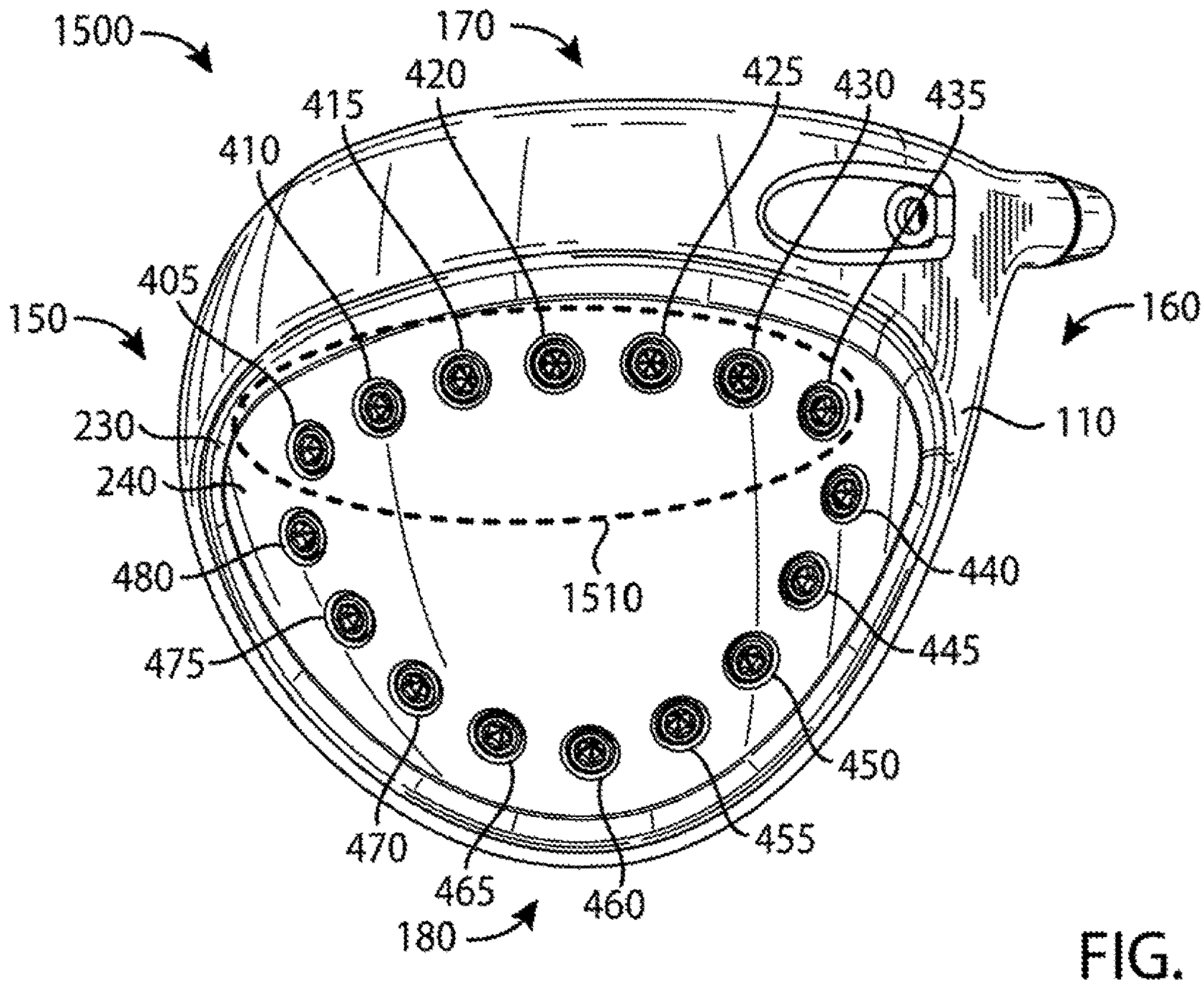
1500
170
420
425
430
435
415
410
405
150
160
230
110
240
1510
440
480
445
475
450
470
455
465
460
180

FIG. 15

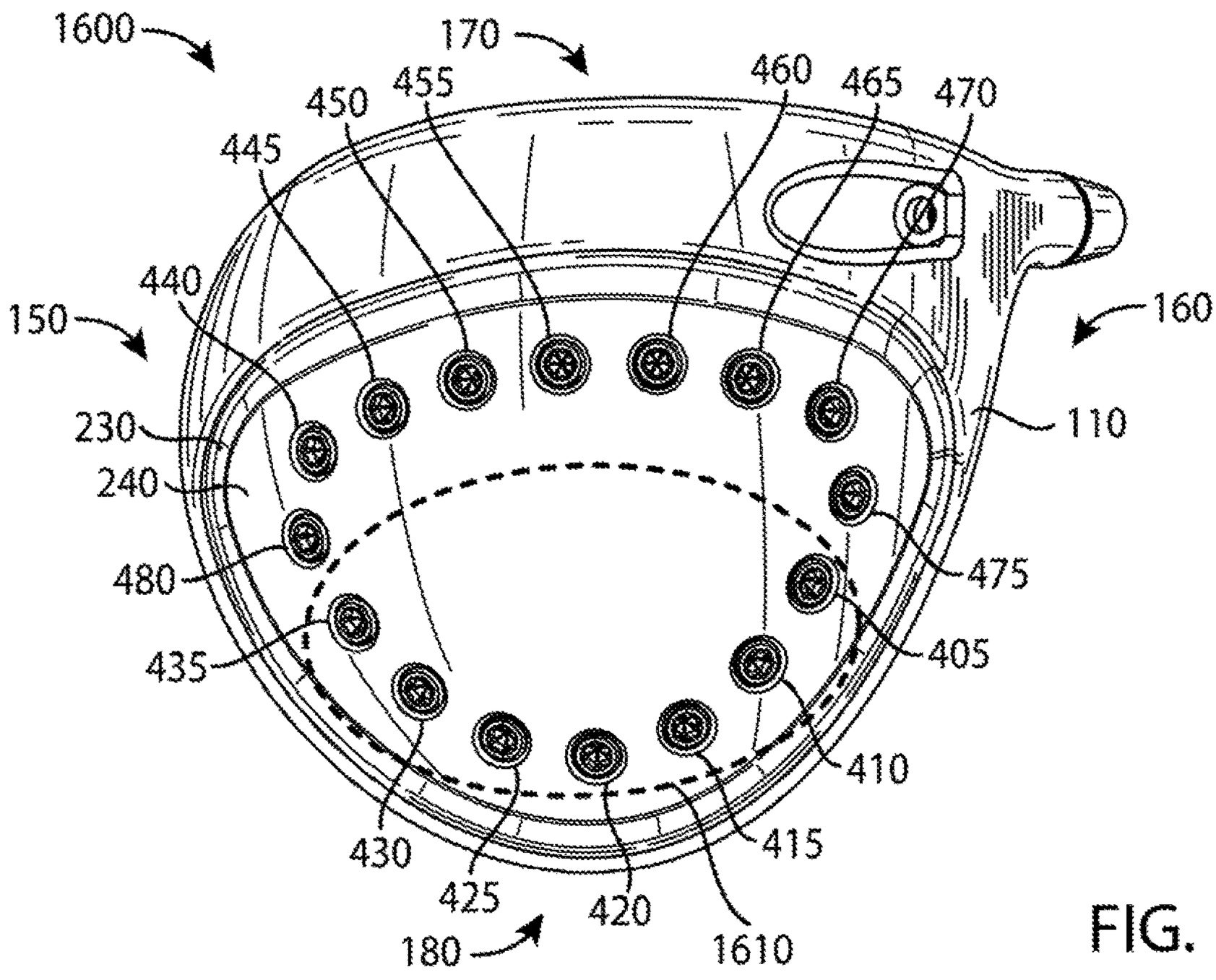
1600
170
460
465
470
450
455
445
440
150
160
230
110
240
475
480
405
435
410
430
415
425
420
180
1610

FIG. 16

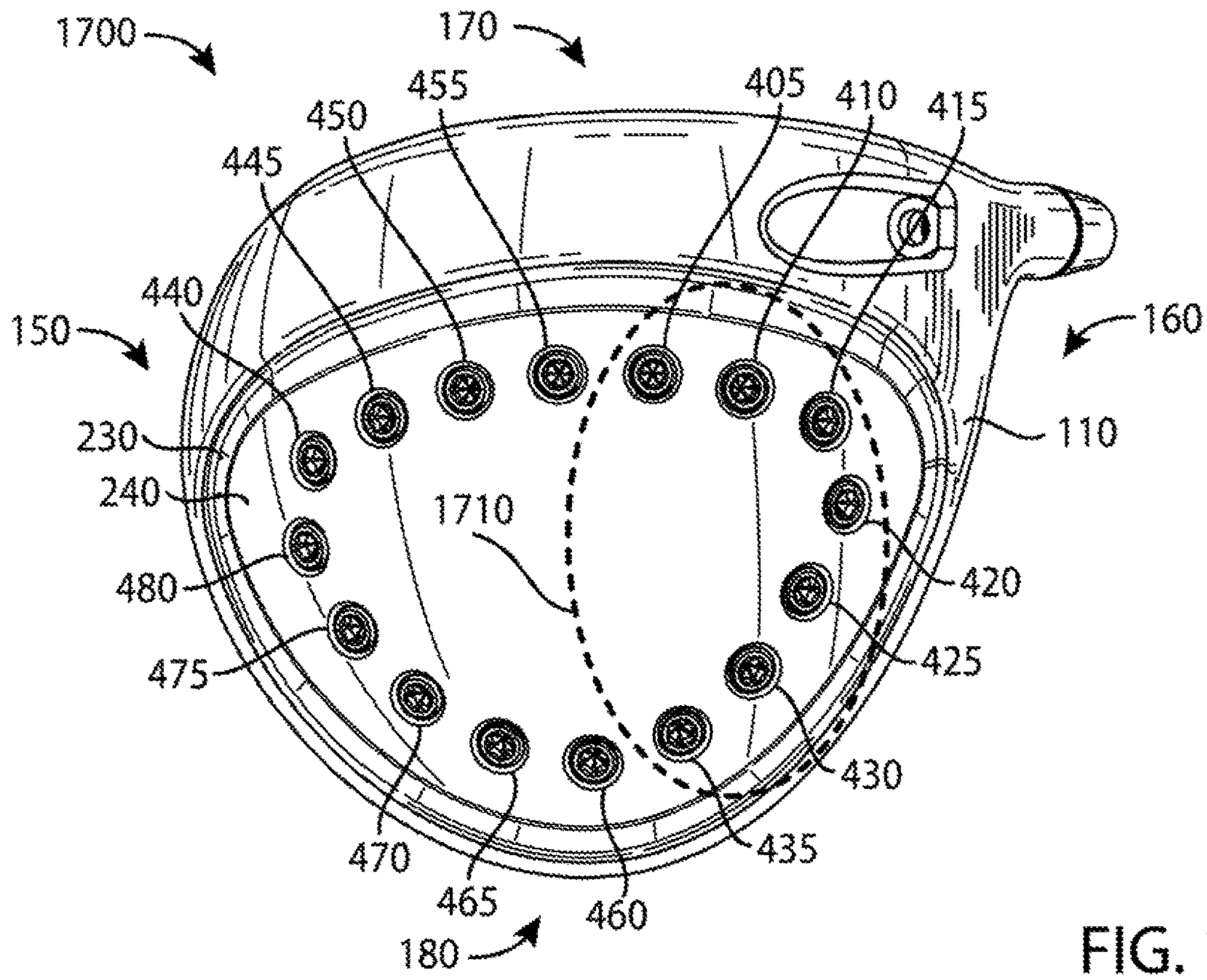
1700
170
455
450
445
405
410
415
440
150
160
230
110
240
1710
480
420
475
425
430
470
435
465
460
180

FIG. 17

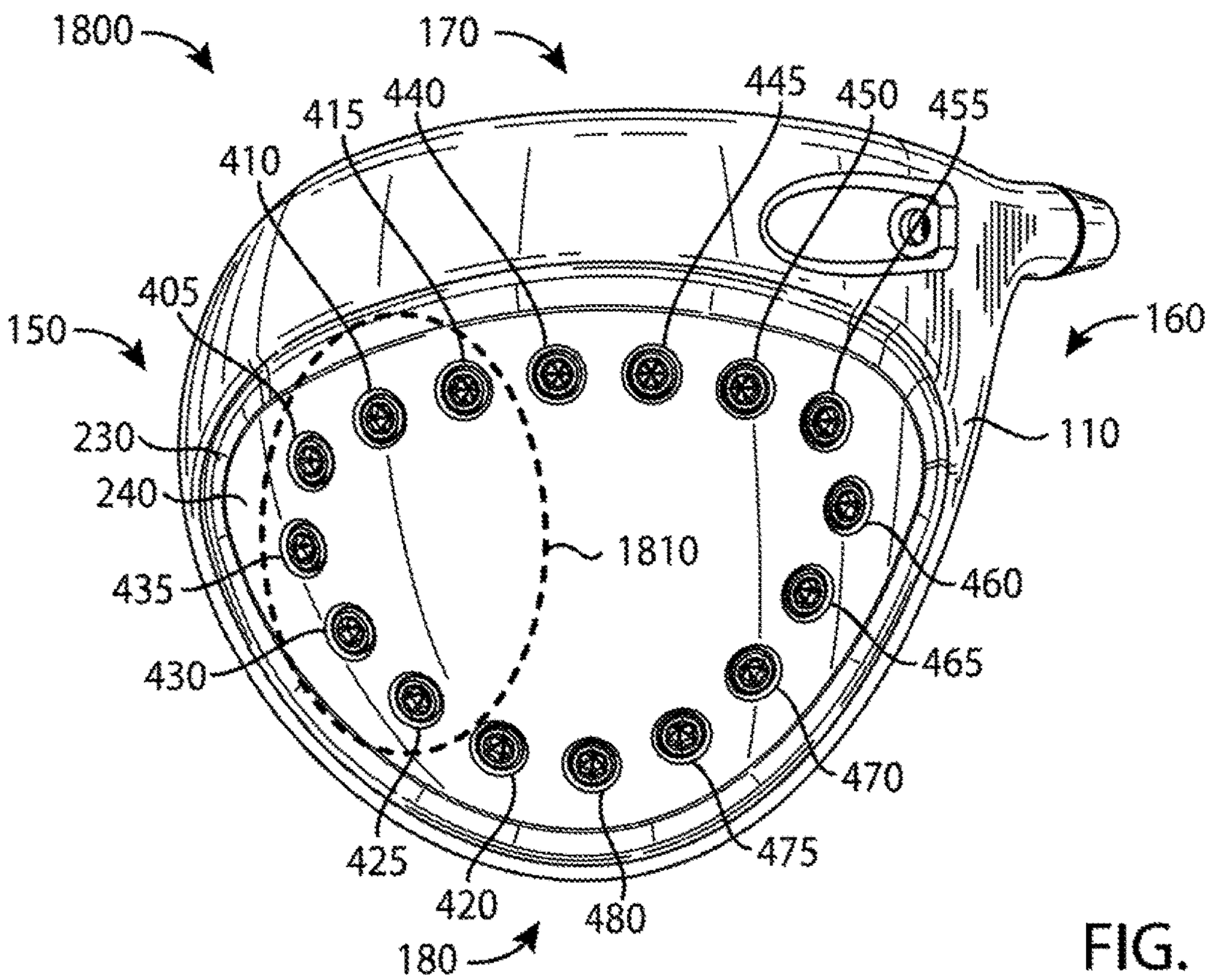
1800
170
445
450
455
415
440
410
405
150
160
230
110
240
1810
460
435
465
430
470
425
475
420
480
180

FIG. 18

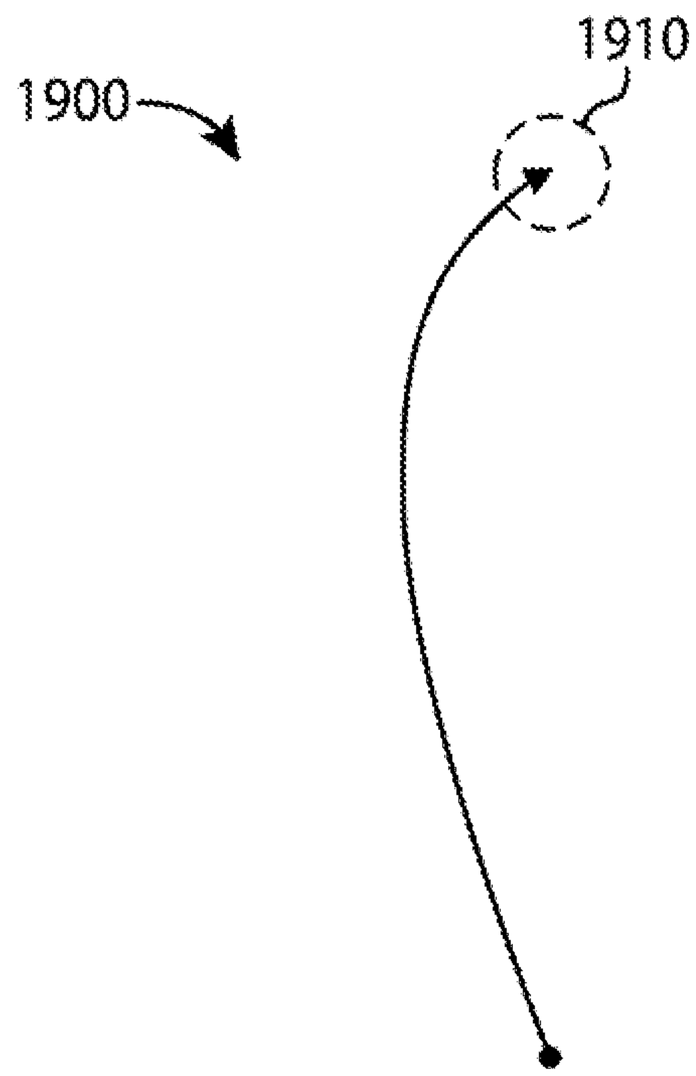
1900
1910

FIG. 19

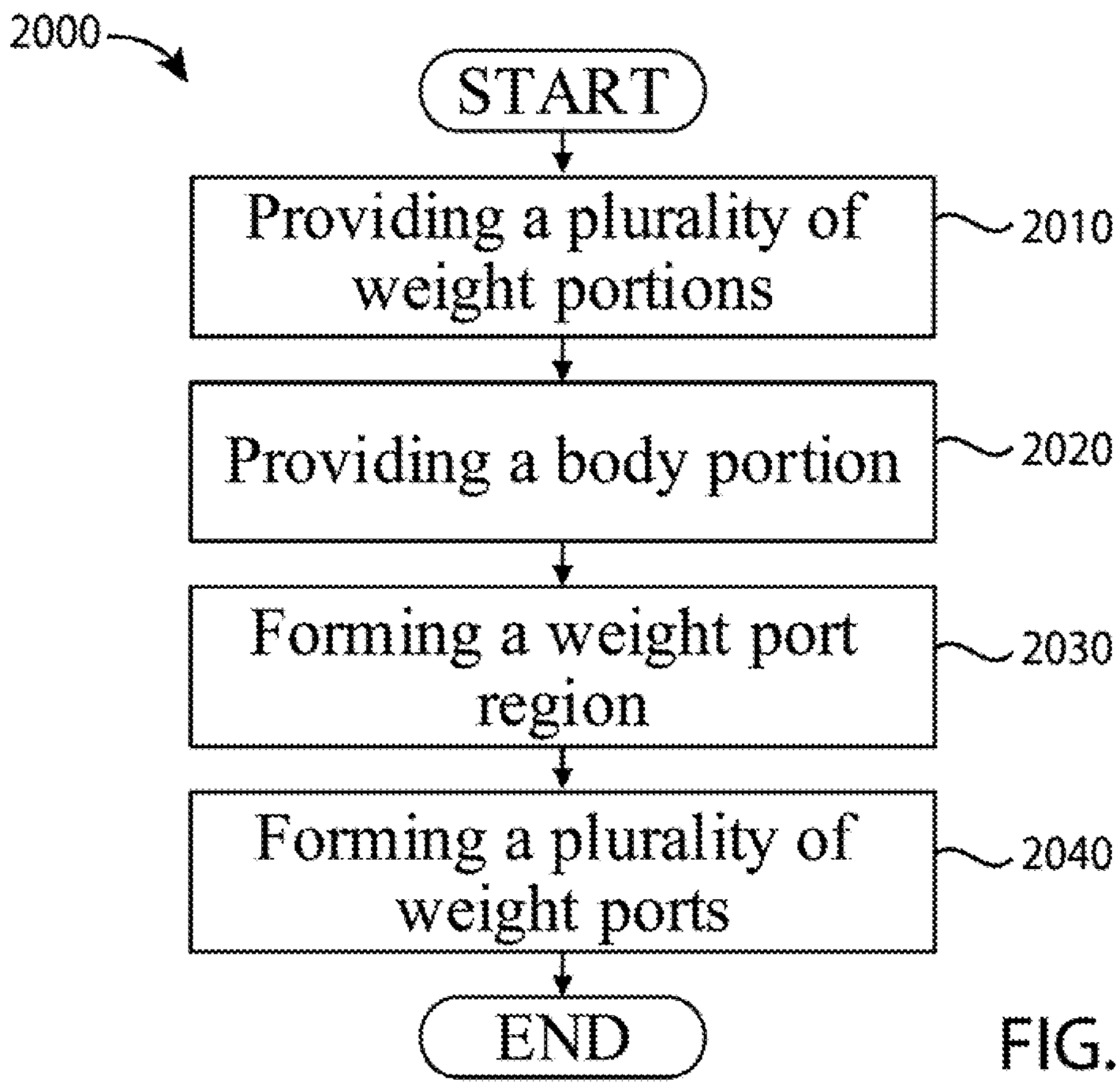
2000
START
Providing a plurality of weight portions
2010
Providing a body portion
2020
Forming a weight port region
2030
Forming a plurality of weight ports
2040
END

FIG. 20

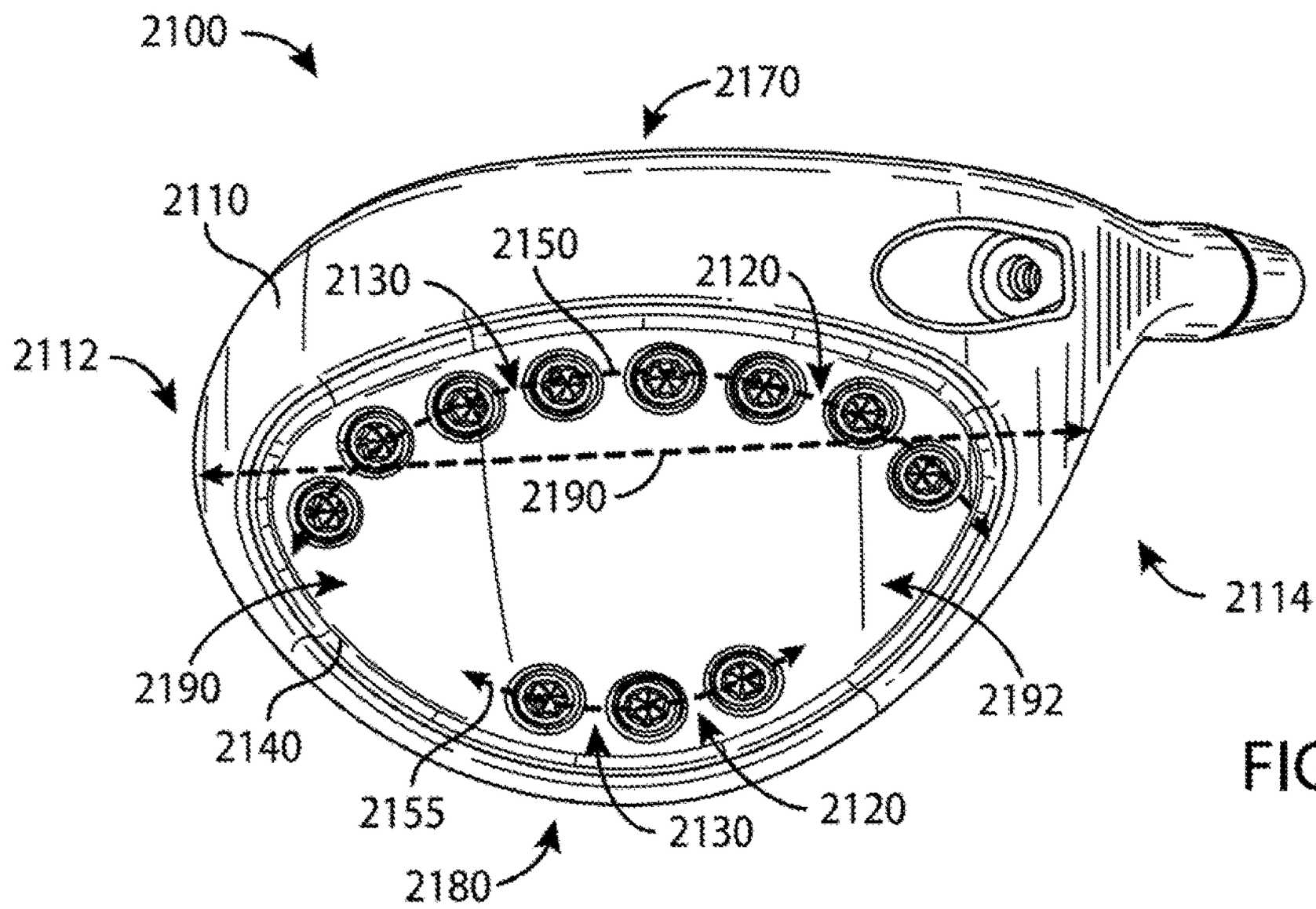
2100
2170
2110
2150
2130
2120
2112
2190
2114
2190
2192
2140
2155
2130
2120
2180

FIG. 21

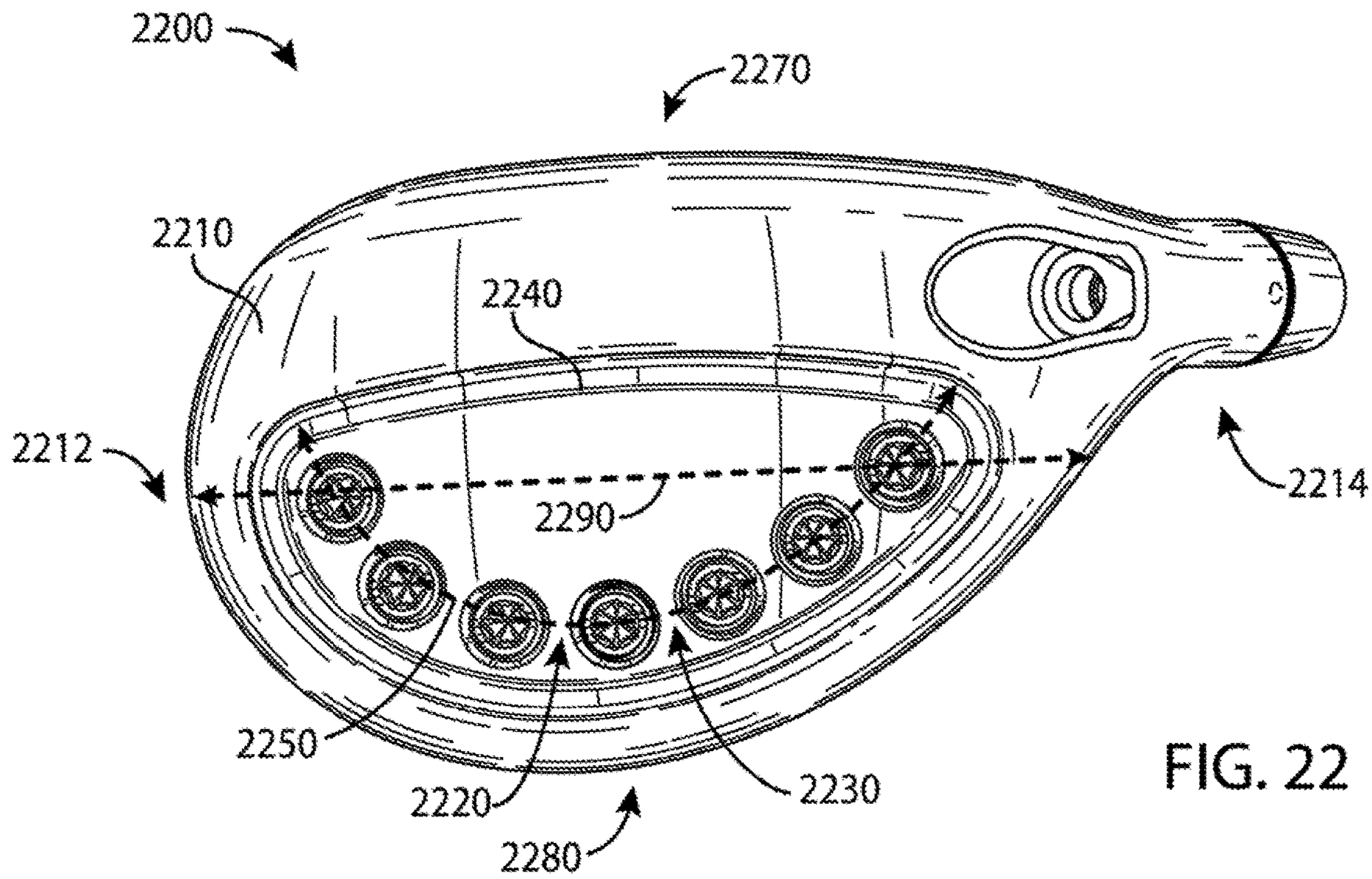
2200
2270
2210
2240
2212
2214
2290
2250
2220
2230
2280

FIG. 22

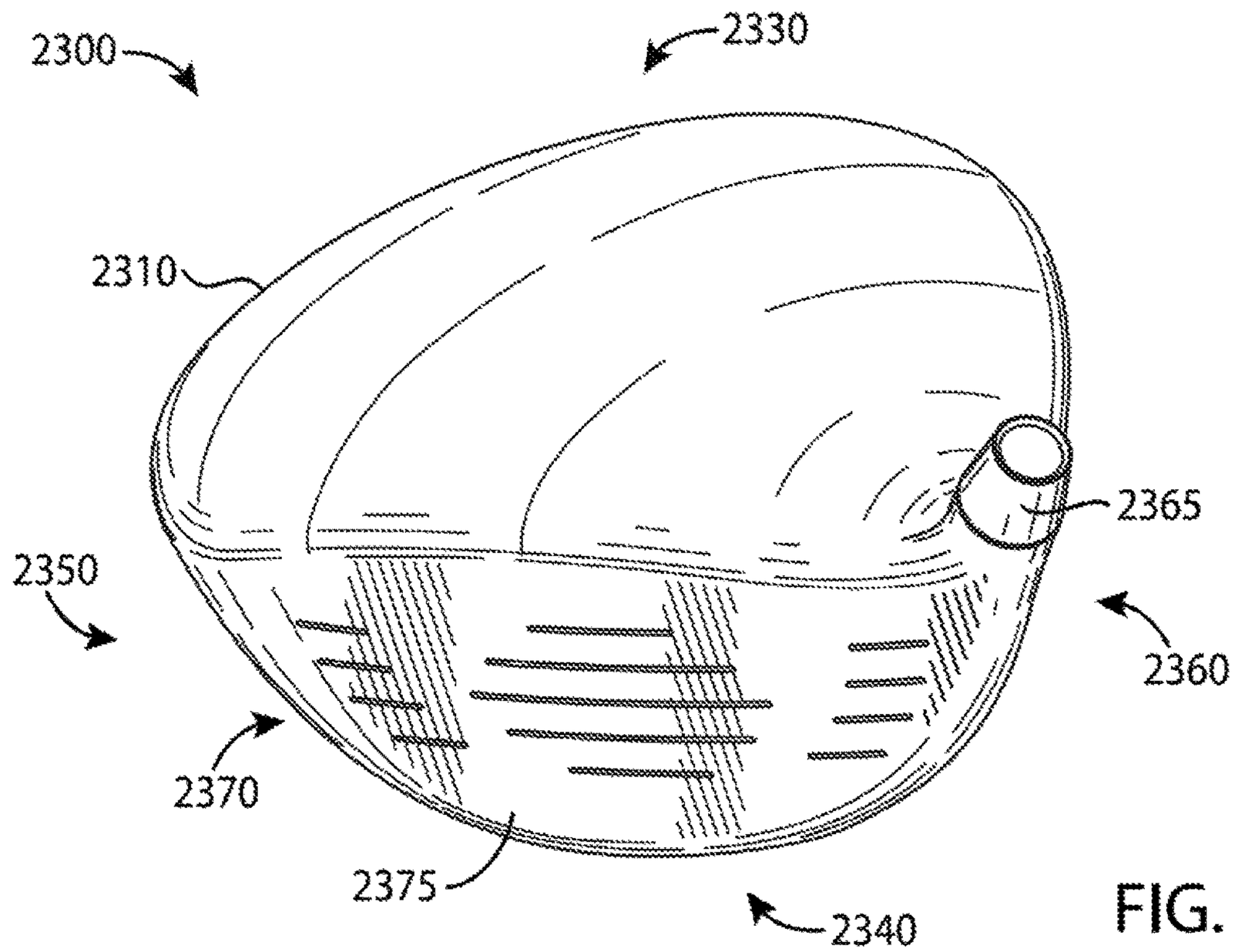
2300
2330
2310
2365
2350
2360
2370
2375
2340

FIG. 23

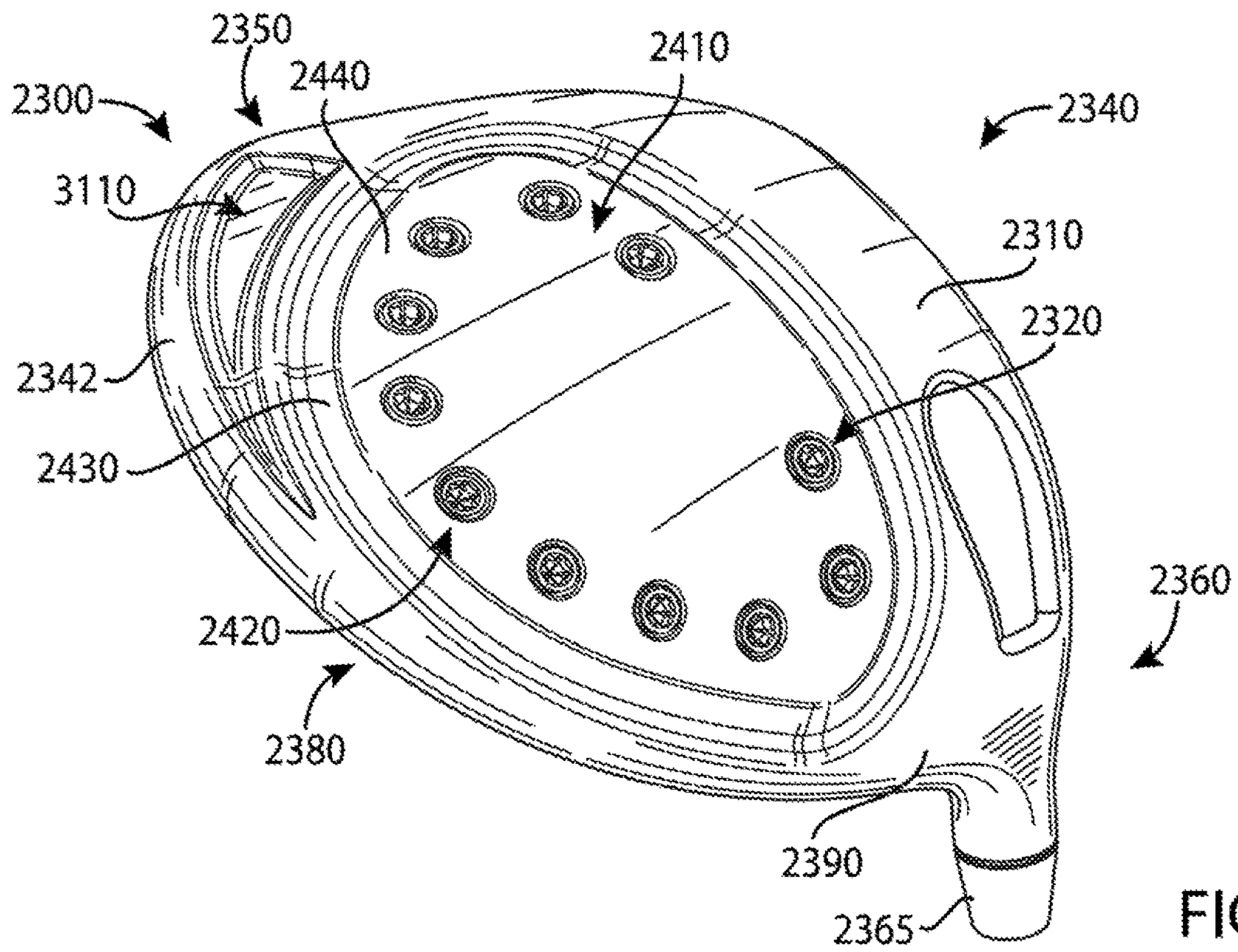
2350
2410
2440
2300
2340
3110
2310
2320
2342
2430
2360
2420
2380
2390
2365

FIG. 24

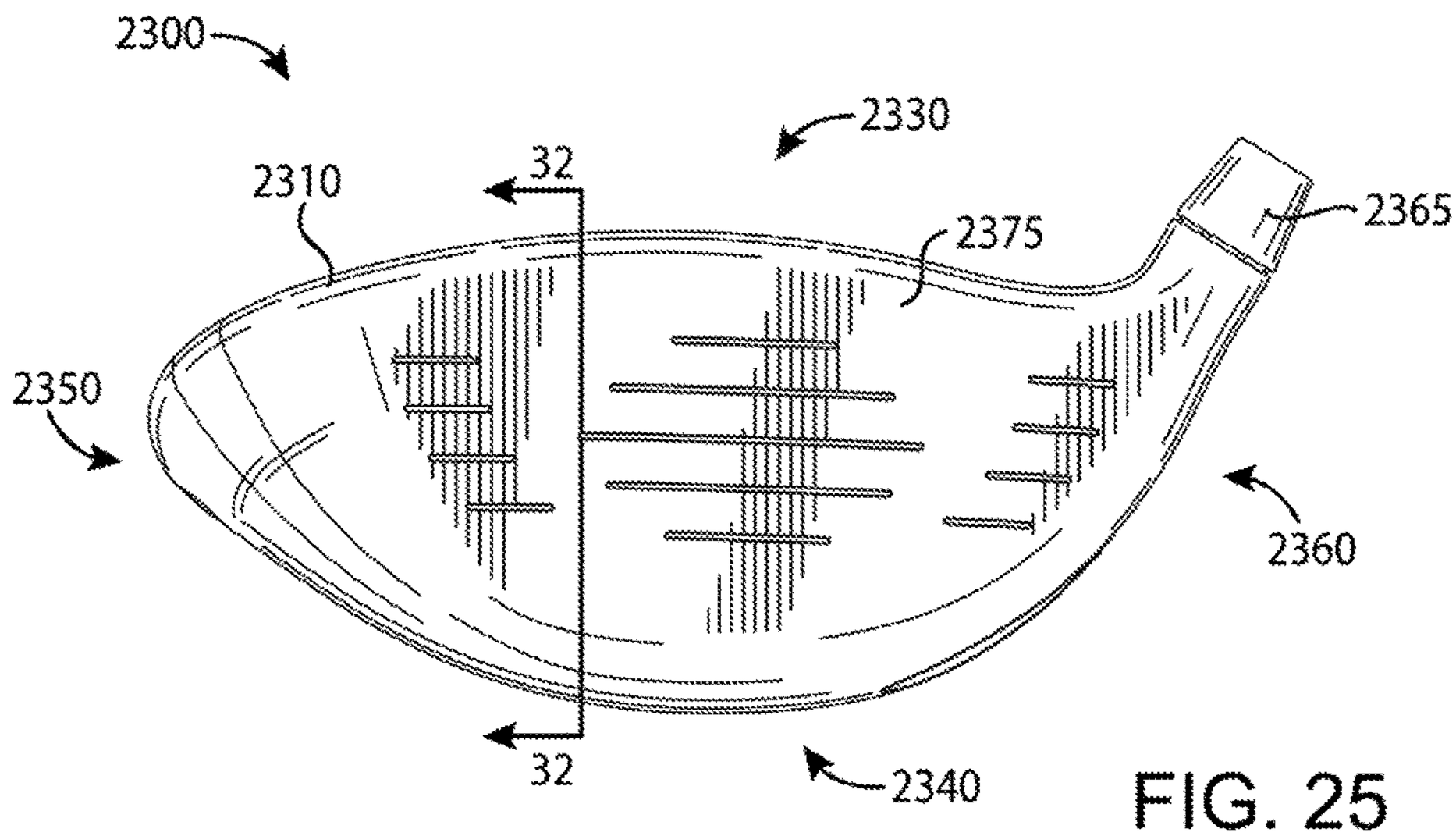
2300
2330
32
2310
2375
2365
2350
2360
32
2340

FIG. 25

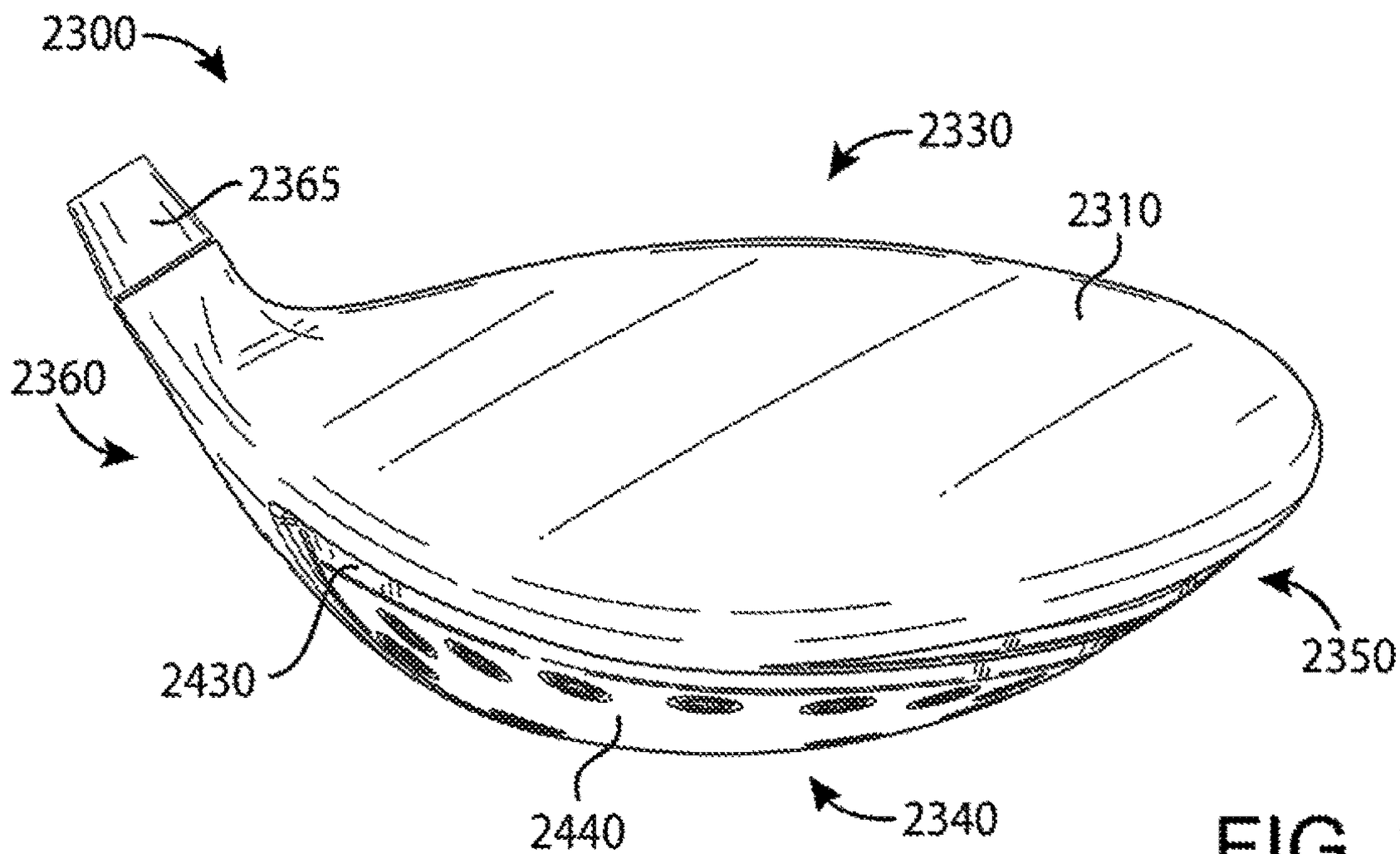
2300
2330
2365
2310
2360
2430
2350
2440
2340

FIG. 26

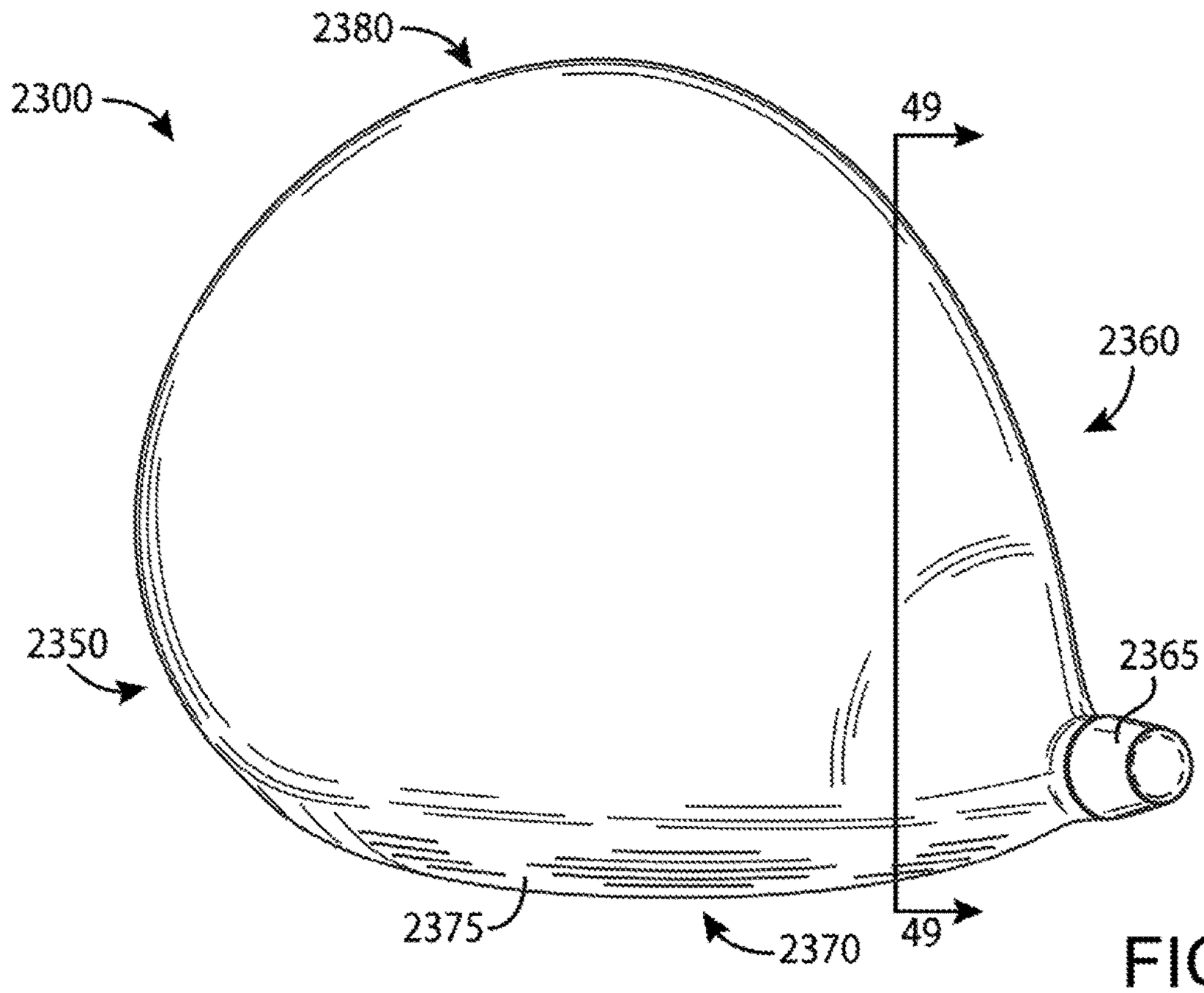
2380
2300
49
2360
2350
2365
2375
2370
49

FIG. 27

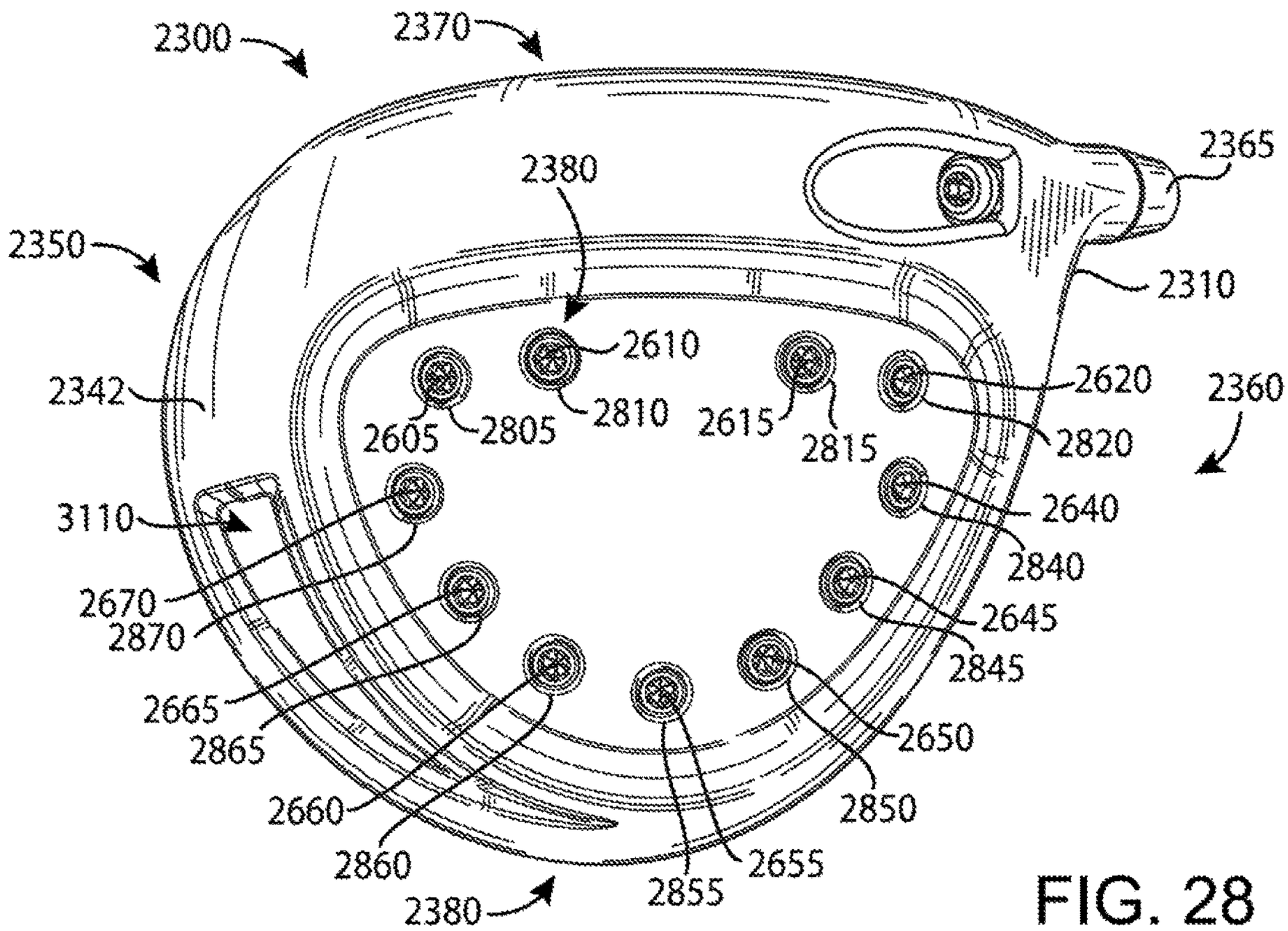
2300
2370
2365
2380
2350
2310
2610
2342
2620
2360
2605
2805
2810
2615
2815
2820
3110
2640
2840
2670
2645
2870
2845
2665
2650
2865
2850
2660
2655
2860
2855
2380

FIG. 28

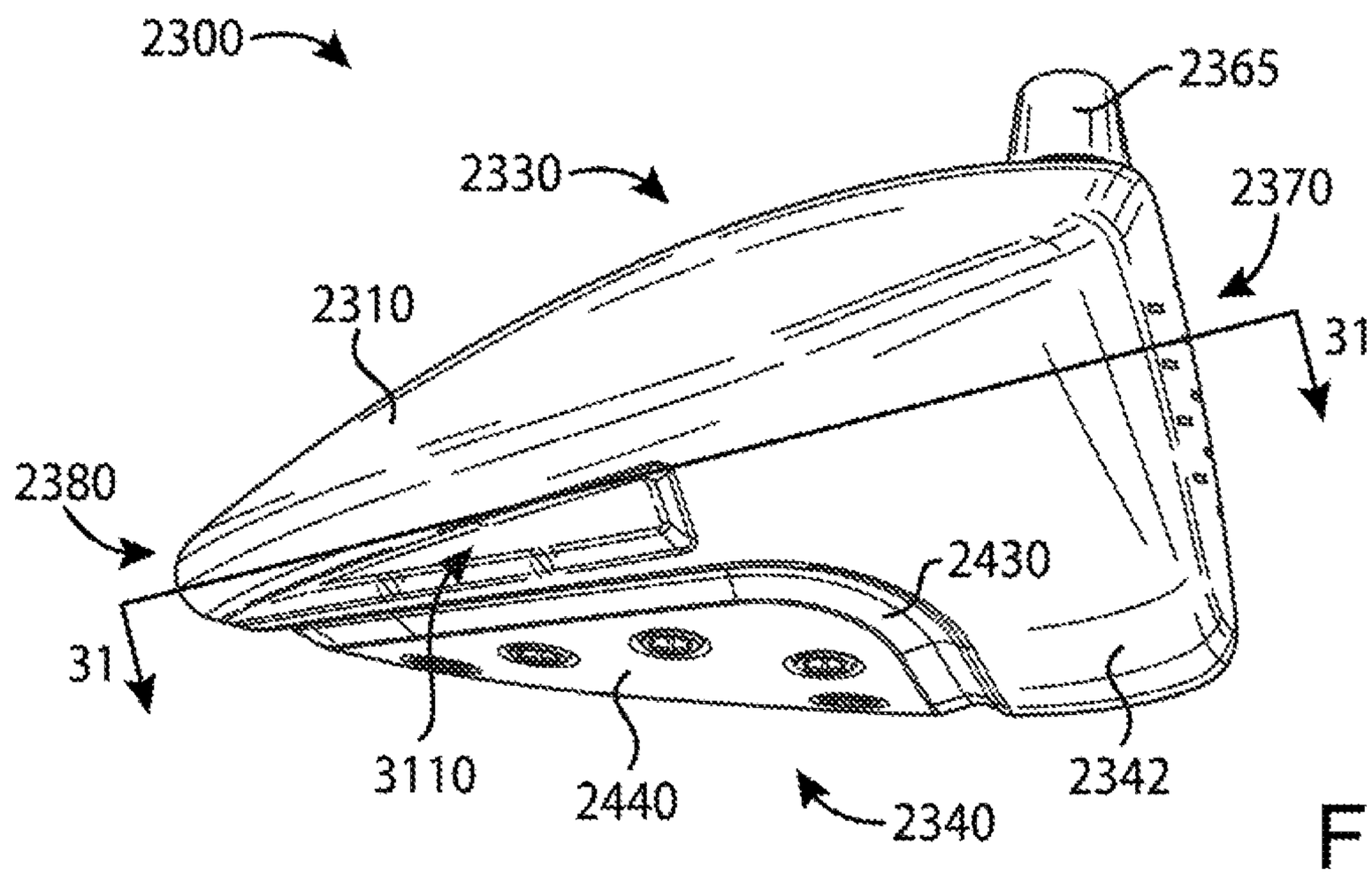
2300
2365
2330
2370
2310
31
2380
2430
31
3110
2440
2342
2340

FIG. 29

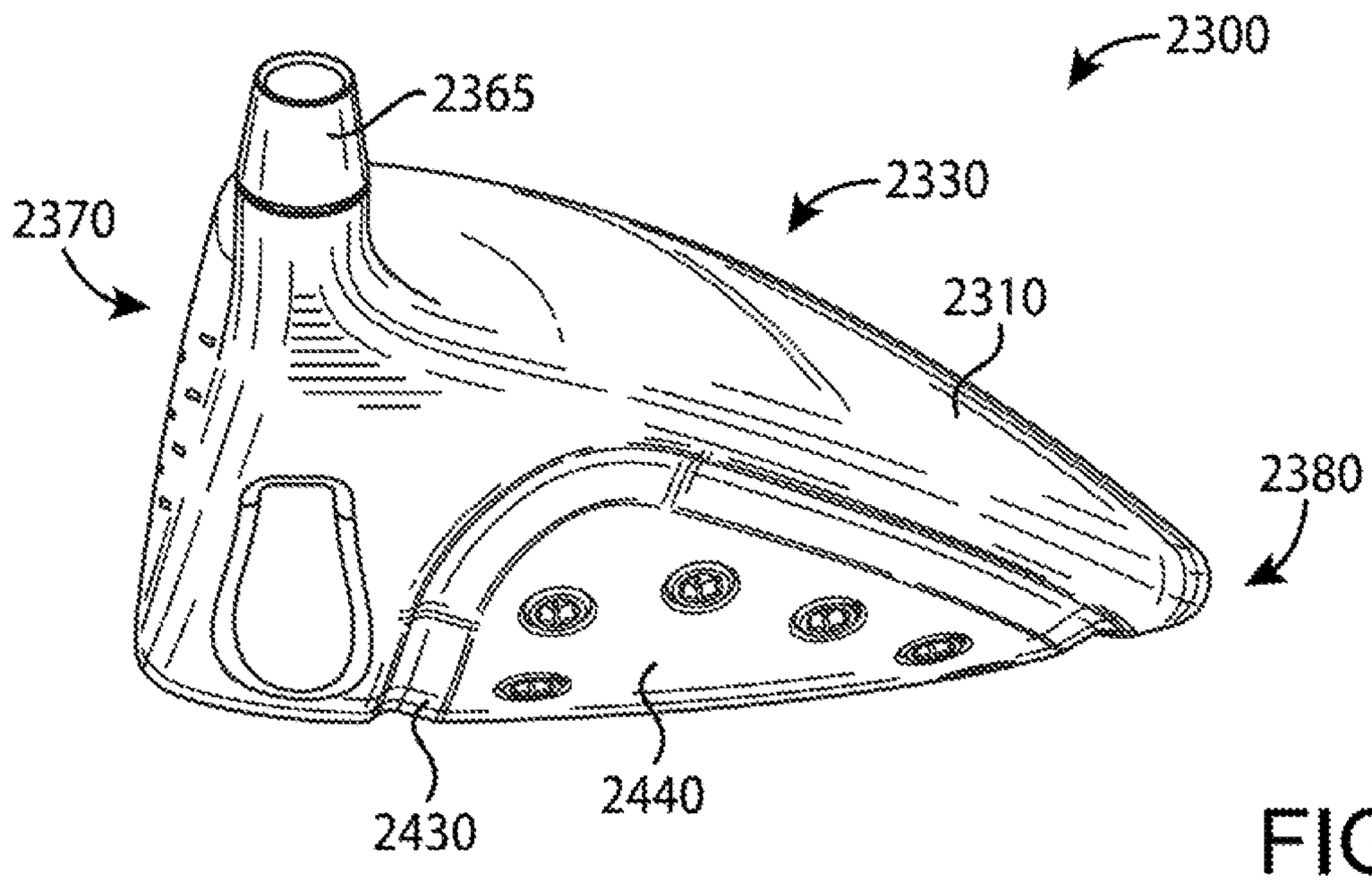
2300
2365
2330
2370
2310
2380
2430
2440

FIG. 30

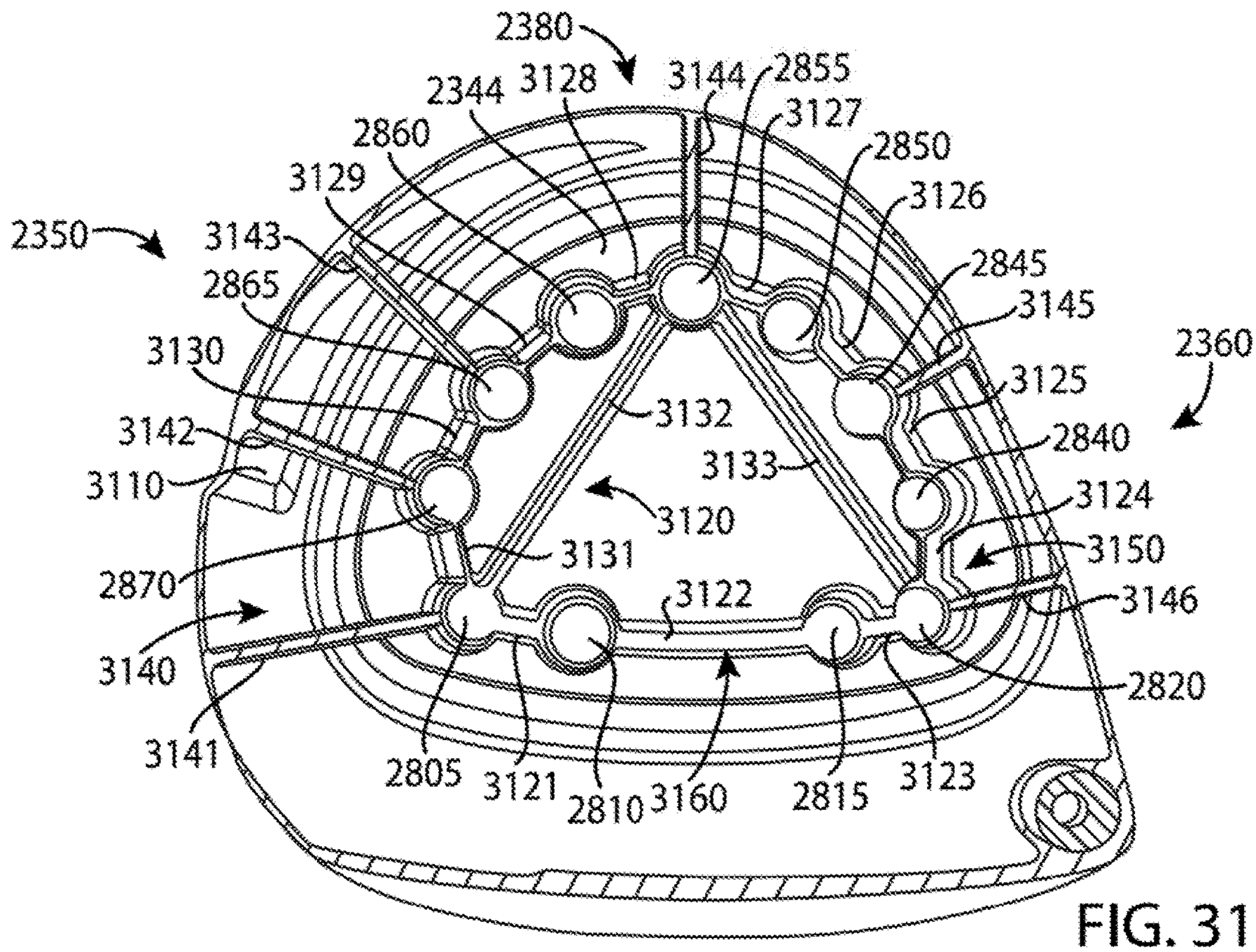
2380
2344
3128
3144
2855
3127
2860
2850
3129
3126
2350
3143
2845
2865
3145
3130
2360
3125
3132
3142
2840
3133
3110
3124
3120
3150
3131
2870
3122
3146
3140
2820
3141
2805
3121
2810
3160
2815
3123

FIG. 31

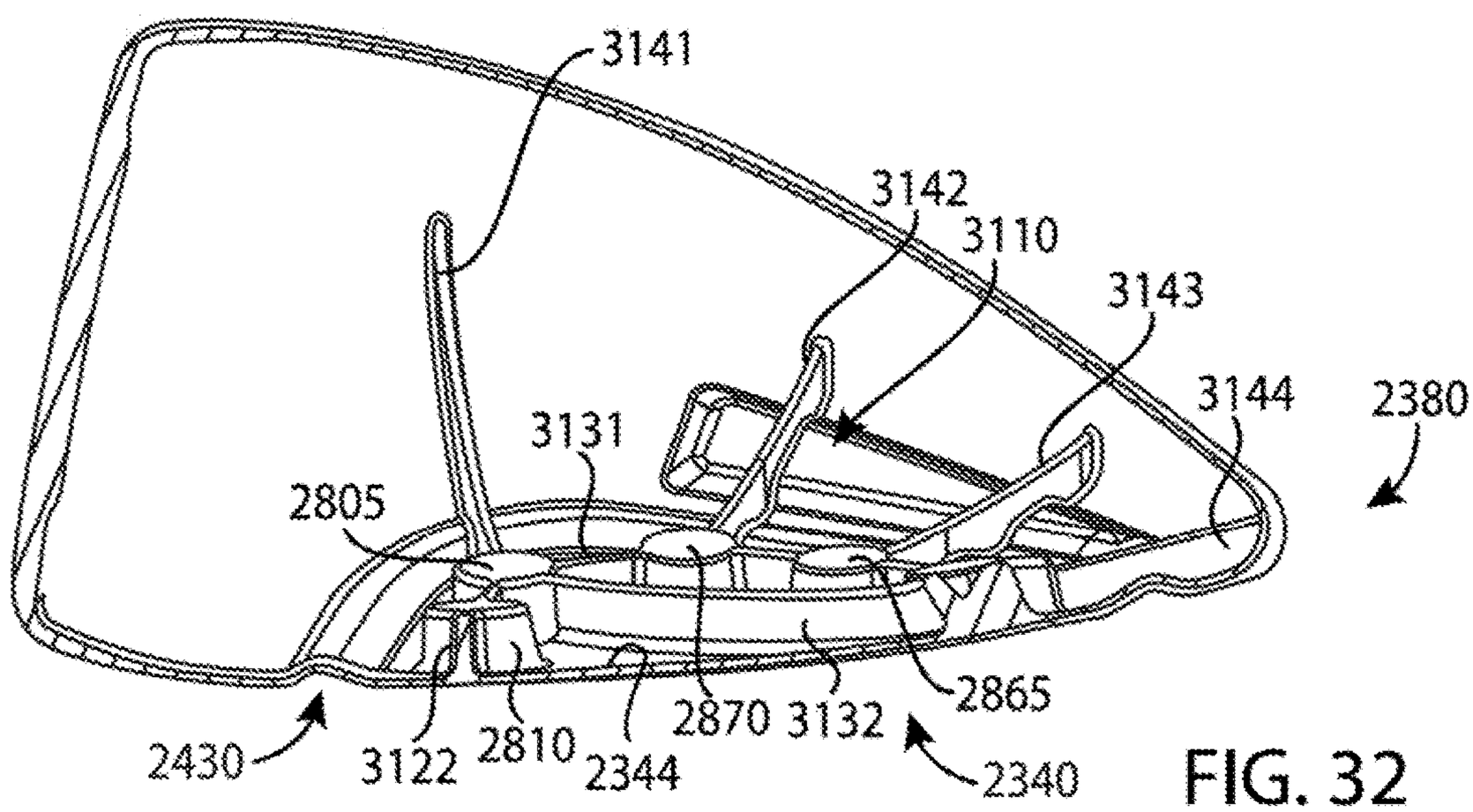
3141
3142
3110
3143
3144
2380
3131
2805
2865
2870
3132
2430
3122
2810
2344
2340

FIG. 32

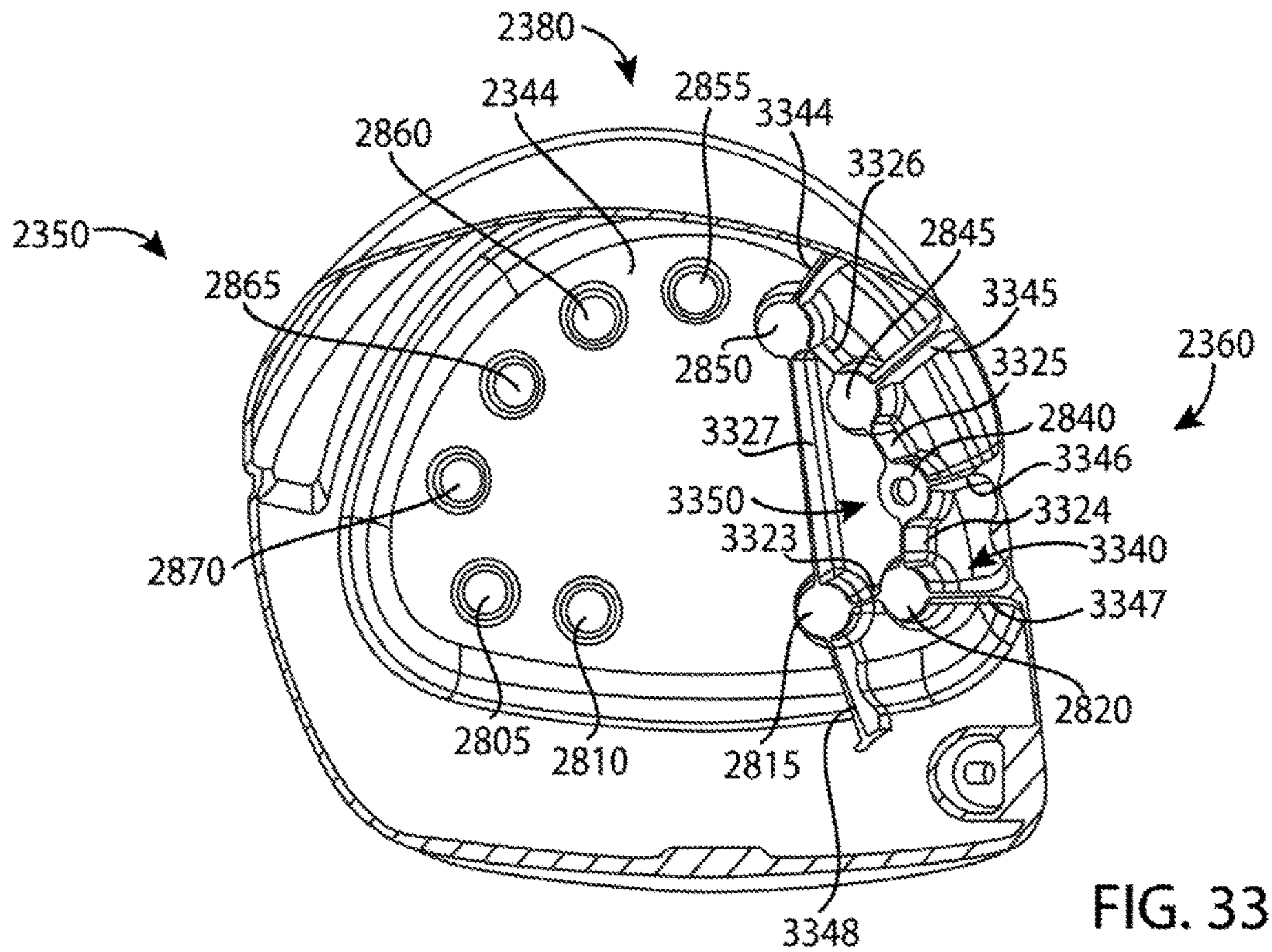
2380
2344
2855
3344
2860
3326
2350
2845
2865
3345
2850
3325
2360
3327
2840
3346
3350
3324
3323
3340
2870
3347
2820
2805
2810
2815
3348

FIG. 33

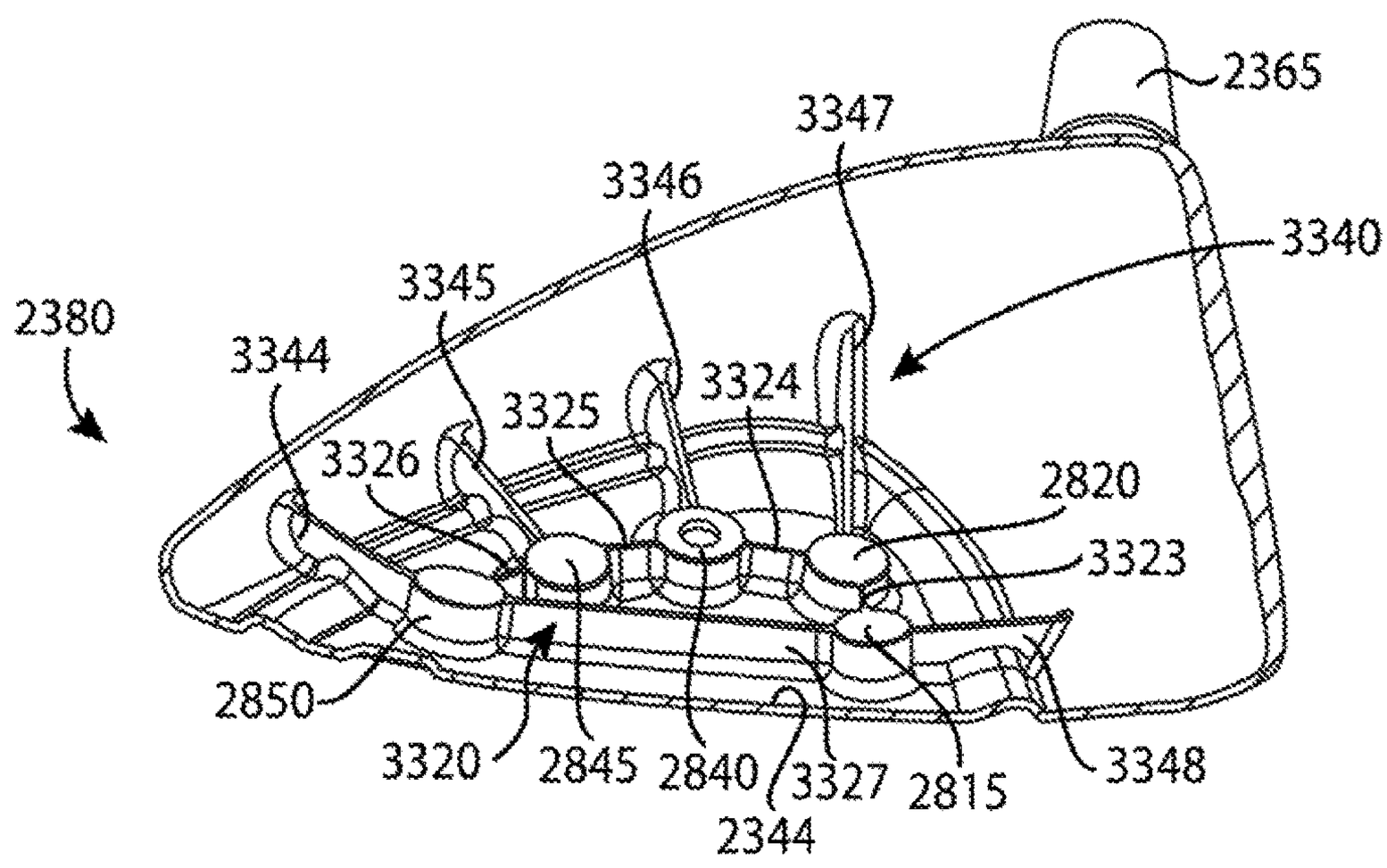
2365
3347
3346
3340
3345
2380
3344
3324
3325
3326
2820
3323
2850
3320
2845
2840
3327
2815
3348
2344

FIG. 34

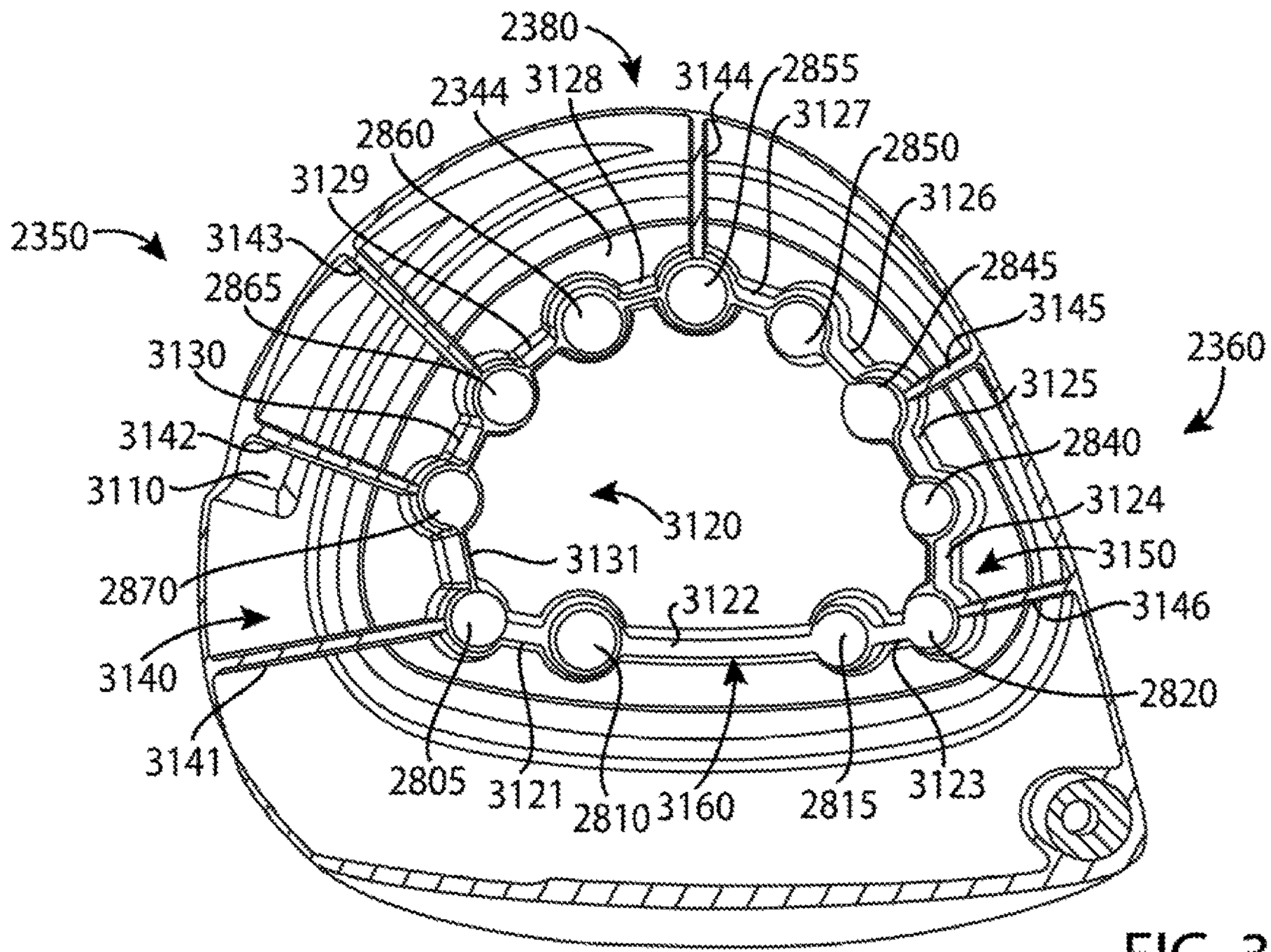
2380
2344
3128
3144
2855
3127
2860
2850
3129
3126
2350
3143
2845
2865
3145
3130
2360
3125
3142
2840
3110
3124
3120
3150
3131
2870
3122
3146
3140
2820
3141
2805
3121
2810
3160
2815
3123

FIG. 35

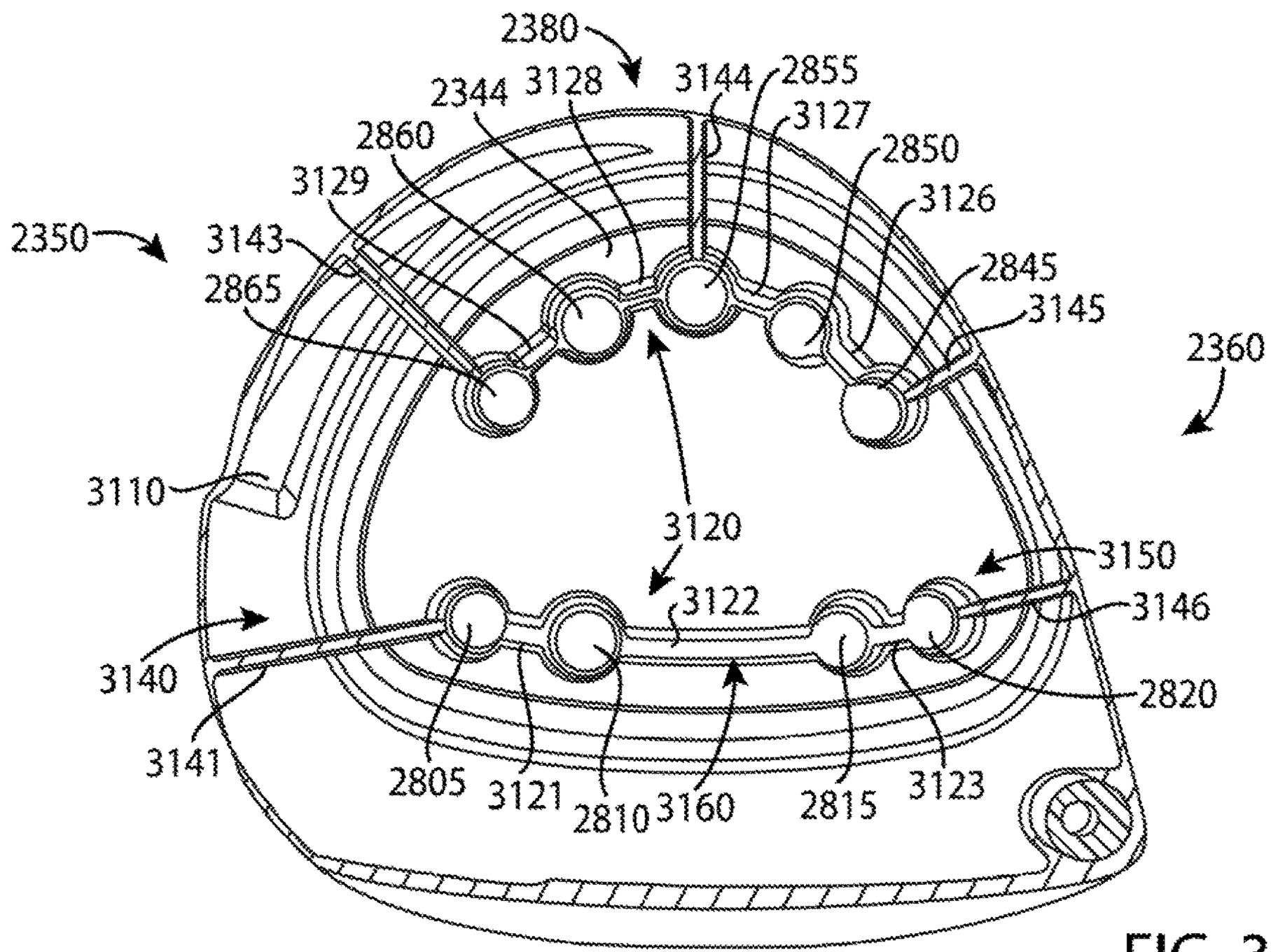
2380
2344
3128
3144
2855
3127
2860
2850
3129
3126
2350
3143
2845
2865
3145
2360
3110
3120
3150
3122
3146
3140
2820
3141
2805
3121
2810
3160
2815
3123

FIG. 36

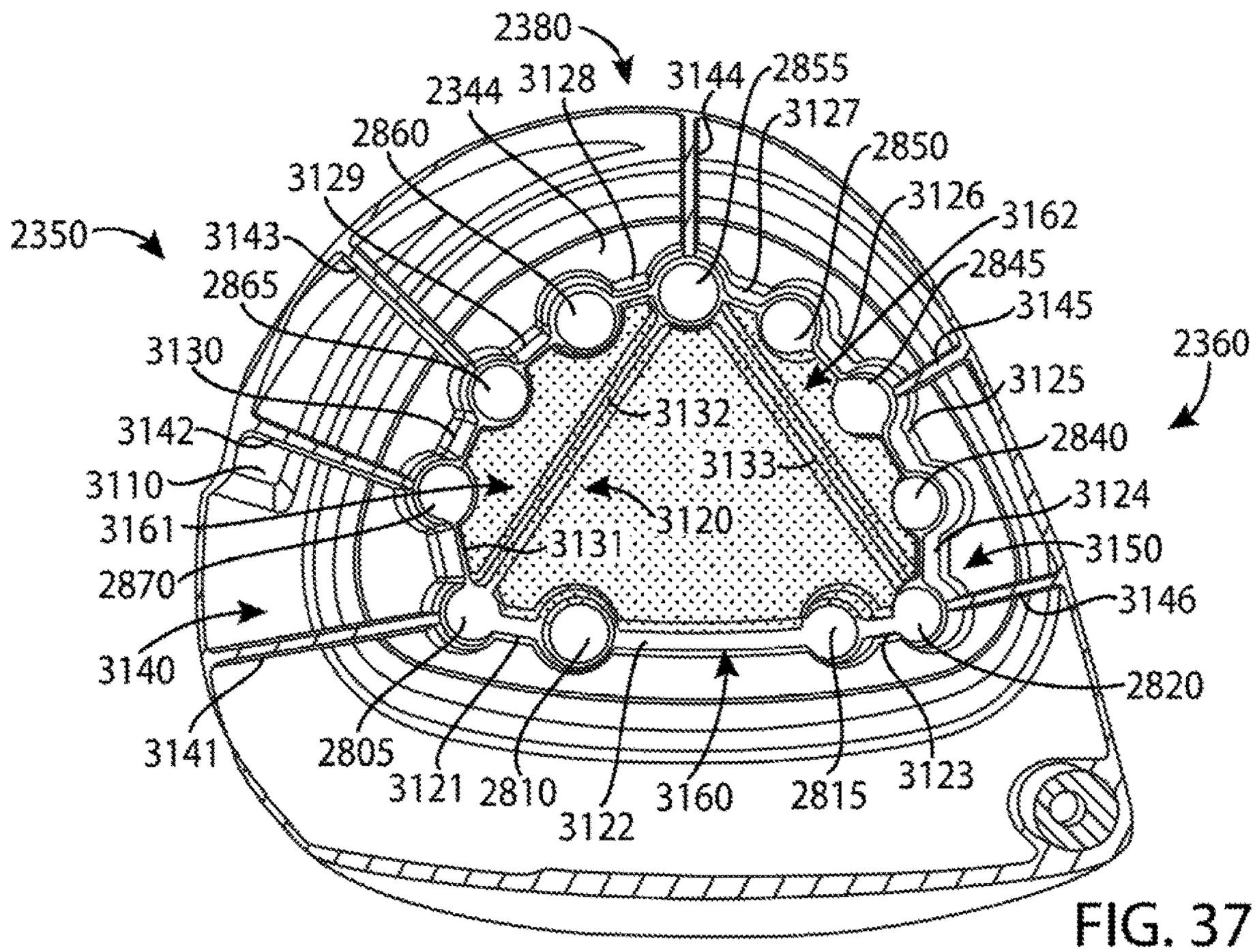
2380
2344
3128
3144
2855
3127
2860
2850
3129
3126
3162
2350
3143
2845
2865
3145
2360
3130
3125
3132
3142
2840
3133
3110
3124
3120
3161
3131
3150
2870
3146
3140
2820
3141
2805
3121
2810
3160
2815
3123
3122

FIG. 37

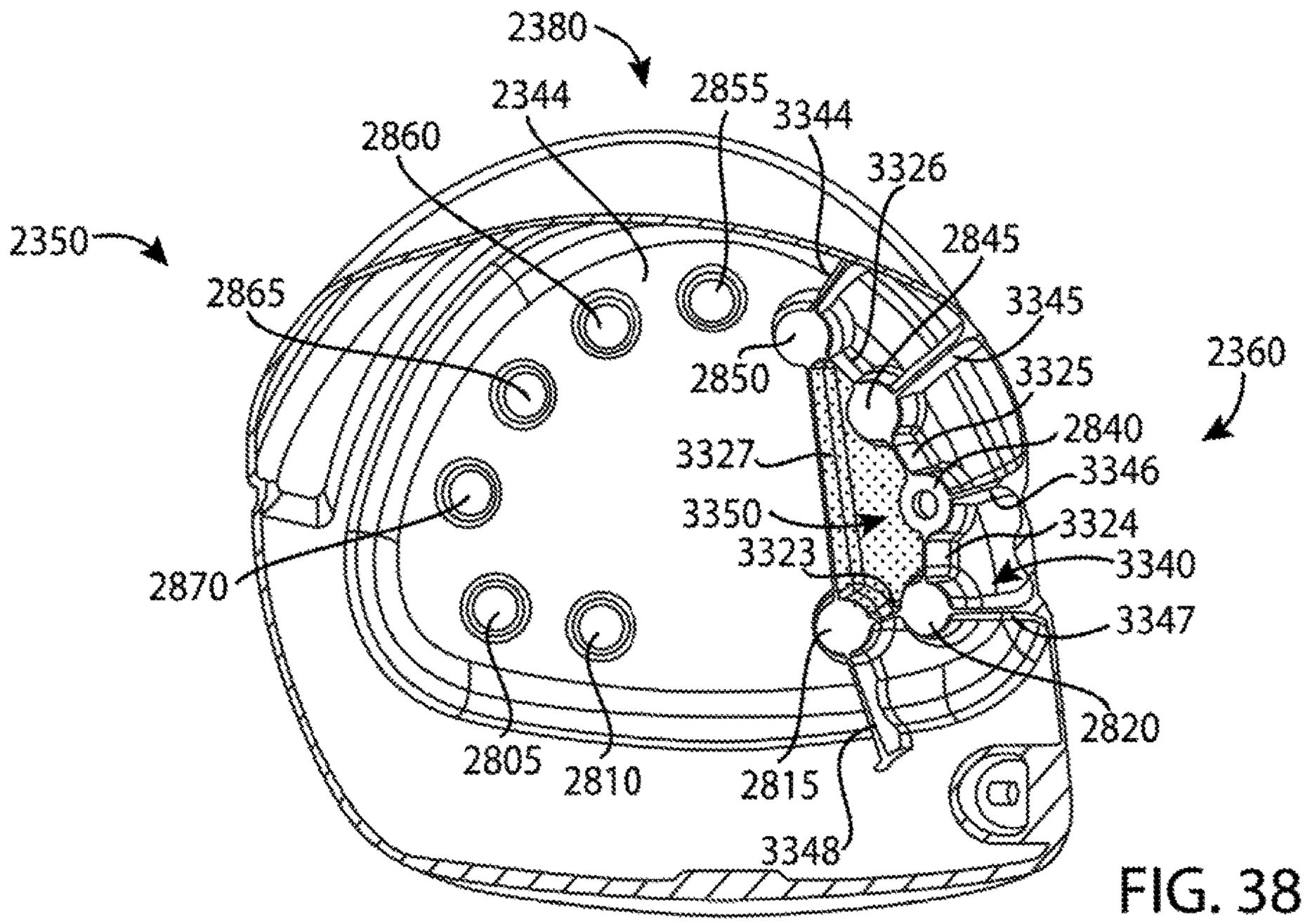
2380
2344
2855
3344
2860
3326
2350
2845
2865
3345
2850
3325
2360
2840
3327
3346
3350
3324
3323
3340
2870
3347
2820
2805
2810
2815
3348

FIG. 38

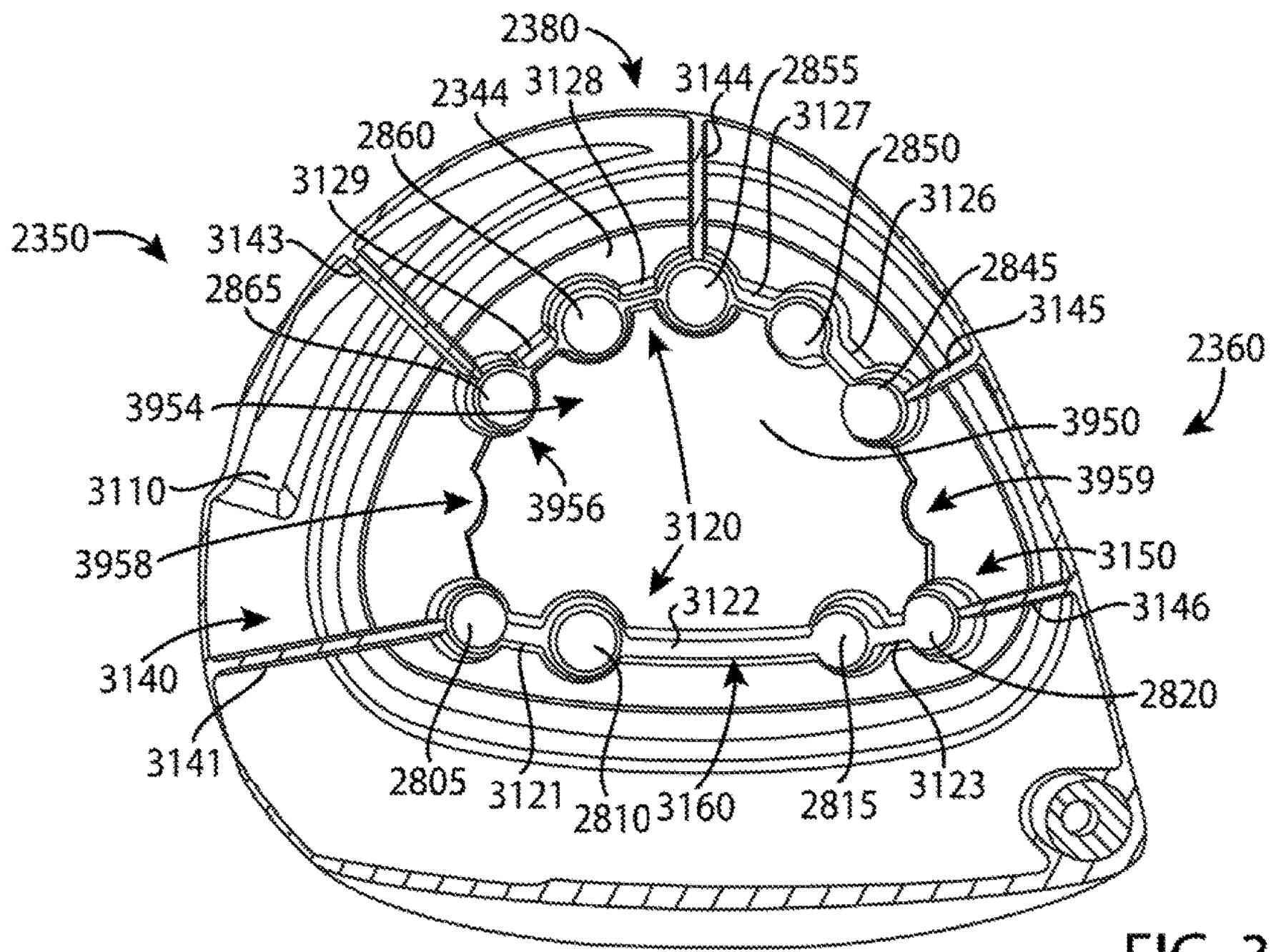
2380
2344
3128
3144
2855
3127
2860
2850
3129
3126
2350
3143
2845
2865
3145
2360
3954
3950
3110
3956
3959
3958
3120
3150
3122
3146
3140
2820
3141
2805
3121
2810
3160
2815
3123

FIG. 39

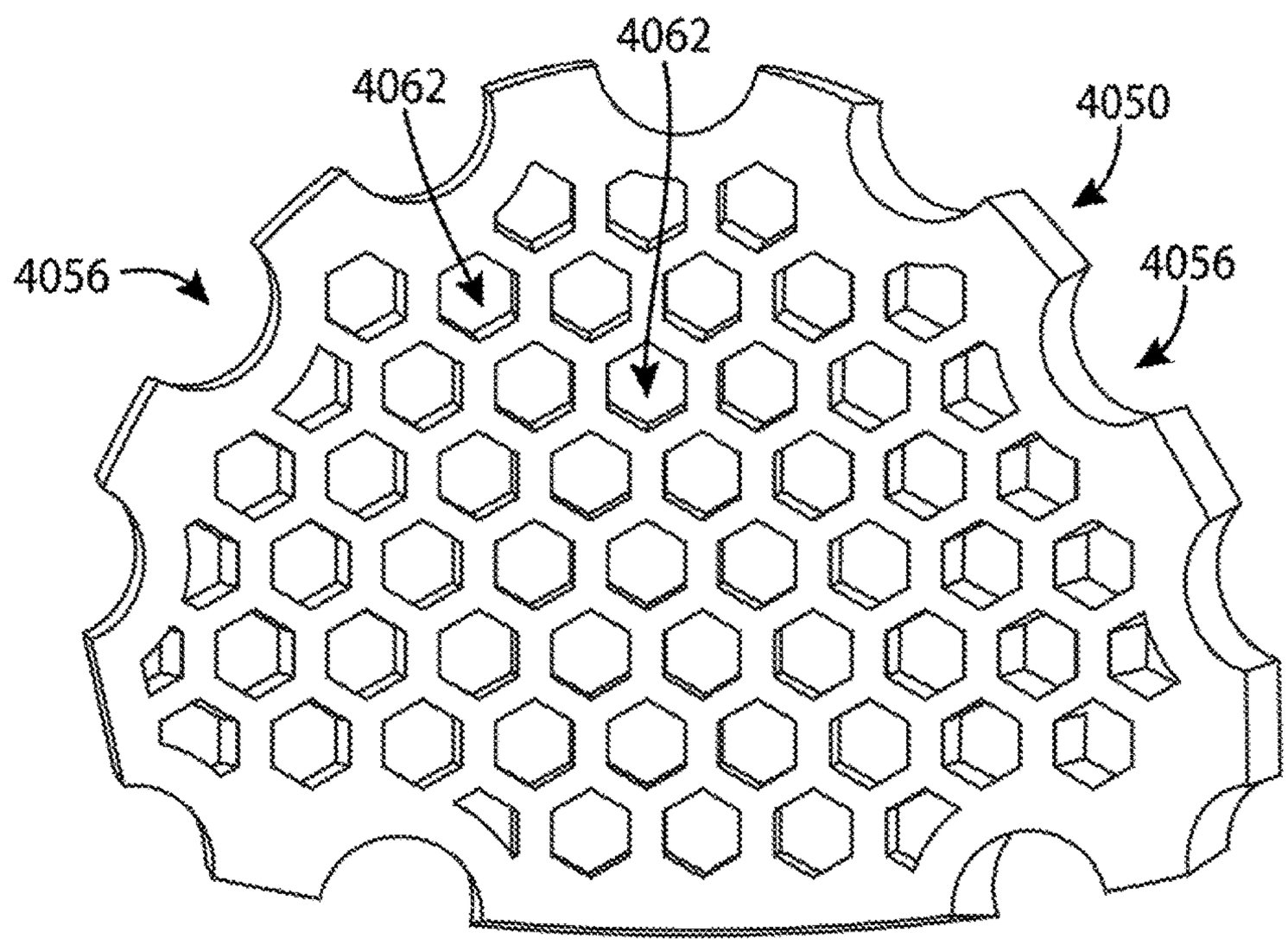
4062
4062
4050
4056
4056

FIG. 40

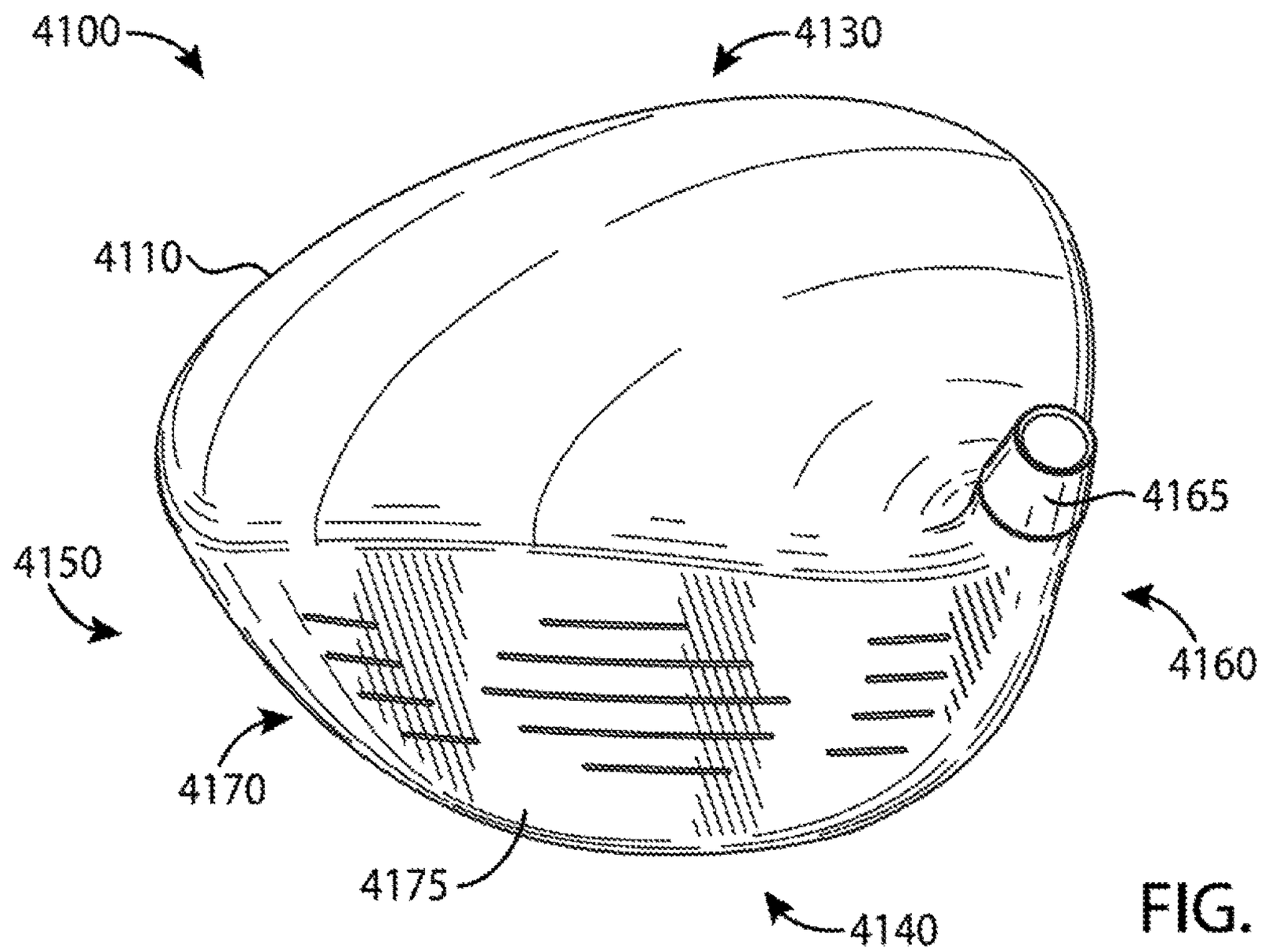
4100
4130
4110
4165
4150
4160
4170
4175
4140

FIG. 41

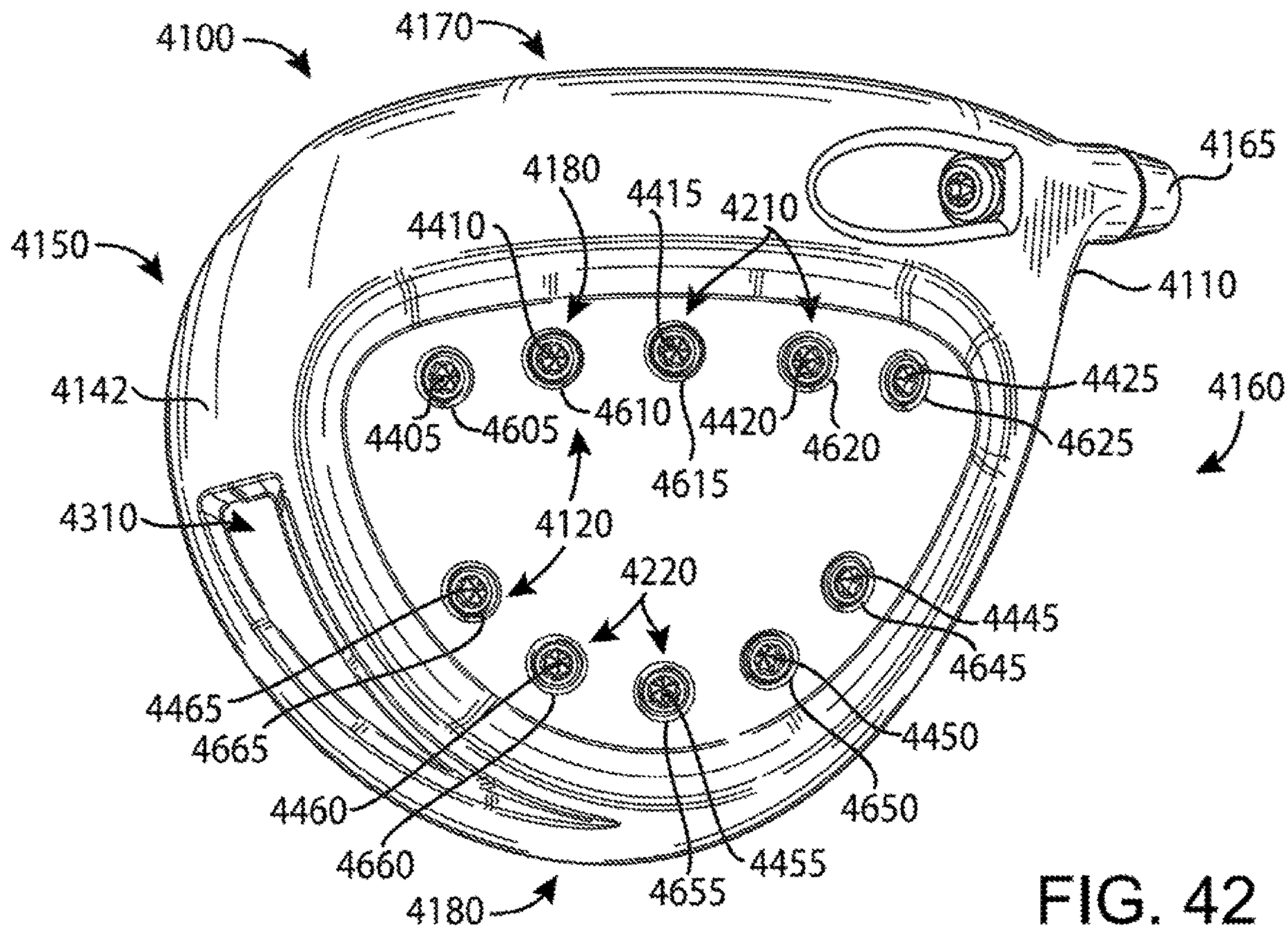
4100
4170
4165
4180
4415
4210
4410
4150
4110
4142
4425
4160
4405
4605
4610
4420
4620
4625
4615
4310
4120
4220
4445
4645
4465
4665
4450
4460
4650
4660
4455
4655
4180

FIG. 42

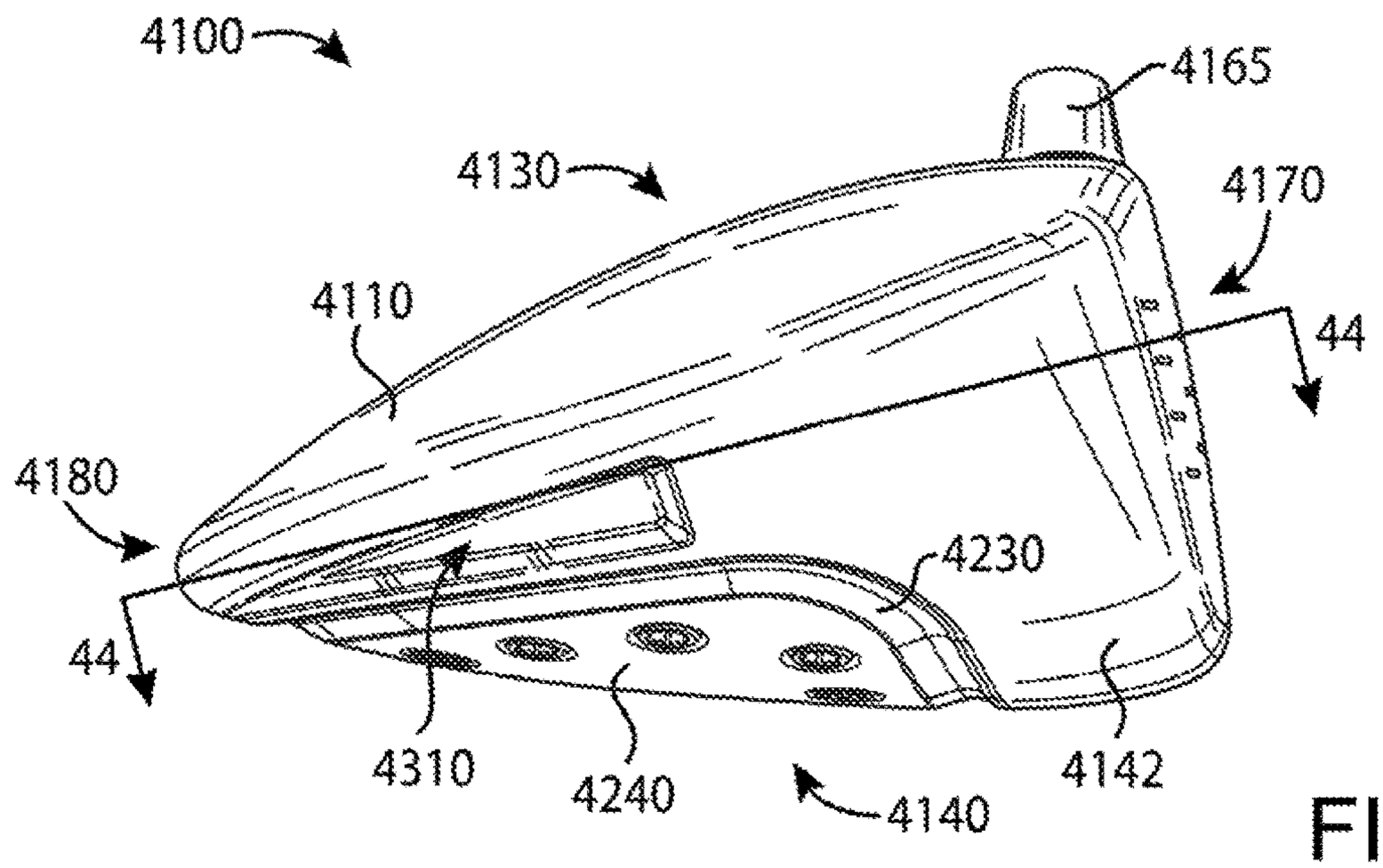
4100
4165
4130
4170
4110
44
4180
4230
44
4310
4240
4140
4142

FIG. 43

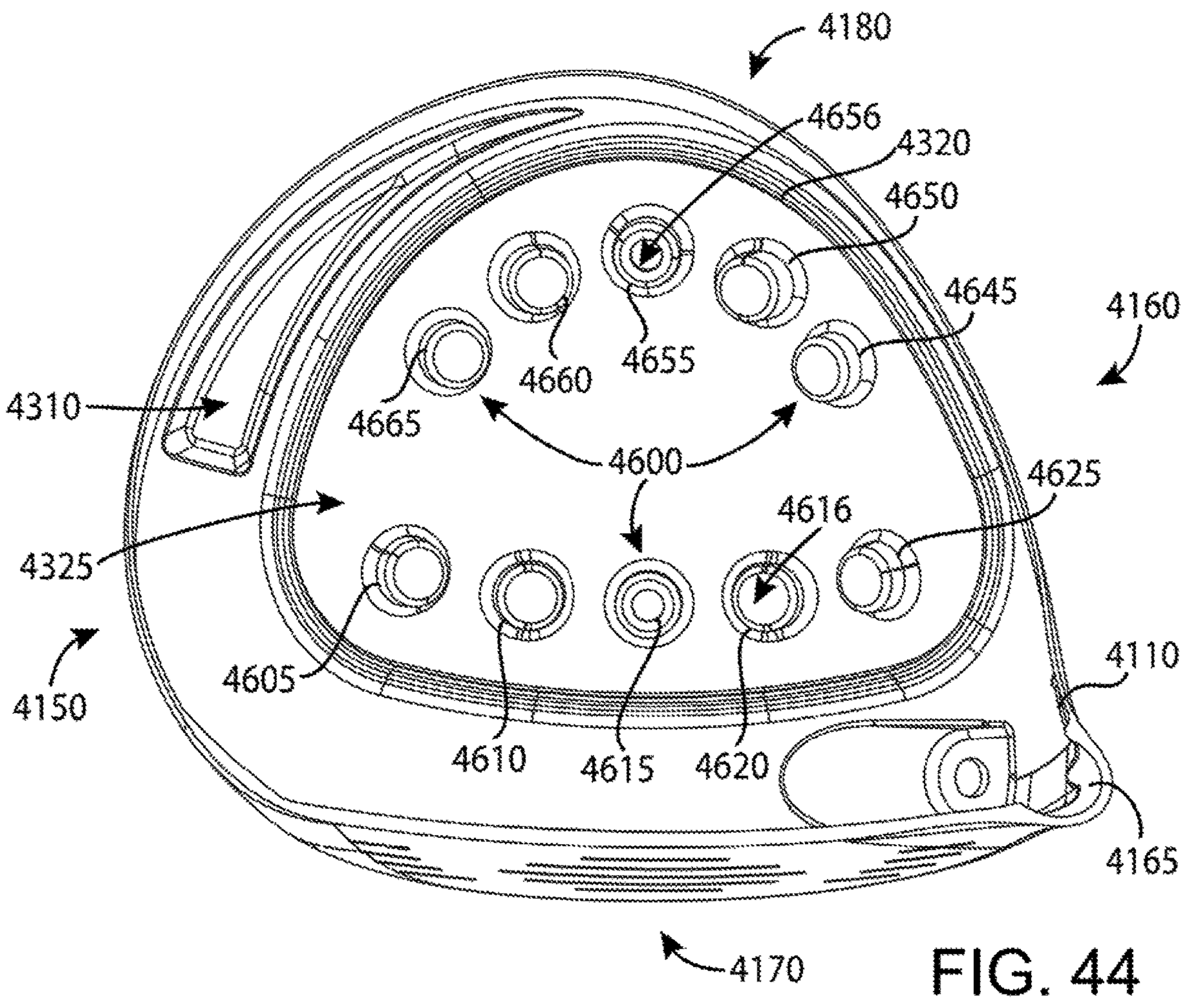
4180
4656
4320
4650
4645
4160
4660
4655
4310
4665
4600
4625
4616
4325
4605
4110
4150
4610
4615
4620
4165
4170

FIG. 44

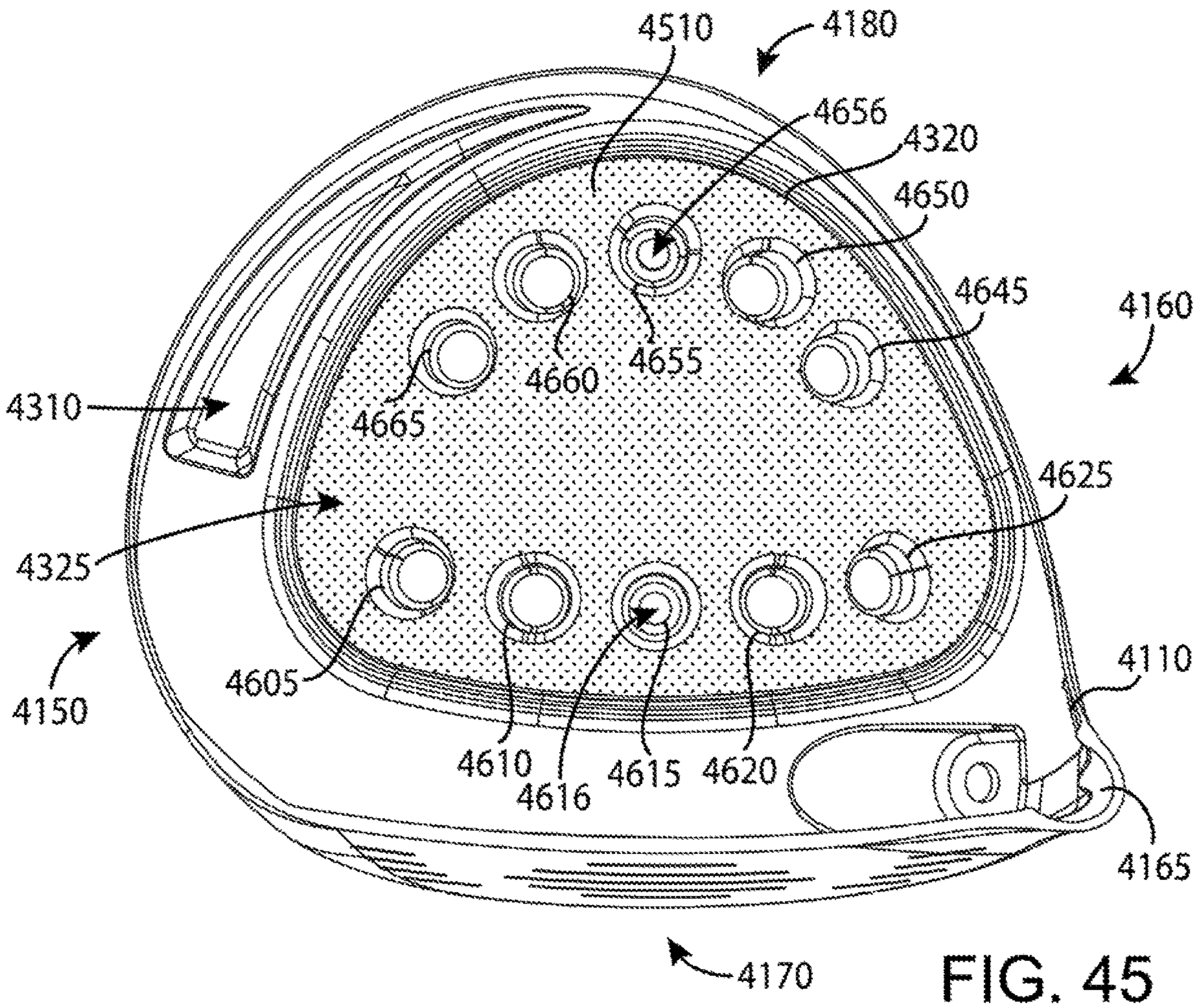
4510
4180
4656
4320
4650
4645
4160
4660
4655
4665
4310
4625
4325
4605
4110
4150
4610
4616
4615
4620
4165
4170

FIG. 45

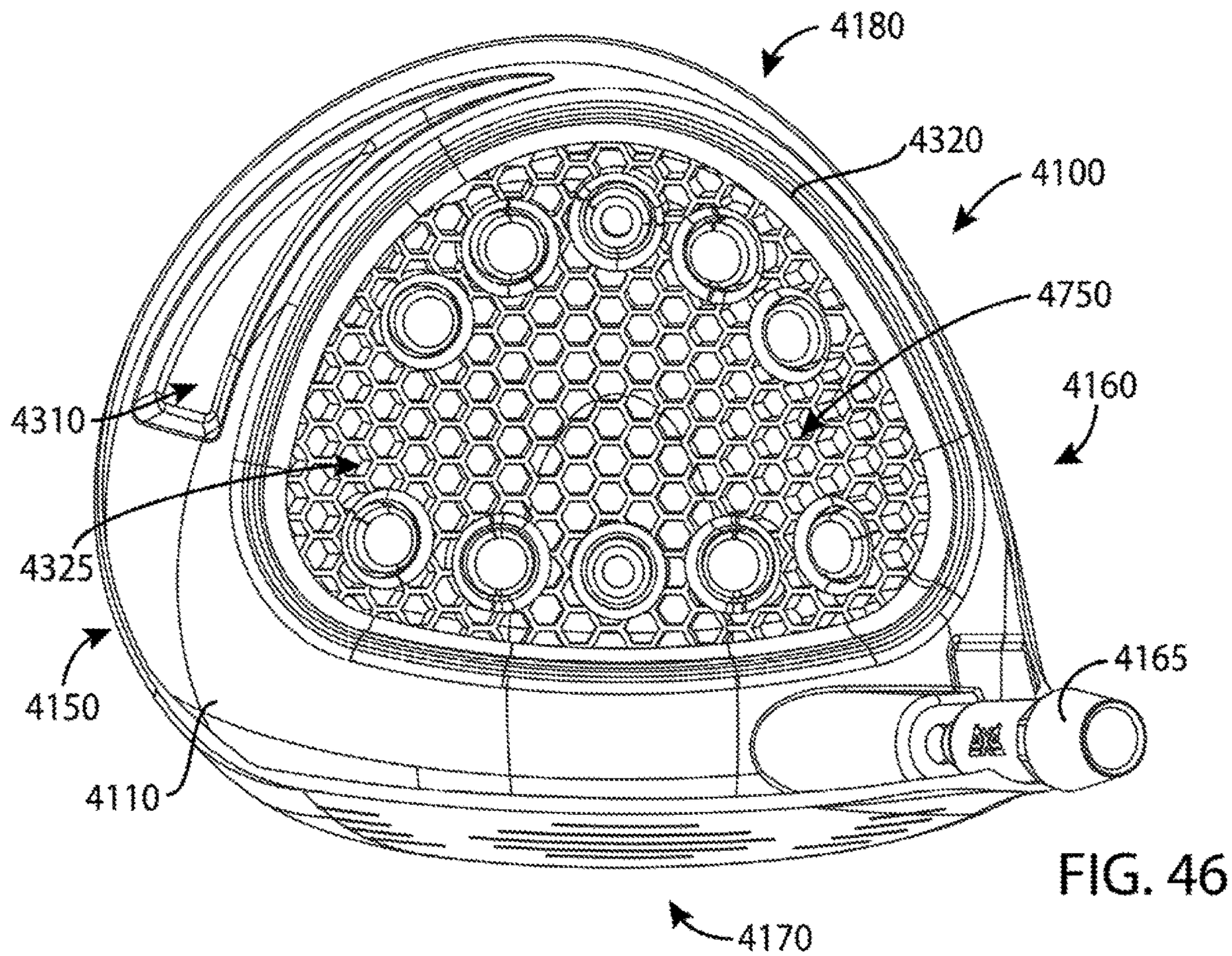
4180
4320
4100
4750
4160
4310
4325
4150
4165
4110
4170

FIG. 46

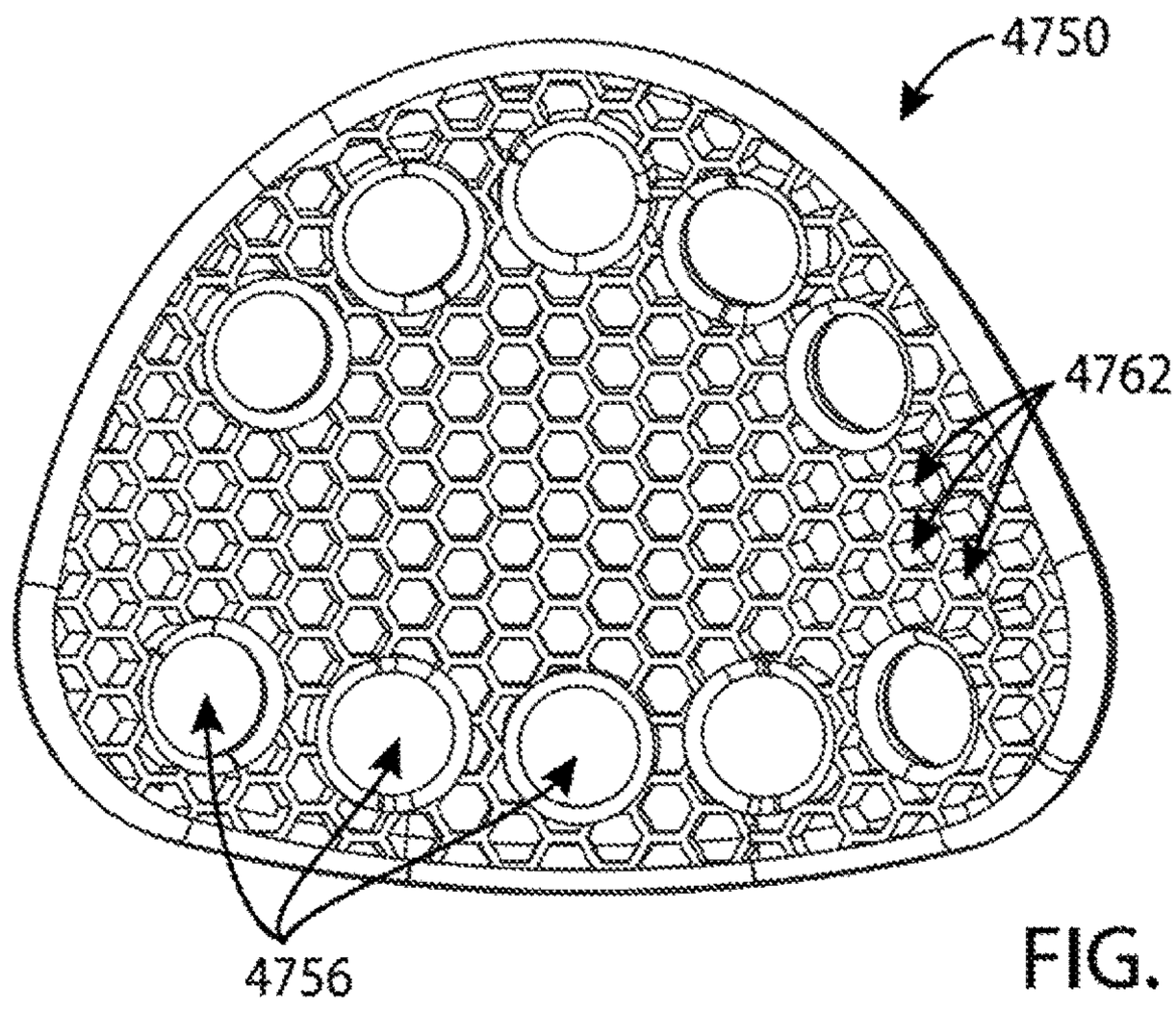
4750
4762
4756

FIG. 47

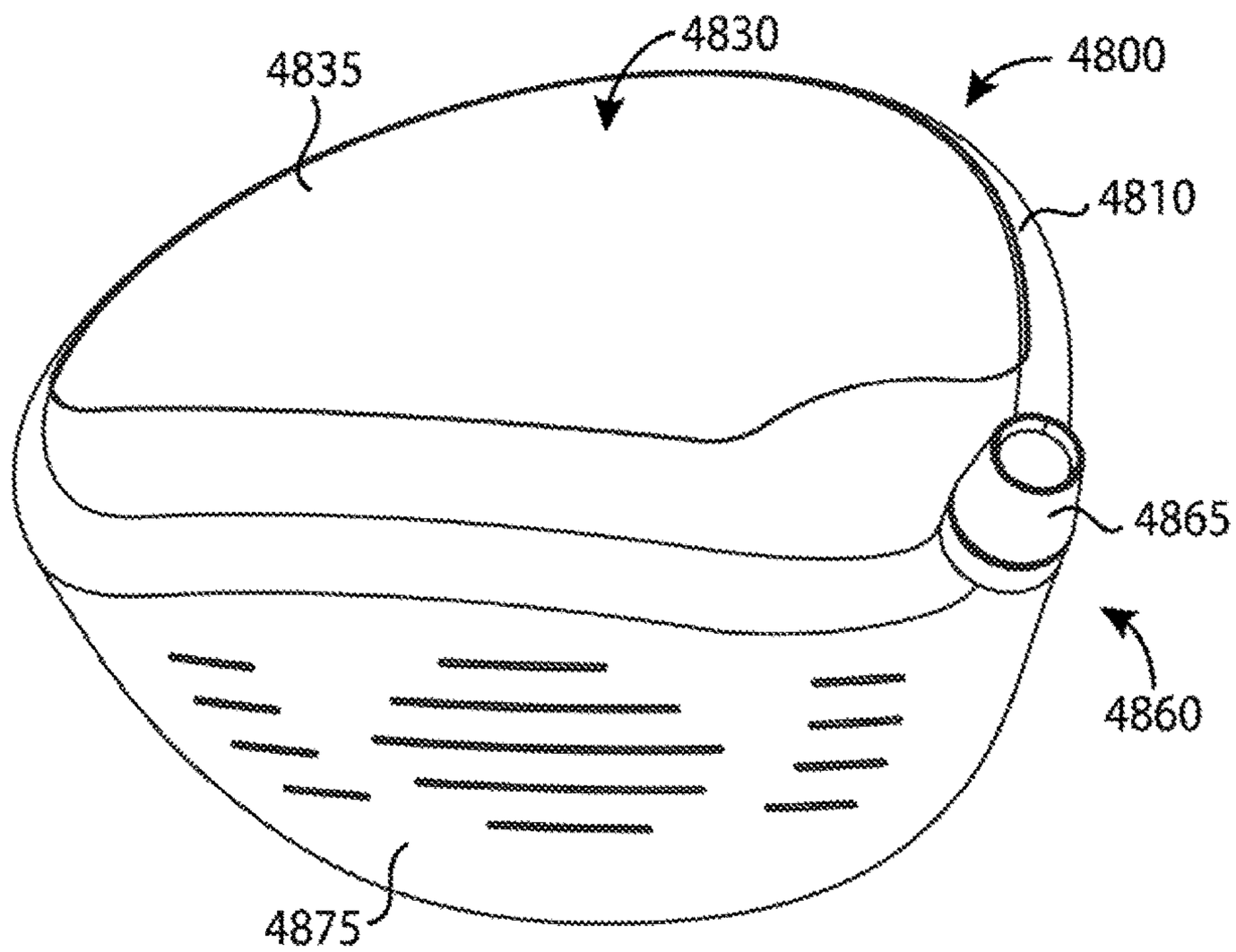
4835
4830
4800
4810
4865
4860
4875

FIG. 48

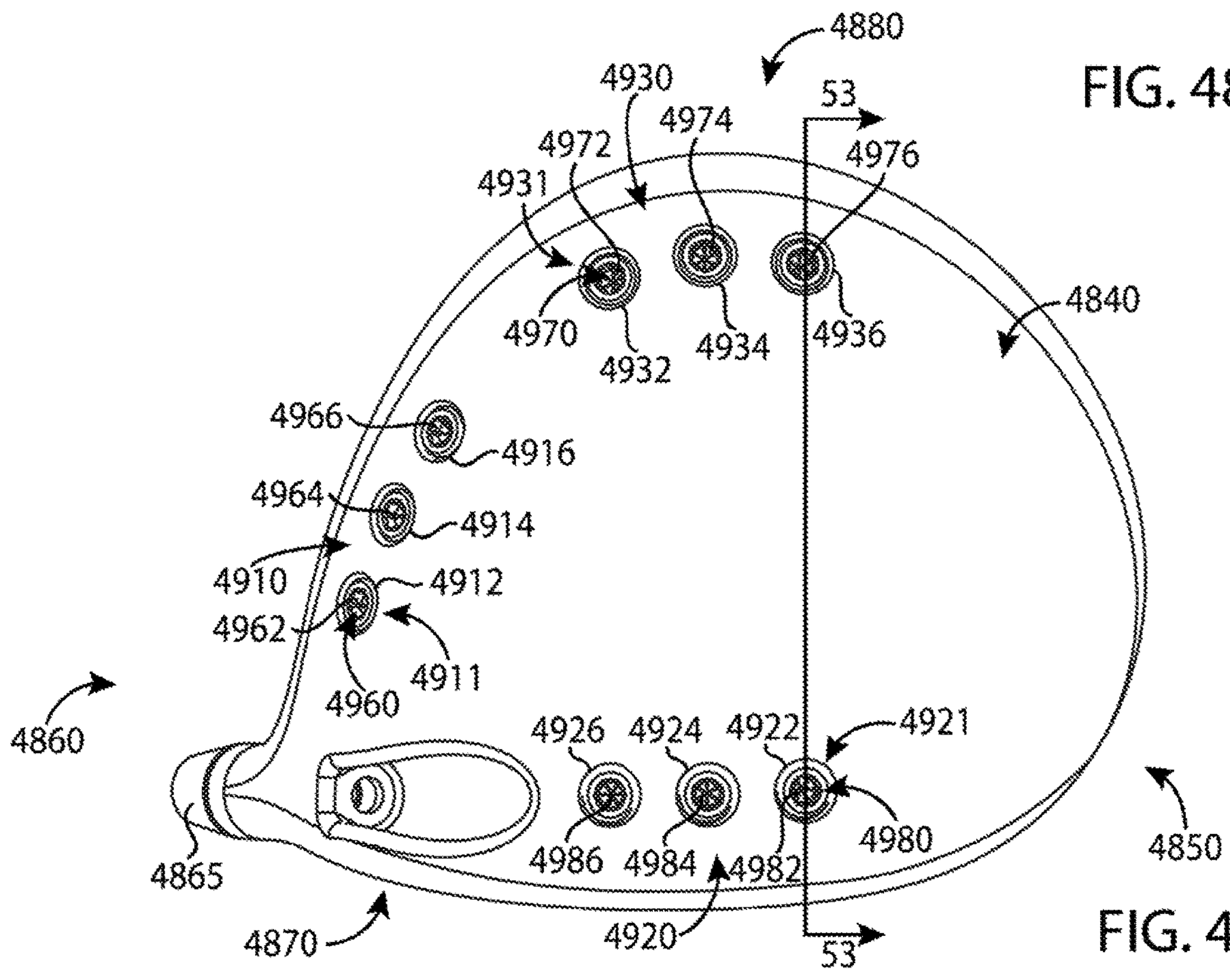
4880
4930
53
4974
4972
4976
4931
4970
4932
4934
4936
4840
4966
4916
4964
4914
4910
4912
4962
4911
4960
4860
4926
4924
4922
4921
4865
4986
4984
4982
4980
4850
4870
4920
53

FIG. 49

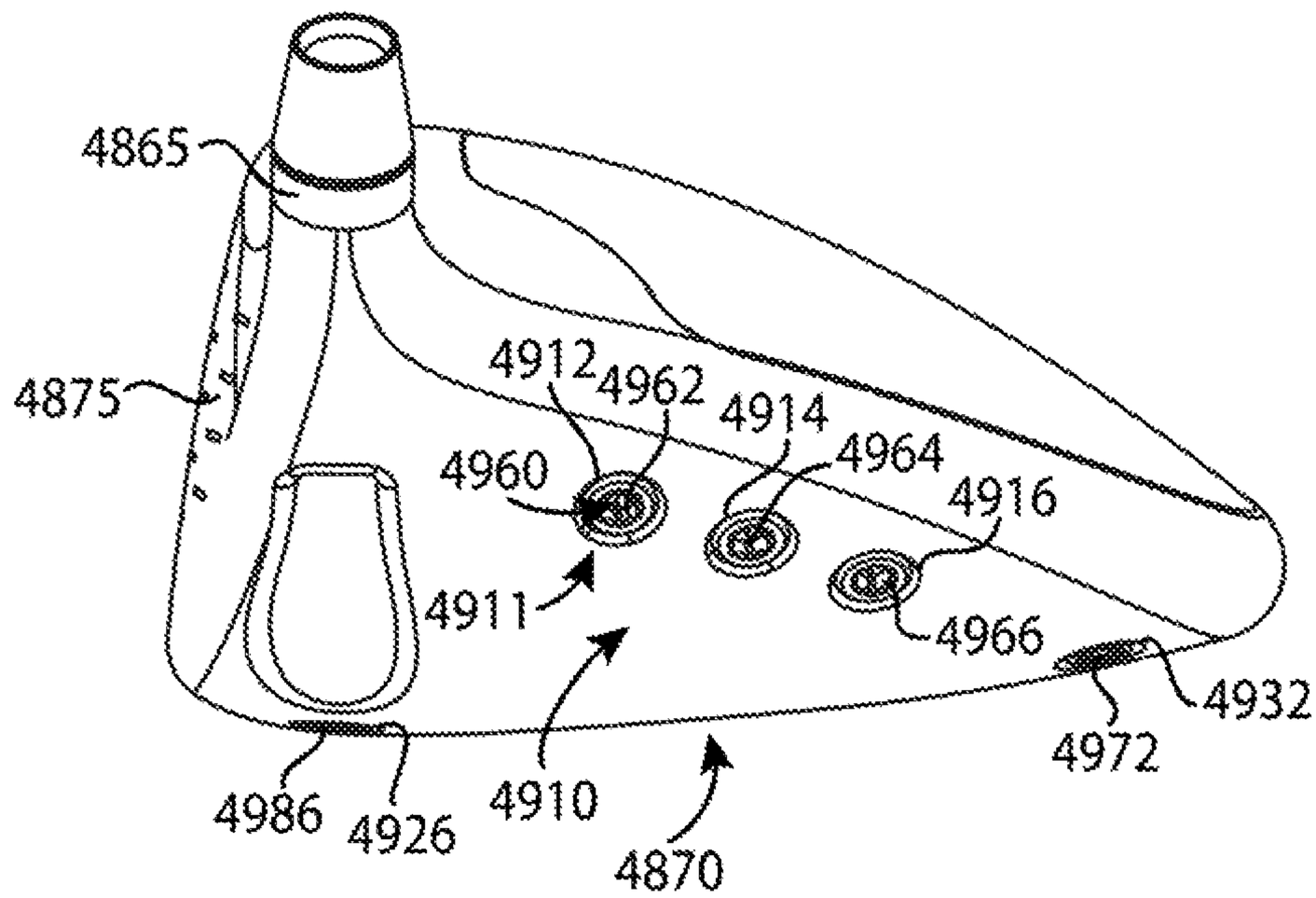
4865
4875
4912
4962
4914
4964
4960
4916
4911
4966
4932
4972
4986
4926
4910
4870

FIG. 50

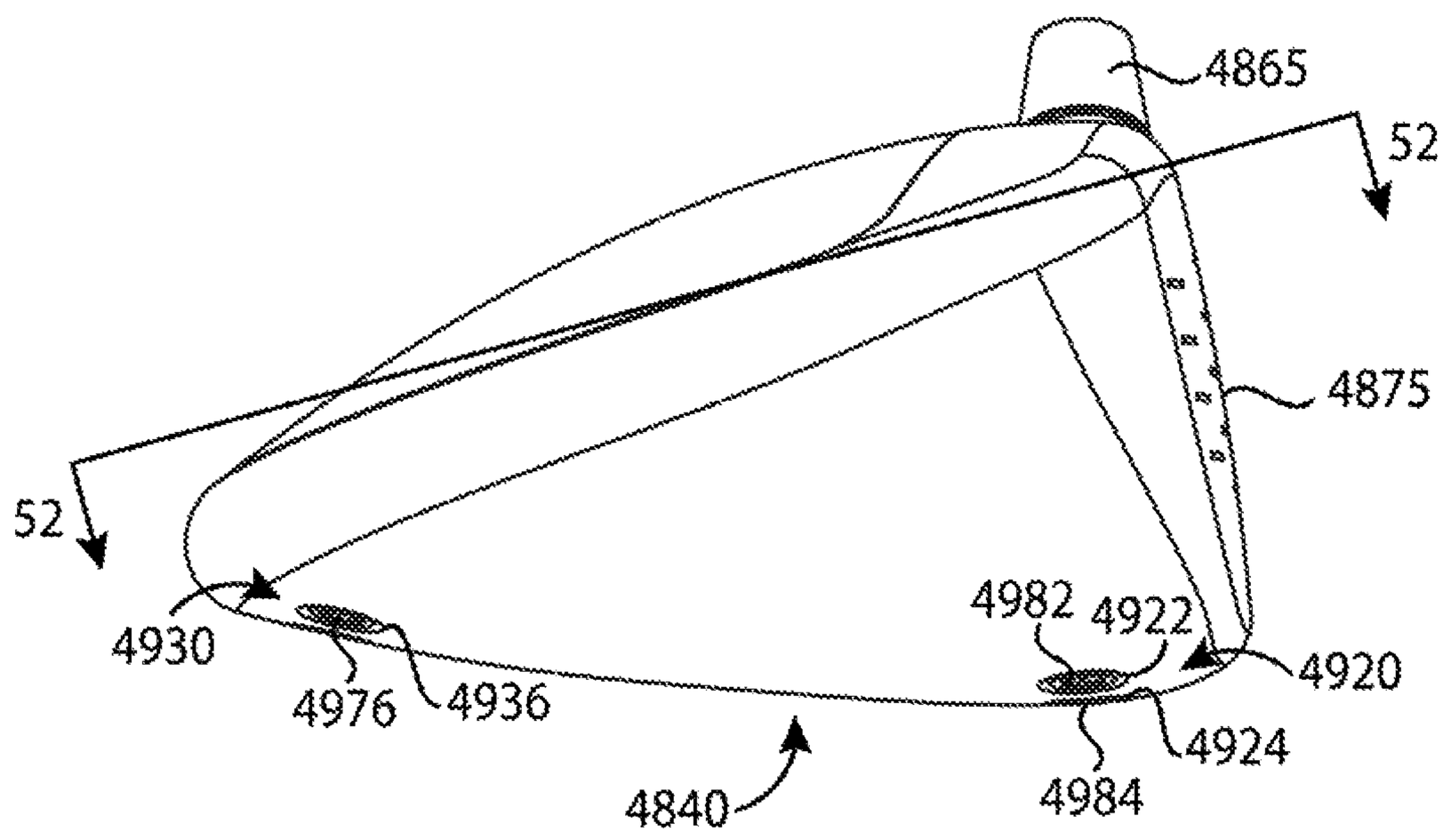
4865
52
4875
52
4930
4976
4936
4982
4922
4920
4924
4984
4840

FIG. 51

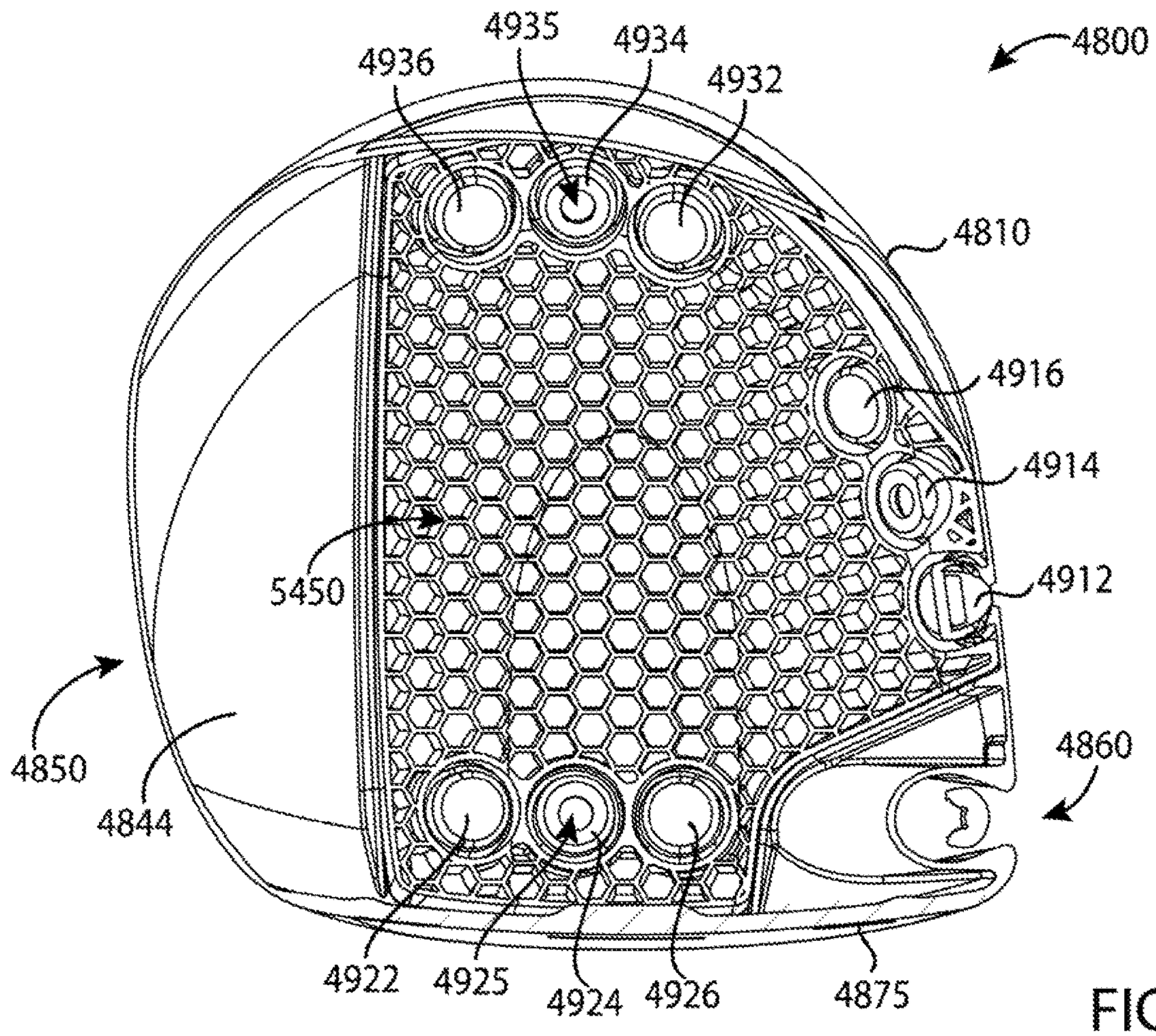
4800
4935
4934
4936
4932
4810
4916
4914
5450
4912
4850
4844
4860
4922
4925
4924
4926
4875

FIG. 52

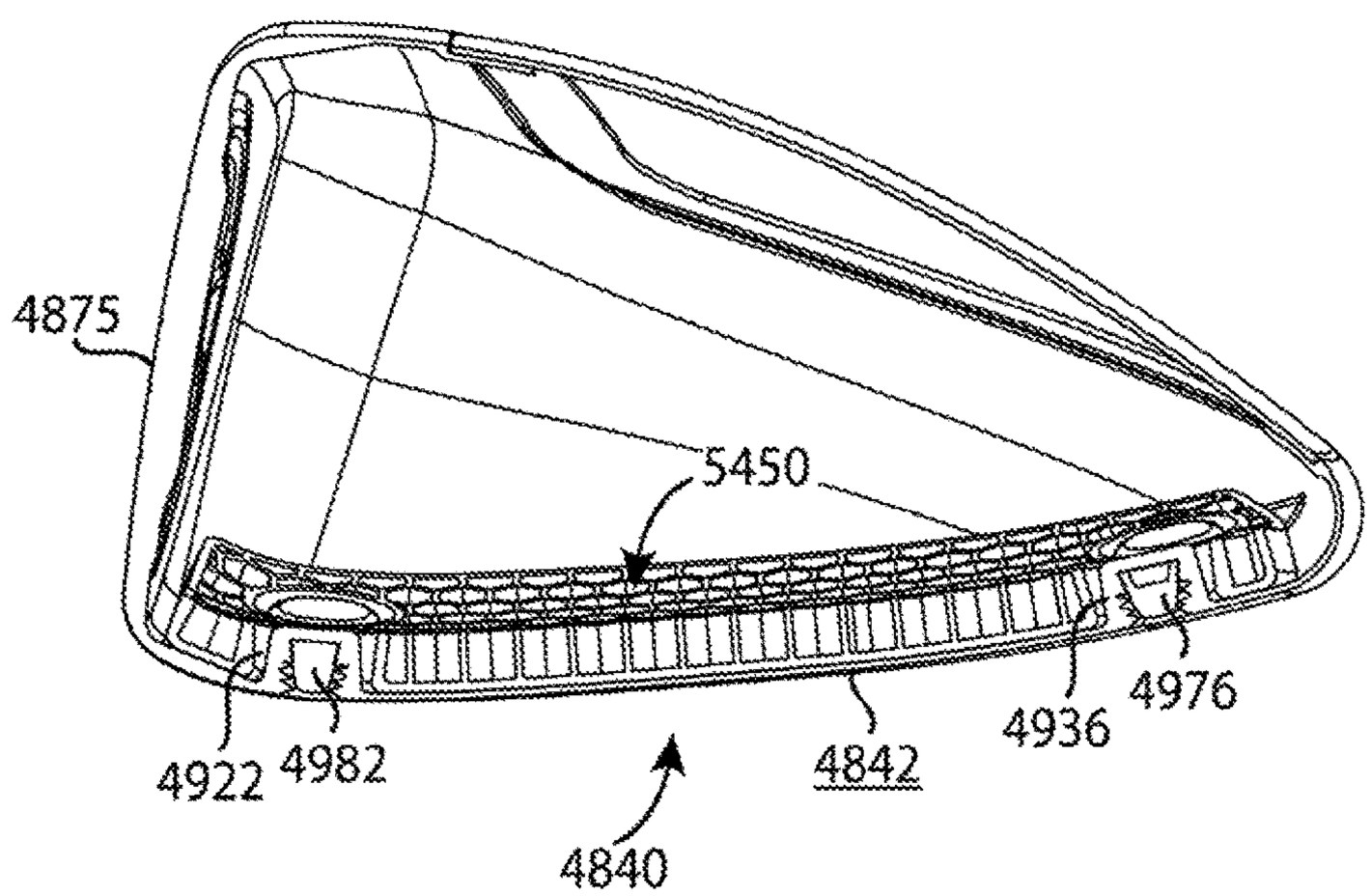
4875
5450
4976
4936
4922
4982
4842
4840

FIG. 53

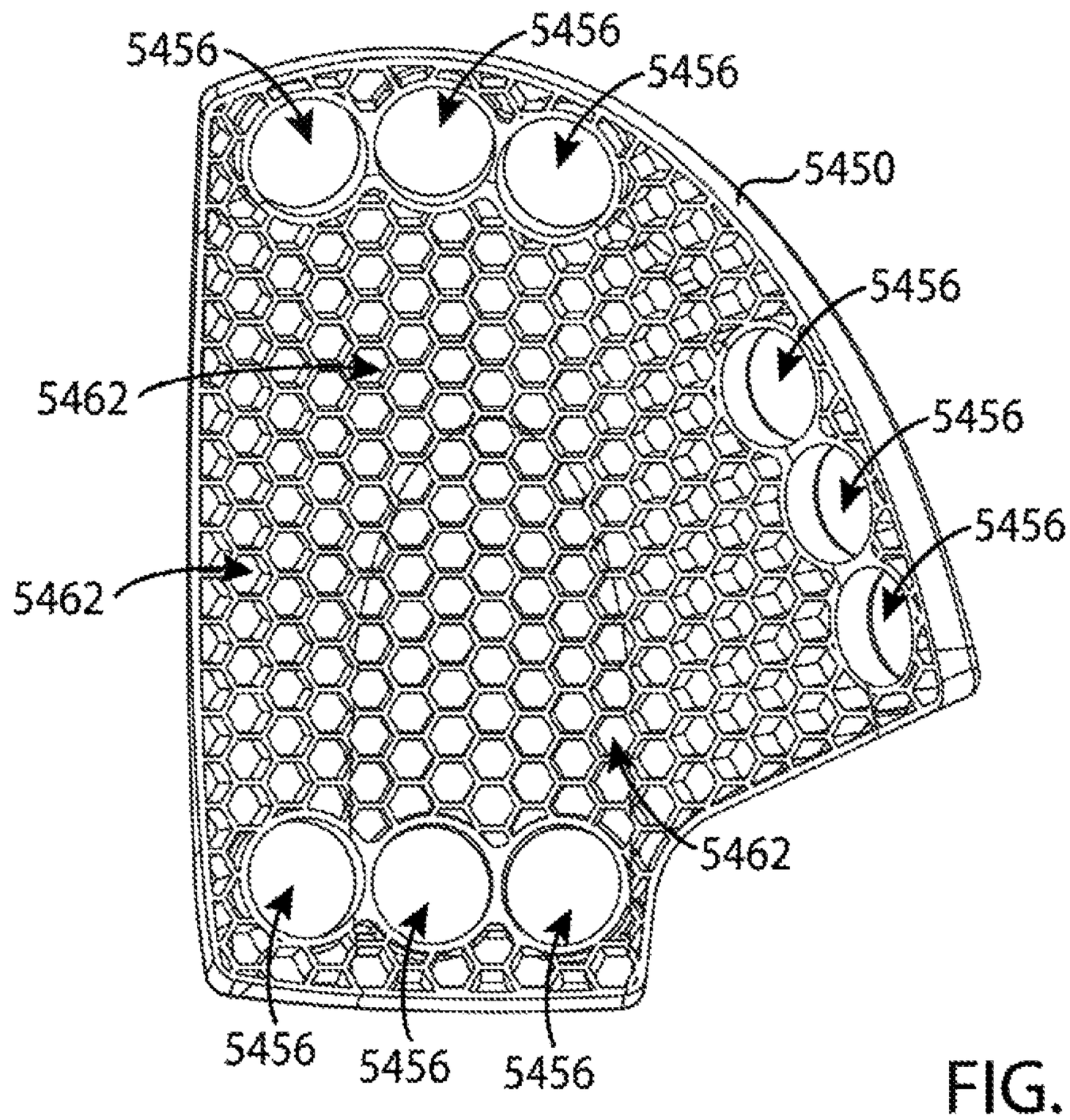
5456
5456
5456
5450
5456
5462
5456
5456
5462
5462
5456
5456
5456

FIG. 54

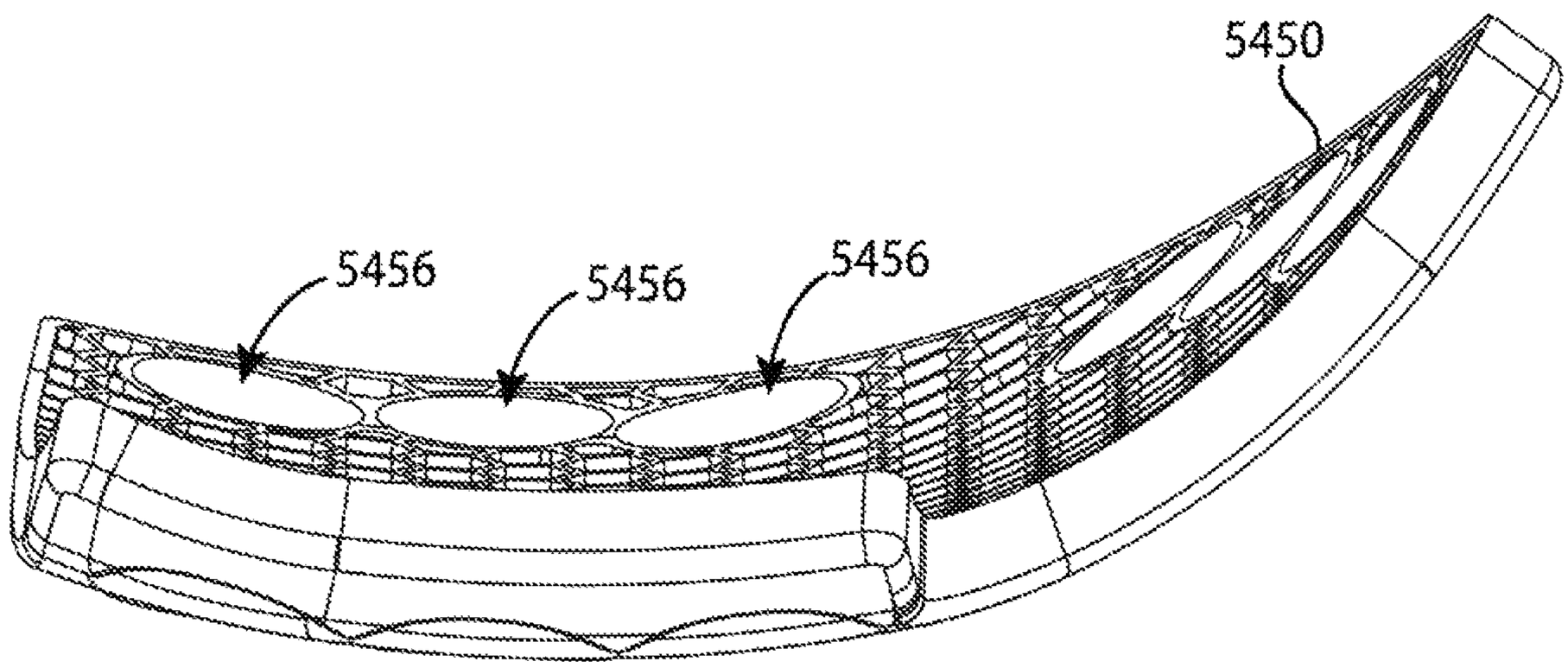
5450
5456
5456
5456

FIG. 55

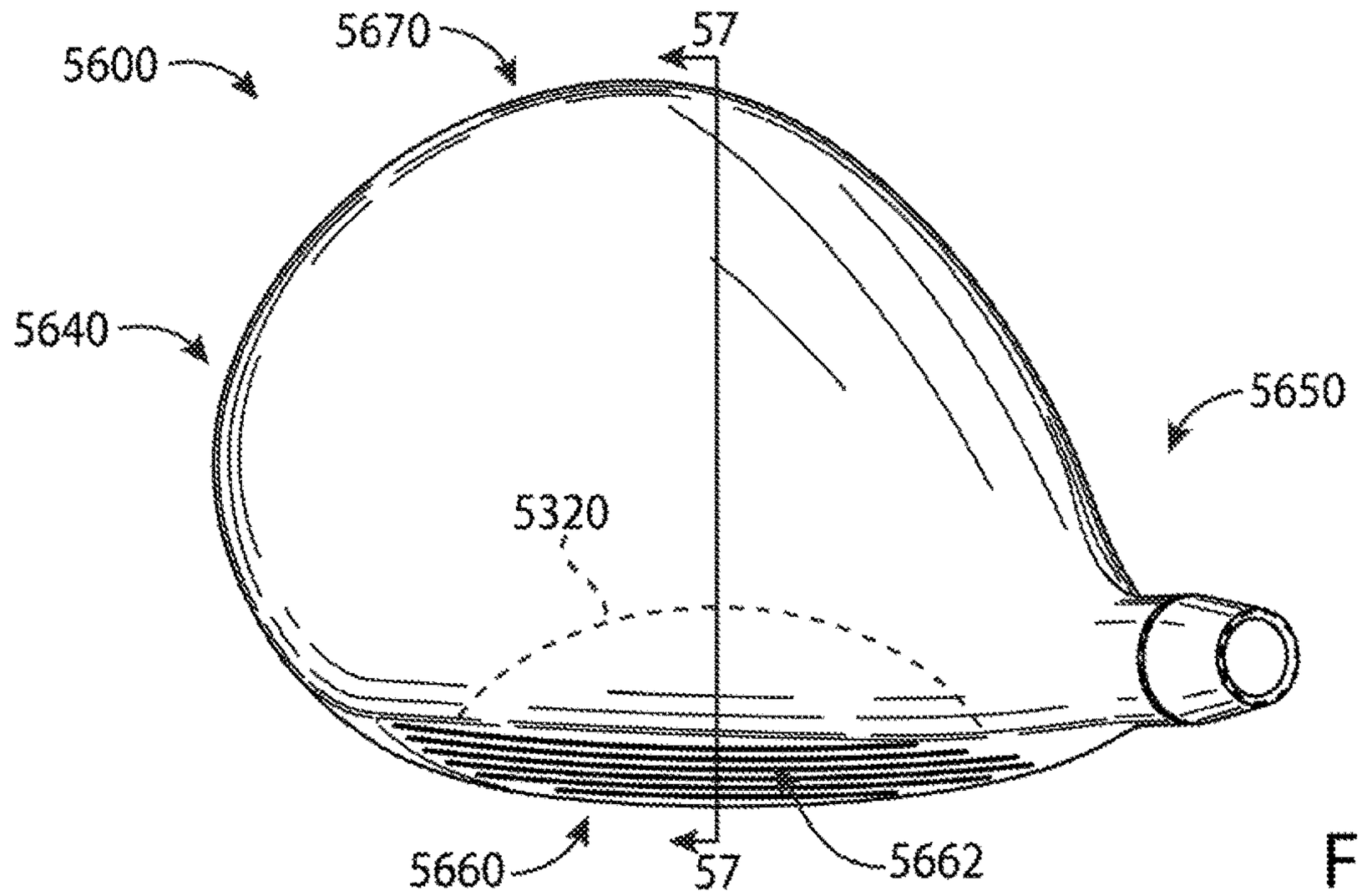

FIG. 56

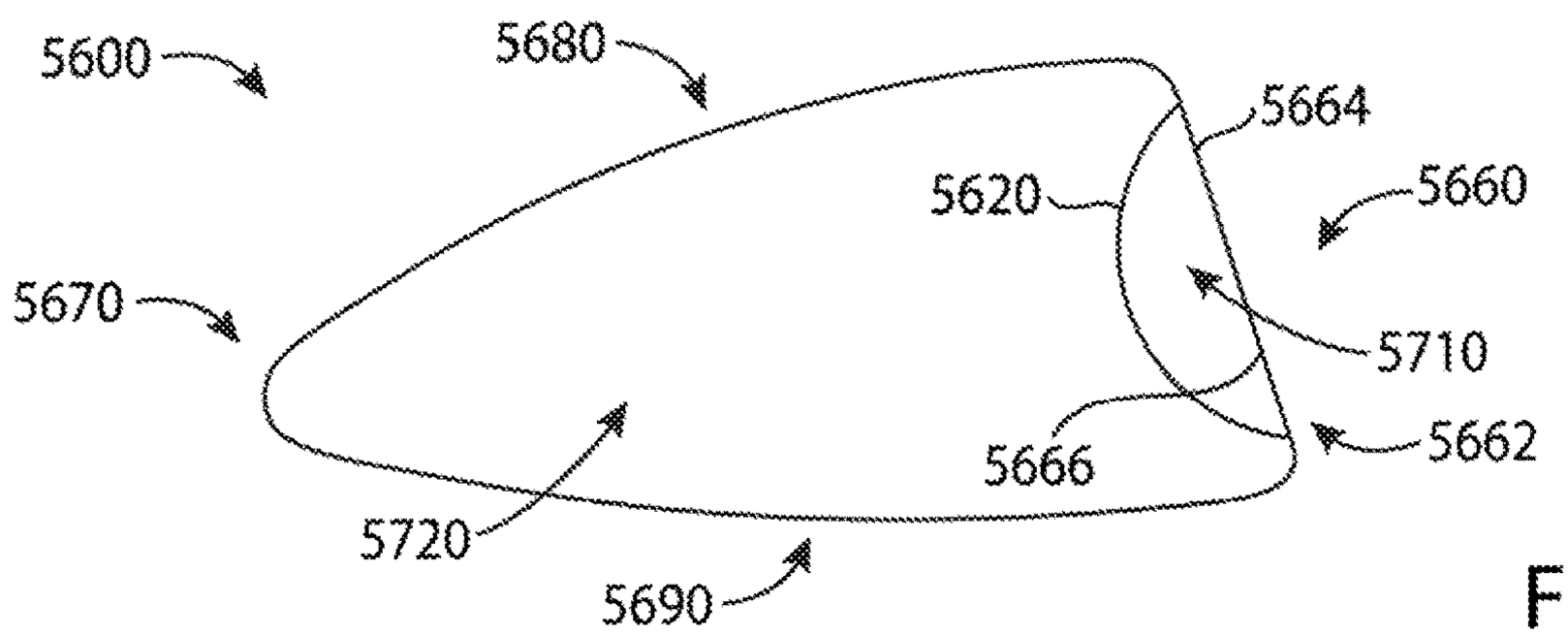

FIG. 57

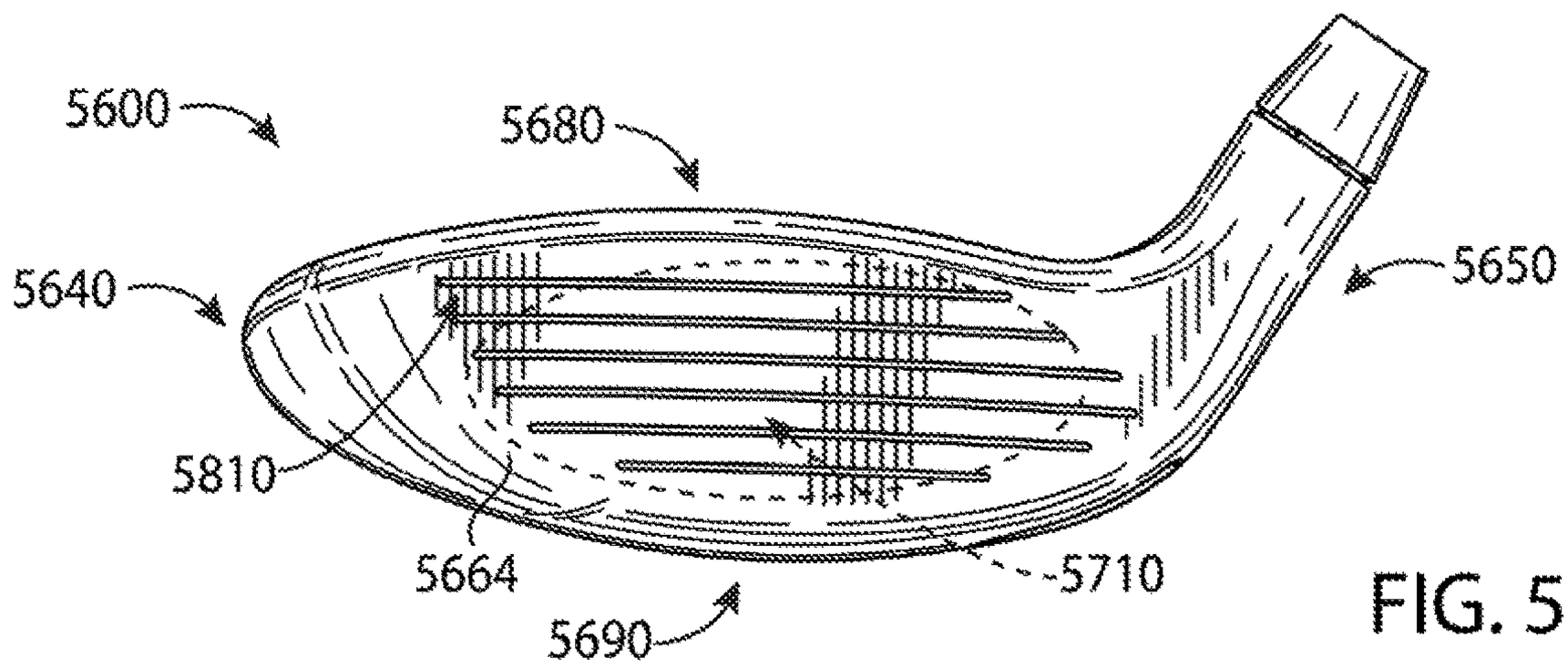

FIG. 58

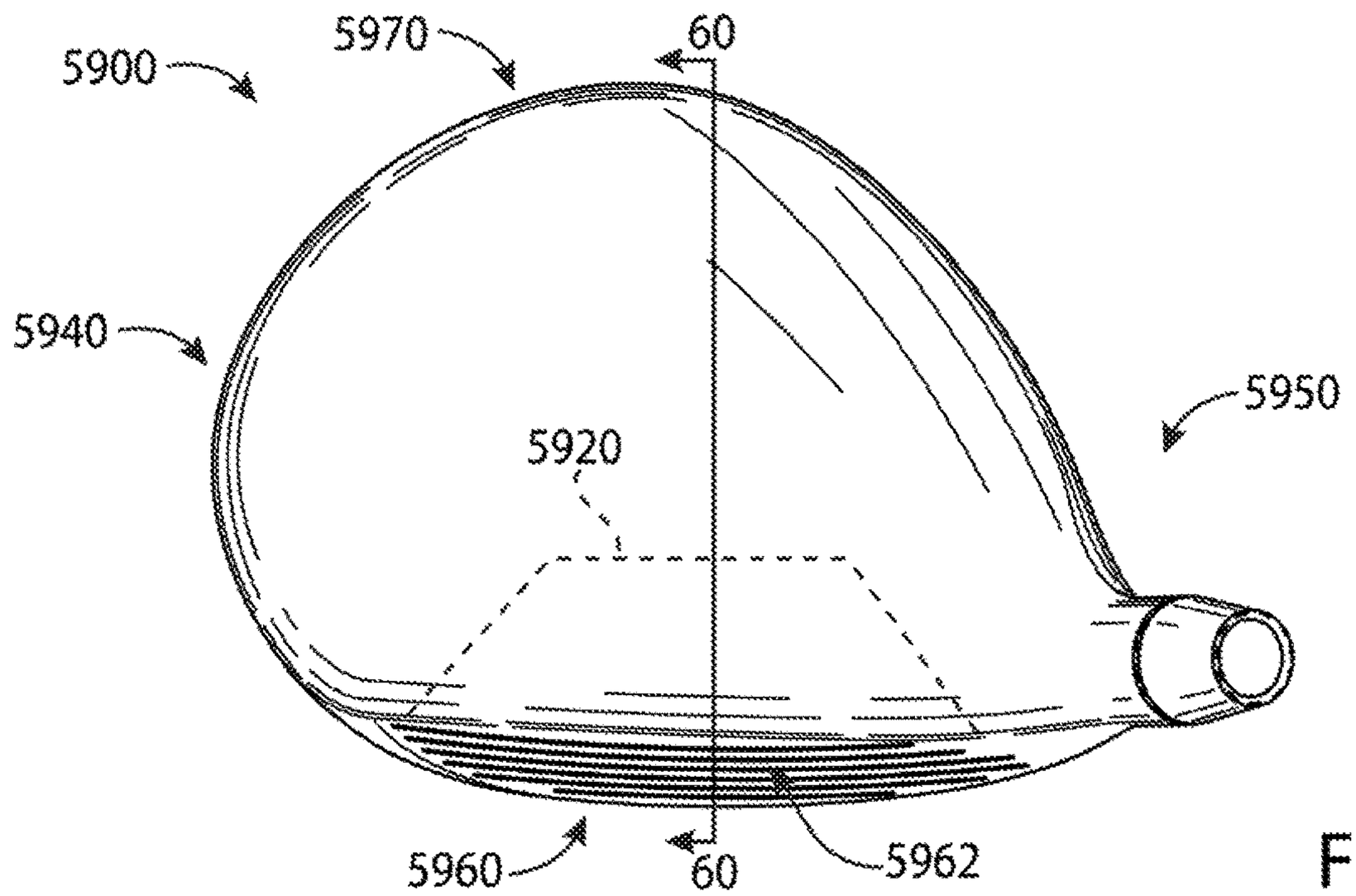

FIG. 59

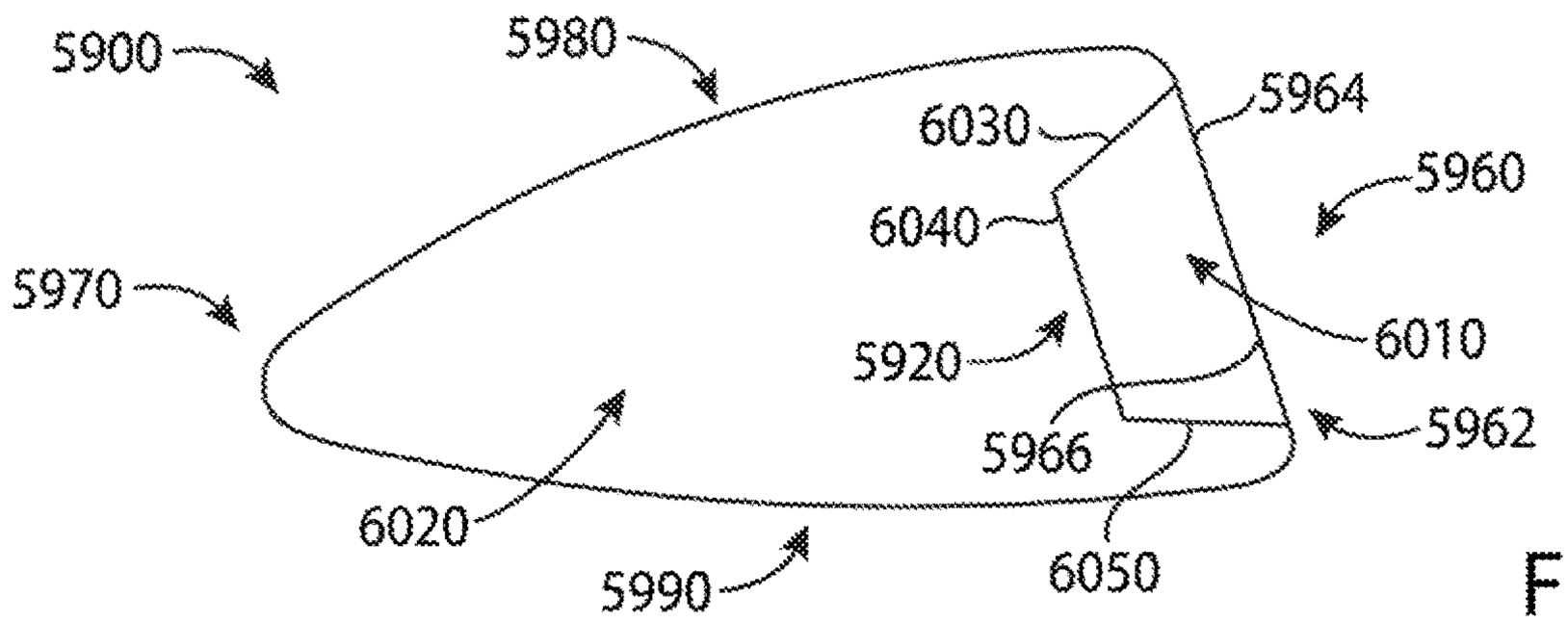

FIG. 60

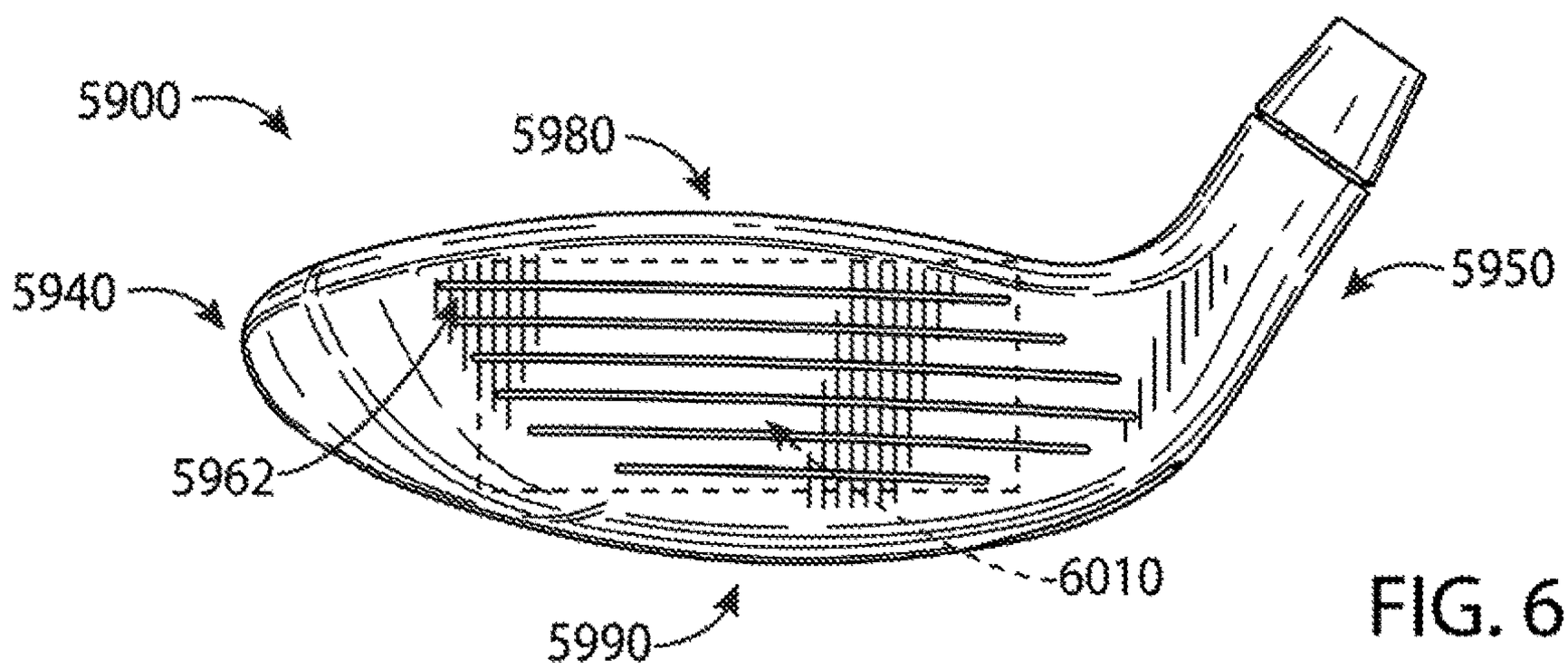

FIG. 61

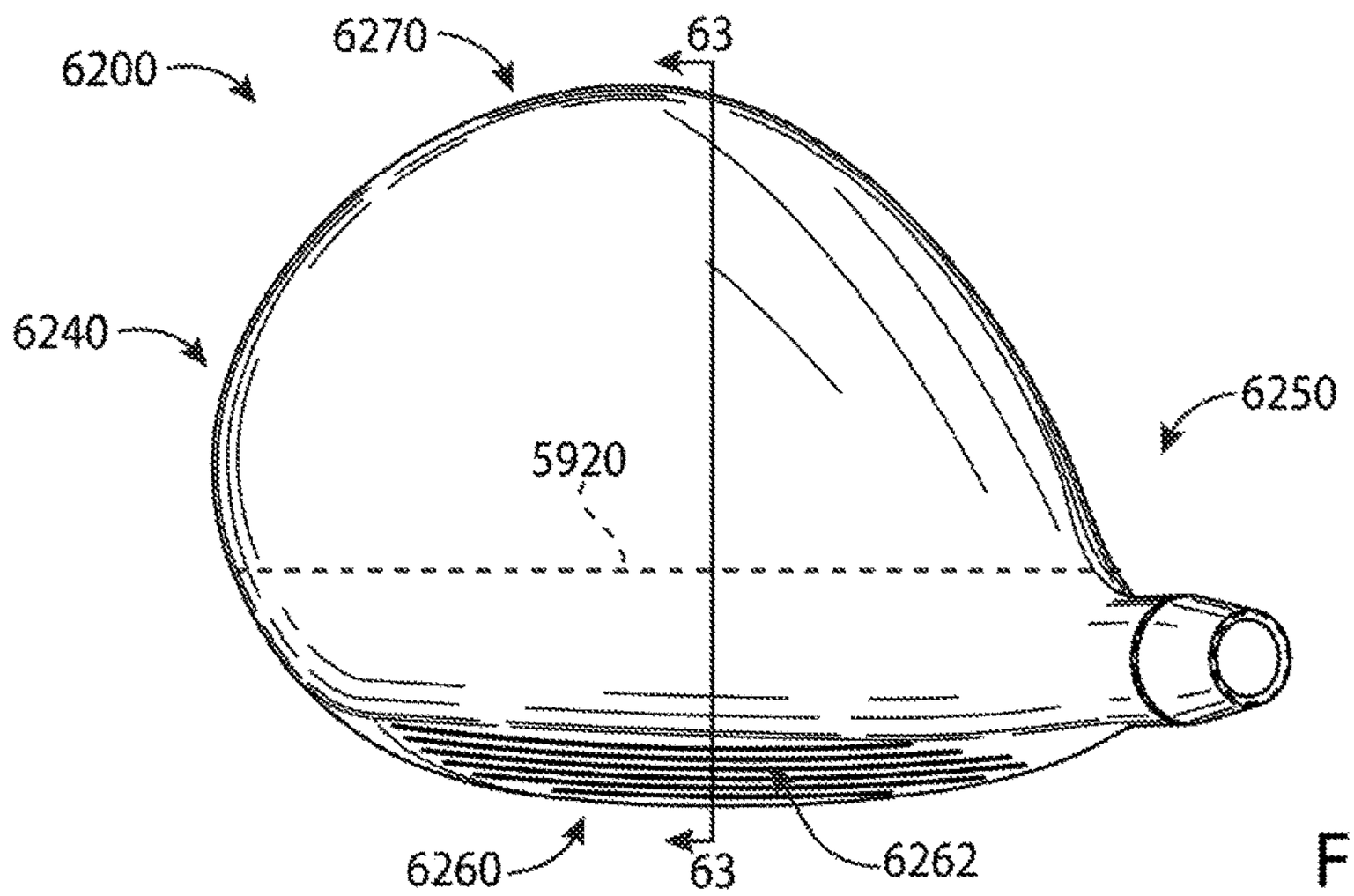

FIG. 62

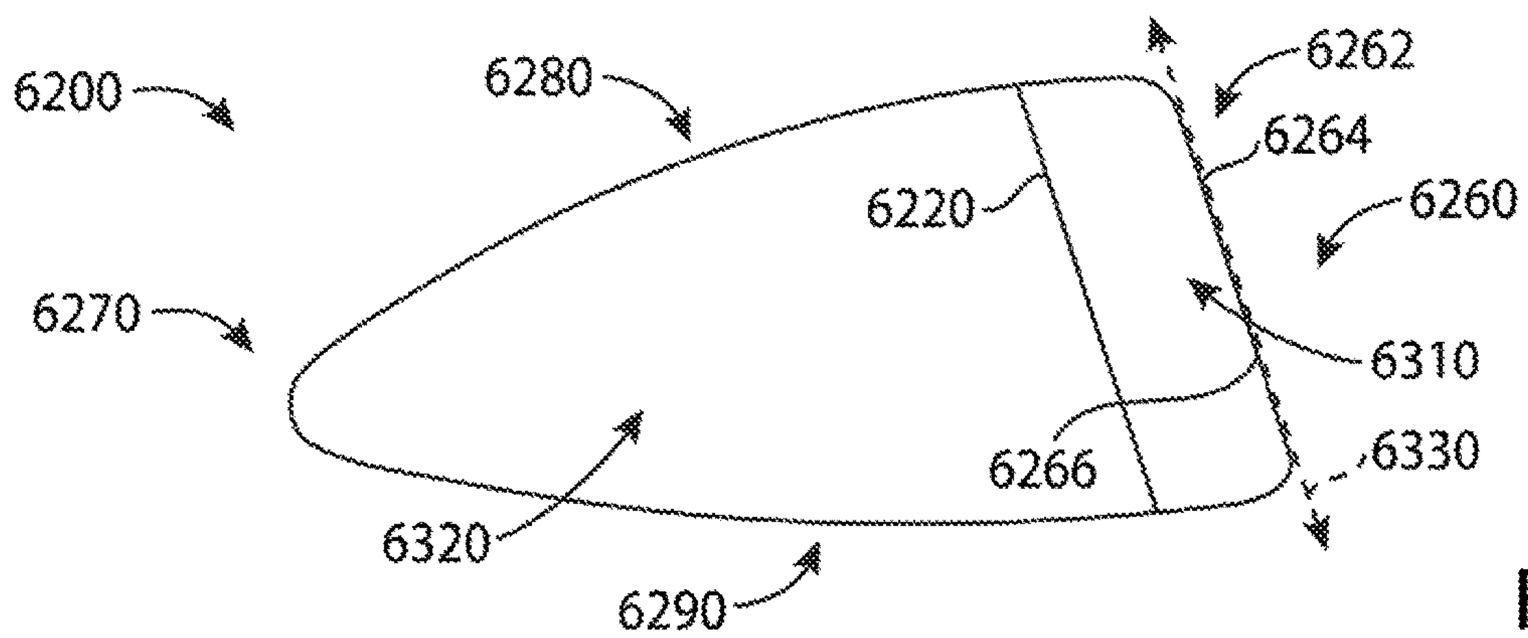

FIG. 63

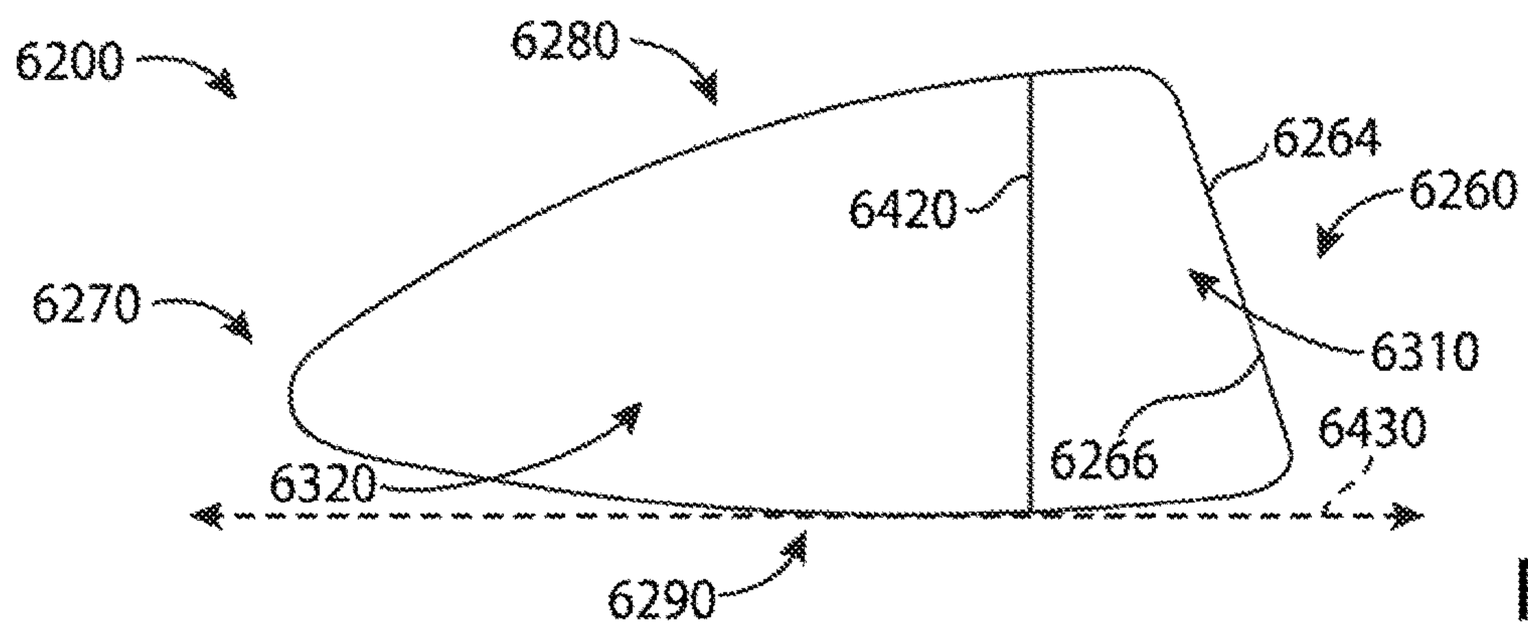

FIG. 64

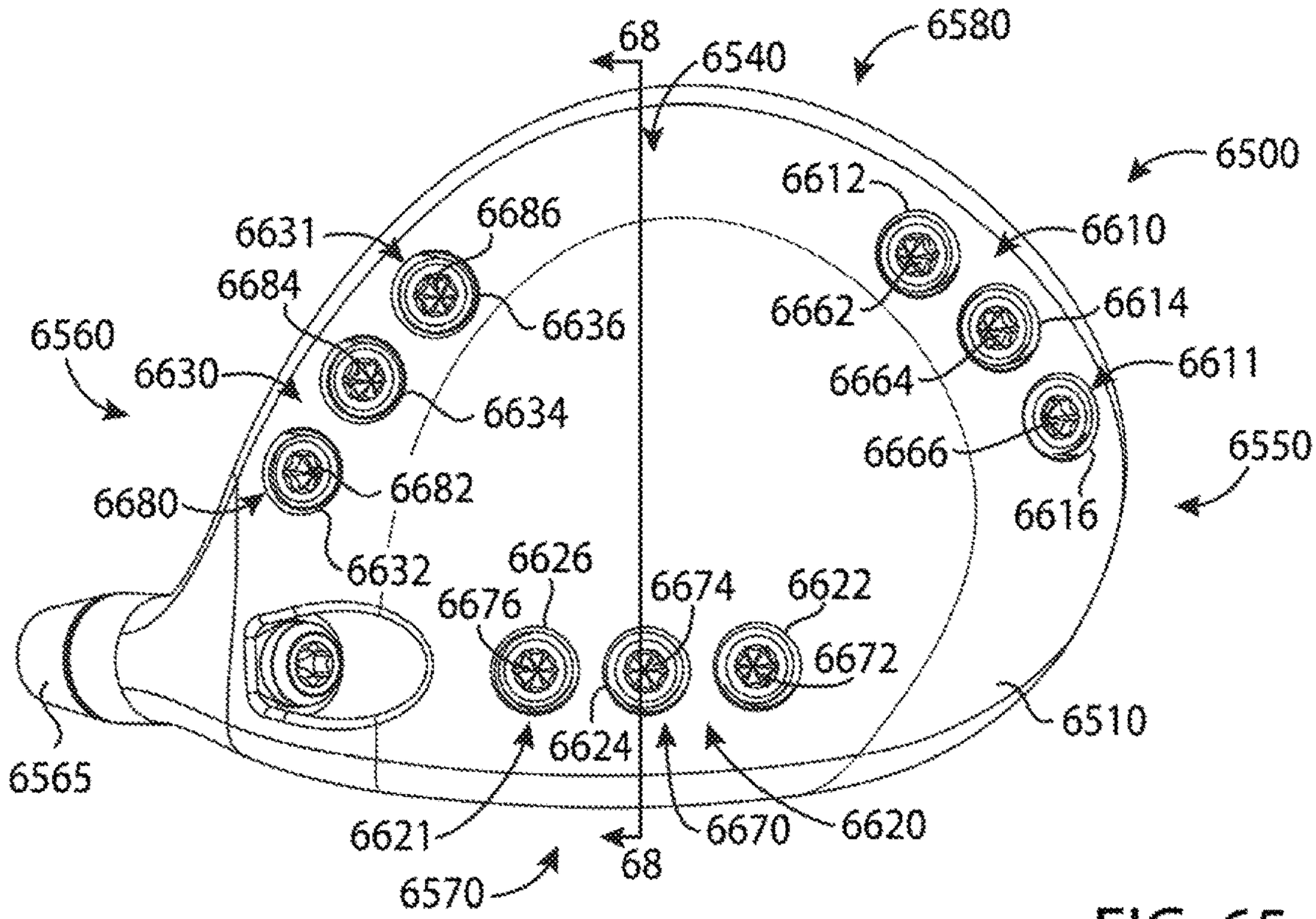
68
6540
6580
6500
6612
6610
6631
6686
6684
6636
6662
6614
6560
6630
6634
6664
6611
6666
6550
6680
6682
6616
6632
6626
6676
6674
6622
6672
6510
6565
6624
6621
6670
6620
68
6570

FIG. 65

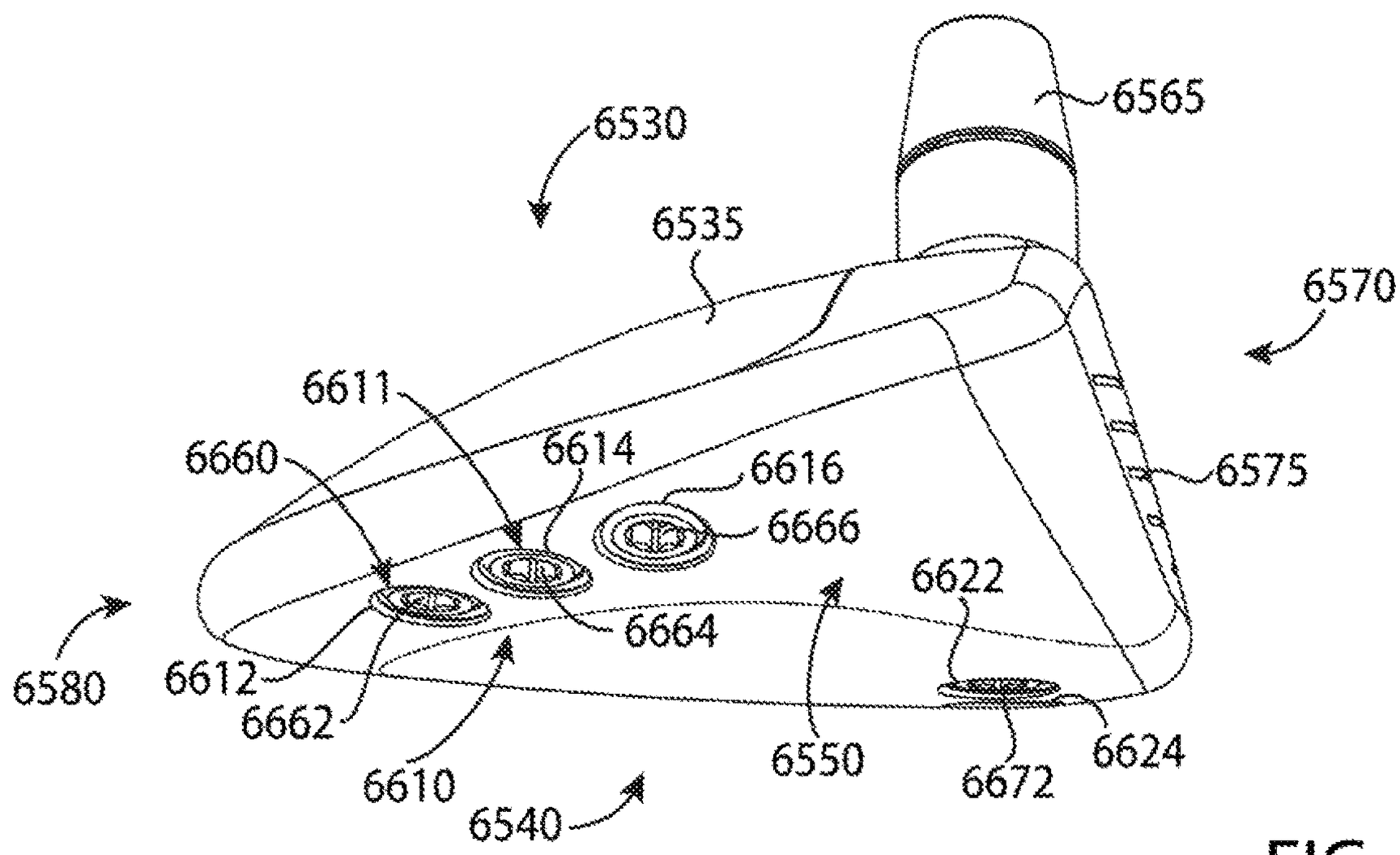
6565
6530
6535
6570
6611
6660
6614
6616
6575
6666
6622
6664
6580
6612
6662
6550
6624
6610
6672
6540

FIG. 66

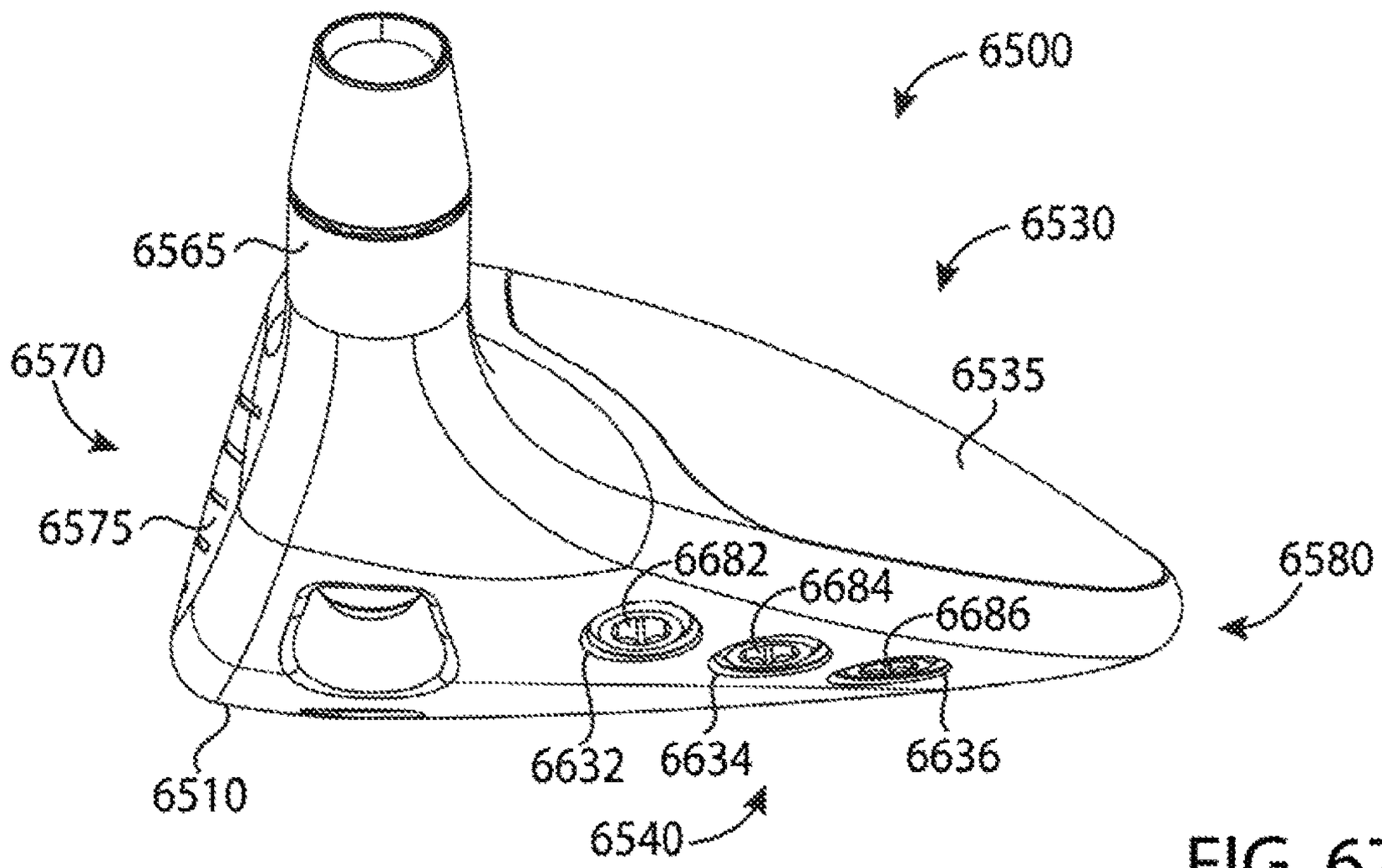
6500
6530
6565
6570
6535
6575
6682
6684
6686
6580
6510
6632
6634
6636
6540

FIG. 67

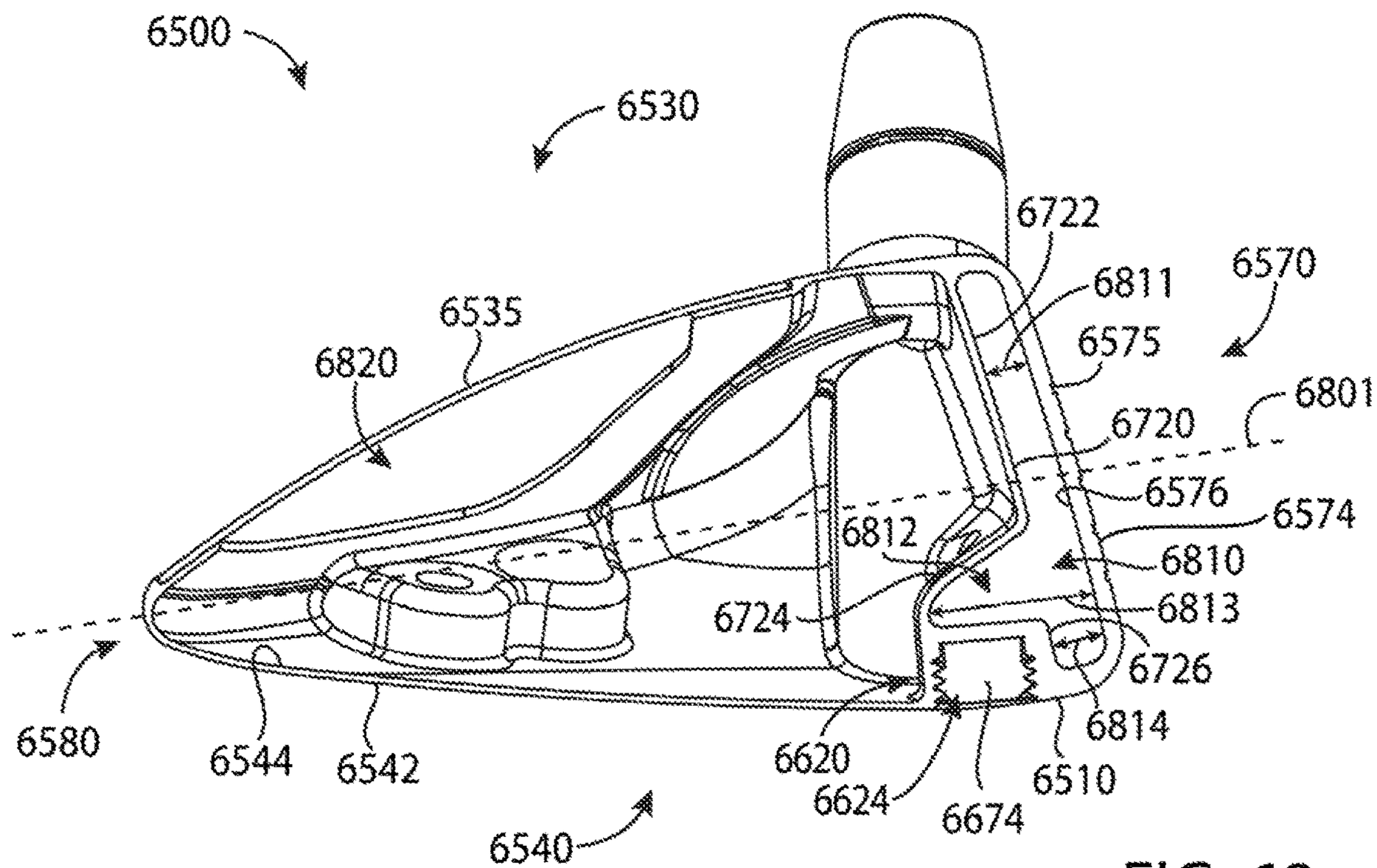
6500
6530
6722
6811
6570
6535
6575
6820
6801
6720
6576
6574
6812
6810
6724
6813
6726
6814
6580
6544
6542
6620
6624
6674
6510
6540

FIG. 68

GOLF CLUB HEADS AND METHODS TO MANUFACTURE GOLF CLUB HEADS

CROSS REFERENCE

This application is a continuation-in-part of application Ser. No. 15/875,416, filed Jan. 19, 2018, now U.S. Pat. No. 10,293,220, which is a continuation of application Ser. No. 15/446,842, filed Mar. 1, 2017, now U.S. Pat. No. 9,895,582, which is a continuation of application Ser. No. 15/377,120, filed Dec. 13, 2016, now U.S. Pat. No. 9,802,087, which is a continuation of application Ser. No. 14/939,849, filed Nov. 12, 2015, now U.S. Pat. No. 9,555,295, which is a continuation of application Ser. No. 14/615,606, filed Feb. 6, 2015, now U.S. Pat. No. 9,199,140.

This application is a continuation-in-part of application Ser. No. 15/875,496, filed Jan. 19, 2018, now U.S. Pat. No. 10,252,123, which is a continuation of application Ser. No. 15/457,627, filed Mar. 13, 2017, now U.S. Pat. No. 9,895,583, which is a continuation of application Ser. No. 15/189,806, filed Jun. 22, 2016, now U.S. Pat. No. 9,636,554, which is a continuation of application Ser. No. 14/667,546, filed Mar. 24, 2015, now U.S. Pat. No. 9,399,158, which is a continuation-in-part of application Ser. No. 14/615,606, filed Feb. 6, 2015, now U.S. Pat. No. 9,199,140, which claims the benefit of U.S. Provisional Application No. 62/042,155, filed Aug. 26, 2014, U.S. Provisional Application No. 62/048,693, filed Sep. 10, 2014, U.S. Provisional Application No. 62/101,543, filed Jan. 9, 2015, U.S. Provisional Application No. 62/105,123, filed Jan. 19, 2015, and U.S. Provisional Application No. 62/109,510, filed Jan. 29, 2015.

This application is a continuation-in-part of application Ser. No. 15/967,117, filed Apr. 30, 2018, now U.S. Pat. No. 10,293,221, which is a continuation application Ser. No. 15/457,618, filed Mar. 13, 2017, now U.S. Pat. No. 9,987,526, which is a continuation of application Ser. No. 15/163,393, filed May 24, 2016, now U.S. Pat. No. 9,662,547, which is a continuation of application Ser. No. 14/667,541, filed Mar. 24, 2015, now U.S. Pat. No. 9,352,197.

This application is a continuation-in-part of application Ser. No. 15/803,157, filed Nov. 3, 2017, now U.S. Pat. No. 10,335,645, which is a continuation of application Ser. No. 15/290,859, filed Oct. 11, 2016, now U.S. Pat. No. 9,814,945, which is a continuation of application Ser. No. 15/040,892, filed Feb. 10, 2016, now U.S. Pat. No. 9,550,096, which claims the benefit of U.S. Provisional Application No. 62/115,024, filed Feb. 11, 2015, U.S. Provisional Application No. 62/120,760, filed Feb. 25, 2015, U.S. Provisional Application No. 62/138,918, filed Mar. 26, 2015, U.S. Provisional Application No. 62/184,757, filed Jun. 25, 2015, U.S. Provisional No. 62/194,135, filed Jul. 17, 2015, and U.S. Provisional Application No. 62/195,211, filed Jul. 21, 2015.

This application is a continuation-in-part of application Ser. No. 16/035,268, filed Jul. 13, 2018, now U.S. Pat. No. 10,420,990, which is a continuation of application Ser. No. 15/725,900, filed Oct. 5, 2017, now U.S. Pat. No. 10,052,532, which is a continuation of application Ser. No. 15/445,253, filed Feb. 28, 2017, now U.S. Pat. No. 9,795,843, which is a continuation of application Ser. No. 15/227,281, filed Aug. 3, 2016, now U.S. Pat. No. 9,782,643, which claims the benefit of U.S. Provisional Application No. 62/281,639, filed Jan. 21, 2016, U.S. Provisional Application No. 62/296,506, filed Feb. 17, 2016, U.S. Provisional Application No. 62/301,756, filed Mar. 1, 2016, and U.S. Provisional Application No. 62/362,491, filed Jul. 14, 2016.

This application is a continuation-in-part of application Ser. No. 15/583,756, filed May 1, 2017, now U.S. Pat. No. 10,143,899, which is a continuation of application Ser. No. 15/271,574, filed Sep. 21, 2016, now U.S. Pat. No. 9,669,270, which claims the benefit of U.S. Provisional Application No. 62/291,793, filed Feb. 5, 2016.

This application is a continuation-in-part of application Ser. No. 16/129,526, filed Sep. 12, 2018, now U.S. Pat. No. 10,441,855, which is a continuation of application Ser. No. 15/808,552, filed Nov. 9, 2017, now U.S. Pat. No. 10,099,093, which is a continuation of application Ser. No. 15/492,711, filed Apr. 20, 2017, now U.S. Pat. No. 9,821,201, which claims the benefit of U.S. Provisional Application No. 62/329,662, filed Apr. 29, 2016.

This application is a continuation-in-part of application Ser. No. 15/994,860, filed May 31, 2018, which is a continuation of application Ser. No. 15/807,201, filed Nov. 8, 2017, now U.S. Pat. No. 10,010,770, which is a continuation of application Ser. No. 15/463,306, filed Mar. 20, 2017, now U.S. Pat. No. 9,821,200, which is a continuation of application Ser. No. 15/249,857, filed Aug. 29, 2016, now U.S. Pat. No. 9,630,070, which claims the benefit of U.S. Provisional Application No. 62/337,184, filed May 16, 2016, and U.S. Provisional Application No. 62/361,988, filed Jul. 13, 2016.

This application is a continuation-in-part of application Ser. No. 15/831,148, filed Dec. 4, 2017, now U.S. Pat. No. 10,195,501, which is a continuation of application Ser. No. 15/453,701, filed Mar. 8, 2017, now U.S. Pat. No. 9,833,667, which claims the benefit of U.S. Provisional Application No. 62/356,539, filed Jun. 30, 2016, and U.S. Provisional Application No. 62/360,802, filed Jul. 11, 2016.

This application is a continuation-in-part of application Ser. No. 15/967,098, filed Apr. 30, 2018, which is a continuation of application Ser. No. 15/687,273, filed Aug. 25, 2017, now U.S. Pat. No. 9,981,160, which claims the benefit of U.S. Provisional Application No. 62/380,727, filed Aug. 29, 2016.

This application is a continuation-in-part of application Ser. No. 15/910,747, filed Mar. 2, 2018, now U.S. Pat. No. 10,232,234, which is a continuation of application Ser. No. 15/477,972, filed Apr. 3, 2017, now U.S. Pat. No. 9,914,029, which is a continuation of application Ser. No. 15/406,408, filed Jan. 13, 2017, now U.S. Pat. No. 9,861,867, which claims the benefit of U.S. Provisional Application No. 62/406,856, filed Oct. 11, 2016, U.S. Provisional Application No. 62/412,389, filed Oct. 25, 2016, and U.S. Provisional Application No. 62/419,242, filed Nov. 8, 2016.

This application is a continuation-in-part of application Ser. No. 15/981,094, filed May 16, 2018, now U.S. Pat. No. 10,384,102, which is a continuation of application Ser. No. 15/724,035, filed Oct. 3, 2017, now U.S. Pat. No. 9,795,842, which is a continuation of application Ser. No. 15/440,968, filed Feb. 23, 2017, now U.S. Pat. No. 9,795,842, which claims the benefit of U.S. Provisional Application No. 62/444,671, filed Jan. 10, 2017, and U.S. Provisional Application No. 62/445,878, filed Jan. 13, 2017.

This application is a continuation-in-part of application Ser. No. 15/970,665, filed May 3, 2018, which is a continuation of application Ser. No. 15/667,343, filed Aug. 2, 2017, now U.S. Pat. No. 10,213,659, which claims the benefit of U.S. Provisional Application No. 62/512,275, filed May 30, 2017.

This application is a continuation-in-part of application Ser. No. 16/030,403, filed Jul. 9, 2018, now U.S. Pat. No. 10,413,787, which claims the benefit of U.S. Provisional

Application No. 62/530,734, filed Jul. 10, 2017, and U.S. Provisional Application No. 62/624,294, filed Jan. 31, 2018.

This application claims the benefit of U.S. Provisional Application No. 62/581,456, filed Nov. 3, 2017.

The disclosures of the referenced applications are incorporated herein by reference.

COPYRIGHT AUTHORIZATION

The present disclosure may be subject to copyright protection. The copyright owner has no objection to the facsimile reproduction by anyone of the present disclosure and its related documents, as they appear in the Patent and Trademark Office patent files or records, but otherwise reserves all applicable copyrights.

FIELD

The present disclosure generally relates to sports equipment, and more particularly, to golf club heads and methods to manufacture golf club heads.

BACKGROUND

In golf, various factors may affect the distance and direction that a golf ball may travel. In particular, the center of gravity (CG) and/or the moment of inertia (MOI) of a golf club head may affect the launch angle, the spin rate, and the direction of the golf ball at impact. Such factors may vary significantly based the type of golf swing.

BRIEF DESCRIPTION OF THE DRAWINGS

FIG. **1** is top perspective view of an example golf club head according to an embodiment of the apparatus, methods, and articles of manufacture described herein.

FIG. **2** depicts a bottom perspective view of the example golf club head of FIG. **1**.

FIG. **3** depicts a top view of the example golf club head of FIG. **1**.

FIG. **4** depicts a bottom view of the example golf club head of FIG. **1**.

FIG. **5** depicts a front view of the example golf club head of FIG. **1**.

FIG. **6** depicts a rear view of the example golf club head of FIG. **1**.

FIG. **7** depicts a toe view of the example golf club head of FIG. **1**.

FIG. **8** depicts a heel view of the example golf club head of FIG. **1**.

FIG. **9** depicts a bottom view of an example body portion of the example golf club head of FIG. **1**.

FIG. **10** depicts a cross-sectional view of the example body portion of the example golf club head of FIG. **1**.

FIG. **11** depicts two ports of the example golf club head of FIG. **1**.

FIG. **12** depicts a top view of an example mass portion of the example golf club head of FIG. **1**.

FIG. **13** depicts a side view of the example mass portion of FIG. **10**.

FIG. **14** depicts example launch trajectory profiles of the example golf club head of FIG. **1**.

FIG. **15** depicts a first weight configuration of the example mass portions.

FIG. **16** depicts a second weight configuration of the example mass portions.

FIG. **17** depicts a third weight configuration of the example mass portions.

FIG. **18** depicts a fourth weight configuration of the example mass portions.

FIG. **19** depicts an example launch trajectory profile of the example golf club head of FIG. **18**.

FIG. **20** depicts one manner in which the example golf club heads described herein may be manufactured.

FIG. **21** depicts a bottom view of another example golf club head.

FIG. **22** depicts a bottom view of yet another example golf club head.

FIG. **23** is top perspective view of an example golf club head according to an embodiment of the apparatus, methods, and articles of manufacture described herein.

FIG. **24** depicts a bottom perspective view of the example golf club head of FIG. **23**.

FIG. **25** depicts a front view of the example golf club head of FIG. **23**.

FIG. **26** depicts a rear view of the example golf club head of FIG. **23**.

FIG. **27** depicts a top view of the example golf club head of FIG. **23**.

FIG. **28** depicts a bottom view of the example golf club head of FIG. **23**.

FIG. **29** depicts a toe view of the example golf club head of FIG. **23**.

FIG. **30** depicts a heel view of the example golf club head of FIG. **23**.

FIG. **31** depicts a cross-sectional view of the example golf club head of FIG. **23** taken at section line **31-31** of FIG. **29**

FIG. **32** depicts a cross-sectional view of the example golf club head of FIG. **23** taken at section line **32-32** of FIG. **25**.

FIG. **33** depicts a cross-sectional view of an example golf club head of FIG. **23** taken at section line **31-31** of FIG. **29** according to an embodiment of the apparatus, methods, and articles of manufacture described herein.

FIG. **34** depicts a cross-sectional view of the golf club head of FIG. **33** taken at section line **32-32** of FIG. **25**.

FIG. **35** depicts a cross-sectional view of an example golf club head of FIG. **23** taken at section line **31-31** of FIG. **29** according to an embodiment of the apparatus, methods, and articles of manufacture described herein.

FIG. **36** depicts a cross-sectional view of an example golf club head of FIG. **23** taken at section line **31-31** of FIG. **29** according to an embodiment of the apparatus, methods, and articles of manufacture described herein.

FIG. **37** depicts a cross-sectional view of an example golf club head of FIG. **23** taken at section line **31-31** of FIG. **29** according to an embodiment of the apparatus, methods, and articles of manufacture described herein.

FIG. **38** depicts a cross-sectional view of an example golf club head of FIG. **23** taken at section line **31-31** of FIG. **29** according to an embodiment of the apparatus, methods, and articles of manufacture described herein.

FIG. **39** depicts a cross-sectional view of an example golf club head of FIG. **23** taken at section line **31-31** of FIG. **29** according to an embodiment of the apparatus, methods, and articles of manufacture described herein.

FIG. **40** depicts a perspective view of an polymer insert according to an embodiment of the apparatus, methods, and articles of manufacture described herein.

FIG. **41** is top perspective view of an example golf club head according to an embodiment of the apparatus, methods, and articles of manufacture described herein.

FIG. **42** depicts a bottom view of the example golf club head of FIG. **41**.

FIG. **43** depicts a toe view of the example golf club head of FIG. **41**.

FIG. **44** depicts a top perspective cross-sectional view of the golf club head of FIG. **41** taken at section line **44-44** of FIG. **43**.

FIG. **45** depicts a top perspective cross-sectional view of an example of the golf club head of FIG. **41** taken at section line **44-44** of FIG. **43** according to an embodiment of the apparatus, methods, and articles of manufacture described herein.

FIG. **46** depicts a top perspective cross-sectional view an example of the golf club head of FIG. **41** taken at section line **44-44** of FIG. **43** according to an embodiment of the apparatus, methods, and articles of manufacture described herein.

FIG. **47** depicts a perspective view of an polymer insert according to an embodiment of the apparatus, methods, and articles of manufacture described herein.

FIG. **48** is top perspective view of an example golf club head according to an embodiment of the apparatus, methods, and articles of manufacture described herein.

FIG. **49** depicts a bottom view of the example golf club head of FIG. **48**.

FIG. **50** depicts a toe view of the example golf club head of FIG. **48**.

FIG. **51** depicts a heel view of the example golf club head of FIG. **48**.

FIG. **52** depicts a top perspective cross-sectional view of the golf club head of FIG. **48** taken at section line **52-52** of FIG. **51**.

FIG. **53** depicts a top perspective cross-sectional view of the golf club head of FIG. **48** taken at section line **53-53** of FIG. **49**.

FIG. **54** depicts a top perspective view of an polymer insert according to an embodiment of the apparatus, methods, and articles of manufacture described herein.

FIG. **55** depicts a side perspective view of the polymer insert of FIG. **54**.

FIG. **56** depicts a top view of a golf club head according to another embodiment of the apparatus, methods, and articles of manufacture described herein.

FIG. **57** depicts a schematic cross-sectional view of the example golf club head of FIG. **56** along line **57-57**.

FIG. **58** depicts a front view of the example golf club head of FIG. **56**.

FIG. **59** depicts a top view of a golf club head according to yet another embodiment of the apparatus, methods, and articles of manufacture described herein.

FIG. **60** depicts a schematic cross-sectional view of the example golf club head of FIG. **59** along line **60-60**.

FIG. **61** depicts a front view of the example golf club head of FIG. **59**.

FIG. **62** depicts a top view of a golf club head according to yet another embodiment of the apparatus, methods, and articles of manufacture described herein.

FIG. **63** depicts a schematic cross-sectional view of the example golf club head of FIG. **62** along line **63-63**.

FIG. **64** depicts a schematic cross-sectional view of the example golf club head of FIG. **62** along line **63-63** according to another embodiment of the apparatus, methods, and articles of manufacture described herein.

FIG. **65** depicts a bottom perspective view of a golf club head according to yet another embodiment of the apparatus, methods, and articles of manufacture described herein.

FIG. **66** depicts a toe-side perspective view of the golf club head of FIG. **65**.

FIG. **67** depicts a heel-side perspective view of the golf club head of FIG. **65**.

FIG. **68** depicts a cross-sectional view of the golf club head of FIG. **65** along line **68-68** of FIG. **65**.

For simplicity and clarity of illustration, the drawing figures illustrate the general manner of construction, and descriptions and details of well-known features and techniques may be omitted to avoid unnecessarily obscuring the present disclosure. Additionally, elements in the drawing figures are not necessarily drawn to scale. For example, the dimensions of some of the elements in the figures may be exaggerated relative to other elements to help improve understanding of embodiments of the present disclosure.

DESCRIPTION

In general, golf club heads and methods to manufacture golf club heads are described herein. The apparatus, methods, and articles of manufacture described herein are not limited in this regard. In the example of FIGS. **1-13**, a golf club head **100** may include a body portion **110**, and a plurality of mass portions **120**, generally, shown as a first set of mass portions **210** (FIG. **2**) and a second set of mass portions **220** (FIG. **2**). The body portion **110** may include a top portion **130**, a bottom portion **140**, a toe portion **150**, a heel portion **160**, a front portion **170**, and a rear portion **180**. The bottom portion **140** may include a skirt portion **190** defined as a side portion of the golf club head **100** between the top portion **130** and the bottom portion **140** excluding the front portion **170** and extending across a periphery of the golf club head **100** from the toe portion **150**, around the rear portion **180**, and to the heel portion **160**. The bottom portion **140** may include a transition region **230** and a port region **240**. For example, the port region **240** may be a D-shape region. The port region **240** may include a plurality of ports **900** (FIG. **9**) to receive the plurality of mass portions **120**. The front portion **170** may include a face portion **175** to engage a golf ball (not shown). The body portion **110** may also include a hosel portion **165** to receive a shaft (not shown). Alternatively, the body portion **110** may include a bore instead of the hosel portion **165**. For example, the body portion **110** may be made partially or entirely of an aluminum-based material, a magnesium-type material, a steel-based material, a titanium-based material, any combination thereof, or any other suitable material. In another example the body portion **110** may be made partially or entirely of a non-metal material such as a ceramic material, a composite material, any combination thereof, or any other suitable material.

The golf club head **100** may have a club head volume greater than or equal to 300 cubic centimeters (cm^3 or cc). In one example, the golf club head **100** may be about 460 cc. Alternatively, the golf club head **100** may have a club head volume less than or equal to 300 cc. In particular, the golf club head **100** may have a club head volume between 100 cc and 200 cc. The club head volume of the golf club head **100** may be determined by using the weighted water displacement method (i.e., Archimedes Principle). For example, procedures defined by golf standard organizations and/or governing bodies such as the United States Golf Association (USGA) and/or the Royal and Ancient Golf Club of St. Andrews (R&A) may be used for measuring the club head volume of the golf club head **100**. Although FIG. **1** may depict a particular type of club head (e.g., a driver-type club head), the apparatus, methods, and articles of manufacture described herein may be applicable to other types of club head (e.g., a fairway wood-type club head, a hybrid-type

club head, an iron-type club head, a putter-type club head, etc.). The apparatus, methods, and articles of manufacture described herein are not limited in this regard.

Each of the first set of mass portions **210**, generally shown as **405**, **410**, **415**, **420**, **425**, **430**, and **435** (FIG. **4**), may be associated with a first mass. Each of the second set of mass portions **220**, generally shown as **440**, **445**, **450**, **455**, **460**, **465**, **470**, **475**, and **480** (FIG. **4**), may be associated with a second mass. The first mass may be greater than the second mass or vice versa. In one example, the first set of mass portions **210** may be made of a tungsten-based material whereas the second set of mass portions **220** may be made of an aluminum-based material. As described in detail below, the first and second set of mass portions **210** and **220**, respectively, may provide various weight configurations (e.g., FIGS. **15-18**).

Referring to FIGS. **9-11**, for example, the bottom portion **140** of the body portion **110** may include a plurality of ports **900**. The plurality of ports **900**, generally shown as **905**, **910**, **915**, **920**, **925**, **930**, **935**, **940**, **945**, **950**, **955**, **960**, **965**, **970**, **975**, and **980**, may be located along a periphery of the port region **240** of the bottom portion **140**. The plurality of ports **900** may extend across the bottom portion **140**. In particular, the plurality of ports **900** may extend between the toe and heel portions **150** and **160**, respectively, across the bottom portion **140**. The plurality of ports **900** may also extend between the front and rear portions **170** and **180**, respectively, across the bottom portion **140**. The plurality of ports **900** may be arranged across the bottom portion **140** along a path that defines a generally D-shaped loop. In one example, the plurality of ports **900** may extend more than 50% of a maximum toe-to-heel distance **500** between of the toe and heel portions **150** and **160**, respectively, across the bottom portion **140**. The maximum toe-to-heel distance **500** of the golf club head **100** may be measured from transition regions between the top and bottom portions **130** and **140**, respectively, at the toe and heel portions **150** and **160**, respectively. Alternatively, the maximum toe-to-heel distance **500** may be a horizontal distance between vertical projections of the outermost points of the toe and heel portions **150** and **160**, respectively. For example, the maximum toe-to-heel distance **500** may be measured when the golf club head **100** is at a lie angle **510** of about 60 degrees. If the outermost point of the heel portion **160** is not readily defined, the outermost point of the heel portion **160** may be located at a height **520** of about 0.875 inches (22.23 millimeters) above a ground plane **530** (i.e., a horizontal plane on which the golf club head **100** is lying on). The plurality of ports **900** may extend more than 50% of a maximum toe-to-heel club head distance **500** of the golf club head **100**. In particular, the plurality of ports **900** may extend between the toe portion **150** and the heel portion **160** at a maximum toe-to-heel port distance **995**, which may be more than 50% of the maximum toe-to-heel club head distance **500** of the golf club head **100**. In one example, the maximum toe-to-heel club head distance **500** of the golf club head **100** may be no more than 5 inches (127 millimeters). Accordingly, the plurality of ports **900** may extend a port maximum toe-to-heel port distance of at least 2.5 inches between the toe and heel portions **150** and **160**, respectively. A maximum toe-to-heel port distance **995** may be the maximum distance between the heel-side boundary of the port farthest from the toe portion **150** and the toe-side boundary of the port farthest from the heel portion **160**. In the example of FIG. **9**, the port maximum toe-to-heel port distance **995** may be the maximum distance between the heel-side boundary of the port **940** and toe-side boundary of the port **980**. For example, the maximum toe-to-heel port distance **995** may be about 3.7 inches. As the rules of golf may change from time to time (e.g., new regulations may be adopted or old rules may be eliminated or modified by golf standard organizations and/or governing bodies), the lie angle **510** and/or the height **520** for measuring the maximum toe-to-heel club head distance **500** may also change. The apparatus, methods, and articles of manufacture described herein are not limited in this regard.

Each of the plurality of ports **900** may be associated with a port diameter (D_{port}) (e.g., two shown as **1105** and **1110** in FIG. **11**). For example, the port diameter of each port of the plurality of ports **900** may be about 0.3 inch (7.65 millimeters). Alternatively, the port diameters of adjacent ports may be different. In one example, the port **905** may be associated with a port diameter **1105**, and the port **910** may be associated with a port diameter **1110**. In particular, the port diameter **1105** of the port **905** may be larger than the port diameter **1110** of the port **910** or vice versa. The apparatus, methods, and articles of manufacture described herein are not limited in this regard.

The bottom portion **140** may also include an outer surface **990**. As illustrated in FIG. **10**, for example, the plurality of ports **900** may be formed on the bottom portion **140** relative to an outer surface curve **1090** formed by the outer surface **990**. In particular, each of the plurality of ports **900** may be associated with a port axis generally shown as **1005**, **1010**, and **1015**. A center of a port may define the port axis of the port. Each port axis may be perpendicular or substantially perpendicular to a plane that is tangent to the outer surface curve **1090** at the point of intersection of the port axis and the outer surface curve **1090**. In one example, substantially perpendicular may refer to a deviation of ±5° from perpendicular. In another example, substantially perpendicular may refer to a deviation of ±3° from perpendicular. The deviation from perpendicular may depend on manufacturing tolerances.

In one example, the port axis **1010** may be perpendicular or substantially perpendicular (i.e., normal) to a tangent plane **1012** of the outer surface curve **1090**. Multiple fixtures may be used to manufacture the plurality of ports **900** by positioning the golf club head **100** in various positions. Alternatively, the ports may be manufactured by multiple-axis machining processes, which may be able to rotate the golf club head around multiple axes to mill away excess material (e.g., by water jet cutting and/or laser cutting) to form the plurality of ports **900**. Further, multiple-axis machining processes may provide a suitable surface finish because the milling tool may be moved tangentially about a surface. Accordingly, the apparatus, methods, and articles of manufacture described herein may use a multiple-axis machining process to form each of the plurality of ports **900** on the bottom portion **140**. For example, a five-axis milling machine may form the plurality of ports **900** so that the port axis **1000** of each of the plurality ports **900** may be perpendicular or substantially perpendicular to the outer surface curve **1090**. The tool of the five-axis milling machine may be moved tangentially about the outer surface curve **1090** of the outer surface **990**.

Turning to FIG. **11**, for example, two adjacent ports may be separated by a port distance **1100**, which may be the shortest distance between two adjacent ports on the outer surface **990**. In particular, the port distance **1100** may be less than or equal to the port diameter of any of the two adjacent ports. In one example, the port distance **1100** between the ports **905** and **910** may be less than or equal to either the port

diameter **1105** or the port diameter **1110**. The apparatus, methods, and articles of manufacture described herein are not limited in this regard.

The plurality of mass portions **120** may have similar or different physical properties (e.g., density, shape, mass, volume, size, color, etc.). In one example, the first set of mass portions **210** may be a black color whereas the second set of mass portions **220** may be a gray color or a steel color. Some or all of the plurality of mass portions **120** may be partially or entirely made of a metal material such as a steel-based material, a tungsten-based material, an aluminum-based material, any combination thereof or suitable types of materials. Alternatively, some or all of the plurality of mass portions **120** may be partially or entirely made of a non-metal material (e.g., composite, plastic, etc.).

In the illustrated example as shown in FIGS. **12** and **13**, each mass portion of the plurality of mass portions **120** may have a cylindrical shape (e.g., a circular cross section). Although the above examples may describe mass portions having a particular shape, the apparatus, methods, and articles of manufacture described herein may include mass portions of other suitable shapes (e.g., a portion of or a whole sphere, cube, cone, cylinder, pyramid, cuboidal, prism, frustum, or other suitable geometric shape). Each mass portion of the plurality of mass portions **120** may be associated with a diameter **1200** and a height **1300**. In one example, each mass portion of the plurality of mass portions **120** may have a diameter of about 0.3 inch (7.62 millimeters) and a height of about 0.2 inch (5.08 millimeters). Alternatively, the first and second sets of mass portions **210** and **220**, respectively, may be different in width and/or height.

Instead of a rear-to-front direction as in other golf club heads, each mass portion of the plurality of mass portions **120** may engage one of the plurality of ports **400** in a bottom-to-top direction. The plurality of mass portions **120** may include threads to secure in the ports. For example, each mass portion of the plurality of mass portions **120** may be a screw. The plurality of mass portions **120** may not be readily removable from the body portion **110** with or without a tool. Alternatively, the plurality of mass portions **120** may be readily removable (e.g., with a tool) so that a relatively heavier or lighter mass portion may replace one or more of the plurality of mass portions **120**. In another example, the plurality of mass portions **120** may be secured in the ports of the body portion **110** with epoxy or adhesive so that the plurality of mass portions **120** may not be readily removable. In yet another example, the plurality of mass portions **120** may be secured in the ports of the body portion **110** with both epoxy and threads so that the plurality of mass portions **120** may not be readily removable. The apparatus, methods, and articles of manufacture described herein are not limited in this regard.

In contrast to other golf club heads, the golf club head **100** may accommodate at least four different types of golf swings. As illustrated in FIG. **14**, for example, each weight configuration may be associated with one of the plurality of launch trajectory profiles **1400**, generally shown as **1410**, **1420**, and **1430**. Referring to FIG. **15**, for example, a first weight configuration **1500** may be associated with a configuration of a first set of ports **1510**. The first set of ports **1510** may be located at or proximate to the front portion **170** (e.g., ports **905**, **910**, **915**, **920**, **925**, **930**, and **935** shown in FIG. **9**). In the first weight configuration **1500**, a first set of mass portions may be disposed toward the front portion **170** according to the configuration of the first set of ports **1510**, whereas a second set of mass portions may be disposed toward the rear portion **180**. In particular, the first set of mass portions may form a cluster according to the configuration of the first set of ports **1510** at or proximate to the front portion **170**. The mass portions **405**, **410**, **415**, **420**, **425**, **430**, and **435** may define the first set of mass portions and may be disposed in ports **905**, **910**, **915**, **920**, **925**, **930**, and **935**, respectively. The mass portions **440**, **445**, **450**, **455**, **460**, **465**, **470**, **475**, and **480** may define the second set of mass portions and may be disposed in ports **940**, **945**, **950**, **955**, **960**, **965**, **970**, **975**, and **980**, respectively. The first weight configuration **1500** may be associated with the first launch trajectory profile **1410** (FIG. **14**). In particular, the first weight configuration **1500** may decrease spin rate of a golf ball. By placing relatively heavier mass portions (i.e., the first set of mass portions) towards the front portion **170** of the golf club head **100** according to the configuration of the first set of ports **1510**, the center of gravity (GC) of the golf club head **100** may move relatively forward and lower to produce a relatively lower launch and spin trajectory. As a result, the first launch trajectory profile **1410** may be associated with a relatively greater roll distance (i.e., distance after impact with the ground). While the above example may describe the mass portions being disposed in certain ports, any mass portion of the first set of mass portions **210** may be disposed in any port of the first set of ports **1510**.

Turning to FIG. **16**, for example, a second weight configuration **1600** may be associated with a configuration of a second set of ports **1610**. The second set of ports **1610** may be located at or proximate to the rear portion **180** (e.g., ports, **945**, **950**, **955**, **960**, **965**, **970**, and **975** shown in FIG. **9**). In a second weight configuration **1600** as illustrated in FIG. **16**, for example, a first set of mass portions may be disposed toward the rear portion **180** whereas a second set of mass portions may be disposed toward the front portion **170**. In particular, the first set of mass portions may form a cluster **1610** at or proximate to the rear portion **180** according to the configuration of the second set of ports **1610**. The mass portions **405**, **410**, **415**, **420**, **425**, **430**, and **435** may define the first set of mass portions and may be disposed in ports **945**, **950**, **955**, **960**, **965**, **970**, and **975**, respectively. The mass portions **440**, **445**, **450**, **455**, **460**, **465**, **470**, **475**, and **480** may define the second set of mass portions and may be disposed in ports **905**, **910**, **915**, **920**, **925**, **930**, **935**, **940**, and **980**, respectively. The second weight configuration **1600** may be associated with the second launch trajectory profile **1420** (FIG. **14**). In particular, the second weight configuration **1600** may increase launch angle of a golf ball and maximize forgiveness. By placing the relatively heavier mass portion (i.e., the first set of mass portions) towards the rear portion **180** of the golf club head **100** according to the configuration of the second set of ports **1610**, the center of gravity (GC) of the golf club head **100** may move relatively back and up to produce a relatively higher launch and spin trajectory. Further, the moment of inertia (MOI) of the golf club head **100** may increase in both the horizontal (front-to-back axis) and vertical axes (top-to-bottom axis), which in turn, provides relatively more forgiveness on off-center hits. As a result, the second launch trajectory profile **1420** may be associated with a relatively greater carry distance (i.e., in-the-air distance).

Turning to FIG. **17**, for example, a third weight configuration **1700** may be associated with a configuration of a third set of ports **1710**. In the third weight configuration **1700**, for example, a first set of mass portions may be disposed toward the heel portion **160** whereas a second set of mass portions may be disposed toward the toe portion **150**. In particular, the first set of mass portions may form a cluster of mass

portions at or proximate to the heel portion **160** according to the configuration of the third set of ports **1710**. The mass portions **405**, **410**, **415**, **420**, **425**, **430**, and **435** may define the first set of mass portions and may be disposed in ports **925**, **930**, **935**, **940**, **945**, **950**, and **955**, respectively. The mass portions **440**, **445**, **450**, **455**, **460**, **465**, **470**, **475**, and **480** may define the second set of mass portions and may be disposed in ports **905**, **910**, **915**, **920**, **960**, **965**, **970**, **975**, and **980**, respectively. The third weight configuration **1700** may be associated with a third launch trajectory profile **1430** (FIG. **14**). In particular, the third weight configuration **1700** may allow an individual to turn over the golf club head **100** relatively easier (i.e., square up the face portion **175** to impact a golf ball). By placing the relatively heavier mass portions (i.e., the first set of mass portions) towards the heel portion **160** of the golf club head **100**, the center of gravity (GC) of the golf club head **100** may move relatively closer to the axis of the shaft.

Turning to FIG. **18**, for example, a fourth weight configuration **1800** may be associated with a configuration of a fourth set of ports **1810**. In a fourth weight configuration **1800**, for example, a first set of mass portions may be disposed toward the toe portion **150** whereas a second set of mass portions may be disposed toward the heel portion **160**. In particular, the first set of mass portions may form a cluster of mass portions at or proximate to the toe portion **150** according to the configuration of the fourth set of ports **1810**. The mass portions **405**, **410**, **415**, **420**, **425**, **430**, and **435** may define the first set of mass portions and may be disposed in ports **905**, **910**, **915**, **965**, **970**, **975**, and **980**, respectively. The mass portions **440**, **445**, **450**, **455**, **460**, **465**, **470**, **475**, and **480** may define the second set of mass portions and may be disposed in ports **920**, **925**, **930**, **935**, **940**, **945**, **950**, **955**, and **960**, respectively. The fourth weight configuration **1800** may be associated with the third launch trajectory profile **1430** (FIG. **14**). In particular, the fourth weight configuration **1800** may prevent an individual from turning over the golf club head **100** (i.e., the face portion **175** may be more open to impact a golf ball). By placing the relatively heavier mass portions (i.e., the first set of mass portions) towards the toe portion **150** of the golf club head **100**, the center of gravity (GC) of the golf club head **100** may move relatively farther away from the axis of the shaft. The fourth weight configuration **1800** may result in a fade golf shot (as shown in FIG. **19**, for example, a trajectory or ball flight in which a golf ball travels to the left of a target **1910** and curving back to the right of the target for a right-handed individual). The apparatus, methods, and articles of manufacture described herein are not limited in this regard.

FIG. **20** depicts one manner in which the golf club head **100** may be manufactured. In the example of FIG. **20**, the process **2000** may begin with providing a plurality of mass portions (block **2010**). The plurality of mass portions may include a first set of mass portions and a second set of mass portions. Each mass portion of the first set of mass portions may be associated with a first mass whereas each mass portion of the second set of mass portions may be associated with a second mass. The first mass may be greater than the second mass. In one example, each mass portion of the first set of mass portions may be made of a tungsten-based material with a mass 2.6 grams whereas each mass portion of the second set of mass portions may be made of an aluminum-based material with a mass of 0.4 grams. The first set of mass portions may have a gray color or a steel color whereas the second set of mass portions may have a black color.

The process **2000** may provide a body portion of a golf club head (block **2020**). The body portion may include a front portion, a rear portion, a toe portion, a heel portion, a top portion, a bottom portion having an outer surface associated with outer surface curve, and a skirt portion between the top and bottom portion.

The process **2000** may form a port region located at or proximate to the bottom and skirts portions (block **2030**). A transition region may surround the port region. The process **2000** may form a plurality of ports along a periphery of the port region (block **2040**). Each port of the plurality of ports may be associated with a port diameter and configured to receive at least one mass portion of the plurality of mass portions. Two adjacent ports may be separated by less than or equal to the port diameter. Further, each port of the plurality of ports may be associated with a port axis. The port axis may be perpendicular or substantially perpendicular relative to a tangent plane of the outer surface curve of the bottom portion of the golf club head.

The example process **2000** of FIG. **20** is merely provided and described in conjunction with FIGS. **1-19** as an example of one way to manufacture the golf club head **100**. While a particular order of actions is illustrated in FIG. **20**, these actions may be performed in other temporal sequences. For example, two or more actions depicted in FIG. **20** may be performed sequentially, concurrently, or simultaneously. Although FIG. **20** depicts a particular number of blocks, the process may not perform one or more blocks. The apparatus, methods, and articles of manufacture described herein are not limited in this regard.

As shown in the above examples, the plurality of mass portions **120** and the plurality of ports **900** may be located on a periphery of the port region **240** along a path that defines a generally D-shaped loop formed with two arcs, generally shown as **490** and **495** in FIG. **4**. For example, the mass portions **405**, **410**, **415**, **420**, **425**, **430**, and **435** (FIG. **4**), and the ports **905**, **910**, **915**, **920**, **925**, **930**, and **935** (FIG. **9**) may form the first arc **490**. In particular, the first arc **490** may extend between the toe and heel portions **150** and **160**, respectively, across the bottom portion **140**. The mass portions **440**, **445**, **450**, **455**, **460**, **465**, **470**, **475**, and **480** (FIG. **4**), the ports **940**, **945**, **950**, **955**, **960**, **965**, **970**, **975**, and **980** (FIG. **9**) may form the second arc **495**. The second arc **495** may generally follow the contour of the rear portion **180** of the body portion **110**. Alternatively, the first and second arcs **490** and **495** may define loops with other shapes that extend across the bottom portion **140** (e.g., a generally O-shaped loop). The apparatus, methods, and articles of manufacture described herein are not limited in this regard.

Although the above examples may depict the plurality of mass portions **120** and the plurality of ports **900** forming a particular geometric shape, the apparatus, methods, and articles of manufacture described herein may have mass portions and ports located along a periphery of a mass portion region to form other geometric shapes. Turning to FIG. **21**, for example, a golf club head **2100** may include a bottom portion **2110**, and a plurality of mass portions **2120** disposed in a plurality of ports **2130**. The plurality of ports **2130** may be located along a periphery of a port region **2140** of the bottom portion **2110** (i.e., the plurality of ports **2130** may extend between the toe and heel portions **2112** and **2114**, respectively, across the bottom portion **2110**). In contrast to the plurality of mass portions **120** and the plurality of ports **900** (e.g., FIGS. **4** and **9**), the plurality of ports **2130** may form two discrete arcs, generally shown as **2150** and **2155**, extending across the bottom portion **2110**.

The first arc **2150** may extend between the toe portion **2112** and the heel portion **2114**. The first arc **2150** may curve toward the front portion **2170** of the golf club head **2100** (i.e., concave relative to the front portion **2170**). According to the example of FIG. **21**, the first arc **2150** may extend from a region proximate the toe portion **2112** to a region proximate to the front portion **2170** and from the region proximate to the front portion **2170** to a region proximate to the heel portion **2114** (i.e., concave relative to the front portion **2170**). Accordingly, the first arc **2150** may appear as a C-shaped arc facing the rear portion **2180** of the golf club head **2100** that extends between the toe portion **2112** and the heel portion **2114**. The second arc **2155** may also extend between the toe portion **2112** and the heel portion **2114**. The second arc **2155** may curve toward the rear portion **2180** of the golf club head **2100** (i.e., concave relative to the rear portion **2180**). Accordingly, the second arc **2155** may appear as a C-shaped arc facing the front portion **2170** of the golf club head **2100** that extends between the toe portion **2112** and the heel portion **2114**. Further, the first arc **2150** may be closer to the front portion **2170** than the second arc **2155**. The first arc **2150** and the second arc **2155** may be discrete so that the first and second arcs **2150** and **2155**, respectively, may be spaced apart along the periphery of the bottom portion **2110**. Accordingly, the bottom portion **2110** may include gaps **2190** and **2192** along the periphery of the bottom portion **2110** between the ports **2130** of the first arc **2150** and the ports **2130** of the second arc **2155**. The gaps **2190** and/or **2192** may be greater than or equal to the port diameter of any of the ports **2130** such as the ports **2130** that are adjacent to the gaps **2190** and/or **2192**. According to one example as shown in FIG. **21**, the gaps **2190** and **2192** may be several orders or magnitude larger than the diameters of the ports **2130** that are adjacent to the gaps **2190** and **2192**. The apparatus, methods, and articles of manufacture described herein are not limited in this regard.

Referring to FIG. **21**, for example, the first arc **2150** may include a greater number of ports **2130** than the second arc **2155**, which may be suitable for certain golf club heads (e.g., a fairway wood-type golf club head and/or a hybrid-type golf club head). Alternatively, the second arc **2155** may include the same or a greater number of ports **2130** than the first arc **2150**. The number of ports **2130** in each of the first and second arcs **2150** and **2155**, respectively, the mass portions **2120** associated with each port **2130** and the spacing between adjacent ports **2130** may be determined based on the type of golf club, a preferred weight distribution of the golf club head **2100**, and/or a center of gravity location of the golf club head **2100**.

The ports **2130** of the first arc **2150** and/or the second arc **2155** may be spaced from each other at the same or approximately the same distance along the first arc **2150** and/or the second arc **2155**, respectively. Any variation in the spacing between the ports **2130** of the first arc **2150** or the second arc **2155** or any of the ports described herein may be due to different manufacturing considerations, such as manufacturing tolerances and/or cost effectiveness associated with manufacturing precision. For example, the variation in the spacing between the ports **2130** of the first arc **2150** and/or the second arc **2155** may be between 1/16 of an inch to 0.001 inch. As described herein, the distance between adjacent ports **2130** (i.e., port distance) may be less than or equal to the port diameter of any of the two adjacent ports. The plurality of ports **2130** may extend between the toe portion **2112** and the heel portion **2114** at a maximum toe-to heel port distance that is more than 50% of a maximum toe-to-heel club head distance **2195** of the golf club head **2100**. The maximum toe-to-heel port distance may be the maximum distance between the heel-side boundary of the port farthest from the toe portion **2112** and the toe-side boundary of the port farthest from the heel portion **2114**.

In particular, the golf club head **2100** may have a volume of less than 430 cc. In example, the golf club head **2100** may have a volume ranging from 100 cc to 400 cc. In another example, the golf club head **2100** may have a volume ranging from 150 cc to 350 cc. In yet another example, the golf club head **2100** may have a volume ranging from 200 cc to 300 cc. The golf club head **2100** may have a mass ranging from 100 grams to 350 grams. In another example, the golf club head **2100** may have a mass ranging from 150 grams to 300 grams. In yet another example, the golf club head **2100** may have a mass ranging from 200 grams to 250 grams. The golf club head **2100** may have a loft angle ranging from 10° to 30°. In another example, the golf club head **2100** may have a loft angle ranging from 13° to 27°. For example, the golf club head **2100** may be a fairway wood-type golf club head. Alternatively, the golf club head **2100** may be a smaller driver-type golf club head (i.e., larger than a fairway wood-type golf club head but smaller than a driver-type golf club head). The apparatus, methods, and articles of manufacture described herein are not limited in this regard.

As illustrated in FIG. **22**, for example, a golf club head **2200** may include a bottom portion **2210**, and a plurality of mass portions **2220** disposed in a plurality of ports **2230**. The plurality of ports **2230** located along a periphery of a port region **2240** may be arranged along a path that defines an arc, generally shown as **2250**, extending across the bottom portion **2210** (i.e., the plurality of ports **2230** may extend between the toe and heel portions **2212** and **2214**, respectively, across the bottom portion **2210**). The arc **2250** may curve toward the rear portion **2280** of the golf club head **2200** (i.e., concave relative to the rear portion **2280**). According to the example of FIG. **22**, the arc **2250** may extend from a region proximate the toe portion **2212** to a region proximate to the rear portion **2280** and from the region proximate to the rear portion **2280** to a region proximate to the heel portion **2214** (i.e., concave relative to the rear portion **2280**). Accordingly, the arc **2250** may appear as a C-shaped arc facing the front portion **2270** of the golf club head **2200** that extends from near the heel portion **2214** to near the toe portion **2212**. Further, the curvature of the arc **2250** is substantially similar to or generally follows the contour of the rear portion **2280** of the golf club head **2200**. The number of ports **2230** in the arc **2250**, the mass portions **2220** associated with each port **2230** and the spacing between adjacent ports **2230** may be determined based on the type of golf club, a preferred weight distribution of the golf club head **2200**, and/or a center of gravity location of the golf club head **2200**.

The ports **2230** of the arc **2250** may be spaced from each other at the same or approximately the same distance along the arc **2250** (e.g., the ports **2230** may be substantially similarly spaced apart from each other). Any variation in the spacing between the ports **2230** of the arc **2250** or any of the ports described herein may be due to different manufacturing considerations, such as manufacturing tolerances and/or cost effectiveness associated with manufacturing precision. For example, the variation in the spacing between the ports **2130** of the arc **2250** may be between 1/16 of an inch to 0.001 inch. As described herein, the distance between adjacent ports **2230** (i.e., port distance) may be less than or equal to the port diameter of any of the two adjacent ports. The plurality of ports **2230** may extend between the toe portion

2212 and the heel portion 2214 at a maximum toe-to heel port distance that is more than 50% of a maximum toe-to-heel club head distance of 2290 the golf club head 2200. The maximum toe-to-heel port distance may be the maximum distance between the heel-side boundary of the port farthest from the toe portion 2212 and the toe-side boundary of the port farthest from the heel portion 2214.

In particular, the golf club head 2200 may have a volume of less than 200 cc. In example, the golf club head 2200 may have a volume ranging from 50 cc to 150 cc. In another example, the golf club head 2200 may have a volume ranging from 60 cc to 120 cc. In yet another example, the golf club head 2200 may have a volume ranging from 70 cc to 100 cc. The golf club head 2200 may have a mass ranging from 180 grams to 275 grams. In another example, the golf club head 2200 may have a mass ranging from 200 grams to 250 grams. The golf club head 2200 may have a loft angle ranging from 15° to 35°. In another example, the golf club head 2200 may have a loft angle ranging from 17° to 33°. For example, the golf club head 2200 may be a hybrid-type golf club head. The apparatus, methods, and articles of manufacture described herein are not limited in this regard.

In the example of FIGS. 23-32, a golf club head 2300 may include a body portion 2310, and a plurality of mass portions 2320, generally, shown as a first set of mass portions 2410 and a second set of mass portions 2420 (FIG. 24). The body portion 2310 may include a top portion 2330, a bottom portion 2340, a toe portion 2350, a heel portion 2360, a front portion 2370, and a rear portion 2380. The bottom portion 2340 may include a skirt portion 2390 defined as a side portion of the golf club head 2300 between the top portion 2330 and the bottom portion 2340 excluding the front portion 2370 and extending across a periphery of the golf club head 2300 from the toe portion 2350, around the rear portion 2380, and to the heel portion 2360. The bottom portion 2340 may include a transition region 2430 and a port region 2440. For example, the port region 2440 may be a D-shape region. The port region 2440 may include a plurality of ports 2800 (FIG. 28) to receive the plurality of mass portions 2320. The front portion 2370 may include a face portion 2375 to engage a golf ball (not shown). The body portion 2310 may also include a hosel portion 2365 to receive a shaft (not shown). The hosel portion 2365 may be an integral portion or a separate portion of the body portion 2310. For example, the hosel portion 2365 may include a hosel sleeve with one end to receive a shaft and an opposite end that may be inserted into the body portion 2310. Alternatively, the body portion 2310 may include a bore instead of the hosel portion 2365. The golf club head 2300 may be constructed from similar material, may have a similar volume and be the same type of golf club head as the golf club head 100 or any of the golf club heads described herein. The apparatus, methods, and articles of manufacture described herein are not limited in this regard.

Each of the first set of mass portions 2410, generally shown as 2605, 2610, 2615, and 2620 may be associated with a first mass. Each of the second set of mass portions 2420, generally shown as 2640, 2645, 2650, 2655, 2660, 2665, and 2670 may be associated with a second mass. The first mass may be greater than the second mass or vice versa. The first and second set of mass portions 2410 and 2420, respectively, may provide various weight configurations for the golf club head 2300 that may be similar to the various weight configurations for the golf club head 100 or any of the golf club heads described herein. Alternatively, all of the mass portions of the first and second set of mass portions 2410 and 2420, respectively, may have the same mass. That is, the first and second masses may be equal to each other. The plurality of mass portions 2320 may have similar or different physical properties (e.g., density, shape, mass, volume, size, color, etc.). The mass portions 2320 may be similar in many respects to the mass portions 120 of the golf club head 100 or any of the golf club heads described herein. The apparatus, methods, and articles of manufacture described herein are not limited in this regard. The apparatus, methods, and articles of manufacture described herein are not limited in this regard.

Referring to FIG. 28, for example, the bottom portion 2340 of the body portion 2310 may include a plurality of ports 2800. The plurality of ports 2800, generally shown as 2805, 2810, 2815, 2820, 2840, 2845, 2850, 2855, 2860, 2865, and 2870 may be located on and/or along a periphery of the port region 2440 of the bottom portion 2340. Each of the plurality of ports 2800 may be similar in many respects (e.g., port diameter) to any of the ports of the golf club head 100 or any of the golf club heads described herein. Further, each of the plurality of ports 2800 may be formed on the bottom portion 2340 similar to the formation of the ports 900 of the golf club head 100 or any of the golf club heads described herein. Further yet, the plurality of ports 2800 may extend across the bottom portion 2340 similar to the configuration of the ports 900 of the golf club head 100 or any of the golf club heads described herein. However, the configuration of the ports 2800 on the bottom portion 2340 may be different than the configuration of the ports 900 of the golf club head 100 or any of the golf club heads described herein. The apparatus, methods, and articles of manufacture described herein are not limited in this regard.

In one example shown in FIGS. 23-32, the bottom portion 2340 may include an outer surface 2342 and an inner surface 2344. Each of the outer surface 2342 and the inner surface 2344 may include one or a plurality of support portions, generally shown as 3110, 3120, and 3140. The outer surface 2342 may include at least one outer support portion 3110 and the inner surface 2344 may include a first set of inner support portions 3120 (generally shown as inner support portions 3121, 3122, 3123, 3124, 3125, 3126, 3127, 3128, 3129, 3130, 3131, 3132 and 3133), and a second set of inner support portions 3140 (generally shown as inner support portions 3141, 3142, 3143, 3144, 3145, and 3146). The apparatus, methods, and articles of manufacture described herein are not limited in this regard.

The outer support portion 3110 may be positioned on the bottom portion 2340 and/or the skirt portion 2390 between any of the ports 2800 and/or a periphery of the body portion 2310 as defined by the toe portion 2350, the heel portion 2360, the front portion 2370, and the rear portion 2380. However, the outer support portion 3110 may be positioned at any location on the golf club head 2300 for structural support of the golf club head 2300. As an example shown in FIGS. 23-32, the outer support portion 3110 may be defined by a groove or indentation that extends on the bottom portion 2340 and/or the skirt portion 2390 from the rear portion 2380 toward and/or to the toe portion 2350 proximate to a periphery of the body portion 2310. The outer support portion 3110 may have any configuration. As illustrated in FIG. 31, a width of the outer support portion 3110 may increase from the rear portion 2380 toward the toe portion 2350 while the outer support portion 3110 may follow a contour of the periphery of the body portion 2310 between the rear portion 2380 and the toe portion 2350. Accordingly, the outer support portion 3110 may resemble a curved triangular groove on the bottom portion 2340. The depth of the outer support portion 3110 may also vary.

Alternatively, the depth of the outer support portion **3110** may be constant. Further, the depth of the outer support portion **3110** may be determined based on the thickness of the bottom portion **2340** and the material from which the bottom portion **2340** is formed. The apparatus, methods, and articles of manufacture described herein are not limited in this regard.

Each inner support portion of the first set of inner support portions **3120** may include walls, ribs and/or any projection from the inner surface **2344** of the bottom portion **2340**. Each inner support portion of the first set of inner support portions **3120** may extend from and connect each port **2800** to an adjacent port or to one or more other non-adjacent ports **2800**. As shown in FIG. **31**, for example, the inner support portion **3121** may include a wall projecting from the inner surface **2344** of the bottom portion **2340** and connecting the ports **2805** and **2810**. Similarly, as shown in FIG. **31**, each pair of adjacent ports **2810** and **2815**, **2815** and **2820**, **2820** and **2840**, **2840** and **2845**, **2845** and **2850**, **2850** and **2855**, **2855** and **2860**, **2860** and **2865**, **2865** and **2870**, **2870** and **2805** may be connected by inner support portions **3122**, **3123**, **3124**, **3125**, **3126**, **3127**, **3128**, **3129**, **3130**, **3131**, respectively. Accordingly, the inner support portions **3121** through **3131** of the first set of inner support portions **3120** may define a loop-shaped support region **3150** on the inner surface **2344** of the bottom portion **2340**. The apparatus, methods, and articles of manufacture described herein are not limited in this regard.

Further, the inner support portion **3132** may include a wall projecting from the inner surface **2344** of the bottom portion **2340** and connecting two non-adjacent ports such as the ports **2805** and **2855**. The inner support portion **3133** may include a wall projecting from the inner surface **2344** of the bottom portion **2340** and connecting two non-adjacent ports such as the ports **2820** and **2855**. Accordingly, the inner support portions **3121**, **3122**, **3123**, **3132** and **3133** may define a triangular support region **3160** on the inner surface **2344** of the bottom portion **2340** partially within the loop-shaped support region **3150** and partially overlapping the loop-shaped support region **3150**. The ports **2805**, **2820** and **2855** may define the vertices of the triangular support region **3160**. The first set of inner support portions **3120** may have any configuration, connect any two or more of the ports, and/or define any shape. The apparatus, methods, and articles of manufacture described herein are not limited in this regard.

Each inner support portion of the second set of inner support portions **3140** may include walls, ribs and/or any projections on the inner surface **2344** of the bottom portion **2340**. Each inner support portion of the second set of inner support portions **3140** may extend from one or more of the ports **2800** toward the periphery and/or the skirt portion **2390** of the body portion **2310**. In one example shown in FIG. **31**, the inner support portion **3141** may include a wall connected to the port **2805** and extending from the port **2805** toward and/or to the toe portion **2350**. The inner support portion **3142** may include a wall connected to the port **2870** and extending from the port **2870** toward and/or to the toe portion **2350**. The inner support portion **3143** may include a wall connected to the port **2865** and extending from the port **2865** toward and/or to the toe portion **2350** or the rear portion **2380**. The length, height, thickness, orientation angle, and/or cross-sectional configuration of each of the inner support portions **3141**, **3142** and **3143** may be configured such that the inner support portions **3141**, **3142** and **3143** may provide or substantially provide structural support to the bottom portion **2340**, the skirt portion **2390**, the toe portion **2350**, the front portion **2370** and/or the rear portion **2380**. The apparatus, methods, and articles of manufacture described herein are not limited in this regard.

As illustrated in FIG. **31**, the inner support portion **3144** may include a wall that may be connected to the port **2855** and may extend from the port **2855** toward and/or to the rear portion **2380**. The inner support portion **3145** may include a wall connected to the port **2845** and extending from the port **2845** toward and/or to the heel portion **2360**. The inner support portion **3146** may include a wall connected to the port **2820** and extending from the port **2820** toward and/or to the heel portion **2360**. The length, height, thickness, orientation angle, and/or cross-sectional configuration of each of the inner support portions **3144**, **3145** and **3146** may be configured such that the inner support portions **3144**, **3145** and **3146** may provide or substantially provide structural support to the bottom portion **2340**, the skirt portion **2390**, the heel portion **2360**, the front portion **2370** and/or the rear portion **2380**. The apparatus, methods, and articles of manufacture described herein are not limited in this regard.

The first set of inner support portions **3120** may structurally support the bottom portion **2340** by distributing the impact loads exerted on the bottom portion **2340** throughout the bottom portion **2340** when the golf club head **2300** strikes a golf ball (not shown). The second set of inner support portions **3140** may further distribute the impact loads throughout the bottom portion **2340**, the skirt portion **2390**, toe portion **2350**, the heel portion **2360**, the front portion **2370**, and/or the rear portion **2380**. In one example, the second set of inner support portions **3140** may include additional walls, ribs and/or projections (not shown) that connect to any of the ports such as ports **2840**, **2850** and **2860** to further distribute impact loads throughout the body portion **2310**. While the above examples may depict a particular number of inner support portions, the bottom portion **2340** may include additional inner support portions (not shown). For example, the bottom portion **2340** may include a plurality of inner support portions (not shown) that connect non-adjacent ports **2800** (e.g., ports **2815** and **2860**) and/or the second set of inner support portions **3140**. The apparatus, methods, and articles of manufacture described herein are not limited in this regard.

The width (i.e., thickness), length, height, orientation angle, and/or cross-sectional shape of the inner support portions of the first set of inner support portions **3120** and/or the second set of inner support portions **3140** may be similar or vary and be configured to provide structural support to the golf club head **2300**. For example, the materials from which the bottom portion **2340** and/or the body portion **2310** may be constructed may determine the width, length, height, orientation angle, and/or cross-sectional shape of the inner support portions of the first set of inner support portions **3120** and/or the second set of inner support portions **3140**. For example, the inner support portions of the first set of inner support portions **3120** and/or the second set of inner support portions **3140** may be defined by walls with rectangular cross sections having heights that are similar to the depths of the mass portions **2800**. The length of each inner support portion of the second set of inner support portions **3140** may be configured such that one or more inner support portions of the second set of inner support portions **3140** extend from the bottom portion **2340** to the skirt portion **2390**. The apparatus, methods, and articles of manufacture described herein are not limited in this regard.

Any of the golf club heads described herein may have different configurations of outer support portions and/or

inner support portions to provide structural support for the golf club head during impact with a golf ball depending on the size, thickness, materials of construction and/or other characteristics of any portions and/or parts of the golf club head. The different configurations of the outer support portions and/or inner support portions may affect vibration, dampening, and/or noise characteristics of the golf club head when striking a golf ball. Further, the different configurations of the outer support portions and/or the inner support portions may provide structural support to portions of the golf club head that may require additional structural support. For example, a golf club head as described herein may include more inner support portions in addition to the first set of inner support portions and the second set of inner support portions as described herein. For example, a golf club head as described herein may include fewer inner support portions than the first set of inner support portions and the second set of inner support portions as described herein.

FIGS. **33** and **34** show another example of the golf club head **2300** with a different configuration of inner support portions. The inner surface **2344** of the bottom portion **2340** may include a first set of inner support portions **3320** (generally shown as inner support portions **3323**, **3324**, **3325**, **3326**, and **3327**), and a second set of inner support portions **3340** (generally shown as inner support portions **3344**, **3345**, **3346**, **3347** and **3348**). The first set of inner support portions **3320** and the second set of inner support portions **3340** are closer to the heel portion **2360** than to the toe portion **2350**. For example, the first set of inner support portions **3320** and the second set of inner support portions **3340** may be located on the bottom portion **2340** between a midpoint (not shown) of the body portion **2310** and the heel portion **2360**. The apparatus, methods, and articles of manufacture described herein are not limited in this regard.

The first set of inner support portions **3320** may be similar in many respects to any of the inner support portions described herein such as the inner support portions of the first set of inner support portions **3120** shown in FIG. **31**. As shown in FIGS. **33** and **34**, for example, the inner support portion **3323** may include a wall projecting from the inner surface **2344** of the bottom portion **2340** and connecting the ports **2815** and **2820**. Similarly, each pair of adjacent ports **2815** and **2820**, **2820** and **2840**, **2840** and **2845**, **2845** and **2850**, and **2850** and **2815** may be connected by inner support portions **3323**, **3324**, **3325**, **3326**, and **3327**, respectively. Accordingly, the inner support portions **3323** through **3327** of the first set of inner support portions **3320** may define a loop-shaped support region **3350** on the inner surface **2344** of the bottom portion **2340**. The loop-shaped support region **3350** may be closer to the heel portion **2360** than to the toe portion **2350**. The loop-shaped support region **3350** may be located between a midpoint (not shown) of the body portion **2310** and the heel portion **2360**. The apparatus, methods, and articles of manufacture described herein are not limited in this regard.

The second set of inner support portions **3340** may be similar in many respects to any of the inner support portions described herein such as the second set of inner support portions **3140** shown in FIG. **31**. As shown in FIGS. **33** and **34**, for example, the inner support portion **3344** may include a wall connected to the port **2850** and extend from the port **2850** toward and/or to the rear portion **2380**. The inner support portion **3345** may include a wall connected to the port **2845** and extend from the port **2845** toward and/or to the heel portion **2360** and the rear portion **2380**. The inner support portion **3346** may include a wall connected to the port **2840** and extend from the port **2840** toward and/or to the heel portion **2360**. The inner support portion **3347** may include a wall connected to the port **2820** and extend from the port **2820** toward and/or to the heel portion **2360**. The inner support portion **3348** may include a wall connected to the port **2815** and extend from the port **3815** toward and/or to the front portion **2370**. The length, height, thickness, orientation angle, and/or cross-sectional configuration of each of the inner support portions **3344**, **3345**, **3346**, **3347** and **3348** may be configured such that the inner support portions **3344**, **3345**, **3346**, **3347** and **3348** may provide or substantially provide structural support to the bottom portion **2340**, the skirt portion **2390**, the heel portion **2360**, the front portion **2370** and/or the rear portion **2380**. The apparatus, methods, and articles of manufacture described herein are not limited in this regard.

FIG. **35** shows another example of the golf club head **2300** with a different configuration of the inner support portions. The inner surface **2344** may include a first set of inner support portions **3120** (generally shown as inner support portions **3121**, **3122**, **3123**, **3124**, **3125**, **3126**, **3127**, **3128**, **3129**, **3130** and **3131**), and a second set of inner support portions **3140** (generally shown as inner support portions **3141**, **3142**, **3143**, **3144**, **3145**, and **3146**). Accordingly, the golf club head **2300** of FIG. **43** may be similar to the golf club head **2300** of FIG. **31**, except that the golf club head **2300** of FIG. **43** does not include the inner support portions **3132** and **3133**. The apparatus, methods, and articles of manufacture described herein are not limited in this regard.

In addition to any of the golf club heads described herein having different configurations of outer support portions and/or inner support portions, any of the golf club heads described herein may have different configurations of ports in combination with different configurations of the outer support portions and/or the inner support portions. The different configurations of the ports may affect the weight distribution of the golf club head. The different configurations of the outer support portions and/or inner support portions may affect stiffness, vibration, dampening, and/or noise characteristics of the golf club head when striking a golf ball. Further, the different configurations of the outer support portions and/or the inner support portions may provide structural support to portions of the golf club head that may require additional structural support. For example, a golf club head as described herein may include more or less ports than some of the example golf club heads described herein. For example, a golf club head as described herein may include more inner support portions in addition to the first set of inner support portions and the second set of inner support portions as described herein. For example, a golf club head as described herein may include fewer inner support portions than the first set of inner support portions and the second set of inner support portions as described herein. The apparatus, methods, and articles of manufacture described herein are not limited in this regard.

FIG. **36** shows another example of the golf club head **2300** with a different configuration of the ports and different configuration of inner support portions. The bottom portion **2340** may include a plurality of ports **2800**, which are generally shown as **2805**, **2810**, **2815**, **2820**, **2845**, **2850**, **2855**, **2860**, and **2865**. Accordingly, the golf club head **2300** of FIG. **36** is similar to the golf club head **2300** of FIG. **31**, except that the golf club head **2300** of FIG. **36** does not include ports **2840** and **2870**. Also, in the example of FIG. **36**, the inner surface **2344** of the bottom portion **2340** may include a first set of inner support portions **3120** (generally

shown as inner support portions **3121**, **3122**, **3123**, **3126**, **3127**, **3128**, and **3129**), and a second set of inner support portions **3140** (generally shown as inner support portions **3141**, **3143**, **3144**, **3145**, and **3146**). Accordingly, the golf club head **2300** of FIG. **36** may be similar to the golf club head **2300** of FIG. **31**, except that the golf club head **2300** of FIG. **36** does not include the inner support portions **3124**, **3125**, **3130**, **3131**, **3132**, **3133** and **3142**. The apparatus, methods, and articles of manufacture described herein are not limited in this regard.

In one example shown in FIG. **37**, certain regions of the interior of the body portion **2310** of the golf club head **2300** may include an elastic polymer material or an elastomer material, which may be referred to herein as the filler material. The filler material may dampen vibration, dampen noise, lower the center of gravity and/or provide a better feel and sound for the golf club head **2300** when striking a golf ball (not shown). According to one example, the triangular support region **3160** may be filled with the filler material. The filler material may extend from the inner surface **2344** of the bottom portion **2340** up to a height of any of the inner support portions **3122**, **3132** and/or **3133**. However, the filler material may extend below or above the height of any of the inner support portions **3122**, **3132** and/or **3133**. Further, the thickness of the filler material, which may be defined as the distance the filler material extends from the inner surface **2344** of the bottom portion **2340**, may vary. In one example, the thickness of the filler material may be greater around a center portion of the triangular support region **3160** than the sides of the triangular support region **3160**. In another example, the thickness of the filler material may be less around a center portion of the triangular support region **3160** than the sides of the triangular support region **3160**. The apparatus, methods, and articles of manufacture described herein are not limited in this regard.

According to another example, a support region **3161** defined by the inner support portions **3128**, **3129**, **3130**, **3131** and **3132**; and a support region **3162** defined by the inner support portions **3124**, **3125**, **3136**, **3137** and **3133** may be filled with the filler material. The filler material may extend from the inner surface **2344** of the bottom portion **2340** up to a height of any of the inner support portions defining the support regions **3161** and/or **3162**. However, the filler material may extend below or above the height of any of the inner support portions defining the support regions **3161** and **3162**. Further, the thickness of the filler material, which may be defined as the distance the filler material extends from the inner surface **2344** of the bottom portion **2340**, may vary. In one example, the thickness of the filler material may be greater around a center portion of the support region **3161** and/or the support region **3162** than the sides of the support region **3161** and/or the support region **3162**, respectively. In another example, the thickness of the filler material may be less around a center portion of the support region **3161** and/or support region **3162** than the sides of the support region **3161** and/or **3162**, respectively. According to one example, any one or a combination of the support regions **3160**, **3161** and/or **3162** may be filled with the filler material as described herein. The apparatus, methods, and articles of manufacture described herein are not limited in this regard.

In one example shown in FIG. **38**, which is similar to many respects to the golf club head **2300** shown in FIG. **33**, certain regions of the interior of the body portion **2310** of the golf club head **2300** may include the filler material, which may be an elastic polymer material or an elastomer material as described. The filler material may dampen vibration, dampen noise, lower the center of gravity and/or provide a better feel and sound for the golf club head **2300** when striking a golf ball (not shown). According to one example, the support region **3350** may be filled with the filler material. The filler material may extend from the inner surface **2344** of the bottom portion **2340** up to a height of any of the inner support portions **3323**, **3324**, **3325**, **3326** and/or **3327**. However, the filler material may extend below or above the height of any of the inner support portions **3323**, **3324**, **3325**, **3326** and/or **3327**. Further, the thickness of the filler material, which may be defined as the distance the filler material extends from the inner surface **2344** of the bottom portion **2340**, may vary. In one example, the thickness of the filler material may be greater around a center portion of the support region **3350** than the sides of the support region **3350**. In another example, the thickness of the filler material may be less around a center portion of the support region **3350** than the sides of the support region **3350**. The apparatus, methods, and articles of manufacture described herein are not limited in this regard.

Any of the golf club heads described herein may have one or more interior regions that may include a filler material as described. In one example, the filler material be injected into a region of the golf club head from one or more ports on the golf club head to cover or fill the region. The one or more ports that may be used to inject the filler material may be one or more of the ports described herein. Accordingly, the filler material may be molded to the shape of the region in which the filler material is injected to cover or fill the region. Alternatively, one or more inserts may be formed from elastic polymer material or an elastomer material (i.e., filler material) and placed in one or more regions of the interior of golf club head. FIG. **39** shows an example of the golf club head **2300** of FIG. **36** with an insert **3950**, which may be constructed from an elastic polymer material or an elastomer material. The insert **3950** may be manufactured to have a similar shape as the shape of a region **3954** on the inner surface **2344** of the bottom portion **2340**. Accordingly, the insert **3950** may have a curvature similar to the curvature of the bottom portion **2340** at the region **3954** to lay generally flat and in contact with the inner surface **2344** of the bottom portion **2340**, have a shape that may be similar to the shape of the region **3954** to be inserted in the region **3954** and generally fit within the region **3954**, and/or have a plurality of cutout portions **3956** to generally match the shape and/or contour of sidewall portions of each of the ports **2800**. The apparatus, methods, and articles of manufacture described herein are not limited in this regard.

The insert **3950** may have a thickness that may be similar to the height of any of the ports **2800**. Accordingly, when the insert **3950** is in the region **3954**, the top portion of the insert **3950** at or proximate to the ports **2800** may be at the same height or substantially the same height as the ports **2800**. However, the thickness of the insert **3950** may be constant or vary such that the thickness of the insert **3950** at any location of the insert **3950** may be more or less than the height of any of the ports **2800**. The insert **3950** may dampen vibration, dampen noise, lower the center of gravity and/or provide a better feel and sound for the golf club head **2300** of FIG. **39** when striking a golf ball (not shown). The apparatus, methods, and articles of manufacture described herein are not limited in this regard.

The insert **3950** may be manufactured for use with any of the golf club heads described herein. As shown in FIG. **39**, the insert **3950** may include a plurality of cutout portions **3956** that may generally match the shape of the outer wall portions of the ports **2800**. The insert **3950** shown in FIG. **39**

further includes cutout portions **3958** and **3959**. Referring back to FIG. **35**, when the insert **3950** is used with the golf club head **2300** of FIG. **35**, the cut out portions **3958** and **3959** may generally match the shape of the outer wall portions of the weigh ports **2870** and **2840**, respectively. Accordingly, the insert **3950** can be used in both the golf club head **2300** of FIG. **35** and the golf club head **2300** of FIG. **36**. The apparatus, methods, and articles of manufacture described herein are not limited in this regard.

Referring back to FIG. **31**, the insert **3950** may include channels, grooves or slots (not shown) that may be sized and shaped to receive the inner support portions **3132** and **3133** therein. Accordingly, an insert **3950** may be manufactured with the described channels, grooves or slot for use with the golf club heads **2300** of FIGS. **31**, **33**, **35** and **36**. Alternatively, one or more inserts may be manufactured that may only fit one of the golf club heads described herein. For example, each of the golf club heads described herein may include one or more inserts that may have a certain shape for fitting only within one or more regions in the golf club head. Referring back to FIG. **31**, for example, the golf club head **2300** may include a first insert (not shown) for fitting in the support region **3161**, a second insert (not shown) for fitting in the triangular support region **3160**, and a third insert (not shown) for fitting in the support region **3162**. Referring back to FIG. **33**, for example, the golf club head **3300** may include an insert (not shown) for fitting in the support region **3350**. The apparatus, methods, and articles of manufacture described herein are not limited in this regard.

Any of the inserts described herein may be manufactured from an elastic polymer material as a one-piece continuous part. In the example of FIG. **39**, the insert **3950** may be a one-piece continuous part without any recesses and/or holes. FIG. **40** illustrates an insert **4050** that is similar in many respects to the insert **3950**. Accordingly, in one example, the insert **4050** may be manufactured to have a similar shape as the shape of the region **3954** on the inner surface **2344** of the bottom portion **2340** of the golf club head **23** of FIG. **39** and further include a plurality of cutout portions **4056** similar to the cutout portions **3956**, **3958** and **3959** as described herein. The insert **4050** further includes a plurality of holes **4062** that may reduce the weight of the insert **4050** and/or the amount of material used for the construction of the insert **4050**. The insert **4050** may include any number of holes **4062** arranged in any configuration on the insert **4050**. In the example of FIG. **40**, the insert **4050** includes a plurality of hexagonal holes **4062** that extend through the thickness of the insert **4050** and are arranged on the insert **4050** to define a pattern similar to a honeycomb pattern. The holes **4062** may have any shape or spacing. Although the above example may describe holes having a particular shape, the apparatus, methods, and articles of manufacture described herein may include holes of other suitable shapes (e.g., circular, triangular, octagonal, or other suitable geometric shape). Further, the holes **4062** may be similar or different in shape, size and/or arrangement on the insert **4050**. In one example, the insert **4050** may include a plurality of round holes (not shown). In another example, the insert **4050** may include a plurality of slots, grooves and/or slits (not shown). In yet another example, the insert **4050** may include recesses (not shown) that do not extend through the insert **4050**. The apparatus, methods, and articles of manufacture described herein are not limited in this regard.

Any of the filler materials and or inserts described herein may be an elastic polymer or elastomer material (e.g., a viscoelastic urethane polymer material such as Sorbothane® material manufactured by Sorbothane, Inc., Kent, Ohio), a thermoplastic elastomer material (TPE), a thermoplastic polyurethane material (TPU), and/or other suitable types of materials to absorb shock, isolate vibration, and/or dampen noise. In another example, the filler material may be a high density ethylene copolymer ionomer, a fatty acid modified ethylene copolymer ionomer, a highly amorphous ethylene copolymer ionomer, an ionomer of ethylene acid acrylate terpolymer, an ethylene copolymer comprising a magnesium ionomer, an injection moldable ethylene copolymer that may be used in conventional injection molding equipment to create various shapes, an ethylene copolymer that can be used in conventional extrusion equipment to create various shapes, and/or an ethylene copolymer having high compression and low resilience similar to thermoset polybutadiene rubbers. For example, the ethylene copolymer may include any of the ethylene copolymers associated with DuPont™ High-Performance Resin (HPF) family of materials (e.g., DuPont™ HPF AD1172, DuPont™ HPF AD1035, DuPont® HPF 1000 and DuPont™ HPF 2000), which are manufactured by E.I. du Pont de Nemours and Company of Wilmington, Del. The DuPont™ HPF family of ethylene copolymers are injection moldable and may be used with conventional injection molding equipment and molds, provide low compression, and provide high resilience. The apparatus, methods, and articles of manufacture described herein are not limited in this regard.

The filler material including any of the inserts that may be manufactured from the filler material as described herein may be bonded, attached and/or connected to any of the golf club heads described herein by a bonding portion (not shown) to improve adhesion and/or mitigate delamination between the body portion of any of the golf club heads described herein and the filler material. The bonding portion may be a bonding agent, an epoxy, a combination of bonding agents, a bonding structure or attachment device, a combination of bonding structures and/or attachment devices, and/or a combination of one or more bonding agents, one or more bonding structures and/or one or more attachment devices. In one example, the bonding portion may be low-viscosity, organic, solvent-based solutions and/or dispersions of polymers and other reactive chemicals such as MEGUM™, ROBOND™ and/or THIXON™ materials manufactured by the Dow Chemical Company, Auburn Hills, Mich. In another example, the bonding portion may be LOCTITE® materials manufactured by Henkel Corporation, Rocky Hill, Conn. The apparatus, methods, and articles of manufacture are not limited in this regard.

In the example of FIGS. **41-47**, a golf club head **4100** may include a body portion **4110** with a top portion **4130**, a bottom portion **4140**, a toe portion **4150**, a heel portion **4160**, a front portion **4170**, and a rear portion **4180**. The bottom portion **4140** may include a skirt portion (not shown) defined as a side portion of the golf club head **4100** between the top portion **4130** and the bottom portion **4140** excluding the front portion **4170** and extending across a periphery of the golf club head **4100** from the toe portion **4150**, around the rear portion **4180**, and to the heel portion **4160**. The bottom portion **4140** may include a transition region **4230** and a port region **4240**. The transition region **4230** may be defined by a groove or a channel on the bottom portion **4140**. Further, the transition region **4230** may define the boundary of the port region **4240**. The front portion **4170** may include a face portion **4175** to engage a golf ball (not shown). The body portion **4110** may also include a hosel portion **4165** that may be similar in many respects to any of the hosel portions described herein. Alternatively, the body portion **4110** may include a bore instead of the hosel portion **4165**.

The body portion **4110** may be made partially or entirely from any of the materials described herein. Further, the golf club head **4100** may be any type of golf club head having a club head volume similar to the club head volume of any of the golf club heads described herein. The apparatus, methods, and articles of manufacture described herein are not limited in this regard.

The body portion **4110** may include a plurality of mass portions **4120** (FIG. **42**), generally, shown as a first set of mass portions **4210** (generally shown as mass portions **4405**, **4410**, **4415**, **4420** and **4425**) and a second set of mass portions **4220** (generally shown as mass portions **4445**, **4450**, **4455**, **4460** and **4465**). The port region **4240** may have a shape similar to the port regions of any of the golf club heads described herein. The port region **4240** may include a plurality of ports **4600** (generally shown as ports **4605**, **4610**, **4615**, **4620**, **4625**, **4645**, **4650**, **4655**, **4660** and **4665**) to receive the plurality of mass portions **4120**. The characteristics (e.g., density, shape, volume, size, color, dimensions, depth, diameter, materials of construction, mass, method of formation, etc.), location on the golf club head (e.g., location relative to the periphery of the golf club head and/or location relative to other mass portions and/or ports), and/or any other properties of each mass portion of the plurality of mass portions **4120** and each port of the plurality of ports **4600** may be similar in many respects to each mass portion and port, respectively, of any of the golf club heads described herein. The apparatus, methods, and articles of manufacture described herein are not limited in this regard.

The outer surface **4142** and/or the inner surface **4144** of the bottom portion **4140** may include one or a plurality of support portions similar to any of the inner or outer support portions described herein. The outer surface **4142** may include at least one outer support portion **4310**. The outer support portion **4310** may be similar in many respects including the function thereof to the outer support portion **3110** of the golf club head **2300**. The apparatus, methods, and articles of manufacture described herein are not limited in this regard.

The inner surface **4144** may include an inner support portion **4320**, which may be also referred to herein as the inner wall portion **4320**. The inner support portion **4320** may include a wall, a rib and/or any projection extending from the inner surface **4144** of the bottom portion **4140**. The inner support portion **4320** may extend around some or all of the ports **4600** to partially or fully surround the ports **4600**. In the example of FIGS. **41-47**, the inner support portion **4320** fully surrounds the ports **4600**. Accordingly, the inner support portion **4320** may define an inner port region **4325** on the inner surface **4144** of the bottom portion **4140**. The inner support portion **4320** may structurally support the bottom portion **4140** by distributing the impact loads exerted on the bottom portion **4140** throughout the bottom portion **4140** when the golf club head **100** strikes a golf ball (not shown). While the above examples may depict a particular inner support portion, the bottom portion **4140** may include additional inner support portions and/or any type of support portions (not shown). The apparatus, methods, and articles of manufacture described herein are not limited in this regard.

The width (i.e., thickness), length, height, orientation angle, and/or cross-sectional shape of the inner support portion **4320** may be similar or vary along the length of the inner support portion **4320** and be configured to provide structural support to the golf club head **4100**. For example, characteristics of the body portion **4110** and/or the bottom portion **4140** including the materials from which the bottom portion **4140** and/or the body portion **4110** is constructed may determine the width, length, height, orientation angle, and/or cross-sectional shape of the inner support portion **4320** along the length of the inner support portion **4320**. In one example, the inner support portion **4320** may be defined by a wall having a height that may be similar to the depths of the mass portions **4600**. In another example, the inner support portion **4320** may be defined by a wall having a height that may be greater than the depths of the mass portions **4600**. In yet another example, the inner support portion **4320** may be defined by a wall having a height that may be smaller than the depths of the mass portions **4600**. The apparatus, methods, and articles of manufacture described herein are not limited in this regard.

In one example shown in FIG. **45**, certain regions of the interior of the body portion **4110** of the golf club head **4100** may include an elastic polymer material or an elastomer material, which may be referred to herein as the filler material **4510**. The filler material **4510** may dampen vibration, dampen noise, lower the center of gravity and/or provide a better feel and sound for the golf club head **4100** when striking a golf ball (not shown). According to one example, the inner port region **4325**, which may be defined by the inner surface **4144** of the bottom portion **4140** and the inner support portion **4320**, may partially or fully include the filler material **4510**. The filler material **4510** may extend from the inner surface **4144** of the bottom portion **4140** up to the height of the inner support portion **4320**. However, the filler material **4510** may extend below or above the inner support portion **4320**. Accordingly, if the height of the inner support portion **4320** is greater than or equal to the depth of the ports **4600**, the ports **4600** may be surrounded and/or covered by the filler material **4510**, respectively, which may provide vibration dampening, noise dampening, and/or a better feel and sound for the golf club head **4100** when striking a golf ball (not shown). The apparatus, methods, and articles of manufacture described herein are not limited in this regard.

The height or thickness of the filler material **4510** in the inner port region **4325** may be constant or may vary. In one example, the thickness of the filler material **4510** may be greater around a center portion of the inner port region **4325** than at one or more perimeter portions of the inner port region **4325**. In another example, the thickness of the filler material **4510** may be less around a center portion of the inner port region **4325** than at one or more perimeter portions of the inner port region **4325**. In yet another example, the thickness of the filler material **4510** may be greater at or around the ports **4600** than at other locations of the inner port region **4325**. In one example, the entire inner port region **4325** may be filled with a filler material **4510**. In another example, only portions of the inner port region **4325** may be filled with a filler material **4510**. Accordingly, some of the ports **4600** may not be partially or fully surrounded and/or covered with the filler material **4510**. The apparatus, methods, and articles of manufacture described herein are not limited in this regard.

Any of the golf club heads described herein, including the golf club head **4100**, may have one or more interior regions that may include a filler material as described herein. In one example, the filler material **4510** may be injected into the inner port region **4325** of the body portion **4110** from one or more of the ports **4600**. In the example of FIGS. **41-47**, each of the ports **4615** and **4655** may include an opening **4616** and **4656**, respectively, into the inner port region **4325** or the interior of the body portion **4110**. Accordingly, the openings **4616** and **4656** may be used to inject the filler material **4510**

into the inner port region **4325**. In one example, one of the openings **4616** or **4656** may be used to inject filler material into inner port region **4325**, while the other opening **4656** or **4616**, respectively, may be used for the air that is displaced by the filler material injected into the body portion **4110** to escape. The inner support portion **4320** may provide a boundary or a holding perimeter for the filler material **4510** when the filler material **4510** is injected into the body portion **4110**. The filler material **4510** may be injected into the inner port region **4325** until the height of the filler material **4510** is similar, substantially similar, or greater than to the height of the inner support portion **4320**. Accordingly, the filler material may be molded to the shape of the inner port region **4325**. Alternatively, the inner port region **4325** may be partially filled with the filler material **4510**. The apparatus, methods, and articles of manufacture described herein are not limited in this regard.

Alternatively, one or more inserts may be formed from an elastic polymer material or an elastomer material (e.g., filler material) and placed in one or more regions of the interior of golf club head. FIG. **46** shows an example of the golf club head **4100** of FIG. **41** with an insert **4750**, which may be constructed from an elastic polymer material or an elastomer material. The insert **4750** may be manufactured to have a similar shape as the shape of the inner port region **4325**. Accordingly, the insert **4750** may have a curvature similar to the curvature of the bottom portion **4140** at the inner port region **4325** to lay generally flat and in contact with the inner surface **4144** of the bottom portion **4140**. The insert **4750** may have a shape that may be similar to the shape of the inner port region **4325** to be inserted in the inner port region **4325** and generally fit within the inner port region **4325**. Further, the insert **4750** may be surrounded and/or in contact with the inner support portion **4320**. The inner support portion **4320** may engage all or portions of the perimeter of the insert **4750** to assist in maintaining the insert in the inner port region **4325** or maintain the insert in the inner port region **4325**. The insert **4750** may have a plurality of cutout portions **4756** to generally match the shape and/or contour of the sidewall portions of each of the ports **4600**. Accordingly, when the insert **4750** is placed in the inner port region **4325**, each port of the plurality of ports **4600** is received in a corresponding cutout portion **4756**. The apparatus, methods, and articles of manufacture described herein are not limited in this regard.

The insert **4750** may have a thickness that may be similar or substantially similar to the height of any of the ports **4600**. Accordingly, when the insert **4750** is in the inner port region **4325**, the top portion of the insert **4750** at or proximate to the ports **4600** may be at the same or substantially the same height as the ports **4600**. However, the thickness of the insert **4750** may vary such that the thickness of the insert **4750** at any location of the insert **4750** may be more or less than the height of any of the ports **4600**. The insert **4750** may dampen vibration, dampen noise, lower the center of gravity and/or provide a better feel and sound for the golf club head **4100** when striking a golf ball (not shown). The apparatus, methods, and articles of manufacture described herein are not limited in this regard.

Any of the inserts described herein may be manufactured from an elastic polymer material as a one-piece continuous part. The insert **4750** may be a one-piece continuous part without any recesses and/or holes. According to the example shown in FIG. **47**, the insert **4750** may include a plurality of holes **4762** that may reduce the weight of the insert **4750**. The insert **4750** may include any number of holes **4762** arranged in any configuration on the insert **4750**. In the example of FIG. **47**, the insert **4750** includes a plurality of hexagonal holes **4762** that extend through the thickness of the insert **4750** and are arranged on the insert **4750** to define a pattern that is similar to a honeycomb pattern. The holes **4762** may have any shape or spacing. Although the above example may describe holes having a particular shape, the apparatus, methods, and articles of manufacture described herein may include holes of other suitable shapes (e.g., circular, triangular, octagonal, or other suitable geometric shape). Further, the openings may be similar or different in shape, size and or arrangement on the insert **4750**. In one example, the insert **4750** may include a plurality of round holes (not shown). In another example, the insert **4750** may include a plurality of slots, grooves and/or slits (not shown). In yet another example, the insert **4750** may include recesses (not shown) instead of holes that do not extend through the insert **4750**. The apparatus, methods, and articles of manufacture described herein are not limited in this regard.

The filler material **4510** and or the insert **4750** may be manufactured from any of the materials described herein. The filler material **4510** or the insert **4750** may be bonded, attached and/or connected to the body portion **4110** of the golf club head **4100** by a bonding portion (not shown) to improve adhesion and/or mitigate delamination between the body portion **4110** and the filler material **4510** or the insert **4750**. Further, as described herein, the inner support portion **4320** may engage the insert **4750** to partially or fully maintain the insert **4750** in the inner port region **4325**. In one example, the insert **4750** may be maintained in the inner port region **4325** by frictionally engaging the inner support portion **4320** and/or a bonding portion bonding the insert **4750** to the inner support portion **4320** and/or the inner surface **4144** of the bottom portion **4140**. The bonding portion may be any of the bonding portions described herein such as a bonding agent, an epoxy, a combination of bonding agents, a bonding structure or attachment device, a combination of bonding structures and/or attachment devices, and/or a combination of one or more bonding agents, one or more bonding structures and/or one or more attachment devices. The apparatus, methods, and articles of manufacture described herein are not limited in this regard.

In the example of FIGS. **48-55**, a golf club head **4800** may include a body portion **4810** with a top portion **4830** having a crown portion **4835**, a bottom portion **4840**, a toe portion **4850**, a heel portion **4860**, a front portion **4870**, and a rear portion **4880**. The bottom portion **4840** may include a skirt portion (not shown) defined as a side portion of the golf club head **4800** between the top portion **4830** and the bottom portion **4840** excluding the front portion **4870** and extending across a periphery of the golf club head **4800** from the toe portion **4850**, around the rear portion **4880**, and to the heel portion **4860**. The front portion **4870** may include a face portion **4875** to engage a golf ball (not shown). The body portion **4810** may also include a hosel portion **4865** that may be similar in many respects to any of the hosel portions described herein. Alternatively, the body portion **4810** may include a bore instead of the hosel portion **4865**. The body portion **4810** may be made partially or entirely from any of the materials described herein. Further, the golf club head **4800** may be any type of golf club head having a club head volume similar to the club head volume of any of the golf club heads described herein. The apparatus, methods, and articles of manufacture described herein are not limited in this regard.

The crown portion **4835** may be a separate piece that may be attached to the top portion **4830**. The crown portion **4835** may be constructed from one or more different materials

than the body portion **4810**. In one example (not shown), the crown portion **4835** may be at least partially constructed from a composite material such as a graphite-based composite material. In another example (not shown), the crown portion **4835** may include two outer layers constructed from a composite material, such as a graphite epoxy composite material, and an inner layer constructed from an elastic polymer material. The apparatus, methods, and articles of manufacture described herein are not limited in this regard.

The bottom portion **4840** may include a plurality of port regions, which are shown for example as a first port region **4910**, a second port region **4920** and a third port region **4930**. The first port region **4910** may be near the heel portion **4860** or be closer to the heel portion **4860** than the toe portion **4850** and include a first set of ports **4911** (generally shown as ports **4912**, **4914** and **4916**). The second port region **4920** may be near the front portion **4870** or be closer to the front portion **4870** than the rear portion **4880** and include a second set of ports **4921** (generally shown as ports **4922**, **4924** and **4926**). The third port region **4930** may be near the rear portion **4880** or be closer to the rear portion **4880** than the front portion **4870** and include a third set of ports **4931** (generally shown as ports **4932**, **4934** and **4936**). The bottom portion may include more than three port regions or less than three port regions with each port region including any number of ports. The body portion **4810** may include a plurality of mass portions, shown as a first set of mass portions **4960** (generally shown as mass portions **4962**, **4964**, and **4966**), a second set of mass portions **4970** (generally shown as mass portions **4972**, **4974**, and **4976**), and a third set of mass portions **4980** (generally shown as mass portions **4982**, **4984** and **4986**). Each port may receive a mass portion similar to any of the golf club heads described herein. In one example, one or more ports may not include mass portions. The characteristics (e.g., density, shape, volume, size, color, dimensions, depth, diameter, materials of construction, mass, method of formation, etc.) and/or any other properties of each mass portion of the plurality of mass portions and each port of the plurality of ports may be similar in many respects to each mass portion and port, respectively, of any of the golf club heads described herein. In one example, the ports and the mass portions of the golf club head of FIGS. **48-55** may have greater dimensions (i.e., length, width, diameter, depth, etc.) than any of the ports and/or mass portions, respectively, described herein. The apparatus, methods, and articles of manufacture described herein are not limited in this regard.

The mass portions of the first set of mass portions **4960**, the second set of mass portions **4970** and/or the third set of mass portions **4980** may have similar or different masses. In one example, the overall mass of the first set of mass portions **4960** may be greater than the overall mass of the second set of mass portions **4970** and/or the third set of mass portions **4980**. In another example, the overall mass of the second set of mass portions **4970** may be greater than the overall mass of the first set of mass portions **4960** and/or the third set of mass portions **4980**. In yet another example, the overall mass of the third set of mass portions **4980** may be greater than the overall mass of the second set of mass portions **4970** and/or the first set of mass portions **4960**. The masses of the mass portions in each of the first set of mass portion **4960**, the second set of mass portions **4970** and/or the third set of mass portions **4980** may be similar or different. Accordingly, by using mass portions having similar or different masses in each of the port regions **4910**, **4920** and/or **4930**, the overall mass in each port region and/or the mass distribution in each port region may be adjusted to generally optimize and/or adjust the swing weight, center of gravity, moment of inertia, and/or an overall feel of the golf club head for an individual using the golf club head **4800**. The apparatus, methods, and articles of manufacture described herein are not limited in this regard.

The outer surface **4842** and/or the inner surface **4844** of the bottom portion **4840** may include one or more inner support portions (not shown) and/or one or more outer support portion (not shown) similar to any of the inner support portions and the outer support portions described herein. The apparatus, methods, and articles of manufacture described herein are not limited in this regard.

Certain regions of the interior of the body portion **4810** may include an elastic polymer material or an elastomer material similar to any of the golf club heads described herein. The filler material may dampen vibration, dampen noise, lower the center of gravity and/or provide a better feel and sound for the golf club head **4800** when striking a golf ball (not shown). The golf club head **4800**, may have one or more interior regions that may include a filler material as described herein. In one example, the filler material may be injected into the body portion **4810** from one or more of the ports as described herein. In the example of FIGS. **48-55**, each of the ports **4924** and **4934** may include an opening **4925** and **4935**, respectively, into the interior of the body portion **4810**. Accordingly, the openings **4925** and/or **4935** may be used to inject the filler material into the body portion **4810**. In one example, one of the openings **4925** or **4935** may be used to inject filler material into the body portion **4810**, while the other opening **4935** or **4925**, respectively, may be used for the air that is displaced by the filler material injected into the body portion **4810** to escape. The body portion may include one or more inner support portions (not shown) similar to any of the inner support portions described herein that may provide a boundary or a holding perimeter for the filler material when the filler material is injected into the body portion **4810**. The filler material may be injected into the body portion **4810** until the height of the filler material is similar, substantially similar, or greater than to the height of one or of the ports of the first set of ports **4911**, second set of ports **4921** and/or third set of ports **4931**. Accordingly, the filler material may be molded to the shape of one or more portions of the bottom portion **4840** or the entire bottom portion **4840**. The apparatus, methods, and articles of manufacture described herein are not limited in this regard.

Alternatively, one or more inserts may be formed from an elastic polymer material or an elastomer material (e.g., filler material) and placed in one or more regions of the interior of golf club head **4800**. FIGS. **52-55** show an example of the golf club head **4800** of FIG. **48** with an insert **5450**, which may be constructed from an elastic polymer material or an elastomer material. The insert **5450** may be manufactured to have a similar shape as the shape of all or portions of the inner surface **4844** of the bottom portion **4840**. Accordingly, as shown in FIG. **55**, the insert **5450** may have a curvature similar to the curvature of the bottom portion **4840** so as to lay generally flat and in contact with the inner surface **4844** of the bottom portion **4840**. The insert **5450** may be partially and/or fully surrounded and/or in contact with any inner support portions (not shown) on the inner surface **4844** of the body portion **4810**. The insert **5450** may have a plurality of cutout portions **5456** to generally match the shape and/or contour of the sidewall portions of each of the ports of the first set of ports **4911**, second set of ports **4921** and/or third set of ports **4931**. Accordingly, when the insert **5450** is placed on the inner surface **4844** of the bottom portion **4840**,

each port of the plurality of ports is received in a corresponding cutout portion **5456**. Each port extending through a corresponding cutout portion **5456** may assist in maintaining the position of the insert **5450** on the inner surface **4844** of the bottom portion **4840**. The apparatus, methods, and articles of manufacture described herein are not limited in this regard.

The insert **5450** may partially cover and/or fully cover the inner surface **4844** of the bottom portion **4840**. In the example of FIGS. **52-55**, the insert **5450** extends from the front portion **4870** to the rear portion **4880** and from a location at or near the heel portion **4860** to a location on the inner surface **4844** of the bottom portion **4840** near the toe portion **4850**. In one example, the insert **5450** may not extend to the toe portion **5640**. In another example (not shown), the insert **5450** may extend to the toe portion **4850**. The insert **5450** may cover any portion of the inner surface **4844** of the bottom portion **4840** so that the insert **5450** surrounds and/or contacts all of the ports that may be on the bottom portion **4840**. For example, as shown in FIG. **52**, the insert **5450** extends from the heel portion **4860** until past the ports **4922** and **4936** to surround and/or contact all of the ports of the first set of ports **4911**, second set of ports **4921** and/or third set of ports **4931**. Accordingly, the insert **5450** may dampen vibration and/or dampen noise at or around each of the ports of the first set of ports **4911**, second set of ports **4921** and/or third set of ports **4931** to provide a better feel and sound for the golf club head **4800** when striking a golf ball (not shown). The apparatus, methods, and articles of manufacture described herein are not limited in this regard.

The insert **5450** may have a thickness that may be similar or substantially similar to the height of any of the ports of the first set of ports **4911**, second set of ports **4921** and/or third set of ports **4931**. Accordingly, when the insert **5450** is in contact with the inner surface **4844** of the bottom portion **4840**, the top portion of the insert **5450** at or proximate to the ports of the first set of ports **4911**, second set of ports **4921** and/or third set of ports **4931** may be at the same or substantially the same height as the ports of the first set of ports **4911**, second set of ports **4921** and/or third set of ports **4931**. However, the thickness of the insert **5450** may vary such that the thickness of the insert **5450** at any location of the insert **5450** may be more or less than the height of any of the ports of the first set of ports **4911**, second set of ports **4921** and/or third set of ports **4931**. The insert **5450** may dampen vibration, dampen noise, lower the center of gravity and/or provide a better feel and sound for the golf club head **4800** when striking a golf ball (not shown). The apparatus, methods, and articles of manufacture described herein are not limited in this regard.

Any of the inserts described herein may be manufactured from an elastic polymer material as a one-piece continuous part. The insert **5450** may be a one-piece continuous part without any recesses and/or holes. According to the example shown in FIGS. **52-55**, the insert **5450** may include a plurality of holes **5462** that may reduce the weight of the insert **5450**. The insert **5450** may include any number of holes **5462** arranged in any configuration on the insert **5450**. The insert **5450** includes a plurality of hexagonal holes **5462** that extend through the thickness of the insert **5450** and are arranged on the insert **5450** to define a pattern that is similar to a honeycomb pattern. The holes **5462** may have any shape or spacing. Although the above example may describe holes having a particular shape, the apparatus, methods, and articles of manufacture described herein may include holes of other suitable shapes (e.g., circular, triangular, octagonal, or other suitable geometric shape). Further, the openings may be similar or different in shape, size and or arrangement on the insert **5450**. In one example, the insert **5450** may include a plurality of round holes (not shown). In another example, the insert **5450** may include a plurality of slots, grooves and/or slits (not shown). In yet another example, the insert **5450** may include recesses (not shown) instead of holes that do not extend through the insert **5450**. The apparatus, methods, and articles of manufacture described herein are not limited in this regard.

The filler material and or the insert **5450** may be manufactured from any of the materials described herein. The filler material or the insert **5450** may be bonded, attached and/or connected to the body portion **4810** of the golf club head **4800** by a bonding portion (not shown) to improve adhesion and/or mitigate delamination between the body portion **4810** and the filler material or the insert **5450**. The bonding portion may be any of the bonding portions described herein such as a bonding agent, an epoxy, a combination of bonding agents, a bonding structure or attachment device, a combination of bonding structures and/or attachment devices, and/or a combination of one or more bonding agents, one or more bonding structures and/or one or more attachment devices. Further, one or more inner support portions (not shown) may engage the insert **5450** to partially or fully maintain the position of the insert **5450** similar to any of the golf club heads described herein. The apparatus, methods, and articles of manufacture described herein are not limited in this regard.

While the above examples may describe a certain type of golf club head, the apparatus, methods, and articles of manufacture described herein may be applicable to other types of golf club heads. Referring to FIGS. **56-58**, for example, a golf club head **5600** may include a body portion **5610** and a cavity wall portion **5620**. The golf club head **5600** may have a club head volume greater than or equal to 300 cubic centimeters (cm3 or cc). In one example, the golf club head **5600** may be about 460 cc. Alternatively, the golf club head **5600** may have a club head volume less than or equal to 300 cc. For example, the golf club head **5600** may have a club head volume between 100 cc and 200 cc. The club head volume of the golf club head **5600** may be determined by using the weighted water displacement method (i.e., Archimedes Principle). For example, procedures defined by golf standard organizations and/or governing bodies such as the United States Golf Association (USGA) and/or the Royal and Ancient Golf Club of St. Andrews (R&A) may be used for measuring the club head volume of the golf club head **100**. Although FIGS. **56-58** may depict a particular type of club head (e.g., a fairway wood-type club head), the apparatus, methods, and articles of manufacture described herein may be applicable to other types of club head (e.g., a driver-type club head, a hybrid-type club head, an iron-type club head, a putter-type club head, etc.). The apparatus, methods, and articles of manufacture described herein are not limited in this regard.

The body portion **5610** may include a toe portion **5640**, a heel portion **5650**, a front portion **5660**, a rear portion **5670**, a top portion **5680** (e.g., a crown portion), and a bottom portion **5690** (e.g., a sole portion). The body portion **5610** may be a hollow body made partially or entirely of an aluminum-based material, a magnesium-type material, a steel-based material, a titanium-based material, any other suitable material, or any combination thereof. In another example, the body portion **5610** may be made partially or entirely of a non-metal material such as a ceramic material, a composite material, any other suitable material, or any

combination thereof. The front portion **5660** may include a face portion **5662** (e.g., a strike face). The face portion **5662** may include a front surface **5664** and a back surface **5666**. The front surface **5664** may include a plurality of grooves, generally shown as **5810** in FIG. **58**.

The cavity wall portion **5620** may form a first interior cavity portion **5710** and a second interior cavity portion **5720** within the body portion **5610**. For example, the cavity wall portion **5620** may be made partially or entirely of an aluminum-based material, a steel-based material, any other suitable material, or any combination thereof. In another example, the cavity wall portion **5620** may be made partially or entirely of a non-metal material such as a ceramic material, a composite material, any other suitable material, or any combination thereof. The first interior cavity portion **5710** may be associated with a first volume, and the second interior cavity portion **5720** may be associated with a second volume. In one example, the first volume may be less than the second volume. Further, the first volume may be less than or equal to 50% of the second volume.

As illustrated in FIG. **57**, for example, the cavity wall portion **5620** may extend from the back surface **5666** of the face portion **5662**. In one example, the cavity wall portion **5620** may extend no more than one inch from the back surface **5666**. In another example, the cavity wall portion **5620** may extend no more than two inches from the back surface **5666**. The cavity wall portion **5620** may be a single curved wall section. In particular, the cavity wall portion **5620** may have a convex arc profile relative to the back surface **5666** (e.g., C shape) to form a dome-like structure with an elliptical base (e.g., FIG. **58**) or a circular base on the back surface **5666**. In another example, the cavity wall portion **5620** may form a cone-like structure or a cylinder-like structure with the body portion **5610**. Alternatively, the cavity wall portion **5620** may be a concave arc profile relative to the back surface **5666**. The apparatus, methods, and articles of manufacture described herein are not limited in this regard.

The first interior cavity portion **5710** may be partially or entirely filled with an elastic polymer or elastomer material (e.g., a viscoelastic urethane polymer material such as Sorbothane® material manufactured by Sorbothane, Inc., Kent, Ohio), a thermoplastic elastomer material (TPE), a thermoplastic polyurethane material (TPU), and/or other suitable types of materials to absorb shock, isolate vibration, dampen noise, and/or provide structural support. The elastic polymer material may be injected into the first interior cavity portion **5710** via an injection molding process via a port on the face portion **5662**. For example, at least 50% of the first interior cavity portion **5710** may be filled with a TPE material to absorb shock, isolate vibration, dampen noise, and/or provide structural support when the golf club head **5600** strikes a golf ball via the face portion **5662**. With the support of the cavity wall portion **5620** to form the first interior cavity portion **5710** and filling at least a portion of the first interior cavity portion **5710** with an elastic polymer material, the face portion **5662** may be relatively thin without degrading the structural integrity, sound, and/or feel of the golf club head **5600**. In one example, the face portion **5662** may have a thickness of less than or equal to 0.075 inch (e.g., a distance between the front surface **5664** and the back surface **5666**). In another example, the face portion **5662** may have a thickness of less than or equal to 0.060 inch. In yet another example, the face portion **5662** may have a thickness of less than or equal to 0.050 inch. Further, the face portion **5662** may have a thickness of less than or equal to 0.030 inch. The apparatus, methods, and articles of manufacture described herein are not limited in this regard.

The cavity wall portion **5620** may include multiple sections. Turning to FIGS. **59-61**, for example, a golf club head **5900** may include a body portion **5910** and a cavity wall portion **5920**. The body portion **5910** may include a toe portion **5940**, a heel portion **5950**, a front portion **5960**, a rear portion **5970**, a top portion **5980** (e.g., a crown portion), and a bottom portion **5990** (e.g., a sole portion). The front portion **5960** may include a face portion **5962** (e.g., a strike face) with a front surface **5964** and a back surface **5966**. The cavity wall portion **5920** may extend from the back surface **5966** to form a first interior cavity portion **6010** and a second interior cavity portion **6020** within the body portion **5910**. The cavity wall portion **5920** may include two or more wall sections, generally shown as **6030**, **6040**, and **6050** in FIG. **60**. The cavity wall portion **5920** may form a truncated pyramid-like structure with a rectangular base (e.g., FIG. **61**) or a square base on the back surface **5966**. Alternatively, the cavity wall portion **5920** may form a cuboid-like structure (i.e., with a rectangular base) or a cuboid-like structure (i.e., with a square base) on the back surface **5966**. In another example, the cavity wall portion **5920** may form a square-based, pyramid-like structure on the back surface **5966**. In yet another example, the cavity wall portion **5920** may form a triangular-based, pyramid-like structure or a triangular prism-like structure on the back surface **5966**. Similar to the first interior cavity portion **5710** (FIGS. **56-58**), the first interior cavity portion **6010** may be partially or entirely filled with an elastic polymer or elastomer material (e.g., a TPE material, a TPU material, etc.). The elastic polymer material may be injected into the first interior cavity portion **6010** via an injection molding process via a port on the face portion **5962**. The apparatus, methods, and articles of manufacture described herein are not limited in this regard.

As illustrated in FIGS. **62** and **63**, for example, a golf club head **6200** may include a body portion **6210** and a cavity wall portion **6220**. The body portion **6210** may include a toe portion **6240**, a heel portion **6250**, a front portion **6260**, a rear portion **6270**, a top portion **6280** (e.g., a crown portion), and a bottom portion **6290** (e.g., a sole portion). The front portion **6260** may include a face portion **6262** (e.g., a strike face) with a front surface **6264** and a back surface **6266**. The face portion **6262** may be associated with a loft plane **6305** that defines the loft angle of the golf club head **6200**.

The cavity wall portion **6220** may be a single flat wall section. In particular, the cavity wall portion **6220** may extend between the toe portion **6240** and the heel portion **6250** and between the top portion **6280** and the bottom portion **6290** to form a first interior cavity portion **6310** and a second interior cavity portion **6320** within the body portion **6210**. The cavity wall portion **6220** may be parallel or substantially parallel to the loft plane **6305**. Alternatively as shown in FIG. **64**, a cavity wall portion **6420** may be perpendicular or substantially perpendicular to a ground plane **6430**. Similar to the first interior cavities **5710** (FIGS. **56-58**) and **6010** (FIGS. **59-61**), the first interior cavity portion **6310** may be partially or entirely filled with an elastic polymer or elastomer material. The elastic polymer material may be injected into the first interior cavity portion **6310** via an injection molding process via a port on the face portion **6262** and/or the bottom portion **6290**. The apparatus, methods, and articles of manufacture described herein are not limited in this regard.

Alternatively, the cavity wall portion **6220** may extend between the bottom portion **6290** and a top-and-front transition region (i.e., a transition region between the top portion

6280 and the front portion 6260) so that the cavity wall portion 6220 and the loft plane 6330 may not be parallel to each other. In another example, the cavity wall portion 6220 may extend between the top portion 6280 and a bottom-and-front transition region (i.e., a transition region between the bottom portion 6290 and the front portion 6260) so that the cavity wall portion 6220 and the loft plane 6330 may be not parallel to each other. Although FIGS. 62-64, may depict the cavity wall portions 6220 and 6420 being flat or substantially flat, the cavity wall portions 6220 and/or 6420 may be concaved or convexed relatively to the face portion 6262. The apparatus, methods, and articles of manufacture described herein are not limited in this regard.

While above examples may describe a cavity wall portion dividing an interior cavity of a hollow body portion to form two separate interior cavities with one interior cavity partially or entirely filled with an elastic polymer material, the apparatus, methods, and articles of manufacture described herein may include two or more cavity wall portions dividing an interior cavity of a hollow body portion to form three or more separate interior cavities with at least two interior cavities partially or entirely filled with an elastic polymer material. In one example, one interior cavity may be partially or entirely filled with a TPE material whereas another interior cavity may be partially or entirely filled with a TPU material. The apparatus, methods, and articles of manufacture described herein are not limited in this regard.

In the example of FIGS. 65-68, a golf club head 6500 may include a body portion 6510 with a top portion 6530 having a crown portion 6535, a bottom portion 6540, a toe portion 6550, a heel portion 6560, a front portion 6570, and a rear portion 6580. The bottom portion 6540 may include a skirt portion (not shown) defined as a side portion of the golf club head 6500 between the top portion 6530 and the bottom portion 6540 excluding the front portion 6570 and extending across a periphery of the golf club head 6500 from the toe portion 6550, around the rear portion 6580, and to the heel portion 6560. The front portion 6570 may include a face portion 6575 to engage a golf ball (not shown). The golf club head 6500 may have a neutral axis 6801. The neutral axis 6801 may be perpendicular to the face portion 6575 and may intersect a center of the face portion 6575. The body portion 6510 may also include a hosel portion 6565 that may be similar in many respects to any of the hosel portions described herein. Alternatively, the body portion 6510 may include a bore instead of the hosel portion 6565. The body portion 6510 may be made partially or entirely from any of the materials described herein. The golf club head 6500 may have a club head volume greater than or equal to 300 cubic centimeters (cm3 or cc). In one example, the golf club head 6500 may be about 460 cc. Alternatively, the golf club head 6500 may have a club head volume less than or equal to 300 cc. For example, the golf club head 6500 may have a club head volume between 100 cc and 200 cc. Further, the golf club head 6500 may be any type of golf club head having a club head volume similar to the club head volume of any of the golf club heads described herein. A maximum front-to-rear distance of the golf club head 6500 may be greater than a maximum heel-to-toe distance of the golf club head 6500. The apparatus, methods, and articles of manufacture described herein are not limited in this regard.

The crown portion 6535 may be a separate piece that may be attached to the top portion 6530. The crown portion 6535 may be constructed from one or more different materials than the body portion 6510. In one example (not shown), the crown portion 6535 may be at least partially constructed from a composite material such as a graphite-based composite material. In another example (not shown), the crown portion 6535 may include two outer layers constructed from a composite material, such as a graphite epoxy composite material, and an inner layer constructed from a polymer material. The apparatus, methods, and articles of manufacture described herein are not limited in this regard.

The bottom portion 6540 may include a plurality of port regions, which are shown for example as a first port region 6610, a second port region 6620 and a third port region 6630. The first port region 6610 may be near the toe portion 6550, closer to the toe portion 6550 than the heel portion 6560, or between the toe portion 6550 and the rear portion 6580 at or proximate to a periphery of the body portion 6510. The first port region 6610 may include a first set of ports 6611 (generally shown as ports 6612, 6614 and 6616). The second port region 6620 may be near the front portion 6570 or be closer to the front portion 6570 than the rear portion 6580 and include a second set of ports 6621 (generally shown as ports 6622, 6624 and 6626). The third port region 6630 may be near the heel portion 6560, be closer to the heel portion 6560 than the toe portion 6550, or between the heel portion 6560 and the rear portion 6580 at or proximate to a periphery of the body portion 6510. The third port region 6630 may include a third set of ports 6631 (generally shown as ports 6632, 6634 and 6636). The bottom portion may include more than three port regions or less than three port regions with each port region including any number of ports. The body portion 6510 may include a plurality of mass portions, shown as a first set of mass portions 6660 (generally shown as mass portions 6662, 6664, and 6666), a second set of mass portions 6670 (generally shown as mass portions 6672, 6674, and 6676), and a third set of mass portions 6680 (generally shown as mass portions 6682, 6684 and 6686). Each port may receive a mass portion similar to any of the golf club heads described herein. In one example, one or more ports may not include mass portions. The characteristics (e.g., density, shape, volume, size, color, dimensions, depth, diameter, materials of construction, mass, method of formation, etc.) and/or any other properties of each port and/or mass portion may be similar or different. Further, the characteristics (e.g., density, shape, volume, size, color, dimensions, depth, diameter, materials of construction, mass, method of formation, etc.) and/or any other properties of each port and/or mass portion may be similar in many respects to or different from each mass portion and port, respectively, of any of the golf club heads described herein. In one example, the ports and the mass portions of the golf club head of FIGS. 65-68 may have one or more greater dimensions (i.e., length, width, diameter, depth, etc.) than any of the ports and/or mass portions, respectively, described herein. In another example, the ports and the mass portions of the golf club head of FIGS. 65-68 may have one or more smaller dimensions (i.e., length, width, diameter, depth, etc.) than any of the ports and/or mass portions, respectively, described herein. The apparatus, methods, and articles of manufacture described herein are not limited in this regard.

The mass portions of the first set of mass portions 6660, the second set of mass portions 6670 and/or the third set of mass portions 6680 may have similar or different masses. In one example, the overall mass of the first set of mass portions 6660 may be greater than the overall mass of the second set of mass portions 6670 and/or the third set of mass portions 6680. In another example, the overall mass of the second set of mass portions 6670 may be greater than the overall mass of the first set of mass portions 6660 and/or the third set of mass portions 6680. In yet another example, the

overall mass of the third set of mass portions **6680** may be greater than the overall mass of the second set of mass portions **6670** and/or the first set of mass portions **6660**. The masses of the mass portions in each of the first set of mass portion **6660**, the second set of mass portions **6670** and/or the third set of mass portions **6680** may be similar or different. Accordingly, by using mass portions having similar or different masses in each of the port regions **6610**, **6620** and/or **6630**, the overall mass in each port region and/or the mass distribution in each port region may be adjusted to generally optimize and/or adjust the swing weight, center of gravity, moment of inertia, and/or an overall feel of the golf club head for an individual using the golf club head **6500**. The apparatus, methods, and articles of manufacture described herein are not limited in this regard.

The outer surface **6542** and/or the inner surface **6544** of the bottom portion **6540** may include one or more inner support portions (not shown) and/or one or more outer support portion (not shown) similar to any of the inner support portions and the outer support portions described herein. The apparatus, methods, and articles of manufacture described herein are not limited in this regard.

Certain regions of the interior of the body portion **6510** may include a polymer material, which may also be referred to herein as the filler material, similar to any of the polymer materials described herein. The filler material may dampen vibration, dampen noise, lower the center of gravity and/or provide a better feel and sound for the golf club head **6500** when striking a golf ball (not shown). The golf club head **6500**, may have one or more interior regions and/or cavities that may include a filler material similar to any of the golf club heads described herein. In one example, as shown in FIG. **68**, the body portion **6510** may include a cavity wall portion **6720**. The cavity wall portion **6720** may form a first interior cavity portion **6810** and a second interior cavity portion **6820** within the body portion **6510**. The first interior cavity portion **6810** and the second interior cavity portion **6820** may be separated by the cavity wall portion **6720**. Alternatively, the first interior cavity portion **6810** and the second interior cavity portion **6820** may be connected through one or more openings in the cavity wall portion **6720**. The apparatus, methods, and articles of manufacture described herein are not limited in this regard.

For example, the cavity wall portion **6720** may be made partially or entirely of an aluminum-based material, a steel-based material, any other suitable material, or any combination thereof. In another example, the cavity wall portion **6720** may be made partially or entirely of a non-metal material such as a ceramic material, a composite material, any other suitable material, or any combination thereof. In another example, the cavity wall portion **6720** may be formed with the body portion **6510**. The first interior cavity portion **6810** may be associated with a first volume, and the second interior cavity portion **6820** may be associated with a second volume. The first volume may be less than, equal to, or greater than the second volume. In one example, the first volume may be less than or equal to 50% of the second volume. In another example, the first volume may be less than or equal to 40% of the second volume. In yet another example, the first volume may be between 30% and 70% of the second volume. In yet another example, the first volume may be between 10% and 90% of the second volume. The apparatus, methods, and articles of manufacture described herein are not limited in this regard.

As illustrated in FIG. **68**, the cavity wall portion **6720** may include a first portion **6722** extending from a location at or proximate to the top portion **6530** toward the bottom portion **6540**. The first portion **6722** may extend toward the bottom portion **6540** at a certain angle or orientation relative to the face portion **6575**. In one example, the first portion **6722** may extend toward the bottom portion **6540** and away from the face portion **6575**. Accordingly, a first width **6811** (W_{C1}) of the first interior cavity portion **6810** may increase in a direction from the top portion **6530** to the bottom portion **6540**. In another example, the first portion **6722** may extend toward the bottom portion **6540** and toward the face portion **6575**. Accordingly, the first width **6811** of the first interior cavity portion **6810** may decrease in a direction from the top portion **6530** to the bottom portion **6540**. In the illustrated example of FIG. **68**, the first portion **6722** of the of the cavity wall portion **6720** may extend from a location at or proximate to the top portion **6530** generally parallel or substantially parallel with the face portion **6575**. Accordingly, the first width **6811** of the first interior cavity portion **6810** may be constant or substantially constant. The apparatus, methods, and articles of manufacture described herein are not limited in this regard.

The first interior cavity portion **6810** may include an enlarged cavity portion **6812** between the top portion **6530** and the bottom portion **6540**. As shown in the illustrated example of FIG. **68**, the enlarged cavity portion **6812** extends partially or fully over the second port region **6620**. Accordingly, the enlarged cavity portion **6812** may have a second width **6813** (W_{C2}) of the first interior cavity portion **6810** that may be greater than the first width **6811** of the first interior cavity portion **6810**. The second width **6813** may be about two times greater than the first width **6811**. The second width **6813** may be at least two times greater than the first width **6811**. The enlarged cavity portion **6812** may be located at least partially below the neutral axis **6801** of the golf club head **6500**. The enlarged cavity portion **6812** may be located wholly below a neutral axis **6801** of the golf club head **6500**. The first width **6811** may be located above the neutral axis **6801**. The second width **6813** may be located below the neutral axis **6801**. The enlarged cavity portion **6812** may be defined by a second wall portion **6724** that may extend from the first wall portion **6722** toward the rear portion **6580** and the bottom portion **6540**, and traverse back over the second port region **6620**. The first interior cavity portion **6810** may include a third wall portion **6726** that extends from the second wall portion **6724** to a location at or proximate to the bottom portion **6540**. The first interior cavity portion **6810** may have a third width **6814** (W_{C3}) extending from the third wall portion **6726** to the back surface **6576** of the face portion **6575**. The third width **6814** may be located below the enlarged cavity portion **6812**. The third width **6814** may be located below the second width **6813**. The third width **6814** may be less than the second width **6813**. The third width **6814** may be substantially equal to the first width **6811**. As shown in the illustrated example of FIG. **68**, the third width **6814** may be located between the second port region **6620** and the face portion **6575**. The third width **6814** may be located proximate to the bottom portion. In other examples, the first interior cavity portion **6810** may be configured similar any of the interior cavities described herein and shown in FIGS. **56-64**. The apparatus, methods, and articles of manufacture described herein are not limited in this regard.

In another example, the first width **6811** may be similar to the second width **6813** of the first interior cavity portion **6810** (not shown). Accordingly, the first wall portion **6722** of the cavity wall portion **6720** may located farther back toward the rear portion **6580** than the location of the first wall portion **6722** shown in FIG. **68** such that the portion of

the first interior cavity portion **6810** above the second port region **6620** extends over the one or more ports of the second port region **6620**. The apparatus, methods, and articles of manufacture described herein are not limited in this regard.

In one example, the first interior cavity portion **6810** may be unfilled (i.e., empty space). Alternatively, the first interior cavity portion **6810** may be partially or entirely filled with a filler material (i.e., a cavity filling portion), which may include one or more similar or different types of materials. In one example, the filler material may include an elastic polymer or an elastomer material (e.g., a viscoelastic urethane polymer material such as Sorbothane® material manufactured by Sorbothane, Inc., Kent, Ohio), a thermoplastic elastomer material (TPE), a thermoplastic polyurethane material (TPU), other polymer material(s), bonding material (s) (e.g., adhesive), and/or other suitable types of materials that may absorb shock, isolate vibration, and/or dampen noise. For example, at least 50% of the first interior cavity portion **6810** may be filled with a TPE material to absorb shock, isolate vibration, and/or dampen noise when the golf club head **100** strikes a golf ball via the face portion **6575**. In one example, the first interior cavity portion **6810** may be partially or entirely filled with a filler material through a port (e.g. **6624**) located in the bottom portion **6540**. In one example, as shown in FIG. **68**, the port **6624** may include an opening that accesses the first interior cavity portion **6810**. The opening may provide a fluid pathway for filler material to be introduced to the first interior cavity portion **6810**. The apparatus, methods, and articles of manufacture described herein are not limited in this regard.

In another example, the filler material may be a polymer material such as an ethylene copolymer material that may absorb shock, isolate vibration, and/or dampen noise when the golf club head **6500** strikes a golf ball via the face portion **6575**. In particular, at least 50% of the first interior cavity portion **6810** may be filled with a high density ethylene copolymer ionomer, a fatty acid modified ethylene copolymer ionomer, a highly amorphous ethylene copolymer ionomer, an ionomer of ethylene acid acrylate terpolymer, an ethylene copolymer comprising a magnesium ionomer, an injection moldable ethylene copolymer that may be used in conventional injection molding equipment to create various shapes, an ethylene copolymer that can be used in conventional extrusion equipment to create various shapes, an ethylene copolymer having high compression and low resilience similar to thermoset polybutadiene rubbers, and/or a blend of highly neutralized polymer compositions, highly neutralized acid polymers or highly neutralized acid polymer compositions, and fillers. For example, the ethylene copolymer may include any of the ethylene copolymers associated with DuPont™ High-Performance Resin (HPF) family of materials (e.g., DuPont™ HPF AD1172, DuPont™ HPF AD1035, DuPont® HPF 1000 and DuPont™ HPF 2000), which are manufactured by E.I. du Pont de Nemours and Company of Wilmington, Del. The DuPont™ HPF family of ethylene copolymers are injection moldable and may be used with conventional injection molding equipment and molds, provide low compression, and provide high resilience, i.e., relatively high coefficient of restitution (COR). The apparatus, methods, and articles of manufacture described herein are not limited in this regard.

For example, the filler material may have a density of less than or equal to 1.5 g/cm^3. The filler material may have a compression deformation value ranging from about 0.0787 inch (2 mm) to about 0.1968 inch (5 mm). The filler material may have a surface Shore D hardness ranging from 40 to 60. As mentioned above, the filler material may be associated with a relatively high coefficient of restitution (COR). The filler material may be associated with a first COR (COR_1) and the face portion **6575** may be associated with a second COR (COR_2), which may be similar or different from the first COR. The first and second CORs may be associated with a COR ratio (e.g., COR_{12} ratio=COR_1/COR_2 or COR_{21} ratio=COR_2/COR_1). In one example, the COR ratio may be less than two (2). In another example, the COR ratio may be in a range from about 0.5 to about 1.5. In yet another example, the COR ratio may be in a range from about 0.8 to about 1.2. The apparatus, methods, and articles of manufacture described herein are not limited in this regard.

The golf club head **6500** may be associated with a third COR (COR_3), which may be similar or different from the first COR and/or the second COR. As mentioned above, the filler material may be associated with the first COR. The first and third CORs may be associated with a COR ratio (e.g., COR_{13} ratio=COR_1/COR_3 or COR_{31} ratio=COR_3/COR_1). In one example, the COR ratio may be less than two (2). In another example, the COR ratio may be in a range from about 0.5 to about 1.5. In yet another example, the COR ratio may be in a range from about 0.8 to about 1.2. The apparatus, methods, and articles of manufacture described herein are not limited in this regard.

The CORs of the filler material, the face portion **6575**, and/or the golf club head **6500** (e.g., the first COR (COR_1), the second COR (COR_2), and/or the third COR (COR_3), respectively) may be measured by methods similar to methods that measure the COR of a golf ball and/or a golf club head as defined by one or more golf standard organizations and/or governing bodies (e.g., United States Golf Association (USGA)). In one example, an air cannon device may launch or eject an approximately 1.55 inch (38.1 mm) spherical sample of the filler material at an initial velocity toward a steel plate positioned at about 4 feet (1.2 meters) away from the air cannon device. The sample may vary in size, shape or any other configuration. A speed monitoring device may be located at a distance in a range from 2 feet (0.6 meters) to 3 feet (0.9 meters) from the air cannon device. The speed monitoring device may measure a rebound velocity of the sample of the filler material after the sample of the filler material strikes the steel plate. The COR may be the rebound velocity divided by the initial velocity. In one example, the filler material may have a COR value in a range from approximately 0.50 to approximately 0.95 when measured with an initial velocity in a range from 100 ft/s (30.48 m/s) to 250 ft/s (76.2 m/s). In another example, the filler material may have a COR value in a range from approximately 0.65 to approximately 0.85 when measured with an initial velocity in a range from 100 ft/s (30.48 m/s) to 150 ft/s (45.72 m/s). In another example, the filler material may have a COR value in a range from approximately 0.75 to approximately 0.8 when measured with an initial velocity in a range 100 ft/s (30.48 m/s) to 150 ft/s (45.72 m/s). In another example, the filler material may have a COR value in a range from approximately 0.55 to approximately 0.90 when measured with an initial velocity in a range from 100 ft/s (30.48 m/s) and 250 ft/s (76.2 m/s). In another example, the filler material may have a COR value in a range from approximately 0.75 to approximately 0.85 when measured with an initial velocity in a range 110 ft/s (33.53 m/s) to 200 ft/s (60.96 m/s). In yet another example, the filler material may have a COR value in a range from approximately 0.8 to approximately 0.9 when measured with an initial velocity of about 125 ft/s (38.1 m/s). While a particular example may be described above, other methods may be used to measure the CORs of the filler material, the

face portion **6575**, and/or the golf club head **6500**. The apparatus, methods, and articles of manufacture described herein are not limited in this regard.

When the face portion **6575** of the golf club head **6500** strikes a golf ball, the face portion **6575** and the filler material may deform and/or compress. The kinetic energy of the impact may be transferred to the face portion **6575** and/or the filler material. For example, some of the kinetic energy may be transformed into heat by the filler material or work done in deforming and/or compressing the filler material. Further, some of the kinetic energy may be transferred back to the golf ball to launch the golf ball at a certain velocity. A filler material with a relatively higher COR may transfer relatively more kinetic energy to the golf ball and dissipate relatively less kinetic energy. Accordingly, a filler material with a relatively high COR may generate relatively higher golf ball speeds because a relatively greater part of the kinetic energy of the impact may be transferred back to the golf ball to launch the golf ball from the golf club head **6500**.

The filler material may include a bonding portion. In one example, the bonding portion may be one or more bonding agents (e.g., one or more adhesive or epoxy materials). For example, the bonding agent may assist in bonding or adhering the filler material to at least a back surface **6576** of the face portion **6575**. The bonding agent may also absorb shock, isolate vibration, and/or dampen noise when the golf club head **6500** strikes a golf ball via the face portion **6575**. Further, the bonding agent may be an epoxy material that may be flexible or slightly flexible when cured. In one example, the filler material may include any of the 3M™ Scotch-Weld™ DP100 family of epoxy adhesives (e.g., 3M™ Scotch-Weld™ Epoxy Adhesives DP100, DP100 Plus, DP100NS and DP100FR), which are manufactured by 3M corporation of St. Paul, Minn. In another example, the filler material may include 3M™ Scotch-Weld™ DP100 Plus Clear adhesive. In yet another example, the filler material may include low-viscosity, organic, solvent-based solutions and/or dispersions of polymers and other reactive chemicals such as MEGUM™, ROBOND™, and/or THIXON™ materials manufactured by the Dow Chemical Company, Auburn Hills, Mich. In yet another example, the filler material may be LOCTITE® materials manufactured by Henkel Corporation, Rocky Hill, Conn. The apparatus, methods, and articles of manufacture described herein are not limited in this regard.

Further, the filler material may include a combination of one or more bonding agents such as any of the bonding agents described herein and one or more polymer materials such as any of the polymer materials described herein. In one example, the filler material may include one or more bonding agents that may be used to bond the polymer material to the back surface **6576** of the face portion **6575**. The one or more bonding agents may be applied to the back surface **6576** of the face portion **6575**. The filler material may further include one or more polymer materials that may partially or entirely fill the remaining portions of the first interior cavity portion **6810**. Accordingly, two or more separate materials may partially or entirely fill the first interior cavity portion **6810**. The apparatus, methods, and articles of manufacture described herein are not limited in this regard.

The filler material may only include one or more polymer materials that adhere to inner surface(s) of the first interior cavity portion **6810** without a separate bonding agent (e.g., an adhesive or epoxy material). For example, the filler material may include a mixture of one or more polymer materials and one or more bonding agents (e.g., adhesive or epoxy material(s)). Accordingly, the mixture including the one or more polymer materials and the one or more bonding agents may partially or entirely fill the first interior cavity portion **6810** and adhere to inner surface(s) of the first interior cavity portion **6810**. In another example, the first interior cavity portion **6810** may be partially or entirely filled with one or more polymer materials without any bonding agents. In yet another example, the first interior cavity portion **6810** may be partially or entirely filled with one or more bonding agents and/or adhesive materials such as an adhesive or epoxy material. The apparatus, methods, and articles of manufacture described herein are not limited in this regard.

For example, at least 50% of the first interior cavity portion **6810** may be filled with a filler material to absorb shock, isolate vibration, dampen noise, and/or provide structural support when the golf club head **6500** strikes a golf ball via the face portion **6575**. With the support of the cavity wall portion **6720** to form the first interior cavity portion **6810** and filling at least a portion of the first interior cavity portion **6810** with a filler material, the face portion **6575** may be relatively thin without degrading the structural integrity, sound, and/or feel of the golf club head **6500**. In one example, the face portion **6575** may have a thickness of less than or equal to 0.075 inch (e.g., a distance between a front surface **6574** and the back surface **6576**). In another example, the face portion **6575** may have a thickness of less than or equal to 0.2 inch. In another example, the face portion **6575** may have a thickness of less than or equal to 0.06 inch. In yet another example, the face portion **6575** may have a thickness of less than or equal to 0.05 inch. Further, the face portion **6575** may have a thickness of less than or equal to 0.03 inch. In yet another example, a thickness of the face portion **6575** may be greater than or equal to 0.03 inch and less than or equal to 0.2 inch. The apparatus, methods, and articles of manufacture described herein are not limited in this regard.

In one example, the filler material may be injected into the first interior cavity portion **6810** from one or more of the ports of the body portion **6510**. For example, one or more of the ports **6622**, **6624**, and **6626** of the second port region **6620** may be connected to the first interior cavity portion **6810** for injection molding the filler material in the first interior cavity portion **6810** and/or applying any bonding agent to the first interior cavity portion **6810**. In another example, another one of the ports of the second port region **6620** may be connected to the first interior cavity portion **6810** so that the air that is displaced by the filler material injected into the body portion **6510** can escape. The apparatus, methods, and articles of manufacture described herein are not limited in this regard.

In the illustrated example of FIGS. **65-68**, the second interior cavity portion **6820** may be unfilled (i.e., empty space). Alternatively (not shown), the second interior cavity portion **6820** may be partially or entirely filled with a filler material (i.e., a cavity filling portion), which may include one or more similar or different types of materials described herein and may be different or similar to the filler material used to fill the first interior cavity portion **6810**. The apparatus, methods, and articles of manufacture described herein are not limited in this regard.

The terms "and" and "or" may have both conjunctive and disjunctive meanings. The terms "a" and "an" are defined as one or more unless this disclosure indicates otherwise. The term "coupled" and any variation thereof refer to directly or indirectly connecting two or more elements chemically,

mechanically, and/or otherwise. The phrase "removably connected" is defined such that two elements that are "removably connected" may be separated from each other without breaking or destroying the utility of either element.

The term "substantially" when used to describe a characteristic, parameter, property, or value of an element may represent deviations or variations that do not diminish the characteristic, parameter, property, or value that the element may be intended to provide. Deviations or variations in a characteristic, parameter, property, or value of an element may be based on, for example, tolerances, measurement errors, measurement accuracy limitations and other factors. The term "proximate" is synonymous with terms such as "adjacent," "close," "immediate," "nearby", "neighboring", etc., and such terms may be used interchangeably as appearing in this disclosure.

The apparatus, methods, and articles of manufacture described herein may be implemented in a variety of embodiments, and the foregoing description of some of these embodiments does not necessarily represent a complete description of all possible embodiments. Instead, the description of the drawings, and the drawings themselves, disclose at least one embodiment, and may disclosure alternative embodiments.

As the rules of golf may change from time to time (e.g., new regulations may be adopted or old rules may be eliminated or modified by golf standard organizations and/or governing bodies such as the USGA, the R&A, etc.), golf equipment related to the apparatus, methods, and articles of manufacture described herein may be conforming or non-conforming to the rules of golf at any particular time. Accordingly, golf equipment related to the apparatus, methods, and articles of manufacture described herein may be advertised, offered for sale, and/or sold as conforming or non-conforming golf equipment. The apparatus, methods, and articles of manufacture described herein are not limited in this regard.

Further, while the above examples may be described with respect to golf clubs, the apparatus, methods and articles of manufacture described herein may be applicable to other suitable types of sports equipment such as a fishing pole, a hockey stick, a ski pole, a tennis racket, etc.

Although certain example apparatus, methods, and articles of manufacture have been described herein, the scope of coverage of this disclosure is not limited thereto. On the contrary, this disclosure covers all apparatus, methods, and articles of articles of manufacture fairly falling within the scope of the appended claims either literally or under the doctrine of equivalents.

What is claimed is:

1. A golf club head comprising:

a body portion having a toe portion, a heel portion, a top portion, a bottom portion, a rear portion, and a front portion;

a face portion having a thickness of less than or equal to 0.2 inch (5.08 millimeters);

a first interior cavity portion comprising a first width above a neutral axis and a second width below the neutral axis, the second width being greater than the first width; and

a second interior cavity portion,

wherein the first interior cavity portion extends to the face portion and the second interior cavity portion,

wherein the first interior cavity portion is at least partially filled with a polymer material, and

wherein the polymer material is coupled to the face portion.

2. A golf club head as defined in claim **1**, wherein the first interior cavity portion further comprises:

a third width below the second width,

wherein the second width is greater than the third width.

3. A golf club head as defined in claim **1** further comprising a port on the body portion connected to the first interior cavity portion, wherein the port is configured to receive the polymer material.

4. A golf club head as defined in claim **1** further comprising a plurality of mass portions on the bottom portion located closer to the front portion than the rear portion, wherein the first interior cavity portion at least partially extends over the plurality of mass portions.

5. A golf club head as defined in claim **1** further comprising a first set of mass portions closer to the toe portion than the heel portion, and a second set of mass portions closer to the heel portion than the toe portion.

6. A golf club head as defined in claim **1**, wherein the first interior cavity portion and the second interior cavity portion are separated by a cavity wall portion, and wherein the cavity wall portion is less than or equal to 1.0 inch (25.4 millimeters) from the face portion.

7. A golf club head as defined in claim **1**, wherein the first interior cavity portion is associated with a first volume, wherein the second interior cavity portion is associated with a second volume, and wherein the first volume is less than or equal to 50% of the second volume.

8. A golf club head comprising:

a body portion having a toe portion, a heel portion, a top portion, a bottom portion, a rear portion, and a front portion;

a face portion having a thickness of less than or equal to 0.075 inch (1.905 millimeters);

a cavity wall portion in the body portion extending to the toe portion and the heel portion and extending to the top portion and the bottom portion, the cavity wall portion comprising:

a first wall portion extending from the top portion toward the bottom portion;

a second wall portion extending from the first wall portion toward the rear portion and the bottom portion; and

a third wall portion extending from the second wall portion to the bottom portion;

a first interior cavity portion extending to the cavity wall portion and the face portion; and

a second interior cavity portion extending to the cavity wall portion and the rear portion,

wherein the first interior cavity portion is at least 50% filled with a polymer material, and wherein the polymer material is coupled to the face portion.

9. A golf club head as defined in claim **8** further comprising a port on the body portion connected to the first interior cavity portion, wherein the port is configured to receive the polymer material.

10. A golf club head as defined in claim **8** further comprising a plurality of mass portions on the bottom portion located closer to the front portion than the rear portion, wherein the first interior cavity portion at least partially extends over the plurality of mass portions.

11. A golf club head as defined in claim **8** further comprising a first set of mass portions closer to the toe portion than the heel portion, and a second set of mass portions closer to the heel portion than the toe portion.

12. A golf club head as defined in claim **8**, wherein the cavity wall portion is less than or equal to 1.0 inch (25.4 millimeters) from the face portion.

13. A golf club head as defined in claim **8**, wherein the first interior cavity portion is associated with a first volume, wherein the second interior cavity portion is associated with a second volume, and wherein the first volume is less than or equal to 50% of the second volume.

14. A golf club head comprising:

a body portion having a toe portion, a heel portion, a top portion, a bottom portion, a rear portion, and a front portion;

a face portion having a thickness of less than or equal to 0.075 inch (1.905 millimeters);

a cavity wall portion located in the body portion less than or equal to 1.0 inch (25.4 millimeters) from the face portion, the cavity wall portion extending to the toe portion, the heel portion, the top portion and the bottom portion;

a first interior cavity portion extending to the cavity wall portion and the face portion, the first interior cavity portion comprising an enlarged cavity portion below a neutral axis, the enlarged cavity portion having a depth greater than a maximum depth of the first interior cavity portion above the neutral axis; and

a second interior cavity portion extending to the cavity wall portion and the rear portion,

wherein the first interior cavity portion is associated with a first volume, the second interior cavity portion is associated with a second volume, and the first volume is less than or equal to 50% of the second volume, and

wherein the first interior cavity portion is at least partially filled with a polymer material.

15. A golf club head as defined in claim **14**, further comprising a port on the body portion connected to the first interior cavity portion, wherein the port is configured to receive the polymer material.

16. A golf club head as defined in claim **14** further comprising a plurality of mass portions on the bottom portion located closer to the front portion than the rear portion, wherein the first interior cavity portion at least partially extends over the plurality of mass portions.

17. A golf club head as defined in claim **14** further comprising a first mass portion closer to the toe portion than the heel portion, and a second mass portion closer to the heel portion than the toe portion.

* * * * *