US 20200133629A1

(19) United States

(12) Patent Application Publication

(10) Pub. No.: US 2020/0133629 A1

(43) Pub. Date: Apr. 30, 2020

Pratt et al.

(54) **AUTOMATED ASSISTANT CONTEXT AND PROTOCOL**

(71) Applicant: **AT&T INTELLECTUAL PROPERTY I, L.P.**, Atlanta, GA (US)

(72) Inventors: **James Pratt**, Round Rock, TX (US); **Miranda Huet**, Austin, TX (US); **William Knotts**, Driftwood, TX (US); **Eric Zavesky**, Austin, TX (US)

(21) Appl. No.: **16/171,067**

(22) Filed: **Oct. 25, 2018**

Publication Classification

(51) **Int. Cl.**

G06F 3/16	(2006.01)
G06F 9/451	(2006.01)

(52) **U.S. Cl.**

CPC ***G06F 3/167*** (2013.01); *H04L 67/42* (2013.01); ***G06F 9/453*** (2018.02)

(57) **ABSTRACT**

Virtual assistants (VAs) can be managed in interactions with communication devices (and associated users) or other VAs. A communication management component (CMC) can track an interaction between a VA and a communication device of a user or another VA with regard to an event. The CMC can analyze information relating to the interaction to determine a context of the interaction. The CMC can manage the VA, the involvement of the communication device in the interaction, or the other VA based on the context. When indicated by the context, the CMC can modify characteristics associated with the VA to enhance the interaction. When another communication device or another VA enter the interaction in progress, the CMC can determine interaction update information, based on the tracking of the interaction, and can communicate the interaction update information to the other communication device (and associated user) or other VA.

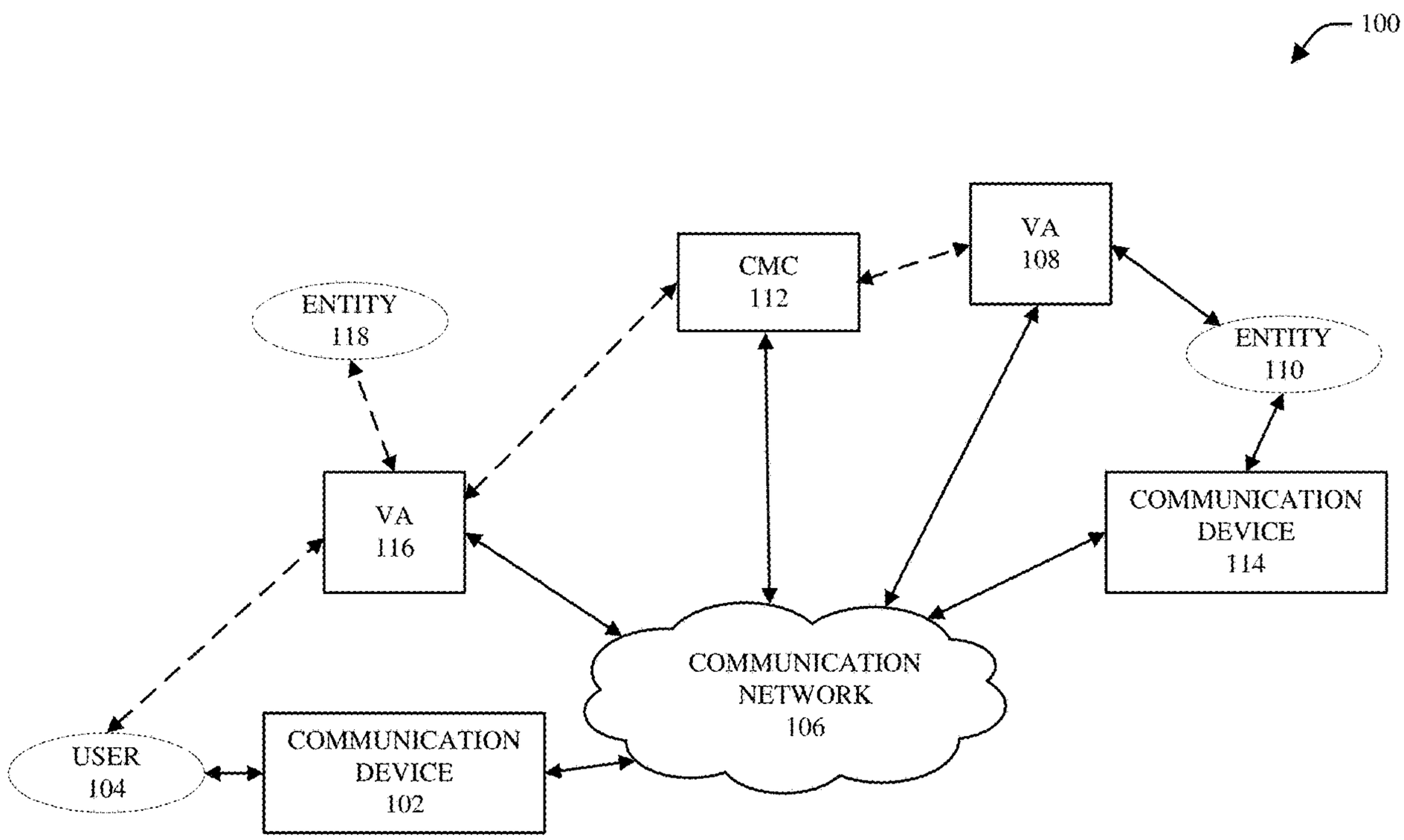

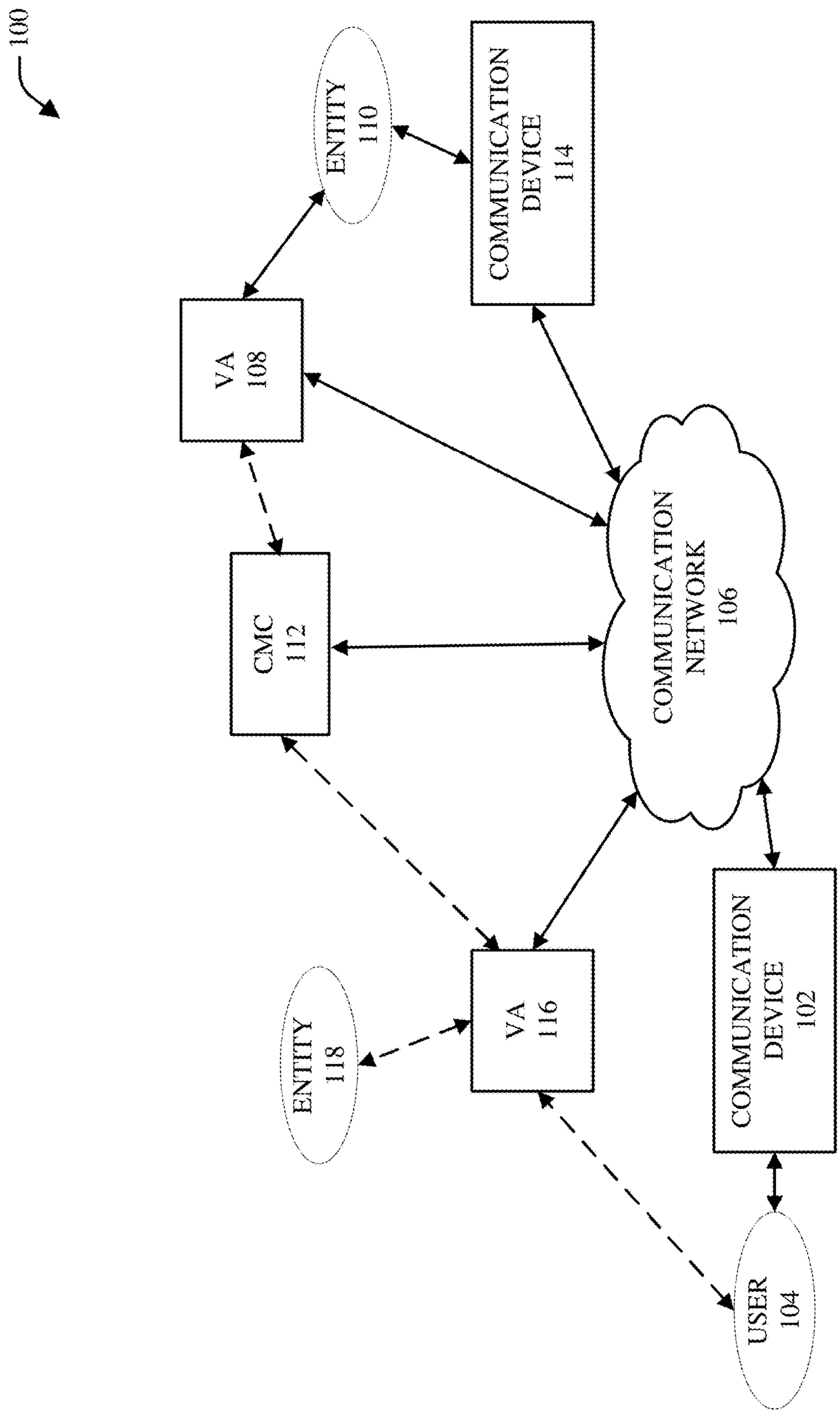
100
ENTITY 110
COMMUNICATION DEVICE 114
VA 108
CMC 112
COMMUNICATION NETWORK 106
ENTITY 118
VA 116
COMMUNICATION DEVICE 102
USER 104

FIG. 1

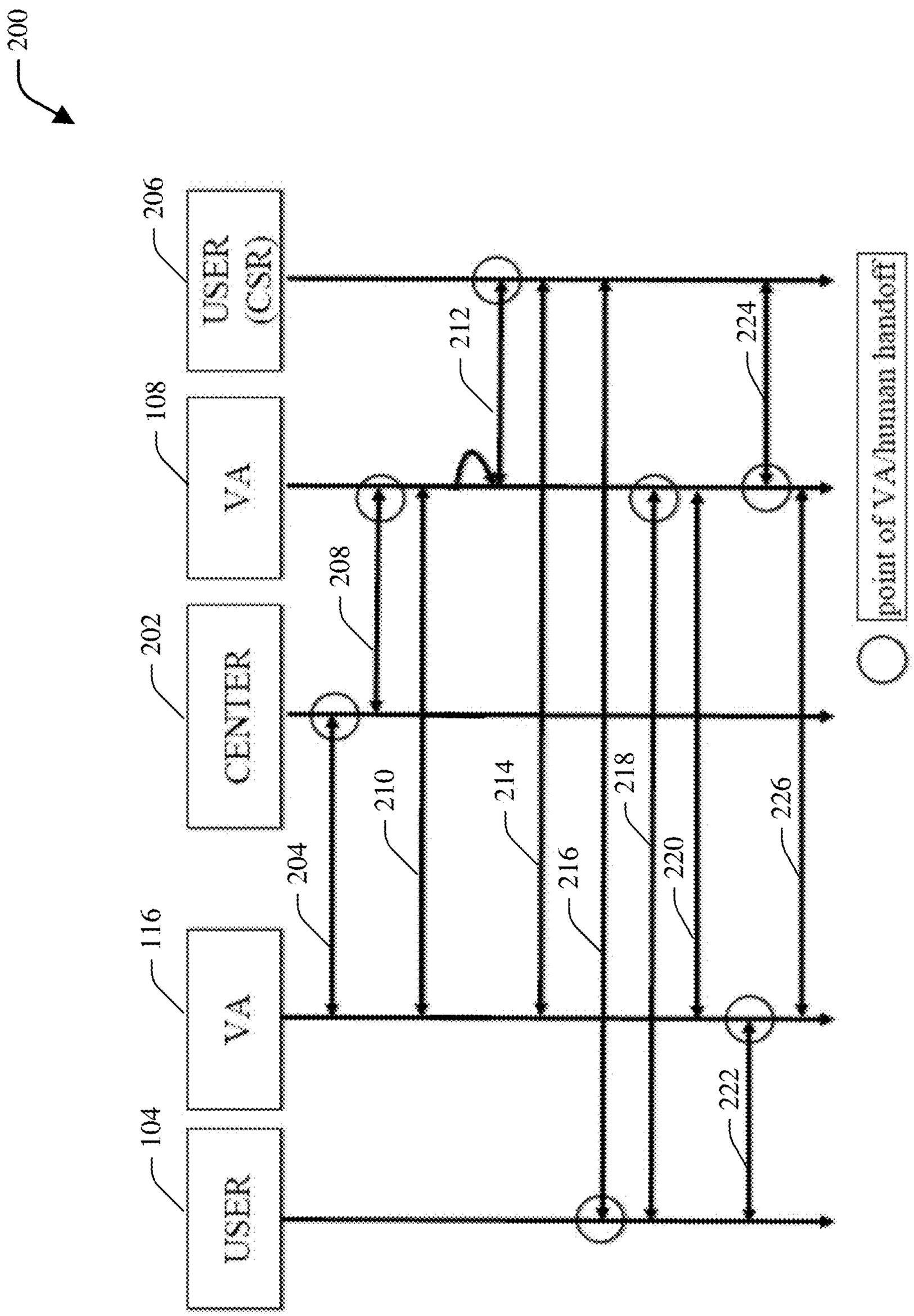
200
USER (CSR)
206
VA
108
CENTER
202
VA
116
USER
104
208
210
212
214
216
218
220
222
224
226
204
point of VA/human handoff

FIG. 2

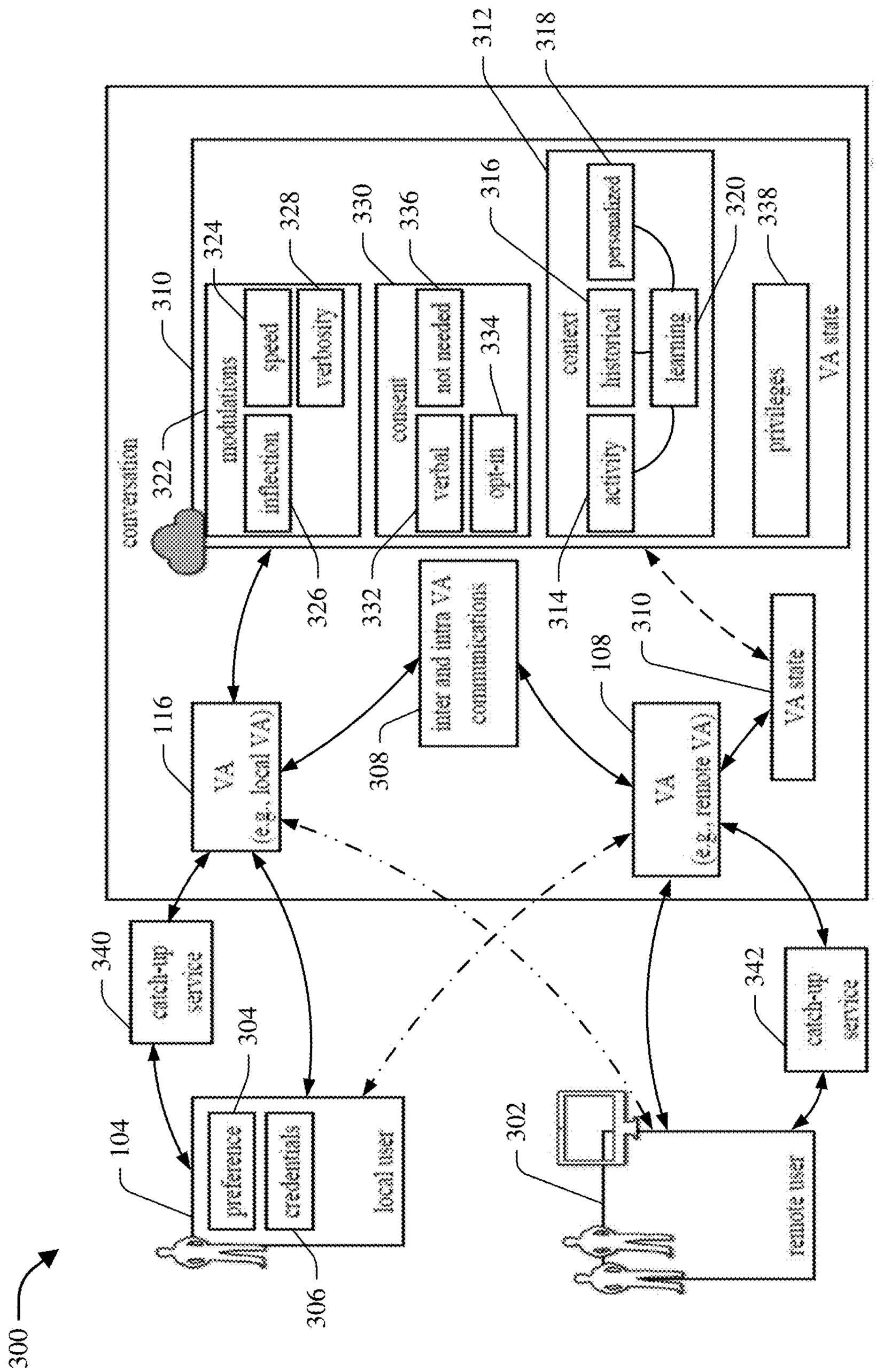
300
104
preference
credentials
local user
306
304
catch-up service
340
VA (e.g., local VA)
116
conversation
322
310
modulations
inflection
speed
velocity
324
328
consent
verbal
opt-in
not needed
330
336
334
326
332
inter and intra VA communications
308
314
context
activity
historical
learning
personalized
316
312
318
320
privileges
VA state
338
VA (e.g., remote VA)
108
VA state
310
catch-up service
342
remote user
302

FIG. 3

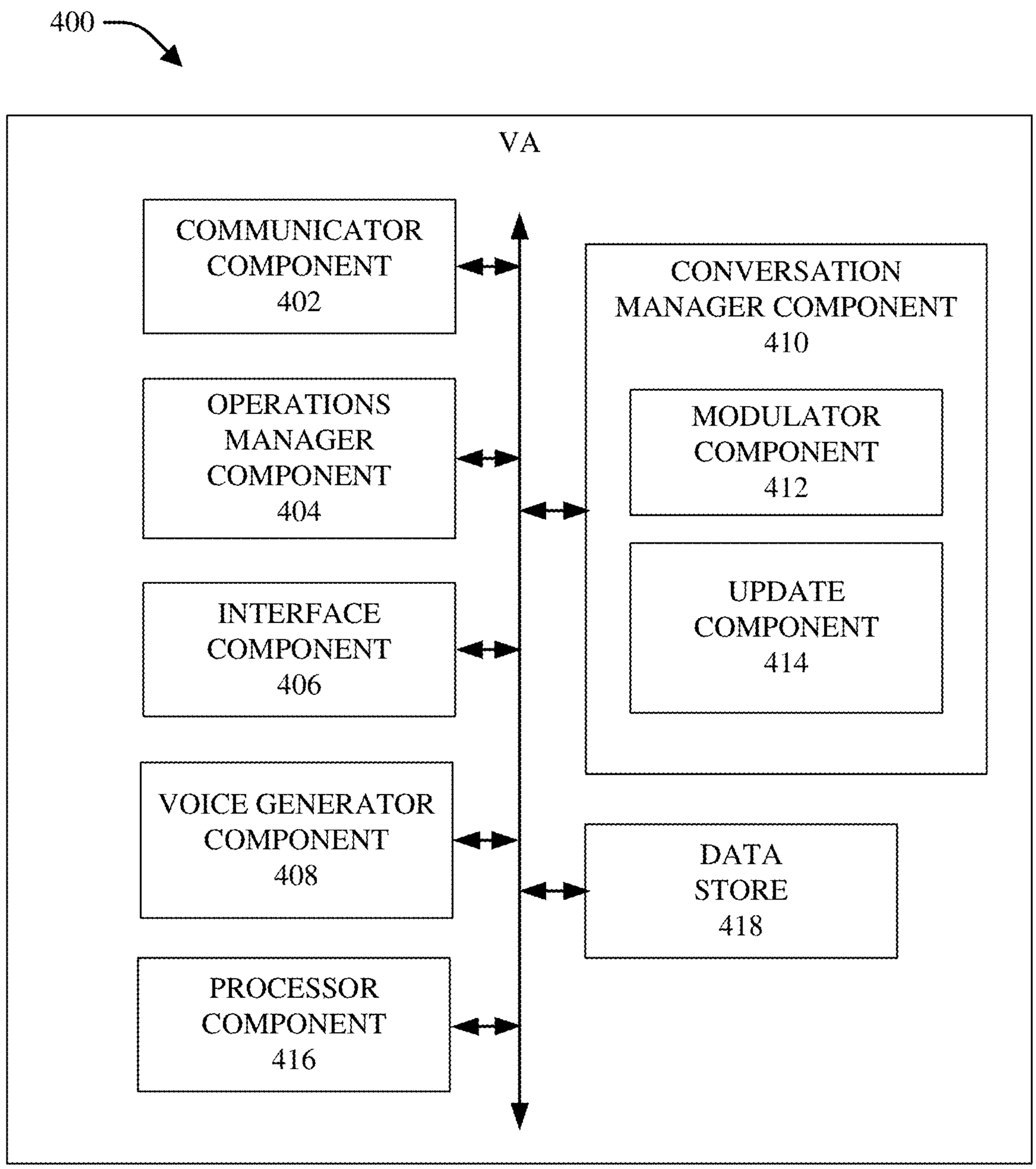
400
VA
COMMUNICATOR COMPONENT 402
OPERATIONS MANAGER COMPONENT 404
INTERFACE COMPONENT 406
VOICE GENERATOR COMPONENT 408
PROCESSOR COMPONENT 416
CONVERSATION MANAGER COMPONENT 410
MODULATOR COMPONENT 412
UPDATE COMPONENT 414
DATA STORE 418

FIG. 4

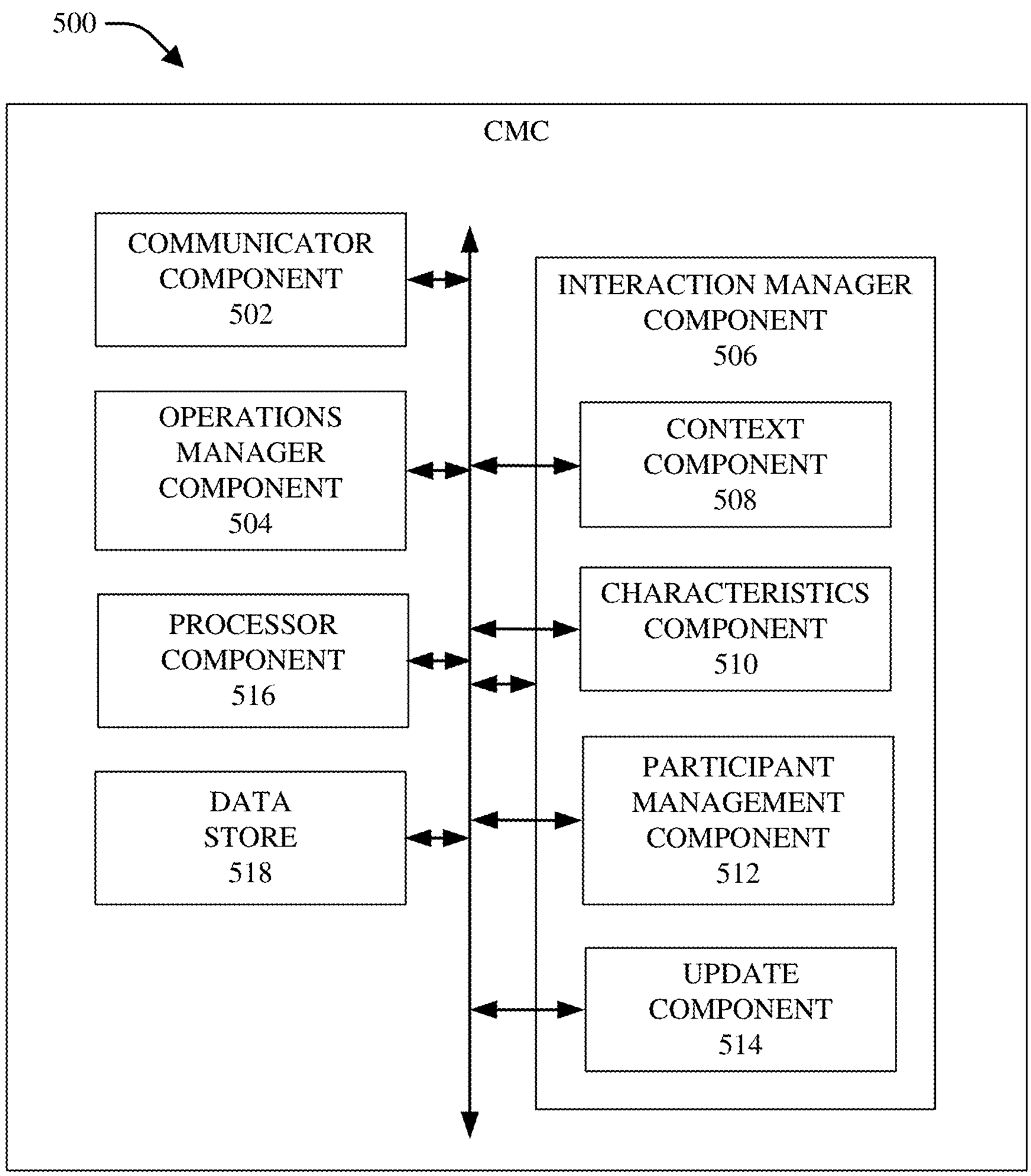
500
CMC
COMMUNICATOR COMPONENT 502
OPERATIONS MANAGER COMPONENT 504
PROCESSOR COMPONENT 516
DATA STORE 518
INTERACTION MANAGER COMPONENT 506
CONTEXT COMPONENT 508
CHARACTERISTICS COMPONENT 510
PARTICIPANT MANAGEMENT COMPONENT 512
UPDATE COMPONENT 514

FIG. 5

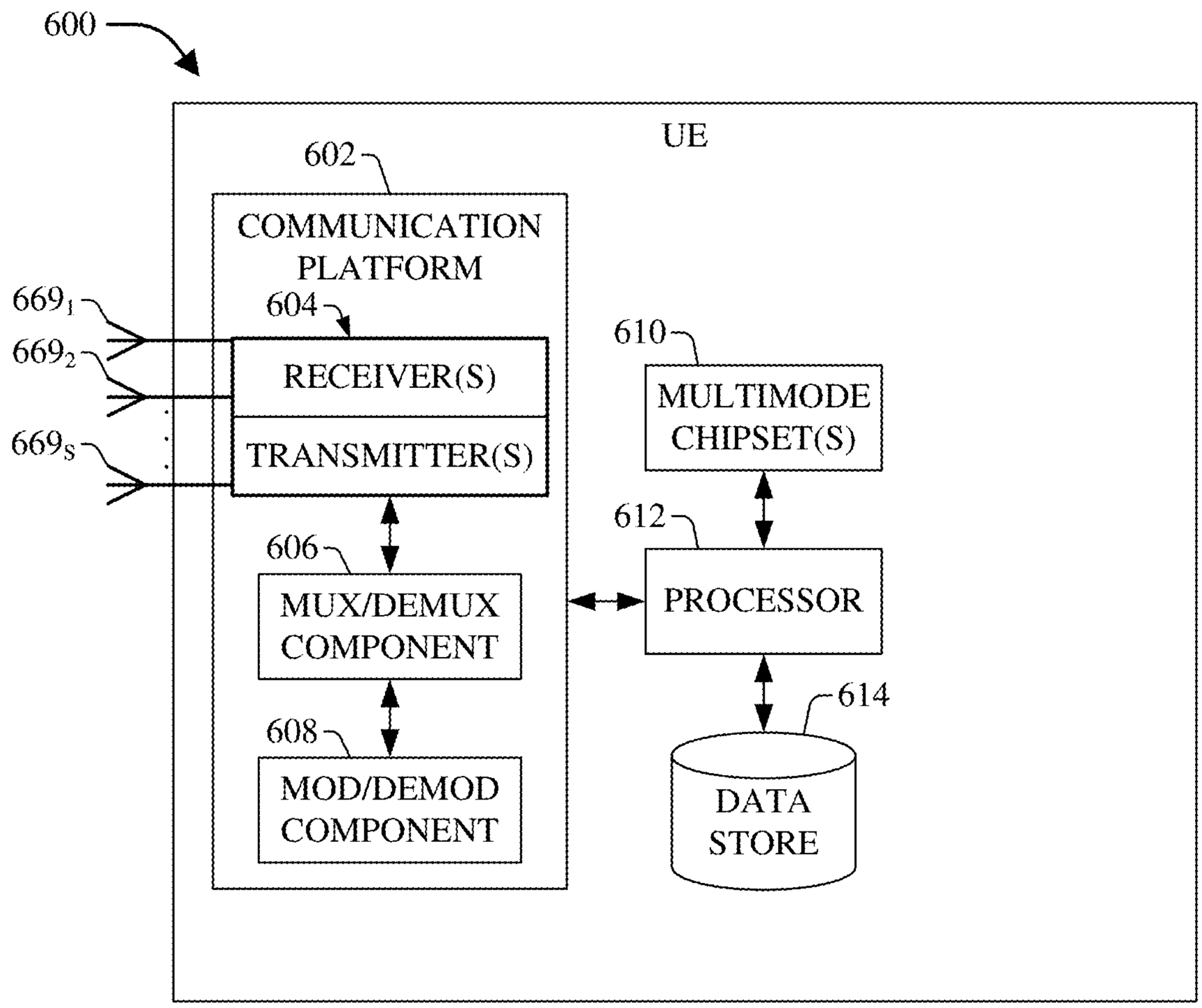
600
UE
602
COMMUNICATION PLATFORM
604
RECEIVER(S)
TRANSMITTER(S)
669_1
669_2
669_S
606
MUX/DEMUX COMPONENT
608
MOD/DEMOD COMPONENT
610
MULTIMODE CHIPSET(S)
612
PROCESSOR
614
DATA STORE

FIG. 6

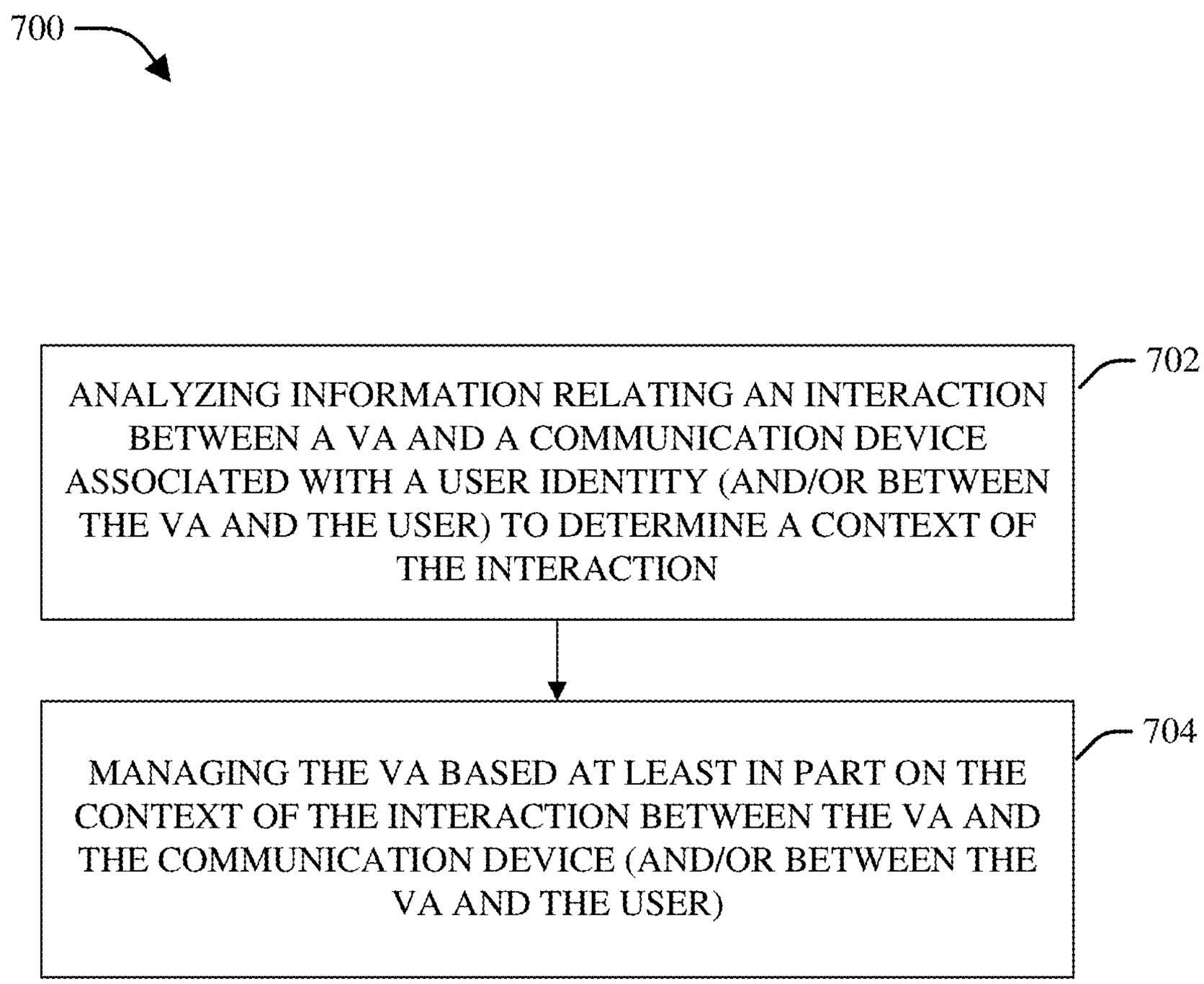
700
ANALYZING INFORMATION RELATING AN INTERACTION BETWEEN A VA AND A COMMUNICATION DEVICE ASSOCIATED WITH A USER IDENTITY (AND/OR BETWEEN THE VA AND THE USER) TO DETERMINE A CONTEXT OF THE INTERACTION
702
MANAGING THE VA BASED AT LEAST IN PART ON THE CONTEXT OF THE INTERACTION BETWEEN THE VA AND THE COMMUNICATION DEVICE (AND/OR BETWEEN THE VA AND THE USER)
704

FIG. 7

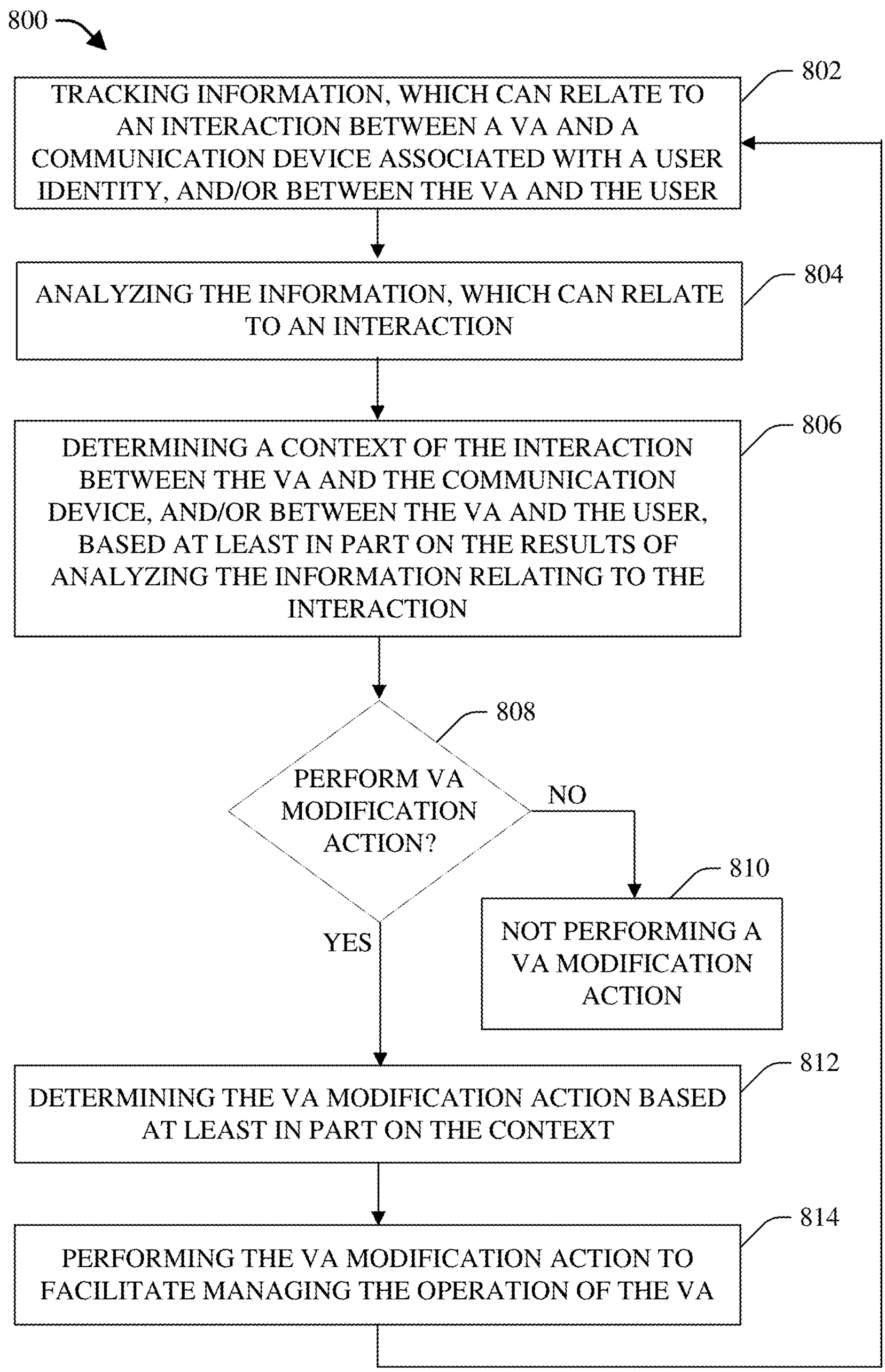
800
TRACKING INFORMATION, WHICH CAN RELATE TO AN INTERACTION BETWEEN A VA AND A COMMUNICATION DEVICE ASSOCIATED WITH A USER IDENTITY, AND/OR BETWEEN THE VA AND THE USER
802
ANALYZING THE INFORMATION, WHICH CAN RELATE TO AN INTERACTION
804
DETERMINING A CONTEXT OF THE INTERACTION BETWEEN THE VA AND THE COMMUNICATION DEVICE, AND/OR BETWEEN THE VA AND THE USER, BASED AT LEAST IN PART ON THE RESULTS OF ANALYZING THE INFORMATION RELATING TO THE INTERACTION
806
PERFORM VA MODIFICATION ACTION?
808
NO
NOT PERFORMING A VA MODIFICATION ACTION
810
YES
DETERMINING THE VA MODIFICATION ACTION BASED AT LEAST IN PART ON THE CONTEXT
812
PERFORMING THE VA MODIFICATION ACTION TO FACILITATE MANAGING THE OPERATION OF THE VA
814

FIG. 8

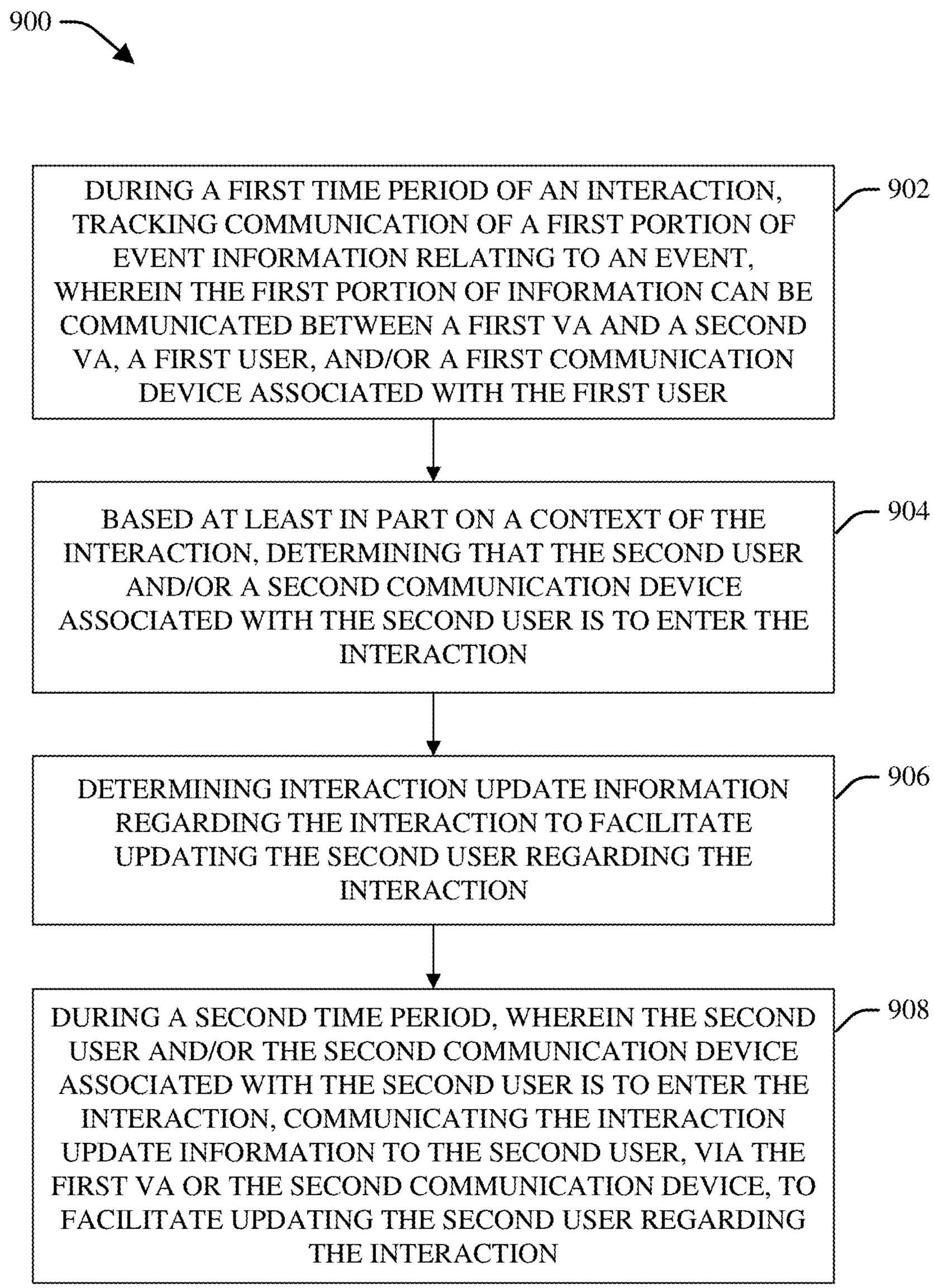
900
DURING A FIRST TIME PERIOD OF AN INTERACTION, TRACKING COMMUNICATION OF A FIRST PORTION OF EVENT INFORMATION RELATING TO AN EVENT, WHEREIN THE FIRST PORTION OF INFORMATION CAN BE COMMUNICATED BETWEEN A FIRST VA AND A SECOND VA, A FIRST USER, AND/OR A FIRST COMMUNICATION DEVICE ASSOCIATED WITH THE FIRST USER
902
BASED AT LEAST IN PART ON A CONTEXT OF THE INTERACTION, DETERMINING THAT THE SECOND USER AND/OR A SECOND COMMUNICATION DEVICE ASSOCIATED WITH THE SECOND USER IS TO ENTER THE INTERACTION
904
DETERMINING INTERACTION UPDATE INFORMATION REGARDING THE INTERACTION TO FACILITATE UPDATING THE SECOND USER REGARDING THE INTERACTION
906
DURING A SECOND TIME PERIOD, WHEREIN THE SECOND USER AND/OR THE SECOND COMMUNICATION DEVICE ASSOCIATED WITH THE SECOND USER IS TO ENTER THE INTERACTION, COMMUNICATING THE INTERACTION UPDATE INFORMATION TO THE SECOND USER, VIA THE FIRST VA OR THE SECOND COMMUNICATION DEVICE, TO FACILITATE UPDATING THE SECOND USER REGARDING THE INTERACTION
908

FIG. 9

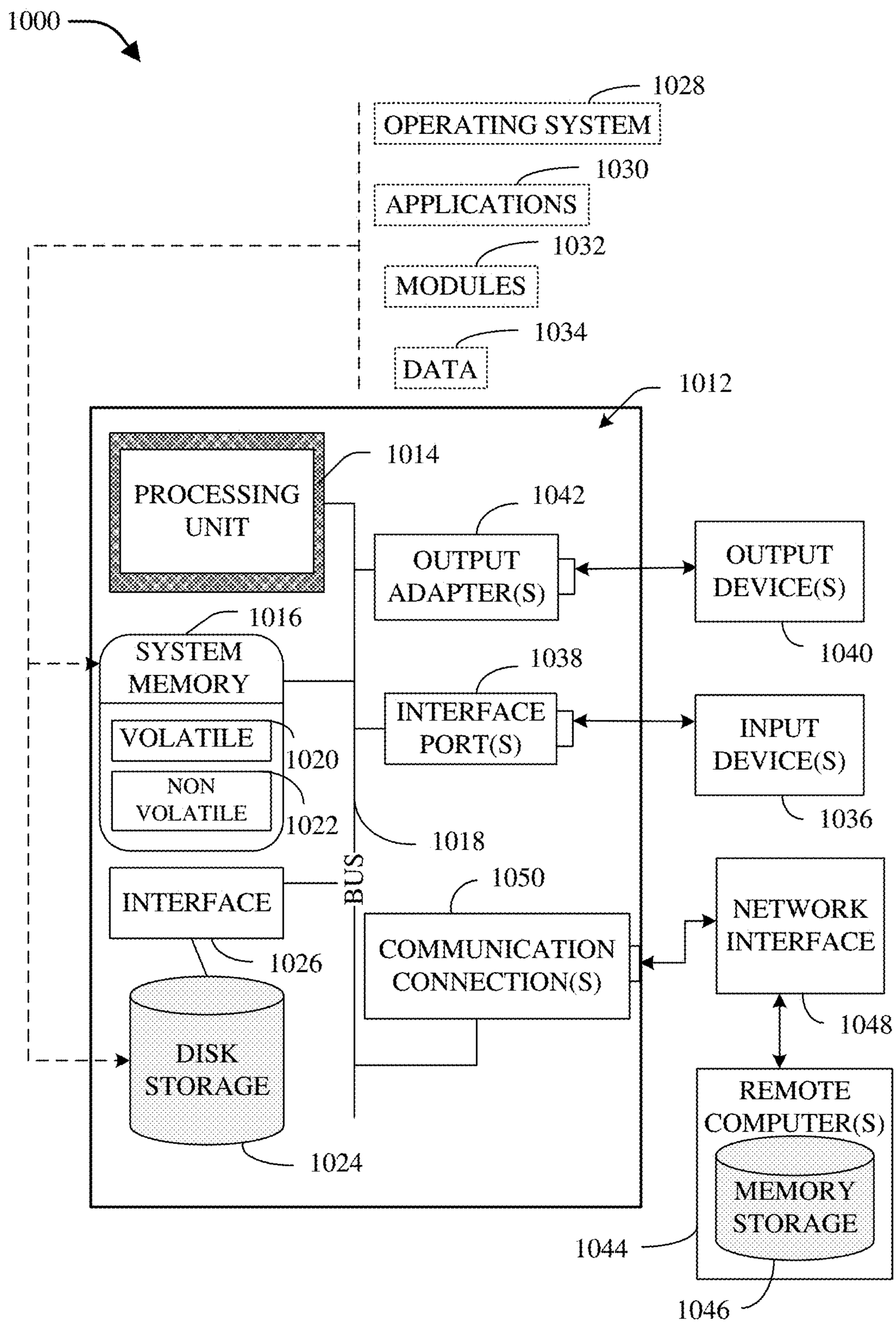
1000
1028
OPERATING SYSTEM
1030
APPLICATIONS
1032
MODULES
1034
DATA
1012
1014
PROCESSING UNIT
1042
OUTPUT ADAPTER(S)
OUTPUT DEVICE(S)
1040
1016
SYSTEM MEMORY
VOLATILE
1020
NON VOLATILE
1022
1038
INTERFACE PORT(S)
INPUT DEVICE(S)
1036
1018
BUS
INTERFACE
1026
1050
COMMUNICATION CONNECTION(S)
NETWORK INTERFACE
1048
DISK STORAGE
1024
REMOTE COMPUTER(S)
MEMORY STORAGE
1044
1046

FIG. 10

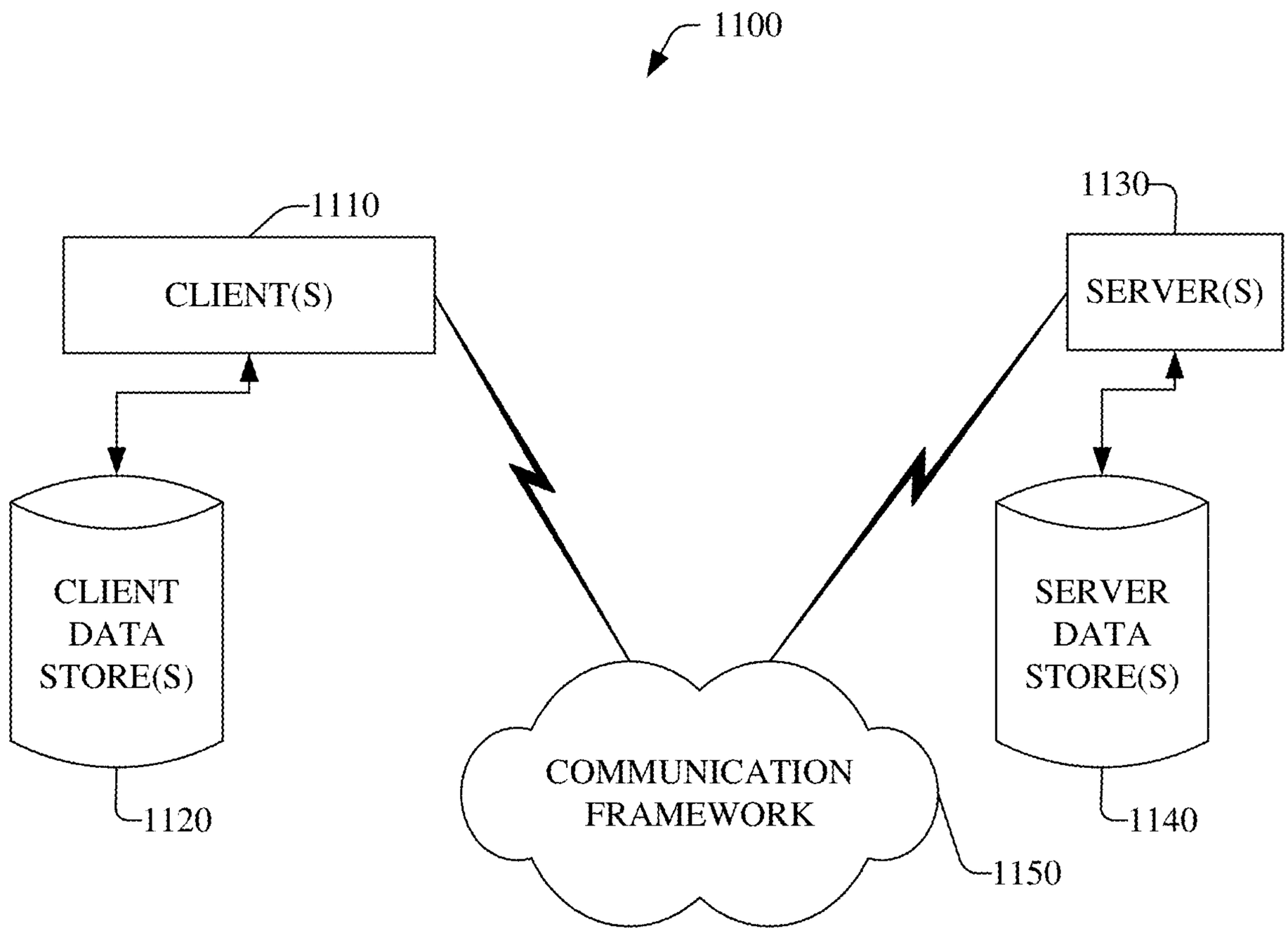
1100
1110
CLIENT(S)
1130
SERVER(S)
CLIENT DATA STORE(S)
1120
SERVER DATA STORE(S)
1140
COMMUNICATION FRAMEWORK
1150

FIG. 11

AUTOMATED ASSISTANT CONTEXT AND PROTOCOL

TECHNICAL FIELD

[0001] This disclosure relates generally to electronic communications, e.g., to an automated assistant context and protocol.

BACKGROUND

[0002] Communication devices (e.g., landline phones, mobile phones, electronic pads or tablets, computers, . . .) can be utilized to engage in electronic communications (e.g., voice and/or data traffic) between entities associated with the communication devices. Various services can be provided to and utilized by entities using communication devices in a communication network.

[0003] The above-described description is merely intended to provide a contextual overview regarding electronic communications, and is not intended to be exhaustive.

BRIEF DESCRIPTION OF THE DRAWINGS

[0004] FIG. **1** illustrates a block diagram of an example system that can manage virtual assistants (VAs) in interactions with users, other VAs, or other entities, in accordance with various aspects and embodiments of the disclosed subject matter.

[0005] FIG. **2** depicts a diagram of an example interaction between communication devices, VAs, and users or other entities, in accordance with various aspects and embodiments of the disclosed subject matter.

[0006] FIG. **3** depicts a block diagram of an example interaction flow, in accordance with various aspects and embodiments of the disclosed subject matter.

[0007] FIG. **4** depicts a block diagram of an example VA **400**, in accordance with various aspects and embodiments of the disclosed subject matter.

[0008] FIG. **5** illustrates a block diagram of an example communication management component, in accordance with various aspects and embodiments of the disclosed subject matter.

[0009] FIG. **6** depicts a block diagram of example user equipment, in accordance with various aspects and embodiments of the disclosed subject matter.

[0010] FIG. **7** illustrates a flow chart of an example method that can manage a VA in interactions with a user, another VA, or another entity, in accordance with various aspects and embodiments of the disclosed subject matter.

[0011] FIG. **8** presents a flow chart of an example method that can manage VAs in interactions with users, other VAs, or other entities, in accordance with various aspects and embodiments of the disclosed subject matter.

[0012] FIG. **9** depicts a flow chart of an example method that can facilitate bringing a user up to date regarding an interaction when the user enters the interaction, in accordance with various aspects and embodiments of the disclosed subject matter.

[0013] FIG. **10** is a schematic block diagram illustrating a suitable operating environment.

[0014] FIG. **11** is a schematic block diagram of a sample-computing environment.

DETAILED DESCRIPTION

[0015] Various aspects of the disclosed subject matter are now described with reference to the drawings, wherein like reference numerals are used to refer to like elements throughout. In the following description, for purposes of explanation, numerous specific details are set forth in order to provide a thorough understanding of one or more aspects. It may be evident, however, that such aspect(s) may be practiced without these specific details. In other instances, well-known structures and devices are shown in block diagram form in order to facilitate describing one or more aspects.

[0016] Communication devices (e.g., landline phones, mobile phones, electronic pads or tablets, computers, devices in or integrated with vehicles, . . .), can operate and communicate via wireline or wireless communication connections (e.g., communication links or channels) in a communication network to perform desired transfers of data (e.g., voice and/or data communications), utilize services, engage in transactions or other interactions, and/or perform other operations. For example, communication devices can be utilized to engage in online-related commerce and/or perform transactions between entities associated with the communication devices, wherein the entities can comprise human users or other users or entities, such as virtual assistants (VAs) and/or software entities or components. As another example, communication devices can be utilized to utilize or provide a service, wherein the communication session between the communication devices can involve one or more human users, one or more VAs, and/or one or more other entities (e.g., software entities or components).

[0017] VAs can engage in and/or complete conversations, on behalf of humans, with other humans. In such two-party conversation, it can be desirable for both parties to know and understand the nature of the interaction. For instance, it can be desirable for both parties to know whether a VA, a human, or some hybrid combination of a VA and a human is taking part in the interaction. It can be desirable to have VAs or other entities to self-identify during an interaction or conversation, enable advanced functionality with minimal confusion to the participants (e.g., entities) taking part in the interaction or conversation, and join or release participants from one side of an interaction or conversation (e.g., a VA interaction or conversation). Also, when a VA is utilized on one side of a conversation, it can be desirable to maintain a number of state and interaction mechanisms (e.g., complex state and interaction mechanisms) for all parties of the conversation so that issues relating to context, privileges, and consent can be accurately maintained.

[0018] To that end, techniques for managing virtual assistants (VAs) in interactions with communication devices (and associated users) and/or other VAs. A communication management component (CMC) can track an interaction between a VA and a communication device associated with a user and/or another VA with regard to an event (e.g., vehicle accident, potential purchase of a product or service, medical situation or emergency, legal or criminal situation, . . .). The CMC can analyze information relating to the interaction to determine a context of the interaction. The CMC can manage the VA, the other VA, the involvement of the communication device in the interaction, and/or the involvement of another communication device in the interaction, based at least in part on the context. For instance, based at least in part on the context (e.g., the context at a

given time during the interaction), the CMC can determine whether the VA is to communicate with the communication device associated with a user, whether the VA is to communicate with another VA, whether the communication device associated with the user is to communicate with another communication device associated with another user, or a combination thereof. As the interaction continues, if the CMC determines that the context has changed, the CMC can determine whether there is to be a change in the participants (e.g., VA, communication device) in the interaction.

[0019] When indicated by the context and defined communication management criteria, the CMC can modify characteristics associated with the VA (e.g., speed or cadence of verbal words being presented by the VA to the communication device of the user, a tone or inflection of a virtual or emulated voice of the VA, . . .) to enhance the interaction. For example, if, based at least in part on the context, the CMC determines that the user is having difficulty in responding to questions presented by the VA, and such difficulty is determined to be due in part to the speed or cadence of the verbal words being presented by the VA to the communication device of the user, the CMC can determine that the speed or cadence is to be modified (e.g., to decrease the speed of presentation of verbal words and/or to adjust the cadence) to facilitate having the VA present the verbal words to the communication device of the user at a speed or using a cadence that enhances (e.g., improves) the ability of the user to understand such verbal words (e.g., questions) and respond to the questions presented by the VA.

[0020] In some embodiments, when another communication device or another VA enters the interaction in progress, the CMC can determine interaction update information, based at least in part on the tracking of the interaction (e.g., tracking of information relating to the interaction) and the context, and can communicate the interaction update information to the other communication device (and associated other user) or other VA.

[0021] These and other aspects and embodiments of the disclosed subject matter will now be described with respect to the drawings.

[0022] Referring now to the drawings, FIG. **1** illustrates a block diagram of an example system **100** that can manage VAs in interactions with users (e.g., communication devices and associated users), other VAs, or other entities (e.g., software-based entities, components, or devices), in accordance with various aspects and embodiments of the disclosed subject matter. The system **100** can comprise a communication device **102** that can be associated with a user **104**. A communication device (e.g., communication device **102**) can be, for example, a mobile and/or wireless communication device, such as a mobile phone, a landline or wireline phone, an electronic notebook, an electronic pad or tablet, an electronic gaming device, a personal digital assistant (PDA), electronic bodywear (e.g., electronic or smart glasses, electronic or smart watch) a computer, a set-top box, or other type of communication device that can operate and communicate in a communication network environment of a communication network **106** of the system **100**.

[0023] The communication network **106** can comprise a radio access network (RAN) (not shown) that can comprise or be associated with a set of base stations (e.g., access points (APs)) (not shown) that can serve communication devices (e.g., **102**) located in respective coverage areas served by respective base stations in the communication network **106**. In some embodiments, the RAN can be a cloud-RAN (C-RAN) that can be located in or associated with a cloud computing environment, comprising various cloud network components of the communication network **106**.

[0024] The respective base stations can be associated with one or more sectors (not shown), wherein respective sectors can comprise respective cells. The cells can have respective coverage areas that can form the coverage area covered by the one or more sectors. The respective communication devices (e.g., **102**) can be communicatively connected to the communication network **106** via respective wireless or wireline communication connections with one or more of the respective cells.

[0025] The system **100** also can comprise a VA **108** that can be associated be an entity **110** (e.g., business entity, product or service provider, person, medical provider, or law enforcement, . . .). In accordance with various embodiments, the VA **108** can be, can comprise, can be associated with, or can be integrated with a communication device. The VA **108** (and/or associated communication device) can be associated with (e.g., communicatively connected to) the communication network **106**. It is to be appreciated and understood that, while the disclosed subject matter is typically described with regard to VAs, another type of software-based entity can be employed to perform the functions of the VAs, as described herein. It is to be appreciated and understood that, while some aspects of the disclosed subject matter are described where the user **104** can use the communication device **102** for communication (e.g., transmission, reception) of information (e.g., interaction-related and/or event-related information) to or from another device (e.g., another communication device, a VA, . . .), in certain aspects of the disclosed subject matter, the user **104** can communicate information using, and can receive information from, the VA **108** (e.g., by speaking into an interface of or associated with the VA **108**, by receiving (e.g., hearing, viewing) information presented via an interface of or associated with the VA **108**). For example, a VA **108** can be associated with (e.g., integrated with, attached to) a vehicle of the user **104**, wherein the user can use (e.g., communicate using) the VA **108** with regard to one or more services that can be provided using or facilitated by the VA **108**.

[0026] A VA (e.g., **108**) can be a domain-specific VA or can be a generalized (or at least more generalized) VA. For example, a domain-specific VA can be created and utilized to provide products or services for one or a relatively small subset of domains (e.g., a VA that provides or facilitates providing food-related products or services; a VA that provides or facilitates providing video and/or audio content-related products or services; a VA that provides or facilitates providing sports-related products or services; . . .). As another example, a generalized (or more generalized) VA can be created and utilized to provide products or services for all domains or at least a relatively large subset of domains. The disclosed subject matter can enable the use of VAs to act as intermediaries and/or navigators for and on behalf of users and/or other entities, for example, with regard to interactions (e.g., transactions).

[0027] The system **100** can include a communication management component **112** (CMC) that can manage (e.g., control) interactions and communications between communication devices (e.g., communication device **102**) and VAs (e.g., VA **108**), between a communication device (e.g.,

communication device **102**) and another communication device (e.g., communication device **114**), between a VA (e.g., VA **108**), and another VA (e.g., VA **116**), etc., in accordance with defined communication management criteria. The CMC **112** can monitor and track an interaction between participants (e.g., communication device **102** and associated user **104**, VA **108**, . . .) to determine a context of the interaction, and can manage the interactions and communications between the participants based at least in part on the context of the interaction. In accordance with various embodiments, the CMC **112** can be a stand-alone unit (as depicted in FIG. **1**), can be part on a VA (e.g., VA **108**), can be part of another device or component, or can be distributed among various devices or components.

[0028] For instance, the CMC **112** can monitor and track an interaction between the VA **108** and the communication device **102** with regard to an event. The event can be or relate to, for example, a vehicle accident (e.g., vehicle accident involving the user **104**), a potential purchase of a product or service, another type of transaction, a medical situation or emergency (e.g., injury or medical condition or emergency involving the user **104** or another person), a legal or criminal situation (e.g., theft, robbery, assault, or homicide), or another type of event. The CMC **112** can receive, obtain, or generate information relating to the interaction. For instance, the CMC **112** can receive or obtain information relating to the interaction from the VA **108**, communication device **102**, and/or another source(s) (e.g., sensors), based at least in part on the tracking of the interaction. The CMC **112** also can generate interaction-related information based at least in part on the tracking of the interaction and/or the received or obtained interaction-related information. The interaction-related information can comprise event information relating to the event, information (e.g., event or other information) exchanged between the participants (e.g., communication device **102** (and associated user **104**), VA **108**) of the interaction, characteristics of the VA **108** during the interaction, characteristics of the user **104** or communication device **102** during the interaction, historical information regarding the VA **108** and/or communication device **102** (and/or user **104**), and/or other desired information relating to the interaction.

[0029] The CMC **112** can analyze the information relating to the interaction to determine a context of the interaction. For instance, as part of determining the context of the interaction, the CMC **112** can analyze the interaction-related information to determine whether the exchange of information (e.g., event information) between the VA **108** and the communication device **102** is proceeding at a desirable (e.g., acceptable, suitable, optimal, or sufficiently fast) pace or is proceeding at an undesirable (e.g., unacceptable or unduly slow) pace, whether or not the user **104** appears to be having difficulty in understanding the verbal words (e.g., audible words) presented by the VA **108** to the user **104** via the communication device **102**, whether or not the VA **108** appears to be having difficulty in understanding the verbal words communicated by the user **104**, via the communication device **102**, to the VA **108**. The CMC **112** also can analyze the interaction-related information, as part of determining the context of the interaction, to determine the status or progress of the interaction, what event information has been exchanged or collected, what event information is still desired (e.g., to otherwise complete the tasks associated with the interaction, to complete an insurance claim, or to complete a transaction), what type of information (e.g., event information, consent from the user **104**, . . .) is desired to be obtained next or within a defined amount of time (e.g., in the near future) in the interaction, characteristics of the VA **108** during the interaction, characteristics of the user **104** or communication device **102** during the interaction, and/or relevant historical data or characteristics regarding the VA **108** and/or communication device **102** (and/or user **104**).

[0030] The characteristics of the VA **108** can comprise, for example, a speed (e.g., rate) or cadence of verbal words being presented by the VA **108** to the communication device **102** associated with the user **104**, a tone or inflection of a virtual or emulated voice being presented by the VA **108**, a volume of the virtual or emulated voice being presented by the VA **108**, a language or dialect of the virtual or emulated voice being presented by the VA **108**, and/or a vocabulary level of the virtual or emulated voice being presented by the VA **108**. The characteristics of the user **104** can comprise, for example, a focus of attention of the user **104** (e.g., whether the user **104** is focused on the interaction or is focused, or partially focused, on something else), a mood (e.g., perceived or determined mood) of the user **104** (e.g., mood: mad, happy, jovial, irritated, upset, excited, . . .), status, including health status, of the user **104** (e.g., healthy, injured, conscious, unconscious, responsive, non-responsive, heart rate, blood pressure, . . .), biometric or physical information of the user **104** (e.g., facial expression, eye focus or movement, movement or location of hands or legs, . . . , of the user **104**), location of the user **104** relative to the location of the event, gender of the user **104**, age of the user **104**, demographic information associated with the user **104**, and/or other characteristics of the user **104**.

[0031] The CMC **112** can manage the participants (e.g., communication device(s), VA(s)) of the interaction during the interaction, including managing (e.g., determining) when a device or entity enters (or actively re-enters) the interaction to become a participant (e.g., an active participant) or leaves the interaction (e.g., exits the interaction or becomes an inactive or passive member associated with the interaction), based at least in part on the context. For example, based at least in part on the context (e.g., the context determined by the CMC **112** at a particular time during the interaction), the CMC **112** can determine whether the VA **108** is to communicate with the communication device **102** associated with a user **104**, whether the VA **108** is to communicate with another VA (e.g., VA **116**), whether the communication device **102** associated with the user **104** is to communicate with another communication device (e.g., communication device **114**) associated with another user (e.g., user who is or is associated with entity **110**), or a combination thereof. As the interaction continues, if the CMC **112** determines that the context has changed (e.g., at a subsequent time), the CMC **112** can determine whether there is to be a change in the participants (e.g., VA(s), communication device(s)) in the interaction.

[0032] When indicated by the context and the defined communication management criteria, the CMC **112** can modify characteristics associated with the VA **108** (e.g., speed or cadence of verbal words being presented by the VA **108** to the communication device **102** of the user **104**, a tone or inflection of a virtual or emulated voice of the VA **108**, . . .) to enhance the interaction. For example, if, in determining the context, the CMC **112** determines that the user **104** is having difficulty in responding to statements or

questions (e.g., event-related statements or questions) presented by the VA **108**, and such difficulty is determined to be due in part to the speed or cadence of the verbal words being presented by the VA **108** to the communication device **102** of the user **104**, the CMC **112** can determine that the speed or cadence is to be modified (e.g., to decrease the speed of presentation of verbal words and/or to adjust the cadence) to facilitate having the VA **108** present the verbal words to the communication device **102** of the user **104** at a speed or using a cadence that enhances (e.g., improves) the ability of the user **104** to understand such verbal words (e.g., statements or questions) and respond to the statements or questions presented by the VA **108**.

[0033] If, however, in determining the context, the CMC **112** determines that the user **104** is readily (e.g., quickly) understanding and responding to questions (e.g., event-related questions) presented by the VA **108**, the CMC **112** can determine that the speed can be modified to increase the speed of presentation of verbal words to facilitate having the VA **108** present the verbal words to the communication device **102** of the user **104** at a speed that enhances (e.g., improves) the interaction (e.g., by enabling the conversation between the user **104** and the VA **108** to proceed at a faster pace) while still enabling the user **104** to understand the verbal words (e.g., statements or questions) being presented by the VA **108** and respond to the statements or questions presented by the VA **108**.

[0034] As another example, in determining the context, the CMC **112** can determine that the user **104** is speaking, or is primarily speaking, in a different language (e.g., Spanish) than the VA **108** (e.g., using a virtual or emulated voice presenting words in English), and that the user **104** is having some difficulty in responding to the questions or statements presented by the VA **108**. Accordingly, based at least in part on such context, the CMC **112** can determine that the language used by the VA **108** to present information is to be modified to the language being spoken, or primarily spoken, by the user **104**.

[0035] As still another example, in determining the context, the CMC **112** can determine that the user **104** is speaking at a lower vocabulary level (e.g., 4th grade vocabulary level) than the VA **108** (e.g., using a virtual or emulated voice to present words at an 8th grade vocabulary level), and that the user **104** is having some difficulty in understanding and/or responding to the questions or statements presented by the VA **108**. Accordingly, based at least in part on such context, the CMC **112** can determine that the vocabulary level used by the VA **108** to present information (e.g., in verbal or written word form) is to be modified to a lower vocabulary level that corresponds or substantially corresponds to the vocabulary level determined for the user **104**.

[0036] In yet another example, if the user **104** is unconscious, injured, and/or otherwise incapable of communicating effectively during an interaction, the VA **116** (e.g., via one or more sensors (e.g., camera, microphone) of the VA) and/or sensors associated with the VA **116** or vehicle of the user **104** can detect that the user **104** is unconscious, injured, and/or otherwise incapable of communicating effectively during the interaction. The CMC **112** or VA **116** can analyze such sensor data, and based at least in part on the analysis results, can determine a context that indicates the user **104** is unconscious, injured, and/or otherwise incapable of communicating effectively during the interaction. The VA **116** (e.g., on its own or as managed by the CMC **112**) can determine a responsive action for the VA **116** to take or perform based at least in part on such context, wherein the responsive action can comprise, for example, contacting an emergency or medical service, a law enforcement agency, and/or a relative of the user **104** and providing the emergency or medical service, law enforcement agency, and/or relative information regarding the status (e.g., health status) or the user **104**, location of the user **104**, and/or other relevant information.

[0037] In some embodiments, when another communication device (e.g., communication device **114**) or another VA (e.g., VA **116**) enters the interaction while in progress, the CMC **112** can determine interaction update information, based at least in part on the tracking of the interaction (e.g., tracking of information relating to the interaction) and the context (e.g., context at the time the other communication device or VA is entering the interaction). The CMC **112** can communicate the interaction update information to the other communication device (e.g., communication device **114**), and associated other user (e.g. user that is or is associated with entity **110**), or other VA (e.g., VA **116**) to enable the other user or other VA to be up to date regarding what has occurred during the interaction, what information (e.g., information determined to be relevant) has been exchanged during the interaction, and/or the current status or progress of the interaction, etc.

[0038] As another example, if the user **104** exits the interaction or otherwise does not actively participate in the interaction for a period of time, the CMC **112** can track the interaction between the participants (e.g., VA **108**, VA **116**, and/or the other user) during that period of time. If the CMC **112** determines that the user **104** is to re-enter the interaction or otherwise become an active participant in the interaction, the CMC **112** can determine interaction update information based at least in part on the tracking of the interaction (e.g., tracking of the interaction during that period of time and/or other relevant time period) and the context (e.g., context at the time the user **104** is to re-enter the interaction and/or actively participate in the interaction). The CMC **112** can communicate the interaction update information to the VA **116** or communication device **102**, wherein the VA **116** (e.g., via an interface(s), such as a display screen and/or speaker, of the VA **116**) or communication device **102** (e.g., via a display screen and/or speaker of the device **102**) can present the interaction update information to the user **104** to update the user regarding the interaction.

[0039] In certain embodiments, a user (e.g., user **104**) can be passively participating in an interaction and having a VA (e.g., VA **116**) act on behalf of the user during the interaction with one or more other participants (e.g., VA **108** and/or the other user). As desired (e.g., as desired by the user **104**), and/or as determined by the CMC **112** based at least in part on the context (e.g., context of the user **104**), the CMC **112** can determine interaction update information during the time the user (e.g., user **104**) is passively participating in the interaction, and, during that time (e.g., on a continual or rolling basis) can communicate the interaction update information to the VA (e.g., VA **116**) or communication device (e.g., communication device **102**) associated with the user for presentation (e.g., visually via a display screen and/or audibly via a speaker) to the user to keep the user updated regarding the interaction as things (e.g., information is exchanged, tasks are completed, or participants in the interaction change, . . .) are occurring in the interaction (e.g., in

real time or substantially real time). The user (e.g., user **104**) can view or listen to the interaction update information, via the VA or communication device, to keep updated regarding the interaction. For instance, based at least in part on tracking the interaction, including tracking attention or focus of the user (e.g., user **104**) to the interaction, the CMC **112** can determine a context that can indicate that, while the user is not actively participating in the interaction (e.g., by talking in the conversation), the user is paying at least some attention to what is transpiring during the interaction. Accordingly, the CMC **112** can determine that interaction update information is to be sent to the user via the VA (e.g., VA **116**) or communication device (e.g., communication device **102**).

[0040] The CMC **112** also can manage VAs (e.g., VA **108** and VA **116**) during VA-to-VA communication to enable enhanced and efficient communication of information (e.g., event-related information or other interaction-related information). For instance, in connection with a particular type of event (e.g., vehicle accident), VA **108** and VA **116** can be communicating information relating to the event between each other. Based at least in part on the particular type of event, the VA **108** and VA **116**, for example, employing an algorithm, information list, task list, and/or checklist, etc., can each know what items of information are to be exchanged between each other during the interaction. Without a request or prompting for a next item of information by the VA **108**, the VA **116** can provide (e.g., communicate to) the VA **108** the next item of information that can be desired by the VA **108**, in accordance with the algorithm, information list, task list, and/or checklist, etc., and/or vice versa, without a request or prompting for a next item of information by the VA **116**, the VA **108** can provide (e.g., communicate to) the VA **116** the next item of information that can be desired by the VA **116**, in accordance with the algorithm, information list, task list, and/or checklist, etc.

[0041] For instance, an algorithm or list (e.g., information list, task list, and/or checklist) relating to a vehicle accident indicates that information be provided by a local VA (e.g., VA **116**) associated with the vehicle to a remote VA (e.g., VA **108**) in the following order: name of vehicle owner, name of driver of vehicle, address of vehicle owner, location of vehicle accident, etc. Based at least in part on the algorithm or list, which can be known by the local VA and remote VA, the local VA, without a request from or prompting by the remote VA to provide such items of information to the remote VA, the local VA (e.g., VA **116**) can communicate (e.g., automatically communicate) such items of information in that order (e.g., name of vehicle owner, name of driver of vehicle, address of vehicle owner, location of vehicle accident, etc.) to the remote VA (e.g., VA **108**), in accordance with the algorithm or list. This can enhance (e.g., reduce the amount of time and resources) utilized by VAs to exchange information relating to an event.

[0042] Also, if, for example, prior to the VA-to-VA communication, the user **104** already had contacted the remote VA (e.g., VA **108**) or another user (or communication device (e.g., **114**) of the other user) associated with the remote VA and provide the remote VA or other user certain items of information such as the name of the driver of the vehicle and location of the vehicle accident, during the subsequent VA-to-VA communication, the local VA (e.g., VA **116**) and remote VA (e.g., VA **108**) can already know that those certain items of information were provided (e.g., based on the CMC **112** managing the local VA and remote VA). Accordingly, based at least in part on the algorithm or list, and based on the knowledge regarding the certain items of information that already were provided by the user **104**, the local VA (e.g., VA **116**), without a request from or prompting by the remote VA to provide the remaining items of information to the remote VA (e.g., VA **108**), the local VA can communicate (e.g., automatically communicate) the remaining items of information in the proper order (e.g., name of vehicle owner, address of vehicle owner, etc.) to the remote VA (e.g., VA **108**), while bypassing the certain items of information that already were provided by the user **104**, in accordance with the algorithm or list. This also can enhance (e.g., reduce the amount of time and resources) utilized by VAs to exchange information relating to an event. While this example relates to one VA (e.g., a local VA) providing items of information to another VA (e.g., a remote VA) without a request or prompt from the other VA to provide the items of information, the providing of items of information also can be bi-directional in that the local VA can communicate a first subset of items of information to the remote VA without a request or prompt from the remote VA for the local VA to communicate the first subset of items of information to the remote VA, and the remote VA can communicate a second subset of items of information to the local VA without a request or prompt from the local VA for the remote VA to communicate the second subset of items of information to the local VA, in accordance with an applicable algorithm or list.

[0043] The CMC **112** and one or more VAs (e.g., VA **116** and/or **108**) also can perform various tasks simultaneously, substantially simultaneously, or in parallel. For example, when a vehicle accident has occurred and the user **104** has been injured, the CMC **112** can manage the VAs to have one VA (e.g., VA **116**) contact and interact with emergency medical services (EMS) or other medical personnel (e.g., a VA or communication device of EMS or other medical personnel), another VA (e.g., VA **108**) contact and interact with the insurance company of the user **104** (e.g., a VA or communication device of the insurance company) to notify the insurance company regarding the accident and initiate an insurance claim, still another VA contact and interact with law enforcement (e.g., a VA or communication device of law enforcement) to notify law enforcement regarding the accident (e.g., location and details of the accident), and yet another VA contact and interact with a towing company (e.g., a VA or communication device of the towing company) to request that the towing company come to the scene of the accident and tow the vehicle, wherein the respective VAs can perform their respective tasks simultaneously, substantially simultaneously, or in parallel. In some embodiments, one VA (e.g., VA **116**) can perform multiple tasks simultaneously, substantially simultaneously, or in parallel. For example, with regard to the vehicle accident example, one VA (e.g., VA **116**) can perform two or more of the aforementioned tasks (e.g., contact and interact with EMS or other medical personnel, contact and interact with the insurance company, contact and interact with law enforcement, and/or contact and interact with the towing company).

[0044] Other aspects and embodiments of the disclosed subject matter will be described with regard to the other figures (and/or FIG. **1**). Referring to FIG. **2** (along with FIG. **1**), FIG. **2** depicts a diagram of an example interaction **200** between communication devices, VAs, and users or other

entities, in accordance with various aspects and embodiments of the disclosed subject matter. The example interaction **200** can relate to, for example, a vehicle accident involving the user **104** and the user's vehicle (not shown in FIG. **1** or **2**).

[0045] In some embodiments, one or more sensors (not shown in FIG. **1** or **2**) of the vehicle can sense or detect that the vehicle has been involved in an accident. The one or more sensors can be associated with a VA **116**, which can be associated with the user **104** (e.g., as user or owner of the vehicle) and an entity **118** (e.g., an entity that can provide a service comprising the VA **116**). Additionally or alternatively, the user **104** can detect that the vehicle has been involved in an accident. The one or more sensors can trigger (e.g., initiate) an outgoing VA interaction, or the user **104** (e.g., driver or passenger of vehicle) can initiate the outgoing VA interaction, by the VA **116** to a center system **202** (e.g., call center system associated with an insurance company, emergency service, medical provider, law enforcement agency, vehicle or towing service, . . .), wherein the center system **202** can comprise or be associated with the CMC **112**, which can manage communications between communication devices, users or other entities, VAs, etc. (e.g., with regard to the vehicle accident). The VA **116** can be a VA that is located in, attached to, or integrated with the vehicle, for example. In some embodiments, the VA can be part of the communication device **102** of the user **104**.

[0046] As indicated at reference numeral **204**, in response to the initiation of the VA interaction, the VA **116** can contact the center system **202** and can identify itself to the center system **202**, including the CMC **112**, as a VA (e.g., as VA **116**). In some embodiments, the VA **116** initially can be in contact with a user **206** (e.g., user associated with entity **110**). In other embodiments, the VA **116** initially can be in contact with another VA, such as VA **108**. In response to being contacted by the VA **116**, the user **206** or the CMC **112** associated with the center system **202** can generate a new ticket (e.g., an insurance claim ticket, a service claim ticket, a work ticket, or a response ticket, . . .). If the initial contact by the VA **116** was with a user **206** associated with the center system **202**, the user **206** or the CMC **112** can facilitate creating the VA **108** (e.g., service VA or bot), including setting initial (e.g., default or initial particular) characteristics associated with the VA **108**, based at least in part on the information (e.g., current and/or historical information) relating to the interaction (e.g., to that point in time). As indicated at reference numeral **208**, the center system **202**, via the CMC **112** or the user **206**, can provide (e.g., communicate or present) the interaction-related information (e.g., to that point in time), including event-related information relating to the event (e.g., vehicle accident), to the VA **108**.

[0047] As indicated at reference numeral **210**, the VA **116** associated with the vehicle can communicate with the VA **108** associated with the center system **202** to exchange data (e.g., event-related data). In some embodiments, the communication of data between the VA **116** and VA **108** can be in a non-verbal form (e.g., communication of digital data via a non-audio data communication channel). Such communication of data in non-verbal form (e.g., data traffic) can enable the exchange of information (e.g., event-related information and other interaction-related information) at a relatively high speed (e.g., typically a higher speed of communication of information than the speed that such information can be communicated in verbal or audio form).

[0048] In other embodiments, if a data communication channel is not available for VA-to-VA data communications, or if only a single communication channel is available (e.g., for communications relating to the interaction), the communication of data between the VA **116** and VA **108** can be in a verbal word form via an available communication channel (e.g., communication via a channel that supports presentation of verbal/audio words. In such instance, the CMC **112** can control (e.g., modify) the characteristics of the VA **108** and/or VA **116** (e.g., if VA **116** also is being managed by the CMC **112**), and/or the respective VAs **108** and **116** can modify their respective characteristics, to exchange information at a higher speed (e.g., at a highest speed achievable via the communication channel). For example, the CMC **112**, and/or the respective VAs **108** and **116**, can modify (e.g., increase) the speed of presentation of verbal words by the VA **108** and/or VA **116**, can modify the cadence of the verbal words being presented by the by the VA **108** and/or VA **116** to enhance (e.g., increase the speed of) the conversation between the VA **108** and VA **116**. To facilitate enhancing the conversation between VA **108** and VA **116**, the CMC **112** can manage, and/or the VA **108** and VA **116** can negotiate with each other or automatically discover, the characteristics (e.g., word speed, voice cadence, voice inflection, voice tone, language, vocabulary level, syntax, . . .) of VA **108** and VA **116** to employ to exchange information to enhance the conversation between VA **108** and VA **116**.

[0049] During the example scenario of the example interaction **200**, the context can change based at least in part on what has occurred during the interaction **200**. The CMC **112** can determine the respective contexts at respective times during the interaction **200**, and detect or determine when the context of the interaction **200** has changed, and can manage the interaction **200**, including controlling operation of, or participation of, the VA **108** and other participants (e.g., user **104** (and/or associated communication device **102**), and/or VA **116**) or participants-to-be (e.g., communication device **114** and user **206** associated with the entity **110**) in the interaction **200**, in accordance with the defined communication management criteria. For example, there can be instances where, during the interaction **200**, it can be desirable (e.g., wanted, suitable, advantageous, or necessary, . . .) for another user **206** (e.g., a human user, such as a customer service representative (CSR), associated with entity **110**) to enter the interaction **200** to obtain additional information from the user **104**, validate or verify information (e.g., event-related information and/or information relating to the user **104**) with the user **104**, and/or obtain consent from the user **104** (e.g., to take a particular action). Based at least in part on the results of analyzing the interaction-related information of the interaction **200**, the CMC **112** can determine a context where it can be desirable for such other user to enter the interaction **200** to obtain additional information from the user **104**, validate or verify information with the user **104**, and/or obtain consent from the user **104**.

[0050] In that regard, as indicated by reference numeral **212**, the CMC **112** can manage the interaction **200** to have the user **206** (e.g., CSR), using communication device **114**, enter the interaction **200**, and join the conversation, to obtain additional information regarding the event and/or the user **104**. In some embodiments, as such other user **206** and

associated communication device **114** enter the interaction, the VA **108** (e.g., service VA) can introduce and/or identify such other user **206** and associated communication device **114** to the user **104** and/or VA **116** (e.g., vehicle VA), or such other user **206** can self-identify himself or herself, including self-identifying that he or she is a human being (as opposed to a VA).

[0051] In some embodiments, as indicated by reference numeral **214**, the other user **206**, using communication device **114**, initially can interact and communicate with the VA **116** to obtain additional information relating to the event and/or user **104** that the VA **116** is able to provide. As indicated at reference numeral **216**, at certain times, the other user **206**, using communication device **114**, also can interact and communicate with the user **104**, who can use an interface on the VA **116** (and/or communication device **102**), for example, to verify or validate the additional information obtained from the VA **116** and/or other information (e.g., information previously obtained before the other user entered the interaction **200**, but not yet verified or validated by the user **104**). In accordance with various embodiments, the CMC **112** and/or the other user **206** can imply that the user **104** has given consent for the other user **206** and associated communication device **114** to communicate with the VA **116** to obtain the additional information, or the other user **206** can request that the user **104** explicitly give consent for the other user **206** and associated communication device **114** to communicate with the VA **116** to obtain the additional information.

[0052] In some instances, the VA **116** can indicate to the user **104** that additional information is desired from the user **104**, and the user **104** can initially refuse or decline to give consent to provide the additional information. In such instances, the other user **206**, using communication device **114**, can communicate with the user **104**, who can use the interface of VA **116** (or communication device **102**) to communicate with the other user **206**, wherein the other user **206** can confirm to the user **104** that the additional consent and information is desired (e.g., required or necessary).

[0053] The user **104** can accept the request for consent and additional information from the other user **206**, but, as indicated at reference numeral **218**, can indicate a preference for continued VA interaction, wherein the other user **206** can hand off the conversation to the VA **108**, which can re-identify in and/or re-enter the interaction **200** (e.g., conversation). As indicated at reference numeral **220**, the VA **116** can re-identify in and/or re-enter the interaction **200** (e.g., conversation), and the VA **108** can interact with the VA **116** to exchange further information (e.g., event-related and/or other interaction-related information), wherein the VA **108** can be proxied or direct to the other user **206** associated with the entity **110**.

[0054] In some embodiments, the VA **116** also can continue to interact with the user **104**, for example, to keep the user **104** updated regarding the status or progress of the interaction **200**. The VA **116** (or the CMC **112**, if the CMC **112** manages the VA **116**) can modify characteristics (e.g., speed of presentation of verbal words, voice inflection, amount of detail of information presented) of the VA **116** based at least in part on a determined context of the interaction **200**, including a context of the user **104** (e.g., based on whether the user **104** is actively paying attention to the conversation or is merely passively following the conversation; based on whether the user **104** appears to be engaging in other activity unrelated to the interaction **200**). For example, the VA **116** can be adjusted to present (e.g., communicate) verbal words at a first speed, if the user **104** is determined to be actively paying attention to and/or engaging in the conversation of the interaction **200**; or the VA **116** can be adjusted to present verbal words at a second (e.g., different) speed, if the user **104** is determined to be not be paying attention or merely passively following the conversation of the interaction **200**. The VA **116** also can have characteristics adjusted to present, via verbal words, different amounts of information (e.g., interaction update information) to the user **104** based at least in part on the context of the user. For example, if the user **104** is determined to be actively paying attention to and/or engaging in the conversation of the interaction **200**, the characteristics of the VA **116** can be adjusted to provide more information (e.g., interaction update information) to the user **104** than the amount of information the VA **116** would provide if the user **104** is determined to be not be paying particular attention or is merely passively following the conversation of the interaction **200**. In certain embodiments, additionally or alternatively, the VA **116** can provide updates (e.g., non-verbal interaction update information) regarding the interaction **200** to the user **104** via a display screen of the VA **116** or via a message(s) (e.g., text or instant message(s)) to the communication device **102**.

[0055] The VA **108** and VA **116** can continue to communicate information to each other. During this time, as desired, the user **104**, using an interface of the VA **116** or communication device **102**, can continue to communicate with the other user (e.g., CSR), wherein the other user can be using communication device **114** or an interface of the VA **108** to communicate with the user **104**.

[0056] At some point in the conversation, the user **104** (e.g., driver or passenger of the vehicle) can desire to allow the VA **116** to take over the remainder, or at least virtually the rest, of the conversation of the interaction **200** on behalf of the user **104**. As indicated at reference numeral **222**, the user **104** can hand off future consent of the user **104** to the VA **116** to enable the VA **116** to give consent and/or provide certain information (e.g., information for which consent is desired), on behalf of the user **104**, to the VA **108** and/or the other user **206**. For example, the user **104**, using an interface of the VA **116** or the communication device **102**, can escalate the local privileges of the VA **116** to enable the VA **116** to give consent and/or provide certain information, on behalf of the user **104**, to the VA **108** and/or the other user **206**.

[0057] As indicated at reference numeral **224**, as desired, the other user **206** can handoff the conversation (e.g., exchange of information) to the VA **108**, for example, to have the VA **108** act on behalf of the other user **206** to address any remaining issues or details relating to the event. As indicated at reference numeral **226**, VA **108** and VA **116** can continue to communicate and exchange information with each other, for example, to complete any remaining tasks relating to the event, wherein such communication between the VA **108** and VA **116** can be performed in the background. The CMC **112** can control the VA **108** and/or VA **116** (if the CMC **112** is managing VA **116**) to control the mode (e.g., verbal communication, or non-verbal communication) of exchange of information and/or characteristics of the VA **108** and/or VA **116**. For example, the CMC **112** can manage the VA **108** and/or VA **116** to have the VA **108** communicate and exchange information with VA **116** using

non-verbal communication via a data communication channel, which typically can be performed significantly quicker than communicating such information using verbal communications.

[0058] In still other embodiments, an entire interaction (and exchanges of information), or a desired portion of the interaction, between one or more VAs (e.g., VA **108**, and/or VA **116**), one or more users (e.g., user **104**, and/or user **206**) and/or one or more associated communication devices (e.g., communication device **102**, and/or communication device **114**), and/or one or more other devices or entities can occur in a virtual reality (VR) and/or augmented reality (AR) setting(s). For example, instead of a real accident or event setting (e.g., purchase of a product or service, social or business interaction, medical or health related event setting, or legal or law enforcement related event setting, . . .), one or more users (e.g., user **104**, and/or user **206**) can be interacting in a virtual environment (e.g., a VR and/or AR environment), such as a racing simulator, customer care or other training program, or other synthetic environment. With no loss or modification of functionality, the CMC **112** can connect and manage the VA(s) (e.g., VA **108**, and/or VA **116**), and can manage the interaction (e.g., interaction between the participants or participants-to-be of the interaction), based at least in part on (e.g., according to) the context(s) of the interaction (e.g., overall context of the interaction, which can include and/or be based at least in part on the user context(s) of the user(s), VA context(s) of the VA(s), communication device context(s) of the communication device(s), . . .), such as described in the example interaction in FIG. **2** (along with FIG. **1**) and/or as otherwise disclosed or described herein.

[0059] Referring to FIG. **3** (along with FIGS. **1** and **2**), FIG. **3** depicts a block diagram of an example interaction flow **300**, in accordance with various aspects and embodiments of the disclosed subject matter. Various components of the interaction flow **300** can be part of or associated with the system (e.g., system **100**). As depicted in the example interaction flow **300**, the user **104** can interact with (e.g., communicate with and/or use an interface of) the VA **116**, for example, in connection with an event (e.g., vehicle accident). For example, at various times, during the interaction (e.g., interaction **200**), the user **104** can interact with the VA **116** to provide information relating to the event to the VA **116** or receive information relating to the event from the VA **116**, such as described herein (e.g., with regard to interaction **200**).

[0060] The interaction between the user **104** and VA **116** (and/or VA **108** or user **302** associated with VA **108** and entity **110**) can be managed (e.g., CMC **112**, VA **116**, and/or VA **108**) based at least in part on preferences **304** and/or credentials **306** (e.g., authentication credentials) of the user **104**. For instance, the user **104** can indicate, set, or specify one or more preferences **304** of the user **104** with regard to interactions, in general, or this particular interaction (e.g., interaction **200**). The one or more preferences **304**, for example, can indicate that the user **104** desires, authorizes, and/or consents the VA **116** to act on behalf of the user **104** with regard to certain actions and/or types of information, in connection with communicating with the VA **108**, user **302**, or other devices or entities; can indicate that there are certain other actions and/or types of information that the user **104** does not desire, authorize, and/or consent the VA **116** to act on behalf of the user **104**; can indicate the manner in which the user **104** desires to be kept updated by the VA **116** (or CMC **112**, or VA **108**) with regard to the interaction (e.g., present certain interaction-related information as the user **104** passively monitors the interaction, while the VA **116** interacts with VA **108** and/or user **302** on behalf of the user **104**; or present interaction update information to the user **104** when the user **104** actively re-enters and participates in the interaction); can indicate or select certain desired (e.g., preferred) characteristics (e.g., language, dialect, . . .) for the VA (e.g., VA **116**) to have; and/or can indicate one or more other preferences of the user **104**.

[0061] At desired times during an interaction, the VA **116** also can interact and communicate with VA **108**, wherein inter and intra VA communications of information (e.g., event-related information or other interaction-related information) can be performed by the VA **116** and VA **108** (e.g., as depicted at reference numeral **308**). The communications between the VA **116** and VA **108** can be in the form of data traffic (e.g., non-verbal data) that can be communicated between the VA **116** and VA **108** using a data communication channel. If no data communication channel is available, the VA **116** and VA **108** can communicate information in verbal form to each other via an audio communication channel. The VA **116** and VA **108** (e.g., as managed by CMC **112**) can enhance communications with each other by adjusting respective VA characteristics (e.g., speed or cadence of presentation of verbal words; inflection or tone of the virtual or emulated voice of the VA; and/or conversation syntax) to enable faster and more efficient communication of information with each other, in accordance with the defined communication management criteria.

[0062] During certain times of the interaction, as desired, the VA **108** also can communicate with the user **104** and/or the user **302**. For example, there can be instances where the VA **108** desires additional information or consent from the user **104**, and the VA **108** can interact and communicate with the user **104** to obtain the additional information or consent, instead of communicating with the VA **116**. As another example, the user **302** can interact and communication with the VA **108** to provide information (e.g., event-related information or other interaction-related information) in connection with the VA **108** entering the interaction (e.g., interaction **200**) and taking a primary role in communicating with the VA **116** or user **104** during the interaction.

[0063] The CMC **112** can manage the operation of the VA **108** (and/or VA **116**), including the VA state **310** of the VA **108** (and/or VA **116**), based at least in part on the context **312** of the interaction, in accordance with the defined communication management criteria. The CMC **112** can determine the context **312** of the interaction (e.g., interaction **200**) based at least in part on activity **314** during the interaction, historical information **316** relating to the participants (e.g., user **104**, VA **116**, VA **108**, and/or user **302**) and/or type of event (e.g., vehicle accident, sale of a product or service, medical injury or emergency, event involving law enforcement, . . .) (e.g., activity and communications by the participants), and personalized information **318**, such as information relating to a relationship (e.g., pre-existing relationship) between participants (e.g., between user **104** and VA **108**; between VA **108** and VA **116**; . . .). The CMC **112** can learn (e.g., as indicated by reference numeral **320**), acquire, and/or track the information regarding the activity **314**, historical information **316**, and personalized information **318**, and can learn (e.g., **320**) or determine the context

of the interaction (e.g., interaction **200**) at a given time during the interaction based at least in part on the activity **314**, historical information **316**, and personalized information **318**. The activity **314** can relate to, for example, respective communications of information between the respective participants, other interactions between the participants (e.g., hand off from a user to a VA, or vice versa; problem with a user understanding or responding to a VA; . . .), and/or other types of activities of the participants during the interaction.

[0064] In connection with managing the VA state **310** of a VA (e.g., VA **108** and/or VA **116**), the CMC **112** can manage the characteristics of the VA **108** (and/or VA **116**) based at least in part on the context of the interaction. For instance, the CMC **112** can manage the modulations **322** of the VA **108** (and/or VA **116**) to adjust or modulate the communication of information between the VA **108** and the user **104** (or user **302**) or between the VA **108** and the VA **116** (and/or between the VA **116** and the user **104** or user **302**), based at least in part on the context determined for the interaction, to enhance the communications between the respective participants, as more fully described herein. The modulations **322** can comprise or relate to, for example, the speed **324** of the presentation of verbal words to a user (e.g., user **104** or user **302**) by a VA (e.g., VA **108** or VA **116**) or to a VA (e.g., VA **116**) by another VA (e.g., VA **108**), an inflection **326** of the verbal words being presented to a user by a VA or to a VA by another VA, a verbosity **328** of the verbal words being presented to a user by a VA or to a VA by another VA, and/or other types of modulations **322** (e.g., modulations comprising or relating to a cadence, vocabulary level, language, and/or dialect of the verbal words being presented by a VA), such as described herein.

[0065] In connection with managing the VA state **310** of a VA (e.g., VA **108** and/or VA **116**), the CMC **112** can manage the operation of the VA **108** (and/or VA **116**) and/or the participation of participants (or potential participants) (e.g., VA **108**, VA **116**, user **104**, or user **302**) in the interaction based at least in part on the context, for example, as the context relates to consent **330**, including verbal consent **332**, opt-in **334**, and consent not needed **336**. For example, with regard to when verbal consent **332** is desired by a VA (e.g., VA **108**) in order to perform an action (e.g., sign (e.g., digitally or verbally sign) a document or statement (e.g., electronic document or statement), initiate a claim (e.g. insurance claim), release medical information regarding a user **104**, perform a credit check on the user **104**, . . .) in connection with the interaction, based at least in part on such context, the CMC **112** can manage the VA **108** and/or VA **116** to request that the user **104** actively participate in the interaction (if the user **104** was having the VA **116** act on behalf of the user) and interact with the VA **108** or VA **116** to provide the desired consent of the user **104** (e.g., verbal consent **332** or otherwise consent) to allow the VA to perform the action.

[0066] As another example, there can be instances where consent of the user **104** can be on an opt-in **334** basis, wherein the CMC **112** and VA (e.g., VA **108** and/or VA **116**) can deem the user **104** as not consenting to a certain action by the VA, unless the user **104** affirmatively or actively opts-in to give consent to such certain action by the VA. Based at least on such context regarding an opt-in **334** with regard to such certain action, the CMC **112** can manage the VA (e.g., VA **108** and/or VA **116**) to have the VA request that the user **104** actively indicate whether the user **104** opts-in to allow the VA to take or perform such certain action.

[0067] As still another example, there can be instances where consent of the user **104** is not necessary (**336**) in order for a VA (e.g., VA **108** and/or VA **116**) to perform a particular action (e.g., provide certain details regarding the event). Based at least in part on such a context, if the user **104** has been allowing the VA **116** to act on behalf of the user **104**, and, on behalf of the user **104**, the VA **116** has been interacting and communicating with the VA **108**, the VA **116** and/or VA **108** (e.g., as managed by the CMC **112**) can perform the particular action without involving the user **104** (e.g., without the user **104** having to actively provide explicit consent to allow the VA to perform the particular action).

[0068] In connection with managing the VA state **310** of a VA (e.g., VA **108** and/or VA **116**), the CMC **112** also can manage the operation of the VA **108** (and/or VA **116**) and/or the participation of participants (or potential participants) (e.g., VA **108**, VA **116**, user **104**, or user **302**) in the interaction based at least in part on the context as it relates to privileges **338** granted to a VA (e.g., VA **116**) by a user (e.g., user **104**). For instance, the user **104** can grant a VA **116** certain privileges to act on behalf of the user **104** during the interaction (e.g., interaction **200**). The certain privileges can relate to, for example, what information the VA **116** is permitted to convey to another VA (e.g., VA **108**) or user (e.g., user **302**) on behalf of the user **104**, what actions the VA **116** is permitted to take on behalf of the user **104**, and/or what the VA **116** can consent to on behalf of the user **104**, etc. The CMC **112** can track and obtain privilege-related information that can indicate the privileges **338** granted to the VA **116**, and the CMC **112** can manage the VA **116** (and/or VA **108**), and/or the participation the participants (e.g., user **104**, user **302**, VA **108**, VA **116**) in the interaction, based at least in part on the privileges **338** granted to the VA **116**.

[0069] The CMC **112** also can provide catch-up services, including catch-up service **340** and catch-up service **342**, to respective users (e.g., user **104**, user **302**) to keep users up to date regarding the status or progress of an interaction (e.g., interaction **200**), for example, when a user has not been actively participating in the interaction. The CMC **112**, and/or the VA **108** and/or VA **116**, can track what occurs during the interaction, including tracking information exchanged between participants of the interaction (e.g., information exchanged between VAs, information exchanged between a VA and a user), progress that has been made with regard to the performance of tasks associated with the interaction, what tasks remain to be performed in connection with the interaction, the participants in the interaction, and/or other activities associated with the interaction. If a user (e.g., user **104**, or user **302**) is preparing to enter or re-enter the interaction to actively participate in the interaction or the user otherwise desires an update regarding the interaction, the CMC **112**, and/or the VA **108** and/or VA **116**, can employ the catch-up service (e.g., catch-up service **340**, or catch-up service **342**) to determine and generate interaction update information, based at least in part on the context of the interaction and the tracking of what has occurred during the interaction. The VA (e.g., VA **108**, or VA **116**) can provide the interaction update information to the user, via an interface of the VA (or a communication device associated with the user), to bring the user up to date regarding what has occurred during the interaction.

[0070] With further regard to FIG. **1**, in another example scenario, an interaction can relate to using VAs (e.g., VA **108**, VA **116**) to facilitate a purchase of an item. The user **104** can desire to purchase a particular item from a seller entity (e.g., entity **110**). On behalf of the user **104**, the VA **116** (e.g., a local VA with respect to the user **104**) can contact a sales interface for the interaction (e.g., interaction relating to the sale of the item). In this example scenario, the VA **116** initially can interact (e.g., communicate) with a remote sales service, for example, via another user (e.g., sales representative or agent) or a remote automated sales service agent associated with the seller entity. The other user (e.g., sales representative or agent) or remote automated sales service agent can initialize the transaction (e.g., sale) and begin the interaction. The VA **116** can identify itself to the other user or remote automated sales service agent that initially can transfer (e.g., hand off) the interaction with the VA **116** to VA **108** (e.g., a sales VA) associated with the seller entity (e.g., entity **110**).

[0071] The VA **108** and VA **116** can communicate information (e.g., non-verbal data) between each other via a data communication channel (e.g., a non-verbal or non-vocal channel), wherein the information can relate to the sale of the particular item. As the communication between VA **108** and VA **116** is being performed via the data communication channel, the information typically can be communicated significantly faster than if the information was in the form of verbal words being communicated via an audio communication channel. The CMC **112** can facilitate managing the VA **108** and/or VA **116** (if the CMC **112** is also managing the VA **116**) to enable desirably quick communication of the information between VA **108** and VA **116** via the data communication channel, in accordance with the defined communication management criteria.

[0072] In this example scenario, the VA **116** can ask the VA **108** one or more questions, wherein the VA **108** is not able to answer some or all of the one or more questions. The CMC **112** can be tracking the interaction and can determine the context of the interaction, wherein the context can indicate that the VA **108** is not able to answer some or all of the one or more questions asked by the VA **116**. In some instances of this example scenario, the CMC **112** can determine that the interaction regarding the purchase of the item is to be transferred to a human user (e.g., the other user associated with the entity **110**) for further processing of the transaction.

[0073] In other example instances of this example scenario, the VA **108** initially can begin to answer or attempt to answer the one or more questions, while the CMC **112** stages (e.g., prepares) or facilitates staging the human user to enter the interaction, wherein the VA **108** at least can be a temporary proxy for the human user to answer or attempt to answer the one or more questions. The CMC **112** can determine and generate interaction update information, comprising a summary or subset of the information relating to the interaction and/or other relevant information (e.g., historical information relating to the user **104**, the item being purchased, the relationship between the user **104**, VA **116**, and/or VA **108**, . . .) based at least in part on the tracking of the interaction, including information communicated between the VA **116** (or user **104**) and the VA **108**. The CMC **112** can communicate the interaction update information, via an interface (e.g., of communication device **114** or VA **108**), to the human user to enable the human user to be updated (e.g., caught up) to the progress or status of the interaction (e.g., progress or status of the sale of the item), to provide the human user with contextual awareness of the historical interaction between the user **104** (and/or VA **116**) and the VA **108** (and/or human user or entity **110**). The interaction update information also can convey to the human user the next operations or actions associated with the transaction that are to be performed by the VA **108** to continue the conversation, or at least partially continue the conversation, with the VA **116**. With the human user brought up to date on the transaction, the VA **108** can hand off, or partially hand off, the performance of the transaction to the human user, wherein the human user can begin interacting and exchanging information with the VA **116** to answer the unanswered question(s) and/or further the progress on the transaction and/or the VA **108** can continue to communicate with the VA **116** (e.g., on a parallel workflow path with the workflow path of the human user interacting with the VA **116**) to perform the next operations or actions associated with the transaction (e.g., as further instructed by the human user or backend sales of the entity **110**).

[0074] In this example scenario, the user **104** can implicitly or explicitly allow the VA **116** (e.g., grant the VA **116** privileges or authority) to execute the purchase of the item on behalf of the user **104**. In some embodiments, the user **104** can allow the VA **116** to perform most of the tasks relating to the purchase of the item, but can reserve the final approval of the purchase of the item to the user **104**.

[0075] As the transaction progresses towards a final sale (or no sale), the CMC **112** can continue to monitor and track the interaction. Based at least in part on a context of the interaction at a given time (e.g., as determined by the CMC **112**), the CMC **112** can continue to manage the interaction and the participants (e.g., user **104**, VA **108**, VA **116**, the other user (e.g., human user), . . .) of the interaction. For instance, as determined appropriate or indicated by a context at a given time, the other user (e.g., remote sales agent) and/or the VA **108** can join or leave the conversation with the VA **116** (and/or the user **104**) (e.g., as managed by the CMC **112**). At a given time when a particular participant (e.g., the other user, the VA **108**, . . .) joins or re-joins the conversation, the CMC **112** can determine and generate interaction update information (e.g., summary or subset of the information relating to the interaction, information relating to the sale of the item, and/or other relevant or contextual information) based at least in part on the tracking of the interaction.

[0076] In some embodiments, and in accordance with this example interaction, the user **104** can grant the VA **116** certain privileges or otherwise authorize the VA **116** to make a payment (e.g., from an account of the user **104**), on behalf of the user **104**, to the VA **108** (or the other user associated with the entity **110**) to complete the purchase of the item. For example, the user **104** can provide the VA **116** with verbal or textual instructions, commands, or preferences, via a desired interface of the VA **116** (or communication device **102**), that can grant the VA **116** certain privileges to make a payment, on behalf of the user **104**, to the VA **108** (or the other user associated with the entity **110**) to complete the purchase of the item, wherein the payment can be made from one or more accounts of the user **104** to which the VA **116** has been granted access rights.

[0077] With further regard to the communication network **106** depicted in FIG. **1**, a RAN of the communication

network **106** can be associated with (e.g., connected to) or can comprise a core network (e.g., mobile core network) that can facilitate communications by communication devices (e.g., communication device **102**, communication device **114**, VA **108**, VA **116**, . . .) wirelessly connected to the communication network **106**. A communication device (e.g., communication device **102**, communication device **114**, VA **108**, VA **116**, . . .) can be communicatively connected to the core network via a base station. The core network can facilitate wireless communication of voice and data associated with communication devices associated with the communication network **106**. The core network can facilitate routing voice and data communications between communication devices and/or other communication devices (e.g., phone, computer, VA, email server, multimedia server, audio server, video server, news server, financial or stock information server, other communication devices associated with an IP-based network (e.g., the Internet, an intranet, . . .) (not shown in FIG. **1**) associated with the communication network **106**.

[0078] In accordance with various embodiments, the communication network **106** can comprise a macro communication network and/or a micro communication network. The macro communication network can be, can comprise, or can be associated with a core network, a cellular network, an IP-based network, Wi-Fi, gigabit wireless (Gi-Fi) network, Hi-Fi network (e.g., providing higher gigabit data communication than Gi-Fi or Wi-Fi), Bluetooth, ZigBee, etc. The micro communication network can be associated with the macro communication network, wherein the micro communication network typically can operate in a defined local area (e.g., in or in proximity to a home, building, or other defined area). The micro communication network can be, can comprise, or can be associated with Wi-Fi, Gi-Fi, Hi-Fi, Bluetooth, ZigBee, etc., and/or can be associated with (e.g., connected to) the macro communication network. The micro communication network can be or can comprise, for example a local area network (LAN), that can facilitate connecting certain devices (e.g., communication devices) associated with the micro communication network to each other and/or to the macro communication network.

[0079] Respective communication devices (e.g., communication device **102**, communication device **114**, VA **108**, VA **116**, . . .) can be associated with (e.g., communicatively connected to) the communication network **106** via a wireless communication connection or a wireline (e.g., wired) communication connection (e.g., via a cell and associated base station). The respective communication devices can operate and communicate in a communication network environment. At various times, a communication device can be communicatively connected via a wireless communication connection(s) to one or more radio access networks (RANs), which can comprise one or more base stations to communicatively connect the communication device to the communication network **106** to enable the communication device to communicate other communication devices associated with (e.g., communicatively connected to) the communication network **106** in the communication network environment. The one or more RANs can comprise, for example, a 3GPP universal mobile telecommunication system (UMTS) terrestrial RAN (UTRAN), an E-UTRAN (e.g., Long Term Evolution (LTE) RAN), a GSM RAN (GRAN), and/or other type of RAN(s) employing another type of communication technology.

[0080] The communication network **106** can comprise one or more wireline communication networks and one or more wireless communication networks, wherein the one or more wireless communication networks can be based at least in part on one or more various types of communication technology or protocols, such as, for example, 3G, 4G, 5G, or x generation (xG) network, where x can be virtually any desired integer or real value; Wi-Fi; Gi-Fi; Hi-Fi; etc. The communication network **106** (e.g., a core network, cellular network, or a network comprising a core network, cellular network, and/or an IP-based network) can facilitate routing voice and data communications between a communication device(s) (e.g., communication device **102**, communication device **114**, VA **108**, VA **116**, . . .) and another communication device associated with the communication network **106** in the communication network environment. The communication network **106** and/or the core network also can allocate resources to the communication devices in the communication network **106**, convert or enforce protocols, establish and enforce quality of service (QoS) for the communication devices, provide applications or services in the communication network **106**, translate signals, and/or perform other desired functions to facilitate system interoperability and communication in the communication network **106** (e.g., wireless portion of the communication network **106** or wireline portion of the communication network **106**). The communication network **106** and/or the core network further can comprise desired components, such as routers, nodes (e.g., general packet radio service (GPRS) nodes, such as serving GPRS support node (SGSN), gateway GPRS support node (GGSN)), switches, interfaces, controllers, etc., that can facilitate communication of data between communication devices in the communication network environment.

[0081] As a communication device(s) (e.g., communication device **102**, communication device **114**, VA **108**, VA **116**, . . .) is moved through a wireless communication network environment, at various times, the communication device(s) can be connected (e.g., wirelessly connected) to one of a plurality of base stations or APs (e.g., macro or cellular AP, femto AP, pico AP, wi-fi AP, wi-max AP, hotspot (e.g., hotspot 1.x, hotspot 2.x, where x is an integer number; communication device (e.g., communication device functioning as a mobile hotspot)) that can operate in the wireless communication network environment. An AP (e.g., base station) can serve a specified coverage area to facilitate communication by the communication device(s) or other communication devices in the wireless communication network environment. An AP can serve a respective coverage cell (e.g., macrocell, femtocell, picocell, . . .) that can cover a respective specified area, and the AP can service mobile wireless devices, such as the communication device(s) located in the respective area covered by the respective cell, where such coverage can be achieved via a wireless link (e.g., uplink (UL), downlink (DL)). When an attachment attempt is successful, the communication device(s) can be served by the AP and incoming voice and data traffic can be paged and routed to the communication device(s) through the AP, and outgoing voice and data traffic from the communication device(s) can be paged and routed through the AP to other communication devices in the communication network environment. In an aspect, the communication device(s) can be connected and can communicate wirelessly using virtually any desired wireless technology, including,

for example, cellular, Wi-Fi, Gi-Fi, Hi-Fi, Wi-Max, Bluetooth, wireless local area networks (WLAN), etc.

[0082] The disclosed subject matter, by employing the CMC **112**, and the VAs (e.g., VA **108**, VA **116**), can enable desirable managing of interactions, including managing VAs during the interaction and managing the participation of participants (or potential participants) in the interaction, wherein the CMC **112** can take into consideration advanced VA states, including context associated with the interaction, in managing the interactions, as more fully described herein. The disclosed subject matter (e.g., employing the CMC **112**) can allow tracking and understanding of user states, VA states, privileges of VAs (e.g., as granted by users), and context associated with an interaction, and making determinations and managing VAs and other participants associated with an interaction based at least in part on the tracking and understanding of user states, VA states, VA privileges, and context.

[0083] The disclosed subject matter, by employing the CMC **112**, and the VAs (e.g., VA **108**, VA **116**), can provide enhanced inter- and intra-VA communications functionality, wherein the disclosed subject matter can determine protocols for handoff between participants (e.g., handoff from user to VA; handoff from VA to user; or handoff from VA to another VA) associated with an interaction such that conversational flow between participants in the interaction can be enhanced (e.g., optimized or improved) and transparent for each participant (e.g., user can know when the user is interacting with a VA; or a VA can know when the VA is interacting with a user or with another VA), as more fully described herein.

[0084] The disclosed subject matter, by employing the CMC **112**, and the VAs (e.g., VA **108**, VA **116**), also can provide workflow catch-up functionality that can enable a user (e.g., user **104**, or user **302**) or VA to be provided interaction update information to bring the user or VA up to date regarding the status or progress of an interaction, for example, when the user or VA enters the interaction or otherwise desires an update regarding the interaction, as more fully described herein. This can enable for enhanced handoff from one participant (e.g., VA) to another participant (e.g., user) during an interaction, desirably efficient entry and exit of participants during an interaction, including desirably efficient entry and exit of human conversation for agents in multi-VA guidances and for the assumption of control by human users in a conversation during an interaction at desired times (e.g., when required by a VA (e.g., proximal VA that is proximate to or associated with the user) or CMC, or when desired by the user).

[0085] The disclosed subject matter, by employing the CMC **112**, and the VAs (e.g., VA **108**, VA **116**), can provide for enhanced (e.g., faster) conversations between participants (e.g., users, VAs) and enhanced (e.g., improved or optimal) interactions with a VA (e.g., by a user or another VA) that can be driven, in part, by the other participant to the conversation or interaction, as more fully described herein. The disclosed subject matter, by employing the CMC **112**, and the VAs (e.g., VA **108**, VA **116**), can manage multiple conversations of an interaction that are happening concurrently (e.g., VA-to-user conversation, VA-to-VA conversation, and/or user-to-user conversation), wherein the multiple conversations can be intelligently and contextually organized (e.g., by the CMC **112**) across a service organization, as more fully described herein.

[0086] The disclosed subject matter, by employing the CMC **112**, and the VAs (e.g., VA **108**, VA **116**), can provide enhanced methods and techniques for human-to-human communication, VA-to-VA communication, and VA-to-human communication through structured context observance and handoff between participants to an interaction, as more fully described herein. The disclosed subject matter also can provide a streamlined, audited, and implicit consent mechanism that can facilitate enhanced mixed human and VA interaction workflows. The disclosed subject matter can determine and employ context of an interaction to provide for enhanced and natural modulations in conversation between participants (e.g., user, VA) that can observe contextual hints on both sides (e.g., user-side, VA-side) of the conversation, and can be customized for natural workflow departure (e.g., questions asked during a conversation) or alternate routes (e.g., following interactive voice response (IVR) mechanisms) for VA interactions.

[0087] FIG. **4** depicts a block diagram of an example VA **400**, in accordance with various aspects and embodiments of the disclosed subject matter. The VA **400** can comprise, for example, a communicator component **402**, an operations manager component **404**, an interface component **406**, a voice generator component **408**, a conversation manager component **410**, a modulator component **412**, and an update component **414**.

[0088] The communicator component **402** can transmit information from the VA **400** to another component(s) or device(s) (e.g., another VA, a communication device, a network component or device, . . .) and/or can receive information from the other component(s) or device(s). For instance, the communicator component **402** can receive (e.g., from another VA or a communication devices of a user) information relating to an event, and/or other interaction-related information, in connection with an interaction between the VA and the other component or device, identifier or authentication information (e.g., device ID, biometric information, communication network address, . . .) associated with, and/or identifying or facilitating authenticating, an entity, component, or device, and/or other desired information. The communicator component **402** also can transmit, for example, information relating to an event, and/or other interaction-related information, in connection with an interaction between the VA and the other component or device, identifier or authentication information associated with, and/or identifying or facilitating authenticating, the VA **400** or an entity associated with the VA **400**, and/or other desired information.

[0089] The operations manager component **404** that can control (e.g., manage) operations associated with the VA **400**. For example, the operations manager component **404** can facilitate generating instructions to have components of the VA **400** perform operations, and can communicate respective instructions to respective components (e.g., communicator component **402**, interface component **406**, voice generator component **408**, conversation manager component **410**, modulator component **412**, update component **414**, . . .) of the VA **400** to facilitate performance of operations by the respective components of the VA **400** based at least in part on the instructions, in accordance with the defined communication management criteria and a communication management algorithm(s) (e.g., communication management algorithms as disclosed, defined, recited, or indicated herein by the methods, systems, and techniques described

herein). The operations manager component **404** also can facilitate controlling data flow between the respective components of the VA **400** and controlling data flow between the VA **400** and another component(s) or device(s) (e.g., another VA, a communication device, a base station or other network node component or device of the communication network) associated with (e.g., connected to) the VA **400**.

[0090] The interface component **406** can comprise one or more interfaces, such as, for example, a display screen (e.g., touch display screen), an audio interface (e.g., microphone (s), speaker(s)), keyboard, keypad, controls, buttons, etc., that can be used to present information to a user associated with the VA **400** or receive information from the user, such as information that is input to the VA **400** by the user and is related to an event or is otherwise related to the interaction. The VA **400** can interact with and have a conversation with the user by using the speaker(s) of the interface component **406** to present verbal words to the user, and the VA **400** can receive, via a microphone(s) of the interface component **406**, verbal words spoken by the user. As another example, the user can view information (e.g., information relating to the interaction or event) displayed on the display screen of the interface component **406**.

[0091] The voice generator component **408** can generate one or more voices of the VA **400** for use in communicating (e.g., speaking) verbal words and sounds that can be emitted from the VA **400** via the interface component **406** and/or communicator component **402**. A voice generated by the voice generator component **408** can be a virtual or emulated voice that can emulate, mimic, recreate, or sound similar to the actual voice of a human being. The voice can have various characteristics (e.g., word speed, speech cadence, inflection, tone, language, dialect, vocabulary level, . . .) that can define or structure the voice and the speaking (e.g., virtual or emulated speaking) of verbal words by the voice generator component **408**.

[0092] The conversation manager component **410** can manage (e.g., control, modify, or adjust) the voice (e.g., the characteristics of the virtual or emulated voice) and the emission (e.g., speaking) of verbal words by the voice generator component **408** to facilitate managing a conversation with a user or another VA based at least in part on the context of the interaction with the user or other VA, including the verbal words spoken, and the characteristics of the verbal words spoken, by the user or other VA during the conversation. The conversation manager component **410** also can determine and manage the verbal words to be emitted by the voice generator component **408** during the conversation, based at least in part on the context of the interaction, including what was said to the VA **400** by the user or other VA participating in the conversation. For example, based at least in part on the context, the conversation manager component **410** (e.g., in coordination with, or as managed by, the CMC) can determine a question to ask or a statement to make to the user or other VA next in a conversation, a response to a question or statement made by the user or other VA to the VA **400**, etc. The conversation manager component **410** can coordinate with, be managed by, and/or operate in conjunction with the CMC to facilitate managing the voice, the determination of verbal words to be emitted, the emission of verbal words, and the overall conversing by the voice generator component **408**, based at least in part on the context, in accordance with the defined communication management criteria.

[0093] The conversation manager component **410** can comprise a modulator component **412** that can be utilized to modulate or adjust the voice, including adjusting the characteristics of the voice, produced by the voice generator component **408**. For example, based at least in part on the context of the interaction, the modulator component **412** can adjust (e.g., increase or decrease) the speed and/or cadence of the verbal words emitted by the voice generator component **408**, the inflection and/or tone of the voice and/or verbal words emitted by the voice generator component **408**, the language and/or dialect of the verbal words emitted by the voice generator component **408**, the vocabulary level of the verbal words emitted by the voice generator component **408**, the syntax of the conversation, and/or one or more other characteristics of the voice or verbal words to facilitate producing verbal words that can enhance the flow of the conversation and enhance the productivity and results of the conversation and interaction.

[0094] The update component **414** can be employed to provide a catch-up service to enable a user (or VA) to be caught up or updated regarding the status or progress of an interaction when the user (or VA) is entering or re-entering a conversation associated with the interaction or when an update regarding the status or progress of the interaction is otherwise desired by the user. In some embodiments, the update component **414** can coordinate with and/or can be managed by the CMC to facilitate determining whether an update is to be provided to a user (or VA) and/or the content of the update to be provided to the user (or VA). The update component **414** can determine and/or generate, or facilitate determining and/or generating, an update, comprising interaction update information relating to the interaction, based at least in part on the current context of the interaction, including the current status or progress of the interaction. The interaction update information can comprise a summary or a subset of interaction-related information and/or event-related information, for example. The VA **400** can present the update (e.g., interaction update information) to the user (or VA, such as another VA) via the interface component **406** or the communicator component **402**.

[0095] The VA **400** also can include a processor component **416** that can work in conjunction with the other components (e.g., communicator component **402**, interface component **406**, voice generator component **408**, conversation manager component **410**, modulator component **412**, update component **414**, and data store **418**) to facilitate performing the various functions of the VA **400**. The processor component **416** can employ one or more processors, microprocessors, or controllers that can process data, such as information relating to interactions, events, contexts of interactions, status or progress of interactions, activities relating to interactions, conversations associated with the VA **400**, identifiers or authentication credentials associated with entities, devices, or components, voice generation of the VA **400**, characteristics or modulations of the one or more voices generated by the VA **400**, catch-up service, parameters, traffic flows, policies, defined communication management criteria, algorithms (e.g., communication management algorithm(s)), protocols, interfaces, tools, and/or other information, to facilitate operation of the VA **400**, as more fully disclosed herein, and control data flow between the VA **400** and other components (e.g., other VAs, com-

munication devices, base stations, network devices of the communication network, data sources, applications, . . .) associated with the VA **400**.

[0096] The data store **418** that can store data structures (e.g., user data, metadata), code structure(s) (e.g., modules, objects, hashes, classes, procedures) or instructions, information relating to interactions, events, contexts of interactions, status or progress of interactions, activities relating to interactions, conversations associated with the VA **400**, identifiers or authentication credentials associated with entities, devices, or components, voice generation of the VA **400**, characteristics or modulations of the one or more voices generated by the VA **400**, catch-up service, parameters, traffic flows, policies, defined communication management criteria, algorithms (e.g., communication management algorithm(s)), protocols, interfaces, tools, and/or other information, to facilitate controlling operations associated with the VA **400**. In an aspect, the processor component **416** can be functionally coupled (e.g., through a memory bus) to the data store **418** in order to store and retrieve information desired to operate and/or confer functionality, at least in part, to the communicator component **402**, interface component **406**, voice generator component **408**, conversation manager component **410**, modulator component **412**, update component **414**, and data store **418**, etc., and/or substantially any other operational aspects of the VA **400**.

[0097] FIG. **5** illustrates a block diagram of an example communication management component (CMC) **500**, in accordance with various aspects and embodiments of the disclosed subject matter. The CMC **500** can comprise, for example, a communicator component **502**, an operations manager component **504**, and an interaction manager component **506**, wherein the interaction manager component **506** can comprise a context component **508**, a characteristics component **510**, a participant management component **512**, and an update component **514**. The CMC **500** can be the same as or similar to that, and/or can comprise the same or similar functionality, as more fully described herein. The CMC **500** also can include a processor component **516**, and a data store **518**.

[0098] The communicator component **502** can transmit information from the CMC **500** to another component(s) or device(s) (e.g., a VA, a communication device, a network component or device, . . .) and/or can receive information from the other component(s) or device(s). For instance, the communicator component **502** can receive (e.g., from a VA, or a communication device associated with a user) information relating to an interaction (e.g., interaction-related information, event-related information), identifier or authentication information (e.g., device ID, user ID, authentication credentials, biometric information, and/or communication network address, . . .) associated with an entity, component, or device, and/or other desired information. The communicator component **502** also can, for example, transmit, to a VA or user (e.g., communication device of a user), information relating to the interaction, modification information (e.g., to modify the characteristics of the voice or verbal words presented by a VA; to modify the conversation by modifying the statements made by the VA), participant-related information to change participants actively engaging in the interaction, update information relating to the interaction, and/or other information.

[0099] The operations manager component **504** that can control (e.g., manage) operations associated with the CMC **500**. For example, the operations manager component **504** can facilitate generating instructions to have components of the CMC **500** perform operations, and can communicate respective instructions to respective components (e.g., communicator component **502**, operations manager component **504**, interaction manager component **506**, . . .) of the CMC **500** to facilitate performance of operations by the respective components of the CMC **500** based at least in part on the instructions, in accordance with the defined communication management criteria and a communication management algorithm(s) (e.g., communication management algorithms as disclosed, defined, recited, or indicated herein by the methods, systems, and techniques described herein). The operations manager component **504** also can facilitate controlling data flow between the respective components of the CMC **500** and controlling data flow between the CMC **500** and another component(s) or device(s) (e.g., a VA, a communication device, a base station or other network node component or device of the communication network) associated with (e.g., connected to) the CMC **500**.

[0100] The interaction manager component **506** can manage interactions, including managing participants in interactions (e.g., what users or devices participate in an interaction at a particular time), conversations between participants in interactions, verbal words presented by a VA during an interaction, updates regarding interactions to users or VAs entering an interaction or otherwise desired by users or VAs, and/or other aspects relating to interactions, based at least in part on context associated interactions (e.g., the context of an interaction at a given time), in accordance with the defined communication management criteria. In some embodiments, based at least in part on the context determined for an interaction, the interaction manager component **506** can determine the words to be presented by a VA (e.g., how the VA is to respond to a user) during the interaction, the characteristics of the voice or the verbal words presented by the VA during the interaction, in accordance with the context of an interaction.

[0101] The interaction manager component **506** can employ the context component **508** to determine the context of an interaction at a given time. The context component **508** can determine the context based at least in part on current or recent information regarding the interaction, historical information that can be relevant to the interaction, and/or other information that can be relevant to the interaction. The historical information can relate to the type of interaction (e.g., type of event associated with the interaction, an item (e.g., item for sale) associated with the interaction, the participants (e.g., particular user(s), VA or type of VA, . . .) in the interaction), a relationship (e.g., a previous relationship or interaction(s) between participants in the interaction, the location of the interaction or part of the interaction, etc.

[0102] The interaction manager component **506** can utilize the characteristics component **510** to determine the characteristics of the voice and verbal words being presented by a VA at a given time and/or modifications that can be made to the characteristics of the voice and verbal words being presented by a VA at a given time, based at least in part on the context determined for the interaction, to facilitate enhancing the presentation of verbal words by the VA, the conversation between the VA and another participant (e.g., a user, another VA), and the productivity and results of the interaction. For example, during an interaction, based at least in part on the context determined for the interaction, the

characteristics component **510** can determine that a speed and/or cadence of the presentation of words by a VA is to be modified (e.g., speed is to be decreased and/or cadence is to be adjusted) to facilitate enhancing the conversation between the VA and a user, wherein the context can indicate that the user is having some difficulty in understanding the verbal words being presented by the VA to the user.

[0103] The participant management component **512** can manage the respective participation of respective participants in an interaction, based at least in part on the context of the interaction (e.g., context at a given time during the interaction). For example, at a given time during an interaction, a VA associated with a user and another VA associated with an entity can be exchanging information relating to an event between each other. The context of the interaction, at the given time, can indicate that additional information and/or consent is desired from the user. Based at least in part on the context, the participant management component **512** can determine that the user is to enter (or re-enter) the interaction to actively participate in the interaction to provide the additional information and/or consent to the VA or other VA. The interaction manager component **506**, employing the communicator component **502**, can communicate request information to the VA, the other VA, or a communication device of the user, wherein the request information can request that the user enter (or re-enter) the interaction to provide the additional information and/or consent to the VA or other VA.

[0104] As another example, the context of an interaction, at a given time, can indicate that it is acceptable or desirable for a VA to communicate with the other VA via a data communication channel, wherein the user can become an inactive or passive member of the interaction. Based at least in part on the context, the participant management component **512** can determine that the VA is to communicate with the other VA (e.g., using non-verbal data communication) via the data communication channel, and the user can become an inactive or passive member of the interaction. The interaction manager component **506**, employing the communicator component **502**, can communicate information to the VA, the other VA, and/or a communication device of the user that can indicate or instruct the VA, the other VA, and/or the user to have the VA and the other VA communicate data between each other (e.g., using non-verbal data communication) via the data communication channel, and to have the user transition to an inactive or passive member of the interaction (unless the user expresses a desire to continue being an active participant in the interaction).

[0105] The update component **514** can be employed to provide a catch-up service to enable a user (or VA) to be caught up or updated regarding the status or progress of an interaction when the user (or VA) is entering or re-entering a conversation associated with the interaction or when an update regarding the status or progress of the interaction is otherwise desired by the user. In some embodiments, the update component **514** can coordinate with a VA to facilitate determining whether an update is to be provided to a user (or VA) and/or the content of the update to be provided to the user (or VA). The update component **514** can determine and/or generate, or facilitate determining and/or generating, an update, comprising interaction update information relating to the interaction, based at least in part on the current context of the interaction, including the current status or progress of the interaction. The interaction update information can comprise, for example, a summary or a subset of interaction-related information and/or event-related information. The interaction manager component **506**, employing the communicator component **502**, can present the update (e.g., interaction update information) to the user (or VA) via the communicator component **502**.

[0106] The processor component **516** that can work in conjunction with the other components (e.g., communicator component **502**, operations manager component **504**, interaction manager component **506**, . . . , and data store **518**) to facilitate performing the various functions of the CMC **500**. The processor component **516** can employ one or more processors, microprocessors, or controllers that can process data, such as information relating to interactions, events, contexts of interactions, status or progress of interactions, activities relating to interactions, conversations associated with participants of interactions, identifiers or authentication credentials associated with entities, devices, or components, voice generation of a VA, characteristics or modulations of one or more voices generated by a VA, catch-up (e.g., update) service, parameters, traffic flows, policies, defined communication management criteria, algorithms (e.g., communication management algorithm(s)), protocols, interfaces, tools, and/or other information, to facilitate operation of the CMC **500**, as more fully disclosed herein, and control data flow between the CMC **500** and other components (e.g., VAs, communication devices, base stations, network devices of the communication network, data sources, applications, . . .) associated with the CMC **500**.

[0107] The data store **518** that can store data structures (e.g., user data, metadata), code structure(s) (e.g., modules, objects, hashes, classes, procedures) or instructions, information relating to interactions, events, contexts of interactions, status or progress of interactions, activities relating to interactions, conversations associated with participants of interactions, identifiers or authentication credentials associated with entities, devices, or components, voice generation of a VA, characteristics or modulations of one or more voices generated by a VA, catch-up (e.g., update) service, parameters, traffic flows, policies, defined communication management criteria, algorithms (e.g., communication management algorithm(s)), protocols, interfaces, tools, and/or other information, to facilitate controlling operations associated with the CMC **500**. In an aspect, the processor component **516** can be functionally coupled (e.g., through a memory bus) to the data store **518** in order to store and retrieve information desired to operate and/or confer functionality, at least in part, to the communicator component **502**, operations manager component **504**, interaction manager component **506**, and data store **518**, etc., and/or substantially any other operational aspects of the CMC **500**.

[0108] FIG. **6** depicts a block diagram of an example UE **600** (e.g., communication device) in accordance with various aspects and embodiments of the disclosed subject matter. In accordance with various embodiments, the UE **600** (e.g., communication device) can be a multimode access terminal, wherein a set of antennas $\mathbf{669}_1$-$\mathbf{669}s$ (S can be a positive integer) can receive and transmit signal(s) from and to wireless devices like access points, access terminals, wireless ports and routers, and so forth, that operate in a radio access network. It should be appreciated that antennas $\mathbf{669}_1$-$\mathbf{669}s$ can be a part of communication platform **602**, which comprises electronic components and associated circuitry that provide for processing and manipulation of

received signal(s) and signal(s) to be transmitted; e.g., receivers and transmitters **604**, multiplexer/demultiplexer (mux/demux) component **606**, and modulation/demodulation (mod/demod) component **608**.

[0109] In some implementations, the UE **600** can include a multimode operation chipset(s) **610** that can allow the UE **600** to operate in multiple communication modes in accordance with disparate technical specification for wireless technologies. In an aspect, multimode operation chipset(s) **610** can utilize communication platform **602** in accordance with a specific mode of operation (e.g., voice, global positioning system (GPS), . . .). In another aspect, multimode operation chipset(s) **610** can be scheduled to operate concurrently (e.g., when S>1) in various modes or within a multitask paradigm.

[0110] The UE **600** also can include a processor(s) **612** that can be configured to confer functionality, at least in part, to substantially any electronic component within the UE **600**, in accordance with aspects of the disclosed subject matter. For example, the processor(s) **612** can facilitate enabling the UE **600** to process data (e.g., symbols, bits, or chips) for multiplexing/demultiplexing, modulation/demodulation, such as implementing direct and inverse fast Fourier transforms, selection of modulation rates, selection of data packet formats, inter-packet times, etc. As another example, the processor(s) **612** can facilitate enabling the UE **600** to process data relating to messaging, voice calls, or other services (e.g., Internet services or access); information relating to measurements of signal conditions with respect to cells; information relating to cells to facilitate connection to a source cell or target cell; information relating to parameters (e.g., UE parameters, network-related parameters); information relating to interactions between the UE **600** and other devices or components (e.g., VA, another communication device), as more fully described herein; and/or other data.

[0111] The UE **600** also can contain a data store **614** that can store data structures (e.g., user data, metadata); code structure(s) (e.g., modules, objects, classes, procedures) or instructions; message hashes; neighbor cell list; one or more lists (e.g., whitelist, etc.); information relating to measurements of signal conditions with respect to cells; information relating to cells to facilitate connection to a source cell or target cell; information relating to parameters (e.g., UE parameters, network-related parameters); information relating to interactions between the UE **600** and other devices or components (e.g., VA, another communication device); UE identifier; information relating to voice calls, messaging, or other services associated with the UE **600**; network or device information like policies and specifications; attachment protocols; code sequences for scrambling, spreading and pilot (e.g., reference signal(s)) transmission; frequency offsets; cell IDs; encoding algorithms; compression algorithms; decoding algorithms; decompression algorithms; and so on. In an aspect, the processor(s) **612** can be functionally coupled (e.g., through a memory bus) to the data store **614** in order to store and retrieve information (e.g., neighbor cell list; signal quality measurement-related information; cell-related information; parameter information; information relating to messaging, voice calls, or other services (e.g., interactive services); information relating to interactions; frequency offsets; desired algorithms; security code; UE identifier; . . .) desired to operate and/or confer functionality, at least in part, to communication platform **602**, multimode operation chipset(s) **610**, and/or substantially any other operational aspects of the UE **600**.

[0112] The aforementioned systems and/or devices have been described with respect to interaction between several components. It should be appreciated that such systems and components can include those components or sub-components specified therein, some of the specified components or sub-components, and/or additional components. Sub-components could also be implemented as components communicatively coupled to other components rather than included within parent components. Further yet, one or more components and/or sub-components may be combined into a single component providing aggregate functionality. The components may also interact with one or more other components not specifically described herein for the sake of brevity, but known by those of skill in the art.

[0113] In view of the example systems and/or devices described herein, example methods that can be implemented in accordance with the disclosed subject matter can be further appreciated with reference to flowcharts in FIGS. **7-9**. For purposes of simplicity of explanation, example methods disclosed herein are presented and described as a series of acts; however, it is to be understood and appreciated that the disclosed subject matter is not limited by the order of acts, as some acts may occur in different orders and/or concurrently with other acts from that shown and described herein. For example, a method disclosed herein could alternatively be represented as a series of interrelated states or events, such as in a state diagram. Moreover, interaction diagram(s) may represent methods in accordance with the disclosed subject matter when disparate entities enact disparate portions of the methods. Furthermore, not all illustrated acts may be required to implement a method in accordance with the subject specification. It should be further appreciated that the methods disclosed throughout the subject specification are capable of being stored on an article of manufacture to facilitate transporting and transferring such methods to computers for execution by a processor or for storage in a memory.

[0114] FIG. **7** illustrates a flow chart of an example method **700** that can manage a VA in interactions with a user, another VA, or another entity, in accordance with various aspects and embodiments of the disclosed subject matter. The method **700** can be employed by, for example, a system comprising the CMC, which can a processor component (e.g., of or associated with the CMC), and/or a data store (e.g., of or associated with the CMC).

[0115] At **702**, information relating an interaction between a VA and a communication device associated with a user identity (associated with a user) (and/or between the VA and the user) can be analyzed to determine a context of the interaction. The CMC can track and/or receive information relating to the interaction between the VA (e.g., VA device) and the communication device. The interaction can be, for example, a conversation between the VA and a user (e.g., user having or associated with the user identity) who can be using the communication device to communicate with the VA. In some embodiments, the user can be communicating directly with the VA without using a communication device. The information relating to the interaction can comprise, for example, data (e.g., event data relating to an event, sensor data relating to the event and obtained from sensors, . . .) being exchanged between the VA and the user, via the communication device, a speed of the respective conversing

(e.g., communication of verbal or audible words) of the VA and the user, respective voice tones, inflections, or cadences of the VA and the user, other respective characteristics of the VA and user with respect to the interaction, the progress or status of the conservation between the VA and user (e.g., progress or status of filing an insurance claim, progress or status of a purchase of a product or service, or progress or status relating to another type of event). Based at least in part on the results of analyzing the information relating to the interaction, the CMC can determine a context of the interaction.

[0116] At **704**, the VA can be managed based at least in part on the context of the interaction between the VA and the communication device associated with the user identity (and/or between the VA and the user). The CMC can manage the VA (e.g., control operation of the VA) with respect to the interaction between the VA and the communication device associated with the user identity (associated with the user), or between the VA and the user, based at least in part on the context determined for the interaction, to facilitate enhancing the interaction, including the user experience, between the VA and the communication device (and associated user). For instance, based at least in part on the context, the CMC can manage (e.g., control, modify, or adjust) a speed of presentation of audible or verbal words by the VA to the communication device associated with the user identity. In accordance with various embodiments, the CMC also can manage a tone of voice (e.g., virtual or emulated voice) of the VA, an inflection of the voice of the VA, a cadence of the audible words being presented by the VA, and/or other characteristics of the voice of the VA, based at least in part on the context, as more fully described herein.

[0117] In some embodiments, the CMC can manage the VA to suspend the interaction of the VA with the communication device of the user, for example, to hand off the communication device and associated user to another communication device of another user (e.g., user associated with a business entity), another VA (e.g., a VA that has particular characteristics, serves a particular domain, or is associated with the user or another entity (e.g., another business entity)), or other type of entity (e.g., software-based entity, component, or device), as more fully described herein.

[0118] FIG. **8** presents a flow chart of an example method **800** that can manage VAs in interactions with users (e.g., communication devices and associated users), other VAs, or other entities (e.g., software-based entities, components, or devices), in accordance with various aspects and embodiments of the disclosed subject matter. The method **800** can be employed by, for example, a system comprising a system comprising the CMC, which can a processor component (e.g., of or associated with the CMC), and/or a data store (e.g., of or associated with the CMC).

[0119] At **802**, information, which can relate to an interaction between a VA and a communication device associated with a user identity (e.g., associated with a user) and/or between the VA and the user, can be tracked. The CMC can monitor and track the interaction between the VA and the communication device (and/or associated user, whether or not the user is using the communication device to interact with the VA). The CMC can receive and/or generate information relating to the interaction based at least in part on the monitoring and tracking of the interaction, and/or can monitor and track the information relating to the interaction.

[0120] At **804**, the information, which can relate to the interaction, can be analyzed. The CMC can analyze the information to facilitate determining a context of the interaction between the VA and the communication device (and/or associated user) and management of the interaction.

[0121] At **806**, a context of the interaction between the VA and the communication device, and/or between the VA and the user, can be determined, based at least in part on the results of analyzing the information relating to the interaction. The CMC can determine the context relating to the interaction between the VA and the communication device, and/or between the VA and the user, based at least in part on the results of analyzing the information relating to the interaction.

[0122] At **808**, a determination can be made regarding whether a VA modification action is to be performed, based at least in part on the context, to facilitate managing the operation of the VA. The CMC can determine whether a VA modification is to be performed, and, if so, which type of VA modification is to be performed, based at least in part on the context, to facilitate managing the operation of the VA, and managing the interaction between the VA and the communication device (and associated user).

[0123] At **810**, in response to determining that no VA modification action is to be performed, the method **800** can return to reference numeral **802**, with no VA modification action being performed, wherein the method **800** can proceed to track information relating to the interaction between the VA and the communication device associated with the user identity and perform one or more operations of method **800**, as described herein. In response to determining that no VA modification action is to be performed, based at least in part on the determined context, the CMC can determine that no VA modification action is to be performed at the time, and the CMC can continue to monitor and track information relating to the interaction between the VA and the communication device associated with the user identity, and can perform one or more operations of method **800**, such as described herein.

[0124] If, at reference numeral **808**, it is determined that a VA modification action is to be performed, based at least in part on the context, at **812**, the VA modification action can be determined based at least in part on the context. At **814**, the VA modification action can be performed to facilitate managing the operation of the VA. In response to determining that a VA modification action is to be performed, based at least in part on the determined context, the CMC can determine the VA modification action that is to be performed, and can perform the VA modification action, to facilitate managing the operation of the VA. The VA modification action can comprise, for example, modifying one or more characteristics of the VA (e.g., speed of words being presented by the VA, cadence of words being presented by the VA, tone or inflection of voice of the VA, . . .), suspending active communication with the communication device of the user, and/or modifying operation of the VA to have the VA communicate (e.g., via non-verbal or verbal communication of information) with another VA, as more fully described herein.

[0125] At this point, the method **800** can proceed from reference numeral **814** to reference numeral **802**, wherein the method **800** can proceed to track information relating to the interaction between the VA and the communication device associated with the user identity and perform one or

more operations of method **800**, as described herein. For instance, in accordance with the method **800**, as the interaction continues to proceed, the CMC can determine (e.g., at reference numeral **806**) that the context is different than it was before, and, based at least in part on the new context, can determine that a VA modification action is to be performed (e.g., at reference numeral **808**) to modify the operation of the VA, can determine the VA modification action to be performed (e.g., at reference numeral **812**), and can perform the VA modification action (e.g., at reference numeral **814**).

[0126] FIG. **9** depicts a flow chart of an example method **900** that can facilitate bringing a user up to date regarding an interaction when the user enters the interaction, in accordance with various aspects and embodiments of the disclosed subject matter. The method **900** can be employed by, for example, a system comprising the CMC, which can a processor component (e.g., of or associated with the CMC), and/or a data store (e.g., of or associated with the CMC).

[0127] At **902**, during a first time period of an interaction, communication of a first portion of event information relating to an event can be tracked, wherein the first portion of information can be communicated between a first VA and a second VA, a first user, and/or a first communication device associated with the first user. During the first time period of the interaction, the CMC can track the communication of the first portion of the event information between the first VA and the second VA, the first user, and/or the first communication device (e.g., the first user using the first communication device). The second VA can be associated with an entity (e.g., an insurance company, a business or seller entity, medical personnel, law enforcement, . . .) and/or the first user. The first VA can be associated with a second user and/or another entity (e.g., a service entity that can provide a service, employing the first VA, to the second user in connection with a vehicle, such as a vehicle of or used by the second user), wherein the second user is not actively participating in the interaction during the first time period. The event can relate to, for example, a vehicle accident, a potential purchase of a product or service, a medical situation (e.g., injury or medical emergency) involving the second user or someone associated with the second user, or a legal situation (e.g., a crime that is being reported or investigated).

[0128] At **904**, based at least in part on a context of the interaction, a determination can be made that the second user and/or a second communication device associated with the second user is to enter the interaction. The CMC can determine the context of the interaction, based at least in part on interaction information regarding the interaction and/or the first portion of the event information. Based at least in part the context, the CMC can determine that the second user and/or the second communication device associated with the second user is to enter the interaction.

[0129] For example, if the event relates to a vehicle accident involving the second user, during the first time period, the first VA can be acting on behalf of the second user to communicate event information to the second VA, the first user, and/or the first communication device of the first user, and receive event information from the second VA, the first user, and/or the first communication device, while the second user can be not participating, or at least not actively (e.g., passively or inattentively) participating, in the interaction. The communication of the first portion of the event information can be non-verbal data (e.g., data communications between the first VA and the second VA) or event information in the form of verbal words (e.g., first VA conversing with the first user (or second VA)). The first portion of the event information, for example, can relate to the vehicle accident, and/or can relate to reporting the accident, including details of the accident and/or filing of an insurance claim with an insurance company with regard to the accident.

[0130] At some point during the interaction (e.g., at or near the end of the first time period), the context can indicate that the second user (e.g., vehicle owner, vehicle driver, or vehicle passenger) is to enter the interaction to communicate with the second VA and/or first user. For instance, the context (e.g., as determined by the CMC) can indicate that the second user is to enter the interaction to communicate with the second VA and/or first user to, for example, obtain the consent of the second user with regard to a condition, legal issue, or other aspect relating to the insurance claim; to obtain additional event information from the second user that can more easily be obtained through human-to-human interaction, rather than human-to-VA interaction, or direct communication with the second user, rather than through interaction with the first VA; or due to a problem with the interaction between the first VA and the first user (and/or the first communication device).

[0131] At **906**, interaction update information regarding the interaction can be determined to facilitate updating the second user regarding the interaction. The CMC can determine the interaction update information based at least in part on the context, the first portion of the event information, user-related information relating to the second user, and/or other information. The interaction update information can comprise, for example, information regarding the first user (e.g., identification information that identifies the first user, contact information, such as a phone number of the first communication device, business address of the first user (e.g., business address of the insurance company), email address of the first user, . . .), information regarding the second VA (e.g., identification information that can identify the second VA and/or associations or affiliations of the second VA (e.g., second VA is associated with the first user and the insurance company), a location of the second VA (e.g., location or address where the second VA is instantiated), . . .), a summary or subset of the event information (e.g., pertinent event information) obtained or determined for the interaction to the current time (e.g., with regard to the first time period of the interaction), and/or status or progress information that can indicate what the status or progress made with regard to the interaction and/or what other information (e.g., other event information) is still desired (e.g., wanted) or what other tasks are yet to be performed in connection with the interaction.

[0132] At **908**, during a second time period, wherein the second user and/or the second communication device associated with the second user is to enter the interaction, the interaction update information can be communicated to the second user, via the first VA or the second communication device, to facilitate updating the second user regarding the interaction. The CMC can communicate, or can initiate or facilitate communicating, the interaction update information to the first VA and/or the second communication device to facilitate updating the second user regarding the interaction, wherein the first VA or second communication device can

present the interaction update information to the second user. The first VA or second communication device can present the interaction update information to the second user via presentation of the interaction update information, in visual form (e.g., textual information and/or visual images or video), on a display screen of the first VA or second communication device, and/or in audio form (e.g., verbal words or other sounds), via one or more speakers of the first VA or second communication device.

[0133] In order to provide a context for the various aspects of the disclosed subject matter, FIGS. **10** and **11** as well as the following discussion are intended to provide a brief, general description of a suitable environment in which the various aspects of the disclosed subject matter may be implemented. While the subject matter has been described above in the general context of computer-executable instructions of a computer program that runs on a computer and/or computers, those skilled in the art will recognize that this disclosure also can or may be implemented in combination with other program modules. Generally, program modules include routines, programs, components, data structures, etc. that perform particular tasks and/or implement particular abstract data types. Moreover, those skilled in the art will appreciate that the inventive methods may be practiced with other computer system configurations, including single-processor or multiprocessor computer systems, mini-computing devices, mainframe computers, as well as personal computers, hand-held computing devices (e.g., mobile phone, electronic tablets or pads, laptop computers, PDAs, . . .), microprocessor-based or programmable consumer or industrial electronics, and the like. The illustrated aspects may also be practiced in distributed computing environments where tasks are performed by remote processing devices that are linked through a communications network. However, some, if not all aspects of this disclosure can be practiced on stand-alone computers. In a distributed computing environment, program modules may be located in both local and remote memory storage devices.

[0134] With reference to FIG. **10**, a suitable environment **1000** for implementing various aspects of this disclosure includes a computer **1012**. The computer **1012** includes a processing unit **1014**, a system memory **1016**, and a system bus **1018**. It is to be appreciated that the computer **1012** can be used in connection with implementing one or more of the systems, components, or methods shown and described in connection with FIGS. **1-9**, or otherwise described herein. The system bus **1018** couples system components including, but not limited to, the system memory **1016** to the processing unit **1014**. The processing unit **1014** can be any of various available processors. Dual microprocessors and other multiprocessor architectures also can be employed as the processing unit **1014**.

[0135] The system bus **1018** can be any of several types of bus structure(s) including the memory bus or memory controller, a peripheral bus or external bus, and/or a local bus using any variety of available bus architectures including, but not limited to, Industrial Standard Architecture (ISA), Micro-Channel Architecture (MSA), Extended ISA (EISA), Intelligent Drive Electronics (IDE), VESA Local Bus (VLB), Peripheral Component Interconnect (PCI), Card Bus, Universal Serial Bus (USB), Advanced Graphics Port (AGP), Personal Computer Memory Card International Association bus (PCMCIA), Firewire (IEEE 1394), and Small Computer Systems Interface (SCSI).

[0136] The system memory **1016** includes volatile memory **1020** and nonvolatile memory **1022**. The basic input/output system (BIOS), containing the basic routines to transfer information between elements within the computer **1012**, such as during start-up, is stored in nonvolatile memory **1022**. By way of illustration, and not limitation, nonvolatile memory **1022** can include read only memory (ROM), programmable ROM (PROM), electrically programmable ROM (EPROM), electrically erasable programmable ROM (EEPROM), flash memory, or nonvolatile random access memory (RAM) (e.g., ferroelectric RAM (FeRAM)). Volatile memory **1020** includes random access memory (RAM), which acts as external cache memory. By way of illustration and not limitation, RAM is available in many forms such as static RAM (SRAM), dynamic RAM (DRAM), synchronous DRAM (SDRAM), double data rate SDRAM (DDR SDRAM), enhanced SDRAM (ESDRAM), Synchlink DRAM (SLDRAM), direct Rambus RAM (DRRAM), direct Rambus dynamic RAM (DRDRAM), and Rambus dynamic RAM.

[0137] Computer **1012** also includes removable/non-removable, volatile/non-volatile computer storage media. FIG. **10** illustrates, for example, a disk storage **1024**. Disk storage **1024** includes, but is not limited to, devices like a magnetic disk drive, floppy disk drive, tape drive, Jaz drive, Zip drive, LS-100 drive, flash memory card, or memory stick. The disk storage **1024** also can include storage media separately or in combination with other storage media including, but not limited to, an optical disk drive such as a compact disk ROM device (CD-ROM), CD recordable drive (CD-R Drive), CD rewritable drive (CD-RW Drive) or a digital versatile disk ROM drive (DVD-ROM). To facilitate connection of the disk storage devices **1024** to the system bus **1018**, a removable or non-removable interface is typically used, such as interface **1026**.

[0138] FIG. **10** also depicts software that acts as an intermediary between users and the basic computer resources described in the suitable operating environment **1000**. Such software includes, for example, an operating system **1028**. Operating system **1028**, which can be stored on disk storage **1024**, acts to control and allocate resources of the computer system **1012**. System applications **1030** take advantage of the management of resources by operating system **1028** through program modules **1032** and program data **1034** stored, e.g., in system memory **1016** or on disk storage **1024**. It is to be appreciated that this disclosure can be implemented with various operating systems or combinations of operating systems.

[0139] A user enters commands or information into the computer **1012** through input device(s) **1036**. Input devices **1036** include, but are not limited to, a pointing device such as a mouse, trackball, stylus, touch pad, keyboard, microphone, joystick, game pad, satellite dish, scanner, TV tuner card, digital camera, digital video camera, web camera, and the like. These and other input devices connect to the processing unit **1014** through the system bus **1018** via interface port(s) **1038**. Interface port(s) **1038** include, for example, a serial port, a parallel port, a game port, and a universal serial bus (USB). Output device(s) **1040** use some of the same type of ports as input device(s) **1036**. Thus, for example, a USB port may be used to provide input to computer **1012**, and to output information from computer **1012** to an output device **1040**. Output adapter **1042** is provided to illustrate that there are some output devices

1040 like monitors, speakers, and printers, among other output devices **1040**, which require special adapters. The output adapters **1042** include, by way of illustration and not limitation, video and sound cards that provide a means of connection between the output device **1040** and the system bus **1018**. It should be noted that other devices and/or systems of devices provide both input and output capabilities such as remote computer(s) **1044**.

[0140] Computer **1012** can operate in a networked environment using logical connections to one or more remote computers, such as remote computer(s) **1044**. The remote computer(s) **1044** can be a personal computer, a server, a router, a network PC, a workstation, a microprocessor based appliance, a peer device or other common network node and the like, and typically includes many or all of the elements described relative to computer **1012**. For purposes of brevity, only a memory storage device **1046** is illustrated with remote computer(s) **1044**. Remote computer(s) **1044** is logically connected to computer **1012** through a network interface **1048** and then physically connected via communication connection **1050**. Network interface **1048** encompasses wire and/or wireless communication networks such as local-area networks (LAN), wide-area networks (WAN), cellular networks, etc. LAN technologies include Fiber Distributed Data Interface (FDDI), Copper Distributed Data Interface (CDDI), Ethernet, Token Ring and the like. WAN technologies include, but are not limited to, point-to-point links, circuit switching networks like Integrated Services Digital Networks (ISDN) and variations thereon, packet switching networks, and Digital Subscriber Lines (DSL).

[0141] Communication connection(s) **1050** refers to the hardware/software employed to connect the network interface **1048** to the bus **1018**. While communication connection **1050** is shown for illustrative clarity inside computer **1012**, it can also be external to computer **1012**. The hardware/software necessary for connection to the network interface **1048** includes, for exemplary purposes only, internal and external technologies such as, modems including regular telephone grade modems, cable modems and DSL modems, ISDN adapters, and Ethernet cards.

[0142] FIG. **11** is a schematic block diagram of a sample-computing environment **1100** (e.g., computing system) with which the subject matter of this disclosure can interact. The system **1100** includes one or more client(s) **1110**. The client(s) **1110** can be hardware and/or software (e.g., threads, processes, computing devices). The system **1100** also includes one or more server(s) **1130**. Thus, system **1100** can correspond to a two-tier client server model or a multi-tier model (e.g., client, middle tier server, data server), amongst other models. The server(s) **1130** can also be hardware and/or software (e.g., threads, processes, computing devices). The servers **1130** can house threads to perform transformations by employing this disclosure, for example. One possible communication between a client **1110** and a server **1130** may be in the form of a data packet transmitted between two or more computer processes.

[0143] The system **1100** includes a communication framework **1150** that can be employed to facilitate communications between the client(s) **1110** and the server(s) **1130**. The client(s) **1110** are operatively connected to one or more client data store(s) **1120** that can be employed to store information local to the client(s) **1110**. Similarly, the server (s) **1130** are operatively connected to one or more server data store(s) **1140** that can be employed to store information local to the servers **1130**.

[0144] It is to be noted that aspects, features, and/or advantages of the disclosed subject matter can be exploited in substantially any wireless telecommunication or radio technology, e.g., Wi-Fi; Gi-Fi; Hi-Fi; Bluetooth; worldwide interoperability for microwave access (WiMAX); enhanced general packet radio service (enhanced GPRS); third generation partnership project (3GPP) long term evolution (LTE); third generation partnership project 2 (3GPP2) ultra mobile broadband (UMB); 3GPP universal mobile telecommunication system (UMTS); high speed packet access (HSPA); high speed downlink packet access (HSDPA); high speed uplink packet access (HSUPA); GSM (global system for mobile communications) EDGE (enhanced data rates for GSM evolution) radio access network (GERAN); UMTS terrestrial radio access network (UTRAN); LTE advanced (LTE-A); etc. Additionally, some or all of the aspects described herein can be exploited in legacy telecommunication technologies, e.g., GSM. In addition, mobile as well non-mobile networks (e.g., the internet, data service network such as internet protocol television (IPTV), etc.) can exploit aspects or features described herein.

[0145] Various aspects or features described herein can be implemented as a method, apparatus, system, or article of manufacture using standard programming or engineering techniques. In addition, various aspects or features disclosed in the subject specification can also be realized through program modules that implement at least one or more of the methods disclosed herein, the program modules being stored in a memory and executed by at least a processor. Other combinations of hardware and software or hardware and firmware can enable or implement aspects described herein, including disclosed method(s). The term "article of manufacture" as used herein is intended to encompass a computer program accessible from any computer-readable device, carrier, or storage media. For example, computer-readable storage media can include but are not limited to magnetic storage devices (e.g., hard disk, floppy disk, magnetic strips, etc.), optical discs (e.g., compact disc (CD), digital versatile disc (DVD), blu-ray disc (BD), etc.), smart cards, and memory devices comprising volatile memory and/or non-volatile memory (e.g., flash memory devices, such as, for example, card, stick, key drive, etc.), or the like. In accordance with various implementations, computer-readable storage media can be non-transitory computer-readable storage media and/or a computer-readable storage device can comprise computer-readable storage media.

[0146] As it is employed in the subject specification, the term "processor" can refer to substantially any computing processing unit or device comprising, but not limited to, single-core processors; single-processors with software multithread execution capability; multi-core processors; multi-core processors with software multithread execution capability; multi-core processors with hardware multithread technology; parallel platforms; and parallel platforms with distributed shared memory. A processor can be or can comprise, for example, multiple processors that can include distributed processors or parallel processors in a single machine or multiple machines. Additionally, a processor can comprise or refer to an integrated circuit, an application specific integrated circuit (ASIC), a digital signal processor (DSP), a programmable gate array (PGA), a field PGA

(FPGA), a programmable logic controller (PLC), a complex programmable logic device (CPLD), a state machine, a discrete gate or transistor logic, discrete hardware components, or any combination thereof designed to perform the functions described herein. Further, processors can exploit nano-scale architectures such as, but not limited to, molecular and quantum-dot based transistors, switches and gates, in order to optimize space usage or enhance performance of user equipment. A processor may also be implemented as a combination of computing processing units.

[0147] A processor can facilitate performing various types of operations, for example, by executing computer-executable instructions. When a processor executes instructions to perform operations, this can include the processor performing (e.g., directly performing) the operations and/or the processor indirectly performing operations, for example, by facilitating (e.g., facilitating operation of), directing, controlling, or cooperating with one or more other devices or components to perform the operations. In some implementations, a memory can store computer-executable instructions, and a processor can be communicatively coupled to the memory, wherein the processor can access or retrieve computer-executable instructions from the memory and can facilitate execution of the computer-executable instructions to perform operations.

[0148] In certain implementations, a processor can be or can comprise one or more processors that can be utilized in supporting a virtualized computing environment or virtualized processing environment. The virtualized computing environment may support one or more virtual machines representing computers, servers, or other computing devices. In such virtualized virtual machines, components such as processors and storage devices may be virtualized or logically represented.

[0149] In the subject specification, terms such as "store," "storage," "data store," data storage," "database," and substantially any other information storage component relevant to operation and functionality of a component are utilized to refer to "memory components," entities embodied in a "memory," or components comprising a memory. It is to be appreciated that memory and/or memory components described herein can be either volatile memory or nonvolatile memory, or can include both volatile and nonvolatile memory.

[0150] By way of illustration, and not limitation, nonvolatile memory can include read only memory (ROM), programmable ROM (PROM), electrically programmable ROM (EPROM), electrically erasable ROM (EEPROM), or flash memory. Volatile memory can include random access memory (RAM), which acts as external cache memory. By way of illustration and not limitation, RAM is available in many forms such as synchronous RAM (SRAM), dynamic RAM (DRAM), synchronous DRAM (SDRAM), double data rate SDRAM (DDR SDRAM), enhanced SDRAM (ESDRAM), Synchlink DRAM (SLDRAM), and direct Rambus RAM (DRRAM). Additionally, the disclosed memory components of systems or methods herein are intended to comprise, without being limited to comprising, these and any other suitable types of memory.

[0151] As used in this application, the terms "component", "system", "platform", "framework", "layer", "interface", "agent", and the like, can refer to and/or can include a computer-related entity or an entity related to an operational machine with one or more specific functionalities. The entities disclosed herein can be either hardware, a combination of hardware and software, software, or software in execution. For example, a component may be, but is not limited to being, a process running on a processor, a processor, an object, an executable, a thread of execution, a program, and/or a computer. By way of illustration, both an application running on a server and the server can be a component. One or more components may reside within a process and/or thread of execution and a component may be localized on one computer and/or distributed between two or more computers.

[0152] In another example, respective components can execute from various computer readable media having various data structures stored thereon. The components may communicate via local and/or remote processes such as in accordance with a signal having one or more data packets (e.g., data from one component interacting with another component in a local system, distributed system, and/or across a network such as the Internet with other systems via the signal). As another example, a component can be an apparatus with specific functionality provided by mechanical parts operated by electric or electronic circuitry, which is operated by a software or firmware application executed by a processor. In such a case, the processor can be internal or external to the apparatus and can execute at least a part of the software or firmware application. As yet another example, a component can be an apparatus that provides specific functionality through electronic components without mechanical parts, wherein the electronic components can include a processor or other means to execute software or firmware that confers at least in part the functionality of the electronic components. In an aspect, a component can emulate an electronic component via a virtual machine, e.g., within a cloud computing system.

[0153] In addition, the term "or" is intended to mean an inclusive "or" rather than an exclusive "or." That is, unless specified otherwise, or clear from context, "X employs A or B" is intended to mean any of the natural inclusive permutations. That is, if X employs A; X employs B; or X employs both A and B, then "X employs A or B" is satisfied under any of the foregoing instances. Moreover, articles "a" and "an" as used in the subject specification and annexed drawings should generally be construed to mean "one or more" unless specified otherwise or clear from context to be directed to a singular form.

[0154] Moreover, terms like "user equipment" (UE), "mobile station," "mobile," "wireless device," "wireless communication device," "subscriber station," "subscriber equipment," "access terminal," "terminal," "handset," and similar terminology are used herein to refer to a wireless device utilized by a subscriber or user of a wireless communication service to receive or convey data, control, voice, video, sound, gaming, or substantially any data-stream or signaling-stream. The foregoing terms are utilized interchangeably in the subject specification and related drawings. Likewise, the terms "access point" (AP), "base station," "node B," "evolved node B" (eNode B or eNB), "home node B" (HNB), "home access point" (HAP), and the like are utilized interchangeably in the subject application, and refer to a wireless network component or appliance that serves and receives data, control, voice, video, sound, gaming, or substantially any data-stream or signaling-stream from a set of subscriber stations. Data and signaling streams can be packetized or frame-based flows.

[0155] Furthermore, the terms "user," "subscriber," "customer," "consumer," "owner," "agent," and the like are employed interchangeably throughout the subject specification, unless context warrants particular distinction(s) among the terms. It should be appreciated that such terms can refer to human entities or automated components supported through artificial intelligence (e.g., a capacity to make inference based on complex mathematical formalisms), which can provide simulated vision, sound recognition and so forth.

[0156] As used herein, the terms "example," "exemplary," and/or "demonstrative" are utilized to mean serving as an example, instance, or illustration. For the avoidance of doubt, the subject matter disclosed herein is not limited by such examples. In addition, any aspect or design described herein as an "example," "exemplary," and/or "demonstrative" is not necessarily to be construed as preferred or advantageous over other aspects or designs, nor is it meant to preclude equivalent exemplary structures and techniques known to those of ordinary skill in the art. Furthermore, to the extent that the terms "includes," "has," "contains," and other similar words are used in either the detailed description or the claims, such terms are intended to be inclusive, in a manner similar to the term "comprising" as an open transition word, without precluding any additional or other elements.

[0157] It is to be appreciated and understood that components (e.g., communication device, virtual assistant, communication management component, communication network, processor component, data store, . . .), as described with regard to a particular system or method, can include the same or similar functionality as respective components (e.g., respectively named components or similarly named components) as described with regard to other systems or methods disclosed herein.

[0158] What has been described above includes examples of systems and methods that provide advantages of the disclosed subject matter. It is, of course, not possible to describe every conceivable combination of components or methods for purposes of describing the disclosed subject matter, but one of ordinary skill in the art may recognize that many further combinations and permutations of the disclosed subject matter are possible. Furthermore, to the extent that the terms "includes," "has," "possesses," and the like are used in the detailed description, claims, appendices and drawings such terms are intended to be inclusive in a manner similar to the term "comprising" as "comprising" is interpreted when employed as a transitional word in a claim.

What is claimed is:

1. A method, comprising:

analyzing, by a system comprising a processor, information relating an interaction between a virtual assistant device and a device associated with a user identity to determine a context of the interaction; and

managing, by the system, the virtual assistant device based on the context of the interaction, wherein the managing comprises managing a speed of a presentation of audible words by the virtual assistant device to the device associated with the user identity based on the context.

2. The method of claim **1**, wherein the virtual assistant device is a first virtual assistant device, and wherein the method further comprises:

determining, by the system, that a second virtual assistant device is to communicate event information relating to an event associated with the user identity, wherein the second virtual assistant device is remote from the first virtual assistant device and is associated with the user identity; and

in response to determining that the second virtual assistant device is to communicate the event information, determining, by the system, that a portion of the event information is to be communicated, in a non-verbal form, between the second virtual assistant device and the first virtual assistance device.

3. The method of claim **2**, wherein the determining that the second virtual assistant device is to communicate the event information comprises determining that the second virtual assistant device is to communicate the event information based on at least one attribute associated with the second virtual assistant device, and wherein the at least one attribute is from a group of attributes comprising a performance attribute associated with the second virtual assistant device, a network attribute associated with the second virtual assistant device, an identifier presented by the second virtual assistant device, and an attribute associated with the context.

4. The method of claim **2**, further comprising:

managing, by the system, a communication speed of the communicating of the portion of the event information between the second virtual assistant device and the first virtual assistance device to communicate the portion of the event information between the second virtual assistant device and the first virtual assistance device at a faster speed than the speed of the presentation of the audible words by the first virtual assistant device to the device.

5. The method of claim **2**, wherein the portion of the event information is a first portion of the event information, wherein the first portion of the event information comprises a second portion of the event information, and wherein the method further comprises:

initiating, by the system, presenting the second portion of the event information via an interface associated with the second virtual assistant device.

6. The method of claim **1**, wherein the information relating the interaction is first information relating to the interaction, wherein the context is a first context, and wherein the method further comprises:

determining, by the system, a second context of the interaction based on the first information and second information relating to the interaction.

7. The method of claim **6**, wherein the device is a first device, wherein the user identity is a first user identity, and wherein the method further comprises:

based on the second context:

determining, by the system, that the virtual assistant device is to suspend the presentation of the audible words to the device, wherein the audible words relate to an event; and

determining, by the system, that event information relating to the event is to be communicated between the first device associated with the first user identity and a second device associated with a second user identity.

8. The method of claim **7**, wherein the event information comprises a first portion of the event information and a second portion of the event information, and wherein the method further comprises:

during a first time period, tracking, by the system, communication of the first portion of the event information between the virtual assistant device and the device associated with the user identity, wherein the first portion of the event information comprises the audible words relating to the event;

during a second time period, in response to determining that the second portion of the event information is to be communicated between the first device and the second device, communicating, by the system, a third portion of the event information to the second device or an interface associated with the second identity to facilitate providing a status of the interaction to the second device or the interface, wherein the third portion of the event information is determined based on the tracking of the communication of the first portion of the event information between the virtual assistant device and the device.

9. The method of claim **6**, wherein the virtual assistant device is a first virtual assistant device, wherein the audible words relate to an event, wherein a second virtual assistant device is remote from the first virtual assistant device and is associated with the device that is associated with the user identity, and wherein the method further comprises:

based on the second context:

determining, by the system, that a portion of event information relating to the event is to be communicated, in a non-verbal form, between the second virtual assistant device and the first virtual assistance device simultaneously with the presentation of the audible words by the first virtual assistant device to the device.

10. The method of claim **6**, wherein the second context occurs at a second time subsequent to a first time associated with the first context, wherein the second context relates to at least one circumstance of a group of circumstances comprising a consent is to be obtained from the device associated with the user identity, a length of time that has transpired since receiving a response to an inquiry from the device, a number of times that the inquiry has been communicated to the device without the response being received by the virtual assistant device from the device, a first portion of event information relating to an event associated with the user identity is to be obtained in audible word form from the device, and a second portion of the event information is able to be communicated in a non-verbal form between virtual assistant devices, comprising the virtual assistant device, and

wherein the managing of the virtual assistant device comprises, at the second time, managing the virtual assistant device based on the second context.

11. The method of claim **1**, further comprising:

based on the context, modifying, by the system, at least one parameter relating to the presentation of the audible words by the virtual assistant device to the device to modify at least one characteristic of the presentation of the audible words.

12. The method of claim **11**, wherein the at least one characteristic is selected from a group of characteristics comprising the speed of the presentation of the audible words by the virtual assistant device to the device, a tone of an emulated voice of the virtual assistant device in connection with the presentation of the audible words, an inflection of the emulated voice of the virtual assistant device in connection with the presentation of the audible words, and a cadence of the emulated voice of the virtual assistant device in connection with the presentation of the audible words.

13. A system, comprising:

a processor; and

a memory that stores executable instructions that, when executed by the processor, facilitate performance of operations, comprising:

analyzing information relating an interaction between a virtual assistant device and a device associated with a user identity to determine a context of the interaction; and

controlling operation of the virtual assistant device based on the context of the interaction, wherein the controlling comprises controlling, based on the context, a rate of a presentation of verbal words by the virtual assistant device to the device.

14. The system of claim **13**, wherein the virtual assistant device is a first virtual assistant device, and wherein the operations comprise:

determining that a second virtual assistant device is to communicate event data relating to an event associated with the user identity, wherein the second virtual assistant device is remote from the first virtual assistant device and is associated with the user identity; and

in response to determining that the second virtual assistant device is to communicate the event data, determining that a portion of the event data is to be communicated, in a non-verbal form, between the second virtual assistant device and the first virtual assistance device.

15. The system of claim **14**, wherein the rate is a first rate, and wherein the operations comprise:

controlling a second rate of the communication of the portion of the event data between the second virtual assistant device and the first virtual assistance device to communicate the portion of the event data between the second virtual assistant device and the first virtual assistance device at a higher rate than the first rate of the presentation of the verbal words by the first virtual assistant device to the device.

16. The system of claim **13**, wherein the information relating the interaction is first information relating to the interaction, wherein the context is a first context, and wherein the operations comprise:

determining a second context of the interaction based on the first information and second information relating to the interaction.

17. The system of claim **16**, wherein the device is a first device and the user identity is a first user identity, and wherein the operations comprise:

based on the second context:

determining that the virtual assistant device is to discontinue the presentation of the verbal words to the device, wherein the verbal words relate to an event; and

determining that event data relating to the event is to be communicated between the first device associated with the first user identity and a second device associated with a second user identity, wherein at

least a portion of the event data is communicated, in verbal word form, between the first device and the second device.

18. The system of claim **13**, wherein the operations comprise:

based on the context, adjusting at least one parameter relating to the presentation of the verbal words by the virtual assistant device to the device to adjust at least one attribute of the presentation of the verbal words, wherein the at least one attribute is selected from a group of attributes comprising the rate of the presentation of the verbal words by the virtual assistant device to the device, a tone of a virtual voice of the virtual assistant device in connection with the presentation of the verbal words, an inflection of the virtual voice of the virtual assistant device in connection with the presentation of the verbal words, and a cadence of the virtual voice of the virtual assistant device in connection with the presentation of the verbal words.

19. A machine-readable storage medium, comprising executable instructions that, when executed by a processor, facilitate performance of operations, comprising:

analyzing data relating an interaction between a virtual assistant device and a device associated with a user identity to determine a context of the interaction; and

managing operation of the virtual assistant device based on the context of the interaction, wherein the managing comprises managing, based on the context, a speed of a presentation of verbal words by the virtual assistant device to the device.

20. The machine-readable storage medium of claim **19**, wherein the operations further comprise:

based on the context, modifying at least one parameter relating to the presentation of the verbal words by the virtual assistant device to the device to modify at least one characteristic of the presentation of the verbal words, wherein the at least one characteristic is selected from a group of characteristics comprising the speed of the presentation of the verbal words by the virtual assistant device to the device, a tone of a virtual voice of the virtual assistant device in connection with the presentation of the verbal words, an inflection of the virtual voice of the virtual assistant device in connection with the presentation of the verbal words, and a cadence of the virtual voice of the virtual assistant device in connection with the presentation of the verbal words.

* * * * *