US 20200136527A1

(19) United States

(12) Patent Application Publication

Ng et al.

(10) Pub. No.: US 2020/0136527 A1

(43) Pub. Date: Apr. 30, 2020

(54) **MEMS ACTUATION SYSTEMS AND METHODS**

(71) Applicant: **MEMS Drive, Inc.**, Pasadena, CA (US)

(72) Inventors: **Matthew Ng**, Rosemead, CA (US); **Xiaolei Liu**, South Pasadena, CA (US); **Guiqin Wang**, Arcadia, CA (US)

(21) Appl. No.: **16/730,653**

(22) Filed: **Dec. 30, 2019**

Related U.S. Application Data

(63) Continuation of application No. 15/699,007, filed on Sep. 8, 2017, now Pat. No. 10,523,135.

(60) Provisional application No. 62/393,436, filed on Sep. 12, 2016, provisional application No. 62/393,419, filed on Sep. 12, 2016, provisional application No. 62/419,117, filed on Nov. 8, 2016, provisional application No. 62/419,814, filed on Nov. 9, 2016, provisional application No. 62/420,960, filed on Nov. 11, 2016.

Publication Classification

(51) **Int. Cl.**

H02N 1/00	(2006.01)
H02N 2/02	(2006.01)
H01L 41/09	(2006.01)
H01L 41/25	(2006.01)
G02B 27/64	(2006.01)
B81B 7/00	(2006.01)
H01L 41/053	(2006.01)
B81B 3/00	(2006.01)
H02N 1/06	(2006.01)
B81C 1/00	(2006.01)

(52) **U.S. Cl.**

CPC ***H02N 1/008*** (2013.01); *G02B 7/10* (2013.01); ***H01L 41/0953*** (2013.01); ***H01L 41/25*** (2013.01); ***G02B 27/646*** (2013.01); ***B81B 7/0016*** (2013.01); ***H01L 41/0536*** (2013.01); ***B81B 3/0035*** (2013.01); ***H02N 2/02*** (2013.01); ***H02N 1/06*** (2013.01); ***B81C 1/00301*** (2013.01); ***B81B 3/0072*** (2013.01); ***B81B 3/0062*** (2013.01); ***B81B 3/0051*** (2013.01); ***B81B 3/0037*** (2013.01); ***B81B 3/0021*** (2013.01); *B81B 2203/053* (2013.01); ***H02N 2/028*** (2013.01)

(57) **ABSTRACT**

A method of manufacturing a micro-electrical-mechanical system (MEMS) assembly includes mounting a micro-electrical-mechanical system (MEMS) actuator to a metal plate. An image sensor assembly is mounted to the micro-electrical-mechanical system (MEMS) actuator. The image sensor assembly is electrically coupled to the micro-electrical-mechanical system (MEMS) actuator, thus forming a micro-electrical-mechanical system (MEMS) subassembly.

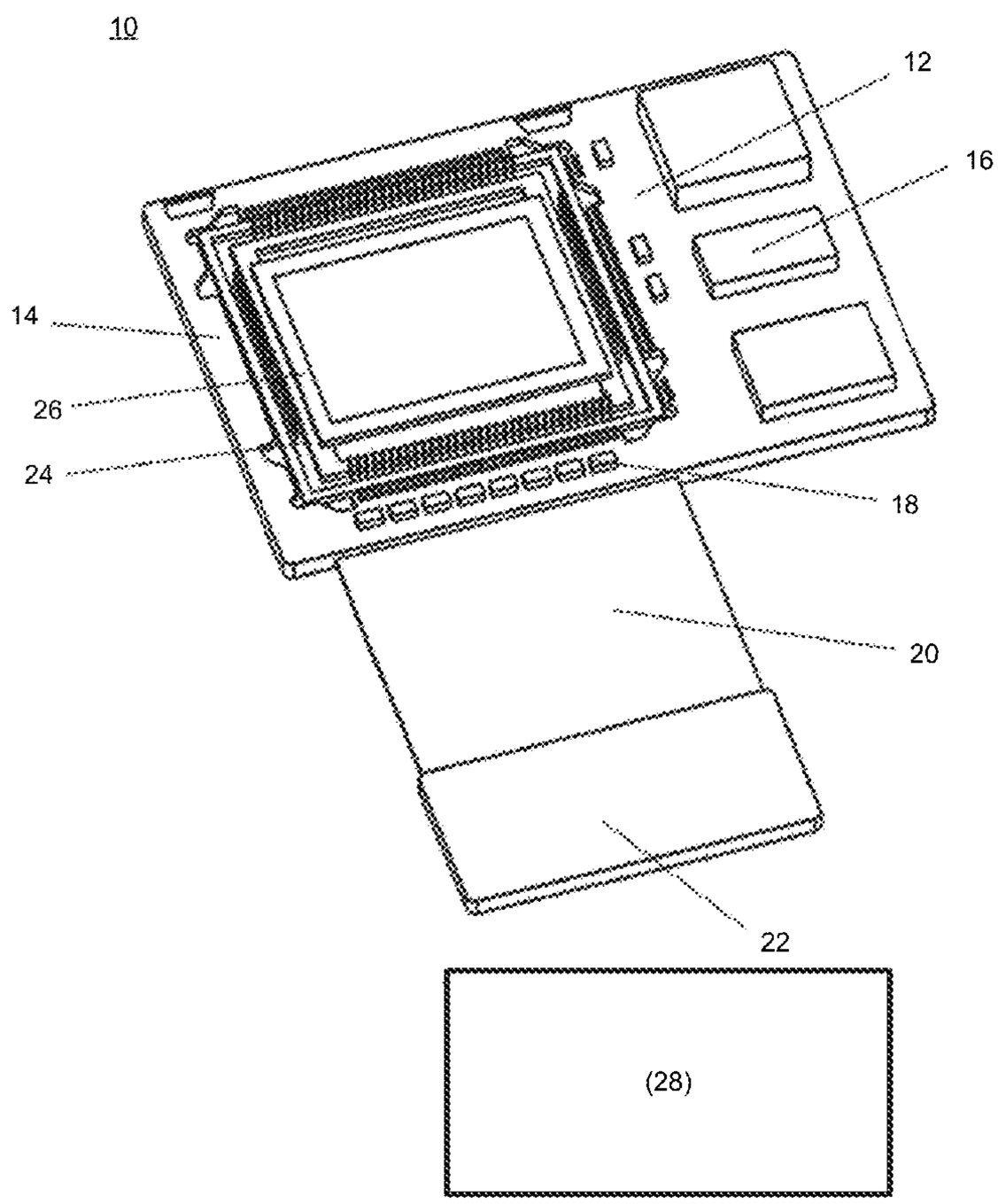

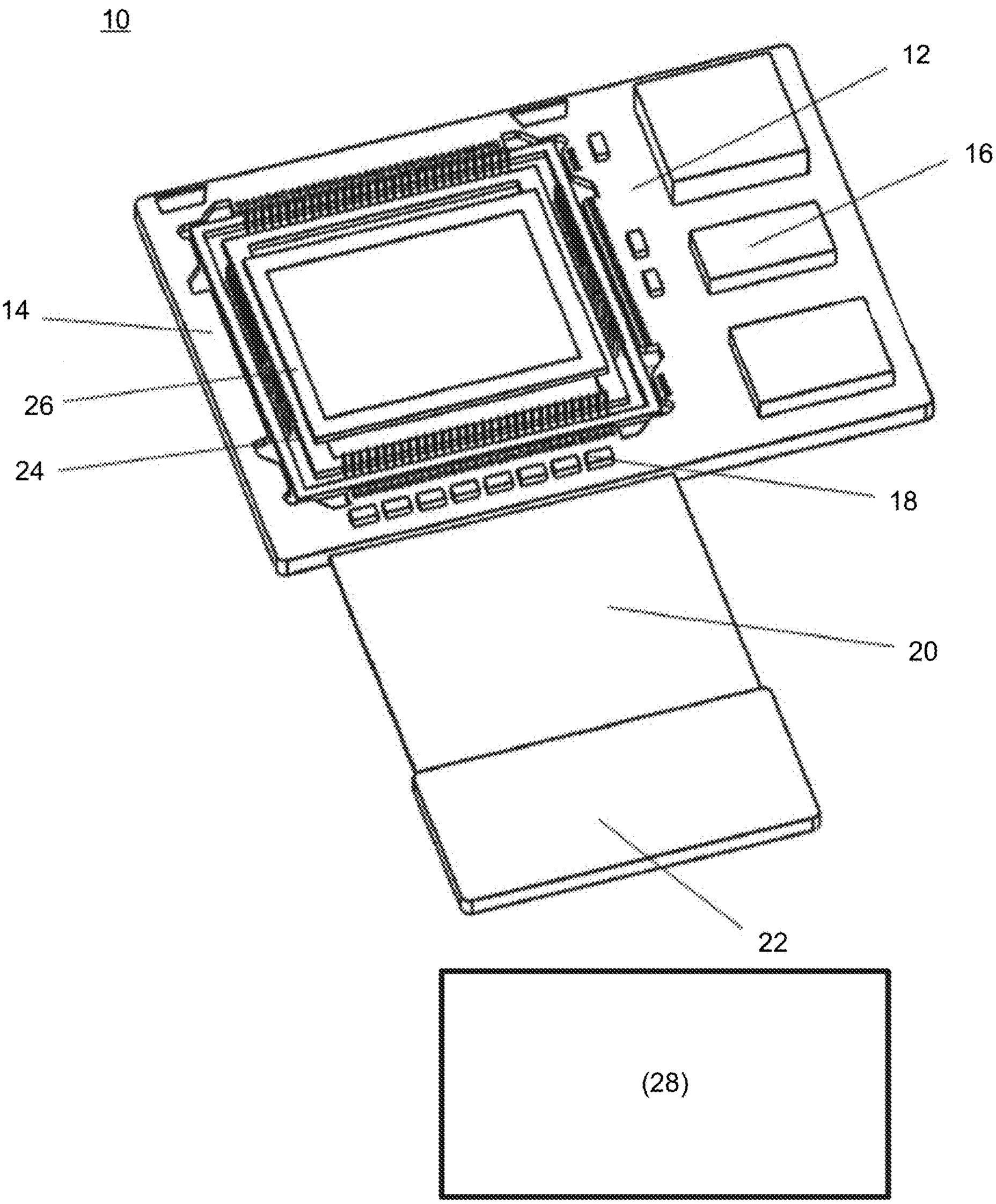

FIG. 1

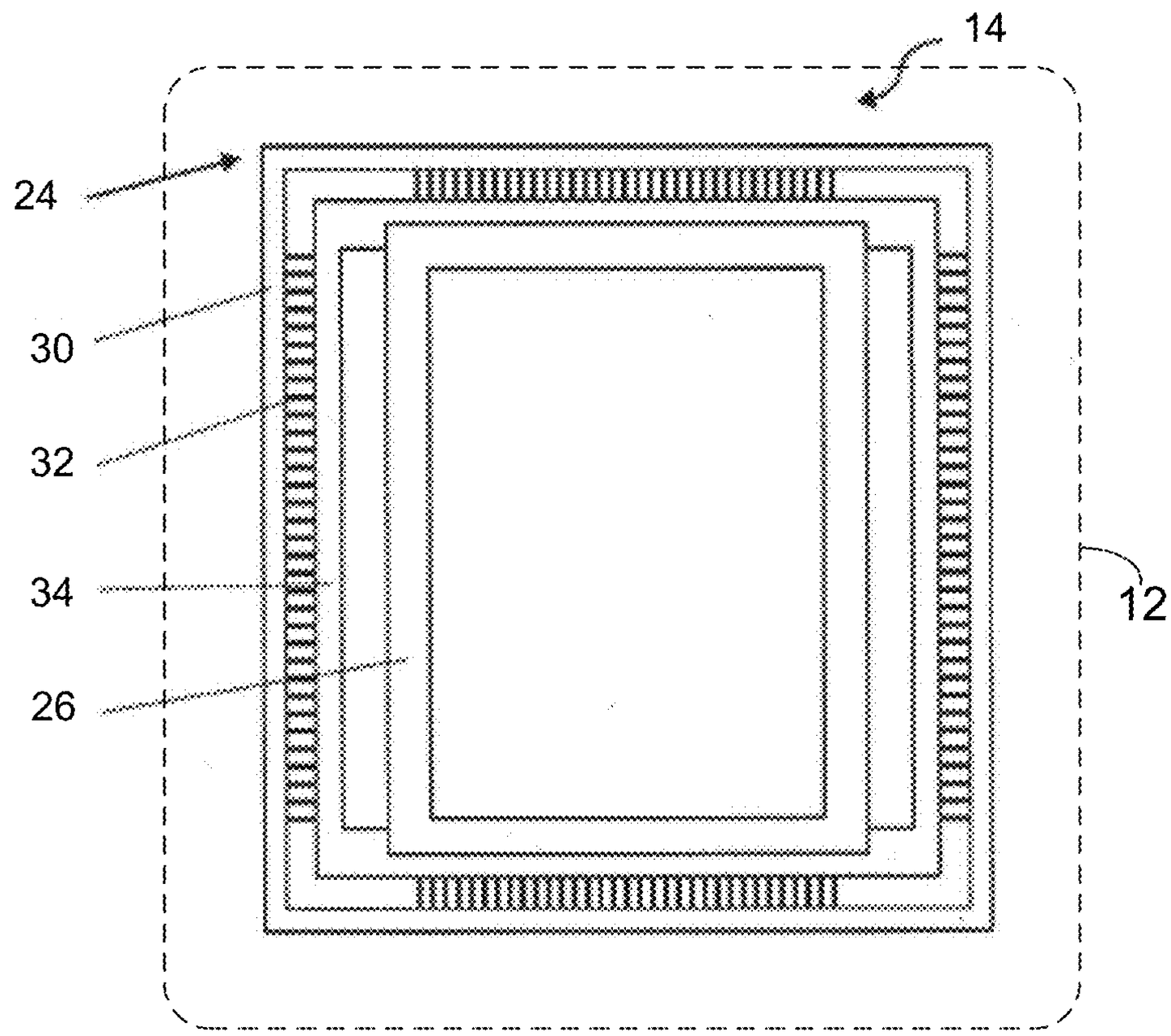

FIG. 2A

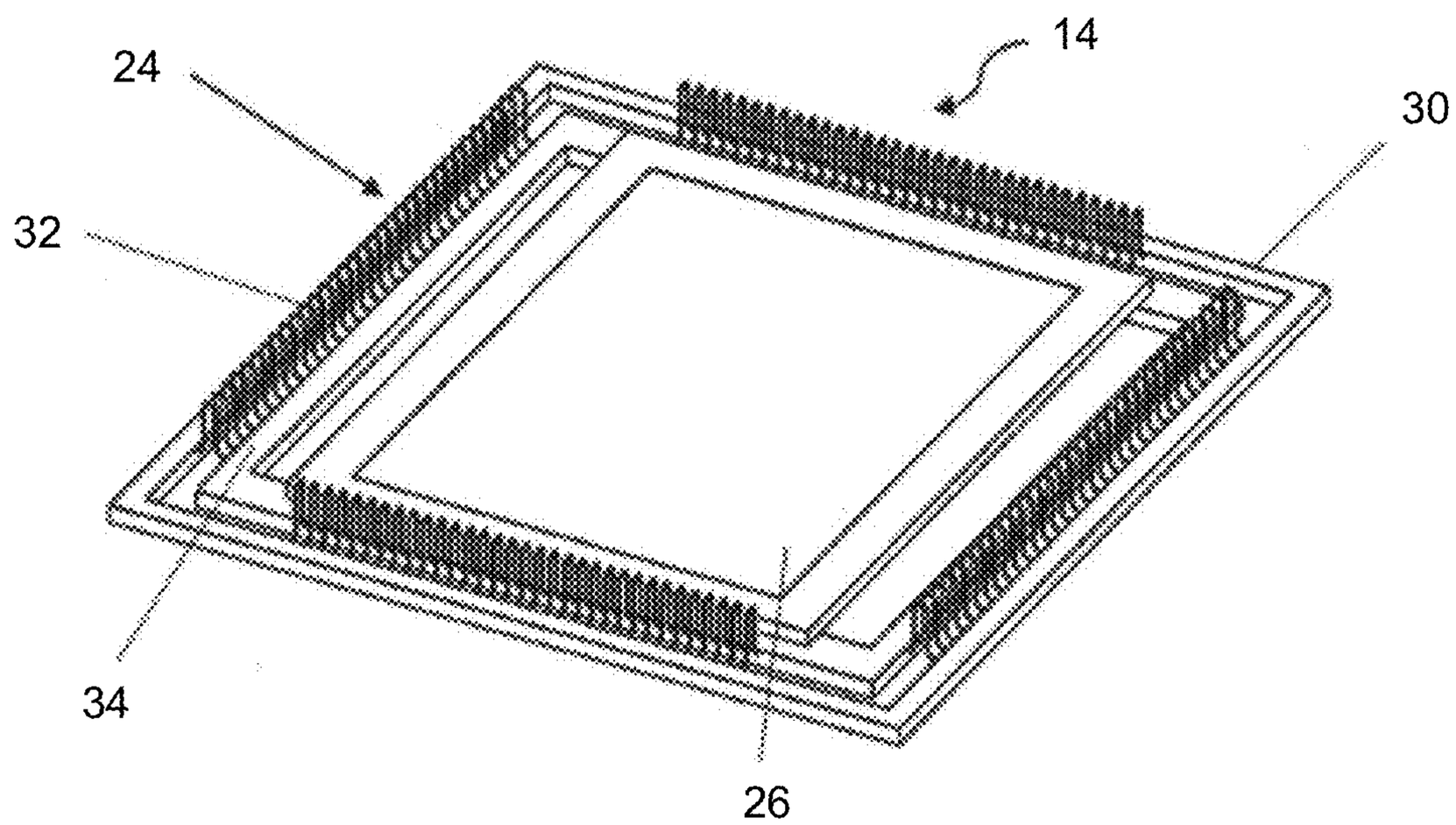

FIG. 2B

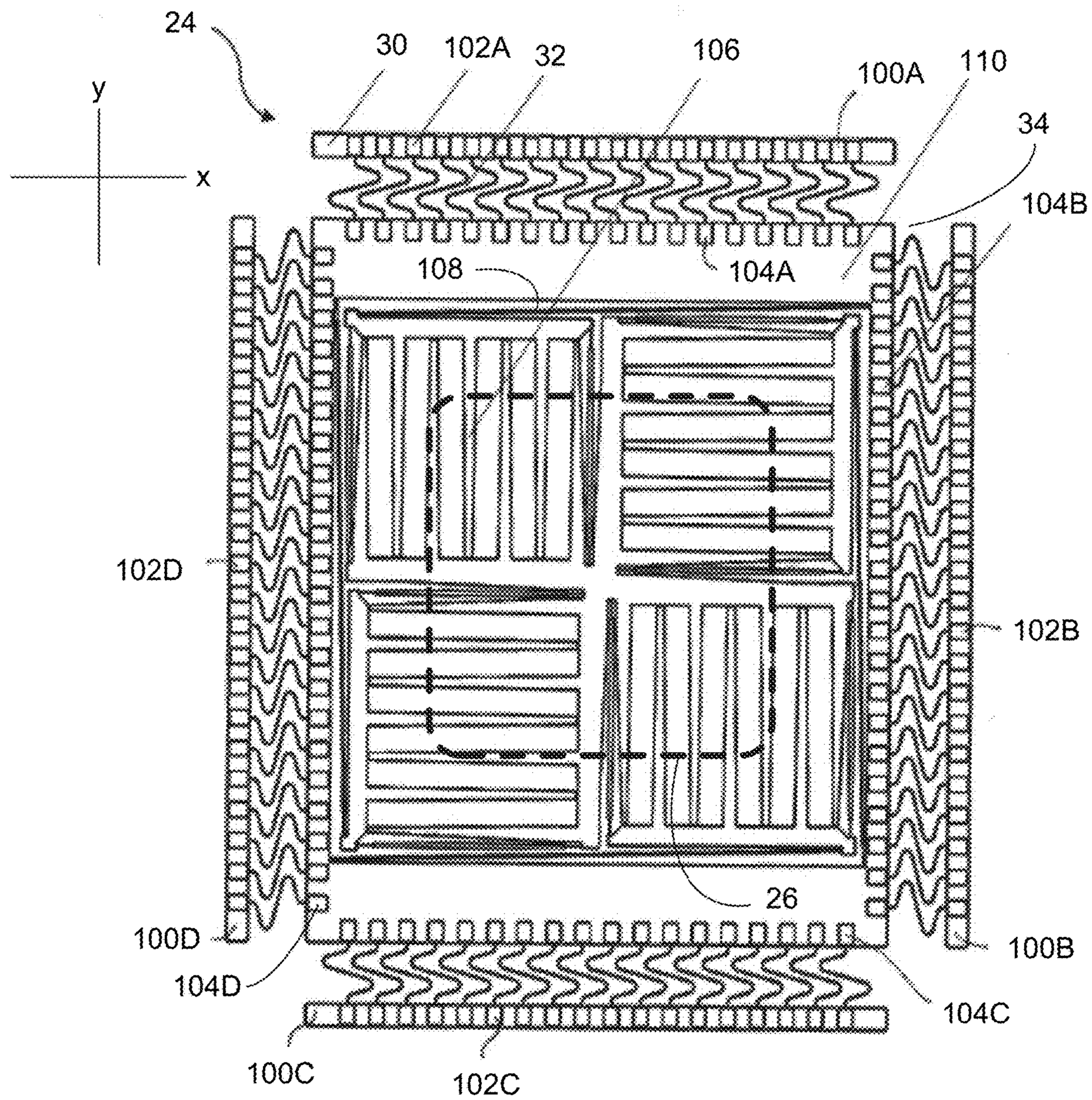
24
30
102A
32
106
100A
110
34
104B
y
x
108
104A
102D
102B
26
100D
100B
104D
104C
100C
102C

FIG. 3A

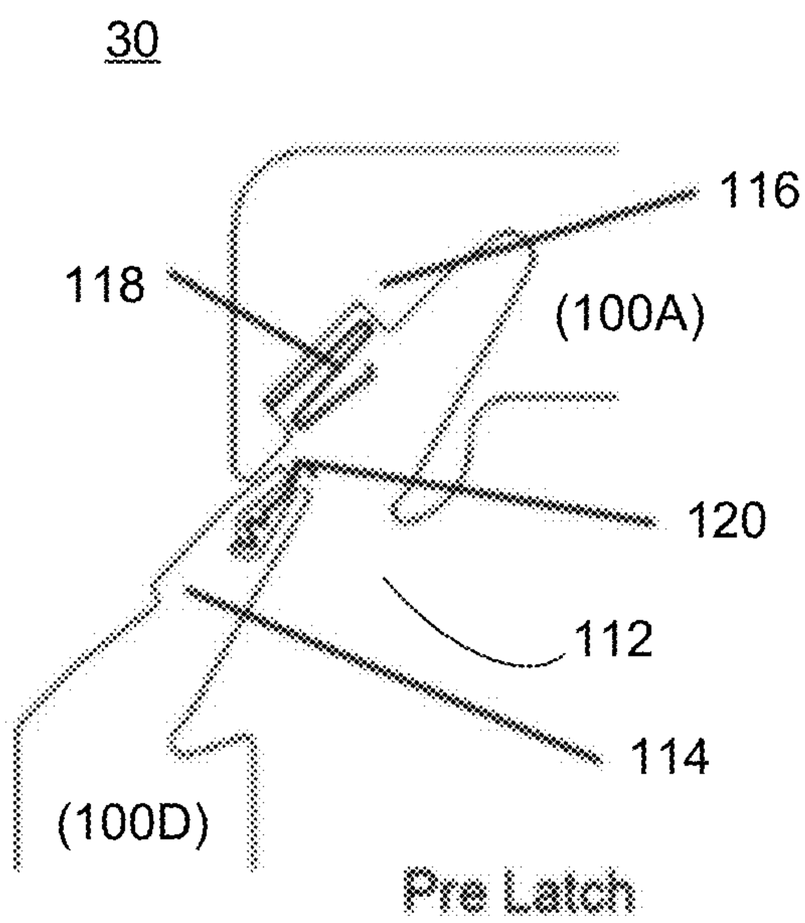
30
116
118
(100A)
120
112
114
(100D)
Pre Latch

FIG. 3B

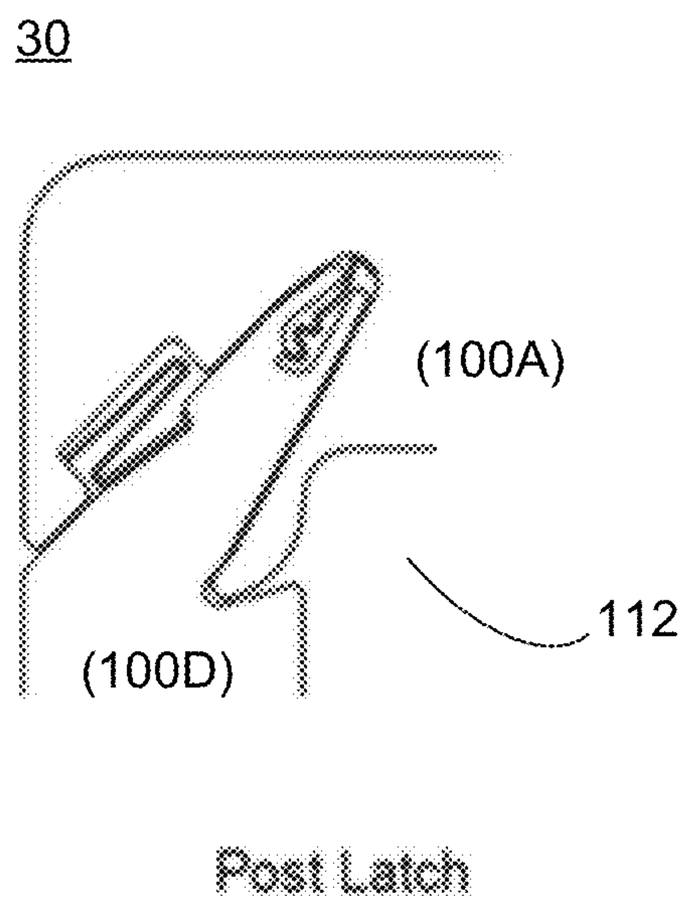
30
(100A)
112
(100D)
Post Latch

FIG. 3C

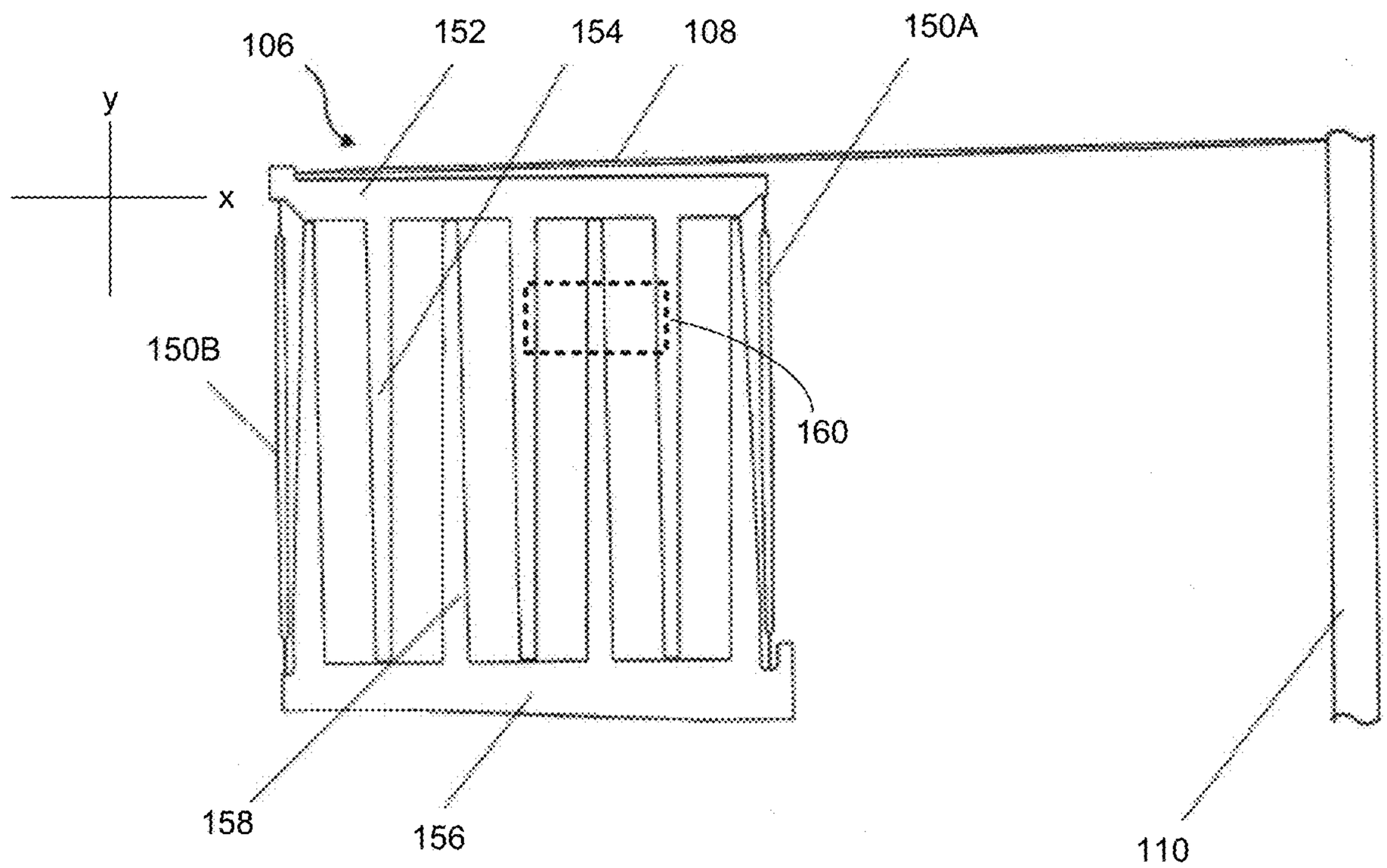

FIG. 4

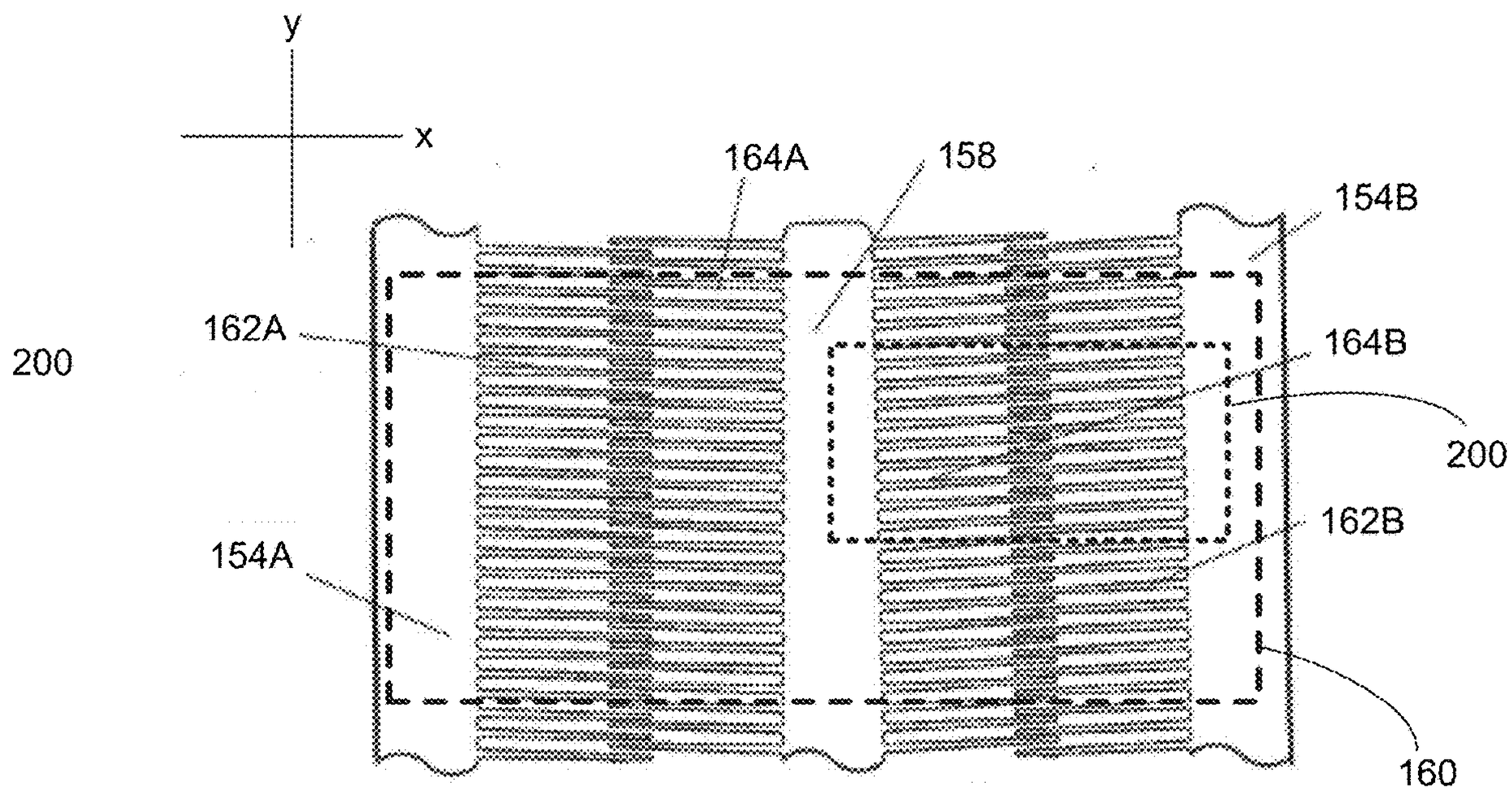

FIG. 5

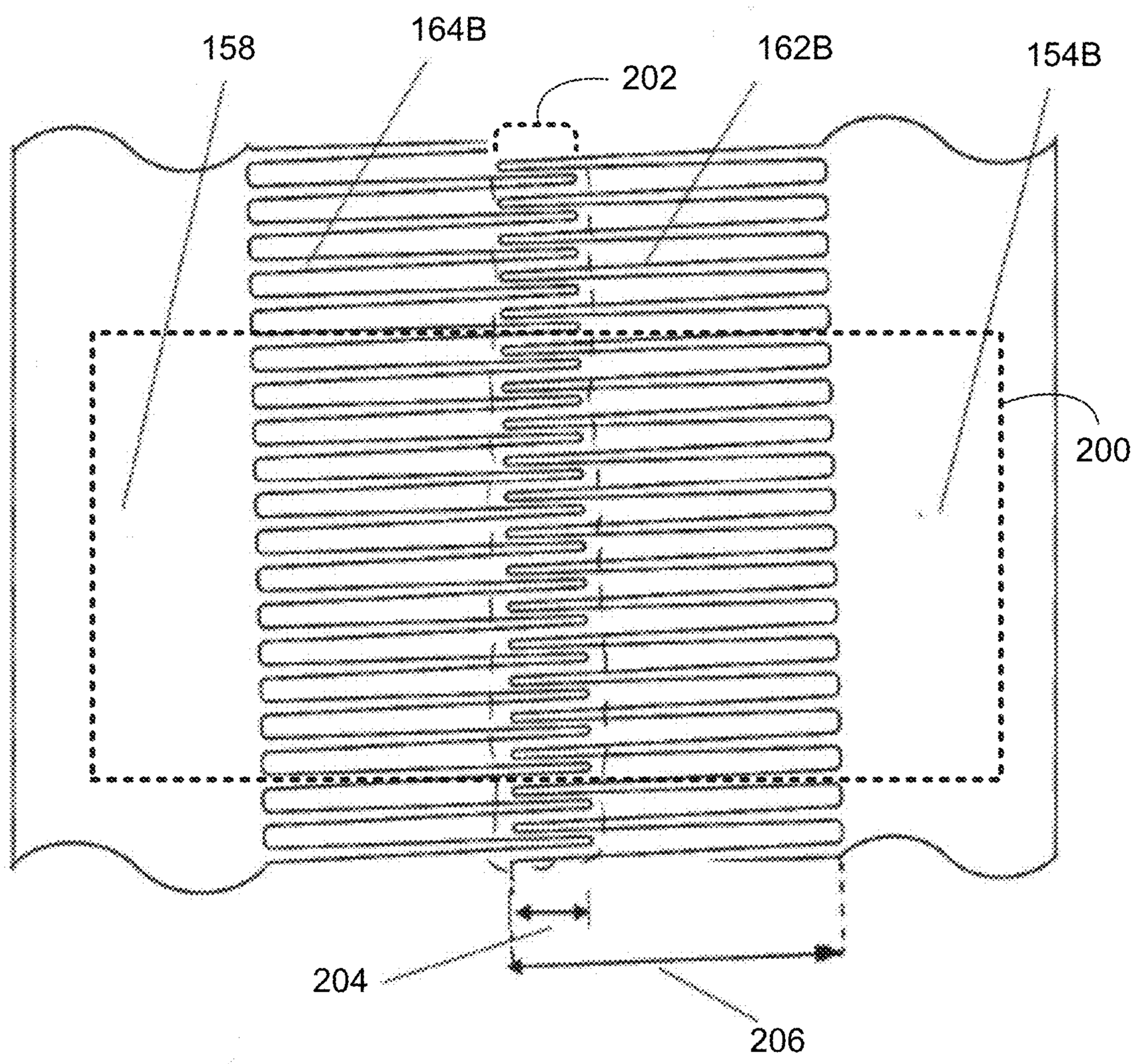

FIG. 6A

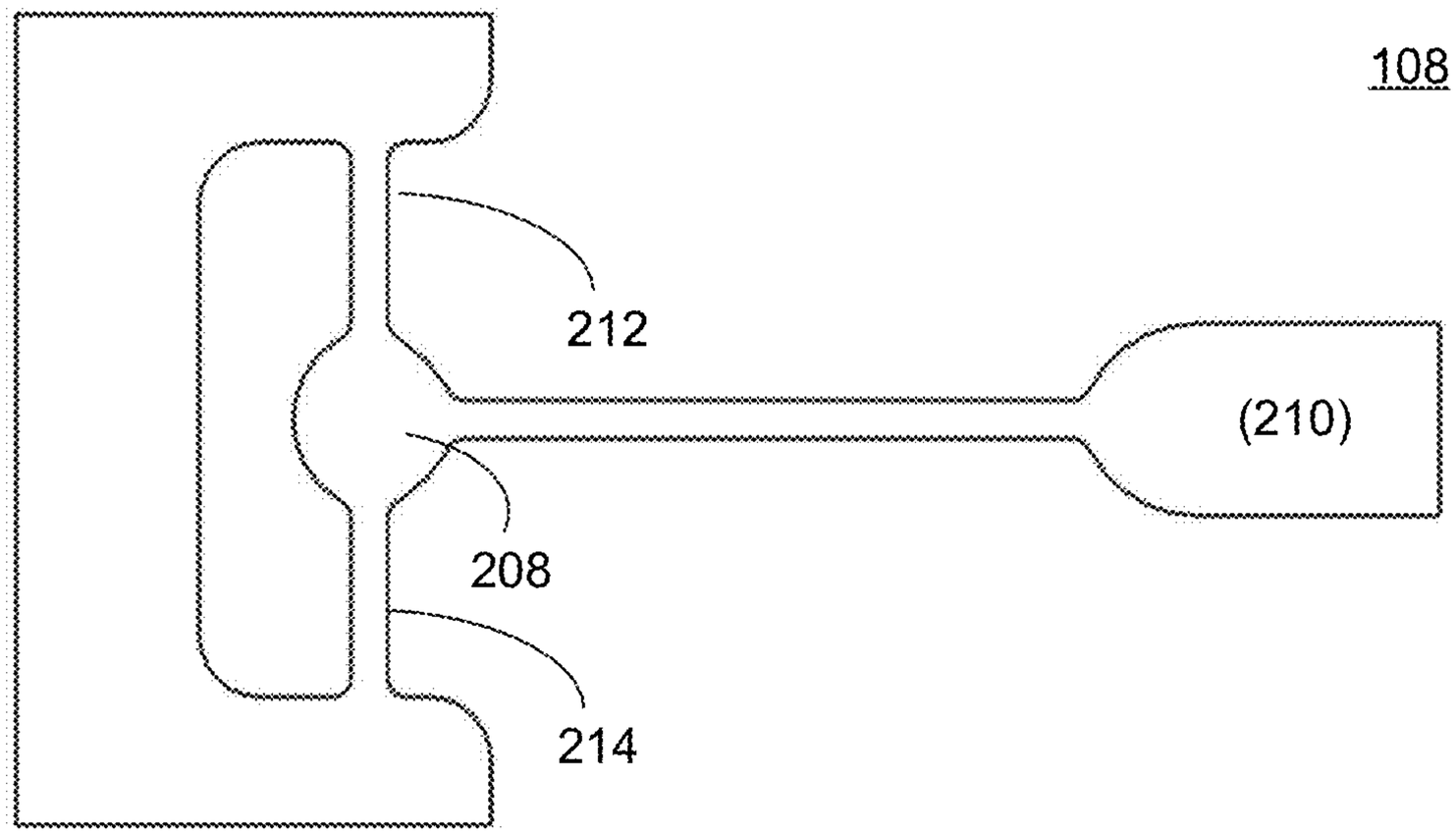

FIG. 6B

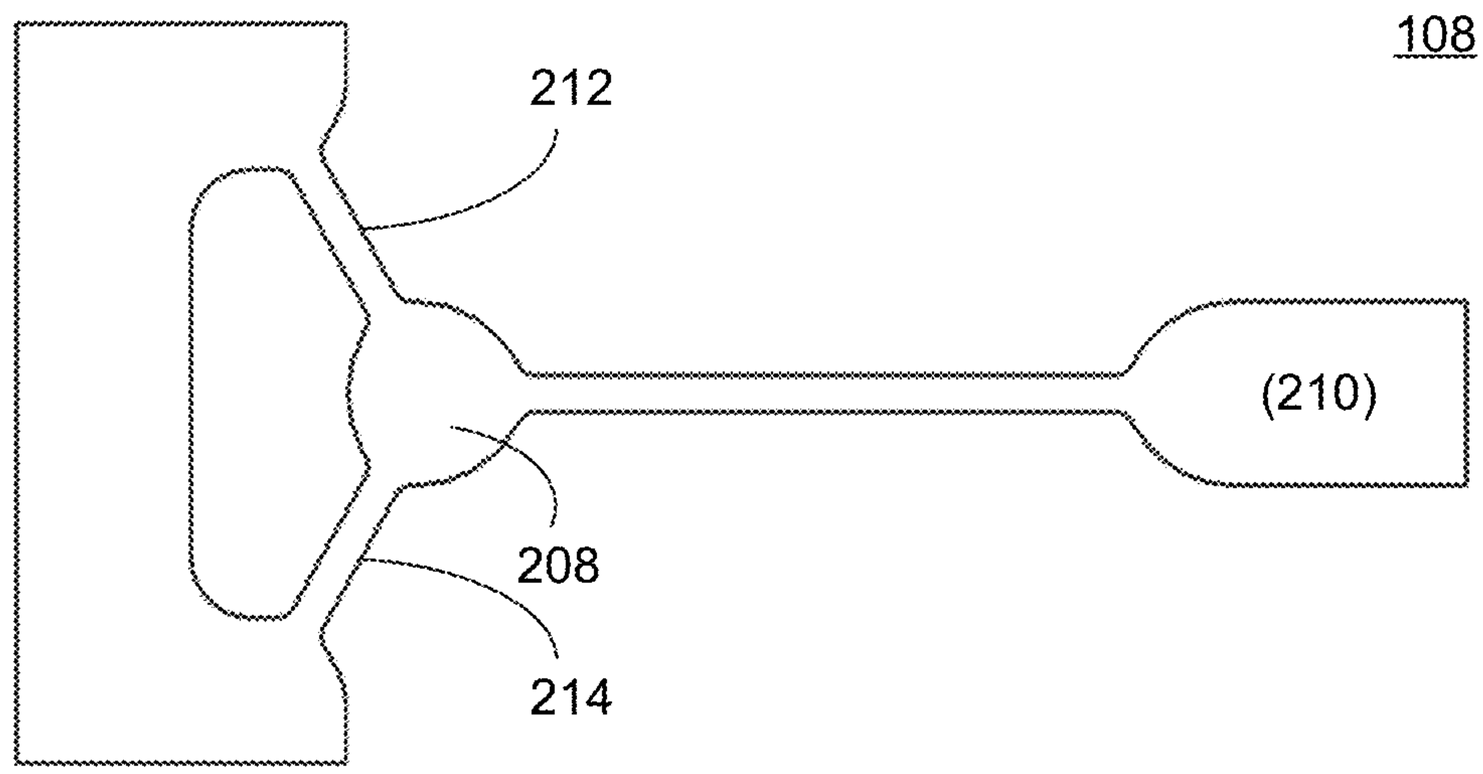

FIG. 6C

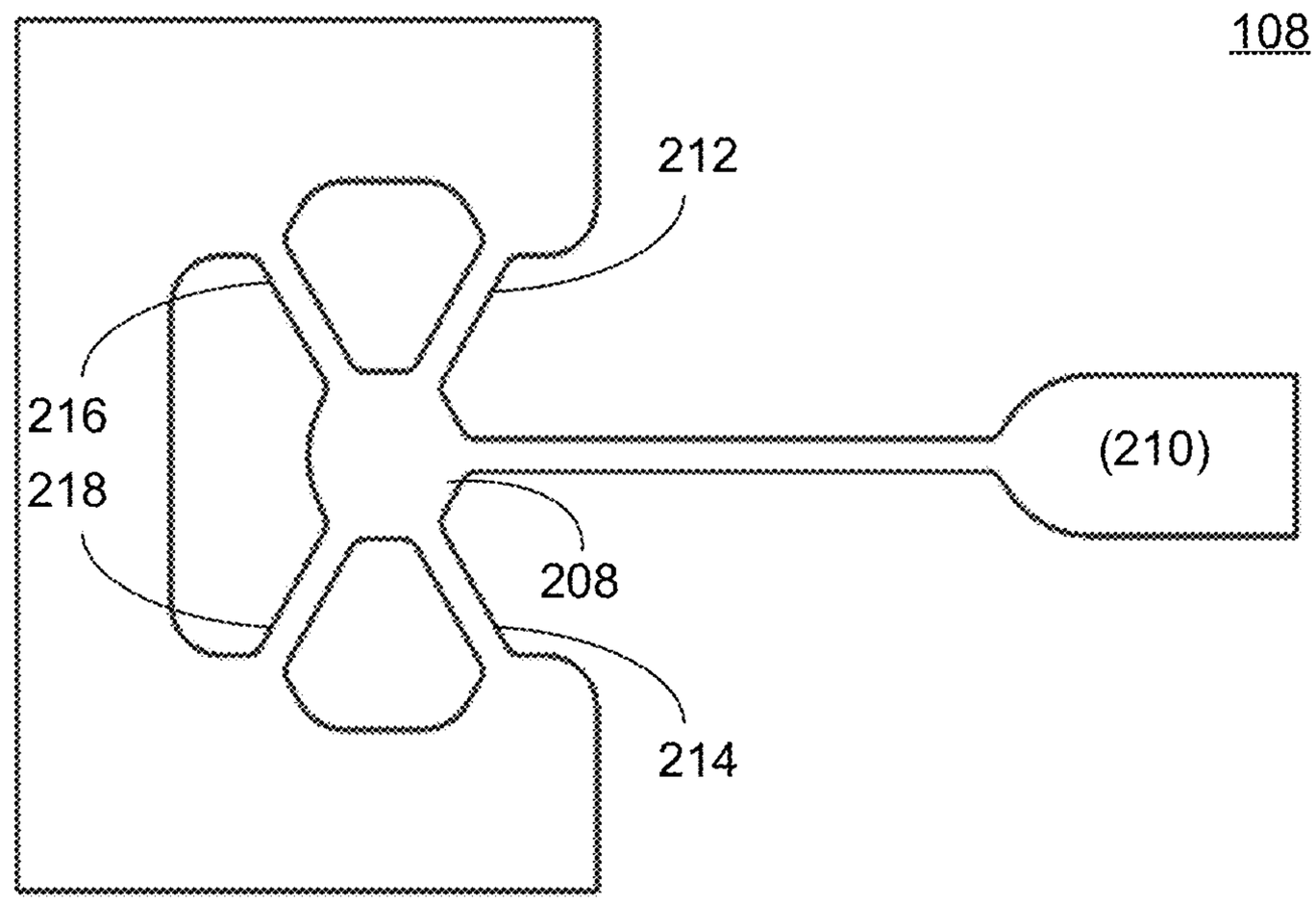

FIG. 6D

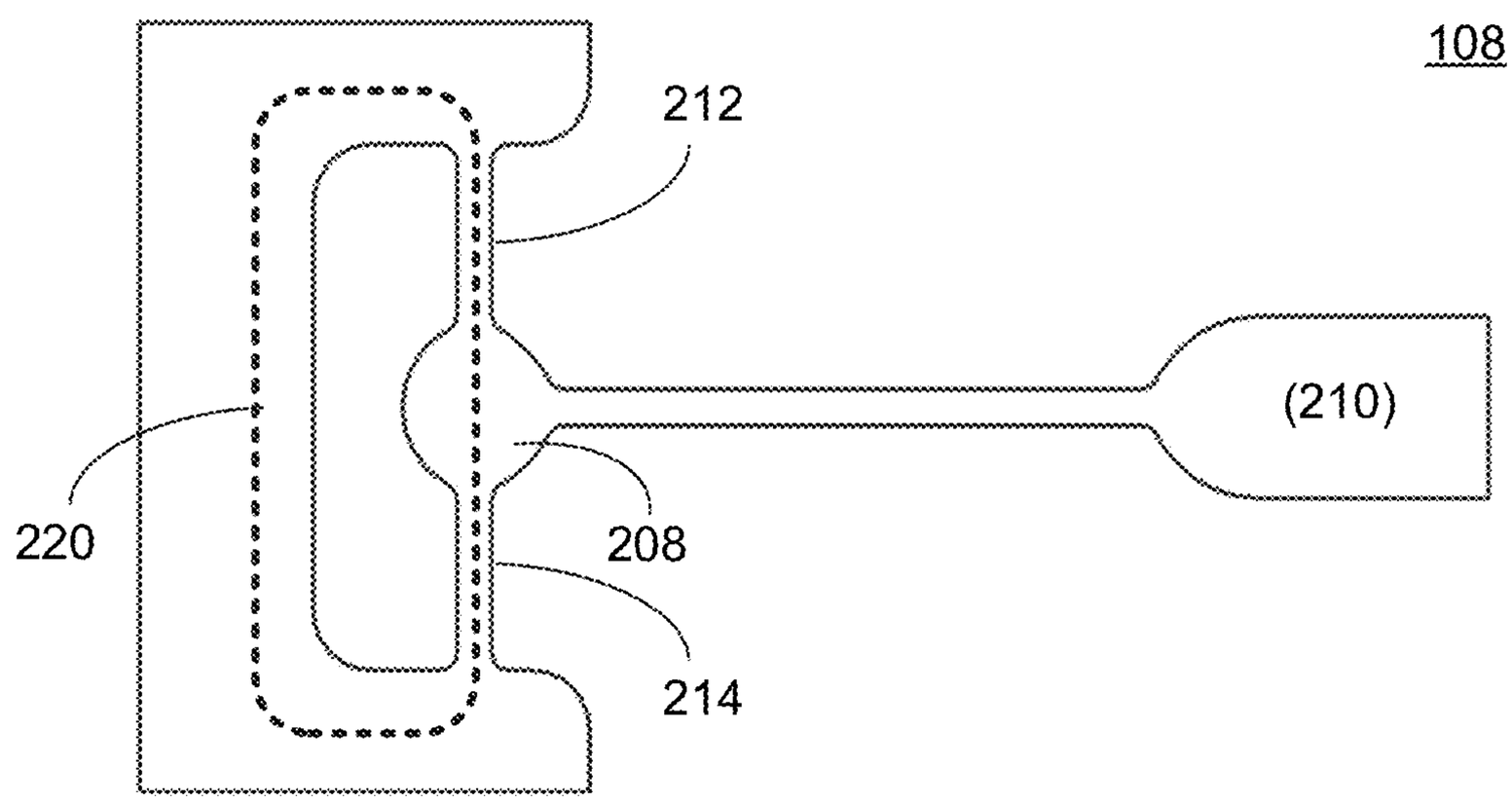

FIG. 6E

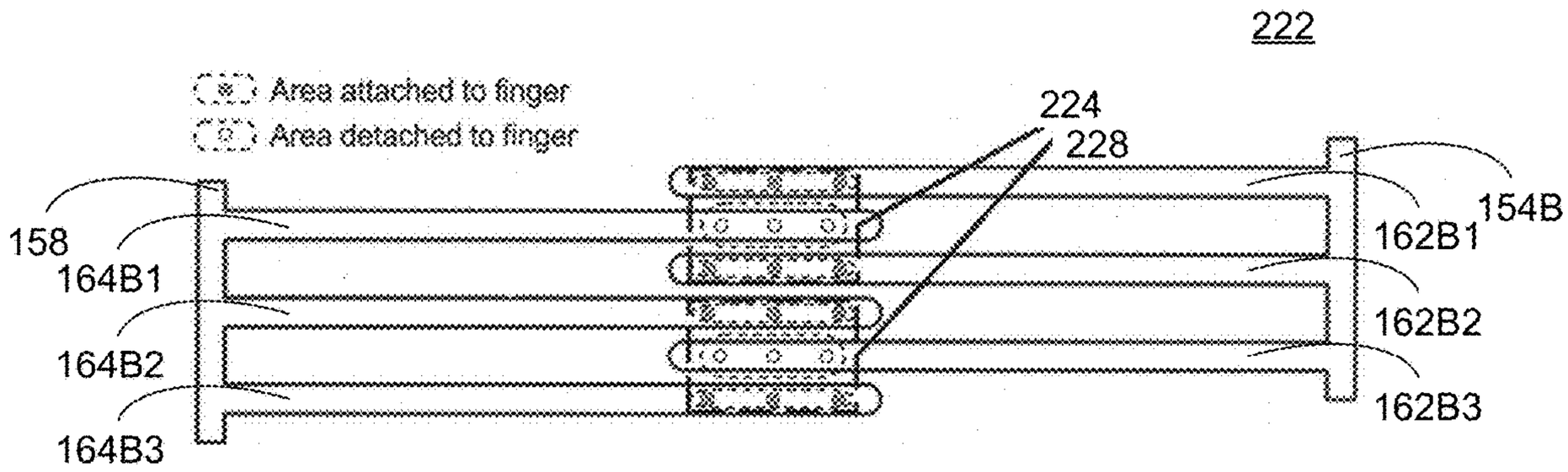

FIG. 6F

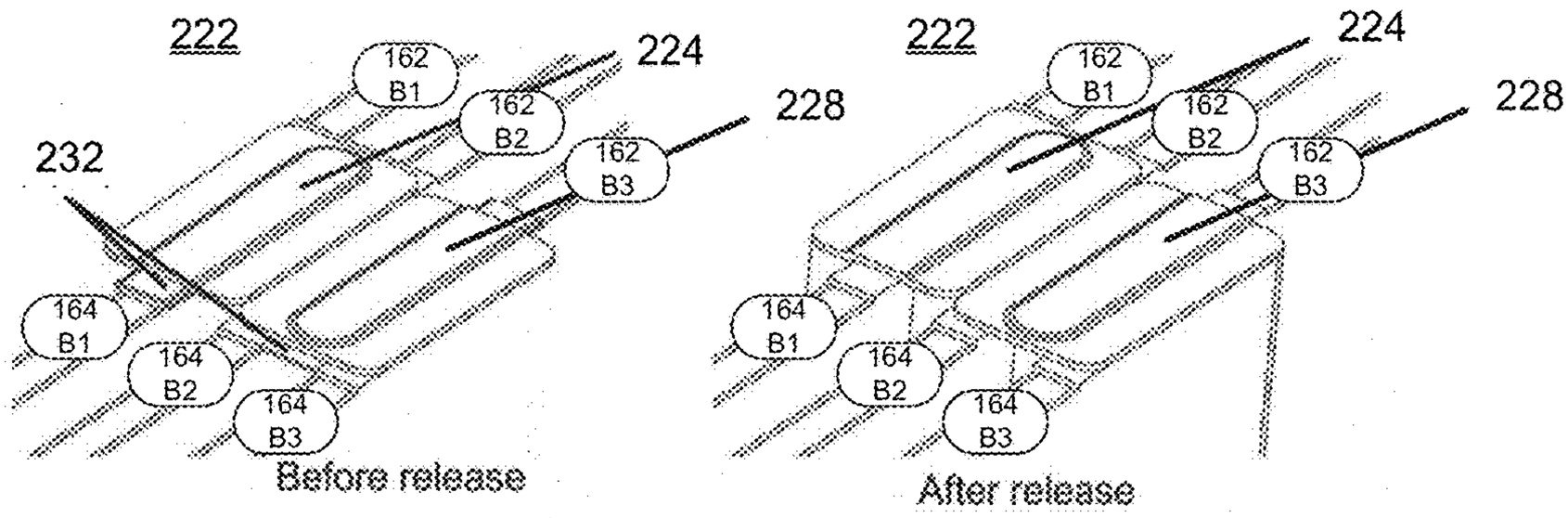

FIG. 6G

FIG. 6H

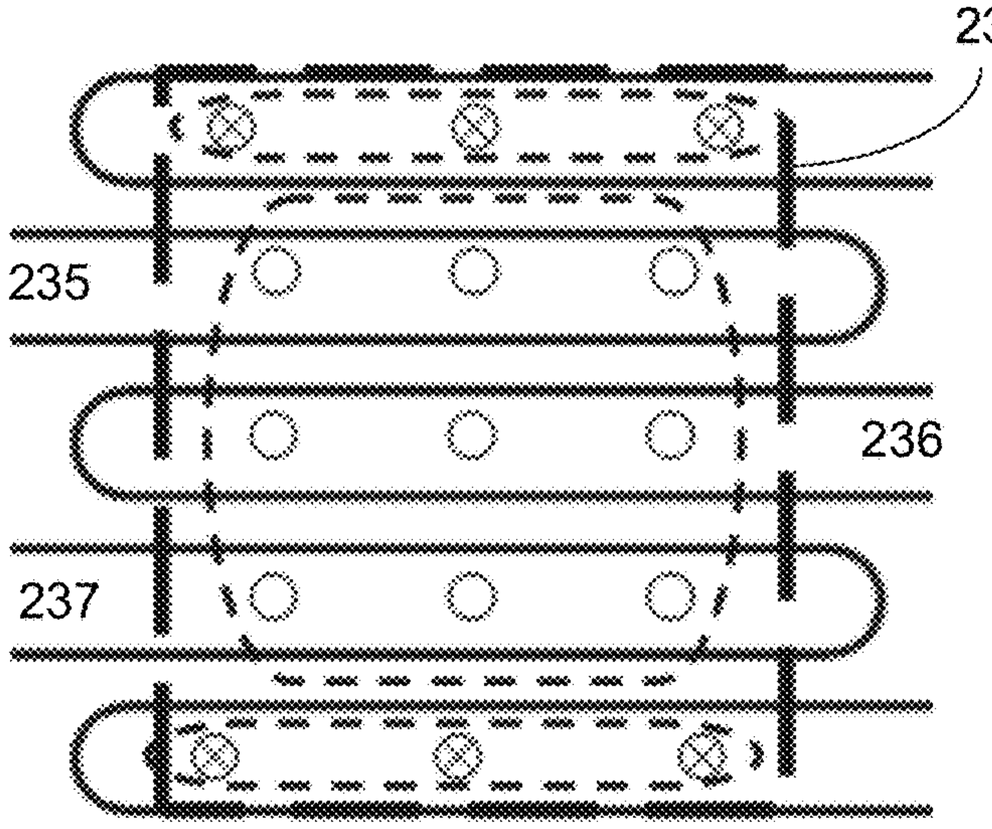

FIG. 6I

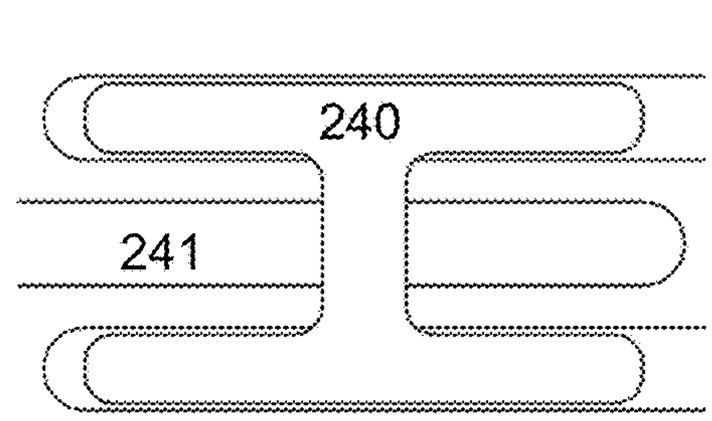

FIG. 6K

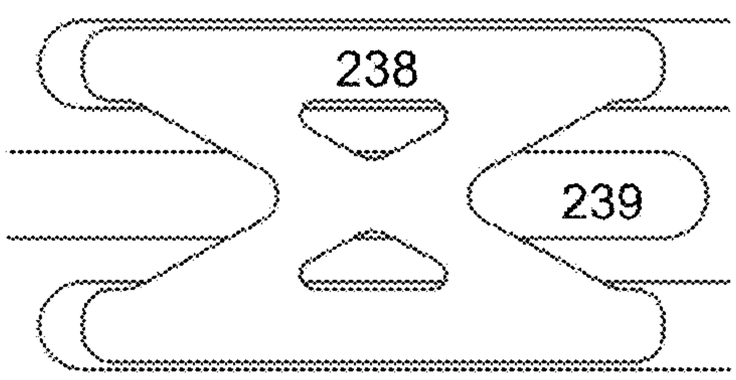

FIG. 6J

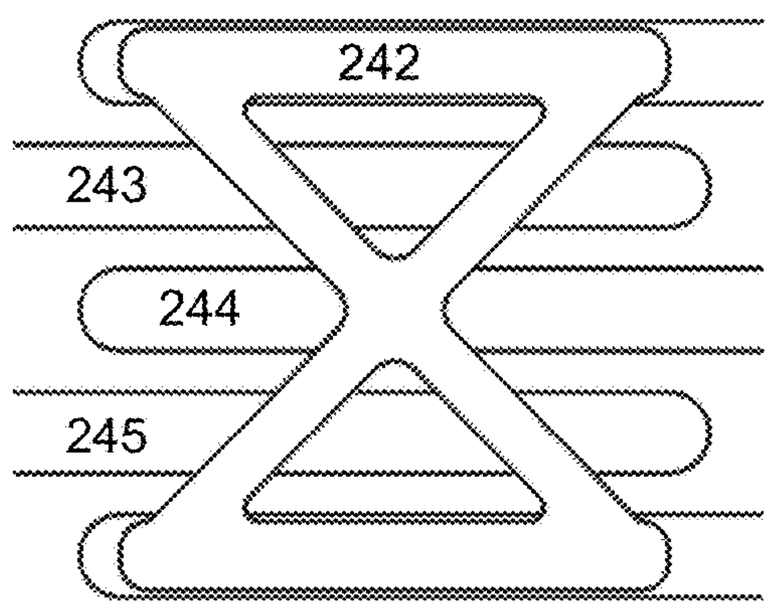

FIG. 6L

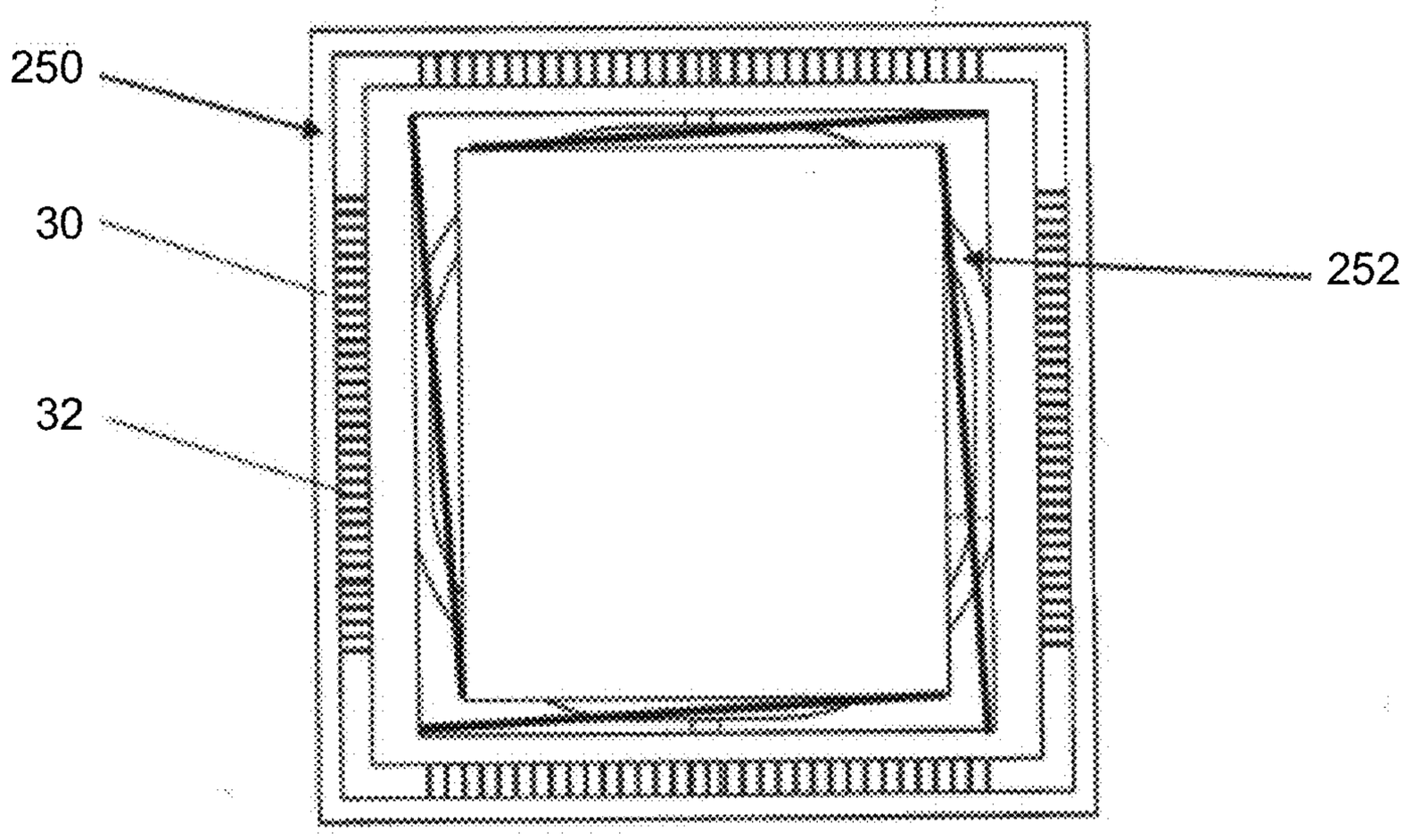

FIG. 7

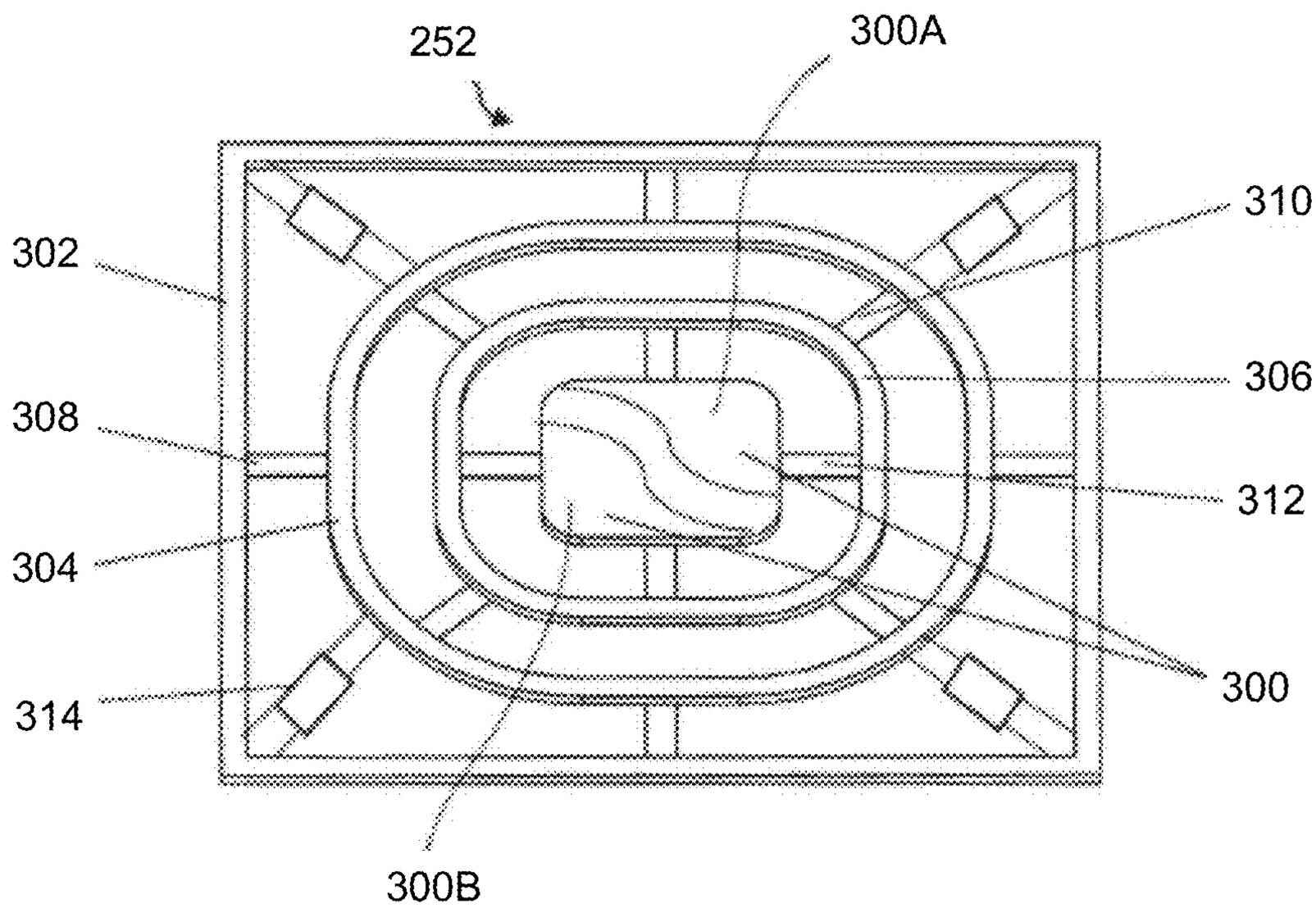

FIG. 8

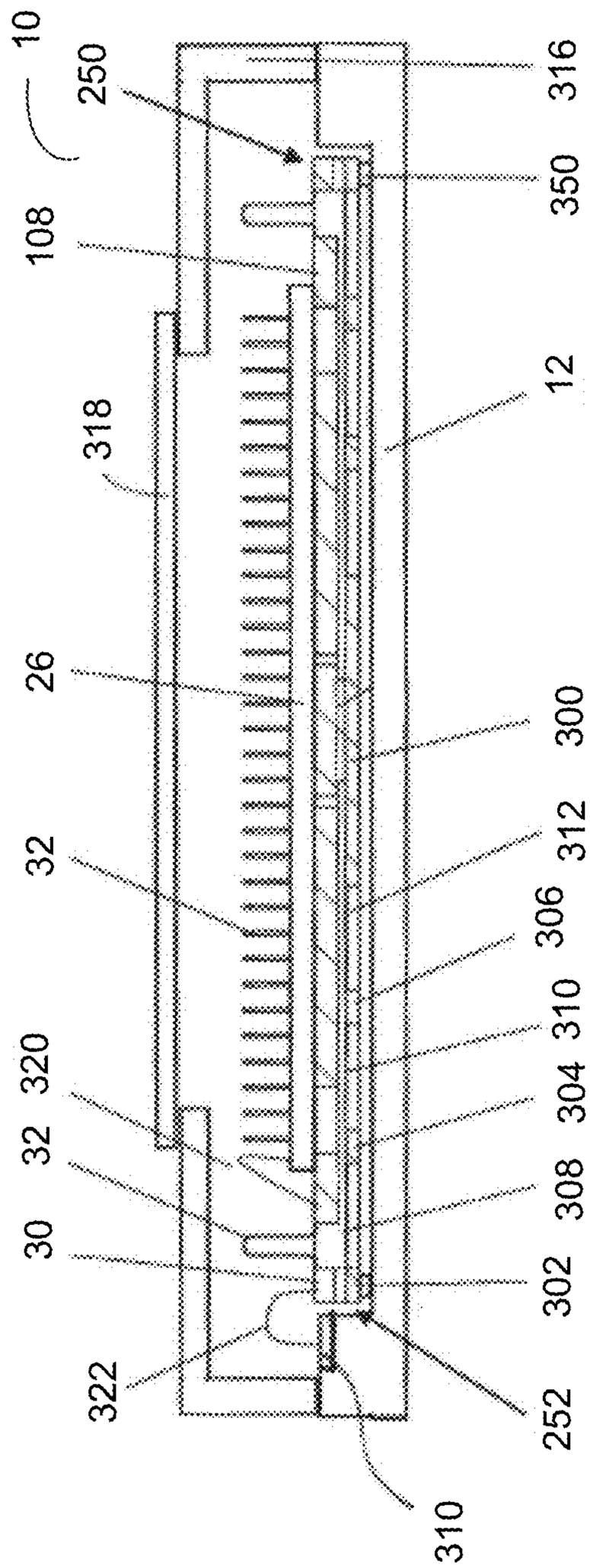
10
250
108
318
26
32
320
32
30
322
316
350
12
300
312
306
310
304
308
302
252
310

FIG. 9A

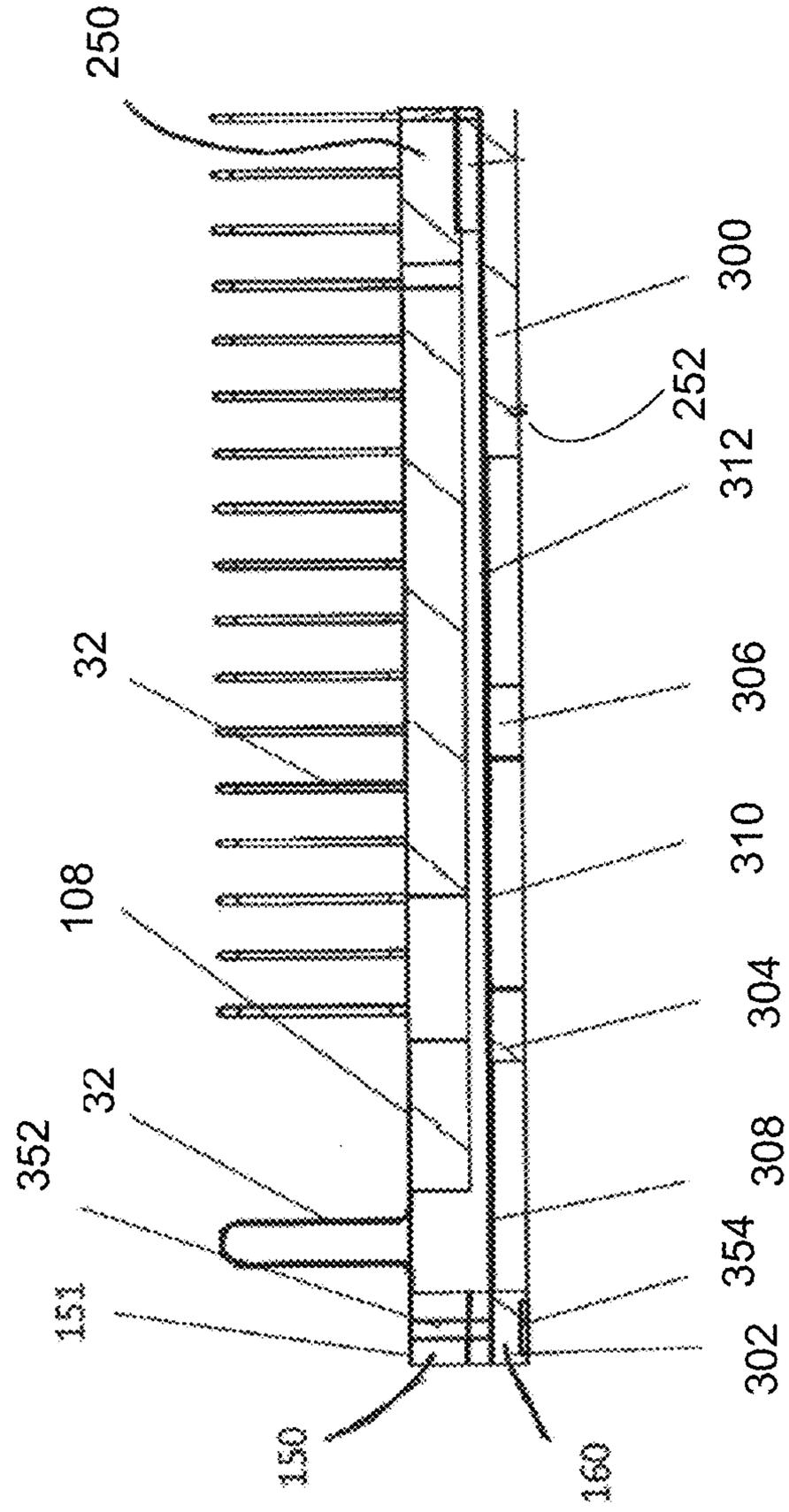

FIG. 9B

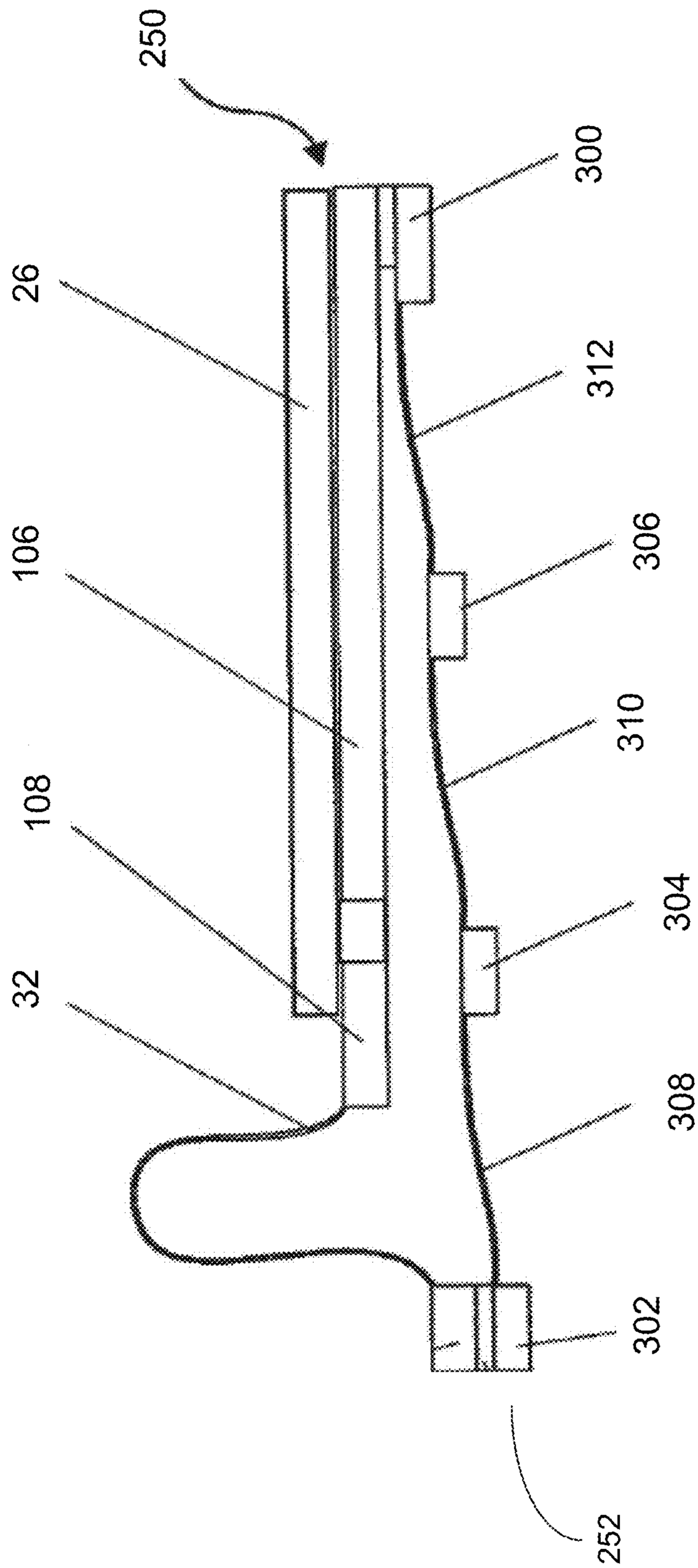

FIG. 10

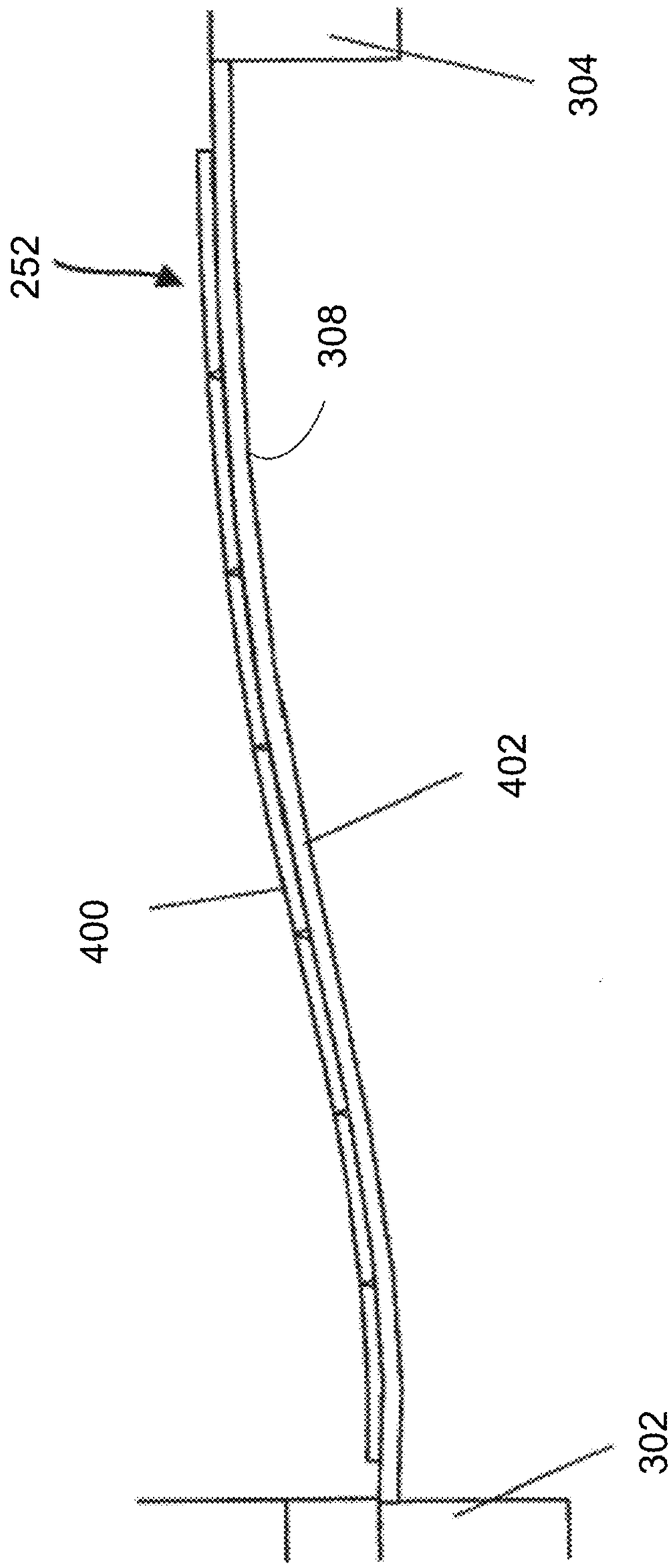

FIG. 11

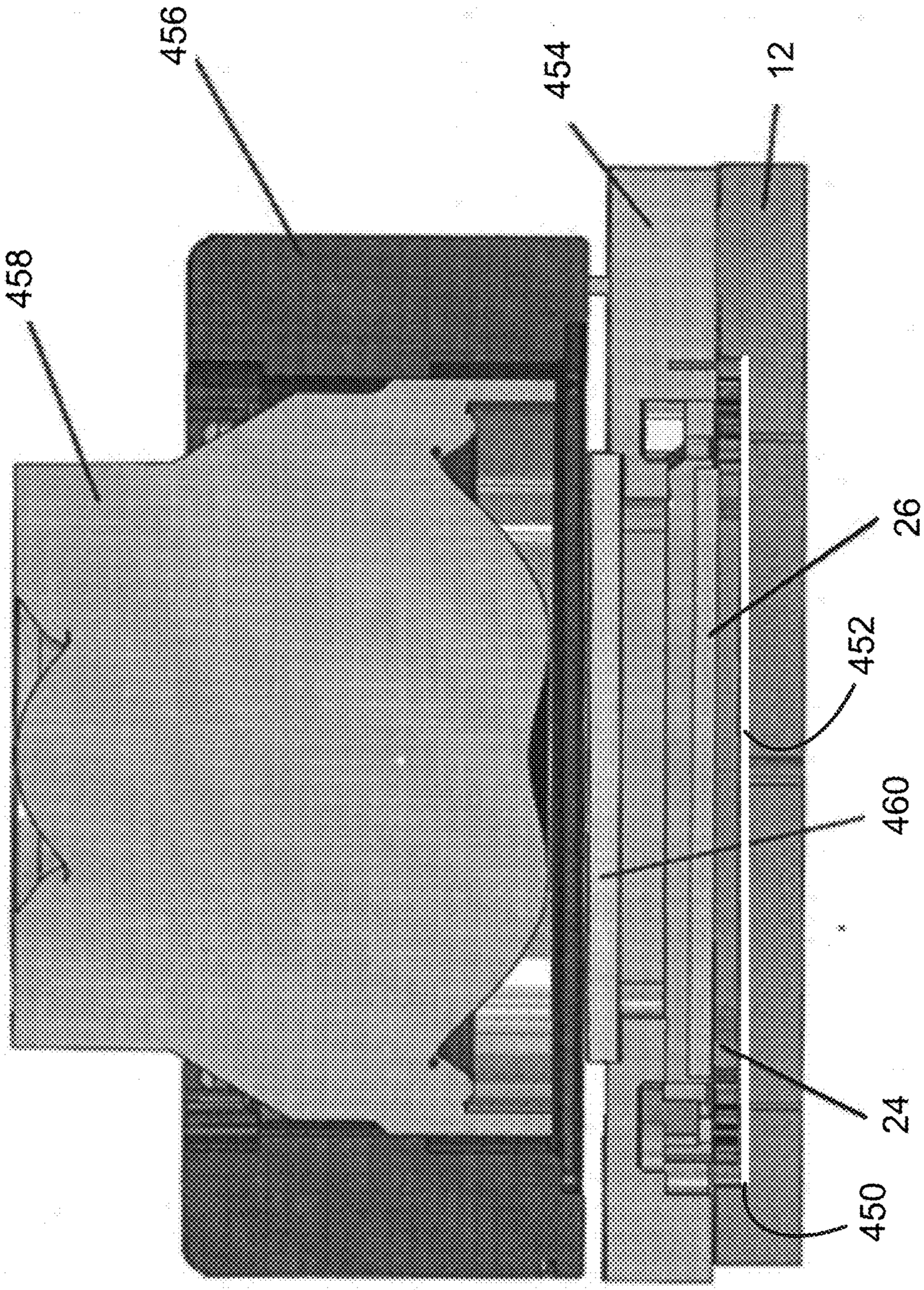

FIG. 12

10

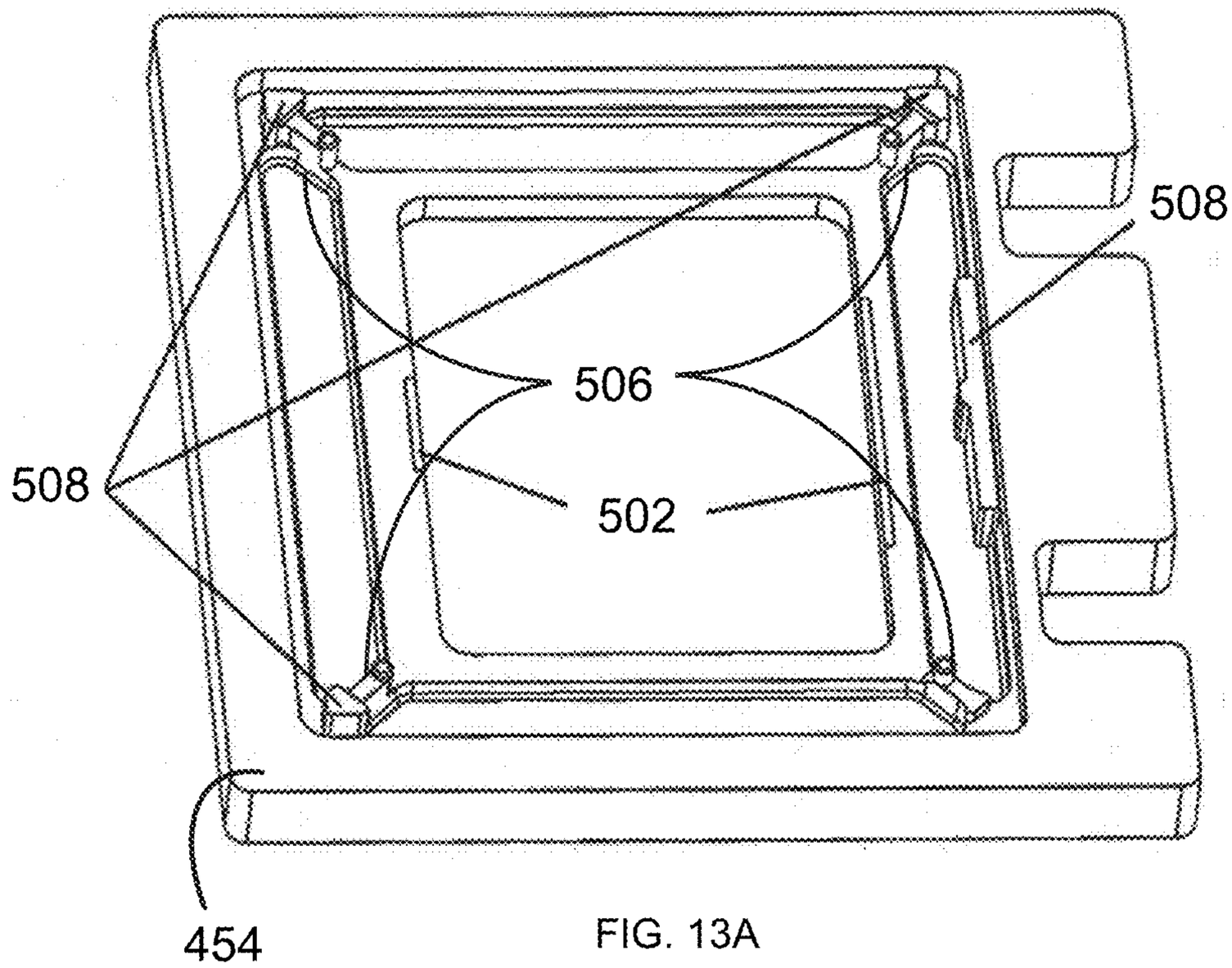

FIG. 13A

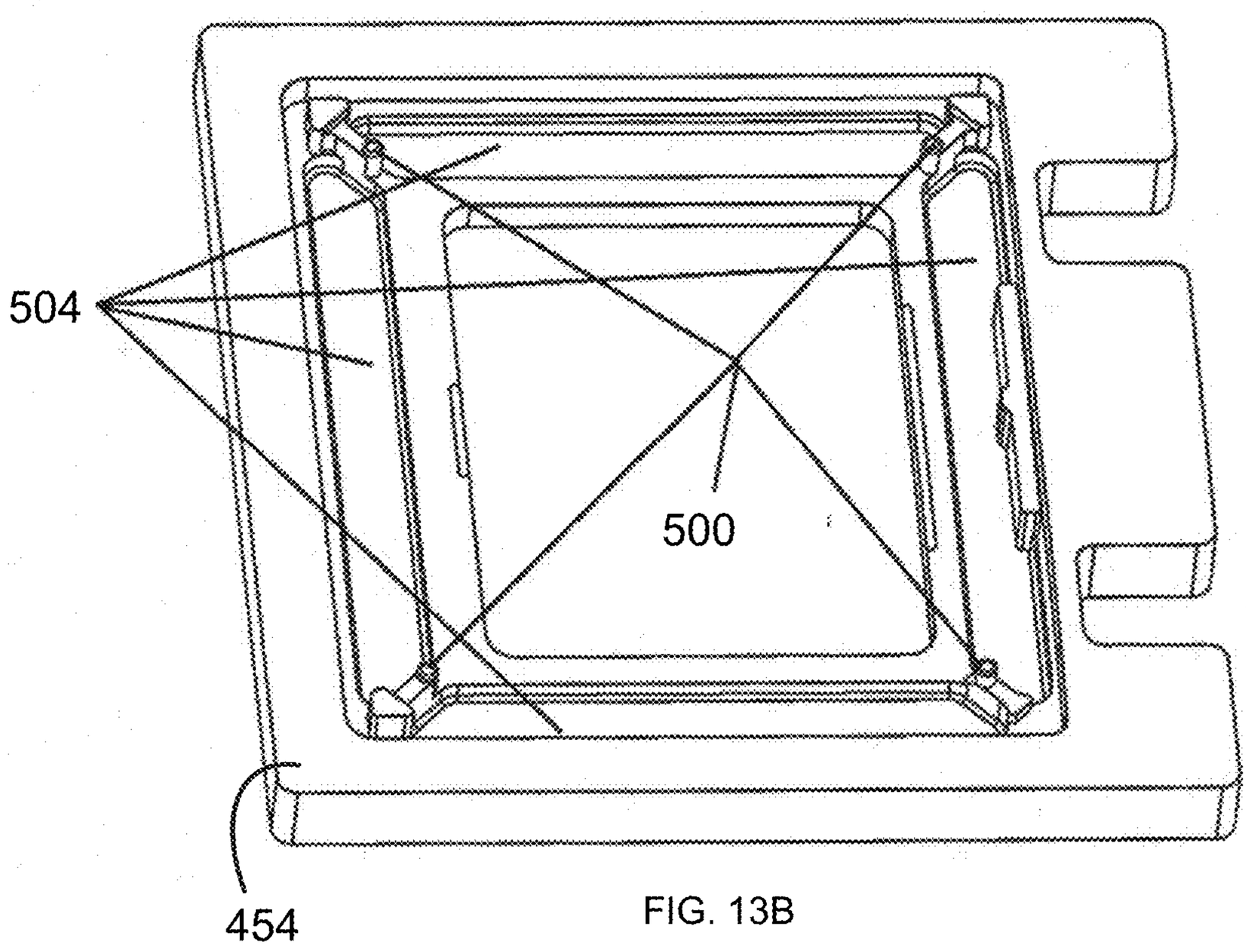

FIG. 13B

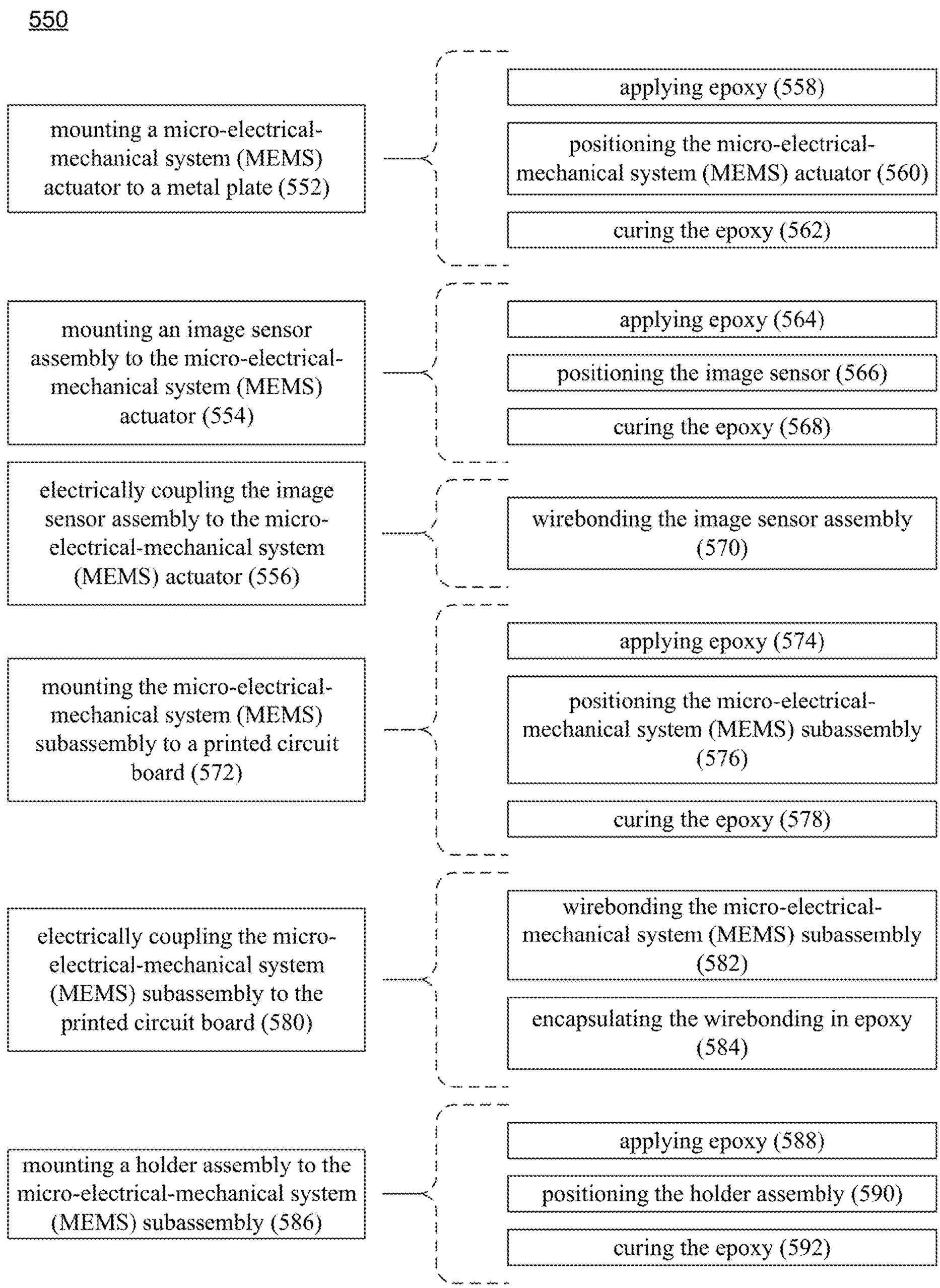
550
mounting a micro-electrical-mechanical system (MEMS) actuator to a metal plate (552)
applying epoxy (558)
positioning the micro-electrical-mechanical system (MEMS) actuator (560)
curing the epoxy (562)
mounting an image sensor assembly to the micro-electrical-mechanical system (MEMS) actuator (554)
applying epoxy (564)
positioning the image sensor (566)
curing the epoxy (568)
electrically coupling the image sensor assembly to the micro-electrical-mechanical system (MEMS) actuator (556)
wirebonding the image sensor assembly (570)
mounting the micro-electrical-mechanical system (MEMS) subassembly to a printed circuit board (572)
applying epoxy (574)
positioning the micro-electrical-mechanical system (MEMS) subassembly (576)
curing the epoxy (578)
electrically coupling the micro-electrical-mechanical system (MEMS) subassembly to the printed circuit board (580)
wirebonding the micro-electrical-mechanical system (MEMS) subassembly (582)
encapsulating the wirebonding in epoxy (584)
mounting a holder assembly to the micro-electrical-mechanical system (MEMS) subassembly (586)
applying epoxy (588)
positioning the holder assembly (590)
curing the epoxy (592)

FIG. 14

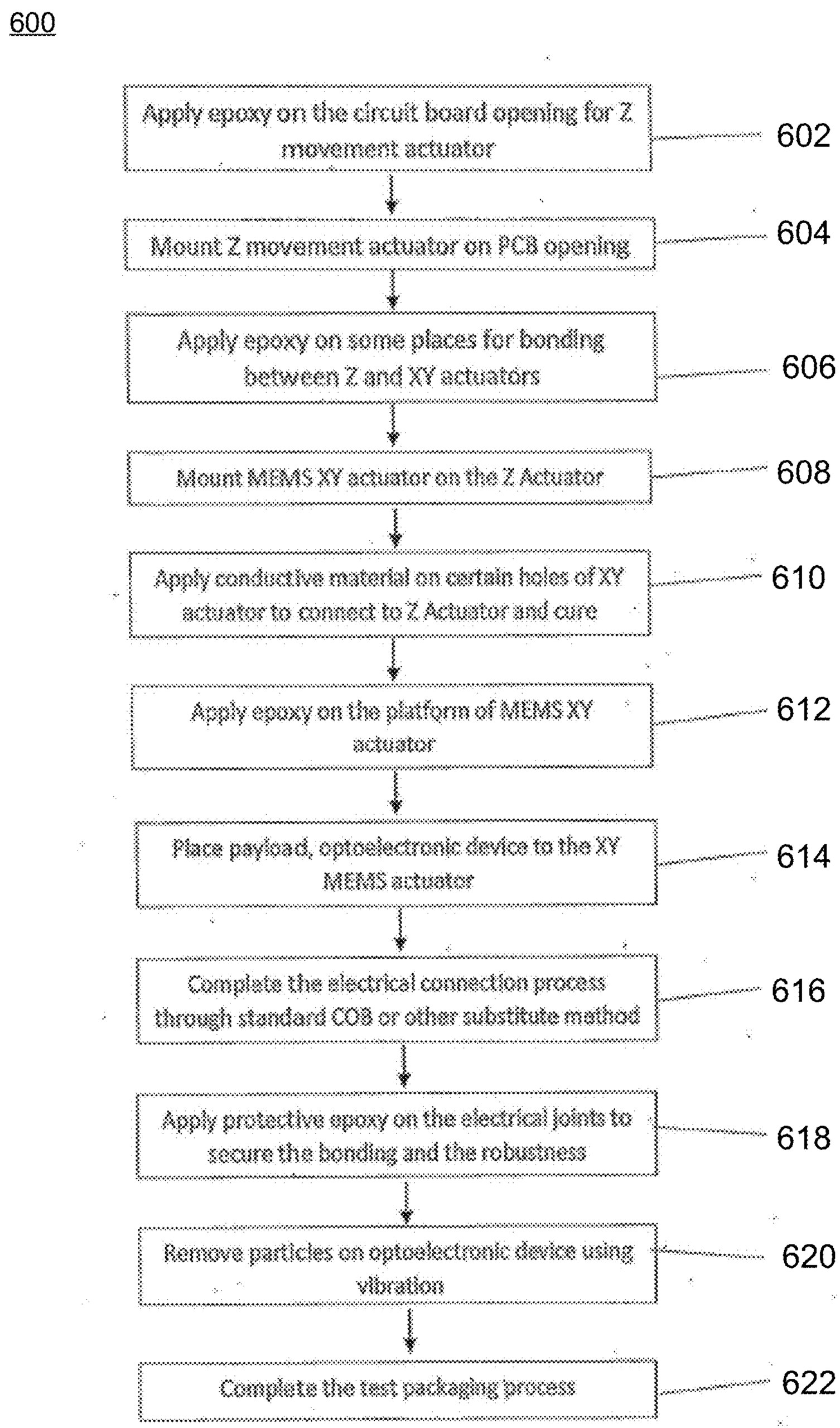
600
Apply epoxy on the circuit board opening for Z movement actuator
602
Mount Z movement actuator on PCB opening
604
Apply epoxy on some places for bonding between Z and XY actuators
606
Mount MEMS XY actuator on the Z Actuator
608
Apply conductive material on certain holes of XY actuator to connect to Z Actuator and cure
610
Apply epoxy on the platform of MEMS XY actuator
612
Place payload, optoelectronic device to the XY MEMS actuator
614
Complete the electrical connection process through standard COB or other substitute method
616
Apply protective epoxy on the electrical joints to secure the bonding and the robustness
618
Remove particles on optoelectronic device using vibration
620
Complete the test packaging process
622

FIG. 15

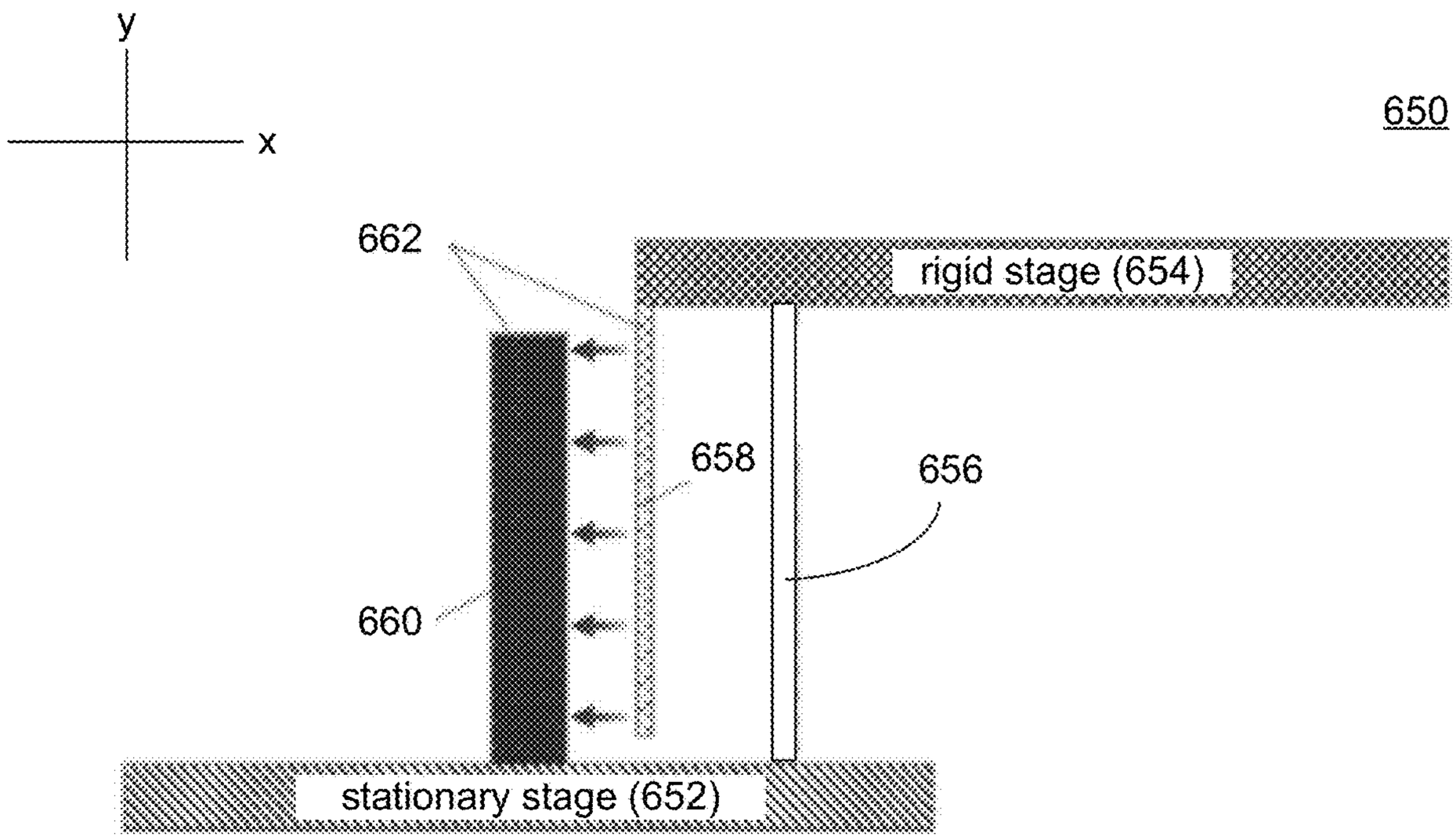

FIG. 16

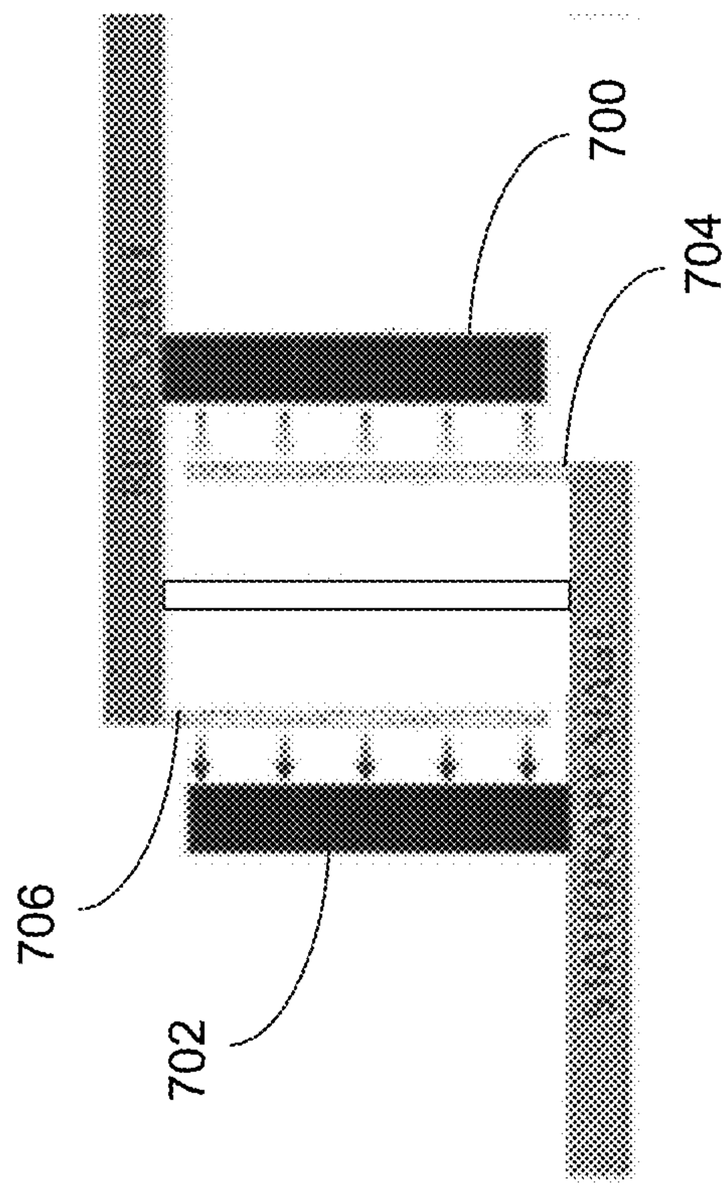

FIG. 17A

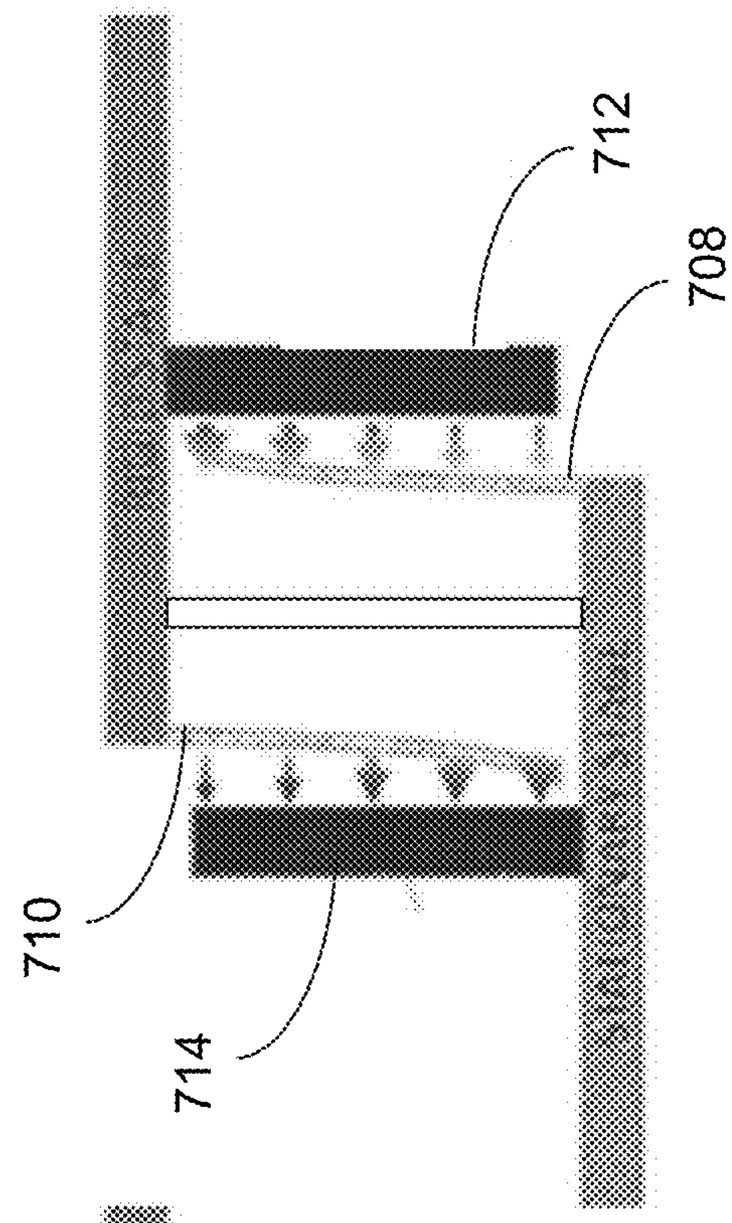

FIG. 17B

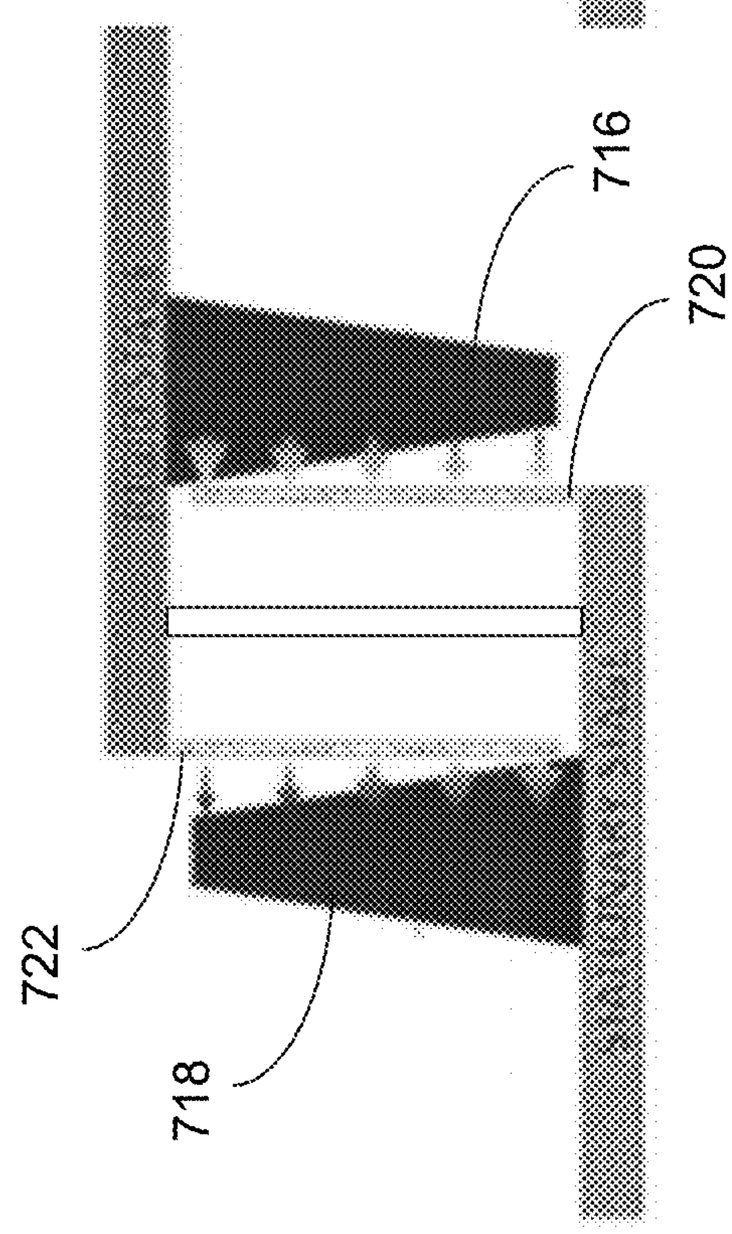

FIG. 17C

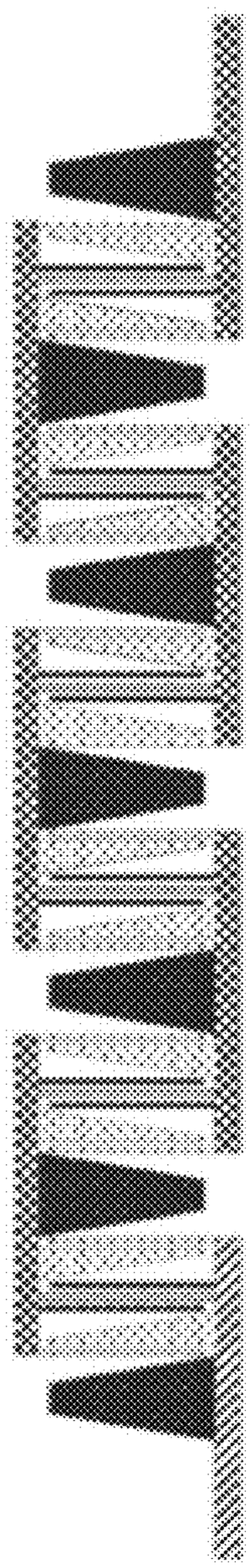

FIG. 18A

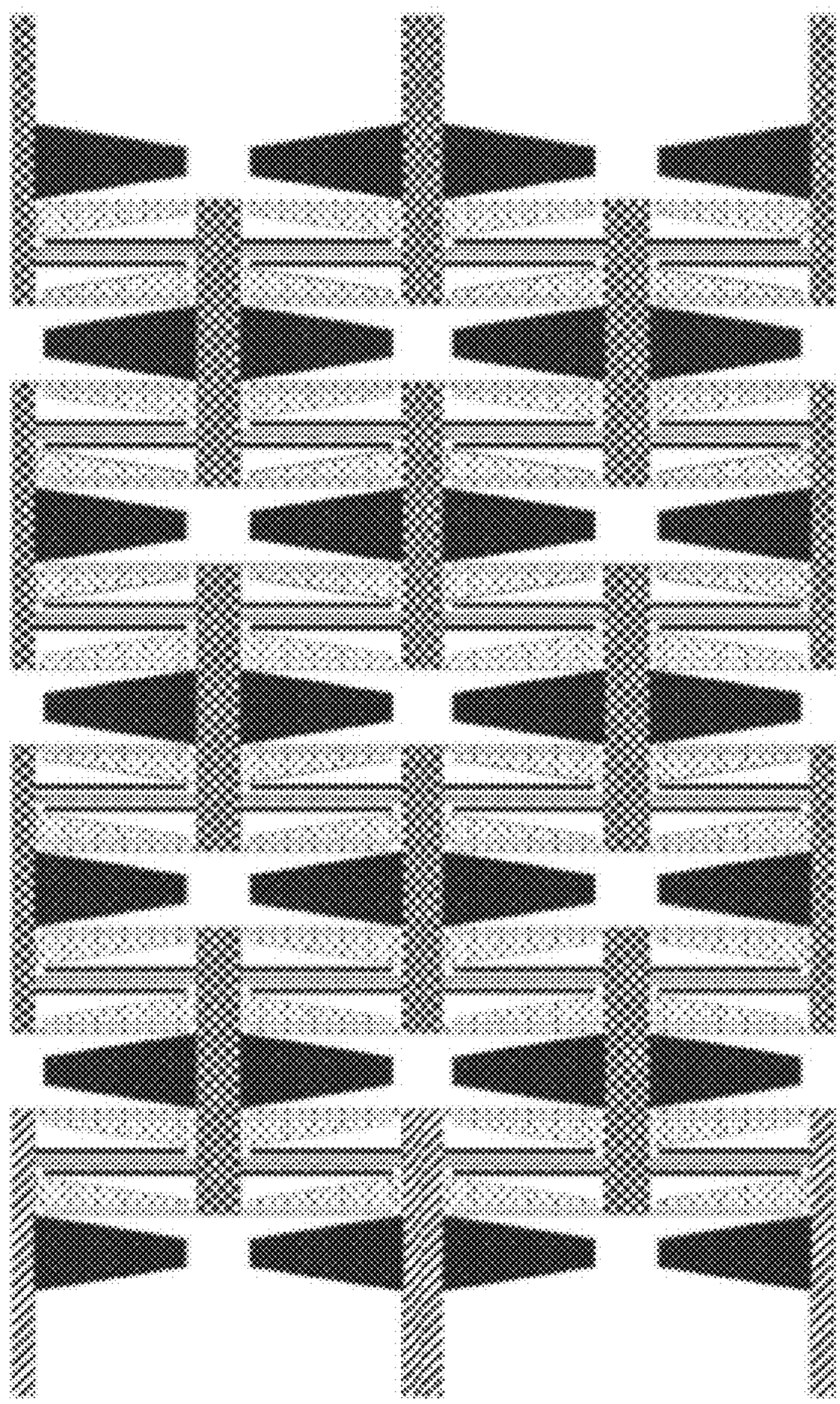

FIG. 18B

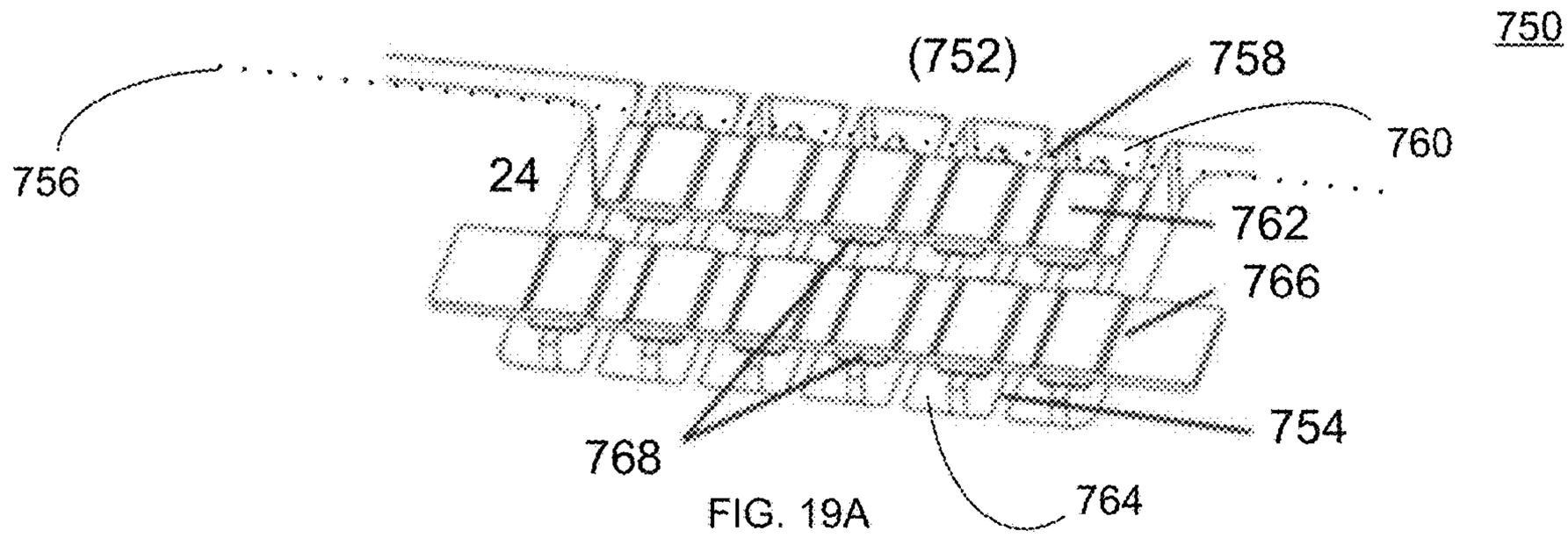

FIG. 19A

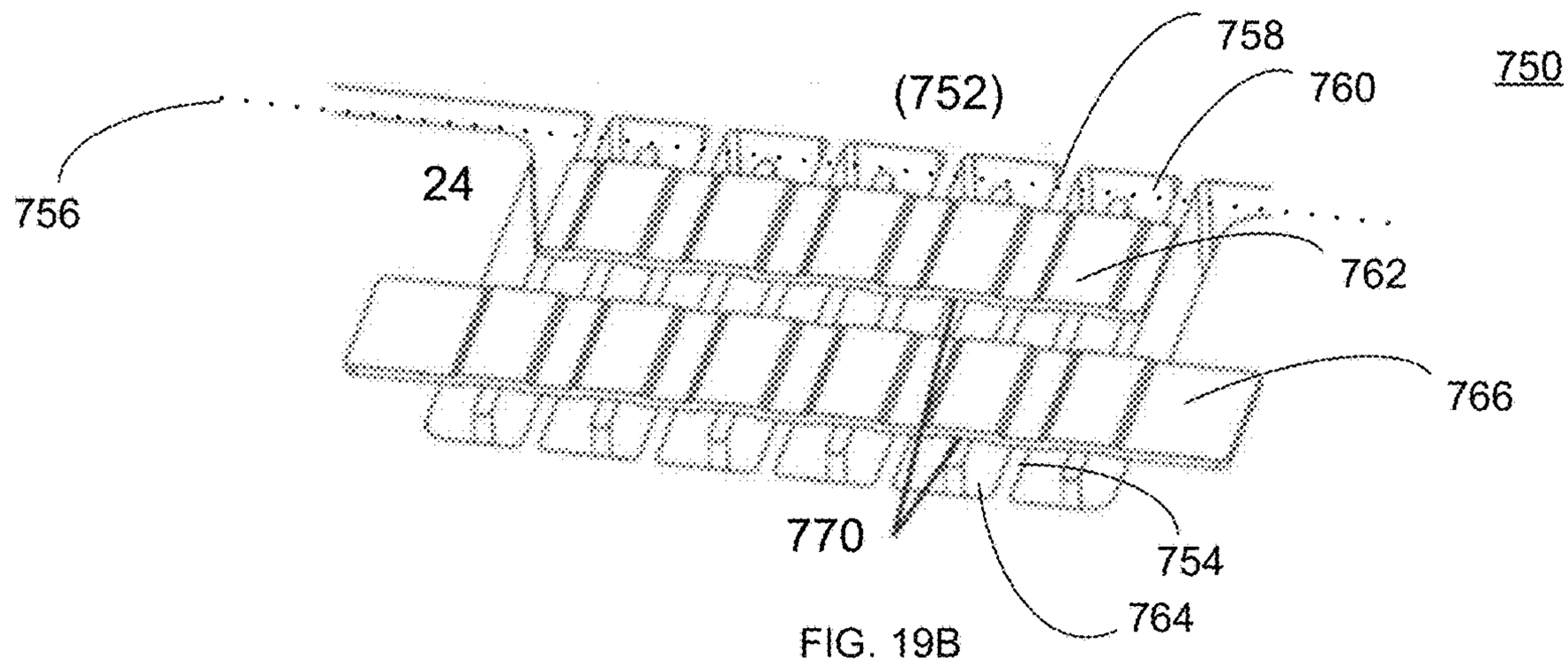

FIG. 19B

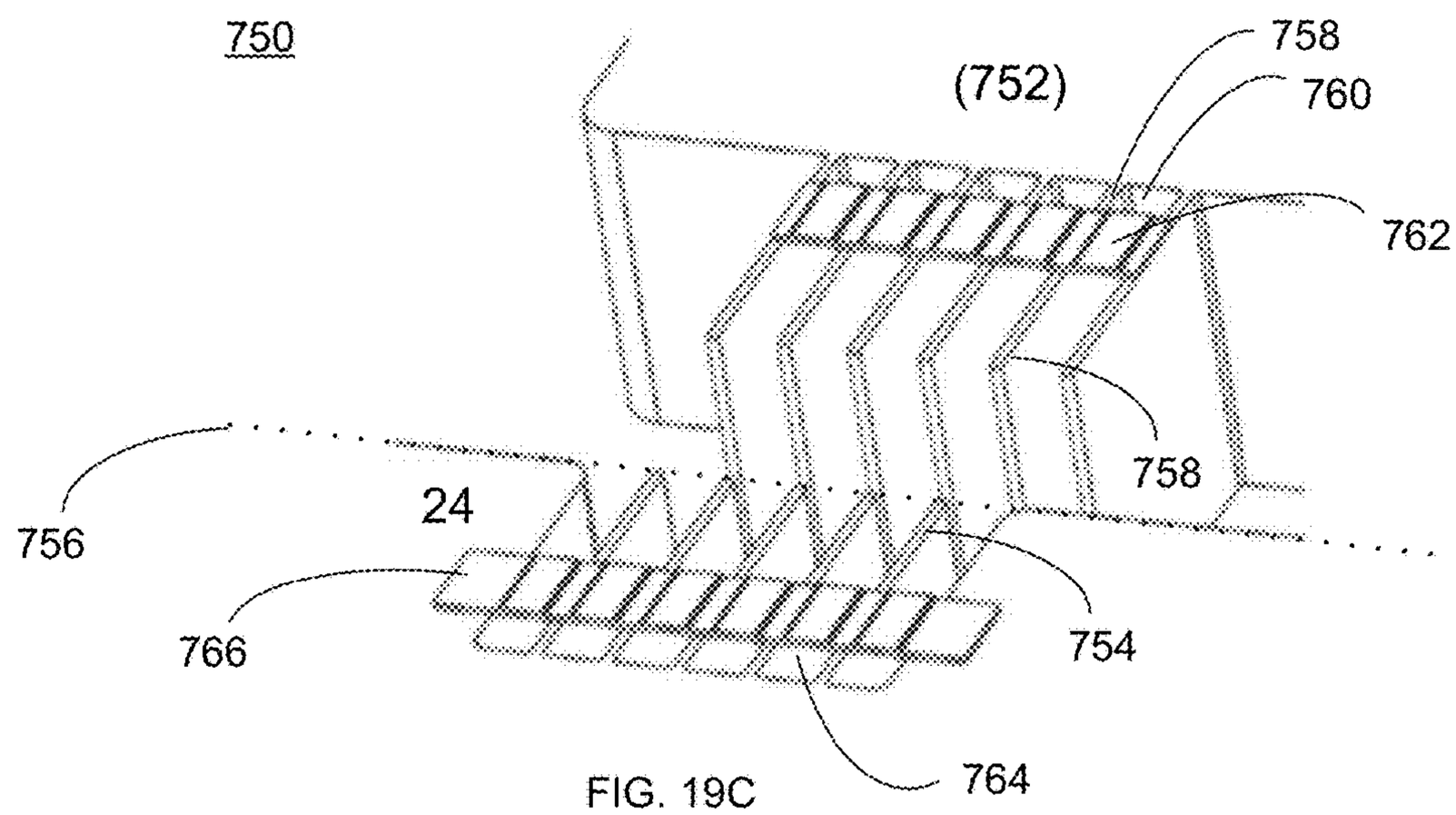

FIG. 19C

MEMS ACTUATION SYSTEMS AND METHODS

RELATED CASE(S)

[0001] This application is a continuation of U.S. application Ser. No. 15/699,007, filed on 8 Sep. 2017, which claims the benefit of the following U.S. Provisional Application Nos. 62/393,436 filed on 12 Sep. 2016, 62/393,419 filed on 12 Sep. 2016, 62/419,117 filed on 8 Nov. 2016, 62/419,814 filed on 9 Nov. 2016, and 62/420,960 filed on 11 Nov. 2016. The contents of each of the applications incorporated herein by reference.

TECHNICAL FIELD

[0002] This disclosure relates to actuators in general and, more particularly, to miniaturized MEMS actuators configured for use within camera packages.

BACKGROUND

[0003] As is known in the art, actuators may be used to convert electronic signals into mechanical motion. In many applications such as e.g., portable devices, imaging-related devices, telecommunications components, and medical instruments, it may be beneficial for miniature actuators to fit within the small size, low power, and cost constraints of these application.

[0004] Micro-electrical-mechanical system (MEMS) technology is the technology that in its most general form may be defined as miniaturized mechanical and electro-mechanical elements that are made using the techniques of microfabrication. The critical dimensions of MEMS devices may vary from well below one micron to several millimeters. In general, MEMS actuators are more compact than conventional actuators, and they consume less power.

SUMMARY OF DISCLOSURE

[0005] In one implementation, a method of manufacturing a micro-electrical-mechanical system (MEMS) assembly includes mounting a micro-electrical-mechanical system (MEMS) actuator to a metal plate. An image sensor assembly is mounted to the micro-electrical-mechanical system (MEMS) actuator. The image sensor assembly is electrically coupled to the micro-electrical-mechanical system (MEMS) actuator, thus forming a micro-electrical-mechanical system (MEMS) subassembly.

[0006] One or more of the following features may be included. Mounting a micro-electrical-mechanical system (MEMS) actuator to a metal plate may include applying epoxy to the metal plate, positioning the micro-electrical-mechanical system (MEMS) actuator on the epoxy, and curing the epoxy. Mounting an image sensor assembly to the micro-electrical-mechanical system (MEMS) actuator may include applying epoxy to the micro-electrical-mechanical system (MEMS) actuator, positioning the image sensor on the epoxy, and curing the epoxy. Electrically coupling the image sensor assembly to the micro-electrical-mechanical system (MEMS) actuator may include wirebonding the image sensor assembly to the micro-electrical-mechanical system (MEMS) actuator. The micro-electrical-mechanical system (MEMS) subassembly may be mounted to a printed circuit board. Mounting the micro-electrical-mechanical system (MEMS) subassembly to a printed circuit board may include applying epoxy to the printed circuit board, positioning the micro-electrical-mechanical system (MEMS) subassembly on the epoxy, and curing the epoxy. The micro-electrical-mechanical system (MEMS) subassembly may be electrically coupled to the printed circuit board. Electrically coupling the micro-electrical-mechanical system (MEMS) subassembly to the printed circuit board may include wirebonding the micro-electrical-mechanical system (MEMS) subassembly to the printed circuit board. Electrically coupling the micro-electrical-mechanical system (MEMS) subassembly to the printed circuit board further may include encapsulating the wirebonding in epoxy. A holder assembly may be mounted to the micro-electrical-mechanical system (MEMS) subassembly. Mounting a holder assembly to the micro-electrical-mechanical system (MEMS) subassembly may include applying epoxy to the printed circuit board, positioning the holder assembly on the epoxy, and curing the epoxy.

[0007] In another implementation, a method of manufacturing a micro-electrical-mechanical system (MEMS) assembly includes mounting a micro-electrical-mechanical system (MEMS) actuator to a metal plate. An image sensor assembly is mounted to the micro-electrical-mechanical system (MEMS) actuator. The image sensor assembly is electrically coupled to the micro-electrical-mechanical system (MEMS) actuator, thus forming a micro-electrical-mechanical system (MEMS) subassembly. The micro-electrical-mechanical system (MEMS) subassembly is mounted to a printed circuit board. The micro-electrical-mechanical system (MEMS) subassembly is electrically coupled to the printed circuit board.

[0008] One or more of the following features may be included. Mounting a micro-electrical-mechanical system (MEMS) actuator to a metal plate may include: applying epoxy to the metal plate, positioning the micro-electrical-mechanical system (MEMS) actuator on the epoxy, and curing the epoxy. Mounting an image sensor assembly to the micro-electrical-mechanical system (MEMS) actuator may include: applying epoxy to the micro-electrical-mechanical system (MEMS) actuator, positioning the image sensor on the epoxy, and curing the epoxy. Electrically coupling the image sensor assembly to the micro-electrical-mechanical system (MEMS) actuator may include wirebonding the image sensor assembly to the micro-electrical-mechanical system (MEMS) actuator. Mounting the micro-electrical-mechanical system (MEMS) subassembly to a printed circuit board may include: applying epoxy to the printed circuit board, positioning the micro-electrical-mechanical system (MEMS) subassembly on the epoxy, and curing the epoxy. Electrically coupling the micro-electrical-mechanical system (MEMS) subassembly to the printed circuit board may include: wirebonding the micro-electrical-mechanical system (MEMS) subassembly to the printed circuit board, and encapsulating the wirebonding in epoxy. A holder assembly may be mounted to the micro-electrical-mechanical system (MEMS) subassembly. Mounting a holder assembly to the micro-electrical-mechanical system (MEMS) subassembly may include: applying epoxy to the printed circuit board, positioning the holder assembly on the epoxy, and curing the epoxy.

[0009] In another implementation, a method of manufacturing a micro-electrical-mechanical system (MEMS) assembly includes: mounting a micro-electrical-mechanical system (MEMS) actuator to a metal plate, mounting an image sensor assembly to the micro-electrical-mechanical

system (MEMS) actuator, electrically coupling the image sensor assembly to the micro-electrical-mechanical system (MEMS) actuator, thus forming a micro-electrical-mechanical system (MEMS) subassembly, mounting the micro-electrical-mechanical system (MEMS) subassembly to a printed circuit board, electrically coupling the micro-electrical-mechanical system (MEMS) subassembly to the printed circuit board; and mounting a holder assembly to the micro-electrical-mechanical system (MEMS) subassembly.

[0010] The details of one or more implementations are set forth in the accompanying drawings and the description below. Other features and advantages will become apparent from the description, the drawings, and the claims.

BRIEF DESCRIPTION OF THE DRAWINGS

[0011] FIG. **1** is a perspective view of a package in accordance with various embodiments of the present disclosure;

[0012] FIG. **2**A is a diagrammatic view of an in-plane MEMS actuator with the optoelectronic device in accordance with various embodiments of the present disclosure;

[0013] FIG. **2**B is a perspective view of an in-plane MEMS actuator with the optoelectronic device in accordance with various embodiments of the present disclosure;

[0014] FIG. **3**A is a diagrammatic view of an in-plane MEMS actuator in accordance with various embodiments of the present disclosure;

[0015] FIGS. **3**B-**3**C are diagrammatic views of a coupling assembly included within the in-plane MEMS actuator of FIG. **3**A in accordance with various embodiments of the present disclosure;

[0016] FIG. **4** is a diagrammatic view of a comb drive sector in accordance with various embodiments of the present disclosure;

[0017] FIG. **5** is a diagrammatic view of a comb pair in accordance with various embodiments of the present disclosure;

[0018] FIG. **6**A is a diagrammatic view of fingers of the comb pair of FIG. **5** in accordance with various embodiments of the present disclosure;

[0019] FIG. **6**B-**6**F are diagrammatic views of a cantilever stress reduction system in accordance with various embodiments of the present disclosure;

[0020] FIG. **6**G-**6**L are diagrammatic views of a finger array snubbing system in accordance with various embodiments of the present disclosure;

[0021] FIG. **7** is a diagrammatic view of a combination of an in-plane MEMS actuator and an out-of-plane actuator in accordance with various embodiments of the present disclosure;

[0022] FIG. **8** is a diagrammatic view of an out-of-plane actuator in accordance with various embodiments of the present disclosure;

[0023] FIG. **9**A is a cross-sectional view of a two-actuator package in accordance with various embodiments of the present disclosure;

[0024] FIG. **9**B is a cross-sectional detail view of a two-actuator package in accordance with various embodiments of the present disclosure;

[0025] FIG. **10** is a cross-sectional detail view of a deformed out-of-plane actuator in accordance with various embodiments of the present disclosure;

[0026] FIG. **11** is a cross-sectional view of an actuation beam of the deformed out-of-plane actuator of FIG. **10** in accordance with various embodiments of the present disclosure;

[0027] FIG. **12** is a cross-sectional view of a package including a single actuator in accordance with various embodiments of the present disclosure;

[0028] FIGS. **13**A-**13**B are perspective view of a holder assembly in accordance with various embodiments of the present disclosure;

[0029] FIG. **14** is a flowchart of a method of assembling a package including a single actuator in accordance with various embodiments of the present disclosure;

[0030] FIG. **15** is a flowchart of a method of assembling a package including multiple actuators in accordance with various embodiments of the present disclosure;

[0031] FIG. **16** is a diagrammatic view of a zipper actuator in accordance with various embodiments of the present disclosure;

[0032] FIGS. **17**A-**17**C are diagrammatic views of alternative embodiments of the zipper actuator of FIG. **16** in accordance with various embodiments of the present disclosure;

[0033] FIGS. **18**A-**18**B are diagrammatic views of alternative embodiments of the zipper actuator of FIG. **16** in accordance with various embodiments of the present disclosure; and

[0034] FIGS. **19**A-**19**C are diagrammatic views of slidable connection assemblies in accordance with various embodiments of the present disclosure.

[0035] Like reference symbols in the various drawings indicate like elements.

DETAILED DESCRIPTION OF THE PREFERRED EMBODIMENTS

System Overview:

[0036] Referring to FIG. **1**, there is shown MEMS package **10**, in accordance with various aspects of this disclosure. In this example, package **10** is shown to include printed circuit board **12**, micro-electrical-mechanical system (MEMS) assembly **14**, driver circuits **16**, electronic components **18**, flexible circuit **20**, and electrical connector **22**. Micro-electrical-mechanical system (MEMS) assembly **14** may include micro-electrical-mechanical system (MEMS) actuator **24** and optoelectronic device **26** mounted to micro-electrical-mechanical system (MEMS) actuator **24**.

[0037] Examples of micro-electrical-mechanical system (MEMS) actuator **24** may include but are not limited to an in-plane MEMS actuator, an out-of-plane MEMS actuator, and a combination in-plane/out-of-plane MEMS actuator. For example and if micro-electrical-mechanical system (MEMS) actuator **24** is an in-plane MEMS actuator, the in-plane MEMS actuator may include an electrostatic comb drive actuation system (as will be discussed below in greater detail). Additionally, if micro-electrical-mechanical system (MEMS) actuator **24** is an out-of-plane MEMS actuator, the out-of-plane MEMS actuator may include a piezoelectric actuation system or electrostatic actuation. And if micro-electrical-mechanical system (MEMS) actuator **24** is a hybrid in-plane/out-of-plane MEMS actuator, the combination in-plane/out-of-plane MEMS actuator may include an electrostatic comb drive actuation system and a piezoelectric actuation system.

[0038] As will be discussed below in greater detail, examples of optoelectronic device **26** may include but are not limited to an image sensor, a holder assembly, a UV filter, an autofocus assembly and/or a lens assembly. Examples of electronic components **18** may include but are not limited to various electronic or semiconductor components and devices. Flexible circuit **20** and/or connector **22** may be configured to electrically couple MEMS package **10** to e.g., a smart phone or a digital camera (represented as generic item **28**).

[0039] As will be discussed below in greater detail, micro-electrical-mechanical system (MEMS) actuator **24** may be sized so that it may fit within a recess in printed circuit board **12**. The depth of this recess within printed circuit board **12** may vary depending upon the particular embodiment and the physical size of micro-electrical-mechanical system (MEMS) actuator **24**.

[0040] In some embodiments, some of the components of MEMS package **10** may be joined together using various epoxies/adhesives. For example and as will be discussed below in greater detail, an outer frame of micro-electrical-mechanical system (MEMS) actuator **24** may include contact pads that may correspond to similar contact pads on printed circuit board **12**.

[0041] Referring also to FIG. **2**A, there is shown micro-electrical-mechanical system (MEMS) assembly **14**, which may include optoelectronic device **26** mounted to micro-electrical-mechanical system (MEMS) actuator **24**. Micro-electrical-mechanical system (MEMS) actuator **24** may include outer frame **30**, plurality of electrically conductive flexures **32**, MEMS actuation core **34** for attaching a payload (e.g., a device), and attached optoelectronic device **26**. Optoelectronic device **26** may be affixed to MEMS actuation core **34** of micro-electrical-mechanical system (MEMS) actuator **24** by epoxy (or various other adhesives/materials and/or bonding methods).

[0042] Referring also to FIG. **2**B, plurality of electrically conductive flexures **32** of micro-electrical-mechanical system (MEMS) actuator **24** may be curved upward and buckled to achieve the desired level of flexibility. In the illustrated embodiment, plurality of electrically conductive flexures **32** may have one end attached to MEMS actuation core **34** (e.g., the moving portion of micro-electrical-mechanical system (MEMS) actuator **24**) and the other end attached to outer frame **30** (e.g., the fixed portion of micro-electrical-mechanical system (MEMS) actuator **24**).

[0043] Plurality of electrically conductive flexures **32** may be conductive wires that may extend above the plane (e.g., an upper surface) of micro-electrical-mechanical system (MEMS) actuator **24** and may electrically couple laterally separated components of micro-electrical-mechanical system (MEMS) actuator **24**. For example, plurality of electrically conductive flexures **32** may provide electrical signals from optoelectronic device **26** and/or MEMS actuation core **34** to outer frame **30** of micro-electrical-mechanical system (MEMS) actuator **24**. As discussed above, outer frame **30** of micro-electrical-mechanical system (MEMS) actuator **24** may be affixed to circuit board **12** using epoxy (or various other adhesive materials or devices).

[0044] Referring also to FIG. **3**A, there is shown a top view of micro-electrical-mechanical system (MEMS) actuator **24** in accordance with various embodiments of the disclosure. Outer frame **30** is shown to include (in this example) four frame assemblies (e.g., frame assembly **100**A, frame assembly **100**B, frame assembly **100**C, frame assembly **100**D) that are shown as being spaced apart to allow for additional detail. However and during assembly, frame assembly **100**A, frame assembly **100**B, frame assembly **100**C and frame assembly **100**D may be coupled (or latched) together to form outer frame **30** (as will be discussed below in greater detail). Conversely and in other embodiments, frame assembly **100**A, frame assembly **100**B, frame assembly **100**C and frame assembly **100**D may not be joined together and may be left as separate assemblies (although this is typically not the case).

[0045] Outer frame **30** of micro-electrical-mechanical system (MEMS) actuator **24** may include a plurality of contact pads (e.g., contact pads **102**A on frame assembly **100**A, contact pads **102**B on frame assembly **100**B, contact pads **102**C on frame assembly **100**C, and contact pads **102**D on frame assembly **100**D), which may be electrically coupled to one end of plurality of electrically conductive flexures **32**. The curved shape of electrically conductive flexures **32** is provided for illustrative purposes only and, while illustrating one possible embodiment, other configurations are possible and are considered to be within the scope of this disclosure.

[0046] MEMS actuation core **34** may include a plurality of contact pads (e.g., contact pads **104**A, contact pads **104**B, contact pads **104**C, contact pads **104**D), which may be electrically coupled to the other end of plurality of electrically conductive flexures **32**. A portion of the contact pads (e.g., contact pads **104**A, contact pads **104**B, contact pads **104**C, contact pads **104**D) of MEMS actuation core **34** may be electrically coupled to optoelectronic device **26** by wire bonding, silver paste, or eutectic seal, thus allowing for the electrical coupling of optoelectronic device **26** to outer frame **30**.

[0047] MEMS actuation core **34** may include one or more comb drive sectors (e.g., comb drive sector **106**) that are actuation sectors disposed within micro-electrical-mechanical system (MEMS) actuator **24**. The comb drive sectors (e.g., comb drive sector **106**) within MEMS actuation core **34** may be disposed in the same plane and may be positioned orthogonal to each other to allow for movement in two axes (e.g., the x-axis and the y-axis).

[0048] While in this particular example, MEMS actuation core **34** is shown to include four comb drive sectors, this is for illustrative purposes only and is not intended to be a limitation of this disclosure, as other configurations are possible. For example, the number of comb drive sectors may be increased or decreased depending upon design criteria.

[0049] While in this particular example, the four comb drive sectors are shown to be generally square in shape, this is for illustrative purposes only and is not intended to be a limitation of this disclosure, as other configurations are possible. For example, the shape of the comb drive sectors may be changed to meet various design criteria.

[0050] Each comb drive sector (e.g., comb drive sector **106**) within MEMS actuation core **34** may include one or more moving portions and one or more fixed portions. As will be discussed below in greater detail, a comb drive sector (e.g., comb drive sector **106**) within MEMS actuation core **34** may be coupled, via a cantilever assembly (e.g., cantilever assembly **108**), to outer periphery **110** of MEMS actuation core **34** (i.e., the portion of MEMS actuation core **34** that includes contact pads **104**A, contact pads **104**B, contact pads **104**C, contact pads **104**D), which is the portion

of MEMS actuation core **34** to which optoelectronic device **26** may be coupled, thus effectuating the transfer of movement to optoelectronic device **26**.

Multi-Piece Outer Frame

[0051] As discussed above, outer frame **30** is shown to include (in this example) four frame assemblies (e.g., frame assembly **100**A, frame assembly **100**B, frame assembly **100**C, frame assembly **100**D) that are shown as being spaced apart to allow for additional detail. However, during assembly, frame assembly **100**A, frame assembly **100**B, frame assembly **100**C, and frame assembly **100**D may be coupled together to form outer frame **30**.

[0052] Accordingly and referring also to FIGS. **3**B-**3**C, micro-electrical-mechanical system (MEMS) actuator **24** may include MEMS actuation core **34**, and a multi-piece MEMS electrical connector assembly (e.g., outer frame **30**) electrically coupled to MEMS actuation core **34** and configured to be electrically coupled to printed circuit board **12**. Multi-piece MEMS electrical connector (e.g., outer frame **30**) may include: a plurality of subcomponents (e.g., frame assembly **100**A, frame assembly **100**B, frame assembly **100**C, frame assembly **100**D), and a plurality of coupling assemblies (e.g., coupling assembly **112**) configured to couple the plurality of subcomponents together (e.g., frame assembly **100**A, frame assembly **100**B, frame assembly **100**C, frame assembly **100**D).

[0053] While FIGS. **3**B-**3**C only shows frame assembly **100**A and frame assembly **100**D being coupled together using coupling assembly **112**, this is for illustrative purposes only. For example, frame assembly **100**A and frame assembly **100**B may be coupled using another coupling assembly; frame assembly **100**B and frame assembly **100**C may be coupled using another coupling assembly; and frame assembly **100**C and frame assembly **100**D may be coupled using another coupling assembly.

[0054] As discussed above, plurality of electrically conductive flexures **32** of micro-electrical-mechanical system (MEMS) actuator **24** may be curved upward and buckled to achieve the desired level of flexibility. Specifically, plurality of electrically conductive flexures **32** may be configured to be generally flat in shape when the plurality of subcomponents (e.g., frame assembly **100**A, frame assembly **100**B, frame assembly **100**C, frame assembly **100**D) are uncoupled. And prior to attaching micro-electrical-mechanical system (MEMS) actuator **24** to printed circuit board **12**, frame assembly **100**A, frame assembly **100**B, frame assembly **100**C, frame assembly **100**D may be coupled together. Further, plurality of electrically conductive flexures **32** may be configured to be generally arched in shape when the plurality of subcomponents (e.g., frame assembly **100**A, frame assembly **100**B, frame assembly **100**C, frame assembly **100**D) are coupled together.

[0055] The plurality of coupling assemblies (e.g., coupling assembly **112**) may include latch bolt **114** and latch catch **116** configured to engage latch bolt **114**. Each latch catch **116** may include tumbler spring **118** for engaging a recess in latch bolt **114**. Further, each latch bolt **114** may include push spring **120** configured to bias the recess of latch bolt **114** against tumbler spring **118**.

[0056] As will be discussed below in greater detail, the multi-piece MEMS electrical connector assembly (e.g., outer frame **30**) may be configured to be rigidly attached to and wire bound to printed circuit board **12** via a plurality of wire bond connections, wherein this plurality of wire bond connections may be encapsulated in epoxy to provide added strength and durability.

[0057] Referring also to FIG. **4**, there is shown a top view of comb drive sector **106** in accordance with various embodiments of the present disclosure. Each comb drive sector (e.g., comb drive sector **106**) may include one or more motion control cantilever assemblies (e.g., motion control cantilever assemblies **150**A, **150**B) positioned outside of comb drive sector **106**, moveable frame **152**, moveable spines **154**, fixed frame **156**, fixed spines **158**, and cantilever assembly **108** that is configured to couple moving frame **152** to outer periphery **110** of MEMS actuation core **34**. In this particular configuration, motion control cantilever assemblies **150**A, **150**B may be configured to prevent y-axis displacement between moving frame **152**/moveable spines **154** and fixed frame **156**/fixed spines **158**.

[0058] Comb drive sector **106** may include a movable member including moveable frame **152** and multiple moveable spines **154** that are generally orthogonal to moveable frame **152**. Comb drive sector **106** may also include a fixed member including fixed frame **156** and multiple fixed spines **158** that are generally orthogonal to fixed frame **156**. Cantilever assembly **108** may be deformable in one direction (e.g., in response to y-axis deflective loads) and rigid in another direction (e.g., in response to x-axis tension and compression loads), thus allowing for cantilever assembly **108** to absorb motion in the y-axis but transfer motion in the x-axis.

[0059] Referring also to FIG. **5**, there is shown a detail view of portion **160** of comb drive sector **106**. Moveable spines **154**A, **154**B may include a plurality of discrete moveable actuation fingers that are generally orthogonally-attached to moveable spines **154**A, **154**B. For example, moveable spine **154**A is shown to include moveable actuation fingers **162**A and moveable spine **154**B is shown to include moveable actuation fingers **162**B.

[0060] Further, fixed spine **158** may include a plurality of discrete fixed actuation fingers that are generally orthogonally-attached to fixed spine **158**. For example, fixed spine **158** is shown to include fixed actuation fingers **164**A that are configured to mesh and interact with moveable actuation fingers **162**A. Further, fixed spine **158** is shown to include fixed actuation fingers **164**B that are configured to mesh and interact with moveable actuation fingers **162**B.

[0061] Accordingly, various numbers of actuation fingers may be associated with (i.e. coupled to) the moveable spines (e.g., moveable spines **154**A, **154**B) and/or the fixed spines (e.g., fixed spine **158**) of comb drive sector **106**. As discussed above, each comb drive sector (e.g., comb drive sector **106**) may include two motion control cantilever assemblies **150**A, **150**B separately placed on each side of comb drive sector **106**. Each of the two motion control cantilever assemblies **150**A, **150**B may be configured to couple moveable frame **152** and fixed frame **156**, as this configuration enables moveable actuation fingers **162**A, **162**B to be displaceable in the x-axis with respect to fixed actuation fingers **164**A, **164**B (respectively) while preventing moveable actuation fingers **162**A, **162**B from being displaced in the y-axis and contacting fixed actuation fingers **164**A, **164**B (respectively).

[0062] While actuation fingers **162**A, **162**B, **164**A, **164**B (or at least the center axes of actuation fingers **162**A, **162**B, **164**A, **164**B) are shown to be generally parallel to one

another and generally orthogonal to the respective spines to which they are coupled, this is for illustrative purposes only and is not intended to be a limitation of this disclosure, as other configurations are possible. Further and in some embodiments, actuation fingers **162**A, **162**B, **164**A, **164**B may have the same width throughout their length and in other embodiments, actuation fingers **162**A, **162**B, **164**A, **164**B may be tapered.

[0063] Further and in some embodiments, moveable frame **152** may be displaced in the positive x-axis direction when a voltage potential is applied between actuation fingers **162**A and actuation fingers **164**A, while moveable frame **152** may be displaced in the negative x-axis direction when a voltage potential is applied between actuation fingers **162**B and actuation fingers **164**B.

[0064] Referring also to FIG. **6**A, there is shown a detail view of portion **200** of comb drive sector **106**. Fixed spine **158** may be generally parallel to moveable spine **154**B, wherein actuation fingers **164**B and actuation fingers **162**B may overlap within region **202**, wherein the width of overlap region **202** is typically in the range of 10-50 microns. While overlap region **202** is described as being in the range of 10-50 microns, this is for illustrative purposes only and is not intended to be a limitation of this disclosure, as other configurations are possible.

[0065] Overlap region **202** may represent the distance **204** where the ends of actuation fingers **162**B extends past and overlap the ends of actuation fingers **164**B, which are interposed therebetween. In some embodiments, actuation fingers **162**B and actuation fingers **164**B may be tapered such that their respective tips are narrower than their respective bases (i.e., where they are attached to their spines). As is known in the art, various degrees of taper may be utilized with respect to actuation fingers **162**B and actuation fingers **164**B. Additionally, the overlap of actuation fingers **162**B and actuation fingers **164**B provided by overlap region **202** may help ensure that there is sufficient initial actuation force when an electrical voltage potential is applied so that MEMS actuation core **34** may move gradually and smoothly without any sudden jumps with varying the applied voltage. The height of actuation fingers **162**B and actuation fingers **164**B may be determined by various aspects of the MEMS fabrication process and various design criteria.

[0066] Length **206** of actuation fingers **162**B and actuation fingers **164**B, the size of overlap region **202**, the gaps between adjacent actuation fingers, and actuation finger taper angles that are incorporated into various embodiments may be determined by various design criteria, application considerations, and manufacturability considerations, wherein these measurements may be optimized to achieve the required displacement utilizing the available voltage potential.

Cantilever Stress Reduction System

[0067] As discussed above, cantilever assembly **108** may be configured to couple moving frame **152** of comb drive sector **106** and outer periphery **110** of MEMS actuation core **34**. Referring also to FIGS. **6**B-**6**E, in order to mitigate the impact of any z-axis shock load experienced by cantilever assembly **108**, a cantilever stress reduction system may be utilized. For example, cantilever assembly **108** may include: intermediary cantilever portion **208**; main cantilever arm **210** configured to couple a moveable portion of a micro-electrical-mechanical system (MEMS) actuator **24** and intermediary cantilever portion **208**; and a plurality of intermediary links (e.g., intermediary links **212**, **214**, **216**, **218**) configured to couple intermediary cantilever portion **208** to a portion of micro-electrical-mechanical system (MEMS) actuator **24**.

[0068] For example, the cantilever stress reduction system shown in FIG. **6**B is shown to include intermediary links **212**, **214**; the cantilever stress reduction system shown in FIG. **6**C is shown to include intermediary links **212**, **214**; the cantilever stress reduction system shown in FIG. **6**D is shown to include intermediary links **212**, **214**, **216**, **218**; and the cantilever stress reduction system shown in FIG. **6**E is shown to include intermediary links **212**, **214**. Some or all of plurality of intermediary links **212**, **214**, **216**, **218** may be coupled to a moveable portion of micro-electrical-mechanical system (MEMS) actuator **24** (e.g., moveable frame **152** and moveable spines **154**) or a non-moveable portion of micro-electrical-mechanical system (MEMS) actuator **24** (e.g., outer periphery **110**)

[0069] In some embodiments, main cantilever arm **210** may include a first distal end coupled to the moveable portion (e.g., moveable frame **152** and moveable spines **154**) of micro-electrical-mechanical system (MEMS) actuator **24** and a second distal end coupled to intermediary cantilever portion **208**.

[0070] Some embodiments of plurality of intermediary links **212**, **214**, **216**, **218** may include two intermediary links (e.g., intermediary links **212**, **214**) configured to be non-parallel to main cantilever arm **210** (as shown in FIGS. **6**B, **6**C and **6**E) or essentially orthogonal to main cantilever arm **210** (as shown in FIGS. **6**B and **6**E). Other embodiments of plurality of intermediary links **212**, **214**, **216**, **218** may include four intermediary links configured to be non-parallel to main cantilever arm **210** (as shown in FIG. **6**D).

[0071] Specifically, plurality of intermediary links **212**, **214**, **216**, **218** may be configured to absorb out-of-plane (z-axis) motion of the moveable portion (e.g., moveable frame **152** and moveable spines **154**) of micro-electrical-mechanical system (MEMS) actuator **24**. For example, some or all of the plurality of intermediary links **212**, **214**, **216**, **218** may be configured to torsionally-twist to absorb out-of-plane motion (z-axis) of the moveable portion (e.g., moveable frame **152** and moveable spines **154**) of micro-electrical-mechanical system (MEMS) actuator **24**. To provide for additional strength, planar spanning structure **220** may be configured to couple an upper surface of intermediary cantilever portion **208** to an upper surface of one or more of the plurality of intermediary links **212**, **214**, **216**, **218**. Planar spanning structure **220** may be made by depositing a layer of material (e.g., polysilicon, metals (such as aluminum, titanium, copper, tungsten), amorphous diamond, oxides (such as silicon oxide, aluminum oxide, or other metal oxide), nitrides (such as silicon nitride, metal nitride), carbides (such as silicon carbide, metal carbide), etc., or combined layers thereof) to span the upper surface of intermediary cantilever portion **208** and the upper surface of one or more of the plurality of intermediary links **212**, **214**, **216**, **218**.

[0072] As discussed above and in order to mitigate the impact of any z-axis shock load experienced by cantilever assembly **108**, a cantilever stress reduction system may be utilized. In the implantations shown in FIGS. **6**A-**6**E, cantilever assembly **108** is shown to include: intermediary cantilever portion **208**; main cantilever arm **210** configured

to couple a moveable portion of a micro-electrical-mechanical system (MEMS) actuator **24** and intermediary cantilever portion **208**; and a plurality of intermediary links (e.g., intermediary links **212**, **214**, **216**, **218**) configured to couple intermediary cantilever portion **208** to a portion of micro-electrical-mechanical system (MEMS) actuator **24**.

[0073] Accordingly, it is understood that other configurations are possible and are considered to be within the scope of this disclosure and claims. For example, the above-described cantilever stress reduction system may be utilized on each end of cantilever assembly **108**. Accordingly, each end of main cantilever arm **210** may be coupled to an intermediary cantilever portion (e.g., intermediary cantilever portion **208**), wherein a first of these intermediary cantilever portions may be utilized to couple a first end of main cantilever arm **210** (of cantilever assembly **108**) to moving frame **152** and a second of these intermediary cantilever portions may be utilized to couple a second end of main cantilever arm **210** (of cantilever assembly **108**) to outer periphery **110** of MEMS actuation core **34**.

Finger Array Snubbing

[0074] As discussed above, micro-electrical-mechanical system (MEMS) actuator **24** may include a plurality of actuation fingers, which includes moveable actuation fingers **162**B (coupled to moveable frame **152** and moveable spine **154**B) and fixed actuation fingers **164**B (coupled to fixed frame **156** and fixed spines **158**). As discussed above, moveable actuation fingers **162**B are displaceable along the x-axis and essentially non-displaceable along the y-axis.

[0075] Referring also to FIGS. **6**F-**6**H, in order to mitigate the impact of any z-axis shock load experienced by the plurality of actuation fingers and any deformation experienced by the motion-control cantilevers, finger array snubbing system **222** may be utilized to mitigate displacement along the z-axis. Micro-electrical-mechanical system (MEMS) actuator **24** may include a first set of actuation fingers (e.g., moveable actuation fingers **162**B**1**, **162**B**2**, **162**B**3**) and a second set of actuation fingers (e.g., fixed actuation fingers **164**B**1**, **164**B**2**, **164**B**3**), wherein these actuation fingers may be constructed of silicon (or any other suitable material).

[0076] First spanning structure (e.g., spanning structure **224**) configured to couple at least two fingers (e.g., actuation fingers **162**B**1**, **162**B**2**) of first set of actuation fingers (e.g., moveable actuation fingers **162**B**1**, **162**B**2**, **162**B**3**) while spanning at least one finger (e.g., actuation finger **164**B**1**) of second set of actuation fingers (e.g., fixed actuation fingers **164**B**1**, **164**B**2**, **164**B**3**). First spanning structure **224** may be constructed of metallic material, examples of which may include but are not limited to polysilicon, metals (such as aluminum, titanium, copper, tungsten), amorphous diamond, oxides (such as silicon oxide, aluminum oxide, or other metal oxide), nitrides (such as silicon nitride, metal nitride), carbides (such as silicon carbide, metal carbide), etc., or combined layers thereof.

[0077] First spanning structure **224** may be configured to span the at least one finger (e.g., actuation finger **164**B**1**) of second set of actuation fingers (e.g., fixed actuation fingers **164**B**1**, **164**B**2**, **164**B**3**) at a distance configured to define a maximum level of first-axis/first-direction (i.e., z-axis) deflection for the at least one finger (e.g., actuation finger **164**B**1**) of the second set of actuation fingers (e.g., fixed actuation fingers **164**B**1**, **164**B**2**, **164**B**3**). First spanning structure **224** may be configured to define a gap between first spanning structure **224** and the at least one finger (e.g., actuation finger **164**B**1**) of the second set of actuation fingers (e.g., fixed actuation fingers **164**B**1**, **164**B**2**, **164**B**3**), wherein this gap is in the range of 0.1 μm and 5 μm.

[0078] Second spanning structure **228** may be configured to couple at least two fingers (e.g., actuation fingers **164**B**2**, **164**B**3**) of second set of actuation fingers (e.g., fixed actuation fingers **164**B**1**, **164**B**2**, **164**B**3**) while spanning at least one finger (e.g., actuation finger **162**B**3**) of the first set of actuation fingers (e.g., moveable actuation fingers **162**B**1**, **162**B**2**, **162**B**3**). Second spanning structure **228** may be constructed of metallic material, examples of which may include but are not limited to polysilicon, metals (such as aluminum, titanium, copper, tungsten), amorphous diamond, oxides (such as silicon oxide, aluminum oxide, or other metal oxide), nitrides (such as silicon nitride, metal nitride), carbides (such as silicon carbide, metal carbide), etc., or combined layers thereof.

[0079] Second spanning structure **228** may be configured to span the at least one finger (e.g., actuation finger **162**B**3**) of the first set of actuation fingers (e.g., moveable actuation fingers **162**B**1**, **162**B**2**, **162**B**3**) at a distance configured to define a maximum level of first-axis/second-direction (i.e., z-axis) deflection for the at least two fingers (e.g., actuation fingers **164**B**2**, **164**B**3**) of the second set of actuation fingers (e.g., fixed actuation fingers **164**B**1**, **164**B**2**, **164**B**3**). Second spanning structure **228** may be configured to define a gap between the second spanning structure **228** and the at least one finger (e.g., actuation finger **162**B**3**) of the first set of actuation fingers (e.g., moveable fingers **162**B**1**, **162**B**2**, **162**B**3**), wherein this gap may be in the range of 0.1 μm and 5 μm.

[0080] While manufacturing first spanning structure **224** and second spanning structure **228**, patches of thin film may be deposited on top of overlapping areas of the finger arrays (e.g., moveable actuation fingers **162**B and fixed actuation fingers **164**B). Specifically, a patch of thin film may be attached to span three fingers (e.g., for first spanning structure **224**, actuation fingers **162**B**1**, **162**B**2** and **164**B**1**), wherein the thin film is detached from (in this example) actuation finger **164**B**1** so that the movable finger (e.g., actuation finger **164**B**1**) may move within the tolerated x-axis range.

[0081] Accordingly and for first spanning structure **224**, moveable actuation fingers **162**B**1**, **162**B**2** may be prevented from moving downward (i.e., into the page). And for second spanning structure **228**, moveable actuation finger **162**B**3** will be prevented from moving upward (i.e., out of the page).

[0082] Sacrificial layers **232** may be constructed of various materials (e.g., polysilicon, metals, oxides, nitrides, carbides, and polymers (such as PMMA, parylene, etc.)) and may be removed during the release process and may leave the above-described gap that controls the maximum amount of z-axis deflection that may be experienced by e.g., moveable actuation fingers **162**B**1**, **162**B**2**, **162**B**3**.

[0083] As stated above, examples of micro-electrical-mechanical system (MEMS) actuator **24** may include but are not limited to an in-plane MEMS actuator, an out-of-plane MEMS actuator, and a combination in-plane/out-of-plane MEMS actuator. Referring also to FIG. **7**, there is shown a combination in-plane/out-of-plane MEMS actuator that includes in-plane MEMS actuator **250**, with out-of-plane

actuator **252** attached thereto. As discussed above (and as shown in FIG. **3**), micro-electrical-mechanical system (MEMS) actuator **24** may include four comb drive sectors (e.g., comb drive sector **106**), wherein out-of-plane actuator **252** may be located in the center of these comb drive sectors. Accordingly, out-of-plane actuator **252** may be located under in-plane MEMS actuator **250** and/or outer frame **30** of in-plane MEMS actuator **250**.

[0084] Plurality of electrically conductive flexures **32** may be configured to conduct electrical signal within in-plane MEMS actuator **250** and may also provide electrical signal routing to out-of-plane actuator **252**. Plurality of electrically conductive flexures **32** may be highly conductivity and may be formed of a metal alloy layer (e.g., aluminum, copper, metal and metal alloys) disposed on multiple layers including but not limited to polysilicon, silicon oxide, silicon or other suitable semiconductor surface.

[0085] Plurality of electrically conductive flexures **32** may be designed in such as to provide a low level of stiffness, thus allowing for x-axis and y-axis and/or z-axis movement to provide the degrees of freedom required by in-plane MEMS actuator **250** and/or out-of-plane actuator **252**.

[0086] While the spanning structures (e.g., first spanning structure **224** and second spanning structure **228**) are shown to be essentially rectangular spanning structures that span a single actuation finger, this is for illustrative purposes only and is not intended to be a limitation of this disclosure, as other configurations are possible and are considered to be within the scope of the disclosure. For example and referring also to FIGS. **61**-**6**L, there is shown other implementations of the spanning structures (e.g., first spanning structure **224** and second spanning structure **228**) that are shaped differently and/or span multiple actuation fingers.

[0087] For example and as shown in FIG. **61**, there is shown an essentially rectangular spanning structure (e.g., spanning structure **234**) that is shown to span three actuation fingers (e.g., actuation fingers **235**, **236**, **237**). Further and as shown in FIG. **6**J, there is shown an essentially X-shaped spanning structures (e.g., spanning structure **238**) that is shown to span one actuation finger (e.g., actuation finger **239**). Additionally and as shown in FIG. **6**K, there is shown an essentially H-shaped spanning structures (e.g., spanning structure **240**) that is shown to span one actuation finger (e.g., actuation finger **241**). Further and as shown in FIG. **6**L, there is shown an essentially X-shaped spanning structure (e.g., spanning structure **242**) that is shown to span three actuation fingers (e.g., actuation fingers **243**, **244**, **245**).

[0088] Referring also to FIG. **8**, there is shown a detail view of out-of-plane actuator **252** in accordance with various embodiments of the present disclosure. Examples of out-of-plane actuator **252** may include but are not limited to a piezoelectric actuator. Out-of-plane actuator **252** may be configured to provide actuation in multiple directions including the direction orthogonal to the motion provided by in-plane MEMS actuator **250** (e.g., the z-axis). Out-of-plane actuator **252** may include center stage **300** configured to allow for the attachment of e.g., optoelectronic device **26** (see FIG. **3**). Out-of-plane actuator **252** may also include outer frame **302**, intermediate stage **304**, intermediate stage **306**, actuation beams **308**, **310**, **312** and electrical flexures **314**. Actuation beams **308**, **310**, **312** may be configured to couple center stage **300**, intermediate stage **304**, intermediate stage **306** and outer frame **302**.

[0089] While only one set of electrical flexures is shown, this is for illustrative purposes only and is not intended to be a limitation of this disclosure, as other configurations are possible. For example, a set of electrical flexures may also be included between intermediate stages **304**, **306**, and/or a set of electrical flexures may also be included between intermediate stage **306** and center stage **300**. While center stage **300** is shown to be oval in shape, other configurations are possible and are considered to be within the scope of this disclosure.

[0090] Z-axis (i.e., out-of-plane) movement of center stage **300** of out-of-plane actuator **252** may be generated due to the deformation of actuation beams **308**, **310**, **312**, which may be formed of a piezoelectric material (e.g., PZT (lead zirconate titanate), zinc oxide or other suitable material) that may be configured to deflect in response to an electrical signal. Actuation beam **308** and electrical flexure **314** may be configured to meet various stiffness requirement and/or allow for the level of deformability needed to achieve a desired level of z-axis movement while prohibiting x-axis and y-axis movement. The quantity of actuation beams and electrical flexures at each level (i.e., each concentric ring in this example) may be varied to achieve the desired level of stiffness and/or flexibility, and provide the required number of electrical connections.

[0091] Actuation beams **308**, **310**, **312** and/or electrical flexures **314** may include cantilevers and/or hinges (not shown) to enable movement in the out-of-plane (z-axis) direction. As discussed above, piezoelectric material may be used to achieve the desired deformation when an electrical signal is applied. The various beams (e.g., actuation beams **308**, **310**, **312**) and electrical flexures (e.g., electrical flexure **314**) may include a metal layer for routing electrical signals.

[0092] Center stage **300** may be divided into two or more discrete portions (e.g., center stage portions **300**A, **300**B), wherein the shape of these discrete portions may vary depending upon design criteria. Additionally, intermediate stages **304**, **306** may also be divided into two or more discrete portions. In such a configuration and when an electrical signal is applied to the actuation beams connected to center stage portion **300**A and/or center stage portion **300**B, the portion of center stage **300** provided with the electrical signal may move out of plane (in the z-axis) to achieve a desired level of roll or pitch.

[0093] Referring also to FIG. **9**A, there is shown a cross-sectional view of a two-actuator package in accordance with various embodiments of the present disclosure. Out-of-plane actuator **252** may be joined to printed circuit board **12** at outer frame **302** by epoxy **350** or other suitable adhesive/material. Printed circuit board **12** may form part of package **10** in various embodiments. In-plane MEMS actuator **250** may be disposed on out-of-plane actuator **252** and may be bonded to outer frame **302** and center stage **300** of out-of-plane actuator **252**. Optoelectronic device **26** may be disposed on top of in-plane MEMS actuator **250**.

[0094] Holder assembly **316** (which may include glass window **318**) may be disposed on top of printed circuit board **12** or in-plane MEMS actuator **250**. Electrical connections **320** from optoelectronic device **26** to the outer periphery of MEMS in-plane actuator **250** may be achieved by e.g., a standard COB wire bonding process, by a conductive epoxy/paste, by a MEMS bonding process, or by another suitable bonding means. Electrical connections **322** from outer frame **30** of in-plane MEMS actuator **250** to pads **310** of printed

circuit board **12** may use the same bonding process as that used for electrical connections **306**.

[0095] As is understood, some embodiments of package **10** may not include out-of-plane actuator **252**. In such embodiments, in-plane MEMS actuator **250** may be mounted directly to printed circuit board **12** by epoxying or otherwise affixing the fixed frame portions (e.g., fixed frame **156**) of the comb drive sectors (e.g., comb drive sector **106**) and outer frame **30** of micro-electrical-mechanical system (MEMS) actuator **24** to printed circuit board **12**.

[0096] Referring also to FIG. **9**B, there is shown a cross-sectional detail view of a portion of the two-actuator package shown in FIG. **9**A. For embodiments of package **10** that include out-of-plane actuator **252**, out-of-plane actuator **252** may be electrically coupled to components outside of package **10** through conductive epoxy (or paste) disposed within passage **352** formed in in-plane MEMS actuator **250** and also through plurality of electrically conductive flexures **32** of in-plane MEMS actuator **250**.

[0097] In various embodiments, the electrical routes/signals of out-of-plane actuator **252** may pass through electrical flexures **314** (see FIG. **8**) or may pass through the actuation beam **308**, **310**, and **312** and through electrical contact **354** to be electrically coupled to circuit board **12** (not shown in FIG. **9**B). Electrical signals may also pass through in-plane MEMS actuator **250** through passage **352** which may be filled with conductive epoxy, silver paste or an electrical plating to achieve the desired conduction.

[0098] Referring also to FIG. **10**, there is shown a cross-sectional view of a portion of out-of-plane actuator **252** (in a deformed position) and in-plane MEMS actuator **250**, in accordance with various embodiments of the present disclosure. Center stage **300** of "deformed" out-of-plane actuator **252** may be coupled to in-plane MEMS actuator **250**, which is coupled to optoelectronic device **26**. Electrical signals may be applied to actuation beams **308**, **310**, **312** and may result in the deformation of out-of-plane actuator **252**. The flexibility of plurality of electrically conductive flexures **32** may be configured to enable three axis movement of in-plane MEMS actuator **250** while achieving the flexibility and robustness requirements of out-of-plane actuator **252**.

[0099] Z-axis "out-of-plane" movement of out-of-plane actuator **252** may be generated at least in part due to the deformation of actuation beams **308**, **310**, **312**. As shown more clearly in FIG. **11**, the actuation beam **308** may deform when an electrical signal is applied to the polarized piezoelectric material (e.g., PZT). Various suitable piezoelectric materials with different polarization pattern and characteristics may be used to achieve the desired level of deformation. While not shown, actuation beams **310**, **312** (not shown) may deform similarly to actuation beam **308**. In some embodiments, actuation beam **308** may be a composite material (e.g., including upper material **400** and lower material **402**), wherein various materials may be used in combination to produce the desired piezoelectric effect. Further embodiments may utilize different configurations of in-plane MEMS actuator **250** and out-of-plane actuator **252** to achieve additional degrees of freedom.

MEMS Camera Package

[0100] As discussed above, some embodiments of package **10** may not include out-of-plane actuator **252** and in such embodiments, in-plane MEMS actuator **250** may be mounted directly to printed circuit board **12** by epoxying or otherwise affixing the fixed frame portions (e.g., fixed frame **156**) of the comb drive sectors (e.g., comb drive sector **106**) and outer frame **30** of micro-electrical-mechanical system (MEMS) actuator **24** to printed circuit board **12**. Accordingly, the following discussion concerns such a system (i.e., a camera package) that does not include an out-of-plane actuator.

[0101] Referring also to FIG. **12**, there is shown a cross-sectional view of a camera package (e.g., package **10**) that does not include an out-of-plane actuator. Accordingly and for this example, package **10** is only capable of movement is two directions (e.g., x-axis and y-axis).

[0102] Package **10** may include micro-electrical-mechanical system (MEMS) actuator **24** that may be configured to be coupled (on a lower surface) to printed circuit board **12**. Printed circuit board **12** may include recess **450** for receiving micro-electrical-mechanical system (MEMS) actuator **24**. Printed circuit board **12** may include a metal plate **452** to effectuate the coupling of micro-electrical-mechanical system (MEMS) actuator **24** to printed circuit board **12**. An example of metal plate **452** may include a stainless steel plate positioned within recess **450**. Specifically, metal plate **452** may be epoxied/attached within recess **450** of printed circuit board **12** and may allow for the coupling of micro-electrical-mechanical system (MEMS) actuator **24** to a smooth, flat surface on printed circuit board **12**.

[0103] An image sensor assembly (e.g., optoelectronic device **26**) may be coupled to an upper surface of micro-electrical-mechanical system (MEMS) actuator **24**. For example, optoelectronic device **26** may be epoxied/attached to outer periphery **110** of MEMS actuation core **34**. Accordingly, by coupling optoelectronic device **26** to micro-electrical-mechanical system (MEMS) actuator **24**, optoelectronic device **26** may be moved along the x-axis and the y-axis to effectuate various operations (e.g., image stabilization).

[0104] A holder assembly (e.g., holder assembly **454**) may be coupled to and positioned with respect to micro-electrical-mechanical system (MEMS) actuator **24**, wherein the purpose of holder assembly **454** may be to cover and snub micro-electrical-mechanical system (MEMS) actuator **24**. For example and instead of positioning holder assembly **454** with respect to printed circuit board **12**, holder assembly **454** may be positioned with respect to micro-electrical-mechanical system (MEMS) actuator **24**. Accordingly and by positioning holder assembly **454** with respect to micro-electrical-mechanical system (MEMS) actuator **24**, any irregularities associated with printed circuit board **12** may be eliminated.

[0105] Autofocus actuator **456** may be coupled to holder assembly **454** and lens assembly **458** may be coupled to autofocus actuator **456**. IR filter **460** may be positioned between autofocus actuator **456** and holder assembly **454** and may be configured to filter infrared light from the incoming image before it strikes optoelectronic device **26**.

[0106] Referring also to FIGS. **13**A-**13**B, holder assembly **454** may include one or more shock impact assemblies (e.g., shock impact assemblies **500**) configured to define a maximum amount of z-axis movement for micro-electrical-mechanical system (MEMS) actuator **24** in response to an impact. Specifically, shock impact assemblies **500** may be positioned proximate moveable portions of micro-electrical-mechanical system (MEMS) actuator **24** (e.g., moveable frame **152** and moveable spines **154**) so that z-axis move-

ment of these moveable portions may be controlled. For example, the maximum amount of z-axis movement for the moveable portions (e.g., moveable frame **152** and moveable spines **154**) of micro-electrical-mechanical system (MEMS) actuator **24** may be approximately 35 micrometers. Further, holder assembly **454** may include one or more image sensor stop assemblies (e.g., sensor stop assemblies **502**) configured to snub optoelectronic device **26** and define a maximum amount of z-axis movement for optoelectronic device **26** in response to an impact. For example, the maximum amount of z-axis movement for optoelectronic device **26** may be approximately 40 micrometers. Specifically, the gap between holder assembly **454** and the image sensor assembly (e.g., optoelectronic device **26**) may be approximately 195 micrometers, wherein the wirebonding and epoxy may reduce this gap to approximately 40 micrometers.

[0107] Additionally, holder assembly **454** may include one or more clearance troughs (e.g., clearance troughs **504**) configured to provide clearance for one or more electrical connectors (e.g., plurality of electrically conductive flexures **32**) of micro-electrical-mechanical system (MEMS) actuator **24**. Holder assembly **454** may further include one or more strengthening ribs (e.g., strengthening ribs **506**) configured to span the one or more clearance troughs (e.g., clearance troughs **504**) and stiffen holder assembly **454**. Holder assembly **454** may also include one or more spacer assemblies (e.g., spacer assemblies **508**) configured to position holder assembly **454** with respect to micro-electrical-mechanical system (MEMS) actuator **24**. Specifically, spacer assemblies **508** may make contact with outer frame **30** of micro-electrical-mechanical system (MEMS) actuator **24**.

Two-Axis MEMS Camera Package Assembly

[0108] As discussed above, some embodiments of package **10** may not include out-of-plane actuator **252** and the following discussion concerns such a system (i.e., a camera package) that does not include an out-of-plane actuator.

[0109] Referring also to FIG. **14**, method **550** of manufacturing a micro-electrical-mechanical system (MEMS) assembly may include mounting **552** micro-electrical-mechanical system (MEMS) actuator **24** to metal plate **452**. An image sensor assembly (e.g., optoelectronic device **26**) may be mounted **554** to micro-electrical-mechanical system (MEMS) actuator **24**. The image sensor assembly (e.g., optoelectronic device **26**) may be electrically coupled **556** to micro-electrical-mechanical system (MEMS) actuator **24**, thus forming a micro-electrical-mechanical system (MEMS) subassembly.

[0110] Mounting **552** micro-electrical-mechanical system (MEMS) actuator **24** to metal plate **452** may include applying **558** epoxy to metal plate **452**, positioning **560** micro-electrical-mechanical system (MEMS) actuator **24** on the epoxy, and curing **562** the epoxy. In other embodiments, other suitable glues or other adhesives may be used.

[0111] Mounting **554** an image sensor assembly (e.g., optoelectronic device **26**) to micro-electrical-mechanical system (MEMS) actuator **24** may include applying **564** epoxy to micro-electrical-mechanical system (MEMS) actuator **24**, positioning **566** the image sensor (e.g., optoelectronic device **26**) on the epoxy, and curing **568** the epoxy. In other embodiments, other suitable glues or other adhesives may be used.

[0112] Electrically coupling **556** the image sensor assembly (e.g., optoelectronic device **26**) to the micro-electrical-mechanical system (MEMS) actuator may include wirebonding **570** the image sensor assembly (e.g., optoelectronic device **26**) to micro-electrical-mechanical system (MEMS) actuator **24**.

[0113] The micro-electrical-mechanical system (MEMS) subassembly may be mounted **572** to printed circuit board **12**. Mounting **572** the micro-electrical-mechanical system (MEMS) subassembly to printed circuit board **12** may include applying **574** epoxy to printed circuit board **12**, positioning **576** the micro-electrical-mechanical system (MEMS) subassembly on the epoxy, and curing **578** the epoxy. In other embodiments, other suitable glues or other adhesives may be used. Printed circuit board **12** may include an opening (or a recess) to various depths and (in some embodiments) the epoxy may be applied to an upper surface of printed circuit board **12**.

[0114] The micro-electrical-mechanical system (MEMS) subassembly may be electrically coupled **580** to printed circuit board **12**. Electrically coupling **580** the micro-electrical-mechanical system (MEMS) subassembly to printed circuit board **12** may include wirebonding **582** the micro-electrical-mechanical system (MEMS) subassembly to printed circuit board **12**. Electrically coupling **580** the micro-electrical-mechanical system (MEMS) subassembly to printed circuit board **12** may further include encapsulating **584** the wirebonding in epoxy.

[0115] Holder assembly **454** may be mounted **586** to the micro-electrical-mechanical system (MEMS) subassembly. Mounting **586** holder assembly **454** to the micro-electrical-mechanical system (MEMS) subassembly may include applying **588** epoxy to printed circuit board **12**, positioning **590** the holder assembly on the epoxy, and curing **592** the epoxy. For example, holder assembly **454** may be placed on top of the micro-electrical-mechanical system (MEMS) subassembly and epoxy may be applied between holder assembly **454** and printed circuit board **12** (to couple holder assembly **454** to the micro-electrical-mechanical system (MEMS) subassembly). This epoxy may be applied in the gap between printed circuit board **12** and holder assembly **454** once holder assembly **454** is positioned on top of the micro-electrical-mechanical system (MEMS) subassembly. The spacer assemblies **508** may be used as a reference surface to make contact with the micro-electrical-mechanical system (MEMS) subassembly. In other embodiments, other suitable glues or other adhesives may be used.

Three-Axis MEMS Camera Package Assembly

[0116] As discussed above, some embodiments of package **10** may include out-of-plane actuator **252** and the following discussion concerns such a system (i.e., a camera package) that includes an out-of-plane actuator.

[0117] Referring also to FIG. **15**, method **600** of manufacturing a micro-electrical-mechanical system (MEMS) assembly may include applying **602** epoxy on printed circuit board **12** for bonding outer frame **302** of out-of-plane actuator **252** to printed circuit board **12**. In other embodiments, other suitable glues or other adhesives may be used. Printed circuit board **12** may include an opening (or a recess) to various depths and (in some embodiments) the epoxy may be applied to an upper surface of printed circuit board **12**.

[0118] Out-of-plane actuator **252** may be a z-axis piezoelectric actuator and may be mounted **604** (directly or indirectly) on printed circuit board **12**. In other embodiments, there may be another component disposed between

out-of-plane actuator **252** and printed circuit board **12**. After the epoxy is cured, outer frame **302** of out-of-plane actuator **252** may be applied to printed circuit board **12**. Outer frame **302** of out-of-plane actuator **252** may be constructed of a silicon material (which may have a thermal expansion coefficient that matches printed circuit board **12**). Additionally/alternatively, outer frame **302** may be constructed of a flexural material that compensates for any mismatch in thermal expansion.

[0119] After the assembly of out-of-plane actuator **252**, epoxy may be applied **606** on center stage **300** and outer frame **302** of out-of-plane actuator **252**. In other embodiments, other suitable glues or other adhesives may be used. In-plane MEMS actuator **250** may be placed **608** on out-of-plane actuator **252** and the epoxy may be allowed to cure. After curing, in-plane MEMS actuator **250** may be bonded to out-of-plane actuator **252** on printed circuit board **12**.

[0120] Out-of-plane actuator **252** may include conductive traces that pass through in-plane MEMS actuator **250** (as described above). Conductive epoxy or similar material may be provided **610** on associated holes on in-plane MEMS actuator **250** to connect and electrically couple to out-of-plane actuator **252**, wherein the conductive epoxy is subsequently allowed to cure.

[0121] Thermal epoxy (or another suitable adhesive) may be applied **612** on an outer periphery of in-plane MEMS actuator **250**, and then optoelectronic device **26** may be joined **614** to in-plane MEMS actuator **250**. Various suitable epoxies or other adhesives may be used.

[0122] After curing to affix optoelectronic device **26** to in-plane MEMS actuator **250**, electrical connections through standard COB process (or other suitable methods) may be completed **616**. Protective epoxy may be applied **618** to the electrical joints to enhance the strength and robustness of the bond. Other protective materials may be used in other embodiments.

[0123] If there are particles on optoelectronic device **26**, these particles may be removed by vibrating **620** optoelectronic device **154**, wherein holder **302** (which may include glass window **304**) may be mounted **622** onto circuit board **12** or in-plane MEMS actuator **250**.

Zipper Actuator

[0124] The above discussion concerned the use of e.g., micro-electrical-mechanical system (MEMS) actuator **24** that includes a plurality of actuation fingers, which includes moveable actuation fingers **162**B (coupled to moveable frame **152** and moveable spine **154**B) and fixed actuation fingers **164**B (coupled to fixed frame **156** and fixed spines **158**). While the use of such a finger-based MEMS actuator provides a high level of granularity and controllability, often times, such granularity and controllability is not needed. For example, certain systems only require that a system be in one of two states (e.g., on/off, open/closed, up/down). Examples of such a system may include but are not limited to a shutter control system (i.e., the shutter is either opened or closed) and a telephoto lens system (i.e., the lens is either in standard mode or zoom mode).

[0125] In such situations, a zipper actuator may be used, as zipper actuators provide good performance with systems that require only two such positions. Referring also to FIG. **16**, micro-electrical-mechanical system (MEMS) assembly **650** may include stationary stage **652** and rigid stage **654**. At least one flexure **656** may be configured to slidably couple stationary stage **652** and rigid stage **654**, thus allowing rigid stage **654** to be slidably displaced along the x-axis. At least one flexible electrode **658** is coupled to and essentially orthogonal to one of stationary stage **652** and rigid stage **654**. And at least one rigid electrode **660** is coupled to and essentially orthogonal to the other of stationary stage **652** and rigid stage **654**.

[0126] The at least one flexible electrode **658** may be configured to be energized at a first voltage potential and the at least one rigid electrode **660** may be configured to be energized at a second voltage potential. Accordingly and by applying a voltage potential across electrodes **658**, **660**, an electric field may be generated between electrodes **658**, **660** that will draw electrodes **658**, **660** towards each other. Specifically and in the embodiment shown in FIG. **16**, flexible electrode **658** will be drawn towards rigid electrode **660**. And as flexible electrode **658** is flexible, flexible electrode **658** will bend toward rigid electrode **660** until the point at which the lower end of flexible electrode **658** contacts the lower end of rigid electrode **660**. At this point, flexure **656** may flex and allow rigid stage **654** to move toward rigid electrode **660**, allowing the entirety of flexible electrode **658** to "zipper up" against rigid electrode **660** and close any gap therebetween. Electrodes **658**, **660** may each include insulation layer **662** so that when electrodes **658**, **660** initially contact each other, they do not short out. This, in turn, will allow the above-described voltage potential to be maintained and allow flexible electrode **658** to fully engage rigid electrode **660**.

[0127] As discussed above, micro-electrical-mechanical system (MEMS) assembly **650** may include at least one flexible electrode **658** and at least one rigid electrode **660**. Accordingly, micro-electrical-mechanical system (MEMS) assembly **650** may include two or more flexible electrodes (that are coupled and essentially orthogonal to one of the stationary stage and the rigid stage) and two or more rigid electrodes (that are coupled and essentially orthogonal to the other of the stationary stage and the rigid stage). For example, FIG. **17**A shows an embodiment of micro-electrical-mechanical system (MEMS) assembly **650** that includes two rigid electrodes (e.g., rigid electrodes **700**, **702**) and two flexible electrode (e.g., flexible electrodes **704**, **706**).

[0128] Typically, the flexible electrodes (e.g., flexible electrodes **658**, **704**, **706**) may be generally straight in shape (as shown in FIGS. **16**, **17**A). However and as shown in FIG. **17**B, these flexible electrodes may be generally curved in shape (e.g., flexible electrodes **708**, **710**) and may be curved toward rigid electrodes **712**, **714**.

[0129] Additionally/alternatively, while the rigid electrodes (e.g., **660**, **700**, **702**, **712**, **714**) are shown to be generally rectangular in shape, this is for illustrative purposes only and is not intended to be a limitation of this disclosure, as other configurations are possible. For example and as shown in FIG. **17**C, these rigid electrode (e.g., rigid electrodes **716**, **718**) may include at least one surface that is not orthogonal to the stationary stage and/or the rigid stage. For example, rigid electrodes **716**, **718** are shown to be somewhat pyramidal in shape, where the portion proximate the stage to which it is attached in comparatively wider and is angled toward flexible electrodes **720**, **722**.

[0130] In order to enhance the utility of micro-electrical-mechanical system (MEMS) assembly **650**, micro-electrical-mechanical system (MEMS) assembly **650** may include a plurality of assemblies that may be arranged in a series

configuration (as shown in FIG. **18**A) to enhances the maximum placement of the rigid (i.e., moveable) stages. Additionally, micro-electrical-mechanical system (MEMS) assembly **650** may include a plurality of assemblies that may be arranged in a parallel configuration to enhance the strength/power of the rigid (i.e., moveable) stages and/or in a parallel-series configuration (as shown in FIG. **18**B) to enhances both the maximum displacement and the strength/power of the rigid (i.e., moveable) stages.

Slidable Connection Assemblies

[0131] As is known in the art, various etching processes may be utilized when manufacturing MEMS devices (e.g., micro-electrical-mechanical system (MEMS) actuator **24**), wherein dozens of these MEMS devices may be etched into a single silicon wafer. Automated machinery and assembly robots may be utilized to retrieve these MEMS devices from the wafer and perform the above-described assembly processes. Accordingly, it may be desirable to include some form of structure on the wafer that holds these MEMS devices in their appropriate positions on the wafer until they are needed for assembly, at which point, this structure should allow for the easy removal of these MEMS devices from the wafer.

[0132] Referring also to FIGS. **19**A-**19**C, there is shown one implementation of a slidable connection assembly that may be used to temporarily hold a MEMS device in the appropriate position on a wafer until the MEMS device is needed for e.g., assembly. Accordingly, the micro-electrical-mechanical system (MEMS) device (e.g., micro-electrical-mechanical system (MEMS) actuator **24**) may include one or more slidable connection assemblies (e.g., slidable connection assemblies **750**) for releasably coupling the micro-electrical-mechanical system (MEMS) device to the wafer (e.g., wafer **752**) from which the micro-electrical-mechanical system (MEMS) device was made. Specifically, the slidable connection assemblies (e.g., slidable connection assemblies **750**) may be manufactured at the same time as the micro-electrical-mechanical system (MEMS) device (e.g., micro-electrical-mechanical system (MEMS) actuator **24**) and may be made from the same wafer (e.g., wafer **752**) that the micro-electrical-mechanical system (MEMS) device (e.g., micro-electrical-mechanical system (MEMS) actuator **24**) is made from. Accordingly, the one or more slidable connection assemblies (e.g., slidable connection assemblies **750**) may include a portion of wafer **752** (e.g., a supporting pillar on wafer **752**).

[0133] As discussed above, micro-electrical-mechanical system (MEMS) actuator **24** may include MEMS actuation core **34** and a MEMS electrical connector assembly (e.g., outer frame **30**) electrically coupled to MEMS actuation core **34** and configured to be electrically coupled to a printed circuit board (e.g., printed circuit board **12**).

[0134] The one or more slidable connection assemblies (e.g., slidable connection assemblies **750**) may be any portion of the MEMS device that is being positioned by slidable connection assemblies **750**. For example, slidable connection assemblies **750** may be a portion of MEMS actuation core **34** and/or a portion of the MEMS electrical connector (e.g., outer frame **30**).

[0135] The one or more slidable connection assemblies (e.g., slidable connection assemblies **750**) may be configured to allow for the easy removal of the micro-electrical-mechanical system (MEMS) device (e.g., micro-electrical-mechanical system (MEMS) actuator **24**) from wafer **752** when needed for assembly but (up to that point) securely position the micro-electrical-mechanical system (MEMS) device (e.g., micro-electrical-mechanical system (MEMS) actuator **24**) on wafer **752**.

[0136] Accordingly, the one or more slidable connection assemblies (e.g., slidable connection assemblies **750**) may include one or more finger assemblies (e.g., device finger assemblies **754**) on the micro-electrical-mechanical system (MEMS) device (e.g., micro-electrical-mechanical system (MEMS) actuator **24**). Device finger assemblies **754** may be sized so that they do not extend past the appropriate edge (e.g., edge **756**) of e.g., micro-electrical-mechanical system (MEMS) actuator **24**, thus allowing micro-electrical-mechanical system (MEMS) actuator **24** to tightly abut or lay flat upon another device/system.

[0137] The one or more slidable connection assemblies (e.g., slidable connection assemblies **750**) may also include one or more finger assemblies (e.g., wafer finger assemblies **758**) on wafer **752**. The one or more slidable connection assemblies (e.g., slidable connection assemblies **750**) may also include one or more socket assemblies (e.g., wafer socket assemblies **760**) on wafer **752** that are configured to receive the one or more finger assemblies (e.g., device finger assemblies **754**) on the micro-electrical-mechanical system (MEMS) device (e.g., micro-electrical-mechanical system (MEMS) actuator **24**).

[0138] The one or more socket assemblies (e.g., wafer socket assemblies **760**) on wafer **752** may include a spanning structure (e.g., wafer spanning structure **762**) configured to span at least two fingers (chosen from wafer finger assemblies **758**) on wafer **752**, thus forming the one or more socket assemblies (e.g., wafer socket assemblies **760**) therebetween.

[0139] The one or more slidable connection assemblies (e.g., slidable connection assemblies **750**) may also include one or more socket assemblies (e.g., device socket assemblies **764**) on the micro-electrical-mechanical system (MEMS) device (e.g., micro-electrical-mechanical system (MEMS) actuator **24**) that are configured to receive the one or more finger assemblies (e.g., wafer finger assemblies **758**) on wafer **752**.

[0140] The one or more socket assemblies (e.g., device socket assemblies **764**) on the micro-electrical-mechanical system (MEMS) device (e.g., micro-electrical-mechanical system (MEMS) actuator **24**) may include a spanning structure (e.g., device spanning structure **766**) that is configured to span at least two fingers (chosen from device finger assemblies **754**) of the micro-electrical-mechanical system (MEMS) device (e.g., micro-electrical-mechanical system (MEMS) actuator **24**), thus forming the one or more socket assemblies (e.g., device socket assemblies **764**) therebetween.

[0141] While manufacturing spanning structures **762**, **766**, patches of thin film may be deposited on top of overlapping areas of the fingers (e.g., device finger assemblies **754** and wafer finger assemblies **758**). Specifically, a patch of thin film may be attached to span three fingers (e.g., for wafer spanning structure **762**, one device finger assembly and two wafer finger assemblies), wherein the film is detached from (in this example) the one device finger assembly so that the device finger assembly may be removed from the appropriate wafer socket assembly **760**. Sacrificial layers **768** may be constructed of poly silicon material and may be removed

during the release process and may leave gap **770** that allows for the removal of the device finger assembly from the appropriate wafer socket assembly **760**.

General:

[0142] In general, the various operations of method described herein may be accomplished using or may pertain to components or features of the various systems and/or apparatus with their respective components and subcomponents, described herein.

[0143] The presence of broadening words and phrases such as "one or more," "at least," "but not limited to" or other like phrases in some instances shall not be read to mean that the narrower case is intended or required in instances where such broadening phrases may be absent.

[0144] Additionally, the various embodiments set forth herein are described in terms of example block diagrams, flow charts and other illustrations. As will become apparent to one of ordinary skill in the art after reading this document, the illustrated embodiments and their various alternatives can be implemented without confinement to the illustrated examples. For example, block diagrams and their accompanying description should not be construed as mandating a particular architecture or configuration.

[0145] While various embodiments of the present disclosure have been described above, it should be understood that they have been presented by way of example only, and not of limitation. Likewise, the various diagrams may depict an example architectural or other configuration for the disclosure, which is done to aid in understanding the features and functionality that can be included in the disclosure. The disclosure is not restricted to the illustrated example architectures or configurations, but the desired features can be implemented using a variety of alternative architectures and configurations. Indeed, it will be apparent to one of skill in the art how alternative functional, logical or physical partitioning and configurations can be implemented to implement the desired features of the present disclosure. Additionally, with regard to flow diagrams, operational descriptions and method claims, the order in which the steps are presented herein shall not mandate that various embodiments be implemented to perform the recited functionality in the same order unless the context dictates otherwise.

[0146] Although the disclosure is described above in terms of various example embodiments and implementations, it should be understood that the various features, aspects and functionality described in one or more of the individual embodiments are not limited in their applicability to the particular embodiment with which they are described, but instead can be applied, alone or in various combinations, to one or more of the other embodiments of the disclosure, whether or not such embodiments are described and whether or not such features are presented as being a part of a described embodiment. Thus, the breadth and scope of the present disclosure should not be limited by any of the above-described example embodiments, and it will be understood by those skilled in the art that various changes and modifications to the previous descriptions may be made within the scope of the claims.

[0147] As will be appreciated by one skilled in the art, the present disclosure may be embodied as a method, a system, or a computer program product. Accordingly, the present disclosure may take the form of an entirely hardware embodiment, an entirely software embodiment (including firmware, resident software, micro-code, etc.) or an embodiment combining software and hardware aspects that may all generally be referred to herein as a "circuit," "module" or "system." Furthermore, the present disclosure may take the form of a computer program product on a computer-usable storage medium having computer-usable program code embodied in the medium.

[0148] Any suitable computer usable or computer readable medium may be utilized. The computer-usable or computer-readable medium may be, for example but not limited to, an electronic, magnetic, optical, electromagnetic, infrared, or semiconductor system, apparatus, device, or propagation medium. More specific examples (a non-exhaustive list) of the computer-readable medium may include the following: an electrical connection having one or more wires, a portable computer diskette, a hard disk, a random access memory (RAM), a read-only memory (ROM), an erasable programmable read-only memory (EPROM or Flash memory), an optical fiber, a portable compact disc read-only memory (CD-ROM), an optical storage device, a transmission media such as those supporting the Internet or an intranet, or a magnetic storage device. The computer-usable or computer-readable medium may also be paper or another suitable medium upon which the program is printed, as the program can be electronically captured, via, for instance, optical scanning of the paper or other medium, then compiled, interpreted, or otherwise processed in a suitable manner, if necessary, and then stored in a computer memory. In the context of this document, a computer-usable or computer-readable medium may be any medium that can contain, store, communicate, propagate, or transport the program for use by or in connection with the instruction execution system, apparatus, or device. The computer-usable medium may include a propagated data signal with the computer-usable program code embodied therewith, either in baseband or as part of a carrier wave. The computer usable program code may be transmitted using any appropriate medium, including but not limited to the Internet, wireline, optical fiber cable, RF, etc.

[0149] Computer program code for carrying out operations of the present disclosure may be written in an object oriented programming language such as Java, Smalltalk, C++ or the like. However, the computer program code for carrying out operations of the present disclosure may also be written in conventional procedural programming languages, such as the "C" programming language or similar programming languages. The program code may execute entirely on the user's computer, partly on the user's computer, as a stand-alone software package, partly on the user's computer and partly on a remote computer or entirely on the remote computer or server. In the latter scenario, the remote computer may be connected to the user's computer through a local area network/a wide area network/the Internet (e.g., network **18**).

[0150] The present disclosure is described with reference to flowchart illustrations and/or block diagrams of methods, apparatus (systems) and computer program products according to embodiments of the disclosure. It will be understood that each block of the flowchart illustrations and/or block diagrams, and combinations of blocks in the flowchart illustrations and/or block diagrams, may be implemented by computer program instructions. These computer program instructions may be provided to a processor of a general purpose computer/special purpose computer/other program-

mable data processing apparatus, such that the instructions, which execute via the processor of the computer or other programmable data processing apparatus, create means for implementing the functions/acts specified in the flowchart and/or block diagram block or blocks.

[0151] These computer program instructions may also be stored in a computer-readable memory that may direct a computer or other programmable data processing apparatus to function in a particular manner, such that the instructions stored in the computer-readable memory produce an article of manufacture including instruction means which implement the function/act specified in the flowchart and/or block diagram block or blocks.

[0152] The computer program instructions may also be loaded onto a computer or other programmable data processing apparatus to cause a series of operational steps to be performed on the computer or other programmable apparatus to produce a computer implemented process such that the instructions which execute on the computer or other programmable apparatus provide steps for implementing the functions/acts specified in the flowchart and/or block diagram block or blocks.

[0153] The flowcharts and block diagrams in the figures may illustrate the architecture, functionality, and operation of possible implementations of systems, methods and computer program products according to various embodiments of the present disclosure. In this regard, each block in the flowchart or block diagrams may represent a module, segment, or portion of code, which comprises one or more executable instructions for implementing the specified logical function(s). It should also be noted that, in some alternative implementations, the functions noted in the block may occur out of the order noted in the figures. For example, two blocks shown in succession may, in fact, be executed substantially concurrently, or the blocks may sometimes be executed in the reverse order, depending upon the functionality involved. It will also be noted that each block of the block diagrams and/or flowchart illustrations, and combinations of blocks in the block diagrams and/or flowchart illustrations, may be implemented by special purpose hardware-based systems that perform the specified functions or acts, or combinations of special purpose hardware and computer instructions.

[0154] The terminology used herein is for the purpose of describing particular embodiments only and is not intended to be limiting of the disclosure. As used herein, the singular forms "a", "an" and "the" are intended to include the plural forms as well, unless the context clearly indicates otherwise. It will be further understood that the terms "comprises" and/or "comprising," when used in this specification, specify the presence of stated features, integers, steps, operations, elements, and/or components, but do not preclude the presence or addition of one or more other features, integers, steps, operations, elements, components, and/or groups thereof.

[0155] The corresponding structures, materials, acts, and equivalents of all means or step plus function elements in the claims below are intended to include any structure, material, or act for performing the function in combination with other claimed elements as specifically claimed. The description of the present disclosure has been presented for purposes of illustration and description, but is not intended to be exhaustive or limited to the disclosure in the form disclosed. Many modifications and variations will be apparent to those of ordinary skill in the art without departing from the scope and spirit of the disclosure. The embodiment was chosen and described in order to best explain the principles of the disclosure and the practical application, and to enable others of ordinary skill in the art to understand the disclosure for various embodiments with various modifications as are suited to the particular use contemplated.

[0156] A number of implementations have been described. Having thus described the disclosure of the present application in detail and by reference to embodiments thereof, it will be apparent that modifications and variations are possible without departing from the scope of the disclosure defined in the appended claims.

What is claimed is:

1. A method of manufacturing a micro-electrical-mechanical system (MEMS) assembly comprising:

mounting a micro-electrical-mechanical system (MEMS) actuator to a metal plate;

mounting an image sensor assembly to the micro-electrical-mechanical system (MEMS) actuator; and

electrically coupling the image sensor assembly to the micro-electrical-mechanical system (MEMS) actuator, thus forming a micro-electrical-mechanical system (MEMS) subassembly.

2. The method of manufacturing a micro-electrical-mechanical system (MEMS) assembly of claim **1** wherein mounting a micro-electrical-mechanical system (MEMS) actuator to a metal plate includes:

applying epoxy to the metal plate;

positioning the micro-electrical-mechanical system (MEMS) actuator on the epoxy; and

curing the epoxy.

3. The method of manufacturing a micro-electrical-mechanical system (MEMS) assembly of claim **1** wherein mounting an image sensor assembly to the micro-electrical-mechanical system (MEMS) actuator includes:

applying epoxy to the micro-electrical-mechanical system (MEMS) actuator;

positioning the image sensor on the epoxy; and

curing the epoxy.

4. The method of manufacturing a micro-electrical-mechanical system (MEMS) assembly of claim **1** wherein electrically coupling the image sensor assembly to the micro-electrical-mechanical system (MEMS) actuator includes:

wirebonding the image sensor assembly to the micro-electrical-mechanical system (MEMS) actuator.

5. The method of manufacturing a micro-electrical-mechanical system (MEMS) assembly of claim **1** further comprising:

mounting the micro-electrical-mechanical system (MEMS) subassembly to a printed circuit board.

6. The method of manufacturing a micro-electrical-mechanical system (MEMS) assembly of claim **5** wherein mounting the micro-electrical-mechanical system (MEMS) subassembly to a printed circuit board includes:

applying epoxy to the printed circuit board;

positioning the micro-electrical-mechanical system (MEMS) subassembly on the epoxy; and

curing the epoxy.

7. The method of manufacturing a micro-electrical-mechanical system (MEMS) assembly of claim **5** further comprising:

electrically coupling the micro-electrical-mechanical system (MEMS) subassembly to the printed circuit board.

8. The method of manufacturing a micro-electrical-mechanical system (MEMS) assembly of claim **7** wherein electrically coupling the micro-electrical-mechanical system (MEMS) subassembly to the printed circuit board includes:

wirebonding the micro-electrical-mechanical system (MEMS) subassembly to the printed circuit board.

9. The method of manufacturing a micro-electrical-mechanical system (MEMS) assembly of claim **8** wherein electrically coupling the micro-electrical-mechanical system (MEMS) subassembly to the printed circuit board further includes:

encapsulating the wirebonding in epoxy.

10. The method of manufacturing a micro-electrical-mechanical system (MEMS) assembly of claim **1** further comprising:

mounting a holder assembly to the micro-electrical-mechanical system (MEMS) subassembly.

11. The method of manufacturing a micro-electrical-mechanical system (MEMS) assembly of claim **10** wherein mounting a holder assembly to the micro-electrical-mechanical system (MEMS) subassembly includes:

applying epoxy to the printed circuit board;

positioning the holder assembly on the epoxy; and

curing the epoxy.

12. A method of manufacturing a micro-electrical-mechanical system (MEMS) assembly comprising:

mounting a micro-electrical-mechanical system (MEMS) actuator to a metal plate;

mounting an image sensor assembly to the micro-electrical-mechanical system (MEMS) actuator;

electrically coupling the image sensor assembly to the micro-electrical-mechanical system (MEMS) actuator, thus forming a micro-electrical-mechanical system (MEMS) subassembly;

mounting the micro-electrical-mechanical system (MEMS) subassembly to a printed circuit board; and

electrically coupling the micro-electrical-mechanical system (MEMS) subassembly to the printed circuit board.

13. The method of manufacturing a micro-electrical-mechanical system (MEMS) assembly of claim **12** wherein mounting a micro-electrical-mechanical system (MEMS) actuator to a metal plate includes:

applying epoxy to the metal plate;

positioning the micro-electrical-mechanical system (MEMS) actuator on the epoxy; and

curing the epoxy.

14. The method of manufacturing a micro-electrical-mechanical system (MEMS) assembly of claim **12** wherein mounting an image sensor assembly to the micro-electrical-mechanical system (MEMS) actuator includes:

applying epoxy to the micro-electrical-mechanical system (MEMS) actuator;

positioning the image sensor on the epoxy; and

curing the epoxy.

15. The method of manufacturing a micro-electrical-mechanical system (MEMS) assembly of claim **12** wherein electrically coupling the image sensor assembly to the micro-electrical-mechanical system (MEMS) actuator includes:

wirebonding the image sensor assembly to the micro-electrical-mechanical system (MEMS) actuator.

16. The method of manufacturing a micro-electrical-mechanical system (MEMS) assembly of claim **12** wherein mounting the micro-electrical-mechanical system (MEMS) subassembly to a printed circuit board includes:

applying epoxy to the printed circuit board;

positioning the micro-electrical-mechanical system (MEMS) subassembly on the epoxy; and

curing the epoxy.

17. The method of manufacturing a micro-electrical-mechanical system (MEMS) assembly of claim **12** wherein electrically coupling the micro-electrical-mechanical system (MEMS) subassembly to the printed circuit board includes:

wirebonding the micro-electrical-mechanical system (MEMS) subassembly to the printed circuit board; and

encapsulating the wirebonding in epoxy.

18. The method of manufacturing a micro-electrical-mechanical system (MEMS) assembly of claim **12** further comprising:

mounting a holder assembly to the micro-electrical-mechanical system (MEMS) subassembly.

19. The method of manufacturing a micro-electrical-mechanical system (MEMS) assembly of claim **18** wherein mounting a holder assembly to the micro-electrical-mechanical system (MEMS) subassembly includes:

applying epoxy to the printed circuit board;

positioning the holder assembly on the epoxy; and

curing the epoxy.

20. A method of manufacturing a micro-electrical-mechanical system (MEMS) assembly comprising:

mounting a micro-electrical-mechanical system (MEMS) actuator to a metal plate;

mounting an image sensor assembly to the micro-electrical-mechanical system (MEMS) actuator;

electrically coupling the image sensor assembly to the micro-electrical-mechanical system (MEMS) actuator, thus forming a micro-electrical-mechanical system (MEMS) subassembly;

mounting the micro-electrical-mechanical system (MEMS) subassembly to a printed circuit board;

electrically coupling the micro-electrical-mechanical system (MEMS) subassembly to the printed circuit board; and

mounting a holder assembly to the micro-electrical-mechanical system (MEMS) subassembly.

* * * * *