US 20200136662A1

(19) United States
(12) Patent Application Publication
KIMURA et al.
(10) Pub. No.: US 2020/0136662 A1
(43) Pub. Date: Apr. 30, 2020

(54) **TRANSMISSION DEVICE, RECEPTION DEVICE, TRANSMISSION METHOD, AND RECEPTION METHOD**

(71) Applicant: **Panasonic Intellectual Property Corporation of America**, Torrance, CA (US)

(72) Inventors: **Tomohiro KIMURA**, Osaka (JP); **Mikihiro OUCHI**, Osaka (JP)

(21) Appl. No.: **16/731,573**

(22) Filed: **Dec. 31, 2019**

Related U.S. Application Data

(63) Continuation of application No. 16/270,930, filed on Feb. 8, 2019, now Pat. No. 10,567,016, which is a continuation of application No. PCT/JP2017/027831, filed on Aug. 1, 2017.

(60) Provisional application No. 62/374,227, filed on Aug. 12, 2016.

Publication Classification

(51) **Int. Cl.**

H04B 1/04	(2006.01)
H04B 1/10	(2006.01)
H04J 7/02	(2006.01)
H04L 27/34	(2006.01)
H04J 13/00	(2006.01)

(52) **U.S. Cl.**

CPC ***H04B 1/0475*** (2013.01); ***H04B 1/10*** (2013.01); ***H04J 13/0003*** (2013.01); ***H04L 27/3488*** (2013.01); ***H04J 7/02*** (2013.01)

(57) **ABSTRACT**

A transmission device includes a first mapper, a second mapper, a converter, a superposer, and a transmitter. The first mapper is configured to map a first bit stream of a first data series to generate a first modulated symbol stream. The second mapper is configured to map a second bit stream of a second data series to generate a second modulated symbol stream. The first modulated symbol stream and the second modulated symbol stream are representable on a complex plane extending in a first direction and a second direction. The converter is configured to convert the second modulated symbol stream in accordance with the first modulated symbol stream only in the first direction on the complex plane. The superposer is configured to superpose the first modulated symbol stream and the second modulated symbol stream converted by the converter, at an amplitude ratio, to generate a multiplexed signal.

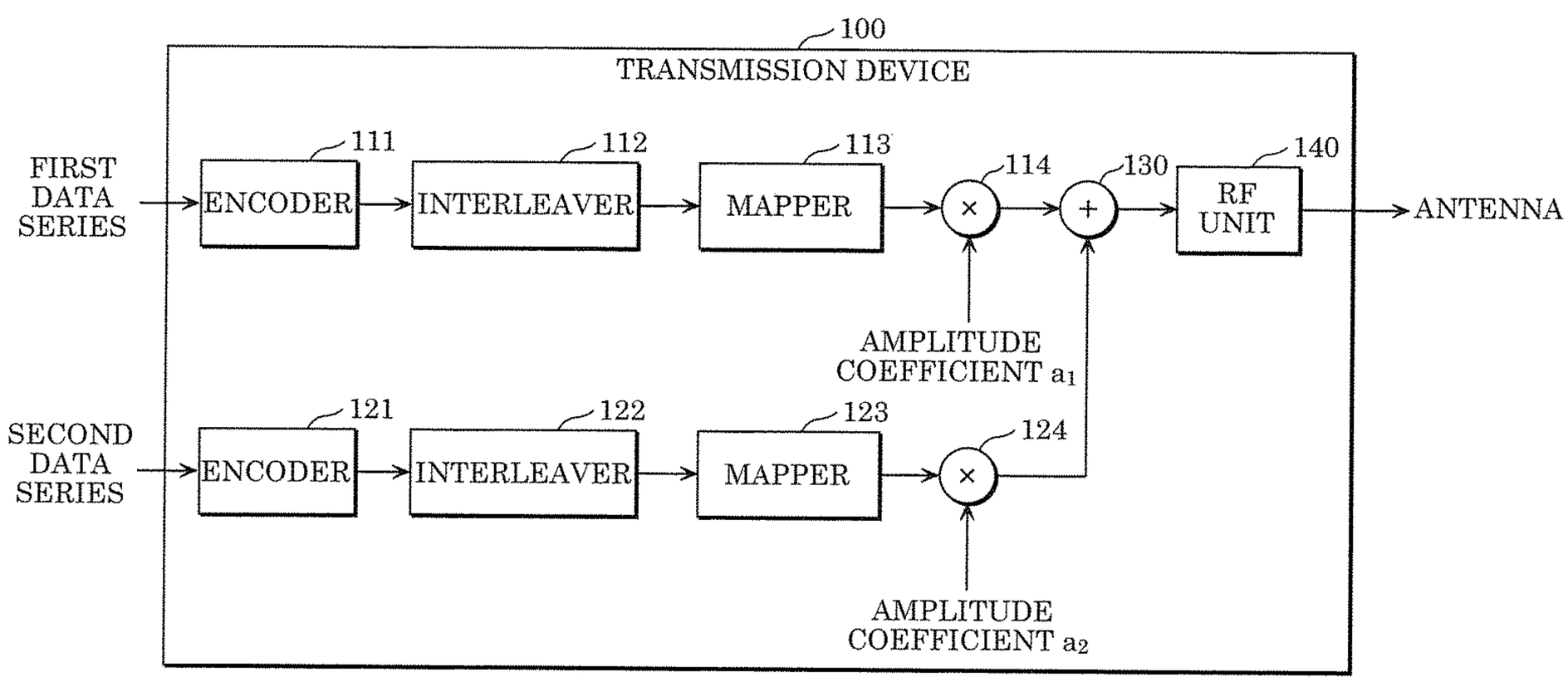

FIG. 1

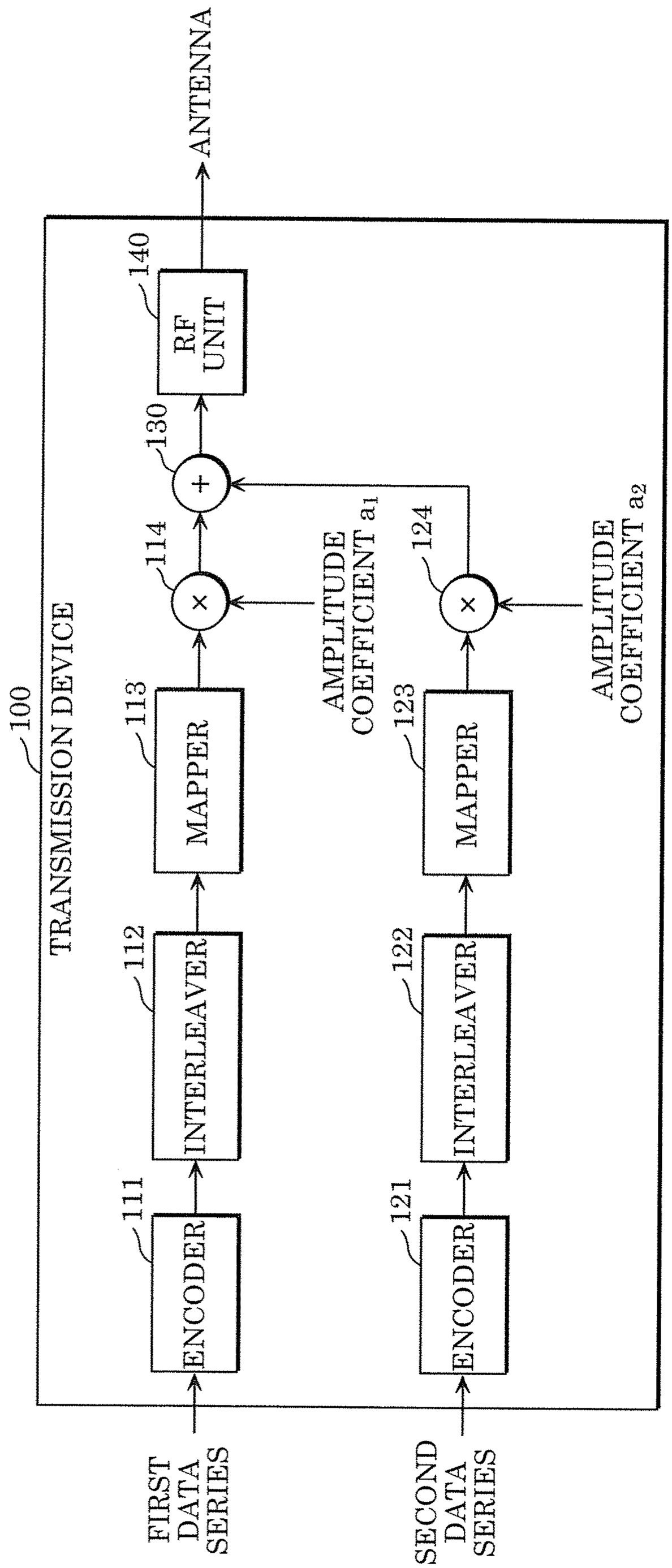
ANTENNA
140
RF UNIT
130
114
AMPLITUDE COEFFICIENT a_1
124
AMPLITUDE COEFFICIENT a_2
100
TRANSMISSION DEVICE
113
MAPPER
123
MAPPER
112
INTERLEAVER
122
INTERLEAVER
111
ENCODER
121
ENCODER
FIRST DATA SERIES
SECOND DATA SERIES

FIG. 2

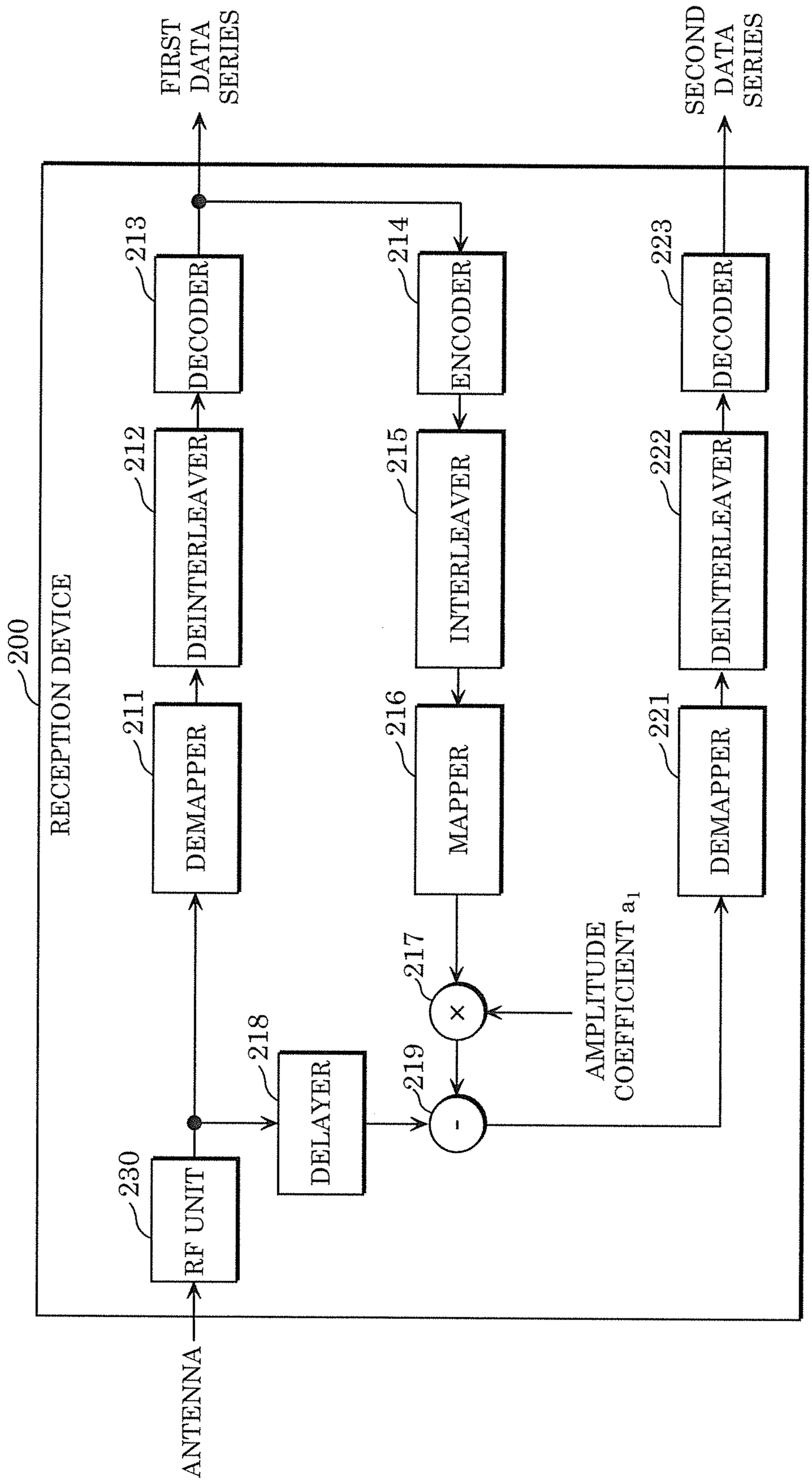
200
RECEPTION DEVICE
ANTENNA
230
RF UNIT
211
DEMAPPER
212
DEINTERLEAVER
213
DECODER
FIRST DATA SERIES
218
DELAYER
219
-
217
×
AMPLITUDE COEFFICIENT a_1
216
MAPPER
215
INTERLEAVER
214
ENCODER
221
DEMAPPER
222
DEINTERLEAVER
223
DECODER
SECOND DATA SERIES

FIG. 3

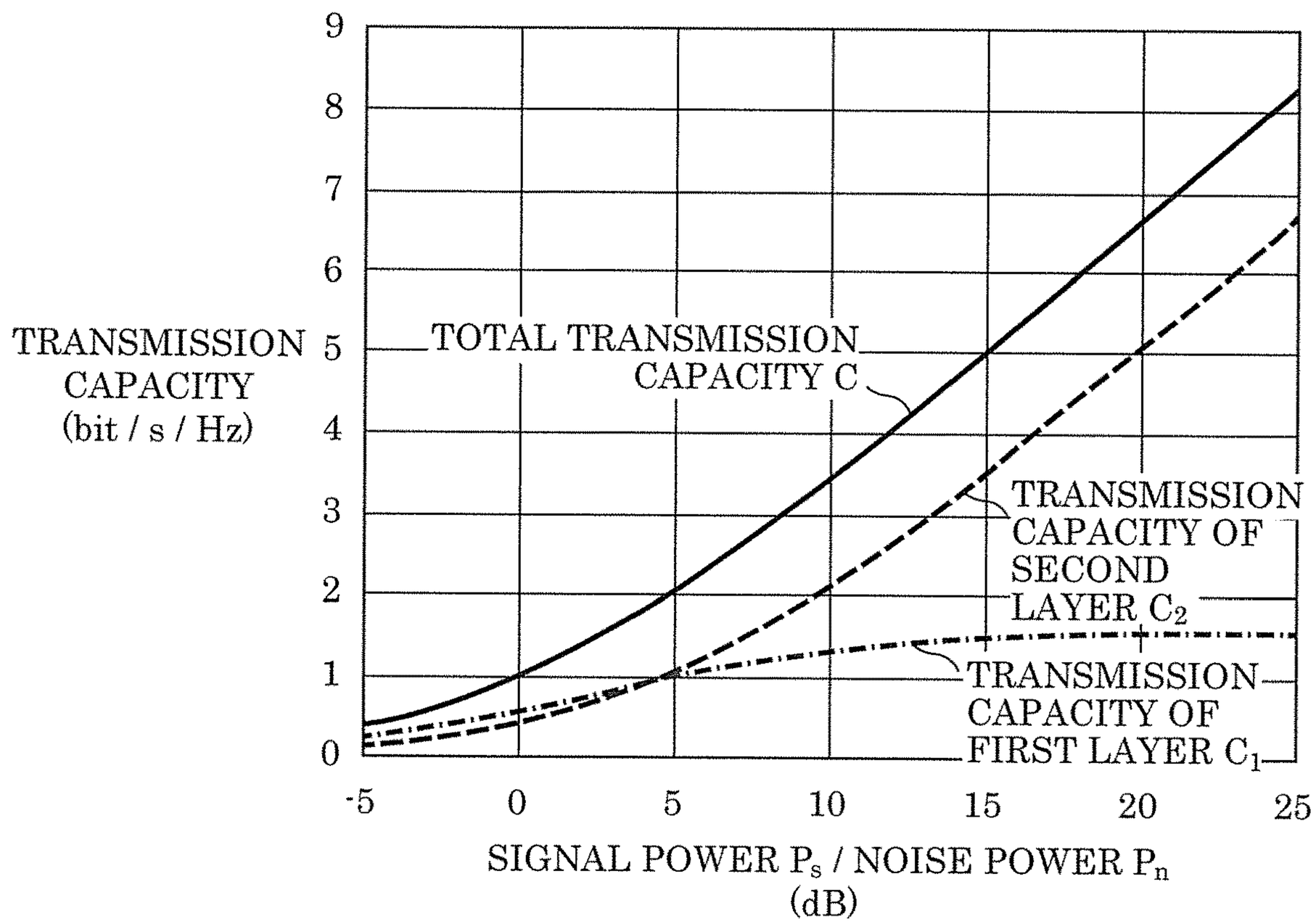
TRANSMISSION CAPACITY (bit / s / Hz)
9
8
7
6
5
4
3
2
1
0
TOTAL TRANSMISSION CAPACITY C
TRANSMISSION CAPACITY OF SECOND LAYER C_2
TRANSMISSION CAPACITY OF FIRST LAYER C_1
-5
0
5
10
15
20
25
SIGNAL POWER P_s / NOISE POWER P_n (dB)

FIG. 4

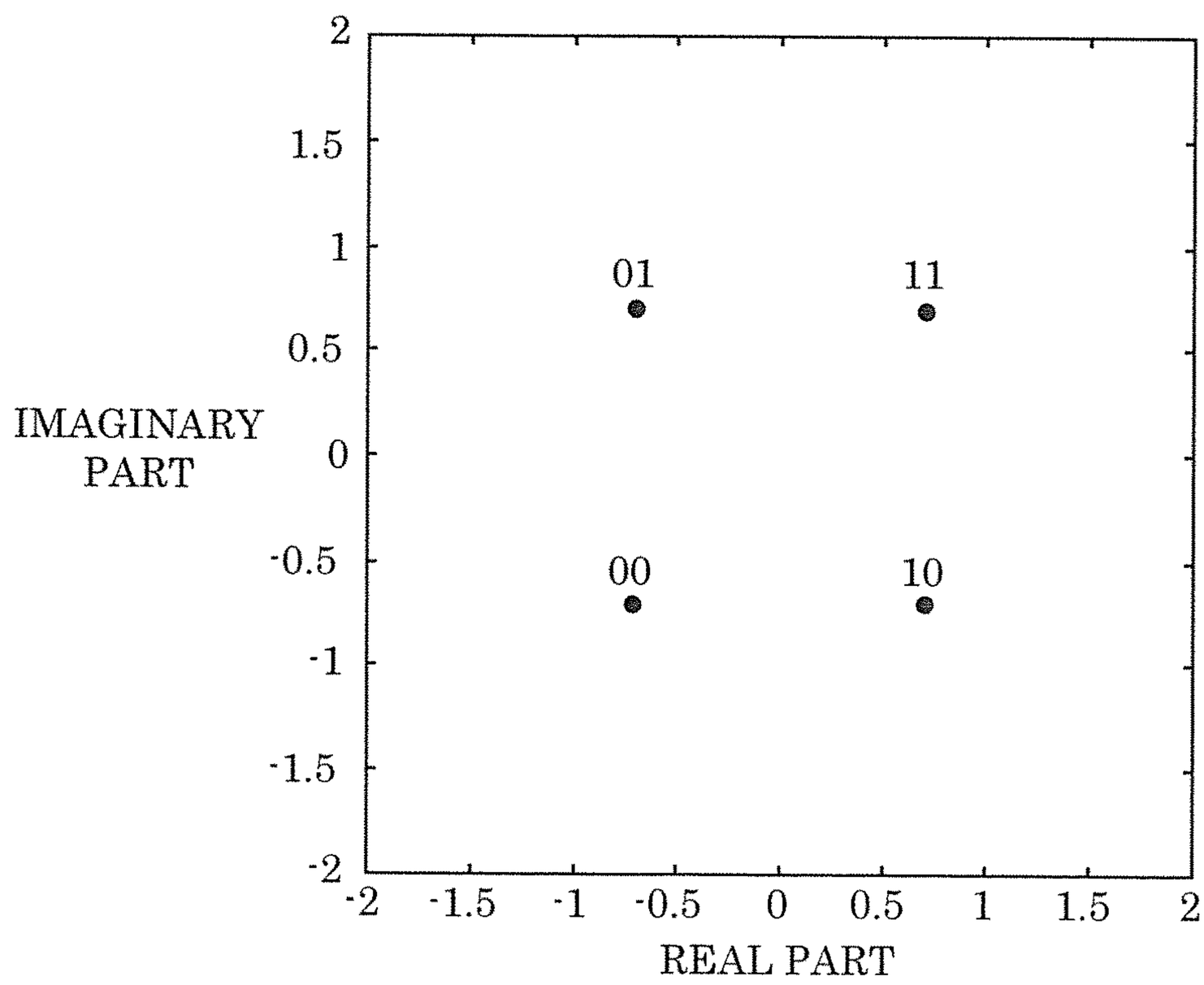
IMAGINARY PART
2
1.5
1
0.5
0
-0.5
-1
-1.5
-2
01
11
00
10
-2
-1.5
-1
-0.5
0
0.5
1
1.5
2
REAL PART

FIG. 5

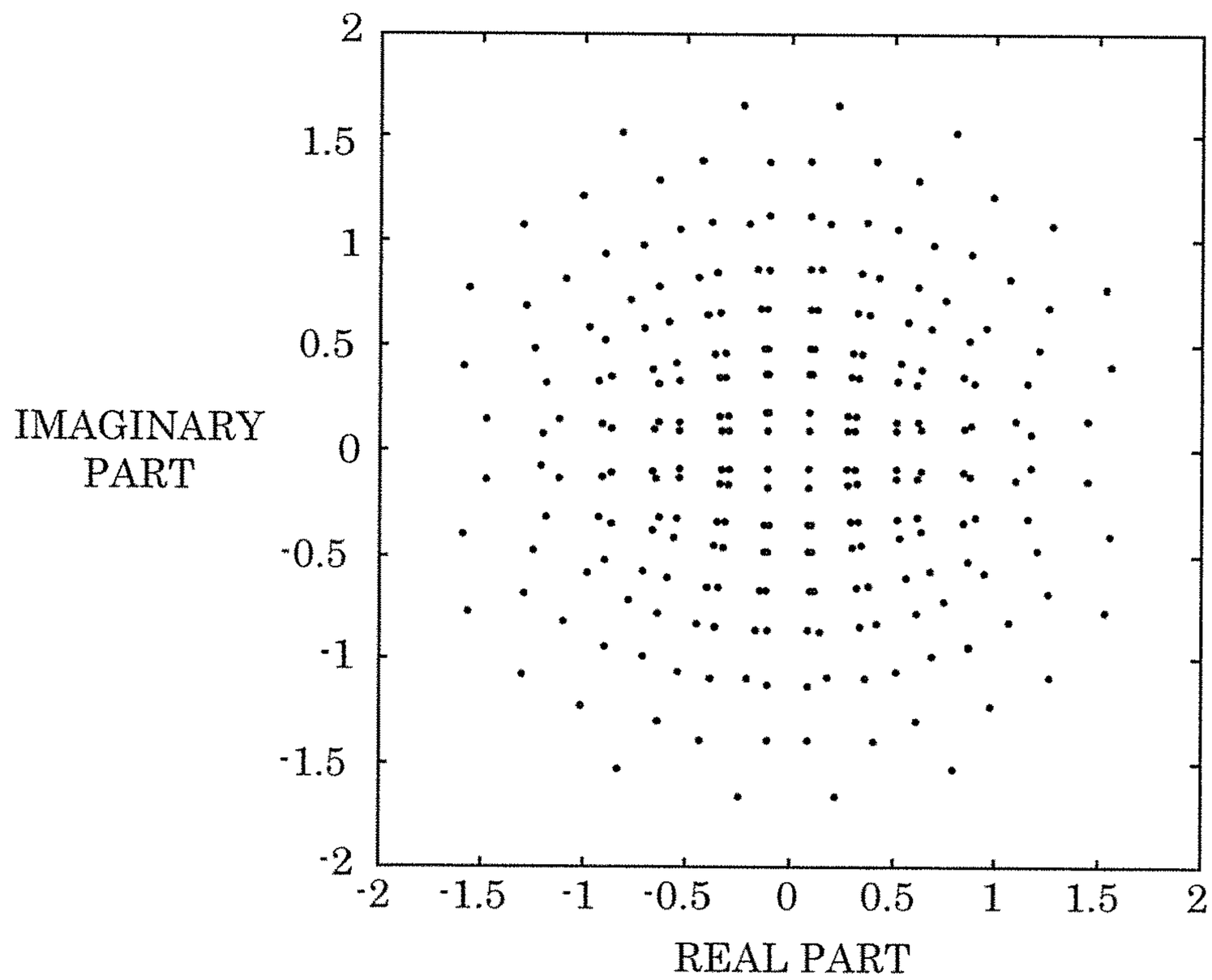
IMAGINARY PART
REAL PART
2
1.5
1
0.5
0
-0.5
-1
-1.5
-2
-2
-1.5
-1
-0.5
0
0.5
1
1.5
2

FIG. 6

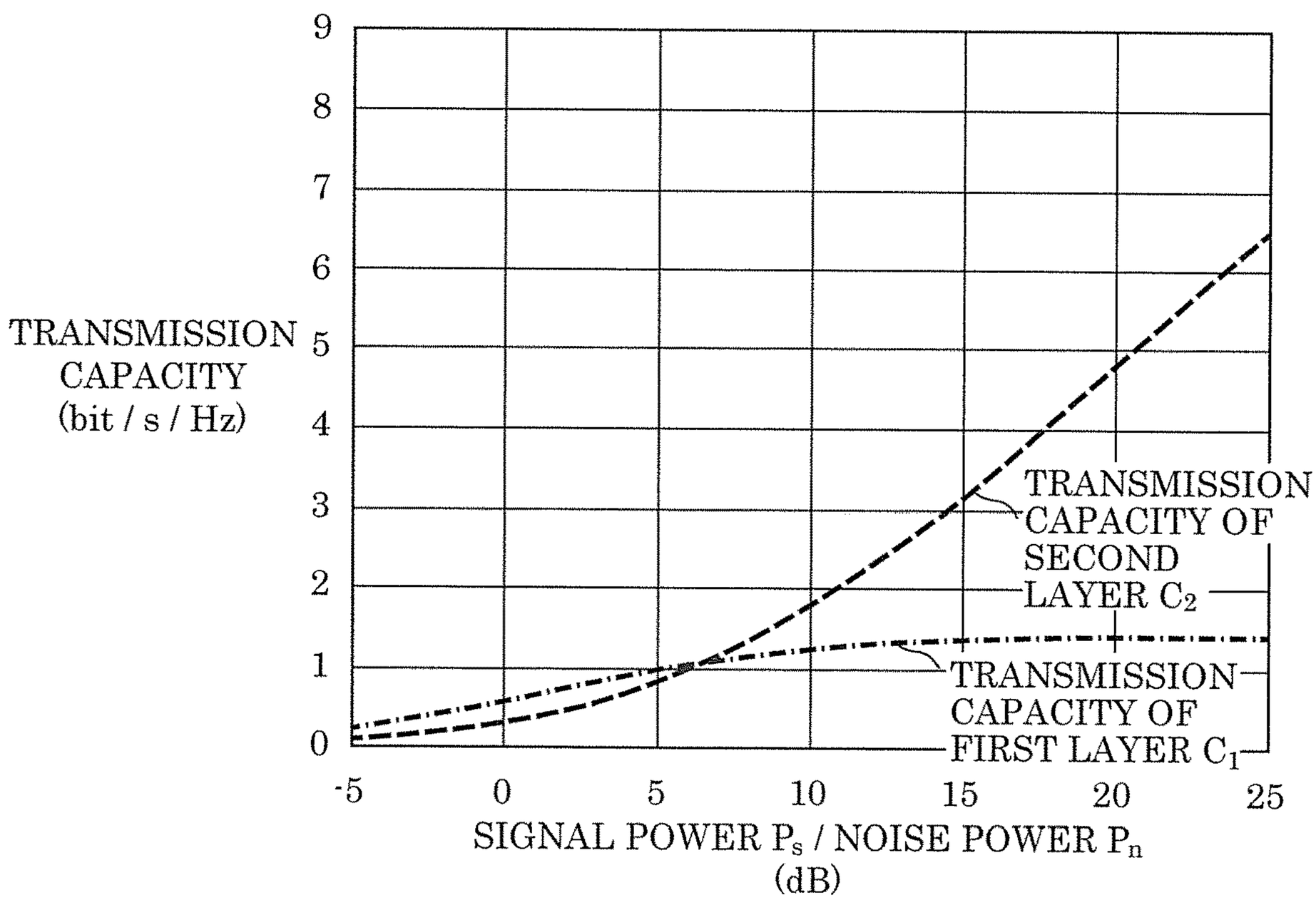
TRANSMISSION CAPACITY (bit / s / Hz)
SIGNAL POWER P_s / NOISE POWER P_n (dB)
9
8
7
6
5
4
3
2
1
0
-5
0
5
10
15
20
25
TRANSMISSION CAPACITY OF SECOND LAYER C_2
TRANSMISSION CAPACITY OF FIRST LAYER C_1

FIG. 7

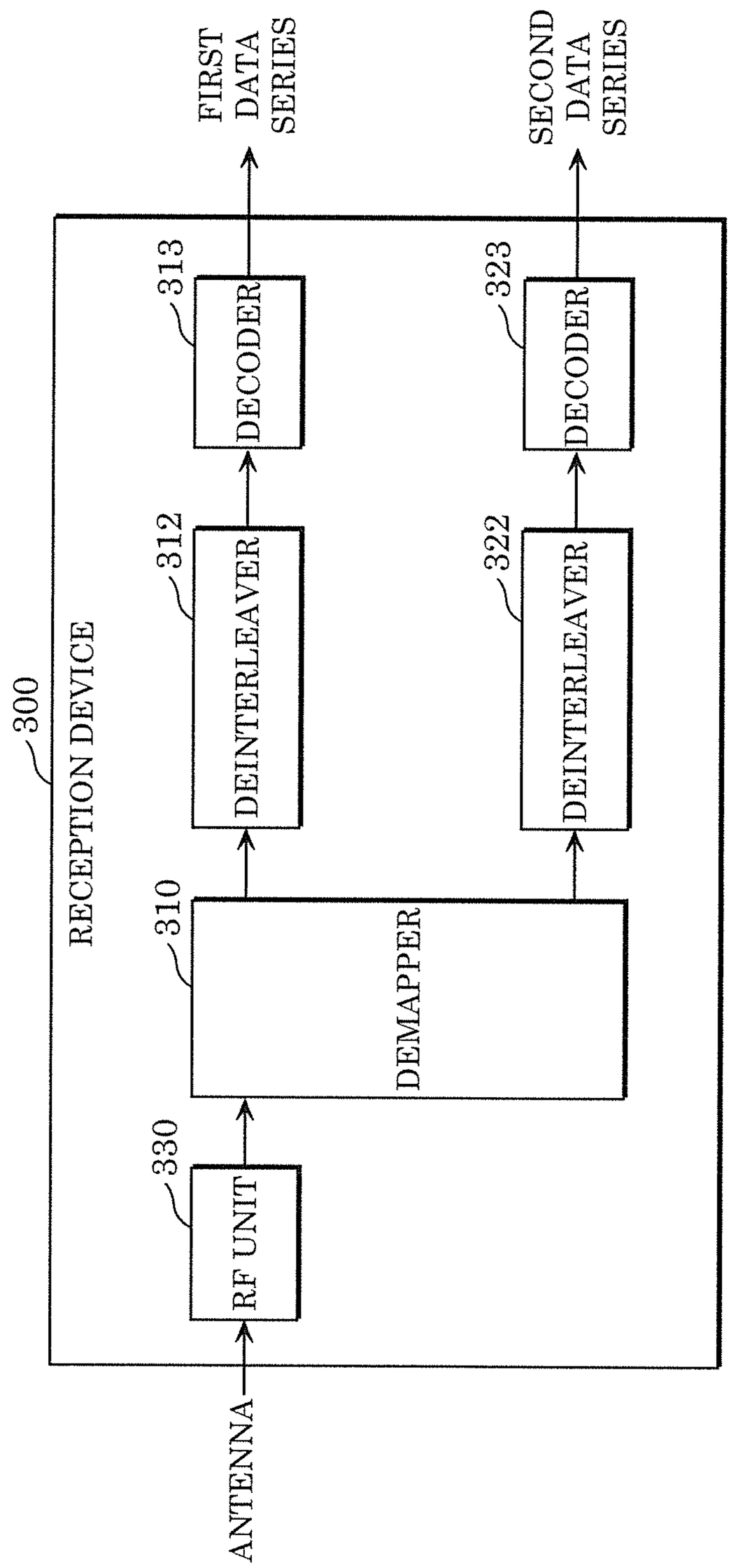
300
RECEPTION DEVICE
ANTENNA
330
RF UNIT
310
DEMAPPER
312
DEINTERLEAVER
313
DECODER
FIRST DATA SERIES
322
DEINTERLEAVER
323
DECODER
SECOND DATA SERIES

FIG. 8

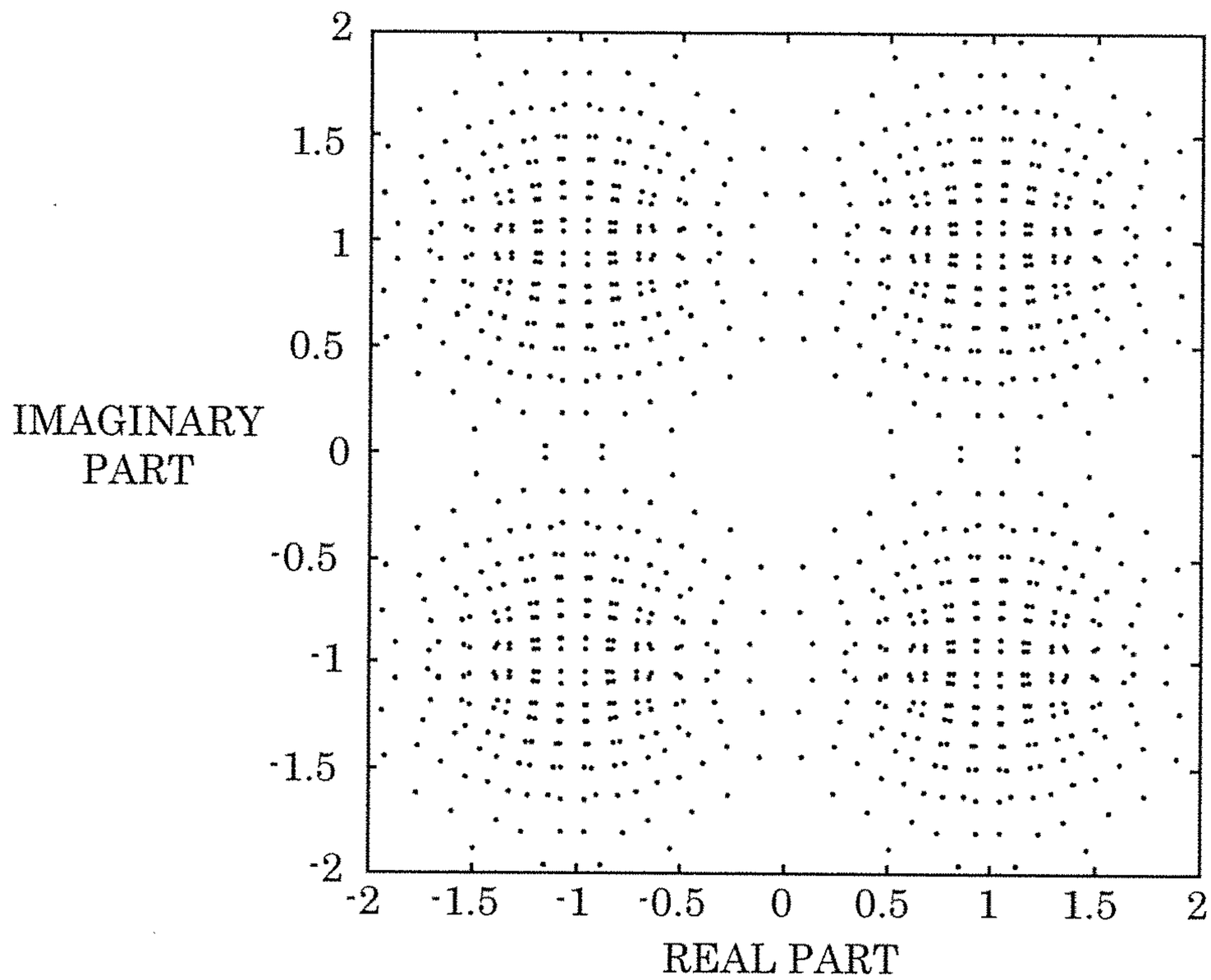
2
1.5
1
0.5
0
-0.5
-1
-1.5
-2
IMAGINARY PART
-2
-1.5
-1
-0.5
0
0.5
1
1.5
2
REAL PART

FIG. 9

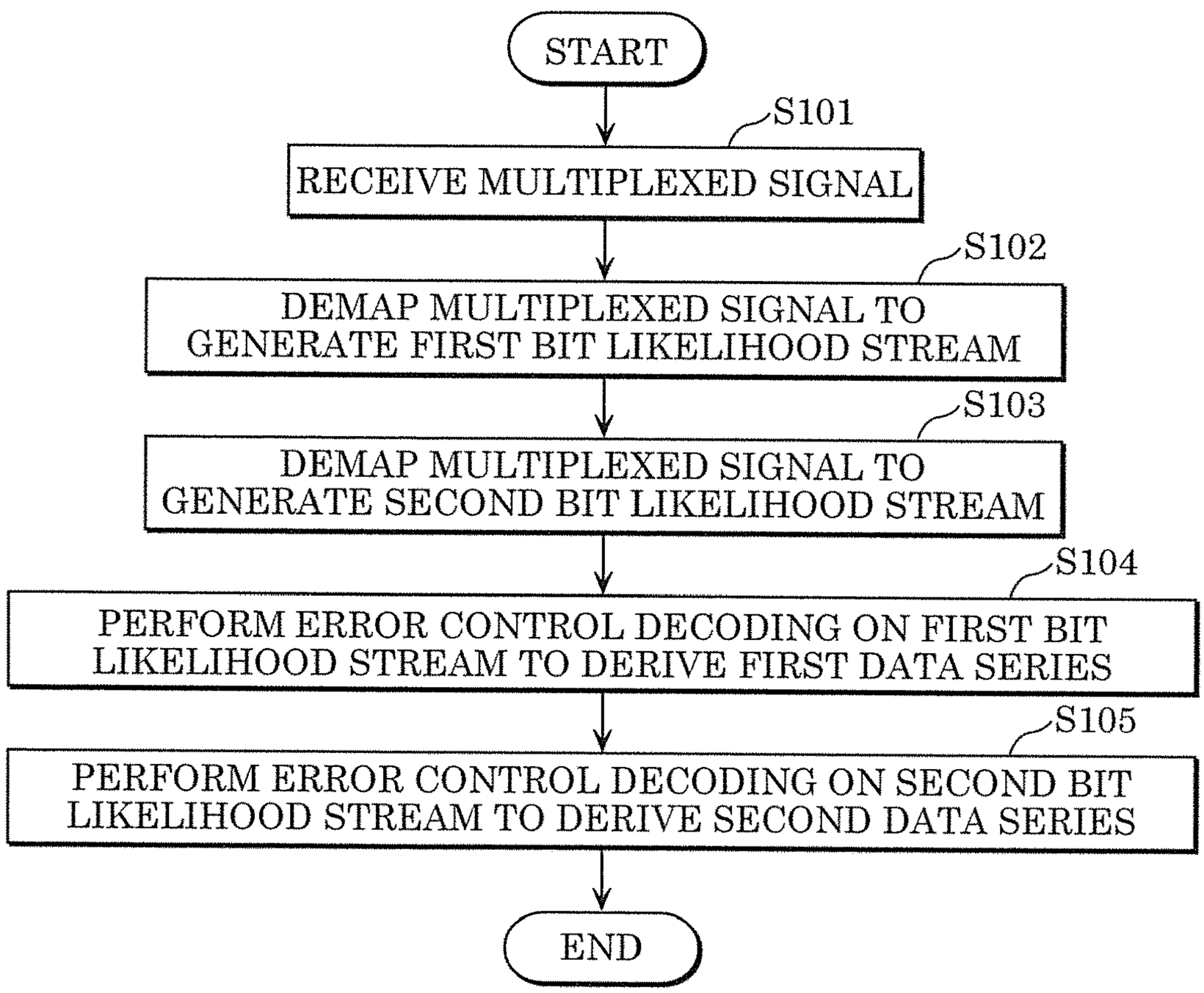
START
S101
RECEIVE MULTIPLEXED SIGNAL
S102
DEMAP MULTIPLEXED SIGNAL TO GENERATE FIRST BIT LIKELIHOOD STREAM
S103
DEMAP MULTIPLEXED SIGNAL TO GENERATE SECOND BIT LIKELIHOOD STREAM
S104
PERFORM ERROR CONTROL DECODING ON FIRST BIT LIKELIHOOD STREAM TO DERIVE FIRST DATA SERIES
S105
PERFORM ERROR CONTROL DECODING ON SECOND BIT LIKELIHOOD STREAM TO DERIVE SECOND DATA SERIES
END

FIG. 10

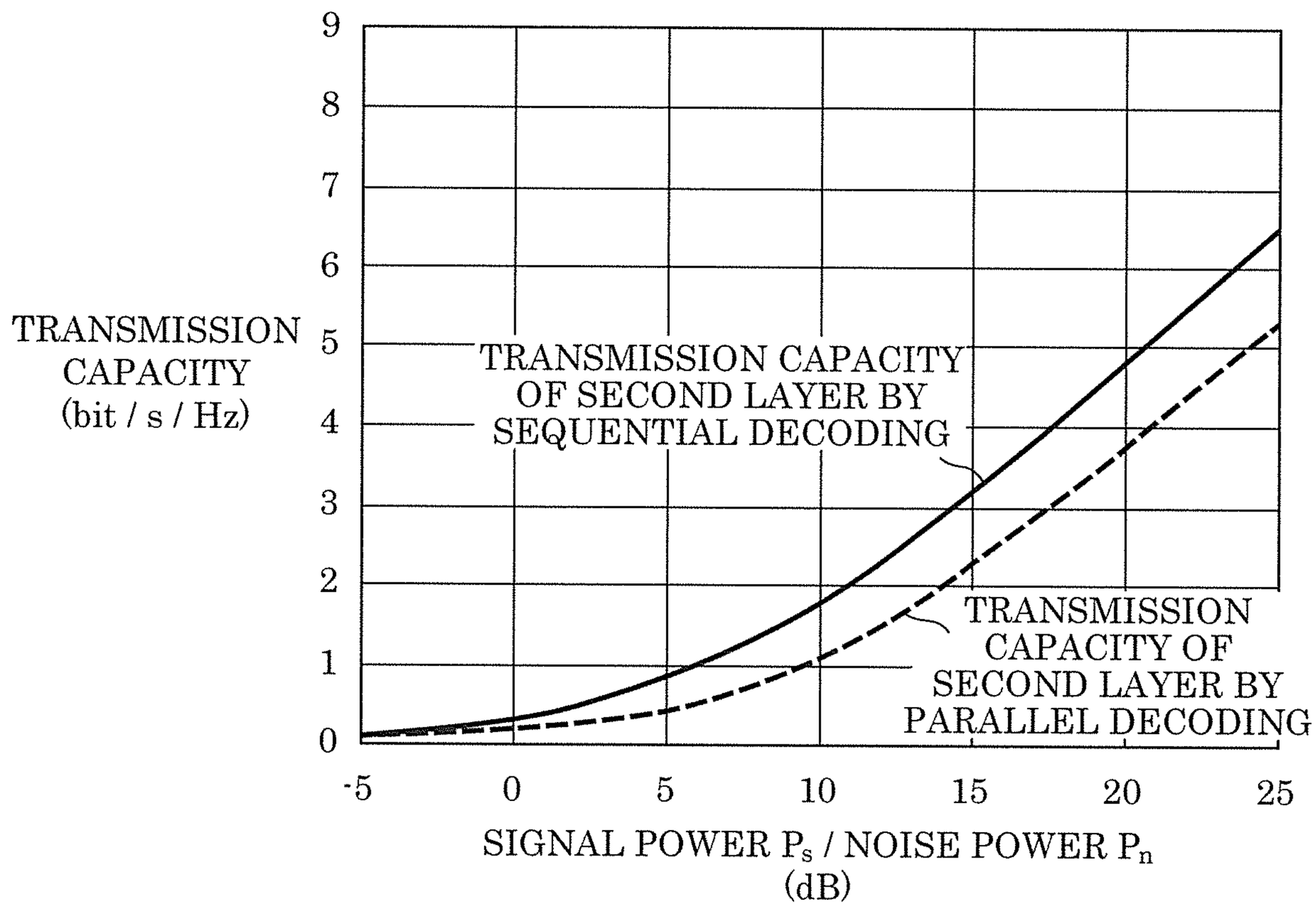
TRANSMISSION CAPACITY (bit / s / Hz)
9
8
7
6
5
4
3
2
1
0
TRANSMISSION CAPACITY OF SECOND LAYER BY SEQUENTIAL DECODING
TRANSMISSION CAPACITY OF SECOND LAYER BY PARALLEL DECODING
-5
0
5
10
15
20
25
SIGNAL POWER P_s / NOISE POWER P_n (dB)

FIG. 11

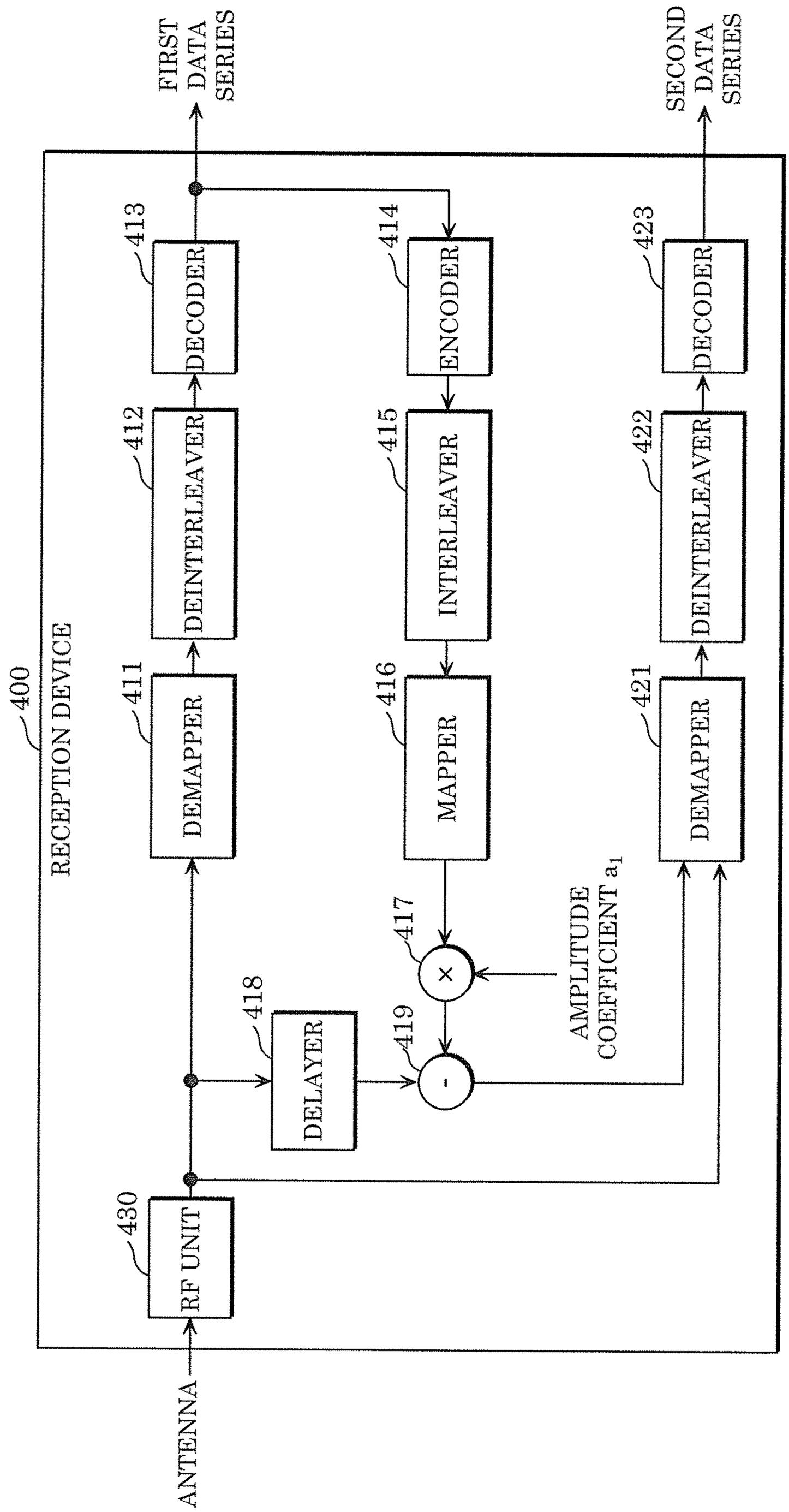
400
RECEPTION DEVICE
ANTENNA
430
RF UNIT
411
DEMAPPER
412
DEINTERLEAVER
413
DECODER
FIRST DATA SERIES
418
DELAYER
419
-
417
×
AMPLITUDE COEFFICIENT a_1
416
MAPPER
415
INTERLEAVER
414
ENCODER
421
DEMAPPER
422
DEINTERLEAVER
423
DECODER
SECOND DATA SERIES

FIG. 12

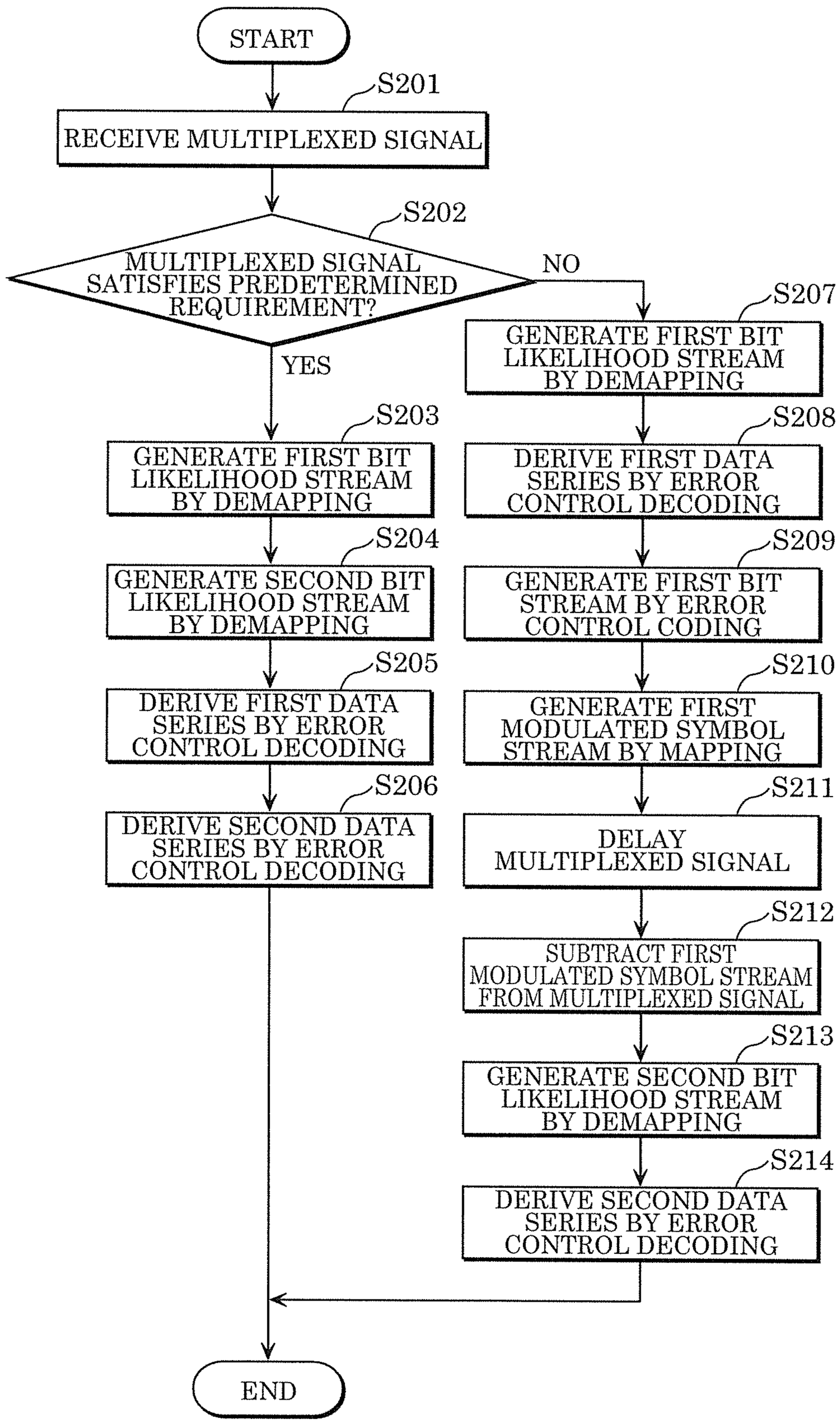
START
S201
RECEIVE MULTIPLEXED SIGNAL
S202
MULTIPLEXED SIGNAL SATISFIES PREDETERMINED REQUIREMENT?
NO
YES
S203
GENERATE FIRST BIT LIKELIHOOD STREAM BY DEMAPPING
S204
GENERATE SECOND BIT LIKELIHOOD STREAM BY DEMAPPING
S205
DERIVE FIRST DATA SERIES BY ERROR CONTROL DECODING
S206
DERIVE SECOND DATA SERIES BY ERROR CONTROL DECODING
S207
GENERATE FIRST BIT LIKELIHOOD STREAM BY DEMAPPING
S208
DERIVE FIRST DATA SERIES BY ERROR CONTROL DECODING
S209
GENERATE FIRST BIT STREAM BY ERROR CONTROL CODING
S210
GENERATE FIRST MODULATED SYMBOL STREAM BY MAPPING
S211
DELAY MULTIPLEXED SIGNAL
S212
SUBTRACT FIRST MODULATED SYMBOL STREAM FROM MULTIPLEXED SIGNAL
S213
GENERATE SECOND BIT LIKELIHOOD STREAM BY DEMAPPING
S214
DERIVE SECOND DATA SERIES BY ERROR CONTROL DECODING
END

FIG. 13

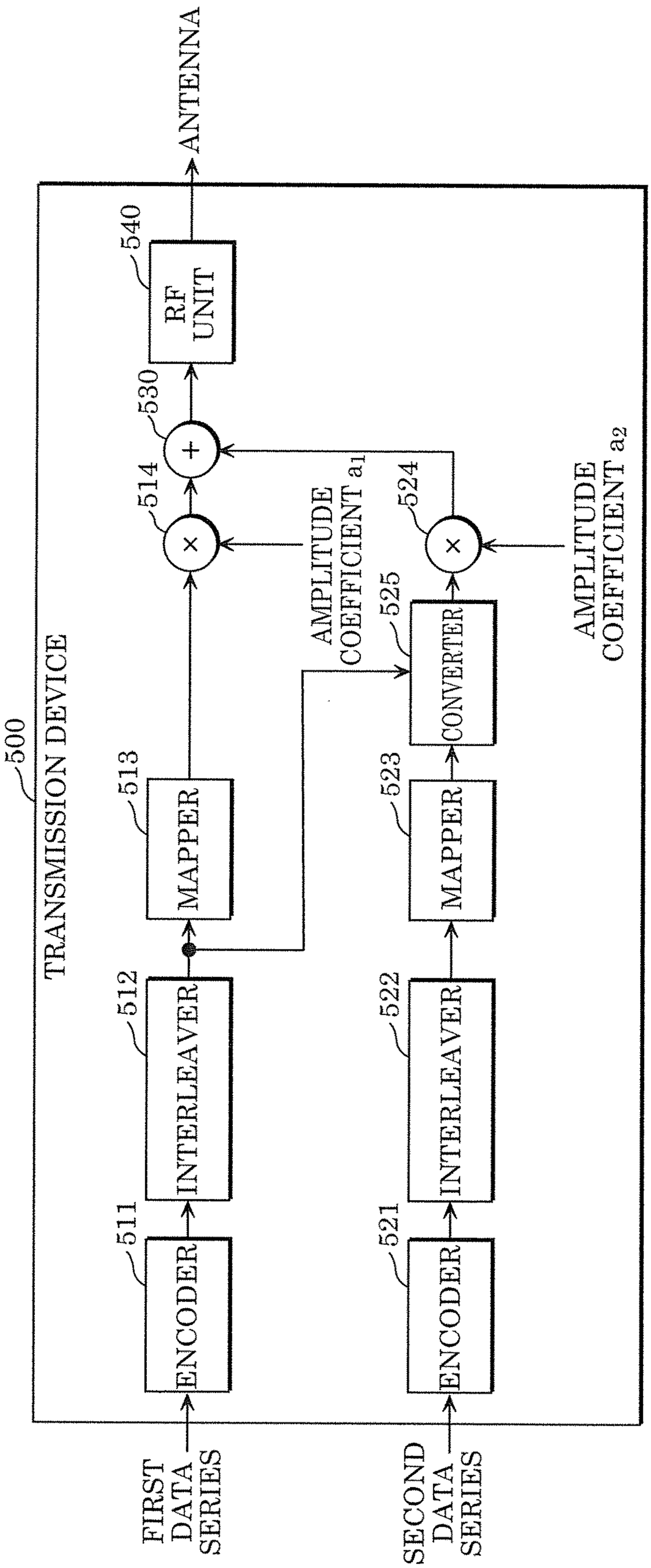
500
TRANSMISSION DEVICE
FIRST DATA SERIES
SECOND DATA SERIES
511
ENCODER
512
INTERLEAVER
513
MAPPER
514
×
530
+
540
RF UNIT
ANTENNA
AMPLITUDE COEFFICIENT a_1
521
ENCODER
522
INTERLEAVER
523
MAPPER
525
CONVERTER
524
×
AMPLITUDE COEFFICIENT a_2

FIG. 14

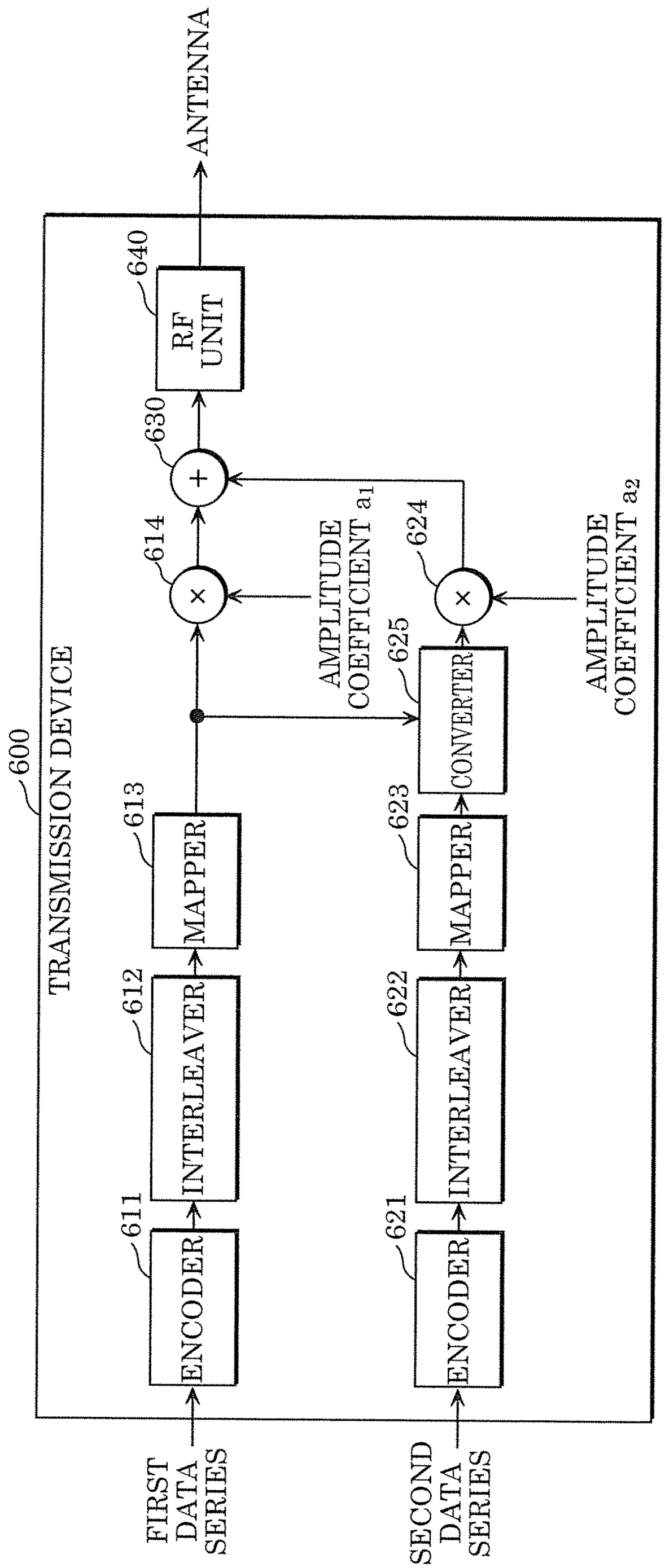
600
TRANSMISSION DEVICE
FIRST DATA SERIES
SECOND DATA SERIES
611
ENCODER
612
INTERLEAVER
613
MAPPER
621
ENCODER
622
INTERLEAVER
623
MAPPER
625
CONVERTER
614
630
624
640
RF UNIT
ANTENNA
AMPLITUDE COEFFICIENT a_1
AMPLITUDE COEFFICIENT a_2

FIG. 15

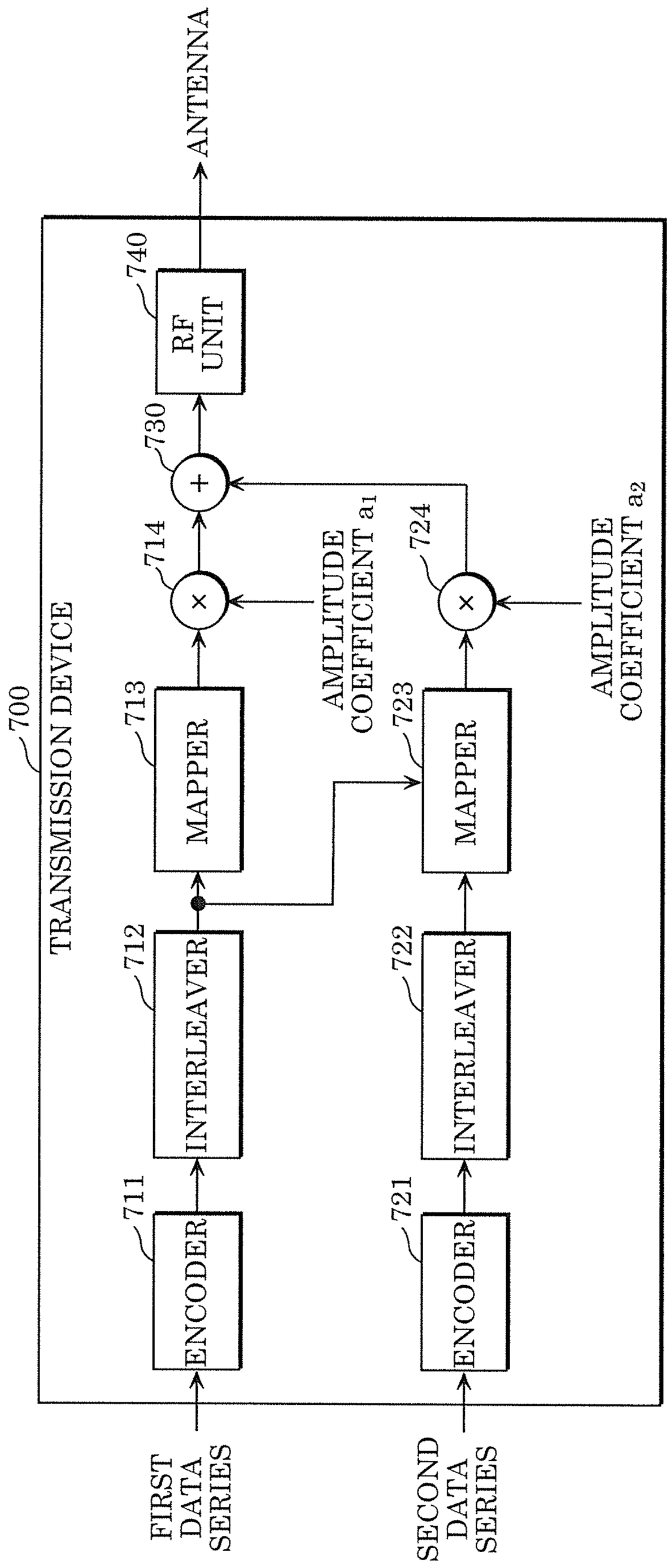
700
TRANSMISSION DEVICE
FIRST DATA SERIES
SECOND DATA SERIES
711
ENCODER
721
ENCODER
712
INTERLEAVER
722
INTERLEAVER
713
MAPPER
723
MAPPER
AMPLITUDE COEFFICIENT a_1
AMPLITUDE COEFFICIENT a_2
714
724
730
740
RF UNIT
ANTENNA

FIG. 16

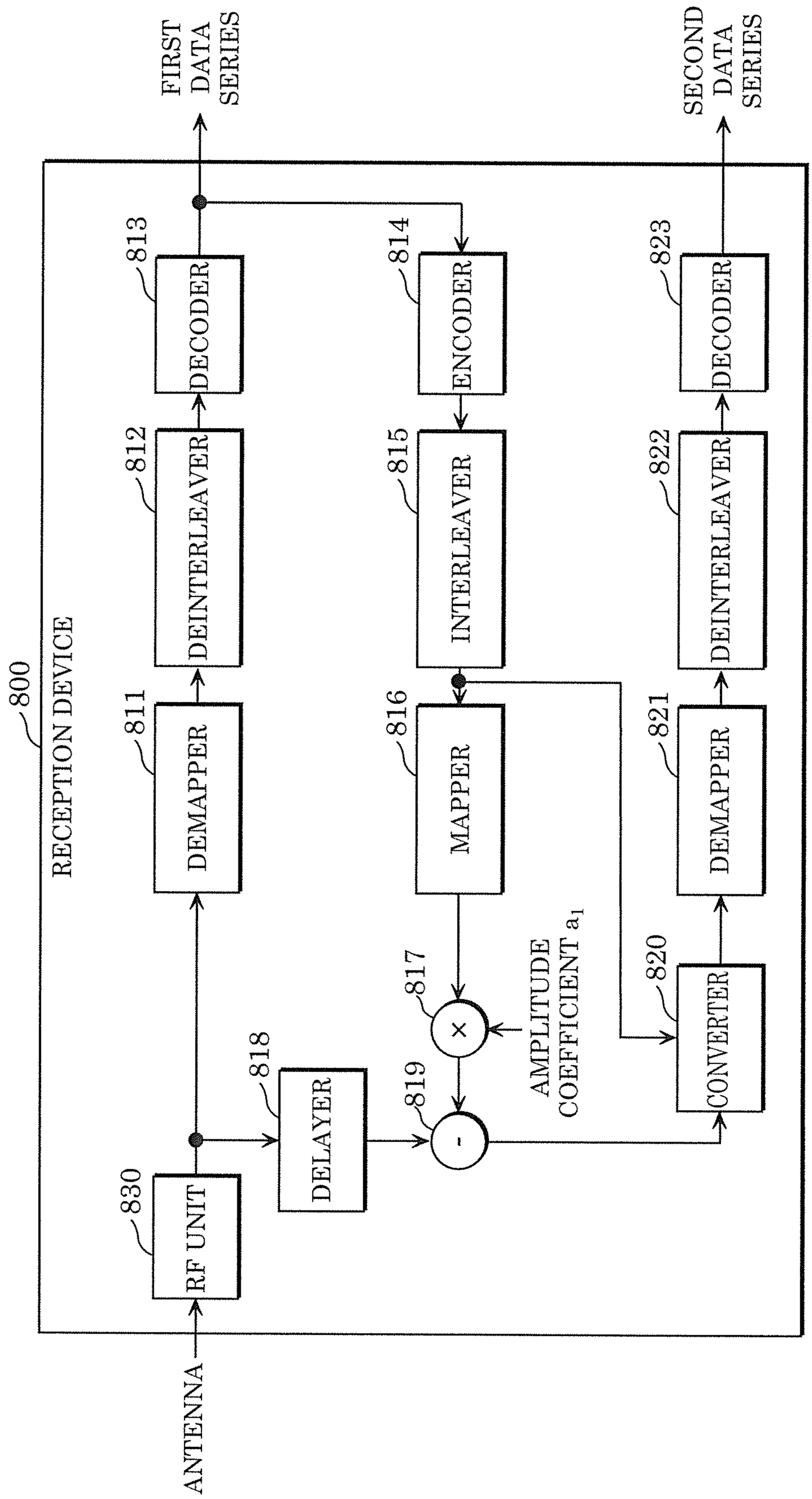
800
RECEPTION DEVICE
ANTENNA
830
RF UNIT
811
DEMAPPER
812
DEINTERLEAVER
813
DECODER
FIRST DATA SERIES
818
DELAYER
819
-
817
×
AMPLITUDE COEFFICIENT a_1
816
MAPPER
814
ENCODER
815
INTERLEAVER
820
CONVERTER
821
DEMAPPER
822
DEINTERLEAVER
823
DECODER
SECOND DATA SERIES

FIG. 17

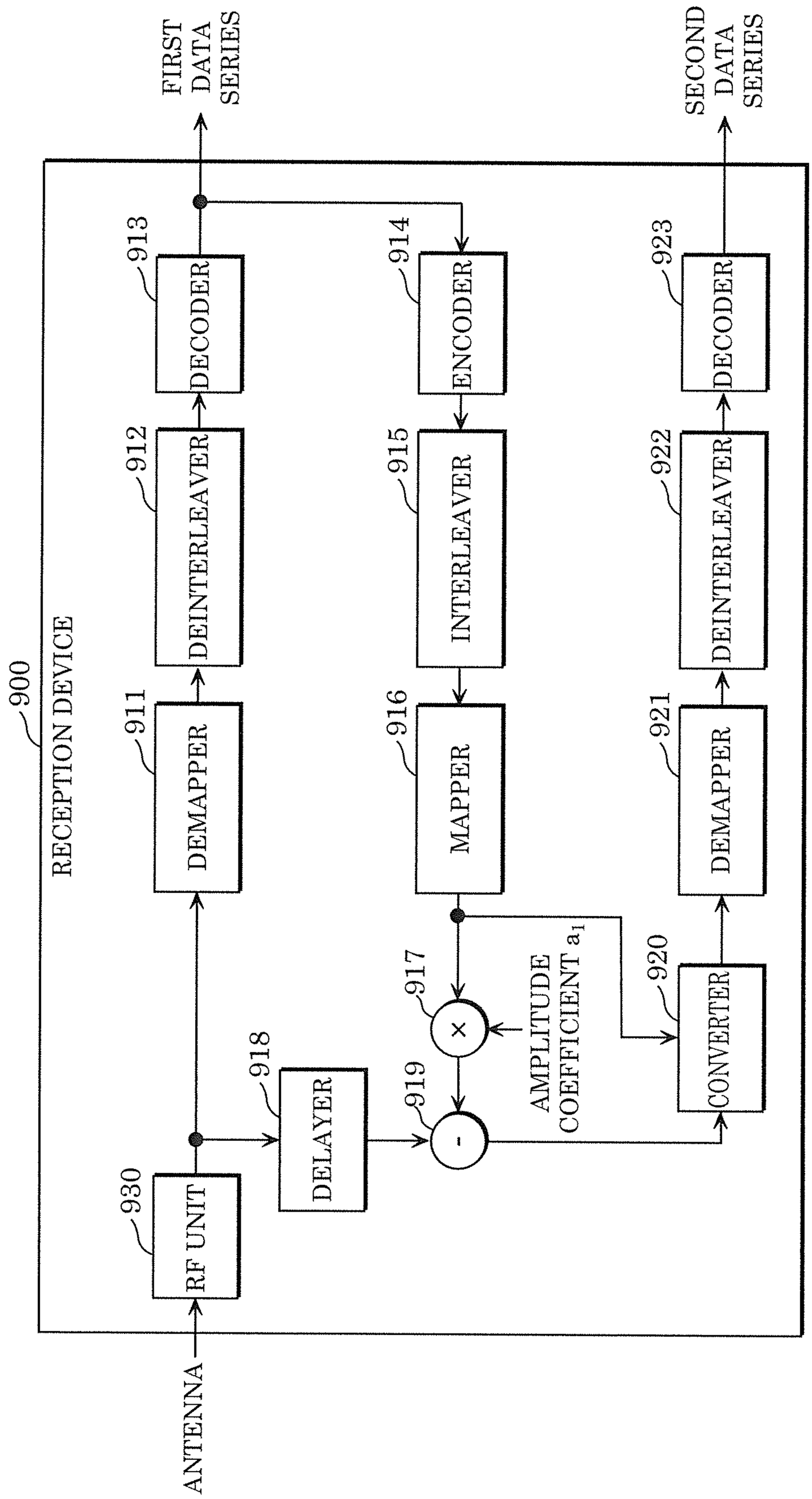
900
RECEPTION DEVICE
ANTENNA
930
RF UNIT
911
DEMAPPER
912
DEINTERLEAVER
913
DECODER
FIRST DATA SERIES
918
DELAYER
919
-
917
×
AMPLITUDE COEFFICIENT a1
916
MAPPER
915
INTERLEAVER
914
ENCODER
920
CONVERTER
921
DEMAPPER
922
DEINTERLEAVER
923
DECODER
SECOND DATA SERIES

FIG. 18

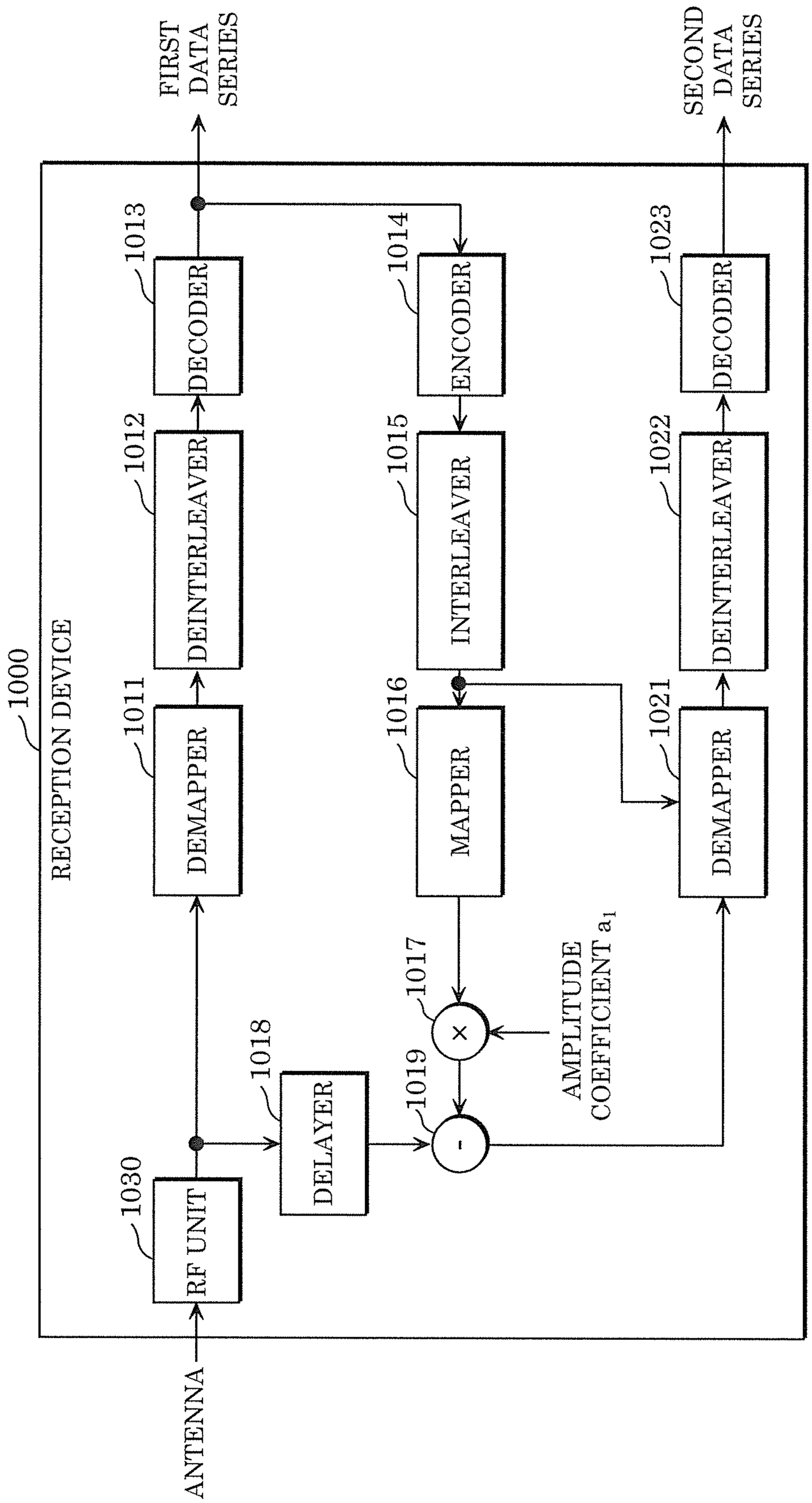
1000
RECEPTION DEVICE
ANTENNA
1030
RF UNIT
1011
DEMAPPER
1012
DEINTERLEAVER
1013
DECODER
FIRST DATA SERIES
1014
ENCODER
1015
INTERLEAVER
1016
MAPPER
1017
×
1018
DELAYER
1019
-
AMPLITUDE COEFFICIENT a_1
1021
DEMAPPER
1022
DEINTERLEAVER
1023
DECODER
SECOND DATA SERIES

FIG. 19

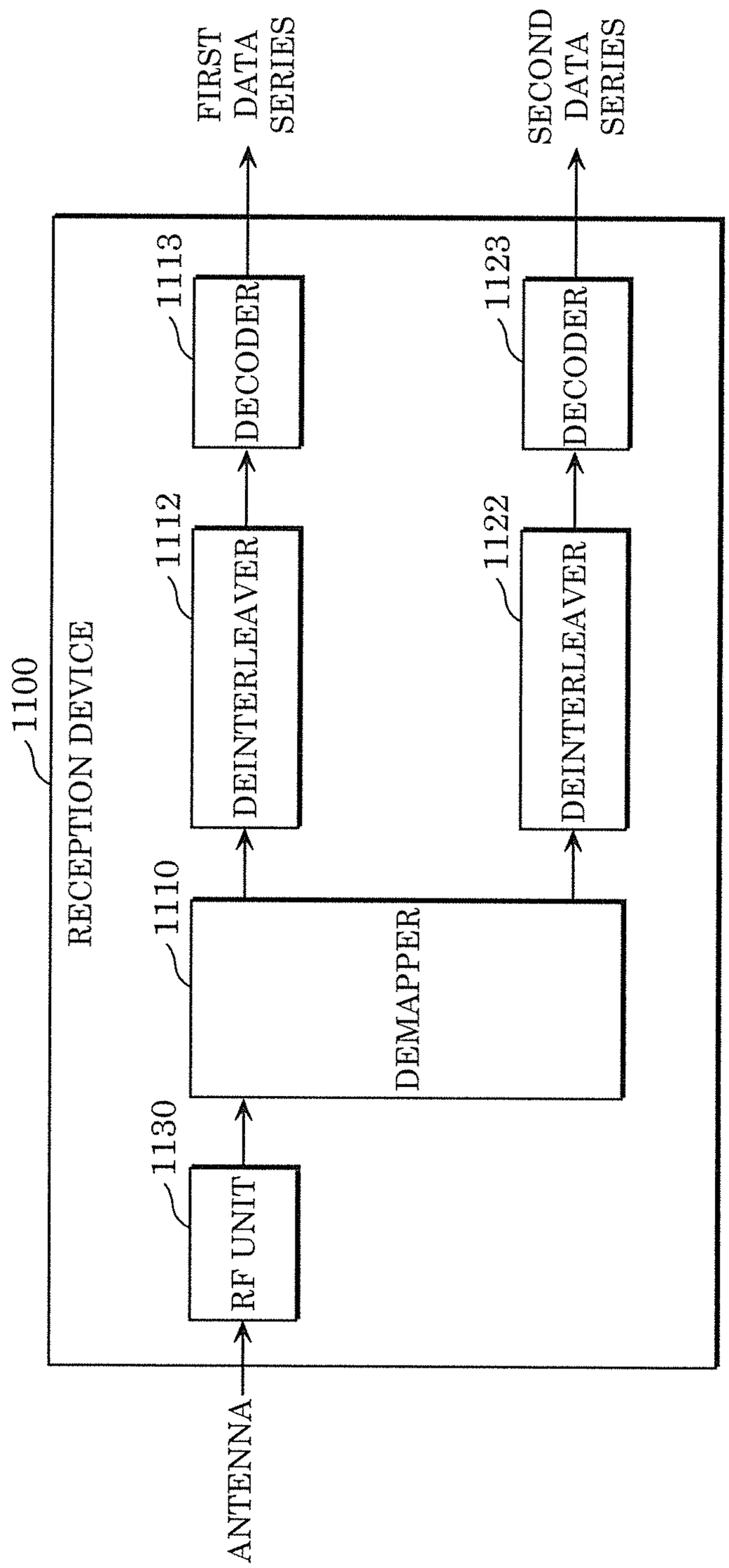
1100
RECEPTION DEVICE
ANTENNA
1130
RF UNIT
1110
DEMAPPER
1112
DEINTERLEAVER
1111
DECODER
FIRST DATA SERIES
1122
DEINTERLEAVER
1121
DECODER
SECOND DATA SERIES

FIG. 20

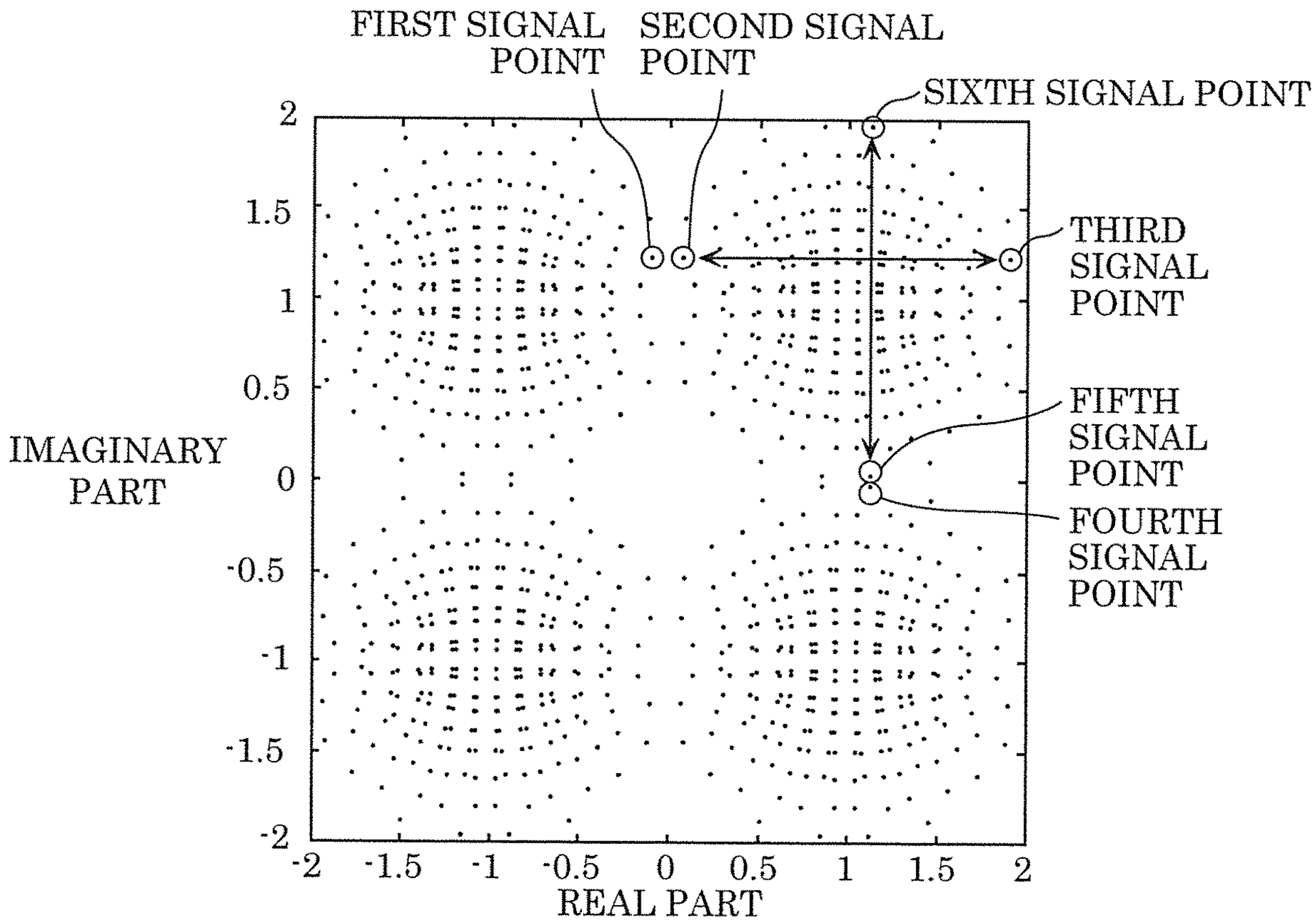
FIRST SIGNAL POINT
SECOND SIGNAL POINT
SIXTH SIGNAL POINT
THIRD SIGNAL POINT
FIFTH SIGNAL POINT
FOURTH SIGNAL POINT
IMAGINARY PART
REAL PART
2
1.5
1
0.5
0
-0.5
-1
-1.5
-2
-2
-1.5
-1
-0.5
0
0.5
1
1.5
2

FIG. 21

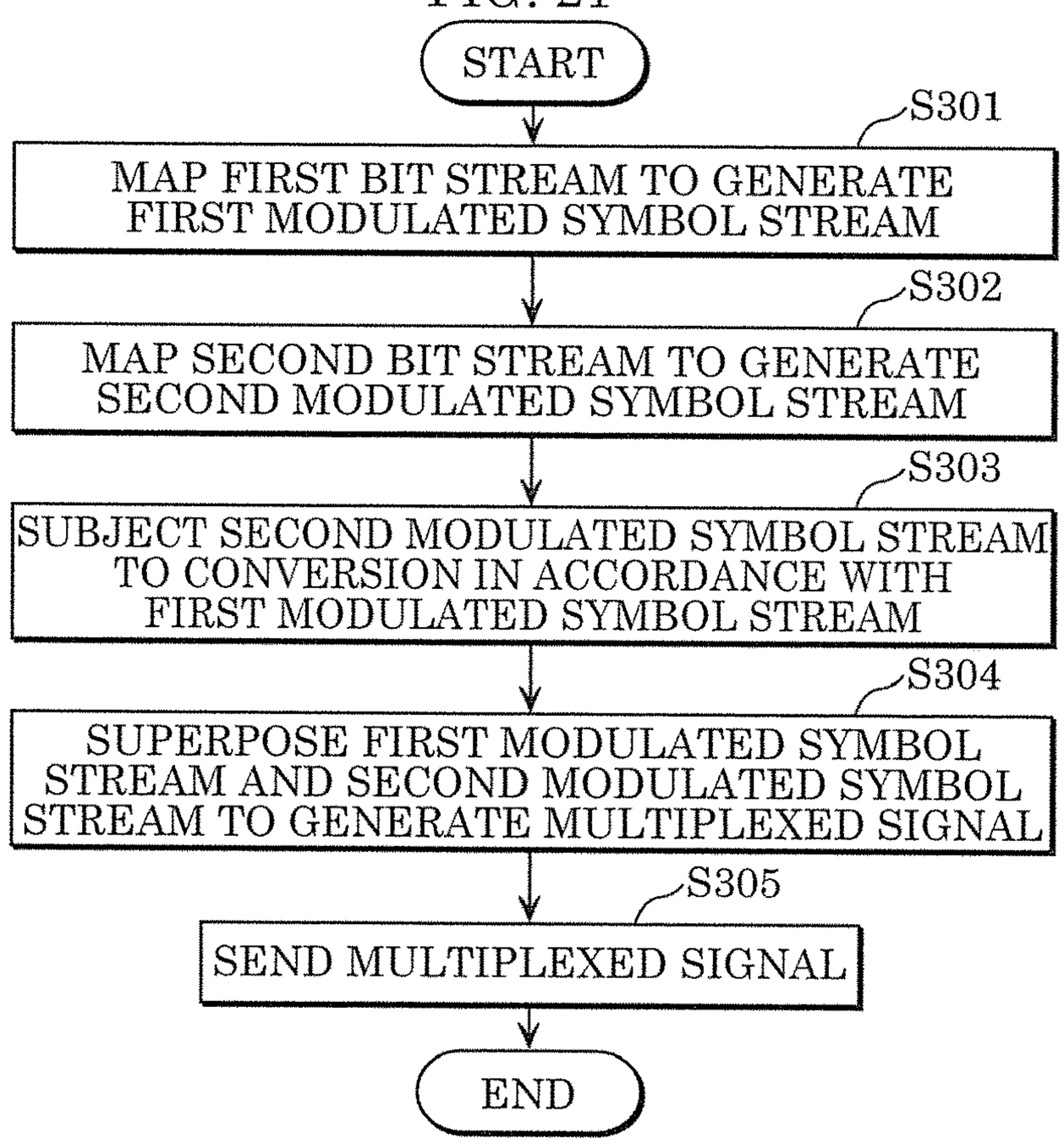
START
S301
MAP FIRST BIT STREAM TO GENERATE FIRST MODULATED SYMBOL STREAM
S302
MAP SECOND BIT STREAM TO GENERATE SECOND MODULATED SYMBOL STREAM
S303
SUBJECT SECOND MODULATED SYMBOL STREAM TO CONVERSION IN ACCORDANCE WITH FIRST MODULATED SYMBOL STREAM
S304
SUPERPOSE FIRST MODULATED SYMBOL STREAM AND SECOND MODULATED SYMBOL STREAM TO GENERATE MULTIPLEXED SIGNAL
S305
SEND MULTIPLEXED SIGNAL
END

FIG. 22

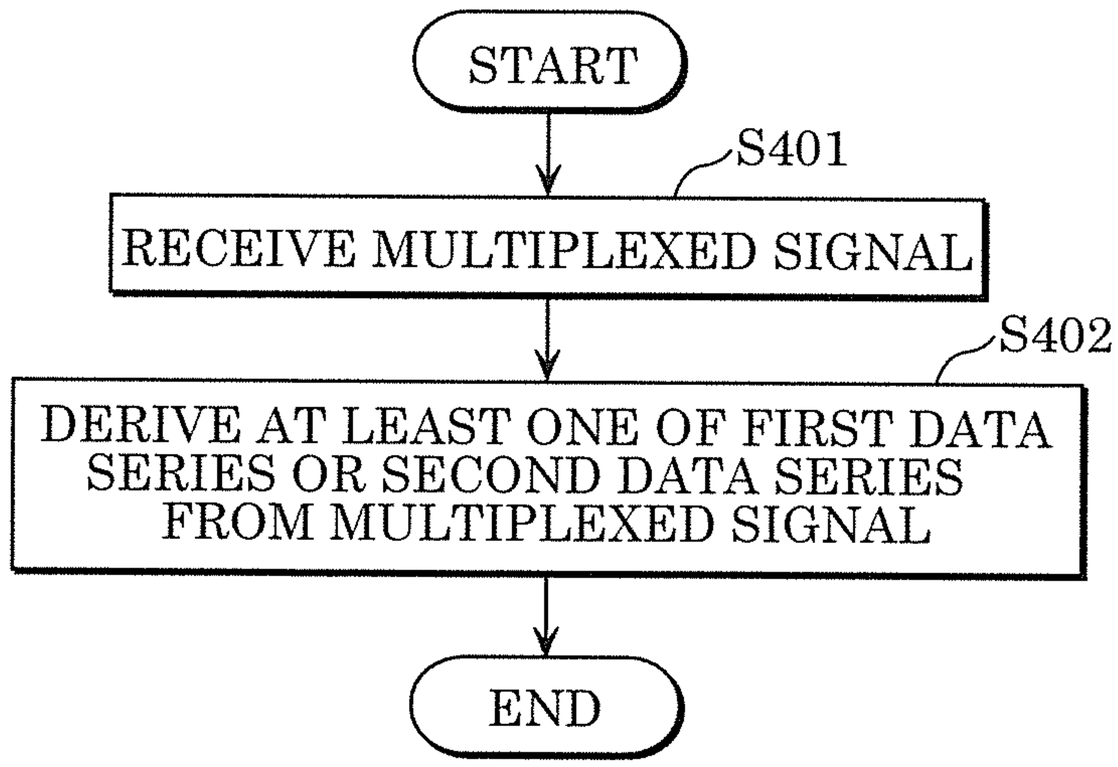
START
S401
RECEIVE MULTIPLEXED SIGNAL
S402
DERIVE AT LEAST ONE OF FIRST DATA SERIES OR SECOND DATA SERIES FROM MULTIPLEXED SIGNAL
END

FIG. 23

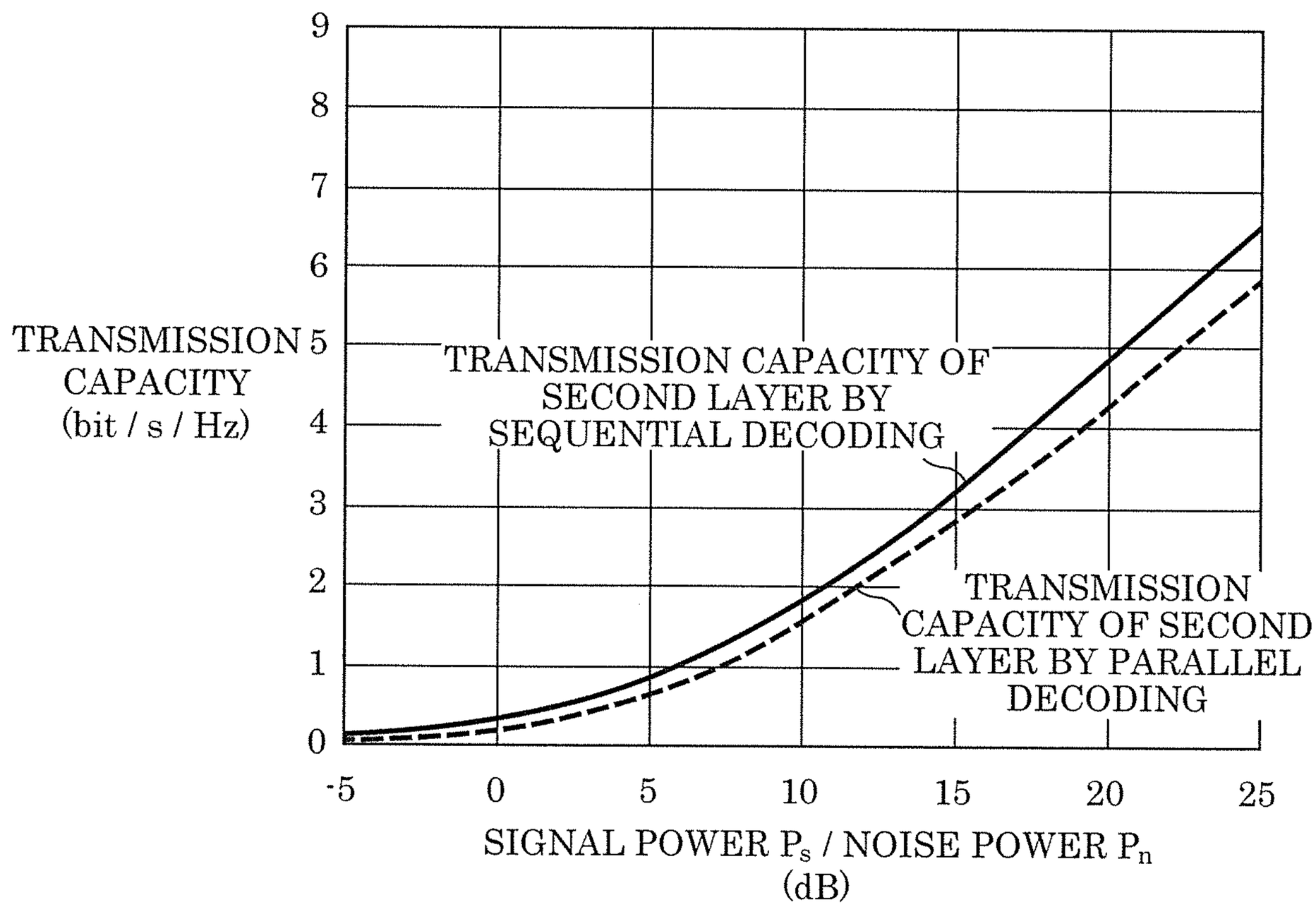
TRANSMISSION CAPACITY (bit / s / Hz)
9
8
7
6
5
4
3
2
1
0
TRANSMISSION CAPACITY OF SECOND LAYER BY SEQUENTIAL DECODING
TRANSMISSION CAPACITY OF SECOND LAYER BY PARALLEL DECODING
-5
0
5
10
15
20
25
SIGNAL POWER P_s / NOISE POWER P_n (dB)

FIG. 24

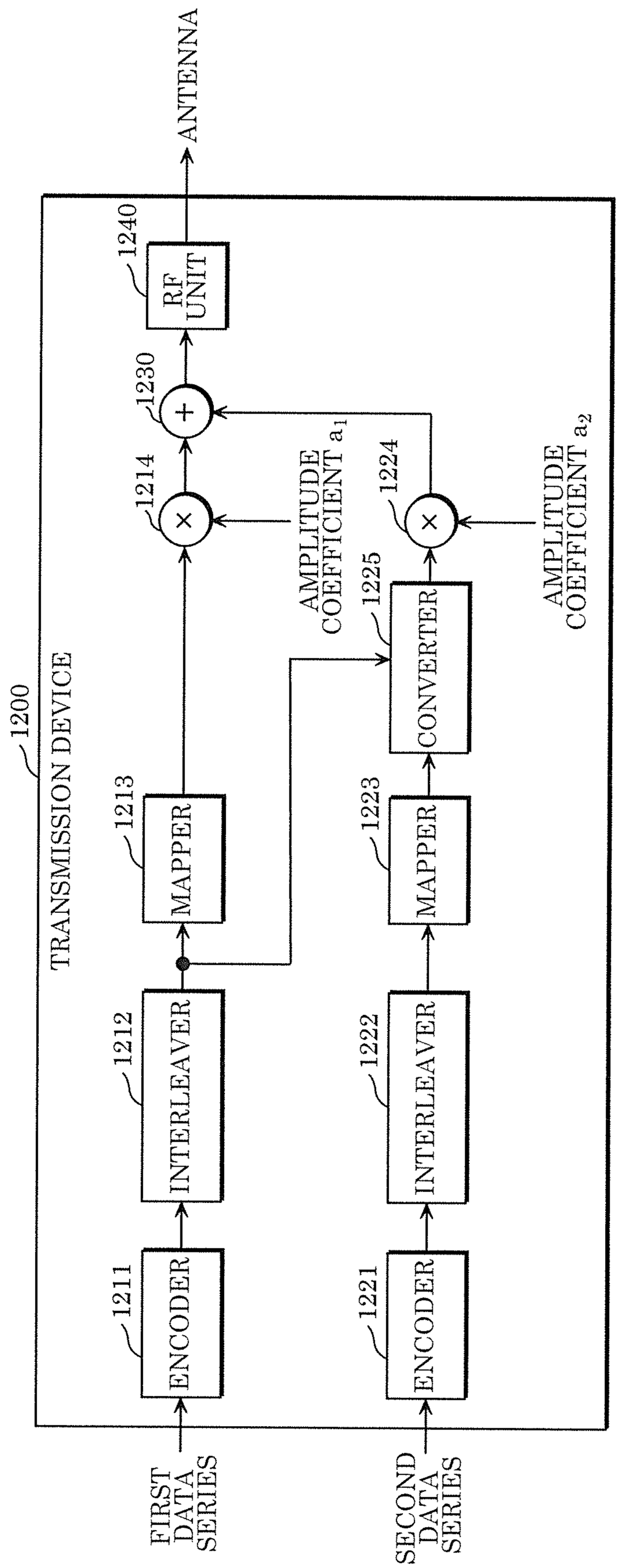
ANTENNA
1240
RF UNIT
1230
1214
AMPLITUDE COEFFICIENT a_1
1224
AMPLITUDE COEFFICIENT a_2
1200
TRANSMISSION DEVICE
1225
CONVERTER
1213
MAPPER
1223
MAPPER
1212
INTERLEAVER
1222
INTERLEAVER
1211
ENCODER
1221
ENCODER
FIRST DATA SERIES
SECOND DATA SERIES

FIG. 25

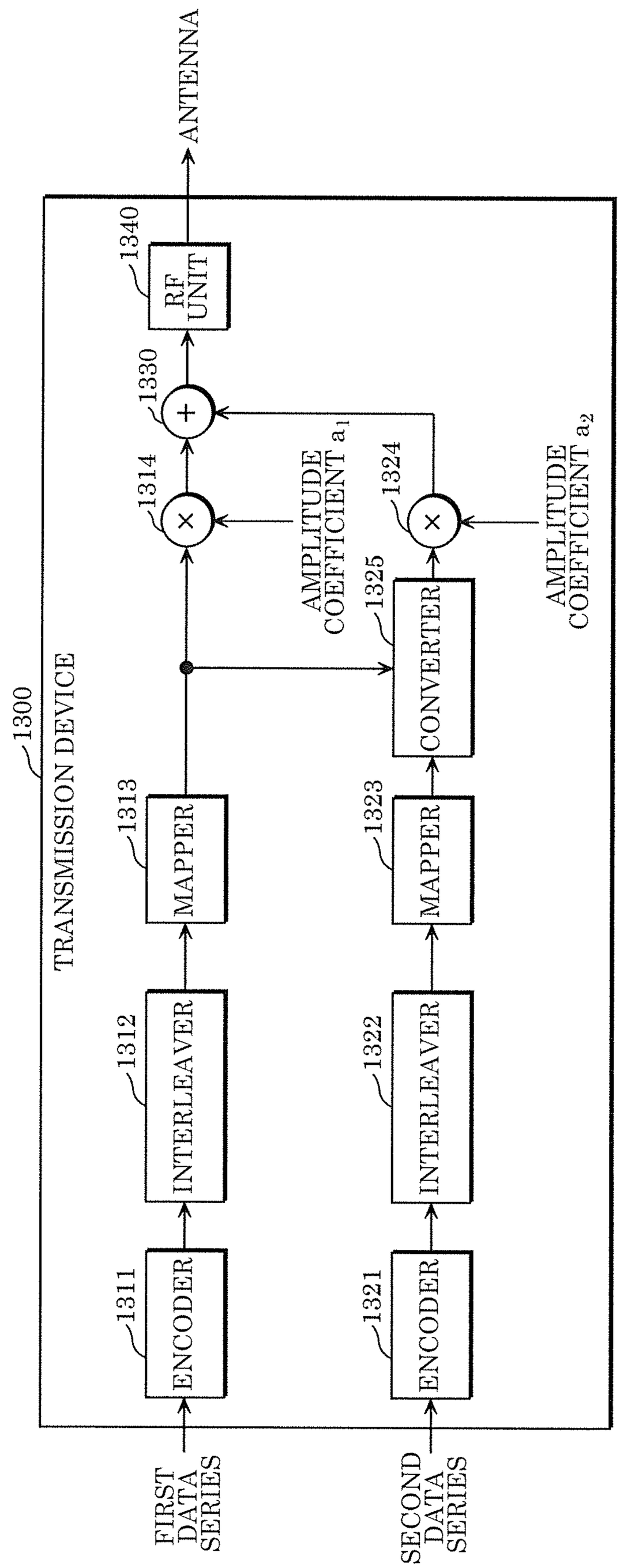
1300
TRANSMISSION DEVICE
FIRST DATA SERIES
SECOND DATA SERIES
1311
ENCODER
1312
INTERLEAVER
1313
MAPPER
1321
ENCODER
1322
INTERLEAVER
1323
MAPPER
1325
CONVERTER
1314
1324
AMPLITUDE COEFFICIENT a_1
AMPLITUDE COEFFICIENT a_2
1330
1340
RF UNIT
ANTENNA

FIG. 26

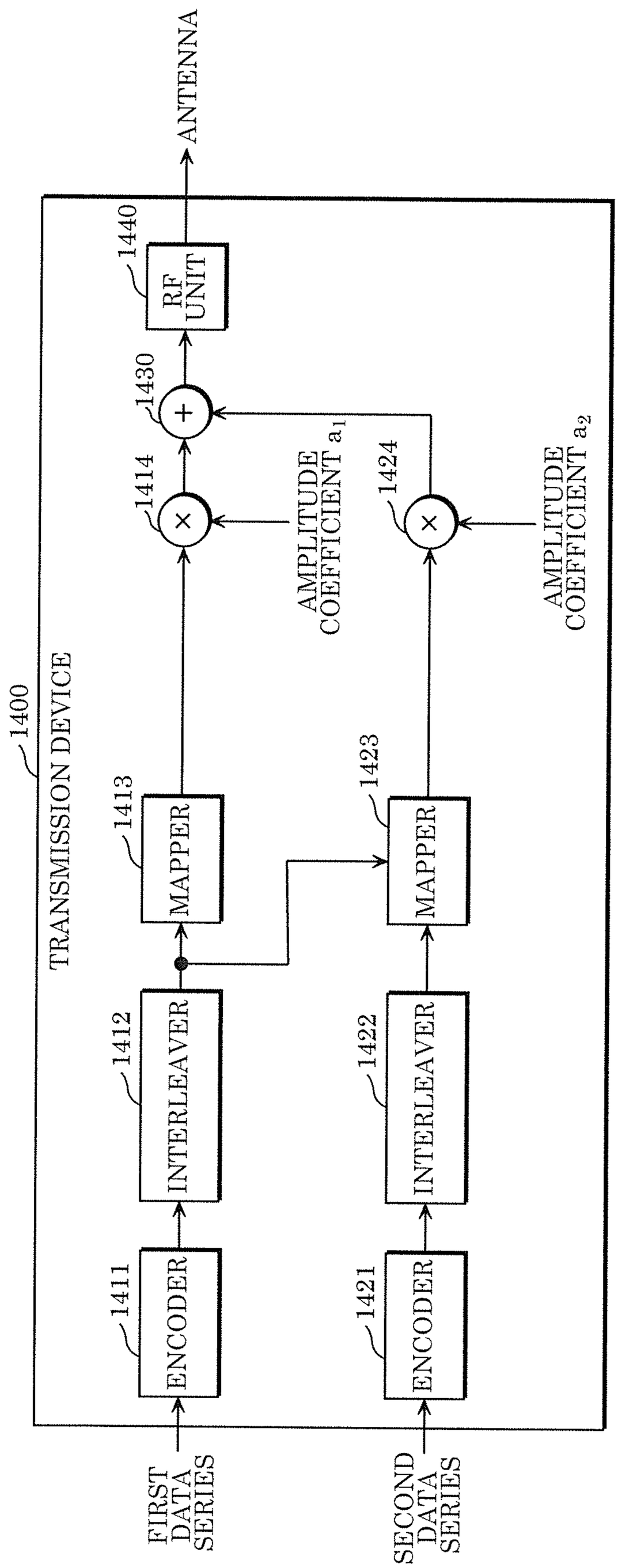
1400
TRANSMISSION DEVICE
FIRST DATA SERIES
SECOND DATA SERIES
1411
ENCODER
1421
ENCODER
1412
INTERLEAVER
1422
INTERLEAVER
1413
MAPPER
1423
MAPPER
1414
1424
AMPLITUDE COEFFICIENT a_1
AMPLITUDE COEFFICIENT a_2
1430
1440
RF UNIT
ANTENNA

FIG. 27

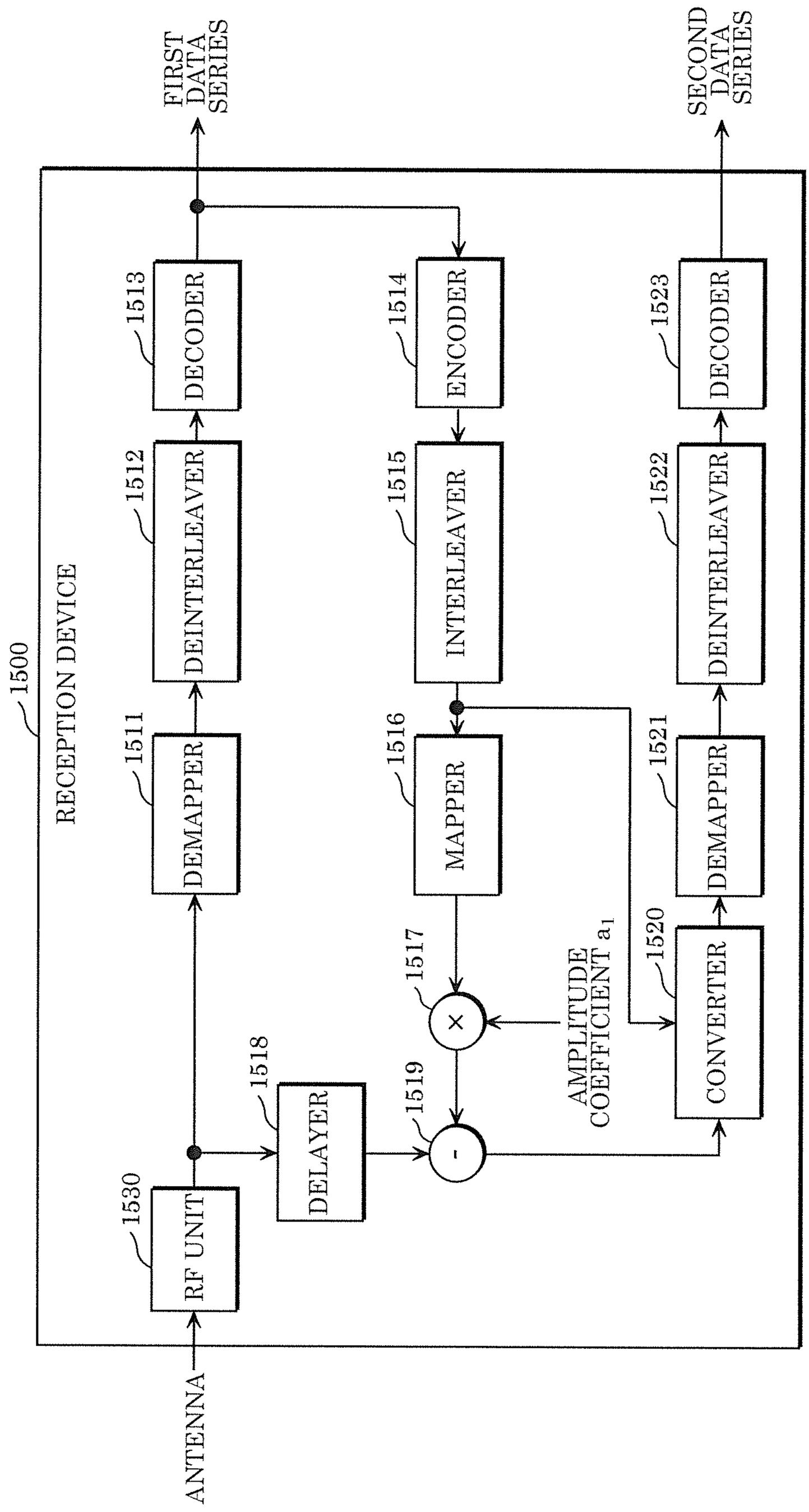
1500
RECEPTION DEVICE
ANTENNA
1530
RF UNIT
1511
DEMAPPER
1512
DEINTERLEAVER
1513
DECODER
FIRST DATA SERIES
1514
ENCODER
1515
INTERLEAVER
1516
MAPPER
1517
1518
DELAYER
1519
AMPLITUDE COEFFICIENT a_1
1520
CONVERTER
1521
DEMAPPER
1522
DEINTERLEAVER
1523
DECODER
SECOND DATA SERIES

FIG. 28

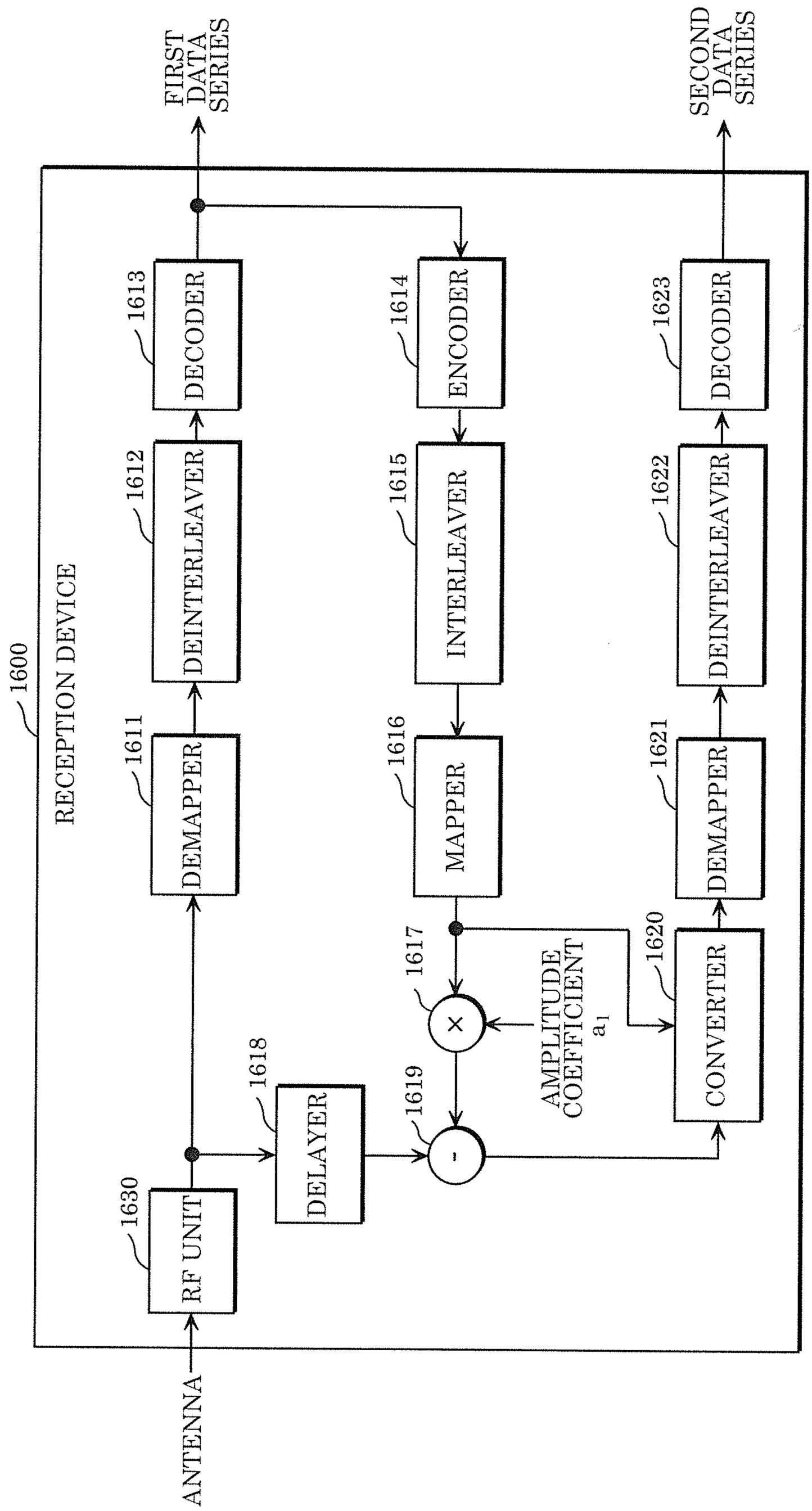
1600
RECEPTION DEVICE
ANTENNA
1630
RF UNIT
1611
DEMAPPER
1612
DEINTERLEAVER
1613
DECODER
FIRST DATA SERIES
1614
ENCODER
1615
INTERLEAVER
1616
MAPPER
1617
1618
DELAYER
1619
AMPLITUDE COEFFICIENT a_1
1620
CONVERTER
1621
DEMAPPER
1622
DEINTERLEAVER
1623
DECODER
SECOND DATA SERIES

FIG. 29

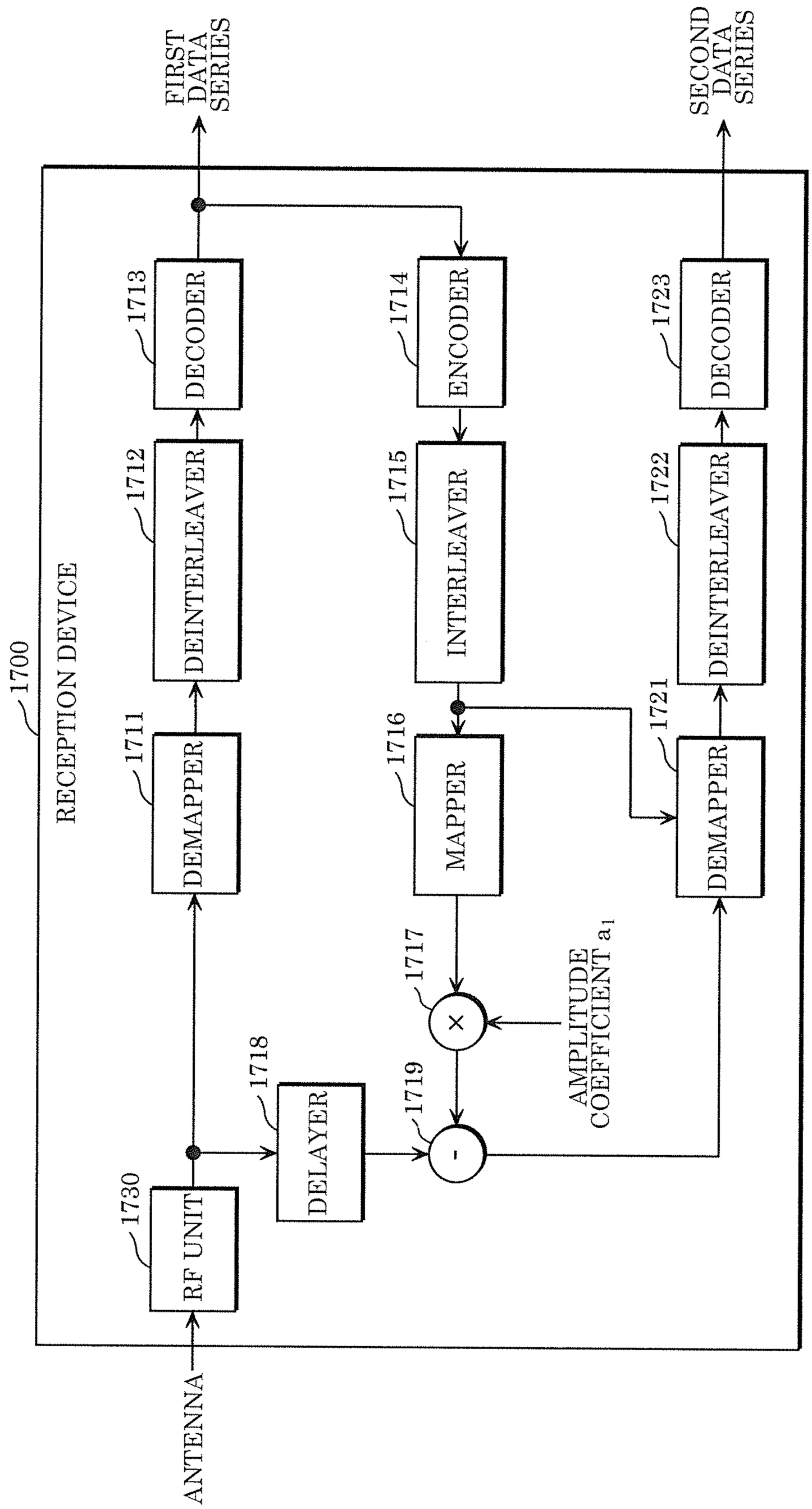
1700
RECEPTION DEVICE
ANTENNA
1730
RF UNIT
1711
DEMAPPER
1712
DEINTERLEAVER
1713
DECODER
FIRST DATA SERIES
1714
ENCODER
1715
INTERLEAVER
1716
MAPPER
1717
1718
DELAYER
1719
AMPLITUDE COEFFICIENT a_1
1721
DEMAPPER
1722
DEINTERLEAVER
1723
DECODER
SECOND DATA SERIES

FIG. 30

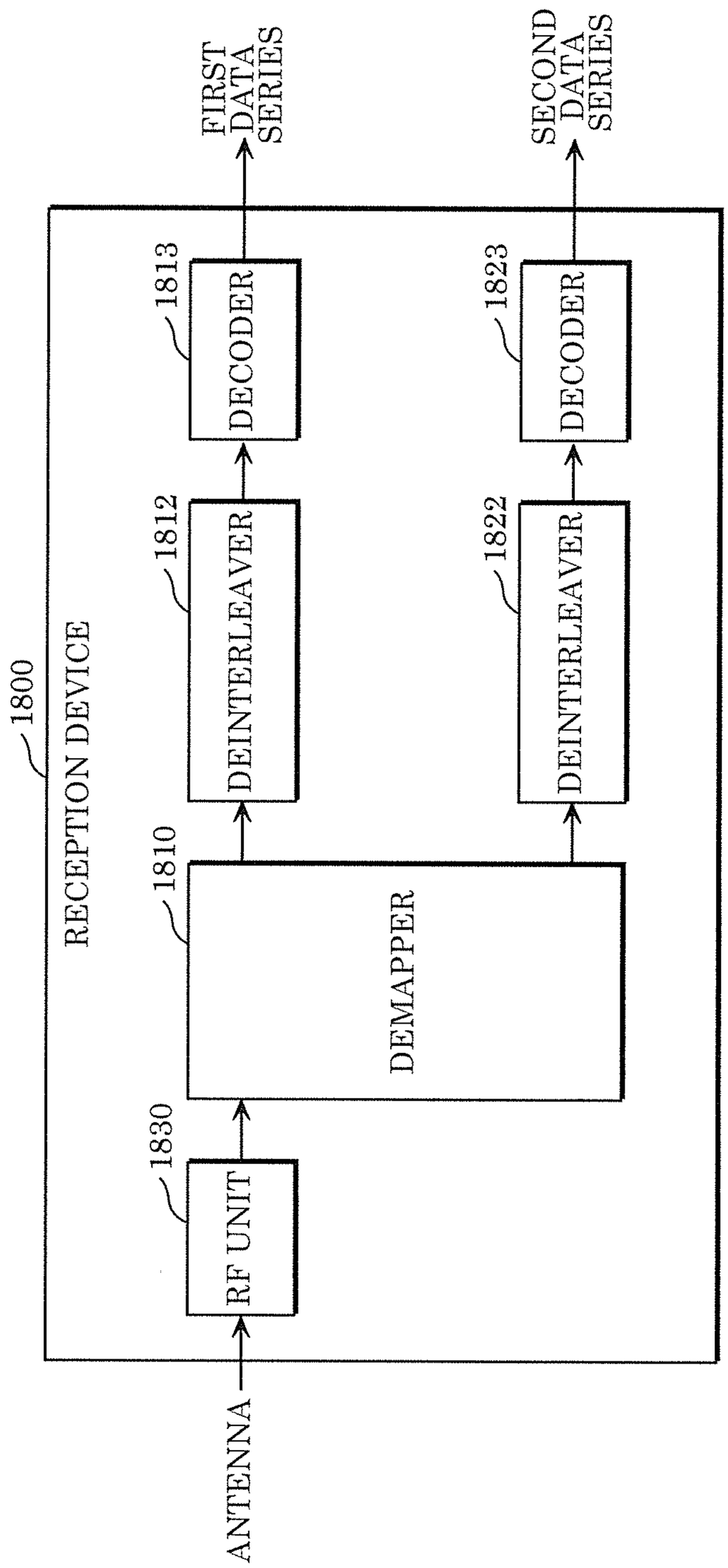
1800
RECEPTION DEVICE
ANTENNA
1830
RF UNIT
1810
DEMAPPER
1812
DEINTERLEAVER
1822
DEINTERLEAVER
1813
DECODER
1823
DECODER
FIRST DATA SERIES
SECOND DATA SERIES

FIG. 31

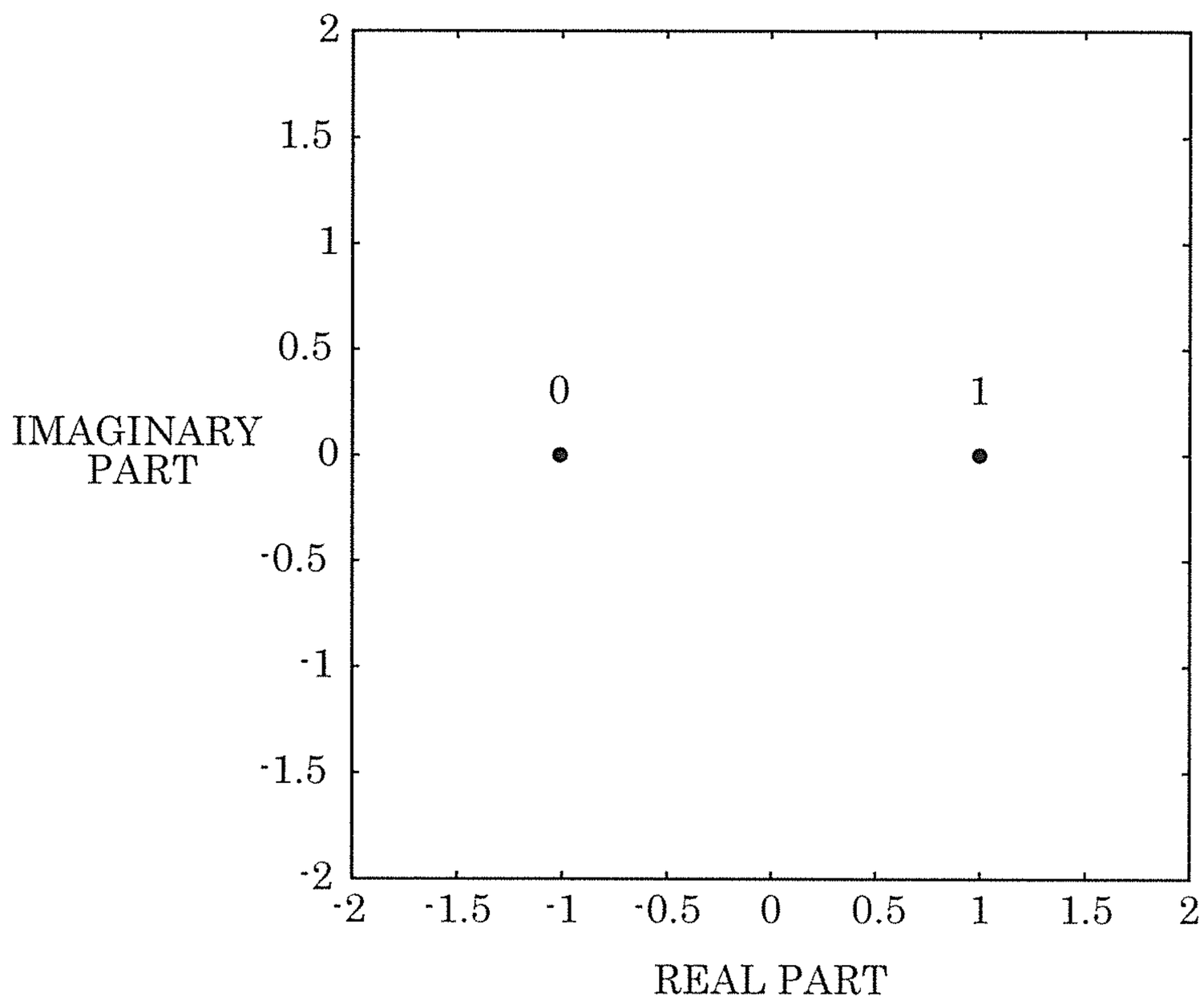

FIG. 32

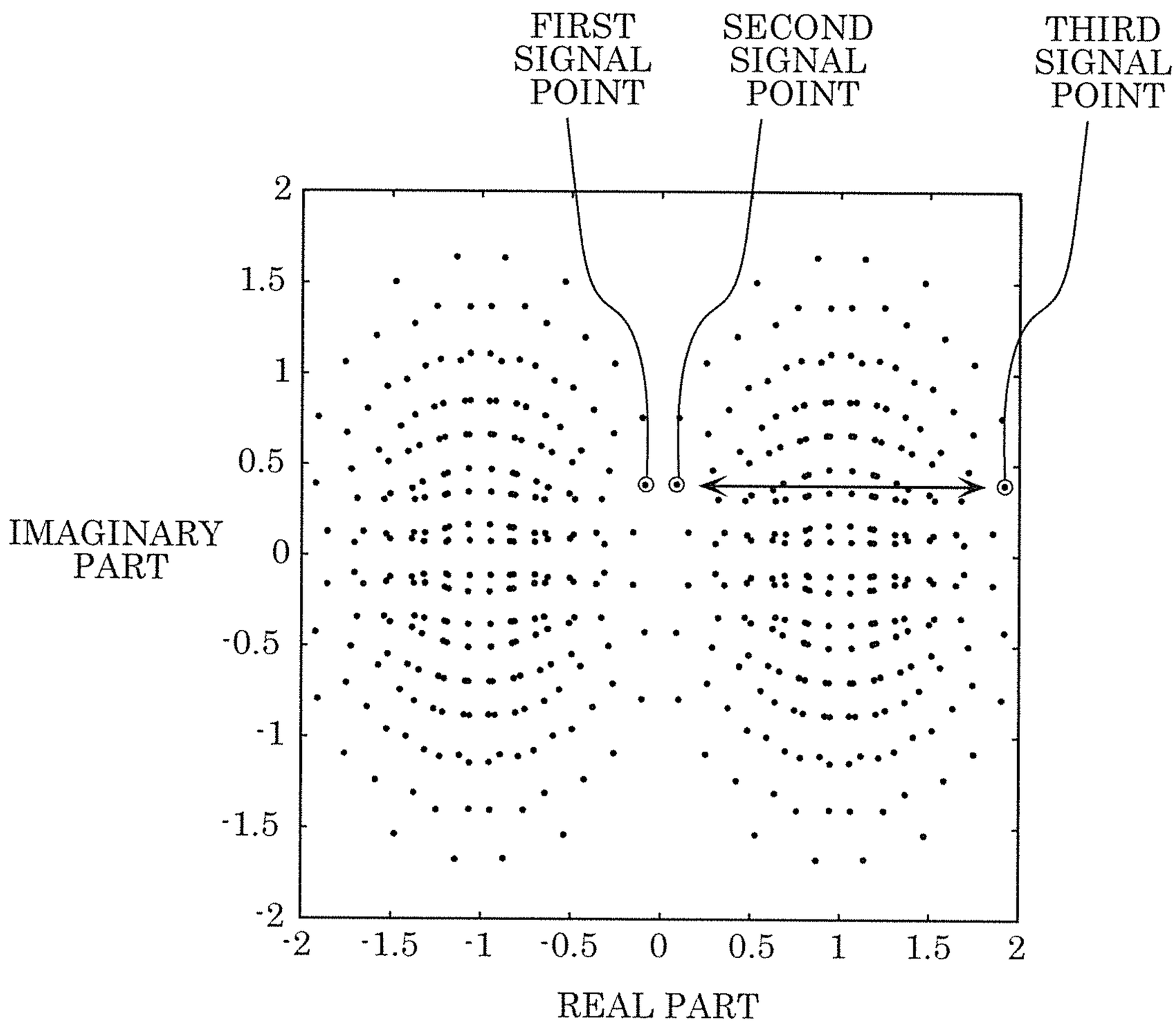
FIRST SIGNAL POINT
SECOND SIGNAL POINT
THIRD SIGNAL POINT
IMAGINARY PART
REAL PART
2
1.5
1
0.5
0
-0.5
-1
-1.5
-2
-2
-1.5
-1
-0.5
0
0.5
1
1.5
2

FIG. 33

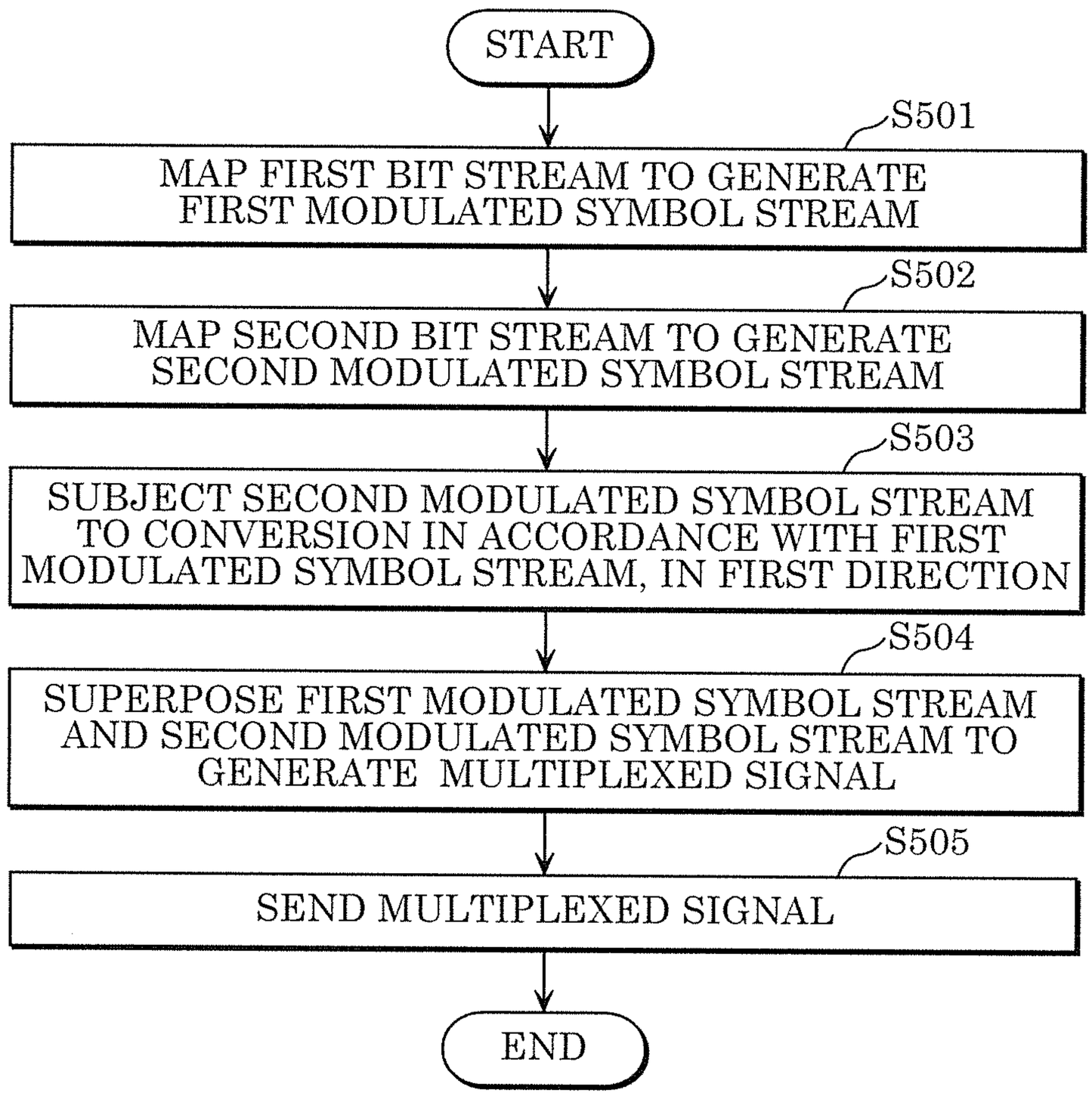
START
S501
MAP FIRST BIT STREAM TO GENERATE FIRST MODULATED SYMBOL STREAM
S502
MAP SECOND BIT STREAM TO GENERATE SECOND MODULATED SYMBOL STREAM
S503
SUBJECT SECOND MODULATED SYMBOL STREAM TO CONVERSION IN ACCORDANCE WITH FIRST MODULATED SYMBOL STREAM, IN FIRST DIRECTION
S504
SUPERPOSE FIRST MODULATED SYMBOL STREAM AND SECOND MODULATED SYMBOL STREAM TO GENERATE MULTIPLEXED SIGNAL
S505
SEND MULTIPLEXED SIGNAL
END

FIG. 34

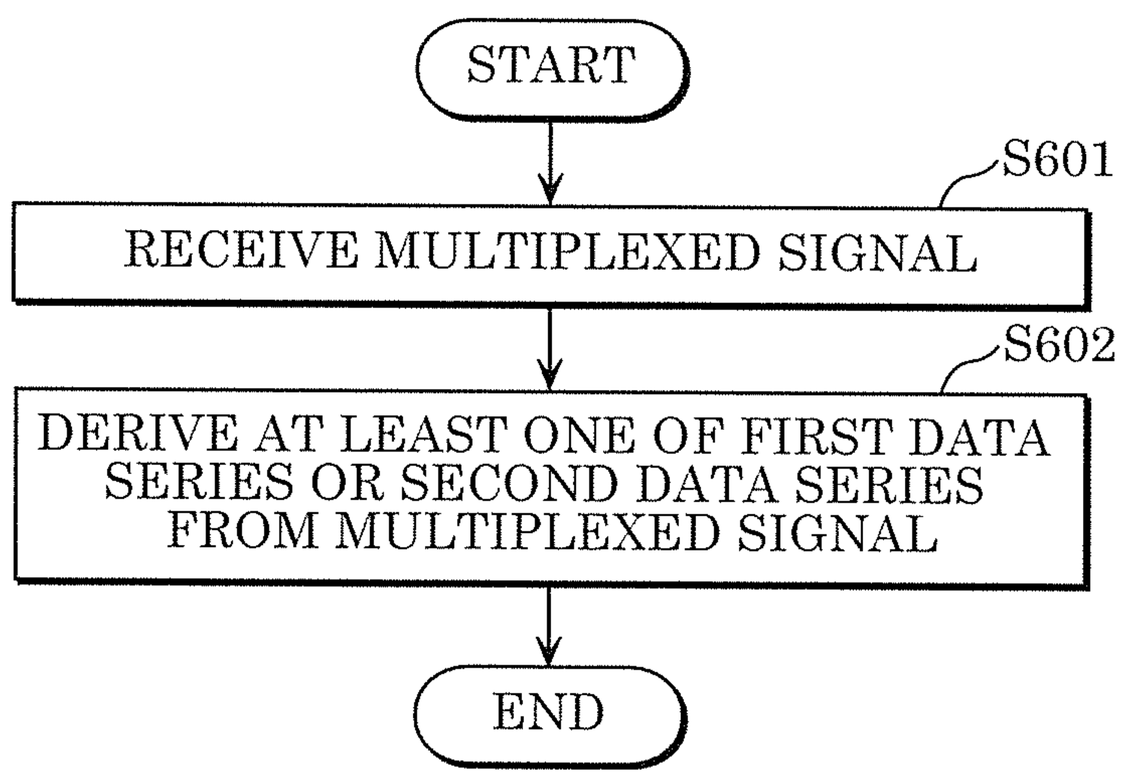
START
S601
RECEIVE MULTIPLEXED SIGNAL
S602
DERIVE AT LEAST ONE OF FIRST DATA SERIES OR SECOND DATA SERIES FROM MULTIPLEXED SIGNAL
END

FIG. 35

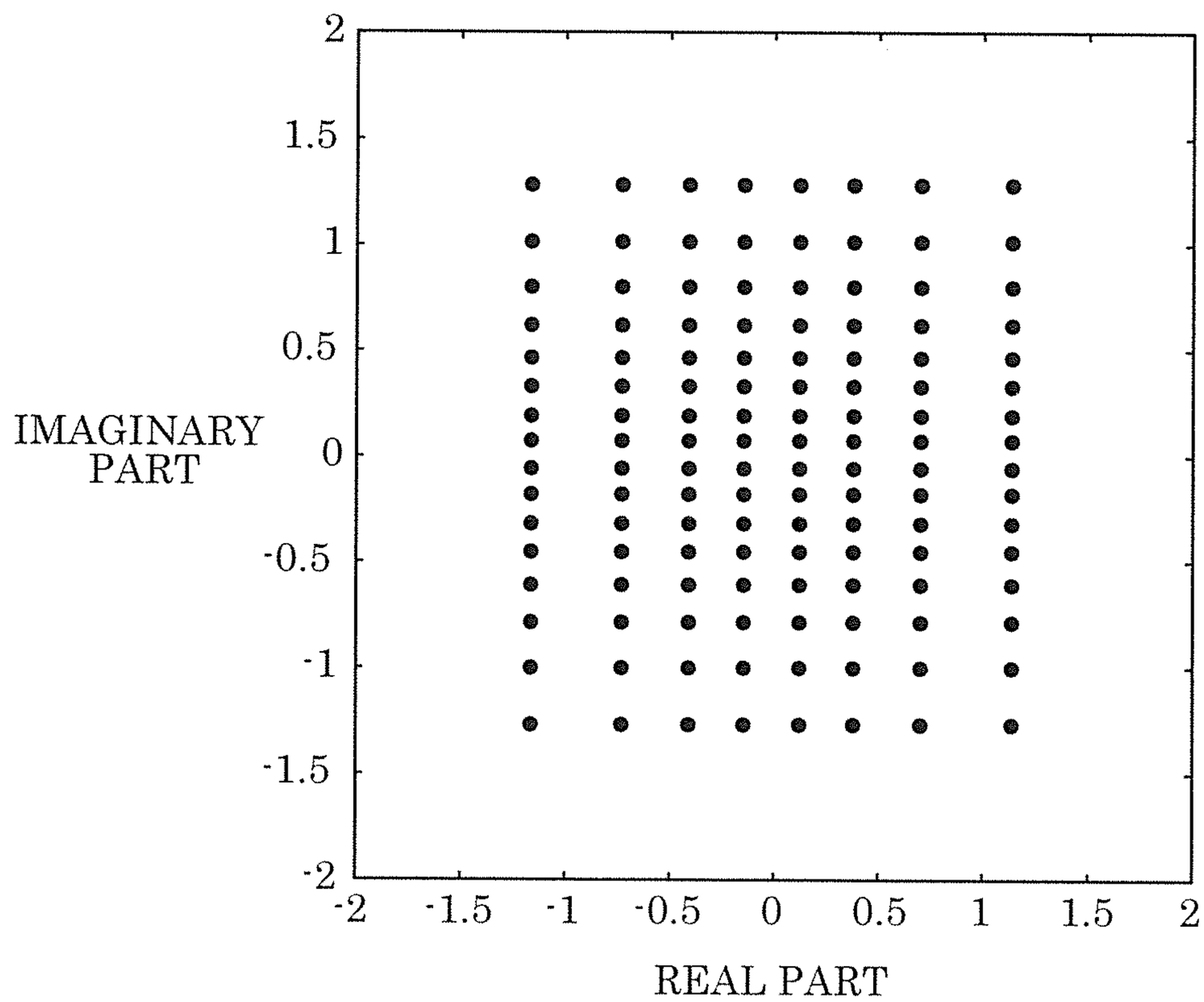

FIG. 36

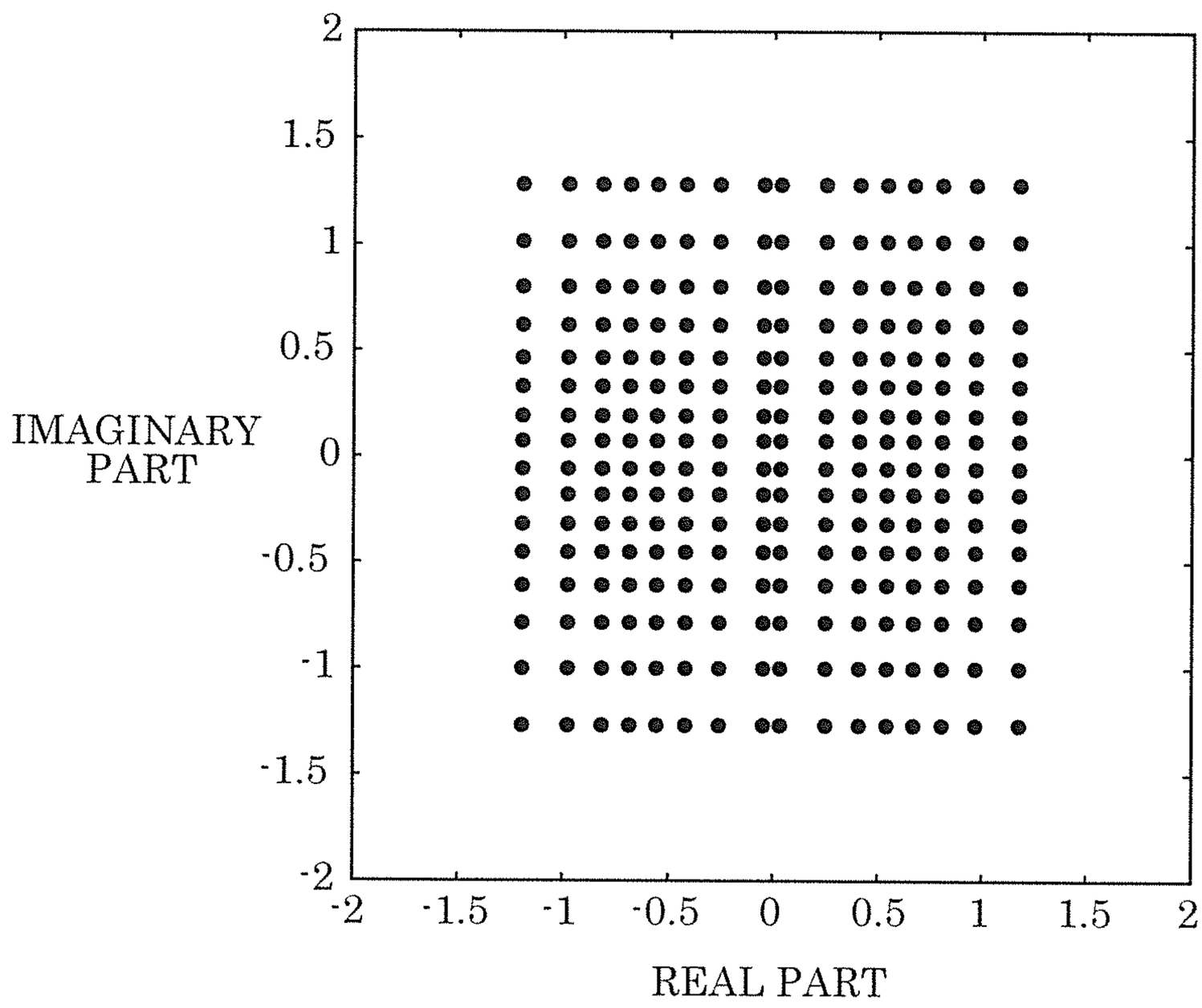

TRANSMISSION DEVICE, RECEPTION DEVICE, TRANSMISSION METHOD, AND RECEPTION METHOD

CROSS REFERENCE TO RELATED APPLICATIONS

[0001] This application is a continuation of U.S. application Ser. No. 16/270,930, filed Feb. 8, 2019, which is a U.S. continuation application of PCT International Patent Application Number PCT/JP2017/027831 filed on Aug. 1, 2017, claiming the benefit of priority of U.S. Provisional Patent Application No. 62/374,227 filed on Aug. 12, 2016, the entire contents of which are hereby incorporated by reference.

BACKGROUND

1. Technical Field

[0002] The present disclosure relates to a transmission device, a reception device, a transmission method, and a reception method.

2. Description of the Related Art

[0003] A multiplexing scheme utilizing superposition coding is known as a scheme to multiplex and send a plurality of data series (Seokhyun YOON and Donghee KIM, Performance of Superposition Coded Broadcast/Unicast Service Overlay System, IEICE Transactions on Communications, vol. E91-B, No. 9). Other known multiplexing schemes include time division multiplexing and frequency division multiplexing (Thomas M. Cover, Broadcast Channels, IEEE Transactions on Information Theory, vol. IT-18, No. 1).

[0004] Compared to time division multiplexing and frequency division multiplexing, the multiplexing scheme utilizing superposition coding is suited to multiplexing a plurality of data series that are required to have different levels of noise tolerance (receiver tolerance). The multiplexing scheme utilizing superposition coding is also termed as layer division multiplexing. The multiplexing scheme utilizing superposition coding applied to multiple access is also known as non-orthogonal division multiple access (NOMA).

[0005] In the multiplexing scheme utilizing superposition coding, a transmission device superposes a plurality of modulated symbols, which are obtained by modulating each of a plurality of data series, using predetermined power allocation, and transmits the superposed modulated symbols. A reception device sequentially demodulates the modulated symbols that are multiplexed by superposition coding, starting with modulated symbols in a layer with high noise tolerance until the completion of demodulating modulated symbols in a layer to which a desired data series belongs.

[0006] More specifically, the reception device demodulates the modulated symbols in a layer with the highest noise tolerance to estimate a data series. When a desired data series is yet to be estimated, the reception device generates a replica of each modulated symbol from another data series that has been estimated to cancel the replica from the received signal, and demodulates modulated symbols in a layer with the second highest noise tolerance to estimate another data series. The reception device repeats these processes until the desired data series is estimated.

SUMMARY

[0007] According to an aspect of the present disclosure, a transmission device includes a first mapper, a second mapper, a converter, a superposer, and a transmitter. The first mapper is configured to map a first bit stream of a first data series to generate a first modulated symbol stream. The second mapper is configured to map a second bit stream of a second data series to generate a second modulated symbol stream. The first modulated symbol stream and the second modulated symbol stream are representable on a complex plane extending in a first direction and a second direction perpendicular to the first direction. The converter is configured to convert the second modulated symbol stream in accordance with the first modulated symbol stream only in the first direction on the complex plane. The superposer is configured to superpose the first modulated symbol stream and the second modulated symbol stream converted by the converter, at an amplitude ratio, to generate a multiplexed signal. The transmitter is configured to transmit the multiplexed signal.

[0008] Further merits and advantageous effects in one aspect of the present disclosure will become apparent from the following description and drawings. These merits and advantageous effects are provided by the characteristics described in the following description and drawings. However, not all of these merits and advantageous effects are required to be provided, and thus one or more of these merits and advantageous effects may be provided by one or more of the characteristics described in the description and drawings.

BRIEF DESCRIPTION OF DRAWINGS

[0009] These and other objects, advantages and features of the disclosure will become apparent from the following description thereof taken in conjunction with the accompanying drawings that illustrate a specific embodiment of the present disclosure.

[0010] FIG. **1** is a block diagram of an example configuration of a transmission device according to Embodiment 1;

[0011] FIG. **2** is a block diagram of an example configuration of a reception device according to Embodiment 1;

[0012] FIG. **3** is a diagram showing transmission capacities in superposition coding;

[0013] FIG. **4** is a diagram showing an example QPSK constellation;

[0014] FIG. **5** is a diagram showing an example non-uniform constellation;

[0015] FIG. **6** is a diagram showing transmission capacities in superposition coding using QPSK and Nu-256QAM;

[0016] FIG. **7** is a block diagram of a first example configuration of a reception device according to Embodiment 2;

[0017] FIG. **8** is a diagram showing an example superposition constellation;

[0018] FIG. **9** is a flowchart of a first example of reception operations according to Embodiment 2;

[0019] FIG. **10** is a diagram showing an example result of simulation to compare sequential decoding and parallel decoding in superposition coding;

[0020] FIG. **11** is a block diagram of a second example configuration of the reception device according to Embodiment 2;

[0021] FIG. **12** is a flowchart of a second example of reception operations according to Embodiment 2;

[0022] FIG. **13** is a block diagram of a first example configuration of a transmission device according to Embodiment 3;

[0023] FIG. **14** is a block diagram of a second example configuration of the transmission device according to Embodiment 3;

[0024] FIG. **15** is a block diagram of a third example configuration of the transmission device according to Embodiment 3;

[0025] FIG. **16** is a block diagram of a first example configuration of a reception device according to Embodiment 3;

[0026] FIG. **17** is a block diagram of a second example configuration of the reception device according to Embodiment 3;

[0027] FIG. **18** is a block diagram of a third example configuration of the reception device according to Embodiment 3;

[0028] FIG. **19** is a block diagram of a fourth example configuration of the reception device according to Embodiment 3;

[0029] FIG. **20** is a diagram showing an example of a variation superposition constellation according to Embodiment 3;

[0030] FIG. **21** is a flowchart of an example of transmission operations according to Embodiment 3;

[0031] FIG. **22** is a flowchart of an example of reception operations according to Embodiment 3;

[0032] FIG. **23** is a diagram showing an example result of simulation to compare sequential decoding and parallel decoding in a variation of superposition coding;

[0033] FIG. **24** is a block diagram showing a first example configuration of a transmission device according to Embodiment 4;

[0034] FIG. **25** is a block diagram showing a second example configuration of the transmission device according to Embodiment 4;

[0035] FIG. **26** is a block diagram showing a third example configuration of the transmission device according to Embodiment 4;

[0036] FIG. **27** is a block diagram showing a first example configuration of a reception device according to Embodiment 4;

[0037] FIG. **28** is a block diagram showing a second example configuration of the reception device according to Embodiment 4;

[0038] FIG. **29** is a block diagram showing a third example configuration of the reception device according to Embodiment 4;

[0039] FIG. **30** is a block diagram showing a fourth example configuration of the reception device according to Embodiment 4;

[0040] FIG. **31** is a diagram showing an example of a BPSK constellation;

[0041] FIG. **32** is a diagram showing a first example of a variation superposition constellation according to Embodiment 4;

[0042] FIG. **33** is a flowchart of an example of transmission operations according to Embodiment 4;

[0043] FIG. **34** is a flowchart of an example of reception operations according to Embodiment 4;

[0044] FIG. **35** is a diagram showing an example of a constellation based on PAM; and

[0045] FIG. **36** is a diagram showing a second example of the variation superposition constellation according to Embodiment 4.

DETAILED DESCRIPTION OF THE EMBODIMENTS

[0046] In some cases, the multiplexing scheme utilizing superposition coding fails to efficiently process a plurality of data series.

[0047] For example, the multiplexing scheme utilizing superposition coding is subjected to processing delays due to the process that requires sequential decoding of a plurality of multiplexed data series. Furthermore, the multiplexing scheme utilizing superposition coding requires the reception device to include an arithmetic resource, etc. for re-modulating a forward decoded data series. The reception device is also required to include a memory resource, etc. for holding received symbols used to decode the subsequent data series, from when the previous data series is decoded and re-modulated until when a modulated symbol stream of the previous data series is obtained.

[0048] Moreover, the multiplexing scheme utilizing superposition coding may suffer a decrease in transmission capacity due to a plurality of superposed data series affecting each other.

[0049] The present disclosure provides exemplary embodiments that solve the above-described problems involved in the multiplexing scheme utilizing superposition coding. The present disclosure, however, also provides an aspect that solves not completely but partially the above-described problems, or an aspect that solves a problem different from the above-described problems.

[0050] The following describes in detail the embodiments according to the present disclosure with reference to the drawings. Note that the following embodiments, etc. show a comprehensive or specific illustration of the present disclosure. The numerical values, shapes, materials, structural components, the arrangement and connection of the structural components, steps, the processing order of the steps, etc. shown in the following embodiments, etc. are mere examples, and thus are not intended to limit the present disclosure. Of the structural components described in the following embodiments, etc. structural components not recited in any one of the independent claims that indicate the broadest concepts of the present disclosure will be described as optional structural components.

[0051] Also note that encoding may mean error control coding. Error control coding is also referred to as error-correcting coding. Also, decoding may mean error control decoding. Error control decoding is also referred to as error-correcting decoding or error correction. Also, unknown may mean undetermined, and transmission may mean sending.

Embodiment 1

[0052] The present embodiment describes multiplexing a plurality of data series onto a plurality of layers by a multiplexing scheme utilizing superposition coding, and transmitting the multiplexed data series.

[0053] To simplify the description without loss of generality, the present embodiment and other embodiments

describe an example in which two data series are multiplexed onto two different layers to be transmitted. However, the multiplexing scheme described in the present embodiment and other embodiments is applicable to three or more data series multiplexed onto three or more different layers to be transmitted.

[0054] Also, the present embodiment and other embodiments use a first layer to which a first data series belongs as a layer with higher noise tolerance than a second layer to which a second data series belongs.

[0055] FIG. **1** shows an example configuration of transmission device **100** that multiplexes two data series onto two layers by superposition coding, and transmits the multiplexed data series. The configuration and operation of transmission device **100** will be described with reference to FIG. **1**.

[0056] Transmission device **100** includes encoder **111**, interleaver **112**, mapper **113**, multiplier **114**, encoder **121**, interleaver **122**, mapper **123**, multiplier **124**, adder **130**, and radio frequency unit (RF unit) **140**. These structural components may also be implemented as dedicated or general-purpose circuits. Multiplier **114**, multiplier **124**, and adder **130** can also be represented collectively as a superposer. RF unit **140** can also be represented as a transmitter. RF unit **140** may include an antenna.

[0057] Encoder **111** encodes an inputted first data series on the basis of a first error control coding scheme to generate a first bit stream. Interleaver **112** permutes the bits in the first bit stream generated by encoder **111** on the basis of a first permutation rule. Such permutation is also referred to as interleaving.

[0058] Mapper **113** maps the first bit stream permuted by interleaver **112** in accordance with a first mapping scheme (a first modulation scheme) to generate a first modulated symbol stream that includes a plurality of first modulated symbols. In the mapping in accordance with the first mapping scheme, mapper **113** maps each group of bits that includes a first number of bits in the first bit stream onto one of the signal points in a first constellation, in accordance with the values of such a group of bits.

[0059] Encoder **121** encodes an inputted second data series on the basis of a second error control coding scheme to generate a second bit stream. Interleaver **122** permutes the bits in the second bit stream generated by encoder **121** on the basis of a second permutation rule. Such permutation is also referred to as interleaving.

[0060] Mapper **123** maps the second bit stream permuted by interleaver **122** in accordance with a second mapping scheme (a second modulation scheme) to generate a second modulated symbol stream that includes a plurality of second modulated symbols. In the mapping in accordance with the second mapping scheme, mapper **123** maps each group of bits that includes a second number of bits in the second bit stream onto one of the signal points in a second constellation, in accordance with the values of such a group of bits.

[0061] When a mapping scheme used is PSK modulation such as BPSK and QPSK, or QAM modulation such as 16QAM and 64QAM, each modulated symbol can be represented by a complex number, for example, with the real part representing the magnitude of the in-phase component and the imaginary part representing the magnitude of the orthogonal component. Meanwhile, when a mapping scheme used is PAM modulation, each modulated symbol can be represented by a real number.

[0062] Multiplier **114** multiplies each first modulated symbol in the first modulated symbol stream by first amplitude coefficient a_1. Multiplier **124** multiplies each second modulated symbol in the second modulated symbol stream by second amplitude coefficient a_2. Adder **130** superposes first modulated symbols multiplied by first amplitude coefficient a_1 and second modulated symbols multiplied by second amplitude coefficient a_2 to generate a superposed modulated symbol stream that includes a plurality of superposed modulated symbols.

[0063] RF unit **140** sends the generated superposed modulated symbol stream as a signal. More specifically, RF unit **140** generates, from the superposed modulated symbol stream generated by adder **130**, a radio-frequency signal as a signal corresponding to the superposed modulated symbol stream to send such a radio-frequency signal from the antenna.

[0064] Stated differently, the superposer constituted by multiplier **114**, multiplier **124**, and adder **130** superposes the first modulated symbol stream and the second modulated symbol stream at a predetermined amplitude ratio, thereby generating a multiplexed signal into which the first data series and the second data series are multiplexed. Subsequently, RF unit **140** sends the multiplexed signal. Note that the multiplexed signal corresponds to the superposed modulated symbol stream. Also note that the predetermined amplitude ratio may be 1:1, and that the multiplication may be omitted.

[0065] FIG. **2** shows an example configuration of reception device **200** capable of receiving and sequentially decoding the signal on which two data series are multiplexed onto two layers by superposition coding, and capable of obtaining (extracting) one of or both of the multiplexed two data series. The configuration and operation of reception device **200** will be described with reference to FIG. **2**.

[0066] Reception device **200** includes RF unit **230**, demapper **211**, deinterleaver **212**, decoder **213**, encoder **214**, interleaver **215**, mapper **216**, multiplier **217**, delayer **218**, subtractor **219**, demapper **221**, deinterleaver **222**, and decoder **223**. These structural components may also be implemented as dedicated or general-purpose circuits.

[0067] Demapper **211**, deinterleaver **212**, decoder **213**, encoder **214**, interleaver **215**, mapper **216**, multiplier **217**, delayer **218**, subtractor **219**, demapper **221**, deinterleaver **222**, and decoder **223** can also be represented collectively as a deriver. RF unit **230** can also be represented as a receiver. RF unit **230** may include an antenna.

[0068] Reception device **200** receives by an antenna the multiplexed signal sent from transmission device **100**, and inputs such a multiplexed signal into RF unit **230**. Stated differently, RF unit **230** receives the multiplexed signal via the antenna. The multiplexed signal received by RF unit **230** is also represented as a received signal, and corresponds to the superimposed modulated symbol stream into which the first modulated symbol stream and the second modulated symbol stream are multiplexed. RF unit **230** generates a baseband received signal from the radio-frequency received signal.

[0069] Demapper **211** demaps the baseband received signal on the basis of the first constellation of the first mapping scheme to generate a first bit likelihood stream. For example, amplitude coefficient a_1 is reflected in the first constellation for demapping.

[0070] Deinterleaver **212** permutes the first bit likelihood stream on the basis of a permutation rule that is a reverse rule of the first permutation rule. Such permutation is also referred to as deinterleaving. Decoder **213** performs decoding that is based on the first error control coding scheme by use of the first bit likelihood stream permuted by deinterleaver **212**, and outputs the decoding result as the first data series.

[0071] Here, of the received signal corresponding to the superposed modulated symbol stream, demapper **211** treats the components corresponding to the second modulated symbols in the second data series as an unknown signal (noise), and performs demapping on the basis of the first constellation of the first mapping scheme.

[0072] When only the first data series is to be obtained, reception device **200** terminates the process upon completing the estimation of the first data series. Meanwhile, when the second data series is to be obtained in addition to the first data series, or when only the second data series is to be obtained, reception device **200** performs the processes described below to obtain the second data series.

[0073] Encoder **214** encodes the first data series obtained by decoder **213** on the basis of the first error control coding scheme to generate the first bit stream. Interleaver **215** permutes the bits in the first bit stream generated by encoder **214** on the basis of the first permutation rule. Such permutation is also referred to as interleaving.

[0074] Mapper **216** maps the first bit stream permuted by interleaver **215** in accordance with the first mapping scheme to generate the first modulated symbol stream that includes a plurality of first modulated symbols. Multiplier **217** multiplies the first modulated symbol stream outputted by mapper **216** by first amplitude coefficient a_1.

[0075] Delayer **218** delays the received signal outputted from RF unit **230** during the time from when RF unit **230** outputs the baseband received signal to when multiplier **217** outputs the reproduced first modulated symbol stream.

[0076] Subtractor **219** subtracts, from the received signal delayed by delayer **218**, the first modulated symbol stream multiplied by first amplitude coefficient a_1 by multiplier **217**. Through this, subtractor **219** removes the components corresponding to the first modulated symbols from the received signal on which the components corresponding to the first modulated symbols, the components corresponding to the second modulated symbols, and noise are superposed. Subsequently, subtractor **219** outputs a signal on which the components corresponding to the second modulated symbols and noise are superposed as a signal corresponding to the second modulated symbol stream.

[0077] Demapper **221** demaps the signal outputted from subtractor **219** on the basis of the second constellation of the second mapping scheme to generate a second bit likelihood stream. For example, amplitude coefficient a_2 is reflected in the second constellation for demapping.

[0078] Deinterleaver **222** permutes the second bit likelihood stream on the basis of a permutation rule that is a reverse rule of the second permutation rule. Such permutation is also referred to as deinterleaving. Decoder **223** decodes the second bit likelihood stream permuted by deinterleaver **222** on the basis of the second error control coding scheme, and outputs the decoding result as the second data series.

[0079] Through the above processes, reception device **200** obtains one of or both of the first data series and the second data series from the signal received by the antenna.

[0080] <Superposition Coding>

[0081] The following describes superposition coding.

[0082] Using signal power P_s(W), noise power P_n(W), and transmission bandwidth B(Hz), transmission capacity C_T (bit/s) is given as the Shannon limit by Equation 1.

[Math. 1]

$$C_T = B \cdot \log_2\left(1 + \frac{P_s}{P_n}\right) \quad \text{(Equation 1)}$$

[0083] Transmission capacity C(bit/s/Hz) per Hz normalized by the transmission bandwidth is given by Equation 2.

[Math. 2]

$$C = \log_2\left(1 + \frac{P_s}{P_n}\right) \quad \text{(Equation 2)}$$

[0084] In the following, "transmission capacity per Hz" will be simply referred to as "transmission capacity".

[0085] In superposition coding of the first data series and the second data series, signal power P_{s1}(W) of the first layer corresponding to the first data series, signal power P_{s2}(W) of the second layer corresponding to the second data series, and the entire signal power P_s(W) satisfy: $P_s=P_{s1}+P_{s2}$.

[0086] When demodulating the first layer, reception device **200** regards the components of the modulated symbols in the second layer as unknown components superposed on the modulated symbols in the first layer, i.e., noise. As such, transmission capacity C_1 of the first layer is given by Equation 3.

[Math. 3]

$$C_1 = \log_2\left(1 + \frac{P_{s1}}{P_{s2} + P_n}\right) \quad \text{(Equation 3)}$$

[0087] When reception device **200** demodulates the second layer, the components of the modulated symbols in the first layer have already been removed from the received signal. As such, transmission capacity C_2 of the second layer is given by Equation 4.

[Math. 4]

$$C_2 = \log_2\left(1 + \frac{P_{s2}}{P_n}\right) \quad \text{(Equation 4)}$$

[0088] As shown by Equation 5, the total of transmission capacity C_1 of the first layer and transmission capacity C_2 of the second layer agrees with the Shannon limit.

[Math. 5]

$$C_1 + C_2 = \log_2\left(1 + \frac{P_{s1}}{P_{s2} + P_n}\right) + \log_2\left(1 + \frac{P_{s2}}{P_n}\right) = \log_2\left(\frac{P_s + P_n}{P_{s2} + P_n}\right) + \log_2\left(\frac{P_{s2} + P_n}{P_n}\right) = \log_2\left(\frac{P_s + P_n}{P_n}\right) = \log_2\left(1 + \frac{P_s}{P_n}\right) \quad \text{(Equation 5)}$$

[0089] In the present embodiment, signal power P_{s1} of the first layer corresponding to the first data series is proportional to the second power of first amplitude coefficient a_1, and signal power P_{s2} of the second layer corresponding to the second data series is proportional to the second power of second amplitude coefficient a_2. The allocation of signal power to a plurality of layers is determined by an amplitude coefficient that is multiplied to the modulated symbols of each layer.

[0090] FIG. **3** shows an example simulation result of each transmission capacity when the ratio between signal power P_{s1} of the first layer and signal power P_{s2} of the second layer is $P_{s1}:P_{s2}=2:1$. In FIG. **3**, the lateral axis represents as dB (decibel) the ratio of signal power P_s to noise power P_n (SNR), and the vertical axis represents transmission capacity. In FIG. **3**, the dot-and-dash line indicates transmission capacity C_1 of the first layer, the broken line indicates transmission capacity C_2 of the second layer, and the solid line indicates the total transmission capacity of transmission capacity C_1 of the first layer and transmission capacity C_2 of the second layer.

[0091] Note that SNR, which means a ratio of signal power to noise power, is also referred to as a signal-to-noise power ratio or a signal-to-noise ratio.

[0092] <Non-Uniform Constellation>

[0093] Transmission device **100** according to the present embodiment can employ any mapping scheme for each of the first mapping scheme and the second mapping scheme. Reception device **200** demodulates the first layer, with the second modulated symbols of the second layer remaining unknown. As such, a mapping scheme such as QPSK, for example, that mainly supports a low SNR is suitable as the first mapping scheme.

[0094] FIG. **4** shows an example QPSK constellation. More specifically, four QPSK signal points are plotted in the complex plane, with the lateral axis representing the real part (the real component) and the vertical axis representing the imaginary part (the imaginary component). In QPSK, a group of bits (00, 01, 10, or 11) is associated with a modulated symbol indicating a complex number on the basis of the constellation shown in FIG. **4**.

[0095] Meanwhile, the second layer is demodulated with the modulated symbols in the first layer having been removed. As such, the second mapping scheme may be a mapping scheme that utilizes multilevel constellation supporting a high SNR.

[0096] Non-uniform constellations as disclosed in J. Zoellner and N. Loghin, Optimization of High-order Non-uniform QAM Constellations, IEEE International Symposium on Broadband Multimedia Systems and Broadcasting 2013 have received recent attention as multilevel constellations. Unlike conventional uniform constellations that include uniformly spaced signal points, such as a QAM constellation, a non-uniform constellation includes ununiformly spaced signal points. In some cases, a mapping scheme using a non-uniform constellation improves the transmission capacity compared to a mapping scheme using a uniform constellation.

[0097] FIG. **5** shows an example non-uniform constellation including 256 signal points (Nu-256QAM). In FIG. **5**, 256 non-uniform constellation signal points are plotted in the complex plane, with the lateral axis representing the real part and the vertical axis representing the imaginary part.

[0098] The following describes an example of using QPSK shown in FIG. **4** as the first mapping scheme and Nu-256QAM shown in FIG. **5** as the second mapping scheme in the multiplexing scheme that utilizes superposition coding.

[0099] FIG. **6** shows an example simulation result of each transmission capacity when the ratio between signal power P_{s1} of the first layer and signal power P_{s2} of the second layer is $P_{s1}:P_{s2}=2:1$. In FIG. **6**, the lateral axis represents as dB (decibel) the ratio of signal power P_s to noise power P_n (SNR), and the vertical axis represents transmission capacity. In FIG. **6**, the dot-and-dash line indicates transmission capacity C_1 of the first layer, and the broken line indicates transmission capacity C_2 of the second layer. A combination of QPSK and Nu-256QAM achieves a transmission capacity that is close to the limit shown in FIG. **3**.

[0100] As described above, transmission device **100** according to the present embodiment is capable of highly efficient multiplexing and transmission of a plurality of data series by a multiplexing scheme utilizing superposition coding. Reception device **200** is capable of receiving a plurality of data series that have been multiplexed in a highly efficient manner by the multiplexing scheme utilizing superposition coding. Transmission device **100** and reception device **200** are also capable of increasing the transmission capacity by use of a non-uniform constellation.

[0101] Note that permutation (interleaving and deinterleaving) reduces the effects that may be caused when successive errors occur. Permutation (interleaving and deinterleaving) also controls the correspondence among bits included in codewords in error correcting coding, modulated symbols, and bits included in such modulated symbols. However, such permutation (interleaving and deinterleaving) may be omitted.

[0102] Stated differently, interleaver **112** and interleaver **122** are optional structural components, and thus may not be included in transmission device **100**. Similarly, deinterleaver **212**, interleaver **215**, and deinterleaver **222** are optional structural components, and thus may not be included in reception device **200**.

[0103] Interleaving and deinterleaving, however, make a pair. As such, when transmission device **100** includes interleaver **112** and interleaver **122**, reception device **200** basically includes deinterleaver **212**, interleaver **215**, and deinterleaver **222**. Meanwhile, when transmission device **100** does not include interleaver **112** and interleaver **122**, reception device **200** does not include deinterleaver **212**, interleaver **215**, and deinterleaver **222**.

[0104] Also, amplitude coefficient a_1 may be reflected in the mapping performed by mapper **216** of reception device **200**. In such a case, reception device **200** may omit the multiplication, and thus may not include multiplier **217**.

[0105] Error control coding on the first data series and the second data series may be performed by an external device that is different from transmission device **100**. In such a case,

transmission device **100** may omit the error control coding, and may not include encoder **111** and encoder **121**.

Embodiment 2

[0106] <Parallel Decoding of Signal Obtained by Superposition Coding>

[0107] The present embodiment describes a reception method for parallel decoding of a signal obtained by superposition coding. The configuration of the transmission device is the same as the configuration of transmission device **100** shown in FIG. **1**, and thus will not be described. In parallel decoding in superposition coding, the reception device treats the components of the modulated symbol stream in the first layer as an unknown signal (noise) to decode the second layer, without removing the components of the modulated symbol stream in the first layer included in the received signal.

[0108] FIG. **7** shows an example configuration of reception device **300** capable of receiving and performing parallel decoding on the signal on which two data series are multiplexed onto two layers by superposition coding, and capable of obtaining one of or both of the multiplexed two data series. The configuration and operation of reception device **300** will be described with reference to FIG. **7**.

[0109] Reception device **300** includes RF unit **330**, demapper **310**, deinterleaver **312**, decoder **313**, deinterleaver **322**, and decoder **323**. These structural components may also be implemented as dedicated or general-purpose circuits. Demapper **310**, deinterleaver **312**, decoder **313**, deinterleaver **322**, and decoder **323** can also be represented collectively as a deriver. RF unit **330** can also be represented as a receiver. RF unit **330** may include an antenna.

[0110] Reception device **300** receives by an antenna the multiplexed signal sent from transmission device **100**, and inputs such a multiplexed signal into RF unit **330**. Stated differently, RF unit **330** receives the multiplexed signal via the antenna. The multiplexed signal received by RF unit **330** is also represented as a received signal. RF unit **330** generates a baseband received signal from the radio-frequency received signal.

[0111] Demapper **310** demaps the baseband received signal to generate the first bit likelihood stream and the second bit likelihood stream. For example, demapper **310** performs such demapping on the basis of a superposition constellation that shows the arrangement of the signal points of superposed modulated symbols obtained by superposing the first modulated symbols and the second modulated symbols by superposition coding.

[0112] The superposition constellation is determined in accordance with the first constellation of the first mapping scheme, the second constellation of the second mapping scheme, first amplitude coefficient a_1, first amplitude coefficient a_2, etc.

[0113] FIG. **8** shows an example superposition constellation, which is more specifically a combination of the QPSK constellation shown in FIG. **4** and the Nu-256QAM constellation shown in FIG. **5**. Even more specifically, the Nu-256QAM constellation (256 signal points) is placed on each of the four regions in the complex plane in accordance with the four signal points of the QPSK constellation. These four regions, each corresponding to Nu-256QAM constellation, may partially overlap with each other.

[0114] Demapper **310** performs demapping on the basis of the superposition constellation as shown in FIG. **8**. Stated differently, demapper **310** generates the first bit likelihood stream, with the modulated symbol stream of the second layer remaining unknown, and generates the second bit likelihood stream, with the modulated symbol stream of the first layer remaining unknown.

[0115] Note that demapper **310** may use the first constellation of the first mapping scheme to generate the first bit likelihood stream, and may use the above-described superposition constellation to generate the second bit likelihood stream.

[0116] The first constellation, when used to generate the first bit likelihood stream, enables demapper **310** to reduce the number of signal points that should be considered in generating the first bit likelihood stream, compared to when the superposition constellation is also used to generate the first bit likelihood stream. This thus enables demapper **310** to reduce the number of arithmetic computations.

[0117] Demapper **310** corresponds, for example, to the first demapper that demaps the received signal to generate the first bit likelihood stream and the second demapper that demaps the received signal to generate the second bit likelihood stream. Demapper **310** may include the first demapper that demaps the received signal to generate the first bit likelihood stream and the second demapper that demaps the received signal to generate the second bit likelihood stream.

[0118] Deinterleaver **312** permutes the first bit likelihood stream on the basis of a permutation rule that is a reverse rule of the first permutation rule. Such permutation is also referred to as deinterleaving. Decoder **313** decodes the first bit likelihood stream permuted by deinterleaver **312** on the basis of the first error control coding scheme, and outputs the decoding result as the first data series.

[0119] Deinterleaver **322** permutes the second bit likelihood stream on the basis of a permutation rule that is a reverse rule of the second permutation rule. Such permutation is also referred to as deinterleaving. Decoder **323** decodes the second bit likelihood stream permuted by deinterleaver **322** on the basis of the second error control coding scheme, and outputs the decoding result as the second data series.

[0120] Note that permutation (deinterleaving) may be omitted as in the case of Embodiment 1. Stated differently, deinterleaver **312** and deinterleaver **322** are optional structural components, and thus may not be included in reception device **300**.

[0121] Interleaving and deinterleaving, however, make a pair. As such, when transmission device **100** includes interleaver **112** and interleaver **122**, reception device **300** basically includes deinterleaver **312** and deinterleaver **322**. Meanwhile, when transmission device **100** does not include interleaver **112** and interleaver **122**, reception device **300** does not include deinterleaver **312** and deinterleaver **322**.

[0122] FIG. **9** is a flowchart of example operations performed by reception device **300**. First, RF unit **330** receives the multiplexed signal into which the first data series and the second data series are multiplexed (S**101**).

[0123] Next, demapper **310** demaps the multiplexed signal to generate the first bit likelihood stream of the first data series (S**102**). Demapper **310** demaps the multiplexed signal to generate the second bit likelihood stream of the second data series (S**103**). Deinterleaver **312** may deinterleave such

a generated first bit likelihood stream. Also, deinterleaver **322** may deinterleave such a generated second bit likelihood stream.

[0124] Then, decoder **313** performs error control decoding on the first bit likelihood stream to derive the first data series (S**104**). Also, decoder **323** performs error control decoding on the second bit likelihood stream to derive the second data series (S**105**).

[0125] Note that processes on the first bit likelihood stream (generation, deinterleaving, and error control decoding) and processes on the second bit likelihood stream (generation, deinterleaving, and error control decoding) are basically performed in parallel.

[0126] Reception device **300** as shown in FIG. **7** that performs parallel decoding has lower performance in decoding the second layer than that of reception device **200** as shown in FIG. **2** that performs sequential decoding.

[0127] FIG. **10** shows an example simulation result of the transmission capacity of the second layer when the ratio between signal power P_{s1} of the first layer and signal power P_{s2} of the second layer is $P_{s1}:P_{s2}=2:1$. In FIG. **10**, the lateral axis represents as dB (decibel) the ratio of signal power P_s to noise power Pn (SNR), and the vertical axis represents transmission capacity. In FIG. **10**, the solid line indicates the transmission capacity of the second layer when sequential decoding is performed, and the broken line indicates the transmission capacity of the second layer when parallel decoding is performed.

[0128] As FIG. **10** shows, in the decoding of the second layer, parallel decoding involves an increased SNR with respect to the same transmission capacity and a decreased transmission capacity with respect to the same SNR, compared to sequential decoding.

[0129] As described above, reception device **300** according to the present embodiment that performs parallel decoding has lower performance in decoding the second data series transmitted on the second layer than that of reception device **200** that performs sequential decoding. However, reception device **300** reduces the number of structural components required for decoding the second layer.

[0130] More specifically, reception device **300** eliminates the need for encoder **214**, interleaver **215**, mapper **216**, and multiplier **217** that are required by reception device **200** shown in FIG. **2** performing sequential decoding to reproduce the modulated symbol stream of the first layer. Reception device **300** also eliminates the need for delayer **218** that delays the received signal and subtractor **219** that removes the components of the modulated symbols in the first layer reproduced from the received signal.

[0131] The circuit size can be thus reduced. Reception device **300** also requires a smaller number of arithmetic computations and lower power consumption than those required by reception device **200**.

[0132] Reception device **200** shown in FIG. **2** that performs sequential decoding demodulates the first layer in the received signal to obtain the first data series, generates the first modulated symbol stream from the obtained first data series, and then starts demodulating the second layer in the received signal to obtain the second data series. Meanwhile, reception device **300** according to the present embodiment that performs parallel decoding is capable of simultaneously obtaining the first data series and the second data series in parallel, thereby reducing processing delays.

[0133] Alternatively, the reception device may observe the SNR of the received signal to make selection between parallel decoding to be performed when the SNR is high and sequential decoding to be performed when the SNR is low.

[0134] In such a case, reception device **200** shown in FIG. **2** includes, for example, a controller that makes selection between sequential decoding and parallel decoding depending on the SNR. Such a controller may be included in RF unit **230** or demapper **221**. Furthermore, demapper **221** is configured to perform demapping based on the superposition constellation, which is described as an operation performed by demapper **310** shown in FIG. **7**, in addition to demapping that is based on the second constellation.

[0135] Demapper **221** switches between demapping to be performed on the signal outputted from subtractor **219** on the basis of the second constellation and demapping to be performed on the signal outputted from RF unit **230** on the basis of the superposition constellation. For example, demapper **221** switches between these demapping operations in accordance with a control signal from the controller.

[0136] FIG. **11** shows an example configuration of reception device **400** that selectively performs parallel decoding and sequential decoding. Reception device **400** includes RF unit **430**, demapper **411**, deinterleaver **412**, decoder **413**, encoder **414**, interleaver **415**, mapper **416**, multiplier **417**, delayer **418**, subtractor **419**, demapper **421**, deinterleaver **422**, and decoder **423**. Structural components of reception device **400** shown in FIG. **11** and structural components of reception device **200** shown in FIG. **2** are basically the same.

[0137] However, demapper **421** of reception device **400** performs demapping that is based on the superposition constellation in addition to demapping that is based on the second constellation of the second mapping scheme. For example, depending on the SNR, demapper **421** switches between demapping to be performed on the signal outputted from subtractor **419** on the basis of the second constellation and demapping to be performed on the signal outputted from RF unit **430** on the basis of the superposition constellation.

[0138] Although the example shown in FIG. **11** omits a controller that makes selection between sequential decoding and parallel decoding depending on the SNR, the controller may be included in demapper **421**, in RF unit **430**, or in reception device **400** as a new structural component.

[0139] FIG. **12** is a flowchart of example operations performed by reception device **400**. First, RF unit **430** receives the multiplexed signal into which the first data series and the second data series are multiplexed (S**201**). Then, RF unit **430** determines whether the multiplexed signal satisfies a predetermined requirement. The predetermined requirement, for example, is that the SNR should be higher than a predetermined threshold.

[0140] When the multiplexed signal satisfies the predetermined requirement (Yes in S**202**), demapper **411** demaps the multiplexed signal to generate the first bit likelihood stream of the first data series (S**203**). Also, demapper **421** demaps the multiplexed signal to generate the second bit likelihood stream of the second data series (S**204**). Deinterleaver **412** may deinterleave such a generated first bit likelihood stream. Also, deinterleaver **422** may deinterleave such a generated second bit likelihood stream.

[0141] Decoder **413** performs error control decoding on the first bit likelihood stream to derive the first data series

(S**205**). Also, decoder **423** performs error control decoding on the second bit likelihood stream to derive the second data series (S**206**).

[0142] These operations (S**203** to S**206**) are basically the same as the operations (S**102** to S**105**) shown in FIG. **9**.

[0143] Meanwhile, when the multiplexed signal fails to satisfy the predetermined requirement (No in S**202**), demapper **411** demaps the multiplexed signal to generate the first bit likelihood stream of the first data series (S**207**). Deinterleaver **412** may deinterleave such a generated first bit likelihood stream. Then, decoder **413** performs error control decoding on the first bit likelihood stream to derive the first data series (S**208**).

[0144] Next, encoder **414** performs error control coding on the first data series to generate the first bit stream (S**209**). Interleaver **415** may interleave such a generated first bit stream. Then, mapper **416** maps the first bit stream to generate the first modulated symbol stream (S**210**). Multiplier **417** may multiply the first modulated symbol stream by amplitude coefficient a_1.

[0145] Delayer **418** delays the multiplexed signal until the first modulated symbol stream is generated (S**211**). Then, subtractor **419** subtracts the first modulated symbol stream from the multiplexed signal (S**212**).

[0146] Next, demapper **421** demaps the multiplexed signal from which the first modulated symbol stream has been subtracted to generate the second bit likelihood stream (S**213**). Deinterleaver **422** may deinterleave such a generated second bit likelihood stream. Then, decoder **423** performs error control decoding on the second bit likelihood stream to derive the second data series (S**214**).

[0147] Through these operations, reception device **400** performs parallel decoding when the SNR is high, thereby reducing the number of arithmetic computations and power consumption. Reception device **400** also performs parallel decoding when the SNR is high, thereby reducing processing delays. Meanwhile, reception device **400** performs sequential decoding when the SNR is low, thereby increasing the possibility of correctly decoding the second data series.

[0148] Note that the first mapping scheme and the second mapping scheme according to the present embodiment are basically the same as the first mapping scheme and the second mapping scheme according to Embodiment 1. Stated differently, the first constellation and the second constellation according to the present embodiment are basically the same as the first constellation and the second constellation according to Embodiment 1. Any one of a uniform constellation and a non-uniform constellation may be used as the second mapping scheme.

Embodiment 3

[0149] <Variation of Superposition Coding (Modified Superposition Coding)>

[0150] The present embodiment describes a method of multiplexing and transmitting a plurality of data series by a variation of superposition coding (modified superposition coding), which is a modified version of the above-described superposition coding.

[0151] FIG. **13** shows an example configuration of transmission device **500** that multiplexes two data series onto two layers by the variation of superposition coding, and transmits a multiplexed data series. The configuration and operation of transmission device **500** will be described with reference to FIG. **13**.

[0152] Transmission device **500** includes encoder **511**, interleaver **512**, mapper **513**, multiplier **514**, encoder **521**, interleaver **522**, mapper **523**, converter **525**, multiplier **524**, adder **530**, and RF unit **540**. These structural components may also be implemented as dedicated or general-purpose circuits. Multiplier **514**, multiplier **524**, and adder **530** can also be represented collectively as a superposer. RF unit **540** can also be represented as a transmitter. RF unit **540** may include an antenna.

[0153] Encoder **511** encodes an inputted first data series on the basis of a first error control coding scheme to generate a first bit stream. Interleaver **512** permutes the bits in the first bit stream generated by encoder **511** on the basis of a first permutation rule. Such permutation is also referred to as interleaving.

[0154] Mapper **513** maps the first bit stream permuted by interleaver **512** in accordance with a first mapping scheme to generate a first modulated symbol stream that includes a plurality of first modulated symbols. In the mapping in accordance with the first mapping scheme, mapper **513** maps each group of bits that includes a first number of bits in the first bit stream onto one of the signal points in a first constellation in accordance with the values of such a group of bits.

[0155] When PSK modulation such as BPSK and QPSK, or QAM modulation such as 16QAM and 64QAM is used as the first mapping scheme, each first modulated symbol can be represented by a complex number, for example, with the real part representing the magnitude of the in-phase component and the imaginary part representing the magnitude of the orthogonal component. Meanwhile, when PAM modulation is used as the first mapping scheme, each first modulated symbol can be represented by a real number.

[0156] Encoder **521** encodes an inputted second data series on the basis of a second error control coding scheme to generate a second bit stream. Interleaver **522** permutes the bits in the second bit stream generated by encoder **521** on the basis of a second permutation rule. Such permutation is also referred to as interleaving.

[0157] Mapper **523** maps the second bit stream permuted by interleaver **522** in accordance with a second mapping scheme to generate a second modulated symbol stream that includes a plurality of second modulated symbols. In the mapping in accordance with the second mapping scheme, mapper **523** maps each group of bits that includes a second number of bits in the second bit stream onto one of the signal points in a second constellation in accordance with the values of such a group of bits.

[0158] When PSK modulation such as BPSK and QPSK, or QAM modulation such as 16QAM and 64QAM is used as the second mapping scheme, each second modulated symbol can be represented by a complex number, for example, with the real part representing the magnitude of the in-phase component and the imaginary part representing the magnitude of the orthogonal component. Meanwhile, when PAM modulation is used as the second mapping scheme, each second modulated symbol can be represented by a real number. Any one of a uniform constellation and a non-uniform constellation may be used as the second mapping scheme.

[0159] Converter **525** converts each second modulated symbol to be superposed with the corresponding first modulated symbol, on the basis of the values of the bits used to generate such a first modulated symbol. Through this, converter **525** converts the second modulated symbol stream.

[0160] Multiplier **514** multiplies each first modulated symbol in the first modulated symbol stream by first amplitude coefficient a_1. Multiplier **524** multiplies, by second amplitude coefficient a_2, each second modulated symbol in the second modulated symbol stream converted by converter **525**. Adder **530** superposes first modulated symbols multiplied by first amplitude coefficient a_1 and second modulated symbols multiplied by second amplitude coefficient a_2 to generate a superposed modulated symbol stream that includes a plurality of superposed modulated symbols.

[0161] RF unit **540** sends the generated superposed modulated symbol stream as a signal. More specifically, RF unit **540** generates, from the superposed modulated symbol stream generated by adder **530**, a radio-frequency signal as a signal corresponding to the superposed modulated symbol stream to send such a radio-frequency signal from the antenna.

[0162] Stated differently, the superposer constituted by multiplier **514**, multiplier **524**, and adder **530** superposes the first modulated symbol stream and the second modulated symbol stream at a predetermined amplitude ratio, thereby generating a multiplexed signal into which the first data series and the second data series are multiplexed. Subsequently, RF unit **540** sends the multiplexed signal. Note that the multiplexed signal corresponds to the superposed modulated symbol stream. Also note that the predetermined amplitude ratio may be 1:1, and that the multiplication may be omitted.

[0163] The following shows an example case in which QPSK is used as the first mapping scheme to describe the operation of converter **525**.

[0164] For example, when $S_1(t)$ is the t-th modulated symbol in the first modulated symbol stream generated by mapper **513**, and $b_1(t)$ and $b_2(t)$ are a plurality of bits to be mapped onto $S_1(t)$, modulated symbol $S_1(t)$ is given by Equation 6.

[Math. 6]

$$S_1(t) = \frac{(2 \cdot b_1(t) - 1) + i \cdot (2 \cdot b_2(t) - 1)}{\sqrt{2}} \quad \text{(Equation 6)}$$

[0165] Here, i denotes the imaginary unit. Modulated symbol $S_1(t)$ may also be given by an equation in which one of or both of the (positive/negative) polarities of the real part and the imaginary part of Equation 6 are reversed. Bit $b_1(t)$ is a bit that contributes to the real part of modulated symbol $S_1(t)$. Bit $b_2(t)$ is a bit that contributes to the imaginary part of modulated symbol $S_1(t)$.

[0166] Converter **525** converts, into $S'_2(t)$, the t-th modulated symbol $S_2(t)$ in the second modulated symbol stream generated by mapper **523**, on the basis of $b_1(t)$ and $b_2(t)$ as shown by Equation 7.

[Math. 7]

$$S'_2(t) = (-1)^{b1(t)}\mathrm{Re}[S_2(t)] + i \cdot (-1)^{b2(t)} \cdot \mathrm{Im}[S_2(t)] \quad \text{(Equation 7)}$$

[0167] Here, $S'_2(t)$ is the converted t-th modulated symbol in the second modulated symbol stream. $\mathrm{Re}[S_2(t)]$ is the value of the real part of $S_2(t)$, and $\mathrm{Im}[S_2(t)]$ is the value of the imaginary part of $S_2(t)$. Modulated symbol $S'_2(t)$ may be given by an equation in which one of or both of the polarities of the real part and the imaginary part of Equation 7 are reversed.

[0168] As described above, the variation of superposition coding controls the polarities of the real part and the imaginary part of each second modulated symbol in accordance with the values of the bits to be mapped onto the first modulated symbol that is superposed with such a second modulated symbol. Note that the polarities of the real part and the imaginary part of each second modulated symbol may be controlled in accordance with the first modulated symbol that is superposed with such a second modulated symbol. Also, the polarity of one of the real part and the imaginary part of each second modulated symbol may be controlled, or the polarities of both the real part and the imaginary part of each second modulated symbol may be controlled.

[0169] FIG. **14** shows an example configuration of transmission device **600** that multiplexes two data series onto two layers by the variation of superposition coding, and transmits the multiplexed data series. The configuration of transmission device **600** is different from the configuration of transmission device **500**. The configuration and operation of transmission device **600** will be described with reference to FIG. **14**.

[0170] Transmission device **600** includes encoder **611**, interleaver **612**, mapper **613**, multiplier **614**, encoder **621**, interleaver **622**, mapper **623**, converter **625**, multiplier **624**, adder **630**, and RF unit **640**. These structural components may also be implemented as dedicated or general-purpose circuits. Multiplier **614**, multiplier **624**, and adder **630** can also be represented collectively as a superposer. RF unit **640** can also be represented as a transmitter. RF unit **640** may include an antenna.

[0171] Encoder **611** encodes an inputted first data series on the basis of a first error control coding scheme to generate a first bit stream. Interleaver **612** permutes the bits in the first bit stream generated by encoder **611** on the basis of a first permutation rule. Such permutation is also referred to as interleaving.

[0172] Mapper **613** maps the first bit stream permuted by interleaver **612** in accordance with a first mapping scheme to generate a first modulated symbol stream that includes a plurality of first modulated symbols. In the mapping in accordance with the first mapping scheme, mapper **613** maps each group of bits that includes a first number of bits in the first bit stream onto one of the signal points in a first constellation in accordance with the values of such a group of bits.

[0173] Encoder **621** encodes an inputted second data series on the basis of a second error control coding scheme to generate a second bit stream. Interleaver **622** permutes the bits in the second bit stream generated by encoder **621** on the basis of a second permutation rule. Such permutation is also referred to as interleaving.

[0174] Mapper **623** maps the second bit stream permuted by interleaver **622** in accordance with a second mapping scheme to generate a second modulated symbol stream that includes a plurality of second modulated symbols. In the mapping in accordance with the second mapping scheme,

mapper **623** maps each group of bits that includes a second number of bits in the second bit stream onto one of the signal points in a second constellation in accordance with the values of such a group of bits.

[0175] Converter **625** converts each second modulated symbol to be superposed with the corresponding first modulated symbol, on the basis of the generated first modulated symbol. Through this, converter **625** converts the second modulated symbol stream.

[0176] Multiplier **614** multiplies each first modulated symbol in the first modulated symbol stream by first amplitude coefficient a_1. Multiplier **624** multiplies, by second amplitude coefficient a_2, each second modulated symbol in the second modulated symbol stream converted by converter **625**. Adder **630** superposes first modulated symbols multiplied by first amplitude coefficient a_1 and second modulated symbols multiplied by second amplitude coefficient a_2 to generate a superposed modulated symbol stream that includes a plurality of superposed modulated symbols.

[0177] RF unit **640** sends the generated superposed modulated symbol stream as a signal. More specifically, RF unit **640** generates, from the superposed modulated symbol stream generated by adder **630**, a radio-frequency signal as a signal corresponding to the superposed modulated symbol stream to send such a radio-frequency signal from the antenna.

[0178] Stated differently, the superposer constituted by multiplier **614**, multiplier **624**, and adder **630** superposes the first modulated symbol stream and the second modulated symbol stream at a predetermined amplitude ratio, thereby generating a multiplexed signal into which the first data series and the second data series are multiplexed. Subsequently, RF unit **640** sends the multiplexed signal. Note that the multiplexed signal corresponds to the superposed modulated symbol stream. Also note that the predetermined amplitude ratio may be 1:1, and that the multiplication may be omitted.

[0179] The following shows an example case in which QPSK is used as the first mapping scheme to describe the operation of converter **625**.

[0180] For example, when $S_1(t)$ is the t-th modulated symbol in the first modulated symbol stream generated by mapper **613**, and $b_1(t)$ and $b_2(t)$ are a plurality of bits to be mapped onto $S_1(t)$, modulated symbol $S_1(t)$ is given by Equation 8.

[Math. 8]

$$S_1(t) = \frac{(2 \cdot b_1(t) - 1) + i \cdot (2 \cdot b_2(t) - 1)}{\sqrt{2}} \quad \text{(Equation 8)}$$

[0181] Here, i denotes the imaginary unit. Modulated symbol $S_1(t)$ may also be given by an equation in which one of or both of the polarities of the real part and the imaginary part of Equation 8 are reversed. Bit $b_1(t)$ is a bit that contributes to the real part of modulated symbol $S_1(t)$. Bit $b_2(t)$ is a bit that contributes to the imaginary part of modulated symbol $S_1(t)$.

[0182] Converter **625** converts, into $S'_2(t)$, the t-th modulated symbol $S_2(t)$ in the second modulated symbol stream generated by mapper **623**, on the basis of modulated symbol $S_1(t)$ as shown by Equation 9.

$$S'_2(t) = -\mathrm{sgn}(\mathrm{Re}[S_1(t)]) \cdot \mathrm{Re}[S_2(t)] - i \cdot \mathrm{sgn}(\mathrm{Im}[S_1(t)]) \cdot \mathrm{Im}[S_2(t)] \quad \text{[Math. 9]}$$

[0183] Here, $S'_2(t)$ is the converted t-th modulated symbol in the second modulated symbol stream. $\mathrm{Re}[S_2(t)]$ is the value of the real part of $S_2(t)$, and $\mathrm{Im}[S_2(t)]$ is the value of the imaginary part of $S_2(t)$. Also, $\mathrm{sgn}(\mathrm{Re}[S_1(t)])$ is the polarity of the real part of $S_1(t)$, and $\mathrm{sgn}(\mathrm{Im}[S_1(t)])$ is the polarity of the imaginary part of $S_1(t)$.

[0184] Modulated symbol $S'_2(t)$ may be given by an equation in which one of or both of the polarities of the real part and the imaginary part of Equation 9 are reversed. Note that the conversion that is based on Equation 9 is substantially the same as the conversion that is based on Equation 7.

[0185] As described above, the variation of superposition coding controls the polarities of the real part and the imaginary part of each second modulated symbol in accordance with the first modulated symbol that is superposed with such a second modulated symbol. Note that the polarities of the real part and the imaginary part of each second modulated symbol may be controlled in accordance with the values of the bits to be mapped onto the first modulated symbol that is superposed with such a second modulated symbol. Also, the polarity of one of the real part and the imaginary part of each second modulated symbol may be controlled, or the polarities of both the real part and the imaginary part of each second modulated symbol may be controlled.

[0186] FIG. **15** shows an example configuration of transmission device **700** that multiplexes two data series onto two layers by the variation of superposition coding, and transmits the multiplexed data series. The configuration of transmission device **700** is different from the configurations of transmission devices **500** and **600**. The configuration and operation of transmission device **700** will be described with reference to FIG. **15**.

[0187] Transmission device **700** includes encoder **711**, interleaver **712**, mapper **713**, multiplier **714**, encoder **721**, interleaver **722**, mapper **723**, multiplier **724**, adder **730**, and RF unit **740**. These structural components may also be implemented as dedicated or general-purpose circuits. Multiplier **714**, multiplier **724**, and adder **730** can also be represented collectively as a superposer. RF unit **740** can also be represented as a transmitter. RF unit **740** may include an antenna. Mapper **723** may include a converter.

[0188] Encoder **711** encodes an inputted first data series on the basis of a first error control coding scheme to generate a first bit stream. Interleaver **712** permutes the bits in the first bit stream generated by encoder **711** on the basis of a first permutation rule. Such permutation is also referred to as interleaving.

[0189] Mapper **713** maps the first bit stream permuted by interleaver **712** in accordance with a first mapping scheme to generate a first modulated symbol stream that includes a plurality of first modulated symbols. In the mapping in accordance with the first mapping scheme, mapper **713** maps each group of bits that includes a first number of bits in the first bit stream onto one of the signal points in a first constellation in accordance with the values of such a group of bits.

[0190] Encoder **721** encodes an inputted second data series on the basis of a second error control coding scheme to generate a second bit stream. Interleaver **722** permutes the

bits in the second bit stream generated by encoder **721** on the basis of a second permutation rule. Such permutation is also referred to as interleaving.

[0191] Mapper **723** converts (modifies) a second mapping scheme in accordance with the first bit stream to be mapped to the first modulated symbol stream by mapper **713**. Mapper **723** then maps the second bit stream interleaved by interleaver **722** in accordance with the second mapping scheme that has been converted in accordance with the first bit stream. Through these processes, mapper **723** generates a second modulated symbol stream that includes a plurality of second modulated symbols.

[0192] In the mapping in accordance with the second mapping scheme, mapper **723** maps each group of bits that includes a second number of bits in the second bit stream onto one of the signal points in a second constellation in accordance with the values of such a group of bits.

[0193] Multiplier **714** multiplies each first modulated symbol in the first modulated symbol stream by first amplitude coefficient a_1. Multiplier **724** multiplies each second modulated symbol in the second modulated symbol stream by second amplitude coefficient a_2. Adder **730** superposes first modulated symbols multiplied by first amplitude coefficient a_1 and second modulated symbols multiplied by second amplitude coefficient a_2 to generate a superposed modulated symbol stream that includes a plurality of superposed modulated symbols.

[0194] RF unit **740** sends the generated superposed modulated symbol stream as a signal. More specifically, RF unit **740** generates, from the superposed modulated symbol stream generated by adder **730**, a radio-frequency signal as a signal corresponding to the superposed modulated symbol stream to send such a radio-frequency signal from the antenna.

[0195] Stated differently, the superposer constituted by multiplier **714**, multiplier **724**, and adder **730** superposes the first modulated symbol stream and the second modulated symbol stream at a predetermined amplitude ratio, thereby generating a multiplexed signal into which the first data series and the second data series are multiplexed. Subsequently, RF unit **740** sends the multiplexed signal. Note that the multiplexed signal corresponds to the superposed modulated symbol stream. Also note that the predetermined amplitude ratio may be 1:1, and that the multiplication may be omitted.

[0196] The following shows an example case in which QPSK is used as the first mapping scheme to describe the operation of mapper **723**.

[0197] For example, when $S_1(t)$ is the t-th modulated symbol in the first modulated symbol stream generated by mapper **713**, and $b_1(t)$ and $b_2(t)$ are a plurality of bits to be mapped onto $S_1(t)$, modulated symbol $S_1(t)$ is given by Equation 10.

[Math. 10]

$$S_1(t) = \frac{(2 \cdot b_1(t) - 1) + i \cdot (2 \cdot b_2(t) - 1)}{\sqrt{2}} \quad \text{(Equation 10)}$$

[0198] Here, i denotes the imaginary unit. Modulated symbol $S_1(t)$ may also be given by an equation in which one of or both of the polarities of the real part and the imaginary part of Equation 10 are reversed. Bit $b_1(t)$ is a bit that contributes to the real part of modulated symbol $S_1(t)$. Bit $b_2(t)$ is a bit that contributes to the imaginary part of modulated symbol $S_1(t)$.

[0199] Mapper **723** performs exclusive-OR between $b_1(t)$ and the bit that most contributes to the real part of the second constellation among the bits in the second bit stream inputted from interleaver **722**. Mapper **723** also performs exclusive-OR between $b_2(t)$ and the bit that most contributes to the imaginary part of the second constellation among the bits in the second bit stream inputted from interleaver **722**. Mapper **723** then maps the second bit stream on which exclusive-OR has been performed, on the basis of the second constellation.

[0200] Here, the bit that most contributes to the real part of the second constellation is a bit that causes the polarity of the real part of the second constellation to be reversed, for example, when the value of such a bit is reversed from 0 to 1 or from 1 to 0. Stated differently, the bit that most contributes to the real part of the second constellation refers to a bit that causes the negative/positive sign of the value of the real part of each modulated symbol to be reversed, for example, when the value of such a bit is reversed from 0 to 1 or from 1 to 0.

[0201] Similarly, the bit that most contributes to the imaginary part of the second constellation is a bit that causes the polarity of the imaginary part of the second constellation to be reversed, for example, when the value of such a bit is reversed from 0 to 1 or from 1 to 0. Stated differently, the bit that most contributes to the imaginary part of the second constellation refers to a bit that causes the negative/positive sign of the value of the imaginary part of each modulated symbol to be reversed when the value of such a bit is reversed from 0 to 1 or from 1 to 0.

[0202] In the above description, mapper **723** converts the second bit stream, thereby substantially converting the second mapping scheme (the second constellation). However, mapper **723** may directly convert the second mapping scheme (the second constellation) without converting the second bit stream. Stated differently, mapper **723** may convert the correspondence between groups of bits and signal points in the second constellation.

[0203] Also, the conversion performed by mapper **723** may be performed by the converter included in mapper **723**.

[0204] As described above, the variation of superposition coding controls the polarities of the real part and the imaginary part of each second modulated symbol in accordance with the values of the bits to be mapped onto the first modulated symbol that is superposed with such a second modulated symbol. Note that the polarities of the real part and the imaginary part of each second modulated symbol may be controlled in accordance with the first modulated symbol that is superposed with such a second modulated symbol. Also, the polarity of one of the real part and the imaginary part of each second modulated symbol may be controlled, or the polarities of both the real part and the imaginary part of each second modulated symbol may be controlled.

[0205] <Sequential Decoding of Signal Obtained by Variation of Superposition Coding>

[0206] FIG. **16** shows an example configuration of reception device **800** capable of receiving and sequentially decoding the signal on which two data series are multiplexed onto two layers by the above-described variation of superposition coding, and capable of obtaining one of or both of the

multiplexed two data series. The configuration and operation of reception device **800** will be described with reference to FIG. **16**.

[0207] Reception device **800** includes RF unit **830**, demapper **811**, deinterleaver **812**, decoder **813**, encoder **814**, interleaver **815**, mapper **816**, multiplier **817**, delayer **818**, subtractor **819**, converter **820**, demapper **821**, deinterleaver **822**, and decoder **823**. These structural components may also be implemented as dedicated or general-purpose circuits.

[0208] Demapper **811**, deinterleaver **812**, decoder **813**, encoder **814**, interleaver **815**, mapper **816**, multiplier **817**, delayer **818**, subtractor **819**, converter **820**, demapper **821**, deinterleaver **822**, and decoder **823** can also be represented collectively as a deriver. RF unit **830** can also be represented as a receiver. RF unit **830** may include an antenna.

[0209] Reception device **800** receives by an antenna the multiplexed signal sent from transmission device **500**, **600**, or **700**, and inputs such a multiplexed signal into RF unit **830**. Stated differently, RF unit **830** receives the multiplexed signal via the antenna. The multiplexed signal received by RF unit **830** is also represented as a received signal, and corresponds to the superposed modulated symbol stream into which the first modulated symbol stream and the second modulated symbol stream are multiplexed. RF unit **830** generates a baseband received signal from the radio-frequency received signal.

[0210] Demapper **811** demaps the baseband received signal on the basis of the first constellation of the first mapping scheme to generate the first bit likelihood stream. For example, amplitude coefficient a_1 is reflected in the first constellation for demapping.

[0211] Deinterleaver **812** permutes the first bit likelihood stream on the basis of a permutation rule that is a reverse rule of the first permutation rule. Such permutation is also referred to as deinterleaving. Decoder **813** performs decoding that is based on the first error control coding scheme by use of the first bit likelihood stream permuted by deinterleaver **812**, and outputs the decoding result as the first data series.

[0212] Here, of the received signal corresponding to the superposed modulated symbol stream, demapper **811** treats the components corresponding to the second modulated symbols in the second data series as an unknown signal (noise), and performs demapping on the basis of the first constellation of the first mapping scheme.

[0213] When only the first data series is to be obtained, reception device **800** terminates the process upon completing the estimation of the first data series. Meanwhile, when the second data series is to be obtained in addition to the first data series, or when only the second data series is to be obtained, reception device **800** performs the processes described below to obtain the second data series.

[0214] Encoder **814** encodes the first data series obtained by decoder **813** on the basis of the first error control coding scheme to generate the first bit stream. Interleaver **815** permutes the bits in the first bit stream generated by encoder **814** on the basis of the first permutation rule. Such permutation is also referred to as interleaving.

[0215] Mapper **816** maps the first bit stream permuted by interleaver **815** in accordance with the first mapping scheme to generate the first modulated symbol stream that includes a plurality of first modulated symbols. Multiplier **817** multiplies the first modulated symbol stream outputted by mapper **816** by first amplitude coefficient a_1.

[0216] Delayer **818** delays the received signal outputted from RF unit **830** during the time from when RF unit **830** outputs the baseband received signal to when multiplier **817** outputs the reproduced first modulated symbol stream.

[0217] Subtractor **819** subtracts, from the received signal delayed by delayer **818**, the first modulated symbol stream multiplied by first amplitude coefficient a_1 by multiplier **817**. Through this, subtractor **819** removes the components corresponding to the first modulated symbols from the received signal on which the components corresponding to the first modulated symbols, the components corresponding to the second modulated symbols, and noise are superposed. Subsequently, subtractor **819** outputs a signal on which the components corresponding to the second modulated symbols and noise are superposed as a signal corresponding to the second modulated symbol stream.

[0218] Converter **820** converts the signal outputted from subtractor **819** as a signal corresponding to the second modulated symbol stream by use of the first bit stream reproduced through encoding, interleaving, etc. Demapper **821** demaps the signal outputted by converter **820** on the basis of the second constellation of the second mapping scheme to generate the second bit likelihood stream. For example, amplitude coefficient a_2 is reflected in the second constellation for demapping.

[0219] Deinterleaver **822** permutes the second bit likelihood stream on the basis of a permutation rule that is a reverse rule of the second permutation rule. Such permutation is also referred to as deinterleaving. Decoder **823** decodes the second bit likelihood stream permuted by deinterleaver **822** on the basis of the second error control coding scheme, and outputs the decoding result as the second data series.

[0220] The following shows an example case in which QPSK is used as the first mapping scheme to describe the operation of converter **820**.

[0221] For example, when $S_1(t)$ is the t-th modulated symbol in the first modulated symbol stream generated by mapper **816**, and $b_1(t)$ and $b_2(t)$ are a plurality of bits to be mapped onto $S_1(t)$, modulated symbol $S_1(t)$ is given by Equation 11.

[Math. 11]

$$S_1(t) = \frac{(2 \cdot b_1(t) - 1) + i \cdot (2 \cdot b_2(t) - 1)}{\sqrt{2}} \quad \text{(Equation 11)}$$

[0222] Here, i denotes the imaginary unit. Modulated symbol $S_1(t)$ may also be given by an equation in which one of or both of the polarities of the real part and the imaginary part of Equation 11 are reversed. Bit $b_1(t)$ is a bit that contributes to the real part of modulated symbol $S_1(t)$. Bit $b_2(t)$ is a bit that contributes to the imaginary part of modulated symbol $S_1(t)$.

[0223] Converter **820** converts, into $S'_2(t)$, signal $S_2(t)$ corresponding to the t-th modulated symbol in the second modulated symbol stream out of the signal outputted by subtractor **819**, on the basis of $b_1(t)$ and $b_2(t)$ as shown by Equation 12.

[Math. 12]

$$S'_2(t)=(-1)^{b1(t)}\cdot\mathrm{Re}[S_2(t)]+i\cdot(1)^{b2(t)}\cdot\mathrm{Im}[S_2(t)] \quad \text{(Equation 12)}$$

[0224] Here, $S'_2(t)$ is the signal that has undergone the conversion. Also, $\mathrm{Re}[S_2(t)]$ is the value of the real part of $S_2(t)$, and $\mathrm{Im}[S_2(t)]$ is the value of the imaginary part of $S_2(t)$. Signal $S'_2(t)$ that has undergone the conversion may be given by an equation in which one of or both of the polarities of the real part and the imaginary part of Equation 12 are reversed.

[0225] Through the above processes, reception device **800** obtains one of or both of the first data series and the second data series from the signal received by the antenna.

[0226] FIG. **17** shows an example configuration of reception device **900** capable of receiving and sequentially decoding the signal on which two data series are multiplexed onto two layers by the above-described variation of superposition coding, and capable of obtaining one of or both of the multiplexed two data series. The configuration of reception device **900** is different from the configuration of reception device **800**. The configuration and operation of reception device **900** will be described with reference to FIG. **17**.

[0227] Reception device **900** includes RF unit **930**, demapper **911**, deinterleaver **912**, decoder **913**, encoder **914**, interleaver **915**, mapper **916**, multiplier **917**, delayer **918**, subtractor **919**, converter **920**, demapper **921**, deinterleaver **922**, and decoder **923**. These structural components may also be implemented as dedicated or general-purpose circuits.

[0228] Demapper **911**, deinterleaver **912**, decoder **913**, encoder **914**, interleaver **915**, mapper **916**, multiplier **917**, delayer **918**, subtractor **919**, converter **920**, demapper **921**, deinterleaver **922**, and decoder **923** can also be represented collectively as a deriver. RF unit **930** can also be represented as a receiver. RF unit **930** may include an antenna.

[0229] Reception device **900** receives by an antenna the multiplexed signal sent from transmission device **500**, **600**, or **700**, and inputs such a multiplexed signal into RF unit **930**. Stated differently, RF unit **930** receives the multiplexed signal via the antenna. The multiplexed signal received by RF unit **930** is also represented as a received signal, and corresponds to the superposed modulated symbol stream into which the first modulated symbol stream and the second modulated symbol stream are multiplexed. RF unit **930** generates a baseband received signal from the radio-frequency received signal.

[0230] Demapper **911** demaps the baseband received signal on the basis of the first constellation of the first mapping scheme to generate the first bit likelihood stream. For example, amplitude coefficient a_1 is reflected in the first constellation for demapping.

[0231] Deinterleaver **912** permutes the first bit likelihood stream on the basis of a permutation rule that is a reverse rule of the first permutation rule. Such a permutation is also referred to as deinterleaving. Decoder **913** performs decoding that is based on the first error control coding scheme by use of the first bit likelihood stream permuted by deinterleaver **912**, and outputs the decoding result as the first data series.

[0232] Here, of the received signal corresponding to the superposed modulated symbol stream, demapper **911** treats the components corresponding to the second modulated symbols in the second data series as an unknown signal (noise), and performs demapping on the basis of the first constellation of the first mapping scheme.

[0233] When only the first data series is to be obtained, reception device **900** terminates the process upon completing the estimation of the first data series. Meanwhile, when the second data series is to be obtained in addition to the first data series, or when only the second data series is to be obtained, reception device **900** performs the processes described below to obtain the second data series.

[0234] Encoder **914** encodes the first data series obtained by decoder **913** on the basis of the first error control coding scheme to generate the first bit stream. Interleaver **915** permutes the bits in the first bit stream generated by encoder **914** on the basis of the first permutation rule. Such permutation is also referred to as interleaving.

[0235] Mapper **916** maps the first bit stream permuted by interleaver **915** in accordance with the first mapping scheme to generate the first modulated symbol stream that includes a plurality of first modulated symbols. Multiplier **917** multiplies the first modulated symbol stream outputted by mapper **916** by first amplitude coefficient a_1.

[0236] Delayer **918** delays the received signal outputted from RF unit **930** during the time from when RF unit **930** outputs the baseband received signal to when multiplier **917** outputs the reproduced first modulated symbol stream.

[0237] Subtractor **919** subtracts, from the received signal delayed by delayer **918**, the first modulated symbol stream multiplied by first amplitude coefficient a_1 by multiplier **917**. Through this, subtractor **919** removes the components corresponding to the first modulated symbols from the received signal on which the components corresponding to the first modulated symbols, the components corresponding to the second modulated symbols, and noise are superposed. Subsequently, subtractor **919** outputs a signal on which the components corresponding to the second modulated symbols and noise are superposed as a signal corresponding to the second modulated symbol stream.

[0238] Converter **920** converts the signal outputted from subtractor **919** as a signal corresponding to the second modulated symbol stream by use of the first modulated symbol stream reproduced through encoding, interleaving, mapping, etc. Demapper **921** demaps the signal outputted by converter **920** on the basis of the second constellation of the second mapping scheme to generate the second bit likelihood stream. For example, amplitude coefficient a_2 is reflected in the second constellation for demapping.

[0239] Deinterleaver **922** permutes the second bit likelihood stream on the basis of a permutation rule that is a reverse rule of the second permutation rule. Such permutation is also referred to as deinterleaving. Decoder **923** decodes the second bit likelihood stream permuted by deinterleaver **922** on the basis of the second error control coding scheme, and outputs the decoding result as the second data series.

[0240] The following shows an example case in which QPSK is used as the first mapping scheme to describe the operation of converter **920**.

[0241] For example, when $S_1(t)$ is the t-th modulated symbol in the first modulated symbol stream generated by mapper **916**, and $b_1(t)$ and $b_2(t)$ are a plurality of bits to be mapped onto $S_1(t)$, modulated symbol $S_1(t)$ is given by Equation 13.

[Math. 13]

$$S_1(t) = \frac{(2 \cdot b_1(t) - 1) + i \cdot (2 \cdot b_2(t) - 1)}{\sqrt{2}} \quad \text{(Equation 13)}$$

[0242] Here, i denotes the imaginary unit. Modulated symbol $S_1(t)$ may also be given by an equation in which one of or both of the polarities of the real part and the imaginary part of Equation 13 are reversed. Bit $b_1(t)$ is a bit that contributes to the real part of modulated symbol $S_1(t)$. Bit $b_2(t)$ is a bit that contributes to the imaginary part of modulated symbol $S_1(t)$.

[0243] Converter **920** converts, into $S'_2(t)$, signal $S_2(t)$ corresponding to the t-th modulated symbol in the second modulated symbol stream out of the signal outputted by subtractor **919**, on the basis of modulated symbol $S_1(t)$ as shown by Equation 14.

$$S'_2(t) = -\mathrm{sgn}(\mathrm{Re}[S_1(t)]) \cdot \mathrm{Re}[S_2(t)] - i \cdot \mathrm{sgn}(\mathrm{Im}[S_1(t)]) \cdot \mathrm{Im}[S_2(t)] \quad \text{[Math. 14]}$$

[0244] Here, $S'_2(t)$ is the signal that has undergone the conversion. Also, $\mathrm{Re}[S_2(t)]$ is the value of the real part of $S_2(t)$, and $\mathrm{Im}[S_2(t)]$ is the value of the imaginary part of $S_2(t)$. Also, $\mathrm{sgn}(\mathrm{Re}[S_1(t)])$ is the polarity of the real part of $S_1(t)$, and $\mathrm{sgn}(\mathrm{Im}[S_1(t)])$ is the polarity of the imaginary part of $S_1(t)$. Signal $S'_2(t)$ that has undergone the conversion may be given by an equation in which one of or both of the polarities of the real part and the imaginary part of Equation 14 are reversed. Note that the conversion that is based on Equation 14 is substantially the same as the conversion that is based on Equation 12.

[0245] Through the above processes, reception device **900** obtains one of or both of the first data series and the second data series from the signal received by the antenna.

[0246] FIG. **18** shows an example configuration of reception device **1000** capable of receiving and sequentially decoding the signal on which two data series are multiplexed onto two layers by the above-described variation of superposition coding, and capable of obtaining one of or both of the multiplexed two data series. The configuration of reception device **1000** is different from the configurations of reception devices **800** and **900**. The configuration and operation of reception device **1000** will be described with reference to FIG. **18**.

[0247] Reception device **1000** includes RF unit **1030**, demapper **1011**, deinterleaver **1012**, decoder **1013**, encoder **1014**, interleaver **1015**, mapper **1016**, multiplier **1017**, delayer **1018**, subtractor **1019**, demapper **1021**, deinterleaver **1022**, and decoder **1023**. These structural components may also be implemented as dedicated or general-purpose circuits.

[0248] Demapper **1011**, deinterleaver **1012**, decoder **1013**, encoder **1014**, interleaver **1015**, mapper **1016**, multiplier **1017**, delayer **1018**, subtractor **1019**, demapper **1021**, deinterleaver **1022**, and decoder **1023** can also be represented collectively as a deriver. RF unit **1030** can also be represented as a receiver. RF unit **1030** may include an antenna. Demapper **1021** may include a converter.

[0249] Reception device **1000** receives by an antenna the multiplexed signal sent from transmission device **500**, **600**, or **700**, and inputs such a multiplexed signal into RF unit **1030**. Stated differently, RF unit **1030** receives the multiplexed signal via the antenna. The multiplexed signal received by RF unit **1030** is also represented as a received signal, and corresponds to the superposed modulated symbol stream into which the first modulated symbol stream and the second modulated symbol stream are multiplexed. RF unit **1030** generates a baseband received signal from the radio-frequency received signal.

[0250] Demapper **1011** demaps the baseband received signal on the basis of the first constellation of the first mapping scheme to generate the first bit likelihood stream. For example, amplitude coefficient a_1 is reflected in the first constellation for demapping.

[0251] Deinterleaver **1012** permutes the first bit likelihood stream on the basis of a permutation rule that is a reverse rule of the first permutation rule. Such permutation is also referred to as deinterleaving. Decoder **1013** performs decoding that is based on the first error control coding scheme by use of the first bit likelihood stream permuted by deinterleaver **1012**, and outputs the decoding result as the first data series.

[0252] Here, of the received signal corresponding to the superposed modulated symbol stream, demapper **1011** treats the components corresponding to the second modulated symbols in the second data series as an unknown signal (noise), and performs demapping on the basis of the first constellation of the first mapping scheme.

[0253] When only the first data series is to be obtained, reception device **1000** terminates the process upon completing the estimation of the first data series. Meanwhile, when the second data series is to be obtained in addition to the first data series, or when only the second data series is to be obtained, reception device **1000** performs the processes described below to obtain the second data series.

[0254] Encoder **1014** encodes the first data series obtained by decoder **1013** on the basis of the first error control coding scheme to generate the first bit stream. Interleaver **1015** permutes the bits in the first bit stream generated by encoder **1014** on the basis of the first permutation rule. Such permutation is also referred to as interleaving.

[0255] Mapper **1016** maps the first bit stream permuted by interleaver **1015** in accordance with the first mapping scheme to generate the first modulated symbol stream that includes a plurality of first modulated symbols. Multiplier **1017** multiplies the first modulated symbol stream outputted by mapper **1016** by first amplitude coefficient a_1.

[0256] Delayer **1018** delays the received signal outputted from RF unit **1030** during the time from when RF unit **1030** outputs the baseband received signal to when multiplier **1017** outputs the reproduced first modulated symbol stream.

[0257] Subtractor **1019** subtracts, from the received signal delayed by delayer **1018**, the first modulated symbol stream multiplied by first amplitude coefficient a_1 by multiplier **1017**. Through this, subtractor **1019** removes the components corresponding to the first modulated symbols from the received signal on which the components corresponding to the first modulated symbols, the components corresponding to the second modulated symbols, and noise are superposed. Subsequently, subtractor **1019** outputs a signal on which the components corresponding to the second modulated symbols and noise are superposed as a signal corresponding to the second modulated symbol stream.

[0258] Demapper **1021** demaps the signal outputted from subtractor **1019** as a signal corresponding to the second modulated symbol stream on the basis of the second constellation of the second mapping scheme to generate the

second bit likelihood stream. Such a process reflects the first bit stream reproduced through encoding, interleaving, etc. For example, amplitude coefficient a_2 is reflected in the second constellation for demapping.

[0259] Deinterleaver **1022** permutes the second bit likelihood stream on the basis of a permutation rule that is a reverse rule of the second permutation rule. Such permutation is also referred to as deinterleaving. Decoder **1023** decodes the second bit likelihood stream permuted by deinterleaver **1022** on the basis of the second error control coding scheme, and outputs the decoding result as the second data series.

[0260] The following shows an example case in which QPSK is used as the first mapping scheme to describe the operation of demapper **1021**.

[0261] For example, when $S_1(t)$ is the t-th modulated symbol in the first modulated symbol stream generated by mapper **1016**, and $b_1(t)$ and $b_2(t)$ are a plurality of bits to be mapped onto $S_1(t)$, modulated symbol $S_1(t)$ is given by Equation 15.

[Math. 15]

$$S_1(t) = \frac{(2 \cdot b_1(t) - 1) + i \cdot (2 \cdot b_2(t) - 1)}{\sqrt{2}} \quad \text{(Equation 15)}$$

[0262] Here, i denotes the imaginary unit. Modulated symbol $S_1(t)$ may also be given by an equation in which one of or both of the polarities of the real part and the imaginary part of Equation 15 are reversed. Bit $b_1(t)$ is a bit that contributes to the real part of modulated symbol $S_1(t)$. Bit $b_2(t)$ is a bit that contributes to the imaginary part of modulated symbol $S_1(t)$.

[0263] Demapper **1021** demaps signal $S_2(t)$ outputted from subtractor **1019** as a signal corresponding to the t-th modulated symbol in the second modulated symbol stream on the basis of the second constellation of the second mapping scheme.

[0264] Demapper **1021** reverses the bit likelihood corresponding to the bit that most contributes to the real part of the second constellation in accordance with $b_1(t)$ among the bit likelihoods in the bit likelihood stream obtained by demapping. Demapper **1021** also reverses the bit likelihood corresponding to the bit that most contributes to the imaginary part of the second constellation in accordance with $b_2(t)$ among the bit likelihoods in the bit likelihood stream obtained by demapping.

[0265] For example, demapper **1021** performs exclusive-OR between $b_1(t)$ and the bit likelihood corresponding to the bit that most contributes to the real part of the second constellation among the bit likelihoods in the bit likelihood stream obtained by demapping. Demapper **1021** also performs exclusive-OR between $b_2(t)$ and the bit likelihood corresponding to the bit that most contributes to the imaginary part of the second constellation among the bit likelihoods in the bit likelihood stream obtained by demapping.

[0266] Demapper **1021** then outputs the bit likelihood stream that has undergone the above-described reversal processes as the second bit likelihood stream.

[0267] In the above description, demapper **1021** converts the bit likelihood stream, thereby substantially converting the second mapping scheme (the second constellation). However, demapper **1021** may directly convert the second mapping scheme (the second constellation) without converting the bit likelihood stream. Stated differently, demapper **1021** may convert the correspondence between groups of bits and signal points in the second constellation.

[0268] Also, the conversion performed by demapper **1021** may be performed by the converter included in demapper **1021**.

[0269] Through the above processes, reception device **1000** obtains one of or both of the first data series and the second data series from the signal received by the antenna.

[0270] <Parallel Decoding of Signal Obtained by Variation of Superposition Coding>

[0271] The following describes a reception method for parallel decoding of a signal obtained by the variation of superposition coding according to the present embodiment. The configuration of the transmission device is the same as the configuration of transmission device **500** shown in FIG. **13**, transmission device **600** shown in FIG. **14**, or transmission device **700** shown in FIG. **15**, and thus will not be described. In parallel decoding in the variation of superposition coding, the reception device treats the components of the modulated symbol stream in the first layer as an unknown signal (noise) to decode the second layer, without removing the components of the modulated symbol stream in the first layer included in the received signal.

[0272] FIG. **19** shows an example configuration of reception device **1100** capable of receiving and performing parallel decoding on the signal on which two data series are multiplexed onto two layers by the variation of superposition coding, and capable of obtaining one of or both of the multiplexed two data series. The configuration and operation of reception device **1100** will be described with reference to FIG. **19**.

[0273] Reception device **1100** includes RF unit **1130**, demapper **1110**, deinterleaver **1112**, decoder **1113**, deinterleaver **1122**, and decoder **1123**. These structural components may also be implemented as dedicated or general-purpose circuits. Demapper **1110**, deinterleaver **1112**, decoder **1113**, deinterleaver **1122**, and decoder **1123** can also be represented collectively as a deriver. RF unit **1130** can also be represented as a receiver. RF unit **1130** may include an antenna.

[0274] Reception device **1100** receives by an antenna the multiplexed signal sent from transmission device **500**, **600**, or **700**, and inputs such a multiplexed signal into RF unit **1130**. Stated differently, RF unit **1130** receives the multiplexed signal via the antenna. The multiplexed signal received by RF unit **1130** is also represented as a received signal. RF unit **1130** generates a baseband received signal from the radio-frequency received signal.

[0275] Demapper **1110** demaps the baseband received signal to generate the first bit likelihood stream and the second bit likelihood stream. For example, demapper **1110** performs demapping on the basis of a variation superposition constellation that shows the arrangement of signal points of superposed modulated symbols obtained by superposing the first modulated symbols and the second modulated symbols by the variation of superposition coding.

[0276] The variation superposition constellation is determined in accordance with the first constellation of the first mapping scheme, the second constellation of the second mapping scheme, first amplitude coefficient a_1, first amplitude coefficient a_2, etc.

[0277] FIG. **20** shows the variation superposition constellation that supports the variation of superposition coding. More specifically, the variation superposition constellation is a combination of the QPSK constellation shown in FIG. **4** and the Nu-256QAM constellation shown in FIG. **5**.

[0278] Even more specifically, the Nu-256QAM constellation (256 signal points) is placed on each of the four regions in the complex plane in accordance with the four signal points of the QPSK constellation. These four regions, each corresponding to Nu-256QAM constellation, may partially overlap with each other. The present variation superposition constellation reflects the conversion performed on the second modulated symbol stream.

[0279] For example, when the Nu-256QAM constellation is combined with a signal point with a positive real part among the four signal points of the QPSK constellation, the polarity of the real part of the Nu-256QAM constellation is reversed. Also, for example, when the Nu-256QAM constellation is combined with a signal point with a positive imaginary part among the four signal points of the QPSK constellation, the polarity of the imaginary part of the Nu-256QAM constellation is reversed.

[0280] More specifically, a first signal point, a second signal point, a third signal point, a fourth signal point, a fifth signal point, and a sixth signal point are shown in FIG. **20**. When the polarity of the real part of the Nu-256QAM constellation is not reversed, the first signal point and the third signal point correspond to the same bit values of the second bit stream. Similarly, when the polarity of the imaginary part of the Nu-256QAM constellation is not reversed, the fourth signal point and the sixth signal point correspond to the same bit values of the second bit stream.

[0281] When the polarity of the real part of the Nu-256QAM constellation is reversed, the first signal point and the second signal point correspond to the same bit values of the second bit stream. Also, when the polarity of the imaginary part of the Nu-256QAM constellation is reversed, the fourth signal point and the fifth signal point correspond to the same bit values of the second bit stream. Stated differently, such reversal enables a plurality of signal points that correspond to the same bit values of the second bit stream to approach each other and converge. This mitigates the effect of noise on demapping.

[0282] Demapper **1110** performs demapping on the basis of the variation superposition constellation as shown in FIG. **20**. Stated differently, demapper **1110** generates the first bit likelihood stream with the modulated symbol stream of the second layer remaining unknown, and generates the second bit likelihood stream with the modulated symbol stream of the first layer remaining unknown.

[0283] Note that demapper **1110** may use the first constellation of the first mapping scheme to generate the first bit likelihood stream, and may use the above-described variation superposition constellation to generate the second bit likelihood stream.

[0284] The first constellation, when used to generate the first bit likelihood stream, enables demapper **1110** to reduce the number of signal points that should be considered in generating the first bit likelihood stream, compared to when the variation superposition constellation is also used to generate the first bit likelihood stream. This thus enables demapper **1110** to reduce the number of arithmetic computations.

[0285] Demapper **1110** corresponds, for example, to the first demapper that demaps the received signal to generate the first bit likelihood stream and the second demapper that demaps the received signal to generate the second bit likelihood stream. Demapper **1110** may include the first demapper that demaps the received signal to generate the first bit likelihood stream and the second demapper that demaps the received signal to generate the second bit likelihood stream.

[0286] Demapper **1110** may convert the second bit likelihood stream that is generated using not the variation superposition constellation but the superposition constellation, in accordance with the first bit likelihood stream. This enables demapper **1110** to obtain the same second bit likelihood stream as the second bit likelihood stream that is generated using the variation superposition constellation.

[0287] Demapper **1110** may convert the multiplexed signal without using the variation superposition constellation to obtain the same second bit likelihood stream as the second bit likelihood stream that is generated using the variation superposition constellation.

[0288] Deinterleaver **1112** permutes the first bit likelihood stream on the basis of a permutation rule that is a reverse rule of the first permutation rule. Such permutation is also referred to as deinterleaving. Decoder **1113** decodes the first bit likelihood stream permuted by deinterleaver **1112** on the basis of the first error control coding scheme, and outputs the decoding result as the first data series.

[0289] Deinterleaver **1122** permutes the second bit likelihood stream on the basis of a permutation rule that is a reverse rule of the second permutation rule. Such permutation is also referred to as deinterleaving. Decoder **1123** decodes the second bit likelihood stream permuted by deinterleaver **1122** on the basis of the second error control coding scheme, and outputs the decoding result as the second data series.

[0290] Through the above processes, reception device **1100** obtains one of or both of the first data series and the second data series from the signal received by the antenna.

[0291] Note that transmission devices **500**, **600**, and **700**, and reception devices **800**, **900**, **1000**, and **1100** may omit permutation (interleaving and deinterleaving) as in the case of Embodiment 1. Stated differently, their respective interleavers and deinterleavers are optional structural components, and thus may not be included in these devices.

[0292] Interleaving and deinterleaving, however, make a pair. As such, when transmission devices **500**, **600**, and **700** include their respective interleavers, reception devices **800**, **900**, **1000**, and **1100** basically include their respective deinterleavers and interleavers. Meanwhile, when transmission devices **500**, **600**, and **700** do not include their respective interleavers, reception devices **800**, **900**, **1000**, and **1100** do not include their respective deinterleavers and interleavers.

[0293] Amplitude coefficient a_1 may be reflected in the mapping for generating the first modulated symbols performed in reception devices **800**, **900**, and **1000**. In such a case, the multiplication of amplitude coefficient a_1 may be omitted. Reception devices **800**, **900**, and **1000** thus may not include multipliers **817**, **917**, and **1017**, respectively.

[0294] Error control coding on the first data series and the second data series may be performed by an external device. In such a case, transmission devices **500**, **600**, and **700** may

omit error control coding, and may not include encoders **511**, **521**, **611**, **621**, **711**, and **721**.

[0295] FIG. **21** is a flowchart of example operations performed by transmission device **500**. First, mapper **513** maps the first bit stream of the first data series to generate the first modulated symbol stream of the first data series (S**301**). Then, mapper **523** maps the second bit stream of the second data series to generate the second modulated symbol stream of the second data series (S**302**).

[0296] Converter **525** subjects the second modulated symbol stream to conversion in accordance with the first modulation symbol stream (S**303**). More specifically, converter **525** converts the second modulated symbol stream in accordance with the first bit stream, thereby subjecting the second modulated symbol stream to conversion in accordance with the first modulated symbol stream.

[0297] Next, the superposer constituted by first multiplier **514**, second multiplier **524**, and adder **530** superposes the first modulated symbol stream and the second modulated symbol stream that has been subjected to conversion in accordance with the first modulated symbol stream at a predetermined amplitude ratio, thereby generating the multiplexed signal (S**304**). RF unit **540** then sends the generated multiplexed signal (S**305**).

[0298] Note that in the above operation example, transmission device **500** converts the second modulated symbol stream in accordance with the first bit stream, thereby subjecting the second modulated symbol stream to conversion in accordance with the first modulated symbol stream (S**303**). Alternatively, transmission device **500** may convert the second modulated symbol stream in accordance with the first modulated symbol stream, as in the case of transmission device **600**, thereby subjecting the second modulated symbol stream to conversion in accordance with the first modulated symbol stream.

[0299] Alternatively, as in the case of transmission device **700**, transmission device **500** may convert the second bit stream or the second mapping scheme (the second constellation) used to generate the second modulated symbol stream, in accordance with the first bit stream. Through this, the second modulated symbol stream may be subjected to conversion in accordance with the first modulated symbol stream. In such a case, the second bit stream or the second mapping scheme is converted before the second modulated symbol stream is generated.

[0300] Stated differently, the second bit stream, the second mapping scheme, or the second modulated symbol stream may be converted in accordance with the first bit stream or the first modulated symbol stream, thereby subjecting the second modulated symbol stream to conversion in accordance with the first modulated symbol stream.

[0301] Converter **525** may subject the second modulated symbol stream to conversion in accordance with the first modulated symbol stream, thereby controlling the polarities of the real part and the imaginary part of each modulated symbol in the second modulated symbol stream. Through this, converter **525** may reverse the polarity of the real part of each second modulated symbol when the real part of the corresponding first modulated symbol satisfies a predetermined real part condition, and may reverse the polarity of the imaginary part of each second modulated symbol when the imaginary part of the corresponding first modulated symbol satisfies a predetermined condition.

[0302] The predetermined real part condition may be a condition that the polarity of the real part should be a predetermined polarity of the real part, or may be a condition that the real part should be within a predetermined range of the real part greater than or equal to one. The predetermined range of the real part greater than or equal to one may be a positive range or a negative range. Similarly, the predetermined imaginary part condition may be a condition that the polarity of the imaginary part should be a predetermined polarity of the imaginary part, or may be a condition that the imaginary part should be within a predetermined range of the imaginary part greater than or equal to one. The predetermined range of the imaginary part greater than or equal to one may be a positive range or a negative range.

[0303] FIG. **22** is a flowchart of example operations performed by reception devices **800**, **900**, **1000**, and **1100**. First, the receiver receives the multiplexed signal (S**401**). Here, the receiver is RF unit **830** of reception device **800**, RF unit **930** of reception device **900**, RF unit **1030** of reception device **1000**, or RF unit **1130** of reception device **1100**.

[0304] The multiplexed signal is a signal into which a plurality of data series including the first data series in the first layer and the second data series in the second layer are multiplexed. The multiplexed signal is also a signal on which the first modulated symbol stream and the second modulated symbol stream are superposed at a predetermined amplitude ratio.

[0305] The first modulated symbol stream is a modulated symbol stream that is generated by mapping the first bit stream of the first data series. The second modulated symbol stream is a modulated symbol stream that is generated by mapping the second bit stream of the second data series, and that has been subjected to conversion in accordance with the first modulated symbol stream.

[0306] Next, the deriver derives at least one of the first data series or the second data series from the multiplexed signal (S**402**).

[0307] The deriver of reception device **800** is constituted, for example, by demapper **811**, deinterleaver **812**, decoder **813**, encoder **814**, interleaver **815**, mapper **816**, multiplier **817**, delayer **818**, subtractor **819**, converter **820**, demapper **821**, deinterleaver **822**, and decoder **823**.

[0308] The deriver of reception device **900** is constituted, for example, by demapper **911**, deinterleaver **912**, decoder **913**, encoder **914**, interleaver **915**, mapper **916**, multiplier **917**, delayer **918**, subtractor **919**, converter **920**, demapper **921**, deinterleaver **922**, and decoder **923**

[0309] The deriver of reception device **1000** is constituted, for example, by demapper **1011**, deinterleaver **1012**, decoder **1013**, encoder **1014**, interleaver **1015**, mapper **1016**, multiplier **1017**, delayer **1018**, subtractor **1019**, demapper **1021**, deinterleaver **1022**, and decoder **1023**

[0310] The deriver of reception device **1100** is constituted, for example, by demapper **1110**, deinterleaver **1112**, decoder **1113**, deinterleaver **1122**, and decoder **1123**.

[0311] In accordance with the above operations, the multiplexed signal is received into which the first modulated symbol stream and the second modulated symbol stream that has been subjected to conversion in accordance with the first modulated symbol stream are multiplexed. Then, at least one of the first data series or the second data series is derived from such a multiplexed signal. Stated differently, such a configuration enables: the reception of the multiplexed signal that has been superposed in such a manner that reduces

performance degradation at the time of parallel decoding: and an efficient derivation of one of or both of the first data series and the second data series from such a multiplexed signal.

[0312] Reception device **1100** as shown in FIG. **19** that performs parallel decoding has lower performance in decoding the second layer than that of reception devices **800**, **900**, and **1000** as shown in FIG. **16**, FIG. **17**, and FIG. **18** that perform sequential decoding.

[0313] FIG. **23** shows an example simulation result of the transmission capacity of the second layer when the ratio between signal power P_{s1} of the first layer and signal power P_{s2} of the second layer is $P_{s1}:P_{s2}=2:1$. In FIG. **23**, the lateral axis represents as dB (decibel) the ratio of signal power P_s to noise power P_n (SNR), and the vertical axis represents transmission capacity. In FIG. **23**, the solid line indicates the transmission capacity of the second layer when sequential decoding is performed, and the broken line indicates the transmission capacity of the second layer when parallel decoding is performed.

[0314] As FIG. **23** shows, in the decoding of the second layer, parallel decoding involves an increased SNR with respect to the same transmission capacity and a decreased transmission capacity with respect to the same SNR, compared to sequential decoding.

[0315] As described above, reception device **1100** according to the present embodiment that performs parallel decoding has lower performance in decoding the second data series transmitted on the second layer than that of reception devices **800**, **900**, and **1000** that perform sequential decoding. However, reception device **1100** reduces the number of structural components required to decode the second layer.

[0316] More specifically, reception device **1100** eliminates the need for the structural components that are required by reception devices **800**, **900**, and **1000** shown in FIG. **16**, FIG. **17**, and FIG. **18** performing sequential decoding to reproduce the modulated symbol stream of the first layer. Stated differently, encoders **814**, **914**, and **1014**, interleavers **815**, **915**, and **1015**, mappers **816**, **916**, and **1016**, and multipliers **817**, **917**, and **1017** are not required.

[0317] Reception device **1100** also eliminates the need for delayers **818**, **918**, and **1018** that delay the received signal, and subtractors **819**, **919**, and **1019** that remove the components of the modulated symbols in the first layer reproduced from the received signal.

[0318] The circuit size can be thus reduced. Reception device **1100** also requires a smaller number of arithmetic computations and lower power consumption than those required by reception devices **800**, **900**, and **1000**.

[0319] Reception devices **800**, **900**, and **1000** shown in FIG. **16**, FIG. **17**, and FIG. **18** that perform sequential decoding demodulate the first layer in the received signal to obtain the first data series, and generate the first modulated symbol stream from the obtained first data series. Subsequently, reception devices **800**, **900**, and **1000** start demodulating the second layer in the received signal to obtain the second data series.

[0320] Meanwhile, reception device **1100** according to the present embodiment that performs parallel decoding is capable of simultaneously obtaining the first data series and the second data series in parallel, thereby reducing processing delays.

[0321] The reception device may observe the SNR of the received signal to make selection between parallel decoding to be performed when the SNR is high and sequential decoding to be performed when the SNR is low.

[0322] In such a case, reception device **800** shown in FIG. **16** includes, for example, a controller that makes selection between sequential decoding and parallel decoding depending on the SNR. Such a controller may be included in RF unit **830** or demapper **821**. Furthermore, demapper **821** is configured to perform demapping based on the variation superposition constellation, which is described as an operation performed by demapper **1110** shown in FIG. **19**, in addition to demapping that is based on the second constellation.

[0323] Demapper **821** switches between demapping to be performed on the signal outputted from converter **820** on the basis of the second constellation and demapping to be performed on the signal outputted from RF unit **830** on the basis of the variation superposition constellation. For example, demapper **821** switches between these demapping operations in accordance with a control signal from the controller.

[0324] Note that such a configuration is also obtained by a combination of reception device **400** shown in FIG. **11**, reception device **800** (converter **820**, demapper **821**, etc.) shown in FIG. **16**, and reception device **1100** (demapper **1110**, etc.) shown in FIG. **19**.

[0325] Another configuration is that reception device **900** shown in FIG. **17** includes, for example, a controller that makes selection between sequential decoding and parallel decoding depending on the SNR. Such a controller may be included in RF unit **930** or demapper **921**. Furthermore, demapper **921** is configured to perform demapping based on the variation superposition constellation, which is described as an operation performed by demapper **1110** shown in FIG. **19**, in addition to demapping that is based on the first bit stream and the second constellation.

[0326] Demapper **921** switches between demapping to be performed on the signal outputted from converter **920** on the basis of the second constellation and demapping to be performed on the signal outputted from RF unit **930** on the basis of the variation superposition constellation. For example, demapper **921** switches between these demapping operations in accordance with a control signal from the controller.

[0327] Note that such a configuration is also obtained by a combination of reception device **400** shown in FIG. **11**, reception device **900** (converter **920**, demapper **921**, etc.) shown in FIG. **17**, and reception device **1100** (demapper **1110**, etc.) shown in FIG. **19**.

[0328] Still another configuration is that reception device **1000** shown in FIG. **18** includes, for example, a controller that makes selection between sequential decoding and parallel decoding depending on the SNR. Such a controller may be included in RF unit **1030** or demapper **1021**. Furthermore, demapper **1021** is configured to perform demapping based on the variation superposition constellation, which is described as an operation performed by demapper **1110** shown in FIG. **19**, in addition to demapping that is based on the first bit stream and the second constellation.

[0329] Demapper **1021** switches between demapping to be performed on the signal outputted from subtractor **1019** on the basis of the second constellation and demapping to be performed on the signal outputted from RF unit **1030** on the basis of the variation superposition constellation. For

example, demapper **1021** switches between these demapping operations in accordance with a control signal from the controller.

[0330] Note that such a configuration is also obtained by a combination of reception device **400** shown in FIG. **11**, reception device **1000** (demapper **1021**, etc.) shown in FIG. **18**, and reception device **1100** (demapper **1110**, etc.) shown in FIG. **19**.

[0331] As described above, reception devices **800**, **900**, and **1000** perform parallel decoding when the SNR is high, thereby reducing the number of arithmetic computations and power consumption. Reception devices **800**, **900**, and **1000** also perform parallel decoding when the SNR is high, thereby reducing processing delays. Meanwhile, reception devices **800**, **900**, and **1000** perform sequential decoding when the SNR is low, thereby increasing the possibility of correctly decoding the second data series.

[0332] Comparison between the transmission capacity in the multiplexing scheme utilizing superposition coding shown in FIG. **10** and the transmission capacity in the multiplexing scheme utilizing the variation of superposition coding shown in FIG. **23** presents the findings described below.

[0333] The characteristics of the transmission capacities exhibited by sequential decoding (indicated by the solid line) are the same between the multiplexing scheme utilizing superposition coding (FIG. **10**) and the multiplexing scheme utilizing the variation of superposition coding (FIG. **23**). Meanwhile, the characteristics of the transmission capacities exhibited by parallel decoding (indicated by the broken line) are improved by use of the multiplexing scheme utilizing the variation of superposition coding (FIG. **23**) compared to the multiplexing scheme utilizing the superposition coding (FIG. **10**). Stated differently, the multiplexing scheme utilizing the variation of superposition coding provides desirable results both in sequential decoding and parallel decoding.

Embodiment 4

[0334] <Variation of Superposition Coding (Modified Superposition Coding)>

[0335] The present embodiment describes a method of multiplexing a plurality of data series using a variation of superposition coding (modified superposition coding), which is a modified version of the above-described superposition coding, and transmitting the plurality of multiplexed data series.

[0336] FIG. **24** shows an example configuration of transmission device **1200** that multiplexes two data series onto two layers using the variation of superposition coding, and transmits a multiplexed data series. The configuration and operation of transmission device **1200** is to be described with reference to FIG. **24**.

[0337] Transmission device **1200** includes encoder **1211**, interleaver **1212**, mapper **1213**, multiplier **1214**, encoder **1221**, interleaver **1222**, mapper **1223**, converter **1225**, multiplier **1224**, adder **1230**, and RF unit **1240**. These structural components may also be implemented as dedicated or general-purpose circuits. Multiplier **1214**, multiplier **1224**, and adder **1230** can also be represented collectively as a superposer. RF unit **1240** can also be represented as a transmitter. RF unit **1240** may include an antenna.

[0338] Encoder **1211** encodes an inputted first data series on the basis of a first error control coding scheme to generate a first bit stream. Interleaver **1212** permutes the bits in the first bit stream generated by encoder **1211** on the basis of a first permutation rule. Such permutation is also referred to as interleaving.

[0339] Mapper **1213** maps the first bit stream permuted by interleaver **1212** in accordance with a first mapping scheme to generate a first modulated symbol stream that includes a plurality of first modulated symbols. In the mapping in accordance with the first mapping scheme, mapper **1213** maps each group of bits that includes a first number of bits in the first bit stream onto one of the signal points in a first constellation in accordance with the values of such a group of bits.

[0340] When PSK modulation such as BPSK and QPSK, or QAM modulation such as 16QAM and 64QAM is used as the first mapping scheme, each first modulated symbol can be represented by a complex number, for example, with the real part representing the magnitude of the in-phase component and the imaginary part representing the magnitude of the orthogonal component. Meanwhile, when PAM modulation is used as the first mapping scheme, each first modulated symbol can be represented by a real number.

[0341] Encoder **1221** encodes an inputted second data series on the basis of a second error control coding scheme to generate a second bit stream. Interleaver **1222** permutes the bits in the second bit stream generated by encoder **1221** on the basis of a second permutation rule. Such permutation is also referred to as interleaving.

[0342] Mapper **1223** maps the second bit stream permuted by interleaver **1222** in accordance with a second mapping scheme to generate a second modulated symbol stream that includes a plurality of second modulated symbols. In the mapping in accordance with the second mapping scheme, mapper **1223** maps each group of bits that includes a second number of bits in the second bit stream onto one of the signal points in a second constellation in accordance with the values of such a group of bits.

[0343] When PSK modulation such as BPSK and QPSK, or QAM modulation such as 16QAM and 64QAM is used as the second mapping scheme, each second modulated symbol can be represented by a complex number, for example, with the real part representing the magnitude of the in-phase component and the imaginary part representing the magnitude of the orthogonal component. Meanwhile, when PAM modulation is used as the second mapping scheme, each second modulated symbol can be represented by a real number. Any one of a uniform constellation and a non-uniform constellation may be used as the second mapping scheme.

[0344] Converter **1225** converts each second modulated symbol to be superposed with the corresponding first modulated symbol, on the basis of the values of the bits used to generate such a first modulated symbol. Through this, converter **1225** converts the second modulated symbol stream.

[0345] Multiplier **1214** multiplies each first modulated symbol in the first modulated symbol stream by first amplitude coefficient a_1. Multiplier **1224** multiplies, by second amplitude coefficient a_2, each second modulated symbol in the second modulated symbol stream converted by converter **1225**.

[0346] Multiplier **1224** may multiply both the real part and the imaginary part of each second modulated symbol by second amplitude coefficient a_2, or may multiply only one of the real part and the imaginary part by second amplitude

coefficient a_2. Alternatively, multiplier **1224** may multiply the real part and the imaginary part of each second modulated symbol by different amplitude coefficients.

[0347] For example, when a first modulated symbol is constituted by only a real part, multiplier **1224** may multiply only the real part of a second modulated symbol by second amplitude coefficient a_2. Multiplier **1224** does not need to multiply the imaginary part of the second modulated symbol by an amplitude coefficient, or may multiply the imaginary part by an amplitude coefficient smaller than second amplitude coefficient a_2.

[0348] Adder **1230** superposes first modulated symbols multiplied by first amplitude coefficient a_1 and second modulated symbols multiplied by second amplitude coefficient a_2 to generate a superposed modulated symbol stream that includes a plurality of superposed modulated symbols.

[0349] RF unit **1240** sends the generated superposed modulated symbol stream as a signal. More specifically, RF unit **1240** generates, from the superposed modulated symbol stream generated by adder **1230**, a radio-frequency signal as a signal corresponding to the superposed modulated symbol stream to send such a radio-frequency signal from the antenna.

[0350] Stated differently, the superposer constituted by multiplier **1214**, multiplier **1224**, and adder **1230** superposes the first modulated symbol stream and the second modulated symbol stream at a predetermined amplitude ratio, thereby generating a multiplexed signal into which the first data series and the second data series are multiplexed. Subsequently, RF unit **1240** sends the multiplexed signal. Note that the multiplexed signal corresponds to the superposed modulated symbol stream.

[0351] Also the predetermined amplitude ratio may be fixed (for example, 1:1), and the multiplication may be omitted. In the superposition of the first modulated symbol stream and the second modulated symbol stream, an amplitude ratio constituted by a proportion of the first modulated symbol stream, a proportion of the real component of the second modulated symbol stream, and a proportion of the imaginary component of the second modulated symbol stream may be used as the predetermined amplitude ratio. The proportion of one of the real component and the imaginary component that is not included in the first modulated symbol stream may be higher than the proportion of the other. Note that the proportion can also be represented as weight.

[0352] The following shows an example case in which BPSK is used as the first mapping scheme to describe the operation of converter **1225**.

[0353] For example, when $S_1(t)$ is the t-th modulated symbol in the first modulated symbol stream generated by mapper **1213**, and $b_1(t)$ is a bit to be mapped onto $S_1(t)$, modulated symbol $S_1(t)$ is given by Equation 16.

[Math. 16]

$$S_1(t)=2\cdot b_1(t)-1 \qquad \text{(Equation 16)}$$

[0354] Modulated symbol $S_1(t)$ may also be given by an equation in which the (positive/negative) polarity in Equation 16 is reversed. Converter **1225** converts, into $S'_2(t)$, the t-th modulated symbol $S_2(t)$ in the second modulated symbol stream generated by mapper **1223**, on the basis of $b_1(t)$ as shown by Equation 17.

[Math. 17]

$$S'_2(t)=(-1)^{b1(t)}\cdot \mathrm{Re}[S_2(t)]+i\cdot \mathrm{Im}[S_2(t)] \qquad \text{(Equation 17)}$$

[0355] Here, $S'_2(t)$ is the converted t-th modulated symbol in the second modulated symbol stream. Further, i denotes the imaginary unit. $\mathrm{Re}[S_2(t)]$ is the value of the real part of $S_2(t)$, and $\mathrm{Im}[S_2(t)]$ is the value of the imaginary part of $S_2(t)$. Modulated symbol $S'_2(t)$ may be given by an equation in which one of or both of the polarities of the real part and the imaginary part of Equation 17 are reversed.

[0356] As described above, the polarity of the real part of each second modulated symbol is controlled in accordance with the values of the bits to be mapped onto the first modulated symbol that is superposed with such a second modulated symbol. Note that the polarity of the real part of each second modulated symbol may be controlled in accordance with the first modulated symbol that is superposed with such a second modulated symbol.

[0357] In the above, superposition coding is performed on the real part. Accordingly, a first modulated symbol is constituted by a real component, and the real component of the first modulated symbol and the real component of a second modulated symbol are superposed on a single real component. However, superposition coding may be performed on the imaginary part. Accordingly, a first modulated symbol may be constituted by an imaginary component, and the imaginary component of the first modulated symbol and the imaginary component of a second modulated symbol may be superposed on a single real component.

[0358] FIG. **25** shows an example configuration of transmission device **1300** that multiplexes two data series onto two layers by the variation of superposition coding, and transmits the multiplexed data series. The configuration of transmission device **1300** is different from the configuration of transmission device **1200**. The configuration and operation of transmission device **1300** will be described with reference to FIG. **25**.

[0359] Transmission device **1300** includes encoder **1311**, interleaver **1312**, mapper **1313**, multiplier **1314**, encoder **1321**, interleaver **1322**, mapper **1323**, converter **1325**, multiplier **1324**, adder **1330**, and RF unit **1340**. These structural components may also be implemented as dedicated or general-purpose circuits. Multiplier **1314**, multiplier **1324**, and adder **1330** can also be represented collectively as a superposer. RF unit **1340** can also be represented as a transmitter. RF unit **1340** may include an antenna.

[0360] Encoder **1311** encodes an inputted first data series on the basis of a first error control coding scheme to generate a first bit stream. Interleaver **1312** permutes the bits in the first bit stream generated by encoder **1311** on the basis of a first permutation rule. Such permutation is also referred to as interleaving.

[0361] Mapper **1313** maps the first bit stream permuted by interleaver **1312** in accordance with a first mapping scheme to generate a first modulated symbol stream that includes a plurality of first modulated symbols. In the mapping in accordance with the first mapping scheme, mapper **1313** maps each group of bits that includes a first number of bits in the first bit stream onto one of the signal points in a first constellation in accordance with the values of such a group of bits.

[0362] Encoder **1321** encodes an inputted second data series on the basis of a second error control coding scheme to generate a second bit stream. Interleaver **1322** permutes the bits in the second bit stream generated by encoder **1321**

on the basis of a second permutation rule. Such permutation is also referred to as interleaving.

[0363] Mapper **1323** maps the second bit stream permuted by interleaver **1322** in accordance with a second mapping scheme to generate a second modulated symbol stream that includes a plurality of second modulated symbols. In the mapping in accordance with the second mapping scheme, mapper **1323** maps each group of bits that includes a second number of bits in the second bit stream onto one of the signal points in a second constellation in accordance with the values of such a group of bits.

[0364] Converter **1325** converts each second modulated symbol to be superposed with the corresponding first modulated symbol, on the basis of the generated first modulated symbol. Through this, converter **1325** converts the second modulated symbol stream.

[0365] Multiplier **1314** multiplies each first modulated symbol in the first modulated symbol stream by first amplitude coefficient a_1. Multiplier **1324** multiplies, by second amplitude coefficient a_2, each second modulated symbol in the second modulated symbol stream converted by converter **1325**.

[0366] Multiplier **1324** may multiply both the real part and the imaginary part of a second modulated symbol by second amplitude coefficient a_2, or may multiply only one of the real part and the imaginary part by second amplitude coefficient a_2. Alternatively multiplier **1324** may multiply the real part and the imaginary part of a second modulated symbol by different amplitude coefficients.

[0367] For example, when the first modulated symbol is constituted by only a real part, multiplier **1324** may multiply only the real part of a second modulated symbol by second amplitude coefficient a_2. Multiplier **1324** does not need to multiply the imaginary part of the second modulated symbol by an amplitude coefficient, or may multiply the imaginary part by an amplitude coefficient smaller than second amplitude coefficient a_2.

[0368] Adder **1330** superposes first modulated symbols multiplied by first amplitude coefficient a_1 and second modulated symbols multiplied by second amplitude coefficient a_2 to generate a superposed modulated symbol stream that includes a plurality of superposed modulated symbols.

[0369] RF unit **1340** sends the generated superposed modulated symbol stream as a signal. More specifically, RF unit **1340** generates, from the superposed modulated symbol stream generated by adder **1330**, a radio-frequency signal as a signal corresponding to the superposed modulated symbol stream to send such a radio-frequency signal from the antenna.

[0370] Stated differently, the superposer constituted by multiplier **1314**, multiplier **1324**, and adder **1330** superposes the first modulated symbol stream and the second modulated symbol stream at a predetermined amplitude ratio, thereby generating a multiplexed signal into which the first data series and the second data series are multiplexed. Subsequently, RF unit **1340** sends the multiplexed signal. Note that the multiplexed signal corresponds to the superposed modulated symbol stream.

[0371] Also the predetermined amplitude ratio may be fixed (for example, 1:1), and the multiplication may be omitted. In the superposition of the first modulated symbol stream and the second modulated symbol stream, an amplitude ratio constituted by a proportion of the first modulated symbol stream, a proportion of the real component of the second modulated symbol stream, and a proportion of the imaginary component of the second modulated symbol stream may be used as the predetermined amplitude ratio. The proportion of one of the real component and the imaginary component that is not included in the first modulated symbol stream may be higher than the proportion of the other. Note that the proportion can also be represented as weight.

[0372] The following shows an example case in which BPSK is used as the first mapping scheme to describe the operation of converter **1325**.

[0373] For example, when $S_1(t)$ is the t-th modulated symbol in the first modulated symbol stream generated by mapper **1313**, and $b_1(t)$ is a bit to be mapped onto $S_1(t)$, modulated symbol $S_1(t)$ is given by Equation 18.

[Math. 18]

$$S_1(t)=2\cdot b_1(t)-1 \quad \text{(Equation 18)}$$

[0374] Modulated symbol $S_1(t)$ may also be given by an equation in which the polarity in Equation 18 is reversed. Converter **1325** converts, into $S'_2(t)$, t-th modulated symbol $S_2(t)$ in the second modulated symbol stream generated by mapper **1323**, on the basis of modulated symbol $S_1(t)$ as shown by Equation 19.

[Math. 19]

$$S'_2(t)=-\mathrm{sgn}(S_1(t))\cdot \mathrm{Re}[S_2(t)]+i\cdot \mathrm{Im}[S_2(t)] \quad \text{(Equation 19)}$$

[0375] Here, i denotes the imaginary unit. $S'_2(t)$ is the converted t-th modulated symbol in the second modulated symbol stream. $\mathrm{Re}[S_2(t)]$ is the value of the real part of $S_2(t)$, and $\mathrm{Im}[S_2(t)]$ is the value of the imaginary part of $S_2(t)$. Also, $\mathrm{sgn}(S_1(t))$ is the polarity of $S_1(t)$.

[0376] Modulated symbol $S'_2(t)$ may be given by an equation in which one of or both of the polarities of the real part and the imaginary part of Equation 19 are reversed. Note that the conversion that is based on Equation 19 is substantially the same as the conversion that is based on Equation 17.

[0377] As described above, the polarity of the real part of each second modulated symbol is controlled in accordance with the first modulated symbol that is superposed with such a second modulated symbol. Note that the polarity of the real part of each second modulated symbol may be controlled in accordance with the values of the bits to be mapped onto the first modulated symbol that is superposed with such a second modulated symbol.

[0378] In the above, superposition coding is performed on the real part. Accordingly, a first modulated symbol is constituted by a real component, and the real component of the first modulated symbol and the real component of a second modulated symbol are superposed on a single real component. However, superposition coding may be performed on the imaginary part. Accordingly, a first modulated symbol may be constituted by an imaginary component, and the imaginary component of the first modulated symbol and the imaginary component of a second modulated symbol may be superposed on a single real component.

[0379] FIG. **26** shows an example configuration of transmission device **1400** that multiplexes two data series onto two layers by the variation of superposition coding, and transmits the multiplexed data series. The configuration of transmission device **1400** is different from the configurations

of transmission devices **1200** and **1300**. The configuration and operation of transmission device **1400** will be described with reference to FIG. **26**.

[0380] Transmission device **1400** includes encoder **1411**, interleaver **1412**, mapper **1413**, multiplier **1414**, encoder **1421**, interleaver **1422**, mapper **1423**, multiplier **1424**, adder **1430**, and RF unit **1440**. These structural components may also be implemented as dedicated or general-purpose circuits. Multiplier **1414**, multiplier **1424**, and adder **1430** can also be represented collectively as a superposer. RF unit **1440** can also be represented as a transmitter. RF unit **1440** may include an antenna. Mapper **1423** may include a converter.

[0381] Encoder **1411** encodes an inputted first data series on the basis of a first error control coding scheme to generate a first bit stream. Interleaver **1412** permutes the bits in the first bit stream generated by encoder **1411** on the basis of a first permutation rule. Such permutation is also referred to as interleaving.

[0382] Mapper **1413** maps the first bit stream permuted by interleaver **1412** in accordance with a first mapping scheme to generate a first modulated symbol stream that includes a plurality of first modulated symbols. In the mapping in accordance with the first mapping scheme, mapper **1413** maps each group of bits that includes a first number of bits in the first bit stream onto one of the signal points in a first constellation in accordance with the values of such a group of bits.

[0383] Encoder **1421** encodes an inputted second data series on the basis of a second error control coding scheme to generate a second bit stream. Interleaver **1422** permutes the bits in the second bit stream generated by encoder **1421** on the basis of a second permutation rule. Such permutation is also referred to as interleaving.

[0384] Mapper **1423** converts (modifies) a second mapping scheme in accordance with the first bit stream to be mapped to the first modulated symbol stream by mapper **1413**. Mapper **1423** then maps the second bit stream interleaved by interleaver **1422** in accordance with the second mapping scheme that has been converted in accordance with the first bit stream. Through these processes, mapper **1423** generates a second modulated symbol stream that includes a plurality of second modulated symbols.

[0385] In the mapping in accordance with the second mapping scheme, mapper **1423** maps each group of bits that includes a second number of bits in the second bit stream onto one of the signal points in a second constellation in accordance with the values of such a group of bits.

[0386] Multiplier **1414** multiplies each first modulated symbol in the first modulated symbol stream by first amplitude coefficient a_1. Multiplier **1424** multiplies each second modulated symbol in the second modulated symbol stream by second amplitude coefficient a_2.

[0387] Multiplier **1424** may multiply both the real part and the imaginary part of a second modulated symbol by second amplitude coefficient a_2, or may multiply only one of the real part and the imaginary part by second amplitude coefficient a_2. Alternatively, multiplier **1424** may multiply the real part and the imaginary part of a second modulated symbol by different amplitude coefficients.

[0388] For example, when a first modulated symbol is constituted by only a real part, multiplier **1424** may multiply only the real part of a second modulated symbol by second amplitude coefficient a_2. Multiplier **1424** does not need to multiply the imaginary part of the second modulated symbol by an amplitude coefficient, or may multiply the imaginary part by an amplitude coefficient smaller than second amplitude coefficient a_2.

[0389] Adder **1430** superposes first modulated symbols multiplied by first amplitude coefficient a_1 and second modulated symbols having the real parts multiplied by second amplitude coefficient a_2 to generate a superposed modulated symbol stream that includes a plurality of superposed modulated symbols.

[0390] RF unit **1440** sends the generated superposed modulated symbol stream as a signal. More specifically, RF unit **1440** generates, from the superposed modulated symbol stream generated by adder **1430**, a radio-frequency signal as a signal corresponding to the superposed modulated symbol stream to send such a radio-frequency signal from the antenna.

[0391] Stated differently, the superposer constituted by multiplier **1414**, multiplier **1424**, and adder **1430** superposes the first modulated symbol stream and the second modulated symbol stream at a predetermined amplitude ratio, thereby generating a multiplexed signal into which the first data series and the second data series are multiplexed. Subsequently, RF unit **1440** sends the multiplexed signal. Note that the multiplexed signal corresponds to the superposed modulated symbol stream.

[0392] Also the predetermined amplitude ratio may be fixed (for example, 1:1), and the multiplication may be omitted. In the superposition of the first modulated symbol stream and the second modulated symbol stream, an amplitude ratio constituted by a proportion of the first modulated symbol stream, a proportion of the real component of the second modulated symbol stream, and a proportion of the imaginary component of the second modulated symbol stream may be used as the predetermined amplitude ratio. The proportion of one of the real component and the imaginary component that is not included in the first modulated symbol stream may be higher than the proportion of the other. Note that the proportion can also be represented as weight.

[0393] The following shows an example case in which BPSK is used as the first mapping scheme to describe the operation of mapper **1423**.

[0394] For example, when $S_1(t)$ is the t-th modulated symbol in the first modulated symbol stream generated by mapper **1413**, and $b_1(t)$ is a bit to be mapped onto $S_1(t)$, modulated symbol $S_1(t)$ is given by Equation 20.

[Math. 20]

$$S_1(t)=2\cdot b_1(t)-1 \quad \text{(Equation 20)}$$

[0395] Modulated symbol stream $S_1(t)$ may also be given by an equation in which the polarity in Equation 20 is reversed. Mapper **1423** performs exclusive-OR between $b_1(t)$ and the bit that most contributes to the real part of the second constellation among the bits in the second bit stream inputted from interleaver **1422**. Mapper **1423** then maps the second bit stream on which exclusive-OR has been performed, on the basis of the second constellation.

[0396] Here, the bit that most contributes to the real part of the second constellation is a bit that causes the polarity of the real part of the second constellation to be reversed, for example, when the value of such a bit is reversed from 0 to 1 or from 1 to 0. Stated differently, the bit that most contributes to the real part of the second constellation refers

to a bit that causes the negative/positive sign of the value of the real part of each modulated symbol to be reversed, for example, when the value of such a bit is reversed from 0 to 1 or from 1 to 0.

[0397] In the above description, mapper **1423** converts the second bit stream, thereby substantially converting the second mapping scheme (the second constellation). However, mapper **1423** may directly convert the second mapping scheme (the second constellation) without converting the second bit stream. Stated differently, mapper **1423** may convert the correspondence between groups of bits and signal points in the second constellation.

[0398] Also, the conversion performed by mapper **1423** may be performed by the converter included in mapper **1423**.

[0399] As described above, the polarity of the real part of each second modulated symbol is controlled in accordance with the values of the bits to be mapped onto the first modulated symbol that is superposed with such a second modulated symbol. Note that the polarity of the real part of each second modulated symbol may be controlled in accordance with the first modulated symbol that is superposed with such a second modulated symbol.

[0400] In the above, superposition coding is performed on the real part. Accordingly, a first modulated symbol is constituted by a real component, and the real component of the first modulated symbol and the real component of a second modulated symbol are superposed on a single real component. However, superposition coding may be performed on the imaginary part. Accordingly, a first modulated symbol may be constituted by an imaginary component, and the imaginary component of the first modulated symbol and the imaginary component of a second modulated symbol may be superposed on a single imaginary component.

[0401] <Sequential Decoding of Signal Obtained by Variation of Superposition Coding>

[0402] FIG. **27** shows an example configuration of reception device **1500** capable of receiving and sequentially decoding the signal on which two data series are multiplexed onto two layers by the above-described variation of superposition coding, and capable of obtaining one of or both of the multiplexed two data series. The configuration and operation of reception device **1500** will be described with reference to FIG. **27**.

[0403] Reception device **1500** includes RF unit **1530**, demapper **1511**, deinterleaver **1512**, decoder **1513**, encoder **1514**, interleaver **1515**, mapper **1516**, multiplier **1517**, delayer **1518**, subtractor **1519**, converter **1520**, demapper **1521**, deinterleaver **1522**, and decoder **1523**. These structural components may also be implemented as dedicated or general-purpose circuits.

[0404] Demapper **1511**, deinterleaver **1512**, decoder **1513**, encoder **1514**, interleaver **1515**, mapper **1516**, multiplier **1517**, delayer **1518**, subtractor **1519**, converter **1520**, demapper **1521**, deinterleaver **1522**, and decoder **1523** can also be represented collectively as a deriver. RF unit **1530** can also be represented as a receiver. RF unit **1530** may include an antenna.

[0405] Reception device **1500** receives by an antenna the multiplexed signal sent from transmission device **1200**, **1300**, or **1400**, and inputs such a multiplexed signal into RF unit **1530**. Stated differently, RF unit **1530** receives the multiplexed signal via the antenna. The multiplexed signal received by RF unit **1530** is also represented as a received signal, and corresponds to the superposed modulated symbol stream into which the first modulated symbol stream and the second modulated symbol stream are multiplexed. RF unit **1530** generates a baseband received signal from the radio-frequency received signal.

[0406] Demapper **1511** demaps the baseband received signal on the basis of the first constellation of the first mapping scheme to generate the first bit likelihood stream. For example, amplitude coefficient a_1 is reflected in the first constellation for demapping.

[0407] Deinterleaver **1512** permutes the first bit likelihood stream on the basis of a permutation rule that is a reverse rule of the first permutation rule. Such permutation is also referred to as deinterleaving. Decoder **1513** performs decoding that is based on the first error control coding scheme by use of the first bit likelihood stream permuted by deinterleaver **1512**, and outputs the decoding result as the first data series.

[0408] Here, of the received signal corresponding to the superposed modulated symbol stream, demapper **1511** treats the components corresponding to the second modulated symbols in the second data series as an unknown signal (noise), and performs demapping on the basis of the first constellation of the first mapping scheme.

[0409] When only the first data series is to be obtained, reception device **1500** terminates the process upon completing the estimation of the first data series. Meanwhile, when the second data series is to be obtained in addition to the first data series, or when only the second data series is to be obtained, reception device **1500** performs the processes described below to obtain the second data series.

[0410] Encoder **1514** encodes the first data series obtained by decoder **1513** on the basis of the first error control coding scheme to generate the first bit stream. Interleaver **1515** permutes the bits in the first bit stream generated by encoder **1514** on the basis of the first permutation rule. Such permutation is also referred to as interleaving.

[0411] Mapper **1516** maps the first bit stream permuted by interleaver **1515** in accordance with the first mapping scheme to generate the first modulated symbol stream that includes a plurality of first modulated symbols. Multiplier **1517** multiplies the first modulated symbol stream outputted by mapper **1516** by first amplitude coefficient a_1.

[0412] Delayer **1518** delays the received signal outputted from RF unit **1530** during the time from when RF unit **1530** outputs the baseband received signal to when multiplier **1517** outputs the reproduced first modulated symbol stream.

[0413] Subtractor **1519** subtracts, from the received signal delayed by delayer **1518**, the first modulated symbol stream multiplied by first amplitude coefficient a_1 by multiplier **1517**. Through this, subtractor **1519** removes the components corresponding to the first modulated symbols from the received signal on which the components corresponding to the first modulated symbols, the components corresponding to the second modulated symbols, and noise are superposed. Subsequently, subtractor **1519** outputs a signal on which the components corresponding to the second modulated symbols and noise are superposed as a signal corresponding to the second modulated symbol stream.

[0414] Converter **1520** converts the signal outputted from subtractor **1519** as a signal corresponding to the second modulated symbol stream by use of the first bit stream reproduced through encoding, interleaving, etc. Demapper **1521** demaps the signal outputted by converter **1520** on the

basis of the second constellation of the second mapping scheme to generate the second bit likelihood stream. For example, amplitude coefficient a_2 is reflected in the second constellation for demapping.

[0415] Deinterleaver **1522** permutes the second bit likelihood stream on the basis of a permutation rule that is a reverse rule of the second permutation rule. Such permutation is also referred to as deinterleaving. Decoder **1523** decodes the second bit likelihood stream permuted by deinterleaver **1522** on the basis of the second error control coding scheme, and outputs the decoding result as the second data series.

[0416] The following shows an example case in which BPSK is used as the first mapping scheme to describe the operation of converter **1520**.

[0417] For example, when $S_1(t)$ is the t-th modulated symbol in the first modulated symbol stream generated by mapper **1516**, and $b_1(t)$ is a bit to be mapped onto $S_1(t)$, modulated symbol $S_1(t)$ is given by Equation 21.

[Math. 21]

$$S_1(t)=2\cdot b_1(t)-1 \quad \text{(Equation 21)}$$

[0418] Modulated symbol $S_1(t)$ may also be given by an equation in which the polarity in Equation 21 is reversed. Converter **1520** converts, into $S'_2(t)$, signal $S_2(t)$ corresponding to the t-th modulated symbol in the second modulated symbol stream among signals outputted by subtractor **1519**, on the basis of $b_1(t)$ as shown by Equation 22.

[Math. 22]

$$S'_2(t)=(-1)^{b1(t)}\cdot \mathrm{Re}[S_2(t)]+i\cdot \mathrm{Im}[S_2(t)] \quad \text{(Equation 22)}$$

[0419] Here, i denotes the imaginary unit. Further, $S'_2(t)$ is the signal that has undergone the conversion. Also, $\mathrm{Re}[S_2(t)]$ is the value of the real part of $S_2(t)$, and $\mathrm{Im}[S_2(t)]$ is the value of the imaginary part of $S_2(t)$. Signal $S'_2(t)$ that has undergone the conversion may be given by an equation in which one of or both of the polarities of the real part and the imaginary part of Equation 22 are reversed.

[0420] Through the above processes, reception device **1500** obtains one of or both of the first data series and the second data series from the signal received by the antenna. Note that in the above, superposition coding is performed on the real part. However, superposition coding may be performed on the imaginary part.

[0421] FIG. **28** shows an example configuration of reception device **1600** capable of receiving and sequentially decoding the signal on which two data series are multiplexed onto two layers by the above-described variation of superposition coding, and capable of obtaining one of or both of the multiplexed two data series. The configuration of reception device **1600** is different from the configuration of reception device **1500**. The configuration and operation of reception device **1600** will be described with reference to FIG. **28**.

[0422] Reception device **1600** includes RF unit **1630**, demapper **1611**, deinterleaver **1612**, decoder **1613**, encoder **1614**, interleaver **1615**, mapper **1616**, multiplier **1617**, delayer **1618**, subtractor **1619**, converter **1620**, demapper **1621**, deinterleaver **1622**, and decoder **1623**. These structural components may also be implemented as dedicated or general-purpose circuits.

[0423] Demapper **1611**, deinterleaver **1612**, decoder **1613**, encoder **1614**, interleaver **1615**, mapper **1616**, multiplier **1617**, delayer **1618**, subtractor **1619**, converter **1620**, demapper **1621**, deinterleaver **1622**, and decoder **1623** can also be represented collectively as a deriver. RF unit **1630** can also be represented as a receiver. RF unit **1630** may include an antenna.

[0424] Reception device **1600** receives by an antenna the multiplexed signal sent from transmission device **1200**, **1300**, or **1400**, and inputs such a multiplexed signal into RF unit **1630**. Stated differently, RF unit **1630** receives the multiplexed signal via the antenna. The multiplexed signal received by RF unit **1630** is also represented as a received signal, and corresponds to the superposed modulated symbol stream into which the first modulated symbol stream and the second modulated symbol stream are multiplexed. RF unit **1630** generates a baseband received signal from the radio-frequency received signal.

[0425] Demapper **1611** demaps the baseband received signal on the basis of the first constellation of the first mapping scheme to generate the first bit likelihood stream. For example, amplitude coefficient a_1 is reflected in the first constellation for demapping.

[0426] Deinterleaver **1612** permutes the first bit likelihood stream on the basis of a permutation rule that is a reverse rule of the first permutation rule. Such permutation is also referred to as deinterleaving. Decoder **1613** performs decoding that is based on the first error control coding scheme by use of the first bit likelihood stream permuted by deinterleaver **1612**, and outputs the decoding result as the first data series.

[0427] Here, of the received signal corresponding to the superposed modulated symbol stream, demapper **1611** treats the components corresponding to the second modulated symbols in the second data series as an unknown signal (noise), and performs demapping on the basis of the first constellation of the first mapping scheme.

[0428] When only the first data series is to be obtained, reception device **1600** terminates the process upon completing the estimation of the first data series. Meanwhile, when the second data series is to be obtained in addition to the first data series, or when only the second data series is to be obtained, reception device **1600** performs the processes described below to obtain the second data series.

[0429] Encoder **1614** encodes the first data series obtained by decoder **1613** on the basis of the first error control coding scheme to generate the first bit stream. Interleaver **1615** permutes the bits in the first bit stream generated by encoder **1614** on the basis of the first permutation rule. Such permutation is also referred to as interleaving.

[0430] Mapper **1616** maps the first bit stream permuted by interleaver **1615** in accordance with the first mapping scheme to generate the first modulated symbol stream that includes a plurality of first modulated symbols. Multiplier **1617** multiplies the first modulated symbol stream outputted by mapper **1616** by first amplitude coefficient a_1.

[0431] Delayer **1618** delays the received signal outputted from RF unit **1630** during the time from when RF unit **1630** outputs the baseband received signal to when multiplier **1617** outputs the reproduced first modulated symbol stream.

[0432] Subtractor **1619** subtracts, from the received signal delayed by delayer **1618**, the first modulated symbol stream multiplied by first amplitude coefficient a_1 by multiplier **1617**. Through this, subtractor **1619** removes the components corresponding to the first modulated symbols from the received signal on which the components corresponding to

the first modulated symbols and the components corresponding to the second modulated symbols and noise are superposed. Subsequently, subtractor **1619** outputs a signal on which the components corresponding to the second modulated symbols and noise are superposed as a signal corresponding to the second modulated symbol stream.

[0433] Converter **1620** converts the signal outputted from subtractor **1619** as a signal corresponding to the second modulated symbol stream by use of the first modulated symbol stream reproduced through encoding, interleaving, mapping, etc. Demapper **1621** demaps the signal outputted by converter **1620** on the basis of the second constellation of the second mapping scheme to generate the second bit likelihood stream. For example, amplitude coefficient a_2 is reflected in the second constellation for demapping.

[0434] Deinterleaver **1622** permutes the second bit likelihood stream on the basis of a permutation rule that is a reverse rule of the second permutation rule. Such permutation is also referred to as deinterleaving. Decoder **1623** decodes the second bit likelihood stream permuted by deinterleaver **1622** on the basis of the second error control coding scheme, and outputs the decoding result as the second data series.

[0435] The following shows an example case in which BPSK is used as the first mapping scheme to describe the operation of converter **1620**.

[0436] For example, when $S_1(t)$ is the t-th modulated symbol in the first modulated symbol stream generated by mapper **1616**, and $b_1(t)$ is a bit to be mapped onto $S_1(t)$, modulated symbol $S_1(t)$ is given by Equation 23.

[Math. 23]

$$S_1(t)=2\cdot b_1(t)-1 \quad \text{(Equation 23)}$$

[0437] Modulated symbol $S_1(t)$ may also be given by an equation in which the polarity in Equation 23 are reversed. Converter **1620** converts, into $S'_2(t)$, signal $S_2(t)$ corresponding to the t-th modulated symbol in the second modulated symbol stream out of the signal outputted by subtractor **1619**, on the basis of modulated symbol $S_1(t)$ as shown by Equation 24.

[Math. 24]

$$S'_2(t)=-\mathrm{sgn}(S_1(t))\cdot \mathrm{Re}[S_2(t)]+i\cdot \mathrm{Im}[S_2(t)] \quad \text{(Equation 24)}$$

[0438] Here, i denotes the imaginary unit. Further, $S'_2(t)$ is the signal that has undergone the conversion. Also, $\mathrm{Re}[S_2(t)]$ is the value of the real part of $S_2(t)$, and $\mathrm{Im}[S_2(t)]$ is the value of the imaginary part of $S_2(t)$. Also, $\mathrm{sgn}(S_1(t))$ is the polarity of $S_1(t)$. Signal $S'_2(t)$ that has undergone the conversion may be given by an equation in which one of or both of the polarities of the real part and the imaginary part of Equation 24 are reversed. Note that the conversion that is based on Equation 24 is substantially the same as the conversion that is based on Equation 22.

[0439] Through the above processes, reception device **1600** obtains one of or both of the first data series and the second data series from the signal received by the antenna. Note that in the above, superposition coding is performed on the real part, but may be performed on the imaginary part.

[0440] FIG. **29** shows an example configuration of reception device **1700** capable of receiving and sequentially decoding the signal on which two data series are multiplexed onto two layers by the above-described variation of superposition coding, and capable of obtaining one of or both of the multiplexed two data series. The configuration of reception device **1700** is different from the configurations of reception devices **1500** and **1600**. The configuration and operation of reception device **1700** will be described with reference to FIG. **29**.

[0441] Reception device **1700** includes RF unit **1730**, demapper **1711**, deinterleaver **1712**, decoder **1713**, encoder **1714**, interleaver **1715**, mapper **1716**, multiplier **1717**, delayer **1718**, subtractor **1719**, demapper **1721**, deinterleaver **1722**, and decoder **1723**. These structural components may also be implemented as dedicated or general-purpose circuits.

[0442] Demapper **1711**, deinterleaver **1712**, decoder **1713**, encoder **1714**, interleaver **1715**, mapper **1716**, multiplier **1717**, delayer **1718**, subtractor **1719**, demapper **1721**, deinterleaver **1722**, and decoder **1723** can also be represented collectively as a deriver. RF unit **1730** can also be represented as a receiver. RF unit **1730** may include an antenna. Demapper **1721** may include a converter.

[0443] Reception device **1700** receives by an antenna the multiplexed signal sent from transmission device **1200**, **1300**, or **1400**, and inputs such a multiplexed signal into RF unit **1730**. Stated differently, RF unit **1730** receives the multiplexed signal via the antenna. The multiplexed signal received by RF unit **1730** is also represented as a received signal, and corresponds to the superposed modulated symbol stream into which the first modulated symbol stream and the second modulated symbol stream are multiplexed. RF unit **1730** generates a baseband received signal from the radio-frequency received signal.

[0444] Demapper **1711** demaps the baseband received signal on the basis of the first constellation of the first mapping scheme to generate the first bit likelihood stream. For example, amplitude coefficient a_1 is reflected in the first constellation for demapping.

[0445] Deinterleaver **1712** permutes the first bit likelihood stream on the basis of a permutation rule that is a reverse rule of the first permutation rule. Such permutation is also referred to as deinterleaving. Decoder **1713** performs decoding that is based on the first error control coding scheme by use of the first bit likelihood stream permuted by deinterleaver **1712**, and outputs the decoding result as the first data series.

[0446] Here, of the received signal corresponding to the superposed modulated symbol stream, demapper **1711** treats the components corresponding to the second modulated symbols in the second data series as an unknown signal (noise), and performs demapping on the basis of the first constellation of the first mapping scheme.

[0447] When only the first data series is to be obtained, reception device **1700** terminates the process upon completing the estimation of the first data series. Meanwhile, when the second data series is to be obtained in addition to the first data series, or when only the second data series is to be obtained, reception device **1700** performs the processes described below to obtain the second data series.

[0448] Encoder **1714** encodes the first data series obtained by decoder **1713** on the basis of the first error control coding scheme to generate the first bit stream. Interleaver **1715** permutes the bits in the first bit stream generated by encoder **1714** on the basis of the first permutation rule. Such permutation is also referred to as interleaving.

[0449] Mapper **1716** maps the first bit stream permuted by interleaver **1715** in accordance with the first mapping

scheme to generate the first modulated symbol stream that includes a plurality of first modulated symbols. Multiplier **1717** multiplies the first modulated symbol stream outputted by mapper **1716** by first amplitude coefficient a_1.

[0450] Delayer **1718** delays the received signal outputted from RF unit **1730** during the time from when RF unit **1730** outputs the baseband received signal to when multiplier **1717** outputs the reproduced first modulated symbol stream.

[0451] Subtractor **1719** subtracts, from the received signal delayed by delayer **1718**, the first modulated symbol stream multiplied by first amplitude coefficient a_1 by multiplier **1717**. Through this, subtractor **1719** removes the components corresponding to the first modulated symbols from the received signal on which the components corresponding to the first modulated symbols, the components corresponding to the second modulated symbols, and noise are superposed. Subsequently, subtractor **1719** outputs a signal on which the components corresponding to the second modulated symbols and noise are superposed as a signal corresponding to the second modulated symbol stream.

[0452] Demapper **1721** demaps the signal outputted from subtractor **1719** as a signal corresponding to the second modulated symbol stream on the basis of the second constellation of the second mapping scheme to generate the second bit likelihood stream. At this time, such a process reflects the first bit stream reproduced through encoding, interleaving, etc. For example, amplitude coefficient a_2 is reflected in the second constellation for demapping.

[0453] Deinterleaver **1722** permutes the second bit likelihood stream on the basis of a permutation rule that is a reverse rule of the second permutation rule. Such permutation is also referred to as deinterleaving. Decoder **1723** decodes the second bit likelihood stream permuted by deinterleaver **1722** on the basis of the second error control coding scheme, and outputs the decoding result as the second data series.

[0454] The following shows an example case in which BPSK is used as the first mapping scheme to describe the operation of demapper **1721**.

[0455] For example, when $S_1(t)$ is the t-th modulated symbol in the first modulated symbol stream generated by mapper **1716**, and $b_1(t)$ is a bit to be mapped onto $S_1(t)$, modulated symbol $S_1(t)$ is given by Equation 25.

[Math. 25]

$$S_1(t)=2\cdot b_1(t)-1 \quad \text{(Equation 25)}$$

[0456] Modulated symbol $S_1(t)$ may also be given by an equation in which the polarity in Equation 25 is reversed. Demapper **1721** demaps signal $S_2(t)$ outputted from subtractor **1719** as a signal corresponding to the t-th modulated symbol in the second modulated symbol stream on the basis of the second constellation of the second mapping scheme.

[0457] Demapper **1721** reverses the bit likelihood corresponding to the bit that most contributes to the real part of the second constellation in accordance with $b_1(t)$ among the bit likelihoods in the bit likelihood stream obtained by demapping. For example, demapper **1721** performs exclusive-OR between b (t) and the bit likelihood corresponding to the bit that most contributes to the real part of the second constellation among the bit likelihoods in the bit likelihood stream obtained by demapping.

[0458] Demapper **1721** then outputs the bit likelihood stream that has undergone the above-described reversal processes as the second bit likelihood stream.

[0459] In the above description, demapper **1721** converts the bit likelihood stream, thereby substantially converting the second mapping scheme (the second constellation). However, demapper **1721** may directly convert the second mapping scheme (the second constellation) without converting the bit likelihood stream. Stated differently, demapper **1721** may convert the correspondence between groups of bits and signal points in the second constellation.

[0460] Also, the conversion performed by demapper **1721** may be performed by the converter included in demapper **1721**.

[0461] Through the above processes, reception device **1700** obtains one of or both of the first data series and the second data series from the signal received by the antenna. Note that in the above, superposition coding is performed on the real part. However, superposition coding may be performed on the imaginary part.

[0462] <Parallel Decoding of Signal Obtained by Variation of Superposition Coding>

[0463] The following describes a reception method for parallel decoding of a signal obtained by the variation of superposition coding according to the present embodiment. The configuration of the transmission device is the same as the configuration of transmission device **1200** shown in FIG. **24**, transmission device **1300** shown in FIG. **25**, or transmission device **1400** shown in FIG. **26**, and thus will not be described. In parallel decoding in the variation of superposition coding, the reception device treats the components of the modulated symbol stream in the first layer as an unknown signal (noise) to decode the second layer, without removing the components of the modulated symbol stream in the first layer included in the received signal.

[0464] FIG. **30** shows an example configuration of reception device **1800** capable of receiving and performing parallel decoding on the signal on which two data series are multiplexed onto two layers by the variation of superposition coding, and capable of obtaining one of or both of the multiplexed two data series. The configuration and operation of reception device **1800** will be described with reference to FIG. **30**.

[0465] Reception device **1800** includes RF unit **1830**, demapper **1810**, deinterleaver **1812**, decoder **1813**, deinterleaver **1822**, and decoder **1823**. These structural components may also be implemented as dedicated or general-purpose circuits. Demapper **1810**, deinterleaver **1812**, decoder **1813**, deinterleaver **1822**, and decoder **1823** can also be represented collectively as a deriver. RF unit **1830** can also be represented as a receiver. RF unit **1830** may include an antenna.

[0466] Reception device **1800** receives by an antenna the multiplexed signal sent from transmission device **1200**, **1300**, or **1400**, and inputs such a multiplexed signal into RF unit **1830**. Stated differently, RF unit **1830** receives the multiplexed signal via the antenna. The multiplexed signal received by RF unit **1830** can also be represented as a received signal. RF unit **1830** generates a baseband received signal from the radio-frequency received signal.

[0467] Demapper **1810** demaps the baseband received signal to generate the first bit likelihood stream and the second bit likelihood stream. For example, demapper **1810** performs demapping on the basis of a variation superposition constellation that shows the arrangement of signal points of superposed modulated symbols obtained by super-

posing the first modulated symbols and the second modulated symbols by the variation of superposition coding.

[0468] The variation superposition constellation is determined in accordance with the first constellation of the first mapping scheme, the second constellation of the second mapping scheme, first amplitude coefficient a_1, second amplitude coefficient a_2, etc.

[0469] FIG. **31** shows an example of a BPSK constellation. More specifically, two BPSK signal points are plotted in the complex plane, with the lateral axis representing the real part (the real component) and the vertical axis representing the imaginary part (the imaginary component). Note that BPSK means binary phase shift keying.

[0470] For example, in BPSK, a bit (0 or 1) is associated with a modulated symbol indicating a complex number on the basis of the constellation shown in FIG. **31**. In this example, a bit is associated with a modulated symbol indicating a complex number whose imaginary part is 0. Specifically, in this example, a bit is substantially associated with a modulated symbol indicating a real number.

[0471] FIG. **32** shows the variation superposition constellation that supports the variation of superposition coding. More specifically, the variation superposition constellation is a combination of the BPSK constellation shown in FIG. **31** and the Nu-256QAM constellation shown in FIG. **5**.

[0472] Even more specifically, the Nu-256QAM constellation (256 signal points) is placed on each of two regions in the complex plane in accordance with the two signal points of the BPSK constellation. These two regions, each corresponding to Nu-256QAM constellation, may partially overlap with each other. The present variation superposition constellation reflects the conversion performed on the second modulated symbol stream.

[0473] For example, when the Nu-256QAM constellation is combined with a signal point with a positive real part among the two signal points of the BPSK constellation, the polarity of the real part of the Nu-256QAM constellation is reversed. More specifically, a first signal point, a second signal point, and a third signal point are shown in FIG. **32**. When the polarity of the real part of the Nu-256QAM constellation is not reversed, the first signal point and the third signal point correspond to the same bit values of the second bit stream.

[0474] When the polarity of the real part of the Nu-256QAM constellation is reversed, the first signal point and the second signal point correspond to the same bit values of the second bit stream. Stated differently, such reversal enables a plurality of signal points that correspond to the same bit values of the second bit stream to approach each other and converge. This mitigates the effect of noise on demapping.

[0475] Demapper **1810** performs demapping on the basis of the variation superposition constellation as shown in FIG. **32**. Stated differently, demapper **1810** generates the first bit likelihood stream with the modulated symbol stream of the second layer remaining unknown, and generates the second bit likelihood stream with the modulated symbol stream of the first layer remaining unknown.

[0476] Note that demapper **1810** may use the first constellation of the first mapping scheme to generate the first bit likelihood stream, and may use the above-described variation superposition constellation to generate the second bit likelihood stream.

[0477] The first constellation, when used to generate the first bit likelihood stream, enables demapper **1810** to reduce the number of signal points that should be considered in generating the first bit likelihood stream, compared to when the variation superposition constellation is also used to generate the first bit likelihood stream. This thus enables demapper **1810** to reduce the number of arithmetic computations.

[0478] Demapper **1810** corresponds, for example, to the first demapper that demaps the received signal to generate the first bit likelihood stream and the second demapper that demaps the received signal to generate the second bit likelihood stream. Demapper **1810** may include the first demapper that demaps the received signal to generate the first bit likelihood stream and the second demapper that demaps the received signal to generate the second bit likelihood stream.

[0479] Demapper **1810** may convert the second bit likelihood stream that is generated using not the variation superposition constellation but the superposition constellation, in accordance with the first bit likelihood stream. This enables demapper **1810** to obtain the same second bit likelihood stream as the second bit likelihood stream that is generated using the variation superposition constellation.

[0480] Demapper **1810** may convert the multiplexed signal without using the variation superposition constellation to obtain the same second bit likelihood stream as the second bit likelihood stream that is generated using the variation superposition constellation.

[0481] Deinterleaver **1812** permutes the first bit likelihood stream on the basis of a permutation rule that is a reverse rule of the first permutation rule. Such permutation is also referred to as deinterleaving. Decoder **1813** decodes the first bit likelihood stream permuted by deinterleaver **1812** on the basis of the first error control coding scheme, and outputs the decoding result as the first data series.

[0482] Deinterleaver **1822** permutes the second bit likelihood stream on the basis of a permutation rule that is a reverse rule of the second permutation rule. Such permutation is also referred to as deinterleaving. Decoder **1823** decodes the second bit likelihood stream permuted by deinterleaver **1822** on the basis of the second error control coding scheme, and outputs the decoding result as the second data series.

[0483] Through the above processes, reception device **1800** obtains one of or both of the first data series and the second data series from the signal received by the antenna. Note that in the above, superposition coding is performed on the real part. However, superposition coding may be performed on the imaginary part.

[0484] Note that transmission devices **1200**, **1300**, and **1400**, and reception devices **1500**, **1600**, **1700**, and **1800** may omit permutation (interleaving and deinterleaving) as in the case of Embodiment 1. Stated differently, their respective interleavers and deinterleavers are optional structural components, and thus may not be included in these devices.

[0485] Interleaving and deinterleaving, however, make a pair. As such, when transmission devices **1200**, **1300**, and **1400** include their respective interleavers, reception devices **1500**, **1600**, **1700**, and **1800** basically include their respective deinterleavers and interleavers. Meanwhile, when transmission devices **1200**, **1300**, and **1400** do not include their

respective interleavers, reception devices **1500**, **1600**, **1700**, and **1800** do not include their respective deinterleavers and interleavers.

[0486] Amplitude coefficient a_1 may be reflected in the mapping for generating the first modulated symbols performed in reception devices **1500**, **1600**, and **1700**. In such a case, the multiplication of amplitude coefficient a_1 may be omitted. Reception devices **1500**, **1600**, and **1700** thus may not include multipliers **1517**, **1617**, and **1717**, respectively.

[0487] Error control coding on the first data series and the second data series may be performed by an external device. In such a case, transmission devices **1200**, **1300**, and **1400** may omit error control coding, and may not include encoders **1211**, **1221**, **1311**, **1321**, **1411**, and **1421**.

[0488] As described above, superposition coding may be performed on the real part or on the imaginary part. Furthermore, superposition coding may be performed in a predetermined direction in the complex plane. For example, superposition coding may be performed in an oblique direction in an orthogonal coordinate system having a real axis and an imaginary axis.

[0489] Specifically, a first modulated symbol may include a component in the first direction in the complex plane, and a second modulated symbol may include a component in the first direction and a component in the second direction perpendicular to the first direction. The component that a first modulated symbol includes in the first direction and the component that a second modulated symbol includes in the first direction may be superposed on a single component in the first direction. In this case, for example, the polarity of the component of the second modulated symbol in the first direction is controlled in accordance with the component of the first modulated symbol in the first direction.

[0490] Specifically, in the description given herein, a real component may be replaced with an imaginary component, replaced with a component in the first direction that is one direction in the complex plane, or replaced with a component in the second direction perpendicular to the first direction. In addition, an imaginary component may be replaced with a real component, replaced with a component in the first direction that is one direction in the complex plane, or replaced with a component in the second direction perpendicular to the first direction.

[0491] For example, a component that a modulated symbol includes in the first direction includes a real part and an imaginary part, and the polarity of such a component is reversed, thus reversing both of the polarities of the real and imaginary parts of the component. Furthermore, the polarity of the component may be determined in accordance with the polarity of the real part of the component or in accordance with the polarity of the imaginary part of the component.

[0492] Specifically, when the polarity of the real part of the component is positive, the polarity of the component may be determined to be positive, and when the polarity of the real part of the component is negative, the polarity of the component may be determined to be negative. Alternatively, when the polarity of the imaginary part of the component is positive, the polarity of the component may be determined to be positive, and when the polarity of the imaginary part of the component is negative, the polarity of the component may be determined to be negative.

[0493] Furthermore, the direction of the real axis may be the first direction or may be the second direction perpendicular to the first direction. The direction of the imaginary axis may be the first direction or may be the second direction perpendicular to the first direction.

[0494] The first constellation of the first mapping scheme may have a plurality of signal points dispersed in only the first direction. Furthermore, the second constellation of the second mapping scheme may have a plurality of signal points dispersed in both the first direction and the second direction.

[0495] The first mapping scheme is not limited to BPSK. A constellation having three or more signal points may be used as the first constellation of the first mapping scheme. For example, a constellation having three or more signal points on a straight line in the complex plane may be used as the first constellation of the first mapping scheme.

[0496] In the first constellation of the first mapping scheme, the polarity in the first direction of the second mapping scheme is reversed for two signal points adjacent to each other along a straight line in the first direction. Specifically, the polarity is reversed such that a second modulated symbol superposed on a first modulated symbol corresponding to one of the two signal points and a second modulated symbol superposed on a first modulated symbol corresponding to the other have different polarities in the first direction. Thus, the polarities in the first direction are alternated along a sequence of three or more signal points on a straight line in the first direction.

[0497] FIG. **33** is a flowchart of example operations performed by transmission device **1200**. First, mapper **1213** maps the first bit stream of the first data series to generate the first modulated symbol stream of the first data series (S**501**). Then, mapper **1223** maps the second bit stream of the second data series to generate the second modulated symbol stream of the second data series (S**502**).

[0498] Converter **1225** subjects the second modulated symbol stream to conversion in accordance with the first modulation symbol stream, in only the first direction among the first direction and the second direction (S**503**). Here, the first direction and the second direction are two directions perpendicular to each other in the complex plane in which the first modulated symbol stream and the second modulated symbol stream are represented.

[0499] Specifically, converter **1225** does not subject a component that the second modulated symbol stream includes in the second direction to conversion in accordance with the first modulation symbol stream, but subjects a component that the second modulated symbol stream includes in the first direction to the conversion. Furthermore, converter **1225** converts the second modulated symbol stream in accordance with the first bit stream, thereby subjecting the second modulated symbol stream to conversion in accordance with the first modulated symbol stream.

[0500] Next, the superposer superposes the first modulated symbol stream and the second modulated symbol stream that has been subjected to conversion in accordance with the first modulated symbol stream at a predetermined amplitude ratio, thereby generating the multiplexed signal (S**504**). Here, the superposer is constituted by first multiplier **1214**, second multiplier **1224**, and adder **1230**. RF unit **1240** then sends the generated multiplexed signal (S**505**).

[0501] Note that in the above operation example, transmission device **1200** converts the second modulated symbol stream in accordance with the first bit stream, thereby subjecting the second modulated symbol stream to conversion in accordance with the first modulated symbol stream

(S**503**). Alternatively, transmission device **1200** may convert the second modulated symbol stream in accordance with the first modulated symbol stream, as in the case of transmission device **1300**, thereby subjecting the second modulated symbol stream to conversion in accordance with the first modulated symbol stream.

[0502] Alternatively, as in the case of transmission device **1400**, transmission device **1200** may convert the second bit stream or the second mapping scheme (the second constellation) used to generate the second modulated symbol stream, in accordance with the first bit stream. Through this, the second modulated symbol stream may be subjected to conversion in accordance with the first modulated symbol stream. In such a case, the second bit stream or the second mapping scheme is converted before the second modulated symbol stream is generated.

[0503] Stated differently, the second bit stream, the second mapping scheme, or the second modulated symbol stream may be converted in accordance with the first bit stream or the first modulated symbol stream, thereby subjecting the second modulated symbol stream to conversion in accordance with the first modulated symbol stream.

[0504] Converter **1225** may subject the second modulated symbol stream to conversion in accordance with the first modulated symbol stream, thereby controlling the polarity of a component that each modulated symbol in the second modulated symbol stream includes in the first direction. Through this, converter **1225** may reverse the polarity of a component that each second modulated symbol includes in the first direction when a component that the corresponding first modulated symbol includes in the first direction satisfies a predetermined condition.

[0505] The predetermined condition may be a condition that the polarity of a component that the first modulated symbol includes in the first direction should be a predetermined polarity, or may be a condition that the component that the first modulated symbol includes in the first direction should be within a predetermined range of one or more. The predetermined range of one or more may be a positive range or a negative range.

[0506] FIG. **34** is a flowchart of example operations performed by reception devices **1500**, **1600**, **1700**, and **1800**. First, the receiver receives the multiplexed signal (S**601**). Here, the receiver is RF unit **1530** of reception device **1500**, RF unit **1630** of reception device **1600**, RF unit **1730** of reception device **1700**, or RF unit **1830** of reception device **1800**.

[0507] The multiplexed signal is a signal into which a plurality of data series including the first data series in the first layer and the second data series in the second layer are multiplexed. The multiplexed signal is also a signal on which the first modulated symbol stream and the second modulated symbol stream are superposed at a predetermined amplitude ratio.

[0508] The first modulated symbol stream is a modulated symbol stream that is generated by mapping the first bit stream of the first data series. The second modulated symbol stream is a modulated symbol stream that is generated by mapping the second bit stream of the second data series, and that has been subjected to conversion in accordance with the first modulated symbol stream in only the first direction among the first direction and the second direction in a complex plane.

[0509] Next, the deriver derives at least one of the first data series or the second data series from the multiplexed signal (S**602**).

[0510] The deriver of reception device **1500** is constituted, for example, by demapper **1511**, deinterleaver **1512**, decoder **1513**, encoder **1514**, interleaver **1515**, mapper **1516**, multiplier **1517**, delayer **1518**, subtractor **1519**, converter **1520**, demapper **1521**, deinterleaver **1522**, and decoder **1523**.

[0511] The deriver of reception device **1600** is constituted, for example, by demapper **1611**, deinterleaver **1612**, decoder **1613**, encoder **1614**, interleaver **1615**, mapper **1616**, multiplier **1617**, delayer **1618**, subtractor **1619**, converter **1620**, demapper **1621**, deinterleaver **1622**, and decoder **1623**.

[0512] The deriver of reception device **1700** is constituted, for example, by demapper **1711**, deinterleaver **1712**, decoder **1713**, encoder **1714**, interleaver **1715**, mapper **1716**, multiplier **1717**, delayer **1718**, subtractor **1719**, demapper **1721**, deinterleaver **1722**, and decoder **1723**.

[0513] The deriver of reception device **1800** is constituted, for example, by demapper **1810**, deinterleaver **1812**, decoder **1813**, deinterleaver **1822**, and decoder **1823**.

[0514] In accordance with the above operations, the multiplexed signal is received into which the first modulated symbol stream and the second modulated symbol stream that has been subjected to conversion in accordance with the first modulated symbol stream in the first direction are multiplexed. Then, at least one of the first data series or the second data series is derived from such a multiplexed signal. Stated differently, such a configuration enables: the reception of the multiplexed signal that has been superposed in such a manner that reduces performance degradation at the time of parallel decoding: and an efficient derivation of one of or both of the first data series and the second data series from such a multiplexed signal.

[0515] Reception device **1800** as shown in FIG. **30** that performs parallel decoding has lower performance in decoding the second layer than that of reception devices **1500**, **1600**, and **1700** as shown in FIG. **27**, FIG. **28**, and FIG. **29** that perform sequential decoding.

[0516] As described above, reception device **1800** according to the present embodiment that performs parallel decoding has lower performance in decoding the second data series transmitted on the second layer than that of reception devices **1500**, **1600**, and **1700** that perform sequential decoding. However, reception device **1800** reduces the number of structural components required to decode the second layer.

[0517] More specifically, reception device **1800** eliminates the need for the structural components that are required by reception devices **1500**, **1600**, and **1700** shown in FIG. **27**, FIG. **28**, and FIG. **29** performing sequential decoding to reproduce the modulated symbol stream of the first layer. Stated differently, encoders **1514**, **1614**, and **1714**, interleavers **1515**, **1615**, and **1715**, mappers **1516**, **1616**, and **1716**, and multipliers **1517**, **1617**, and **1717** are not required.

[0518] Reception device **1800** also eliminates the need for delayers **1518**, **1618**, and **1718** that delay the received signal, and subtractors **1519**, **1619**, and **1719** that remove the components of the modulated symbols in the first layer reproduced from the received signal.

[0519] The circuit size can be thus reduced. Reception device **1800** also requires a smaller number of arithmetic computations and lower power consumption than those required by reception devices **1500**, **1600**, and **1700**.

[0520] Reception devices **1500**, **1600**, and **1700** shown in FIG. **27**, FIG. **28**, and FIG. **29** that perform sequential decoding demodulate the first layer in the received signal to obtain the first data series, and generate the first modulated symbol stream from the obtained first data series. Subsequently, reception devices **1500**, **1600**, and **1700** start demodulating the second layer in the received signal to obtain the second data series.

[0521] Meanwhile, reception device **1800** according to the present embodiment that performs parallel decoding is capable of simultaneously obtaining the first data series and the second data series in parallel, thereby reducing processing delays.

[0522] The reception device may observe the SNR of the received signal to make selection between parallel decoding to be performed when the SNR is high and sequential decoding to be performed when the SNR is low.

[0523] In such a case, reception device **1500** shown in FIG. **27** includes, for example, a controller that makes selection between sequential decoding and parallel decoding depending on the SNR. Such a controller may be included in RF unit **1530** or demapper **1521**. Furthermore, demapper **1521** is configured to perform demapping based on the variation superposition constellation, which is described as an operation performed by demapper **1810** shown in FIG. **30**, in addition to demapping that is based on the second constellation.

[0524] Demapper **1521** switches between demapping to be performed on the signal outputted from converter **1520** on the basis of the second constellation and demapping to be performed on the signal outputted from RF unit **1530** on the basis of the variation superposition constellation. For example, demapper **1521** switches between these demapping operations in accordance with a control signal from the controller.

[0525] Note that such a configuration is also obtained by a combination of reception device **400** shown in FIG. **11**, reception device **1500** (converter **1520**, demapper **1521**, etc.) shown in FIG. **27**, and reception device **1800** (demapper **1810**, etc.) shown in FIG. **30**.

[0526] Another configuration is that reception device **1600** shown in FIG. **28** includes, for example, a controller that makes selection between sequential decoding and parallel decoding depending on the SNR. Such a controller may be included in RF unit **1630** or demapper **1621**. Furthermore, demapper **1621** is configured to perform demapping based on the variation superposition constellation, which is described as an operation performed by demapper **1810** shown in FIG. **30**, in addition to demapping that is based on the first bit stream and the second constellation.

[0527] Demapper **1621** switches between demapping to be performed on the signal outputted from converter **1620** on the basis of the second constellation and demapping to be performed on the signal outputted from RF unit **1630** on the basis of the variation superposition constellation. For example, demapper **1621** switches between these demapping operations in accordance with a control signal from the controller.

[0528] Note that such a configuration is also obtained by a combination of reception device **400** shown in FIG. **11**, reception device **1600** (converter **1620**, demapper **1621**, etc.) shown in FIG. **28**, and reception device **1800** (demapper **1810**, etc.) shown in FIG. **30**.

[0529] Still another configuration is that reception device **1700** shown in FIG. **29** includes, for example, a controller that makes selection between sequential decoding and parallel decoding depending on the SNR. Such a controller may be included in RF unit **1730** or demapper **1721**. Furthermore, demapper **1721** is configured to perform demapping based on the variation superposition constellation, which is described as an operation performed by demapper **1810** shown in FIG. **30**, in addition to demapping that is based on the first bit stream and the second constellation.

[0530] Demapper **1721** switches between demapping to be performed on the signal outputted from subtractor **1719** on the basis of the second constellation and demapping to be performed on the signal outputted from RF unit **1730** on the basis of the variation superposition constellation. For example, demapper **1721** switches between these demapping operations in accordance with a control signal from the controller.

[0531] Note that such a configuration is also obtained by a combination of reception device **400** shown in FIG. **11**, reception device **1700** (demapper **1721**, etc.) shown in FIG. **29**, and reception device **1800** (demapper **1810**, etc.) shown in FIG. **30**.

[0532] As described above, reception devices **1500**, **1600**, and **1700** perform parallel decoding when the SNR is high, thereby reducing the number of arithmetic computations and power consumption. Reception devices **1500**, **1600**, and **1700** also perform parallel decoding when the SNR is high, thereby reducing processing delays. Meanwhile, reception devices **1500**, **1600**, and **1700** perform sequential decoding when the SNR is low, thereby increasing the possibility of correctly decoding the second data series.

[0533] In the present embodiment, different mapping rules may be used for the real part and the imaginary part in the second mapping scheme. When superposition coding is performed on the real part, the receiving level of the real part is lower than the receiving level of the imaginary part in the second mapping scheme. Accordingly, in the second mapping scheme, it is better that the noise tolerance of the real part is higher than the noise tolerance of the imaginary part.

[0534] Accordingly, it is suitable to make the multilevel number for mapping the real part smaller than the multilevel number for mapping the imaginary part. A multilevel number is also referred to as a modulation multilevel number. For example, 32-PAM may be used to map the real part in accordance with the second mapping scheme, and 64-PAM may be used to map the imaginary part.

[0535] When a non-uniform constellation is used as the second constellation of the second mapping scheme, it is suitable to use a non-uniform constellation in which the real part corresponds to an SNR lower than that of the imaginary part. For example, non-uniform 32-PAM corresponding to an SNR of about 15 dB may be used to map the real part in accordance with the second mapping scheme, and non-uniform 32-PAM corresponding to an SNR of about 20 dB may be used to map the imaginary part.

[0536] Note that 32 indicated as the multilevel number for mapping the real part and 64 indicated as the multilevel number for mapping the imaginary part are mere examples and may be other values. For example, 4-PAM may be used for the real part, and 8-PAM may be used for the imaginary part. Furthermore, 2-PAM may be used for the real part, and 4-PAM may be used for the imaginary part. Furthermore, 2-PAM may be used for the real part, and 8-PAM may be

used for the imaginary part. Thus, a combination of any values may be used to map the real part and the imaginary part.

[0537] The second data series may include two series. Among the two series, a bit stream in one series is mapped on the real part, and a bit stream in the other series may be mapped on the imaginary part. One modulated symbol stream may be generated as the second modulated symbol stream by mapping the two bit streams in the two series on the real part and the imaginary part. In such a case, PAM that can be used as a single-axis modulation scheme is effective. Note that PAM means pulse amplitude modulation.

[0538] FIG. **35** shows an example of a constellation based on PAM. Specifically, a plurality of signal points based on PAM are plotted in the complex plane, with the lateral axis representing the real part (the real component) and the vertical axis representing the imaginary part (the imaginary component). In this example, non-uniform 8-PAM is used for the real part and non-uniform 16-PAM is used for the imaginary part.

[0539] The constellation shown in FIG. **35** may be used as the second constellation of the second mapping scheme. Specifically, a constellation in which more signal points are arranged in the vertical axis direction corresponding to the imaginary part than in the horizontal axis direction corresponding to the real part may be used as the second constellation of the second mapping scheme.

[0540] FIG. **36** shows an example of the variation superposition constellation corresponding to the variation of superposition coding. Specifically, the constellation shown in FIG. **31** and the constellation shown in FIG. **35** are combined. Stated differently, a BPSK constellation and a constellation based on PAM are combined. The first constellation of the first mapping scheme is the BPSK constellation, and the second constellation of the second mapping scheme is the constellation based on PAM.

[0541] More specifically, in accordance with two signal points in the BPSK constellation, the constellation based on PAM (128 signal points) is placed on each of two regions in the complex plane. The two regions, each corresponding to the constellation based on PAM, may partially overlap each other.

[0542] In this example, first amplitude coefficient a_1 is a positive square root of 0.75, second amplitude coefficient a_2 is a positive square root of 0.25, and two constellations are combined based on the amplitude coefficients. Note that in superposition coding in this example, the imaginary part of the second modulated symbol stream is not multiplied by second amplitude coefficient a_2, and the value of the imaginary part at a signal point included in the second constellation that is a constellation based on PAM is maintained.

[0543] The variation superposition constellation reflects the conversion performed on the second modulated symbol stream. For example, when the constellation based on PAM is combined with a signal point with a positive real part among two signal points in the BPSK constellation, the polarity of the real part in the constellation based on PAM is reversed.

[0544] Note that in the above second mapping scheme, the mapping rule for the real part and the mapping rule for the imaginary part are based on PAM, yet the second mapping scheme may be a mapping scheme other than this.

[0545] For example, arbitrary QAM or arbitrary non-uniform QAM which has arrangement of signal points each with the real part and the imaginary part both represented by PAM of an arbitrary multilevel number may be used as the second mapping scheme. As another example, arbitrary non-uniform QAM which has arrangement of signal points each with the real part and the imaginary part either or both of which are not represented by PAM may be used as the second mapping scheme.

[0546] In this case, for example, the arrangement of signal points each with the real part corresponding to an SNR of about 15 dB and the imaginary part corresponding to an SNR of about 20 dB may be used for the second mapping scheme. As another example, the arrangement of signal points in which the greatest value of the real components at the signal points is smaller than the greatest value of the imaginary components at the signal points may be used as the second mapping scheme.

[0547] In the above, superposition coding is performed on the real part, yet processing on the real part and processing on the imaginary part may be switched, and superposition coding may be performed on the imaginary part. Stated differently, a first modulated symbol may be constituted by the imaginary component, and the imaginary component of the first modulated symbol and the imaginary component of a second modulated symbol may be superposed on a single imaginary component.

[0548] In addition, the second modulated symbol stream is not necessarily subjected to conversion in accordance with the first modulated symbol stream. Specifically, the polarity may not be reversed, and may not need to be controlled. Even if such conversion is not applied, simple superposition coding can be performed along the real axis, the imaginary axis, or one direction corresponding to another axis. Accordingly, this provides more flexible superposition coding.

[0549] Even if conversion is not applied, superposition coding is performed more efficiently by use of a mapping scheme or a constellation according to the direction of superposition coding.

[0550] As described above, a transmission device according to an aspect of the present disclosure is a transmission device that multiplexes a plurality of data series including a first data series in a first layer and a second data series in a second layer, and transmits a multiplexed signal into which the plurality of data series have been multiplexed, the transmission device including: a first mapper that maps a first bit stream of the first data series to generate a first modulated symbol stream of the first data series; a second mapper that maps a second bit stream of the second data series to generate a second modulated symbol stream of the second data series; a converter that subjects the second modulated symbol stream to conversion in accordance with the first modulated symbol stream in only a first direction among the first direction and a second direction perpendicular to each other in a complex plane in which the first modulated symbol stream and the second modulated symbol stream are represented; a superposer that superposes the first modulated symbol stream and the second modulated symbol stream subjected to the conversion, at a predetermined amplitude ratio, to generate the multiplexed signal; and a transmitter that transmits the multiplexed signal.

[0551] Accordingly, for example, the transmission device can convert a component which each modulated symbol in the second modulated symbol stream of the second data series includes in the first direction, in accordance with the first modulated symbol stream of the first data series.

Accordingly, the transmission device can appropriately adjust the second modulated symbol stream of the second data series, in accordance with the first modulated symbol stream of the first data series, thus allowing the second data series to be readily derived from the multiplexed signal into which the first modulated symbol stream and the second modulated symbol stream are multiplexed.

[0552] Accordingly, the transmission device can help inhibiting a processing delay in the reception device, and can efficiently perform processing in a multiplexing scheme that utilizes superposition coding.

[0553] For example, the converter may control a polarity of a component that each of modulated symbols in the second modulated symbol stream includes in the first direction, by subjecting the second modulated symbol stream to the conversion.

[0554] Accordingly, the transmission device can control the polarity of a component that each modulated symbol in the second modulated symbol stream includes in the first direction, in accordance with the first modulated symbol stream. Thus, the transmission device can superpose the first modulated symbol stream and the second modulated symbol stream in which the polarity of each modulated symbol in the first direction is controlled in accordance with the first modulated symbol stream. Stated differently, the transmission device can superpose the first modulated symbol stream and the second modulated symbol stream in which the polarity is appropriately adjusted in accordance with the first modulated symbol stream.

[0555] For example, in superposing the first modulated symbol stream and the second modulated symbol stream, the superposer may superpose a first modulated symbol in the first modulated symbol stream and a second modulated symbol in the second modulated symbol stream in which the polarity is controlled, and in controlling the polarity, when a component that the first modulated symbol includes in the first direction satisfies a predetermined condition, the converter may reverse a polarity of a component that the second modulated symbol includes in the first direction.

[0556] Accordingly, the transmission device can transmit the multiplexed signal on which the first modulated symbol and the second modulated symbol the polarity of which in the first direction is reversed in accordance with the first modulated symbol are superposed. The reversal of the polarity of the second modulated symbol brings a plurality of signal points associated with the same bit group of the second data series close to each other. Accordingly, the transmission device can more appropriately adjust the second modulated symbol stream of the second data series in accordance with the first modulated symbol stream of the first data series, and allows the second data series to be readily derived from the multiplexed signal.

[0557] For example, the converter may subject the second modulated symbol stream to the conversion by converting the second bit stream, a constellation used to map the second bit stream, or the second modulated symbol stream, in accordance with the first bit stream or the first modulated symbol stream.

[0558] Accordingly, the transmission device can convert information corresponding to the second modulated symbol stream in accordance with information corresponding to the first modulated symbol stream, and can appropriately subject the second modulated symbol stream to the conversion in accordance with the first modulated symbol stream.

[0559] For example, the first mapper may map the first bit stream by use of a first constellation in which a plurality of signal points are dispersed in only the first direction among the first direction and the second direction, and the second mapper may map the second bit stream by use of a second constellation in which a plurality of signal points are dispersed in both the first direction and the second direction.

[0560] Accordingly, the transmission device can apply superposition coding in the first direction. Thus, the transmission device can superpose, on a single component, a component that the first modulated symbol in the first modulated symbol stream includes in the first direction, and a component that the second modulated symbol in the second modulated symbol stream includes in the first direction. The transmission device can apply suitable superposition coding in the first direction, using the second modulated symbol stream adjusted with respect to the first direction.

[0561] For example, the second constellation used by the second mapper to map the second bit stream may be a constellation in which noise tolerance in the first direction is higher than noise tolerance in the second direction.

[0562] Accordingly, the transmission device can inhibit the influence of noise tolerance which decreases due to superposition coding, for the first direction in which superposition coding is applied.

[0563] For example, the second constellation used by the second mapper to map the second bit stream may be a constellation in which a multilevel number in the first direction is smaller than a multilevel number in the second direction.

[0564] Accordingly, the transmission device can inhibit the influence of the multilevel number which increases due to superposition coding, for the first direction in which superposition coding is applied. Thus, the transmission device can inhibit the influence of noise tolerance which decreases due to superposition coding, for the first direction in which superposition coding is applied.

[0565] For example, the multiplexed signal generated by the superposer may be a signal on which (i) a first modulated symbol in the first modulated symbol stream, (ii) a first component that a second modulated symbol in the second modulated symbol stream includes in the first direction, and (iii) a second component that the second modulated symbol includes in the second direction are superposed, and a proportion of the first component superposed on the multiplexed signal may be lower than a proportion of the second component superposed on the multiplexed signal.

[0566] Accordingly, the transmission device relatively decreases the first component in the first direction in which superposition coding is applied, and can relatively increase the second component in the second direction perpendicular to the first direction. Thus, the transmission device can appropriately apply superposition coding for the first component, and inhibit the influence caused by superposition coding for the second component.

[0567] For example, the converter may control a polarity of a component that each of modulated symbols in the second modulated symbol stream includes in the first direction, by subjecting the second modulated symbol stream to the conversion, in superposing the first modulated symbol stream and the second modulated symbol stream, the superposer may superpose a first modulated symbol in the first modulated symbol stream and a second modulated symbol in the second modulated symbol stream in which the polarity

is controlled, and in controlling the polarity, the converter may reverse a polarity of a component that the second modulated symbol includes in the first direction when the first modulated symbol corresponds to one of two signal points adjacent to each other in the first constellation, and may maintain the polarity of the component that the second modulated symbol includes in the first direction when the first modulated symbol corresponds to the other of the two signal points.

[0568] Accordingly, the transmission device can appropriately control the polarity of the component that the second modulated symbol in the second modulated symbol stream includes in the first direction, in accordance with the first modulated symbol in the first modulated symbol stream.

[0569] A reception device according to an aspect of the present disclosure includes: a receiver that receives a multiplexed signal into which a plurality of data series including a first data series in a first layer and a second data series in a second layer have been multiplexed, and on which a first modulated symbol stream and a second modulated symbol stream are superposed at a predetermined amplitude ratio, the first modulated symbol stream being generated by mapping a first bit stream of the first data series, the second modulated symbol stream being generated by mapping a second bit stream of the second data series; and a deriver that derives at least one of the first data series or the second data series from the multiplexed signal. The multiplexed signal received by the receiver is a signal on which the first modulated symbol stream and the second modulated symbol stream are superposed, the second modulated symbol stream being subjected to conversion in accordance with the first modulated symbol stream in only a first direction among the first direction and a second direction perpendicular to each other in a complex plane in which the first modulated symbol stream and the second modulated symbol stream are represented.

[0570] Accordingly, the reception device can receive the multiplexed signal into which the first modulated symbol stream and the second modulated symbol stream adjusted in accordance with the first modulated symbol stream with respect to the first direction in the complex plane are multiplexed. Thus, the reception device can appropriately derive the first data series or the second data series from the multiplexed signal into which the first data series and the second data series are appropriately multiplexed. Hence, the reception device can efficiently perform processing in a multiplexing scheme that utilizes superposition coding.

[0571] A transmission method according to an aspect of the present disclosure is a transmission method of multiplexing a plurality of data series including a first data series in a first layer and a second data series in a second layer, and transmitting a multiplexed signal into which the plurality of data series have been multiplexed, the transmission method including: mapping a first bit stream of the first data series to generate a first modulated symbol stream of the first data series; mapping a second bit stream of the second data series to generate a second modulated symbol stream of the second data series; subjecting the second modulated symbol stream to conversion in accordance with the first modulated symbol stream in only a first direction among the first direction and a second direction perpendicular to each other in a complex plane in which the first modulated symbol stream and the second modulated symbol stream are represented; superposing the first modulated symbol stream and the second modulated symbol stream subjected to the conversion, at a predetermined amplitude ratio, to generate the multiplexed signal; and transmitting the multiplexed signal.

[0572] Accordingly, for example, the transmission device, etc. employing this transmission method can convert the component that each modulated symbol in the second modulated symbol stream of the second data series includes in the first direction, in accordance with the first modulated symbol stream of the first data series. The transmission device, etc. employing this transmission method thus can appropriately adjust the second modulated symbol stream of the second data series in accordance with the first modulated symbol stream of the first data series, and allow the second data series to be readily derived from the multiplexed signal into which the first modulated symbol stream and the second modulated symbol stream are multiplexed.

[0573] Thus, the transmission device, etc. employing this transmission method can help inhibiting a processing delay in the reception device, and can efficiently perform processing in a multiplexing scheme that utilizes superposition coding.

[0574] For example, a polarity of a component that each of modulated symbols in the second modulated symbol stream includes in the first direction may be controlled by the second modulated symbol stream being subjected to the conversion.

[0575] Accordingly, the transmission device, etc. employing this transmission method can control the polarity of a component that each modulated symbol in the second modulated symbol stream includes in the first direction, in accordance with the first modulated symbol stream. Thus, the transmission device, etc. employing this transmission method can superpose the first modulated symbol stream, and the second modulated symbol stream in which the polarity of each modulated symbol in the first direction is controlled in accordance with the first modulated symbol stream. Stated differently, the transmission device, etc. employing this transmission method can superpose the first modulated symbol stream, and the second modulated symbol stream in which the polarity is appropriately adjusted in accordance with the first modulated symbol stream.

[0576] For example, in superposing the first modulated symbol stream and the second modulated symbol stream, a first modulated symbol in the first modulated symbol stream and a second modulated symbol in the second modulated symbol stream in which the polarity is controlled may be superposed, and in controlling the polarity, when a component that the first modulated symbol includes in the first direction satisfies a predetermined condition, a polarity of a component that the second modulated symbol includes in the first direction may be reversed.

[0577] Thus, the transmission device, etc. employing this transmission method can transmit the multiplexed signal on which the first modulated symbol and the second modulated symbol the polarity of which in the first direction is reversed in accordance with the first modulated symbol are superposed. The reversal of the polarity of the second modulated symbol brings a plurality of signal points associated with the same bit group of the second data series close to each other. Thus, the transmission device, etc. employing this transmission method can more appropriately adjust the second modulated symbol stream of the second data series in accordance with the first modulated symbol stream of the

first data series, and allow the second data series to be readily derived from the multiplexed signal.

[0578] For example, the second modulated symbol stream may be subjected to the conversion by converting the second bit stream, a constellation used to map the second bit stream, or the second modulated symbol stream, in accordance with the first bit stream or the first modulated symbol stream.

[0579] Thus, the transmission device, etc. employing this transmission method can convert information corresponding to the second modulated symbol stream in accordance with information corresponding to the first modulated symbol stream, and can appropriately subject the second modulated symbol stream to the conversion in accordance with the first modulated symbol stream.

[0580] For example, in mapping the first bit stream, a first constellation may be used to map the first bit stream, the first constellation being a constellation in which a plurality of signal points are dispersed in only the first direction among the first direction and the second direction, and in mapping the second bit stream, a second constellation may be used to map the second bit stream, the second constellation being a constellation in which a plurality of signal points are dispersed in both the first direction and the second direction.

[0581] Accordingly, the transmission device, etc. employing this transmission method can apply superposition coding in the first direction. Thus, the transmission device, etc. employing this transmission method can superpose, onto a single component, a component that the first modulated symbol in the first modulated symbol stream includes in the first direction and a component that the second modulated symbol in the second modulated symbol stream includes in the first direction. Further, the transmission device, etc. employing this transmission method can apply suitable superposition coding in the first direction, using the second modulated symbol stream adjusted with respect to the first direction.

[0582] For example, in mapping the second bit stream, the second constellation used to map the second bit stream may be a constellation in which noise tolerance in the first direction is higher than noise tolerance in the second direction.

[0583] Accordingly, the transmission device, etc. employing this transmission method can inhibit the influence of noise tolerance that decreases due to superposition coding, for the first direction in which superposition coding is applied.

[0584] For example, in mapping the second bit stream, the second constellation used to map the second bit stream may be a constellation in which a multilevel number in the first direction is smaller than a multilevel number in the second direction.

[0585] Accordingly, the transmission device, etc. employing this transmission method can inhibit the influence of a multilevel number which increases due to superposition coding, for the first direction in which superposition coding is applied. Specifically, the transmission device, etc. employing this transmission method can inhibit the influence of noise tolerance which decreases due to superposition coding, for the first direction in which superposition coding is applied.

[0586] For example, in generating the multiplexed signal, the multiplexed signal generated may be a signal on which (i) a first modulated symbol in the first modulated symbol stream, (ii) a first component that a second modulated symbol in the second modulated symbol stream includes in the first direction, and (iii) a second component that the second modulated symbol includes in the second direction are superposed, and a proportion of the first component superposed on the multiplexed signal may be lower than a proportion of the second component superposed on the multiplexed signal.

[0587] Accordingly, the transmission device, etc. employing this transmission method can make the first component in the first direction in which superposition coding is applied relatively small and can make the second component in the second direction perpendicular to the first direction relatively large. Thus, the transmission device, etc. employing this transmission method can appropriately apply superposition coding to the first component, and can inhibit the influence caused by superposition coding on the second component.

[0588] For example, a polarity of a component that each of modulated symbols in the second modulated symbol stream includes in the first direction may be controlled by the second modulated symbol stream being subjected to the conversion, in superposing the first modulated symbol stream and the second modulated symbol stream, a first modulated symbol in the first modulated symbol stream and a second modulated symbol in the second modulated symbol stream in which the polarity is controlled may be superposed, and in controlling the polarity, a polarity of a component that the second modulated symbol includes in the first direction may be reversed when the first modulated symbol corresponds to one of two signal points adjacent to each other in the first constellation, and the polarity of the component that the second modulated symbol includes in the first direction may be maintained when the first modulated symbol corresponds to the other of the two signal points.

[0589] Accordingly, the transmission device, etc. employing this transmission method can appropriately control the polarity of a component that the second modulated symbol in the second modulated symbol stream includes in the first direction, in accordance with the first modulated symbol in the first modulated symbol stream.

[0590] A receiving method according to an aspect of the present disclosure includes: receiving a multiplexed signal into which a plurality of data series including a first data series in a first layer and a second data series in a second layer have been multiplexed, and on which a first modulated symbol stream and a second modulated symbol stream are superposed at a predetermined amplitude ratio, the first modulated symbol stream being generated by mapping a first bit stream of the first data series, the second modulated symbol stream being generated by mapping a second bit stream of the second data series; and deriving at least one of the first data series or the second data series from the multiplexed signal. In receiving the multiplexed signal, the multiplexed signal received is a signal on which the first modulated symbol stream and the second modulated symbol stream are superposed, the second modulated symbol stream being subjected to conversion in accordance with the first modulated symbol stream in only a first direction among the first direction and a second direction perpendicular to each other in a complex plane in which the first modulated symbol stream and the second modulated symbol stream are represented.

[0591] Accordingly, the reception device, etc. employing this reception method can receive a multiplexed signal into which the first modulated symbol stream and the second modulated symbol stream adjusted in accordance with the first modulated symbol stream with respect to the first direction in the complex plane are multiplexed. Accordingly, the reception device, etc. employing this reception method can appropriately derive the first data series or the second data series from the multiplexed signal into which the first data series and the second data series are appropriately multiplexed. Thus, the reception device, etc. employing this reception method can efficiently perform processing in a multiplexing scheme that utilizes superposition coding.

[0592] Note that although the above description of the embodiments illustrates an example in which two data series are multiplexed and transmitted on the two layers to simplify the description, it is clear that the present disclosure is readily extendable to multiplexing and transmitting three or more data series, following the embodiments.

[0593] Also, FIG. **1**, FIG. **13** to FIG. **15**, and FIG. **24** to FIG. **26** illustrate an example in which a radio-frequency signal is sent from an external antenna connected to the transmission device that does not include an antenna, but the transmission device may include an antenna such that a radio-frequency signal is sent from such an antenna of the transmission device.

[0594] Also, FIG. **2**, FIG. **7**, FIG. **16** to FIG. **19**, and FIG. **27** to FIG. **30** illustrate an example in which a radio-frequency signal is sent from an external antenna connected to the reception device that does not include an antenna, but the reception device may include an antenna such that a radio-frequency signal is sent from such an antenna of the reception device.

[0595] Also, the antennas used to send/receive a radio-frequency signal may be an antenna unit that includes a plurality of antennas.

[0596] Although not illustrated in FIG. **1**, FIG. **13** to FIG. **15**, and FIG. **24** to FIG. **26**, the transmission device may include a frame configuration unit that arranges a superposed signal generated by the adder in accordance with a predetermined frame configuration to generate a frame, and outputs such a frame into the RF unit.

[0597] Here, the configuration of a frame generated by the frame configuration unit may be uniform, or may be changed in accordance with a control signal sent from a controller not illustrated. The frame configuration unit arranges, in a frame, a superposed modulated symbol stream in which the first data series and the second data series are multiplexed, in accordance with a predetermined rule.

[0598] The frame generated by the frame configuration unit may include a pilot symbol, a control information symbol, a preamble, etc. in addition to a data symbol. Note that a pilot symbol, a control information symbol, and a preamble can each be referred to by another name.

[0599] For example, a pilot symbol may be a symbol that is generated by mapping a bit stream known to the reception device on the basis of PSK modulation such as BPSK and QPSK. A pilot symbol may also be a symbol that includes an amplitude and in-phase (or complex value) known to the reception device. A pilot symbol may also be a symbol, according to which the reception device can estimate the amplitude and in-phase (or complex value) sent by the transmission device.

[0600] Then, the reception device uses the pilot symbol to perform frequency synchronization, time synchronization, channel estimation, etc. on the received signal. Channel estimation is also referred to as the estimation of channel state information (CSI).

[0601] A control information symbol is a symbol used to transmit information that should be notified to the reception device as information required to demodulate a received signal and obtain a desired data series.

[0602] For example, the transmission device sends a control information symbol corresponding to control information. The control information may indicate the mapping (modulation) scheme and error control coding scheme used for each data series, the code rate and code length of the error control coding scheme, and the positions where the modulated symbols of each data series are arranged in a frame, etc. The reception device demodulates the control information symbol to obtain the control information. The reception device then demodulates a data symbol on the basis of the obtained control information to obtain the data series.

[0603] The control information may also include information used to control the operations of an application, such as settings information for an upper layer.

[0604] A preamble is a signal added at the leading end of a frame. For example, the reception device may receive a signal that includes a preamble to perform processes such as frame detection and frame synchronization on the basis of the preamble. A preamble may also include a pilot symbol and a control information symbol. A frame may also include not only a preamble but also a postamble, which is a signal added at the rear end of the frame.

[0605] The encoders use low density parity check (LDPC) coding, turbo coding, etc., for example, as the error control coding scheme. The encoders may also use another coding scheme.

[0606] The transmission devices illustrated in FIG. **1**, FIG. **13** to FIG. **15**, and FIG. **24** to FIG. **26** include their respective interleavers, but may not include interleavers as described above. In such a case, the transmission device may input a bit stream generated by each encoder directly into each mapper or may perform a process different from interleaving on the bit stream before inputting it into each mapper. When the transmission device does not include any interleavers, the reception devices illustrated in FIG. **2**, FIG. **7**, FIG. **16** to FIG. **19**, and FIG. **27** to FIG. **30** may not include any deinterleavers.

[0607] The deinterleavers of the reception devices illustrated in FIG. **2**, FIG. **7**, FIG. **16** to FIG. **19**, and FIG. **27** to FIG. **30** perform permutation on the basis of a permutation rule that is a reverse rule of the permutation rule used by the transmission side, but may perform an operation different from such permutation. For example, each deinterleaver may input into the corresponding decoder a plurality of bit likelihoods of a bit likelihood stream generated by the corresponding demapper in the bit order required for decoding performed by the decoder.

[0608] In the above description, although superposition coding and the variation of superposition coding are applied to wireless transmission, but the present disclosure is not limited to the application to wireless transmission, and thus may be applied to wired transmission, optical transmission, etc. and also to storage into a recording medium. A fre-

quency band used for transmission is not limited to a radio-frequency band, and thus may be a baseband.

[0609] "A plurality of" used in the present disclosure is synonymous with "two or more". Ordinal numbers such as first, second, and third may be removed from the expressions, replaced by other wording, or newly added as appropriate.

[0610] Note that the devices, methods, etc. according to the present disclosure are not limited to the respective embodiments, and thus allow for various modifications for implementation. For example, in the embodiments, the technology of the present disclosure is implemented as a communication device (transmission device or reception device), but the technology of the present disclosure is not limited to this, and thus may be implemented as software used to execute a communication method (transmission method or reception method) executed by such a communication device.

[0611] Also, two or more structural components of the transmission device or the reception device may be integrated as a single structural component, and a single structural component may be divided into two or more structural components. Also, the transmission device and the reception device may form a single transmission/reception device. In such a case, a plurality of structural components of the same kind may be integrated into a single structural component. For example, a transmission antenna and a reception antenna may be formed by a single antenna.

[0612] Also, for example, a process performed by a specified structural component may be performed by another structural component. The order of performing processes may be changed, and a plurality of processes may be performed in parallel.

[0613] Note that a program for executing the above-described communication method may be previously stored in a read only memory (ROM) to be executed by a central processing unit (CPU).

[0614] Moreover, the program for executing the above communication method may be stored in a computer-readable recording medium. Such a program stored in the recording medium may be recorded in a random access memory (RAM) in a computer so that the computer may execute the communication method according to the program.

[0615] Note that each of the structural components according to the embodiments, etc. may be implemented as a large-scale integration (LSI), which is typically an integrated circuit. The structural components may take the form of individual chips, or one or more or all of the structural components according to the embodiments may be encapsulated into a single chip. Although LSI is illustrated here as an example, such chips may be referred to as integrated circuits (ICs), system LSIs, super LSIs, or ultra LSIs, depending on their degree of integration.

[0616] The ICs are not limited to LSIs. Each of the structural components thus may be implemented as a dedicated circuit or a general-purpose processor. A field programmable gate array (FPGA) that allows for programming after the manufacture of an LSI, or a reconfigurable processor that allows for reconfiguration of the connection and the settings of circuit cells inside an LSI may be employed.

[0617] Furthermore, when the progress in a semiconductor technology or another derivative technology results in a new IC technology that replaces LSI, such new technology may of course be employed to integrate the devices or some of their structural components according to the embodiments. For example, adaptation to biotechnology is possible.

[0618] Furthermore, when the progress in a semiconductor technology or another derivative technology results in a new IC technology that replaces LSI, such new technology may of course be employed to integrate the devices or some of their structural components according to the embodiments. For example, adaptation to biotechnology is possible.

[0619] In this disclosure, the phrase of "at least one of A or B" should be interpreted that the phrase includes only A, only B, and both A and B.

[0620] Although only some exemplary embodiments of the present disclosure have been described in detail above, those skilled in the art will readily appreciate that many modifications are possible in the exemplary embodiments without materially departing from the novel teachings and advantages of the present disclosure. Accordingly, all such modifications are intended to be included within the scope of the present disclosure.

INDUSTRIAL APPLICABILITY

[0621] The present disclosure is applicable to a wireless communication system and a broadcasting system, etc. The present disclosure is widely applicable to a system for multiplexing a plurality of data series by superposition coding.

[0622] The present disclosure is also applicable to a wired communication system, etc. such as a power line communication (PLC) system, an optical communication system, and a digital subscriber line (DSL) system. The present disclosure is further applicable to a storage system, etc. for recording data into a recording medium such as an optical disk and a magnetic disk.

1-26. (canceled)

27. A transmission device comprising:

a signal processing circuit configured to generate a multiplexed signal on which a first signal and a second signal are superposed at an amplitude ratio, the first signal having a first in-phase component and a first orthogonal component, the second signal having a second in-phase component and a second orthogonal component, the second signal having been subjected to QPSK modulation; and

a transmitter configured to transmit the multiplexed signal from a transmission antenna, wherein

the signal processing circuit is further configured to convert the second signal to generate the multiplexed signal such that:

(i) a polarity of the second in-phase component is inverted if a polarity of the first in-phase component is positive; and

(ii) a polarity of the second orthogonal component is inverted if a polarity of the first orthogonal component is positive.

28. The transmission device according to claim **27**, wherein the signal processing circuit is configured to control the polarity of the second in-phase component and the second orthogonal component according to an equation into which the first in-phase component and the first orthogonal component are input as arguments.

29. A reception device comprising:

a receiver configured to receive, via a reception antenna, a multiplexed signal on which a first signal and a

second signal are superposed at an amplitude ratio, the first signal having a first in-phase component and a first orthogonal component, the second signal having a second in-phase component and a second orthogonal component, the second signal having been subjected to QPSK modulation, the second signal having been converted to generate the multiplexed signal such that:

(i) a polarity of the second in-phase component is inverted if a polarity of the first in-phase component is positive; and

(ii) a polarity of the second orthogonal component is inverted if a polarity of the first orthogonal component is positive; and

a signal processing circuit configured to derive at least one of the first signal or the second signal from the multiplexed signal.

30. The reception device according to claim **29**, wherein in the multiplexed signal, the polarity of the second in-phase component and the second orthogonal component have been controlled according to an equation into which the first in-phase component and the first orthogonal component are input as arguments.

31. A transmission method, performed by a transmission device, comprising:

superposing a first signal and a second signal at an amplitude ratio to generate a multiplexed signal, the first signal having a first in-phase component and a first orthogonal component, the second signal having a second in-phase component and a second orthogonal component, the second signal having been subjected to QPSK modulation; and

transmitting the multiplexed signal from a transmission antenna, wherein

the second signal is converted to generate the multiplexed signal such that:

(i) a polarity of the second in-phase component is inverted if a polarity of the first in-phase component is positive; and

(ii) a polarity of the second orthogonal component is inverted if a polarity of the first orthogonal component is positive.

32. A reception method, performed by a reception device, comprising:

receiving, via a reception antenna, a multiplexed signal on which a first signal and a second signal are superposed at an amplitude ratio, the first signal having a first in-phase component and a first orthogonal component, the second signal having a second in-phase component and a second orthogonal component, the second signal having been subjected to QPSK modulation, the second signal having been converted to generate the multiplexed signal such that:

(i) a polarity of the second in-phase component is inverted if a polarity of the first in-phase component is positive; and

(ii) a polarity of the second orthogonal component is inverted if a polarity of the first orthogonal component is positive; and

deriving at least one of the first signal or the second signal from the multiplexed signal.

* * * * *