US 20200136556A1

(19) United States

(12) Patent Application Publication

LIN

(10) Pub. No.: US 2020/0136556 A1

(43) Pub. Date: Apr. 30, 2020

(54) **OSCILLATOR CIRCUIT, DEVICE, AND METHOD**

(71) Applicant: **TAIWAN SEMICONDUCTOR MANUFACTURING COMPANY, LTD.**, Hsinchu (TW)

(72) Inventor: **Chi-Hsien LIN**, Taichung City (TW)

(21) Appl. No.: **16/731,454**

(22) Filed: **Dec. 31, 2019**

Related U.S. Application Data

(63) Continuation-in-part of application No. 16/432,004, filed on Jun. 5, 2019.

(60) Provisional application No. 62/943,744, filed on Dec. 4, 2019, provisional application No. 62/691,928, filed on Jun. 29, 2018.

Publication Classification

(51) **Int. Cl.**
H03B 5/12 (2006.01)

(52) **U.S. Cl.**
CPC ***H03B 5/1228*** (2013.01); ***H03B 5/1212*** (2013.01)

(57) **ABSTRACT**

A voltage-controlled oscillator (VCO) includes a first transistor cross-coupled with a second transistor, and a transformer-coupled band-pass filter (BPF) including a first transformer and a second transformer. The first transformer is configured to control a gate and a drain terminal of the first transistor, and the second transformer is configured to control a gate and a drain terminal of the second transistor.

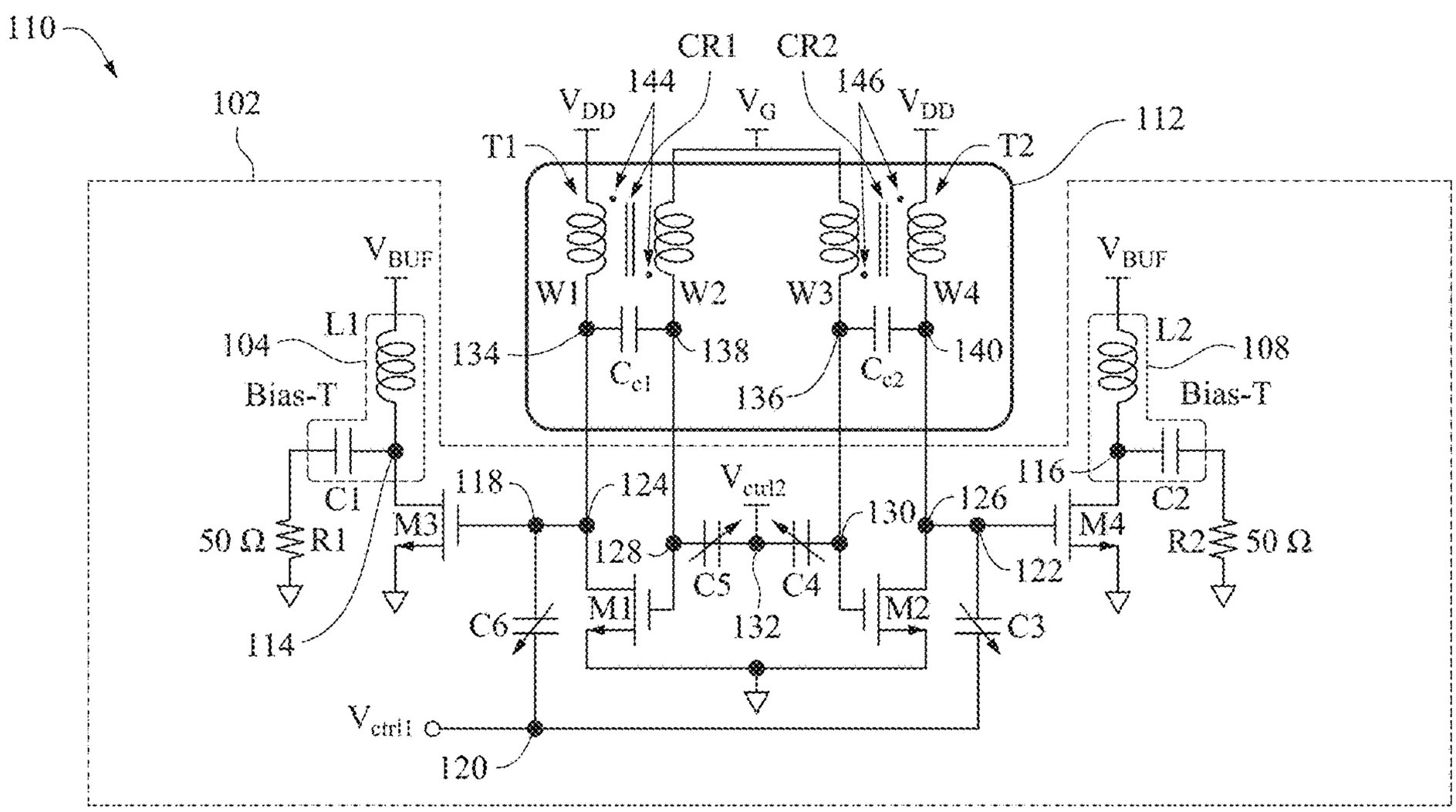

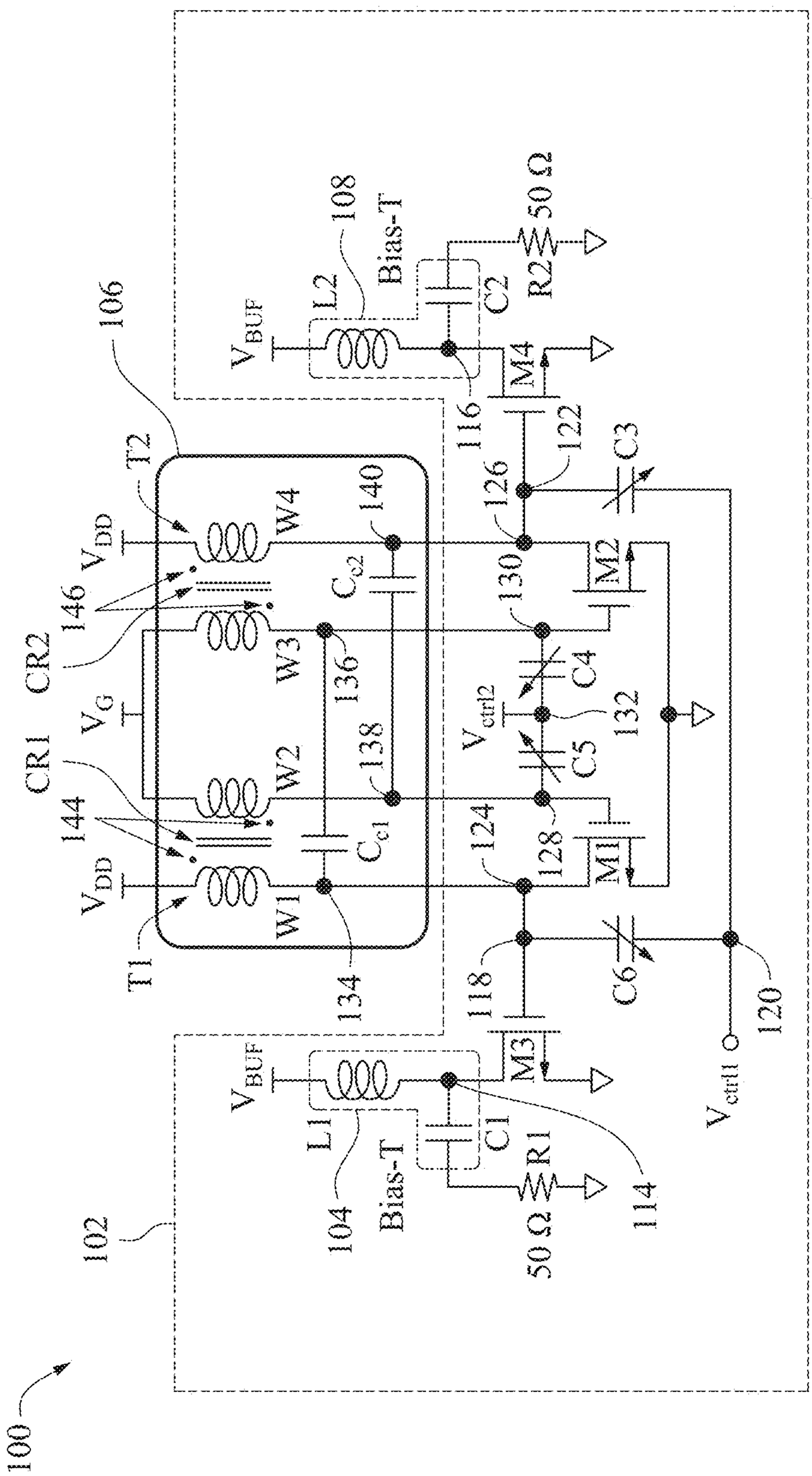
100
102
104
106
108
114
116
118
120
122
124
126
128
130
132
134
136
138
140
144
146
CR1
CR2
T1
T2
W1
W2
W3
W4
L1
L2
Bias-T
C1
C2
C3
C4
C5
C6
R1
R2
50 Ω
M1
M2
M3
M4
V_{BUF}
V_{DD}
V_G
V_{ctrl1}
V_{ctrl2}
C_{c1}
C_{c2}

FIG. 1A

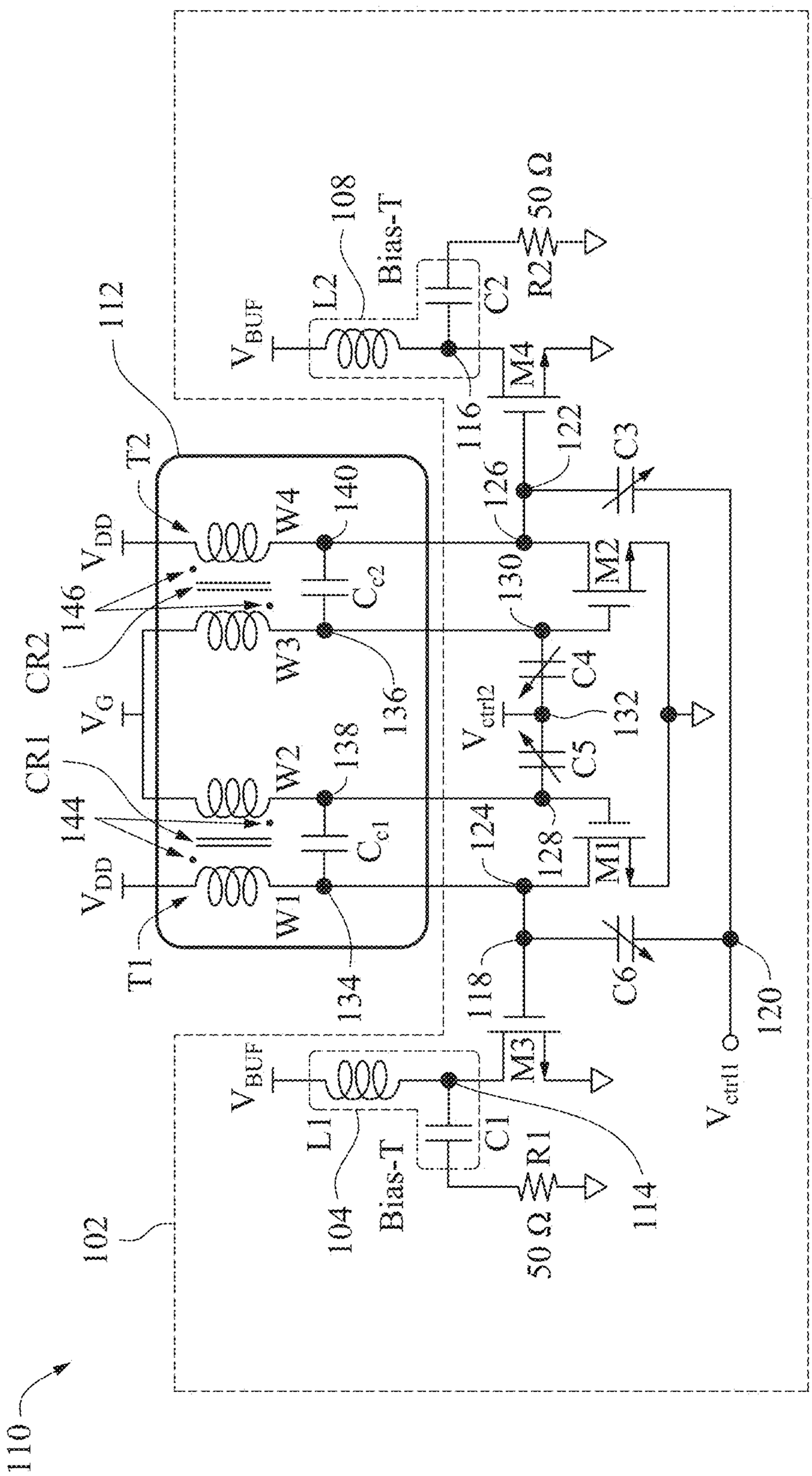
110
102
104
Bias-T
L1
C1
R1
50 Ω
114
V_{BUF}
V_{ctrl1}
120
118
M3
C6
134
T1
W1
C_{c1}
138
W2
144
V_{DD}
124
128
M1
V_{ctrl2}
132
C5
C4
136
W3
V_G
146
CR1
CR2
C_{c2}
140
W4
T2
V_{DD}
112
130
M2
126
C3
122
116
M4
6
C2
R2
50 Ω
Bias-T
L2
108
V_{BUF}

FIG. 1B

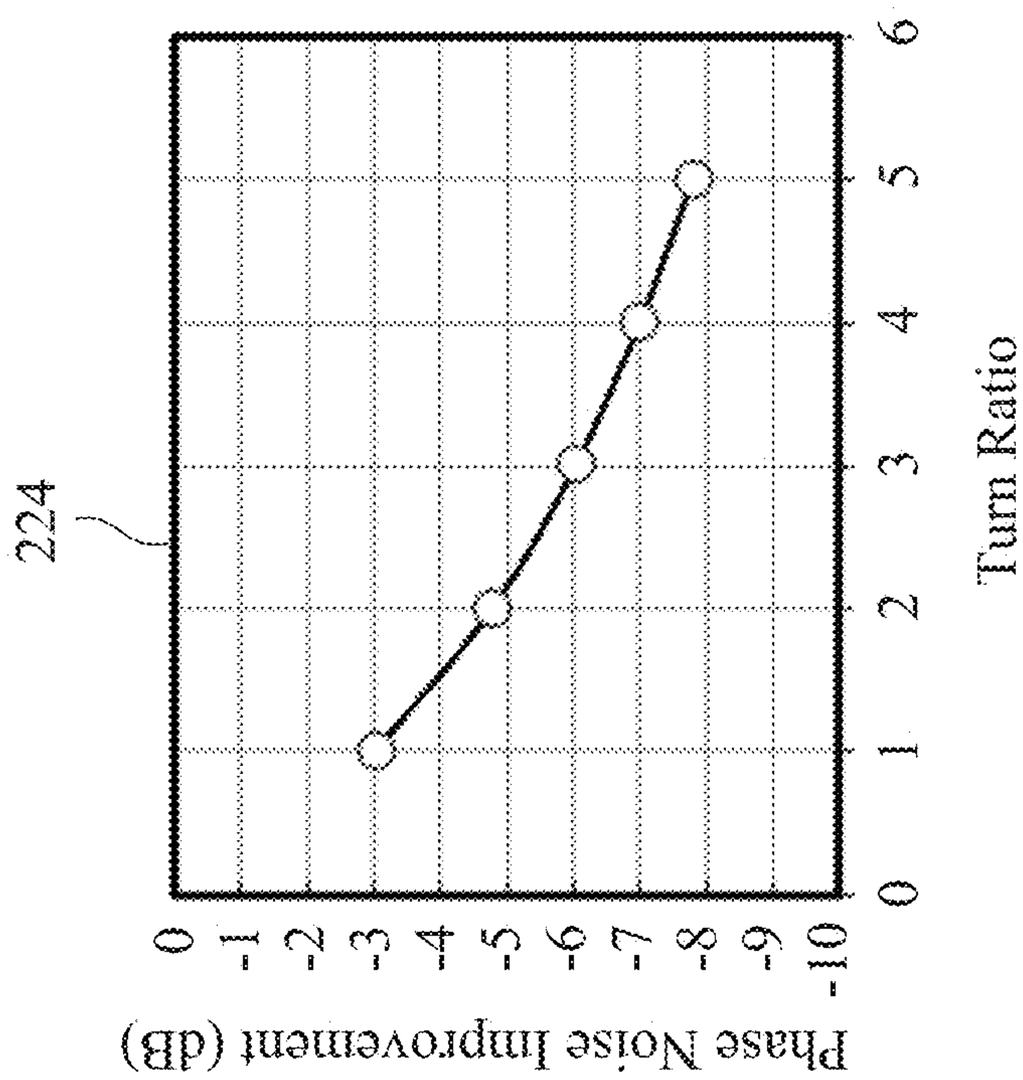

FIG. 2B

$P_{D1}+m_2P_{D2}=P_{G1}$

If $P_{D1}=P_{D2}$ and $m_1=m_2=2$

$P_{G1}+3P_{D1}$

$10\log(1/3) \approx -4.8$

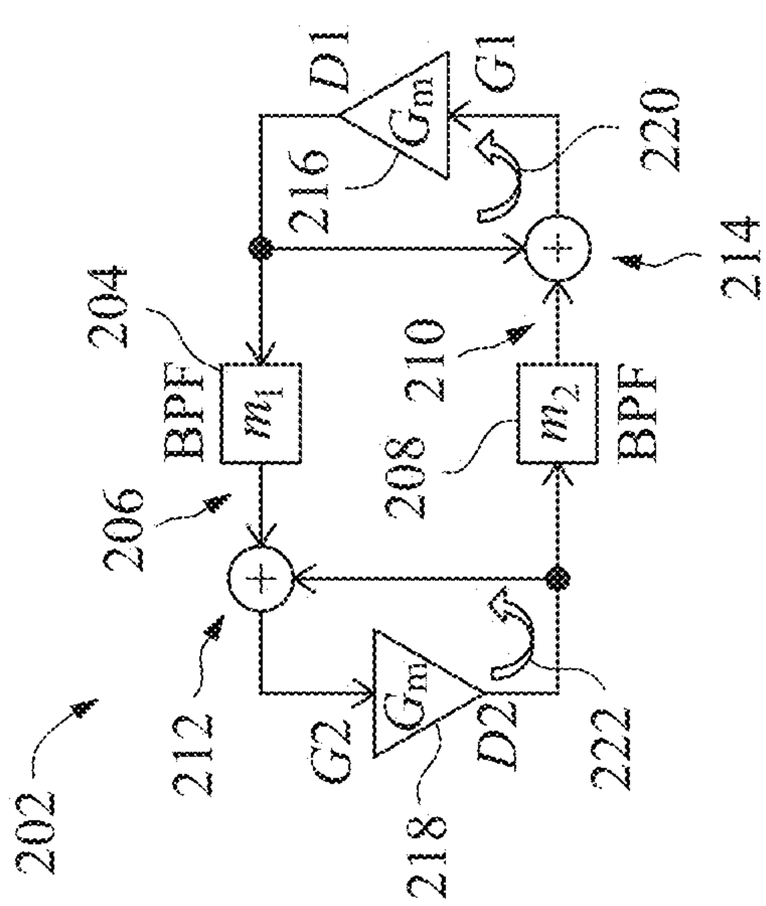

FIG. 2A

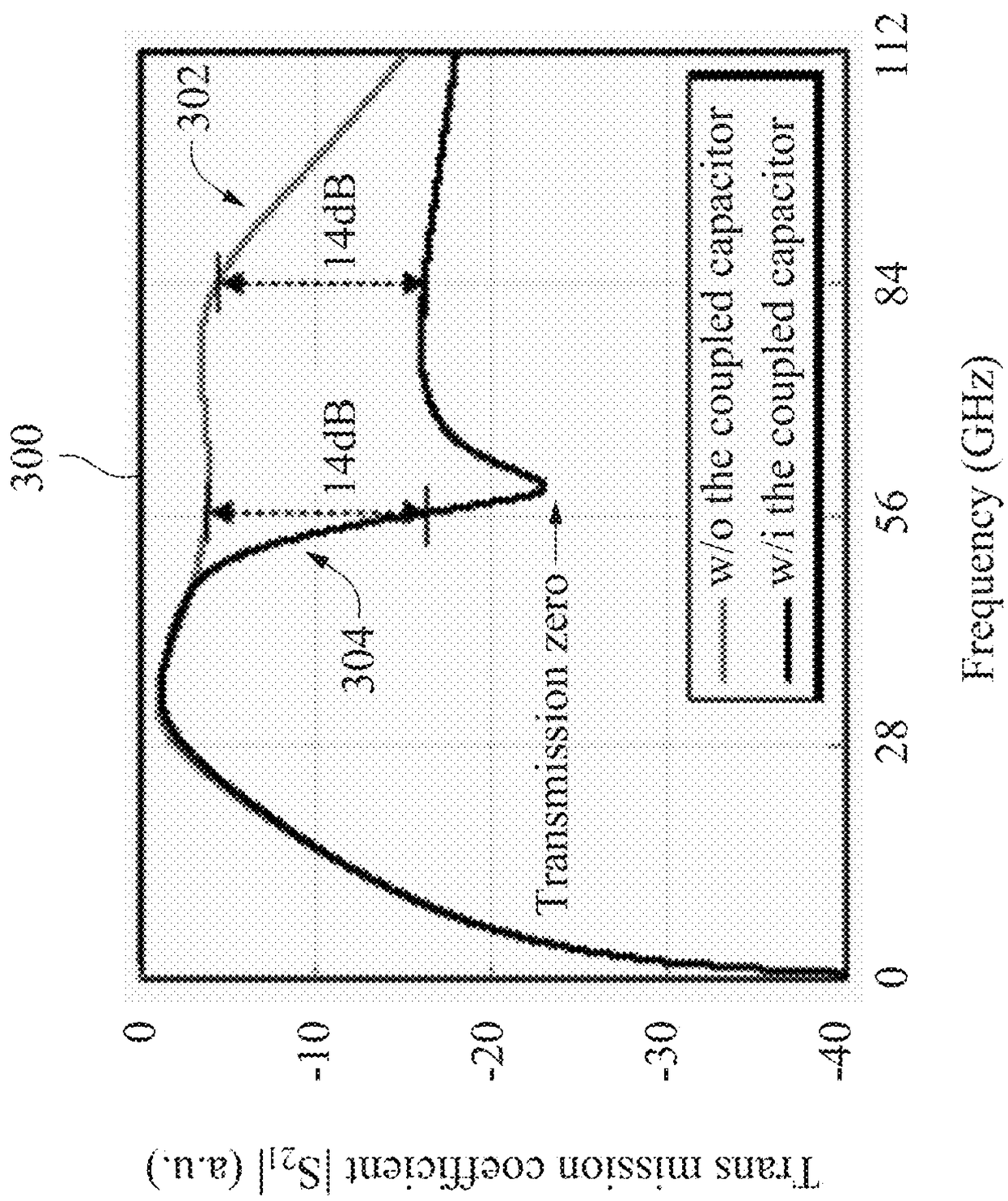
300
302
304
14dB
14dB
Transmission zero
w/o the coupled capacitor
w/i the coupled capacitor
Trans missiion coefficient |S21| (a.u.)
0
-10
-20
-30
-40
0
28
56
84
112
Frequency (GHz)

FIG. 3

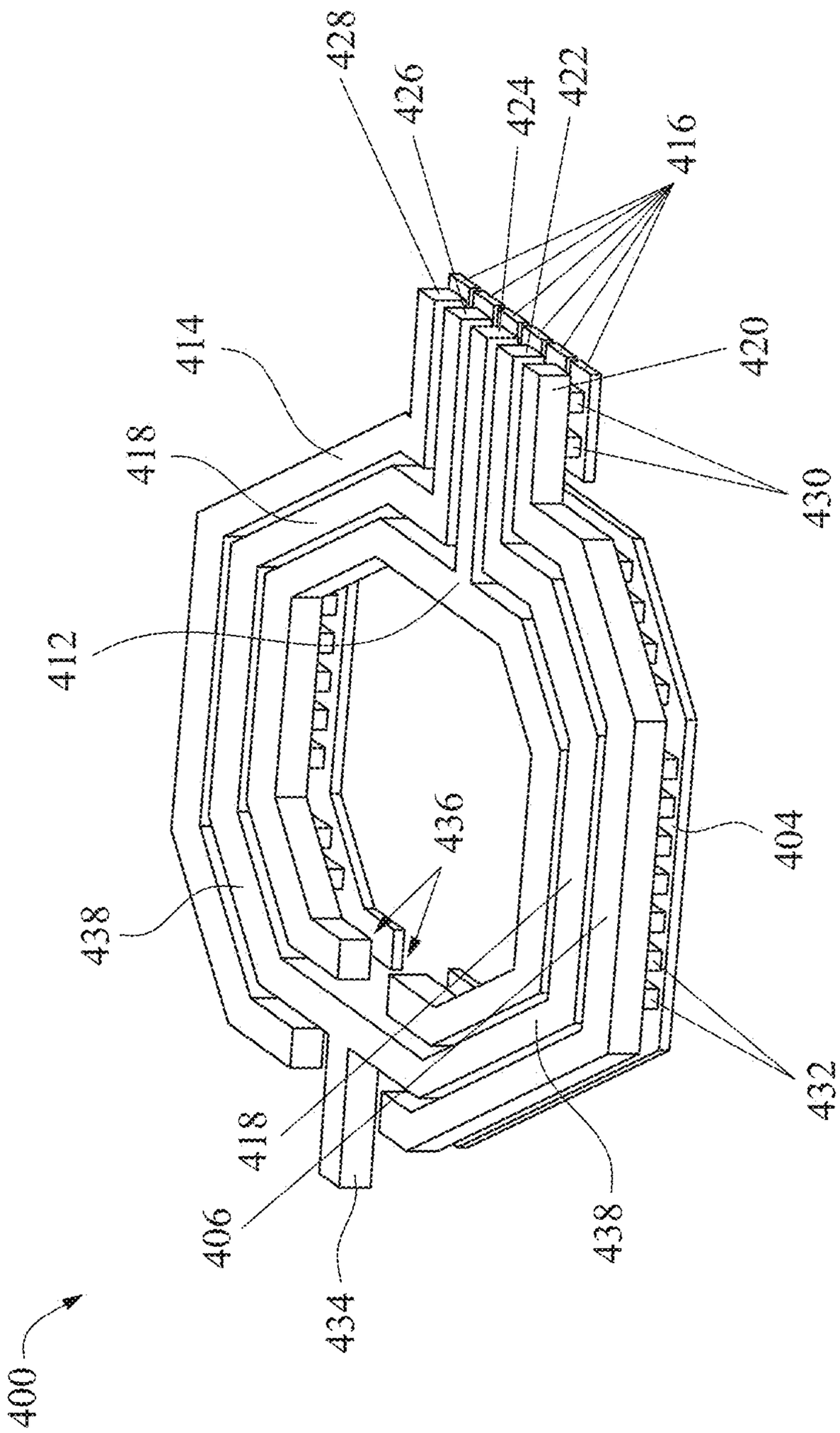
428
426
424
422
416
414
420
418
430
412
436
404
438
432
418
406
438
434
400

FIG. 4

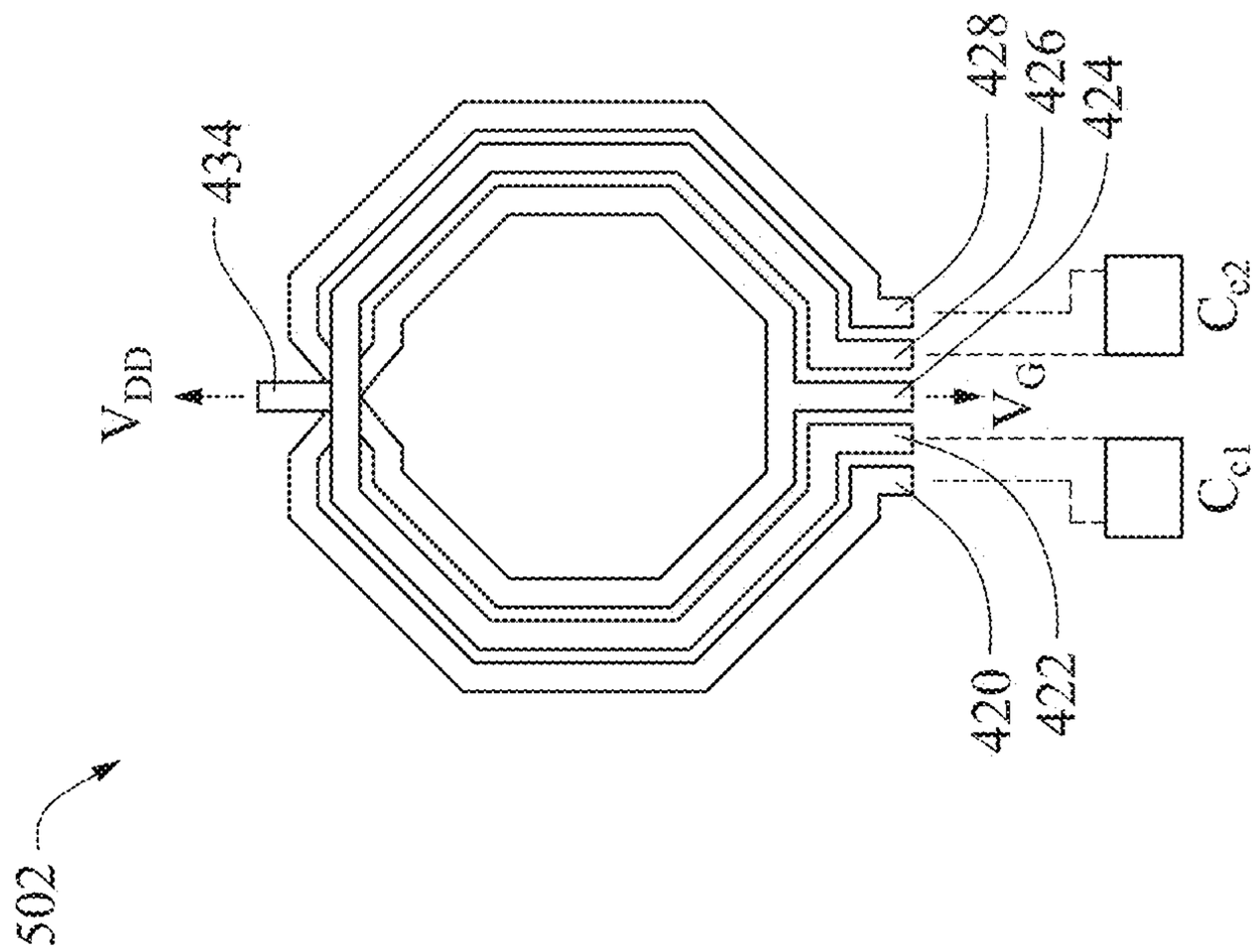
502
V_{DD}
434
428
426
424
V_G
C_{c2}
C_{c1}
420
422

FIG. 5B

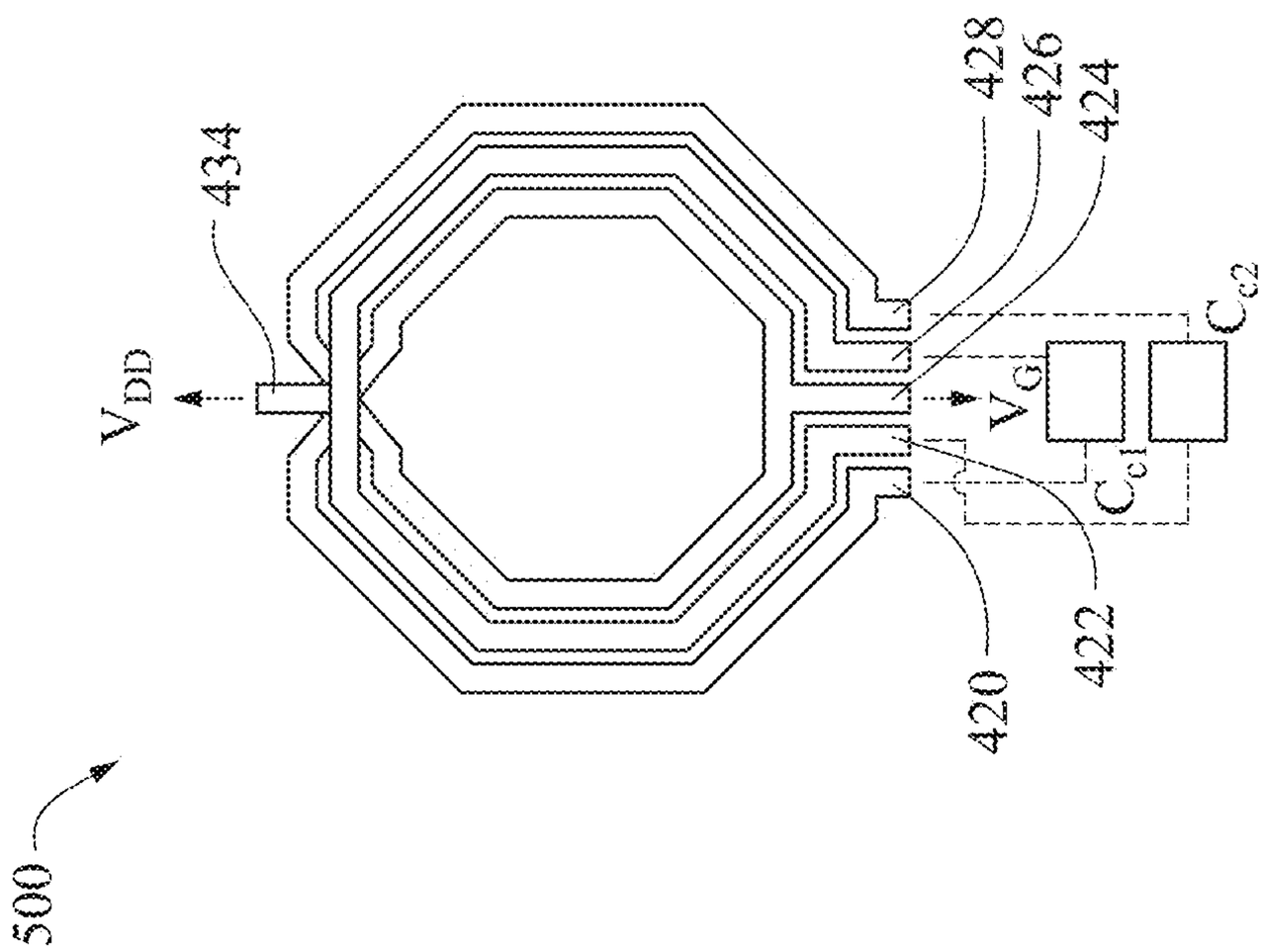
500
V_{DD}
434
428
426
424
V_G
C_{c2}
C_{c1}
420
422

FIG. 5A

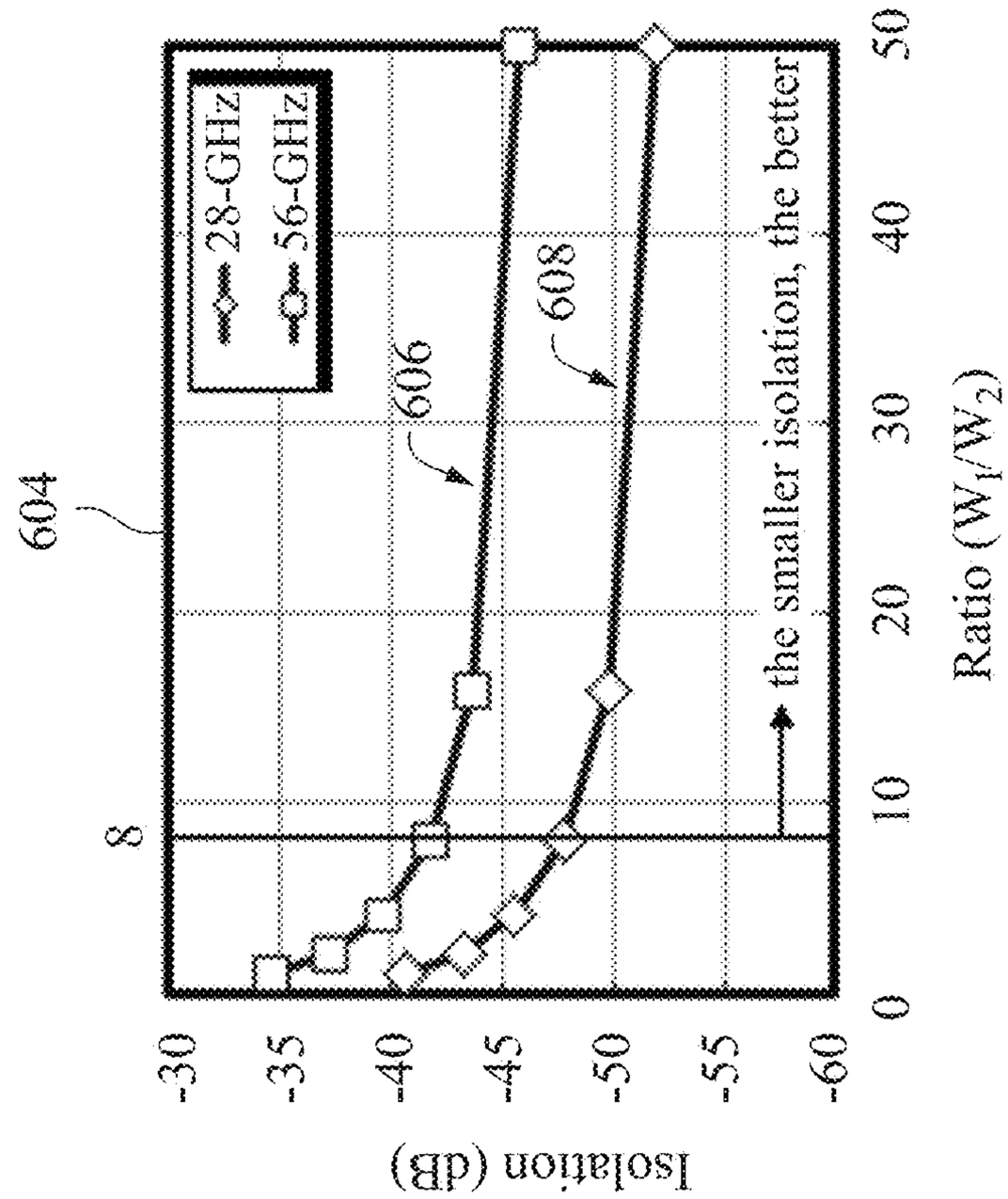
604
606
608
28-GHz
56-GHz
the smaller isolation, the better
Isolation (dB)
Ratio (W_1/W_2)
-30
-35
-40
-45
-50
-55
-60
0
10
20
30
40
50

FIG. 6B

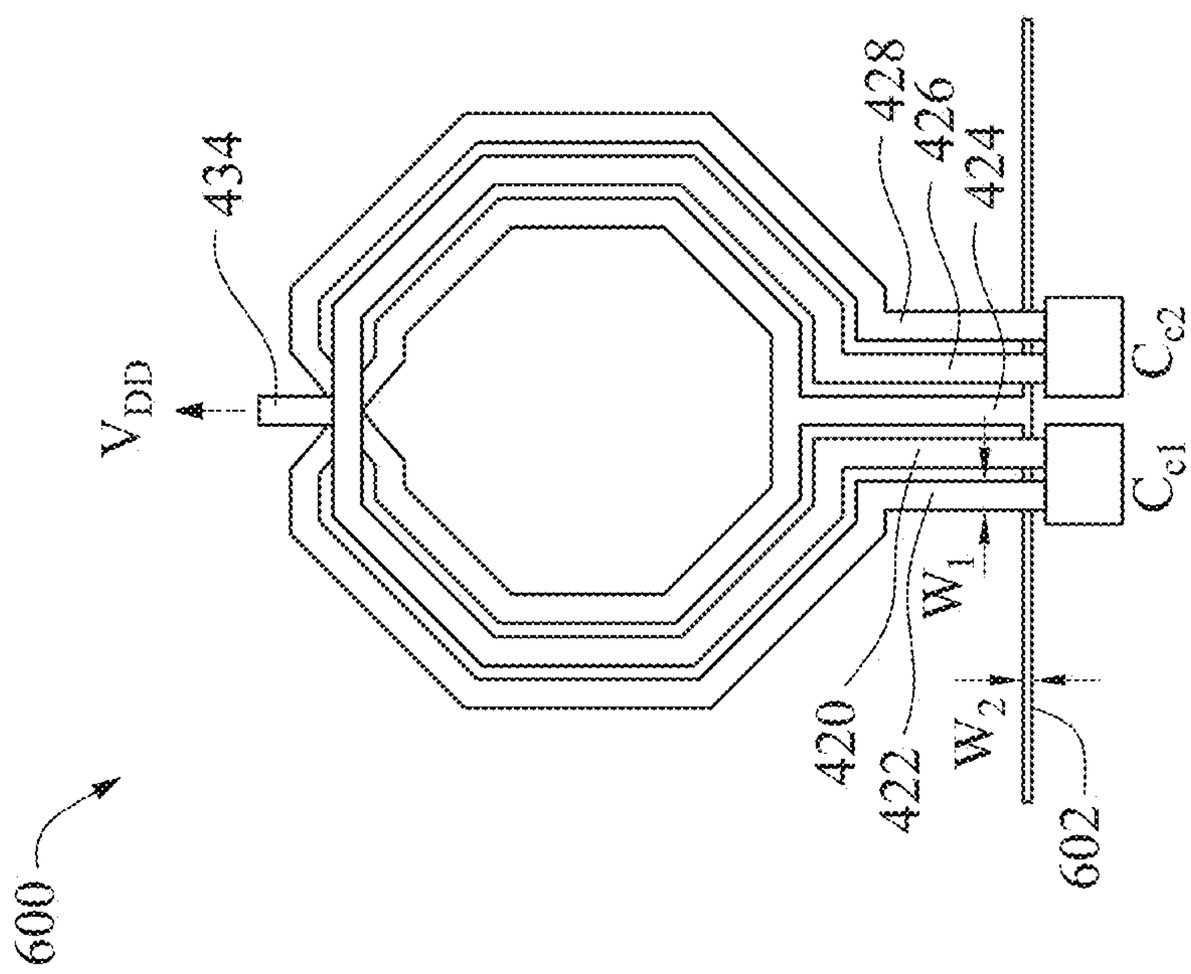
600
434
V_{DD}
420
422
424
426
428
W_1
W_2
602
C_{c1}
C_{c2}

FIG. 6A

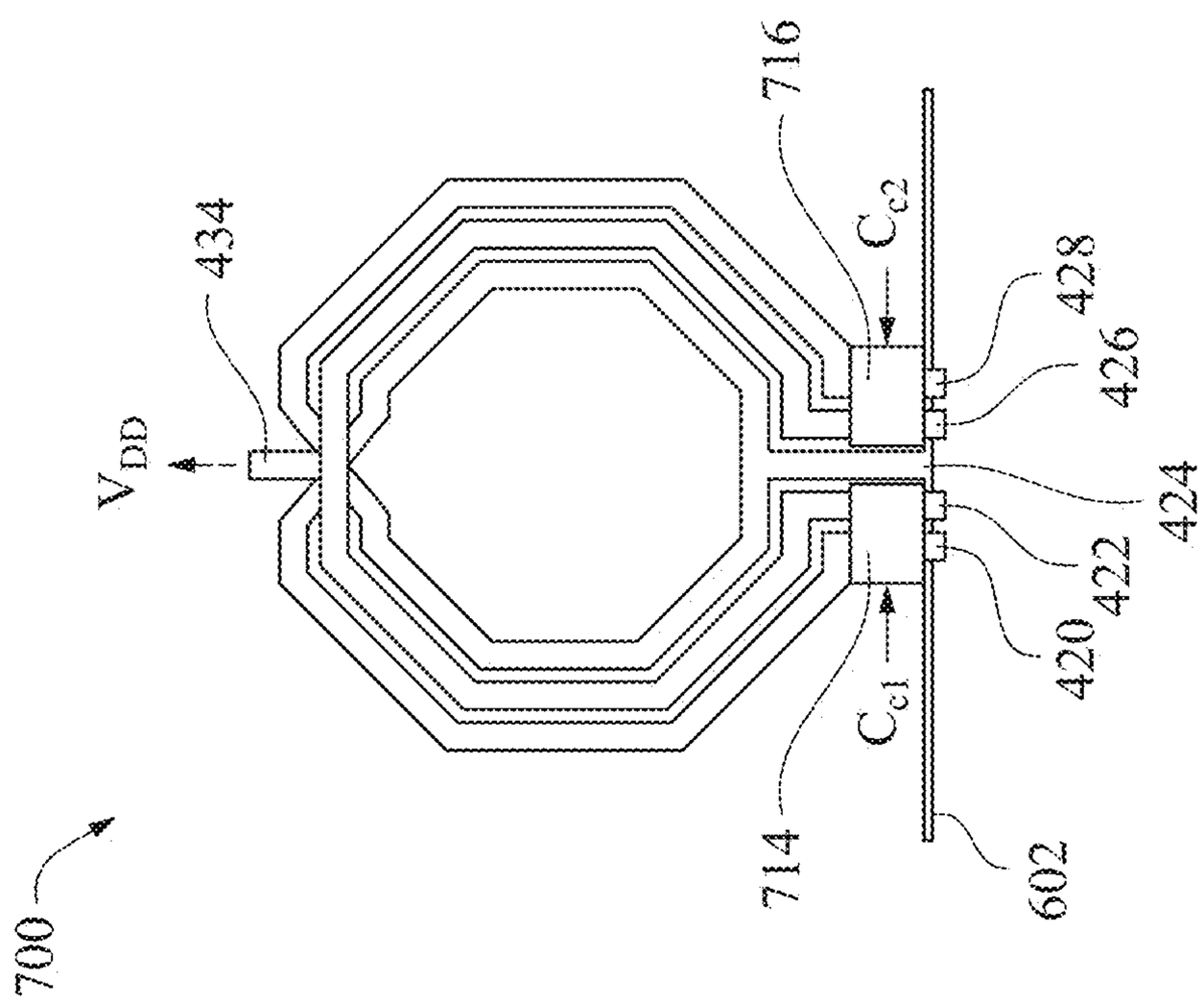

FIG. 7

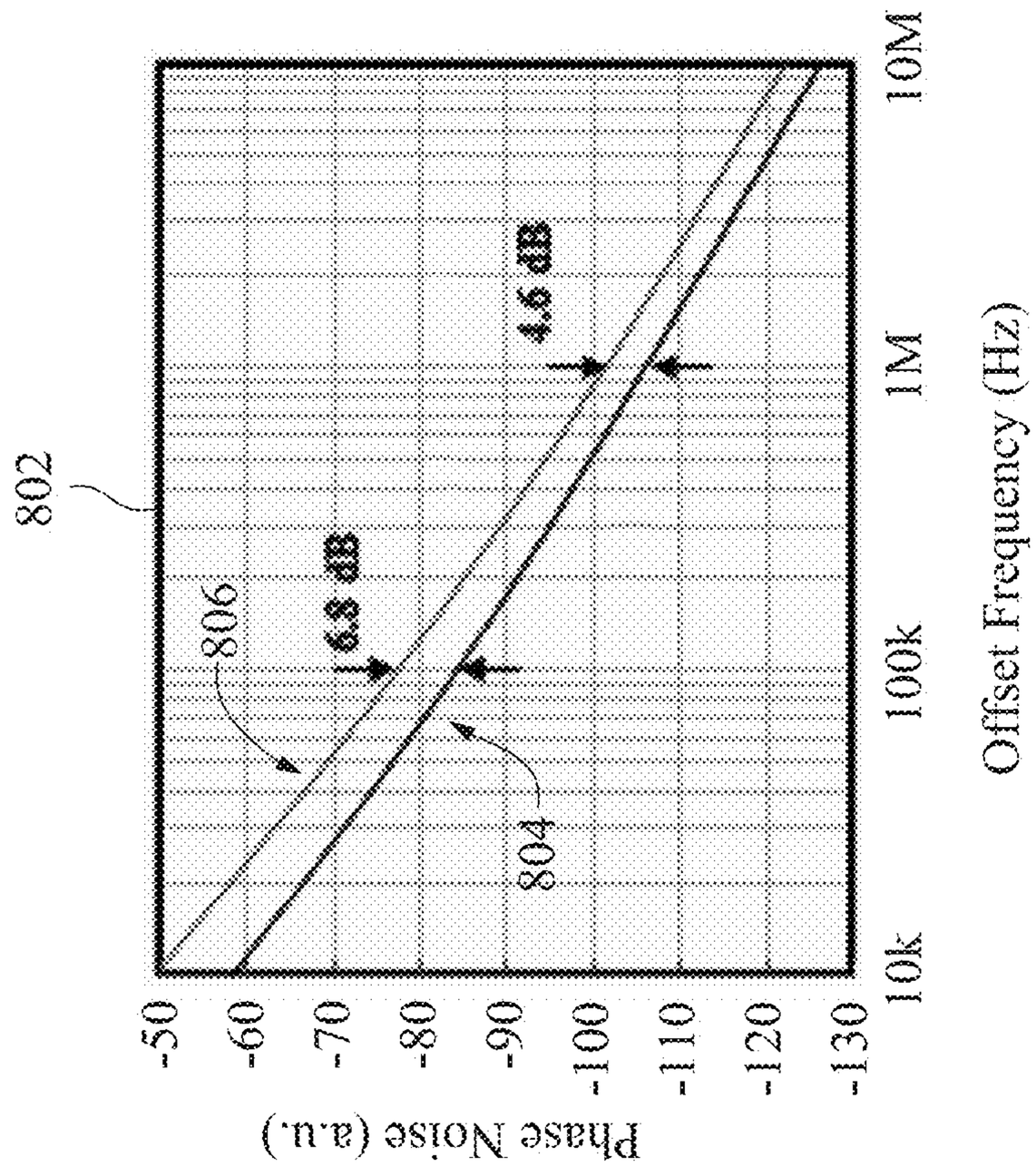
802
806
804
16.8 dB
4.6 dB
Phase Noise (a.u.)
-50
-60
-70
-80
-90
-100
-110
-120
-130
10k
100k
1M
10M
Offset Frequency (Hz)

FIG. 8B

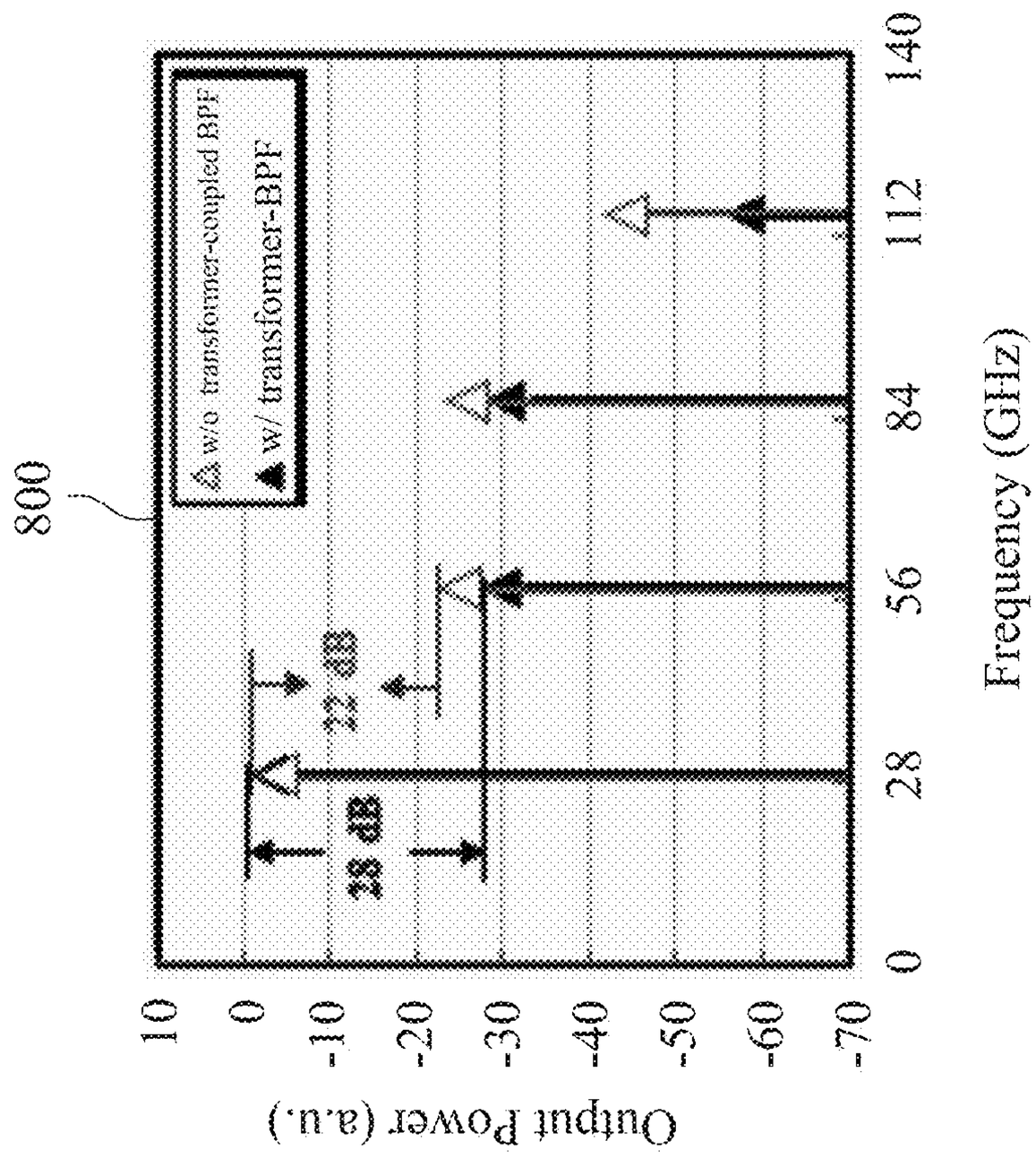
800
w/o transformer-coupled BPF
w/ transformer-BPF
28 dB
22 dB
Output Power (a.u.)
10
0
-10
-20
-30
-40
-50
-60
-70
0
28
56
84
112
140
Frequency (GHz)

FIG. 8A

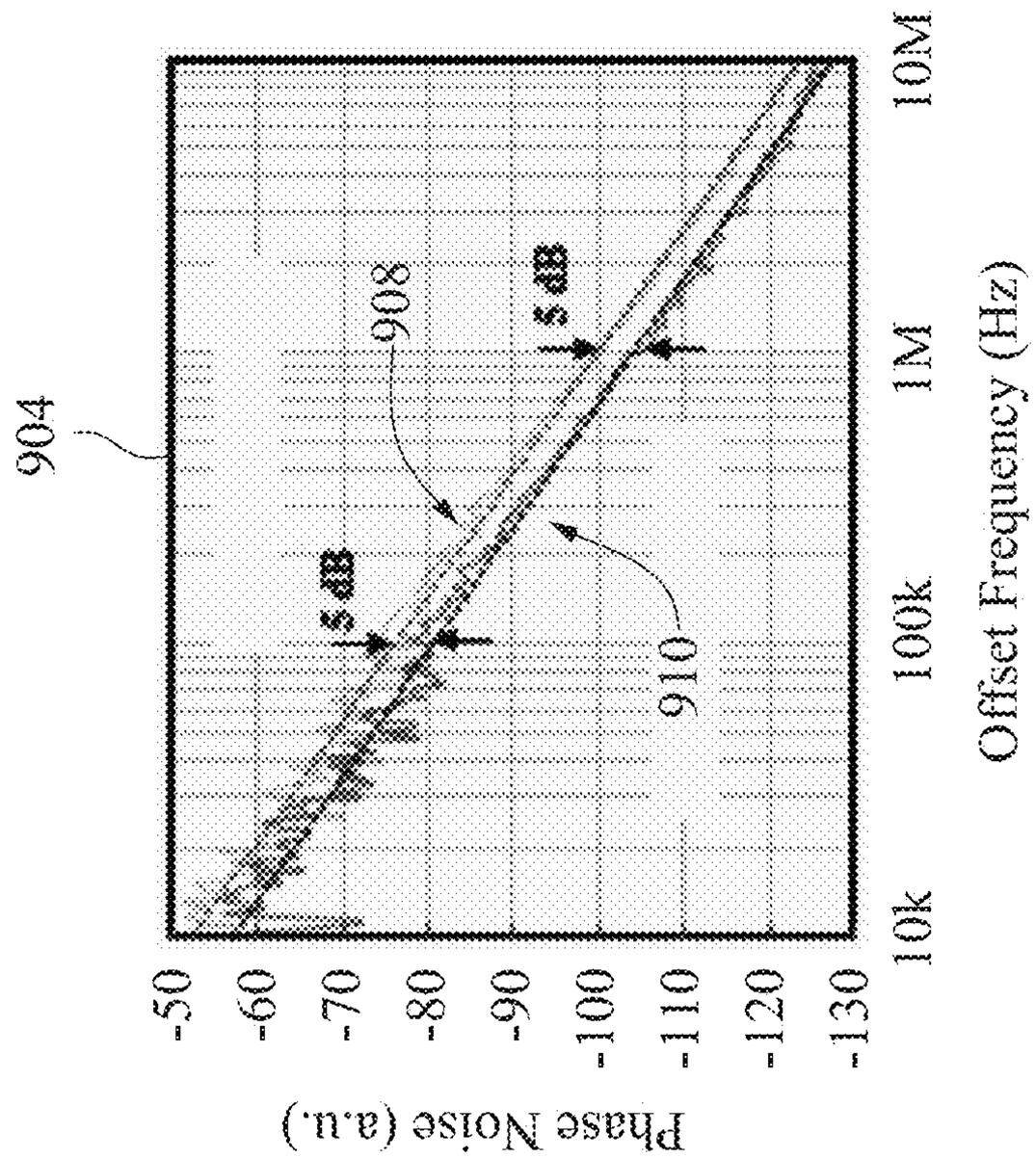
904
908
5 dB
5 dB
910
Phase Noise (a.u.)
-50
-60
-70
-80
-90
-100
-110
-120
-130
10k
100k
1M
10M
Offset Frequency (Hz)

FIG. 9B

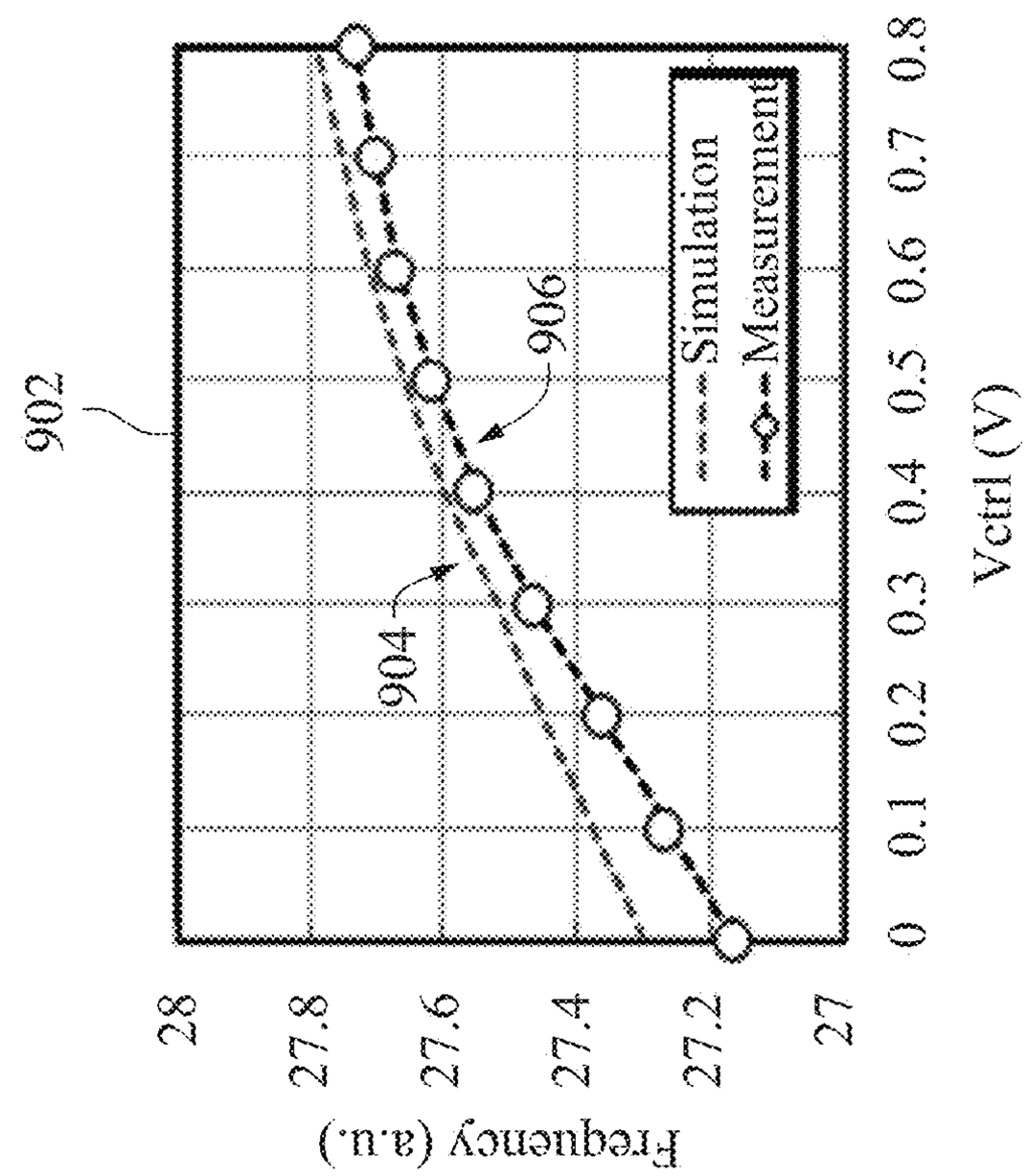
902
904
906
Simulation
Measurement
Frequency (a.u.)
28
27.8
27.6
27.4
27.2
27
0
0.1
0.2
0.3
0.4
0.5
0.6
0.7
0.8
Vctrl (V)

FIG. 9A

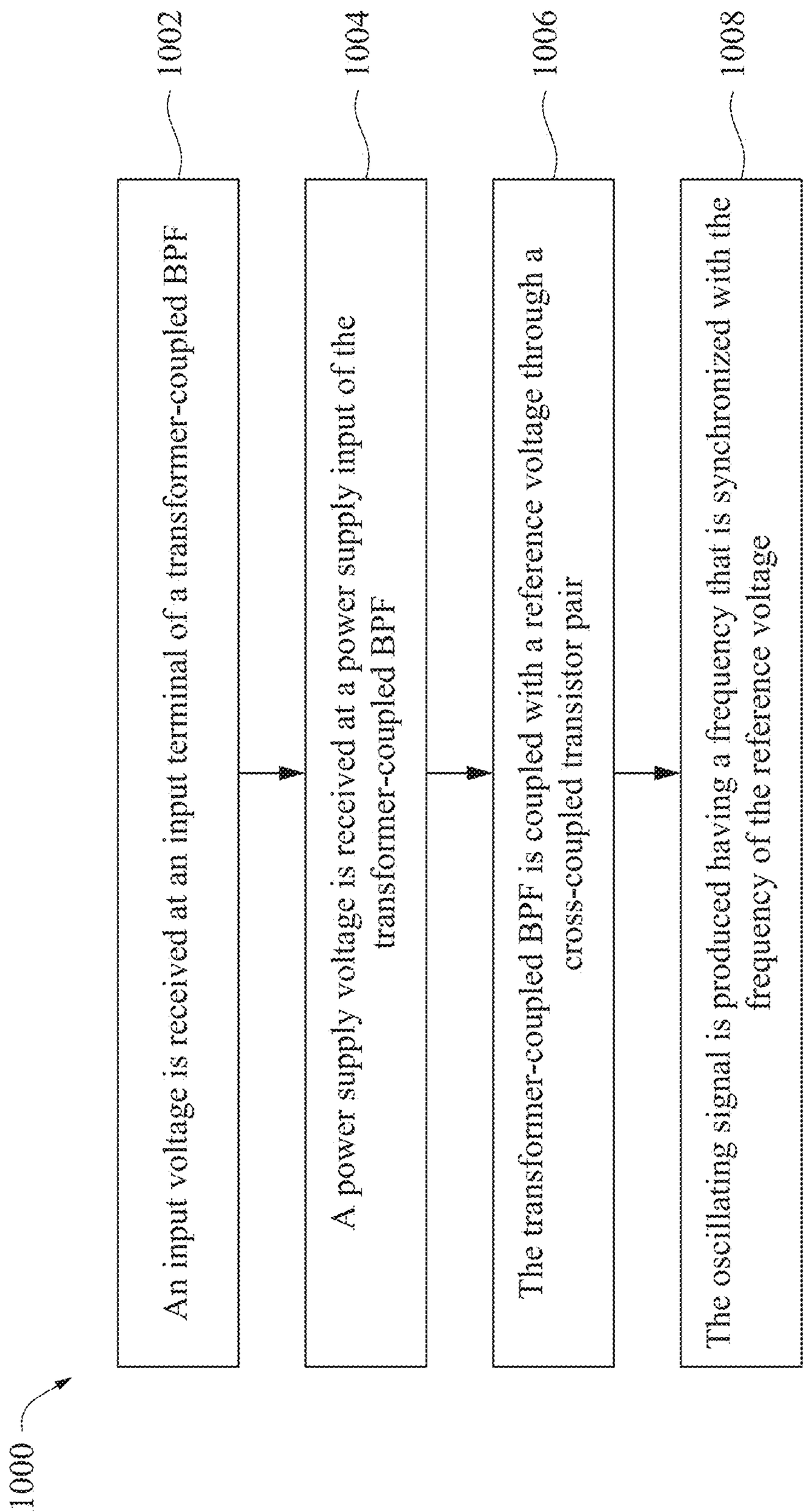
1000
1002
An input voltage is received at an input terminal of a transformer-coupled BPF
1004
A power supply voltage is received at a power supply input of the transformer-coupled BPF
1006
The transformer-coupled BPF is coupled with a reference voltage through a cross-coupled transistor pair
1008
The oscillating signal is produced having a frequency that is synchronized with the frequency of the reference voltage

FIG. 10

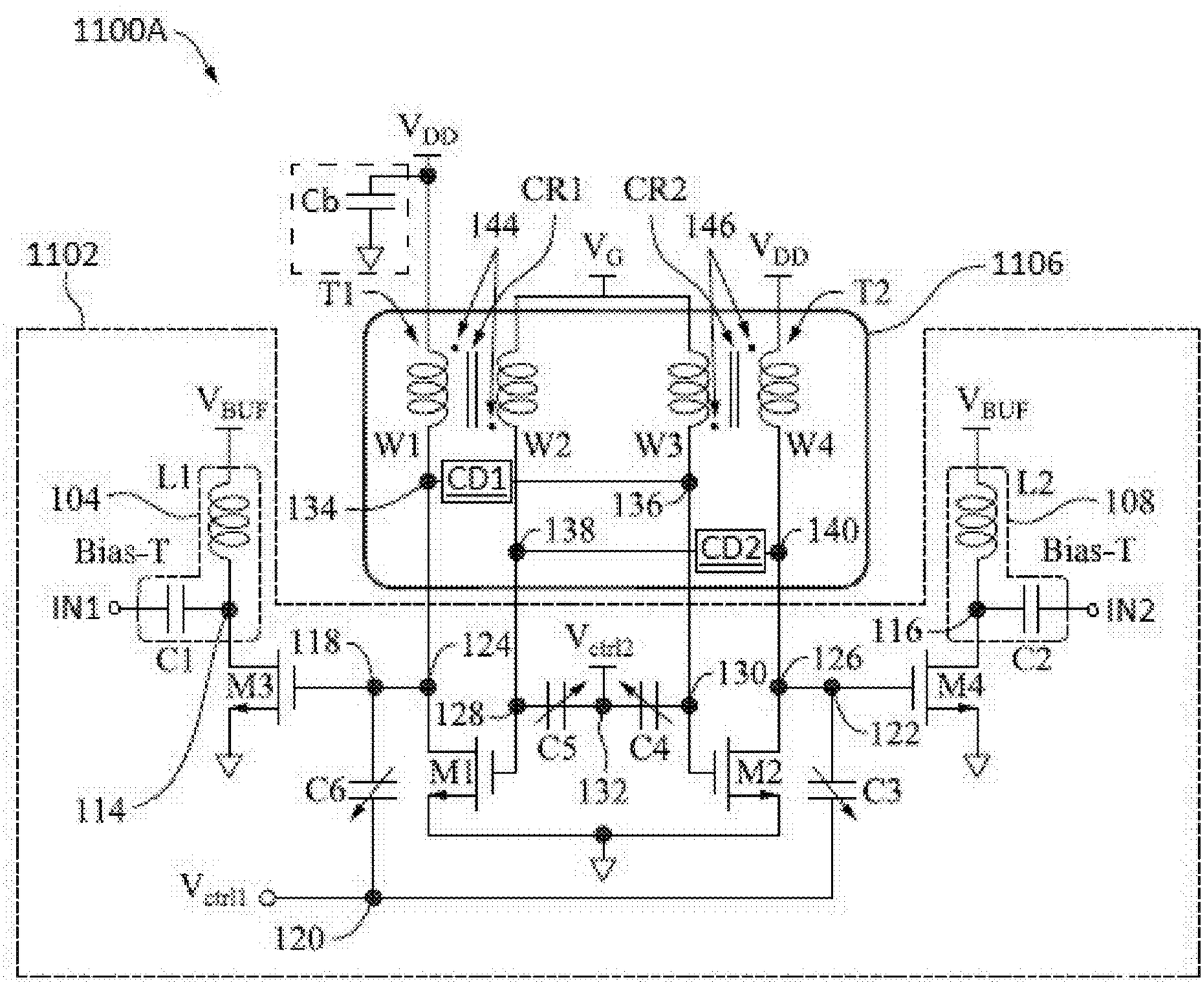
1100A
V_{DD}
Cb
CR1
CR2
144
146
V_G
V_{DD}
1102
1106
T1
T2
V_{BUF}
W1
W2
W3
W4
V_{BUF}
L1
CD1
L2
104
134
136
108
138
140
CD2
Bias-T
Bias-T
IN1
IN2
116
C1
C2
118
124
V_{ctrl2}
130
126
M3
M4
128
122
C5
C4
C6
M1
132
M2
C3
114
V_{ctrl1}
120

FIG. 11A

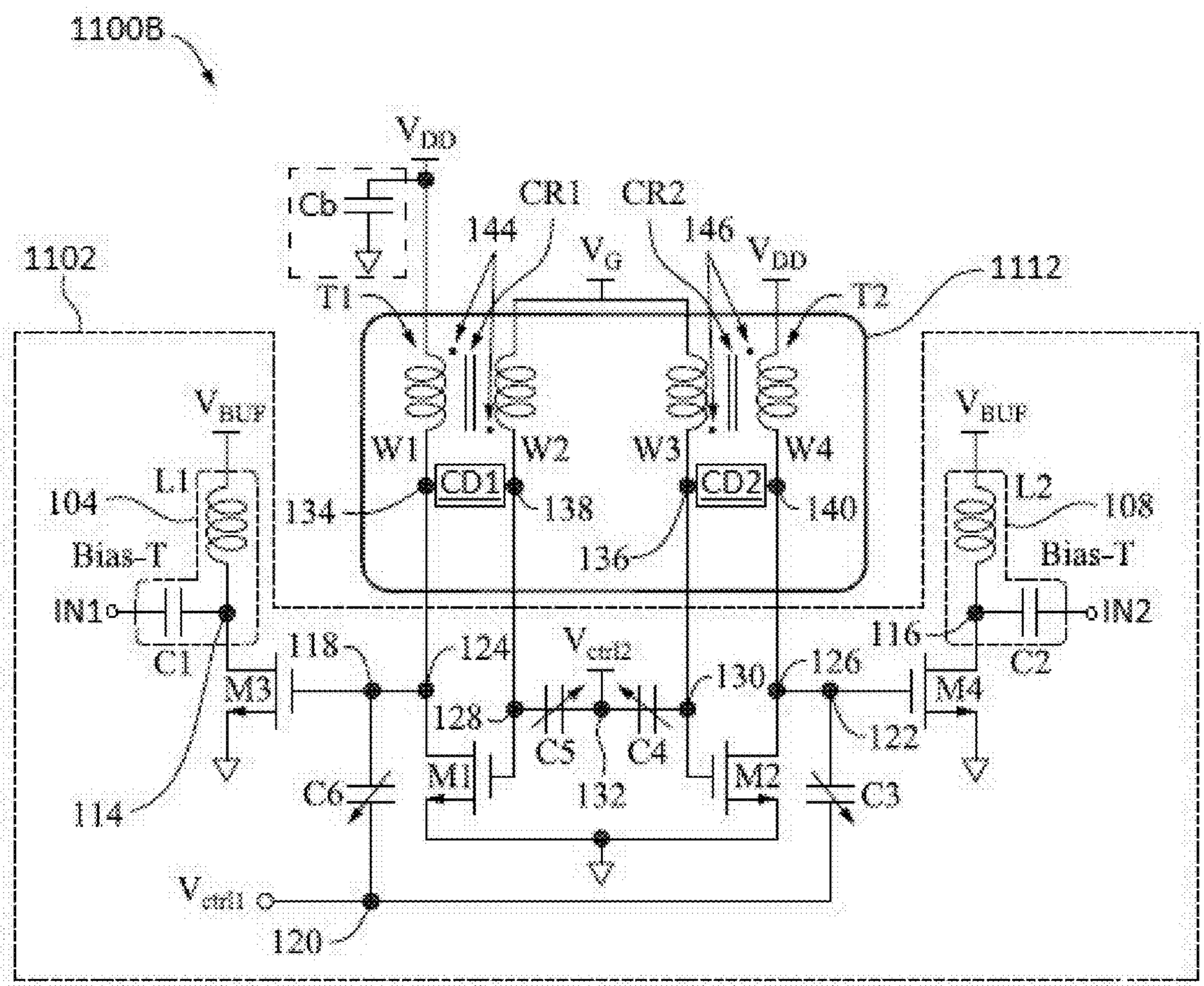
1100B
V_{DD}
Cb
CR1
CR2
144
146
V_G
V_{DD}
1102
1112
T1
T2
V_{BUF}
W1
W2
W3
W4
CD1
CD2
L1
L2
104
108
134
138
136
140
Bias-T
Bias-T
IN1
IN2
C1
C2
116
118
124
V_{ctrl2}
126
130
M3
M4
128
122
C5
C4
M1
M2
C6
C3
114
132
V_{ctrl1}
120

FIG. 11B

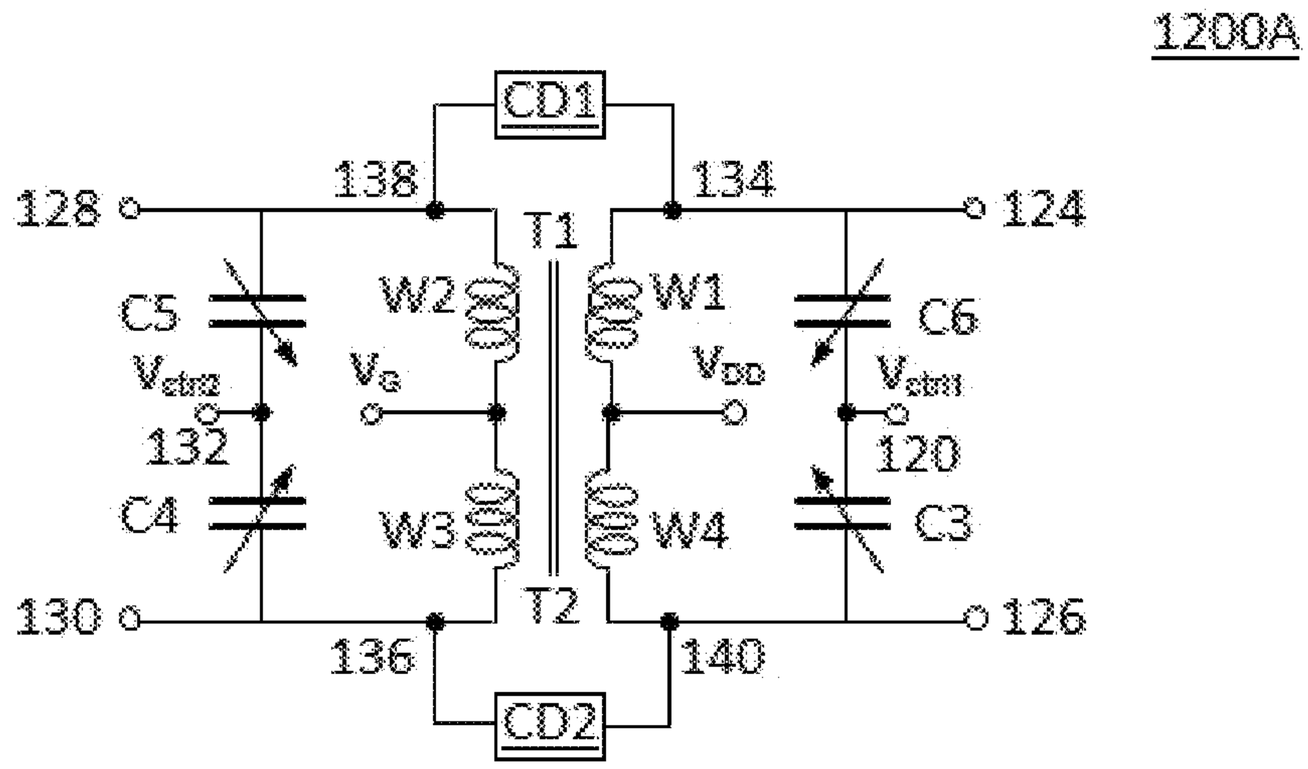

FIG. 12A

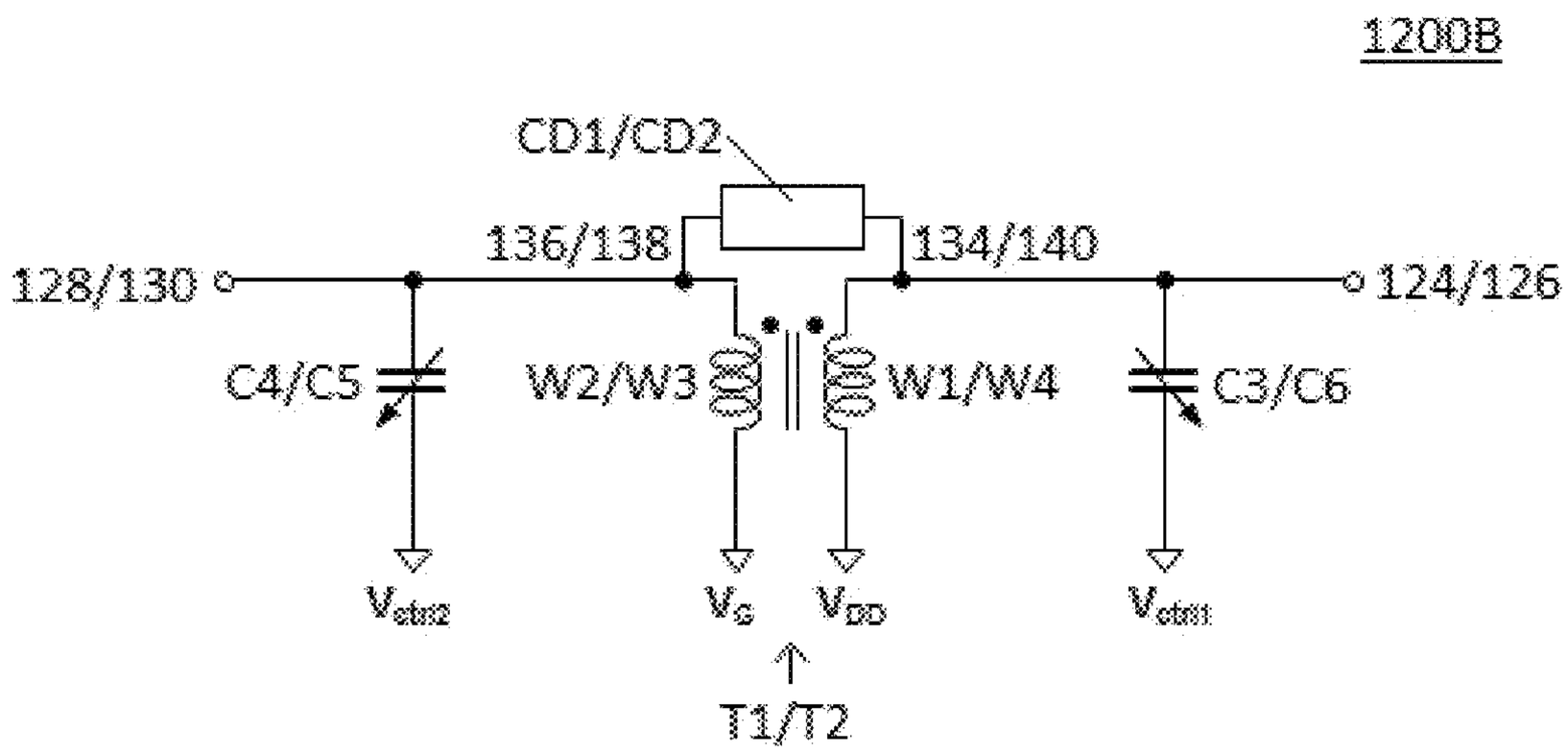

FIG. 12B

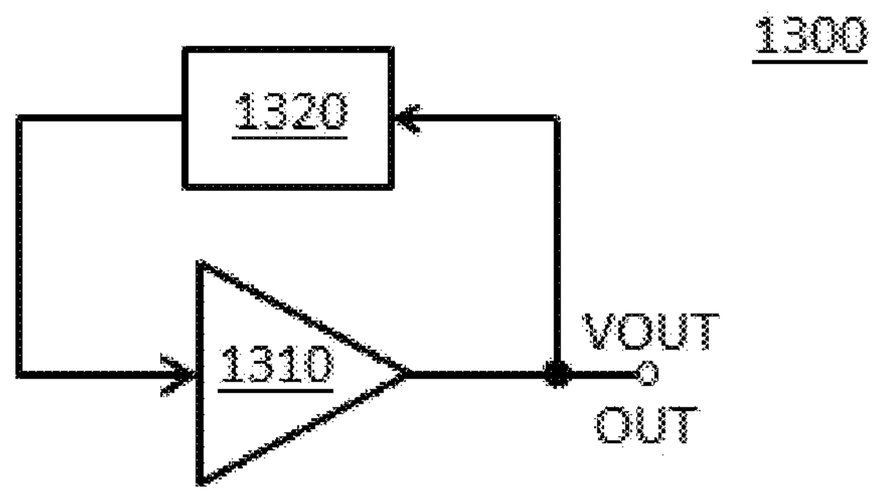

FIG. 13A

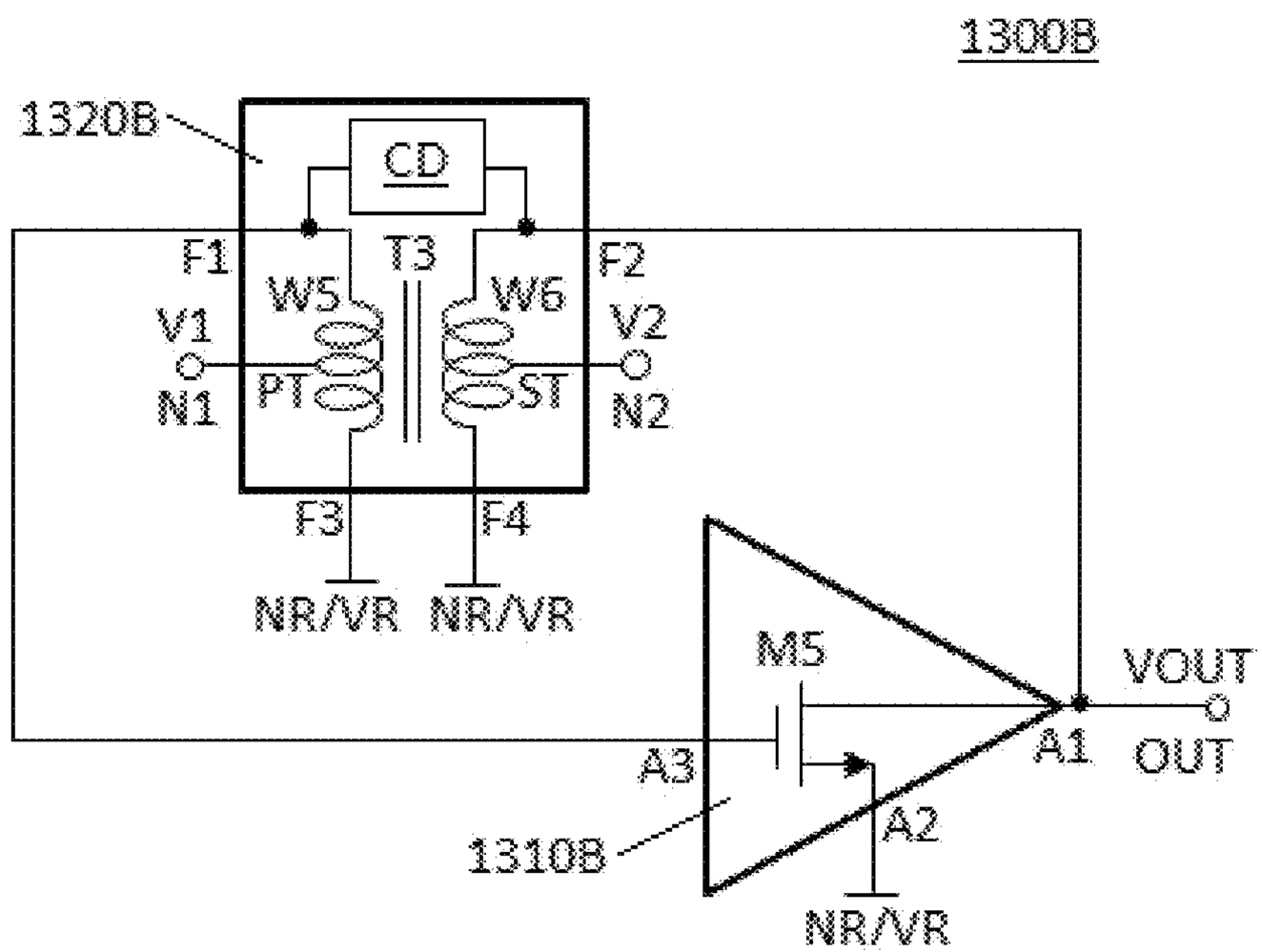

FIG. 13B

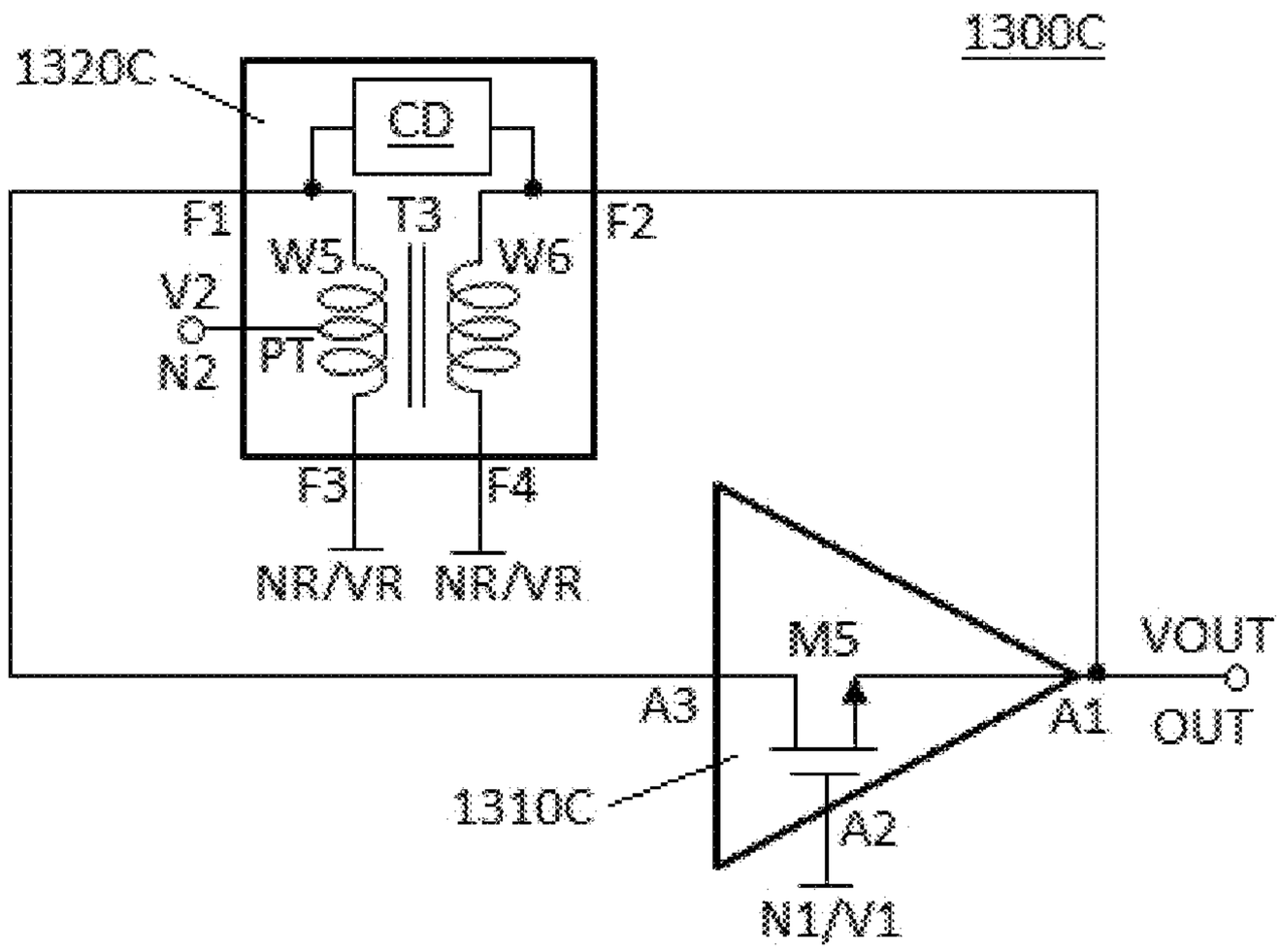

FIG. 13C

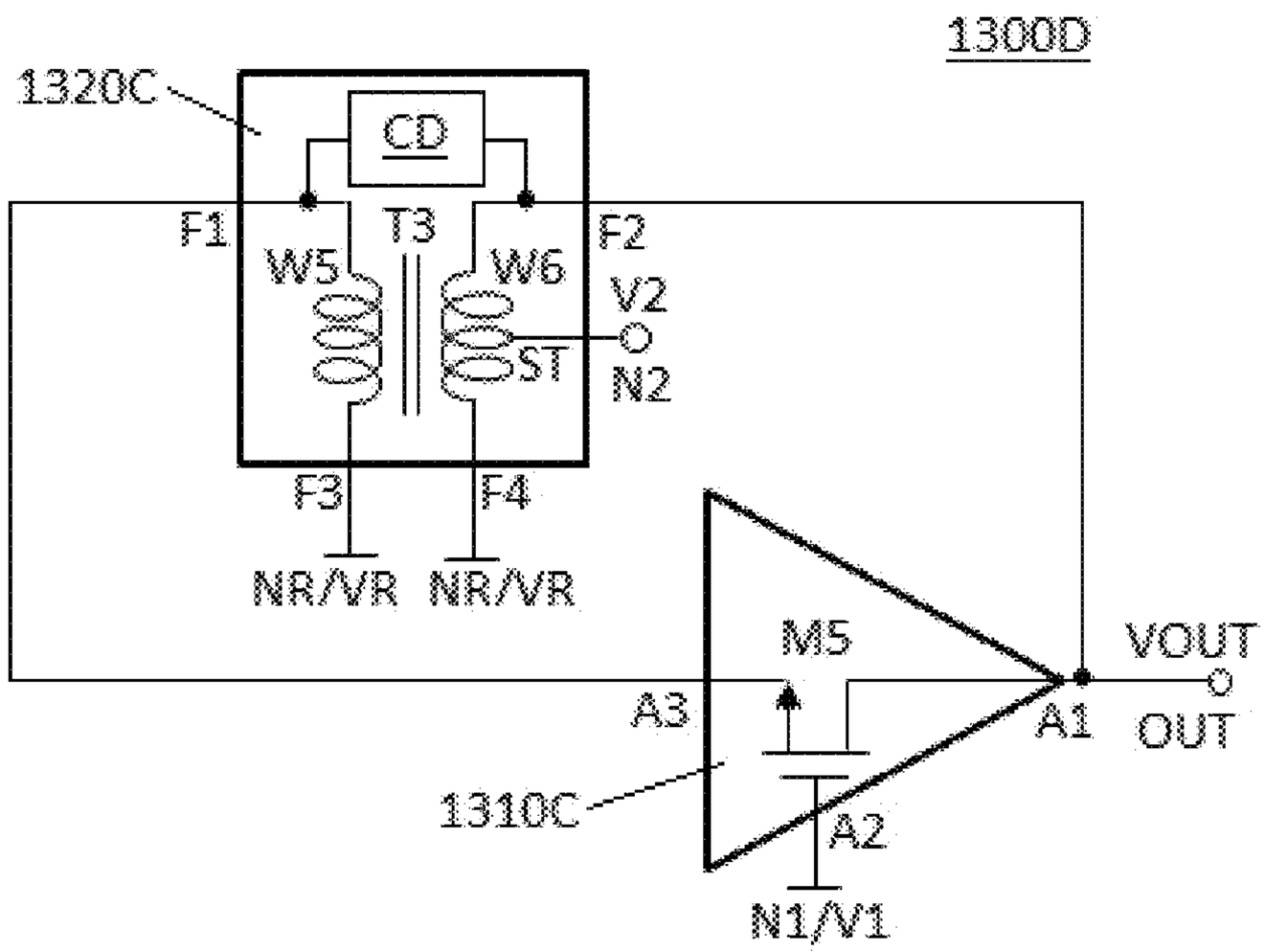

FIG. 13D

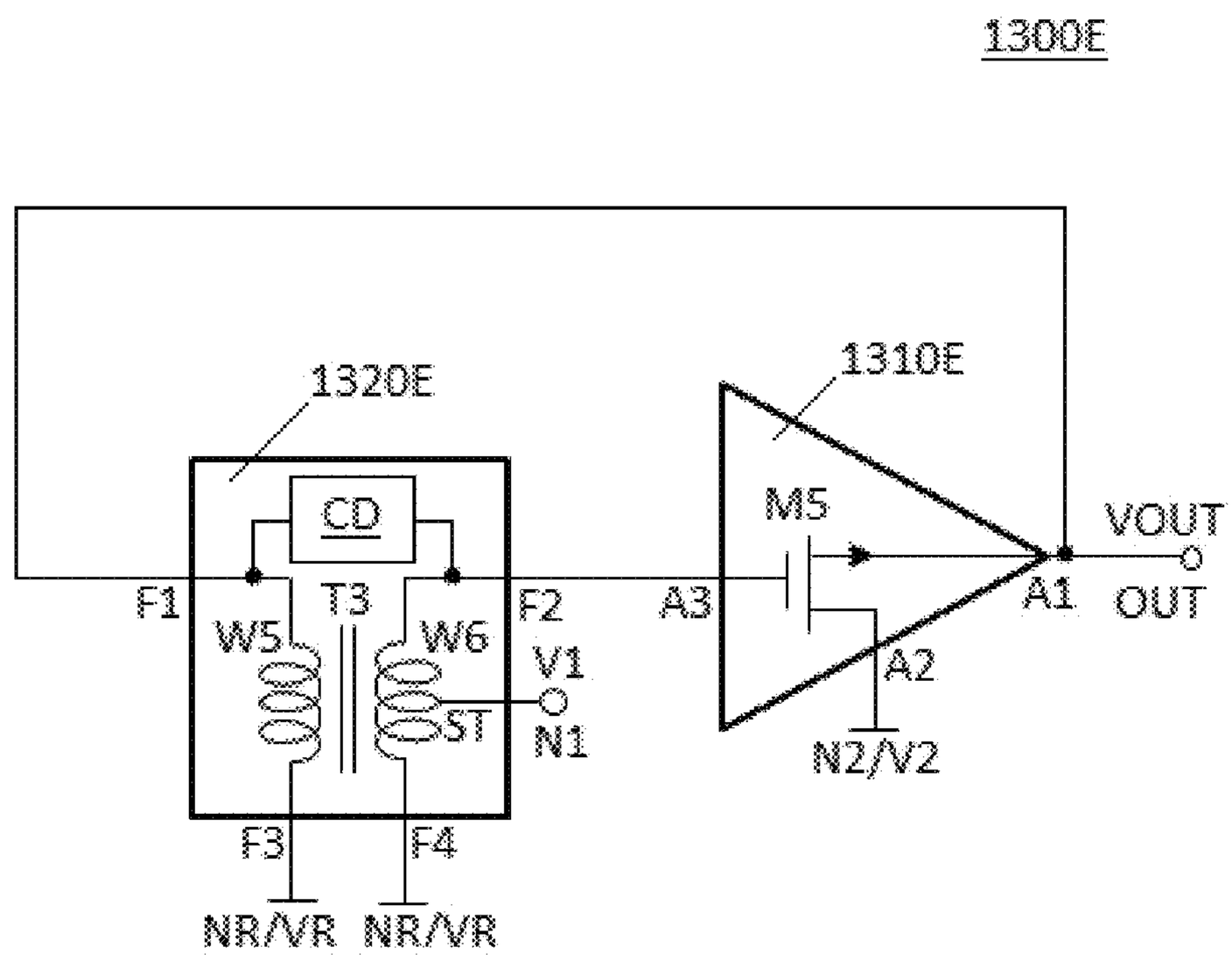
1300E
1320E
1310E
CD
M5
VOUT
F1
T3
F2
A3
A1
OUT
W5
W6
V1
A2
ST
N1
N2/V2
F3
F4
NR/VR
NR/VR

FIG. 13E

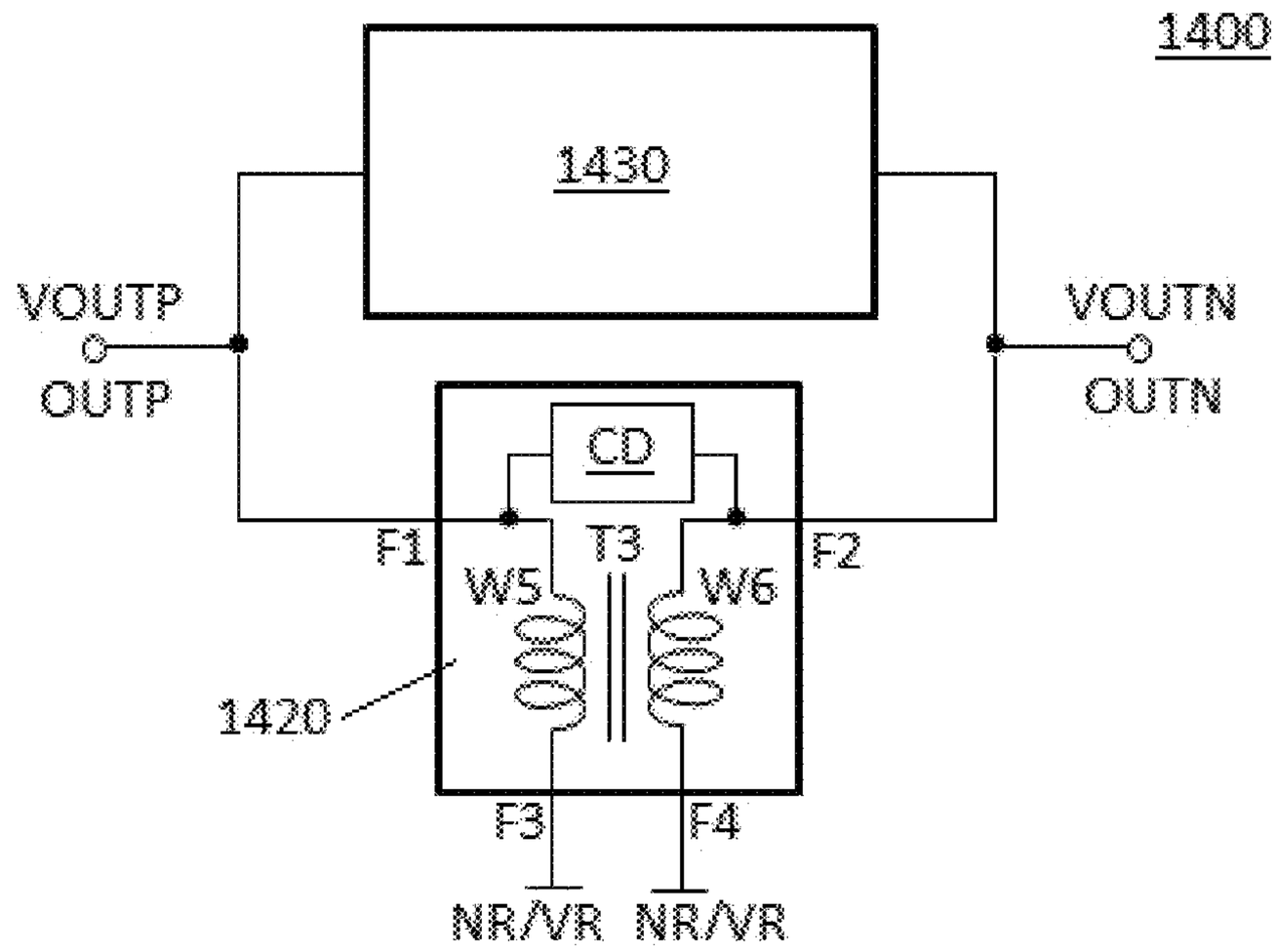

FIG. 14A

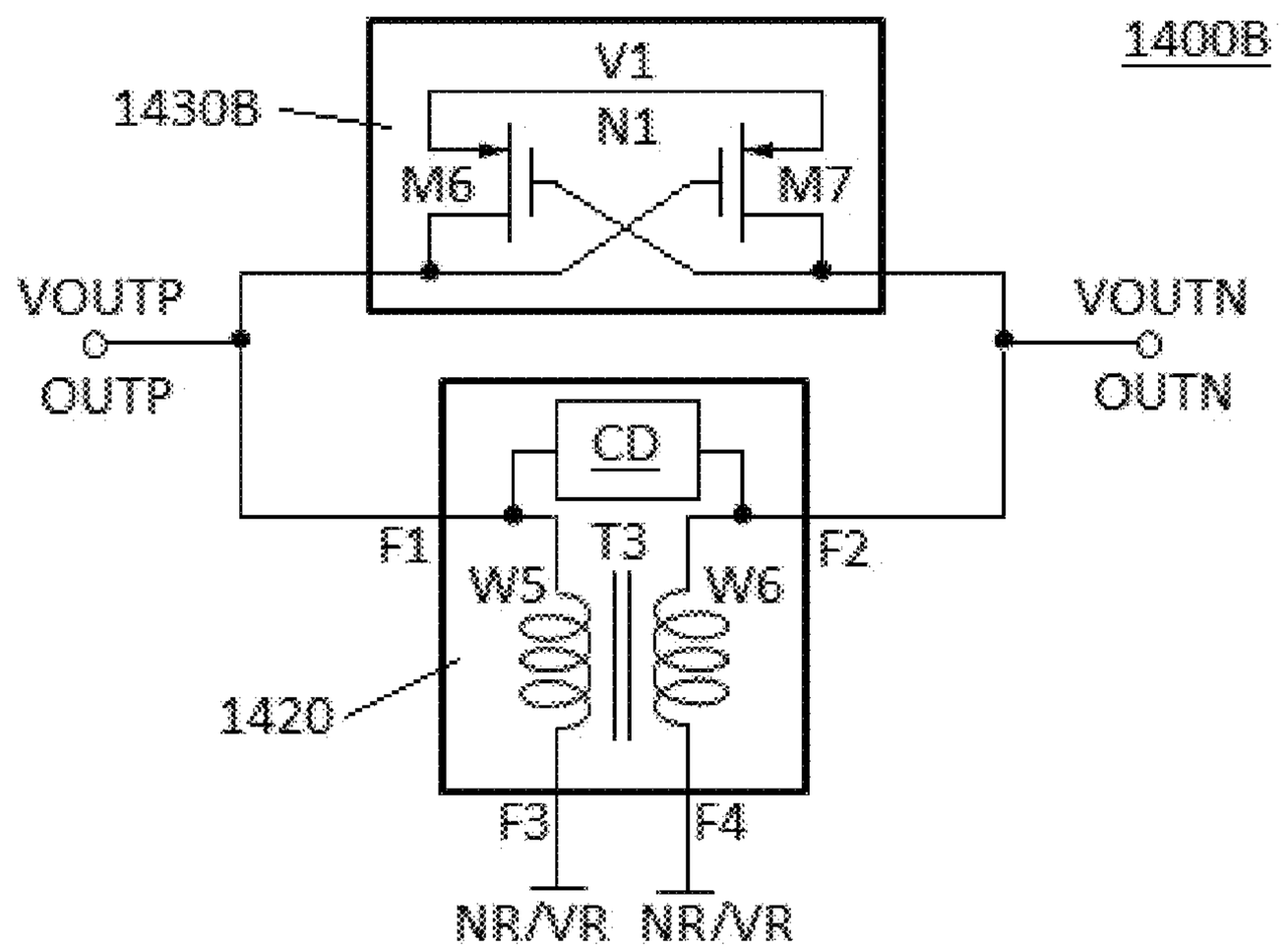

FIG. 14B

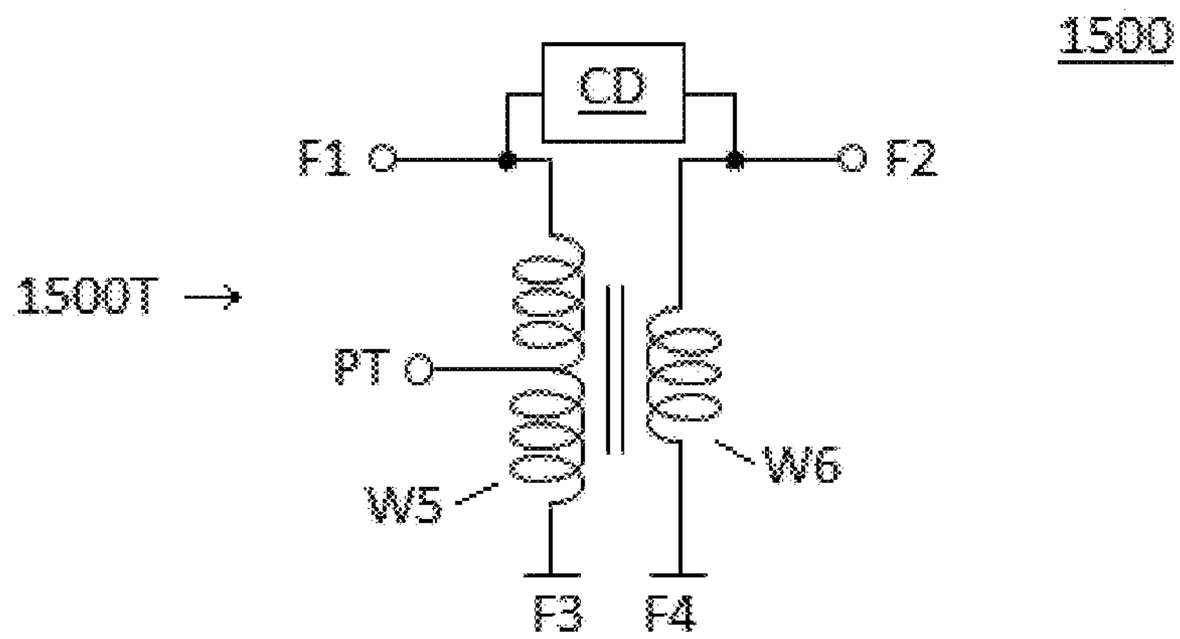

FIG. 15A

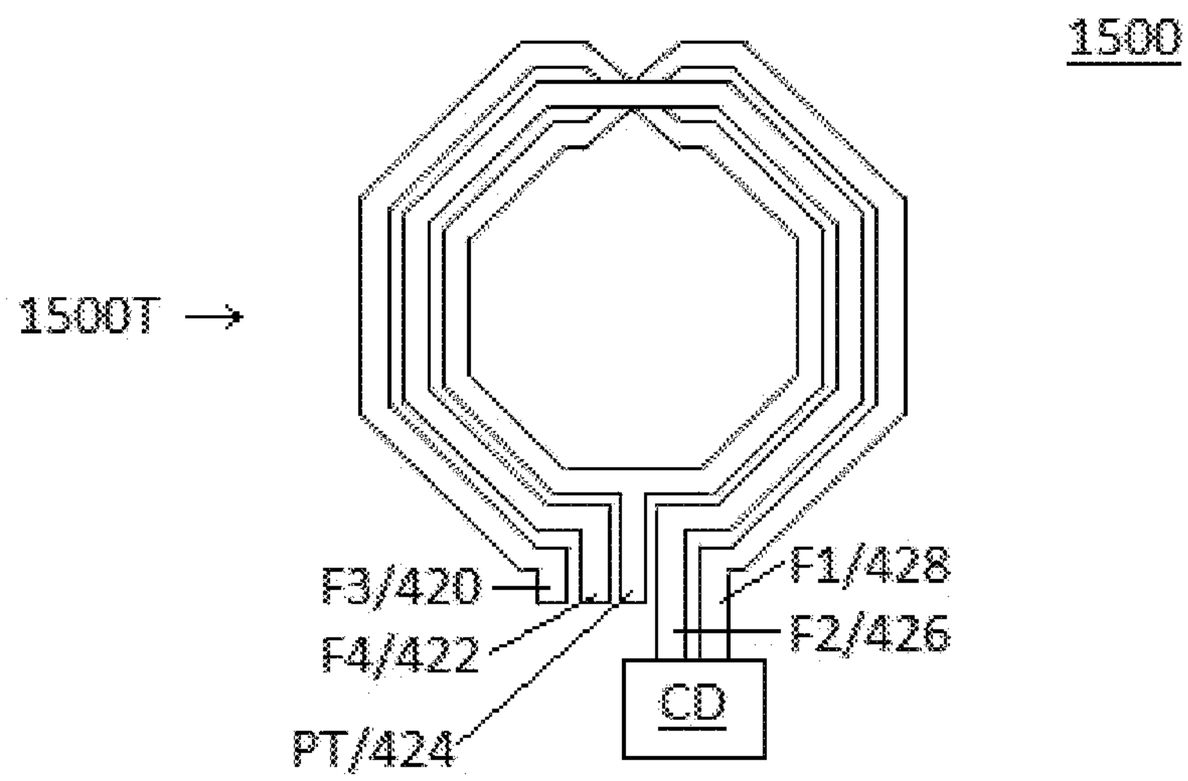

FIG. 15B

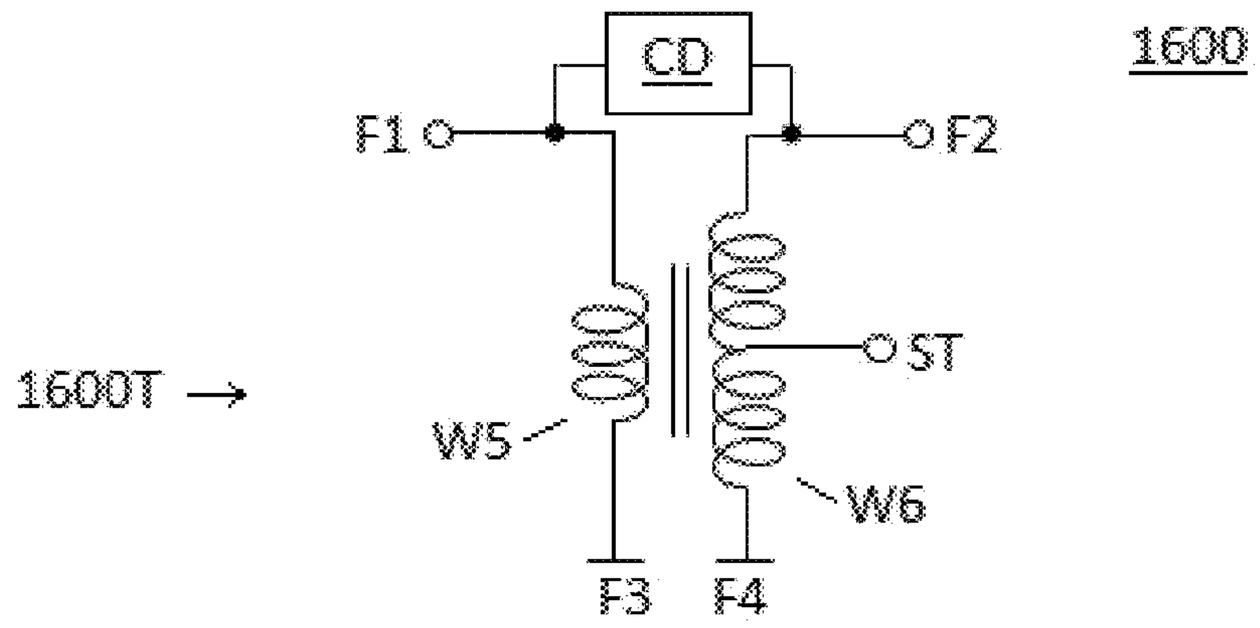

FIG. 16A

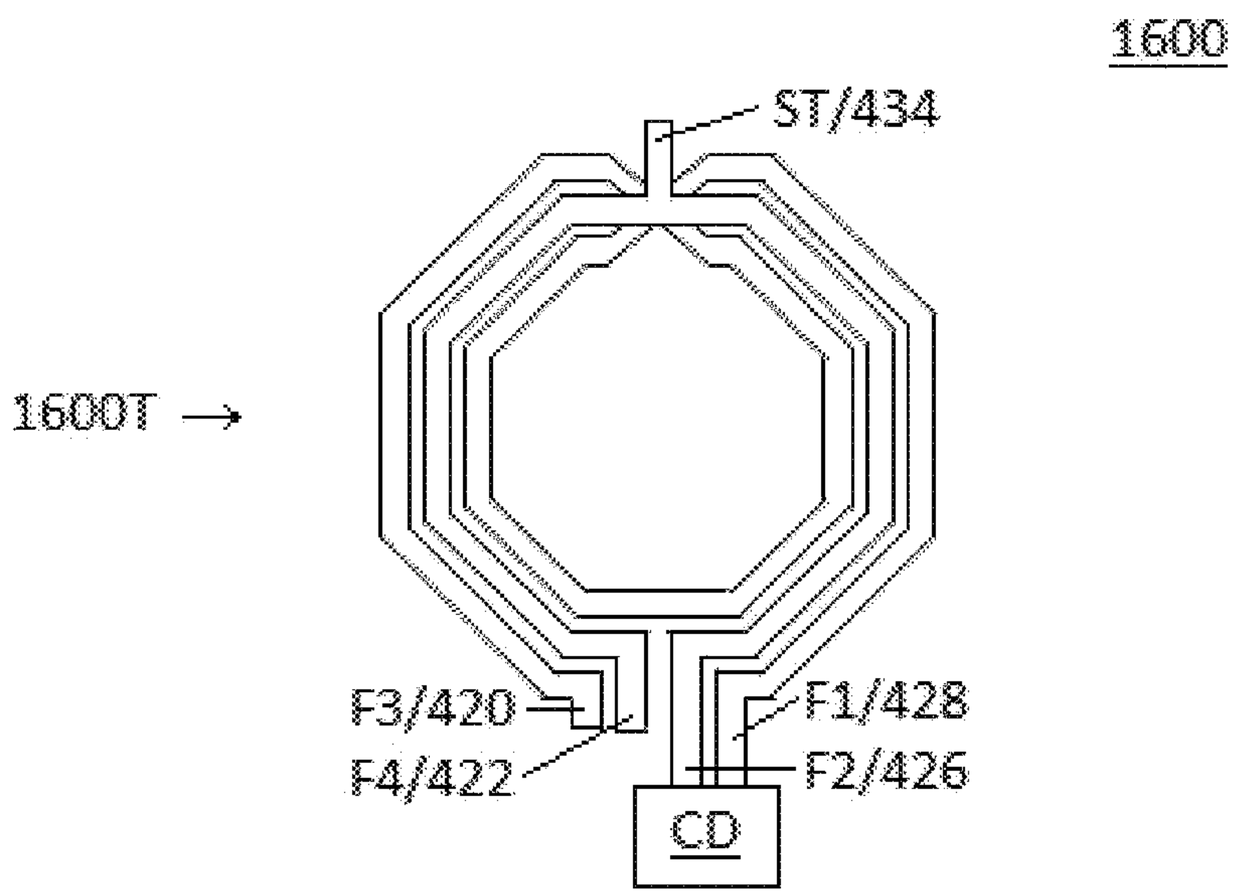

FIG. 16B

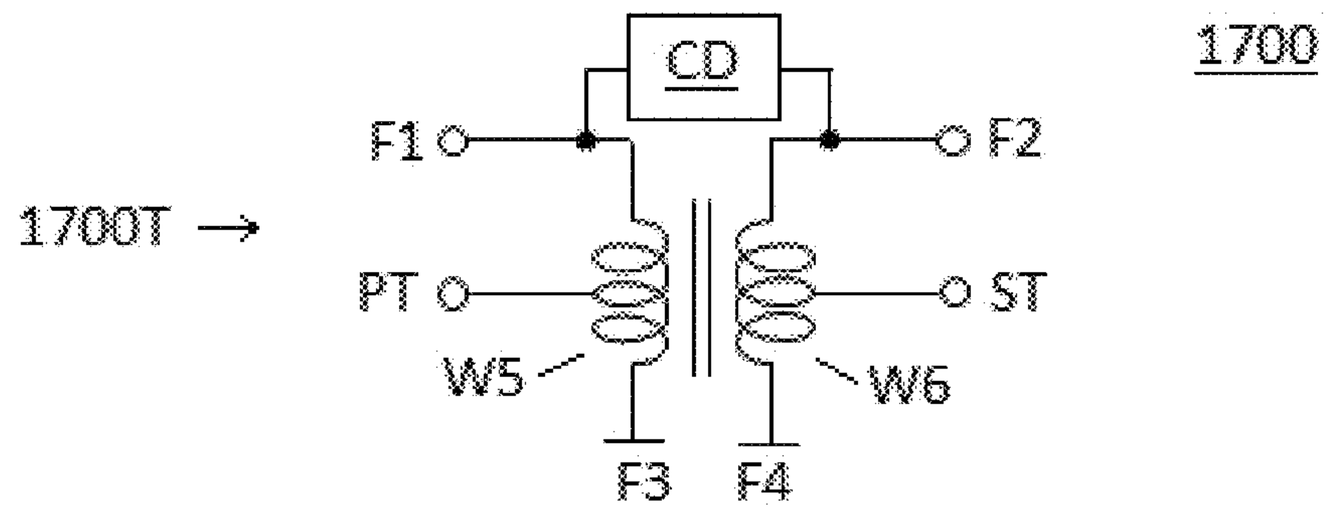

FIG. 17A

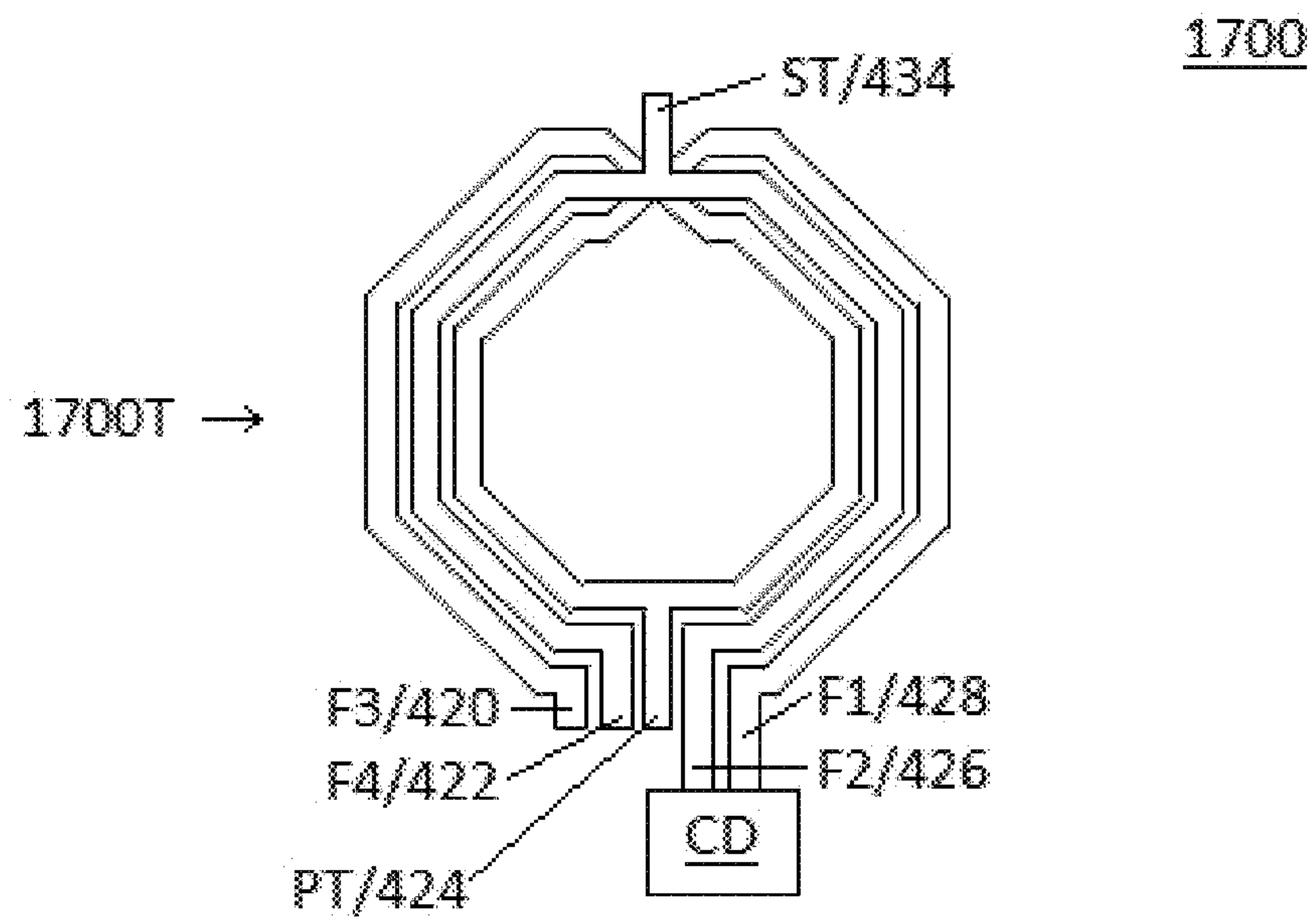

FIG. 17B

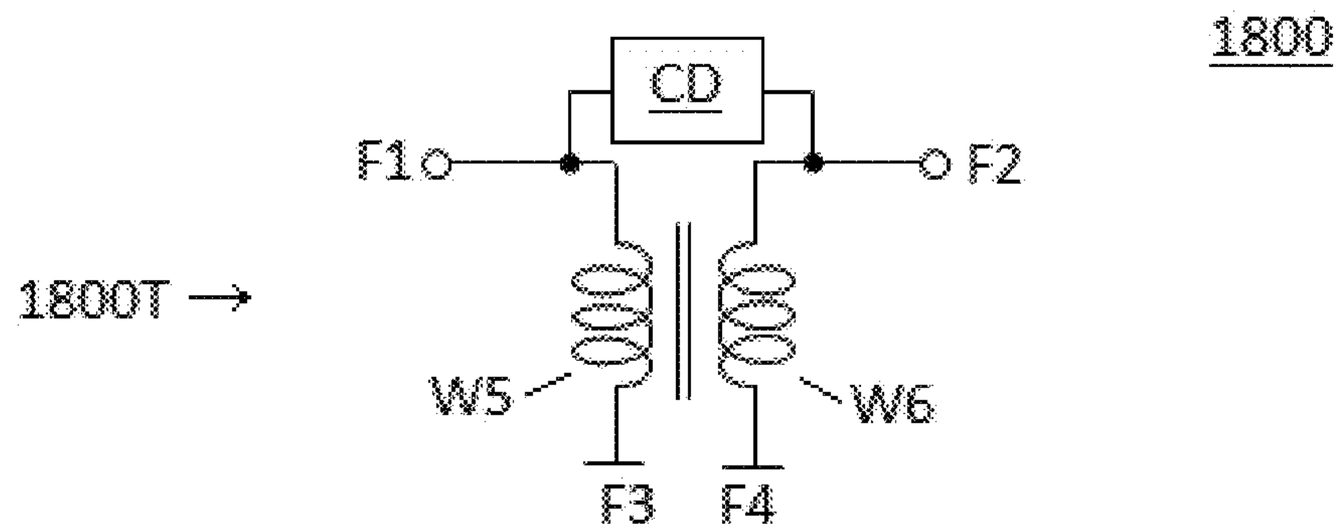

FIG. 18A

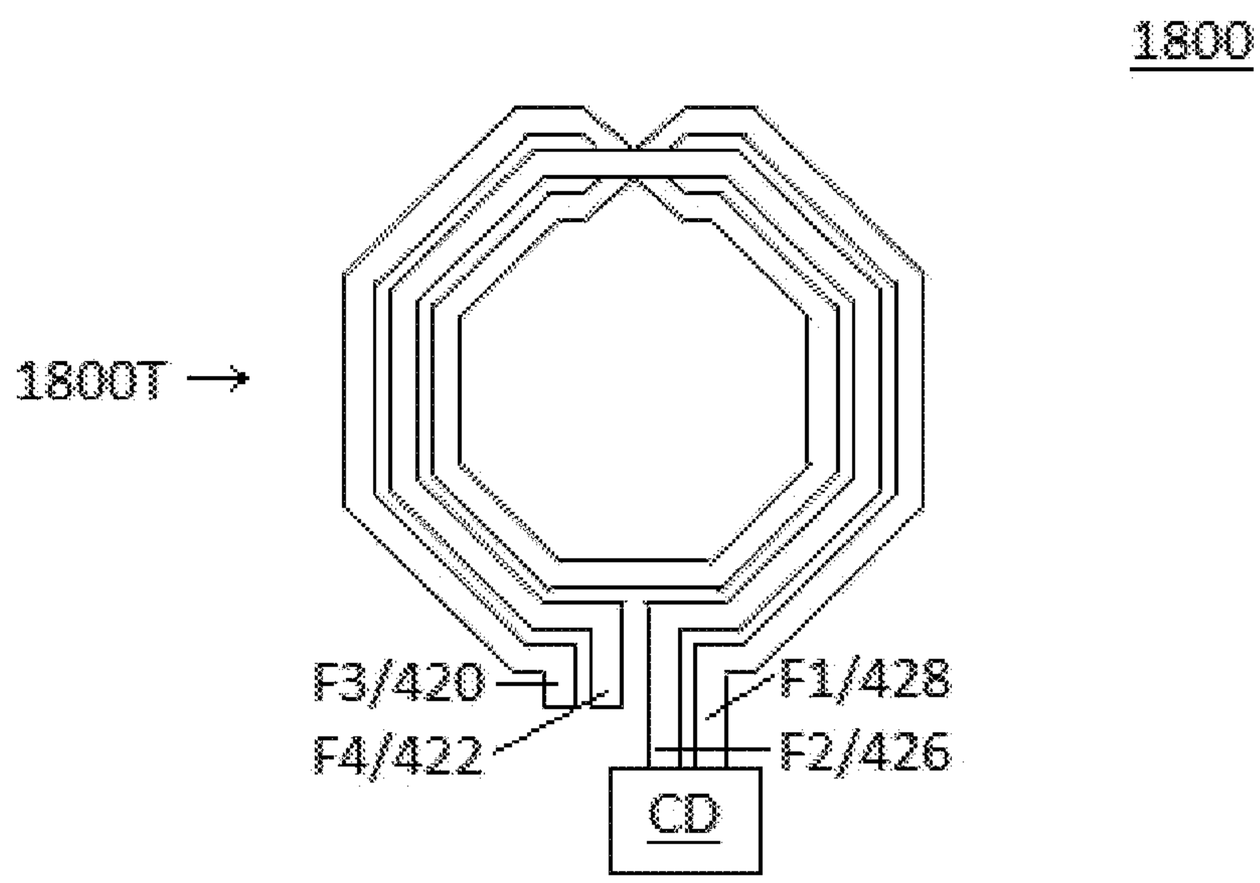

FIG. 18B

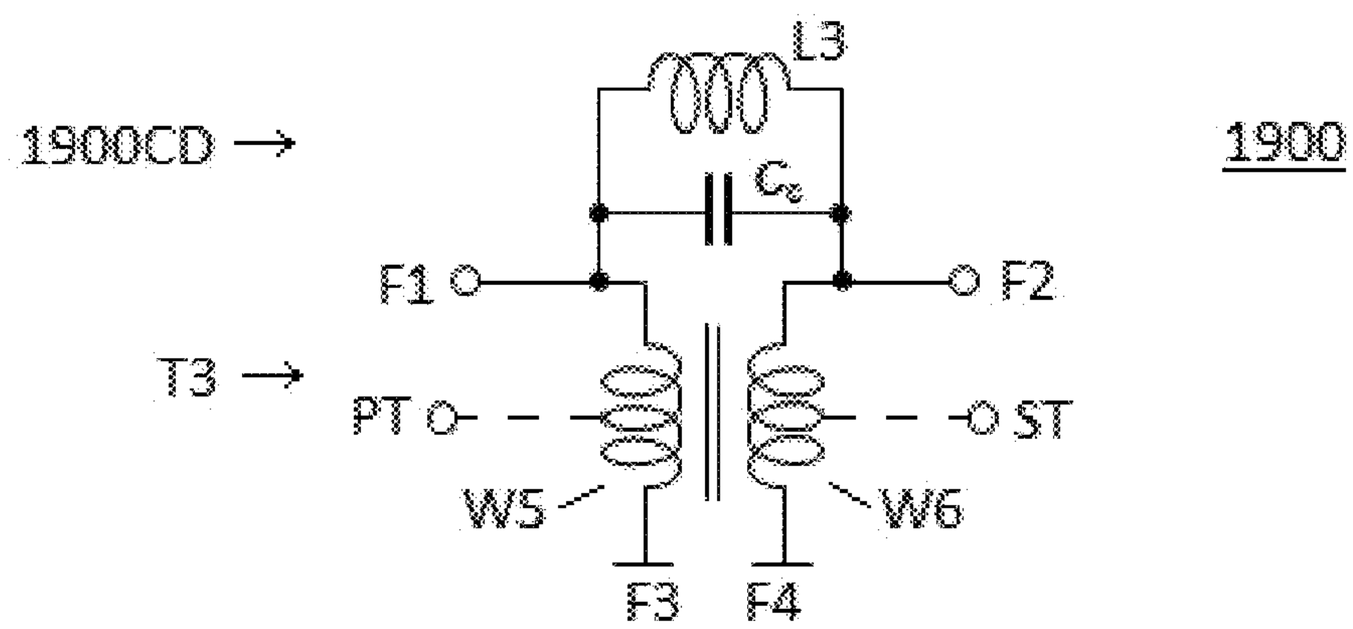

FIG. 19A

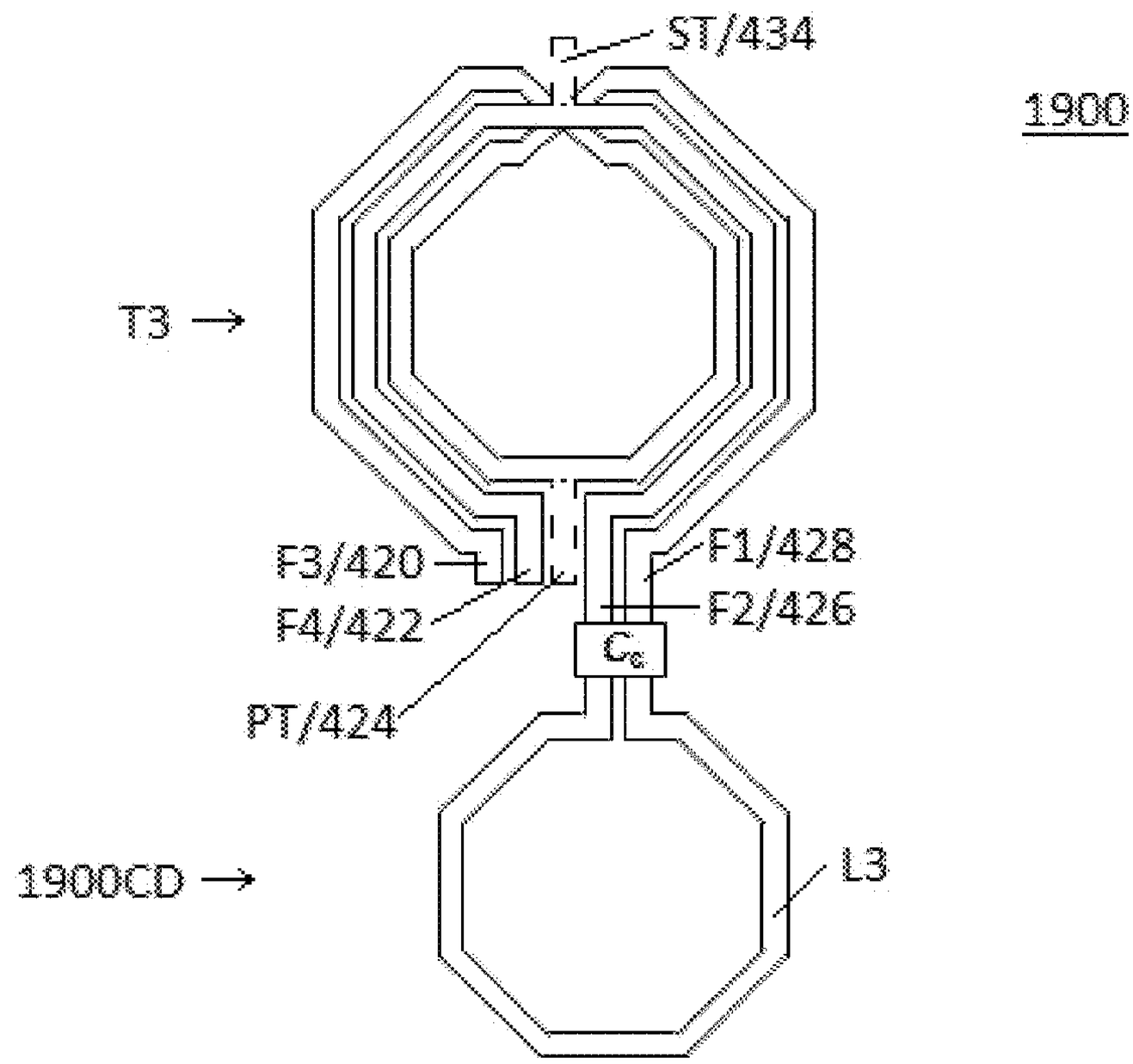

FIG. 19B

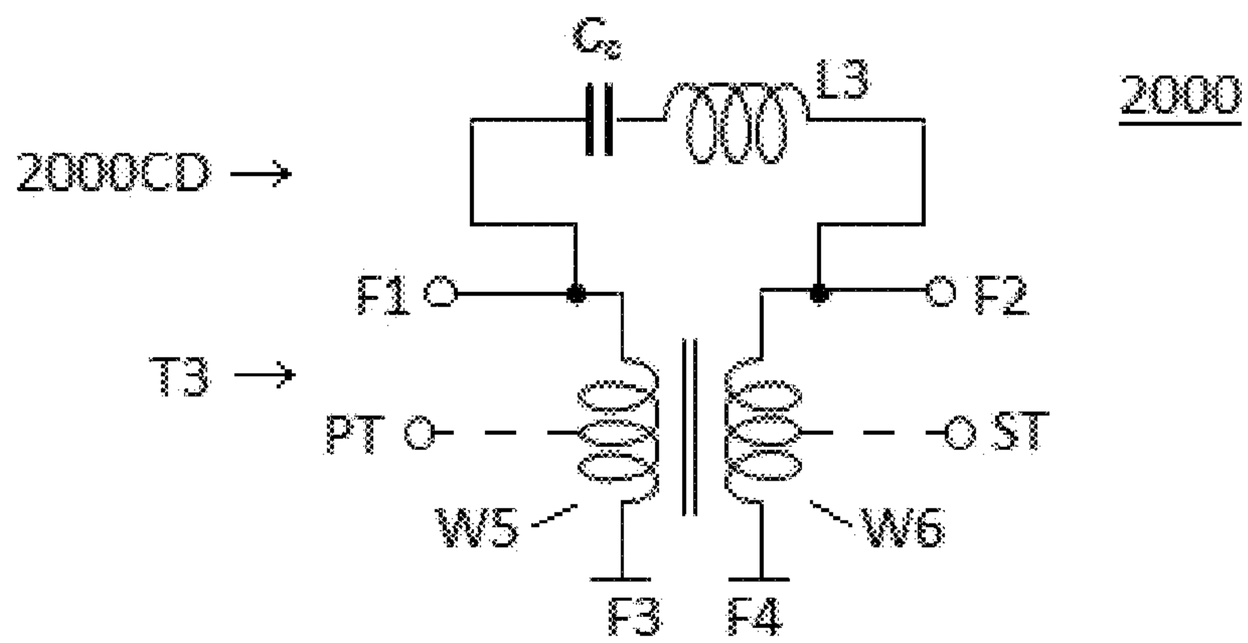

FIG. 20A

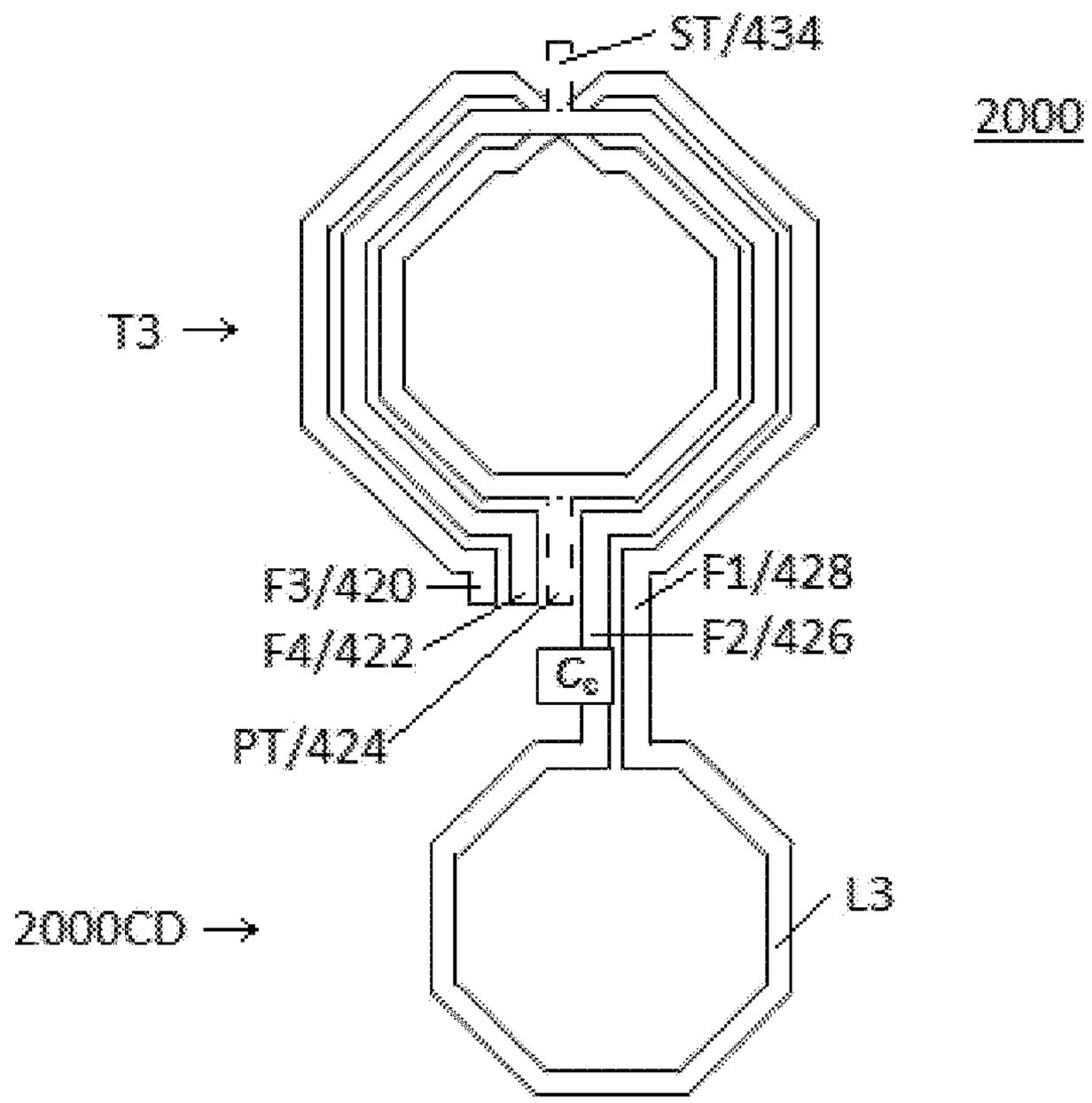

FIG. 20B

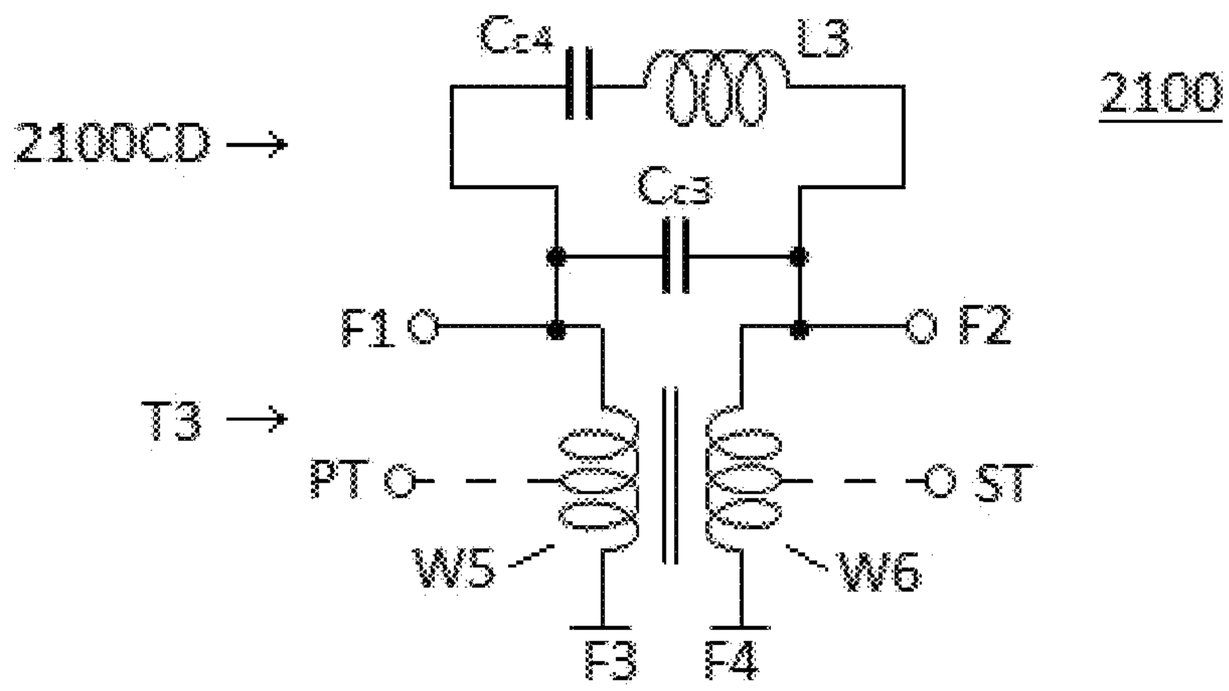

FIG. 21A

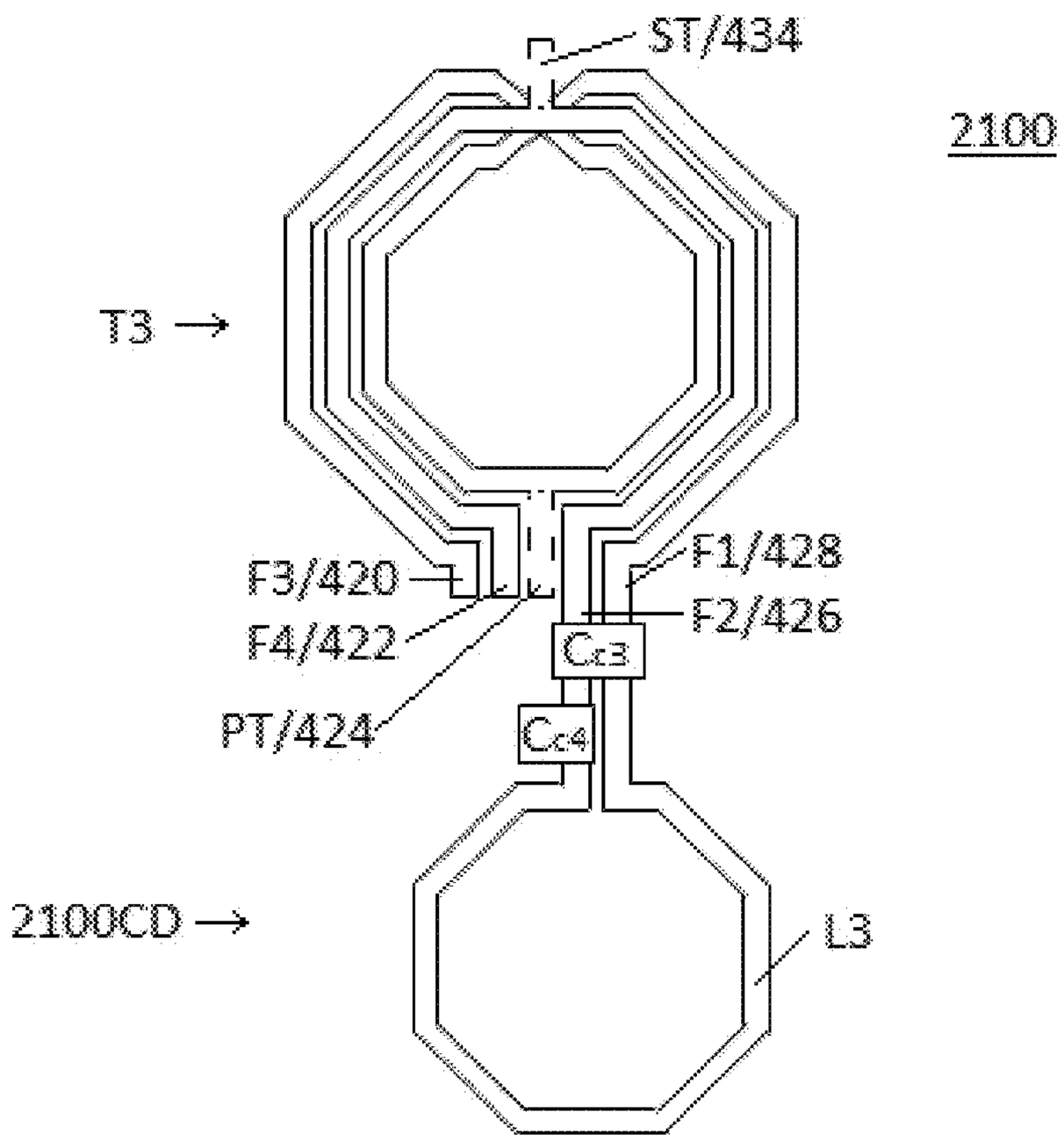

FIG. 21B

2200

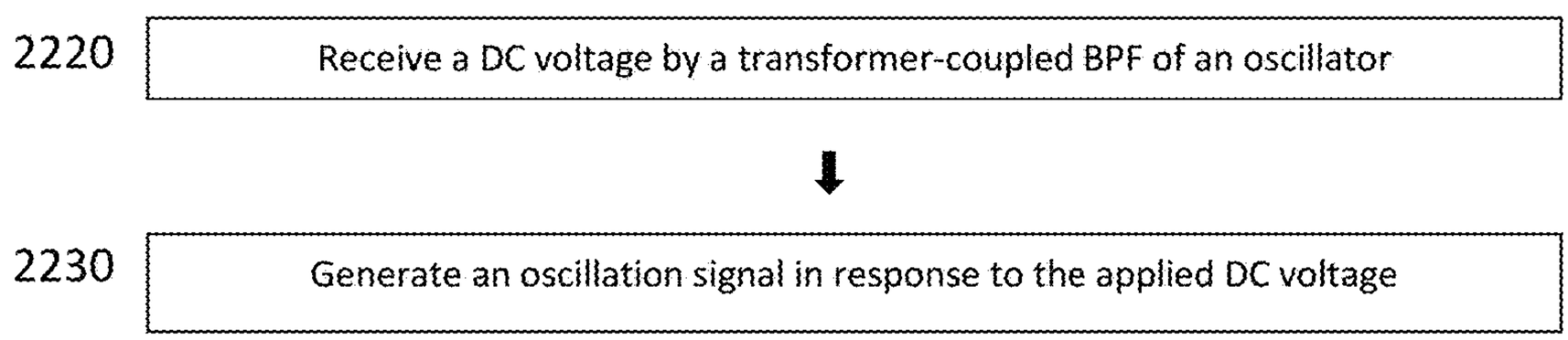
2220
Receive a DC voltage by a transformer-coupled BPF of an oscillator
2230
Generate an oscillation signal in response to the applied DC voltage

FIG. 22

OSCILLATOR CIRCUIT, DEVICE, AND METHOD

PRIORITY CLAIM AND CROSS-REFERENCE

[0001] This application claims priority of U.S. Provisional Patent Application, Ser. No. 62/943,744, filed Dec. 4, 2019, and is a continuation-in-part of U.S. patent application Ser. No. 16/432,004, filed on Jun. 5, 2019, which claims priority of U.S. Provisional Patent Application Ser. No. 62/691,928, filed Jun. 29, 2018, each of which is incorporated herein by reference in its entirety.

BACKGROUND

[0002] Integrated circuits (ICs) sometimes include one or more oscillator circuits that generate signals having frequencies ranging from a few hertz to hundreds of gigahertz (GHz). The frequencies depend on circuit design and, in some cases, one or more circuit input signal values. A voltage controlled oscillator (VCO) is an oscillator with an output signal whose output can be varied over a range, which is controlled by an input voltage. The output frequency of the output signal of the oscillator is directly related to the input voltage. By varying the input voltage, the output frequency of the output signal is adjusted.

BRIEF DESCRIPTION OF THE DRAWINGS

[0003] Aspects of the present disclosure are best understood from the following detailed description when read with the accompanying figures. It is noted that, in accordance with the standard practice in the industry, various features are not drawn to scale. In fact, the dimensions of the various features may be arbitrarily increased or reduced for clarity of discussion.

[0004] FIGS. **1**A-**1**B are schematic diagrams of a voltage controlled oscillator (VCO), in accordance with some embodiments.

[0005] FIGS. **2**A-**2**B are a schematic diagram and graph of the phase noise performance of a VCO, in accordance with some embodiments.

[0006] FIG. **3** is a graph of the transmission coefficient of a VCO, in accordance with some embodiments.

[0007] FIG. **4** is a schematic diagram of a transformer of a transformer-coupled bandpass filter (BPF), in accordance with some embodiments.

[0008] FIGS. **5**A-**5**B are schematic diagrams of a transformer-coupled BPF, in accordance with some embodiments.

[0009] FIGS. **6**A-**6**B are a schematic diagram of a transformer-coupled BPF and a graph of the isolation of the transformer-coupled BPF, respectively, in accordance with some embodiments.

[0010] FIG. **7** is a schematic diagram of a transformer-coupled BPF, in accordance with some embodiments.

[0011] FIGS. **8**A-**8**B are graphs of the noise suppression of a VCO, in accordance with some embodiments.

[0012] FIGS. **9**A-**9**B are graphs of the measured oscillation frequency and measure phase noise of a VCO, in accordance with some embodiments.

[0013] FIG. **10** is a flowchart of a method of generating an oscillation signal, in accordance with one or more embodiments.

[0014] FIGS. **11**A and **11**B are schematic diagrams of VCOs, in accordance with some embodiments.

[0015] FIGS. **12**A and **12**B are schematic diagrams of a VCO circuit, in accordance with some embodiments.

[0016] FIGS. **13**A-**13**E are schematic diagrams of feedback oscillators, in accordance with some embodiments.

[0017] FIGS. **14**A and **14**B are schematic diagrams of differential oscillators, in accordance with some embodiments.

[0018] FIGS. **15**A-**21**B are schematic diagrams of transformer-coupled BPFs, in accordance with some embodiments.

[0019] FIG. **22** is a flowchart of a method of generating an oscillation signal, in accordance with some embodiments.

DETAILED DESCRIPTION

[0020] The following disclosure provides many different embodiments, or examples, for implementing different features of the provided subject matter. Specific examples of components, values, operations, materials, arrangements, or the like, are described below to simplify the present disclosure. These are, of course, merely examples and are not intended to be limiting. Other components, values, operations, materials, arrangements, or the like, are contemplated. For example, the formation of a first feature over or on a second feature in the description that follows may include embodiments in which the first and second features are formed in direct contact, and may also include embodiments in which additional features may be formed between the first and second features, such that the first and second features may not be in direct contact. In addition, the present disclosure may repeat reference numerals and/or letters in the various examples. This repetition is for the purpose of simplicity and clarity and does not in itself dictate a relationship between the various embodiments and/or configurations discussed.

[0021] Voltage controlled oscillators (VCOs) are used as part of a phase locked loop (PLL) to synchronize the VCO frequency to a reference frequency. The quality of the output of a VCO is compromised when short term random frequency signal fluctuations, called phase noise, appear at the output. Phase noise introduces second order and third order harmonic spectral components that alter the output of a VCO. For a VCO to be operable with certain millimeter wave applications (mmWave) (30 GHz-300 GHz), the VCO needs to control the amount of phase noise that appears at the VCO output.

[0022] FIG. **1**A is a schematic diagram of a VCO **100**, in accordance with some embodiments. VCO **100** has two components: a resonator **102** and a transformer-coupled bandpass filter (BPF) **106**. The resonator **102** is used for frequency detection and replication for the VCO **100**. The resonator **102** includes two bias-tee (bias-T) circuits **104** and **108** that provide DC voltage or DC current in order to bias the resonator **102**. The bias-T circuit **104** includes an inductor L**1**, a node **114**, and a capacitive device C**1**. The inductor L**1** is connected to the node **114** at one end and a DC voltage power source (VBUF) at the other end. The capacitive device C**1** is connected to the node **114** at one end and a resistor R**1** at the other end. The resistor R**1** is connected to a ground source at the other end. The bias-T circuit **108** includes an inductor L**2**, a node **116**, and a capacitive device C**2**. The inductor L**2** is connected to the node **116** at one end and a DC voltage power source (VBUF) at the other end. The capacitive device C**1** is connected to the node **116** at one end and a resistor R**2** at the other end. The resistor R**2** is

connected to a ground source at the other end. The bias-T circuits **104** and **108** are used to provide a fixed DC voltage to transistors M**3** and M**4**.

[0023] Transistor M**3** is connected at a drain terminal to the node **114** and is connected at a source terminal to a ground source. A gate of transistor M**3** is connected to a node **118**. A variable capacitive device C**6** is connected to the node **118** at one end and to an electrical node **120** at the other end. Transistor M**4** is connected at a drain terminal to the node **116** and is connected at a source terminal to a ground source. The gate of transistor M**4** is connected to a node **122**. A variable capacitive device C**3** is connected to the node **122** at one end and to the node **120** at the other end. The node **120** is connected to a first reference voltage V_{ctrl1}.

[0024] A drain terminal of transistor M**1** is connected to a node **124** and a source terminal is connected to a ground voltage. A drain terminal of transistor M**2** is connected to a node **126**, and a source terminal is connected to a ground voltage. A gate of transistor M**1** is connected to a node **128**, and a gate of transistor M**2** is connected to a node **130**. A variable capacitive device C**5** is connected to the node **128** at one end and to a node **132** at the other end. A variable capacitive device C**4** is connected to the node **130** at one end and to the node **132** at the other end. The node **132** is connected to a second reference voltage source (V_{ctrl2}). The transistors M**1** and M**2** are configured to form a cross-coupled pair of transistors.

[0025] The transformer-coupled BPF **106** includes a pair of coupled-transformers T**1** and T**2**, and a pair of coupled capacitive devices C_{c1} and C_{c2}. Transformer T**1** includes a primary winding W**1**, a secondary winding W**2**, and a core CR**1**. The transformer T**2** includes a primary winding W**3**, a secondary winding W**4**, and a core CR**2**. The transformer T**1** and T**2** are configured to operate together as a 1:2 transformer in this embodiment, however, in other embodiments the transformers T**1** and T**2** have different transformer implementations depending on power considerations of the VCO. The transformer T**1** produces a phase difference of 180 degrees as indicated by the polarity dots **144** for transformer T**1** while the phase produced by the transformer device T**2** is −180 degrees as indicated by the polarity dots **146**. The primary winding W**1** is connected to node **134** at one end and to a power supply source (VDD) at the other end and the primary winding W**3** is connected to node **136** at one end and to the power supply source (VDD) at the other end. The capacitive device C_{c1} is connected between nodes **134** and **136**. The secondary winding W**2** is coupled to node **138** at one end and to voltage source (V_G) at the other end and the secondary winding W**4** is connected to node **140** at one end and to voltage source (V_G) at the other end. The capacitive device C_{C2} is connected between nodes **138** and **140**. The coupling of the pair of coupled capacitive devices C_{c1} and C_{c2} with the transformer T**1** and T**2** form a BPF.

[0026] The connection of node **134** to node **124**, node **136** to node **130**, node **138** to node **128**, and node **140** to node **126** connects resonator component **102** to the transformer-coupled BPF **106**.

[0027] FIG. **1**B is a schematic diagram of a VCO **110**, in accordance with an embodiment. VCO **110** comprises the resonator component **102**. VCO **110** differs from VCO **100** in the configuration of a transformer-coupled BPF **112** in connection with VCO **110**. The transformer-coupled BPF **112** is similar to the transformer-coupled BPF **106** except for the connection of the pair of coupled capacitive devices C_{c1} and C_{c2}. In VCO **110**, the capacitive device C_{c1} is connected between node **134** and node **138**, and the capacitive device C_{c2} is connected between node **136** and node **140**. Both ends of the capacitive devices C_{c1} and C_{c2} of VCO **110** are connected to the terminals of the same transformers T**1** and T**2**, which is opposite the connection of the capacitive devices C_{c1} and C_{c2} for VCO **100**.

[0028] The cross-coupled pair of transistors M**1** and M**2** are configured to produce negative resistance to compensate for signal loss from the transformer-coupled BPF **106**. The transistors M**1** and M**2** operate in the saturation region for current stability to reduce 1/f (also known as flicker noise) caused by charge trapping and releasing in the transistors M**1** and M**2**; however, removing flicker noise does not reduce phase noise. Flicker noise is not a predominant factor at higher frequency ranges, such as 1 GHz or higher, where phase noise is more predominant. To reduce phase noise, the transformer-coupled BPFs **106** and **112** use the pair of coupled capacitive devices C_{c1} and C_{c2} to filter and reduce phase noise contributed by higher harmonics, such as $2f_0$, $3f_0$, or higher, where f_0 is a lower cutoff frequency of the transformer-coupled BPF **106** or **112** described herein. The capacitive devices C_{c1} and C_{c2} are each coupled to the pair of coupled-transformers T**1** and T**2** to form the transformer-coupled BPF **106** or **112**. The frequency response of the transformer-coupled BPF **106** or **112** includes an additional transmission zero, defined as the frequency where the frequency response produces a nearly zero value. Capacitive devices, such as C_{c1} and C_{c2}, increases the number of transmission zeros in a frequency response of a system due to filtering. The transmission zero for transformer-coupled BPFs **106** or **112** occurs at twice the lower cutoff frequency ($2f_0$), where the lower cutoff frequency (f_0) is the lowest corner frequency of the transformer-coupled BPF **106** or **112**. Moreover, the pair of coupled capacitive devices C_{c1} and C_{c2} are configured so that the transformer-coupled BPF includes a bandpass range outside the frequency range of the phase noise contributed by the 2nd and 3rd harmonics. In at least some embodiments, the transformer-coupled BPF **106** or **112** reduces phase noise by 14 dB or more.

[0029] In some embodiments, the transistors M**1**-M**4** are bipolar transistors, field effect transistors (FETs), or the like. In some embodiments, the transistors M**1**-M**4** are metal-oxide semiconductor field-effect transistors (MOSFETs), such as CMOS, NMOS, PMOS, or the like. In some embodiments, the transistors M**1**-M**4** are different types of transistors. In some embodiments, the ground source described is external to the VCO or internal ground to the VCO. In some embodiments, the variable capacitive devices C**3**-C**6** are varactor structures or the like that allow capacitance to change based on voltage or current.

[0030] FIG. **2**A is a schematic diagram of a feedback circuit of a VCO **202**, in accordance with an embodiment. The VCO **202** includes a first BPF **204** having a gain mi that receives as input a signal D**1**. The first BPF **204** produces an output **206** that is a result of the multiplication of the gain mi and D**1**. A second BPF **208**, having a gain mz, receives as input a signal D**2**. The second BPF **208** produces an output signal **210** that is a result of the multiplication of a gain mz and D**2**. An adder **212** receives as input the signal **206** and the signal D**2** and outputs a signal G**2**. An adder **214** receives as input the signal **210** and the signal D**1** and outputs a signal G**1**. A conductance device **216** receives as input the signal G**1**, and outputs the signal D**1**. A conductance device **218**

receives as input the signal G**2**, and outputs the signal D**2**. A feedback arm **220** is configured to include the conductance device **216** and adder **214** so the signal D**1** produces consistent results. A feedback arm **222** is configured to include the conductance device **218** and adder **212** so the signal D**2** produces consistent results.

[0031] In some embodiments, the gains mi and mz are related to the turn ratios of each of the transformers of the pair of coupled-transformers as described herein (e.g. "T**1**" and "T**2**"). In some embodiments, the gains mi and mz are the same or different. In some embodiments, the conductance devices **216** and **218** are the conductance of each of the transformers of the pair of coupled-transformers T**1** and T**2** of FIGS. **1**A and **1**B. In some embodiments, the conductance devices **216** and **218** include circuits that are external to the VCO **202**.

[0032] The BPFs **204** and **208** increase the oscillation amplitude by applying gains mi and mz to signals D**1** and D**2** without requiring additional DC voltage. In this case, the signals D**1** and D**2** are substantially similar and the gains mi and mz are **2**, and the transformers used by the BPFs **204** and **206** have turn ratios of **2**. Moreover, all parasitic losses are negligible. Using these parameters, the signal power of G**1** (Pm) is approximately three times the signal power of D**1** (Pm) based on the feedback circuit of the VCO **202** and the following equation:

$$P_{D1}+m_2P_{D2}=P_{G1}$$

$$\text{If } P_{D1}=P_{D2} \text{ and } m_1=m_2=2$$

$$P_{G1}=3P_{D1}.$$

[0033] The noise power does not increase due to the phase noise suppression of the BPFs **204** and **208**. The VCO **202** produces a phase reduction of approximately 10 log(⅓) ≈−4.8 dB.

[0034] In some embodiments, the turn ratio is higher than 2 and signals D**1** and D**2** are not similar.

[0035] FIG. **2**B is a graph of the phase noise performance **224** of the VCO **202**, in accordance with some embodiments. Plot **224** is a graph of the phase noise improvement in decibels (dB) versus turn ratio. As the turn ratio increases, phase noise improvement increases, i.e., dB levels fall, as depicted in plot **224**.

[0036] FIG. **3** is a graph **300** of the transmission coefficient of a VCO, in accordance with some embodiments. The transmission coefficient of the VCO indicates the amplitude and power outputted by the VCO. The plot **300** includes a curve **302** and a curve **304**. The curve **302** includes the transmission coefficient versus frequency of a pair of coupled-transformers according to an approach not having a transformer-coupled BPF as described herein, and the curve **304** includes the transmission coefficient versus frequency of a transformer-coupled BPF (e.g. "**106**" or "**112**") of FIGS. **1**A or **1**B. In this case, the transformer-coupled BPF has a lower cutoff frequency (f_0) of approximately 28 GHz. The curve **304** includes a transmission zero at approximately 56 GHz or ($2f_0$) with more than a 14 dB drop relative to the curve **302** at the same point. At 84 GHz, the curve **304** includes a drop of approximately 14 dB relative to the curve **302**. The pair of coupled capacitors filters out the higher frequency components of the phase noise.

[0037] FIG. **4** is a schematic diagram of a pair of coupled-transformers **400** used in a transformer-coupled BPF, in accordance with some embodiments. The pair of coupled-transformers **400** is configured in a two stacked metal layer arrangement. The pair of coupled-transformers includes a number of conductive structures **406**, **412**, and **414** formed on a metal layer. Also, the pair of coupled-transformers **400** include a conductive structure **418** formed on the metal layer having a first terminal **434** at one end of the coupled-transformer **400** where two extending portions **438** extend from the first terminal **434** to two terminals **422** and **426** at the opposite end. The extending portions **438** are configured to be the primary windings W**1** and W**3** shown in FIGS. **1**A-**1**B.

[0038] The conductive structure **412** includes a terminal **424** at one end and two oppositely extending portions **436** at the opposite end of the conductive structure **412**. The two oppositely extending portions **436** extend from the terminal **424**. The conductive structure **406** includes a first end that is connected to one of the extending portions **436** near the first terminal **434**. The conductive structure **406** includes a terminal **420** positioned at an opposite end from the first end. The conductive structure **414** includes a first end that is connected to another of the extending portions **436** of the conductive structure **412** near the first terminal **434**. Also, the conductive structure **414** includes a terminal **428** positioned at an opposite end from the first end. Conductive structures **406** and **414** connect with the extending portions **436** of the conductive structure **412** below the first terminal **434**.

[0039] Via structures **430** and **432** are configured to provide the connections necessary to form the pair of coupled-transformers **400**. A portion of the conductive structures **406**, **412**, **414**, and **418** are positioned above a first substrate **404**. The via structures **432** are configured to make connections between the conductive structures **406** and **412** to form the secondary winding W**2** of FIGS. **1**A-**1**B and between conductive structures **412** and **414** to form the secondary winding W**4** of FIGS. **1**A-**1**B. The connection between the conductive structure **406** and the conductive structure **412** and between the conductive structure **414** and the conductive structure **412** is beneath the first terminal. The other portions of the conductive structures **406**, **412**, **414** and **418** include the terminals **420**, **422**, **424**, **426**, and **428** are each positioned above one of a series of second substrate structures **416**. The second substrate structures **416** are individually patterned to have similar dimensions with terminals **420**, **422**, **424**, **426**, and **428**. Moreover, the via structures **430** are configured to make connections between the terminals **420** and **424** and between the terminals **424** and **428**.

[0040] In some embodiments, the first substrate **404** and second substrate **416** are separate substrates. In some embodiments, the first substrate **404** and second substrates **416** form a single substrate structure. In some embodiments, the first substrate **404** is a silicon (Si) substrate or a metal substrate. In some embodiments, the second substrate **416** is a Si substrate or a metal substrate.

[0041] In some embodiments, the via structures **430** and **432** are square vias. In some embodiments, the via structures **430** and **432** have octagonal shapes, hexagonal shapes, rectangular shapes, or the like. In some embodiments, the via structures **430** and **432** are through silicon vias. In some embodiments, the via structures **430** and **432** are holes etched in an interlayer dielectric that is filled with a metal. In some embodiments, the via structures **430** and **432** are buried vias. In some embodiments, the via structure **430** is different from via structure **432**. In some embodiments, the

via structures **430** and/or **432** are replaced with layered metal pairs to form interconnections with the conductive structures **406**, **412**, **414**, and **418**.

[0042] FIG. **5**A is a schematic diagram of a transformer-coupled BPF **500**, in accordance with some embodiments. The transformer-coupled BPF **500** includes a pair of coupled-transformers that is similar to the pair of coupled-transformers **400** of FIG. **4**. Moreover, FIG. **5**A includes the same coupling arrangement of the pair of coupled capacitive devices C_{c1} and C_{c2} as in FIG. **1**A of the transformer-coupled BPF **106**. The first terminal **434** is coupled to the voltage source VDD and the input voltage (V_G) is connected to terminal **424**. The coupled capacitive device C_{c1} is connected at one end to terminal **420** and the other end is connected to terminal **426**. The coupled capacitive device C_{c2} is connected at one end to terminal **422** and the other end is connected to terminal **428**. The transformer-coupled BPF **500** is an embodiment of the transformer-coupled BPF **106** of FIG. **1**A.

[0043] FIG. **5**B is a schematic diagram of a transformer-coupled BPF **502**, in accordance with some embodiments. The transformer-coupled BPF **502** includes a pair of coupled-transformers that is similar to the pair of coupled-transformers **400** of FIG. **4**. Moreover, FIG. **5**B includes a similar coupling arrangement as in FIG. **1**B of the pair of coupled capacitive devices C_{c1} and C_{c2} of the transformer-coupled BPF **112**. The first terminal **434** is coupled to the voltage source VDD and the input voltage (V_G) is connected to terminal **424**. The coupled capacitive device C_{c1} is connected at one end to terminal **420** and the other end is connected to terminal **422**. The coupled capacitive device C_{c2} is connected at one end to terminal **426** and the other end is connected to terminal **428**. The transformer-coupled BPF **502** is an embodiment of the transformer-coupled BPF **112** of FIG. **1**B.

[0044] The transformer-coupled BPFs **500** and **502** have similar properties described herein for the transformer-coupled BPFs **106** and **112** of FIG. **1**A and FIG. **1**B. In particular, the transformer-coupled BPFs **500** and **502** have a transmission zero at twice the lower cutoff frequencies (**2f0**). Moreover, the transformer-coupled BPFs **500** and **502** filter phase noise contributed by the 2nd and 3rd harmonics, as described herein.

[0045] FIG. **6**A is a schematic diagram of a transformer-coupled BPF **600**, in accordance with some embodiments. The transformer-coupled BPF **600** is similar to the transformer-coupled BPF **502** described in FIG. **5**B. FIG. **6**A includes the terminal **424** being coupled to the lowest metal layer **602**, and the pair of capacitive devices C_{c1} and C_{c2} being similarly arranged as the transformer-coupled BPF **502** of FIG. **5**B. The metal layer **602** is configured to be coupled to the voltage source (V_G). Also, the transformer-coupled BPF **600** is configured to provide isolation to prevent noise produced by parasitic resistance or the like. The width ratio between the width of the terminals (Wi) and the width of the metal layer **602** (W**2**) is correlated to increasing isolation in the transformer-coupled BPF **604**.

[0046] FIG. **6**B is a graph of the isolation versus width ratio (W_1/W_2). The plot **604** includes two curves **606** and **608**. The curve **606** includes the isolation versus width ratio for a transformer-coupled BPF operating at 28 GHz, and the curve **608** includes the isolation versus width ratio for a transformer-coupled BPF operating at 56 GHz. The higher the width ratio the better the isolation, as shown in both curves **606** and **608**. One way to increase isolation is to decrease the width (W**2**) of the metal layer **602**. At 28 GHz and 56 GHz, a width ratio of 8 or higher is used.

[0047] FIG. **7** is a schematic diagram of a transformer-coupled bandpass filter (BPF) **700**, in accordance with some embodiments. The transformer-coupled BPF **700** is similar to the transformer-coupled BPF **600** described in FIG. **6**A. Also, FIG. **7** includes a pair of coupled capacitive devices C_{c1} and C_{c2} being positioned at a lower metal layer beneath the transformer-coupled BPF **700** at regions **714** and **716**. The placement of the coupled pair of capacitive devices C_{c1} and C_{c2} at the lower metal layer beneath the transformer allows for sufficient separation between the coupled pair of capacitive devices C_{c1} and C_{c2} and the other operational elements of the transformer-coupled BPF **700**. The separation lowers the effects of parasitic capacitance introduced by the coupled capacitive devices C_{c1} and C_{c2} to the remaining operational elements of the transformer-coupled BPF **700**. Moreover, the space area of the transformer-coupled BPF **700** is decreased. In some embodiments, a layer of insulator material or the like is used to form the pair of coupled capacitive devices underneath the transformer.

[0048] FIG. **8**A is a graph **800** of the output power of a VCO, in accordance with some embodiments. In particular, the graph **800** includes the output power versus frequency at the fundamental frequency and several harmonics of a first VCO according to another approach not having a transformer-coupled BPF as described herein and a second VCO according to the approach of a transformer-coupled BPF as described herein. The fundamental frequency is 28 GHz. At the second harmonic (56 GHz), the first VCO produces a drop of 22 dB in phase noise and the second VCO produces a larger drop of 28 dB. At the third harmonic (84 GHz) and fourth harmonic (112 GHz), the second VCO produces larger drops in phase noise relative to the first VCO due to filtering properties of the transformer-BPFs as described herein.

[0049] FIG. **8**B is a graph of the noise suppression of a VCO, in accordance with some embodiments. In this case, FIG. **8**B includes a graph **802** having two curves **804** and **806**. The curve **804** is the simulated phase noise versus offset frequency of a first VCO according to another approach not having a transformer-coupled BPF as described herein and curve **806** is the simulated phase noise versus offset frequency of a second VCO having a transformer-coupled BPF as described herein. The phase noise of the second VCO is improved by 6.8 and 4.6 dB at 100 kHz and 1 MHz offset as shown in FIG. **8**B.

[0050] FIG. **9**A is a graph **902** of the measured frequency oscillation. The graph **902** includes two curves **904** and **906**. The curve **904** includes a simulation of the oscillation frequency versus control voltage (Vctr**12**) of a VCO having a transformer-coupled BPF as described herein, and the curve **906** shows the actual measurement of the oscillation frequency versus control voltage (Vctr**12**) of the same VCO. The tuning range illustrated in plot **902** is between 27.2 GHz and 27.7 GHz. The more the control voltage increases the smaller the difference between the oscillation frequencies of the simulation and measurement becomes, as shown in FIG. **9**A.

[0051] FIG. **9**B is a graph **904** of the measured phase noise. The graph **904** includes two curves **908** and **910**. The curve **908** is the measured phase noise at 27.4 GHz for a first VCO according to another approach not having a trans-

former-coupled BPF as described herein while curve **910** is the measured phase noise at 27.4 GHz for a second VCO having a transformer-coupled BPF as described herein. The measured phase noise for curve **910** is improved by 5 dB compared to the measured phase noise for curve **908**. This improvement is consistent with the 4.8 dB phase noise reduction discussed in FIGS. **2**A-**2**B.

[0052] FIG. **10** is a flowchart of a method **1000** of generating an oscillation signal, in accordance with one or more embodiments. The method **1000** is usable to generate a low phase noise oscillation signal. In step **1002**, an input voltage, such as V_G (FIG. **2**A), is received at an input terminal, such as terminal **424** of the pair of coupled-transformer **400**, of a transformer-coupled BPF.

[0053] In step **1004**, a power supply voltage, such as VDD, is received at a power supply input, such as first terminal **434** of the pair of coupled-transformer **400**, of the transformer-coupled BPF.

[0054] In step **1006**, the transformer-coupled BPF is coupled with a reference voltage, such as Vctrl**2** or Vctrl**1**, through a cross-coupled transistor pair, such as M**1** and M**2**. In some embodiments, the transformer-coupled BPF includes a pair of coupled-transformers having specific turn ratios. The transformer-coupled BPF includes a pair of coupled capacitive devices. In some embodiments, a first capacitive device of the pair of coupled capacitive devices is coupled at one end to a gate of a first transistor of the cross-coupled pair of transistors and the other end is coupled to a drain of a second transistor of the cross-coupled pair of transistors, and a second capacitive device of the pair of coupled capacitive devices is coupled at one end to the drain of the first transistor of the cross-coupled pair of transistors and the other end is coupled to the gate of the second transistor of the cross-coupled pair of transistors. In some embodiments, the first capacitive device of the pair of coupled devices is coupled at one end to a gate and the other end is coupled to a drain of a first transistor of the cross-coupled pair of transistors, and the second capacitive device of the pair of coupled capacitive devices is coupled at one end to a gate and the other end is coupled to a drain of a second transistor of the cross-coupled pair of transistors.

[0055] In step **1008**, the oscillating signal is produced having a frequency that is synchronized with the frequency of the reference voltage.

[0056] FIGS. **11**A and **11**B are schematic diagrams of respective VCOs **1100**A and **1100**B, in accordance with some embodiments. VCO **1100**A corresponds to VCO **100** discussed above with respect to FIG. **1**A, and in some embodiments is equivalent to VCO **100**, as discussed below. VCO **1100**B corresponds to VCO **110** discussed above with respect to FIG. **1**B, and in some embodiments is equivalent to VCO **110**, as discussed below.

[0057] Each of VCOs **1100**A and **1100**B includes power supply source VDD and voltage source VG, each discussed above with respect to VCOs **100** and **110** and FIGs. 1A and **1**B, a resonator **1102**, and, in some embodiments, a capacitive device Cb coupled between power supply source VDD and the ground source. VCO **1100**A also includes a transformer-coupled BPF **1106**, and VCO **1100**B also includes a transformer-coupled BPF **1112**.

[0058] Transformer-coupled BPF **1106** corresponds to transformer-coupled BPF **106** discussed above with respect to VCO **100** and FIG. **1**A, and in some embodiments is equivalent to transformer-coupled BPF **106**, as discussed below. Transformer-coupled BPF **1112** corresponds to transformer-coupled BPF **112** discussed above with respect to VCO **110** and FIG. **1**B, and in some embodiments is equivalent to transformer-coupled BPF **112**, as discussed below.

[0059] Each of transformer-coupled BPFs **1106** and **1112** includes the circuit elements and configurations of respective transformer-coupled BPFs **106** and **112**, except that each of transformer-coupled BPFs **1106** and **1112** includes coupling devices CD**1** and CD**2** instead of capacitive devices C_{c1} and C_{c2}.

[0060] A coupling device, e.g., coupling device CD**1** or CD**2**, is an IC device including one or more IC structures configured to provide an impedance, e.g., a capacitive and/or inductive path, between two terminals, e.g., terminals coupled to nodes **134**, **136**, **138**, and **140** as depicted in FIGS. **11**A and **11**B. In various embodiments, a coupling device includes one or more of a capacitive device, e.g., a plate capacitor, e.g., a metal-insulator-metal (MIM) capacitor, a capacitor-configured MOS device, or an adjustable capacitor, e.g., a MOSCAP, a capacitor network, an LC network, or another IC structure capable of providing the path impedance. In various embodiments, a coupling device is one of coupling devices **1900**C-**2100**C depicted in respective FIGS. **19**A-**21**B and discussed below.

[0061] In some embodiments, a coupling device is equivalent to a capacitive device. In some embodiments, by including a capacitive device and one or more elements in addition to the capacitive device, a coupling device is capable of having frequency characteristics different from those of the capacitive device alone. In various embodiments, a coupling device is thereby capable of having multiple transmission zeroes such that, compared to a circuit including a capacitive device alone, the circuit including the coupling device exhibits improved suppression of harmonics in operation.

[0062] In some embodiments, a coupling device is one of capacitive devices C_{c1} or C_{c2}. In some embodiments, one or both of transformer-coupled BPFs **1106** or **1112** includes capacitive devices C_{c1} and C_{c2} as respective coupling devices CD**1** and CD**2** and is thereby equivalent to the corresponding one or both of transformer-coupled BPFs **106** or **112**.

[0063] Resonator **1102** includes DC voltage power source VBUF, reference voltages V_{ctrl1} and V_{ctrl2}, bias-T circuits **104** and **108**, transistors M**1**-M**4**, and capacitive devices C**3**-C**6**, configured as discussed above with respect to resonator **102** and FIGS. **1**A and **1**B. Compared to resonator **102** discussed above, resonator **1102** depicted in FIGS. **11**A and **11**B does not include resistors R**1** and R**2**, and instead includes respective input terminals IN**1** and IN**2**. In some embodiments, resonator **1102** includes resistor R**1** (not shown in FIGS. **11**A and **11**B) coupled between input terminal IN**1** and the ground voltage and resistor R**2** (not shown in FIGS. **11**A and **11**B) coupled between input terminal IN**2** and the ground voltage, and is thereby equivalent to resonator **102**.

[0064] In various embodiments, one or both of input terminals IN**1** or IN**2** is coupled to one or more circuit elements (not shown) external to resonator **1102** and is thereby configured to control a voltage level at the respective node **114** or **116** based on DC voltage power source VBUF and the respective one of bias-T circuit **104** or **108**. Compared to VCOs **100** and **110** including resonator **102**

discussed above, VCOs **1100**A and **1100**B including resonator **1102** are thereby configured to have increased biasing flexibility, in operation.

[0065] Capacitive device Cb is a capacitor, MOSFET, or similar IC device coupled between power supply source VDD and the ground voltage. Capacitive device Cb thereby provides a low-resistance path between power supply source VDD and the ground voltage for alternating current (AC) signals in operation, and each of VCOs **1100**A and **1100**B is thereby configured to reduce effects from radio frequency (RF) and/or low frequency noise, e.g., possible oscillations in biasing networks. Compared to VCOs **100** and **110**, VCOs **1100**A and **1100**B including capacitive device Cb are thereby configured to have increased stability.

[0066] By the configurations discussed above, each of VCOs **1100**A and **1100**B is capable of realizing the benefits discussed above with respect to VCOs **100** and **110** along with increased harmonic suppression, flexibility, and/or stability as discussed above.

[0067] In some embodiments, VCO **1100**A includes transformer-coupled BPF **1106** equivalent to transformer-coupled BPF **106**, resonator **1102** equivalent to resonator **102**, and does not include capacitive device Cb, e.g., capacitive device Cb is external to VCO **1100**A, and VCO **1100**A is thereby equivalent to VCO **100** discussed above with respect to FIG. **1**A. In some embodiments, VCO **1100**B includes transformer-coupled BPF **1112** equivalent to transformer-coupled BPF **112**, resonator **1102** equivalent to resonator **102**, and does not include capacitive device Cb, e.g., capacitive device Cb is external to VCO **1100**B, and VCO **1100**B is thereby equivalent to VCO **110** discussed above with respect to FIG. **1**B.

[0068] Table 1 lists parameters for various known approaches in which a VCO does not include a transformer-coupled BPF in comparison with a non-limiting example of VCO **1100**A. The first column includes either a reference number or the non-limiting example of VCO **1100**A, the second column indicates either a CMOS or SOI technology corresponding to each approach. The third through eighth columns indicate a respective power supply voltage level, carrier frequency, phase noise level at 1 megahertz (MHz), power consumption level, phase noise as a figure of merit (FoM), and core area corresponding to each approach.

TABLE 1

Ref.	Technology	V_{DD} (V)	Frequency (GHz)	Phase Noise @1-MHz (dBc/Hz)	Power consumption (mW)	FoM (dBc/Hz)	Core area (mm^2)
1	CMOS	1.2	28	−112.9	12	−191	0.086
2	CMOS	1.5	20.9	−103.2	7.2	−181	0.088**
3	CMOS	1.0	26.4	−106.6	12.7	−184	0.047
4	CMOS	0.9	24.8	−101	13.5	−178	0.018***
5	SOI	0.9	24.7	−107.3*	24	−181	0.075***
6	CMOS	0.9	25.6	−102.5	5.5	−183	0.067
7	CMOS	1.0	27.3	−105.7	11.6	−184	0.064
VCO1100A	CMOS	0.8	27.5	−108.1	4	−191	0.011

[0069] As illustrated in Table 1, the non-limiting example of VCO **1100**A provides a relatively low-power, small-area approach having at least equivalent performance parameters compared to the other approaches considered.

[0070] FIGS. **12**A and **12**B are schematic diagrams of respective VCO circuits **1200**A and **1200**B, in accordance with some embodiments. VCO circuit **1200**A, equivalent to a portion of VCO **1100**A or VCO **1100**B, and VCO circuit **1200**B, an alternative representation of VCO circuit **1200**A, depict equivalent circuits that illustrate operation of VCOs **1100**A and **1100**B, as discussed below.

[0071] VCO circuit **1200**A includes transformer T**1** including windings W**1** and W**2**, transformer T**2** including windings W**3** and W**4**, capacitive devices C**3**-C**6**, and nodes **120** and **124**-**140**, each discussed above with respect to FIGS. **1**A, **1**B, **11**A, and **11**B, and coupling devices CD**1** and CD**2**, discussed above with respect to FIGS. **11**A and **11**B. In the embodiment depicted in FIG. **12**A, coupling device CD**1** is coupled between nodes **134** and **138**, coupling device CD**2** is coupled between nodes **136** and **140**, and VCO circuit **1200**A thereby corresponds to a portion of VCO **1100**B. In some embodiments, coupling device CD**1** is coupled between nodes **134** and **136**, coupling device CD**2** is coupled between nodes **138** and **140**, and VCO circuit **1200**A thereby corresponds to a portion of VCO **1100**A.

[0072] FIG. **12**A depicts a DC biasing of VCO circuit **1200**A, in operation, in which voltage source V_G is applied between windings W**2** and W**3**, power supply source VDD is applied between windings W**1** and W**4**, reference voltage V_{ctrl1} is applied at node **120**, and reference voltage V_{ctrl2} is applied at node **132**. For AC signals (not shown) generated in response to the applied voltages, the applied voltages can be collectively considered as a virtual ground, also referred to as an AC ground in some embodiments.

[0073] By the configuration discussed above, in operation, the AC signals relative to virtual ground have a positive 180° phase shift at node **128** and a negative 180° phase shift at node **126** relative to a phase of zero at each of nodes **124** and **130**. Because node **128** is coupled to the gate of transistor M**1** depicted in FIGS. **1**A, **1**B, **11**A, and **11**B, node **126** is coupled to the drain terminal of transistor M**2** depicted in FIGS. **1**A, **1**B, **11**A, node **124** is coupled to the drain terminal of transistor M**1**, and node **130** is coupled to the gate of transistor M**2**, in operation, each of transistors M**1** and M**2** experiences a 180° phase shift such that each of VCOs **100**, **110**, **1100**A, and **1100**B, including transistors M**1** and M**2** configured as discussed above, oscillates in response to the applied voltages.

[0074] FIG. **12**B depicts VCO circuit **1200**B equivalent to portions of VCO circuit **1200**A corresponding to each of transistors T**1** and T**2**, and thereby illustrates an equivalent AC circuit for each relevant portion. As depicted in FIG. **12**B, each of voltage source V_G, power supply source VDD, and reference voltages V_{ctrl1} and V_{ctrl2} is represented as both the applied voltage and as virtual ground of the equivalent AC circuit.

[0075] In the case of transformer T**1**, capacitive device C**5** is coupled between node **128** and virtual ground, winding W**2** is coupled between node **138** and virtual ground, winding W**1** is coupled between node **134** and virtual ground, capacitive device C**6** is coupled between node **124** and virtual ground, and coupling device CD**1** is coupled between nodes **134** and **138**. In operation, the gate of transistor M**1** coupled to node **128** and the drain terminal of transistor M**1** coupled to node **124** are thereby controlled based on the configuration of transformer T**1**.

[0076] In the case of transformer T**2**, capacitive device C**4** is coupled between node **130** and virtual ground, winding W**3** is coupled between node **136** and virtual ground, winding W**4** is coupled between node **140** and virtual ground, capacitive device C**3** is coupled between node **126** and virtual ground, and coupling device CD**2** is coupled between nodes **136** and **140**. In operation, the gate of transistor M**2** coupled to node **130** and the drain terminal of transistor M**2** coupled to node **126** are thereby controlled based on the configuration of transformer T**2**.

[0077] FIGS. **13**A-**13**E are schematic diagrams of feedback oscillators, in accordance with some embodiments FIG. **13**A is a block diagram of a feedback oscillator **1300**, referred to as a single-end feedback oscillator **1300** in some embodiments. FIGS. **13**B-**13**E are diagrams of respective feedback oscillators **1300**B-**1300**E that are non-limiting examples of feedback oscillator **1300** in accordance with various embodiments.

[0078] As depicted in FIG. **13**A, feedback oscillator **1300** includes a forward stage **1310** and a feedback network **1320**, each coupled to an output node OUT. Forward stage **1310** and feedback network **1320** are arranged in a cross-coupled configuration, feedback network **1320** thereby being configured to provide positive feedback to forward stage **1310**.

[0079] Two or more circuit elements are considered to be coupled based on a direct electrical connection or an electrical connection that includes one or more additional circuit elements, e.g., one or more logic or transmission gates, and is thereby capable of being controlled, e.g., made resistive or open by a transistor or other switching device.

[0080] In various embodiments, feedback oscillator **1300** includes one or more nodes (not shown in FIG. **13**A) configured to have one or more corresponding voltages, e.g., a node N**1** configured to have a voltage V**1**, a node N**2** configured to have a voltage V**2**, and a reference node NR configured to have a reference voltage VR, as variously depicted in FIGS. **13**B-**13**E.

[0081] In the embodiments depicted in FIGS. **13**A-**13**E, reference voltage VR is a ground voltage having a ground voltage value, voltage V**2** is a power supply voltage, e.g., a voltage corresponding to power supply source VDD discussed above with respect to FIGS. **1**A and **1**B, and voltage V**1** is a supply voltage having a supply voltage value between the ground voltage value and a power supply voltage value of voltage V**2**. In various embodiments, reference voltage VR and voltages V**1** and V**2** have values other than those corresponding to FIGS. **13**A-**13**E. For example, in some embodiments, reference voltage VR has the power supply voltage value, voltage V**2** has the ground voltage value, and voltage V**1** has a value between the supply voltage value and the ground voltage value.

[0082] In various embodiments, forward stage **1310** includes an amplifier, e.g., an operational amplifier, and/or a transistor, e.g., an NMOS or PMOS transistor or a BJT. Feedback network **1320** includes a transformer-coupled BPF, e.g., a transformer-coupled BPF **1320**B-**1320**E depicted in a corresponding one of FIGS. **13**B-**13**E and discussed below. By including the transformer-coupled BPF in feedback network **1320**, oscillator **1300**, e.g., one of oscillators **1300**B-**1300**E, is configured to generate an AC output signal VOUT on output terminal OUT, output signal VOUT having a fast roll-off characteristic, i.e., one or more transmission zeroes, capable of suppressing high-order harmonics as further discussed below.

[0083] In the non-limiting examples depicted in FIGS. **13**B-**13**E, each corresponding feedback oscillator **1300**B-**1300**E includes a respective forward stage **1310**B-**1310**E usable as forward stage **1310**. Each forward stage **1310**B-**1310**E includes a terminal A**1** coupled to output terminal OUT, terminals A**2** and A**3**, and a transistor M**5** coupled between terminals A**1**-A**3** in accordance with the various embodiments discussed below. In the embodiments depicted in FIGS. **13**B-**13**E, transistor M**5** is an NMOS transistor. In various embodiments, one or more of forward stages **1310**B-**1310**E includes transistor M**5** being a transistor other than an NMOS transistor, e.g., a PMOS transistor, an NPN BJT, or a PNP BJT. In various embodiments, one or more of forward stages **1310**B-**1310**E includes one or more transistors (not shown), in addition to transistor M**5**, coupled between one or more of terminals A**1**-A**3** and one or more of a drain or source terminal or gate of transistor M**5**.

[0084] Each transformer-coupled BPF **1320**B-**1320**E included in the corresponding feedback oscillator **1300**B-**1300**E includes terminals F**1**-F**4**, one or both of taps PT or ST, a transformer T**3** coupled between terminals F**1**-F**4** and taps PT and/or ST as discussed below, and a coupling device CD coupled between terminals F**1** and F**2**. In various embodiments, one or more of transformer-coupled BPFs **1320**B-**1320**E includes one or more transistors (not shown) coupled between transformer T**3** and one or more of terminals F**1**-F**4** and/or taps PT and/or ST. In each of the embodiments depicted in FIGS. **13**B-**13**E, each of terminals F**3** and F**4** is coupled to reference node NR.

[0085] Transformer T**3** corresponds to one of transformers **1500**T-**1800**T depicted in FIGS. **15**A-**18**B, and is represented collectively in the depictions of FIGS. **19**A-**21**B discussed below. Transformer T**3** includes a primary winding W**5** coupled to a secondary winding W**6**. Winding W**5** is coupled between terminals F**1** and F**3**, and winding W**6** is coupled between terminals F**2** and F**4**. In various embodiments, transformer T**3** includes one or both of tap PT electrically connected to winding W**5** or tap ST electrically connected to winding W**6**. In various embodiments, tap PT is a center tap of winding W**5** and/or tap ST is a center tap of winding W**6**.

[0086] Feedback oscillator **1300**B depicted in FIG. **13**B, also referred to as a common-source feedback oscillator **1300**B or a single-end common-source feedback oscillator **1300**B in some embodiments, includes forward stage **1310**B usable as forward stage **1310**, transformer-coupled BPF **1320**B usable as feedback network **1320**, node N**1**, node N**2**, reference node NR, and output terminal OUT, each discussed above with respect to feedback oscillator **1300** and FIG. **13**A.

[0087] As depicted in FIG. **13**B, forward stage **1310**B includes transistor M**5** including a drain terminal coupled to terminal A**1**, a source terminal coupled to terminal A**2**, and a gate coupled to terminal A**3**. Terminal A**2** is coupled to

reference node NR, and terminal A3 is coupled to terminal F1 of transformer-coupled BPF 1320B. Transformer-coupled BPF 1320B also includes terminal F2 coupled to terminal A1 and output terminal OUT, coupling device CD coupled between terminals F1 and F2, and transformer T3 including tap PT coupled to node N1 and tap ST coupled to node N2, thereby having a configuration corresponding to that of transformer-coupled BPF 1700 discussed below with respect to FIGS. 17A and 17B.

[0088] By including forward stage 1310B and transformer-coupled BPF 1320B as depicted in FIG. 13B, feedback oscillator 1300B is configured to generate output signal VOUT on output terminal OUT having the benefits discussed above with respect to feedback oscillator 1300.

[0089] Feedback oscillator 1300C depicted in FIG. 13C, also referred to as a common-gate feedback oscillator 1300C or a single-end common-gate feedback oscillator 1300C in some embodiments, includes forward stage 1310C usable as forward stage 1310, transformer-coupled BPF 1320C usable as feedback network 1320, node N1, node N2, reference node NR, and output terminal OUT, each discussed above with respect to feedback oscillator 1300 and FIG. 13A.

[0090] As depicted in FIG. 13C, forward stage 1310C includes transistor M5 including the source terminal coupled to terminal A1, the gate coupled to terminal A2, and the drain terminal coupled to terminal A3. Terminal A2 is coupled to node N1, and terminal A3 is coupled to terminal F1 of transformer-coupled BPF 1320C. Transformer-coupled BPF 1320C also includes terminal F2 coupled to terminal A1 and output terminal OUT, coupling device CD coupled between terminals F1 and F2, and transformer T3 including tap PT coupled to node N2, thereby having a configuration corresponding to that of transformer-coupled BPF 1500 discussed below with respect to FIGS. 15A and 15B.

[0091] By including forward stage 1310C and transformer-coupled BPF 1320C as depicted in FIG. 13C, feedback oscillator 1300C is configured to generate output signal VOUT on output terminal OUT having the benefits discussed above with respect to feedback oscillator 1300.

[0092] Feedback oscillator 1300D depicted in FIG. 13D, also referred to as a common-gate feedback oscillator 1300D or a single-end common-gate feedback oscillator 1300D in some embodiments, includes forward stage 1310D usable as forward stage 1310, transformer-coupled BPF 1320D usable as feedback network 1320, node N1, node N2, reference node NR, and output terminal OUT, each discussed above with respect to feedback oscillator 1300 and FIG. 13A.

[0093] As depicted in FIG. 13D, forward stage 1310D includes transistor M5 including the drain terminal coupled to terminal A1, the gate coupled to terminal A2, and the source terminal coupled to terminal A3. Terminal A2 is coupled to node N1, and terminal A3 is coupled to terminal F1 of transformer-coupled BPF 1320D. Transformer-coupled BPF 1320D also includes terminal F2 coupled to terminal A1 and output terminal OUT, coupling device CD coupled between terminals F1 and F2, and transformer T3 including tap ST coupled to node N2, thereby having a configuration corresponding to that of transformer-coupled BPF 1600 discussed below with respect to FIGS. 16A and 16B.

[0094] By including forward stage 1310D and transformer-coupled BPF 1320D as depicted in FIG. 13D, feedback oscillator 1300D is configured to generate output signal VOUT on output terminal OUT having the benefits discussed above with respect to feedback oscillator 1300.

[0095] Feedback oscillator 1300E depicted in FIG. 13E, also referred to as a common-drain feedback oscillator 1300E or a single-end common-drain feedback oscillator 1300E in some embodiments, includes forward stage 1310E usable as forward stage 1310, transformer-coupled BPF 1320E usable as feedback network 1320, node N1, node N2, reference node NR, and output terminal OUT, each discussed above with respect to feedback oscillator 1300 and FIG. 13A.

[0096] As depicted in FIG. 13E, forward stage 1310E includes transistor M5 including the source terminal coupled to terminal A1, the drain terminal coupled to terminal A2, and the gate coupled to terminal A3. Terminal A2 is coupled to node N2, and terminal A3 is coupled to terminal F2 of transformer-coupled BPF 1320E. Transformer-coupled BPF 1320E also includes terminal F1 coupled to terminal A1 and output terminal OUT, coupling device CD coupled between terminals F1 and F2, and transformer T3 including tap ST coupled to node N1, thereby having a configuration corresponding to that of transformer-coupled BPF 1600 discussed below with respect to FIGS. 16A and 16B.

[0097] By including forward stage 1310E and transformer-coupled BPF 1320E as depicted in FIG. 13E, feedback oscillator 1300E is configured to generate output signal VOUT on output terminal OUT having the benefits discussed above with respect to feedback oscillator 1300.

[0098] FIGS. 14A and 14B are schematic diagrams of differential oscillators, in accordance with some embodiments FIG. 14A is a block diagram of a feedback oscillator 1400, and FIG. 14B is a diagram of a differential oscillator 1400B, a non-limiting example of feedback oscillator 1400 in accordance with some embodiments.

[0099] As depicted in FIG. 14A, differential oscillator 1400 includes a transformer-coupled BPF 1420 and a differential circuit 1430. Transformer-coupled BPF 1420 is coupled to node NR, discussed above with respect to FIGS. 13A-13E, and each of transformer-coupled BPF 1420 and differential circuit 1430 is coupled between output nodes OUTP and OUTN. Transformer-coupled BPF 1420 and differential circuit 1430 are arranged in a parallel configuration, differential oscillator 1400 thereby being configured to generate a differential output signal as complementary signals VOUTP on output node OUTP and VOUTN on output node OUTN.

[0100] Transformer-coupled BPF 1420 includes transformer T3 including windings W5 and W6, coupling device CD, and terminals F1-F4, configured as discussed above with respect to transformer-coupled BPFs 1320B-1320E and FIGS. 13B-13E. Compared to transformer-coupled BPFs 1320B-1320E, transformer-coupled BPF 1420 does not include either of taps PT or ST in the embodiment depicted in FIGS. 14A and 14B and thereby has a configuration corresponding to that of transformer-coupled BPF 1800 discussed below with respect to FIGS. 18A and 18B. In various embodiments, transformer-coupled BPF 1420 includes one or both of taps PT or ST coupled to one or both of nodes N1 or N2 discussed above with respect to FIGS. 13A-13E, thereby having a configuration corresponding to that of one of transformer-coupled BPFs 1500-1700 discussed below with respect to FIGS. 15A-17B.

[0101] Differential circuit 1430 is an electronic circuit configured to drive signals VOUTP and VOUTN responsive

to loading at respective output nodes OUTP and OUTN provided by transformer-coupled BPF **1420**. In various embodiments, differential circuit **1430** includes one or more amplifiers, e.g., an operational amplifier, and/or transistors, e.g., an NMOS or PMOS transistor or a BJT, and one or more nodes configured to carry one or more of a power supply or reference voltage, e.g., VDD and/or a ground voltage. In various embodiments, differential circuit **1430** includes a cross-coupled configuration of one or more amplifiers and/or transistors and is thereby configured to generate signals VOUTP and VOUTN as complementary signals.

[0102] By including transformer-coupled BPF **1420** and differential circuit **1430** configured as discussed above, differential oscillator **1400** is capable of generating signals VOUTP and VOUTN as the differential output signal, controlled by transformer-coupled BPF **1420** in operation, such that the differential output signal has a fast roll-off characteristic, i.e., one or more transmission zeroes, capable of suppressing high-order harmonics as discussed above with respect to VCOs **1100**A and **1100**B and feedback oscillators **1300-1300**E.

[0103] In the non-limiting example depicted in FIG. **14**B, differential oscillator **1400**B includes a differential circuit **1430**B usable as differential circuit **1430**. Differential circuit **1430**B includes a transistor M**6** cross-coupled with a transistor M**7** between output nodes OUTP and OUTN. In the embodiment depicted in FIG. **14**B, each of transistors M**6** and M**7** is a PMOS transistor and includes a source terminal coupled to node N**1**. In various embodiments, differential circuit **1430**B includes transistors M**6** and M**7** being transistors other than PMOS transistors, e.g., NMOS transistors or NPN or PNP BJTs, and that include one or more terminals otherwise coupled to one or more of output nodes OUTP or OUTN or nodes N**1**, N**2**, or NR. In various embodiments, differential circuit **1430**B includes one or more transistors (not shown), in addition to transistors M**6** and M**7**, coupled between one or more terminals of transistors M**6** and/or M**7** and one or more of output nodes OUTP or OUTN or nodes N**1**, N**2**, or NR.

[0104] By including differential circuit **1430**B and transformer-coupled BPF **1420** as depicted in FIG. **14**B, differential oscillator **1400**B is configured to generate signals VOUTP and VOUTN on respective output terminals OUTP and OUTN having the benefits discussed above with respect to differential oscillator **1400**.

[0105] FIGS. **15**A-**18**B are schematic diagrams of respective transformer-coupled BPFs **1500-1800**, in accordance with some embodiments. FIGS. **15**A-**18**A depict circuit diagrams and FIGS. **15**B-**18**B depict layout diagrams of respective transformer-coupled BPFs **1500-1800**. In accordance with various embodiments, transformer-coupled BPFs **1500-1800** are usable as transformer-coupled BPFs **1320**B-**1320**E or **1420**, discussed above with respect to FIGS. **13**A-**14**B.

[0106] As depicted in FIGS. **15**A-**18**B, transformer-coupled BPFs **1500-1800** include respective transformers **1500**T-**1800**T and coupling device CD discussed above with respect to FIGS. **13**A-**14**B. Each of transformers **1500**T-**1800**T is an embodiment of transformer T**3** discussed above with respect to FIGS. **13**A-**14**B and further discussed below.

[0107] Each of FIGS. **15**A-**18**A depicts transformers **1500**T-**1800**T including terminals F**1**-F**4**, winding W**5** coupled between terminals F**1** and F**3**, and winding W**6** coupled between terminals F**2** and F**4**, and coupling device CD coupled between terminals F**1** and F**2**. As depicted in FIG. **15**A, transformer **1500**T also includes tap PT electrically connected to winding W**5**. As depicted in FIG. **16**A, transformer **1600**T also includes tap ST electrically connected to winding W**6**. As depicted in FIG. **17**A, transformer **1700**T also includes tap PT electrically connected to winding W**5** and tap ST electrically connected to winding W**6**.

[0108] Each of the layout diagrams depicted in FIGS. **15**B-**18**B includes terminals F**1**-F**4** and, if present, taps PT and/or ST. Terminals F**1**-F**4** and taps PT and ST correspond to respective terminals **428**, **426**, **420**, **422**, **424**, and **434** of coupled-transformer **400** and transformer-coupled BPFs **500-700** discussed above with respect to FIGS. **4-7**.

[0109] Winding W**5** (not labeled in FIGS. **15**B-**18**B) corresponds to the conductive path between terminals F**1**/**428** and F**3**/**420**, depicted as conductive structures **414**, **412**, and **406** and discussed above with respect to FIG. **4**. Winding W**6** (not labeled in FIGS. **15**B-**18**B) corresponds to the conductive path between terminals F**2**/**426** and F**4**/**422**, depicted as conductive structure **418** including extending portions **438** and discussed above with respect to FIG. **4**.

[0110] As depicted in FIGS. **15**B and **17**B, tap PT/**424** of respective transformers **1500**T and **1700**T is electrically connected to winding W**5** at a location midway along the conductive path between terminals F**1**/**428** and F**3**/**420** and corresponding to conductive structure **412** of FIG. **4**, and is thereby configured as a center tap of winding W**5**. In various embodiments, tap PT is electrically connected to winding W**5** at a location other than midway along the conductive path between terminals F**1**/**428** and F**3**/**420** and is thereby configured as a tap other than a center tap of winding W**5**.

[0111] As depicted in FIGS. **16**B and **17**B, tap ST/**434** of respective transformers **1600**T and **1700**T is electrically connected to winding W**6** at a location midway along the conductive path between terminals F**2**/**426** and F**4**/**422** and corresponding to conductive structure **418** of FIG. **4**, and is thereby configured as a center tap of winding W**6**. In various embodiments, tap ST is electrically connected to winding W**6** at a location other than midway along the conductive path between terminals F**2**/**426** and F**4**/**422** and is thereby configured as a tap other than a center tap of winding W**6**.

[0112] By the configurations discussed above, each of transformer-coupled BPFs **1500-1800**, used in an oscillator, e.g., one of feedback oscillators **1300-1300**E or differential oscillators **1400** or **1400**B, is capable of realizing the benefits discussed above with respect to feedback oscillators **1300-1300**E and differential oscillators **1400** and **1400**B.

[0113] FIGS. **19**A-**21**B are schematic diagrams of respective transformer-coupled BPFs **1900-2100**, in accordance with some embodiments. FIGS. **19**A-**21**A depict circuit diagrams and FIGS. **19**B-**21**B depict layout diagrams of respective transformer-coupled BPFs **1900-2100**. In accordance with various embodiments, transformer-coupled BPFs **1900-2100** are usable as transformer-coupled BPFs **1320**B-**1320**E or **1420**, discussed above with respect to FIGS. **13**A-**14**B.

[0114] As depicted in FIGS. **19**A-**21**B, transformer-coupled BPFs **1900-2100** include transformer T**3** and respective coupling devices **1900**CD-**2100**CD. Transformer T**3** is represented in FIGS. **19**A-**21**B as optionally including various elements of the embodiments depicted in FIGs, **15**A-**18**B as respective transformers **1500**T-**1800**T, and each

transformer-coupled BPF **1900-2100** is capable of being realized by including any one of transformers **1500**T-**1800**T.

[0115] In various embodiments, one or more of transformer-coupled BPFs **1900-2100** includes a transformer other than transformer T**3**, e.g., transformer T**1** or T**2** discussed above with respect to FIGS. **1**A-**12**B, and respective coupling devices **1900**CD-**2100**CD. In various embodiments, coupling devices **1900**CD-**2100**CD are usable as coupling devices CD**1** and CD**2** discussed above with respect to FIGS. **11**A-**12**B and coupling device CD discussed above with respect to FIGS. **13**A-**18**B.

[0116] In the embodiment depicted in FIGS. **19**A and **19**B, coupling device **1900**CD of transformer-coupled BPF **1900** includes a capacitive device Cc configured in parallel with an inductive device L**3**. In the embodiment depicted in FIGS. **20**A and **20**B, coupling device **2000**CD of transformer-coupled BPF **2000** includes capacitive device Cc configured in series with inductive device L**3**. In the embodiment depicted in FIGS. **21**A and **21**B, coupling device **2100**CD of transformer-coupled BPF **2100** includes a capacitive device Cc**3** configured in parallel with a series combination of inductive device L**3** and a capacitive device Cc**4**.

[0117] A capacitive device, e.g., capacitive device Cc, Cc**3**, or Cc**4**, is an IC structure configured to provide a targeted capacitance value between two or more terminals. In various embodiments, a capacitive device includes a plate capacitor, e.g., a MIM capacitor, a capacitor-configured MOS device, a variable capacitor, an adjustable capacitor, e.g., a MOSCAP, or another IC device suitable for providing a targeted capacitance value.

[0118] An inductive device, e.g., inductive device L**3**, is an IC structure configured to provide a targeted inductance value between two or more terminals. In various embodiments, an inductive device includes a single or multi-layer structure including one or more conductive, e.g., metallic, segments, having a geometry suitable for providing a targeted inductance value. In the embodiment depicted in FIGS. **19**B-**21**B, inductive device L**3** includes conductive segments having an octagonal shape, and is thereby configured to provide a targeted inductance value. In various embodiments, an inductive device includes conductive segments having another shape, e.g., a square, spiral or other suitable shape, and/or includes a transmission line, and is thereby configured to provide a targeted inductance value.

[0119] By including a transformer-coupled BPF including at least one coupling device, e.g., a transformer-coupled BPF **1500-2100** depicted in FIGS. **15**A-**21**B, an oscillator, e.g., a feedback oscillator **1300-1300**E or differential oscillator **1400** or **1400**B, is capable of including a transmission zero configured to enhance 2nd and 3rd harmonic suppression, thereby improving a signal to noise ratio of a generated signal compared to other approaches. In embodiments in which a coupling device includes a variable capacitor, the oscillator is further capable of including the transmission zero as a tunable transition zero. In embodiments that include an inductive device and/or second coupling capacitor, the oscillator is further capable of including one or more additional transmission zeroes, thereby further improving the signal to noise ratio of the generated signal compared to other approaches.

[0120] FIG. **22** is a flowchart of a method **2200** of generating an oscillation signal, in accordance with some embodiments. Method **2200** is usable with an oscillator, e.g., VCO **1100**A or **1100**B, feedback oscillator **1300-1300**E, or differential oscillator **1400** or **1400**B, discussed above with respect to FIGS. **11**A, **11**B, and **13**A-**14**B, and/or with a transformer-coupled BPF, e.g., transformer-coupled BPF **1500-2100** discussed above with respect to FIGS. **15**A-**21**B.

[0121] The sequence in which the operations of method **2200** are depicted in FIG. **22** is for illustration only; the operations of method **2200** are capable of being executed in sequences that differ from that depicted in FIG. **22**. In some embodiments, operations in addition to those depicted in FIG. **22** are performed before, between, during, and/or after the operations depicted in FIG. **22**. In some embodiments, some or all of the operations of method **2200** are part of operating a circuit including an oscillator, e.g., a PLL including a VCO.

[0122] At operation **2210**, in some embodiments, a DC voltage is received by a transformer-coupled BPF of an oscillator. Receiving the DC voltage includes receiving one or more of a power supply voltage, a bias voltage, a reference voltage, e.g., a ground voltage, or a logical state of a control or enable signal. In various embodiments, receiving the DC voltage by the transformer-coupled BPF includes receiving the voltage from the oscillator of from a circuit other than the oscillator.

[0123] In some embodiments, receiving the voltage by the transformer-coupled BPF includes receiving one or more of voltage source V_G or power supply source VDD discussed above with respect to FIGS. **11**A and **11**B, or voltages V**1** or V**2** or reference voltage VR discussed above with respect to FIGS. **13**A-**14**B.

[0124] In some embodiments, receiving the voltage by the transformer-coupled BPF of an oscillator includes receiving the voltage by one or more of transformer-coupled BPFs **1500-2100** discussed above with respect to FIGS. **15**A-**21**B.

[0125] In some embodiments, receiving the voltage by the transformer-coupled BPF of an oscillator includes receiving the voltage by one or more of transformer-coupled BPFs **1106** or **1112** of VCOs **1100**A or **1100**B discussed above with respect to FIGS. **11**A and **11**B, transformer-coupled BPFs **1320-1320**E of feedback oscillators **1300-1300**E discussed above with respect to FIGS. **13-13**E, or transformer-coupled BPF **1420** of differential oscillators **1400** or **1400**B discussed above with respect to FIGS. **14**A and **14**B.

[0126] In some embodiments, receiving the voltage by the transformer-coupled BPF of an oscillator includes receiving one or more additional voltages by one or more components of the oscillator in addition the transformer-coupled BPF. In some embodiments, receiving the voltage by the transformer-coupled BPF of an oscillator includes receiving one or more of voltage power source VBUF, or reference voltages V_{ctrl1} or V_{ctrl2} by resonator **1102** of VCOs **1100**A or **1100**B discussed above with respect to FIGS. **11**A and **11**B. In some embodiments, receiving the voltage by the transformer-coupled BPF of an oscillator includes receiving one or more of voltages V**1** or V**2** or reference voltage VR by one or more of forward stage **1310-1310**E or differential circuit **1430** or **1430**B discussed above with respect to FIGS. **13**A-**14**B.

[0127] At operation **2220**, in response to the applied DC voltage, the oscillator generates an oscillation signal. Generating the oscillation signal includes generating the oscillation signal using the transformer-coupled BPF of the oscillator. In various embodiments, generating the oscillation signal includes generating the oscillation signal using

one or more of transformer-coupled BPFs **1500-2100** discussed above with respect to FIGS. **15**A-**21**B.

[0128] In various embodiments, generating the oscillation signal includes generating a complementary pair of signals or a standalone signal. In various embodiments, generating the oscillation signal includes the oscillator generating the oscillation signal at a pair of output terminals of the oscillator or at a single output terminal of the oscillator.

[0129] In some embodiments, generating the oscillation signal includes using transformer-coupled BPF **1106** or **1112** to control the drain terminals of transistors M**1** and M**2** of VCO **1100**A or **1100**B as discussed above with respect to FIGS. **11**A-**12**B. In some embodiments, generating the oscillation signal includes generating signal VOUT at output terminal OUT as discussed above with respect to FIGS. **13**A-**13**E. In some embodiments, generating the oscillation signal includes generating signals VOUTN at output terminal OUTN and VOUTP at output terminal OUTP as discussed above with respect to FIGS. **14**A and **14**B.

[0130] By executing some or all of the operations of method **2200**, an oscillator generates an oscillation signal having enhanced **2**nd and **3**rd harmonic suppression compared to other approaches, thereby obtaining the benefits discussed above with respect to VCOs **1100**A and **1100**B, feedback oscillators **1300-1300**E, differential oscillators **1400** and **1400**B, and transformer-coupled BPFs **1500-2100**.

[0131] In some embodiments, a VCO includes a first transistor cross-coupled with a second transistor, and a transformer-coupled BPF including a first transformer and a second transformer. The first transformer is configured to control a gate and a drain terminal of the first transistor, and the second transformer is configured to control a gate and a drain terminal of the second transistor.

[0132] In some embodiments, an oscillator includes a first node configured to have a first bias voltage, a second node configured to have a second bias voltage, a reference node configured to have a reference voltage, an output terminal, a forward stage including a first terminal coupled to the output terminal and a second terminal coupled to one of the first node, the second node, or the reference node, and a transformer-coupled BPF coupled between the output terminal and a third terminal of the forward stage.

[0133] In some embodiments, a differential oscillator includes a differential circuit coupled between a first output node and a second output node, and a transformer-coupled BPF coupled between the first output node and the second output node. The transformer-coupled BPF includes a coupling device coupled between the first output node and the second output node, and a transformer including a first winding coupled between the first output node and a voltage node, and a second winding coupled between the second output node and the voltage node.

[0134] The foregoing outlines features of several embodiments so that those skilled in the art may better understand the aspects of the present disclosure. Those skilled in the art should appreciate that they may readily use the present disclosure as a basis for designing or modifying other processes and structures for carrying out the same purposes and/or achieving the same advantages of the embodiments introduced herein. Those skilled in the art should also realize that such equivalent constructions do not depart from the spirit and scope of the present disclosure, and that they may make various changes, substitutions, and alterations herein without departing from the spirit and scope of the present disclosure.

What is claimed is:

1. A voltage-controlled oscillator (VCO) comprising:
a first transistor cross-coupled with a second transistor; and
a transformer-coupled band-pass filter (BPF) comprising a first transformer and a second transformer,
wherein
the first transformer is configured to control a gate and a drain terminal of the first transistor, and
the second transformer is configured to control a gate and a drain terminal of the second transistor.

2. The VCO of claim **1**, wherein
the first transformer comprises a first winding coupled between a power supply source and the drain terminal of the first transistor, and a second winding coupled between a voltage source and the gate of the first transistor, and
the second transformer comprises a third winding coupled between the power supply source and the drain terminal of the second transistor, and a fourth winding coupled between the voltage source and the gate of the second transistor.

3. The VCO of claim **2**, further comprising:
a first coupling device coupled between the drain terminal of the first transistor and one of the gate of the first transistor or the gate of the second transistor; and
a second coupling device coupled between the drain terminal of the second transistor and the other of the gate of the first transistor or the gate of the second transistor.

4. The VCO of claim **3**, wherein each of the first coupling device and the second coupling device comprises a capacitive device.

5. The VCO of claim **4**, wherein each of the first coupling device and the second coupling device further comprises an inductive device in series with or in parallel with the capacitive device.

6. The VCO of claim **2**, further comprising a bypass capacitor coupled to the power supply source and parallel to each of the first winding in series with the first transistor and the third winding in series with the second transistor.

7. An oscillator comprising:
a first node configured to have a first bias voltage;
a second node configured to have a second bias voltage;
a reference node configured to have a reference voltage;
an output terminal;
a forward stage comprising a first terminal coupled to the output terminal and a second terminal coupled to one of the first node, the second node, or the reference node; and
a transformer-coupled band-pass filter (BPF) coupled between the output terminal and a third terminal of the forward stage.

8. The oscillator of claim **7**, wherein the transformer-coupled BPF comprises a capacitive device coupled between the output terminal and the third terminal of the forward stage.

9. The oscillator of claim **8**, wherein the transformer-coupled BPF further comprises an inductive device coupled in series or in parallel with the capacitive device between the output terminal and the third terminal of the forward stage.

10. The oscillator of claim **7**, wherein the transformer-coupled BPF comprises a first winding coupled between the third terminal of the forward stage and the reference node, and a second winding coupled between the output terminal and the reference node.

11. The oscillator of claim **7**, wherein the second bias voltage has a value relative to a value of the reference voltage greater than a value of the first bias voltage relative to the value of the reference voltage.

12. The oscillator of claim **7**, wherein

the forward stage comprises a transistor, the transistor comprising a drain terminal corresponding to the first terminal, a source terminal corresponding to the second terminal coupled to the reference node, and a gate corresponding to the third terminal, and

the transformer-coupled BPF comprises a first center tap coupled to the first node and a second center tap coupled to the second node.

13. The oscillator of claim **7**, wherein

the forward stage comprises a transistor, the transistor comprising a source terminal corresponding to the first terminal, a gate corresponding to the second terminal coupled to the first node, and a drain terminal corresponding to the third terminal, and

the transformer-coupled BPF comprises a center tap coupled to the second node.

14. The oscillator of claim **7**, wherein

the forward stage comprises a transistor, the transistor comprising a drain terminal corresponding to the first terminal, a gate corresponding to the second terminal coupled to the first node, and a source terminal corresponding to the third terminal, and

the transformer-coupled BPF comprises a center tap coupled to the second node.

15. The oscillator of claim **7**, wherein

the forward stage comprises a transistor, the transistor comprising a source terminal corresponding to the first terminal, a drain terminal corresponding to the second terminal coupled to the second node, and a gate corresponding to the third terminal, and

the transformer-coupled BPF comprises a center tap coupled to the first node.

16. A differential oscillator comprising:

a differential circuit coupled between a first output node and a second output node; and

a transformer-coupled band-pass filter (BPF) coupled between the first output node and the second output node, the transformer-coupled BPF comprising:

a coupling device coupled between the first output node and the second output node; and

a transformer comprising:

a first winding coupled between the first output node and a voltage node; and

a second winding coupled between the second output node and the voltage node.

17. The differential oscillator of claim **16**, wherein the voltage node is configured to have a ground voltage.

18. The differential oscillator of claim **16**, wherein the differential circuit comprises a cross-coupled pair of transistors.

19. The differential oscillator of claim **16**, wherein the coupling device comprises a capacitive device coupled between the first output node and the second output node.

20. The oscillator of claim **19**, wherein the coupling device further comprises an inductive device coupled in series or in parallel with the capacitive device between the first output node and the second output node.

* * * * *