US 20200130920A1

(19) United States
(12) Patent Application Publication
SCHNEIDER
(10) Pub. No.: US 2020/0130920 A1
(43) Pub. Date: Apr. 30, 2020

(54) **INSULATING CONTAINER**

(71) Applicant: **Joseph Scott SCHNEIDER**, Ocean City, MD (US)

(72) Inventor: **Joseph Scott SCHNEIDER**, Ocean City, MD (US)

(21) Appl. No.: **16/725,148**

(22) Filed: **Dec. 23, 2019**

Related U.S. Application Data

(63) Continuation of application No. 15/450,526, filed on Mar. 6, 2017.

(60) Provisional application No. 62/374,274, filed on Aug. 12, 2016, provisional application No. 62/304,565, filed on Mar. 7, 2016.

Publication Classification

(51) **Int. Cl.**

B65D 81/38	(2006.01)
B65D 25/28	(2006.01)
B65D 25/32	(2006.01)
B65D 25/24	(2006.01)
B65D 43/02	(2006.01)
A47J 47/18	(2006.01)

(52) **U.S. Cl.**

CPC ***B65D 81/3802*** (2013.01); ***B65D 25/2841*** (2013.01); ***B65D 25/32*** (2013.01); ***B65D 25/24*** (2013.01); ***B65D 43/0212*** (2013.01); ***A47J 47/18*** (2013.01); *B65D 2543/00407* (2013.01); ***B65D 25/2805*** (2013.01); *B65D 2543/00092* (2013.01); *B65D 2543/00685* (2013.01); *B65D 2543/00296* (2013.01); *B65D 2543/00629* (2013.01); ***B65D 25/2802*** (2013.01)

(57) **ABSTRACT**

An assembly comprising a bucket body having vertical side walls wherein the vertical side walls extend upwards from a closed bottom base. A handle may be connected to the vertical side walls, and one or more ergonomically designed feet may be detachably connected to and extend beyond a bottom surface of the bottom base. Disclosed embodiments may provide an ergonomic grip portion integrally formed with the handle. The handle may be connected to the bucket body via a twist-lock connection assembly.

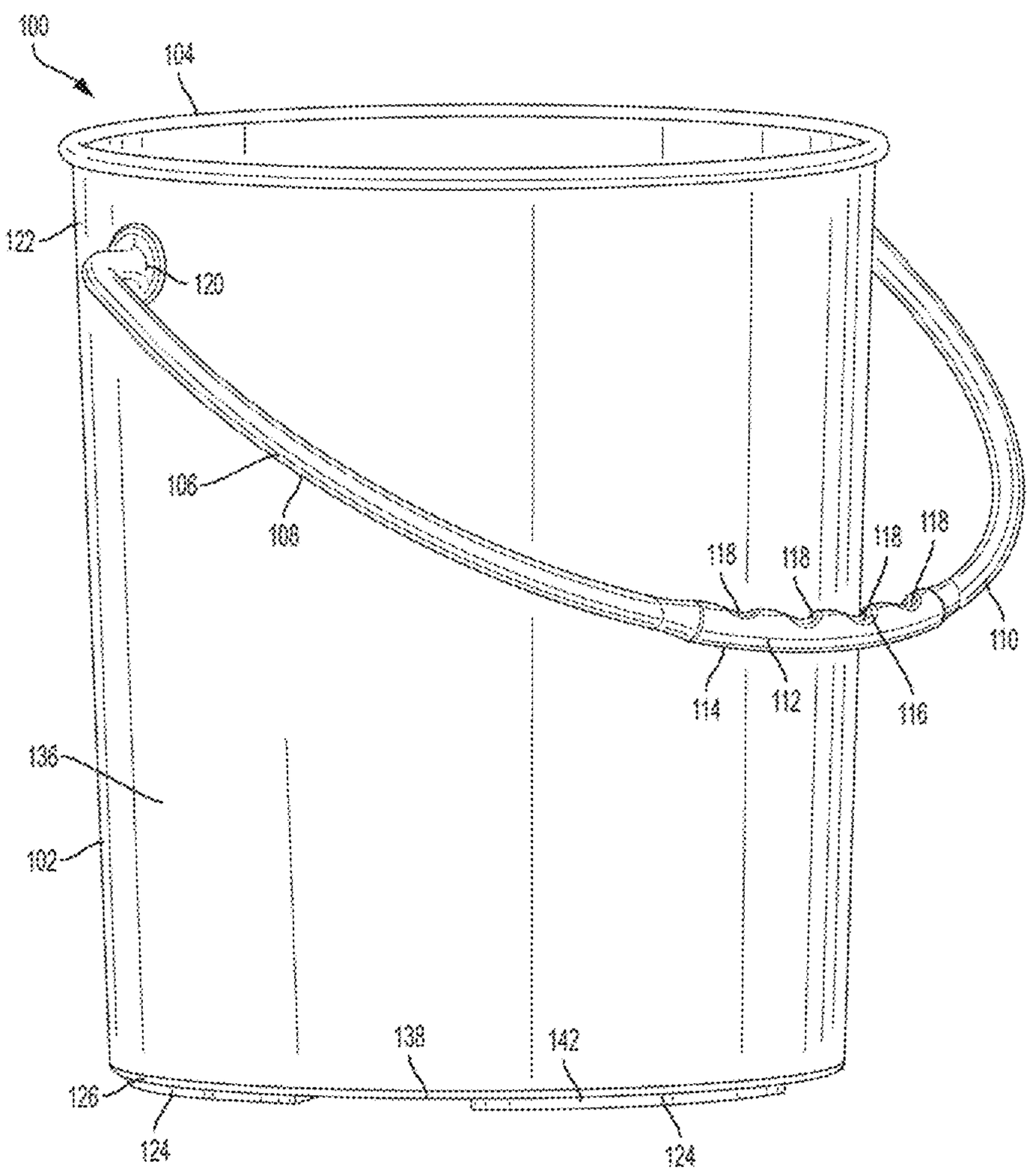

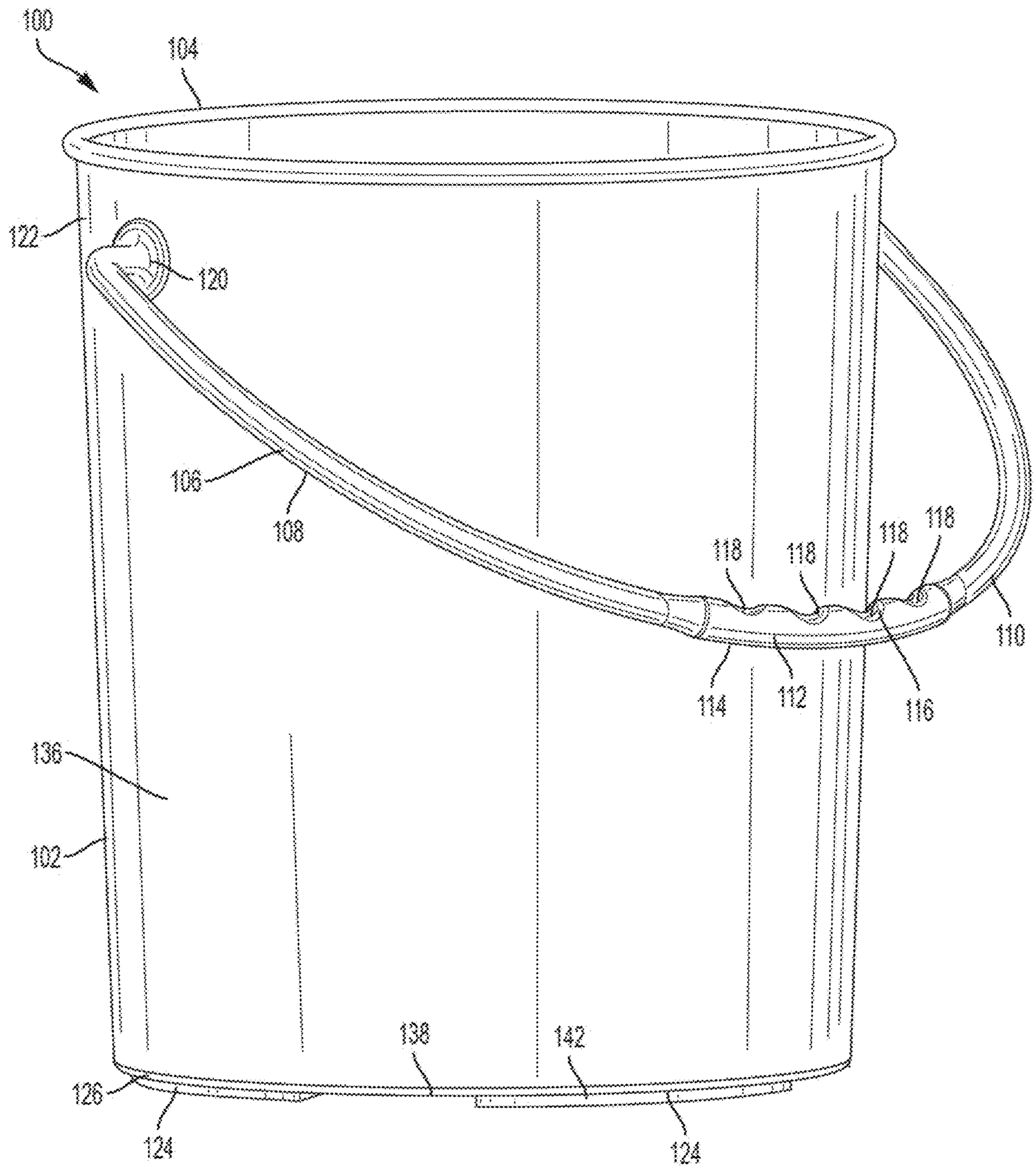
100
104
122
120
106
108
118
118
118
118
110
114
112
116
136
102
138
142
126
124
124

FIG. 1

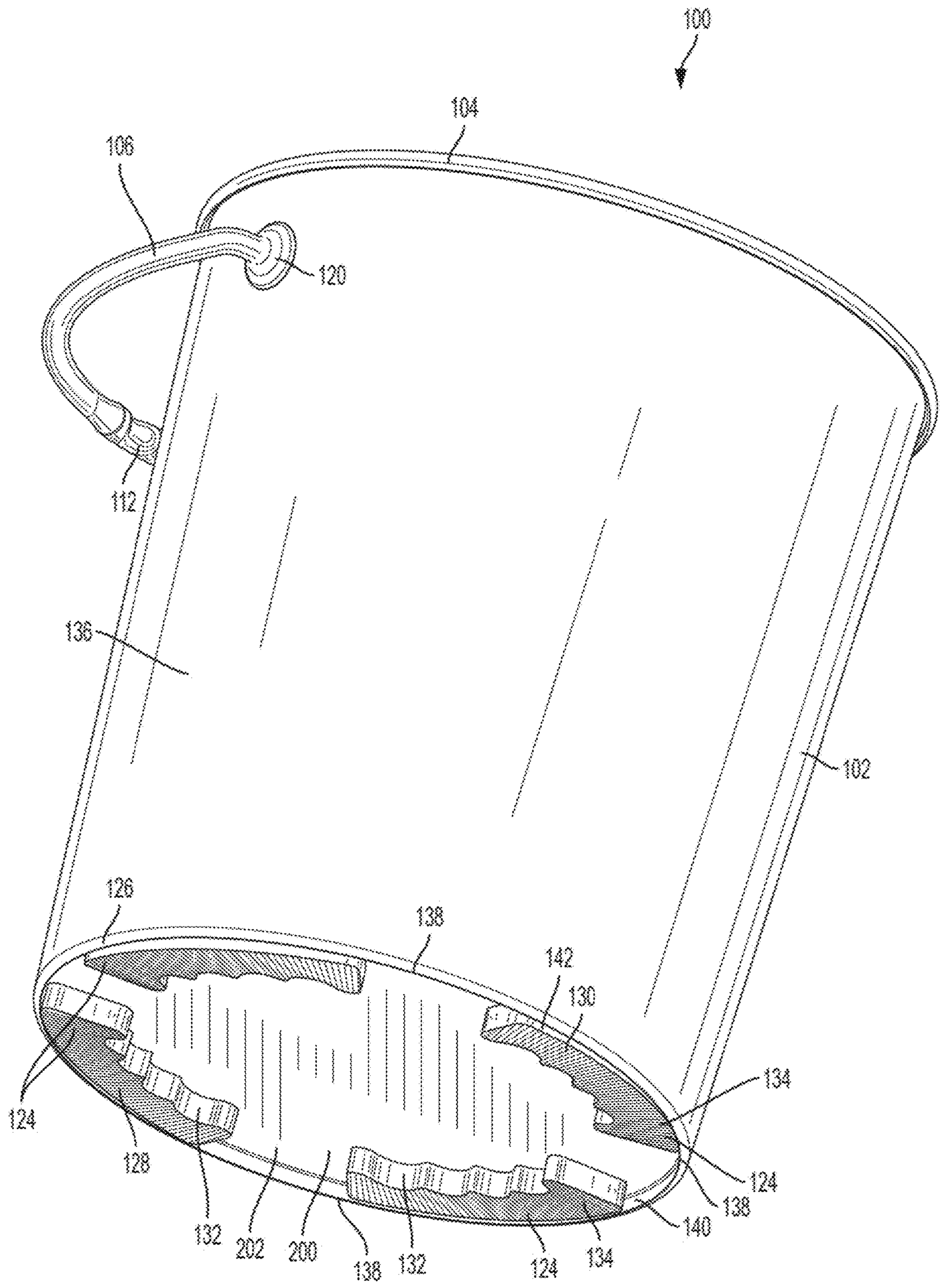
100
104
106
120
112
136
102
126
138
142
130
134
124
128
132
202
200
138
132
124
134
140
138
124

FIG. 2

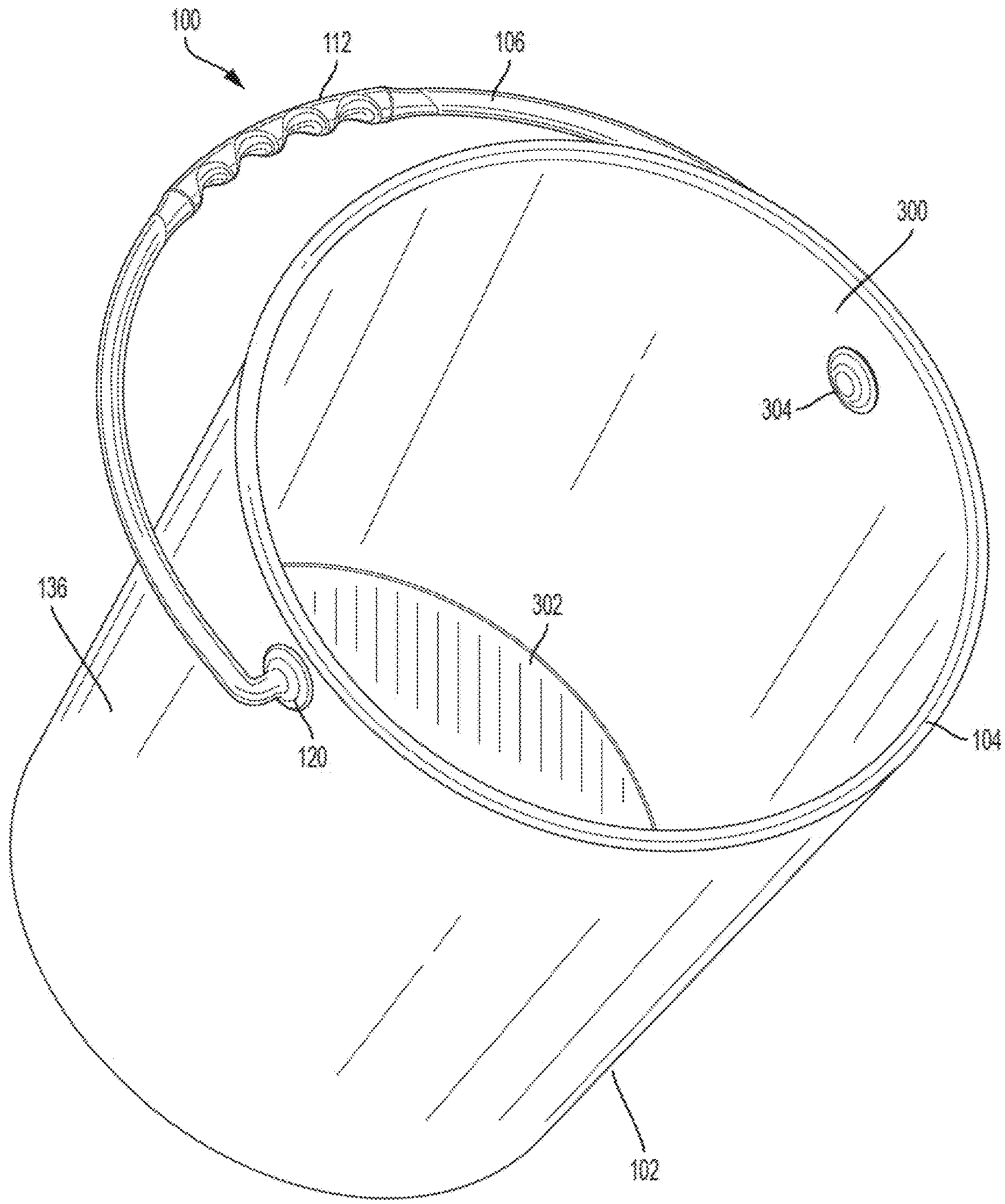

FIG. 3

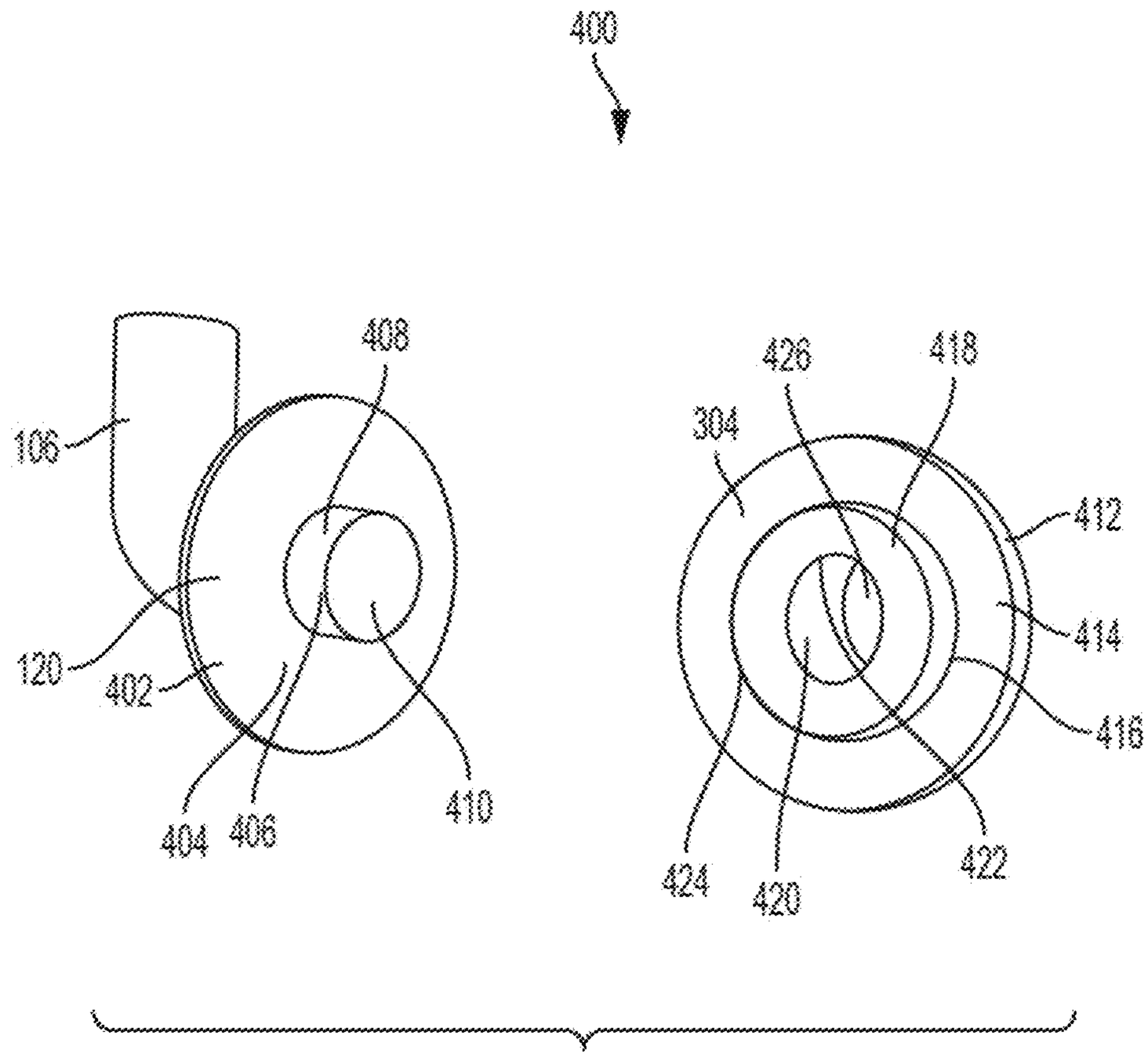
400
106
408
120
402
404
406
410
304
426
418
412
414
416
424
420
422

FIG. 4

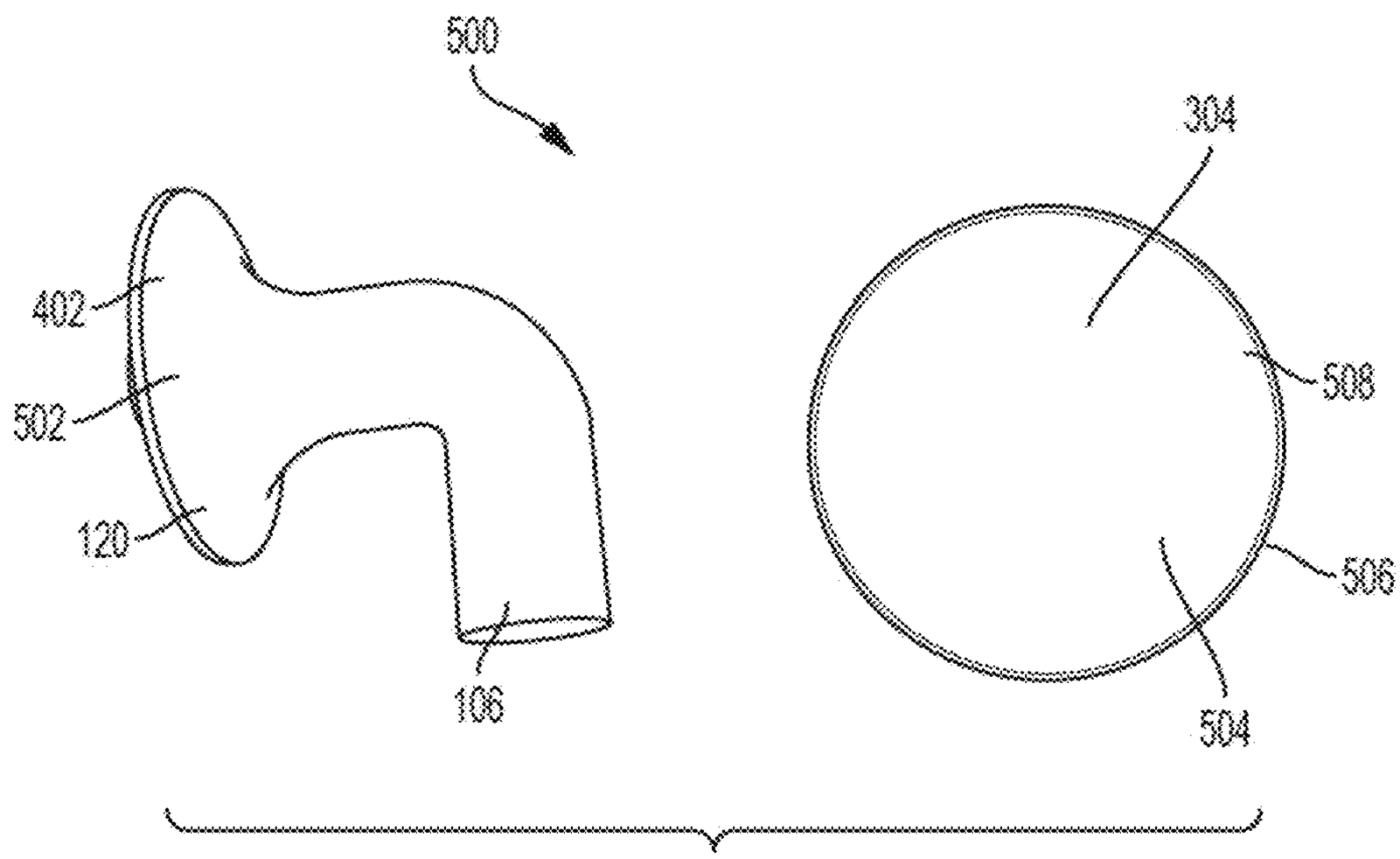

FIG. 5

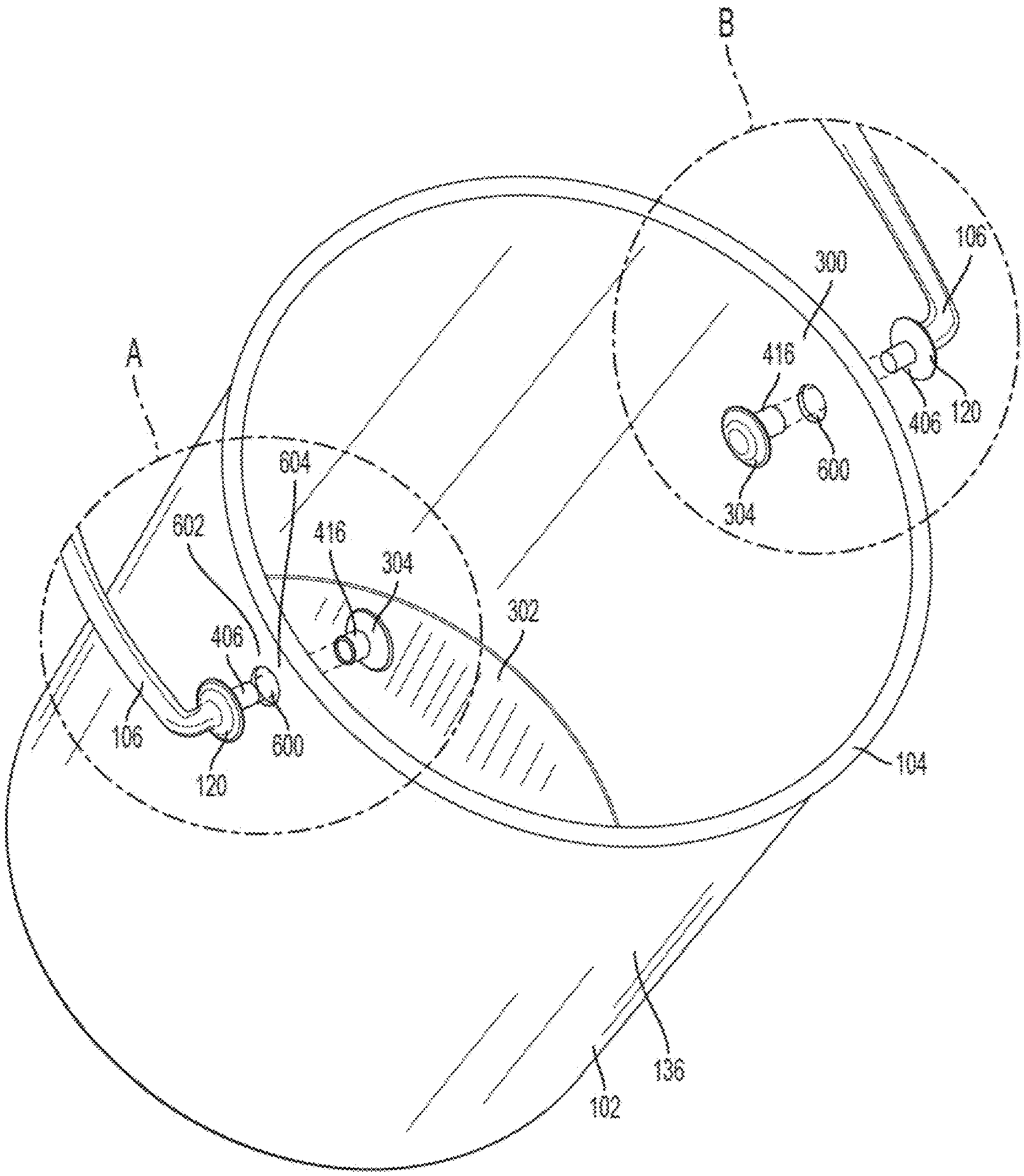
B
A
300
106
416
406
120
600
304
604
602
416
304
302
406
106
600
120
104
136
102

FIG. 6

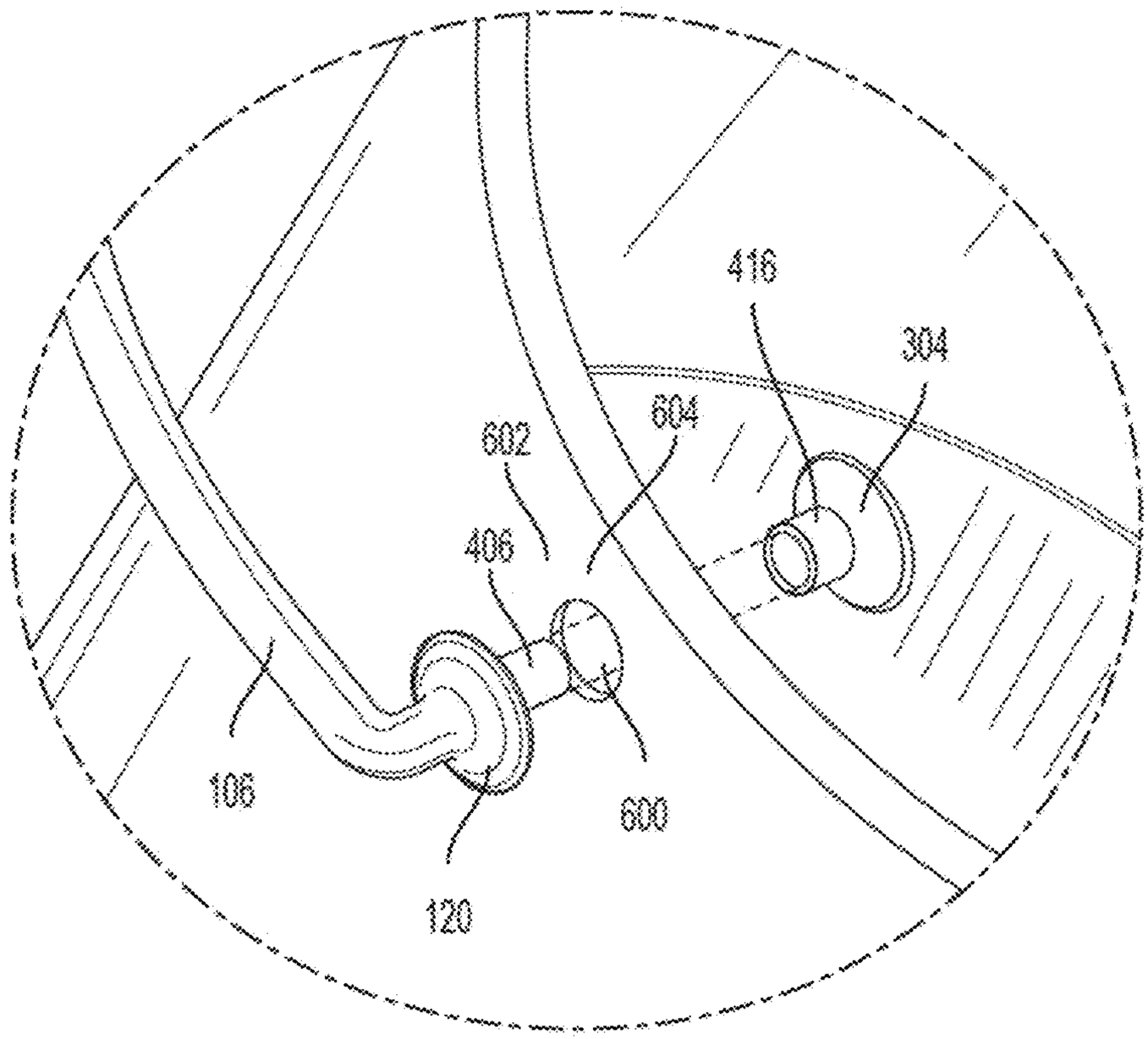

FIG. 7A

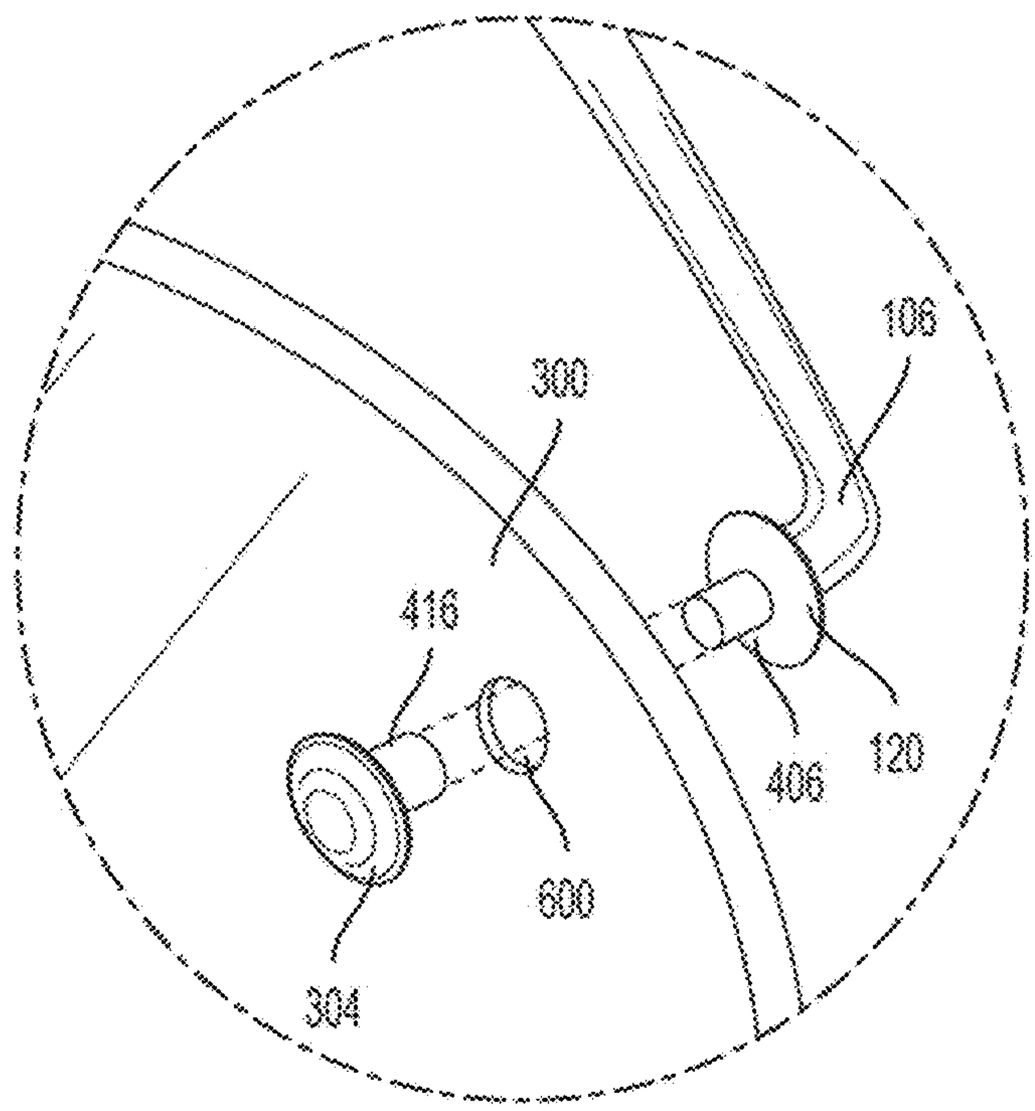

FIG. 7B

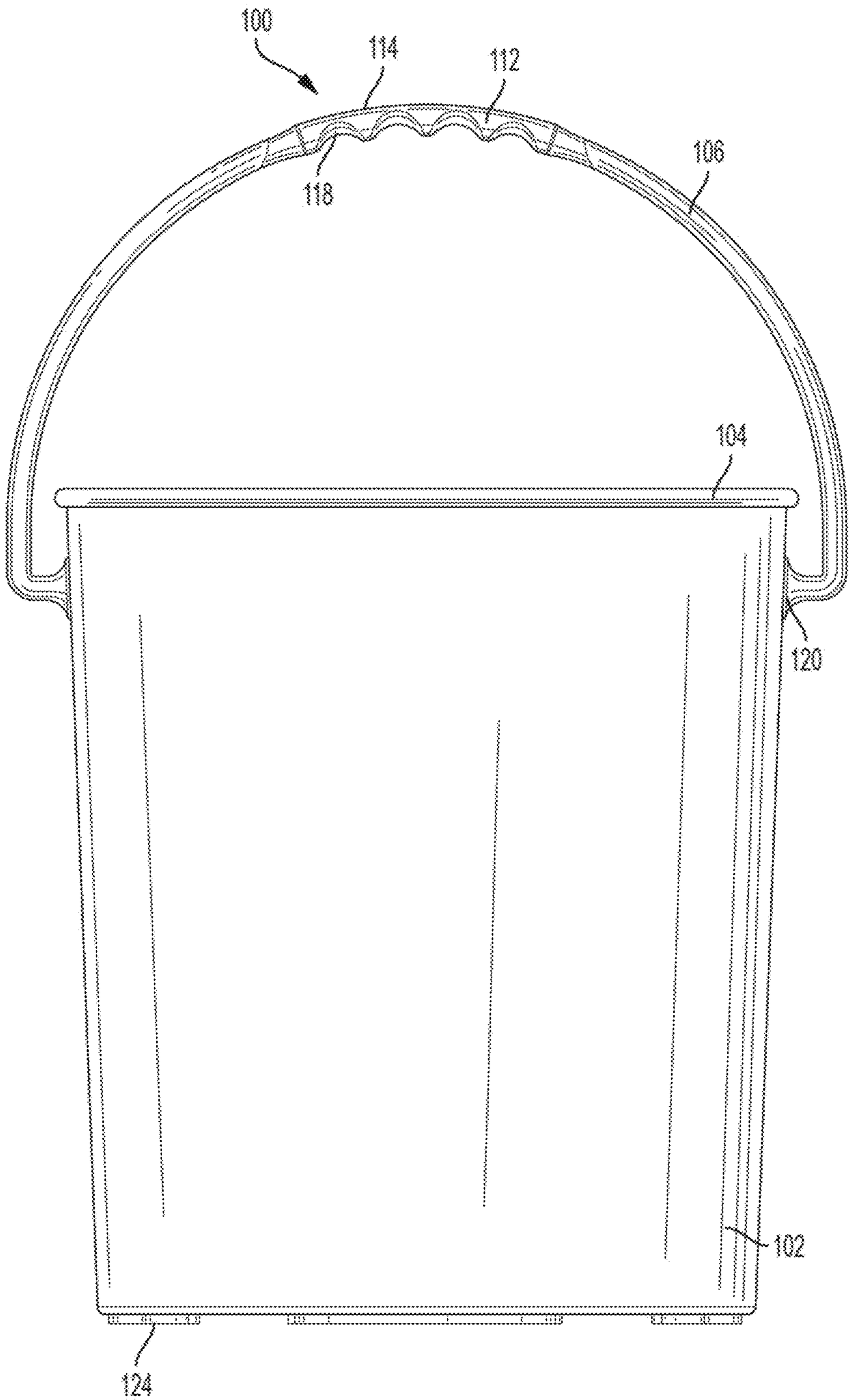

FIG. 8

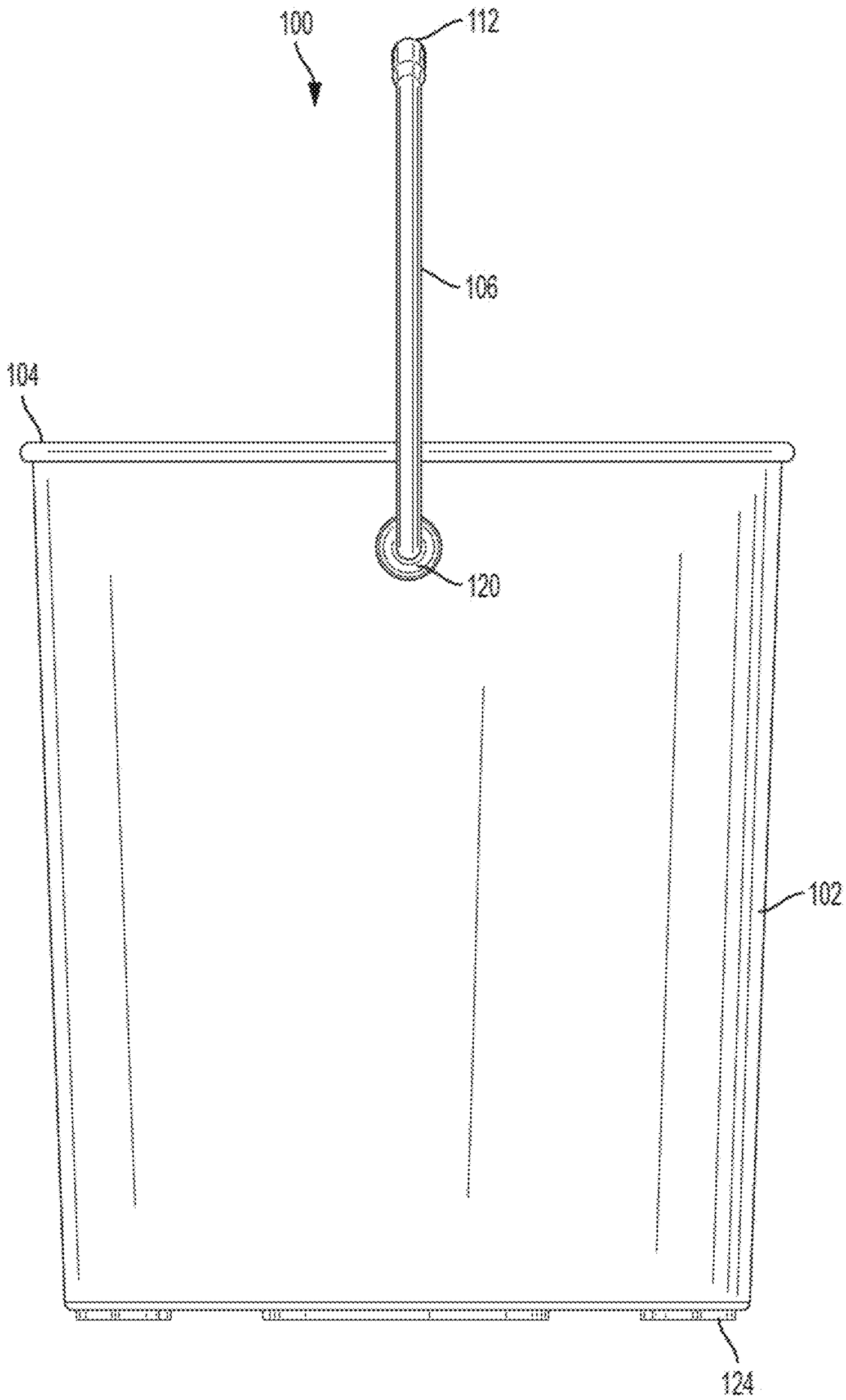

FIG. 9

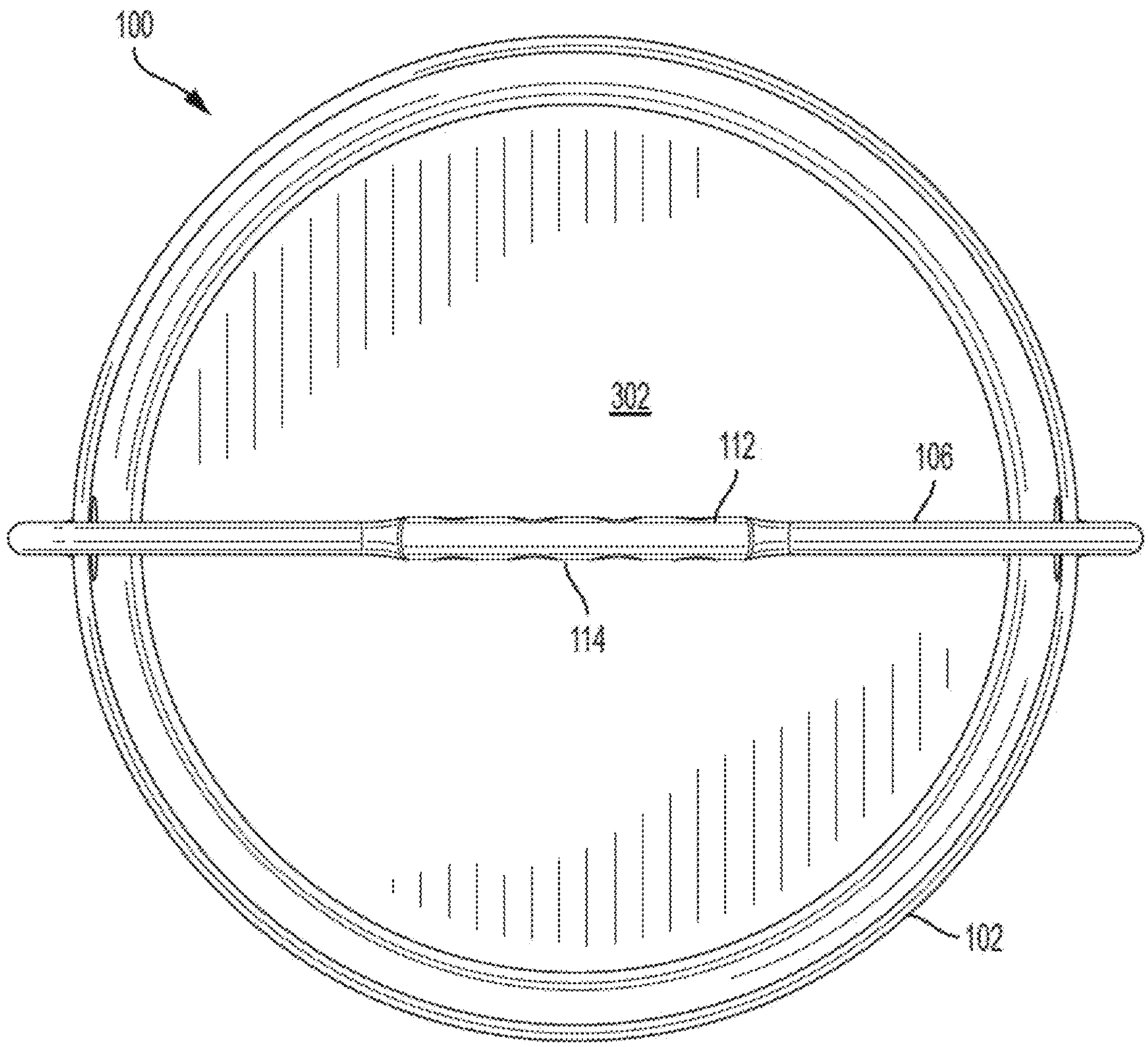

FIG. 10

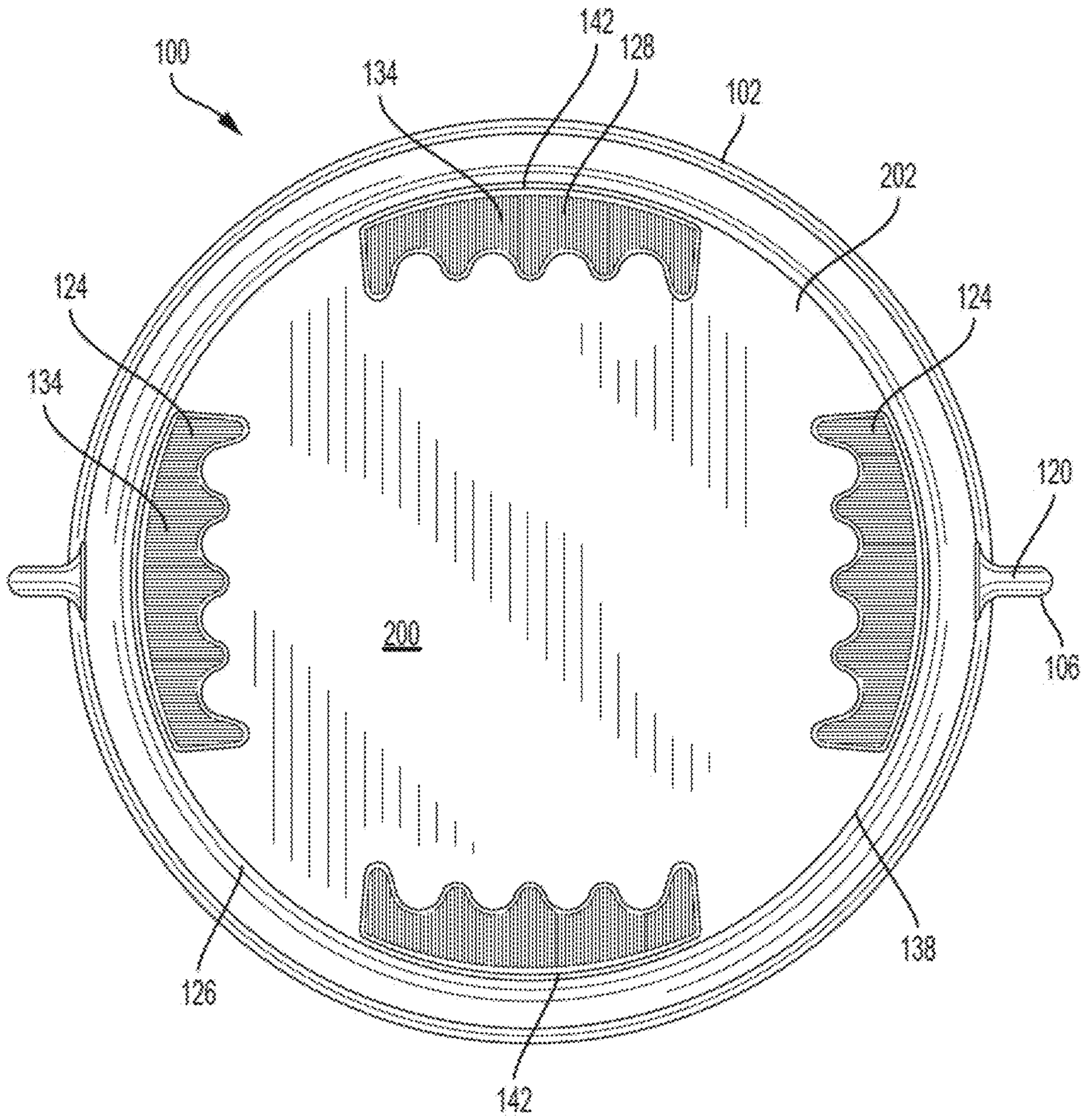

FIG. 11

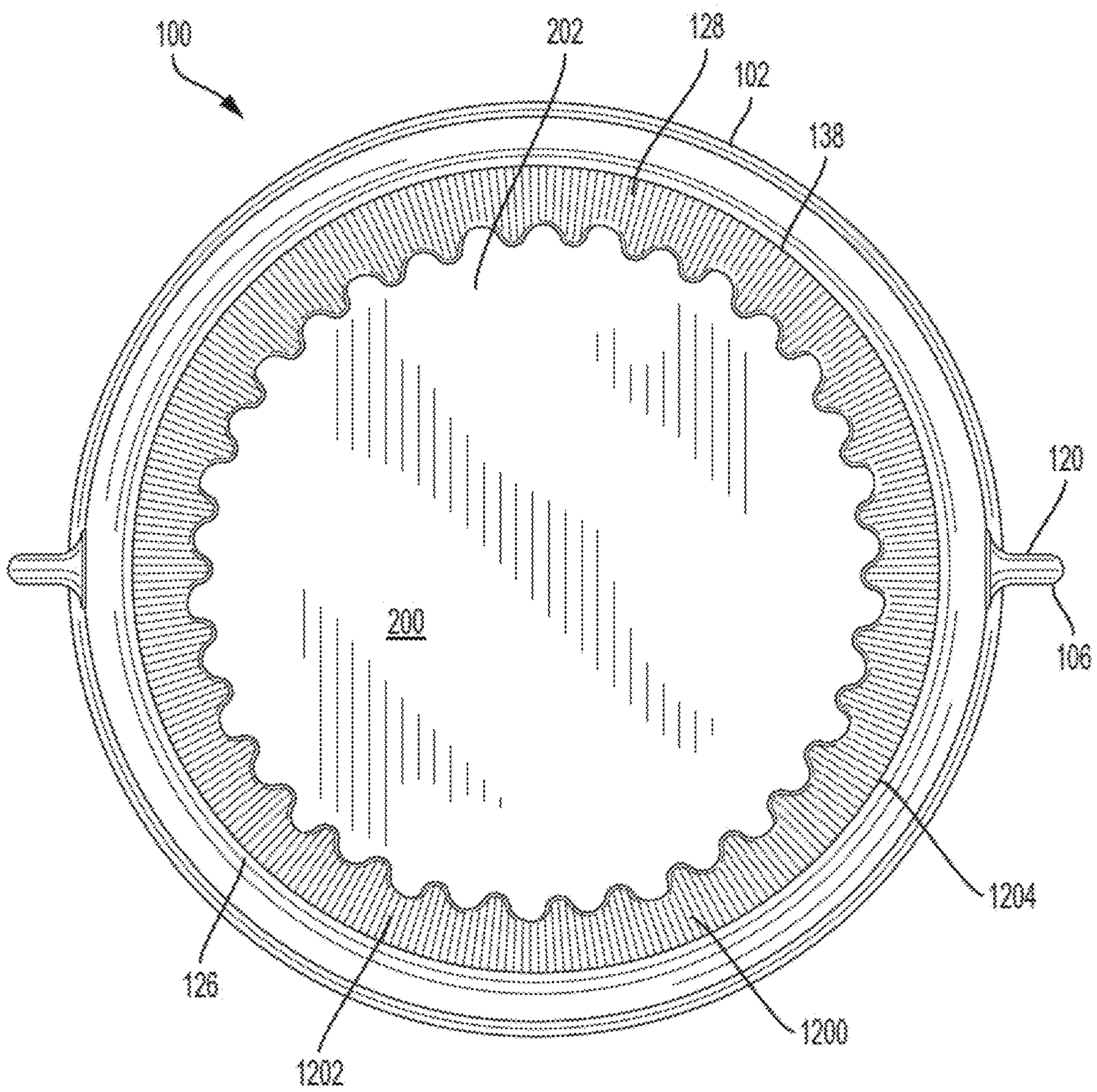

FIG. 12

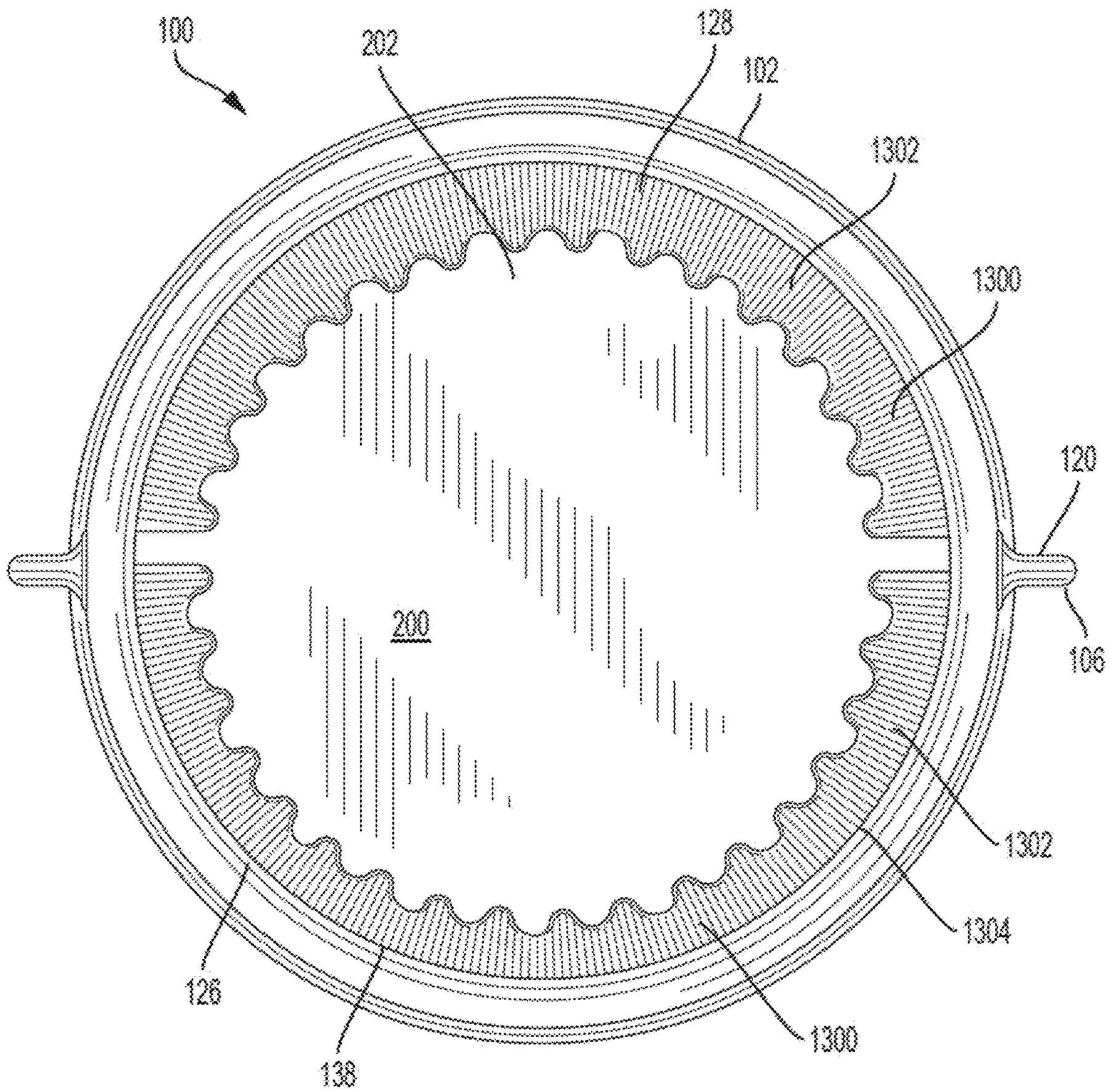

FIG. 13

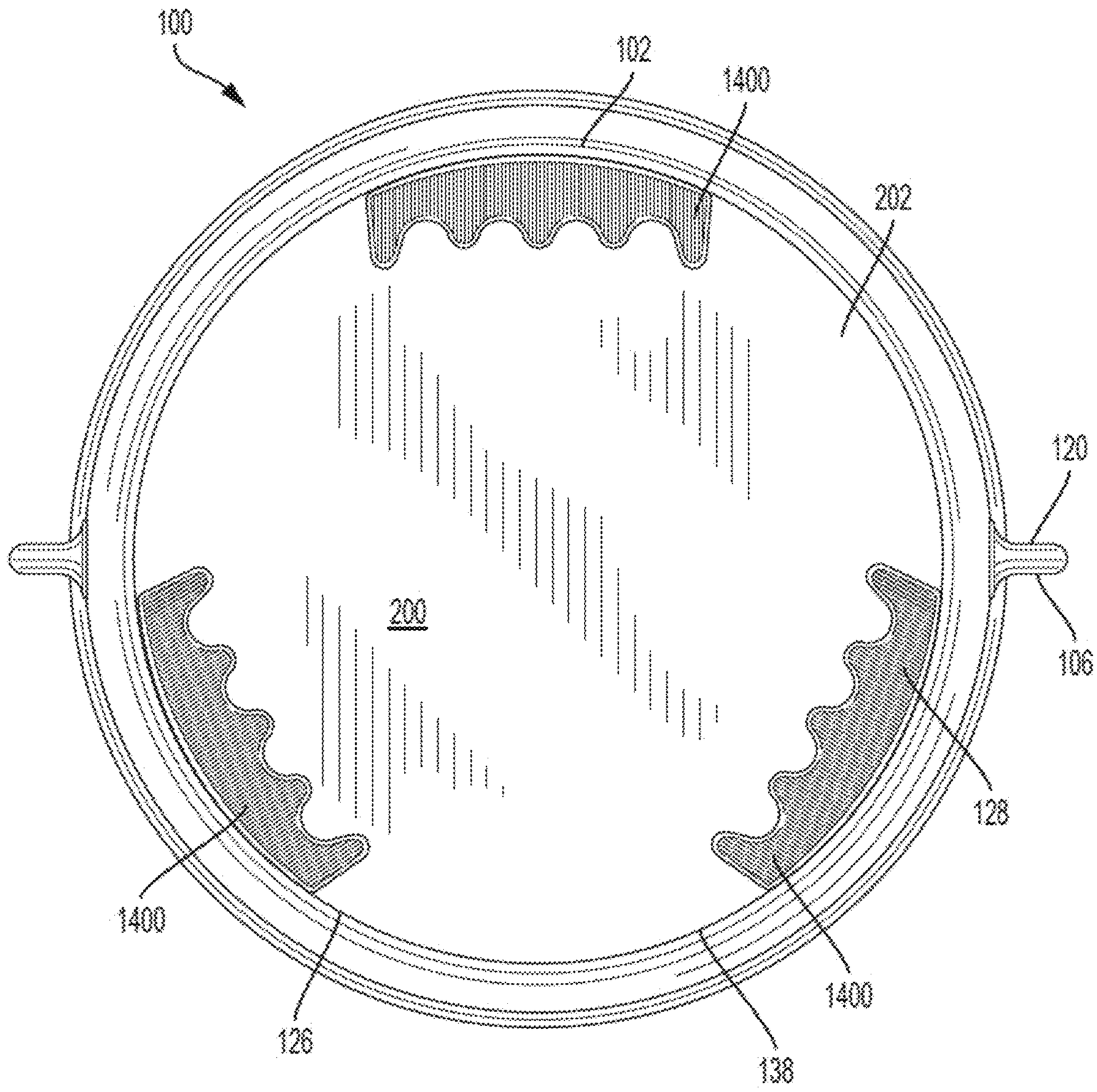

FIG. 14

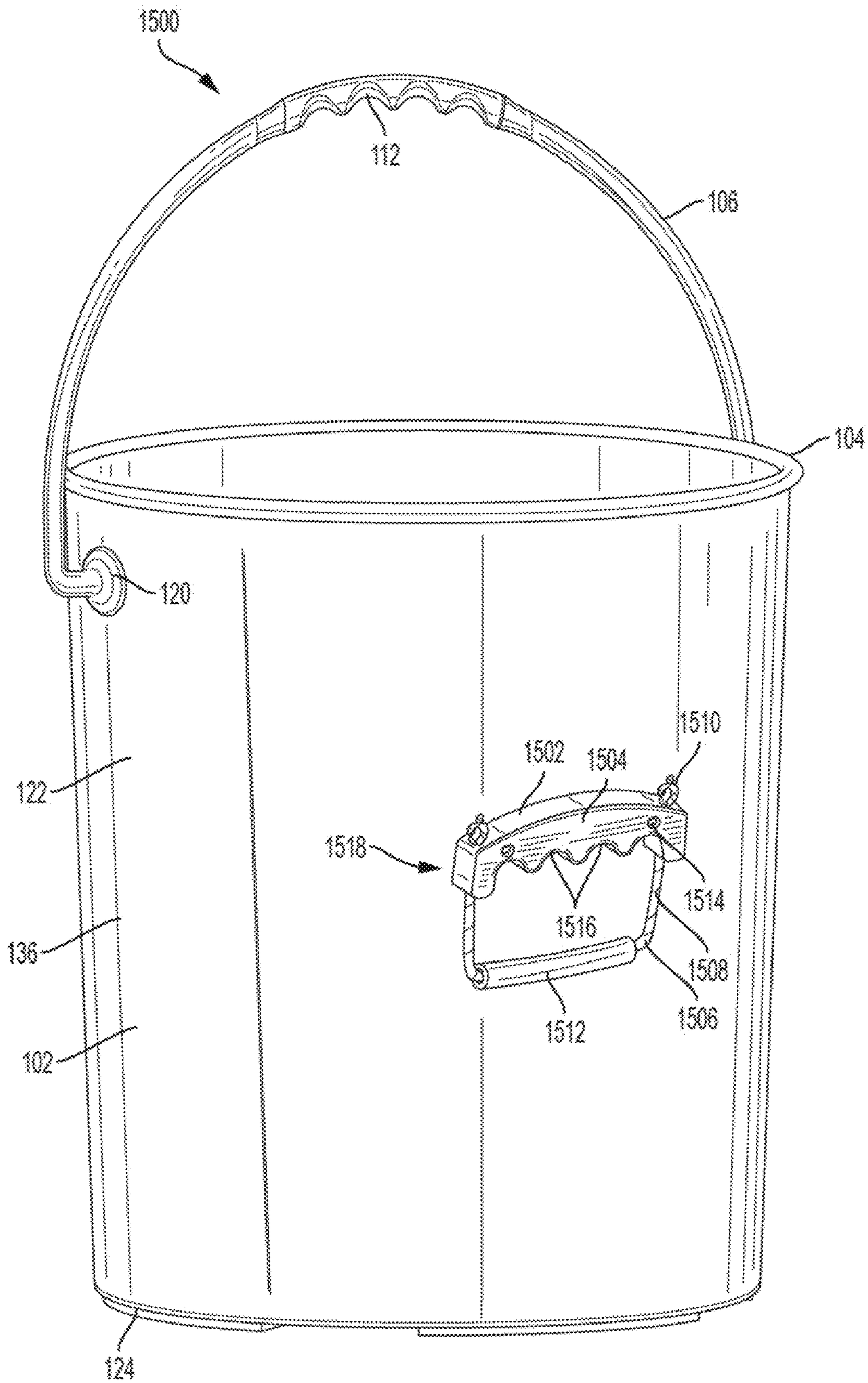
1500
112
106
104
120
122
136
102
124
1510
1502
1504
1518
1514
1516
1508
1506
1512

FIG. 15

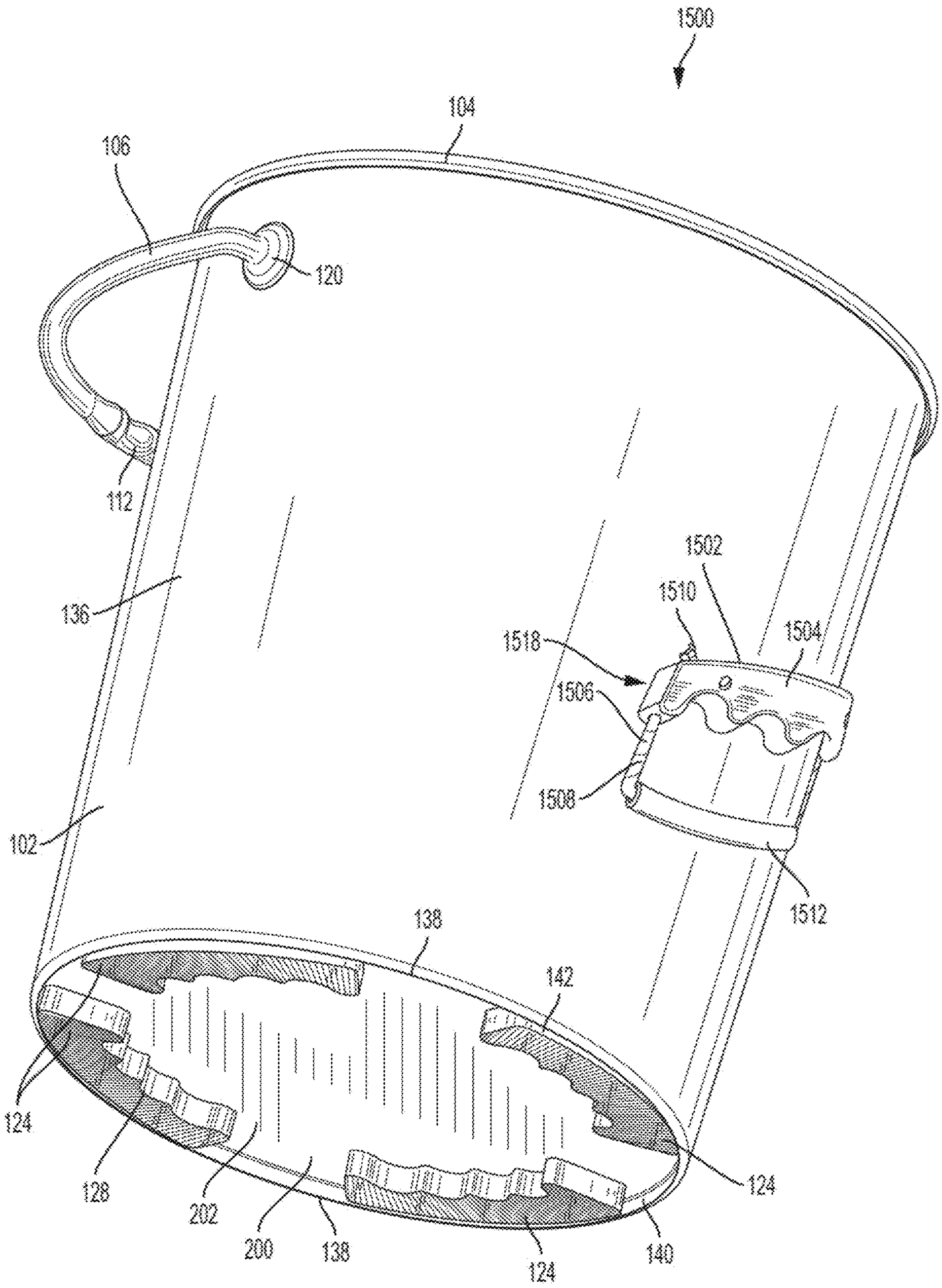
1500
104
106
120
112
136
102
1502
1510
1504
1518
1506
1508
1512
138
142
124
128
202
200
138
124
140
124

FIG. 16

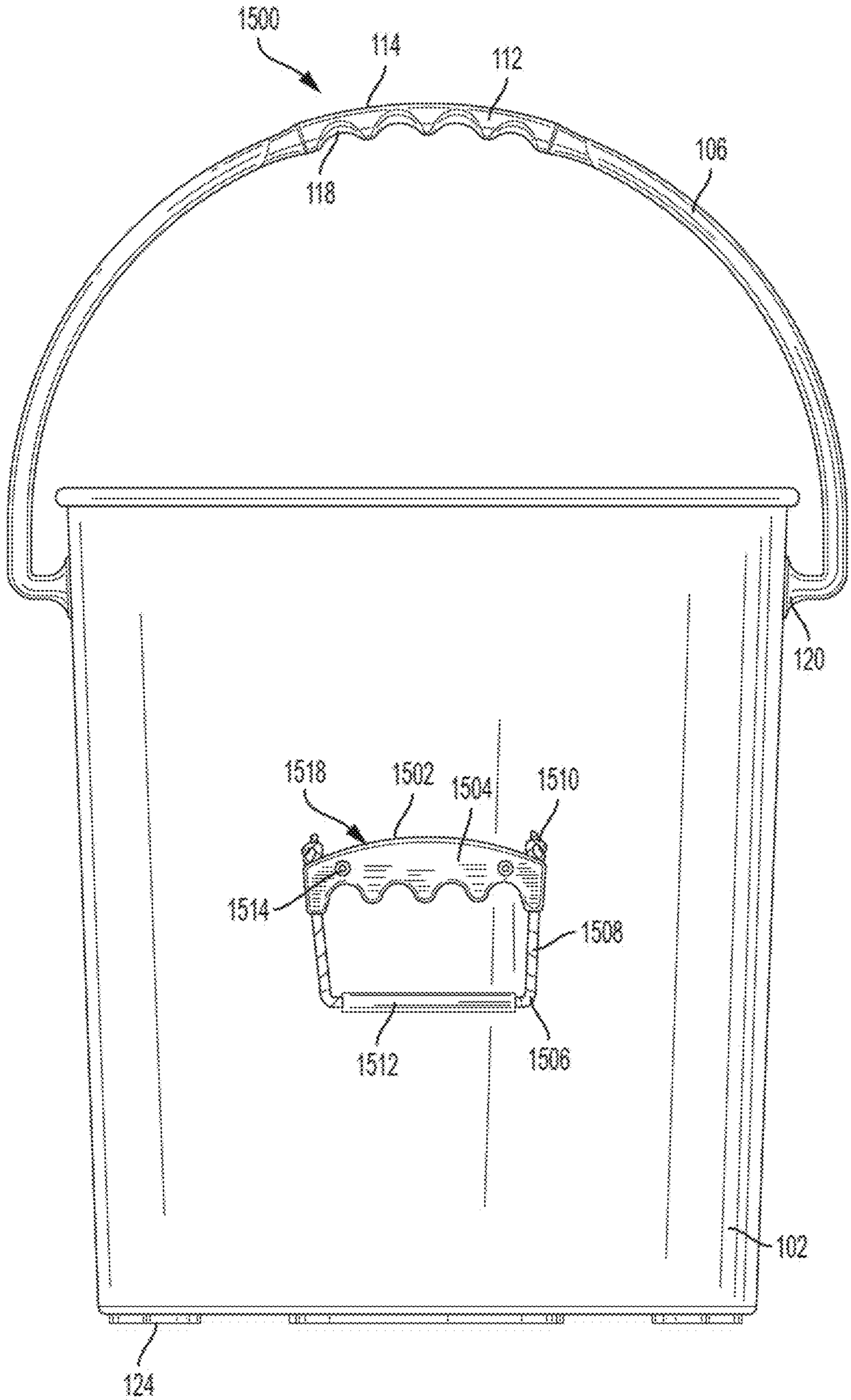
1500
114
112
106
118
120
1518
1502
1504
1510
1514
1508
1512
1506
102
124

FIG. 17

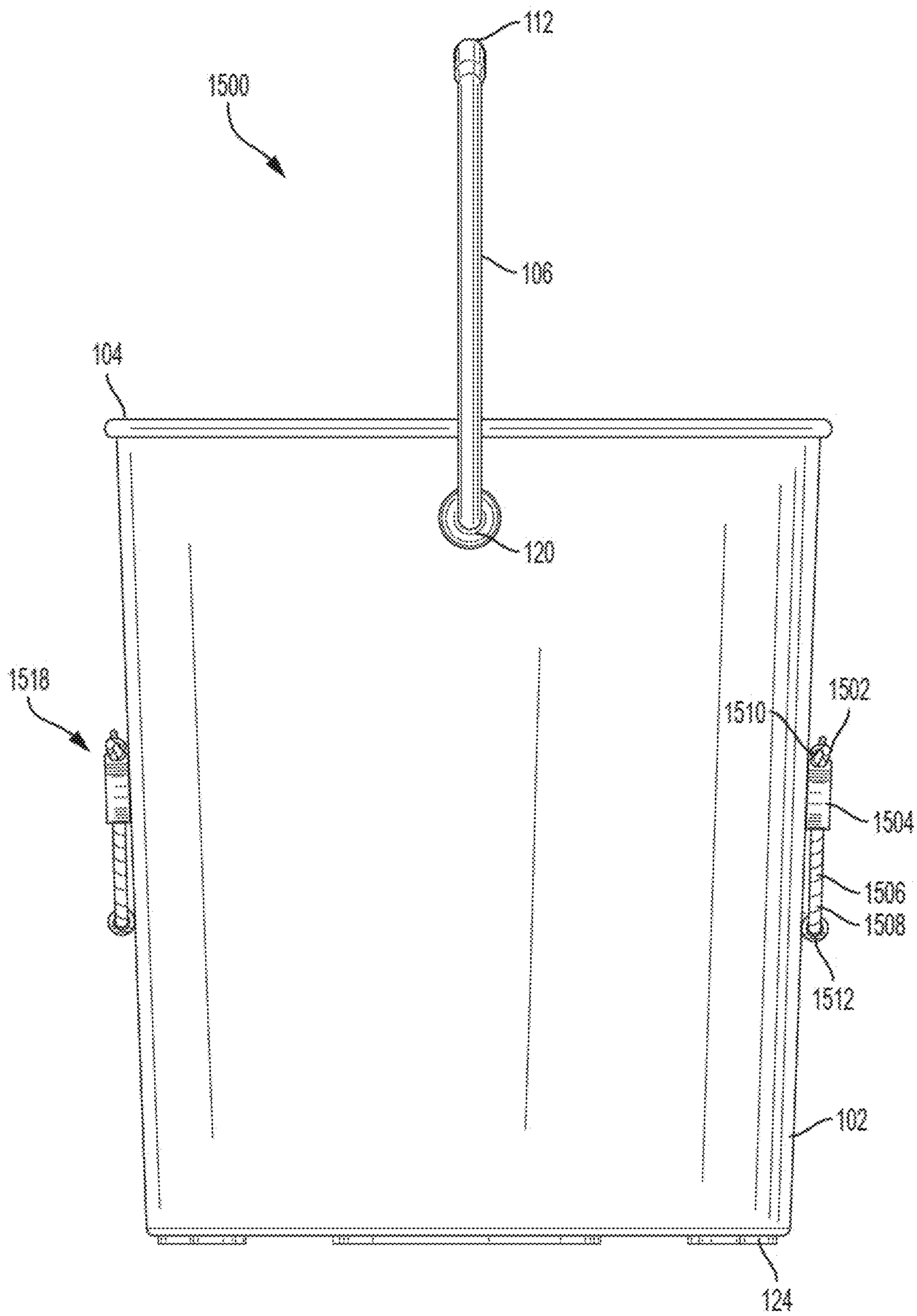
112
1500
106
104
120
1518
1502
1510
1504
1506
1508
1512
102
124

FIG. 18

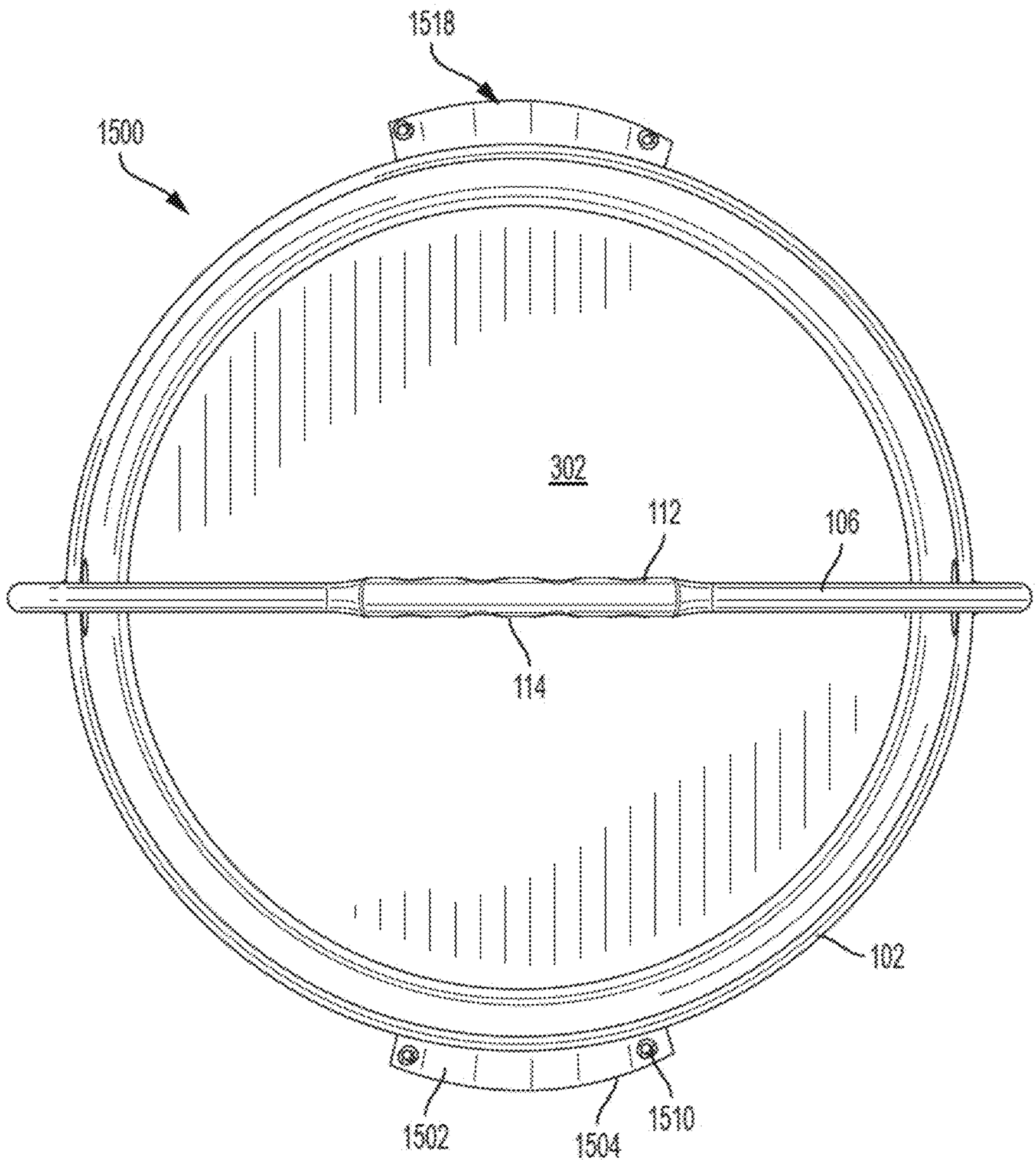

FIG. 19

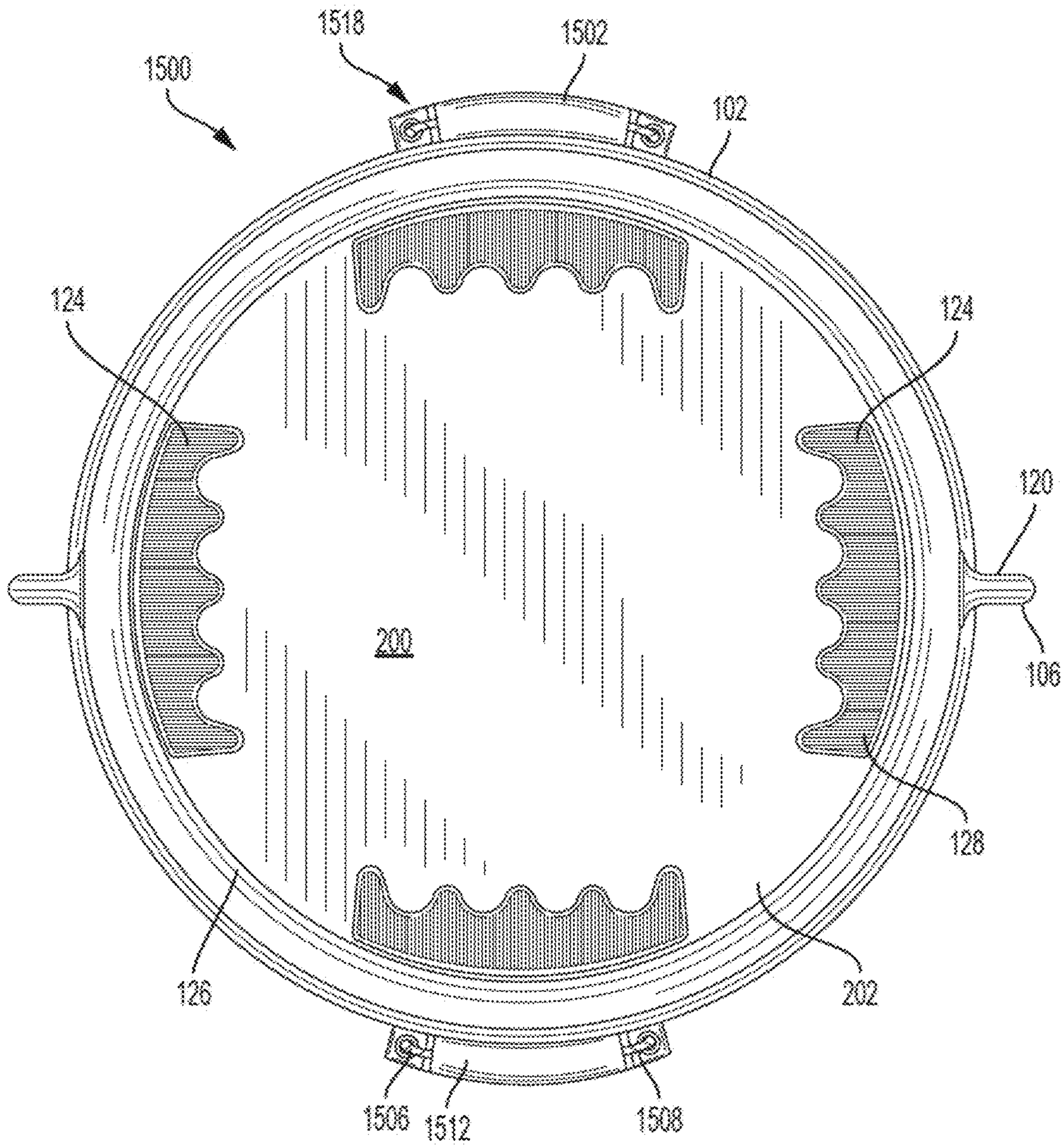
1518
1502
1500
102
124
124
120
200
106
128
126
202
1506
1512
1508

FIG. 20

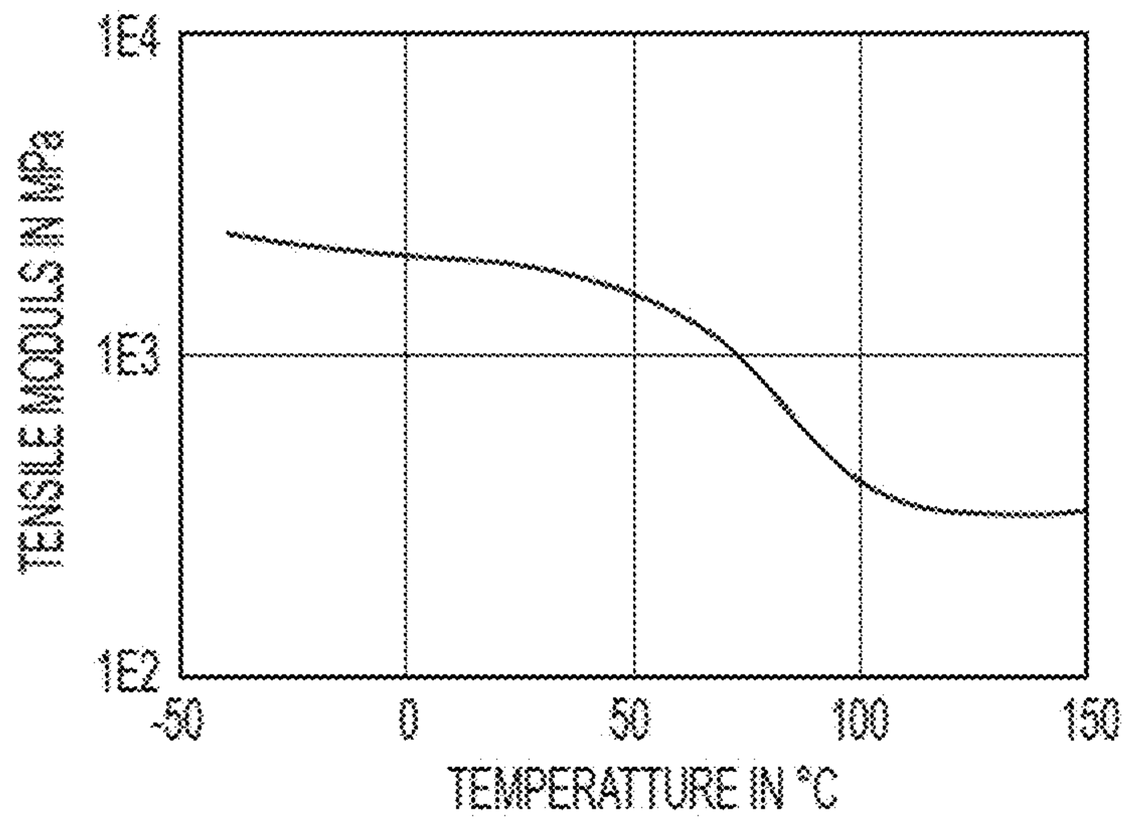
1E4
1E3
1E2
TENSILE MODULS IN MPa
-50
0
50
100
150
TEMPERATTURE IN °C

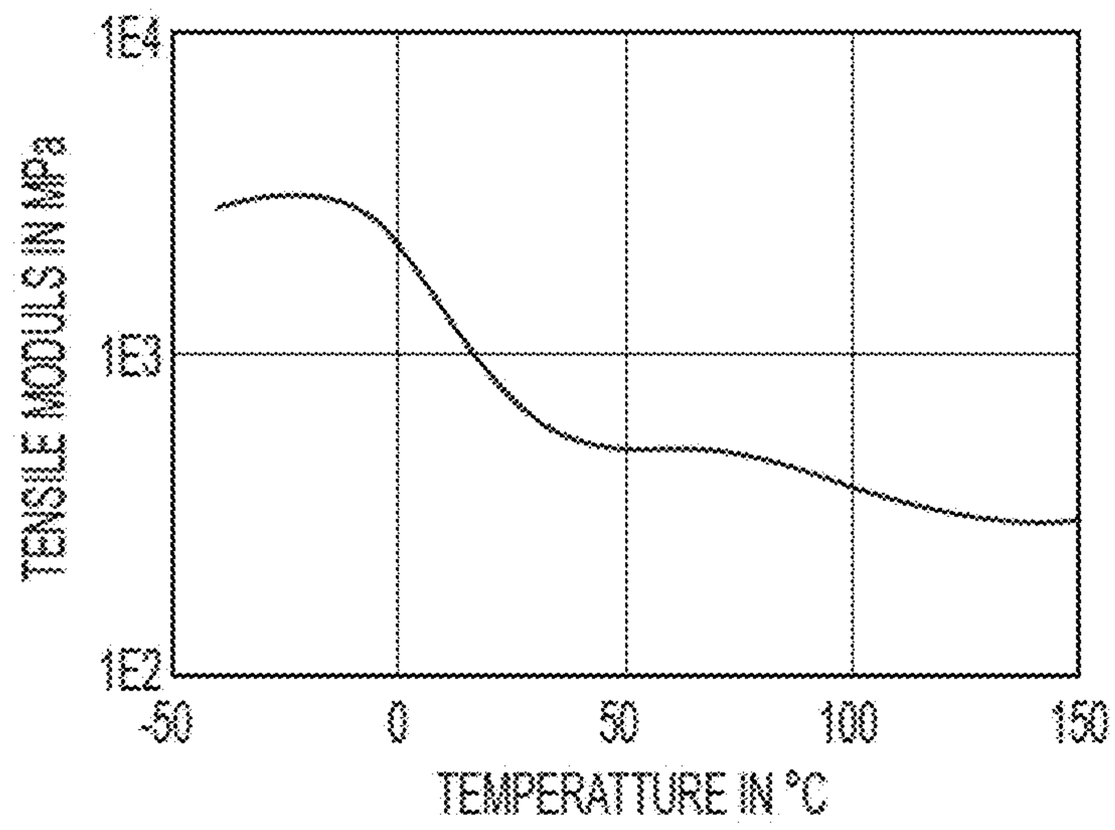
1E4
1E3
1E2
TENSILE MODULS IN MPa
-50
0
50
100
150
TEMPERATTURE IN °C

FIG. 21

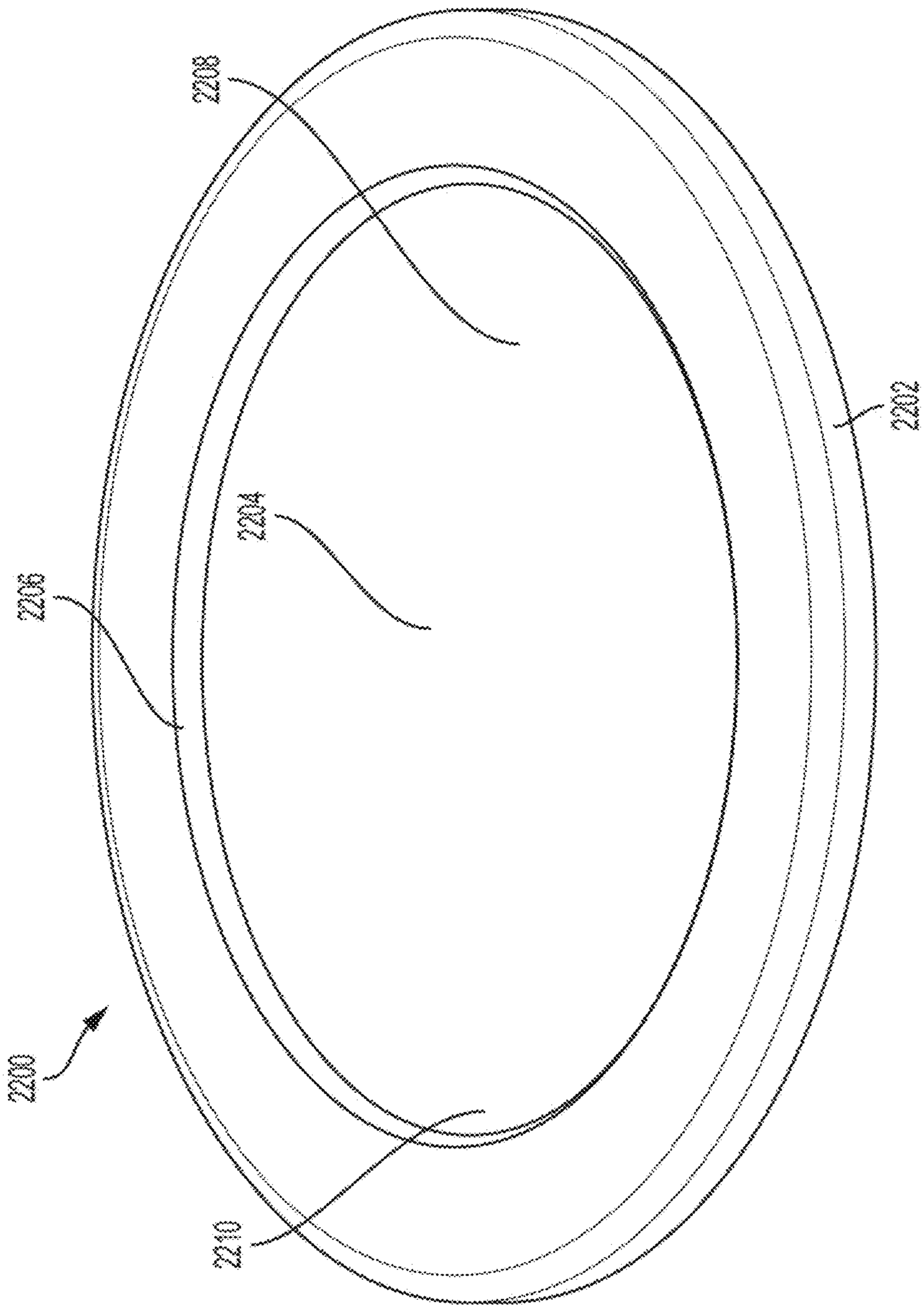

FIG. 22

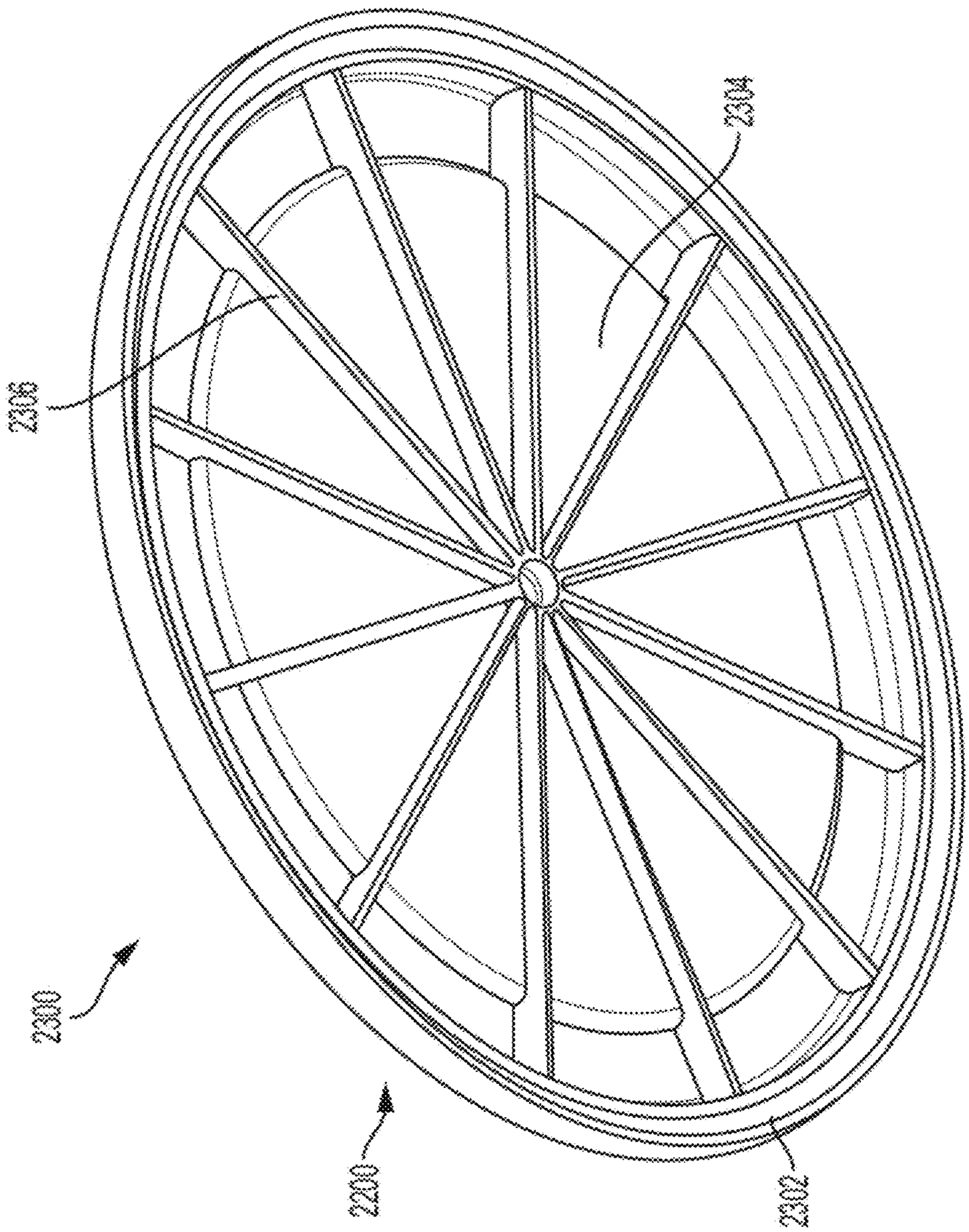

FIG. 23

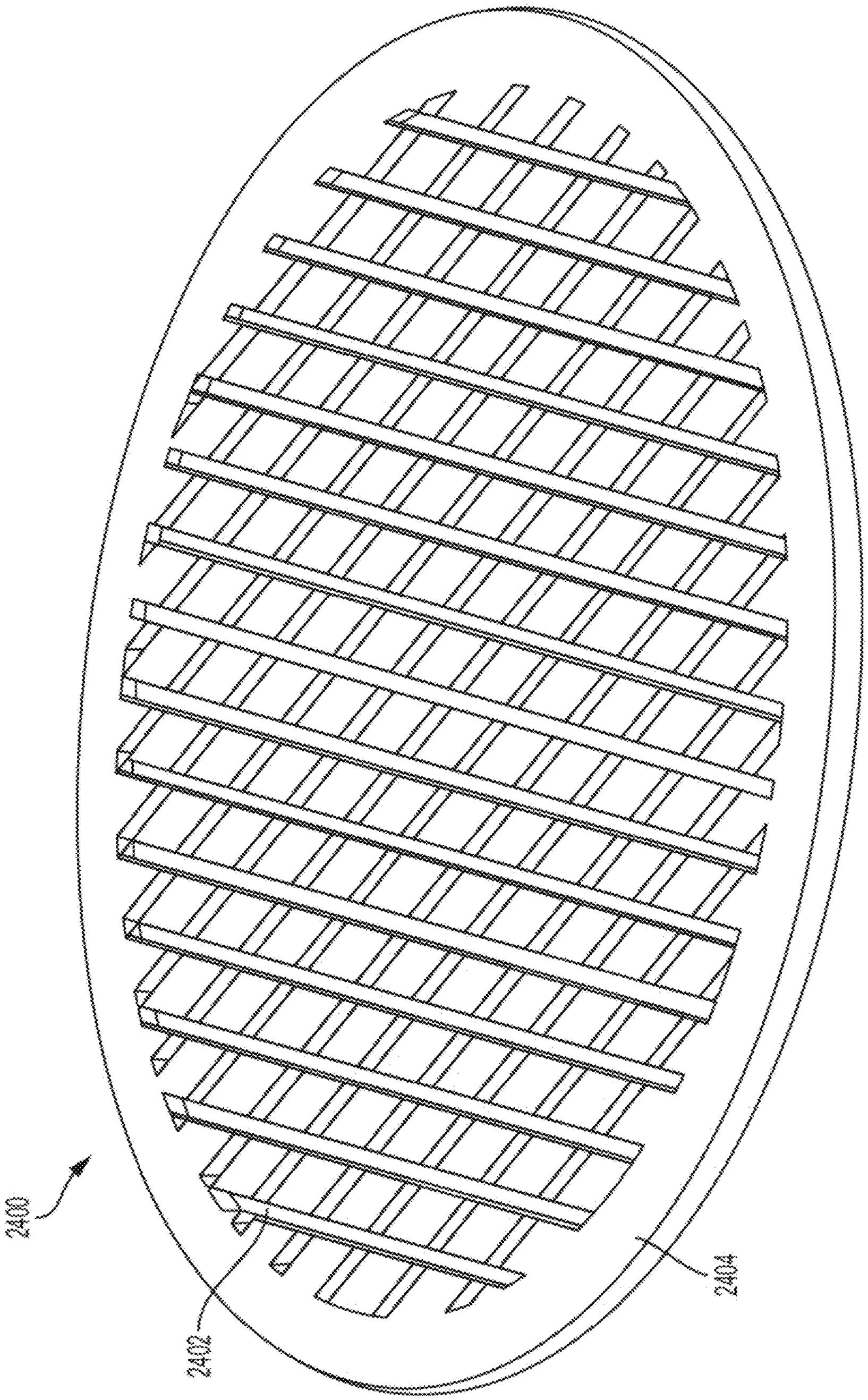

FIG. 24

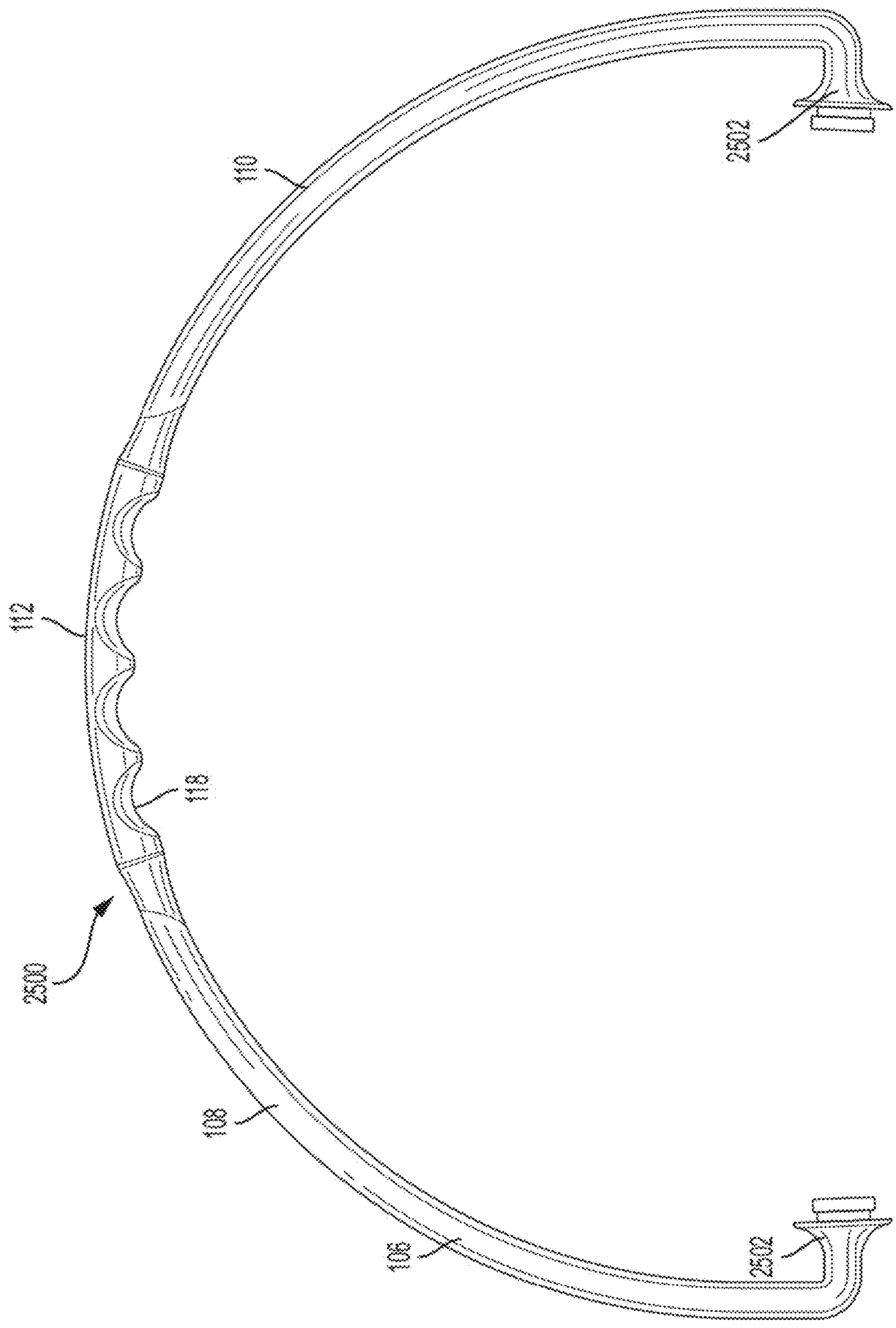

FIG. 25

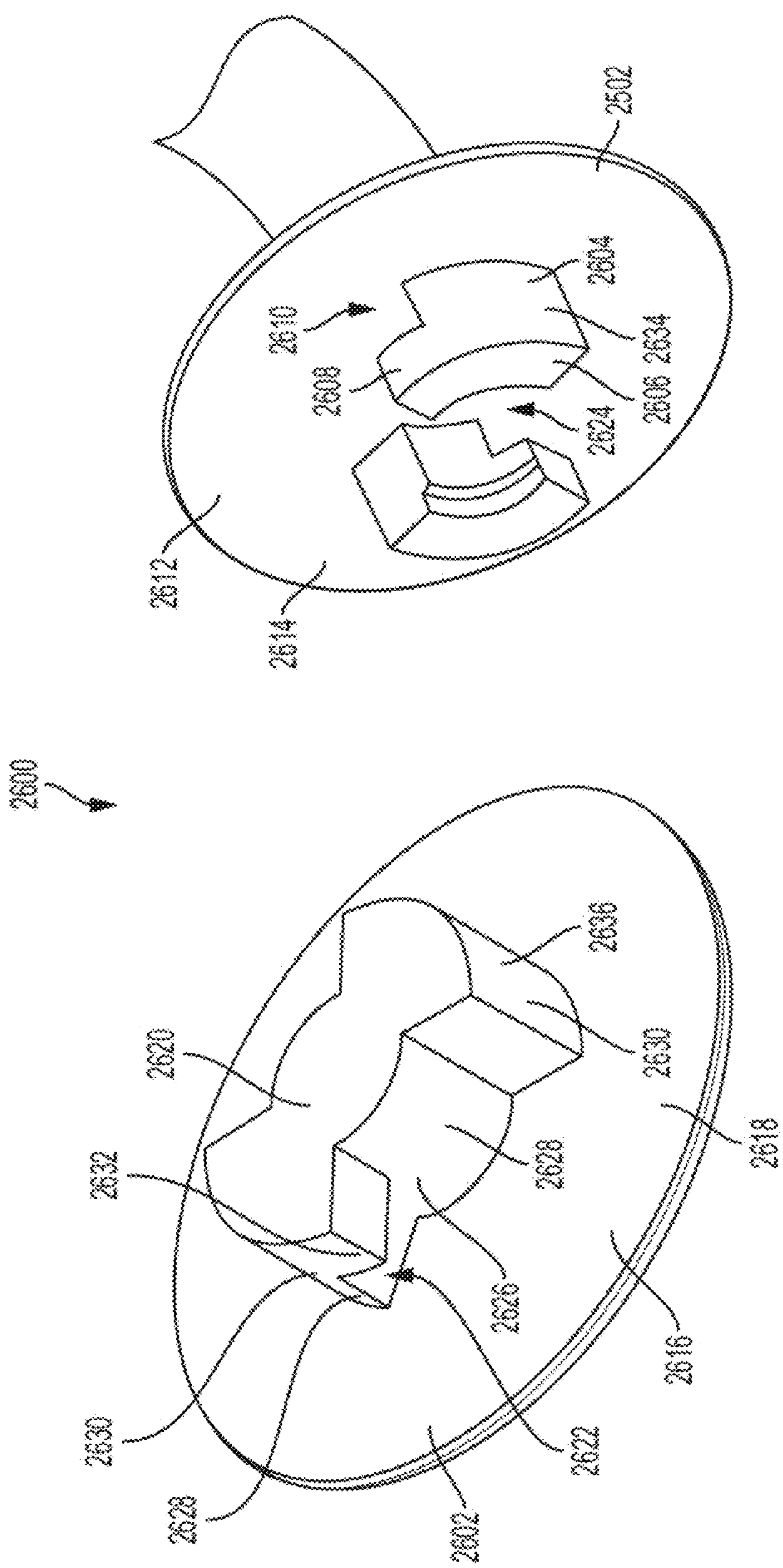
2600
2610
2608
2612
2614
2604
2634
2606
2624
2602
2620
2632
2630
2628
2626
2622
2616
2618
2636

FIG. 26

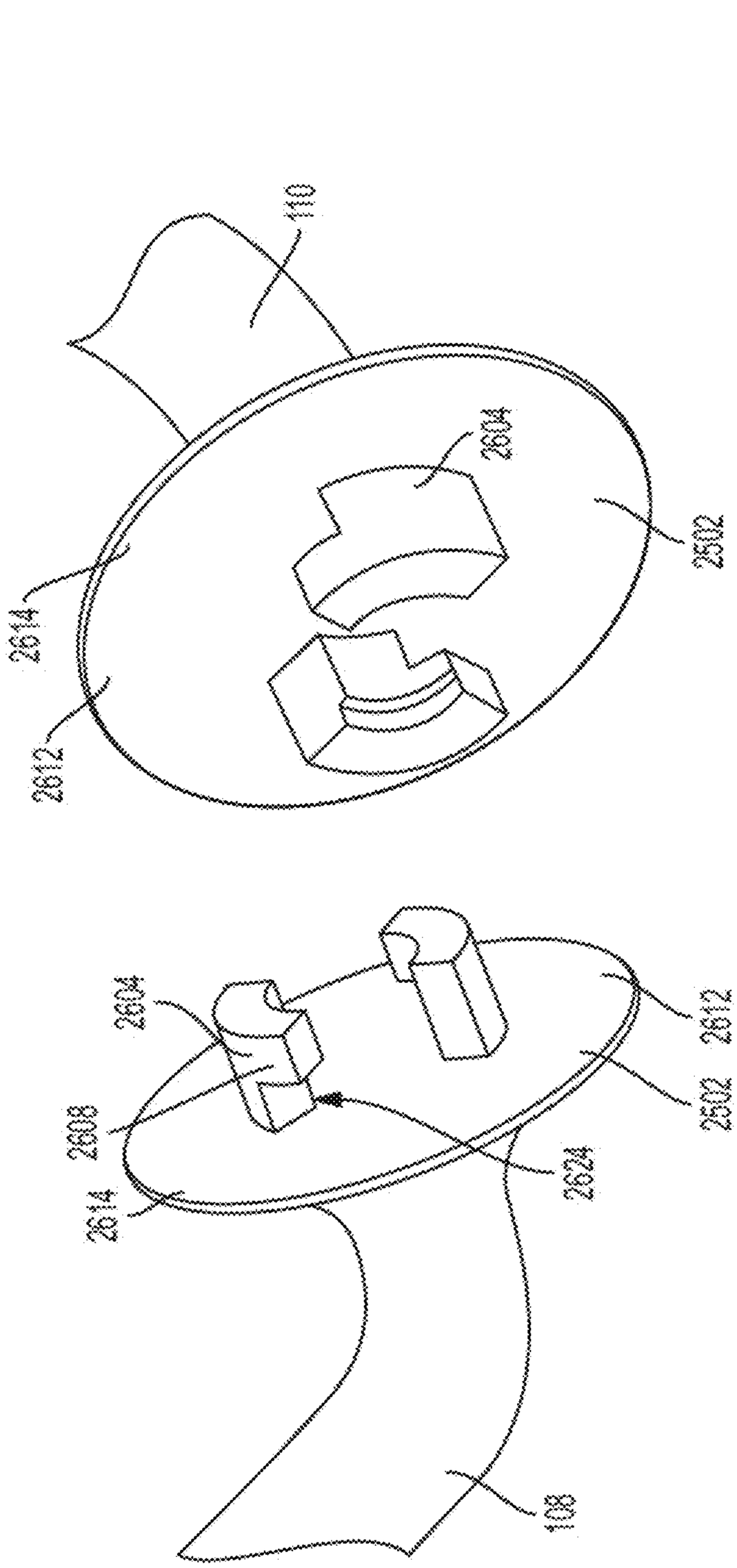

FIG. 27

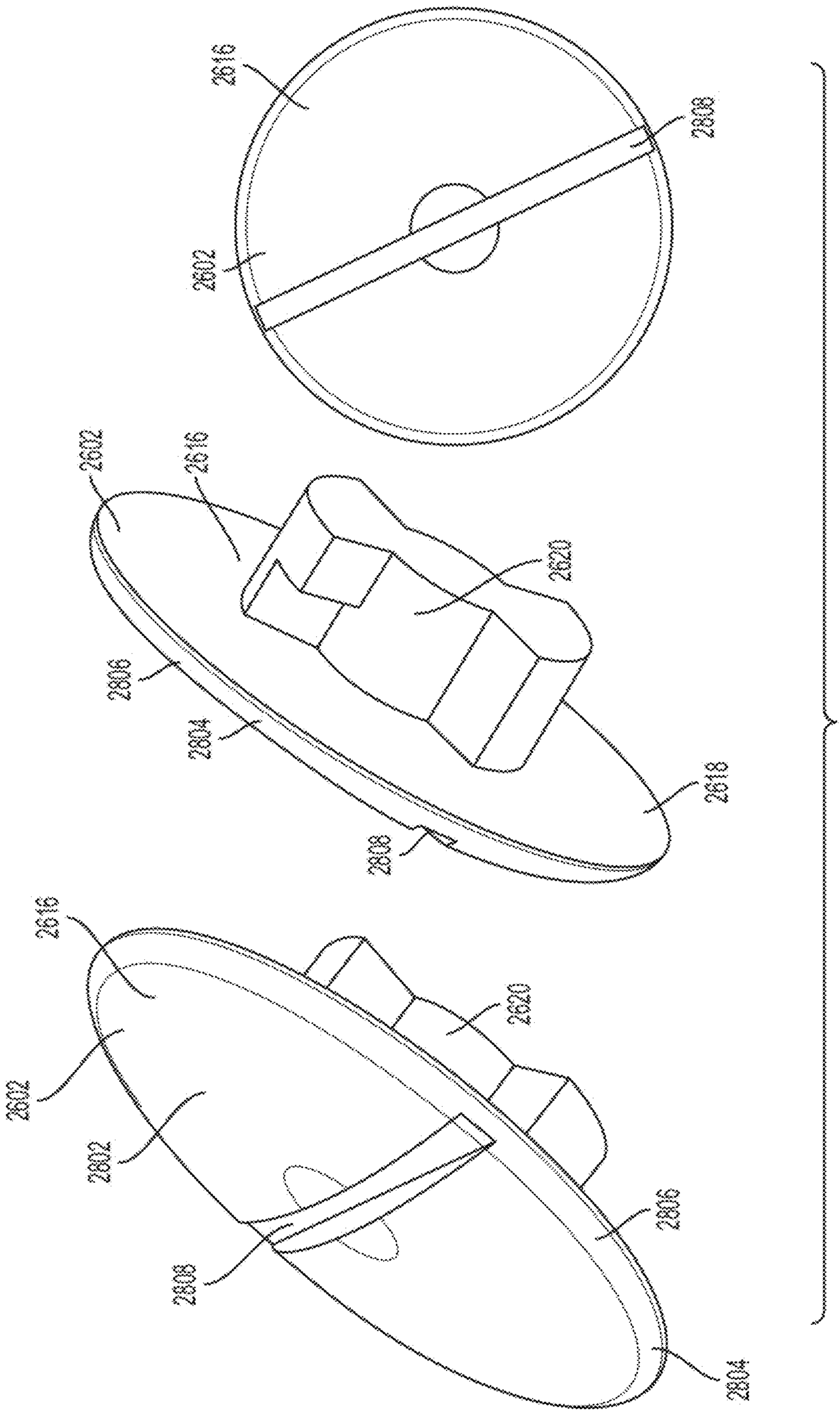
2616
2808
2602
2602
2616
2620
2806
2804
2818
2808
2616
2620
2602
2602
2806
2808
2804

FIG. 28

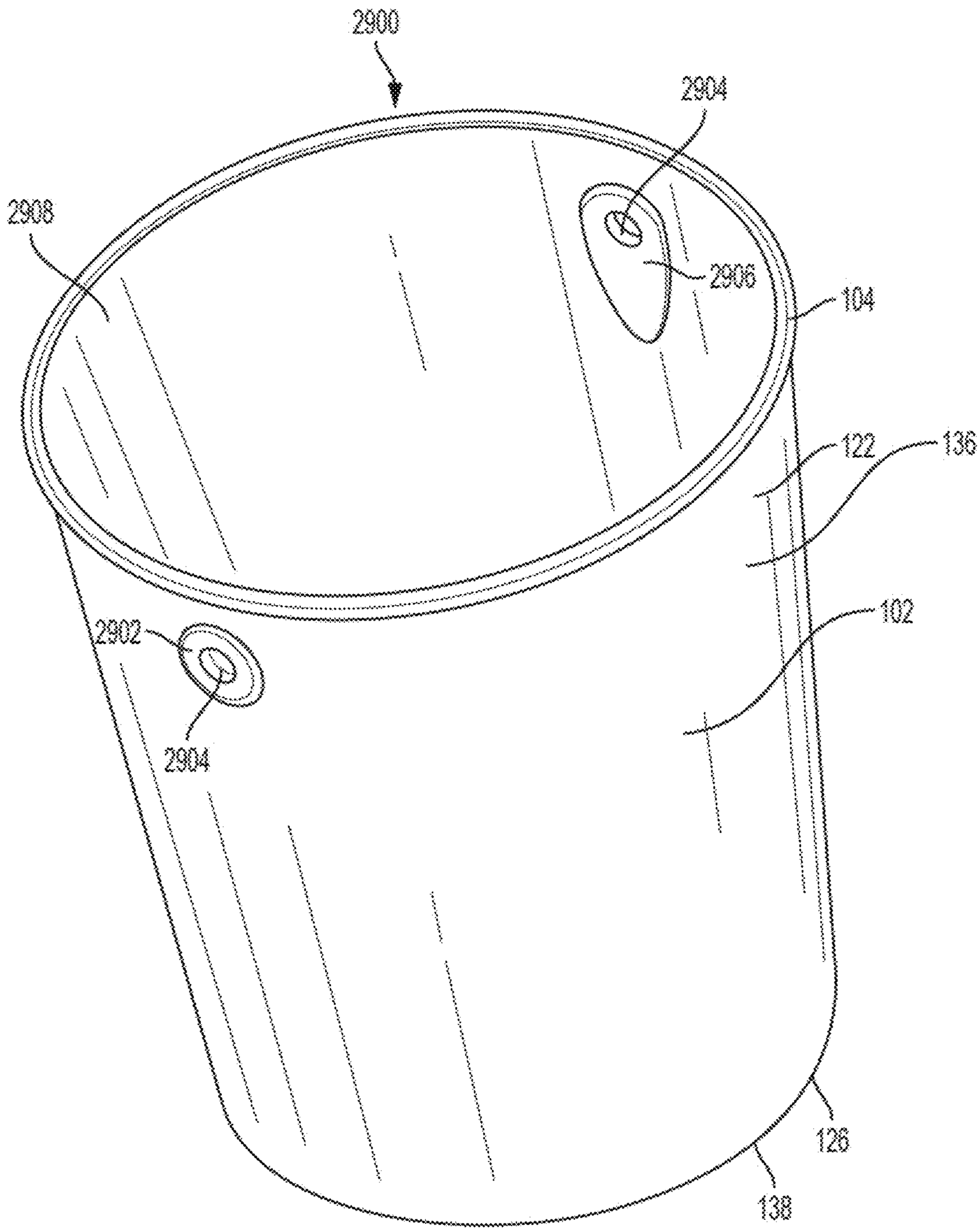

FIG. 29

INSULATING CONTAINER

CROSS-REFERENCE TO RELATED APPLICATIONS

[0001] This application is a continuation of U.S. patent application Ser. No. 15/450,526, filed on Mar. 6, 2017, which claims the benefit of U.S. Provisional Patent Application No. 62/374,274, filed on Aug. 12, 2016, and U.S. Provisional Patent Application No. 62/304,565, filed on Mar. 7, 2016, all of which have been incorporated herein by reference in their entirety.

BACKGROUND

Field of the Invention

[0002] The present invention generally relates to an improved insulating container, and more particularly, to an improved insulating container having a multilayer structure that is rigid and lightweight.

Background of the Invention

[0003] Bucket design challenges exist in conventional buckets and bucket-type carriers. Of concern is the operation life cycle of typical buckets and an inefficient ability to utilize and manipulate the same during operational use. Preventing failure in traditional buckets usually employs having extra buckets on hand or going to get another bucket once the immediate bucket in use fails.

[0004] Embodiments of the present invention alleviate the need for extra buckets by making the bucket sturdier and easier to handle. Additional features and advantages of the invention will be set forth in the description which follows, and in part will be apparent from the description, or may be learned by practice of the invention. The objectives and other advantages of the invention will be realized and attained by the structure particularly pointed out in the written description and claims hereof as well as the appended drawings.

SUMMARY

[0005] According to first broad aspect, the present invention provides an assembly comprising a bucket body having vertical side walls wherein the vertical side walls extend upwards from a closed bottom base. A handle may be connected to the vertical side walls, and one or more ergonomically designed feet may be detachably connected to and extend beyond a bottom surface of the bottom base. Disclosed embodiments may provide an ergonomic grip portion integrally formed with the handle. The handle may be connected to the bucket body via a twist-lock connection assembly.

BRIEF DESCRIPTION OF THE DRAWINGS

[0006] The accompanying drawings, which are incorporated herein and constitute part of this specification, illustrate exemplary embodiments of the invention, and, together with the general description given above and the detailed description given below, serve to explain the features of the invention.

[0007] FIG. **1** is a schematic illustration of a bucket container with handle according to a first embodiment of the present invention.

[0008] FIG. **2** is a perspective view of the bucket container with handle according to the first embodiment of the present invention.

[0009] FIG. **3** is a second perspective view of the bucket container with handle according to the first embodiment of the present invention.

[0010] FIG. **4** is a schematic illustration of an attachment plug assembly according to a one embodiment of the present invention.

[0011] FIG. **5** is an alternate view of the attachment plug assembly of FIG. **4** according to one embodiment of the present invention.

[0012] FIG. **6** is a schematic illustration of an attachment plug assembly being assembled to a bucket container with handle according to one embodiment of the present invention.

[0013] FIG. **7**A is an enlarged view of a region A of FIG. **6** according to one embodiment of the present invention.

[0014] FIG. **7**B is an enlarged view of a region B of FIG. **6** according to one embodiment of the present invention.

[0015] FIG. **8** is a first-side view of the bucket container with handle according to the first embodiment of the present invention.

[0016] FIG. **9** is a second-side view of the bucket with handle container according to the first embodiment of the present invention.

[0017] FIG. **10** is a top plan view of the bucket container with handle according to the first embodiment of the present invention.

[0018] FIG. **11** illustrates a bottom plan view of the bucket container with handle according to the first embodiment of the present invention.

[0019] FIG. **12** illustrates a bottom plan view of the first embodiment of the bucket container with handle having a second foot layout according to one embodiment of the present invention.

[0020] FIG. **13** illustrates a bottom plan view of the first embodiment of the bucket container with handle having a third foot layout according to one embodiment of the present invention.

[0021] FIG. **14** illustrates a bottom plan view of the first embodiment of the bucket container with handle having a fourth foot layout according to one embodiment of the present invention.

[0022] FIG. **15** is a schematic illustration of a bucket container with handle according to a second embodiment of the present invention.

[0023] FIG. **16** is a perspective view of the bucket container with handle according to the second embodiment of the present invention.

[0024] FIG. **17** is a first-side view of the bucket container with handle according to the second embodiment of the present invention.

[0025] FIG. **18** is a second-side view of the bucket with handle container according to the second embodiment of the present invention.

[0026] FIG. **19** is a top plan view of the bucket container with handle according to the second embodiment of the present invention.

[0027] FIG. **20** illustrates a bottom plan view of the bucket container with handle according to the second embodiment of the present invention.

[0028] FIG. **21** is a graphical diagram for a nylon resin according to one embodiment of the present invention.

[0029] FIG. **22** is a top perspective view of an exemplary lid for a bucket container according to one embodiment of the present invention.

[0030] FIG. **23** is a bottom perspective view of an exemplary lid for a bucket container according to one embodiment of the present invention.

[0031] FIG. **24** is a perspective view of an exemplary non-skid pad according to one embodiment of the present invention.

[0032] FIG. **25** illustrates another exemplary handle according to one embodiment of the present invention.

[0033] FIG. **26** illustrates a twist-lock connection assembly according to one embodiment of the present invention.

[0034] FIG. **27** illustrates alternate views of a coupling connector according to one embodiment of the present invention.

[0035] FIG. **28** illustrates alternate views of a mating retention cap according to one embodiment of the present invention.

[0036] FIG. **29** illustrates a perspective view of another bucket container according to one embodiment of the present invention.

DETAILED DESCRIPTION OF THE INVENTION

Definitions

[0037] Where the definition of terms departs from the commonly used meaning of the term, applicant intends to utilize the definitions provided below, unless specifically indicated.

[0038] It is to be understood that the foregoing general description and the following detailed description are exemplary and explanatory only and are not restrictive of any subject matter claimed. In this application, the use of the singular includes the plural unless specifically stated otherwise. It must be noted that, as used in the specification and the appended claims, the singular forms "a," "an" and "the" include plural referents unless the context clearly dictates otherwise. In this application, the use of "or" means "and/or" unless stated otherwise. Furthermore, use of the term "including" as well as other forms, such as "include", "includes," and "included," is not limiting.

[0039] For purposes of the present invention, the term "comprising," the term "having," the term "including," and variations of these words are intended to be open-ended and mean that there may be additional elements other than the listed elements.

[0040] For purposes of the present invention, directional terms such as "top," "bottom," "upper," "lower," "above," "below," "left," "right," "horizontal," "vertical," "up," "down," etc., are used merely for convenience in describing the various embodiments of the present invention. The embodiments of the present invention may be oriented in various ways. For example, the diagrams, apparatuses, etc., shown in the drawing figures may be flipped over, rotated by 90° in any direction, reversed, etc.

[0041] For purposes of the present invention, a value or property is "based" on a particular value, property, the satisfaction of a condition, or other factor, if that value is derived by performing a mathematical calculation or logical decision using that value, property or other factor.

[0042] For purposes of the present invention, it should be noted that to provide a more concise description, some of the quantitative expressions given herein are not qualified with the term "about." It is understood that whether the term "about" is used explicitly or not, every quantity given herein is meant to refer to the actual given value, and it is also meant to refer to the approximation to such given value that would reasonably be inferred based on the ordinary skill in the art, including approximations due to the experimental and/or measurement conditions for such given value.

[0043] For purposes of the present invention, the term "bucket" or "pail" refers to a watertight, generally vertical cylinder or truncated cone, with an open top and a generally flat bottom. Some disclosed embodiments may include carrying handle typically referred to as a bail.

[0044] For purposes of the present invention, the term "circumference" refers to an enclosing boundary of a curved geometric figure.

[0045] For purposes of the present invention, the term "container" refers to a tool consisting of any device creating a partially or fully enclosed space that can be used to contain, store, and transport objects or materials.

[0046] For purposes of the present invention, the term "ergonomic" refers to equipment design intended to maximize productivity by reducing operator fatigue and discomfort. Additional aspects include designing and arranging equipment for use so that the user and equipment interact most efficiently, safely and comfortably in the working environment.

[0047] For purposes of the present invention, the term "flange" refers to a projecting rim, collar, ring or plate on a shaft, pipe, machine housing, etc., cast or formed to give additional strength, stiffness, or supporting area, or to provide a place for the attachment of other objects. The flange may be provided or formed as an external or internal ridge, or rim (lip), for strength.

[0048] For purposes of the present invention, the term "grip" refers to a part or attachment by which an object is held in the hand.

[0049] For purposes of the present invention, the term "handle" refers to a part of, or attachment to, an object that can be moved, held, carried or used by hand. In some embodiments the handle may include an ergonomic design.

[0050] For purposes of the present invention, the term "integral" refers to of, relating to, or belonging as a part of the whole; constituent or component; i.e., necessary to the completeness of the whole; consisting or composed of parts that together constitute a whole.

[0051] For purposes of the present invention, the term "non-skid" refers to a design to prevent sliding or skidding.

[0052] For purposes of the present invention, the term "thermoplastic elastomer (TPE)" refers to a diverse family of rubber-like materials that, unlike conventional thermoset rubber, can be processed and recycled within the manufacturing process like thermoplastic materials.

[0053] For purposes of the present invention, the term "Santoprene™" refers to a fully dynamically vulcanized ethylene propylene diene monomer (EPDM) rubber in a thermoplastic matrix of polypropylene (PP). Santoprene™ looks, feels and behaves like rubber but, due to the PP content, offers simple, flexible part design and manufacturing. Santoprene™ is essentially a high performance elastomer which exhibits the properties of rubber while providing the ease of processing of plastics. It has proven to be a dependable polymer for flexible engineered parts that require long-term performance. Santoprene™ provides

reduced system costs, compared to materials such as thermoset rubber, has a potential for sustainability benefits. Santoprene™ TPV (thermoplastic vulcanizates) is available in several different grades. Depending on the ratio of EPDM rubber to PP, the physical properties such as hardness, modulus and flexibility will vary. Santoprene™ has the look, feel and behavior of EPDM rubber, but it can be processed on conventional thermoplastic processing equipment. This allows simplified, more flexible part design and easier manufacturing when compared to EPDM rubber. A main advantage of a TPV over EPDM rubber is lower weight for parts with a similar design. The weight reduction can be as high as 30%.

[0054] For purposes of the present invention, the term "watertight" refers to being closely sealed, fastened, or fitted so that no water enters or passes through.

[0055] For purposes of the present invention, the term "Zytel®" refers to a trademark owned by DuPont™ and used for a number of different high strength, abrasion and impact resistant thermoplastic polyamide formulations of the family more commonly known as nylon. Common features of Zytel® nylon resin include mechanical and physical properties such as high mechanical strength, excellent balance of stiffness and toughness, good high temperature performance, good electrical and flammability properties, good abrasion and chemical resistance. In addition, Zytel® nylon resins are available in different modified and reinforced grades to create a wide range of products with tailored properties for specific processes and end uses. Zytel® nylon resin, including most flame retardant grades, offer the ability to be colored. The good melt stability of Zytel® nylon resin normally enables the recycling of property handled production waste. Zytel® nylon resin typically is used in demanding applications in the automotive, furniture, domestic appliances, sporting goods and construction Industry. Zytel® ST801AW NC010 Is a Super Tough, high performance polyamide 66 resin. It is UV stabilized and when appropriately colored offers the best resistance to indirect sunlight.

DESCRIPTION

[0056] While the invention is susceptible to various modifications and alternative forms, specific embodiment thereof has been shown by way of example in the drawings and will be described in detail below. It should be understood, however that it is not intended to limit the invention to the particular forms disclosed, but on the contrary, the invention is to cover all modifications, equivalents, and alternatives falling within the spirit and the scope of the invention.

[0057] Existing buckets (or pails) are commonplace physical containers. In a typical configuration, the bucket is cylindrical in shape having a closed bottom surface and an open top surface. In addition, buckets are often formed of low grade metal or plastic materials. As cheap materials are most often used, the resulting buckets are not very durable. In addition, their poor construction often leads to failure of the bucket at handle and other locations of the body of the bucket. Despite their ubiquity, buckets are also very limited by their lack of grip options.

[0058] Accordingly, the embodiments of the present invention are directed to an improved container assembly that substantially obviates one or more problems due to limitations and disadvantages of the related art. Although bucket configurations are described herein, it is readily understood by one of ordinary skill in art that the embodiments of the invention may be applied to a variety of container assemblies. By improving and increasing handle locations, the bucket and its contents are more easily controlled or otherwise manipulated. Moreover, by improving the composition of its structure with the use of a multi-layered insulated core, the utility, resiliency, and longevity of buckets are enhanced.

[0059] Turning to FIGS. **1-3** and **8-9**, a bucket **100** is illustrated according to one disclosed embodiment of the invention. In an exemplary embodiment, the bucket body having vertical side walls **102** extending upwards from a generally flat closed bottom **202** to form a top rim at an opening of bucket **100**. In some configurations, the top rim may be formed into a lip **104** disposed around the periphery of sidewalls **102** at the opening. Lip **104** facilitates securement of a lid **2200** (see FIG. **22**) to the top of bucket **100** at the opening. Embodiments of lid **2200** may incorporate, for example, a sealable snap-on type design to affix and secure an outer rim **2202** to lip **104** of bucket **100**. The snap-on and off design allows for quick removal and replacement of sealable lid **2200**.

[0060] As shown in a bottom perspective view **2300**, FIG. **23** illustrates a receiving channel **2302** on the underside **2304** of lid **2200**. Outer rim **2202** of lid **2200** may be urged along lip **104** of bucket **100** to force lip **104** into receiving channel **2302**. In this manner, lid **2200** may be retained to bucket **100** in a sealable fashion to retain the contents therein and/or prevent the contents from spilling. In addition, the sealing action of lid **2200** to bucket **100** serves to prevent exterior materials from entering an internal area of bucket **100** or to simply protect the contents from exterior elements. In addition, outer rim **2202** may be rigidly flexible to bend outwardly to release lip **104** from receiving channel **2302**.

[0061] Additionally, disclosed embodiments of lid **2200** may be configured with a built-in handle (not-shown) to make removing and re-installing the lid easier. Thus, lid **2200** may be separate and regarded as an accessory to bucket **100**. In addition, lip **104** provides contouring to the edge of the opening of bucket **100** for pouring and also provides increased strength along the edge of bucket **100** around the periphery of the opening. Thus lip **104** facilitates the opening of bucket **100** to maintain its shape under stress.

[0062] Lid **2200** may serve as a seating area to the top of bucket **100** for a user. Lid **2200** may be configured to incorporate a seating area **2204** to accommodate a user. In some embodiments, seating area **2204** may be designed as a recessed area in about the center area in the top **2210** of lid **2200**. Seating area **2204** may also provide additional functionality such as serving as a table area for retaining/supporting any number and variety of items generally disposed thereon. For example, disclosed embodiments may include an inner rim **2206** along a recessed area of seating area **2204** to generally retain and/or support the aforementioned variety of items disposed in seating area **2204**. Seating area **2204** may also employ various ergonomic contours to enhance user comfort.

[0063] Additional support structure, such as spines or reinforcement ridges **2306**, may be incorporated along the underside **2304** of lid **2200**. Reinforcement ridges **2306** provide increased support to the lid to accommodate a user's weight (for example, sitting or standing) or materials set upon a top **2210** of lid **2200**. In some embodiments, seating area **2204** may be configured to include an attachment area

2208, for example, configured to receive a separately applied support material (not shown), such as a cushion, for supporting a user in seating area **2204**. Attachment area **2208** may employ any variety of securing means to retain the separately applied support material, such as including, but not limited to, adhesives, hook and tooth materials, screws, nails, etc. In some embodiments, a portion of lid **2200**, such as recessed area of seating area **2204**, may accommodate other exemplary materials such as a non-skid pad **2400**. Turning to FIG. **24**, an exemplary non-skid pad **2400** may incorporate a non-skid design **2402**, such as in a top surface **2404**, to aid in traction, for example, should a user need to stand on bucket **100**. Non-skid pad **2400** may also be designed having a prescribed thickness and, therefore, function as an enhancement to a user's comfort, for example, should they need to use it as a seat.

[0064] In one disclosed embodiment, vertical side walls **102** meet in connection with closed bottom **202** at an outer periphery base bottom **126** of bucket **100**. Outer periphery base bottom **126** may be curved along its outer circumference to include an arch in its ends (similar to an eggshell). Thus, this joint connection at outer periphery base bottom **126** provides a curvature (or arch) that facilitates prevention and protection against cracking of bucket **100** by distributing applied stresses to outer periphery base bottom **126** over a wider area of its curved surface area and material to mitigate impacts. In one disclosed embodiment the aforementioned curvature of outer periphery base bottom **126** is about a ⅛ inch radius. This additional layer of protection assists in a prolonged lifespan of bucket **100**. In some disclosed embodiments, a bottom rim **138** of outer periphery base bottom **126** may extend past exterior bottom surface **200** of flat closed bottom **202** thereby forming a lip **140**. The circumference of lip **140** may include a curvature profile generally extending around flat closed bottom **202** of bucket **100**.

[0065] A handle **106** may be attached to bucket **100** to make bucket **100** maneuverable by a user such as for handling, transporting, or manipulating the contents therein. In one disclosed embodiment, handle **106** may comprise a grip portion **112** disposed between extending arms thereby forming an integrated one-piece generally rigid design of handle **106**. Extending arms may comprise a first extending portion **108** (extending from one respective end of grip portion **112**) and a second extending portion **110** (extending from another respective end of grip portion **112**). First extending portion **108** and second extending portion **110** may each terminate at respective attachment ends **120**, as described below. In one disclosed embodiment, first extending portion **108**, second extending portion **110** and grip portion **112** of handle **106** form a generally semicircular design. It is readily appreciated that any shape or design may be formed by first extending portion **108**, second extending portion **110** and grip portion **112** of handle **106** sufficient for operating and carrying bucket **100**.

[0066] Grip portion **112** includes a top side **114** and a bottom side or underside **116**. Ergonomic features may be integrated into grip portion **112** such as grooves, finger indents or finger receiving recesses **118** along the bottom or underside **116** thereof. In one select embodiment, grip portion **112** comprises four grooves, finger indents or finger receiving recesses **118**. The disclosed design allows a user's fingers to naturally fall into respective grooves, finger indents or finger receiving recesses **118**, for example, when grasping grip portion **112** from the top side **114**. A rounded ergonomic contour of top surface **114** of grip portion **112** generally aligns with the natural curvature of a user's palm area when grip portion **112** is grasped by a user.

[0067] A removable shoulder strap (not shown) may be attached to handle **106**. In one disclosed embodiment, the shoulder strap is affixed to first extending portion **108** and second extending portion **110** of handle **106**. For example, in one exemplary embodiment, first extending portion **108** and second extending portion **110** include clip holes for removably attaching the shoulder strap. In select embodiments, should straps may include a pad. Thus, removable shoulder strap gives the operator an additional option for transporting the bucket, for example, by carrying bucket **100** over the shoulder.

[0068] In select embodiments, each end of handle **106** is configured to turn inwardly to terminate at attachment ends **120** of handle **106**. Attachment ends **120** are designed as male attachment ends of an attachment plug assembly (discussed below). Thus, in a disclosed embodiment, ends of handle **106** may terminate in male attachment ends **120** for securing handle **106** such as to the exterior surface **136** of vertical sidewalls **102**. As further described below, a portion of male attachment ends **120** may be disposed through the side **122** of bucket **100**.

[0069] FIG. **3** illustrates a perspective view of bucket **100** wherein the interior wall **300** and an interior bottom **302** of bucket **100** are configured to retain the contents of bucket **100**. A complimentary female receiving cap **304** is disposed in the interior of bucket **100**. As described below, a portion of female receiving cap **304** is received through interior wall **300** and is designed to connect with male attachment end **120** to secure handle **106** to bucket **100**.

[0070] Turning to FIGS. **4** and **5**, an attachment plug assembly **400** is illustrated including male attachment end **120** and female receiving cap **304**. Male attachment end **120** may be integrally formed with handle **106**. Male attachment end **120** may be configured to sprawl into a flanged portion **402**. Projecting from an inner surface **404** of flanged portion **402** is a male extending portion **406** having sidewall **408** and terminating at end surface **410**. Female receiving cap **304** may comprise a flanged head portion **412**. A hollow extended portion **416** projects from an inner surface **414** of flanged head portion **412** and terminates at end surface **418**. Hollow extended portion **416** is configured with a hollow interior **420** for receiving male extending portion **406**.

[0071] In one disclosed embodiment, sidewall **408** of male extending portion **406** is designed in a cylindrical configuration and is received within a complimentary configuration of interior surface **422** of hollow interior **420**. Disclosed embodiments provide the dimensions of the round cylindrical configuration of male extending portion **406** to be in close fit arrangement with interior surface **422** of hollow interior **420**. End surface **410** of male extending portion **406** is urged toward back wall surface **426** of hollow interior **420**. An adhesive is disposed within hollow interior **420** such that it may contact its inner region including, for example, interior surface **422** and back wall surface **426**. In one disclosed embodiment, the adhesive may include 3M Scotch-Weld Plastic & Rubber Instant Adhesive PR100. However any suitable adhesive may be utilized sufficient for bonding substrates, such as EPDM (ethylene propylene

diene monomer (M-class)) rubber, nylon, polypropylene and polyethylene or any low viscosity instant adhesive applications.

[0072] As male extending portion **406** is urged within hollow interior **420**, adhesive may be applied to end surface **410** and sidewall **408** to secure male extending portion **406** therein. A slight clearance area may exist within hollow interior **420** such as between sidewall **408** and interior surface **422** and/or between end surface **410** and back wall surface **426** to allow for curing and to accommodate for spreading and/or expansion of the adhesive. In a final assembly, end surface **418** of female receiving cap **304** generally abuts inner surface **404** of flange portion **402**. By this arrangement, the adhesive is secured within hollow interior **420** and does not contact any surface areas of bucket **100**. Once cured, male attachment end **120** is mated and secured to female receiving cap **304** whereupon handle **106** is capable of pivoting about hole **600**. Accordingly, a final handle assembly may include first extending portion **108**, second extending portion **110**, grip portion **112**, male attachment ends **120**, and female receiving caps **304**.

[0073] FIG. **5** illustrates an alternate view **500** of attachment plug assembly **400**. Outer surface **502** is shown on flange portion **402**. Outer surface **504** of flanged head portion **412** may generally resemble a mushroom shaped configuration. An edge **506** of flanged head portion **412** may include a curved surface **508**. Curved surface **508** is provided to reduce stresses imparted to female receiving cap **304** which may be transferred through handle **106** by distributing externally applied forces throughout its material and against internal side wall **300**.

[0074] FIGS. **6**, **7**A and **7**B detail the coupling of handle **106** to bucket **100**. By connecting male attachment end **120** to female receiving cap **304** through a hole **600** in vertical side walls **102**, handle **106** is attached to bucket **100**. During assembly, male extending portion **406** and hollow extending portion **416** are inserted through opposite sides of hole **600** (FIG. **6**) of bucket **100** and mated together. The dimensions of hole **600** is designed in close-fit arrangement with an exterior surface **424** of hollow extended portion **416**. In one disclosed embodiment, exterior surface **424** is round and complimentary to the round shape of hole **600** to produce the aforementioned tight fit arrangement. Yet, said tight fit arrangement is sufficient to allow exterior surface **424** of female receiving cap **304** to rotate within hole **600**.

[0075] In a final arrangement, when handle **106** is connected to bucket **100**, inner surface **404** of flange portion **402** is abutted against exterior surface **136** of vertical sidewall **102**. Additionally, inner surface **414** of flanged head portion **412** is abutted against interior sidewall **300** of vertical sidewall **102**. Flange portion **402** of male attachment end **120** and flanged head portion **412** of female receiving cap **304** prevent entry of foreign contents and loss of internal contents through hole **600**. In addition, flange portion **402** of male attachment end **120** and flanged head portion **412** of female receiving cap **304** prevent handle **106** from being pulled through vertical side wall **102** of bucket **100**. Furthermore, flange portion **402** and flanged head portion **412** may act as a baffle to disallow liquid from running straight out of hole **600**.

[0076] In another exemplary embodiment, an alternative type of attachment system may be employed for attaching handle **106** to a bucket. For example, twist-lock connection assembly, may be provided and incorporated into the design of the handle for securing the same to the bucket. In additional, other structural features may be incorporated into the design of bucket **100** to accommodate the twist-lock connection assembly. Turning to FIG. **25** an exemplary disclosed handle **2500** may be fashioned, designed and constructed in practically every way as handle **106**. Thus, handle **2500** may comprise a grip portion **112** disposed between extending arms thereby forming an integrated one-piece generally rigid design of handle **2500**. Extending arms may comprise a first extending portion **108** (extending from one respective end of grip portion **112**) and a second extending portion **110** (extending from another respective end of grip portion **112**). First extending portion **108** and second extending portion **110** may each terminate at respective attachment ends, as described below. In one disclosed embodiment, first extending portion **108**, second extending portion **110** and grip portion **112** of handle **106** form a generally semicircular design. It is readily appreciated that any shape or design may be formed by first extending portion **108**, second extending portion **110** and grip portion **112** of handle **2500** sufficient for operating and carrying a bucket.

[0077] In select embodiments, each end of handle **2500** is configured to turn inwardly to terminate at attachment ends of handle **2500**. In this embodiment, attachment ends comprise a coupling connector **2502** of a twist-lock connection assembly. Complimentary mating retention caps may accommodate each respective coupling connector of the twist-lock connection assembly to retain handle **2500** to a bucket as detailed below.

[0078] Turning to FIGS. **26-28**, a twist-lock connection assembly **2600** is illustrated including coupling connector **2502** and mating retention cap **2602**. Coupling connector **2502** may be integrally formed with handle **2500**. Coupling connector **2502** may be configured with extending prongs **2604** configured to terminate at a head portion **2606**. In some embodiments, head portion **2606** may be configured to include an extended portion which extends beyond a width of extending prong **2604** thereby forming a cutout area or channel **2610** such as in an L-type configuration. Cutout area or channel **2610** may extend along extending prongs **2604** from an inside surface **2612** of coupling connector **2502** flange portion **2614**. Each integral extending prong **2604** and head portion **2606** may comprise a curvature within its design. In an exemplary embodiment, extending prongs **2604** may project symmetrically from about a center of inside surface **2612** of flange portion **2614**. A space **2624** may be created between extending prongs **2604** for accommodating a complimentary mating support structure as described below.

[0079] Mating retention cap **2602** includes a flange portion **2616** having an interior surface **2618**. Projecting from about a center of interior surface **2618** is a complimentary mating portion **2620** for accommodating integral extending prongs **2604** and head portion **2606** of male attachment end **2502**. Complimentary mating portion **2620** may comprise a main support structure **2626** and extended locking portions **2630**. In some embodiments main support structure **2626** and extended locking portions **2630** form an integral design structure. Extended locking portions **2630** may project from interior surface **2618** of flange portion **2616** as a base portion **2628** and extending to a wider head portion **2632** thereby forming complimentary cutout areas or channels **2622** at base portion **2628** for receiving respective extending por-

tions **2608** of head portions **2606** in mated assembly. In a disclosed embodiment, a configuration of base portion **2628** extends to wider head portion **2630** generally forming an L-type configuration. Main support structure **2626** may generally extend from about a center of interior surface **2618** of mating retention cap **2602** for extending into a complimentary shaped space **2624** of coupling connector **2502** in mated assembly. Extended locking portions **2630** may comprise a curvature within its design structure.

[0080] Alternate views of mating retention cap **2602** are illustrated in FIG. **28**. An outer surface **2802** of flanged portion **2616** may generally resemble a mushroom shaped configuration. An edge **2804** of flanged portion **2616** may include a curved surface **2806**. Curved surface **2806** is provided to reduce stresses imparted to mating retention cap **2602** which may be transferred through handle **2500** by distributing externally applied forces throughout its material and against the internal side wall of the bucket.

[0081] In a final assembly, coupling connector **2502** and mating retention cap **2602** are mated with one another by inserting complimentary mating portion **2620** into space **2624**. Upon mating, retention cap **2602** may be rotated into a locked position by twisting extending clocking portions **2630** and head portion **2632** to connect and secure retention cap **2602** to coupling connector **2502**. In one disclosed embodiment, a groove **2808** may be provided in top side **2810** outer surface **2802** of mating retention cap **2602**. Groove **2808** may be sufficiently sized to accommodate a tool, such as a flat head screwdriver, for facilitating rotation of mating retention cap **2602**. While a generally elongated channel is provide as groove **2808**, it is readily appreciated that any geometrically-designed shape for groove **2808** may be provided (such as a hexagonal, star, Phillips tool design, etc.) sufficient for imparting rotational force to top side **2810** outer surface **2802** of mating retention cap **2602**. Such rotational movement of mating retention cap **2602** may engage head portion **2632** into cutout area or channel **2610** of coupling connector **2502**. In addition, head portion **2608** is engaged within complimentary cutout areas or channels **2622** of mating retention cap **2602**. In disclosed embodiments, cutout area or channel **2610** of coupling connector **2502** is sized to close fit relation with engages head portion **2632**. Also complimentary cutout areas or channels **2622** are sized in close fit relation with head portion **2608**. Thus, when mating retention cap **2602** is rotated in engagement with coupling connector **2502**, head portions **2608** and **2632** are locked into place by close-frictional fit within cutout areas or channels **2622** and cutout area or channel **2610**, respectively. Additional applications may also be provided to secure mating retention cap **2602** to coupling connector **2502** including, but not limited to adhesives and bonding agents. In one disclosed embodiment, the adhesive may include 3M Scotch-Weld Plastic & Rubber Instant Adhesive PR100. However any suitable adhesive may be utilized sufficient for bonding substrates, such as EPDM (ethylene propylene diene monomer (M-class)) rubber, nylon, polypropylene and polyethylene or any low viscosity instant adhesive applications.

[0082] Turning to FIG. **29**, an exemplary embodiment of another disclosed bucket **2900** is illustrated. In some disclosed embodiments, bucket **2900** is designed to accommodate handle **2500** and twist-lock connection assembly **2600**. In many respects, bucket **2900** employees many design features as discussed in the embodiments for bucket **10**, for example, including vertical side walls **102**, lip **104**, exterior bottom **200**, and bottom rim **138**. Thus, bucket **2900** is fashioned, designed and constructed in practically every way as bucket **100**. However, bucket **2900** provides additional support structure features as disclosed herein. For example, disclosed embodiments provide external areas **2902** (along vertical walls **102** at and around hole **2904**) and internal areas **2906** (along interior side wall **2908** at and around hole **2904**) of bucket **2900** to be made thicker in an effort to create a stronger point of connection for twist-lock connection assembly **2600** and, hence, handle, **2500** to bucket **2900**. As a result, flange portion **2614** of coupling connector **2502** and flange portion **2616** of mating retention cap **2602** may have an enlarged design and comprise a thicker material. The point (i.e., attachment area **2902**) on vertical side wall **102** where handle **2500** will attach will be made thicker a similar shape (e.g., circular) of flange contact areas (e.g., flange portion **2614** of coupling connector **2502** and flange portion **2616** of mating retention cap **2602**) to reinforce the attachment area **2902** at vertical side wall **102** and increase the resistance vertical side wall **102** has against handle **2500** pulling through. In some embodiments, bucket **2900** may be configured such that from the point in vertical side wall **102** where the aforementioned thickness will be increased, that thickness will carry from that point up towards the top of bucket **2900** and taper down to meet the rim of bucket **100**. In one disclosed embodiment, the taper will follow the same degree as the overall wall of bucket **2900** follows from top to bottom.

[0083] By connecting coupling connector **2502** to mating retention cap **2602** through hole **2904** in vertical side walls **102**, handle **2500** is attached to bucket **2900**. During assembly, extending prongs **2604** of coupling connector **2502** and complimentary mating portion **2620** are inserted through opposite sides of hole **2904** of bucket **2900** and mated together (as described above). The dimensions of hole **2904** is designed in close-fit arrangement with the mated connection of exterior surface **2634** of extending prongs **2604** and exterior surface **2636** of extended locking portions **2630**. In one disclosed embodiment, exterior surface **2634** of extending prongs **2604** and exterior surface **2636** of extended locking portions **2630** are round and complimentary to the round shape of hole **2904** to produce the aforementioned tight fit arrangement. Yet, said tight fit arrangement is sufficient to allow a mated connection of exterior surface **2634** of extending prongs **2604** and exterior surface **2636** to rotate within hole **2904**.

[0084] In a final arrangement, when handle **2500** is connected to bucket **2900**, inside surface **2612** of flange portion **2614** is abutted against thickened exterior areas **2902** of vertical sidewall **102**. Additionally, interior surface **2618** of flange portion **2616** is abutted against thickened interior areas **2906** of interior sidewall **2908**. Flange **2614** of coupling connector **2502** and flanged portion **2616** of mating retention cap **2602** generally prevent entry of foreign contents and loss of internal contents through hole **2904**. In addition, flange **2614** of coupling connector **2502** and flanged portion **2616** of mating retention cap **2602** prevent handle **2500** from being pulled through vertical side wall **102** of bucket **2900**. Furthermore, flange **2614** and flanged portion **2616** may act as a baffle to disallow liquid from running straight out of hole **2900**.

[0085] Turning again to FIGS. **1-2**, **8-9** and **11**, bucket **100** may include one or more feet **124** disposed on the exterior

bottom surface **200** of bucket **100**. One or more feet **124** may include a non-skid surface **128** on the exterior surface of the one or more feet thereby producing a one or more non-skid feet design. Non-skid surface **128** may be an integral design on the one or more feet **124** such as being molded into the material of one or more feet **123**. Thus in some disclosed embodiments, non-skid surface **12** may be integrally designed into the surface of one or more feet **124**. Alternatively, non-skid surface **128** may include a separately applied non-skid material to enhance the grip in both wet and dry conditions. The separately applied non-skid material may be removable and replaceable. Accordingly, non-skid feet **124** will serve to maintain a position of bucket **100** such as on wet or slippery surfaces. In some embodiments, an external surface of non-skid feet **124** may include a design pattern **130**, such as a raised design pattern, lug or tread-like pattern. The raised design pattern, lug or thread-like patter allows liquid (such as water) to pass through design pattern **130** thereby expelling the liquid from beneath non-skid feet **124** to prevent a hydroplaning effect. Thus, the design pattern **130** enhances the stability of bucket **100** in wet conditions.

[0086] In particular, non-skid feet **124** may be configured to include an ergonomic design such as one or more grooves, finger indents or finger receiving recesses **132** to give an operator a firm comfortable grip and help control the function of bucket **100** and its contents, for example, whether filling or emptying. In a select embodiment, non-skid feet **124** comprises four grooves or finger indents or finger receiving recesses **132**. In addition, non-skid feet **124** provide ease for tasks that necessitate grabbing and manipulating the bottom of the bucket (e.g., pouring or scooping).

[0087] According to an example embodiment, non-skid feet **124** may be mounted to exterior bottom surface **200** of bucket **100**. In some instances, non-skid feet **124** may be detachably connected to exterior bottom surface **200** of bucket **100**. For example, non-skid feet **124** may be mounted and secured via connectors such as with ¼ inch marine grade stainless steel screws. In another embodiment, a connecting assembly, such as marine grade stainless steel bolts and nuts, may be utilized to secure non-skid feet **124** to exterior bottom surface **200** of bucket **100**. In another disclosed embodiment, non-skid feet **124** may be secured to exterior bottom surface **200** of bucket **100** by an adhesive. In one disclosed embodiment, the adhesive may include 3M Scotch-Weld Plastic & Rubber Instant Adhesive PR100. However any suitable adhesive may be utilized sufficient for bonding substrates, such as EPDM (ethylene propylene diene monomer (M-class)) rubber, nylon, polypropylene and polyethylene or any low viscosity instant adhesive applications. It is also readily appreciated that any other connection device or method may be utilized to detachably connect one or more non-skid feet **124** to exterior bottom surface **200** of bucket **100**. In one disclosed embodiment, non-skid feet **124** are mounted such that the grooves or finger indents or finger receiving recesses **132** face towards the center of bucket **100**. A contour of the backside **142** of non-skid feet **124** may be generally designed to match the same contour of the circumference of the outer edge of flat closed bottom **202** and/or bottom rim **138**.

[0088] In some disclosed embodiments, a thickness of non-skid feet **124** may protrude or extend past bottom rim **138** of outer periphery base bottom **126**. For example, in select embodiments, non-skid feet **124** may protrude a short distance (e.g., about ⅛ inch), and have an overall thickness (e.g., about ⅜ of an inch). Given that non-skid feet **124** extend past bottom **202**, non-skid feet **124** may serve as a buffer from impacts, since any contact below bucket **100** will generally occur to non-skid feet **124** before reaching exterior bottom surface **200** of bucket **100**, for example, when bucket **100** is dropped. Accordingly, since bucket **100** is elevated having been mounted to one or more non-skid feet **124**, as a primary point of contact, one or more non-skid feet **124** may wear more quickly than bucket **100** itself.

[0089] In select embodiments, non-skid feet **124** are removable and replaceable thereby extending the wear-life of bucket **100**. Non-skid feet **124** may vary in overall length (e.g., about 4 inches). In other configurations, non-skid feet **124** may be integrally formed as part of bucket **100**. Disclosed embodiments provide placement of non-skid feet **124** along exterior bottom surface **200** in a symmetrical manner such that two non-skid feet **124** generally align with the front and back of bucket **100**, respectively, and two non-skid feet **124** generally align with each side (left and right) of bucket **100**, respectively. Thus, at least two non-skid feet **124** are generally mounted in the swinging direction of handle **106**, **2500**. Another two non-skid feet **124** may be mounted perpendicular to the other two non-skid feet **124** mounted in the swinging direction of handle **106**, **2500**.

[0090] Skilled artisans will readily appreciate that more or less non-skid feet **124** may be applied and mounted to exterior bottom surface **200** of bucket **100** accordingly to individual design preferences. Recognizing that the utilization of any quantity/alternative number of non-skid feet **124** will generally depend on providing a preferred stability and protection for bucket **100**, alternative non-skid feet configurations may be achieved. For example, turning to FIG. **12**, the non-skid foot **1200** is configured as a one-piece foot design **1202**. A contour of the backside **1202** of non-skid feet **1200** may be generally designed to match the same contour of the circumference of the outer edge of flat closed bottom **202** and/or bottom rim **138**. Like the previously described non-skid feet **124**, non-skid foot **1200** may incorporate a non-skid surface **128** (including, for example, a raised design pattern) on its exterior surface and be secured in a similar fashion to exterior bottom surface **200** of bucket **100**. In an alternative configuration, non-skid foot **1200** may be integrally formed as part of bucket **100**. As with non-skid feet **124**, non-skid foot **1200** may be similarly replaceable, for example, after extended wear or damage.

[0091] In another embodiment, FIG. **13** illustrates non-skid feet **1300** as a two-piece foot design **1302**. A contour of the backside **1304** of non-skid feet **1300** may be generally designed to match the same contour of the circumference of the outer edge of flat closed bottom **202** and/or bottom rim **138**. Like the previously described non-skid feet **124**, non-skid feet **1300** may incorporate a non-skid surface **128** (including, for example, a raised design pattern) on its exterior surface and be secured in a similar fashion to exterior bottom surface **200** of bucket **100**. In an alternative configuration, non-skid feet **1300** may be integrally formed as part of bucket **100**. As with non-skid feet **124**, non-skid feet **1300** may be similarly replaceable, for example, after extended wear or damage.

[0092] FIG. **14** illustrates a configuration where less non-skid feet are utilized along the bottom **202** of bucket **100**. Nevertheless, the non-skid feet are placed generally at equal distances from one another to provide stability to bucket **100**

and protection to exterior bottom surface **200**. Accordingly, non-skid feet **1400** are disposed around the circumference of exterior bottom surface **200** or bottom rim **138** as a three-piece foot design. It is readily appreciated that previously discussed non-skid feet **124** may serve as non-skid feet **1400**, and hence, non-skid feet **1300** may incorporate a non-skid surface **128** (including, for example, a raised design pattern) on its exterior surface and be secured in a similar fashion to exterior bottom surface **200** of bucket **100**. In an alternative configuration, non-skid feet **1400** may be integrally formed as part of bucket **100**. As with non-skid feet **124**, non-skid feet **1400** may be similarly replaceable, for example, after extended wear or damage.

[0093] FIGS. **15-20** illustrate another embodiment of the disclosed bucket. In an alternate embodiment, construction of the bucket body (i.e., vertical side walls **102** extending upwards from a generally flat closed bottom **202** to form a top rim at an opening) of bucket **1500** is similar in every way to bucket **100**, however, the alternate embodiment of bucket **1500** includes one or more side handles **1518** introduced and mounted to exterior surface **136** of vertical sidewalls **102**. In some embodiments, one or more side handles **1518** is detachably connected to vertical walls **102**. One or more side handles **1518** may be disposed on the front and back of bucket **1500**, i.e., generally half way between the mounted locations of attachment ends **120** and in the swinging directions of handle **106**. Mounted to bucket **1500** in this manner, one or more side handles **1518** facilitate handling and control of bucket **1500** during operation or manipulation thereby creating an improved handle configuration.

[0094] In some instances, one or more side handles **1518** include a two-in-one handle configuration including a rigid side handle **1504** and non-rigid side handle **1506**. Non-rigid side handle **1506** may include a rope **1508** and rope handle or grip **1512**. In a disclosed embodiment, each end of rigid side handle **1504** may include a thru-hole designed to accommodate rope **1508** (e.g., about ¼ inch rope). Knots **1510** may be tied to secure rope **1508** through locations of rigid side handle **1504** to retain non-rigid side handle **1506** thereto. Rigid side handle **1504** may be detachably connected to side walls **102** of bucket **1500** via one or more connectors **1514** (such as with marine grade stainless steel screws, marine grade stainless steel bolt and nut assembly, adhesive, or any other appropriate securement device sufficient to retain one or more side handles **1518** to vertical wall **102**).

[0095] Rigid side handle **1504** may include an ergonomic design such as being outfitted with grooves, finger indents or finger receiving recesses **1516** on the bottom side rigid side handle **1504** thereby forming a rigid grip for added control and manipulation of bucket **1500**. Top surface **1502** of rigid side handle **1504** may employ an ergonomic design to accommodate a natural curvature of a user's palm. In one select embodiment, rigid side handle **1504** comprises four grooves, finger indents or finger receiving recesses **1516**. The disclosed design allows a user's fingers to naturally fall into respective grooves, finger indents or finger receiving recesses **1516**, for example, when grasping rigid side handle **1504** from top surface **1502**. Thus, disclosed embodiments provide one or more side handles **1518** and/or one or more non-skid feet **124** disposed on the bottom surface of the bucket. In an exemplary embodiment, one or more non-skid feet **124** are aligned directly below one or more side handles **1518**. Bucket **1500** and its contents can be controlled or otherwise manipulated using the two-in-one handle configuration disposed along the bucket's sides (for example, including grooves, finger indents or finger receiving recesses **1516** or rope handle or grip **1512**) as well as handle **106** or non-skid feet **124**.

[0096] In some embodiments, the two-in-one handle may have an overall length of about five inches, and may protrude from the side of bucket **1500** (e.g., by about ¾ inches). Despite such protrusions, rigid side handles **1504** may be integrally formed as an actual part of bucket **1500** (e.g., built into the mold).

[0097] Construction and Materials

[0098] Disclosed embodiments provide an improved bucket with handle as a performance product superior in materials and functionality that's visually pleasing and minimalist in its appeal. Disclosed embodiments for bucket **100**, **1500**, **2900** include a performance polymer (often used in car parts to replace metal and designed to last 10 to 20 years and stand up to hundreds of thousands of engine cycles in extreme environments). The thickness of the bucket body (i.e., a cross-section of vertical side walls **102** and flat closed bottom **202**) is about ⅛ inch of an inch thick (versus the thickness of conventional bucket bodies which is about $1/16^{th}$ of an inch thick).

[0099] As a function of bucket **100**, **1500**, **2900** being elevated off the ground by non-skid feet **124**, the bucket counteracts any instability by incorporating a wider base design. In a disclosed embodiment, the body of bucket **100**, **1500**, **2900** includes a shallow taper to allow the buckets to be stacked. The width at the top of bucket **100**, **1500**, **2900** is about 11.5 inches and it tapers to about 10.5 inches at outer periphery base bottom **126**. Bucket **100**, **1500**, **2900** has an overall height of about 13.225 inches tall giving it a volume of about 5.01 US Gallons. Additional embodiments of the shape of the body of bucket **100**, **1500**, **2900** may include other generally vertical cylinder or truncated cone configurations.

[0100] Two holes **600**, **2904** in vertical side walls **102** of bucket **100**, **1500**, **2900** may be located an inch and a half (1.5") down from the top lip and serve as the mounting location of handle **106**, **2500**. The one-piece integrated handle **106**, **2500** may be constructed from the same engineered resin as the body of bucket **100**, **1500**, **2900**. In a disclosed embodiment, the circumference of the cross-section of each of first extending portion **108** and second extending portion **110** of handle **106**, **2500** is about ⅜ of an inch. The circumference of the cross-section of the middle of grip portion **112** is about a ½ of an inch. The design of the aforementioned circumference of grip portion **112** enhances a user's comfort over long and short periods for carrying loads within bucket **100**, **1500**, **2900**. The added comfort is accomplished by distributing the weight of the burden over the wider surface area of grip portion **112** and having the fingers naturally fall into grooves, finger indents or finger receiving recesses **118**.

[0101] As described above, the top rim of bucket **100**, **1500**, **2900** comprises lip **104** that is intended to accommodate a sealable snap-on lid. Lid **2200** design allows for quick attachment and removal from bucket **100**, **1500**, **2900**. In disclosed embodiments, a cross-sectional thickness of lid **2200** is about ⅛ of an inch thick (i.e., similar to a cross-section of vertical side walls **102** and flat closed bottom **202**). In select embodiments, the disclosed non-skid pad of

the lid may be the same material as non-skid feet **124** and also come in an array of colors and patterns to allow for customization.

[0102] Disclosed embodiments of the invention focus on simplicity and in selected embodiments, a total of two separate materials are incorporated into the construction of the materials utilized for the disclosed invention. For example, selected for its durability and resilient qualities, a performance polymer by Dupont™ may be utilized for the body of bucket **100**, **1500** and the handle assembly. Accordingly, a nylon resin material such as Zytel® may be utilized to injection mold the shape of the bucket body, the handle assembly of bucket **100**, **1500** (including first extending portion **108**, second extending portion **110**, grip portion **112**, male attachment ends **120**, and female receiving caps **304**). In one disclosed embodiment, Zytel® ST801AW NC010 is selected for the injection molding material. Thus, the body of bucket **100**, **1500** and handle **106**, **2500** and rigid side handles **1504** may be formed by injection molding. The natural color of the Zytel® ST801AW NC010 allows it to be easily colored and can be made available in almost any color in the spectrum. Zytel® ST801AW NC010 is received from the mold in a finished condition and requires no post mold configuring to get it to an assembly phase. Material properties and product information for Zytel® ST801AW NC010 are provided in Tables 1 and 2 below:

TABLE I

DuPont ™ Zytel ® ST801AW NC010
NYLON RESIN
Product Information
Common features of Zytel ® nylon resin include mechanical and physical properties such as high mechanical strength, excellent balance of stiffness and toughness, good high temperature performance, good electrical and flammability properties, good abrasion and chemical resistance. In addition, Zytel ® nylon resins are available in different modified and reinforced grades to create a wide range of products with tailored properties for specific processes and end uses. Zytel ® nylon resin, including most flame retardant grades, offer the ability to be colored.
The good melt stability of Zytel ® nylon resin normally enables the recycling of property handled production waste. If recycling is not possible. DuPont recommends, as the preferred option, Incineration with energy recovery (−31 kJ/g of base polymer) in appropriately equipped installations. For disposal, local regulations have to be observed.
Zytel ® nylon resin typically is used in demanding applications in the automotive, furniture, domestic appliances, sporting goods and construction Industry.
Zytel ® ST801AW NC010 Is a Super Tough, high performance polyamide 66 resin. It is UV stabilized and when appropriately colored offers the best resistance to indirect sunlight in automotive interior applications.

General Information	Value	Unit	Test Standard
Resin Identification	PA66-HI	—	—
Part Marking Code	>PA66-HI<	—	ISO 11469

	dry/cond	Unit	Test Standard
Rheological Properties			
Moulding shrinkage, parallel	2.0/*	%	ISO 294-4, 2577
Moulding shrinkage, normal	1.8/*	%	ISO 294-4, 2577
Mechanical Properties			
Tensile Modulus	1900/775	MPa	ISO 527-1/-2
Yield Stress	49/35.5	MPa	ISO 527-1/-2
Yield Strain	5/26.5	%	ISO 527-1/-2
Stress at 50% strain	*/48	MPa	ISO 527-1/-2
Stress at Break, 23° C., 50 mm/min	45/48	MPa	ISO 527-1/-2
Strain at break			
Strain at break	*/>50	%	
50 mm/min	74/*	%	
Flexural Modulus	1800/728	MPa	ISO 178
Charpy impact strength			ISO 179/1eU
23° C.	N/—	kJ/m2	
−30° C.	N/—	kJ/m2	
−40° C.	240/—	kJ/m2	
Charpy notched impact strength			ISO 179/1eA
23° C.	83/120	kJ/m2	
−30° C.	23/22	kJ/m2	
−40° C.	21/—	kJ/m2	
Izod notched impact strength			ISO 180/1A
23° C.	77/—	kJ/m2	
−40° C.	21/—	kJ/m2	
Izod impact strength			ISO 180/1A
23° C.	N/—	kJ/m2	
−30° C.	N/—	kJ/m2	
Hardness, Rockwell, R-scale	110/—	—	ISO 2039-2

TABLE I-continued

Thermal Properties			
Melting temperature, 10° C./min	262/*	° C.	ISO 11357-1/-3
Temp. of deflection under load			ISO 75-1/-2
1.8 MPa	60/*	° C.	
0.45 MPa	155/*	° C.	
Coeff. of linear therm. expansion, parallel	140/*	E−6/K	ISO 11359-1/-2
Coeff. of linear therm. expansion, normal	120/*	E−6/K	ISO 11359-1/-2
RTI, electrical, 0.75 mm	125/*	° C.	UL 746B
RTI, electrical, 0.75 mm	75	° C.	UL 746B
RTI, strength, 0.75 mm	85	° C.	UL 746B
Flammability			
Burning Behav. at 1.5 mm nom. thickn.	HB/*	class	IEC 60695-11-10
Thickness tested	1.5/*	mm	IEC 60695-11-10
UL recognition	UL/*	—	—
Burning Behav. at thickness h	HB/*	class	IEC 60695-11-10
Thickness tested	0.75/*	mm	IEC 60695-11-10
Burning rate, Thickness 1 mm	26	mm/min	ISO 3795 (FMVSS 302)
Electrical properties			
Relative permittivity			IEC 60250
100 Hz	3.4/6	—	
1 MHz	3.2/3.5	—	
Disssipation factor			IEC 60250
100 Hz	50/1760	E−4	
1 MHz	110/380	E−4	
Volume resistivity	2.5E14/2.4E10	Ohm*m	IEC 60093
Surface resistivity	*/7.1E12	Ohm	IEC 60093
Electric strength	26/26	kV/mm	IEC 60243-1
Comparative tracking index	600/—	—	IEC 60112
Electric Strength, Short Time, 2 mm	26/26	kV/mm	IEC 60243-1
Other properties			
Humidity absorption, 2 mm	1.9/*	%	Sim. to ISO 62
Density	1080/—	kg/m^3	ISO 1183
Water Absorption, Immersion 24 h	1.17/*	%	ASTM D 570
Film Properties			
Strain at yield, parallel	9.49/*	%	ISO 527-3
Injection			
Drying Recommended	yes[1]	—	—
Drying Time, Dehumidified Dryer	2-4	h	—
Processing Moisture Content	≤0.2	%	—
Melt Temperature Optimum	290	° C.	—
Min. melt temperature	280	° C.	—
Max. melt temperature	300	° C.	—
Max. screw tangential speed	0.3/*	m/s	—
Mold Temperature Optimum	70	° C.	—
Min. mould temperature	50	° C.	—
Max. mould temperature	90	° C.	—
Hold pressure range	50-100	MPa	—
Hold pressure time	3	s/mm	—

Characteristics			
Processing	Injection Moulding		
Delivery form	Pellets		
Additives	Release agent		
Special characteristics	Light stabilized or stable to light	U.V. stabilised or stable to weather	
Regional Availability	North America Europe	Asia Pacific South and Central	Near East/Africa Global America

Processing Texts
Injection molding

Moulding datasheets
Moulding guide

[1]Yes, if moisture content of resin exceeds recommended level

TABLE 2

DuPont ™ Zytel ® ST801AW NC010 Nylon Resin	
Chemical Media Resistance	
Acids	
✓	Acetic Acid (5% by mass) (23° C.)
✓	Citric Acid solution (10% by mass) (23° C.) °
✓	Lactic Acid (10% by mass) (23° C.)
x	Hydrochloric Acid (36% by mass) (23° C.)
x	Nitric Acid (40% by mass) (23° C.)
x	Sulfuric Acid (38% by mass) (23° C.)
x	Sulfuric Acid (5% by mass) (23° C.)
x	Chromic Acid solution (40% by mass) (23° C.)
Bases	
x	Sodium Hydroxide solution (35% by mass) (23° C.)
✓	Sodium Hydroxide solution (1% by mass) (23° C.)
✓	Ammonium Hydroxide solution (10% by mass) (23° C.)
Alcohols	
✓	Isopropyl alcohol (23° C.)
✓	Methanol (23° C.)
✓	Ethanol (23° C.)
Hydrocarbons	
✓	n-Hexane (23° C.)
✓	Toluene (23° C.)
✓	iso-Octane (23° C.)
Ketones	
✓	Acetone (23° C.)
Ethers	
✓	Diethyl ether (23° C.)
Mineral oils	
✓	SAE 10W40 multigrade motor oil (23° C.)
x	SAE 10W40 multigrade motor oil (130° C.)
x	SAE 80/90 hypoid-gear oil (130° C.)
✓	Insulating Oil (23° C.)
Standard Fuels	
✓	ISO 1817 Liquid 1 - E5 (60° C.)
✓	ISO 1817 Liquid 2 - M15E4 (60° C.)
✓	ISO 1817 Liquid 3 - M3E7 (60° C.)
✓	ISO 1817 Liquid 4 - M15 (60° C.)
✓	Standard fuel without alcohol (pref. ISO 1817 Liquid C) (23° C.)
✓	Standard fuel with alcohol (pref. ISO 1817 Liquid 4) (23° C.)
✓	Diesel fuel (pref. ISO 1817 Liquid F) (23° C.)
x	Diesel fuel (pref. ISO 1817 Liquid F) (90° C.)
x	Diesel fuel (pref. ISO 1817 Liquid F) (>90° C.)
Salt solutions	
✓	Sodium Chloride solution (10% by mass) (23° C.)
x	Sodium Hypochlorite solution (10% by mass) (23° C.)
✓	Sodium Carbonate solution (20% by mass) (23° C.)
✓	Sodium Carbonate solution (2% by mass) (23° C.)
x	Zinc Chloride solution (50% by mass) (23° C.)
Other	
✓	Ethyl Acetate (23° C.)
x	Hydrogen peroxide (23° C.)
x	DOT No. 4 Brake fluid (130° C.)
x	Ethylene Glycol (50% by mass) in water (108° C.)
✓	1% nonylphenoxy-polyethyleneoxy ethanol in water (23° C.)
✓	50% Oleic acid + 50% Olive Oil (23° C.)

TABLE 2-continued

DuPont ™ Zytel ® ST801AW NC010 Nylon Resin	
Chemical Media Resistance	
✓	Water (23° C.)
x	Water (90° C.)
x	Phenol solution (5% by mass) (23° C.)

Symbols used:

✓ possibly resistant

Defined as: Supplier has sufficient indication that contact with chemical can be potentially accepted under the Intended use conditions and expected service life. Criteria for assessment have to be Indicated (e.g. surface aspect, volume change, property change).

x not recommended • see explanation

Defined as: Not recommended for general use. However, short-term exposure under certain restricted conditions could be acceptab°°le (e.g. fast cleaning with thorough rinsing, spills, wiping, vapor exposure).

Contact DuPont for Material Safety Data Sheet, general guides and/or additional information about ventilation, handling, purging, drying, etc. ISO Mechanical properties measured at 4.0 mm (Hytrel ® measured at 2 mm), IEC Electrical properties measured at 2.0 mm, all ASTM properties measured at 3.2 mm, and test temperatures are 23° C. unless otherwise stated.

[0103] FIG. **21** illustrates tensile modulus versus temperature for Zytel® ST801AW NC010.

[0104] It is readily appreciated that the selection of materials is not limited to Zytel® and that any suitable engineered resin designed to be light weight and super tough with excellent impact resistance, hot and cold temperature resilience, good electrical and flammability properties, good abrasion and chemical resistance, BPA free and good UV stabilization for forming the aforementioned components of the disclosed invention may be utilized.

[0105] Materials selection for non-skid feet **124** may comprise a second material. In select embodiments, the second material may include Santoprene™. Thus, non-skid feet **124** may be formed by injection molding. It is readily appreciated that the selection of materials is not limited to Santoprene™ and that any rubber material compound may be utilized for generating the over-all shape of non-skid feet **124** including design pattern **130** (such as a raised design pattern, lug or tread-like pattern) sufficient for providing/achieving high-performance grip and traction in accordance with the disclosed invention. Several colors for non-skid feet **124** may be available to enable customization of bucket **100**, **1500**, **2900**.

[0106] Thus, the embodiments of the present invention can dramatically enhance the control that a user has over bucket **100**, **1500**, **2900** and the tasks for which it is being utilized with the addition of strategically placed multi-functioning handles and grips located on the sides and bottom of the bucket. In addition to improving the utility, resiliency, and longevity of the bucket, the engineered nylon resin core may increase the utility of the vessel by allowing it to retain ice and double as a cooler. Other disclosed aspects include the bucket's ability to retain heat such as for heated foods and/or beverages.

[0107] From the point bucket **100**, **1500**, **2900** is lifted/maneuvered, grasping grip portion **112** in handle **106**, **2500** causes the fingers to naturally fall into their respective grooves, finger indents or finger receiving recesses **118** and instantly makes carrying or manipulating a load more comfortable by distributing the burden over a wider surface area of grip portion **112**. Accordingly, the user has an increased sense of control and comfort, for example, when filling or pouring out the contents of bucket **100**, **1500**, **2900** as they naturally grab the base of the bucket and utilize the grip and grooves or finger indents or finger receiving recesses **132** of non-skid feet **124**. This equates to less exertion by the

operator and minimizes the risk of the contents and/or bucket **100**, **1500**, **2900** slipping from their grasp and causing damage or injury. In a disclosed embodiment, a design feature of bucket **100**, **1500**, **2900** includes a gentle taper in the vertical sidewalls **102** which may be subtle, i.e., virtually unnoticeable. The resulting look conveys clean lines that echo a more refined approach to performance utilization.

[0108] It will be apparent to those skilled in the art that various modifications and variations can be made in the improved insulating container of the present invention without departing from the spirit or scope of the invention. Thus, it is intended that the present invention cover the modifications and variations of this invention provided they come within the scope of the appended claims and their equivalents.

[0109] Multi-Layer Structure

[0110] Buckets according to another example embodiment of the present invention may be formed to include a multi-layered insulated core. In addition to improving the utility, resiliency, and longevity of the bucket, the multi-layered insulated core may increase the utility of the vessel by allowing it to retain ice and double as a cooler. Other disclosed aspects include the bucket's ability to retain heat such as for heated foods and/or beverages.

[0111] Accordingly to an exemplary disclosed embodiment, the interior and exterior of the lid and body of the bucket may be constructed using a process of biaxial rotomolding using a base of medium density powdered polyethylene with ultra-violet inhibitors. For example, both the interior and exterior wall of the bucket may be ⅛ inch thick. The middle layer or core of the bucket may be made of a variety of insulating materials, such as PUR in-situ foam or polyurethane foam. The insulating material may be sprayed or otherwise deposited into the void created between the interior and exterior two rigid layers of polyethylene with ultra-violet inhibitors. In some instances, the insulating layer may be ¼ inch thick, and deposited to have a seamless structure.

[0112] Molding Aspects

[0113] According to some embodiments of the present invention, a mold for the bucket used in the rotomolding machine may include appropriate locations for aluminum bar handle anchor points as well as the two-in-one rope side handle anchor points. The anchor points of the non-skid feet may be located in the mold as this is where they would be attached to the bucket bottom. The resulting bucket body and lid may then be constructed accordingly with the handle attachments, non-skid feet, sealable lid, and the removable shoulder strap. The body and lid of the bucket may be constructed via a process of biaxial rotomolding. The roto-molded multi-layered insulated core body may fixed with the aluminum bar handle with grips on opposing sides of the bucket. The two-in-one rope side handles with finger indents grip may also be affixed on opposing sides of the bucket. The non-skid feet with finger indents may also be affixed on the bottom of the bucket in various configurations. The sealable multi-layered insulated core lid can be affixed to the top of the roto-molded bucket body. An aluminum bar handle with grip portion may be constructed and attached to the bucket. A shoulder strap can be attached, for example, to clip holes on the aluminum bar handle with grip portion.

[0114] Additional Aspects

[0115] The embodiments of the present invention are unique as the change in the composition of the body of the bucket to a mutli-layered insulated core construction creates unmatched strength and longevity and opens up a new realm of utility previously unseen such as by creating the ability to retain ice and double its use as a cooler.

[0116] The invention described here drastically increases the life and effectiveness of the bucket by using materials that make the body of the bucket exponentially stronger and easier to use. The handle systems not only accommodate the weight of whatever the operator wants to fill the bucket with, but also give the user several different options for increased control as different materials and situations often call for. The non-skid feet prevent the bucket from sliding away from where it is placed and the attachable lid prevents the contents from spilling and enhances the insulation qualities of the vessel. The result is a well-made product with increased functionality and a longer life.

[0117] While the present invention has been disclosed with references to certain embodiments, numerous modification, alterations, and changes to the described embodiments are possible without departing from the sphere and scope of the present invention, as defined in the appended claims. Accordingly, it is intended that the present invention not be limited to the described embodiments, but that it has the full scope defined by the language of the following claims, and equivalents thereof

What is claimed is:

1. An assembly comprising:

a bucket body having substantially vertical side walls;

wherein the side walls extend upwards from a closed bottom base;

a handle connected to the side walls; and

one or more ergonomically designed feet separately applied to and extending beyond a bottom surface of the bottom base;

wherein the side walls meet in connection with the closed bottom base at an outer periphery base bottom;

wherein the outer periphery base bottom includes a bottom rim extending past an exterior bottom surface of the closed bottom base to form a lip; and

wherein a circumference of the lip is curved and extends around the closed bottom base.

2. The assembly of claim **1**, wherein a connection of the vertical side walls extending from the bottom base is curved.

3. The assembly of claim **1**, further comprising one or more side handles connected to the vertical side walls.

4. The assembly of claim **3**, wherein the one or more side handles are integral with the bucket body.

5. The assembly of claim **1**, wherein the side walls meet in connection with the closed bottom base at an outer periphery base bottom, wherein the outer periphery base bottom includes a curvature along its outer circumference.

6. The assembly of claim **5**, wherein the curvature is about a ⅛ inch radius.

7. The assembly of claim **1**, wherein the one or more ergonomically designed feet comprise a ring-shaped one-piece foot.

* * * * *