US010643630B2

(12) **United States Patent**
Hatanaka et al.

(10) **Patent No.: US 10,643,630 B2**
(45) **Date of Patent: May 5, 2020**

(54) **HIGH FREQUENCY REPLICATION UTILIZING WAVE AND NOISE INFORMATION IN ENCODING AND DECODING AUDIO SIGNALS**

(71) Applicant: **Sony Corporation**, Tokyo (JP)

(72) Inventors: **Mitsuyuki Hatanaka**, Kanagawa (JP); **Toru Chinen**, Kanagawa (JP)

(73) Assignee: **Sony Corporation**, Tokyo (JP)

(*) Notice: Subject to any disclaimer, the term of this patent is extended or adjusted under 35 U.S.C. 154(b) by 0 days.

(21) Appl. No.: **16/526,215**

(22) Filed: **Jul. 30, 2019**

(65) **Prior Publication Data**

US 2019/0355368 A1 Nov. 21, 2019

Related U.S. Application Data

(63) Continuation of application No. 15/424,741, filed on Feb. 3, 2017, now Pat. No. 10,431,229, which is a (Continued)

(30) **Foreign Application Priority Data**

Jan. 14, 2011 (JP) 2011-006233

(51) **Int. Cl.**
G10L 21/038 (2013.01)
G10L 19/02 (2013.01)
(Continued)

(52) **U.S. Cl.**
CPC ..... ***G10L 19/0204*** (2013.01); ***G10L 19/008*** (2013.01); ***G10L 19/028*** (2013.01); (Continued)

(58) **Field of Classification Search**
None
See application file for complete search history.

(56) **References Cited**

U.S. PATENT DOCUMENTS

6,266,644 B1 7/2001 Levine
7,933,769 B2 4/2011 Bessette
(Continued)

FOREIGN PATENT DOCUMENTS

CN 1571993 A 1/2005
CN 1932970 A 3/2007
(Continued)

OTHER PUBLICATIONS

Japanese Patent Abstracts, Translation, 2007-187905, Nettre et al, pp. 1-27, 2007.*
(Continued)

Primary Examiner — Michael N Opsasnick
(74) *Attorney, Agent, or Firm* — Wolf, Greenfield & Sacks, P.C.

(57) **ABSTRACT**

A signal processing device, method, and program that may obtain audio at a higher audio quality when decoding an audio signal. An envelope information generating unit generates envelope information representing an envelope form of high frequency components of an audio signal to be encoded. A sine wave information generating unit extracts a sine wave signal from the high frequency components of the audio signal, and generates a sine wave information representing an emergence start position of the sine wave signal. An encoding stream generating unit multiplexes the envelope information, the sine wave information, and low frequency components of the audio signal that have been encoded, and outputs an encoding stream obtained as the result. The high frequency components included in the sine wave signal may be predicted at a higher accuracy from the envelope information and the sine wave information at the receiving side of the encoding stream.

5 Claims, 24 Drawing Sheets

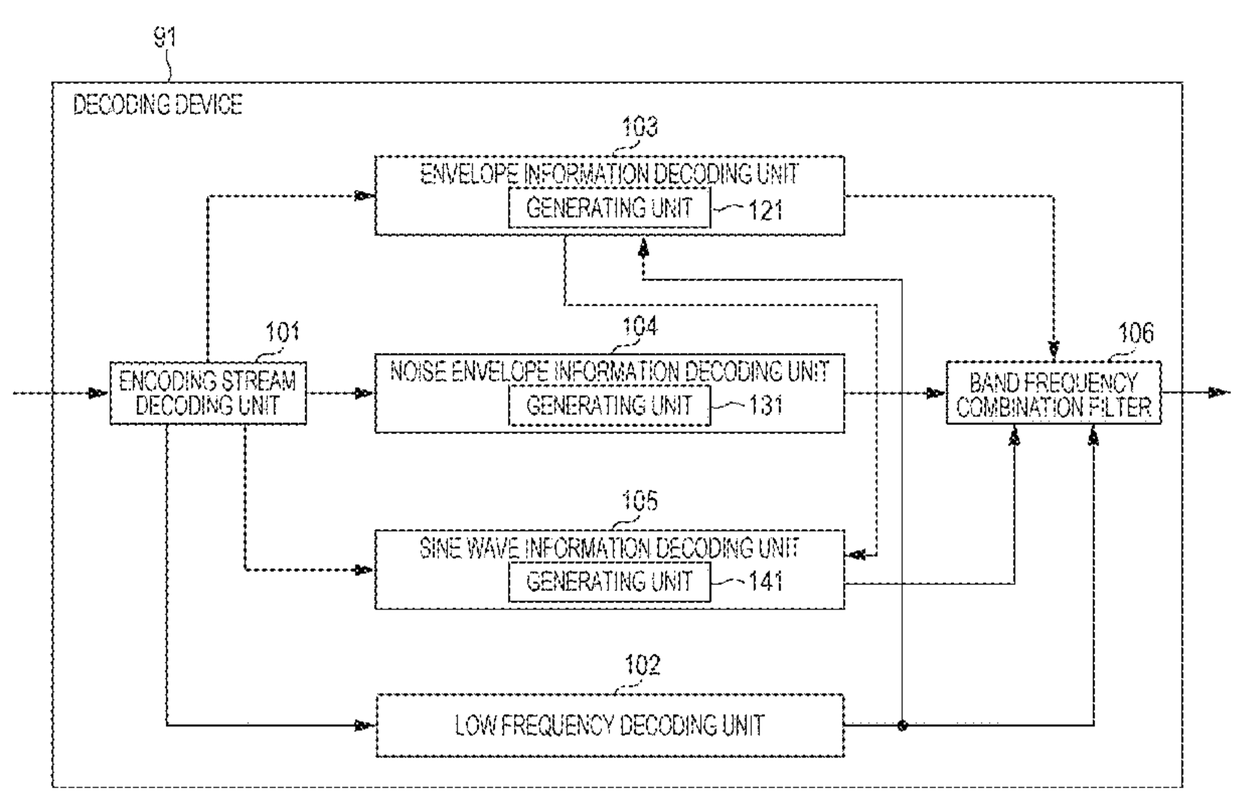

Related U.S. Application Data

continuation of application No. 13/978,175, filed as application No. PCT/JP2012/050173 on Jan. 6, 2012, now abandoned.

(51) **Int. Cl.**

G10L 19/028	(2013.01)
G10L 19/093	(2013.01)
G10L 19/008	(2013.01)
H03M 7/40	(2006.01)

(52) **U.S. Cl.**

CPC ***G10L 19/0208*** (2013.01); ***G10L 19/093*** (2013.01); *G10L 21/038* (2013.01); *H03M 7/40* (2013.01)

(56) **References Cited**

U.S. PATENT DOCUMENTS

8,793,123	B2	7/2014	Disch	
8,949,119	B2	2/2015	Yamamoto et al.	
9,177,563	B2	11/2015	Yamamoto et al.	
9,208,795	B2	12/2015	Yamamoto et al.	
9,236,061	B2	1/2016	Ekstrand et al.	
9,294,062	B2	3/2016	Hatanaka et al.	
9,361,900	B2	6/2016	Yamamoto et al.	
9,390,717	B2	7/2016	Yamamoto et al.	
9,406,306	B2	8/2016	Yamamoto et al.	
9,406,312	B2	8/2016	Yamamoto et al.	
9,437,197	B2	9/2016	Honma et al.	
9,437,198	B2	9/2016	Hatanaka et al.	
9,536,542	B2	1/2017	Yamamoto et al.	
9,542,952	B2	1/2017	Hatanaka et al.	
9,583,112	B2	2/2017	Yamamoto et al.	
9,659,573	B2	5/2017	Yamamoto et al.	
9,679,580	B2	6/2017	Yamamoto et al.	
9,691,410	B2	6/2017	Yamamoto et al.	
9,767,814	B2	9/2017	Yamamoto et al.	
9,767,824	B2	9/2017	Yamamoto et al.	
9,842,603	B2	12/2017	Yamamoto et al.	
9,875,746	B2	1/2018	Honma et al.	
10,083,700	B2	9/2018	Hatanaka et al.	
10,140,995	B2	11/2018	Hatanaka et al.	
10,224,054	B2	3/2019	Yamamoto et al.	
10,229,690	B2	3/2019	Yamamoto et al.	
10,236,015	B2	3/2019	Yamamoto et al.	
10,297,270	B2	5/2019	Yamamoto et al.	
10,304,466	B2	5/2019	Hatanaka et al.	
2001/0013003	A1*	8/2001	Taori	G10L 19/02 704/500
2004/0247037	A1*	12/2004	Honma	G10L 21/038 375/259
2005/0080621	A1*	4/2005	Tsushima	G10L 21/038 704/229
2005/0149339	A1	7/2005	Tanaka et al.	
2005/0228648	A1	10/2005	Heikkinen	
2007/0063877	A1	3/2007	Shmunk et al.	
2007/0185707	A1	8/2007	Gerrits et al.	
2008/0097751	A1*	4/2008	Tsuchinaga	G10L 19/002 704/205
2008/0140425	A1	6/2008	Shimada	
2008/0221905	A1*	9/2008	Schnell	G10L 19/025 704/500
2008/0235033	A1	9/2008	Lee et al.	
2009/0271204	A1*	10/2009	Tammi	G10L 19/0208 704/500
2009/0306975	A1	12/2009	Pietsch et al.	
2010/0063811	A1*	3/2010	Gao	G10L 19/025 704/230
2010/0250261	A1*	9/2010	Laaksonen	G10L 19/02 704/500
2011/0202353	A1	8/2011	Neuendorf et al.	
2012/0243526	A1	9/2012	Yamamoto et al.	
2013/0028427	A1	1/2013	Yamamoto et al.	
2013/0030818	A1	1/2013	Yamamoto et al.	
2013/0124214	A1	5/2013	Yamamoto et al.	
2013/0202118	A1	8/2013	Yamamoto et al.	
2013/0208902	A1	8/2013	Yamamoto et al.	
2013/0275142	A1	10/2013	Hatanaka et al.	
2014/0006037	A1	1/2014	Honma et al.	
2014/0156289	A1	6/2014	Hatanaka et al.	
2014/0172433	A2	6/2014	Honma et al.	
2014/0180682	A1	6/2014	Shi et al.	
2014/0200899	A1	7/2014	Yamamoto et al.	
2014/0200900	A1	7/2014	Yamamoto et al.	
2014/0205101	A1	7/2014	Yamamoto et al.	
2014/0205111	A1	7/2014	Hatanaka et al.	
2014/0211948	A1	7/2014	Hatanaka et al.	
2014/0214432	A1	7/2014	Hatanaka et al.	
2014/0214433	A1	7/2014	Hatanaka et al.	
2015/0088528	A1	3/2015	Toguri et al.	
2015/0120307	A1	4/2015	Yamamoto et al.	
2016/0012829	A1	1/2016	Yamamoto et al.	
2016/0019911	A1	1/2016	Yamamoto et al.	
2016/0140982	A1	5/2016	Yamamoto et al.	
2016/0225376	A1	8/2016	Honma et al.	
2016/0322057	A1	11/2016	Yamamoto et al.	
2016/0343380	A1	11/2016	Hatanaka et al.	
2017/0076737	A1	3/2017	Yamamoto et al.	
2017/0148452	A1	5/2017	Hatanaka et al.	
2017/0229139	A1	8/2017	Yamamoto et al.	
2017/0236530	A1	8/2017	Yamamoto et al.	
2017/0337928	A1	11/2017	Yamamoto et al.	
2017/0352365	A1	12/2017	Yamamoto et al.	
2018/0197555	A1	7/2018	Yamamoto et al.	
2018/0330746	A1	11/2018	Yamamoto et al.	
2019/0164558	A1	5/2019	Yamamoto et al.	
2019/0180768	A1	6/2019	Yamamoto et al.	

FOREIGN PATENT DOCUMENTS

CN	101297356	A		10/2008
JP	2001-521648	A		11/2001
JP	2004-053940	A		2/2004
JP	2007-187905	A		7/2007
JP	2007187905	A	*	7/2007
JP	2011-527448	A		10/2011
WO	WO 2010/003544	A1		1/2010
WO	WO 2010/024371	A1		3/2010

OTHER PUBLICATIONS

U.S. Appl. No. 13/498,234, filed Apr. 12, 2012, Yamamoto et al.
U.S. Appl. No. 13/499,559, filed Jun. 11, 2012, Yamamoto et al.
U.S. Appl. No. 13/639,325, filed Oct. 4, 2012, Yamamoto et al.
U.S. Appl. No. 13/639,338, filed Oct. 4, 2012, Yamamoto et al.
U.S. Appl. No. 13/640,500, filed Apr. 19, 2013, Yamamoto et al.
U.S. Appl. No. 13/877,192, filed Apr. 1, 2013, Yamamoto et al.
U.S. Appl. No. 13/978,175, filed Jul. 3, 2013, Hatanaka et al.
U.S. Appl. No. 14/006,148, filed Sep. 19, 2013, Honma et al.
U.S. Appl. No. 14/104,828, filed Dec. 12, 2013, Shi et al.
U.S. Appl. No. 14/236,350, filed Jan. 31, 2014, Yamamoto et al.
U.S. Appl. No. 14/237,990, filed Feb. 10, 2014, Yamamoto et al.
U.S. Appl. No. 14/237,993, filed Feb. 10, 2014, Yamamoto et al.
U.S. Appl. No. 14/238,243, filed Feb. 11, 2014, Hatanaka et al.
U.S. Appl. No. 14/238,265, filed Feb. 11, 2014, Hatanaka et al.
U.S. Appl. No. 14/239,568, filed Feb. 19, 2014, Hatanaka et al.
U.S. Appl. No. 14/239,574, filed Feb. 19, 2014, Hatanaka et al.
U.S. Appl. No. 14/239,797, filed Feb. 20, 2014, Hatanaka et al.
U.S. Appl. No. 14/390,810, filed Oct. 6, 2014, Toguri et al.
U.S. Appl. No. 14/585,974, filed Dec. 30, 2014, Yamamoto et al.
U.S. Appl. No. 14/861,734, filed Sep. 22, 2015, Yamamoto et al.
U.S. Appl. No. 14/870,268, filed Sep. 30, 2015, Yamamoto et al.
U.S. Appl. No. 14/917,825, filed Mar. 9, 2016, Honma et al.
U.S. Appl. No. 15/003,960, filed Jan. 22, 2016, Yamamoto et al.
U.S. Appl. No. 15/106,498, filed Jun. 20, 2016, Yamamoto.
U.S. Appl. No. 15/206,783, filed Jul. 11, 2016, Yamamoto et al.
U.S. Appl. No. 15/227,024, filed Aug. 3, 2016, Hatanaka et al.
U.S. Appl. No. 15/357,877, filed Nov. 21, 2016, Yamamoto et al.
U.S. Appl. No. 15/424,741, filed Feb. 3, 2017, Hatanaka et al.

(56) **References Cited**

OTHER PUBLICATIONS

U.S. Appl. No. 15/581,527, filed Apr. 28, 2017, Yamamoto et al.
U.S. Appl. No. 15/584,447, filed May 2, 2017, Yamamoto et al.
U.S. Appl. No. 15/670,407, filed Aug. 7, 2017, Yamamoto et al.
U.S. Appl. No. 15/684,340, filed Aug. 23, 2017, Yamamoto et al.
U.S. Appl. No. 16/046,070, filed Jul. 26, 2018, Yamamoto et al.
U.S. Appl. No. 16/263,356, filed Jan. 31, 2019, Yamamoto et al.
U.S. Appl. No. 16/276,936, filed Feb. 15, 2019, Yamamoto et al.
International Search Report and Written Opinion dated Feb. 14, 2012 in connection with International Application No. PCT/JP2012/050173, and English translation thereof.
International Preliminary Report on Patentability dated Jul. 25, 2013 in connection with International Application No. PCT/JP2012/050173, and English translation thereof.
Chinese Office Action and English translation thereof dated Aug. 12, 2014 in connection with Chinese Application No. 2012800004776.X.
Japanese Office Action and English translation thereof dated Sep. 30, 2014 in connection with Application No. 2011-006233.
Extended European Search Report dated Nov. 15, 2016 in connection with European Application No. 12734067.7.
Korean Office Action dated Jun. 28, 2018 in connection with Korean Application No. 10-2013-7017522, and English translation thereof.
Chinese Office Action and English translation thereof dated Aug. 12, 2014 in connection with Chinese Application No. 201280004776.X.
Wolters et al., A close look into MPEG-4 High Efficiency AAC. Audio Engineering Society Convention Paper. Presented at the 115th Convention Oct. 10-13, 2003, New York NY, USA. pp. 1-16.

* cited by examiner

FIG. 1

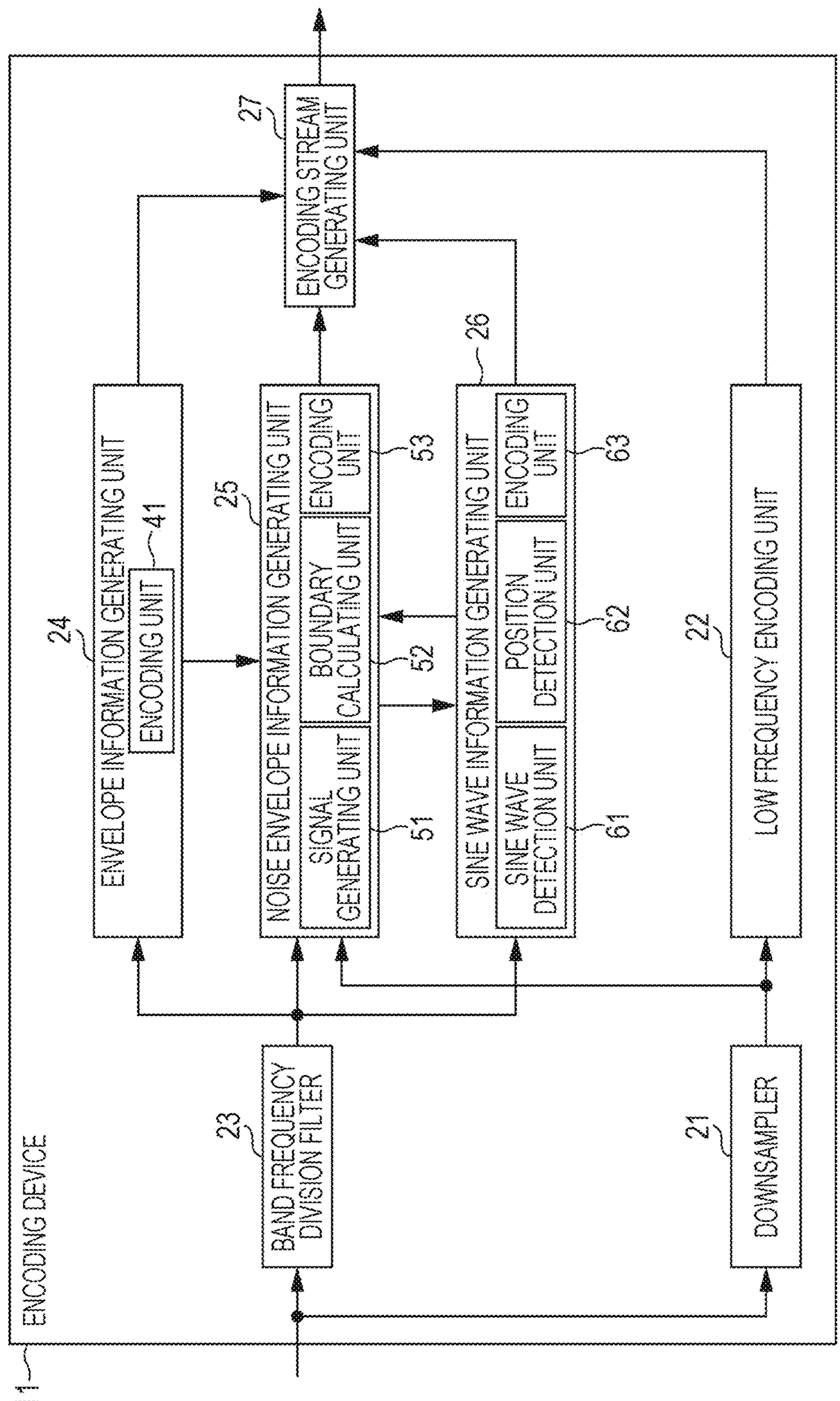
ENCODING DEVICE
11
BAND FREQUENCY DIVISION FILTER
23
DOWNSAMPLER
21
ENVELOPE INFORMATION GENERATING UNIT
24
ENCODING UNIT
41
NOISE ENVELOPE INFORMATION GENERATING UNIT
25
SIGNAL GENERATING UNIT
51
BOUNDARY CALCULATING UNIT
52
ENCODING UNIT
53
SINE WAVE INFORMATION GENERATING UNIT
26
SINE WAVE DETECTION UNIT
61
POSITION DETECTION UNIT
62
ENCODING UNIT
63
LOW FREQUENCY ENCODING UNIT
22
ENCODING STREAM GENERATING UNIT
27

FIG. 2

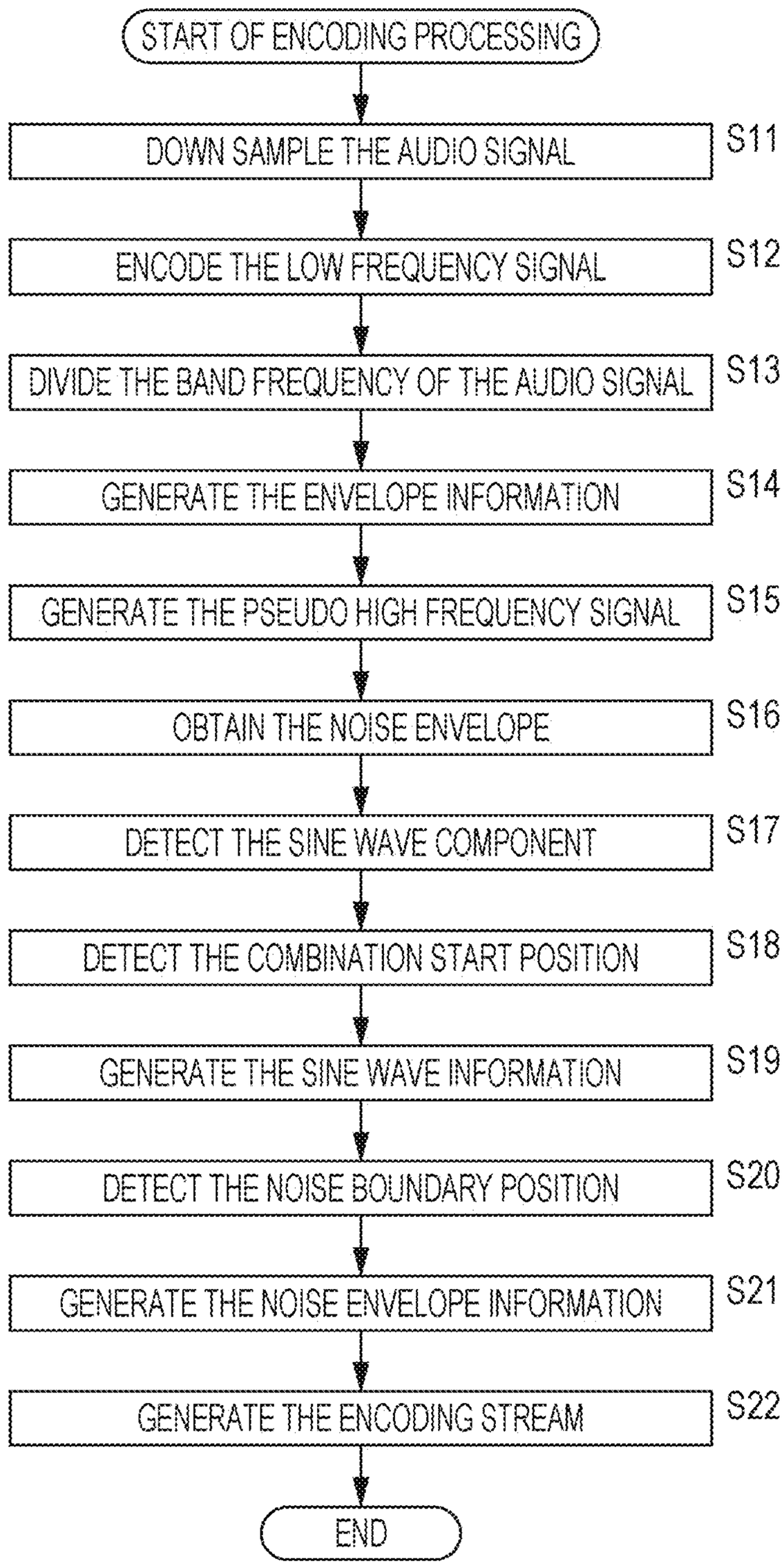
START OF ENCODING PROCESSING
DOWN SAMPLE THE AUDIO SIGNAL
S11
ENCODE THE LOW FREQUENCY SIGNAL
S12
DIVIDE THE BAND FREQUENCY OF THE AUDIO SIGNAL
S13
GENERATE THE ENVELOPE INFORMATION
S14
GENERATE THE PSEUDO HIGH FREQUENCY SIGNAL
S15
OBTAIN THE NOISE ENVELOPE
S16
DETECT THE SINE WAVE COMPONENT
S17
DETECT THE COMBINATION START POSITION
S18
GENERATE THE SINE WAVE INFORMATION
S19
DETECT THE NOISE BOUNDARY POSITION
S20
GENERATE THE NOISE ENVELOPE INFORMATION
S21
GENERATE THE ENCODING STREAM
S22
END

FIG. 3

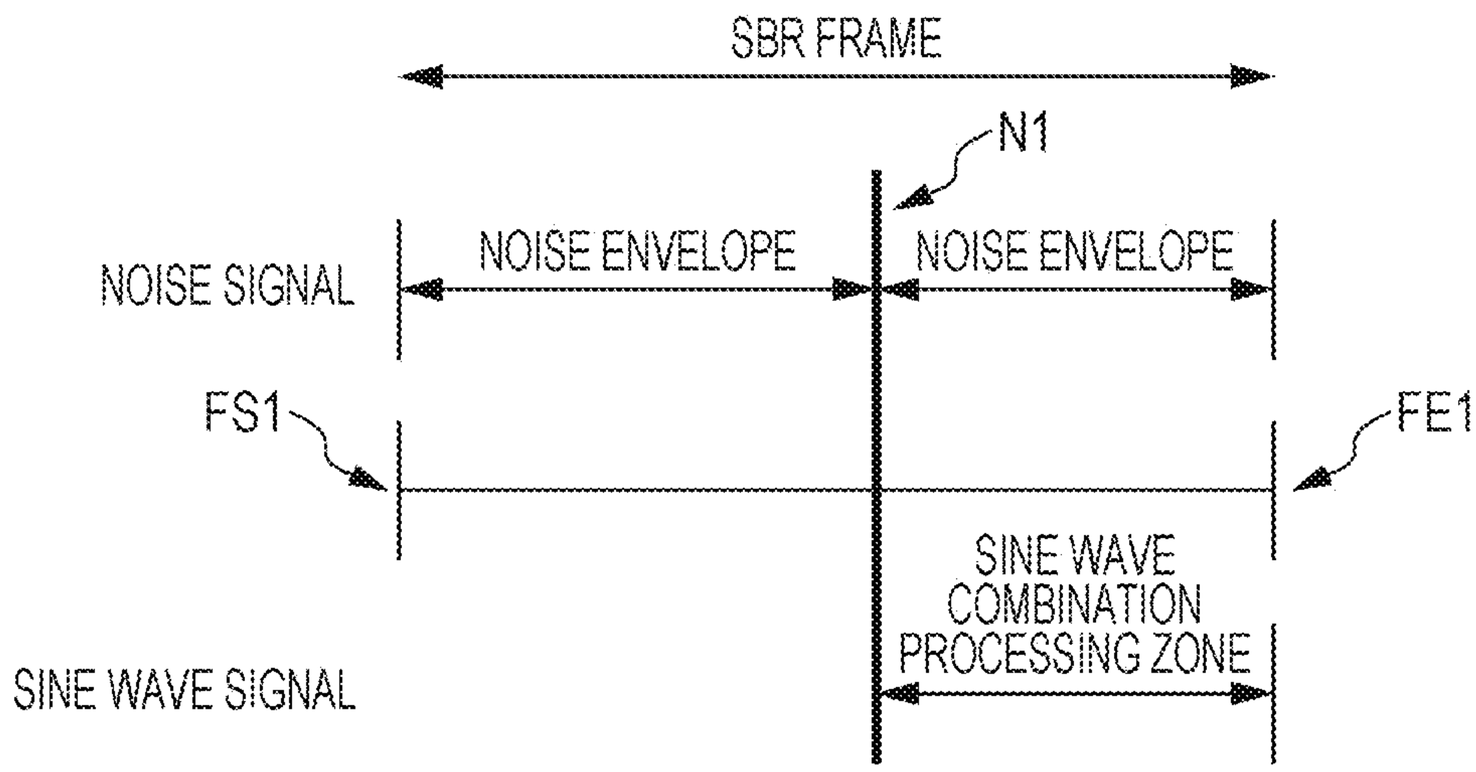
SBR FRAME
N1
NOISE SIGNAL
NOISE ENVELOPE
NOISE ENVELOPE
FS1
FE1
SINE WAVE COMBINATION PROCESSING ZONE
SINE WAVE SIGNAL

FIG. 4

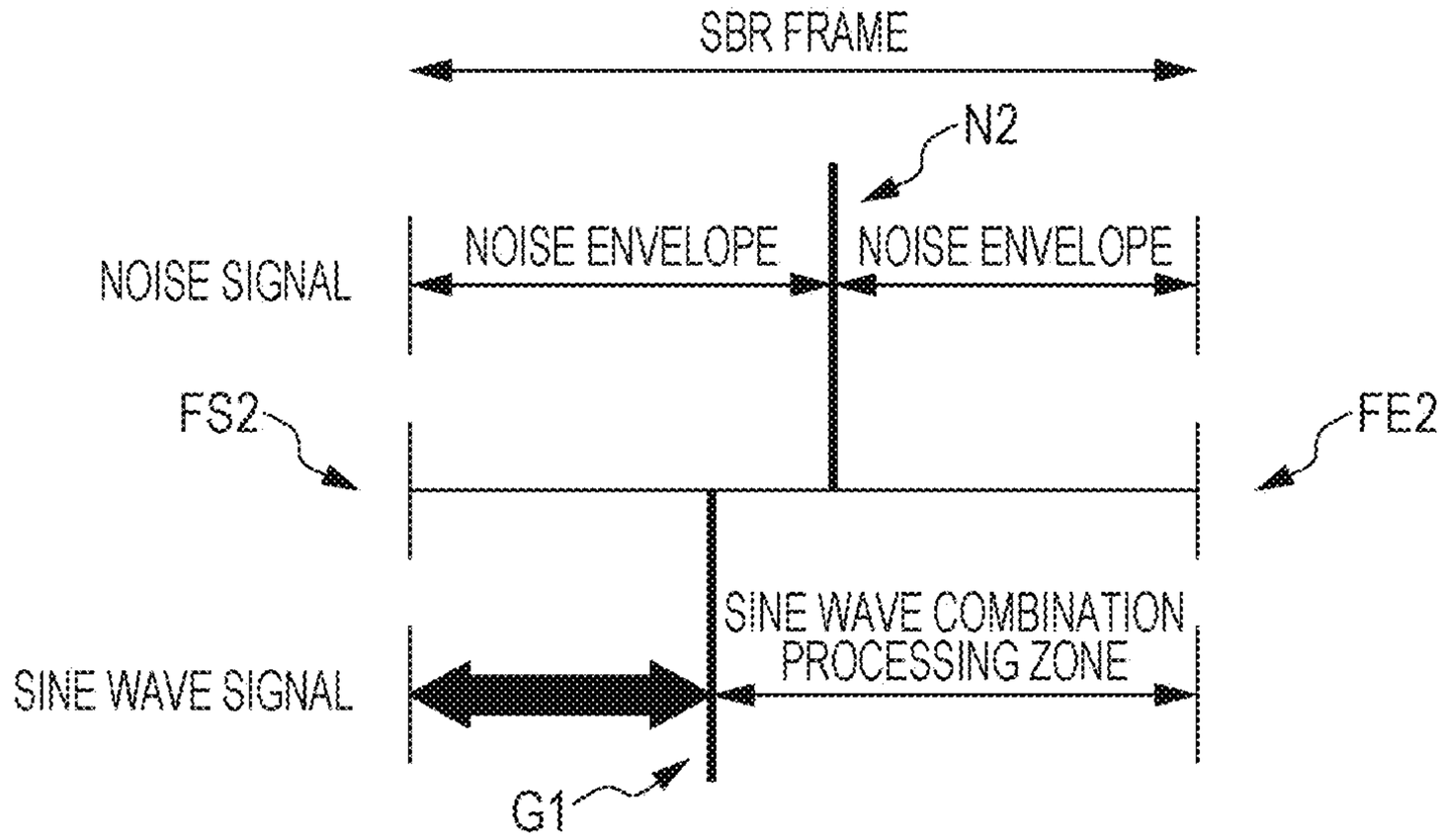
SBR FRAME
N2
NOISE SIGNAL
NOISE ENVELOPE
NOISE ENVELOPE
FS2
FE2
SINE WAVE COMBINATION PROCESSING ZONE
SINE WAVE SIGNAL
G1

FIG. 5

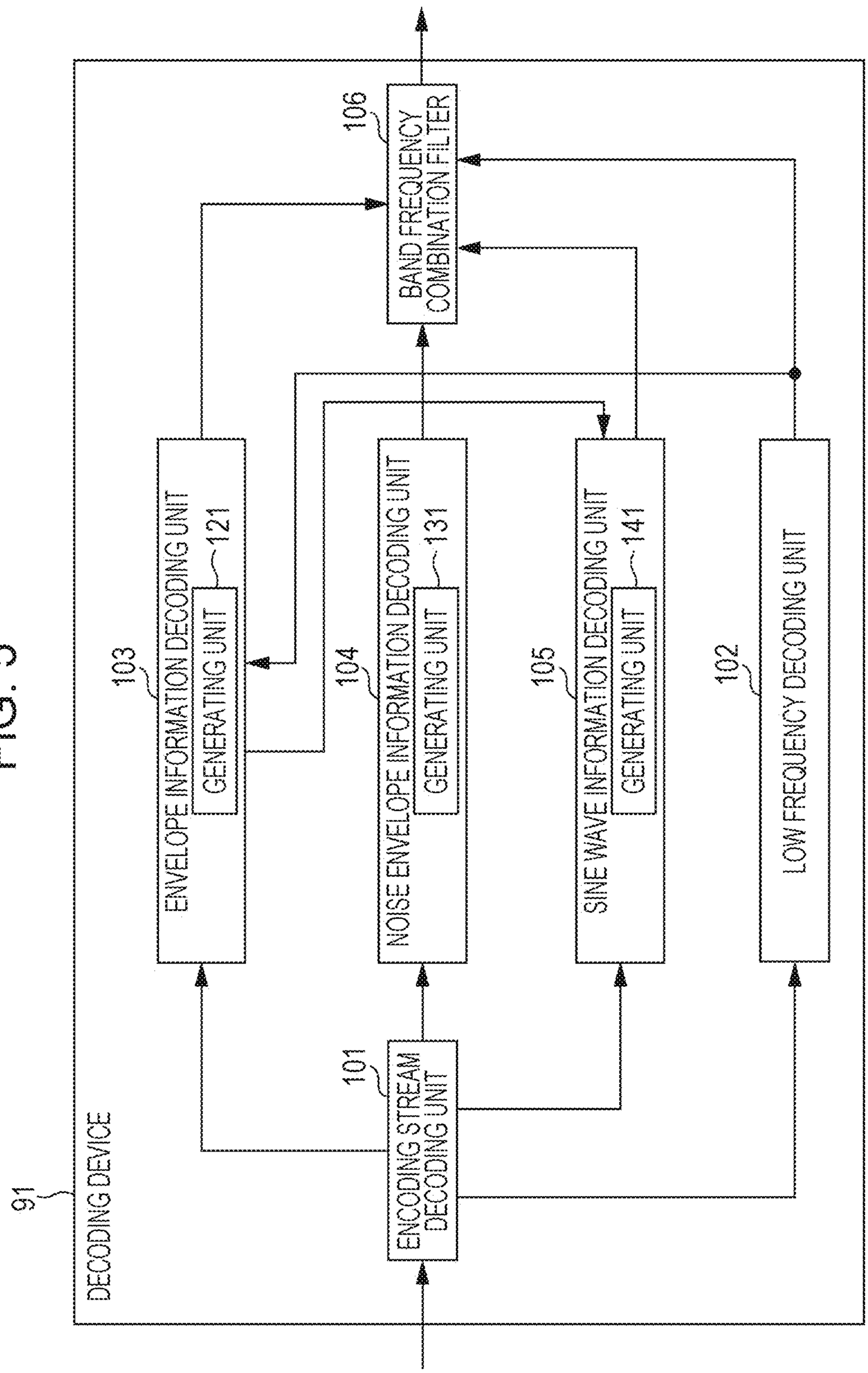
91
DECODING DEVICE
101
ENCODING STREAM DECODING UNIT
103
ENVELOPE INFORMATION DECODING UNIT
121
GENERATING UNIT
104
NOISE ENVELOPE INFORMATION DECODING UNIT
131
GENERATING UNIT
105
SINE WAVE INFORMATION DECODING UNIT
141
GENERATING UNIT
102
LOW FREQUENCY DECODING UNIT
106
BAND FREQUENCY COMBINATION FILTER

FIG. 6

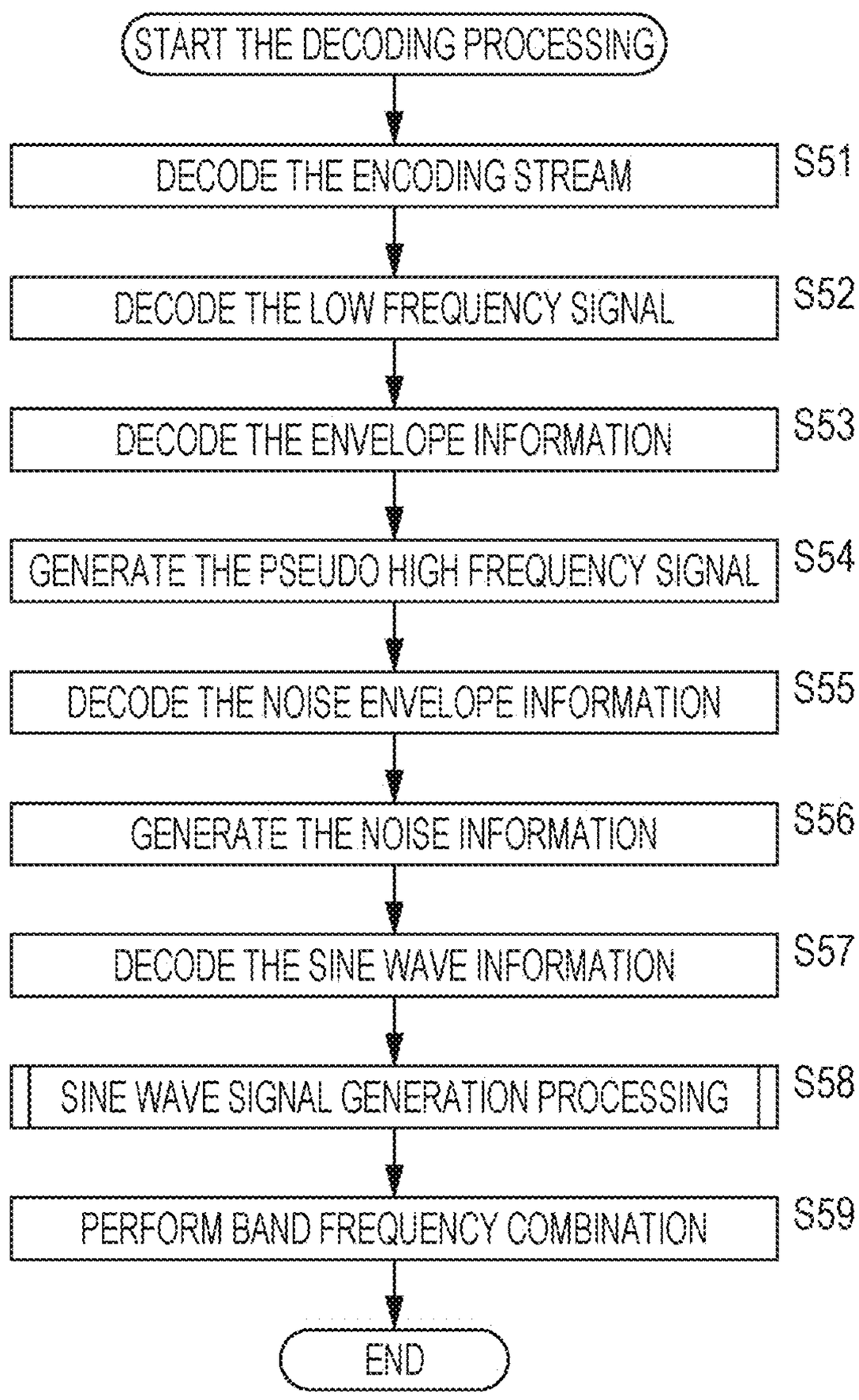
START THE DECODING PROCESSING
DECODE THE ENCODING STREAM
S51
DECODE THE LOW FREQUENCY SIGNAL
S52
DECODE THE ENVELOPE INFORMATION
S53
GENERATE THE PSEUDO HIGH FREQUENCY SIGNAL
S54
DECODE THE NOISE ENVELOPE INFORMATION
S55
GENERATE THE NOISE INFORMATION
S56
DECODE THE SINE WAVE INFORMATION
S57
SINE WAVE SIGNAL GENERATION PROCESSING
S58
PERFORM BAND FREQUENCY COMBINATION
S59
END

FIG. 7

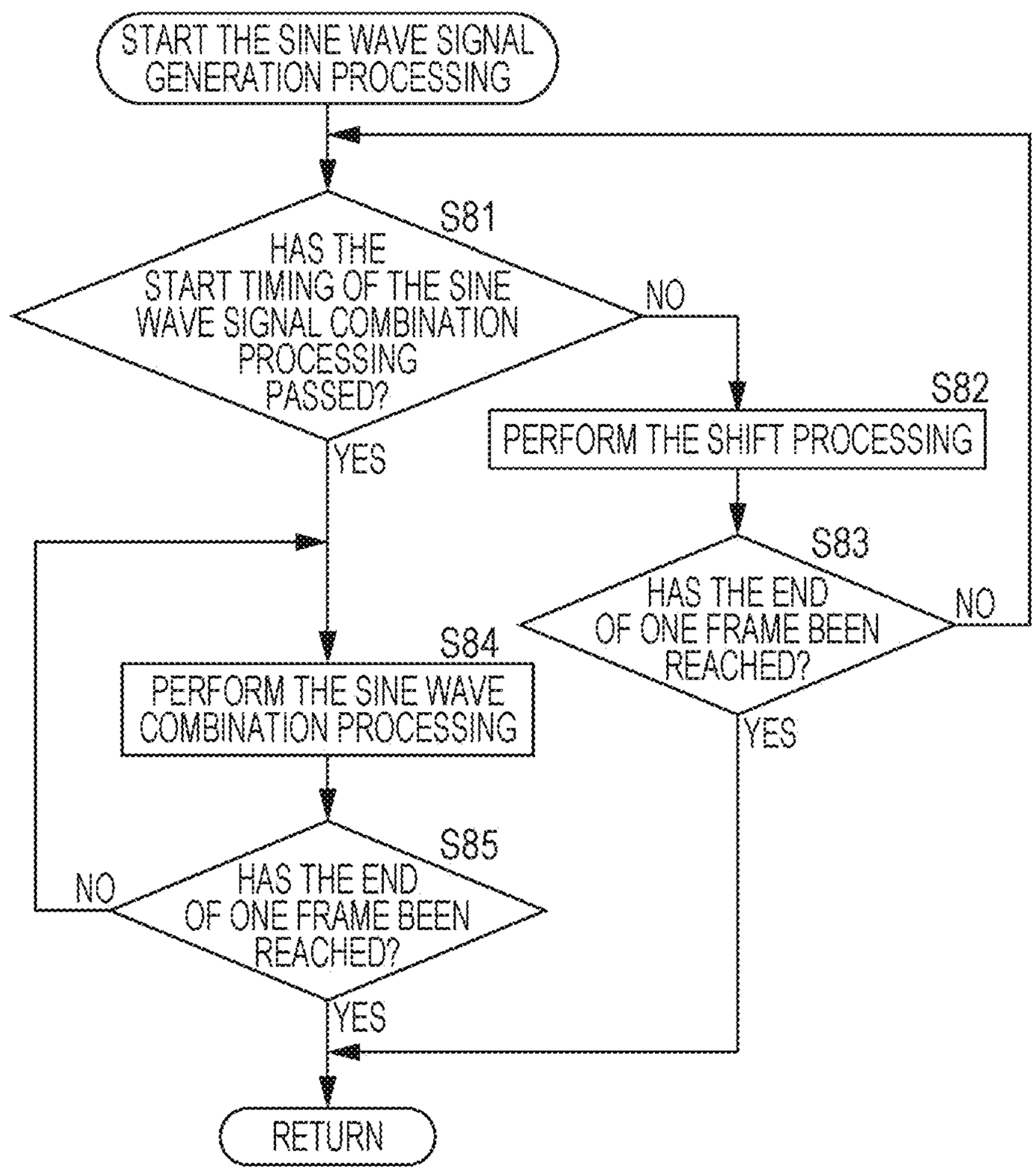
START THE SINE WAVE SIGNAL GENERATION PROCESSING
S81
HAS THE START TIMING OF THE SINE WAVE SIGNAL COMBINATION PROCESSING PASSED?
NO
YES
S82
PERFORM THE SHIFT PROCESSING
S83
HAS THE END OF ONE FRAME BEEN REACHED?
NO
YES
S84
PERFORM THE SINE WAVE COMBINATION PROCESSING
S85
HAS THE END OF ONE FRAME BEEN REACHED?
NO
YES
RETURN

FIG. 8

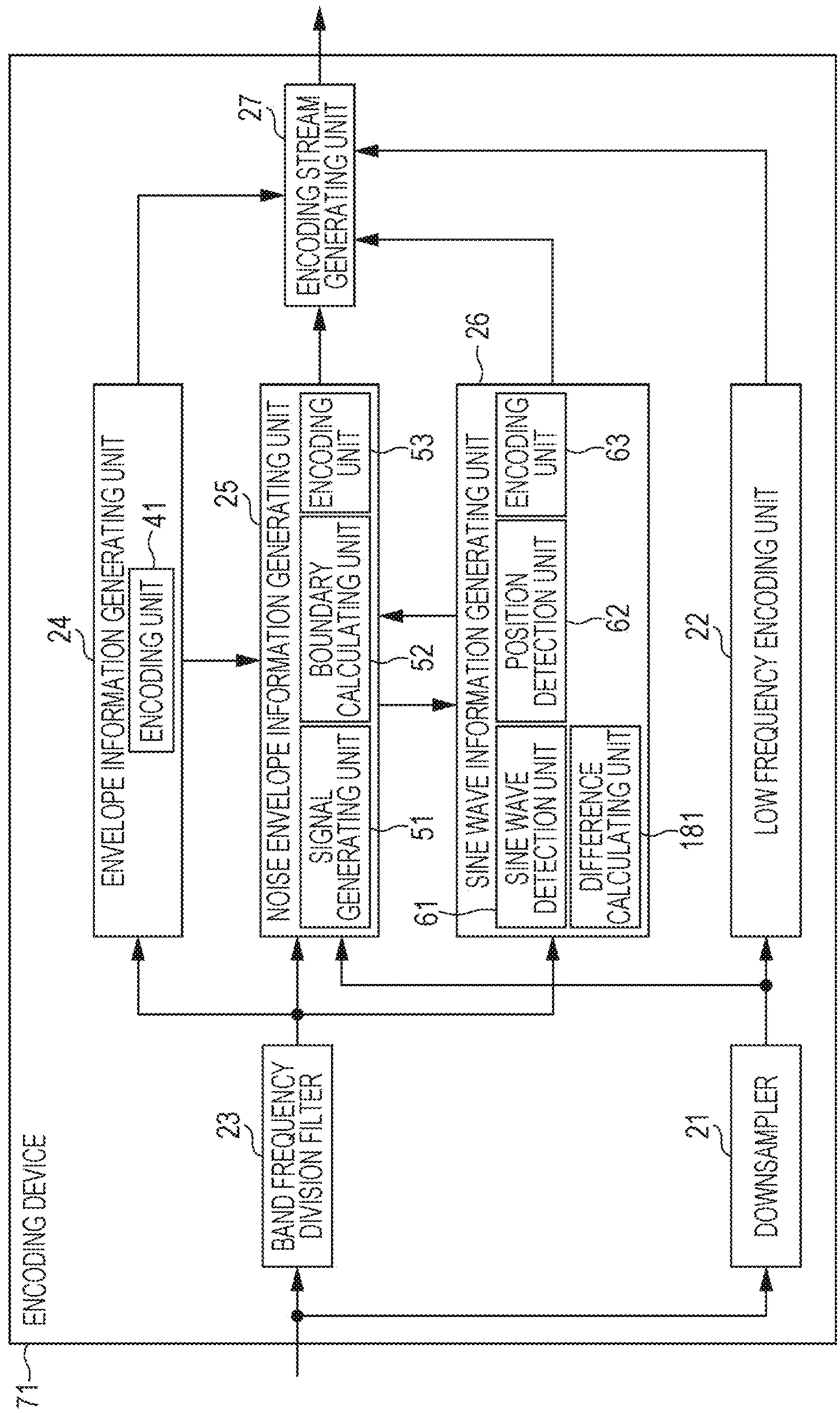
ENCODING DEVICE
171
BAND FREQUENCY DIVISION FILTER
23
DOWNSAMPLER
21
ENVELOPE INFORMATION GENERATING UNIT
24
ENCODING UNIT
41
NOISE ENVELOPE INFORMATION GENERATING UNIT
25
SIGNAL GENERATING UNIT
51
BOUNDARY CALCULATING UNIT
52
ENCODING UNIT
53
SINE WAVE INFORMATION GENERATING UNIT
26
SINE WAVE DETECTION UNIT
61
POSITION DETECTION UNIT
62
DIFFERENCE CALCULATING UNIT
181
ENCODING UNIT
63
LOW FREQUENCY ENCODING UNIT
22
ENCODING STREAM GENERATING UNIT
27

FIG. 9

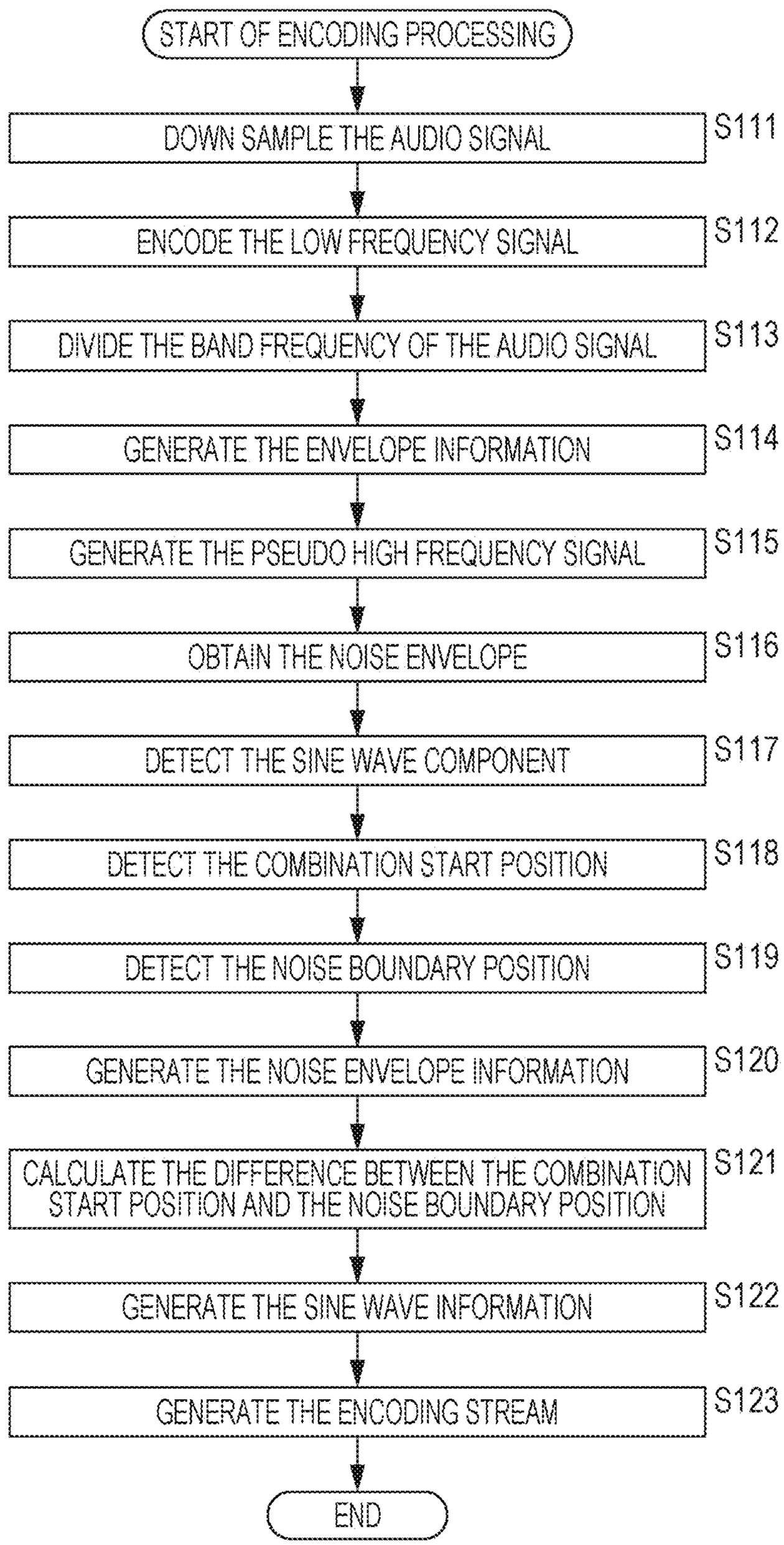
START OF ENCODING PROCESSING
DOWN SAMPLE THE AUDIO SIGNAL
S111
ENCODE THE LOW FREQUENCY SIGNAL
S112
DIVIDE THE BAND FREQUENCY OF THE AUDIO SIGNAL
S113
GENERATE THE ENVELOPE INFORMATION
S114
GENERATE THE PSEUDO HIGH FREQUENCY SIGNAL
S115
OBTAIN THE NOISE ENVELOPE
S116
DETECT THE SINE WAVE COMPONENT
S117
DETECT THE COMBINATION START POSITION
S118
DETECT THE NOISE BOUNDARY POSITION
S119
GENERATE THE NOISE ENVELOPE INFORMATION
S120
CALCULATE THE DIFFERENCE BETWEEN THE COMBINATION START POSITION AND THE NOISE BOUNDARY POSITION
S121
GENERATE THE SINE WAVE INFORMATION
S122
GENERATE THE ENCODING STREAM
S123
END

FIG. 10

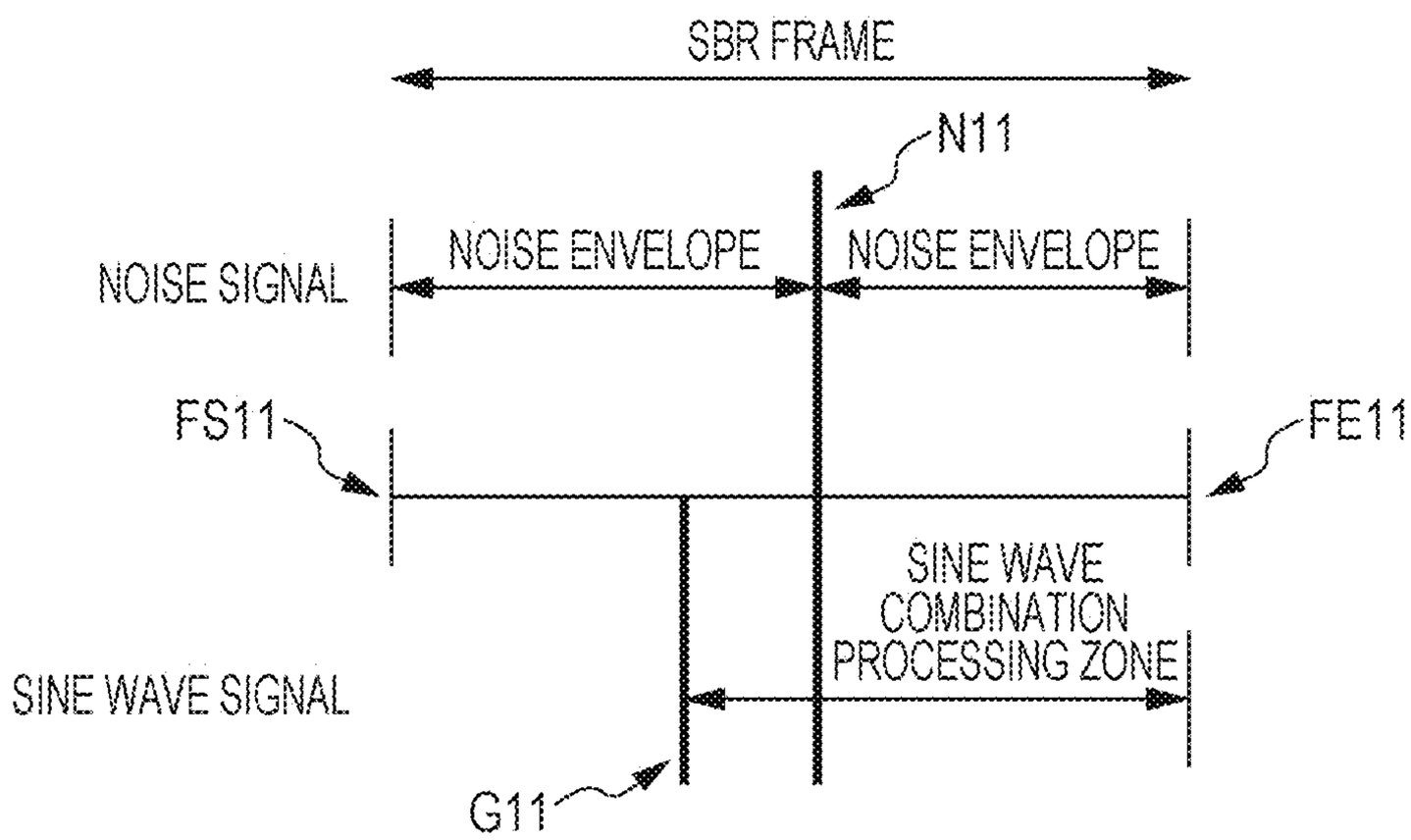
SBR FRAME
N11
NOISE SIGNAL
NOISE ENVELOPE
NOISE ENVELOPE
FS11
FE11
SINE WAVE COMBINATION PROCESSING ZONE
SINE WAVE SIGNAL
G11

FIG. 11

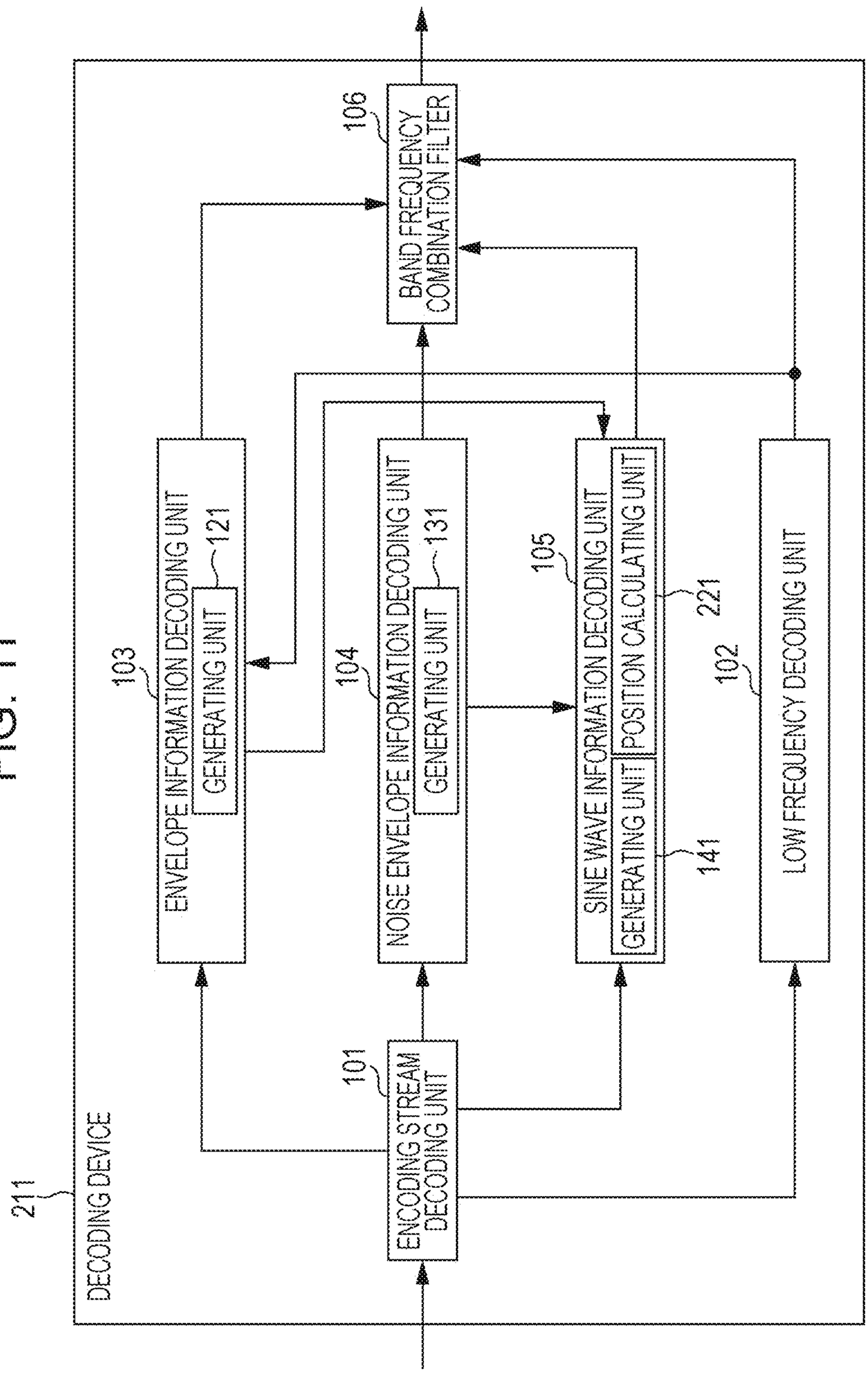
211
DECODING DEVICE
101
ENCODING STREAM DECODING UNIT
103
ENVELOPE INFORMATION DECODING UNIT
121
GENERATING UNIT
104
NOISE ENVELOPE INFORMATION DECODING UNIT
131
GENERATING UNIT
105
SINE WAVE INFORMATION DECODING UNIT
221
POSITION CALCULATING UNIT
141
GENERATING UNIT
102
LOW FREQUENCY DECODING UNIT
106
BAND FREQUENCY COMBINATION FILTER

FIG. 12

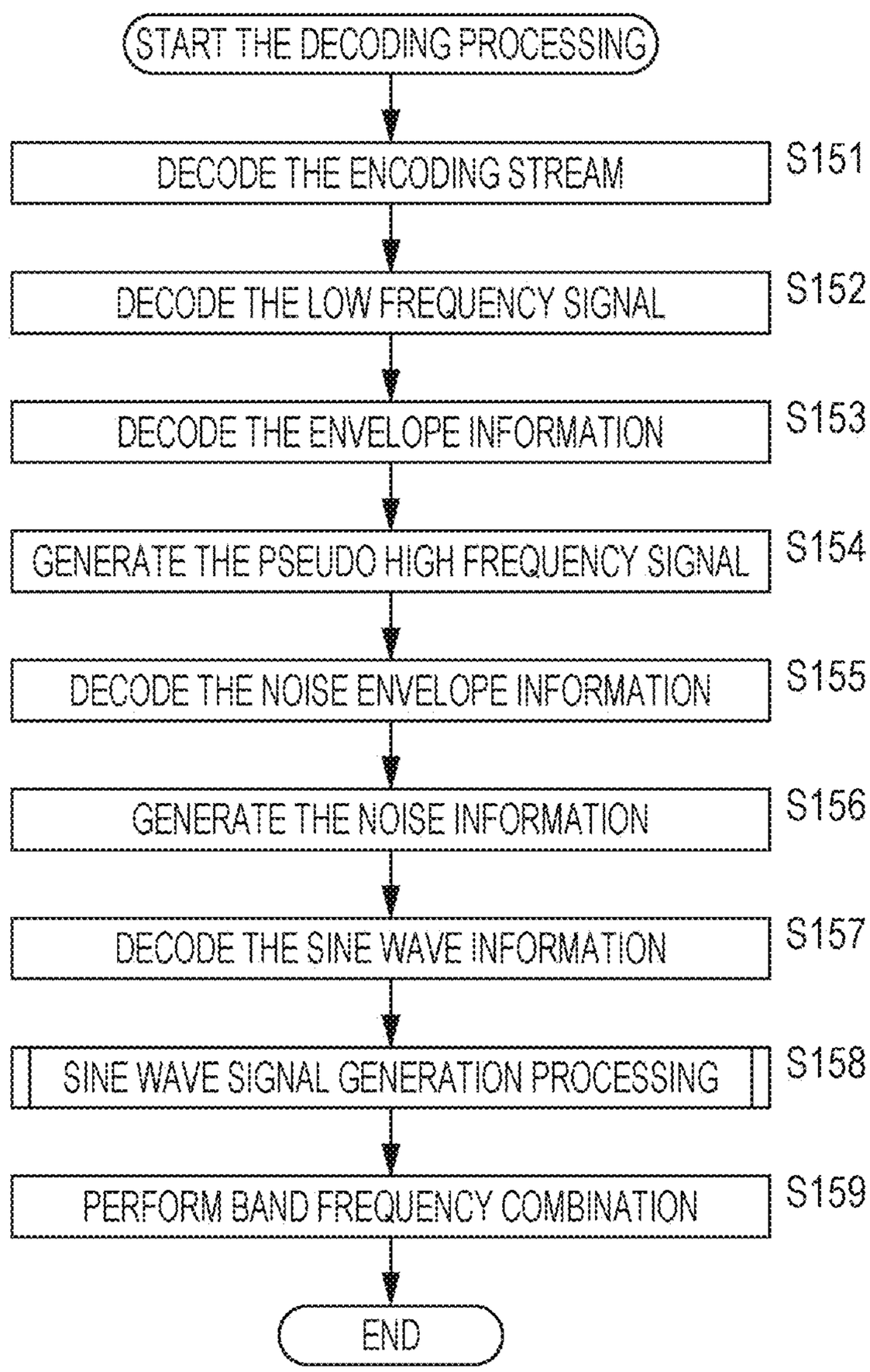
START THE DECODING PROCESSING
DECODE THE ENCODING STREAM
S151
DECODE THE LOW FREQUENCY SIGNAL
S152
DECODE THE ENVELOPE INFORMATION
S153
GENERATE THE PSEUDO HIGH FREQUENCY SIGNAL
S154
DECODE THE NOISE ENVELOPE INFORMATION
S155
GENERATE THE NOISE INFORMATION
S156
DECODE THE SINE WAVE INFORMATION
S157
SINE WAVE SIGNAL GENERATION PROCESSING
S158
PERFORM BAND FREQUENCY COMBINATION
S159
END

FIG. 13

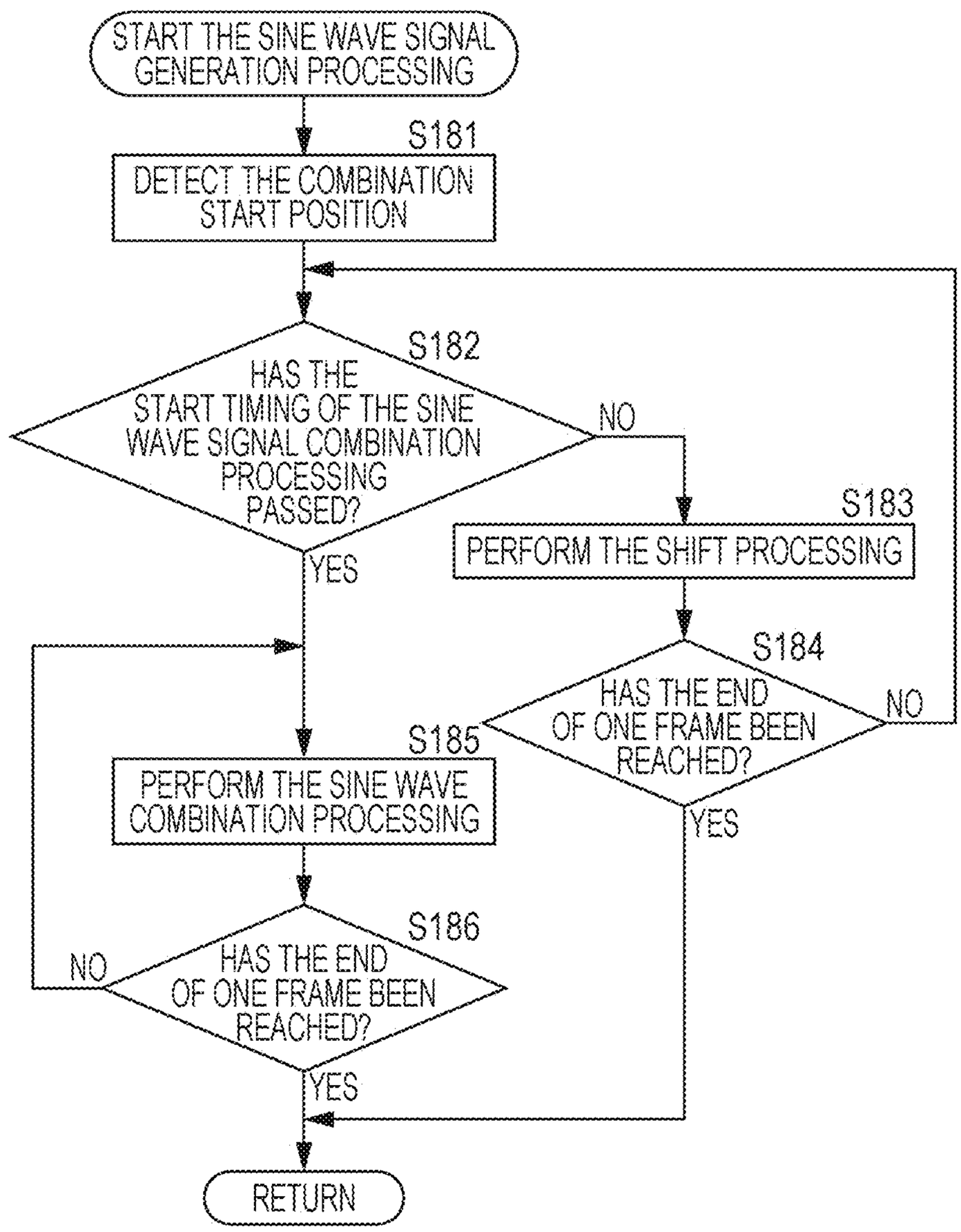
START THE SINE WAVE SIGNAL GENERATION PROCESSING
S181
DETECT THE COMBINATION START POSITION
S182
HAS THE START TIMING OF THE SINE WAVE SIGNAL COMBINATION PROCESSING PASSED?
NO
YES
S183
PERFORM THE SHIFT PROCESSING
S184
HAS THE END OF ONE FRAME BEEN REACHED?
NO
YES
S185
PERFORM THE SINE WAVE COMBINATION PROCESSING
S186
HAS THE END OF ONE FRAME BEEN REACHED?
NO
YES
RETURN

FIG. 14

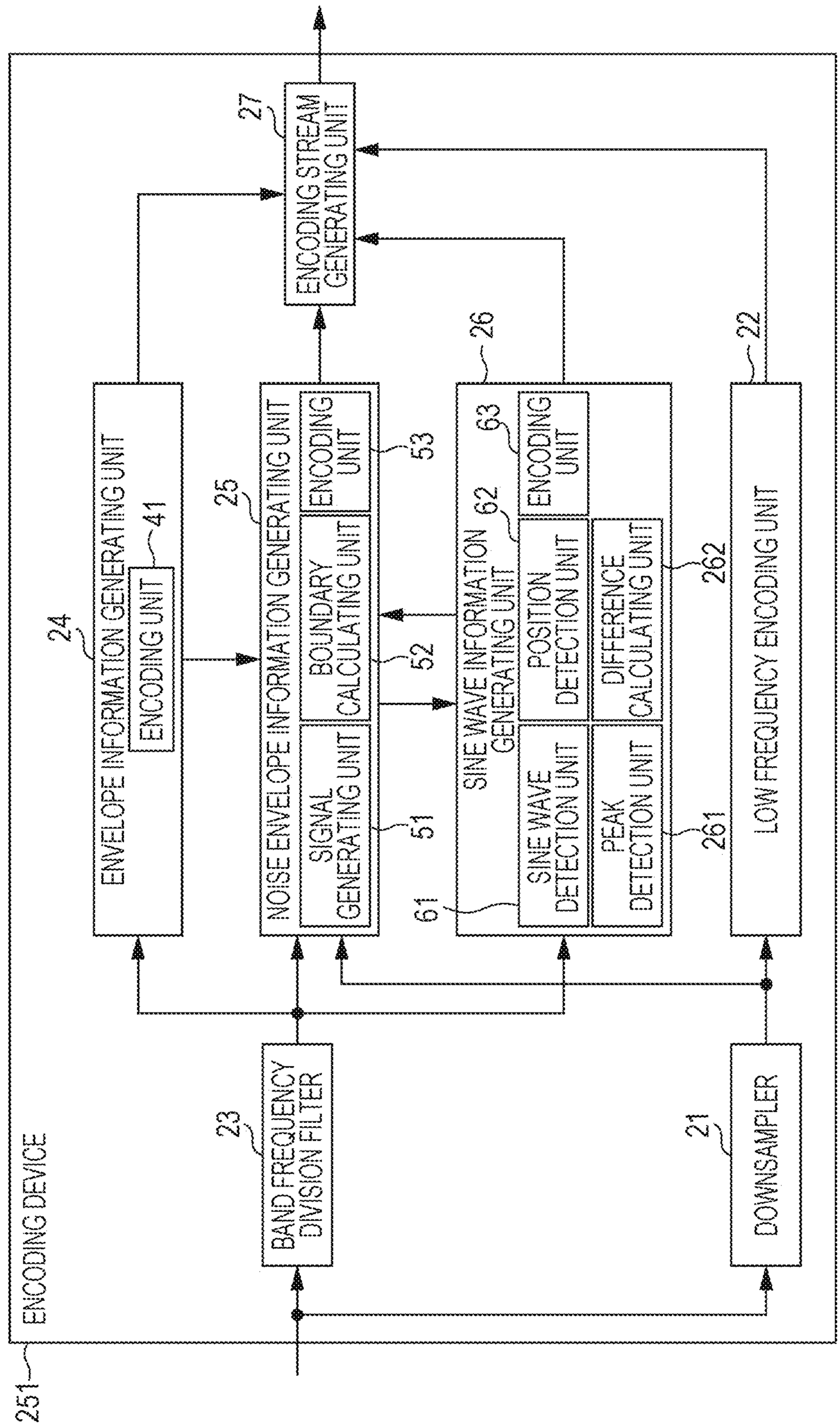
ENCODING DEVICE
251
BAND FREQUENCY DIVISION FILTER
23
DOWNSAMPLER
21
ENVELOPE INFORMATION GENERATING UNIT
24
ENCODING UNIT
41
NOISE ENVELOPE INFORMATION GENERATING UNIT
25
SIGNAL GENERATING UNIT
51
BOUNDARY CALCULATING UNIT
52
ENCODING UNIT
53
SINE WAVE INFORMATION GENERATING UNIT
26
SINE WAVE DETECTION UNIT
61
POSITION DETECTION UNIT
62
ENCODING UNIT
63
PEAK DETECTION UNIT
261
DIFFERENCE CALCULATING UNIT
262
LOW FREQUENCY ENCODING UNIT
22
ENCODING STREAM GENERATING UNIT
27

FIG. 15

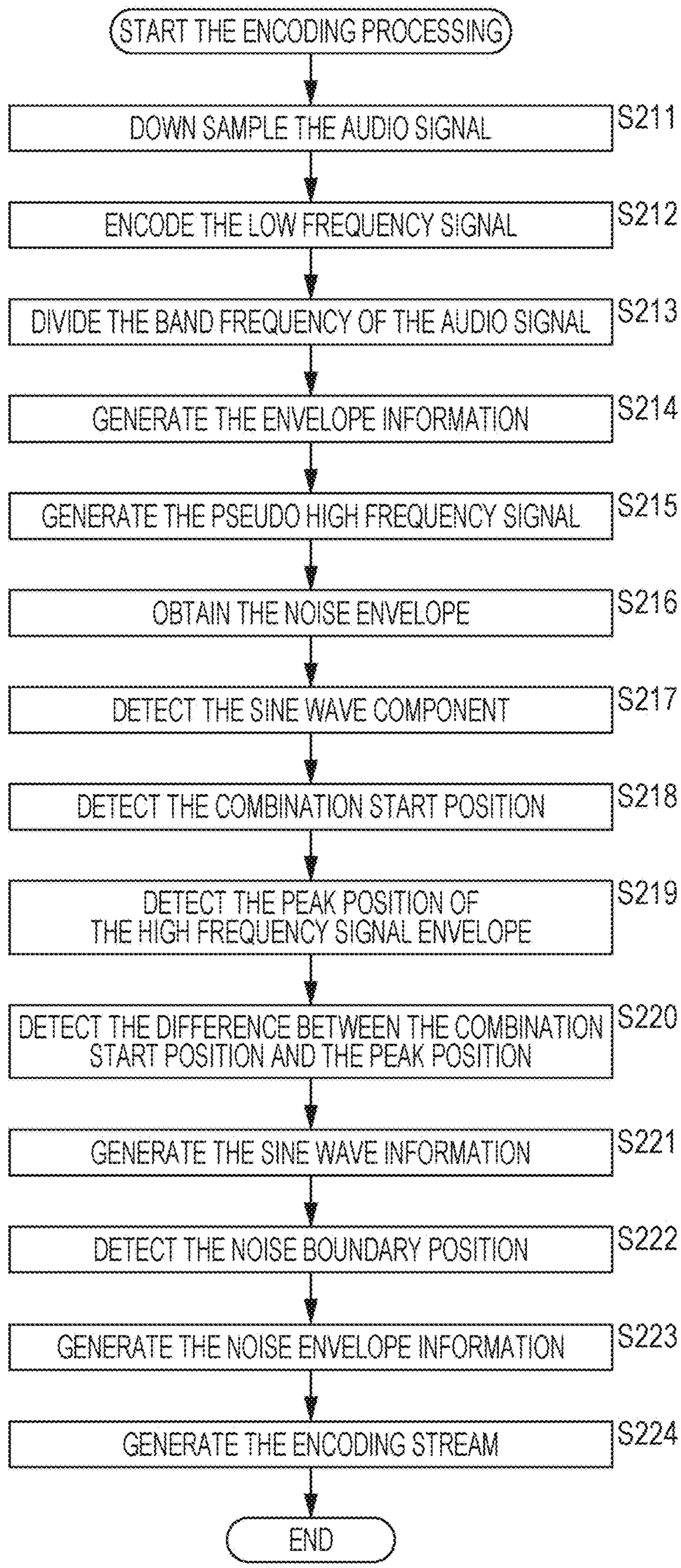
START THE ENCODING PROCESSING
DOWN SAMPLE THE AUDIO SIGNAL
S211
ENCODE THE LOW FREQUENCY SIGNAL
S212
DIVIDE THE BAND FREQUENCY OF THE AUDIO SIGNAL
S213
GENERATE THE ENVELOPE INFORMATION
S214
GENERATE THE PSEUDO HIGH FREQUENCY SIGNAL
S215
OBTAIN THE NOISE ENVELOPE
S216
DETECT THE SINE WAVE COMPONENT
S217
DETECT THE COMBINATION START POSITION
S218
DETECT THE PEAK POSITION OF THE HIGH FREQUENCY SIGNAL ENVELOPE
S219
DETECT THE DIFFERENCE BETWEEN THE COMBINATION START POSITION AND THE PEAK POSITION
S220
GENERATE THE SINE WAVE INFORMATION
S221
DETECT THE NOISE BOUNDARY POSITION
S222
GENERATE THE NOISE ENVELOPE INFORMATION
S223
GENERATE THE ENCODING STREAM
S224
END

FIG. 16

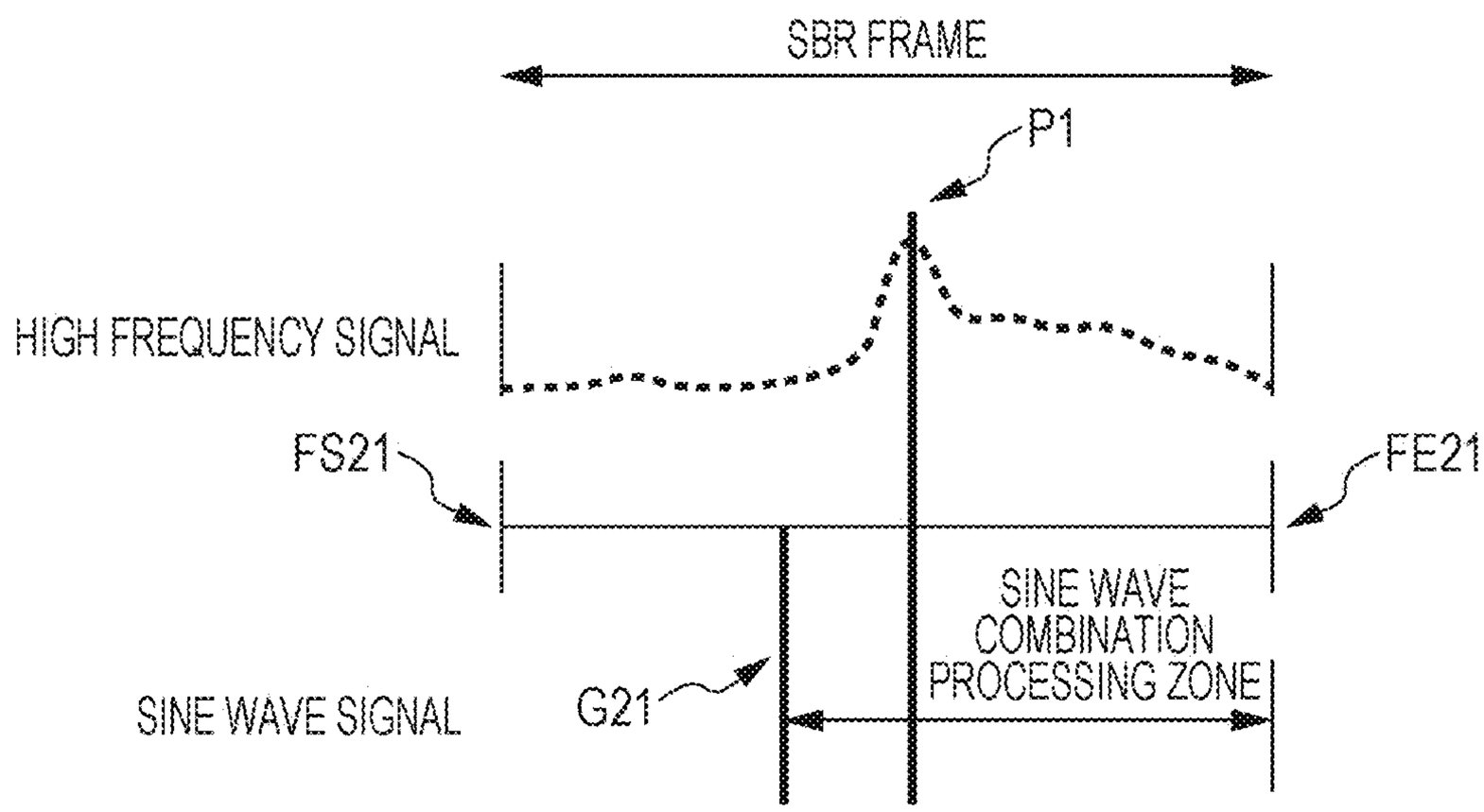
SBR FRAME
P1
HIGH FREQUENCY SIGNAL
FS21
FE21
SINE WAVE COMBINATION PROCESSING ZONE
SINE WAVE SIGNAL
G21

FIG. 17

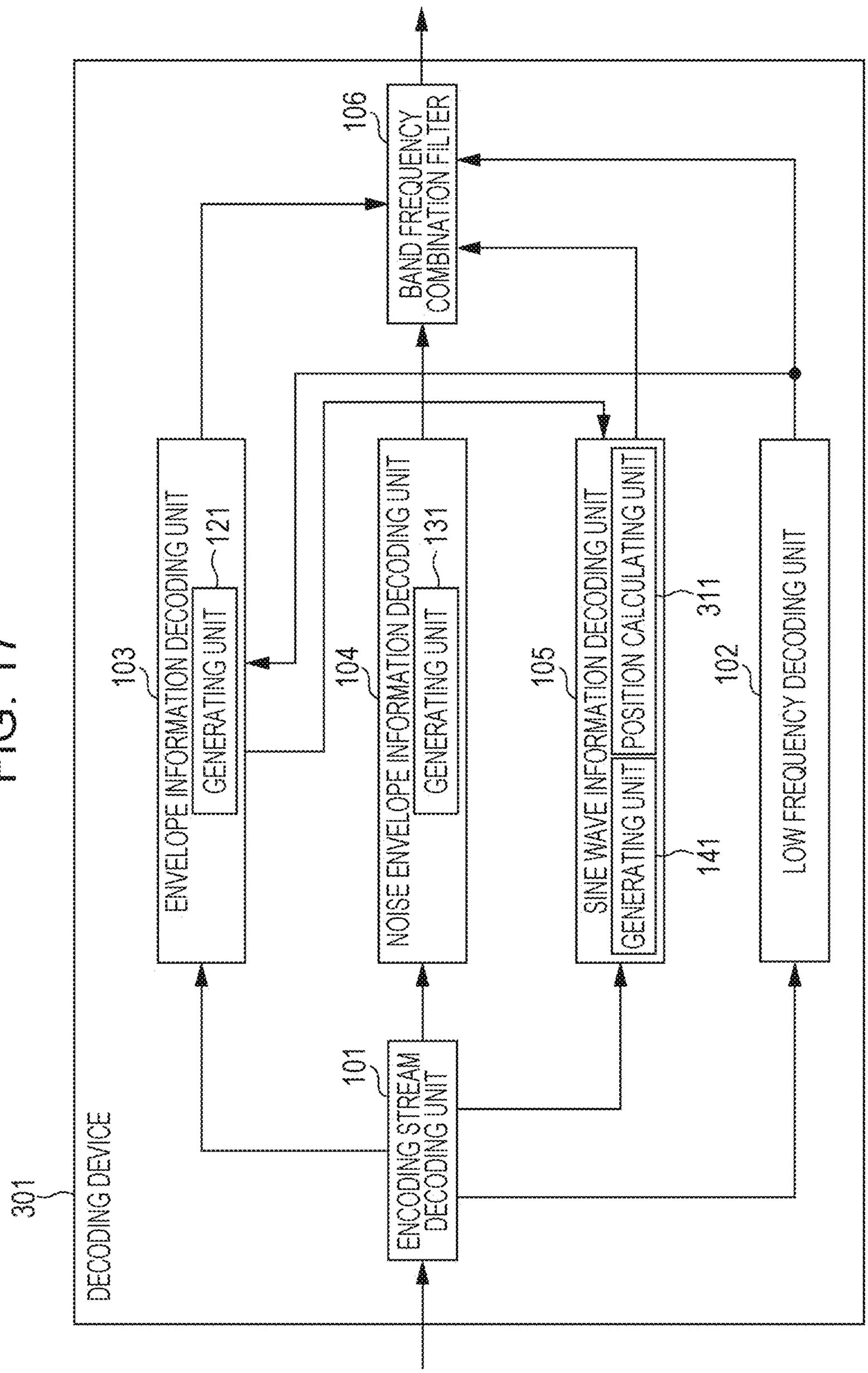
301
DECODING DEVICE
101
ENCODING STREAM DECODING UNIT
103
ENVELOPE INFORMATION DECODING UNIT
121
GENERATING UNIT
104
NOISE ENVELOPE INFORMATION DECODING UNIT
131
GENERATING UNIT
105
SINE WAVE INFORMATION DECODING UNIT
311
POSITION CALCULATING UNIT
141
GENERATING UNIT
102
LOW FREQUENCY DECODING UNIT
106
BAND FREQUENCY COMBINATION FILTER

FIG. 18

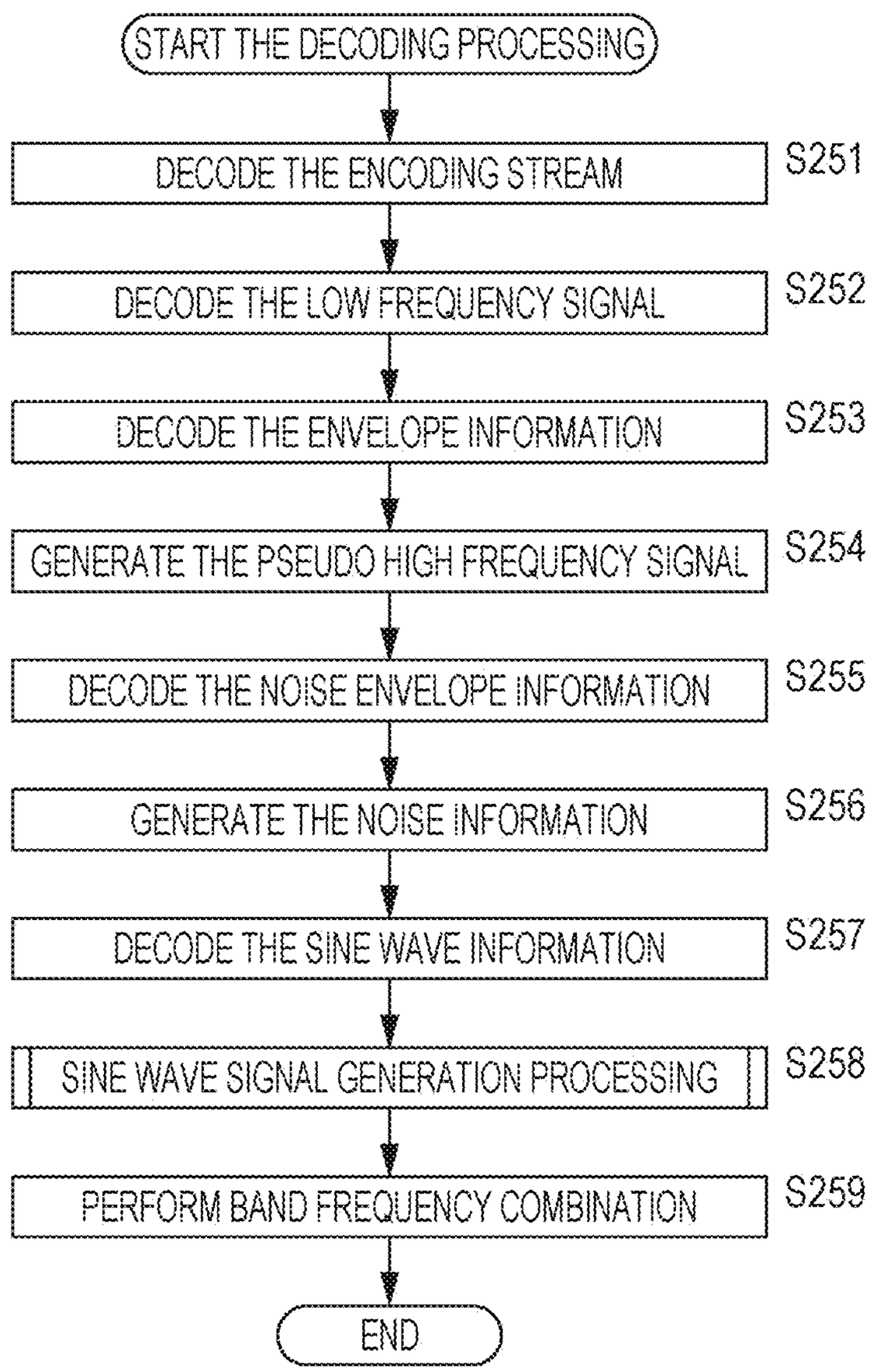
START THE DECODING PROCESSING
DECODE THE ENCODING STREAM
S251
DECODE THE LOW FREQUENCY SIGNAL
S252
DECODE THE ENVELOPE INFORMATION
S253
GENERATE THE PSEUDO HIGH FREQUENCY SIGNAL
S254
DECODE THE NOISE ENVELOPE INFORMATION
S255
GENERATE THE NOISE INFORMATION
S256
DECODE THE SINE WAVE INFORMATION
S257
SINE WAVE SIGNAL GENERATION PROCESSING
S258
PERFORM BAND FREQUENCY COMBINATION
S259
END

FIG. 19

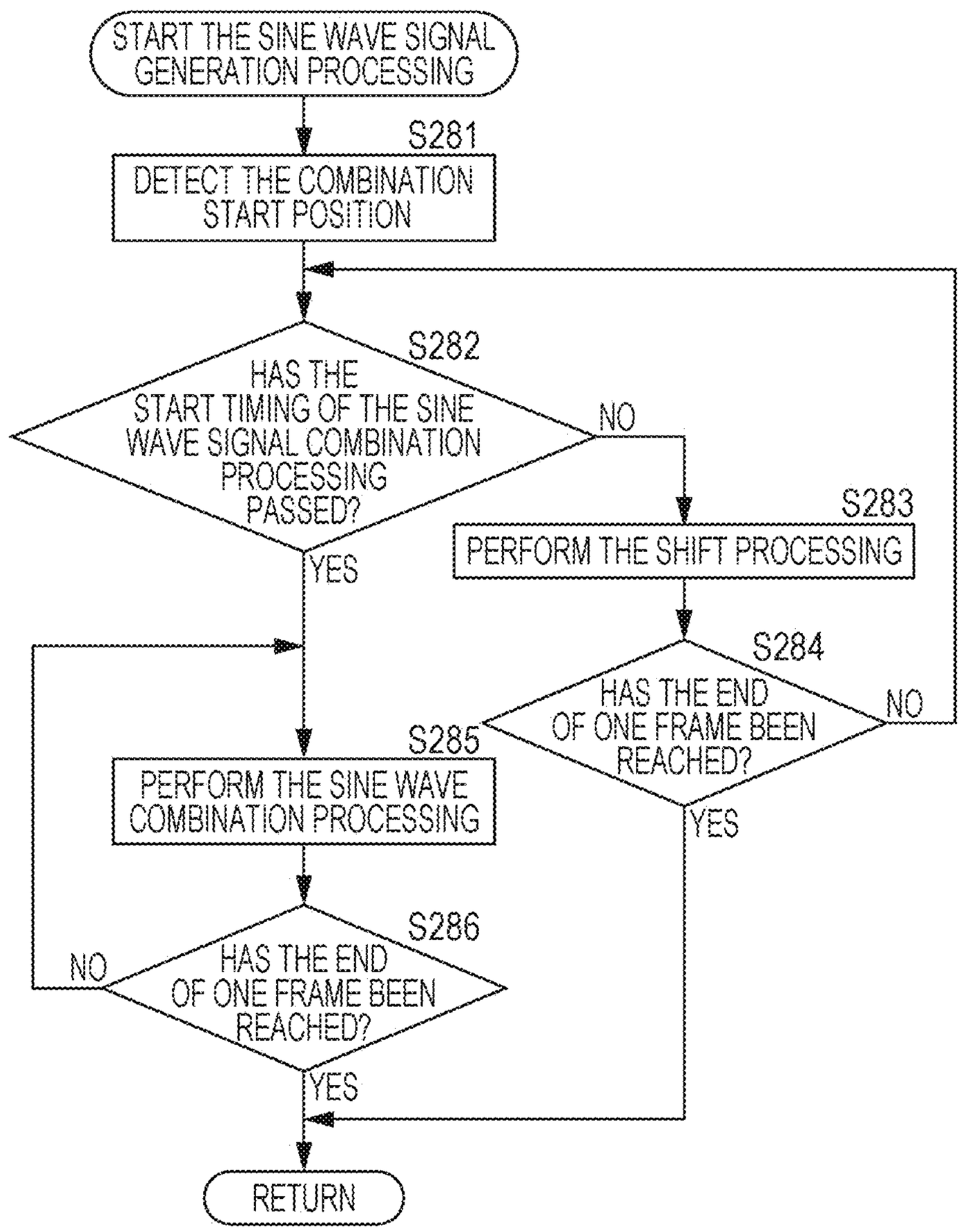
START THE SINE WAVE SIGNAL GENERATION PROCESSING
S281
DETECT THE COMBINATION START POSITION
S282
HAS THE START TIMING OF THE SINE WAVE SIGNAL COMBINATION PROCESSING PASSED?
NO
YES
S283
PERFORM THE SHIFT PROCESSING
S284
HAS THE END OF ONE FRAME BEEN REACHED?
NO
YES
S285
PERFORM THE SINE WAVE COMBINATION PROCESSING
S286
HAS THE END OF ONE FRAME BEEN REACHED?
NO
YES
RETURN

FIG. 20

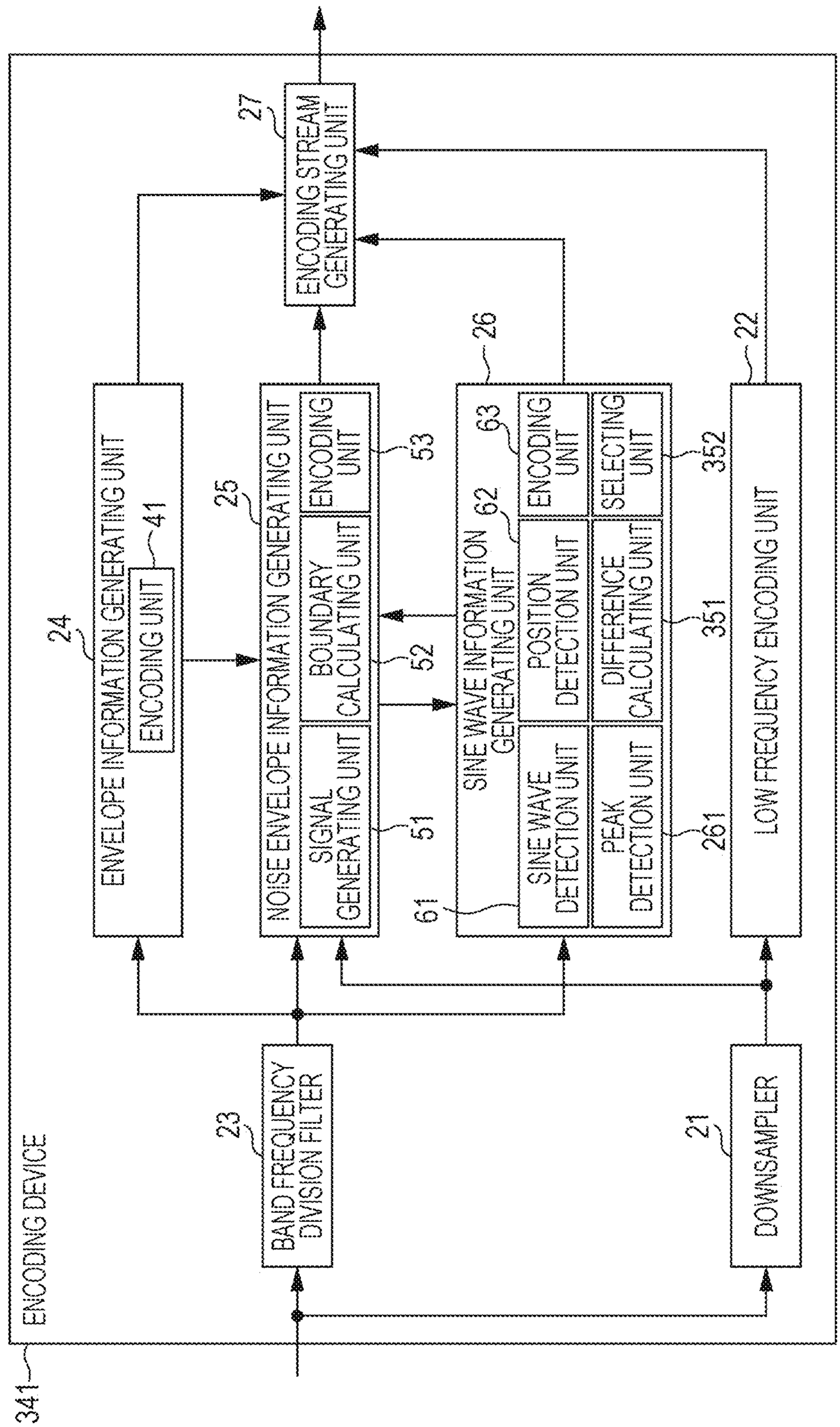
ENCODING DEVICE
341
BAND FREQUENCY DIVISION FILTER
23
DOWNSAMPLER
21
ENVELOPE INFORMATION GENERATING UNIT
24
ENCODING UNIT
41
NOISE ENVELOPE INFORMATION GENERATING UNIT
25
SIGNAL GENERATING UNIT
51
BOUNDARY CALCULATING UNIT
52
ENCODING UNIT
53
SINE WAVE INFORMATION GENERATING UNIT
26
SINE WAVE DETECTION UNIT
61
POSITION DETECTION UNIT
62
ENCODING UNIT
63
PEAK DETECTION UNIT
261
DIFFERENCE CALCULATING UNIT
351
SELECTING UNIT
352
LOW FREQUENCY ENCODING UNIT
22
ENCODING STREAM GENERATING UNIT
27

FIG. 21

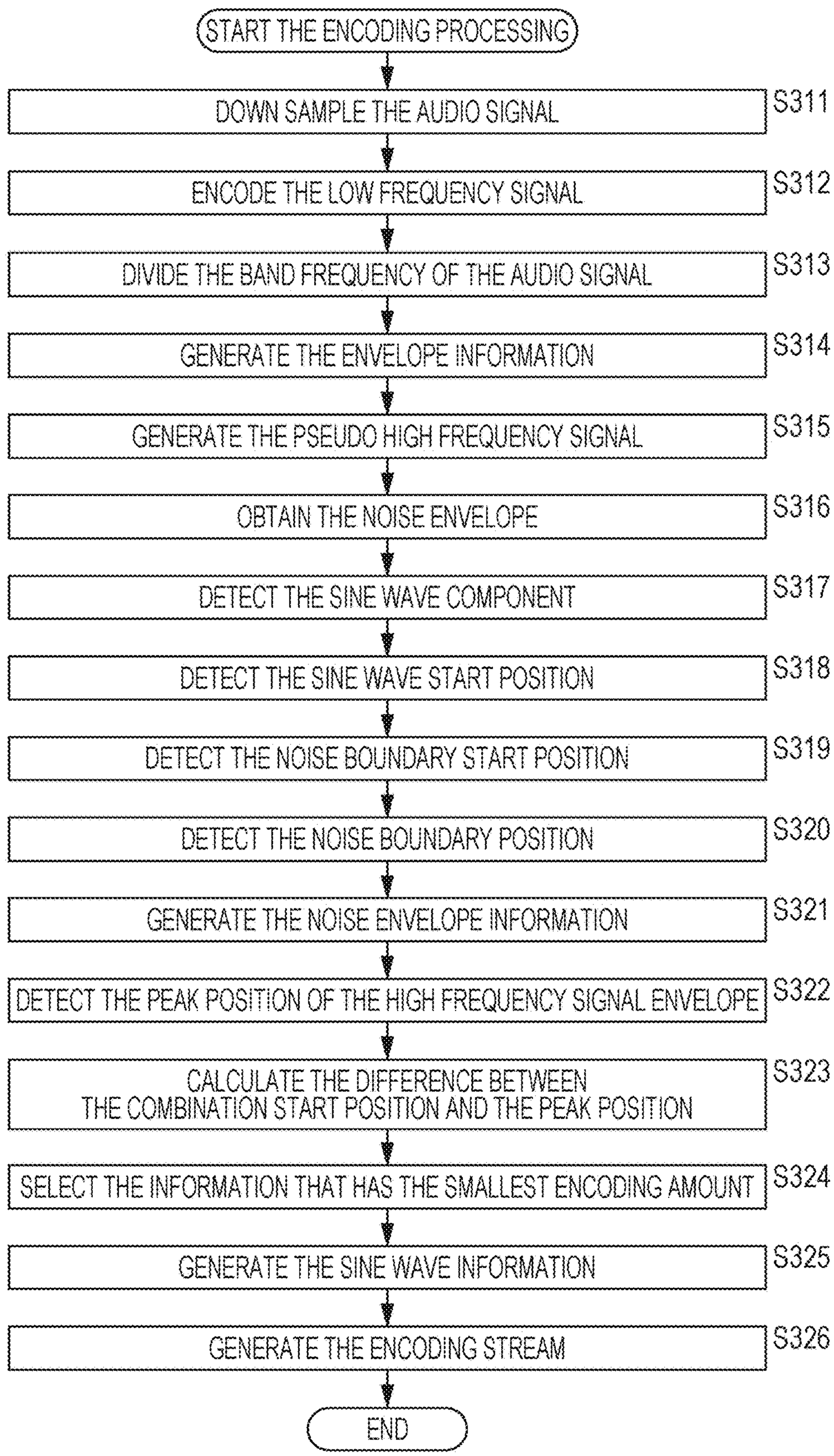
START THE ENCODING PROCESSING
DOWN SAMPLE THE AUDIO SIGNAL
S311
ENCODE THE LOW FREQUENCY SIGNAL
S312
DIVIDE THE BAND FREQUENCY OF THE AUDIO SIGNAL
S313
GENERATE THE ENVELOPE INFORMATION
S314
GENERATE THE PSEUDO HIGH FREQUENCY SIGNAL
S315
OBTAIN THE NOISE ENVELOPE
S316
DETECT THE SINE WAVE COMPONENT
S317
DETECT THE SINE WAVE START POSITION
S318
DETECT THE NOISE BOUNDARY START POSITION
S319
DETECT THE NOISE BOUNDARY POSITION
S320
GENERATE THE NOISE ENVELOPE INFORMATION
S321
DETECT THE PEAK POSITION OF THE HIGH FREQUENCY SIGNAL ENVELOPE
S322
CALCULATE THE DIFFERENCE BETWEEN THE COMBINATION START POSITION AND THE PEAK POSITION
S323
SELECT THE INFORMATION THAT HAS THE SMALLEST ENCODING AMOUNT
S324
GENERATE THE SINE WAVE INFORMATION
S325
GENERATE THE ENCODING STREAM
S326
END

FIG. 22

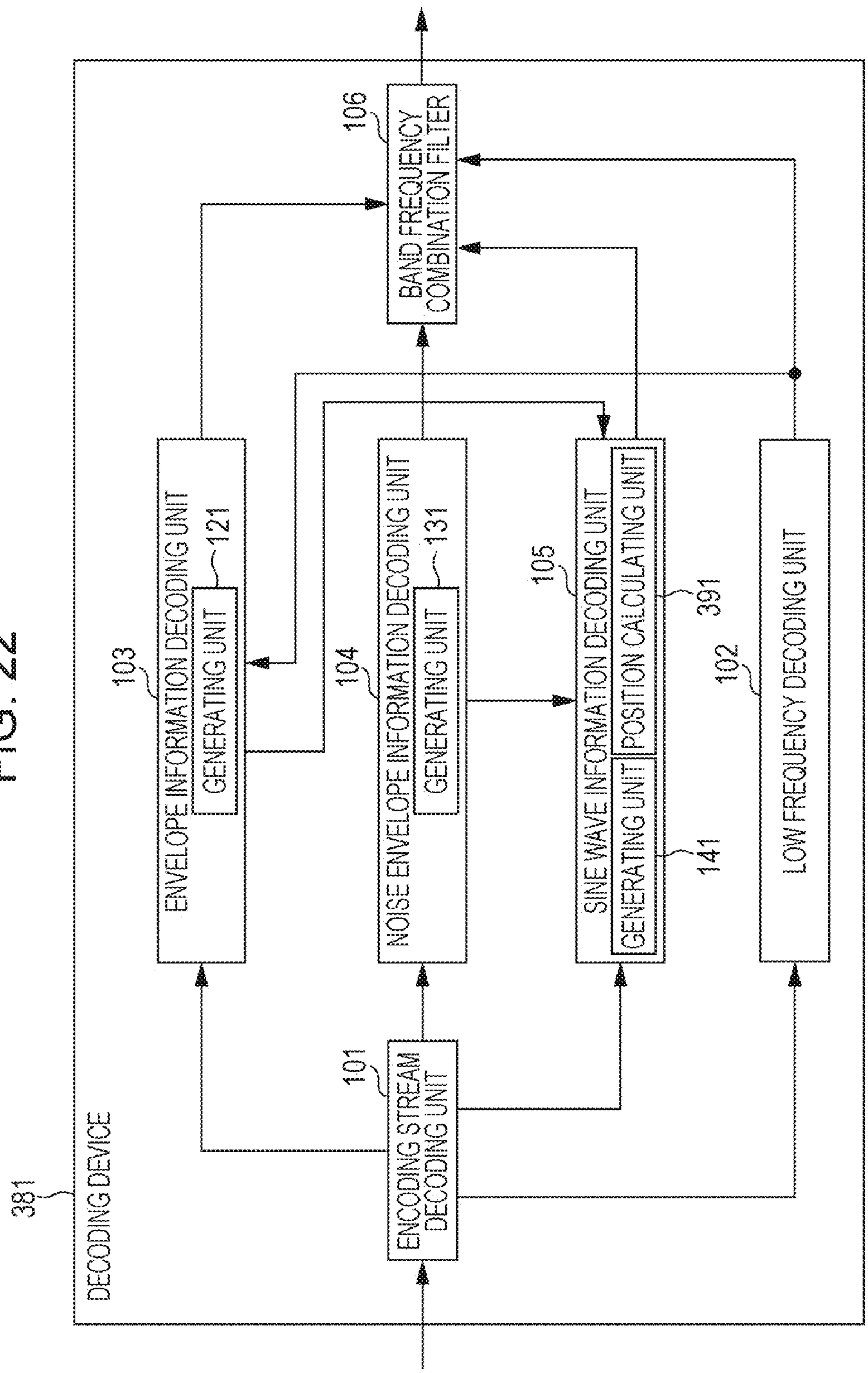
381
DECODING DEVICE
101
ENCODING STREAM DECODING UNIT
103
ENVELOPE INFORMATION DECODING UNIT
121
GENERATING UNIT
104
NOISE ENVELOPE INFORMATION DECODING UNIT
131
GENERATING UNIT
105
SINE WAVE INFORMATION DECODING UNIT
391
POSITION CALCULATING UNIT
141
GENERATING UNIT
102
LOW FREQUENCY DECODING UNIT
106
BAND FREQUENCY COMBINATION FILTER

FIG. 23

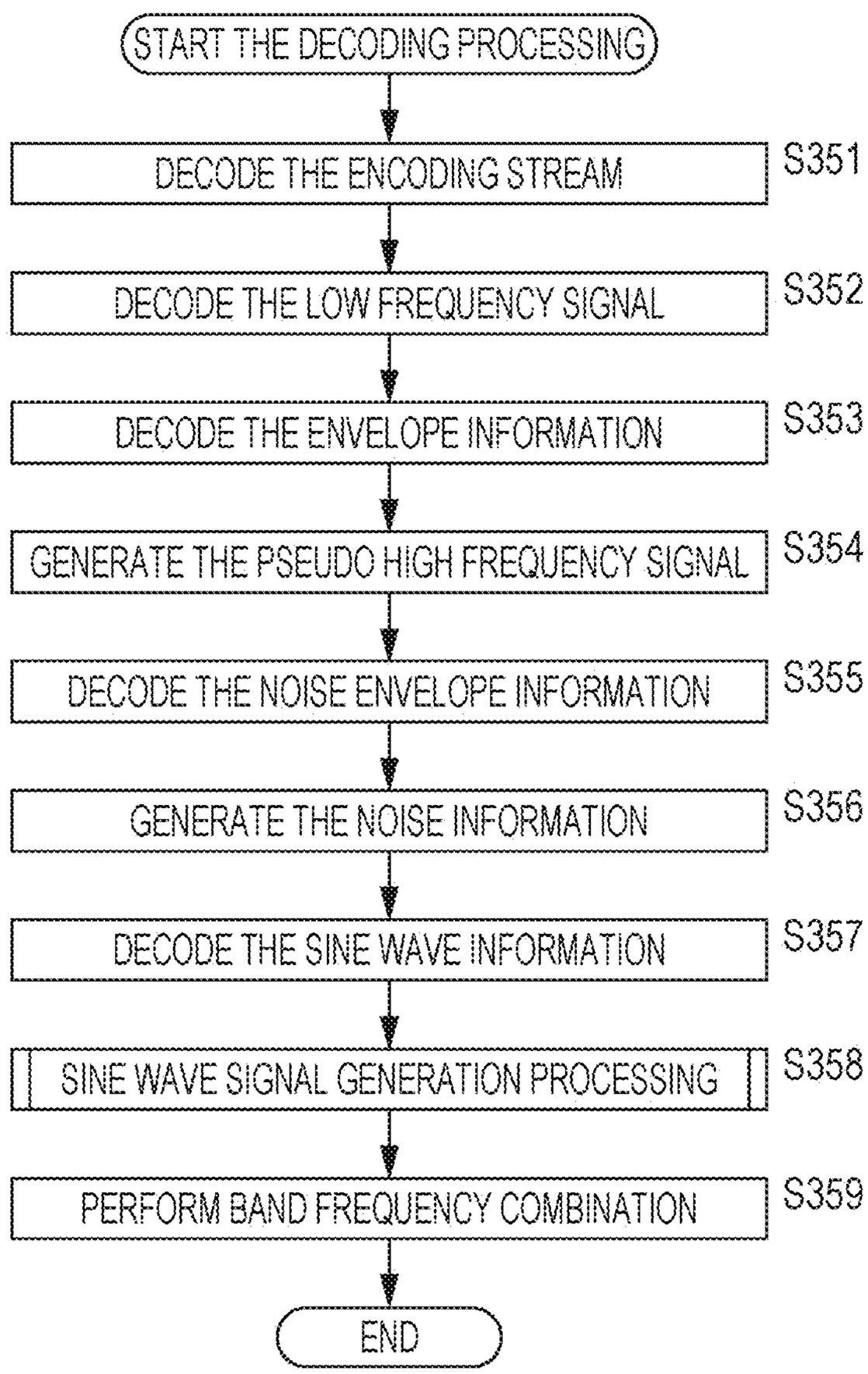
START THE DECODING PROCESSING
DECODE THE ENCODING STREAM
S351
DECODE THE LOW FREQUENCY SIGNAL
S352
DECODE THE ENVELOPE INFORMATION
S353
GENERATE THE PSEUDO HIGH FREQUENCY SIGNAL
S354
DECODE THE NOISE ENVELOPE INFORMATION
S355
GENERATE THE NOISE INFORMATION
S356
DECODE THE SINE WAVE INFORMATION
S357
SINE WAVE SIGNAL GENERATION PROCESSING
S358
PERFORM BAND FREQUENCY COMBINATION
S359
END

FIG. 24

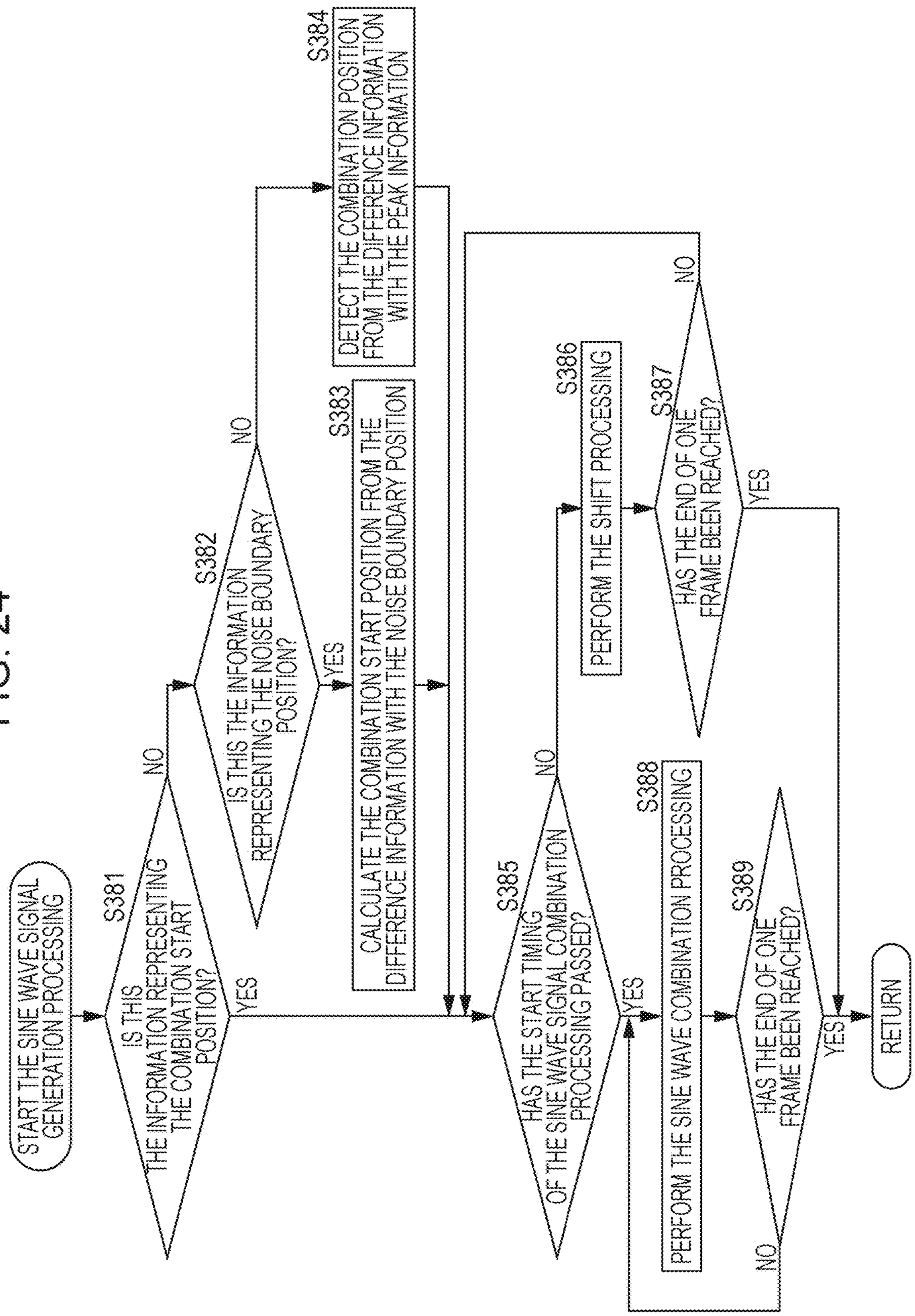
START THE SINE WAVE SIGNAL GENERATION PROCESSING
S381
IS THIS THE INFORMATION REPRESENTING THE COMBINATION START POSITION?
NO
YES
S382
IS THIS THE INFORMATION REPRESENTING THE NOISE BOUNDARY POSITION?
NO
YES
S383
CALCULATE THE COMBINATION START POSITION FROM THE DIFFERENCE INFORMATION WITH THE NOISE BOUNDARY POSITION
S384
DETECT THE COMBINATION POSITION FROM THE DIFFERENCE INFORMATION WITH THE PEAK INFORMATION
S385
HAS THE START TIMING OF THE SINE WAVE SIGNAL COMBINATION PROCESSING PASSED?
NO
YES
S386
PERFORM THE SHIFT PROCESSING
S387
HAS THE END OF ONE FRAME BEEN REACHED?
NO
YES
S388
PERFORM THE SINE WAVE COMBINATION PROCESSING
S389
HAS THE END OF ONE FRAME BEEN REACHED?
NO
YES
RETURN

FIG. 25

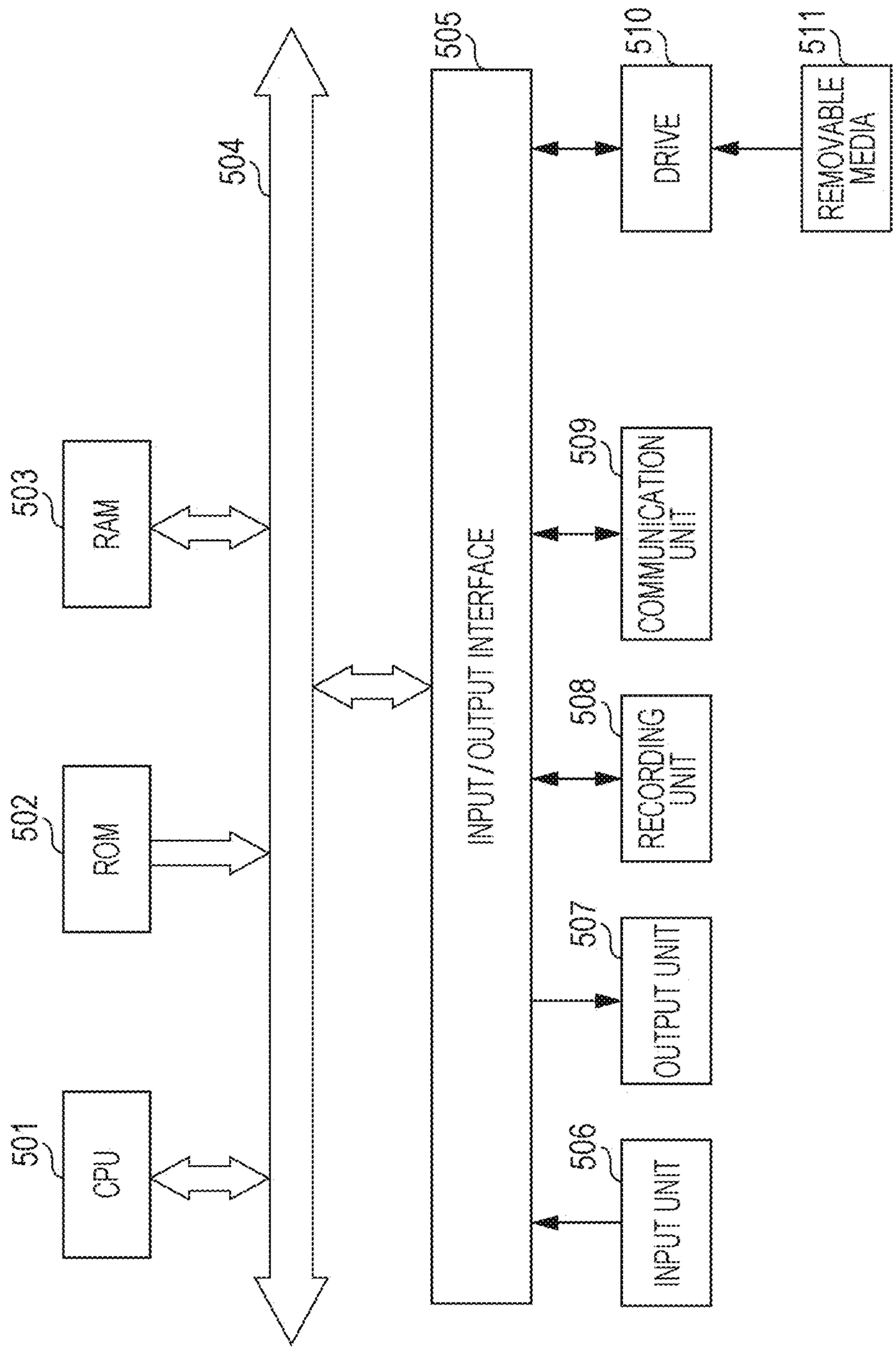
501
CPU
502
ROM
503
RAM
504
505
INPUT/OUTPUT INTERFACE
506
INPUT UNIT
507
OUTPUT UNIT
508
RECORDING UNIT
509
COMMUNICATION UNIT
510
DRIVE
511
REMOVABLE MEDIA

HIGH FREQUENCY REPLICATION UTILIZING WAVE AND NOISE INFORMATION IN ENCODING AND DECODING AUDIO SIGNALS

CROSS REFERENCE TO RELATED APPLICATIONS

This application is a continuation of and claims the benefit under 35 U.S.C. § 120 of U.S. patent application Ser. No. 15/424,741, titled "DEVICES AND METHODS FOR ENCODING AND DECODING AUDIO SIGNALS," filed on Feb. 3, 2017. Application Ser. No. 15/424,741 is a continuation of and claims the benefit under 35 U.S.C. § 120 of U.S. patent application Ser. No. 13/978,175, titled "SIGNAL PROCESSING DEVICE, METHOD, AND PROGRAM," filed on Jul. 3, 2013, which is a U.S. National Stage Application under 35 U.S.C. § 371 of International Application No. PCT/JP2012/050173, filed on Jan. 6, 2012, which claims priority to Japanese Priority Patent Application JP 2011-006233 filed on Jan. 14, 2011. The entire contents of these applications are hereby incorporated by reference in their entireties.

TECHNICAL FIELD

The present invention relates to a signal processing device, method, and program, and particularly, relates to a signal processing device, program, and method that enables audio to be obtained at a higher audio quality in a case of decoding encoding audio signals.

BACKGROUND ART

In general, audio signal encoding methods such as HE-AAC (High Efficiency MPEG (Moving Picture Experts Group) 4 AAC (Advanced Audio Coding)) (international standard ISO/IEC 14496-3) are known. With such an encoding method, a high frequency feature encoding technology such as SBR (Spectral Band Replication) is used (for example, refer to PTL 1).

According to SBR, when encoding audio signals, SBR information is output for generating high frequency components of the audio signal (hereafter, referred to as high frequency signal) together with low frequency components of the encoded audio signal (hereafter, low frequency signal). At the decoding device, while decoding the encoded low frequency signal, the high frequency signal is generated by using the low frequency signal obtained by the decoding and the SBR information, and so the audio signal made up of the low frequency signal and the high frequency signal is obtained.

This kind of SBR information includes envelope information mainly representing an envelope form for the high frequency components, and noise envelope information representing for obtaining a noise signal added during the generation of the high frequency components at the decoding device.

Here, the noise envelope information includes information representing a boundary position for dividing each SBR frame of the noise signal included in the high frequency components into two zones (hereafter, referred to as the noise boundary position), and information representing gain of noise signals in each zone. Therefore, at the decoding device, a gain adjustment is performed on each zone divided by the noise boundary position on a predetermined noise signal on the basis of the noise envelope information to establish a final noise signal. Further, with SBR, it is also possible to set the gain on the entire SBR frame without dividing the SBR frame of the noise signal into two zones.

When decoding the audio signal, the decoding device generates the high frequency components by combining a pseudo high frequency signal obtained from the low frequency signal and the envelope information, and the noise signal obtained from the noise envelope information, and generates the audio signal from the obtained high frequency components and the low frequency signal.

Also, with SBR, an encoding using sine wave synthesis is performed on an audio signal with a high tone characteristic. That is to say, when generating the high frequency components at the decoding side, a sine wave signal of a particular frequency is added to the pseudo high frequency signal in addition to the noise signal. In this case, the signal obtained from combining the pseudo high frequency signal, the noise signal, and the sine wave signal is set to the high frequency signal obtained as a prediction.

When using a sine wave signal to predict the high frequency components, a sine wave information representing the existence/non-existence of the sine wave signal in the SBR frame is included in the SBR information. Specifically, the combination start position of the sine wave signal used during decoding is either the start position of the SBR frame or the noise boundary position, and the sine wave information is made up of binary information representing the existence/non-existence of a sine wave signal combination in each zone of the SBR frame divided by the noise boundary position.

In this way, the noise signal and the sine wave signal added to the pseudo high frequency signal are components that are difficult to reproduce from the envelope information within the high frequency components of the source audio signal. Therefore, by combining the noise signal and the sine wave signal at a suitable position in the pseudo high frequency signal, it is possible to predict the high frequency components with higher accuracy, and it is possible to reproduce audio at a higher audio quality by performing band pass expansion using the high frequency components obtained by prediction.

CITATION LIST

Patent Literature

PTL 1: Japanese Unexamined Patent Application Publication (Translation of PCT Application) No. 2001-521648

SUMMARY OF INVENTION

Technical Problem

However, when using a sine wave signal to predict the high frequency components, the combination start position of the sine wave signal is set as the SBR frame start position or the noise boundary position, which may cause variance in the emergence start position of the sine wave components in the original audio signal, in some cases. Thus, it is not possible to reproduce the high frequency components with high accuracy, and may cause degradation in the audible perception of the audio signal obtained from the decoding.

Particularly with SBR, the frame length is fixed and not dependent on the sampling rate of the audio signal to be encoded, and so when the sampling rate is low, the absolute time length for one frame becomes longer. For this reason, the amount of variance (difference) in absolute time between

the emergence start position of the sine wave components in the source audio signal and the combination start position of the sine wave signal to be combined during decoding increases, and quantization noise becomes noticeable at these zones of variance.

The present technology has been made taking this kind of situation into consideration to enable the obtainment of audio at a higher audio quality when decoding audio signals.

Solution to Problem

A signal processing device of a first aspect of the present invention is provisioned with an extracting unit configured to extract an envelope information representing low frequency components of an audio signal and an envelope of high frequency components of the audio signal and a sine wave information used for identifying the frequency and emergence position of sine wave components included in the high frequency components, a pseudo high frequency generating unit configured to generate a pseudo high frequency signal configuring the high frequency components on the basis of the low frequency signal as the low frequency component and the envelope information, a sine wave generating unit configured to generate a sine wave signal at a frequency represented by the sine wave information and which designates the emergence position identified from the sine wave information as the start position, and a combining unit configured to combine the low frequency signal, the pseudo high frequency signal, and the sine wave signal to generate the audio signal.

The sine wave information may include information representing the distance from the start position of a frame of the high frequency component until the emergence start position of the sine wave component as information used for identifying the emergence position.

The signal processing device is further provisioned with a noise generating unit configured to generate a noise signal configuring the high frequency components by adjusting the gain of each zone of a predetermined signal, in which the zones are divided by a noise boundary position represented by a noise envelope information, on the basis of information representing the gain of each zone represented by the noise envelope information, wherein the extracting unit further extracts the noise envelope information, the sine wave information includes information representing the distance from the noise boundary position until the emergence start position of the sine wave components as the information used for identifying the emergence position, and the combining unit may combines the low frequency signal, the pseudo high frequency signal, the sine wave signal, and the noise signal to generate the audio signal.

The sine wave information may include information representing the distance from a peak position of the high frequency component envelope until the emergence start position of the sine wave component as the information used for identifying the emergence position.

The sine wave information may be extracted for each frame, and the sine wave generating unit may generate the sine wave signal for the high frequency components of each frame.

The sine wave information may be extracted for each band configuring the high frequency components, and the sine wave generating unit may generate the sine wave signal for each band.

A signal processing method or program of the first aspect of the present invention includes the steps of extracting the low frequency components of the audio signal, the envelope information representing the envelope of the high frequency component of the audio signal, and the sine wave information used for identifying the frequency and emergence start position of the sine wave component included in the high frequency components, generating the pseudo high frequency signal configuring the high frequency components on the basis of a low frequency signal as the low frequency component and the envelope information, generating a sine wave signal at the frequency represented by the sine wave information at a start position identified by the emergence start position from the sine wave information, and combining the low frequency signal, the pseudo high frequency signal, and the sine wave signal to generate the audio signal.

Regarding the first aspect of the present invention, the envelope information representing low frequency components of an audio signal and an envelope of high frequency components of the audio signal and sine wave information used for identifying the frequency and emergence position of sine wave components included in the high frequency components are extracted, a pseudo high frequency signal configuring the high frequency components is generated on the basis of the low frequency signal as the low frequency component and the envelope information, a sine wave signal at a frequency represented by the sine wave information and which designates the emergence position identified from the sine wave information as the start position is generated, and the low frequency signal, the pseudo high frequency signal, and the sine wave signal are combined to generate the audio signal.

A signal processing device of a second aspect of the present invention is provisioned with an envelope information generating unit configured to generate envelope information representing an envelope of a high frequency signal, which is the high frequency component of an audio signal, a sine wave information generating unit configured to detect a sine wave signal included in the high frequency signal, and generating a sine wave information used for identifying the frequency and emergence position of the sine wave signal, and an output unit configured to generate and output data made up from a low frequency signal, which is a low frequency component of the audio signal, the envelope information, and the sine wave information.

The sine wave information may include information representing the distance from the start position of a frame of the high frequency component until the emergence start position of the sine wave signal as information used for identifying the emergence position.

The signal processing device is further provisioned with a noise envelope information generating unit configured to detect a noise signal included in the high frequency signal, and generating a noise envelope information made up from information representing a noise boundary position which divides the noise signal into multiple zones and information representing the gain of the noise signal in the zone, wherein the sine wave information includes information representing the distance from the noise boundary position until the emergence start position of the sine wave components as the information used for identifying the emergence position, and the output unit may generate and output data made up from the low frequency signal, the envelope information, the sine wave information, and the noise envelope information.

The sine wave information may include information representing the distance from a peak position of the high frequency component envelope until the emergence start position of the sine wave component as the information used for identifying the emergence position.

The sine wave information may be generated for each frame.

The sine wave information may be generated for each band configuring the high frequency components.

A signal processing method or program of the second aspect of the present invention includes the steps of generating envelope information representing an envelope of a high frequency signal, which is the high frequency component of an audio signal, generating sine wave information included in the high frequency signal is detected, and a sine wave information used for identifying the frequency and emergence position of the sine wave signal, and generating and outputting data made up from a low frequency signal, which is the low frequency component of the audio signal, the envelope information, and the sine wave information.

Regarding the second aspect of the present invention, envelope information representing an envelope of a high frequency signal, which is a high frequency component of an audio signal, is generated, a sine wave signal included in the high frequency signal is detected, and a sine wave information used for identifying the frequency and emergence position of the sine wave signal is generated, and data made up from a low frequency signal, which is a low frequency component of the audio signal, the envelope information, and the sine wave information is generated and output.

Advantageous Effects of Invention

According to the first aspect and the second aspect of the present technology, audio may be obtained at a higher audio quality when decoding an audio signal.

BRIEF DESCRIPTION OF DRAWINGS

FIG. **1** is a diagram illustrating a configuration example of a first Embodiment of an encoding device.

FIG. **2** is a flowchart describing an encoding processing.

FIG. **3** is a diagram illustrating a combination start position of a sine wave signal.

FIG. **4** is a diagram illustrating a combination start position of a sine wave signal.

FIG. **5** is a diagram illustrating a configuration example of the first Embodiment of a decoding device.

FIG. **6** is a flowchart describing a decoding processing.

FIG. **7** is a flowchart describing a processing to generate the sine wave signal.

FIG. **8** is a diagram illustrating a configuration example of another encoding device.

FIG. **9** is a flowchart describing an encoding processing.

FIG. **10** is a diagram describing a combination start position of the sine wave signal.

FIG. **11** is a diagram illustrating a configuration example of another decoding device.

FIG. **12** is a flowchart describing a decoding processing.

FIG. **13** is a flowchart describing a processing to generate the sine wave signal.

FIG. **14** is a diagram illustrating a configuration example of another encoding device.

FIG. **15** is a flowchart describing an encoding processing.

FIG. **16** is a diagram describing a combination start position of the sine wave signal.

FIG. **17** is a diagram illustrating a configuration example of another decoding device.

FIG. **18** is a flowchart describing a decoding processing.

FIG. **19** is a flowchart describing a processing to generate the sine wave signal.

FIG. **20** is a diagram illustrating a configuration example of another encoding device.

FIG. **21** is a flowchart describing an encoding processing.

FIG. **22** is a diagram illustrating a configuration example of another decoding device.

FIG. **23** is a flowchart describing a decoding processing.

FIG. **24** is a flowchart describing a processing to generate the sine wave signal.

FIG. **25** is a diagram illustrating a configuration example of a computer.

DESCRIPTION OF EMBODIMENTS

Hereafter, the embodiments applying the present technology will be described with reference to the drawings.

First Embodiment

Configuration Example of Encoding Device

FIG. **1** is a diagram illustrating a configuration example of a first Embodiment of an encoding device applying the present technology.

An encoding device **11** is configured with a downsampler **21**, a low frequency encoding unit **22**, a band pass division filter **23**, an envelope information generating unit **24**, a noise envelope information generating unit **25**, a sine wave information generating unit **26**, and an encoding stream generating unit **27**. The encoding device **11** encodes and outputs an input audio signal, and the audio signal input into the encoding device **11** is supplied to the downsampler **21** and the band pass division filter **23**.

The downsampler **21** extracts the low frequency signal, which is the low frequency components of the audio signal, by downsampling the input audio signal, and supplies this to the low frequency encoding unit **22** and the noise envelope information generating unit **25**. Further, hereafter, the frequency band components at or below a certain frequency of the audio signal are referred to as the low frequency components, and the frequency band components higher than the low frequency components of the audio signal are referred to as the high frequency components.

The low frequency encoding unit **22** encodes the low frequency signal supplied from the downsampler **21**, and supplies this to the encoding stream generating unit **27**.

The band pass division filter **23** conducts a filter processing on the input audio signal, and performs a band pass division of the audio signal. As a result of this band pass division, the audio signal is divided into a signal of multiple band components. Further, hereafter, each band signal configuring the high frequency components from within each band signal obtained by the band pass division is referred to as the high frequency signal. The band pass division filter **23** supplies the high frequency signal from the high frequency side of each band obtained by the band pass division to the envelope information generating unit **24**, the noise envelope information generating unit **25**, and the sine wave information generating unit **26**.

The envelope information generating unit **24** generates an envelope information representing a form of an envelope (envelope) for the high frequency signal of the band for each band on the high frequency side on the basis of the high frequency signal supplied from the band pass division filter **23**, and then supplies this to the noise envelope information generating unit **25**. Also, the envelope information generating unit **24** is provisioned with an encoding unit **41**, and the encoding unit **41** encodes the envelope information gener-

ated by the envelope information generating unit **24**, and supplies this to the encoding stream generating unit **27**.

The noise envelope information generating unit **25** generates a noise envelope information while receiving information from the sine wave information generating unit **26** as necessary, on the basis of the high frequency signal from the band pass division filter **23** and the envelope information from the envelope information generating unit **24**.

Here, the noise envelope information is information made up from information representing a boundary position (noise boundary position) for dividing the noise signal included in the high frequency components of the audio signal, and information representing the noise signal gain for each zone divided at the noise boundary position. Further, the noise signal is a previously determined signal.

Also, the noise envelope information generating unit **25** is provisioned with a signal generating unit **51**, a boundary calculating unit **52**, and an encoding unit **53**. When generating noise envelope information, the signal generating unit **51** predicts the high frequency side of the audio signal for each band component on the basis of the low frequency signal from the downsampler **21** and the envelope information from the envelope information generating unit **24**.

The boundary calculating unit **52** determines the noise boundary position used for dividing the noise signal into multiple zones on the basis of the noise signal envelope obtained from the high frequency signal and a pseudo high frequency signal, which is the result of the high frequency side of each band pass component predicted during the generation of the noise envelope information. The encoding unit **53** encodes the noise envelope information generated by the noise envelope information generating unit **25**, and supplies this to the encoding stream generating unit **27**.

The sine wave information generating unit **26** generates sine wave information used for obtaining the sine wave signal included in the band for each band at the high frequency side while receiving the information from the noise envelope information generating unit **25** as necessary, on the basis of the high frequency signal supplied from the band pass division filter **23**.

Here, the sine wave information is information made up from information representing the existence/non-existence of a sine wave signal included in the high frequency components of the audio signal, and information used for identifying the emergence start position of the sine wave signal. That is to say, the sine wave information may be information made up from information representing the existence/non-existence of a sine wave signal to be combined with the pseudo high frequency components during decoding of the audio signal, and information representing the combination start position of the sine wave signal.

Also, then sine wave information generating unit **26** is provisioned with a sine wave detection unit **61**, a position detection unit **62**, and an encoding unit **63**. The sine wave detection unit **61** detects the existence/non-existence of the sine wave components from the high frequency signal during generation of the sine wave information.

When generating sine wave information, the position detection unit **62** detects the combination start position indicating where the combination of the sine wave signal should start, that is to say, the emergence start position of the sine wave signal, on the basis of the high frequency signal from the band pass division filter **23**. The encoding unit **63** encodes the sine wave information generated by the sine wave information generating unit **26**, and supplies this to the encoding stream generating unit **27**.

The encoding stream generating unit **27** encodes the low frequency signal from the low frequency encoding unit **22**, the envelope information from the envelope information generating unit **24**, the noise envelope information from the noise envelope information generating unit **25**, and the sine wave information from the sine wave information generating unit **26**, and outputs the encoding stream obtained from this encoding. That is to say, the low frequency signal, the envelope information, the noise envelope information, and the sine wave information are multiplexed into the encoding stream.

Description of Encoding Processing

Next, the operation of the encoding device **11** will be described.

When the audio signal is input into the encoding device **11**, and instructed to encode the audio signal, the encoding device **11** performs the encoding processing to perform the encoding of the audio signal, and outputs the encoding stream obtained as the result. Hereafter, the encoding processing by the encoding device **11** will be described with reference to the flowchart in FIG. **2**.

At a step S**11**, the downsampler **21** downsamples the input audio signal to generate the low frequency signal, and supplies this to the noise envelope information generating unit **25** and the low frequency encoding unit **22**.

At a step S**12**, the low frequency encoding unit **22** encodes the low frequency signal supplied from the downsampler **21**, and supplies this to the encoding stream generating unit **27**. For example, the low frequency signal is encoded by an encoding method such as MPEG4 AAC, MPEG2 AAC, CELP (Code Exited Linear Prediction), TCX (Transform Coded Excitation), or AMR (Adaptive Multi-Rate).

At a step S**13**, the band pass division filter **23** divides the input audio signal into bands, and the high frequency components obtained as the result are supplied to the envelope information generating unit **24** through the sine wave information generating unit **26**. For example, high frequency signals may be obtained as high frequency components from **64** different bands.

At a step S**14**, the envelope information generating unit **24** generates the envelope information for each band on the basis of the high frequency signal for each band supplied from the band pass division filter **23**. For example, the envelope information generating unit **24** may designate a zone made up of **32** samples of the high frequency signal as one frame, and generate the envelope information for each band per frame.

Specifically, the envelope information generating unit **24** obtains an average sample value of two samples of the high frequency signal neighboring on a time line in one frame, and this average value becomes the new high frequency signal sample value. As a result, the high frequency signal for one frame is converted from a 32-sample signal to a 16-sample signal.

Next, the envelope information generating unit **24** performs a difference encoding on the high frequency signal that is now **16** samples, and the information obtained as the result becomes the envelope information. For example, the difference between the sample value of two high frequency signal samples to be processed neighboring on a time line is obtained by the difference encoding, and this difference becomes the envelope information. Also, the envelope information may be made up of the difference between the sample value of a sample of the high frequency signal of the band to be processed and the sample value of a sample in a

band adjacent to that band, in the same position as the high frequency signal band, for example.

The envelope information obtained in this way is the information representing the form of the envelope for one frame of the high frequency signal. The encoding unit **41** performs a variable length encoding such as Huffman encoding on the generated envelope information, and supplies the encoded envelope information to the encoding stream generating unit **27**. Also, the envelope information generating unit **24** supplies the envelope information to the noise envelope information generating unit **25**.

Further, hereafter, the high frequency signal will continue to be described as that processed in units of one frame configured of 32 samples. Also, hereafter, the zone configured from two samples of the high frequency signal (audio signal) will be called one timeslot.

At a step S**15**, the signal generating unit **51** in the noise envelope information generating unit **25** generates the pseudo high frequency signal for each band at the high frequency side on the basis of the envelope information supplied from the envelope information generating unit **24** and the low frequency signal supplied from the downsampler **21**.

For example, the signal generating unit **51** extracts the zone for one frame of a predetermined band of the low frequency signal, and manipulates the extracted low frequency signal into the envelope form represented by the envelope information. That is to say, the sample value of the sample of the low frequency signal is increased or decreased so that the position gain corresponding to the sample fits in the envelope represented by the envelope information, and the signal obtained as the result becomes the pseudo high frequency signal.

The pseudo high frequency signal obtained in this way has the almost the same envelope form as the envelope of the actual high frequency signal represented by the envelope information. That is to say, the pseudo high frequency signal is generated from the low frequency signal and the envelope information.

At a step S**16**, the noise envelope information generating unit **25** extracts the difference between the high frequency signal and the pseudo high frequency signal for each band at the high frequency side, and obtains the envelope for the noise signal (hereafter, referred to as the noise envelope).

Further, more specifically, the noise envelope obtained at step S**16** is a virtual noise envelope. The receiving side of the encoding stream output from the encoding device **11** predicts the high frequency components of the audio signal during the decoding of the audio signal, but this prediction is performed by combining of the pseudo high frequency signal, the noise signal, and the sine wave signal.

That is to say, the high frequency components of the actual audio signal are assumed to include the pseudo high frequency signal, the noise signal, and the sine wave signal. Here, at the step S**16**, the difference between the high frequency signal and the pseudo high frequency signal is obtained, and this difference should be the combination of the noise signal and the sine wave signal. Thus, the difference obtained in this way is considered as the envelope of the noise signal including the sine wave signal.

The noise envelope information generating unit **25** supplies the virtual noise envelope for each band at the high frequency side obtained as previously described to the sine wave information generating unit **26**.

At a step S**17**, the sine wave detection unit **61** in the sine wave information generating unit **26** detects the sine wave components from the high frequency signal for each band on the basis of the virtual noise envelope supplied from the noise envelope information generating unit **25**.

For example, the sine wave detection unit **61** conducts a frequency conversion on the virtual noise envelope, and converts the noise envelope into frequency components. Then, when there are frequency spikes having high power in the obtained frequency components, the sine wave detection unit **61** recognizes these frequency components as the sine wave components. Specifically, when the difference between the power of the frequency under observation and the power of other surrounding frequencies is at or above a predetermined threshold, the frequency under observation is recognized as the sine wave component. The sine wave signal for the frequency detected in this way is determined as the sine wave signal included in the actual high frequency components.

At a step S**18**, the position detection unit **62** in the sine wave information generating unit **26** detects, for each band, the combination start position where the sine wave signal, which is the detected sine wave component, should be combined on the basis of the high frequency signal supplied from the band pass division filter **23**.

For example, the position detection unit **62** obtains the difference between the average sample value of the samples included in one timeslot of the high frequency signal, in units of timeslots, and the average sample value of samples included in one timeslot of the detected sine wave signal. Then, the position detection unit **62** determines the combination start position looking from the beginning of the zone for one frame as the final position (start position of the timeslot or the final position of the sample) where the value of the obtained difference is at or above a predetermined threshold. This combination start position is the emergence start position of the sine wave signal included in the actual high frequency signals, from a timing after the combination start position, the difference in the average sample values of the high frequency signal and the sine wave signal should decrease.

Also, for each band at the high frequency side, the sine wave information generating unit **26** supplies the information representing whether or not the sine wave has been detected from the bands, the information representing the frequency and power of the detected sine wave signal, and the combination start position to the noise envelope information generating unit **25**.

At a step S**19**, the sine wave information generating unit **26** generates the sine wave information for each band at the high frequency side, and supplies this to the encoding stream generating unit **27**.

For example, the sine wave information generating unit **26** designates the information made up from the information representing whether or not the sine wave signal has been detected from the high frequency band and the combination start position as the sine wave information. Also, during the generation of the sine wave information, the encoding unit **63** in the sine wave information generating unit **26** performs the variable length encoding of the information representing the combination start position.

Here, the information representing whether or not the sine wave signal has been detected is, more specifically, information representing which frequency in the high frequency band is the sine wave component. For example, when multiple sine wave signals are detected from the high frequency band, the information used for identifying the frequencies of these sine wave signals is designated as the information representing whether or not the sine wave signals were detected. Also, when multiple sine wave signals

are detected from the high frequency band, information representing the combination start position is generated for each sine wave signal.

Also, when the sine wave component is not detected from the high frequency band, the sine wave information made up only of information representing whether or not the sine wave signal has been detected is transmitted to the decoding side. That is to say, the sine wave information not including information representing the combination start position is transmitted.

Further, the encoding device **11** may select whether or not to transmit the sine wave information to the decoding side per frame. In this way, by enabling the transmission of the sine wave information to be selectable, transfer efficiency of the encoding stream in increased, and at the same time, a resetting of the time information of the sine wave components may be performed. As a result, when starting the decoding processing from an arbitrary frame within the stream on the decoding side of the encoding stream, the sine wave component from the frame including the information representing the combination start position may be started.

Further, as illustrated in FIG. **3** for example, the combination start position on the decoding side has conventionally been either the start position of the frame or the noise boundary position. Further, the horizontal axis in the figure represents the time line. Also, an arrow FS**1** and an arrow FE**1** in FIG. **3** represent the start position and end position of the frame, respectively.

According to the example in FIG. **3**, the position represented by an arrow N**1** is the noise boundary position, and the combination start position of the sine wave signal is also in the same position as the noise boundary position. Therefore, the sine wave signal is combined in a zone from the position represented by the arrow N**1** until the end position of the frame.

However, when the position that sine wave signal included in the actual high frequency components arrives is after the noise boundary position represented by the arrow N**1**, for example, at the decoding side, unnecessary sine wave components are added in the space from the noise boundary position to the emergence start position of the actual sine wave signal. In this case, there is an unpleasant audible sensation in the audio signal obtained by the decoding, and audio at a high audio quality is unable to be obtained.

Regarding this, as illustrated in FIG. **4**, according to the encoding device **11**, the combination start position output to the decoding side is not limited to being the same as the noise boundary position. Further, the horizontal axis in the figure represents the time line. Also, an arrow FS**2** and arrow FE**2** in FIG. **4** represent the start position and the end position of the frame, respectively.

According to the example in FIG. **4**, the position represented by an arrow N**2** represents the noise boundary position. Also, the combination start position of the sine wave signal is the position represented by an arrow G**1**, and this combination start position is before the noise boundary position. According to this example, the sine wave signal is combined in the zone from the combination start position represented by the arrow G**1** until the end position of the frame.

Also, in this case, the information representing the length of time (time distance) from the start position of the frame represented by the arrow FS**2** until the combination start position represented by the arrow G**1** is designated as the information representing the combination start position. Here, the time from the beginning of the frame until the combination start position is an integral multiple of the timeslot length.

In this way, by specifying the combination start position independent of the noise boundary position, the combination of unnecessary signals is prevented during the decoding of the audio signal, and audio at a higher audio quality may be obtained.

Further, the sine wave information has been previously described as information generated representing the combination start position for the high frequency side for each band, but the sine wave information may use a representative value of the combination start positions for these bands shared for each band configuring the high frequency. In such a case, for example, the information representing the combination start position for the band out of multiple bands configuring the high frequency which has the sine wave signal of the highest power becomes the sine wave information.

Also, the information representing the combination start position has been described above as the sine wave information to which variable length encoding has been performed, but the information representing the combination start position may not be encoded.

Returning to the description of the flowchart in FIG. **2**, at the step S**19**, the sine wave information is generated, and afterwards, processing proceeds to a step S**20**.

At a step S**20**, the boundary calculating unit **52** in the noise envelope information generating unit **25** detects the noise boundary position for each band at the high frequency side.

For example, the boundary calculating unit **52** generates the sine wave information included in the frame for the band configuring the high frequency on the basis of the information representing whether or not the sine wave signal has been detected, the information representing the frequency and power of the sine wave signal, and the combination start position. For example, when the sine wave signal is detected, the zone from the beginning of the frame until the combination start position is designated as a silent zone, and the zone from this point is made up of the sine wave component of a predetermined amplitude of the detected frequency. At this time, the amplitude of the sine wave signal is determined from the information representing the power of the sine wave signal supplied from the sine wave information generating unit **26**. Also, when the sine wave signal is not detected, the amplitude of the sine wave signal is set to zero.

Next, the boundary calculating unit **52** subtracts the sine wave signal obtained in this way from the virtual noise envelope obtained at a step S**16** to obtain the final noise envelope. Then, the boundary calculating unit **52** determines the noise boundary position according to the distribution of the final noise envelope gain.

That is to say, the boundary calculating unit **52** divides the frame into two zones as necessary based on the distribution of the gain of the final noise envelope. Specifically, when the noise envelope gain is nearly the same value for the entire frame of the band being processed, the division of the frame is not performed. That is to say, there is no noise boundary position.

Also, when there is a large difference in the gain distribution of the noise envelope at a predetermined position in the frame for the zone before this position and the zone after this position, this position becomes the noise boundary position. Further, the noise boundary position is designated as the timeslot boundary position.

At a step S**21**, the noise envelope information generating unit **25** generates the noise envelope information for each band at the high frequency side, and supplies this to the encoding stream generating unit **27**.

For example, the noise envelope information generating unit **25** designates the noise envelope information as the information made up from the noise boundary position, and the noise signal gain in each zone in the frame divided by this noise boundary position. At this time, the encoding unit **53** performs an encoding of the information representing the noise boundary position, and a variable length encoding of the information representing the gain for each divided zone.

Here, the gain for each divided zone is the average gain value of the noise envelope in these zones, for example. That is to say, the frame being processed is divided into two zones by the noise boundary position. In this case, the gain for the zone from the beginning of the frame until the noise boundary position is the average gain value for each position of the final noise envelope in this zone.

At a step S**22**, the encoding stream generating unit **27** encodes the low frequency signal from the low frequency encoding unit **22**, the envelope information from the envelope information generating unit **24**, the noise envelope information from the noise envelope information generating unit **25**, and the sine wave information from the sine wave information generating unit **26**, and generates the encoding stream. Then, the encoding stream generating unit **27** transmits the encoding stream obtained from the encoding to the decoding device, etc., and the encoding processing terminates.

In this way, the encoding device **11** generates and outputs the encoding stream made up from the low frequency signal, the envelope information, the noise envelope information, and the sine wave information. At this time, by a more accurate combination start position of the sine wave signal being detected, and generating the sine wave information including this combination start position, a more accurate sine wave signal combination may be performed at the decoding side of the audio signal, which results in the obtainment of audio at a higher audio quality.

Further, the low frequency signal generated by the downsampler **21** has been described above to be supplied to the noise envelope information generating unit **25**, but the low frequency signal supplied to the noise envelope information generating unit **25** may be a low frequency signal obtained by division of the bands by the band pass division filter **23**. Also, the low frequency signal encoded by the low frequency encoding unit **22** is obtained by decoding, but this may also be supplied to the noise envelope information generating unit **25**.

Configuration Example of Decoding Device

Next, a decoding device which receives the encoding stream output from the encoding device **11** in FIG. **1**, and obtains the audio signal from the encoding stream will be described. This kind of decoding device is configured as illustrated in FIG. **5**, for example.

A decoding device **91** in FIG. **5** is configured with an encoding stream decoding unit **101**, a low frequency decoding unit **102**, an envelope information decoding unit **103**, a noise envelope information decoding unit **104**, a sine wave information decoding unit **105**, and a band pass combination filter **106**.

The encoding stream decoding unit **101** receives and decodes the encoding stream transmitted from the encoding device **11**. That is to say, the encoding stream decoding unit **101** inverse multiplexes the encoding stream, and the low frequency signal, the envelope information, the noise envelope information, and the sine wave information obtained as a result is supplied to the low frequency decoding unit **102**, the envelope information decoding unit **103**, the noise envelope information decoding unit **104**, and the sine wave information decoding unit **105**, respectively.

The low frequency decoding unit **102** decodes the low frequency signal supplied from the encoding stream decoding unit **101**, and supplies this to the envelope information decoding unit **103** and the band pass combination filter **106**.

The envelope information decoding unit **103** decodes the envelope information supplied from the encoding stream decoding unit **101**, and also supplies the decoded envelope information to the sine wave information decoding unit **105**. Also, the envelope information decoding unit **103** is provisioned with a generating unit **121**, and the generating unit **121** generates envelop information and the pseudo high frequency signal based on the low frequency signal from the low frequency decoding unit **102**, and supplies this to the band pass combination filter **106**.

The noise envelope information decoding unit **104** decodes the noise envelope information supplied from the encoding stream decoding unit **101**. Also, the noise envelope information decoding unit **104** is provisioned with a generating unit **131**, and the generating unit **131** generates the noise signal based on the noise envelope information, and supplies this to the band pass combination filter **106**.

The sine wave information decoding unit **105** decodes the sine wave information supplied from the encoding stream decoding unit **101**. Also, the sine wave information decoding unit **105** is provisioned with a generating unit **141**, and the generating unit **141** generates the sine wave signal based on the sine wave information and envelope information from the envelope information decoding unit **103**, and supplies this to the band pass combination filter **106**.

The band pass combination filter **106** combines the bands of the low frequency signal from the low frequency decoding unit **102**, the pseudo high frequency signal from the envelope information decoding unit **103**, the noise signal from the noise envelope information decoding unit **104**, and the sine wave signal from the sine wave information decoding unit **105** to generate the audio signal. The band pass combination filter **106** outputs the signal obtained from combining the bands as the decoded audio signal to a downstream player unit or similar.

Description of Decoding Processing

When the encoding stream from the encoding device **11** is transmitted to the decoding device **91** illustrated in FIG. **5**, the decoding device **91** performs the decoding processing in units of frames to decode the audio signal. Hereafter, the decoding processing performed by the decoding device **91** will be described with reference to FIG. **6**.

At a step **51**, the encoding stream decoding unit **101** decodes the encoding stream received from the encoding device **11**, and supplies the low frequency signal, envelope information, noise envelope information, and sine wave information obtained as a result to the low frequency decoding unit **102** through the sine wave information decoding unit **105**.

At a step S**52**, the low frequency decoding unit **102** decoded the low frequency signal from the encoding stream decoding unit **101**, and supplies this to the envelope information decoding unit **103** and the band pass combination filter **106**.

At a step S**53**, the envelope information decoding unit **103** decodes the envelope information from the encoding stream decoding unit **101**. Also, the envelope information decoding unit **103** supplies the decoded envelope information to the sine wave information decoding unit **105**.

At a step S**54**, the generating unit **121** in the envelope information decoding unit **103** generates the pseudo high frequency signal for each band at the high frequency side, on the basis of the low frequency signal from the low frequency decoding unit **102**, and supplies this to the band pass combination filter **106**. For example, the generating unit **121** generates the pseudo high frequency signal by extracting the zone for one frame regarding a predetermined band of the low frequency signal, and increasing or decreasing the low frequency signal so that the sample value of the extracted low frequency signal sample matches the gain of the position in the envelope represented by the envelope information corresponding to this sample.

At a step S**55**, the noise envelope information decoding unit **104** decodes the noise envelope information from the encoding stream decoding unit **101**.

At a step S**56**, the generating unit **131** in the noise envelope information decoding unit **104** generates the noise signal for each band at the high frequency side, on the basis of the noise envelope information, and supplies this to the band pass combination filter **106**. That is to say, the generating unit **131** generates the noise signal by adjusting the gain for each zone of a predetermined signal which has been divided into zones by the noise boundary position represented by the noise envelope information so that the gain of this signal matches the gain represented by the noise envelope information.

At a step S**57**, the sine wave information decoding unit **105** decodes the sine wave information from the encoding stream decoding unit **101**. For example, the information representing the combination start position included in the sine wave information is decoded as necessary.

At a step S**58**, the sine wave information decoding unit **105** performs the sine wave signal generation processing to generate the sine wave signal for each band at the high frequency side, and supplies this to the band pass combination filter **106**. Further, the details of the sine wave signal generation processing will be described later.

At a step S**59**, the band pass combination filter **106** combines the bands of the low frequency signal from the low frequency decoding unit **102**, the pseudo high frequency signal from the envelope information decoding unit **103**, the noise signal from the noise envelope information decoding unit **104**, and the sine wave signal from the sine wave information decoding unit **105**.

That is to say, the audio signal is generated by performing the band combination by adding the samples at each timing from the low frequency signal, the pseudo high frequency signal for each band, the noise signal for each band, and the sine wave signal for each band input from the low frequency decoding unit **102** through the sine wave information decoding unit **105**. Here, the signal made up of the pseudo high frequency signal, the noise signal, and the sine wave signal is the high frequency component obtained by prediction.

When the audio signal has been obtained by the band combination, the band pass combination filter **106** outputs this audio signal to a downstream player unit or similar, and the decoding processing terminates. This decoding processing is performed per frame, and as the next frame of the encoding stream is input, the decoding device **91** performs the decoding processing on this frame of the encoding stream.

In this way, the decoding device **91** predicts the high frequency components on the basis of the low frequency signal, the envelope information, the noise envelope information, and the sine wave information, and generates the audio signal by expanding the bands from the high frequency signal obtained by prediction and the decoded low frequency signal. At this time, by using the sine wave information representing a more accurate combination start position of the sine wave signal, a more accurate sine wave signal combination may be performed, and so audio at a higher audio quality may be obtained.

Description of the Sine Wave Signal Generation Processing

Next, the sine wave signal generation processing corresponding to step S**58** of the processing in FIG. **6** will be described with reference to the flowchart in FIG. **7**.

At a step S**81**, the generating unit **141** in the sine wave information decoding unit **105** determines whether or not the start timing for the sine wave signal combination processing has passed based on the combination start position and the information included in the sine wave information representing whether or not the sine wave signal has been detected.

For example, the generating unit **141** generates the sine wave signal as the sine wave component configuring the high frequency component by designating the beginning of the frame as the emergence start position and the end of the frame as the emergence end position.

Here, the frequency of the sine wave signal designated as the sine wave component configuring the high frequency component is identified by the information included in the sine wave information representing whether or not the sine wave signal has been detected. Also, the amplitude of the sine wave signal frequency identified by the sine wave information is identified from the envelope information supplied from the envelope information decoding unit **103** through the sine wave information decoding unit **105**. For example, the generating unit **141** converts the envelope information into frequencies, and obtains the amplitude of the sine wave signal based on the power of the sine wave signal frequency from among the power of all frequencies obtained as a result.

Next, the generating unit **141** selects the sample in the start position of the timeslot for one frame of the sine wave signal as the sample (timeslot) to be processed in order from the beginning of the frame. Then, the generating unit **141** determines whether or not the selected sample position is the sample position represented by the combination start position, that is to say the timing at which the combination of the sine wave signal should be started. For example, when information included in the sine wave information indicates that the sine wave signal has not been detected, this will continue to be determined that the start timing of the sine wave combination processing has not passed.

When it has been determined that the start timing has not passed at the step S**81**, at a step S**82**, the generating unit **141** shifts the generated sine wave signal backward on a timeline by one timeslot. As a result, the emergence start position of the sine wave signal is shifted backward on a timeline. When the shifting of the sine wave signal is performed, the sine wave has not yet emerged in the timeslot zone to be processed, and so the sine wave signal is not output from the sine wave information decoding unit **105** to the band pass combination filter **106**.

At a step S**83**, the generating unit **141** determines whether or not the end of one frame has been reached. For example, when the zone for the final timeslot configuring the frame is being processed, that is to say, when all timeslots in the frame have been processed, this is determined that the end of the frame has been reached.

When it has been determined that the end of the frame has not been reached at the step S**83**, the next timeslot is selected as that to be processed, the processing returns to step S**81**, and the previously described processing repeats. In this case, the shift processing, etc. is performed on the sine wave signal already generated.

Conversely, when it has been determined that the end of the frame has been reached at the step S**83**, the sine wave signal generation processing terminates, and afterwards, the processing proceeds to a step S**59** in FIG. **6**. In this case, the result is that the sine wave signal combination is not performed.

Also, when it has been determined that the start position of the sine wave combination processing has passed at the step S**81**, at a step S**84**, the generating unit **141** performs the sine wave combination processing. That is to say, the generating unit **141** outputs to the band pass combination filter **106** the sample value configuring the timeslot being processed of the sine wave signal which has been arbitrarily shift processed. As a result, the sample value of the output sine wave signal sample is combined with the low frequency signal as the sine wave component configuring the high frequency component.

At a step S**85**, the generating unit **141** determines whether or not the end of one frame has been reached. For example, when the zone for the final timeslot configuring the frame is being processed, that is to say, when all timeslots in the frame have been processed, this is determined that the end of the frame has been reached.

When it has been determined that the end of the frame has not been reached at the step S**85**, the next timeslot is selected as that to be processed, the processing returns to step S**84**, and the previously described processing repeats. Conversely, when it has been determined that the end of the frame has been reached at the step S**85**, the sine wave signal generation processing terminates, and afterwards, the processing proceeds to the step S**59** in FIG. **6**.

In this way, the sine wave information decoding unit **105** shifts the emergence start position of the sine wave signal to the combination start position on the basis of the sine wave information, and outputs the shifted sine wave signal. As a result, the combination of the sine wave is started at a more accurate position in one frame, and so audio at a higher audio quality may be obtained.

Second Embodiment

Configuration Example of Encoding Device

Though it has been described above that the combination start position representing the time (number of samples) from the beginning position of the frame until the position at which the combination of the sine wave signal should start is included in the sine wave information, information of the difference between the combination start position and the noise boundary position may be included.

In this case, the encoding device is configured as illustrated in FIG. **8**. Further, the components in FIG. **8** that correspond to those in FIG. **1** have the same reference numerals, and so their descriptions will be omitted as appropriate. An encoding device **171** in FIG. **8** and the encoding device **11** are different in that a difference calculating unit **181** is newly provisioned in the sine wave information generating unit **26** of the encoding device **171**, and so are the same regarding other components.

The difference calculating unit **181** in the sine wave information generating unit **26** calculates the difference between the combination start position of the sine wave signal detected by the position detection unit **62** and the noise boundary position. The sine wave information generating unit **26** supplies information made up from the difference information representing the difference with the noise boundary position calculated by the difference calculating unit **181** and the information representing whether or not the sine wave signal has been detected to the encoding stream generating unit **27** as the sine wave information.

Description of Encoding Processing

Next, the encoding processing performed by the encoding device **171** will be described with reference to the flowchart in FIG. **9**. Further, the processing of the step S**111** through the step S**118** are the same as the step S**11** through the step S**18** in FIG. **2**, and so their description is omitted.

At a step S**119**, the boundary calculating unit **52** in the noise envelope information generating unit **25** detects the noise boundary position for each band at the high frequency side. Then, at a step S**20**, the noise envelope information generating unit **25** generates the noise envelope information for each band at the high frequency side, and supplies this to the encoding stream generating unit **27**. Further, at the step S**119** and step S**120**, the same processing as at step S**20** and step S**21** in FIG. **2** is performed.

At a step S**121**, the difference calculating unit **181** in the sine wave information generating unit **26** calculates the difference between the noise boundary position and the combination start position of the sine wave signal detected by the position detection unit **62**.

For example, as illustrated in FIG. **10**, the time (number of samples) from the start position of the sine wave combination until the noise boundary position is calculated as the difference. Further, the horizontal axis in the figure represents the timeline. Also, an arrow FS**11** and an arrow FE**11** in FIG. **10** represent the start position and the end position of the frame, respectively.

According to the example in FIG. **10**, the position represented by an arrow N**11** in the frame represents the noise boundary position. Also, the combination start position of the sine wave signal is the position represented by an arrow G**11**, and the combination start position is positioned before the noise boundary position. Therefore, the sine wave signal is combined in the zone from the combination start position represented by the arrow G**11** until the end position of the frame.

According to this example, the length of time (temporal distance) from the combination start position represented by the arrow G**11** until the noise boundary position represented by the arrow N**11** is designated as the difference information with the noise boundary position. Here, the time from the combination start position until the noise boundary position is an integral multiple of the timeslot length.

By using the difference information representing the time from the combination start position until the noise boundary position obtained in this way, a more accurate combination start position may also be identified at the decoding side of the audio signal, and so audio at a higher audio quality may be obtained.

Returning to the description of the flowchart in FIG. **9**, after the difference information with the noise boundary position is obtained at the step S**121**, the processing proceeds to a step S**122**.

At a step S**122**, the sine wave information generating unit **26** generates the sine wave information for each band at the high frequency side, and supplies this to the encoding stream generating unit **27**.

For example, the sine wave information generating unit **26** designates the information made up from the information representing whether or not the sine wave has been detected from the high frequency band and the difference information between the combination start position and the noise boundary position as the sine wave information. At this time, the encoding unit **63** in the sine wave information generating unit **26** performs the variable length encoding of the difference information with the noise boundary position. The sine wave information generating unit **26** supplies the sine wave information made up from the difference information processed by the variable length encoding and the information representing whether or not the sine wave signal has been detected to the encoding stream generating unit **27**.

After the sine wave information is generated, the processing at a step S**123** is performed and the encoding processing terminates, and as the processing at the step S**123** is the same as the processing at the step S**22** in FIG. **2**, so its description is omitted.

As previously described, the encoding device **171** generates and outputs the encoding stream made up from the low frequency signal, the envelope information, the noise envelope information, and the sine wave information. At this time, by detecting a more accurate combination start position of the sine wave signal and generating sine wave information including the difference information used for identifying this combination start position, a more accurate combination of the sine wave signal may be performed during decoding, and so audio at a higher audio quality may be obtained as a result.

Configuration Example of Decoding Device

Also, a decoding device that receives the encoding stream transmitted from the encoding device **171**, and obtains the audio signal from the encoding stream is configured as illustrated in FIG. **11**. Further, the components in FIG. **11** that correspond to those in FIG. **5** have the same reference numerals, and so their descriptions will be omitted as appropriate. A decoding device **211** in FIG. **11** and the decoding device **91** are different in that a position calculating unit **221** is newly provisioned in the sine wave information decoding unit **105** of the decoding device **211**, and so are the same regarding other components.

The position calculating unit **221** in the decoding device **211** calculates the combination start position of the sine wave signal from the difference information obtained from the sine wave information and the noise boundary position supplied from the noise envelope information decoding unit **104**.

Description of Decoding Processing

Next, the decoding processing performed by the decoding device **211** will be described with reference to the flowchart in FIG. **12**. Note that, the processing from step S**151** through step S**157** is the same as the processing from step S**51** through step S**57** in FIG. **6**, and so their descriptions are omitted. However, at the step S**155**, the noise envelope information decoding unit **104** supplies the information representing the noise boundary position included in the noise envelope information obtained from the decoding to the sine wave information decoding unit **105**.

At a step S**158**, the sine wave information decoding unit **105** performs the sine wave signal generation processing, generates the sine wave signal for each band at the high frequency side, and supplies this to the band pass combination filter **106**. Further, details of the sine wave signal generation processing will be described later.

After the sine wave signal generation processing has been performed, the processing at a step S**159** is performed, and the decoding processing terminates, and as the processing at the step S**159** is the same as the step S**59** in FIG. **6**, its description will be omitted.

Description of Sine Wave Signal Generation Processing

Also, at the step S**158** in FIG. **12**, the sine wave information decoding unit **105** performs the sine wave signal generation processing illustrated in FIG. **13**. Hereafter, the sine wave signal generation processing corresponding to the processing at the step S**158** will be described with reference to the flowchart in FIG. **13**.

At a step S**181**, the position calculating unit **221** in the sine wave information decoding unit **105** calculates the combination start position of the sine wave signal from the noise boundary position supplied from the noise envelope information decoding unit **104** and the difference information obtained from the sine wave information. That is to say, the difference in the time between the combination start position and the noise boundary position is subtracted from the time from the start position of the frame being processed until the noise boundary position, the time from the start position of the frame until the combination start position of the sine wave signal is obtained, and the timing (sample) of the combination start position is identified.

After the combination start position is calculated, the processing of a step S**182** through a step S**186** is performed, and the sine wave signal generation processing terminates, and as this processing is the same as the processing of the step S**81** through the step S**85** in FIG. **7**, their descriptions are omitted. After the sine wave signal generation processing terminates in this way, the processing proceeds to a step S**159** in FIG. **12**.

In this way, the sine wave information decoding unit **105** calculates a more accurate combination start position of the sine wave signal from the difference information included in the sine wave information signal and the noise boundary position. As a result, the combination of the sine wave signal is started at a more accurate position in one frame, and so audio at a higher audio quality may be obtained.

Third Embodiment

Configuration Example of Encoding Device

Though the second Embodiment has been described above with an example in which the difference information between the combination start position and the noise boundary position is included in the sine wave information, information of the difference between the peak position of the combination start position and the high frequency signal envelope may be included.

In this case, the encoding device is configured as illustrated in FIG. **14**. Further, the components in FIG. **14** that

correspond to those in FIG. **1** have the same reference numerals, and so their descriptions will be omitted as appropriate. An encoding device **251** in FIG. **14** and the encoding device **11** are different in that a peak detection unit **261** and a difference calculating unit **262** are newly provisioned in the sine wave information generating unit **26** of the encoding device **251**, and so are the same regarding other components.

According to the encoding device **251**, the envelope information supplied from the envelope information generating unit **24** to the noise envelope information generating unit **25** is also supplied from the noise envelope information generating unit **25** to the sine wave information generating unit **26**. The peak detection unit **261** detects the peak position of the high frequency signal envelope on the basis of the envelope information supplied from the noise envelope information generating unit **25**.

The difference calculating unit **262** calculates the difference between the combination start position of the sine wave signal detected by the position detection unit **62** and the peak position of the high frequency signal envelope. The sine wave information generating unit **26** supplies the information made up from the difference information representing the difference with the peak position calculated by the difference calculating unit **262** and the information representing whether or not the sine wave signal has been detected to the encoding stream generating unit **27** as the sine wave information.

Description of Encoding Processing

Next, the encoding processing performed by the encoding device **251** will be described with reference to the flowchart in FIG. **15**. Further, the processing of the step S**211** through the step S**218** are the same as the step S**11** through the step S**18** in FIG. **2**, and so their description is omitted. However, at the step S**214**, the generated envelope information is also supplied to the sine wave information generating unit **26** from the envelope information generating unit **24** through the noise envelope information generating unit **25**.

At a step S**219**, the peak detection unit **261** in the sine wave information generating unit **26** detects the peak position of the high frequency signal envelope on the basis of the envelope information supplied from the noise envelope information generating unit **25**. For example, the position where the gain of the high frequency signal envelope represented by the envelope information is at a maximum is detected as the peak position of the high frequency signal envelope.

At a step S**220**, the difference calculating unit **262** calculates, for each band at the high frequency side, the difference between the combination start position of the sine wave signal detected by the position detection unit **62** and the peak position of the envelope detected by the peak detection unit **261**.

For example, as illustrated in FIG. **16**, the time (number of samples) from the start position of the sine wave combination until the peak position is calculated as the difference. Further, the horizontal axis in the figure represents the timeline. Also, an arrow FS**21** and an arrow FE**21** in FIG. **16** represent the start position and the end position of the frame, respectively.

According to the example in FIG. **16**, the envelope of the high frequency signal is represented by a dotted line, and the position represented by an arrow P**1** in the frame represents the peak position of this envelope. Also, the combination start position of the sine wave signal is the position represented by an arrow G**21**, and the combination start position is positioned before the peak position of the envelope. During the decoding, the sine wave signal is combined in the zone from the combination start position represented by the arrow G**21** until the end position of the frame.

According to this example, the length of time (temporal distance) from the combination start position represented by the arrow G**21** until the peak position of the high frequency signal envelope represented by the arrow P**1** is designated as the difference with the peak position. Here, the time from the combination start position until the peak position is an integral multiple of the timeslot length.

By using the difference information representing the time from the combination start position until the peak position obtained in this way, a more accurate combination start position may be identified during decoding of the audio signal, and so audio at a higher audio quality may be obtained.

Returning to the description of the flowchart in FIG. **15**, after the difference information with the peak position is obtained at the step S**220**, the processing proceeds to a step S**221**.

At the step S**221**, the sine wave information generating unit **26** generates the sine wave information for each band at the high frequency side, and supplies this to the encoding stream generating unit **27**.

For example, the sine wave information generating unit **26** designates the information made up from the information representing whether or not the sine wave has been detected from the high frequency band and the difference information between the combination start position and the peak position as the sine wave information. At this time, the encoding unit **63** in the sine wave information generating unit **26** performs the variable length encoding of the difference information with the peak position. The sine wave information generating unit **26** supplies the sine wave information made up from the difference information processed by the variable length encoding and the information representing whether or not the sine wave signal has been detected to the encoding stream generating unit **27**.

After the sine wave information is generated, the processing at a step S**222** through a step S**224** is performed and the encoding processing terminates, and as this processing is the same as the processing at the step S**20** through the step S**22** in FIG. **2**, so its description is omitted.

As previously described, the encoding device **251** generates and outputs the encoding stream made up from the low frequency signal, the envelope information, the noise envelope information, and the sine wave information. At this time, by detecting a more accurate combination start position of the sine wave signal and generating sine wave information including the difference information used for identifying this combination start position, a more accurate combination of the sine wave signal may be performed during decoding, and so audio at a higher audio quality may be obtained as a result.

Configuration Example of Decoding Device

Also, a decoding device that receives the encoding stream transmitted from the encoding device **251**, and obtains the audio signal from the encoding stream is configured as illustrated in FIG. **17**. Further, the components in FIG. **17** that correspond to those in FIG. **5** have the same reference numerals, and so their descriptions will be omitted as appropriate. A decoding device **301** in FIG. **17** and the decoding device **91** are different in that a position calculating

unit **311** is newly provisioned in the sine wave information decoding unit **105** of the decoding device **301**, and so are the same regarding other components.

The position calculating unit **311** in the decoding device **301** calculates the combination start position of the sine wave signal from the difference information obtained from the sine wave information and the envelope information supplied from the envelope information decoding unit **103**.

Description of Decoding Processing

Next, the decoding processing performed by the decoding device **301** will be described with reference to the flowchart in FIG. **18**. Further, the processing of a step S**251** through a step S**257** are the same as the step S**51** through the step S**57** in FIG. **6**, and so their description is omitted.

At a step S**258**, the sine wave information decoding unit **105** performs the sine wave signal generation processing, generates the sine wave signal for each band at the high frequency side, and supplies this to the band pass combination filter **106**. Further, details of the sine wave signal generation processing will be described later.

After the sine wave signal generation processing has been performed, the processing at a step S**259** is performed, and the decoding processing terminates, and as the processing at the step S**259** is the same as the step S**59** in FIG. **6**, its description is omitted.

Description of Sine Wave Signal Generation Processing

Also, at the step S**258** in FIG. **18**, the sine wave information decoding unit **105** performs the sine wave signal generation processing illustrated in FIG. **19**. Hereafter, the sine wave signal generation processing corresponding to the processing at the step S**258** will be described with reference to the flowchart in FIG. **19**.

At a step S**281**, the position calculating unit **311** in the sine wave information decoding unit **105** calculates the combination start position of the sine wave signal from the envelope information supplied from the envelope information decoding unit **103** and the difference information obtained from the sine wave information.

That is to say, the position where the gain of the high frequency signal envelope represented in the envelope information is at a maximum is calculated by the position calculating unit **311** as the peak position of the high frequency signal envelope. Then, the position calculating unit **311** subtracts the difference in the time between the combination start position and the peak position is subtracted from the time from the start position of the frame being processed until the peak position, the time from the start position of the frame until the combination start position of the sine wave signal, and the timing (sample) of the combination start position is identified.

After the combination start position is calculated, the processing of a step S**282** through a step S**286** is performed, and the sine wave signal generation processing terminates, and as this processing is the same as the processing of the step S**81** through the step S**85** in FIG. **7**, their descriptions are omitted. After the sine wave signal generation processing terminates in this way, the processing proceeds to a step S**259** in FIG. **18**.

In this way, the sine wave information decoding unit **105** calculates a more accurate combination start position of the sine wave signal from the difference information included in the sine wave information and the peak position of the high frequency signal envelope. As a result, the combination of the sine wave signal is started at a more accurate position in one frame, and so audio at a higher audio quality may be obtained.

Further, though an example has been described above in which the detection of the peak position of the envelope is performed at the decoding device **301** side, information representing the peak position may be included in the sine wave information. In this case, the sine wave information generating unit **26** in the encoding device **251** generates the sine wave information including the information representing the peak position, and the position calculating unit **311** in the decoding device **301** calculates the combination start position from the difference information and the information representing the peak position included in the sine wave information.

Fourth Embodiment

Configuration Example of Encoding Device

Though an example has been described above that the sine wave information included one type of previously determined information from among the combination start position, the difference information with the noise boundary position, or the difference information with the peak position, the information among these with the smallest encoding amount may be selected to be included in the sine wave information.

In this case, the encoding device is configured as illustrated in FIG. **20**, for example. Further, the components in FIG. **20** that correspond to those in FIG. **1** or FIG. **14** have the same reference numerals, and so their descriptions will be omitted as appropriate. An encoding device **341** in FIG. **20** and the encoding device **11** in FIG. **1** are different in that a peak detection unit **261**, a difference calculating unit **351**, and a selection unit **352** are newly provisioned in the sine wave information generating unit **26** of the encoding device **341**, and so are the same regarding other components.

According to the encoding device **341**, the envelope information supplied from the envelope information generating unit **24** to the noise envelope information generating unit **25** is also supplied from the noise envelope information generating unit **25** to the sine wave information generating unit **26**, and the peak detection unit **261** detects the peak position of the high frequency signal envelope on the basis of the envelope information.

The difference calculating unit **351** calculates the difference between the combination start position of the sine wave signal detected by the position detection unit **62** and the peak position of the high frequency signal envelope. The difference calculating unit **351** also calculates the difference between the combination start position and the noise boundary position.

The selection unit **352** selects the information that will result in the smallest encoding amount after the variable length encoding from among the combination start position, the difference information with the peak position, or the difference information with the noise boundary position. The sine wave information generating unit **26** supplies the information made up from the information representing the result of the selection by the selection unit **352**, the information selected by the selection unit **352**, and the information representing whether or not the sine wave signal has been detected, to the encoding stream generating unit **27** as sine wave information.

Description of Encoding Processing

Next, the encoding processing performed by the encoding device **341** will be described with reference to the flowchart in FIG. **21**. Further, the processing of the step S**311** through the step S**321** are the same as the step S**111** through the step S**121** in FIG. **9**, and so their description is omitted.

However, at the step S**321**, the difference calculating unit **351** in the sine wave information generating unit **26** calculates the difference between the combination start position of the sine wave signal detected by the position detection unit **62** and the noise boundary position for each band at the high frequency side. Also, at the step S**314**, the generated envelope information is also supplied to the sine wave information generating unit **26** from the envelope information generating unit **24** through the noise envelope information generating unit **25**.

At a step S**322**, the peak detection unit **261** in the sine wave information generating unit **26** detects, for each band at the high frequency side, the peak position of the high frequency signal envelop on the basis of the envelop information supplied from the noise envelope information generating unit **25**.

At a step S**323**, the difference calculation unit **351** calculates, for each band at the high frequency side, the difference between the combination start position of the sine wave signal detected by the position detection unit **62** and the peak position of the envelope detected by the peak detection unit **261**.

Further, the same processing at the step S**219** and the step S**220** in FIG. **15** is performed at the step S**322** and the step S**323**.

At a step S**324**, the selection unit **352** selects, for each band at the high frequency side, the information that will result in the smallest encoding amount after the variable length encoding from among the combination start position, the difference information between the combination start position and the peak position, or the difference information between the combination start position and the noise boundary position. Then, the selection unit **352** generates the selection information representing the result of this selection. At this time, only the encoding amount of the combination start position or similar may be calculated and compared, or the actual combination start position or similar information may be processed by the variable length encoding, and this encoding amount may be compared.

At the step S**325**, the sine wave information generating unit **26** generates the sine wave information for each band at the high frequency side, and supplies this to the encoding stream generating unit **27**.

Specifically, the sine wave information generating unit **26** designates the information made up from the information representing whether or not the sine wave signal has been detected from the high frequency band, the selection information, and the information representing the selection information as the sine wave information. At this time, the encoding unit **63** in the sine wave information generating unit **26** performs the variable length encoding of the selection information and the information representing the selection information. The sine wave information generating unit **26** supplies the sine wave information made up from the selection information and the information representing the selection information processed by the variable length encoding and the information representing whether or not the sine wave signal has been detected to the encoding stream generating unit **27**.

For example, when the information representing the selection information is the difference information between the combination start position and the peak position, the information made up from the selection information, the difference information with the peak position, and the information representing whether or not the sine wave signal has been detected is designated as the sine wave information. In this way, by generating the sine wave information including the information with the smallest encoding amount that identifies the combination start position of the sine wave signal, the encoding amount of the encoding stream may be further reduced.

After the sine wave information is generated, the processing at a step S**326** is performed and the encoding processing terminates, and as this processing is the same as the processing at the step S**224** in FIG. **15**, its description is omitted.

As previously described, the encoding device **341** generates and outputs the encoding stream made up from the low frequency signal, the envelope information, the noise envelope information, and the sine wave information. At this time, by generating the sine wave information including the information with the smallest encoding amount from among the information that identifies the combination start position of the sine wave signal, the data amount of the encoding stream to be transferred may be reduced, and at the same time, a more accurate combination of the sine wave signal may be performed during decoding at the decoding side of the audio signal. As a result, audio at a higher audio quality may be obtained.

Configuration Example of Decoding Device

Also, a decoding device that receives the encoding stream transmitted from the encoding device **341**, and obtains the audio signal from the encoding stream is configured as illustrated in FIG. **22**, for example. Further, the components in FIG. **22** that correspond to those in FIG. **5** have the same reference numerals, and so their descriptions will be omitted as appropriate. A decoding device **381** in FIG. **22** and the decoding device **91** are different in that a position calculating unit **391** is newly provisioned in the sine wave information decoding unit **105** of the decoding device **381**, and so are the same regarding other components.

The position calculating unit **391** in the decoding device **381** calculates the combination start position of the sine wave signal from either the difference information with the peak position or the difference information with the noise boundary position obtained from the sine wave information, depending on the selection information included in the sine wave information.

Description of Decoding Processing

Next, the decoding processing performed by the decoding device **381** will be described with reference to the flowchart in FIG. **23**. Further, the processing of a step S**351** through a step S**356** are the same as the step S**51** through the step S**56** in FIG. **6**, and so their description is omitted.

However, at the step **355**, the noise envelope information decoding unit **104** supplies the information representing the noise boundary position included in the noise envelope information obtained by the decoding to the sine wave information decoding unit **105**.

At a step S**357**, the sine wave information decoding unit **105** decodes the sine wave information from the encoding stream decoding unit **101**. For example, the selection information included in the sine wave information, and the

information used to obtain the combination start position identified by the selection information, are decoded.

At a step S**358**, the sine wave information decoding unit **105** performs the sine wave signal generation processing, generates the sine wave signal for each band at the high frequency side, and supplies this to the band pass combination filter **106**. Further, details of the sine wave signal generation processing will be described later.

After the sine wave signal generation processing has been performed, the processing at a step S**359** is performed, and the decoding processing terminates, and as the processing at the step S**359** is the same as the step S**59** in FIG. **6**, its description is omitted.

Description of Sine Wave Signal Generation Processing

Also, at the step S**358** in FIG. **23**, the sine wave information decoding unit **105** performs the sine wave signal generation processing illustrated in FIG. **24**. Hereafter, the sine wave signal generation processing corresponding to the processing at the step S**358** will be described with reference to the flowchart in FIG. **24**.

At a step S**381**, the position calculating unit **391** determines whether or not the information used to obtain the combination start position of the sine wave signal represented by the selection information is the information actually representing the combination start position. That is to say, it is determined whether or not the combination start position is included in the sine wave information.

In the event that determination is made in step S**381** that the information represented by the selection information is the information representing the combination start position of the sine wave signal, the processing proceeds to a step S**385**.

Conversely, in the event that determination is made in step S**381** that the information represented by the selection information is not be the information representing the combination start position of the sine wave signal, the processing proceeds to a step S**382**.

At the step S**382**, the position calculating unit **391** determines whether or not the information used to obtain the combination start position of the sine wave signal represented by the selection information is the difference information between the combination start position and the noise boundary position. That is to say, it is determined whether or not the difference information with the noise boundary position is included in the sine wave information.

When the information represented by the selection information is determined to be the difference information with the noise boundary position, the processing proceeds to a step S**383**.

At the step S**383**, the position calculating unit **391** in the sine wave information decoding unit **105** calculates the combination start position of the sine wave signal from the noise boundary position supplied from the noise envelope information decoding unit **104** and the difference information with the noise boundary position obtained from the sine wave information. After the combination start position is calculated, the processing proceeds to the step S**385**.

Also, when the information represented by the selection information is determined to not be the difference information with the noise boundary position in the step S**382**, that is to say, when the information represented by the selection information is the difference information between the combination start position and the peak position, the processing proceeds to a step S**384**.

At the step S**384**, the position calculating unit **391** in the sine wave information decoding unit **105** calculates the combination start position of the sine wave signal form the envelope information supplied from the envelope information decoding unit **103** and the difference information with the peak position of the high frequency signal envelope obtained from the sine wave information.

That is to say, the position calculating unit **391** detects the position where the gain in the high frequency signal envelope represented by the envelope information is at a maximum as the peak position of the high frequency signal envelope. Then, the position calculating unit **391** subtracts the difference in time between the combination start position and the peak position from the time from the start position of the frame to be processed until the peak position, obtains the time from the start position of the frame until the combination start position of the sine wave signal, and identifies the timing (sample) of the combination start position. After the combination start position is calculated, the processing proceeds to the step S**385**.

After the information represented by the selection information is determined to be the information representing the combination start position at the step S**381**, or the combination start position is calculated at the step S**383**, or the combination start position is calculated at the step S**384**, the processing proceeds to the step S**385**. Then, the processing of the step S**382** through a step S**389** is performed, and the sine wave signal generation processing terminates, and as this processing is the same as the processing of the step S**81** through the step S**85** in FIG. **7**, their descriptions are omitted. After the sine wave signal generation processing terminates in this way, the processing proceeds to a step S**359** in FIG. **23**.

In this way, the sine wave information decoding unit **105** identifies the information included in the sine wave information from the selection information, and arbitrarily calculates a more accurate combination start position of the sine wave signal according to the result of this specification. As a result, the combination of the sine wave signal is started at a more accurate position in one frame, and so audio at a higher audio quality may be obtained.

The series of processing previously described may be executed by hardware, or may be executed by software. When the series of processing is executed by software, a program configuring this software may be installed into a computer built with specialized hardware, or by installing various programs from a program recording medium into a general purpose personal computer, for example, that may execute various functions.

FIG. **25** is a block diagram illustrating a configuration example of computer hardware for executing the previously described series of processing as a program.

A CPU **501**, ROM (Read Only Memory) **502**, and RAM (Random Access Memory) **503**, are connected together in the computer by a bus **504**.

Also, an input/output interface **505** is connected to the bus **504**. Devices connected to the input/output interface **505** include an input unit **506** made up of a keyboard, a mouse, a microphone, etc., an output unit **507** made up of a display, speaker, etc., a recording unit **508** made up of a hard disk, non-volatile memory, etc., a communication unit **509** made up of a network interface, etc., and a drive **510** for driving a magnetic disk, an optical disk, a magneto-optical disk, or a removable media **511** such as semiconductor memory.

According to the computer configured in this way, the CPU **501** loads and executes the program installed in the recording unit **508** into the RAM **503** through the input/

output interface **505** and bus **504**, for example, to perform the previously described series of processing.

The program executed by the computer (CPU **501**) may be recorded in the removable media **511**, which is a form of packaged media configured of, for example, a magnetic disk (including a floppy disk), an optical disk (such as CD-ROM (Compact Disc-Read Only Memory) or DVD (Digital Versatile Disc)), a magneto-optical disk, or semiconductor memory, etc., or may be supplied via a wired or wireless transmission medium such as a local area network, the Internet, or a digital satellite broadcast.

Also, the program may be installed to the recording unit **508** through the input/output interface **505** by installing the removable media **511** to the drive **510**. Also, the program may be installed to the recording unit **508** after being received by the communication unit **509** via the wired or wireless transfer medium. Also, the program may be previously installed in the ROM **502** or the recording unit **508**.

Further, the program executed by the computer may perform the processing in time-sequence order as described in the present specification, may perform the processing in parallel, or at a necessary timing such as when a call is performed.

Further, the embodiments of the preset technology are not limited to the previously described embodiments, and various modifications may occur insofar as they are within the scope of the present technology.

REFERENCE SIGNS LIST

11 encoding device
22 low frequency encoding unit
24 envelope information generating unit
25 noise envelope information generating unit
26 sine wave information generating unit
52 boundary calculating unit
61 sine wave detection unit
62 position detection unit
91 decoding device
102 low frequency decoding unit
103 envelope information decoding unit
104 noise envelope information decoding unit
105 sine wave information decoding unit
141 generating unit
181 difference calculating unit
221 position calculating unit
261 peak detection unit
262 difference calculating unit
311 position detecting unit
351 difference calculating unit
352 selection unit
391 position calculating unit

The invention claimed is:

1. A signal processing device comprising:

an extracting unit that extracts a low frequency component of an audio signal, envelope information representing an envelope of a high frequency component of the audio signal, noise envelope information representing a noise boundary position for dividing a noise signal included in the high frequency component into zones and a noise signal gain for each of the zones, and sine wave information which includes information representing a distance from a start position of a frame of the high frequency component to an appearance start position of a sine wave component included in the high frequency component, and is for specifying a frequency and an appearance position of the sine wave component, wherein the start position for the sine wave component is independent of the noise boundary position;

a pseudo high frequency generating unit that generates a pseudo high frequency signal configuring the high frequency component on the basis of a low frequency signal as the low frequency component and the envelope information;

a sine wave generating unit that generates a sine wave signal which is at a frequency represented by the sine wave information and in which the appearance start position specified from the sine wave information is set as a start position;

a noise generating unit configured to generate a noise signal configuring the high frequency component by adjusting, for a predetermined signal having zones divided by the noise boundary position, a gain for each zone of the predetermined signal on the basis of the noise signal gain represented by the noise envelope information; and

a combining unit that combines the low frequency signal, the pseudo high frequency signal the sine wave signal, and the noise signal to generate an audio signal.

2. The signal processing device according to claim **1**, wherein the sine wave information is extracted for each frame, and the sine wave generating unit generates the sine wave signal for each frame of the high frequency component.

3. The signal processing device according to claim **1**, wherein the sine wave information is extracted for each band configuring the high frequency component, and the sine wave generating unit generates the sine wave signal for each band.

4. A signal processing method of a signal processing device including an extracting unit that extracts a low frequency component of an audio signal, envelope information representing an envelope of a high frequency component of the audio signal, noise envelope information representing a noise boundary position for dividing a noise signal included in the high frequency component into zones and a noise signal for each of the zones, and sine wave information which includes information representing a distance from a start position of a frame of the high frequency component to an appearance start position of a sine wave component included in the high frequency component, and is for specifying a frequency and an appearance position of the sine wave component, wherein the start position for the sine wave component is independent of the noise boundary position, a pseudo high frequency generating unit that generates a pseudo high frequency signal configuring the high frequency component on the basis of a low frequency signal as the low frequency component and the envelope information, a sine wave generating unit that generates a sine wave signal which is at a frequency represented by the sine wave information and in which the appearance start position specified from the sine wave information is set as a start position, a noise generating unit configured to generate a noise signal configuring the high frequency component by adjusting, for a predetermined signal having zones divided by the noise boundary position, a gain for each zone of the predetermined signal on the basis of the noise signal gain represented by the noise envelope information, and a combining unit that combines the low frequency signal, the pseudo high frequency signal, the sine wave signal, and the noise signal to generate an audio signal, the method comprising steps of:

extracting, using the extracting unit, the low frequency component, the envelope information, and the sine wave information;

generating, using the pseudo high frequency generating unit, the pseudo high frequency signal;

generating, using the sine wave generating unit, the sine wave signal;

generating, using the noise generating unit, the noise signal; and

combining, using the combining unit, the low frequency signal, the pseudo high frequency signal, the sine wave signal, and the noise signal to generate an audio signal.

5. At least one non-transitory computer-readable storage medium having encoded thereon instructions that, when executed by at least one processor, cause the at least one processor to execute a process including steps of:

extracting a low frequency component of an audio signal, envelope information representing an envelope of a high frequency component of the audio signal, noise envelope information representing a noise boundary position for dividing a noise signal included in the high frequency component into zones and a noise signal gain for each of the zones, and sine wave information which includes information representing a distance from a start position of a frame of the high frequency component to an appearance start position of a sine wave component included in the high frequency component, and is for specifying a frequency and an appearance position of the sine wave component, wherein the start position for the sine wave component is independent of the noise boundary position;

generating a pseudo high frequency signal configuring the high frequency component on the basis of a low frequency signal as the low frequency component and the envelope information;

generating a sine wave signal which is at a frequency represented by the sine wave information and in which the appearance start position specified from the sine wave information is set as a start position;

generating a noise signal configuring the high frequency component by adjusting, for a predetermined signal having zones divided by the noise boundary position, a gain for each zone of the predetermined signal on the basis of the noise signal gain represented by the noise envelope information; and

combining the low frequency signal, the pseudo high frequency signal, the sine wave signal, and the noise signal to generate an audio signal.

* * * * *