US010644760B2

(12) **United States Patent**
Wang et al.

(10) **Patent No.: US 10,644,760 B2**
(45) **Date of Patent: *May 5, 2020**

(54) **METHOD AND APPARATUS FOR MEDIUM ACCESS CONTROL FOR UNIFORM MULTIPLE ACCESS POINTS COVERAGE IN WIRELESS LOCAL AREA NETWORKS**

(71) Applicant: **InterDigital Patent Holdings, Inc.**, Wilmington, DE (US)

(72) Inventors: **Xiaofei Wang**, Cedar Grove, NJ (US); **Guodong Zhang**, Woodbury, NY (US); **Oghenekome Oteri**, San Diego, CA (US); **Pengfei Xia**, San Diego, CA (US)

(73) Assignee: **InterDigital Patent Holdings, Inc.**, Wilmington, DE (US)

(*) Notice: Subject to any disclaimer, the term of this patent is extended or adjusted under 35 U.S.C. 154(b) by 0 days.

This patent is subject to a terminal disclaimer.

(21) Appl. No.: **16/419,900**

(22) Filed: **May 22, 2019**

(65) **Prior Publication Data**

US 2019/0273534 A1 Sep. 5, 2019

Related U.S. Application Data

(63) Continuation of application No. 14/441,487, filed as application No. PCT/US2013/069299 on Nov. 8, 2013, now Pat. No. 10,305,550.

(Continued)

(51) **Int. Cl.**
H04B 7/024 (2017.01)
H04W 72/12 (2009.01)

(Continued)

(52) **U.S. Cl.**
CPC ***H04B 7/024*** (2013.01); ***H04B 7/0617*** (2013.01); ***H04W 72/085*** (2013.01);

(Continued)

(58) **Field of Classification Search**
CPC ... H04B 7/024; H04B 7/0617; H04W 72/085; H04W 72/1273; H04W 72/1284; H04W 84/12
See application file for complete search history.

(56) **References Cited**

U.S. PATENT DOCUMENTS

7,889,701 B2 2/2011 Malik et al.
8,259,745 B2 9/2012 Gong et al.

(Continued)

FOREIGN PATENT DOCUMENTS

AU 2011202551 6/2011
EP 1602196 11/2009

(Continued)

OTHER PUBLICATIONS

Cariou et al., "Carrier-oriented WIFI for cellular offload," IEEE 802.11-12/1123r0 (Sep. 14, 2012).

(Continued)

Primary Examiner — Rina C Pancholi
(74) *Attorney, Agent, or Firm* — Volpe and Koenig, P.C.

(57) **ABSTRACT**

A method and apparatus may be used in multi-AP and multi-wireless transmit/receive unit joint transmissions. The apparatus may be configured to transmit a joint transmission request on a first medium, and receive a joint transmission response on the first medium. In response, the apparatus my perform a joint transmission negotiation on a second medium and transmit data on the second medium based on the joint transmission negotiation. The apparatus may be configured to perform coordinated sectorized or beamformed transmissions through access point (AP)/PCP negotiations. The apparatus may provide an indication of support for joint transmission and coordinated sectorized or beamformed transmissions. The method and apparatus may also implement multi-AP/WTRU request-to-send (RTS)/clear-to-send (CTS) procedures. The apparatus may be configured

(Continued)

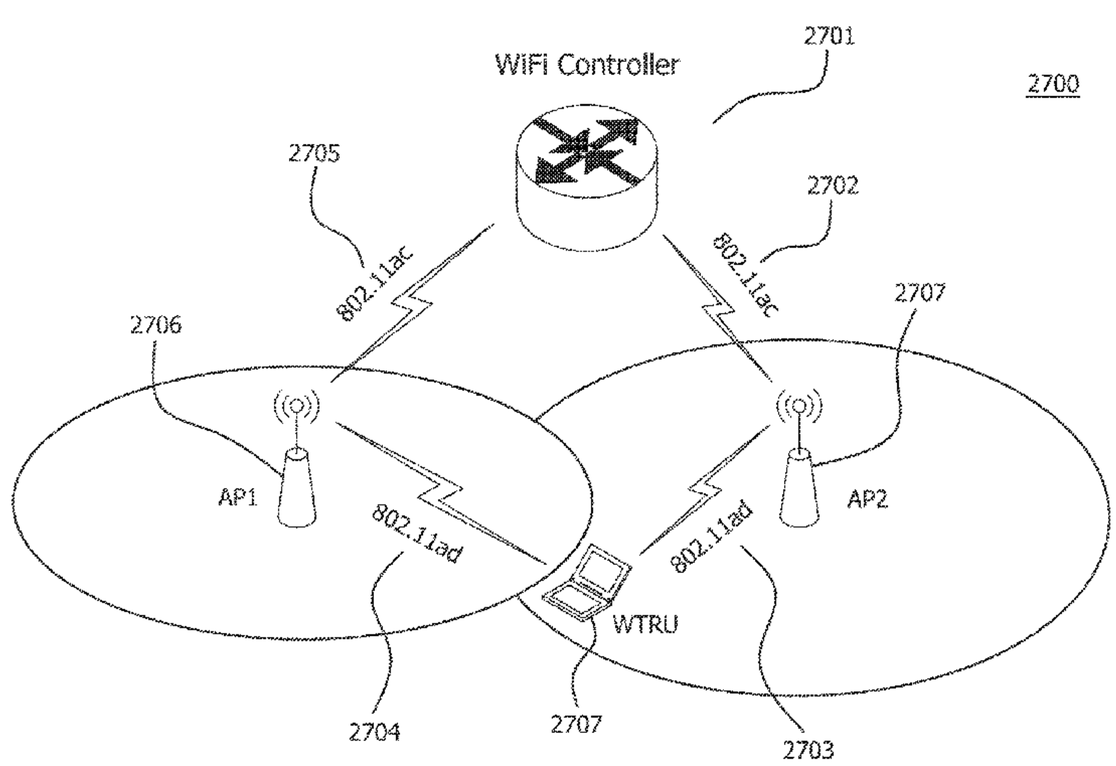

to perform coordinated sectorized or beamforming grouping.

12 Claims, 45 Drawing Sheets

Related U.S. Application Data

(60) Provisional application No. 61/724,032, filed on Nov. 8, 2012.

(51) **Int. Cl.**

H04B 7/06	(2006.01)
H04W 72/08	(2009.01)
H04W 84/12	(2009.01)
H04B 7/026	(2017.01)

(52) **U.S. Cl.**
CPC ... ***H04W 72/1273*** (2013.01); ***H04W 72/1284*** (2013.01); *H04B 7/026* (2013.01); *H04W 84/12* (2013.01)

(56) **References Cited**

U.S. PATENT DOCUMENTS

8,649,326	B2	2/2014	Wu	
2005/0170776	A1	8/2005	Siorpaes	
2006/0194616	A1*	8/2006	Willins	H04W 88/08 455/562.1
2007/0224990	A1	9/2007	Edge et al.	
2009/0232240	A1*	9/2009	Lakkis	H04B 7/0491 375/260
2010/0033374	A1*	2/2010	van Rensburg	H01Q 1/246 342/368
2010/0106828	A1*	4/2010	Palanki	H04L 1/02 709/224
2010/0177746	A1*	7/2010	Gorokhov	H04B 7/024 370/336
2010/0273492	A1*	10/2010	Liu	H04B 7/022 455/446
2010/0279619	A1	11/2010	Yeh et al.	
2010/0322171	A1	12/2010	Dekorsy et al.	
2011/0085460	A1	4/2011	Zhang et al.	
2011/0149842	A1*	6/2011	Cordeiro	H04B 7/0491 370/328
2012/0020312	A1	1/2012	Lv et al.	
2012/0202431	A1	8/2012	Hawryluck et al.	
2013/0003588	A1*	1/2013	Gage	H04L 5/0037 370/252
2014/0126408	A1	5/2014	Ding et al.	
2015/0295629	A1	4/2015	Xia et al.	

FOREIGN PATENT DOCUMENTS

EP	2405679	1/2012
WO	2003/026221	3/2003
WO	2012/126514	9/2012

OTHER PUBLICATIONS

Draft Standard for Information Technology—Telecommunications and information exchange between systems—Local and metropolitan area networks—Specific requirements; Part 11: Wireless LAN Medium Access Control (MAC) and Physical Layer (PHY) specifications; Amendment 5: Enhancements for Very High Throughput for Operation in Bands below 6GHz, IEEE P802.11ac/D1.4 (Nov. 2011).

Gong et al., "11ah Channelization of China," IEEE 802.11-11/1320r0 (Sep. 2011).

IEEE P802.11ad/D9.0, Draft Standard for Information Technology—Telecommunications and Information Exchange Between Systems—Local and Metropolitan Area Networks—Specific Requirements—Part 11: Wireless LAN Medium Access Control (MAC) and Physical Layer (PHY) Specifications—Amendment 3: Enhancements for Very High Throughput in the 60 GHz Band, IEEE P802.11ad/D9.0 (Jul. 2012).

IEEE P802.11ad-2012, IEEE Standard for Information Technology—Telecommunications and Information Exchange Between Systems—Local and Metropolitan Area Networks—Specific Requirements—Part 11: Wireless LAN Medium Access Control (MAC) and Physical Layer (PHY) Specifications—Amendment 3: Enhancements for Very High Throughput in the 60 GHz Band, IEEE P802.11ad-2012 (Oct. 2012).

IEEE P802.11ah/D1.0, Draft Standard for Information technology—Telecommunications and information exchange between systems Local and metropolitan area networks—Specific requirements; Part 11: Wireless LAN Medium Access Control (MAC) and Physical Layer (PHY) Specifications; Amendement 6: Sub 1 GHz License Exempt Operation, IEEE P802.11ah/D1.0 (Oct. 2013).

IEEE Standard for Information technology—Telecommunications and information exchange between systems—Local and metropolitan area networks—Specific requirements; Part 11: Wireless LAN Medium Access Control (MAC) and Physical Layer (PHY) Specifications, IEEE Std. 802.11-2012 (Mar. 29, 2012).

IEEE Standard for Information technology—Telecommunications and information exchange between systems—Local and metropolitan area networks—Specific requirements; Part 11: Wireless LAN Medium Access Control (MAC) and Phyiscal Layer (PHY) Specifications; Amendment 5: Enhancements for Higher Throughput, IEEE Std 802.11n-2009 (Sep. 2009).

Perahia et al., "Sectorized Beam Operation—Follow Up," IEEE 802.11-12/1355r1 (Nov. 2012).

Wang et al., "Sectorized beam Operation," IEEE 802.11-12/1103r0 (Sep. 2012).

Wong et al., "Proposed TGah Draft Amendment," IEEE P802.11 Wireless LANs, IEEE 802.11-13/0500r0 (May 2013).

* cited by examiner

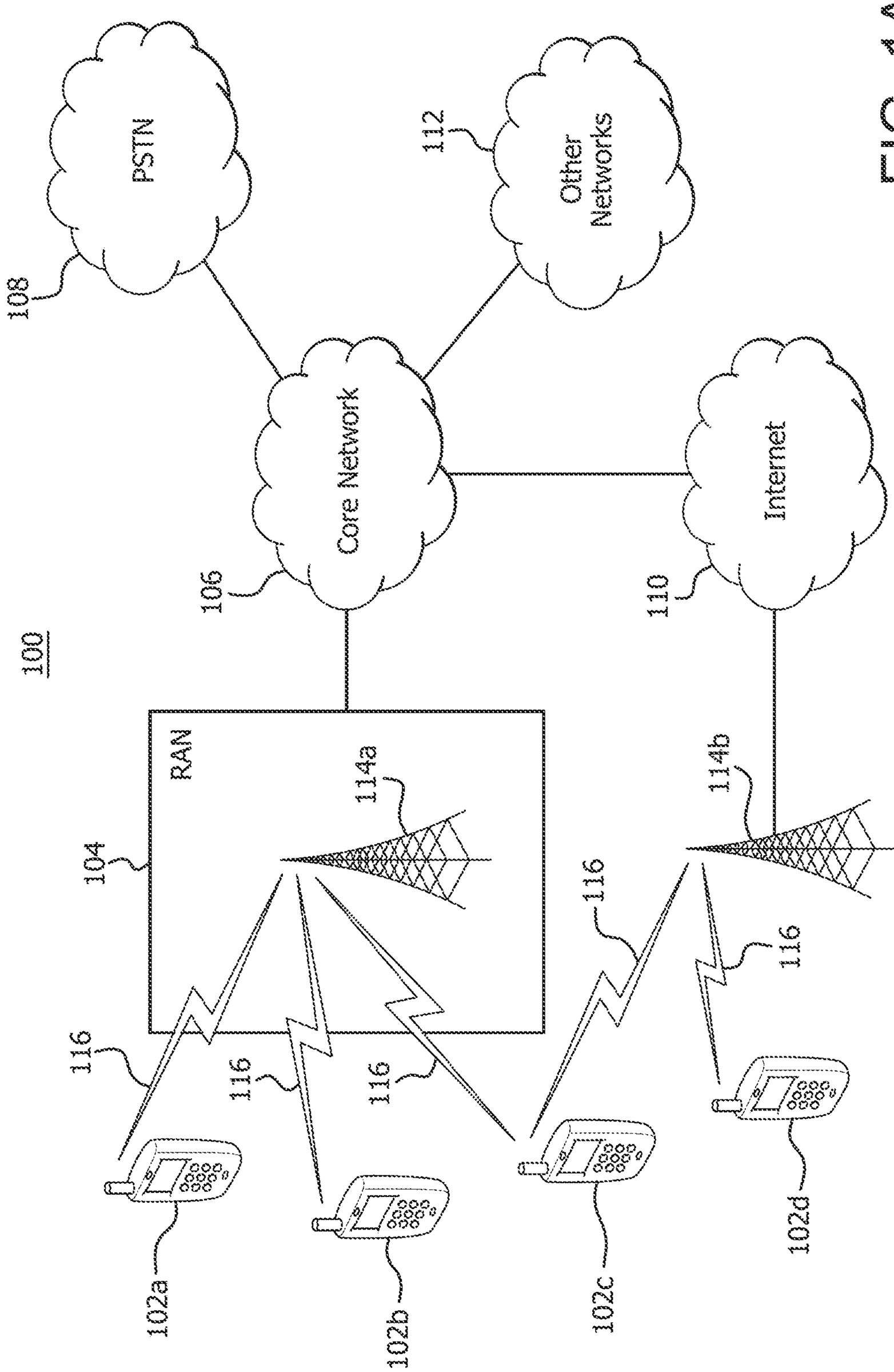
100
PSTN
108
Other Networks
112
Core Network
106
Internet
110
RAN
104
114a
114b
116
116
116
116
102a
102b
102c
102d

FIG. 1A

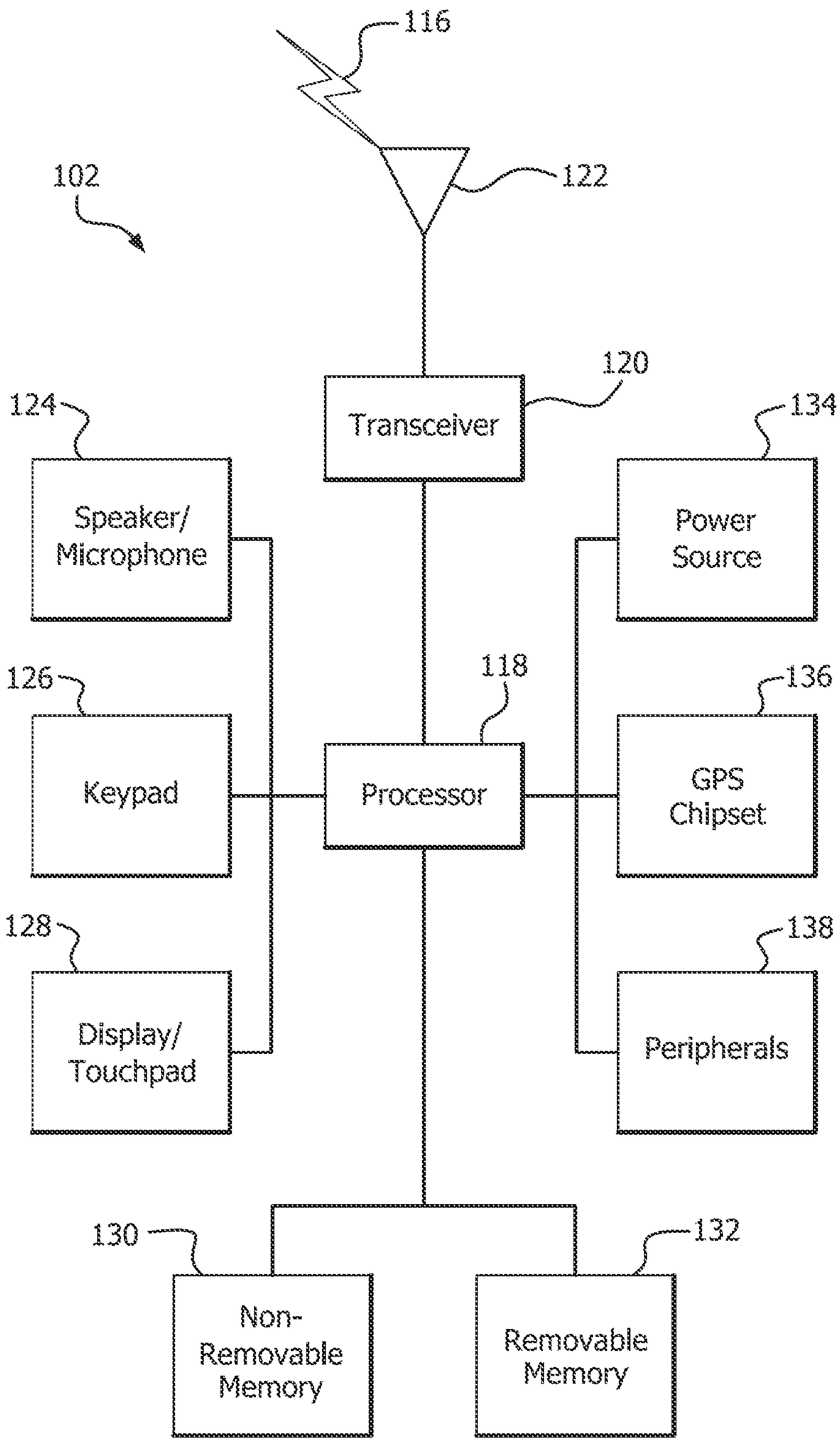
116
102
122
120
Transceiver
124
Speaker/
Microphone
134
Power
Source
126
118
136
Keypad
Processor
GPS
Chipset
128
138
Display/
Touchpad
Peripherals
130
132
Non-
Removable
Memory
Removable
Memory

FIG. 1B

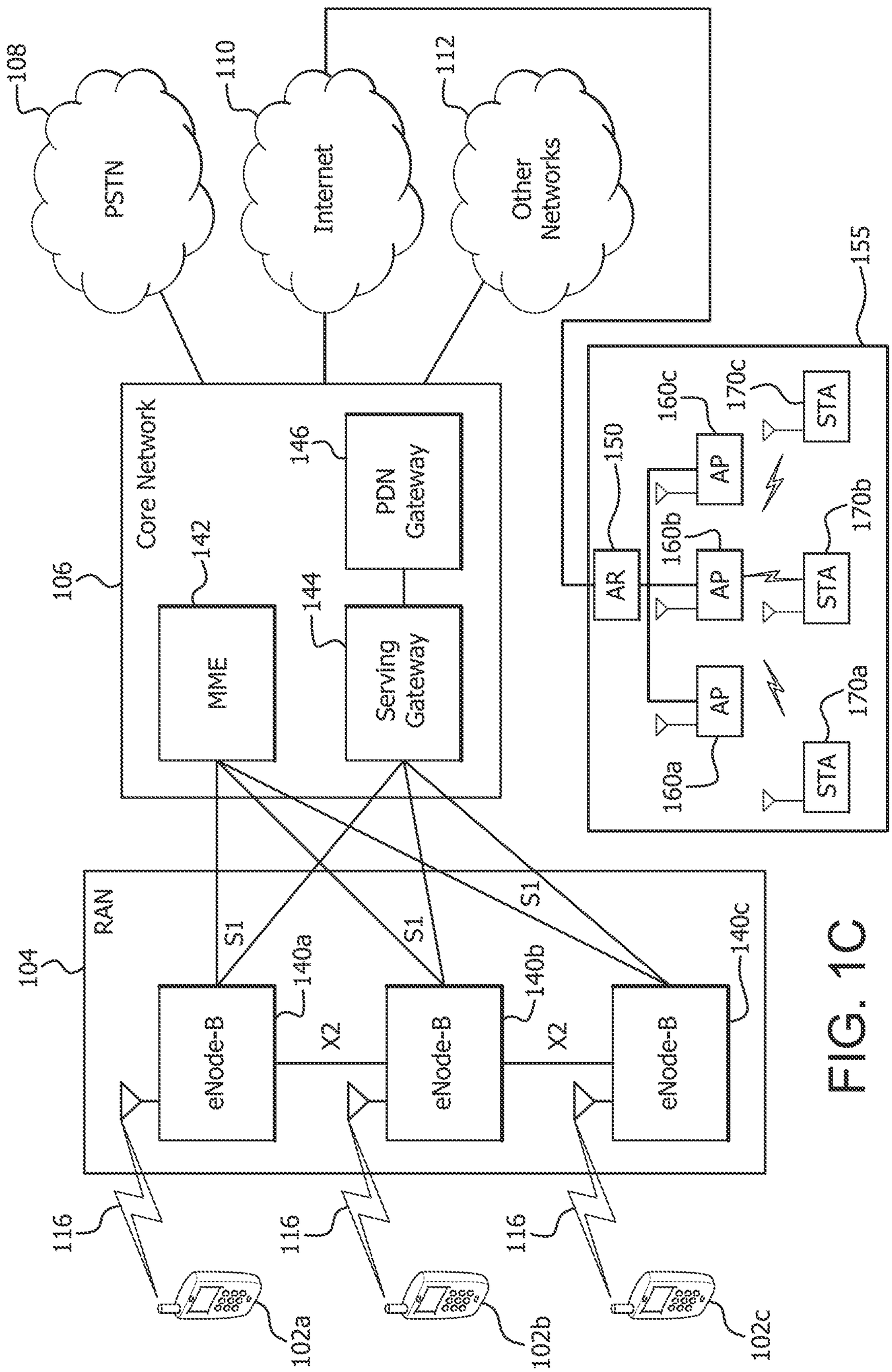
108
PSTN
110
Internet
112
Other Networks
155
106
Core Network
142
MME
144
Serving Gateway
146
PDN Gateway
150
AR
160a
AP
160b
AP
160c
AP
170a
STA
170b
STA
170c
STA
104
RAN
S1
S1
S1
140a
eNode-B
X2
140b
eNode-B
X2
140c
eNode-B
116
116
116
102a
102b
102c

FIG. 1C

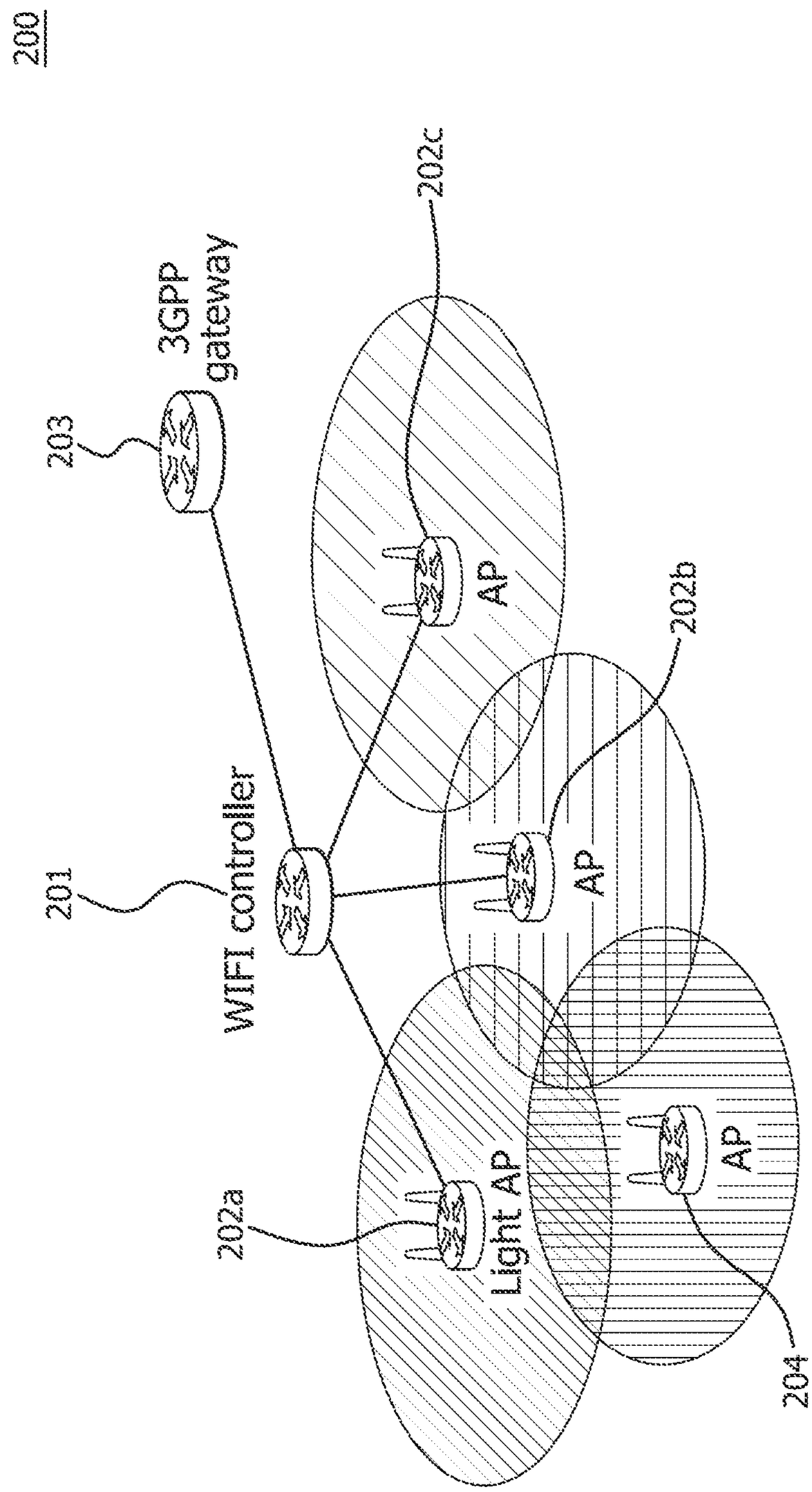
200
202c
3GPP gateway
203
AP
202b
WIFI controller
201
AP
Light AP
202a
AP
204

FIG. 2

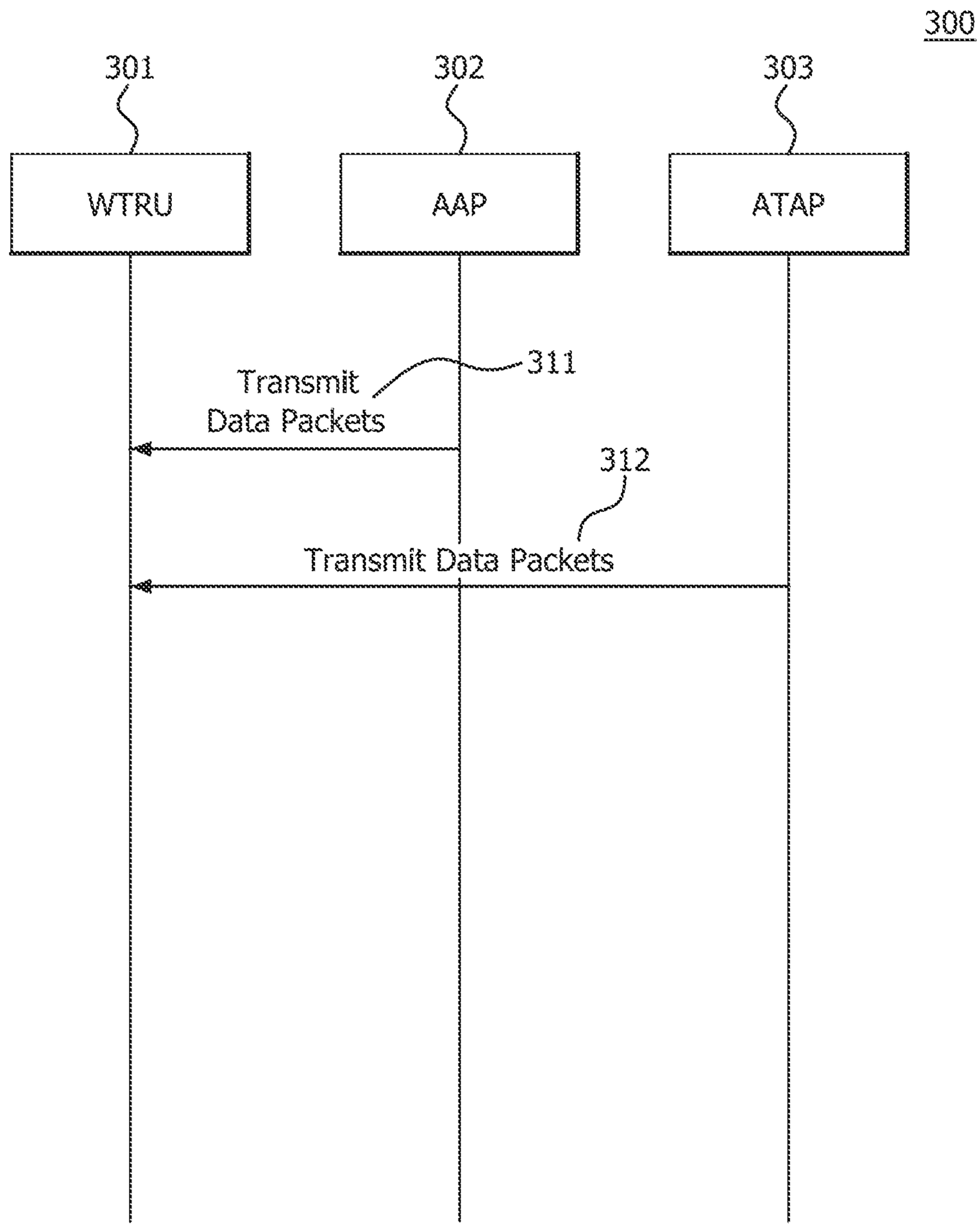
300
301
302
303
WTRU
AAP
ATAP
311
Transmit
Data Packets
312
Transmit Data Packets

FIG. 3A

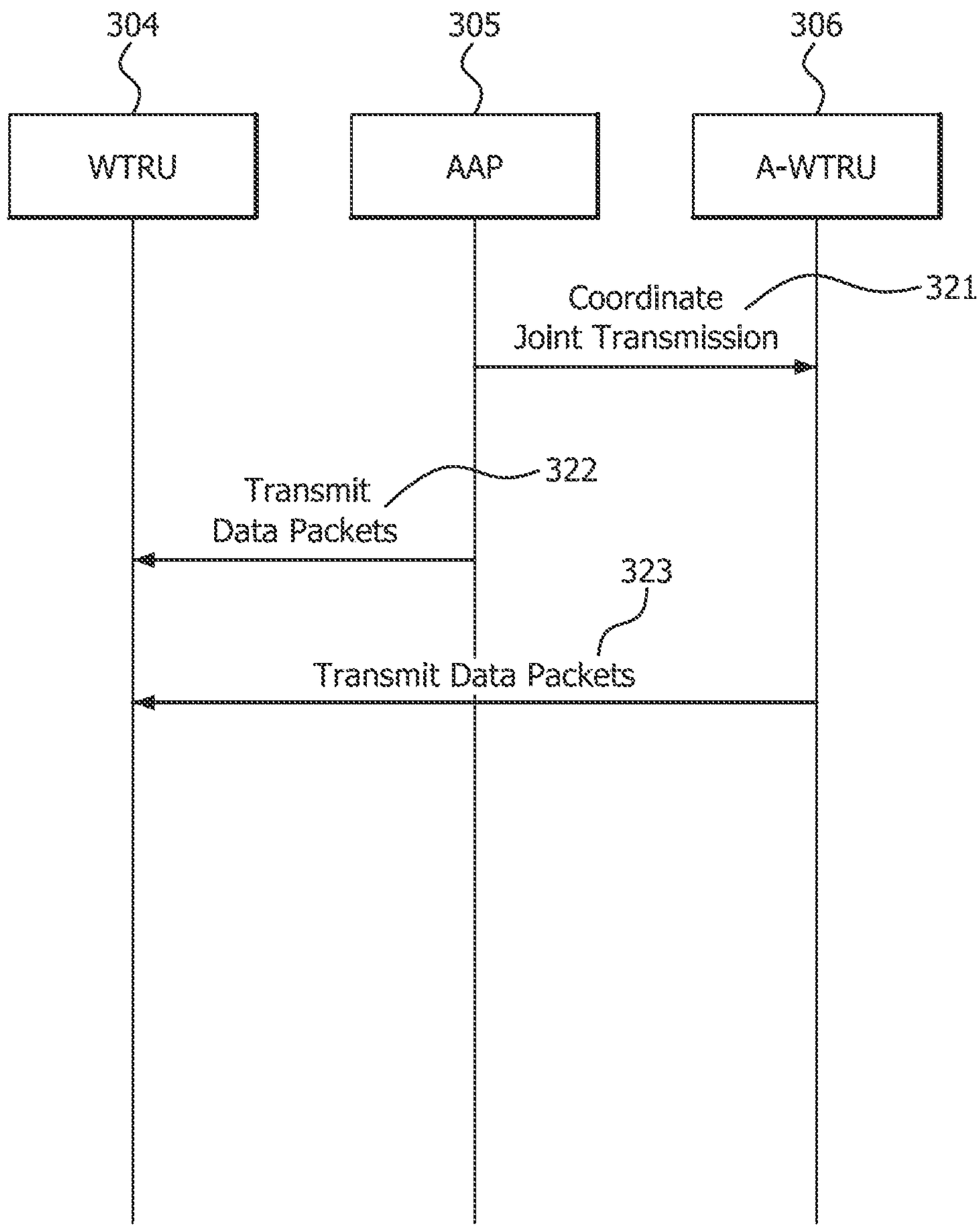
304
305
306
WTRU
AAP
A-WTRU
Coordinate
Joint Transmission
321
Transmit
Data Packets
322
323
Transmit Data Packets

FIG. 3B

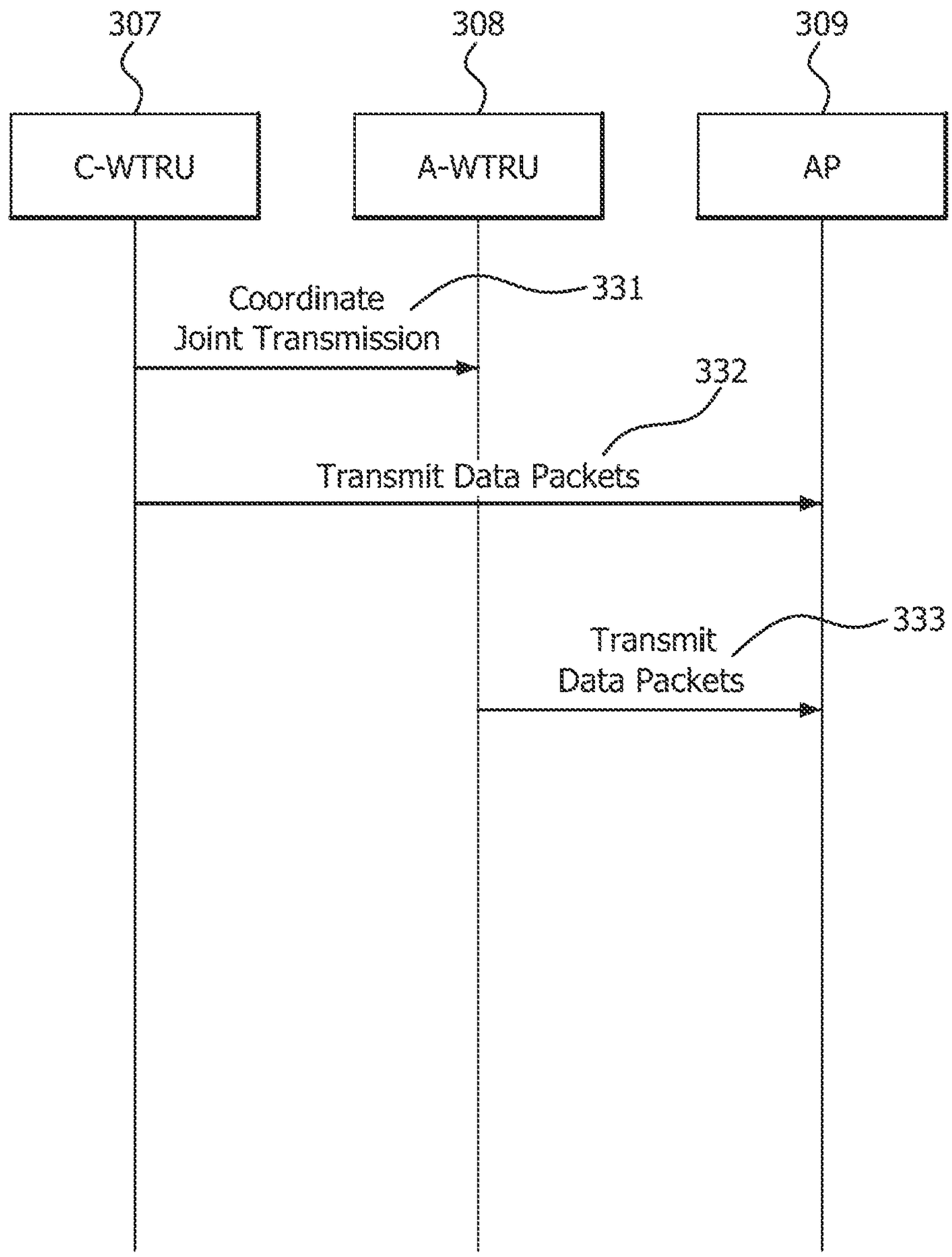
307
308
309
C-WTRU
A-WTRU
AP
Coordinate
Joint Transmission
331
332
Transmit Data Packets
Transmit
Data Packets
333

FIG. 3C

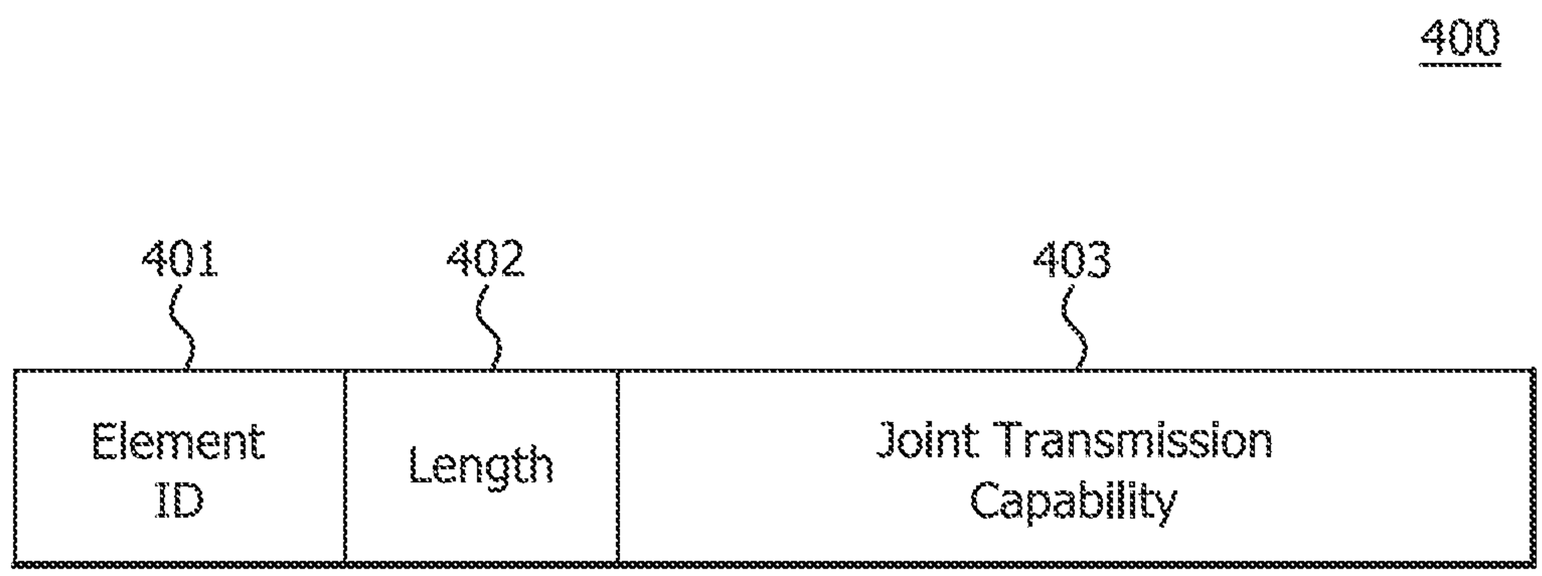
400
401
402
403
Element ID
Length
Joint Transmission Capability

FIG. 4

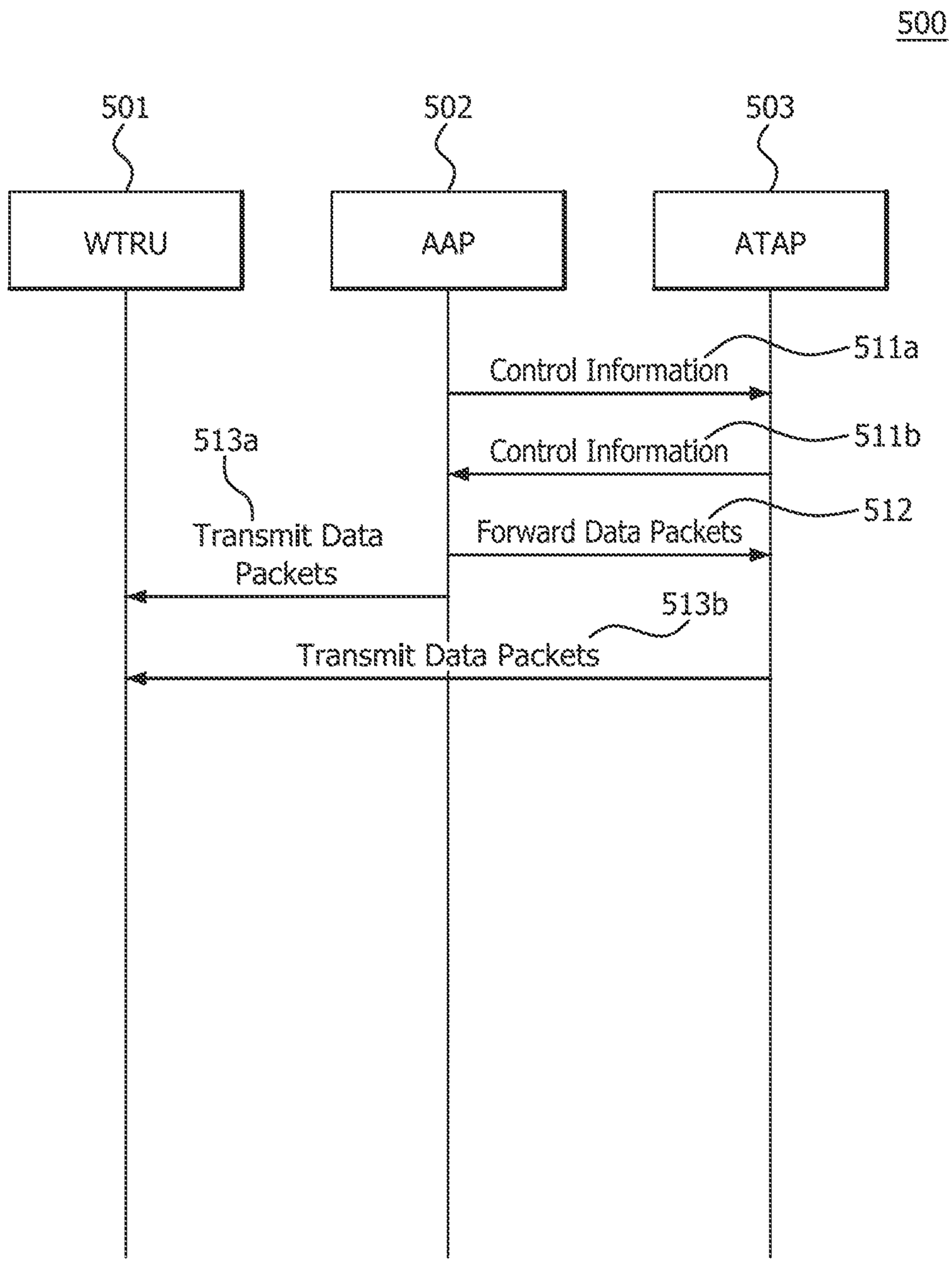
500
501
502
503
WTRU
AAP
ATAP
Control Information
511a
Control Information
511b
513a
Forward Data Packets
512
Transmit Data Packets
513b
Transmit Data Packets

FIG. 5A

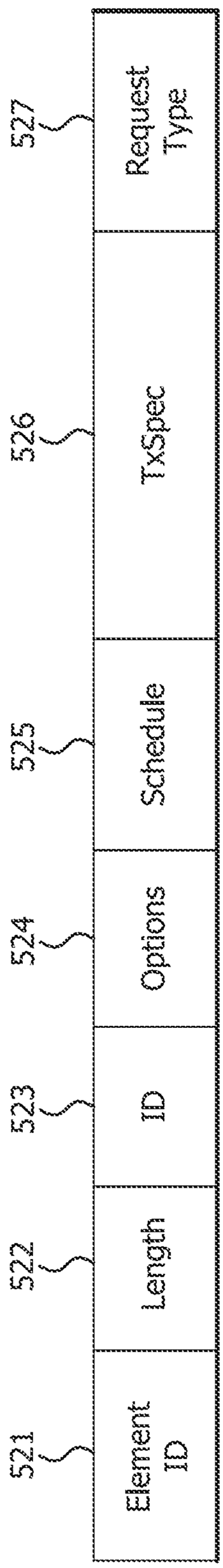
521
Element ID
522
Length
523
ID
524
Options
525
Schedule
526
TxSpec
527
Request Type

FIG. 5B

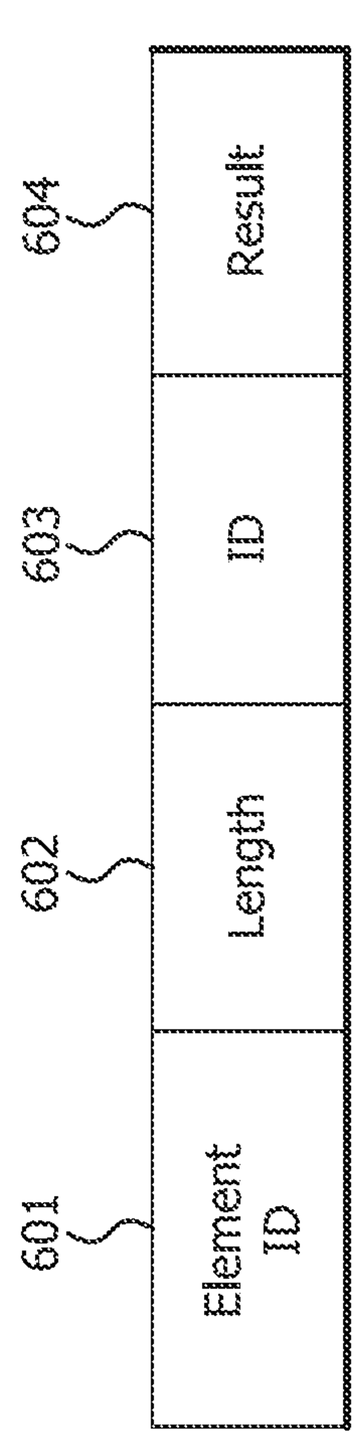
600
601
Element ID
602
Length
603
ID
604
Result

FIG. 6

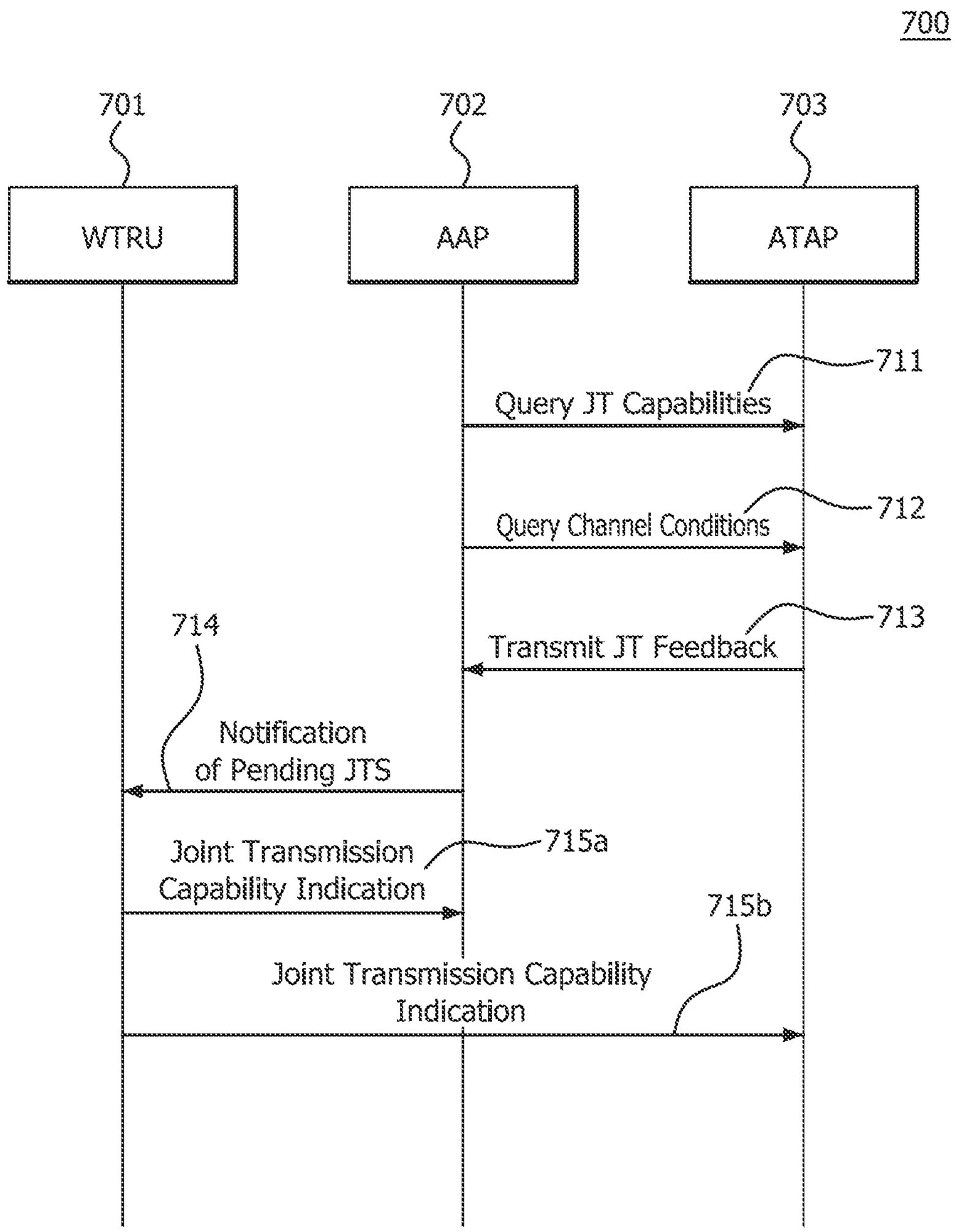
700
701
WTRU
702
AAP
703
ATAP
711
Query JT Capabilities
712
Query Channel Conditions
713
Transmit JT Feedback
714
Notification
of Pending JTS
715a
Joint Transmission
Capability Indication
715b
Joint Transmission Capability
Indication

FIG. 7A

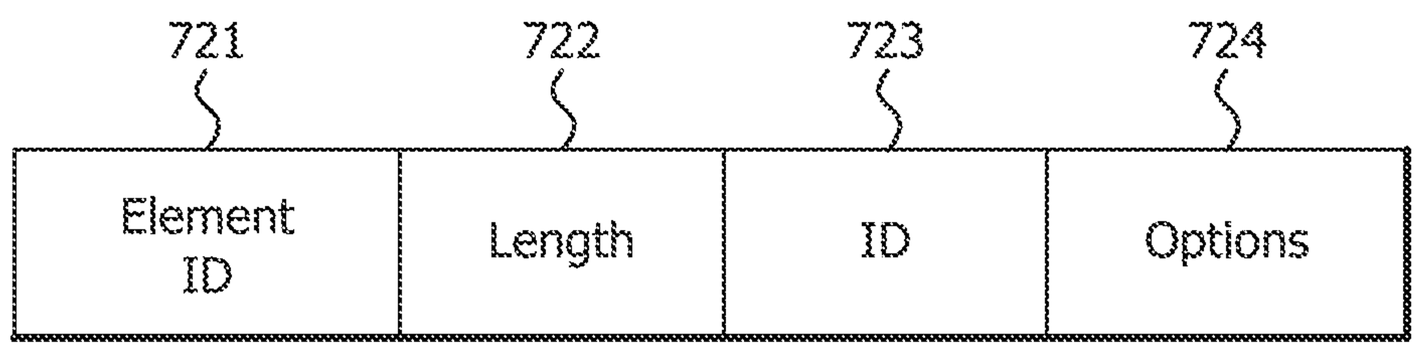

FIG. 7B

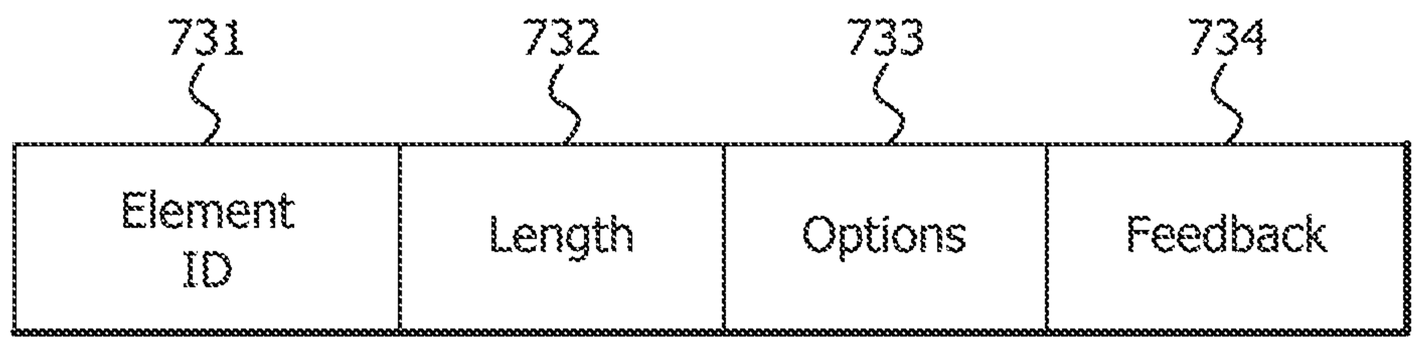

FIG. 7C

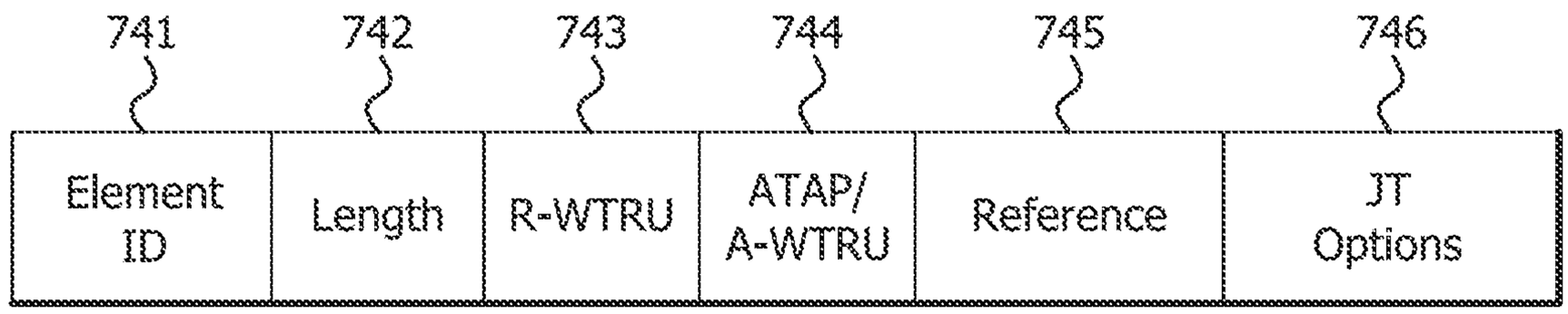

FIG. 7D

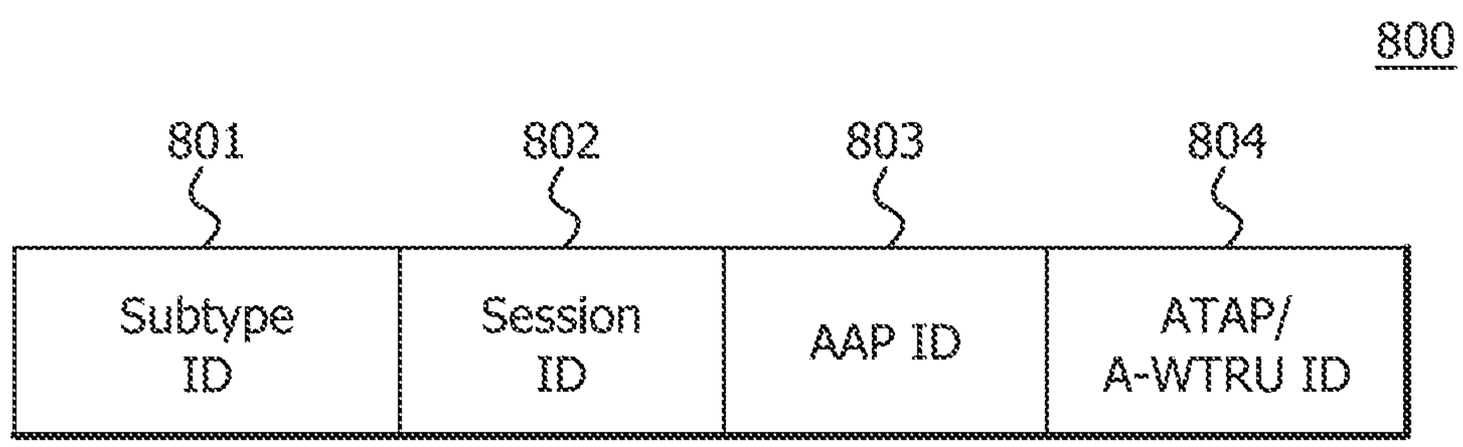

FIG. 8

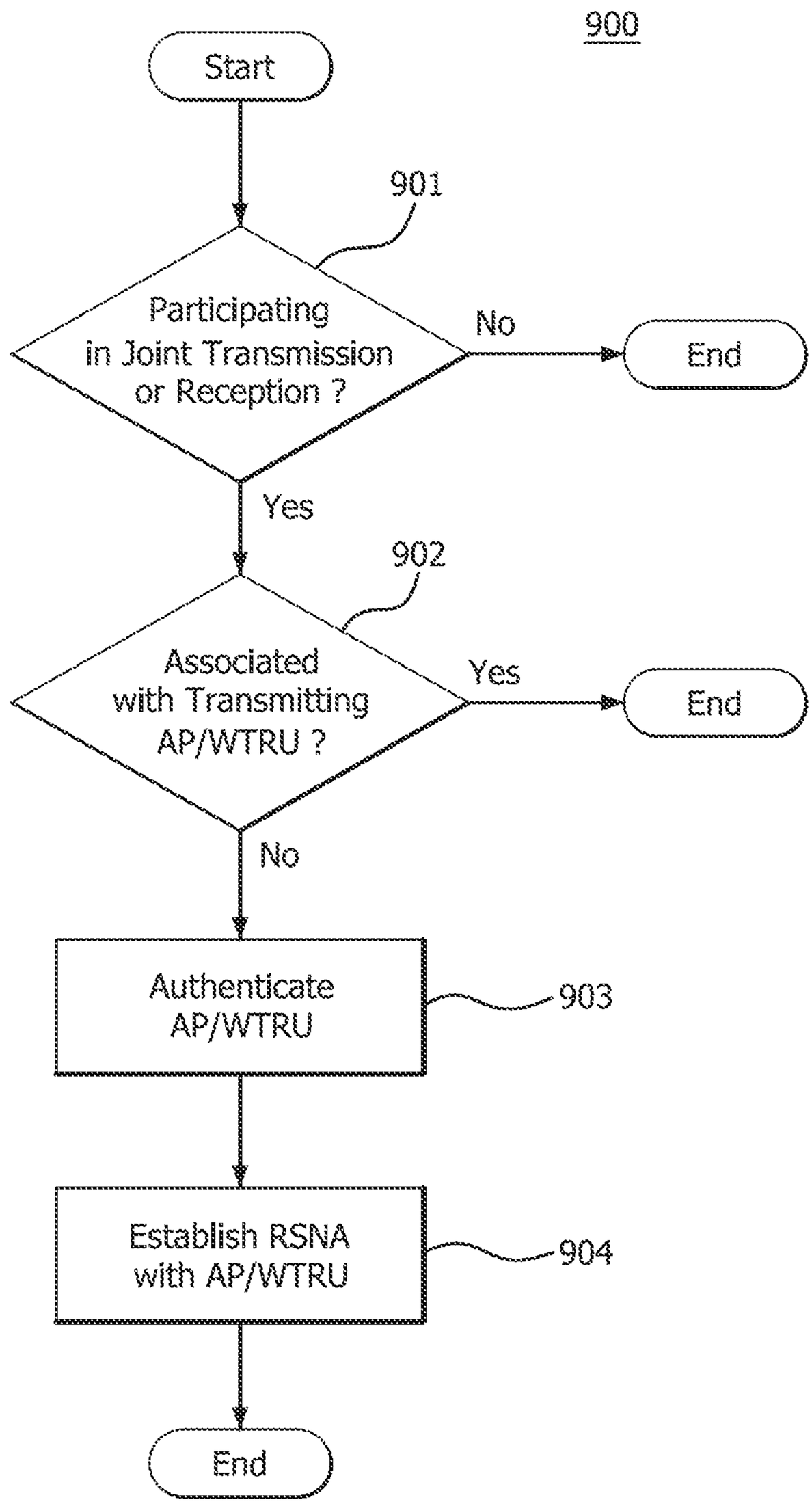
900
Start
901
Participating in Joint Transmission or Reception ?
No
End
Yes
902
Associated with Transmitting AP/WTRU ?
Yes
End
No
Authenticate AP/WTRU
903
Establish RSNA with AP/WTRU
904
End

FIG. 9

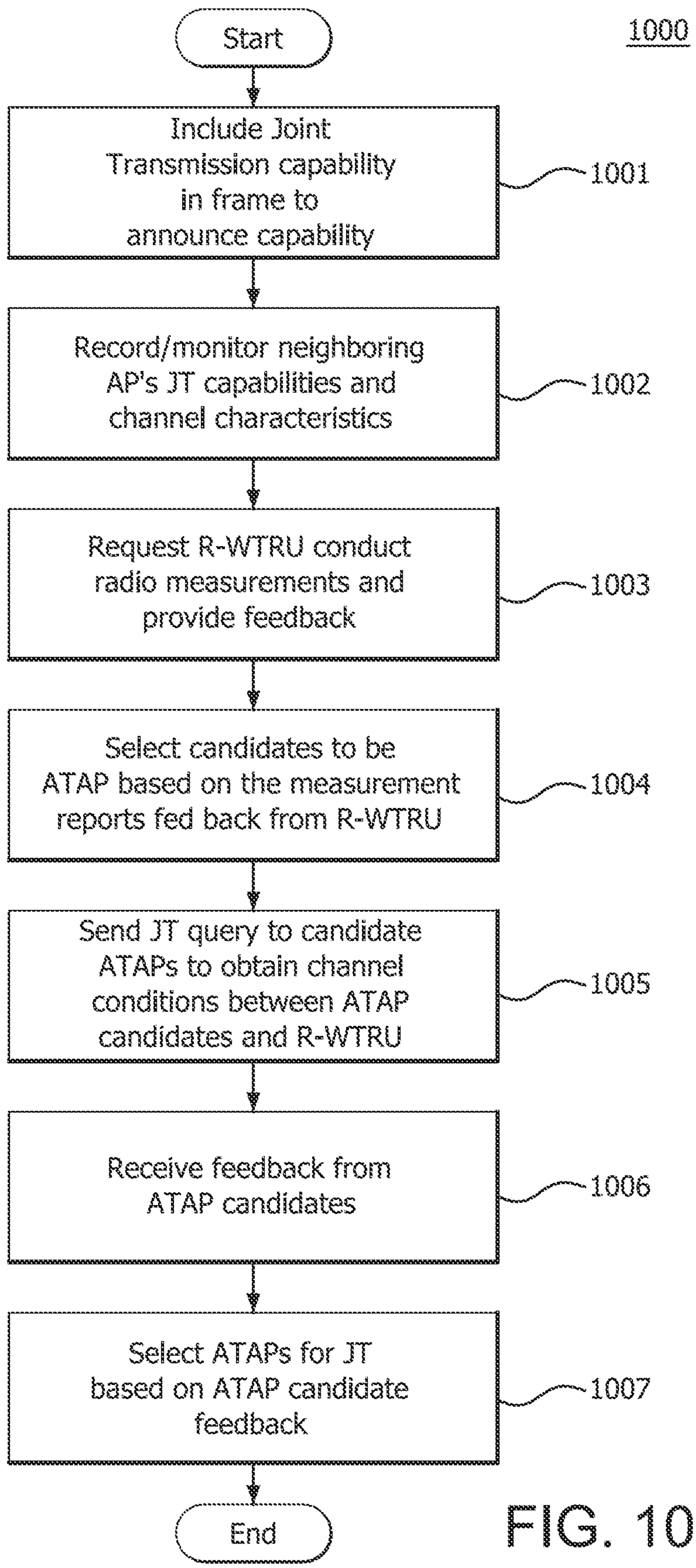
1000
Start
Include Joint Transmission capability in frame to announce capability
1001
Record/monitor neighboring AP's JT capabilities and channel characteristics
1002
Request R-WTRU conduct radio measurements and provide feedback
1003
Select candidates to be ATAP based on the measurement reports fed back from R-WTRU
1004
Send JT query to candidate ATAPs to obtain channel conditions between ATAP candidates and R-WTRU
1005
Receive feedback from ATAP candidates
1006
Select ATAPs for JT based on ATAP candidate feedback
1007
End

FIG. 10

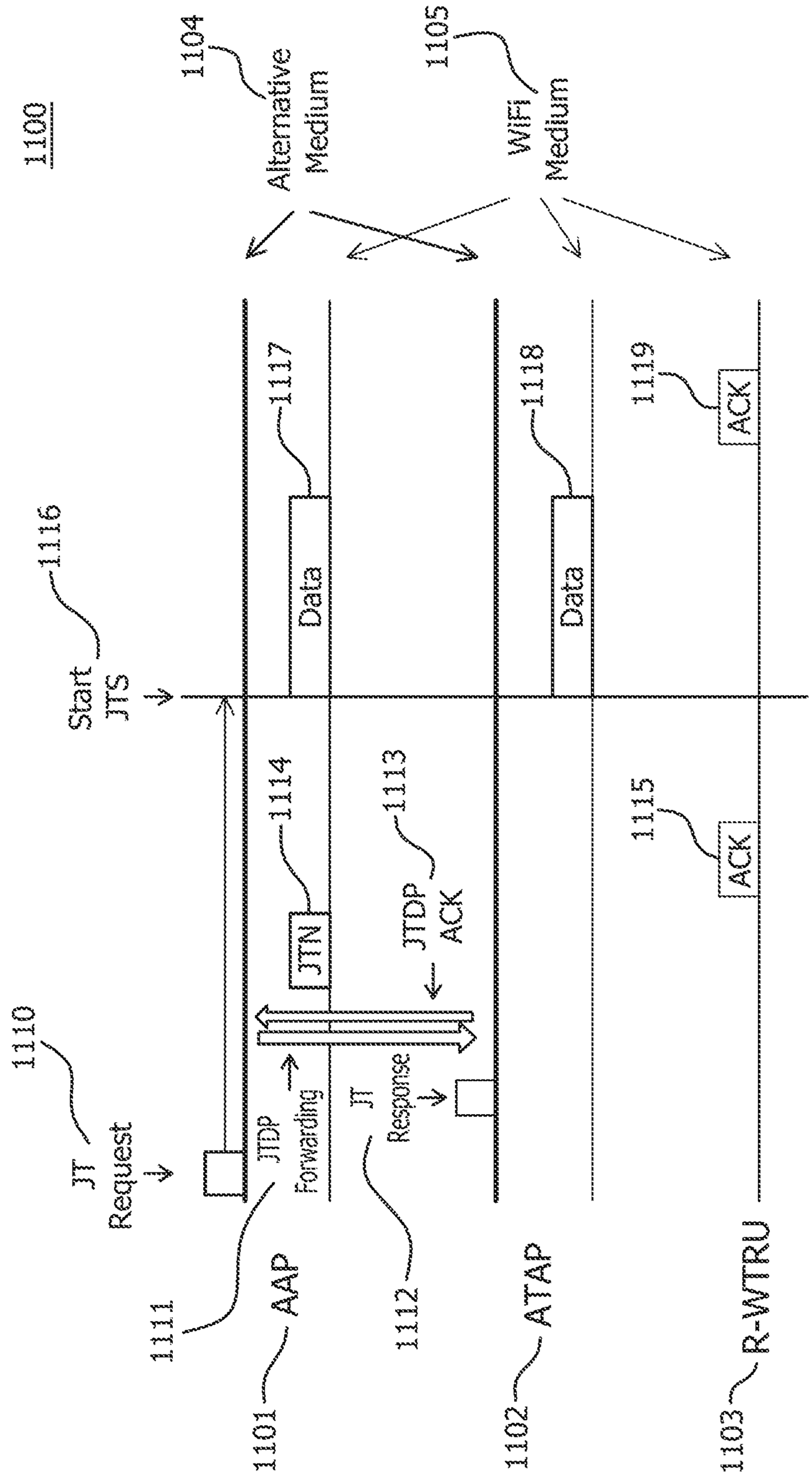
1100
1104
Alternative Medium
1105
WiFi Medium
1116
Start JTS
1117
Data
1118
Data
1119
ACK
1114
JTN
1113
JTDP ACK
1115
ACK
1110
JT Request
JTDP Forwarding
JT Response
1111
1112
1101
AAP
1102
ATAP
1103
R-WTRU

FIG. 11

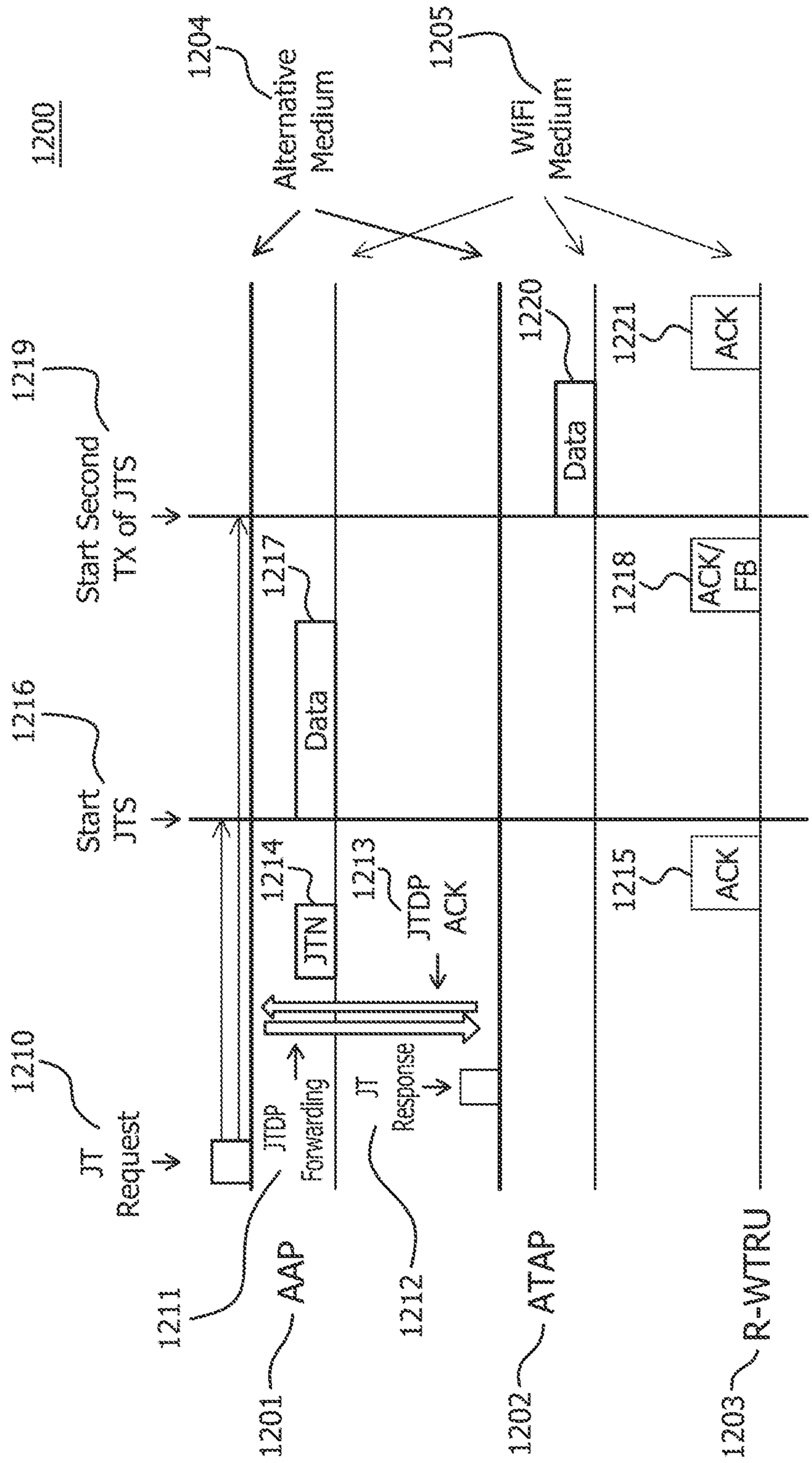
1200
1204
Alternative Medium
1205
WiFi Medium
1219
Start Second TX of JTS
1216
Start JTS
1217
Data
1220
Data
1221
ACK
1218
ACK/ FB
1214
JTN
1213
JTDP ACK
1215
ACK
1210
JT Request
JTDP Forwarding
JT Response
1211
1212
1201
AAP
1202
ATAP
1203
R-WTRU

FIG. 12

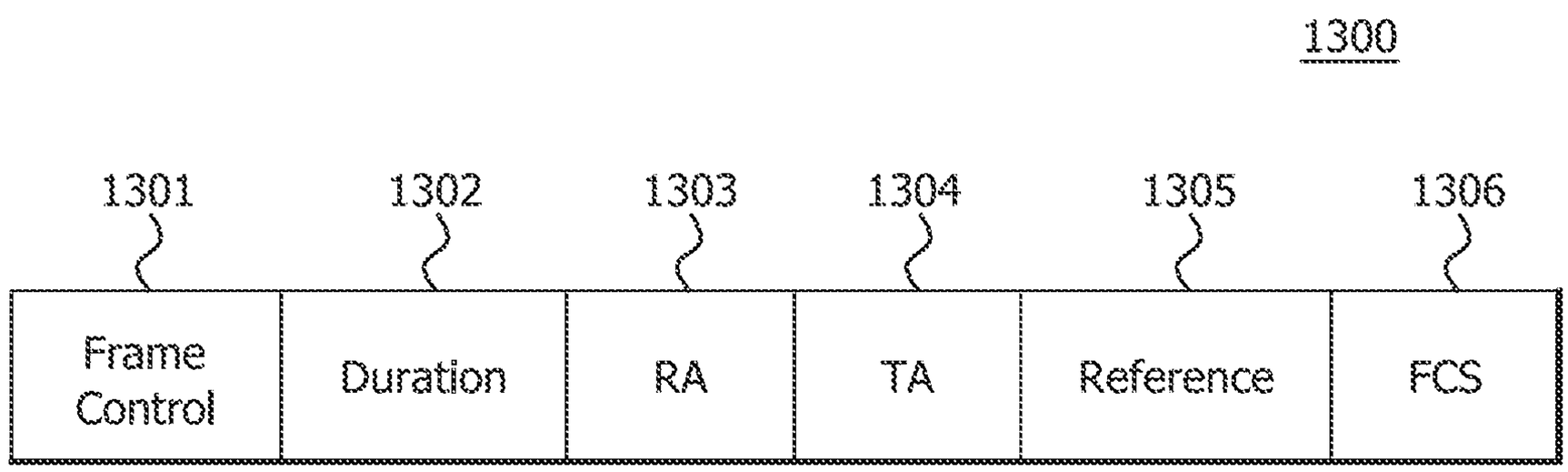
1300
1301
1302
1303
1304
1305
1306
Frame Control
Duration
RA
TA
Reference
FCS

FIG. 13

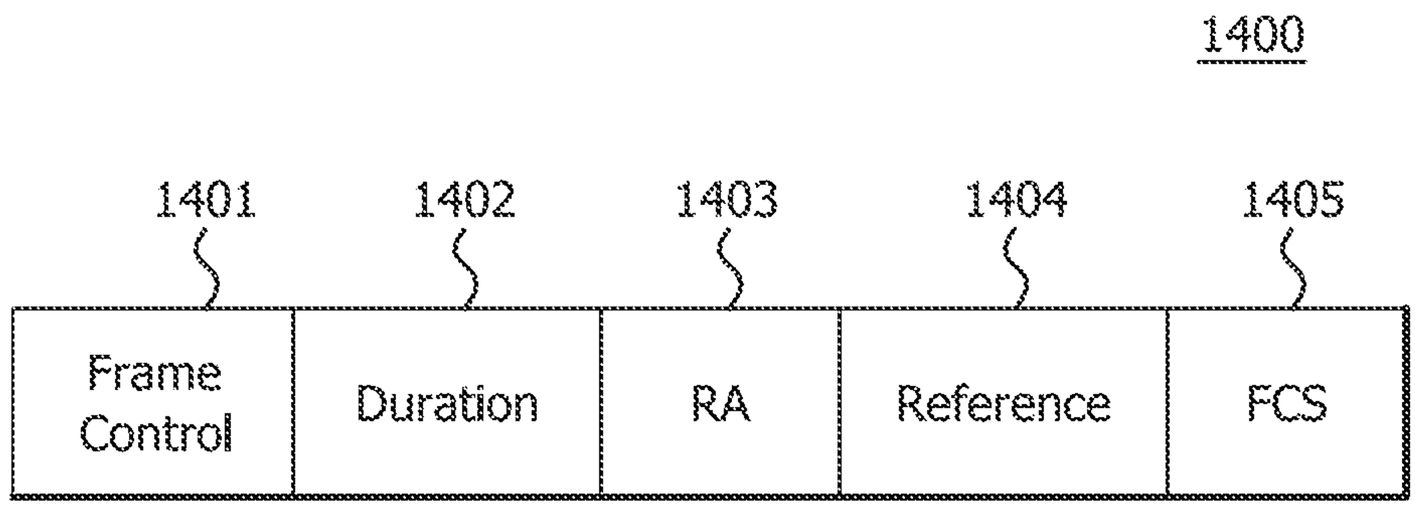
1400
1401
1402
1403
1404
1405
Frame Control
Duration
RA
Reference
FCS

FIG. 14

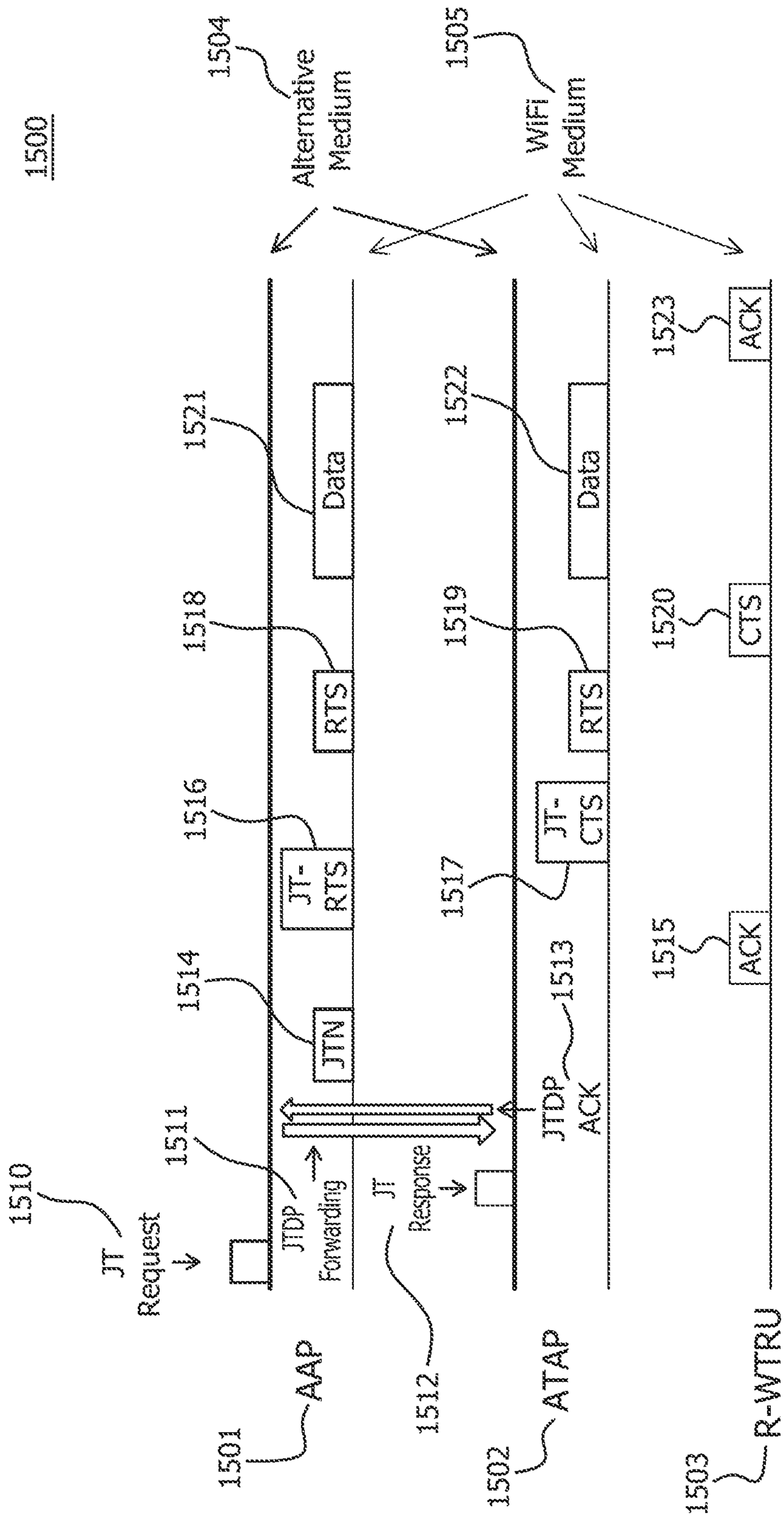
1500
1504
Alternative Medium
1505
WIFI Medium
1521
Data
1522
Data
1523
ACK
1518
RTS
1519
RTS
1520
CTS
1516
JT-RTS
1517
JT-CTS
1514
JTN
1513
JTDP ACK
1515
ACK
1511
JTDP Forwarding
1510
JT Request
JT Response
1512
1501
AAP
1502
ATAP
1503
R-WTRU

FIG. 15

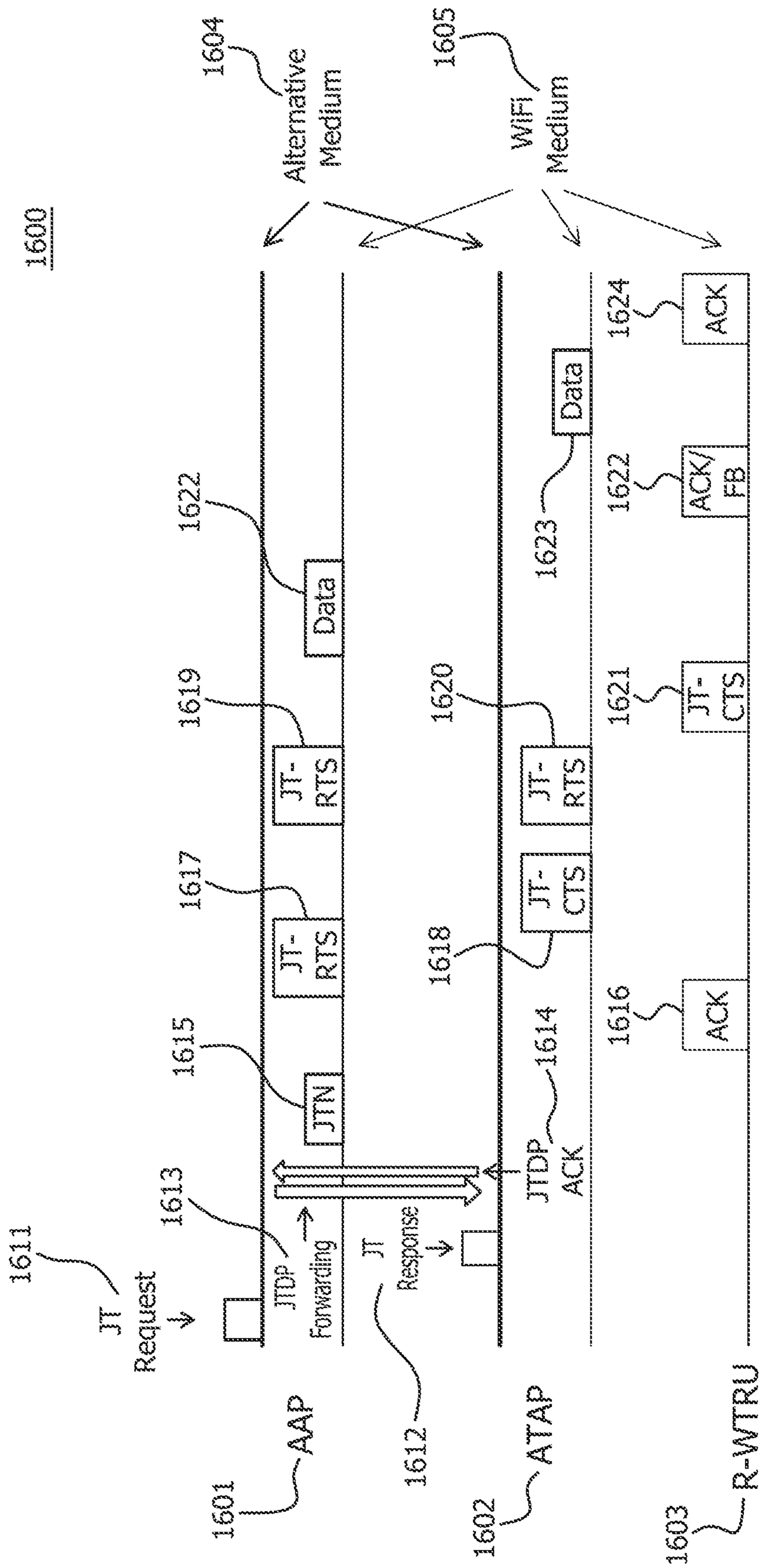
1600
1604
Alternative Medium
1605
WiFi Medium
1601
AAP
1602
ATAP
1603
R-WTRU
1611
JT Request
1612
JT Response
1613
JTDP Forwarding
1614
JTDP ACK
1615
JTN
1616
ACK
1617
JT-RTS
1618
JT-CTS
1619
JT-RTS
1620
JT-RTS
1621
JT-CTS
1622
Data
1623
Data
1622
ACK/FB
1624
ACK

FIG. 16

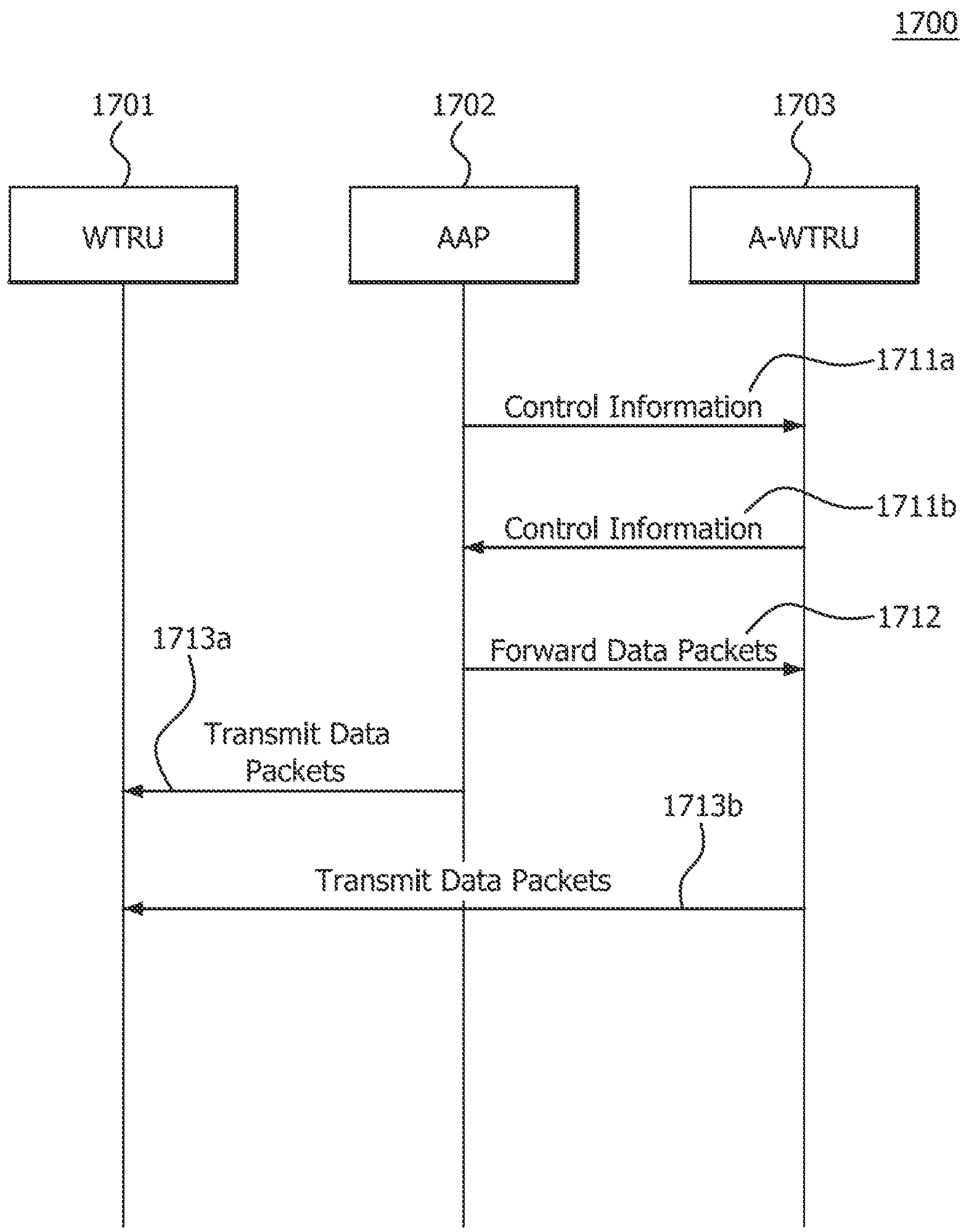
1700
1701
1702
1703
WTRU
AAP
A-WTRU
1711a
Control Information
1711b
Control Information
1712
Forward Data Packets
1713a
Transmit Data Packets
1713b
Transmit Data Packets

FIG. 17A

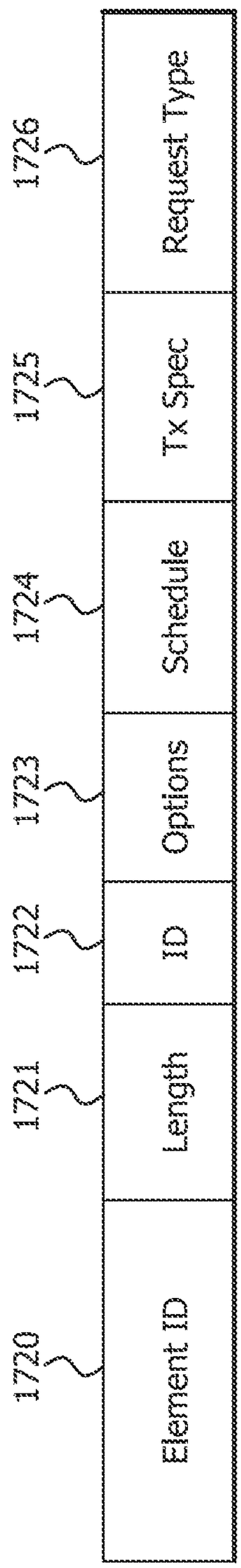
1720
Element ID
1721
Length
1722
ID
1723
Options
1724
Schedule
1725
Tx Spec
1726
Request Type

FIG. 17B

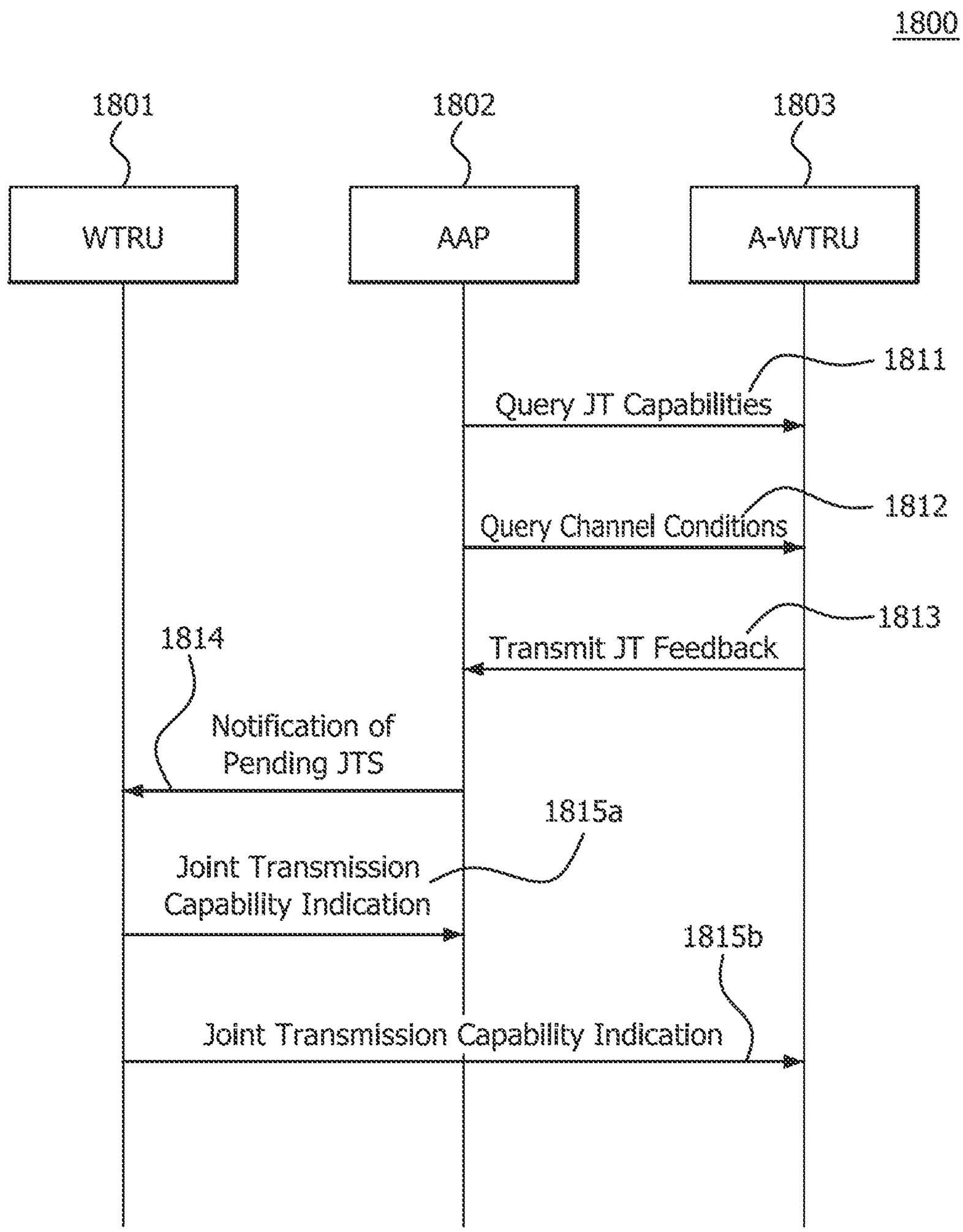
1800
1801
1802
1803
WTRU
AAP
A-WTRU
1811
Query JT Capabilities
1812
Query Channel Conditions
1813
Transmit JT Feedback
1814
Notification of Pending JTS
1815a
Joint Transmission Capability Indication
1815b
Joint Transmission Capability Indication

FIG. 18

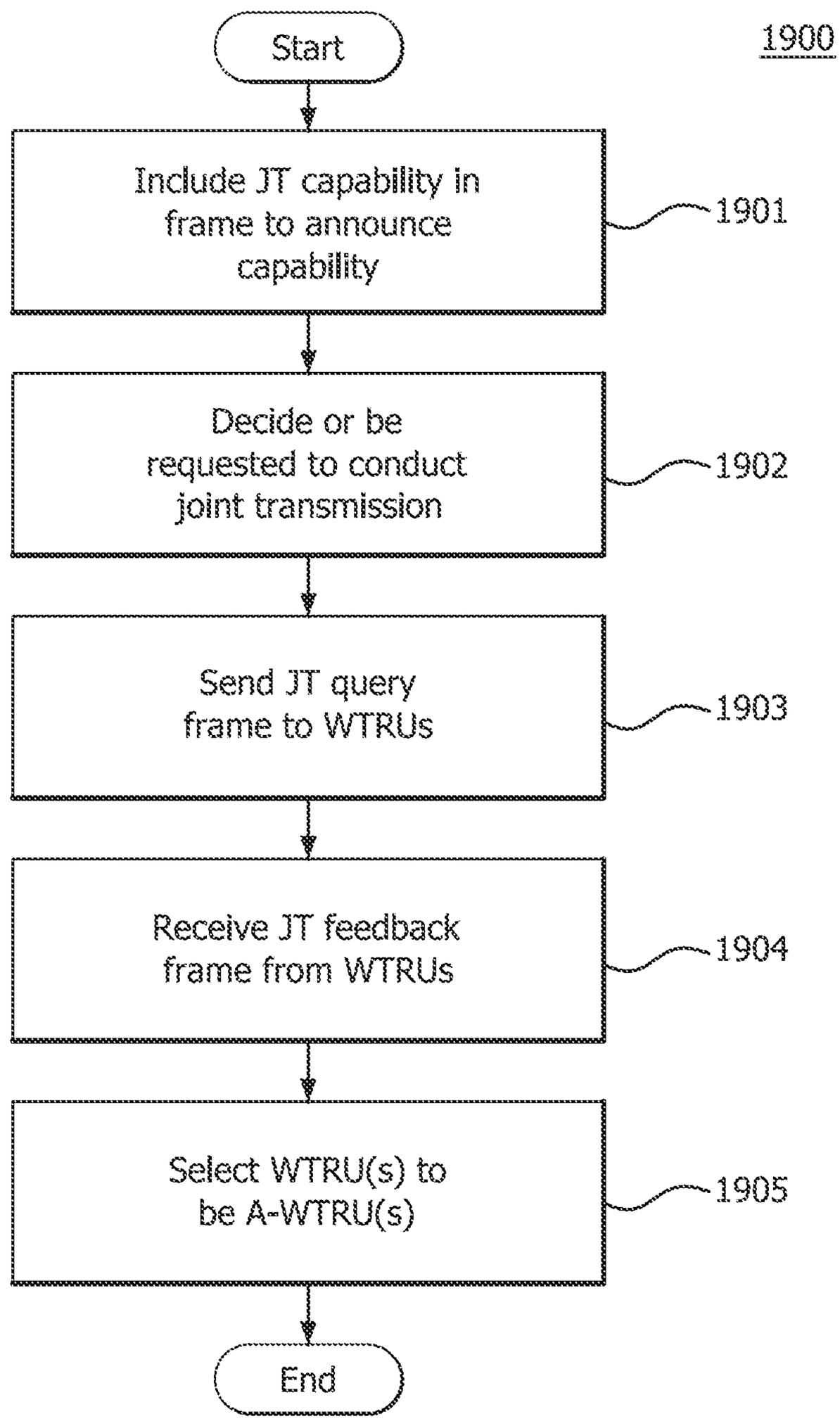
1900
Start
Include JT capability in frame to announce capability
1901
Decide or be requested to conduct joint transmission
1902
Send JT query frame to WTRUs
1903
Receive JT feedback frame from WTRUs
1904
Select WTRU(s) to be A-WTRU(s)
1905
End

FIG. 19

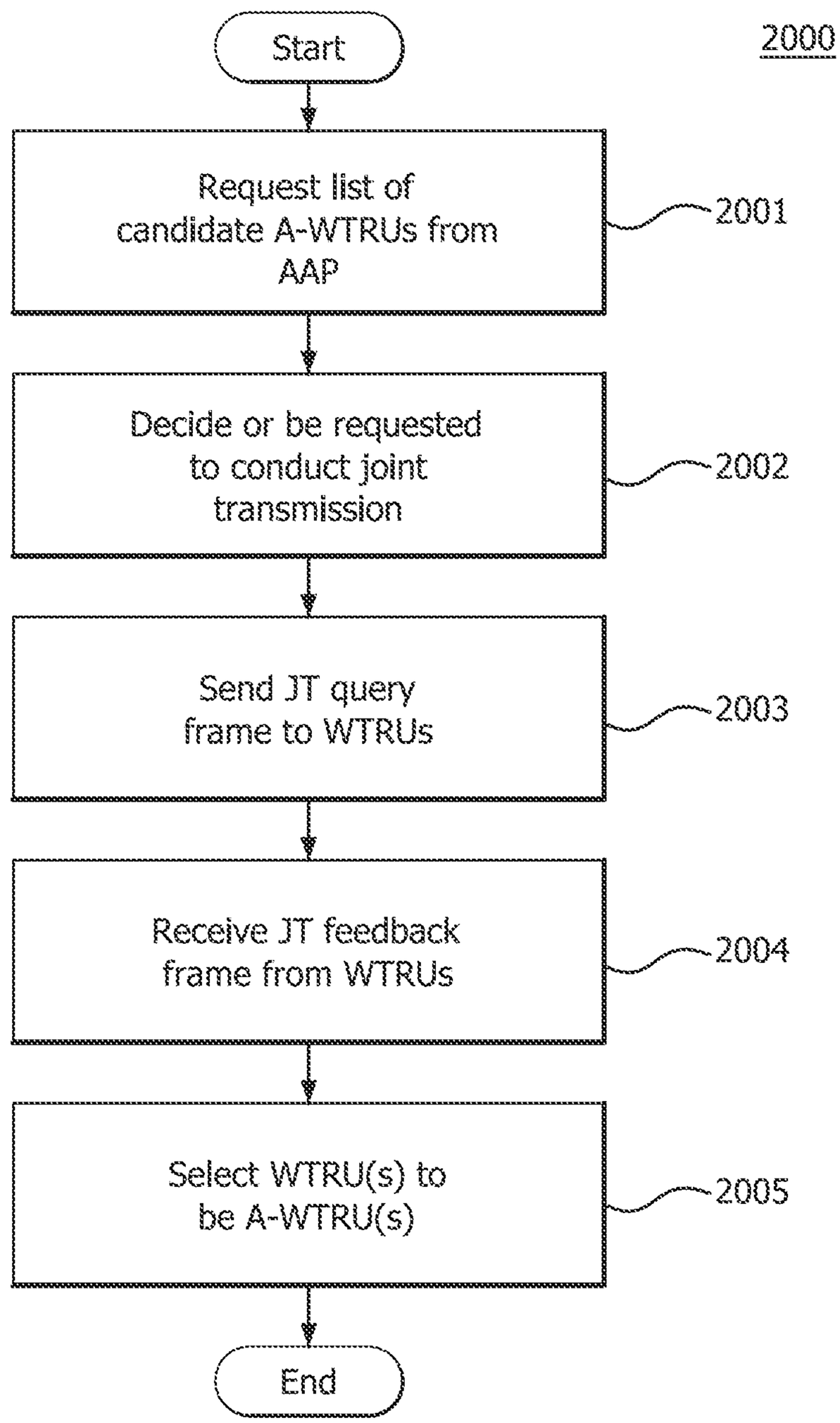
2000
Start
Request list of candidate A-WTRUs from AAP
2001
Decide or be requested to conduct joint transmission
2002
Send JT query frame to WTRUs
2003
Receive JT feedback frame from WTRUs
2004
Select WTRU(s) to be A-WTRU(s)
2005
End

FIG. 20

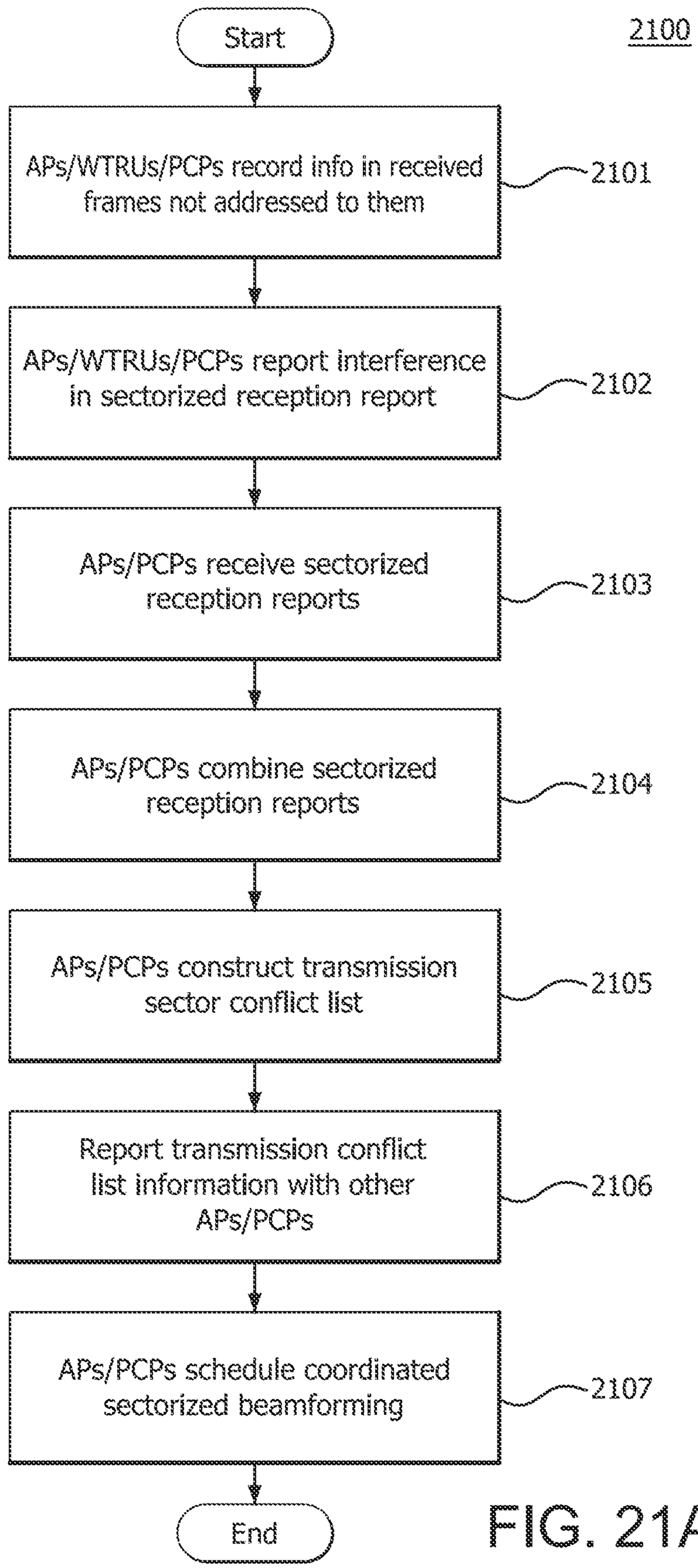
2100
Start
APs/WTRUs/PCPs record info in received frames not addressed to them
2101
APs/WTRUs/PCPs report interference in sectorized reception report
2102
APs/PCPs receive sectorized reception reports
2103
APs/PCPs combine sectorized reception reports
2104
APs/PCPs construct transmission sector conflict list
2105
Report transmission conflict list information with other APs/PCPs
2106
APs/PCPs schedule coordinated sectorized beamforming
2107
End

FIG. 21A

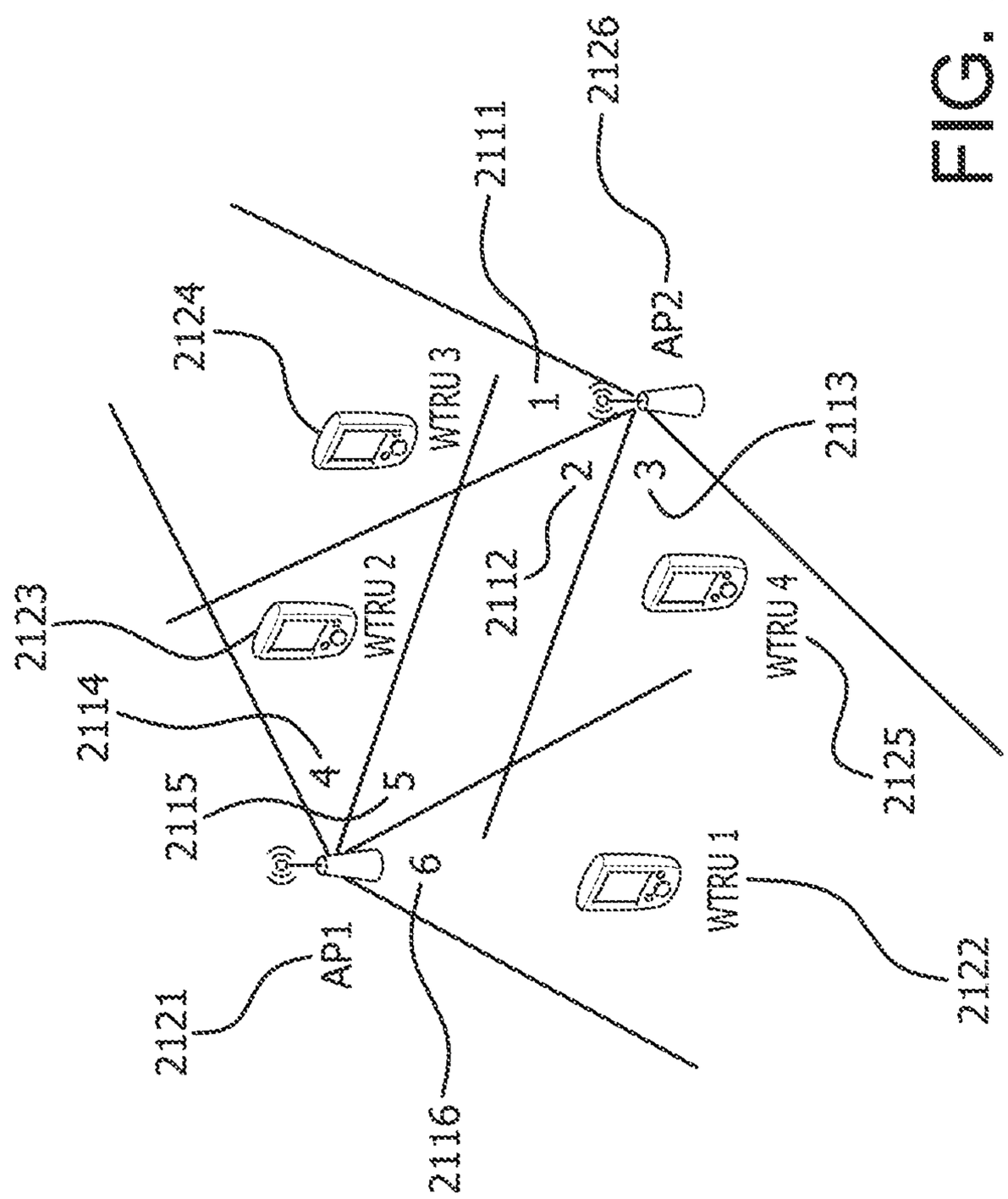
2121
AP1
2115
2114
2123
2116
6
4
5
WTRU 2
2124
WTRU 3
2111
1
2126
AP2
2112
2
3
2113
WTRU 4
2125
WTRU 1
2122

FIG. 21B

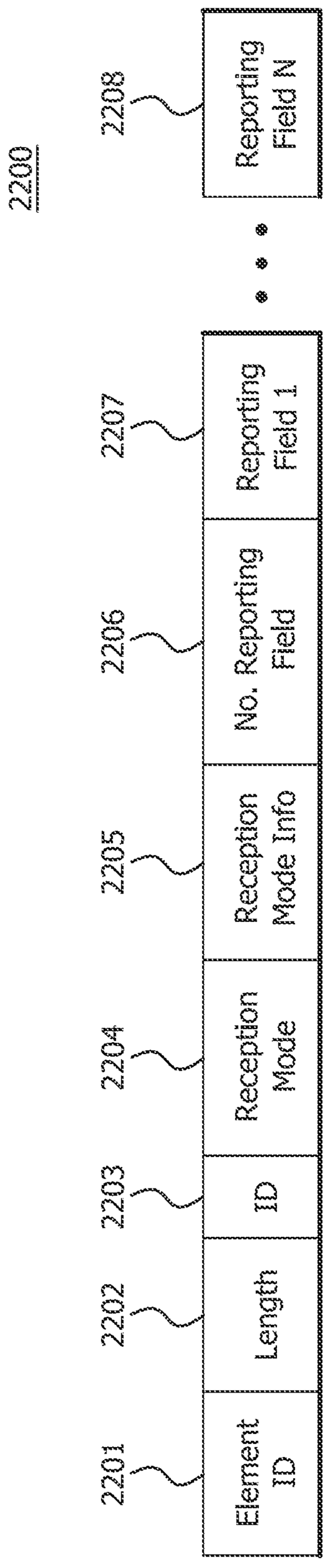
2200
2201
Element ID
2202
Length
2203
ID
2204
Reception Mode
2205
Reception Mode Info
2206
No. Reporting Field
2207
Reporting Field 1
2208
Reporting Field N

FIG. 22

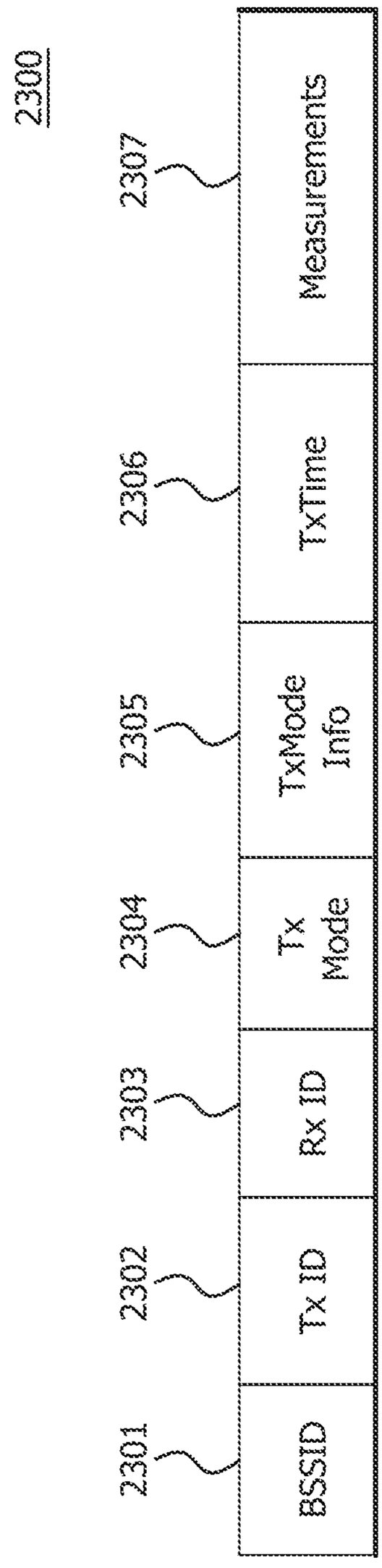
2300
2301
BSSID
2302
Tx ID
2303
Rx ID
2304
Tx Mode
2305
TxMode Info
2306
TxTime
2307
Measurements

FIG. 23

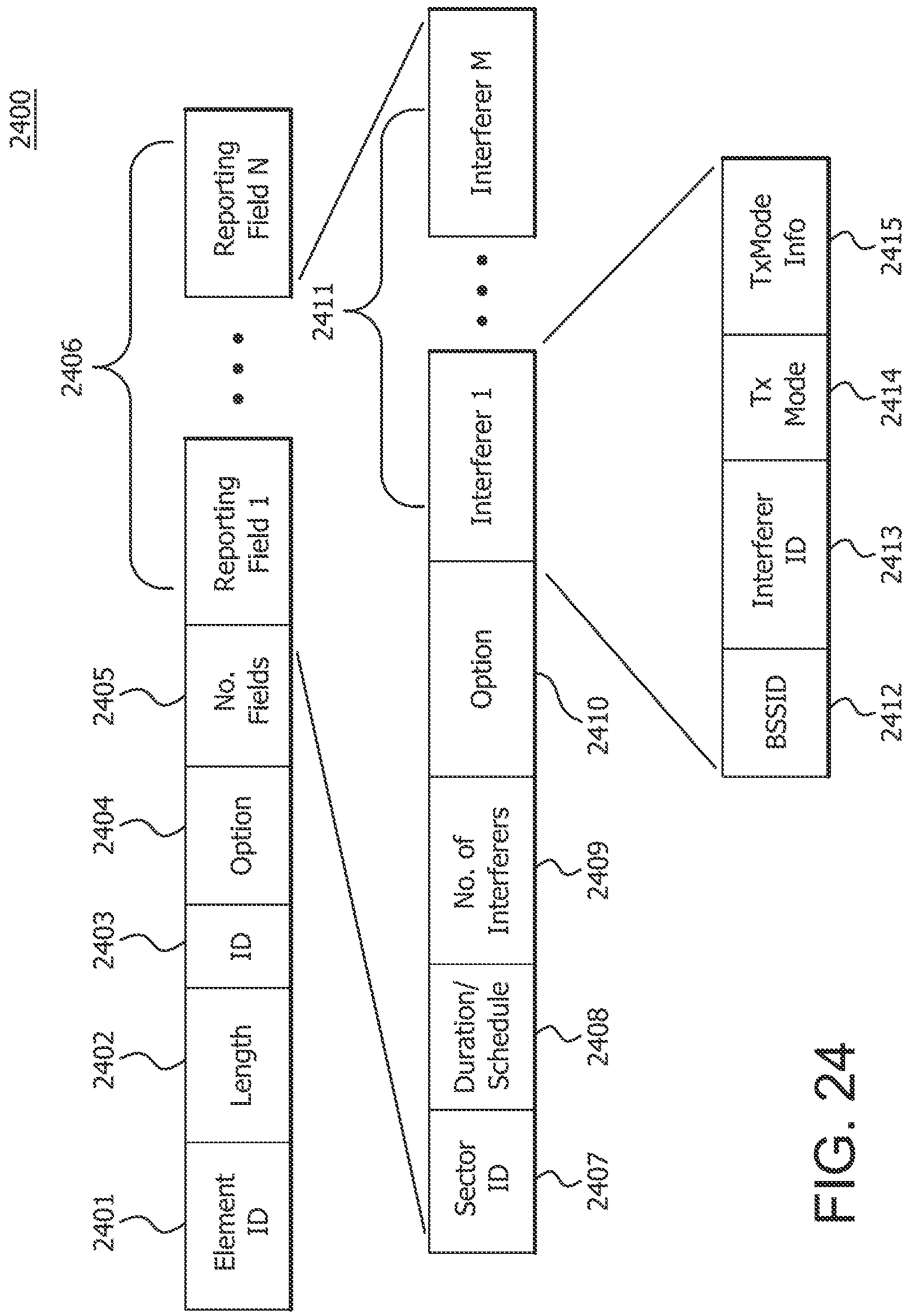
2400
Element ID
Length
ID
Option
No. Fields
Reporting Field 1
Reporting Field N
2401
2402
2403
2404
2405
2406
Sector ID
Duration/ Schedule
No. of Interferers
Option
Interferer 1
Interferer M
2407
2408
2409
2410
2411
BSSID
Interferer ID
Tx Mode
TxMode Info
2412
2413
2414
2415

FIG. 24

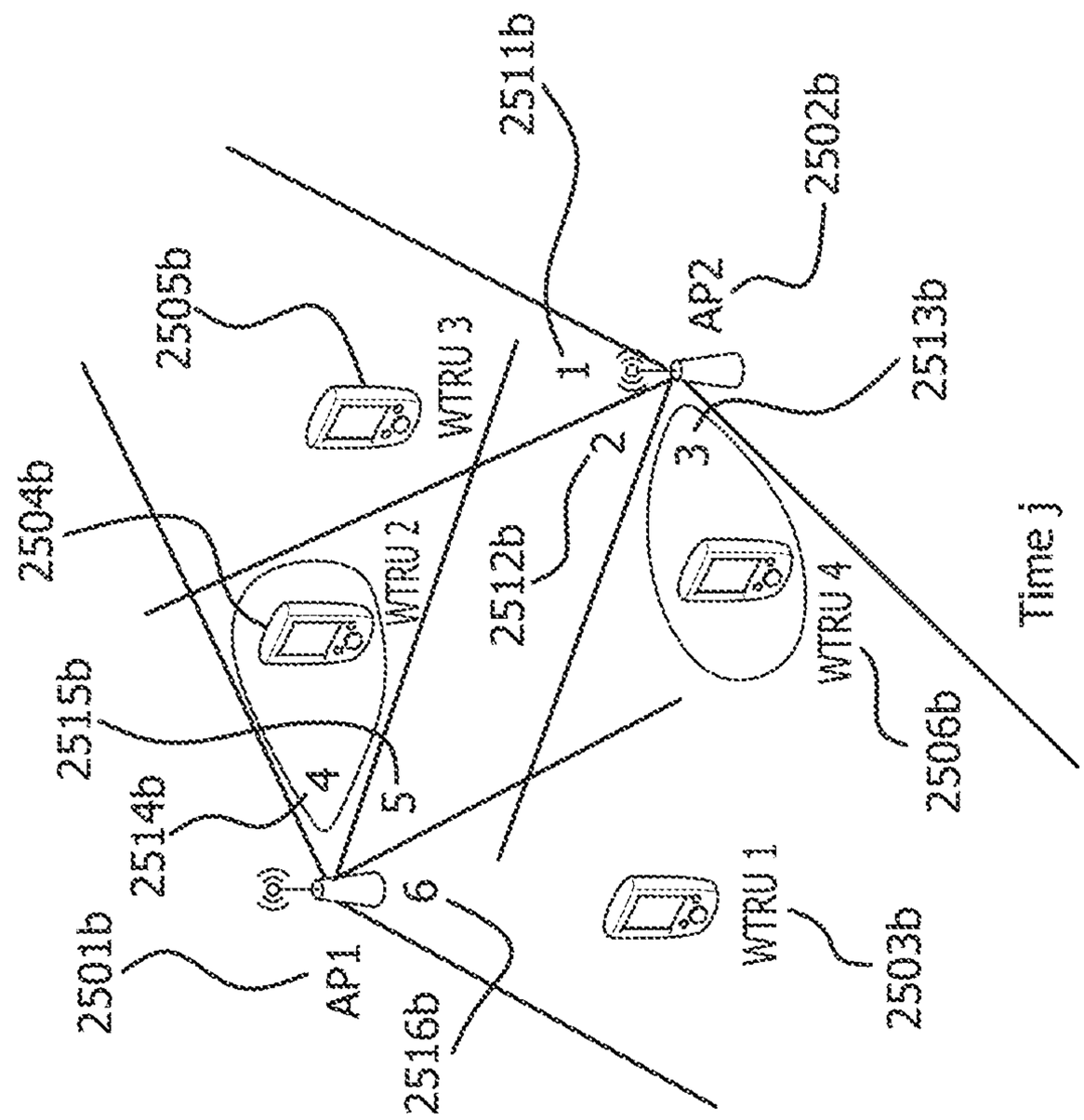

FIG. 25B

2500

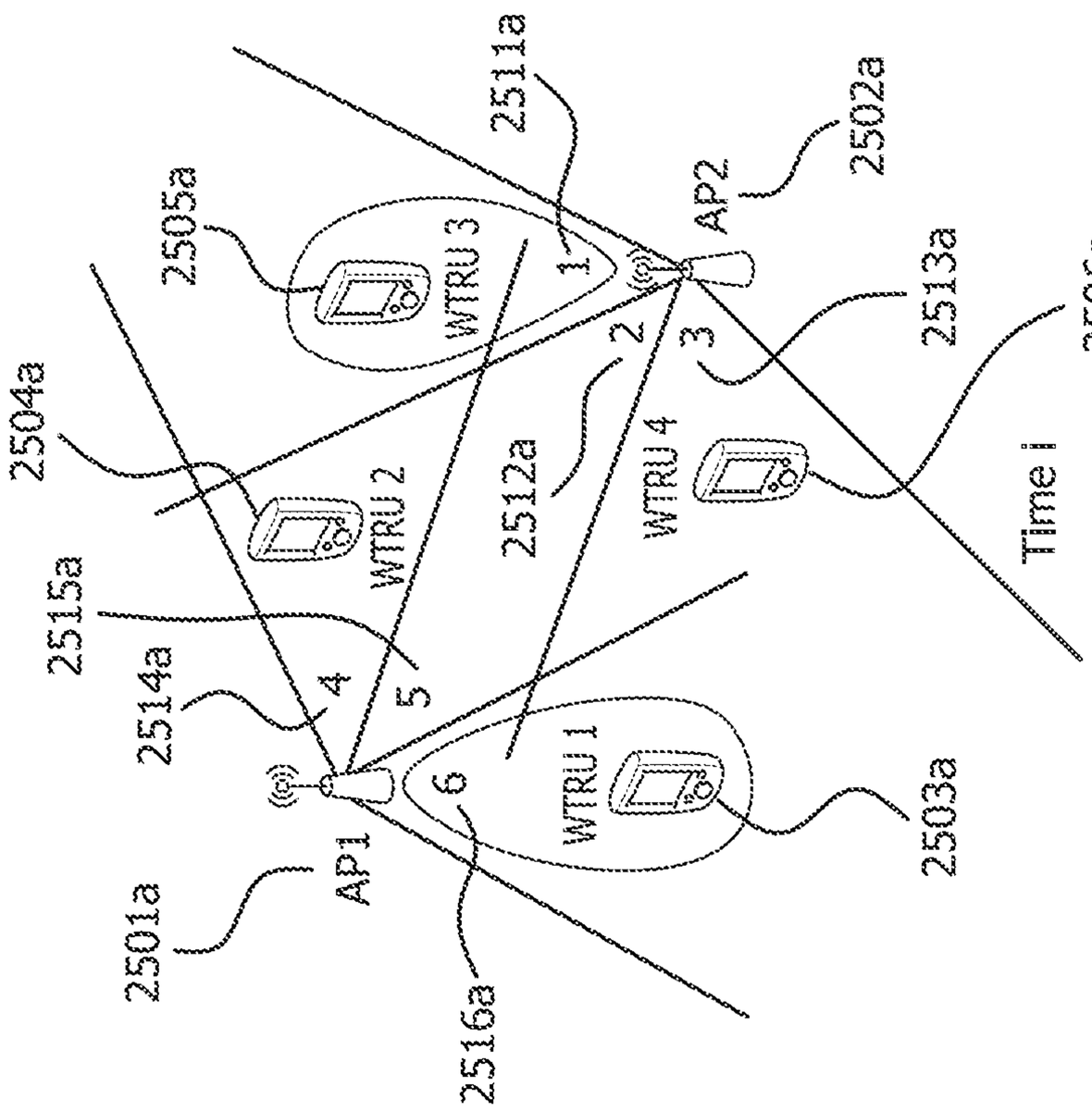

FIG. 25A

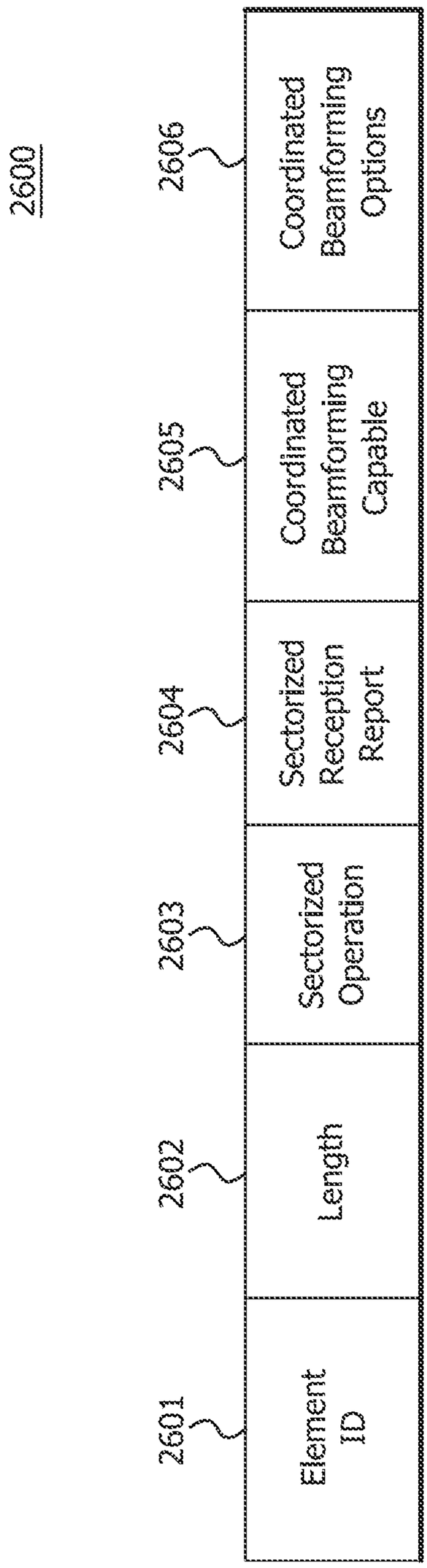
2600
2601
Element ID
2602
Length
2603
Sectorized Operation
2604
Sectorized Reception Report
2605
Coordinated Beamforming Capable
2606
Coordinated Beamforming Options

FIG. 26

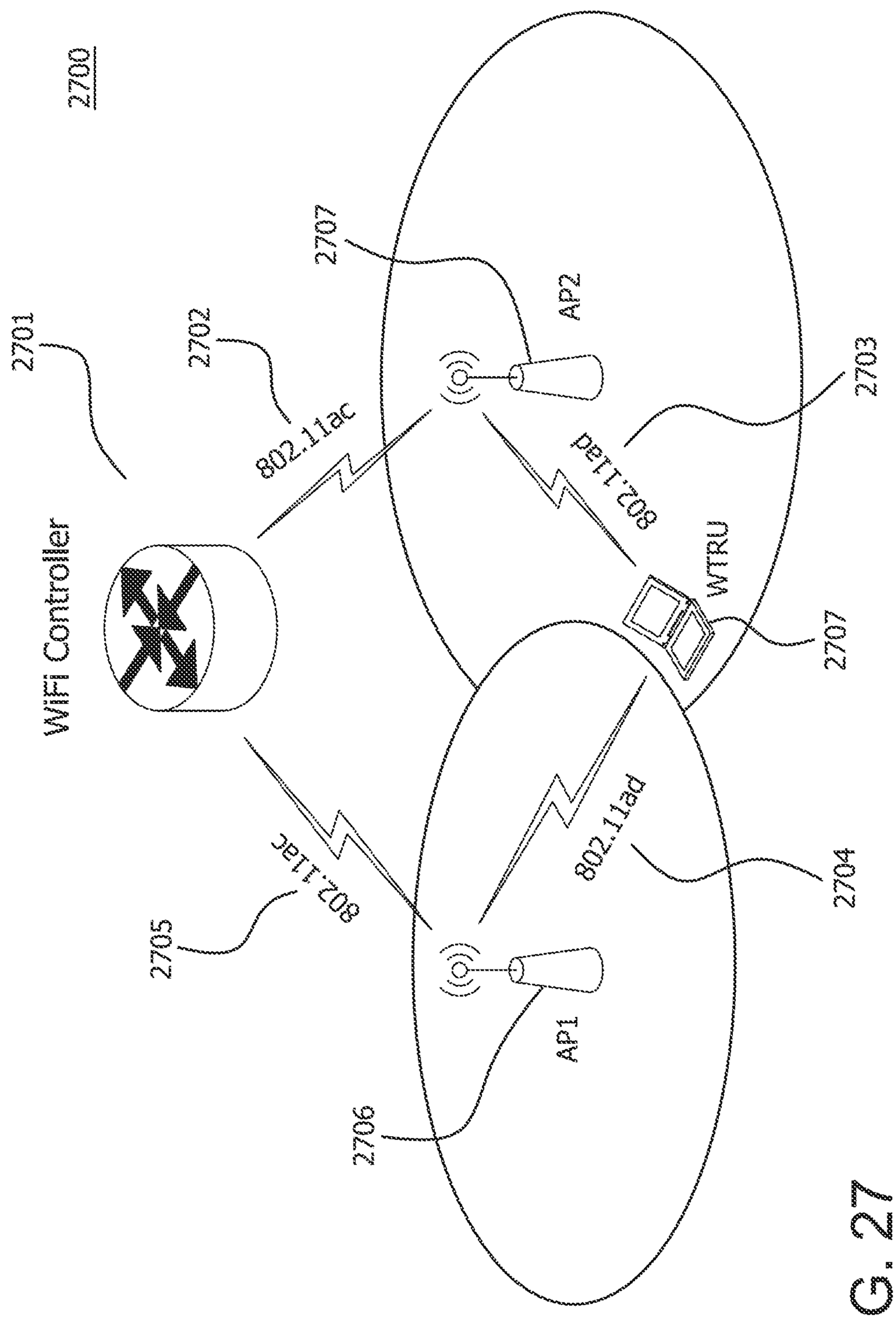
2700
2707
AP2
2701
2702
802.11ac
2703
802.11ad
WiFi Controller
WTRU
2707
802.11ac
802.11ad
2704
2705
AP1
2706

FIG. 27

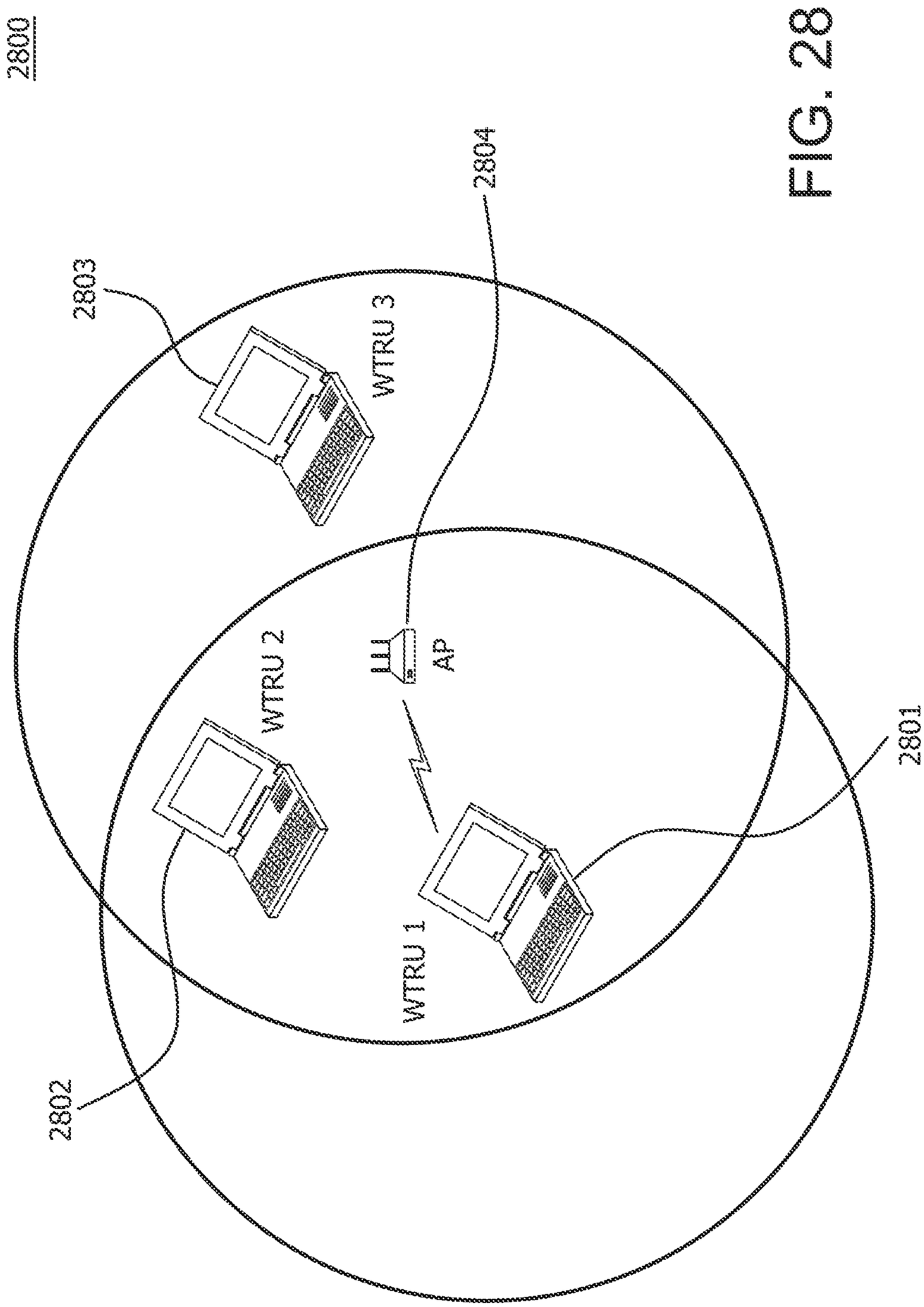

FIG. 28

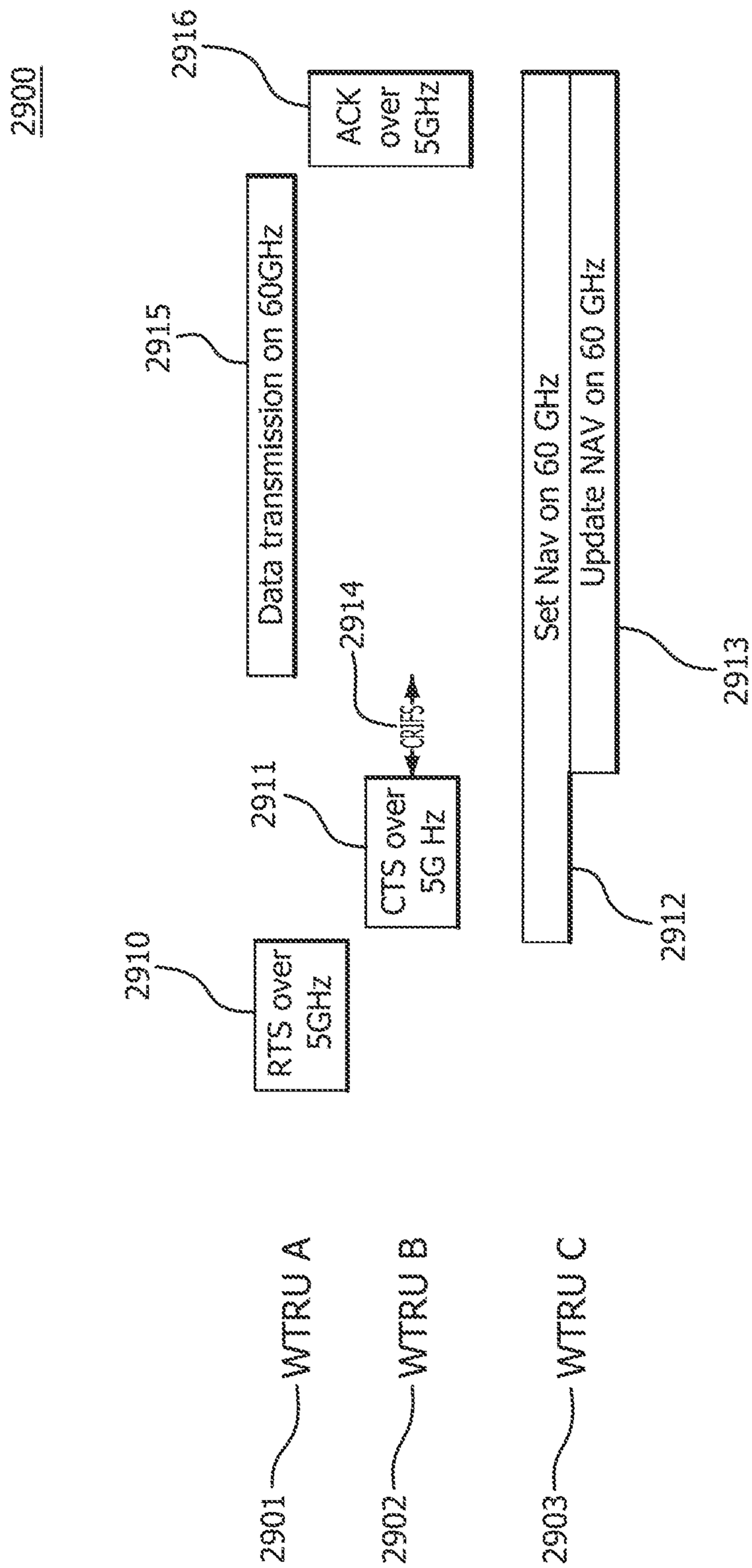
2900
2916
ACK over 5GHz
2915
Data transmission on 60GHz
2914
CRIFS
2911
CTS over 5G Hz
2910
RTS over 5GHz
Set Nav on 60 GHz
Update NAV on 60 GHz
2913
2912
2901
WTRU A
2902
WTRU B
2903
WTRU C

FIG. 29

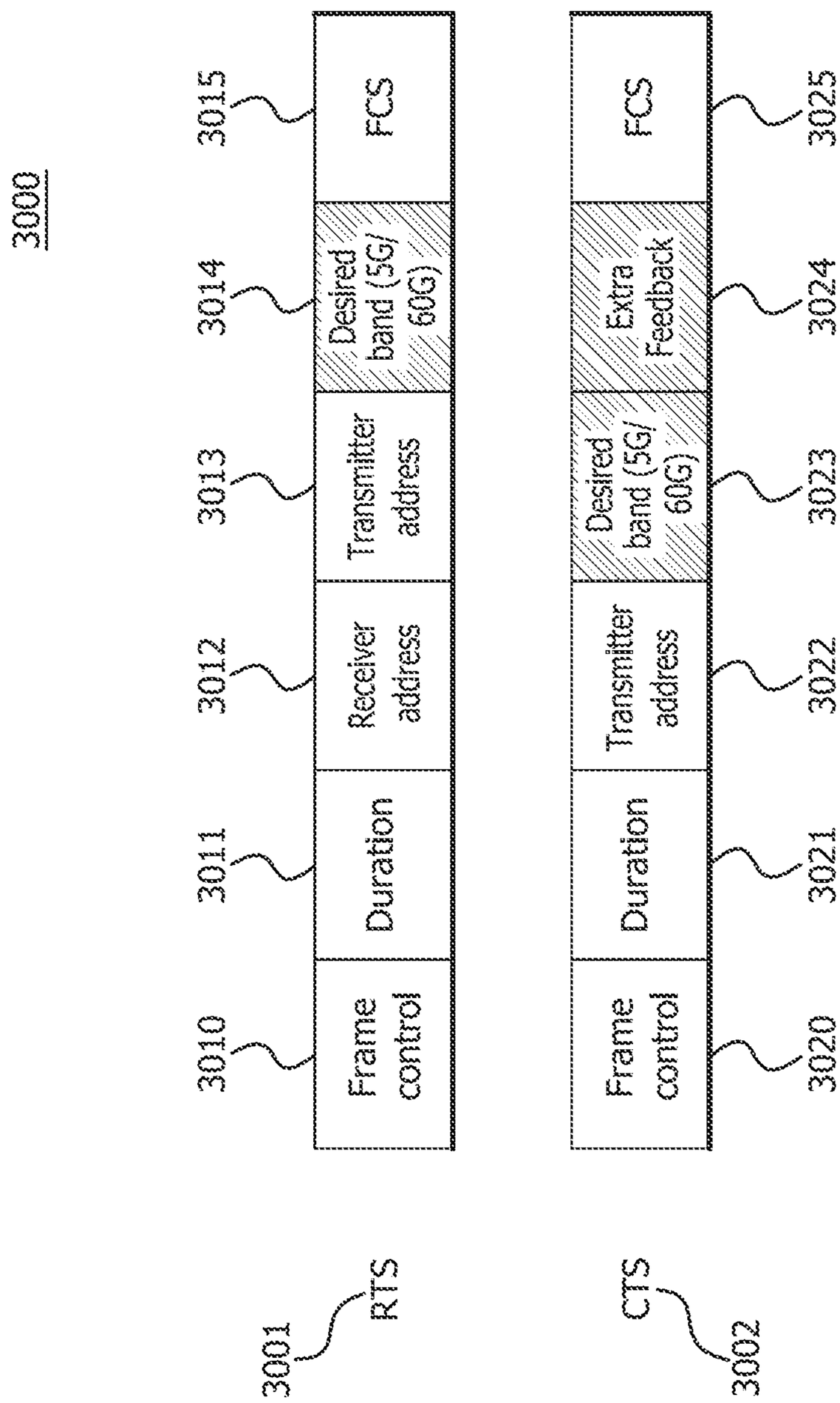
3000
3001
RTS
3010
Frame control
3011
Duration
3012
Receiver address
3013
Transmitter address
3014
Desired band (5G/ 60G)
3015
FCS
CTS
3002
3020
Frame control
3021
Duration
3022
Transmitter address
3023
Desired band (5G/ 60G)
3024
Extra Feedback
3025
FCS

FIG. 30

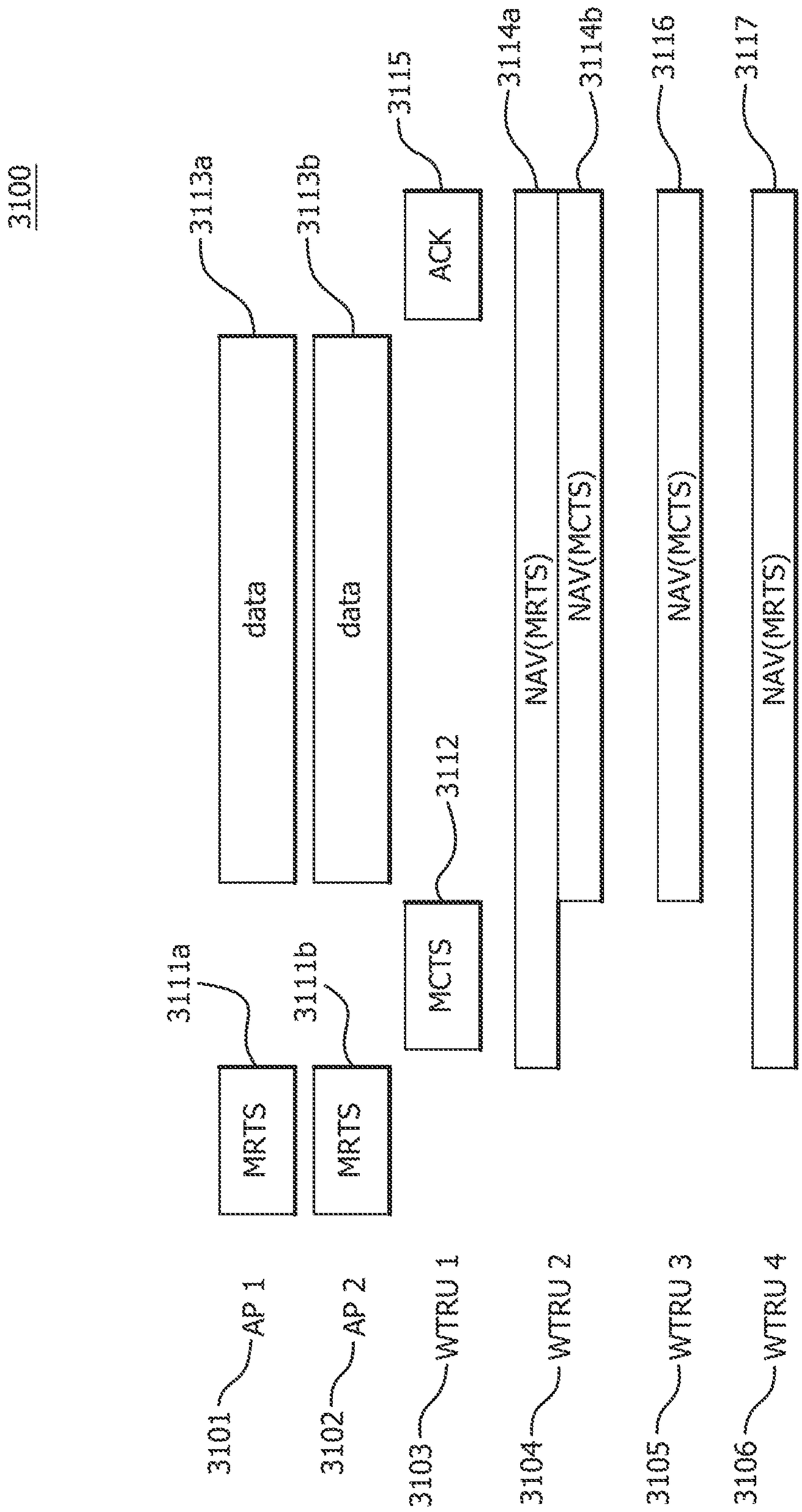
3100
3101
AP 1
3102
AP 2
3103
WTRU 1
3104
WTRU 2
3105
WTRU 3
3106
WTRU 4
3111a
MRTS
3111b
MRTS
3112
MCTS
3113a
data
3113b
data
3115
ACK
3114a
NAV(MRTS)
3114b
NAV(MCTS)
3116
NAV(MCTS)
3117
NAV(MRTS)

FIG. 31

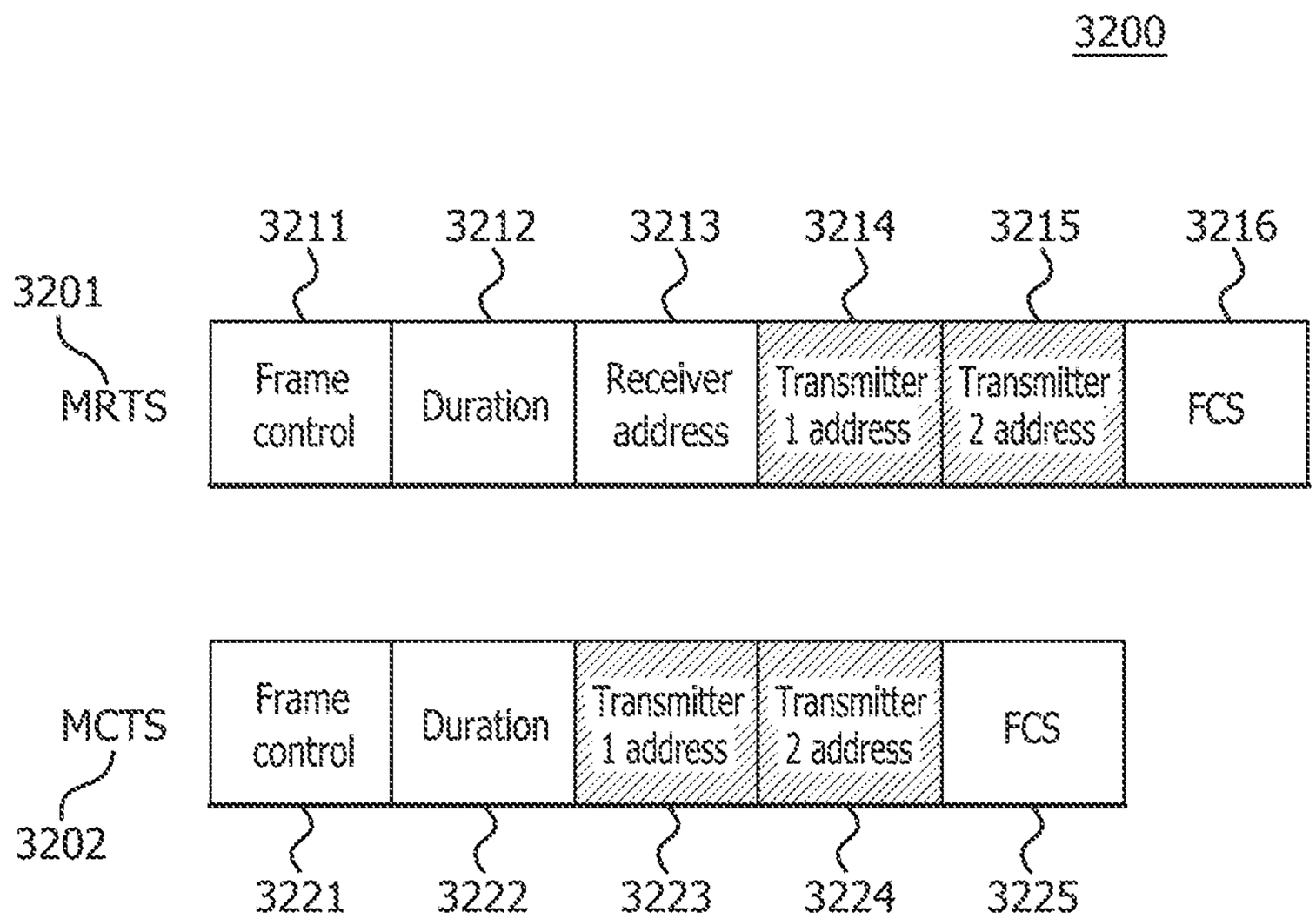
3200
3211
3212
3213
3214
3215
3216
3201
MRTS
Frame control
Duration
Receiver address
Transmitter 1 address
Transmitter 2 address
FCS
MCTS
3202
Frame control
Duration
Transmitter 1 address
Transmitter 2 address
FCS
3221
3222
3223
3224
3225

FIG. 32

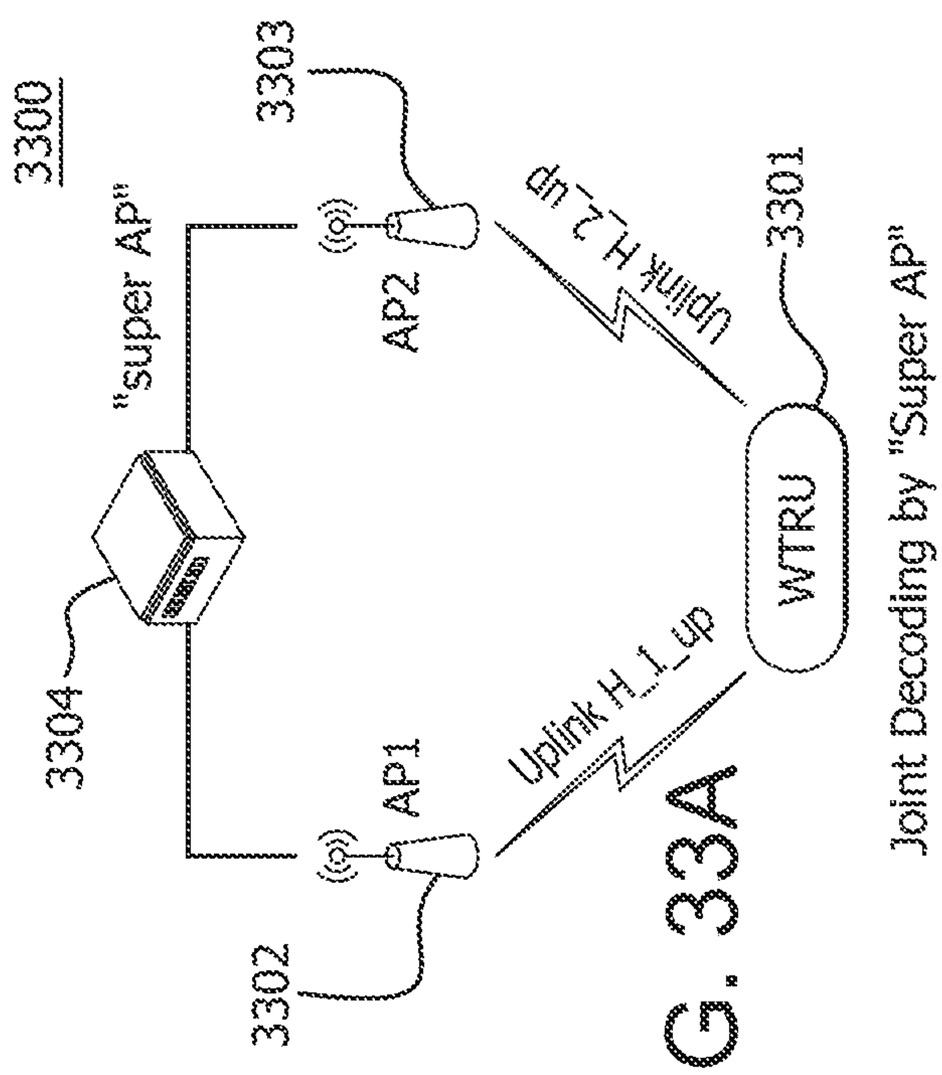

FIG. 33A

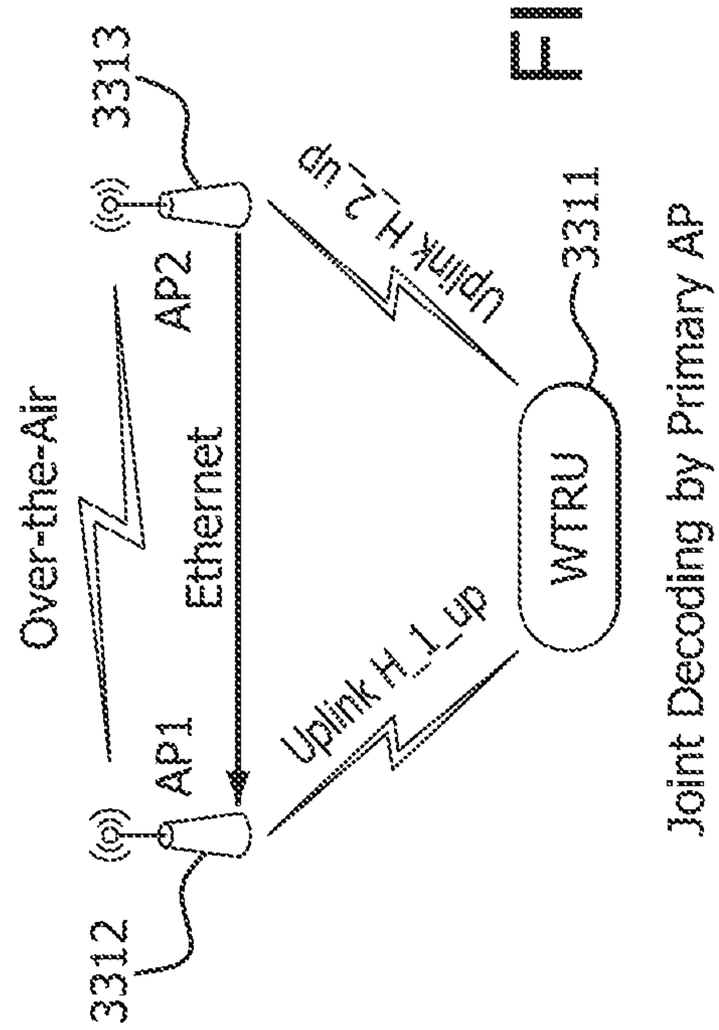

FIG. 33B

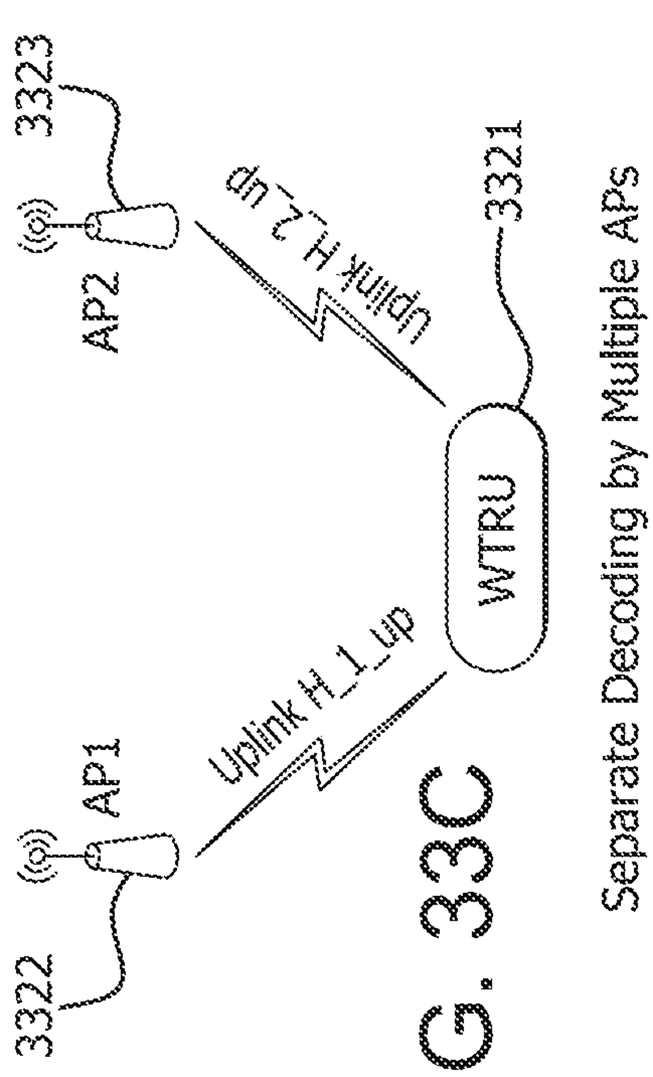

FIG. 33C

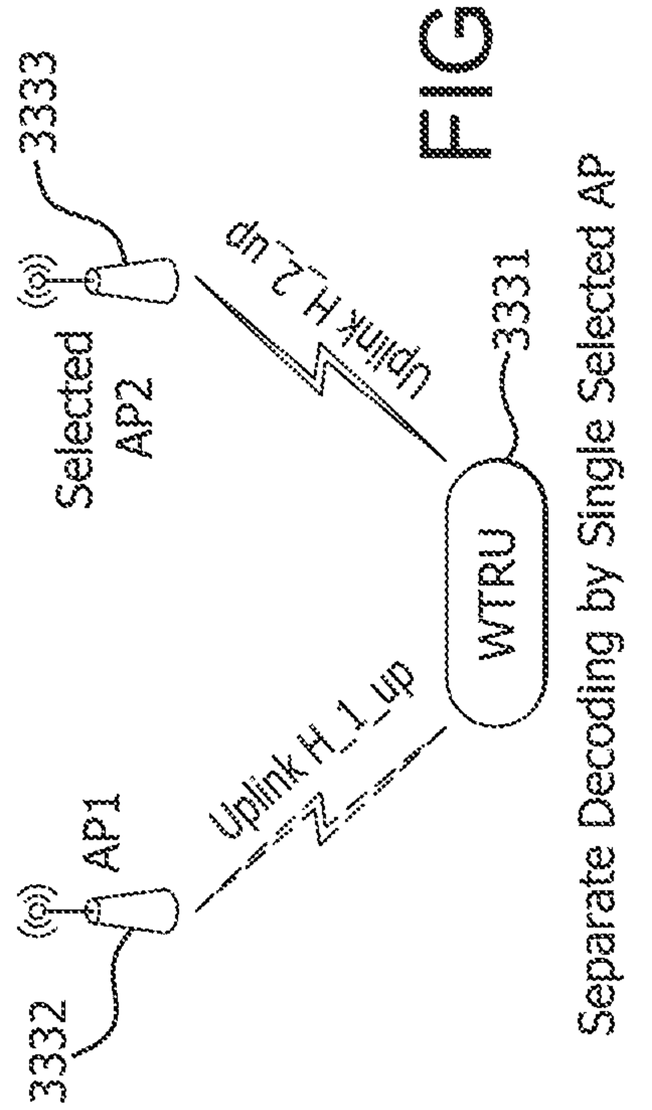

FIG. 33D

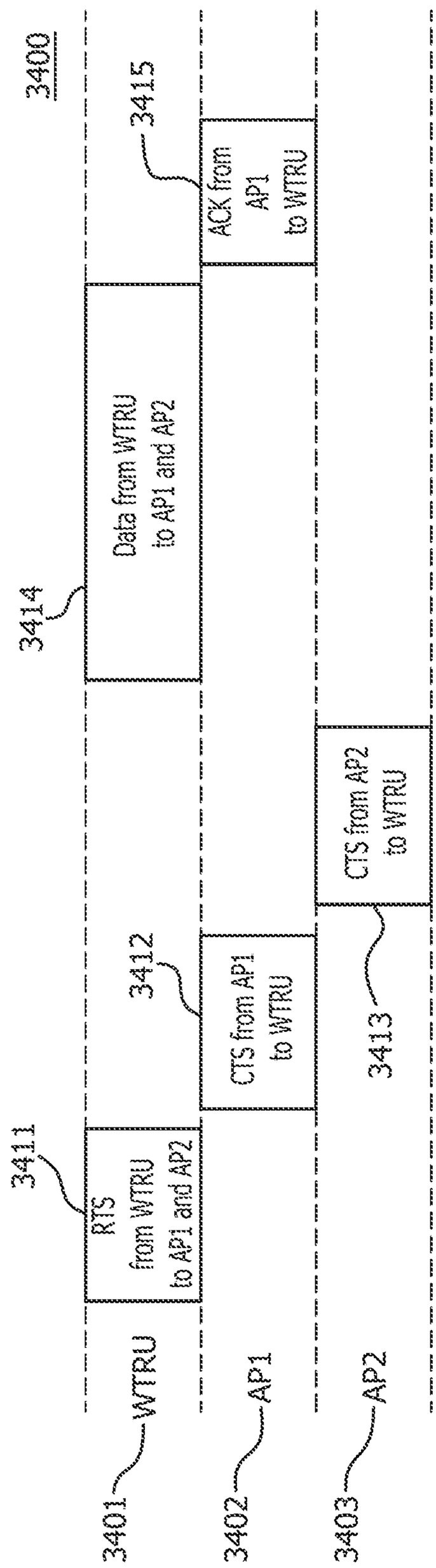

FIG. 34A

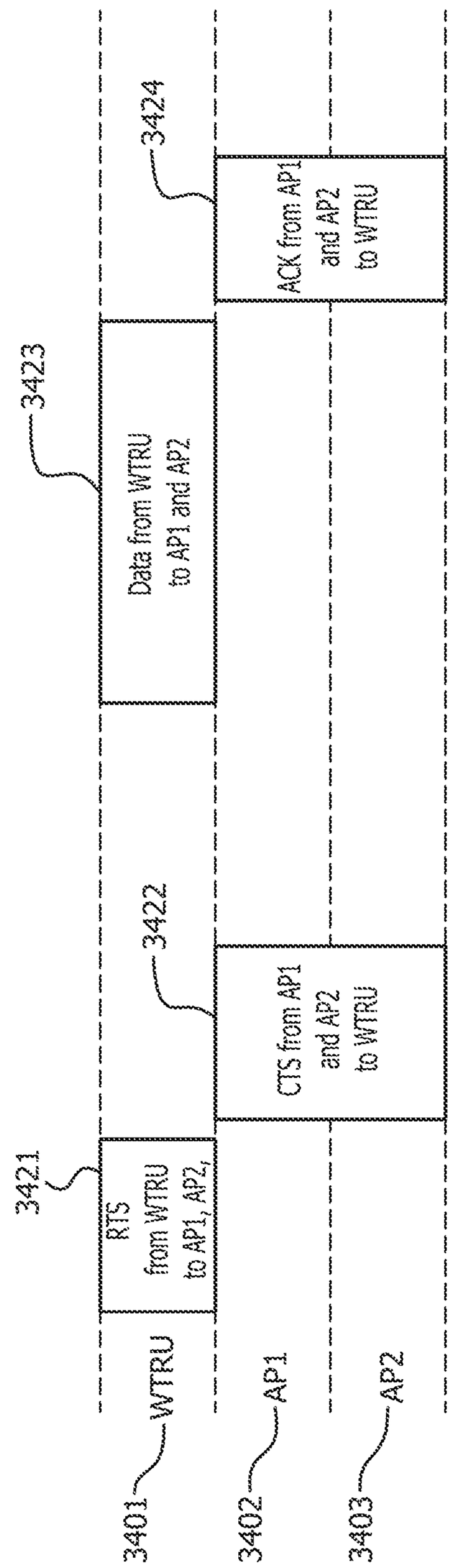

FIG. 34B

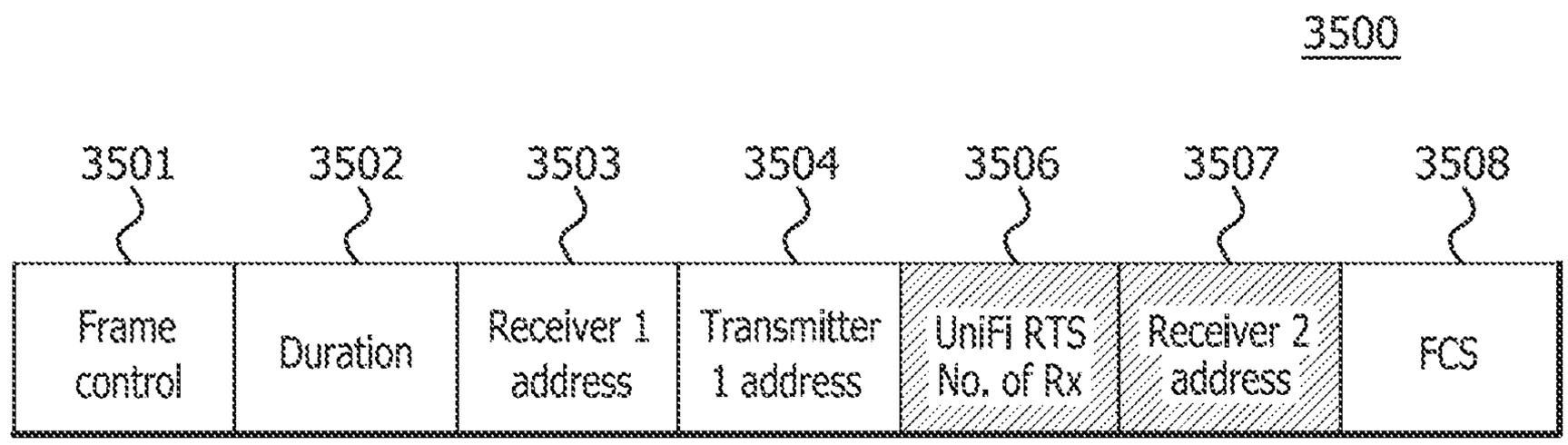

FIG. 35

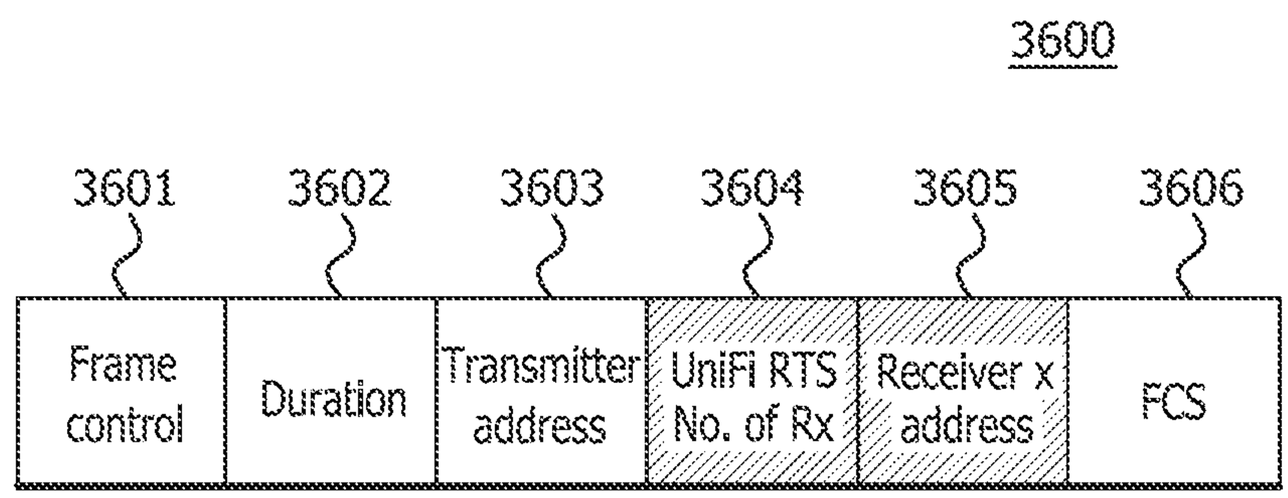

FIG. 36

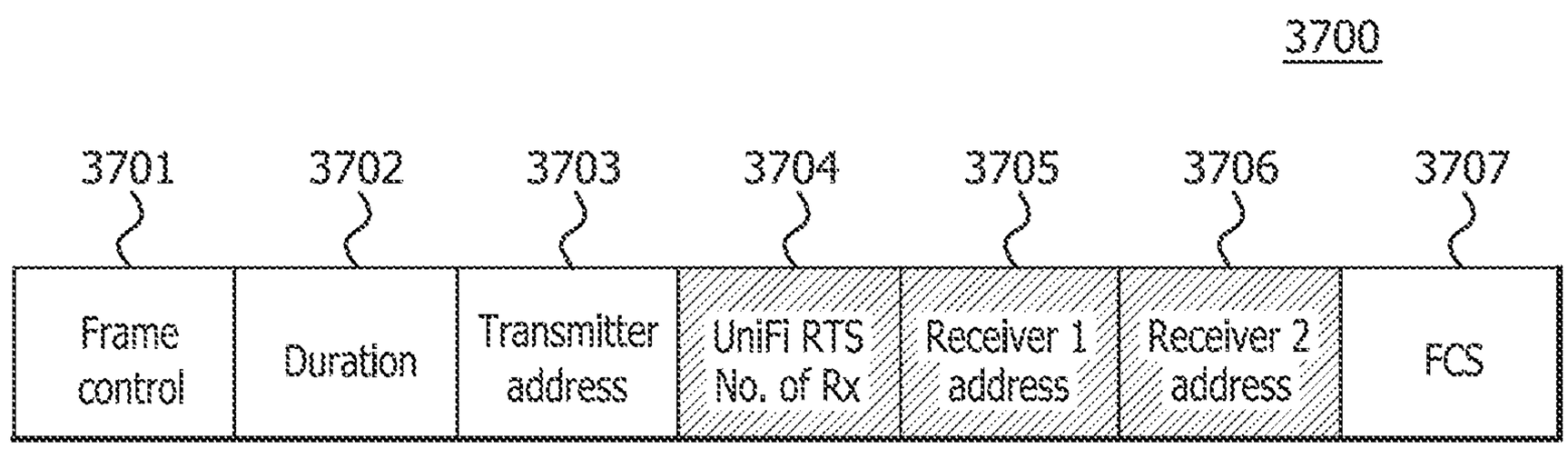

FIG. 37

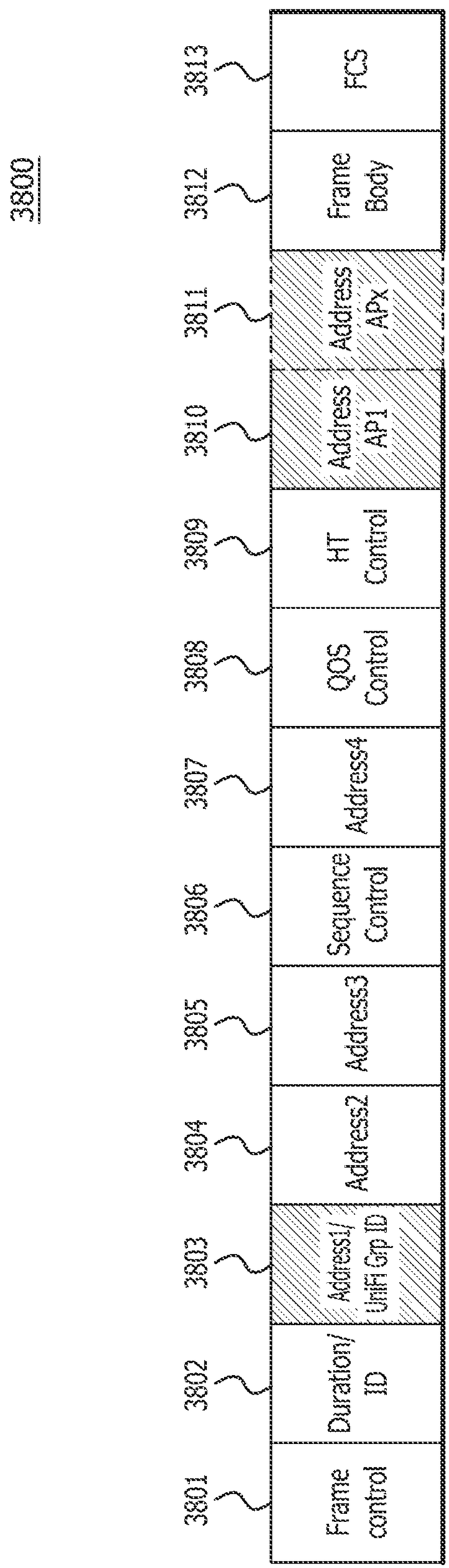
3800
3801
Frame control
3802
Duration/ ID
3803
Address1/ UniFi Grp ID
3804
Address2
3805
Address3
3806
Sequence Control
3807
Address4
3808
QOS Control
3809
HT Control
3810
Address AP1
3811
Address APx
3812
Frame Body
3813
FCS

FIG. 38

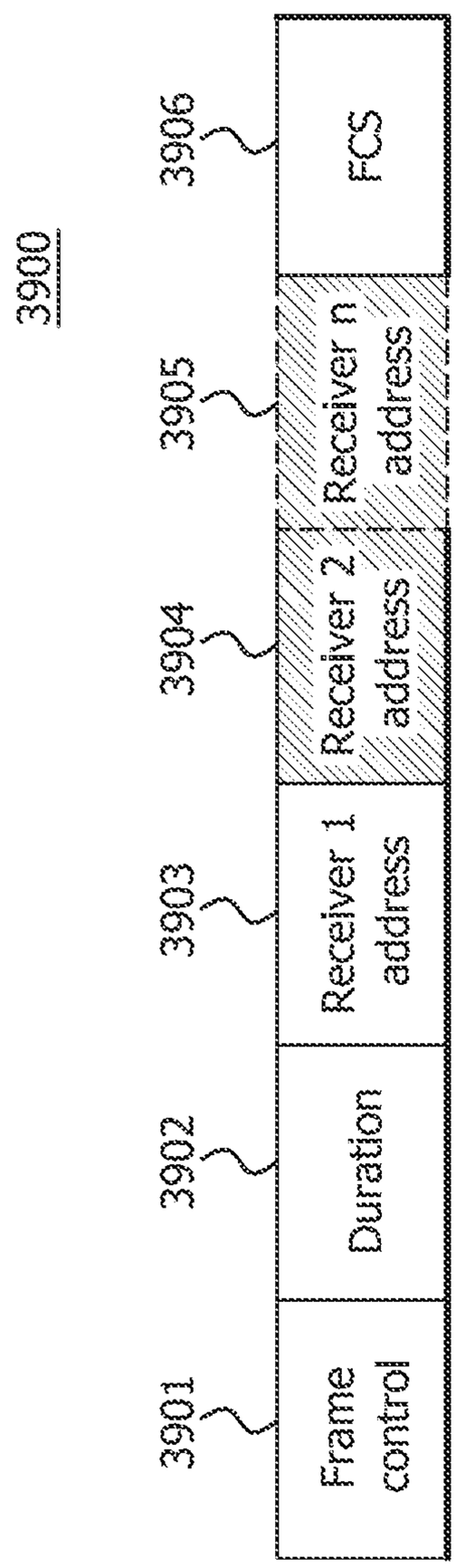

FIG. 39A

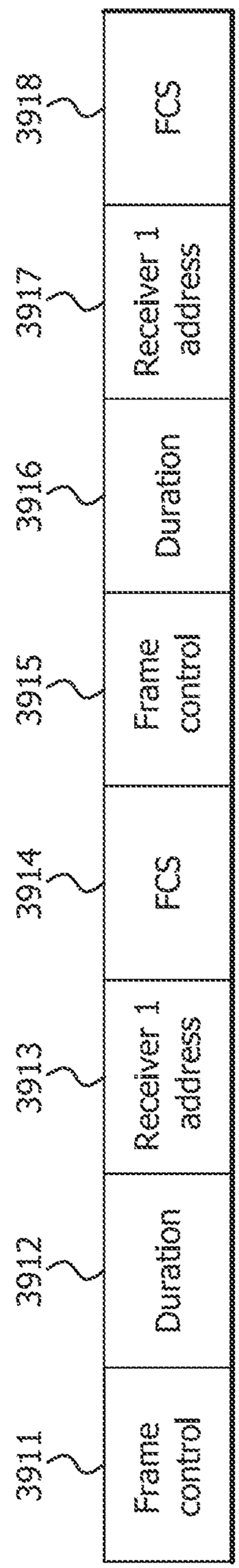

FIG. 39B

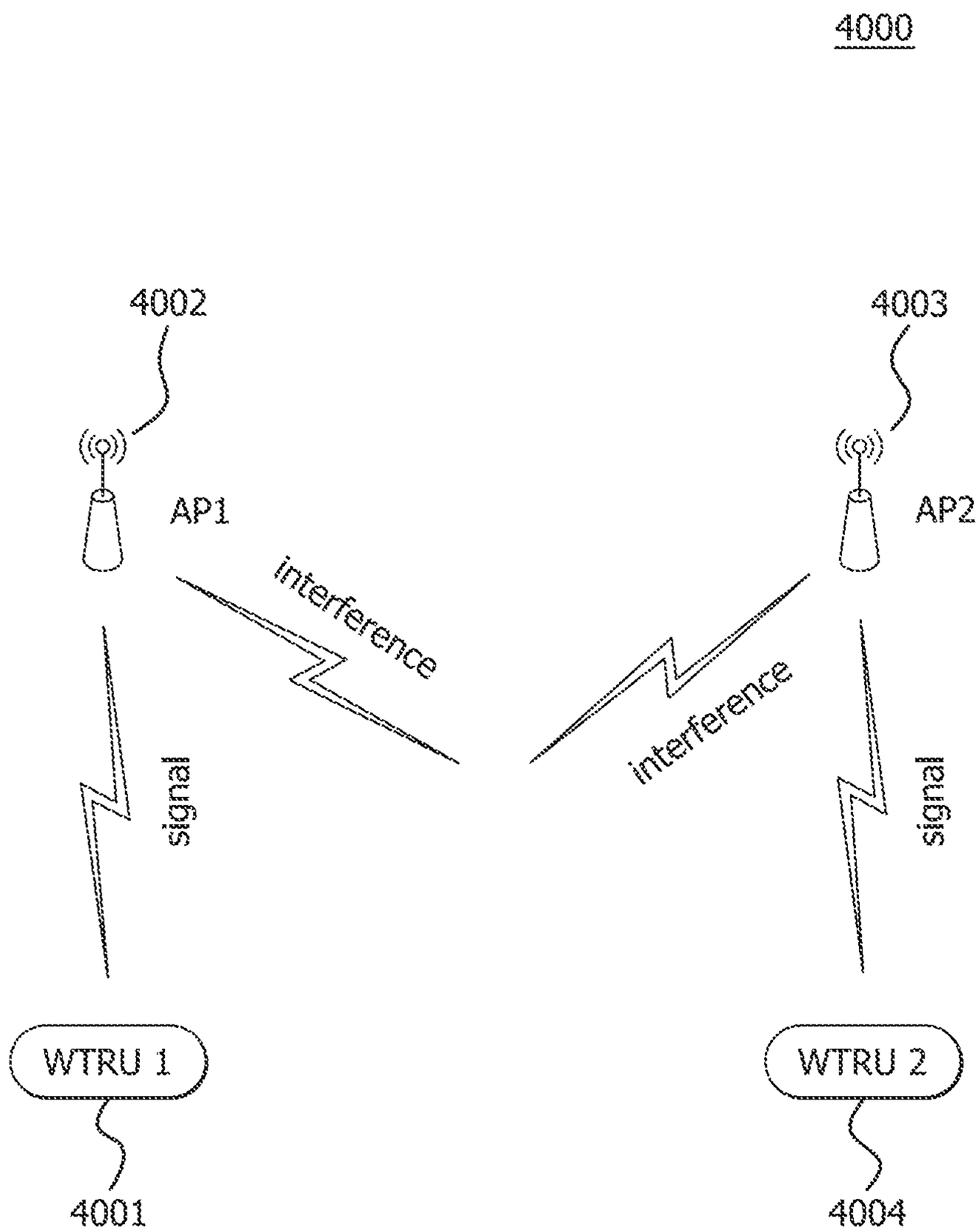
4000
4002
4003
AP1
AP2
interference
interference
signal
signal
WTRU 1
WTRU 2
4001
4004

FIG. 40

4100

	4101 User position in SCMAT group 0	4102 User position in SCMAT group 1	.....	4103 User position in SCMAT group M
Bits:	2N	2N		2N

FIG. 41

4200

4211	4212	4213	4214	4215	4216
Frame control	Duration	addr1	addr2	addr3	addr4

FIG. 42A

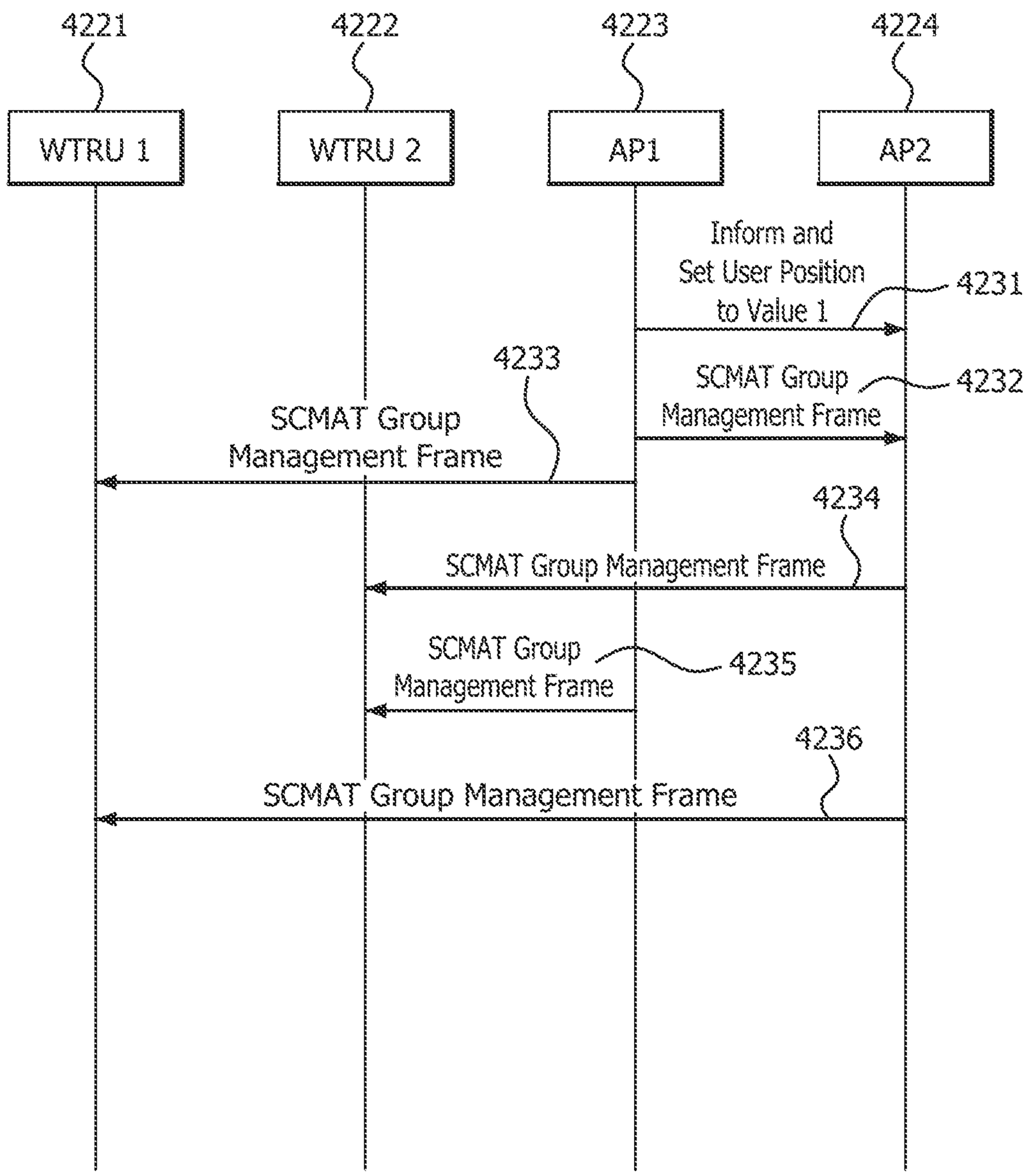
4221
4222
4223
4224
WTRU 1
WTRU 2
AP1
AP2
Inform and
Set User Position
to Value 1
4231
4233
SCMAT Group
Management Frame
SCMAT Group
Management Frame
4232
4234
SCMAT Group Management Frame
SCMAT Group
Management Frame
4235
4236
SCMAT Group Management Frame

FIG. 42B

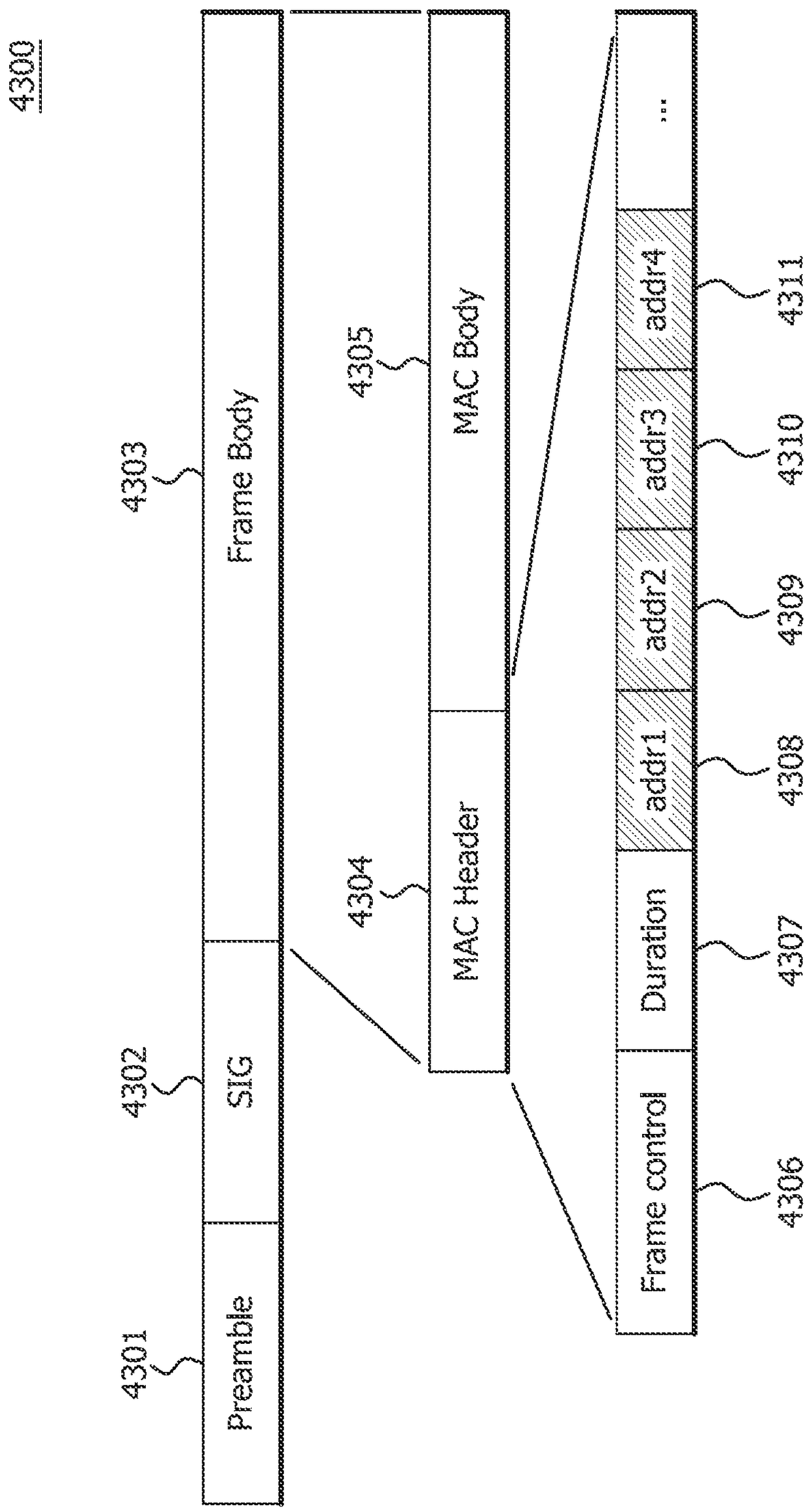
4300
4301
Preamble
4302
SIG
4303
Frame Body
4304
MAC Header
4305
MAC Body
Frame control
4306
Duration
4307
addr1
4308
addr2
4309
addr3
4310
addr4
4311

FIG. 43

METHOD AND APPARATUS FOR MEDIUM ACCESS CONTROL FOR UNIFORM MULTIPLE ACCESS POINTS COVERAGE IN WIRELESS LOCAL AREA NETWORKS

CROSS REFERENCE TO RELATED APPLICATIONS

This application is a continuation of U.S. patent application Ser. No. 14/441,487, filed May 7, 2015, which issued as U.S. Pat. No. 10,305,550 on May 28, 2019, which claims the benefit of PCT Application No. PCT/US2013/069299, filed Nov. 8, 2013, and U.S. Provisional Application Ser. No. 61/724,032 filed Nov. 8, 2012, the contents of which are hereby incorporated by reference herein.

BACKGROUND

A WLAN in Infrastructure basic service set (BSS) mode has an Access Point (AP) for the BSS and one or more stations (STAs) also referred to herein as wireless transmit/receive units WTRUs associated with the AP. The AP typically has access or interface to a distribution system (DS) or another type of wired/wireless network that carries traffic in and out of the BSS. Traffic to STAs that originates from outside the BSS arrives through the AP and may be delivered to the STAs. Traffic originating from STAs to destinations outside the BSS may be sent to the AP to be delivered to the respective destinations. Traffic between STAs within the BSS may also be sent to through the AP where the source STA sends traffic to the AP and the AP delivers the traffic to the destination STA. Such traffic between STAs within a BSS may be peer-to-peer traffic. Such peer-to-peer traffic may also be sent directly between the source and destination STAs with a direct link setup (DLS) using an 802.11e DLS or an 802.11z tunneled DLS (TDLS). A WLAN in Independent BSS mode may have no AP and STAs that communicate directly with each other. There is a need for improved throughput performance and reduced interference for these systems.

SUMMARY

A method and apparatus may be used in multi-AP and multi-wireless transmit/receive unit joint transmissions. The apparatus may be configured to transmit a joint transmission request on a first medium, and receive a joint transmission response on the first medium. In response, the apparatus my perform a joint transmission negotiation on a second medium and transmit data on the second medium based on the joint transmission negotiation. The apparatus may be configured to perform coordinated sectorized or beamformed transmissions through access point (AP)/PCP negotiations. The apparatus may provide an indication of support for joint transmission and coordinated sectorized or beamformed transmissions. The method and apparatus may also implement multi-AP/WTRU request-to-send (RTS)/clear-to-send (CTS) procedures. The apparatus may be configured to perform coordinated sectorized or beamforming grouping.

BRIEF DESCRIPTION OF THE DRAWINGS

A more detailed understanding may be had from the following description, given by way of example in conjunction with the accompanying drawings wherein:

FIG. **1**A is a system diagram of an example communications system in which one or more disclosed embodiments may be implemented;

FIG. **1**B is a system diagram of an example wireless transmit/receive unit (WTRU) that may be used within the communications system illustrated in FIG. **1**A;

FIG. **1**C is a system diagram of an example radio access network and an example core network that may be used within the communications system illustrated in FIG. **1**A;

FIG. **2** is a diagram of an example wireless fidelity (WiFi) hotspot deployment;

FIG. **3**A is a high level signal flow diagram of multi-AP coordinated joint transmission;

FIG. **3**B is a high level signal flow diagram of multi-WTRU coordinated joint transmission in the downlink;

FIG. **3**C is a high level signal flow diagram of multi-WTRU coordinated joint transmission in the uplink;

FIG. **4** is a diagram of an example Joint Transmission Capability Information Element (IE);

FIG. **5**A shows a high level signal flow diagram of an example control information exchange used for coordinated joint transmission;

FIG. **5**B is a diagram of an example Joint Transmission Request IE;

FIG. **6** is a diagram of an example Joint Transmission Response IE;

FIG. **7**A shows an example flow diagram for determining joint transmission capabilities in APs and preparing for joint transmission;

FIG. **7**B is a diagram of an example Joint Transmission Query IE;

FIG. **7**C is a diagram of an example Joint Transmission Feedback IE;

FIG. **7**D is a diagram of an example Joint Transmission Notification IE;

FIG. **8** shows an example of a data packet that may be sent from an AAP to an ATAP to be sent to a receiving WTRU during a joint transmission session;

FIG. **9** shows a flow chart of an example procedure for associating with an AP or WTRU to enable coordinated joint transmission;

FIG. **10** shows an example procedure for selecting an ATAP for coordinated joint transmission;

FIG. **11** is a diagram of an example scheduled concurrent joint transmission Procedure;

FIG. **12** is a diagram of an example scheduled sequential joint transmission Procedure;

FIG. **13** is a diagram of an example Joint Transmission (JT)-RTS frame;

FIG. **14** is a diagram of an example JT-CTS frame;

FIG. **15** is a diagram of an example Contention-Based Concurrent Joint Transmission Procedure;

FIG. **16** is a diagram of an example Contention-Based Sequential Joint Transmission Procedure;

FIG. **17**A shows a high level signal flow diagram of an example control information exchange used for multi-WTRU coordinated joint transmission;

FIG. **17**B is a diagram of an example joint transmission request IE used for multi-WTRU coordinated joint transmission;

FIG. **18** shows an example flow diagram for determining joint transmission capabilities in APs and preparing for joint transmission;

FIG. **19** shows an example procedure for selecting an A-WTRU for coordinated joint transmission in the downlink;

FIG. **20** shows an example procedure used by a C-WTRU for selecting an A-WTRU for coordinated joint transmission in the uplink;

FIG. **21**A shows an example procedure for enabling coordinated sectorized operation or beamformed transmissions through AP/PCP/WTRU negotiations;

FIG. **21**B shows an example of a system using sectorized or beamformed transmissions and receptions;

FIG. **22** shows an example design of a sectorized reception report IE;

FIG. **23** shows an example of a reporting field;

FIG. **24** shows an example design of a transmission sector conflict IE for sharing a transmission sector conflict lists or tables;

FIG. **25**A shows an example of coordinated sectorized or beamformed transmissions;

FIG. **25**B shows another example of coordinated sectorized or beamformed transmissions;

FIG. **26** shows an example of a coordinated sectorized and beamforming capability IE;

FIG. **27** shows an example system in which WTRUs are equipped with more than one WLAN interface;

FIG. **28** provides an example of the hidden node problem;

FIG. **29** shows an example procedure for transmission of RTS/CTS packets over different frequency bands;

FIG. **30** shows an example RTS/CTS format;

FIG. **31** provides an example of multi-AP WiFi in which the hidden node problem is handled;

FIG. **32** provides an example frame format for an MRTS and an MCTS;

FIG. **33**A shows an example of joint decoding by a super AP;

FIG. **33**B shows an example of joint decoding by a primary AP;

FIG. **33**C shows an example of separate decoding by multiple APs;

FIG. **33**D shows an example of separate decoding by a single AP;

FIG. **34**A shows an example CSMA/CA procedure in which a single WTRU may transmit to multiple APs;

FIG. **34**B shows another example CSMA/CA procedure in which a single WTRU may transmit to multiple APs;

FIG. **35** shows an example UniFi_RTS frame format;

FIG. **36** shows an independent UniFi_CTS frame format;

FIG. **37** shows joint UniFi_CTS frame format;

FIG. **38** shows an example of a data frame with a group ID and additional AP IDs;

FIG. **39**A shows an example of a joint ACK that may include multiple receive addresses;

FIG. **39**B shows an example of an aggregated ACK;

FIG. **40** shows an example of grouping for spatial coordinated multi-AP transmission (SCMAT);

FIG. **41** provides an example of a user position array field;

FIG. **42**A provides an example of a partial MAC header for a SCMAT group management frame;

FIG. **42**B provides an example procedure to utilize a SCMAT group management frame to form a SCMAT group; and

FIG. **43** provides an example of a frame format defined for SCMAT related transmissions.

DETAILED DESCRIPTION

FIG. **1**A is a diagram of an example communications system **100** in which one or more disclosed embodiments may be implemented. The communications system **100** may be a multiple access system that provides content, such as voice, data, video, messaging, broadcast, etc., to multiple wireless users. The communications system **100** may enable multiple wireless users to access such content through the sharing of system resources, including wireless bandwidth. For example, the communications systems **100** may employ one or more channel access methods, such as code division multiple access (CDMA), time division multiple access (TDMA), frequency division multiple access (FDMA), orthogonal FDMA (OFDMA), single-carrier FDMA (SC-FDMA), and the like.

As shown in FIG. **1**A, the communications system **100** may include wireless transmit/receive units (WTRUs) **102***a*, **102***b*, **102***c*, **102***d*, a radio access network (RAN) **104**, a core network **106**, a public switched telephone network (PSTN) **108**, the Internet **110**, and other networks **112**, though it will be appreciated that the disclosed embodiments contemplate any number of WTRUs, base stations, networks, and/or network elements. Each of the WTRUs **102***a*, **102***b*, **102***c*, **102***d* may be any type of device configured to operate and/or communicate in a wireless environment. By way of example, the WTRUs **102***a*, **102***b*, **102***c*, **102***d* may be configured to transmit and/or receive wireless signals and may include user equipment (UE), a mobile station, a fixed or mobile subscriber unit, a pager, a cellular telephone, a personal digital assistant (PDA), a smartphone, a laptop, a netbook, a personal computer, a wireless sensor, consumer electronics, and the like.

The communications systems **100** may also include a base station **114***a* and a base station **114***b*. Each of the base stations **114***a*, **114***b* may be any type of device configured to wirelessly interface with at least one of the WTRUs **102***a*, **102***b*, **102***c*, **102***d* to facilitate access to one or more communication networks, such as the core network **106**, the Internet **110**, and/or the networks **112**. By way of example, the base stations **114***a*, **114***b* may be a base transceiver station (BTS), a Node-B, an eNode B, a Home Node B, a Home eNode B, a site controller, an access point (AP), a wireless router, and the like. While the base stations **114***a*, **114***b* are each depicted as a single element, it will be appreciated that the base stations **114***a*, **114***b* may include any number of interconnected base stations and/or network elements.

The base station **114***a* may be part of the RAN **104**, which may also include other base stations and/or network elements (not shown), such as a base station controller (BSC), a radio network controller (RNC), relay nodes, etc. The base station **114***a* and/or the base station **114***b* may be configured to transmit and/or receive wireless signals within a particular geographic region, which may be referred to as a cell (not shown). The cell may further be divided into cell sectors. For example, the cell associated with the base station **114***a* may be divided into three sectors. Thus, in one embodiment, the base station **114***a* may include three transceivers, i.e., one for each sector of the cell. In another embodiment, the base station **114***a* may employ multiple-input multiple output (MIMO) technology and, therefore, may utilize multiple transceivers for each sector of the cell.

The base stations **114***a*, **114***b* may communicate with one or more of the WTRUs **102***a*, **102***b*, **102***c*, **102***d* over an air interface **116**, which may be any suitable wireless communication link (e.g., radio frequency (RF), microwave, infrared (IR), ultraviolet (UV), visible light, etc.). The air interface **116** may be established using any suitable radio access technology (RAT).

More specifically, as noted above, the communications system **100** may be a multiple access system and may employ one or more channel access schemes, such as

CDMA, TDMA, FDMA, OFDMA, SC-FDMA, and the like. For example, the base station **114***a* in the RAN **104** and the WTRUs **102***a*, **102***b*, **102***c* may implement a radio technology such as Universal Mobile Telecommunications System (UMTS) Terrestrial Radio Access (UTRA), which may establish the air interface **116** using wideband CDMA (WCDMA). WCDMA may include communication protocols such as High-Speed Packet Access (HSPA) and/or Evolved HSPA (HSPA+). HSPA may include High-Speed Downlink Packet Access (HSDPA) and/or High-Speed Uplink Packet Access (HSUPA).

In another embodiment, the base station **114***a* and the WTRUs **102***a*, **102***b*, **102***c* may implement a radio technology such as Evolved UMTS Terrestrial Radio Access (E-UTRA), which may establish the air interface **116** using Long Term Evolution (LTE) and/or LTE-Advanced (LTE-A).

In other embodiments, the base station **114***a* and the WTRUs **102***a*, **102***b*, **102***c* may implement radio technologies such as IEEE 802.16 (i.e., Worldwide Interoperability for Microwave Access (WiMAX)), CDMA2000, CDMA2000 1×, CDMA2000 EV-DO, Interim Standard 2000 (IS-2000), Interim Standard 95 (IS-95), Interim Standard 856 (IS-856), Global System for Mobile communications (GSM), Enhanced Data rates for GSM Evolution (EDGE), GSM EDGE (GERAN), and the like.

The base station **114***b* in FIG. **1**A may be a wireless router, Home Node B, Home eNode B, or access point, for example, and may utilize any suitable RAT for facilitating wireless connectivity in a localized area, such as a place of business, a home, a vehicle, a campus, and the like. In one embodiment, the base station **114***b* and the WTRUs **102***c*, **102***d* may implement a radio technology such as IEEE 802.11 to establish a wireless local area network (WLAN). In another embodiment, the base station **114***b* and the WTRUs **102***c*, **102***d* may implement a radio technology such as IEEE 802.15 to establish a wireless personal area network (WPAN). In yet another embodiment, the base station **114***b* and the WTRUs **102***c*, **102***d* may utilize a cellular-based RAT (e.g., WCDMA, CDMA2000, GSM, LTE, LTE-A, etc.) to establish a picocell or femtocell. As shown in FIG. **1**A, the base station **114***b* may have a direct connection to the Internet **110**. Thus, the base station **114***b* may not be required to access the Internet **110** via the core network **106**.

The RAN **104** may be in communication with the core network **106**, which may be any type of network configured to provide voice, data, applications, and/or voice over internet protocol (VoIP) services to one or more of the WTRUs **102***a*, **102***b*, **102***c*, **102***d*. For example, the core network **106** may provide call control, billing services, mobile location-based services, pre-paid calling, Internet connectivity, video distribution, etc., and/or perform high-level security functions, such as user authentication. Although not shown in FIG. **1**A, it will be appreciated that the RAN **104** and/or the core network **106** may be in direct or indirect communication with other RANs that employ the same RAT as the RAN **104** or a different RAT. For example, in addition to being connected to the RAN **104**, which may be utilizing an E-UTRA radio technology, the core network **106** may also be in communication with another RAN (not shown) employing a GSM radio technology.

The core network **106** may also serve as a gateway for the WTRUs **102***a*, **102***b*, **102***c*, **102***d* to access the PSTN **108**, the Internet **110**, and/or other networks **112**. The PSTN **108** may include circuit-switched telephone networks that provide plain old telephone service (POTS). The Internet **110** may include a global system of interconnected computer networks and devices that use common communication protocols, such as the transmission control protocol (TCP), user datagram protocol (UDP) and the internet protocol (IP) in the TCP/IP internet protocol suite. The networks **112** may include wired or wireless communications networks owned and/or operated by other service providers. For example, the networks **112** may include another core network connected to one or more RANs, which may employ the same RAT as the RAN **104** or a different RAT.

Some or all of the WTRUs **102***a*, **102***b*, **102***c*, **102***d* in the communications system **100** may include multi-mode capabilities, i.e., the WTRUs **102***a*, **102***b*, **102***c*, **102***d* may include multiple transceivers for communicating with different wireless networks over different wireless links. For example, the WTRU **102***c* shown in FIG. **1**A may be configured to communicate with the base station **114***a*, which may employ a cellular-based radio technology, and with the base station **114***b*, which may employ an IEEE 802 radio technology.

FIG. **1**B is a system diagram of an example WTRU **102**. As shown in FIG. **1**B, the WTRU **102** may include a processor **118**, a transceiver **120**, a transmit/receive element **122**, a speaker/microphone **124**, a keypad **126**, a display/touchpad **128**, non-removable memory **130**, removable memory **132**, a power source **134**, a global positioning system (GPS) chipset **136**, and other peripherals **138**. It will be appreciated that the WTRU **102** may include any sub-combination of the foregoing elements while remaining consistent with an embodiment.

The processor **118** may be a general purpose processor, a special purpose processor, a conventional processor, a digital signal processor (DSP), a plurality of microprocessors, one or more microprocessors in association with a DSP core, a controller, a microcontroller, Application Specific Integrated Circuits (ASICs), Field Programmable Gate Array (FPGAs) circuits, any other type of integrated circuit (IC), a state machine, and the like. The processor **118** may perform signal coding, data processing, power control, input/output processing, and/or any other functionality that enables the WTRU **102** to operate in a wireless environment. The processor **118** may be coupled to the transceiver **120**, which may be coupled to the transmit/receive element **122**. While FIG. **1**B depicts the processor **118** and the transceiver **120** as separate components, it will be appreciated that the processor **118** and the transceiver **120** may be integrated together in an electronic package or chip.

The transmit/receive element **122** may be configured to transmit signals to, or receive signals from, a base station (e.g., the base station **114***a*) over the air interface **116**. For example, in one embodiment, the transmit/receive element **122** may be an antenna configured to transmit and/or receive RF signals. In another embodiment, the transmit/receive element **122** may be an emitter/detector configured to transmit and/or receive IR, UV, or visible light signals, for example. In yet another embodiment, the transmit/receive element **122** may be configured to transmit and receive both RF and light signals. It will be appreciated that the transmit/receive element **122** may be configured to transmit and/or receive any combination of wireless signals.

In addition, although the transmit/receive element **122** is depicted in FIG. **1**B as a single element, the WTRU **102** may include any number of transmit/receive elements **122**. More specifically, the WTRU **102** may employ MIMO technology. Thus, in one embodiment, the WTRU **102** may include two or more transmit/receive elements **122** (e.g., multiple antennas) for transmitting and receiving wireless signals over the air interface **116**.

The transceiver **120** may be configured to modulate the signals that are to be transmitted by the transmit/receive element **122** and to demodulate the signals that are received by the transmit/receive element **122**. As noted above, the WTRU **102** may have multi-mode capabilities. Thus, the transceiver **120** may include multiple transceivers for enabling the WTRU **102** to communicate via multiple RATs, such as UTRA and IEEE 802.11, for example.

The processor **118** of the WTRU **102** may be coupled to, and may receive user input data from, the speaker/microphone **124**, the keypad **126**, and/or the display/touchpad **128** (e.g., a liquid crystal display (LCD) display unit or organic light-emitting diode (OLED) display unit). The processor **118** may also output user data to the speaker/microphone **124**, the keypad **126**, and/or the display/touchpad **128**. In addition, the processor **118** may access information from, and store data in, any type of suitable memory, such as the non-removable memory **130** and/or the removable memory **132**. The non-removable memory **130** may include random-access memory (RAM), read-only memory (ROM), a hard disk, or any other type of memory storage device. The removable memory **132** may include a subscriber identity module (SIM) card, a memory stick, a secure digital (SD) memory card, and the like. In other embodiments, the processor **118** may access information from, and store data in, memory that is not physically located on the WTRU **102**, such as on a server or a home computer (not shown).

The processor **118** may receive power from the power source **134**, and may be configured to distribute and/or control the power to the other components in the WTRU **102**. The power source **134** may be any suitable device for powering the WTRU **102**. For example, the power source **134** may include one or more dry cell batteries (e.g., nickel-cadmium (NiCd), nickel-zinc (NiZn), nickel metal hydride (NiMH), lithium-ion (Li-ion), etc.), solar cells, fuel cells, and the like.

The processor **118** may also be coupled to the GPS chipset **136**, which may be configured to provide location information (e.g., longitude and latitude) regarding the current location of the WTRU **102**. In addition to, or in lieu of, the information from the GPS chipset **136**, the WTRU **102** may receive location information over the air interface **116** from a base station (e.g., base stations **114***a*, **114***b*) and/or determine its location based on the timing of the signals being received from two or more nearby base stations. It will be appreciated that the WTRU **102** may acquire location information by way of any suitable location-determination method while remaining consistent with an embodiment.

The processor **118** may further be coupled to other peripherals **138**, which may include one or more software and/or hardware modules that provide additional features, functionality and/or wired or wireless connectivity. For example, the peripherals **138** may include an accelerometer, an e-compass, a satellite transceiver, a digital camera (for photographs or video), a universal serial bus (USB) port, a vibration device, a television transceiver, a hands free headset, a Bluetooth® module, a frequency modulated (FM) radio unit, a digital music player, a media player, a video game player module, an Internet browser, and the like.

FIG. **10** is a system diagram of the RAN **104** and the core network **106** according to an embodiment. As noted above, the RAN **104** may employ an E-UTRA radio technology to communicate with the WTRUs **102***a*, **102***b*, **102***c* over the air interface **116**. The RAN **104** may also be in communication with the core network **106**.

The RAN **104** may include eNode-Bs **140***a*, **140***b*, **140***c*, though it will be appreciated that the RAN **104** may include any number of eNode-Bs while remaining consistent with an embodiment. The eNode-Bs **140***a*, **140***b*, **140***c* may each include one or more transceivers for communicating with the WTRUs **102***a*, **102***b*, **102***c* over the air interface **116**. In one embodiment, the eNode-Bs **140***a*, **140***b*, **140***c* may implement MIMO technology. Thus, the eNode-B **140***a*, for example, may use multiple antennas to transmit wireless signals to, and receive wireless signals from, the WTRU **102***a*.

Each of the eNode-Bs **140***a*, **140***b*, **140***c* may be associated with a particular cell (not shown) and may be configured to handle radio resource management decisions, handover decisions, scheduling of users in the uplink and/or downlink, and the like. As shown in FIG. **10**, the eNode-Bs **140***a*, **140***b*, **140***c* may communicate with one another over an X2 interface.

The core network **106** shown in FIG. **10** may include a mobility management gateway (MME) **142**, a serving gateway **144**, and a packet data network (PDN) gateway **146**. While each of the foregoing elements are depicted as part of the core network **106**, it will be appreciated that any one of these elements may be owned and/or operated by an entity other than the core network operator.

The MME **142** may be connected to each of the eNode-Bs **142***a*, **142***b*, **142***c* in the RAN **104** via an S1 interface and may serve as a control node. For example, the MME **142** may be responsible for authenticating users of the WTRUs **102***a*, **102***b*, **102***c*, bearer activation/deactivation, selecting a particular serving gateway during an initial attach of the WTRUs **102***a*, **102***b*, **102***c*, and the like. The MME **142** may also provide a control plane function for switching between the RAN **104** and other RANs (not shown) that employ other radio technologies, such as GSM or WCDMA.

The serving gateway **144** may be connected to each of the eNode Bs **140***a*, **140***b*, **140***c* in the RAN **104** via the S1 interface. The serving gateway **144** may generally route and forward user data packets to/from the WTRUs **102***a*, **102***b*, **102***c*. The serving gateway **144** may also perform other functions, such as anchoring user planes during inter-eNode B handovers, triggering paging when downlink data is available for the WTRUs **102***a*, **102***b*, **102***c*, managing and storing contexts of the WTRUs **102***a*, **102***b*, **102***c*, and the like.

The serving gateway **144** may also be connected to the PDN gateway **146**, which may provide the WTRUs **102***a*, **102***b*, **102***c* with access to packet-switched networks, such as the Internet **110**, to facilitate communications between the WTRUs **102***a*, **102***b*, **102***c* and IP-enabled devices. An access router (AR) **150** of a wireless local area network (WLAN) **155** may be in communication with the Internet **110**. The AR **150** may facilitate communications between APs **160***a*, **160***b*, and **160***c*. The APs **160***a*, **160***b*, and **160***c* may be in communication with STAs **170***a*, **170***b*, and **170***c*.

The core network **106** may facilitate communications with other networks. For example, the core network **106** may provide the WTRUs **102***a*, **102***b*, **102***c* with access to circuit-switched networks, such as the PSTN **108**, to facilitate communications between the WTRUs **102***a*, **102***b*, **102***c* and traditional land-line communications devices. For example, the core network **106** may include, or may communicate with, an IP gateway (e.g., an IP multimedia subsystem (IMS) server) that serves as an interface between the core network **106** and the PSTN **108**. In addition, the core network **106** may provide the WTRUs **102***a*, **102***b*, **102***c* with access to the networks **112**, which may include other wired or wireless networks that are owned and/or operated by other service providers.

A WLAN in infrastructure basic service set (BSS) mode has an AP for the BSS and one or more stations (STAs) (also referred to herein as WTRUs) associated with the AP. As used in the embodiments described hereinafter, a WTRU may include, but is not limited to, a STA or a communication device.

The AP typically has access or an interface to a distribution system (DS) or another type of wired/wireless network that carries traffic in and out of the BSS. Traffic to WTRUs that originates from outside the BSS arrives through the AP and may be delivered to the WTRUs. Traffic originating from WTRUs to destinations outside the BSS may be sent to the AP to be delivered to the respective destinations. Traffic between WTRUs within the BSS may also be sent to through the AP where the source WTRU sends traffic to the AP and the AP delivers the traffic to the destination WTRU. Such traffic between WTRUs within a BSS may be peer-to-peer traffic. Such peer-to-peer traffic may also be sent directly between the source and destination WTRUs with a direct link setup (DLS) using an 802.11e DLS or an 802.11z tunneled DLS (TDLS). A WLAN in Independent BSS mode may have no AP and WTRUs that communicate directly with each other.

Coordinated multi-point (CoMP) transmission/reception may be considered for LTE-Advanced (LTE-A) to improve the coverage of high data rates, improve the cell-edge throughput, and/or to increase system throughput in both high load and low load scenarios. CoMP in LTE may be applied in the downlink or the uplink.

In a Joint Transmission (JT) CoMP scheme, data may be shared between base stations and is available at each cooperating cell. With a JT CoMP scheme being applied, a WTRU may receive its desired signals from multiple transmitting points (or cells) in such a way that the received signal to interference and noise ratio may be improved. The reasons why the received signal to interference and noise ratio may be improved are twofold. The first may be due to received signal strength improvement, and the second may be due to received interference strength deduction.

The Coordinated Beamforming/Coordinated Scheduling (CS/CB) may not require any data sharing between cells. The data may only be available at, and transmitted from, the serving cell. However, the user scheduling and beamforming decisions may be made with coordination among the cells in the set of cooperating cells. For CS/CB CoMP, the potential gains may be obtained from the fact that the received interference strength of a WTRU may be reduced in such a way that the received signal to interference and noise ratio is improved. The CS/CB CoMP may have a lower implementation complexity and a lower requirement on backhaul capacity than JT CoMP.

Dynamic Transmission Point Selection may also be referred to as Downlink CoMP. Dynamic cell selection may refer to the technique where at any given moment there is only one transmission point, for example, a single cell transmitting to the WTRU. The transmission point may change dynamically and may not be the serving cell. Similar to JT CoMP, data may be shared between base stations and may be available at each cooperating cell. Based on each cell's instantaneous channel to the WTRU, dynamic selection may be used to determine which cell may be transmitting to the WTRU. For example, the cell that has the highest SINR to the WTRU may be selected to transmit in that subframe.

In uplink CoMP, cell edge user throughput may be improved by coordinating signal reception from different cells. In joint reception and processing, the system may utilize antennas at different cell sites to form a virtual antenna array. The resulting signals may be combined and processed to create the final output signal. This example may require a large capacity backhaul between the eNBs. In coordinated scheduling, the scheduling decisions of the eNBs may be coordinated to minimize the interference.

Coordinated Transmissions may be performed in 802.11ad. For example, coordinated beamforming within a personal basic service set (PBSS) may be implemented in 802.11ad. A PBSS central point (PCP) may request a pair of WTRUs that intend to conduct directional transmissions to each other to conduct a directional measurement, while another pair of WTRUs may be actively transmitting directionally. Subsequently, the PCP may request the second pair of WTRUs to conduct directional measurements, while the first pair of WTRUs may transmit directionally to each other. If both pairs of WTRUs report little or no interference from each other's transmissions, the two pairs of WTRUs may be scheduled in the same Service Period (SP) to conduct concurrent directional transmissions.

FIG. **2** is a high level diagram of the various use cases that may be used for WiFi hotspot deployment **200**. A first use case may include use of a fixed network interconnected to the cellular core network via a 3GPP gateway **203** resulting in a high layer interconnection. This fixed network connection may be used with a WiFi controller **201**. A second use case for WiFi hotspot deployment may cluster APs **202***a*, **202***b*, **202***c* with the WiFi controller **201**. In yet another use case for WiFi hotspot, a stand-alone AP **204** may be used. WTRUs associated with the APs may experience poor downlink (DL)/uplink (UL) performance when located a farther distance from the associated AP, or when the WTRUs do not have acceptable channel conditions compared to other WTRUs in the BSS or overlapping BSS (OBSS). For example, when the WTRU is located at a long distance from the AP, its throughput performance may be significantly limited when compared to other WTRUs that may be located closer to the AP.

FIG. **3**A-**3**C show examples of coordinated joint transmissions in accordance with a first embodiment, which may provide more uniform DL/UL throughput performance for all WTRUs in a WLAN BSS or an OBSS. In the first embodiment, multiple WTRUs or multiple APs may conduct joint transmission to the same receiving WTRU or AP either concurrently or sequentially. This may enable more uniform performance for all WTRUs and APs in a BSS or OBSS. Joint transmissions may also allow DL transmission and UL transmission to be conducted at higher average rates resulting in higher DL and UL throughput performance. Joint transmissions may be used in situations including but not limited to the following: (1) when a WTRU is located too great of a distance from an AP; (2) when the instantaneous channel between the WTRU and the AP experiences poor quality due to mobility, limited power, fading, and interference; (3) or when the DL/UL throughput is limited.

FIG. **3**A shows a high level signal flow diagram of an example coordinated multi-AP joint transmission **300**. The AP with which WTRU **301** may be associated may be referred to as the Associated AP (AAP) **302**. A second AP participating in the multi-AP transmission to receiving WTRU (R-WTRU) **301** may be referred to as the Assistant AP (ATAP) **303**. In this example, AAP **302** may transmit data packets **311** to WTRU **301**. ATAP **303** may also transmit the same data packets **312** to WTRU **301**. As an alternative to transmitting the same data packets **311** and **312** to WTRU **301**, the transmitted data packets from AAP **302** and ATAP **303** may be different versions of the same data packets. For

example, the data packets from the AAP **302** and the ATAP **303**, may be coded using different data rates, transmitted using different MCS, space-time block coded (STBC), or using Hybrid ARQ (HARQ) schemes. In the example of FIG. **3**A, the coordinated multi-AP joint transmission may be conducted either concurrently or sequentially. In the sequential transmission scheme, AAP **302** and the ATAP **301** may transmit sequentially to receiving WTRU **301** with or without delay between their transmissions.

FIG. **3**B shows a high level signal flow diagram of an example multi-WTRU coordinated joint transmission, in which an AP and at least one WTRU may transmit to a receiving WTRU in the downlink. In the example of FIG. **3**B, a multi-WTRU downlink joint transmission is performed. AAP **305** may coordinate a joint transmission **321** with a non-AP referred to as an Assistant WTRU (A-WTRU) **306** to a receiving WTRU **301**. AAP **305** may transmit data packets **322** to WTRU **304**. A-WTRU **306** may also transmit the same data packets **323** to WTRU **304**. As an alternative to transmitting the same data packets **322** and **323** to WTRU **304**, the transmitted data packets from AAP **305** and A-WTRU **306** may be different versions of the same data packets. In the example of FIG. **3**B, the coordinated multi-WTRU joint transmission in the downlink may be conducted either concurrently or sequentially. In the sequential transmission scheme, AAP **305** and the A-WTRU **306** may transmit sequentially to receiving WTRU **304** with or without delay between their transmissions.

FIG. **3**C shows a high level signal flow diagram of an example multi-WTRU coordinated uplink joint transmission. In the example of FIG. **3**C, a non-AP referred to as a coordinating WTRU (C-WTRU) **307** may coordinate an UL joint transmission **331** in with an assistant WTRU (A-WTRU) **308** to a receiving AP **309**. C-WTRU **307** may transmit data packets **332** to AP **309**. A-WTRU **308** may also transmit the same data packets **333** to AP **309**. As an alternative to transmitting the same data packets **332** and **323** to AP **309**, the transmitted data packets from C-WTRU **307** and A-WTRU **308** may be different versions of the same data packets. In the example of FIG. **3**C, the coordinated multi-WTRU joint transmission in the uplink may be conducted either concurrently or sequentially. In the sequential transmission scheme, C-WTRU **307** and A-WTRU **308** may transmit sequentially to receiving AP **309** with or without delay between their transmissions.

FIG. **4** shows an example of a joint transmission capability information element (IE) that an AP or WTRU may use as a joint transmission capability indication in accordance with the first embodiment **400**. An AP or WTRU may indicate its capability for multi-AP or multi-WTRU joint transmission using a joint transmission capability IE in its beacon or in another management or control frame including but not limited to a probe request/response frame, association request/response frame, action frame, or action no ACK frame. A WTRU may also indicate that it is capable of joint transmission by sending a management or control frame which includes a joint transmission capability IE.

The joint transmission capability information element (IE) example design of FIG. **4** may contain the following fields: element ID field **401**, length field **402**, and joint transmission capability field **403**.

The element ID field **401** may indicate that the IE is a joint transmission capability IE. The length field **402** may contain the length of the joint transmission capability IE. The joint transmission capability field **403** may indicate that the device is joint transmission capable. Example indications for the joint transmission capability field **403** are shown in Table 1 below.

TABLE 1

Indication	Description
Associated AP Joint Transmission Capable	Capable of joint transmission as the AAP
Assistant AP Joint Transmission Capable	Capable of joint transmission as the ATAP
Assistant WTRU (A-WTRU) Joint Transmission Capable	Capable of conducting joint transmission as an A-WTRU
Assistant AP Coordination Capable	Capable of conducting coordination with an AAP for joint transmission
Assistant WTRU (A-WTRU) Coordination Capable	Capable of conducting coordination with an A-WTRU for joint transmission
Concurrent Joint Transmission Capable	Capable of concurrent joint transmission
Sequential Joint Transmission Capable	STBC capable Different MCS capable HARQ capable Different channel coding capable
Concurrent Joint Transmission Reception Capable	Capable of reception of a joint transmission
Sequential Joint Transmission Reception Capable	STBC reception capable Different MCS reception capable HARQ reception capable Different channel coding reception capable
Joint Transmission Coordination Options	Coordination over DS (Distribution System) capable Coordination over wireless capable Coordination control transmission format: Ethernet, 802.11 legacy/a/b/g/n/ac/af/ah, X-1, UMTS, LTE, WiMAX, etc. Coordination control transmission band and channel: channel numbers as well as frequency bands such as sub 1 GHz as for 802.11af and 802.11ah, 2.4 GHz, 5 GHz, 60 GHz, etc.
Data/Control Forwarding Options	TDLS (Tunneled Direct Link Setup) DLS (Direct Link Setup) OCT (On Channel Transfer) Joint transmission forwarding: a

TABLE 1-continued

Indication	Description
	forwarding method that is specially designed for forwarding data and control packets associated with joint transmissions Data/Control forwarding over DS capable Data/Control forwarding over wireless capable Data/Control forwarding transmission format: Ethernet, 802.11 legacy/a/b/g/n/ac/af/ah, X-1, UMTS, LTE, etc. Data/Control forwarding transmission band and channel: channel numbers as well as frequency bands such as sub 1 GHz as for 802.11af and 802.11ah, 2.4 GHz, 5 GHz, 60 GHz, etc.

Although the joint transmission capability indication as designed in Table 1 is described as an IE, any field, subfield, or subset of the elements described herein may be implemented. The IE may be any part of a management frame, control frame, data frame, or any other type of frame. The joint transmission capability indication may include all explicit and implicit signaling, which may include but is not limited to any part of the Physical Layer Convergence Procedure (PLCP) or medium access control (MAC) header, frame body, scrambler initialization seeds, etc.

FIG. **5**A shows a high level signal flow diagram of an example control information exchange used for coordinated joint transmissions **500**. In the example of FIG. **5**A, AAP **502** and ATAP **503** may exchange control information **511***a* and **511***b* to prepare to conduct multi-AP joint transmission as described above. Control information **511***a* may include a joint transmission request. Control information **511***b* may include a joint transmission response. Additionally or alternatively, AAP **502** may forward data packets **512** to ATAP **503**. AAP **502** and ATAP **503** may then transmit the data packets **513***a* and **513***b* to receiving WTRU **501** in the joint transmission session. The exchange of the coordination information as well as the forwarding of the associated data packets may take places in at least two ways. First, they may be transmitted wirelessly using the same or a separate wireless interfaces including but not limited to another WLAN, UMTS, LTE, WiMAX interface. Second, they may be transmitted over a wired backhaul link. Control information may be exchanged between WTRUs and between APs and WTRUs for multi-WTRU coordinated joint transmission using the same procedure shown in FIG. **5**A.

FIG. **5**B shows an example joint transmission request IE that may be used for conducting coordination between an AAP and ATAP and for transmitting coordination control information. A joint transmission request IE may include but is not limited to the following fields and/or information: element ID field **521**, length field **522**, ID field **523**, options field **524**, schedule field **525**, Transmission Specification (TxSpec) field **526**, and request type field **527**.

Element ID field **521** that may indicate that the IE is a joint transmission request IE. Length field **522** may contain the length of the joint transmission request IE.

ID field **523** may contain one or more IDs shown in Table 2 below. The ID(s) may be implemented as a MAC address, a BSSID, an SSID, an AID, or any other type of IDs that the WTRUs may agree upon.

TABLE 2

Example ID	Description
Receiving WTRUs that are the recipient of the joint transmission	ID of the WTRU(s) receiving data packets in the joint transmission
Requesting AAP	ID of the requesting AAP
ATAP being requested	ID of ATAP being requested
Session ID	Sequence number identifying a particular joint transmission session to a particular receiving WTRU or requested by a particular AAP

The Options field **524** may contain various options for the joint transmissions. Example contents of the Options field are shown in Table 3.

TABLE 3

Example Options	Description
Number of joint transmission packets	The number of packets may be expected to be transmitted during the joint transmission sessions
Size of joint transmission packets/time/TXOP	The size of the joint transmission packets may be specified in bytes, in transmission time or in TXOP expressed in microseconds or any other time units
Data rate (or MCS) expected for the joint transmission session	Data rate (or MCS) to be used in joint transmission
Duration of joint transmission session	Duration to be used in joint transmission
Concurrent Joint Transmission	The ATAP may conduct concurrent joint transmission
Sequential Joint Transmission	The ATAP may conduct sequential joint transmission. The ATAP may use one or more of the following specifications to construct the PPDU or PSDU frames containing the data packets forwarded to it by the AAP according to the channel

TABLE 3-continued

Example Options	Description
	conditions between itself and the receiving WTRU and/or its own transmitting capabilities. These specifications may include STBC, different MCS, HARQ, and different channel coding.
Scheduled Joint Transmission	The ATAP may conduct joint transmission at a scheduled time according to the Schedule specified by the AAP.
Coordination Information Forwarding Option	TDLS DLS OCT Joint Transmission Forwarding: a forwarding method that may be designed for forwarding data and control packets associated with Joint Transmissions Forwarding over Distribution System (DS) Forwarding over wireless Forwarding transmission format: Ethernet, 802.11 legacy/a/b/g/n/ac/af/ah, X-1, UMTS, LTE, etc. Forwarding transmission band and channel: channel numbers as well as frequency bands such as sub 1 GHz as for 802.11af and 802.11ah, 2.4 GHz, 5 GHz, 60 GHz, etc.
Data Forwarding Options	TDLS DLS OCT Joint Transmission Forwarding: a forwarding method that may be designed for forwarding data and control packets associated with Joint Transmissions Forwarding over DS Forwarding over wireless Forwarding transmission format: Ethernet, 802.11 legacy/a/b/g/n/ac/af/ah, X-1, UMTS, LTE, etc. Forwarding transmission band and channel: channel numbers as well as frequency bands such as sub 1 GHz as for 802.11af and 802.11ah, 2.4 GHz, 5 GHz, 60 GHz, etc.
Medium Access Control Options	CTS forwarding options: Similar to Coordination Information Forwarding as described above

The TxSpec field **526** may include transmission specifications that may be associated with the joint transmissions. Example contents of the TxSpec field **526** are shown in Table 4. The TxSpec **526** may be implemented such that it may be similar to the PHY service primitive, TXVECTOR, or it may be a modified version of the TXVECTOR and may specify an MCS, a transmit power, a channel matrix, and/or a pre-coding matrix, etc. When sequential joint transmission is used, the AAP may include a TxSpec for the ATAP on how to construct the MAC protocol data unit (MPDU), such as frame check sequence (FCS) length, address field values, etc. The ATAP may construct the PLCP header and the associated PLCP service data units (PSDUs)/PLCP protocol data units (PPDUs) based on the TxSpec and the forwarded packets received from the AAP.

TABLE 4

Example TxSpec	Description
Channel access method	Scheduled Contention-based Signaled by the AAP
AAP transmission specifications	Various transmission specifications, at which the AAP may transmit the original data packet, such as MCS, transmit power, channel matrix, pre-coding matrix, etc.

TABLE 4-continued

Example TxSpec	Description
	The ATAP may be able to determine its most optimal setting to transmit the packets to the receiving WTRUs in the joint transmission session based on the transmission specifications of the AAP and the channel conditions between the ATAP and the receiving WTRU.

Example contents of the Schedule field **505** are shown in Table 5.

TABLE 5

Example Schedule	Description
Scheduled start	The scheduled start time of the joint transmission session; the time may be referenced to the TSF timer of either AP, Greenwich Mean Time (GMT) or any other reference clock.
Schedule transmission times	The scheduled transmission times of the joint transmission packets; the times may be referenced to the TSF timer of either AP, GMT or any other reference clock.
Scheduled frequency	How often a joint transmission may take place

TABLE 5-continued

Example Schedule	Description
Scheduled end	The scheduled end of the joint transmission session
Current TSF timer	The current TSF timer of the AAP; the times in this schedule may use the TSF timer of the AAP as the reference. Alternatively, the reference clock may be specified using this field as well.
Estimated mutual clock drift	This subfield may contain the estimated clock drift between the reference clock and the local clock at the ATAP. The estimated clock drift may also be estimated by monitoring the beacons, short beacons, sync packets, or any other types of frames that may contain a clock reference time.

Example contents of the Request type field **507** are shown in Table 6.

TABLE 6

Example Request	Description
New joint transmission request	
Joint transmission request renewal	Renewal of the current or previous joint transmission session request
End	The end of the joint transmission session.

Although the joint transmission request is described in the form of an IE in FIG. **5**B, any field, subfield, or subset of the elements discussed may be implemented as any part of a management frame, control frame, data frame, or any other type of frame. These frames may include all explicit and implicit signaling, such as any part of the PLCP/MAC header, frame body, and/or scrambler initialization seeds, etc. The joint transmission request may also be implemented as frames or fields of frames in other types of communication systems such as, for example, LTE, UMTS, any WiFi standards, and Ethernet, etc. For example, it may be implemented using the Ethertype 89-0d, with a Payload Type set to 4 or any other numbers between 4-255 to indicate that the frame may contain a Joint Transmission Protocol, or may be related to multi-AP transmission protocol frames. Additional fields may be included to indicate that the frame contained may be of the subtype Joint Transmission Request Packet (JDReq). Session IDs may identify a particular joint transmission session to one or more receiving WTRUs. The receiving WTRUs may be a set of receiving WTRUs. An ID of the frame, for example, the sequence number of the packet in the joint transmission session identified by the session ID, ID of the AAP, and/or ID of the ATAP may be included as an additional field.

FIG. **6** shows an example of a joint transmission response IE that the ATAP may transmit to the AAP after receiving the joint transmission request in the control information from the AAP **600**. The joint transmission response IE may be included in its individual frame, a management frame, control frame, or any other type of frame that may contain the joint transmission response IE. The joint transmission response IE may include but is not limited to the following fields and/or information: element ID field **601**, length field **602**, ID field **603**, and result field **604**.

Element ID field **601** may indicate that the IE is a joint transmission response IE. The length field **602** may contain the length of the joint transmission response IE. The ID field **603** may contain one or more IDs of receiving WTRUs that may be the recipient of the joint transmission. Example contents of the ID field **603** are shown in Table 7. The ID(s) may be implemented as a MAC address, a BSSID, an SSID, an AID, or any other type of ID that the WTRUs may agree upon.

TABLE 7

Example ID	Description
Requesting AAP	
ATAP being requested	
Session ID	Sequence number identifying a particular joint transmission session to a particular receiving WTRU or requested by a particular AAP
ID of the frame	For example, the sequence number of the packet in the joint transmission session identified by the session ID.

Example contents of the Result field **604** are shown in Table 8.

TABLE 8

Example Result	Description
Accept	The ATAP may participate in the requested joint transmission session as specified by the Joint Transmission Request frame.
Reject	The ATAP may not participate in the requested joint transmission session as specified by the Joint Transmission Request frame. Example reasons to reject may include one or more of the following: No joint transmission capability, No links to the receiving WTRU, Unacceptable TxSpec, Temporary disabling joint transmission, High traffic load/congestion, Unknown receiving WTRU, Unacceptable schedule, Circumstances change and the ATAP cannot longer accommodate the Joint Transmission Session, and/or, None.

FIG. **7**A shows an example flow diagram for determining joint transmission capabilities in APs and preparing for joint transmission **700**. In the example of FIG. **7**A, AAP **702** may query another AP or ATAP **703** on its joint transmission (JT) capabilities **711** and/or on its channel conditions **712** associated with one or more WTRUs that are targeted for joint transmissions. ATAP **703** may respond with joint transmission feedback **713**. WTRU **701** may then receive notification of the pending joint transmission session **714** from AAP **702**. WTRU **701** before participating in the reception of joint transmissions may indicate its joint transmission and reception capability by transmitting to AAP **702** and/or ATAP **703** a joint transmission capability indication **715***a* and **715***b* in any management frame, control frame, or any other type of frame such as Probe Request, Association Request, etc. Alternatively, if concurrent joint transmission is conducted, the joint transmission session may take place transparently to the receiving WTRU. WTRU **701** may also indicate that it is capable of receiving sequential joint transmissions.

The AAP may use a joint transmission query frame or any type of frame containing a joint transmission query IE for querying the JT capabilities of an ATAP. FIG. **7**B shows an example of a joint transmission query IE. The joint transmission query IE may include but is not limited to the following fields and/or information: an element ID field **721**, length field **722**, ID field **723**, and options field **724**.

Element ID field **721** may indicate that the IE is a joint transmission query IE. Length field **722** may contain the length of the joint transmission query IE.

ID field **723** may contain one or more IDs of receiving WTRUs about which the AAP is querying. The ID(s) may be implemented as a MAC address, a BSSID, an AID, or any

other type of ID that the WTRUs may agree upon. A pre-established generic ID or the ID of the AP that is being queried may be used to indicate that the joint transmission query frame is meant to query the joint transmission capability of the AP.

Options field **724** may contain information on the content of the feedback requested and may include indications shown in Table 9.

TABLE 9

Example Indication	Description
Channel feedback	Compressed or uncompressed, between the AP being queried and the receiving WTRU
Capabilities of joint transmission	Indicates capabilities of joint transmission
Channel feedback	Compressed or uncompressed, between the querying AP and the AP being queried
Preferred Joint Transmission Parameters	The AP being queried may provide preferred Joint Transmission Options as well as TxSpec. Preferred TxSpec may be for each receiving WTRU. Preferred Joint Transmission Options may be as explained for the Joint Transmission Request IE.

The ATAP may use joint transmission feedback frame or any type of frame containing a joint transmission feedback IE for responding to the JT capabilities query by the AAP. FIG. **7**C provides an example of the joint transmission feedback IE. The joint transmission feedback IE may include but is not limited to the following fields and/or information: element ID field **731**, length field **732**, options field **733**, and feedback frame **734**.

Element ID field **731** may indicate that the IE is a joint transmission feedback IE. Length field **732** may contain the length of the joint transmission feedback IE. Options field **733** may contain joint transmission capabilities and preferred joint transmission options for the transmitting AP.

Feedback field **734** may contain the feedback of one or more WTRUs. Example contents of the Feedback field **734** are shown in Table 10.

TABLE 10

Example Feedback	Description
Number of feedback fields	Number of feedback fields included
Feedback field 1-N	ID: the ID of the receiving WTRU that was queried by the Querying AP or the ID of the querying AP if the feedback field contains the feedback for the querying AP; this may be implemented as MAC addresses, AID, or any other type of IDs that the WTRUs agree upon Channel feedback between the transmitting AP and the WTRU indicated in the ID field Preferred Joint Transmission Options for this WTRU Preferred Joint Transmission TxSpec for this WTRU

The AAP may use joint transmission notification frame or any type of frame containing a joint transmission notification IE or fields or subfields thereof for notifying the receiving WTRU of the pending joint transmission session (JTS) once the AAP and the ATAP have agreed on a JTS. This notification may be used by the receiving WTRU in a non-transparent JTS, in which a receiving WTRU may be aware that it is receiving similar or related data from more than two APs. For example, in a non-transparent JTS, the AAP and the ATAP may transmit MPDUs that may be associated with a particular data packet but with different TA addresses in the header. It may also be important to notify the receiving WTRU of the pending scheduled joint transmission so that the receiving WTRU does not go into a sleep state for power saving.

FIG. **7**D shows an example design of the joint transmission notification IE. The joint transmission notification IE may include but is not limited to the following fields and/or information: element ID field **741**, length field **742**, receiving WTRU (R-WTRU) field **743**, ATAP/A-WTRU field **744**, reference field **745**, and joint transmission (JT) options field **746**.

Element ID field **741** may indicate that the IE is a joint transmission notification IE. Length field **742** may contain the length of the joint transmission notification IE. Reference field **745** may contain one or more references to the pending JTS, such as the ID or the sequence number of the JTS.

The R-WTRU field **743** may contain one or more IDs of the R-WTRUs for the JTS. The IDs may be implemented as MAC addresses, AIDs, etc. The R-WTRU field **743** may not be included in a frame when the IDs or addresses of the intended R-WTRUs may already be included in the MAC header as a group or individual address.

ATAP field **744** may contain one or more IDs of the ATAP assigned to the receiving WTRU (R-WTRU) for the pending JTS. The IDs may be implemented as MAC addresses, BSSIDs, SSIDs, AIDs, etc.

JT Options field **746** may contain various options for the joint transmissions. Example contents of JT Options field **746** are shown in Table 11.

TABLE 11

Example JT Option	Description
Number of joint transmission packets	The number of packets that may be expected to be transmitted during the joint transmission sessions
Size of joint transmission packets/time/TXOP	The size of the joint transmission packets may be specified in bytes, in transmission time or in TXOP expressed in microseconds or any other time units
Data rate (or MCS) expected for the joint transmission session	Data rate (or MCS) used for JTS
Duration of joint transmission session	Duration used for JTS
Concurrent Joint Transmission	The ATAP may conduct concurrent joint transmission
Sequential Joint Transmission	The ATAP may conduct sequential joint transmission. The ATAP may use one or more of the following specifications to construct the PPDU or PSDU frames containing the data packets forwarded to it by the AAP according to the channel conditions between itself and the receiving WTRU and/or its own transmitting capabilities. The example specifications may include STBC, different MCS, HARQ, and/or different channel coding.
Scheduled Joint Transmission	The ATAP may conduct joint transmission at a scheduled time according to the Schedule specified by the AAP
TxSpec	The transmission specifications that are associated with the joint transmissions: The TxSpec may be implemented similar to the TXVECTOR or as a modified version of the TXVECTOR and may specify MCS, transmit power, channel matrix, pre-coding matrix, etc. If sequential joint transmission is used, the AAP may include TxSpec for the ATAP on how to construct the MPDU, such as FCS length, address field values, etc.

TABLE 11-continued

Example JT Option	Description
	The ATAP may construct the PLCP header and the associated PSDUs/PPDUs based on the TxSpec and the forwarded packets received from the AAP Channel access method: may include Scheduled, Contention-based, or Signaled by the AAP AAP transmission specifications: Various transmissions specifications at which the AAP transmits the original data packet such as MCS, transmit power, channel matrix, pre-coding matrix, etc. The ATAP may be able to determine its most optimal setting to transmit the packets to the receiving WTRUs in the joint transmission session based on the AAP's transmission specifications and the channel conditions between the ATAP and the receiving WTRU
Schedule	Scheduled start: the scheduled start time of the joint transmission session; the time may be referenced to the TSF timer of either AP, GMT or any other reference clock Schedule transmission times: the scheduled transmission times of the joint transmission packets; the times may be referenced to the TSF timer of either AP, GMT or any other reference clock Scheduled frequency: how often a joint transmission takes place Scheduled end: the scheduled end of the joint transmission session Current TSF timer: the current TSF timer of the AAP; the times in this schedule may use the TSF timer of the AAPs as the reference. Alternatively, the reference clock may be specified using this field as well.

Although the example of the various joint transmission frames in FIGS. **7B-7D** are described in the form of an IE, any field or subfield or subset of the elements discussed may be implemented as any part of a management frame, control frame, data frame, or other type of frame. These frames may include all explicit and implicit signaling such as any part of the PLCP/MAC header, frame body, and/or scrambler initialization seeds, etc. The Joint Transmission frames may also be implemented as frames, or fields of frames, in another type of communication system, for example, LTE, UMTS, any WiFi standard, and/or Ethernet, etc. For example, the frame may be implemented using the Ethertype 89-0d, with a Payload Type set to 4 or any other numbers between 4-255 to indicate that it contains Joint Transmission Protocol related frames or multi-AP transmission protocol related frames. Additional fields may be included to indicate: that the frame contained is of the subtype joint transmission data packets (JTDP), one or more session IDs to identify a particular joint transmission session to a (set of) receiving WTRUs, an ID of the AAP, an ID of the ATAP, and/or an ID of the R-WTRU.

FIG. **8** shows an example of a data packet that may be sent from an AAP to an ATAP to be sent to a receiving WTRU during a joint transmission session **800**. These packets may be referred to as the joint transmission data packets (JTDP). The JTDP may not necessarily be of the type data. However, they may be referred to as data packets since they are packets that are transmitted to the receiving WTRU during the joint transmission sessions. The JTDP may include but is not limited to the following field: subtype ID field **801** that may indicate that the frame contained may be of the subtype JTDP, one or more session ID fields **802** to identify a particular joint transmission session to one or more receiving WTRUs, AAP ID field **803**, and/or ATAP/A-WTRU ID field **804**.

The JTDP as shown in FIG. **8** may be of the type MAC protocol data units (MPDUs) or MAC service data units (MSDUs). The JTDP may also be of other types of frame which carry MPDU/MSDUs in its frame body. The JTPDs may also be implemented as frames, or fields of frames, in another type of communication system, including but not limited to LTE, UMTS, any WiFi standards, and/or Ethernet, etc. For example, the frames may be implemented using the Ethertype 89-0d, with a Payload Type set to 6 or any other numbers between 4-255 to indicate that they contain Joint Transmission Protocol frames or multi-AP transmission protocol data frames.

When concurrent joint transmission is used, the AAP may forward to the ATAP the original MPDUs and the transmission specifications to be used in accordance with the methods described above. The original MPDUs may be identical to the ones that the AAP may be transmitting to the receiving WTRUs during the joint transmission. In concurrent joint transmission, both the AAP and the ATAP may transmit identical PPDUs including the address fields in the MAC headers.

When sequential or scheduled joint transmission is used, the AAP and the ATAP may transmit different PPDUs in accordance with the methods described above. The AAP may forward the original MSDUs to the ATAP along with the transmission specifications for the AAP and/or for the ATAP. The AAP may determine the transmission specification for the ATAP when transmitting during the joint transmission session. Alternatively or additionally, the ATAP may determine its own transmission specifications based on the channel condition between itself to the receiving WTRU and/or the transmission specifications used by the AAP.

FIG. **9** shows a flow chart of an example procedure for authenticating and establishing Robust Security Network Association (RSNA) with an AP or WTRU to enable coordinated joint transmission **900**. A WTRU or AP may not receive a Class **3** packet such as a data frame over an 802.11 interface, unless the WTRU is associated with the transmitting AP. An AAP therefore may not be able to forward a JTDP to the ATAP or A-WTRU, or a receiving WTRU may not accept the packet sent to it by an ATAP or A-WTRU unless the receiving WTRU is associated with it. Transitioning to State **4** in a similar way as defined in 802.11ad may enable transmission and reception of all classes of frames between the AAP, ATAP, A-WTRU, C-WTRU, and the receiving WTRU. In the example procedure, an AAP may determine whether another AP or WTRU is going to participate in joint transmission **901**. If the targeted AAP or WTRU is going to participate in joint transmission, the AAP may then determine whether the targeted AP or WTRU is associated with the AAP **902**. If the targeted AP or WTRU is not associated, then the AAP may authenticate the targeted AP or WTRU **903** and then establish RSNA with targeted AP or WTRU **904** in order to enter State **4** and be able to transmit and receive all classes of frames to and from the AAP. This procedure may also be extended to be performed by an ATAP, A-WTRU, or C-WTRU.

If the AAP and the ATAP or A-WTRU communicate on other interfaces including but not limited to LTE and/or wired Ethernet, the procedure of FIG. **9** on the WiFi interface may not be needed. In that case, the receiving WTRU

may authenticate with either or both the AAP and the ATAP or A-WTRU in accordance with the procedure of FIG. **9**. The WTRU may be associated with the AAP only, or it may associate with the AAP as well as the ATAP or A-WTRU. Alternatively, the WTRU may not conduct association with the AAP and/or the ATAP or A-WTRU, but instead establish RSNA with either or both the AAP and the ATAP or A-WTRU.

FIG. **10** shows an example procedure for selecting an ATAP for coordinated joint transmission **1000**. In the example procedure of FIG. **10**, the AAP may include a joint transmission capability indication **1001** in its beacon, probe response, association response, or any other type of management and control frame to announce its capabilities.

The AAP may also monitor/record neighboring AP's joint transmission capabilities and the channel characteristics associated with WTRUs **1002**. These capabilities and channel characteristics may be received by the AP when it receives frames such as a beacon, probe response, association response, or any other type of management and control frame that may include a joint transmission capability indication. Any AP when receiving a frame from another WTRU, may record the conditions of the channel between the transmitting WTRU and itself.

The AAP may identify a receiving WTRU for joint transmission and may request that the receiving WTRU conduct one or more beacon radio measurements or radio measurements on other types of frames from surrounding APs and provide feedback **1003**. The receiving WTRU may conduct the requested radio measurements and may provide feedback to the AAP. The AAP may also be requested by the receiving WTRU to conduct measurements of a neighbor AP to obtain a measurement report.

The AAP may select candidates to be an ATAP based on the measurement reports fed back from the receiving WTRU **1004**.

The AAP may send a joint transmission query to candidate ATAPs based on the feedback from the receiving WTRU to obtain channel conditions between the ATAP candidates and the receiving WTRU **1005**. The AAP may send the joint transmission query to the APs which are known to have joint transmission capabilities or may query the joint transmission capabilities of the APs if they are not known beforehand in accordance with the method described above.

These APs may then receive feedback from the queried ATAP candidates in a joint transmission feedback frame **1006** that may provide a channel quality indication, preferred Joint Transmissions Options, and/or a Joint Transmission TxSpec that the responding AP has determined locally based on its local situation such as channel conditions, traffic load, local medium occupancy time, and transmit power limits, etc.

The AAP may select one or more candidate ATAPs as the ATAP for a joint transmission session to one or more receiving WTRUs based on the joint transmission feedback **1007** that the AAP received from all the APs. Selection criteria for an ATAP may include but is not limited to:

(1) an ATAP having good channel conditions to the receiving WTRU such that the joint transmission may significantly provide throughput improvement for the receiving WTRU;

(2) an ATAP having good channel conditions with the AAP such that the forwarding of coordination information and JTDP, which may be considered as overhead, takes a relatively short period of time;

(3) an ATAP sharing similar capabilities as the AAP such as scheduled channel access, and similar wired/wireless interfaces, etc.;

(4) an ATAP being capable of joint transmission options and TxSpec that the AAP desires during the JTS; and

(5) an ATAP not receiving an excessive overload of traffic, which may cause delay for the joint transmission session.

This procedure may also be extended to be performed by an ATAP, A-WTRU, or C-WTRU. Alternatively or additionally, at any time an AAP may exit the above procedure and may conduct a joint transmission capability procedure as described in FIG. **7**A by transmitting a joint transmission query frame to one or more neighboring APs to obtain their joint transmission capabilities as described above.

Once an AAP has selected an ATAP for a JTS to one or more receiving WTRUs, the AAP, ATAP, and WTRU may conduct a multi-AP joint transmission procedure. Using the joint transmission request and response exchanges as described herein, an AAP and ATAP may agree on a type of coordinated joint transmission. Examples of coordinated joint transmission include but are not limited to: scheduled concurrent joint transmissions, scheduled sequential joint transmissions, contention-based concurrent joint transmissions, and contention-based sequential joint transmission. The procedure for each type of joint transmissions is discussed below.

FIG. **11** shows an example of a scheduled concurrent joint transmission procedure **1100**. AAP **1101** and ATAP **1102** may listen to each other's beacons and determine the difference between their local timer, such as the TSF timers at AAP **1101** and ATAP **1102**. Joint transmission may be possible even if AAP **1101** and ATAP **1102** are not within range of each other on the wireless WiFi interface. The beacons may be exchanged over the DS or other type of wireless or wired interface.

AAP **1101** may set up a JTS using a joint transmission request **1110** transmitted either wirelessly or on a wired connection. The joint transmission request **1110** may be sent on the same WiFi medium **1105** as the pending JTS. Alternatively, the joint transmission request **1110** may also be sent on an alternative medium **1104** over an alternative interface provided that it may be delivered to ATAP **1102**. For example, the joint transmission request **1110** may be transmitted using a different interface conforming to LTE, UMTS, WiMAX, Ethernet, or a different WiFi standard, or the same WiFi standards but on a different channel.

The AAP may provide schedule information for the JTS for the transmission of one or more transmit opportunities using the joint transmission request **1110**. This schedule information may be referenced to the local timer at either the ATAP or the AAP, or may be referenced to any other timer that is agreed upon. This schedule may be, for example, time and duration or any other type of indication of a period such as, for example, transmit opportunities (TXOPs), power save multi-poll (PSMP) downlink (DL) slots, scheduled automatic power save delivery (S-APSD) slots, or service periods for example, in 802.11ad. The AAP and/or the ATAP may announce such a schedule in their beacons, short beacons, or any other type of frame.

ATAP **1102** may respond by sending a joint transmission response **1112** either accepting or rejecting the JTS on the same medium used for transmitting the joint transmission request **1110**. If the JTS is rejected, AAP **1101** may select the next suitable AP to which to transmit a joint transmission request **1110**. Alternatively, AAP **1101** may adjust the joint transmission parameters and specifications according to a reject reason code and send a new joint transmission request

1110 to the same AP. If the selected AP accepts the JTS, ATAP 1102 may remain the same for the JTS for a WTRU or a set of WTRUs, unless AAP 1101 selects a new ATAP or ATAP 1102 indicates to AAP 1101 that it may no longer accommodate the JTS by sending a joint transmission response 1112 to the AP with a result field indicating the change. Alternatively, ATAP 1102 may choose a different medium, such as the same WiFi medium 1105 for the JTS.

AAP 1101 may then forward JTDPs 1111 to ATAP 1102. If JTDPs 1111 are forwarded together in aggregated packets with the joint transmission request 1110, the joint transmission response may be aggregated with JTDP ACK/block ACK (BA) 1113 frames for the forwarded JTDPs 1111. Alternatively, the joint transmission request 1110 frames may include fields containing JTDPs, and the joint transmission response 1112 frames may include a field indicating JTDP ACK/BA 1113 frames for the forwarded JTDPs 1111.

JTDPs may be forwarded to ATAP 1102 by AAP 1101 according to the data forwarding options included in the joint transmission capabilities or according to an agreement during the joint transmission request 1110 and joint transmission response 1112 exchange. Forwarding of JTDPs 1111 may be done with the coordination information such as a joint transmission request 1110 in aggregated frames. The forwarding of JTDPs 1111 may be completed and acknowledged before the joint transmission of those JTDPs commences. The forwarded JTDPs may be MPDUs or MSDUs. These MPDUs or MSDUs may be encapsulated in the frame body and transmitted as, for example, Ethernet, WiFi, LTE, or WiMax frames.

If MSDUs are forwarded to ATAP 1102, ATAP 1102 may construct MPDUs using the MSDUs and the information and TxSpec provided by AAP 1101. When AAP 1101 forwards MPDUs to ATAP 1102 along with TxSpec, ATAP 1102 may extract MPDUs directly. For joint transmission, ATAP 1102 may save the MPDUs in a separate queue and pass the MPDUs to the physical (PHY) layer at an appropriate time using primitives such as PHY-TXSTART.request (TXVECTOR), where TXVECTOR may be derived from the TxSpec that ATAP 1102 has been determined locally or obtained from AAP 1101.

In joint transmissions that are transparent for the RSTA, the PPDUs that are transmitted by AAP 1101 and ATAP 1102 may be identical including the address fields in the MAC headers and the group IDs in the PLCP headers.

AAP 1101 and/or ATAP 1102 may notify R-WTRU 1103 with the pending scheduled concurrent JTS and its schedule using a joint transmission notification frame 1114. Alternatively or additionally, AAP 1101 and/or ATAP 1102 may include a joint transmission notification IE in their beacon, short beacon or any other type of frames to achieve the same purpose. If R-WTRU 1103 is notified using a uni-cast frame, R-WTRU 1103 may transmit ACK 1115 the reception of the joint transmission notification frame 1114.

AAP 1101 and ATAP 1102 may start the joint transmissions 1116 at the scheduled time, using TXVECTORs that may be derived from the TxSpec locally determined or determined by the AAP. In the scheduled concurrent JTS, the PPDUs containing packet data 1117 and 1118 transmitted by both AAP 1101 and ATAP 1102 may be identical. It may be transparent to the R-WTRU 1103 that the packet data 1117 and 1118 that it is receiving is a scheduled concurrent joint transmission. When having received the jointly transmitted packet data 1117 and 1118, the R-WTRU 1103 may acknowledge the reception by transmitting an ACK 1119, a short ACK, or a BA to AAP 1101. R-WTRU 1103 may also skip the acknowledgement according to the ACK policies specified. If a joint transmission has failed, AAP 1101 may decide to retransmit the packet data 1117, either individually or jointly at a later scheduled time.

FIG. 12 shows an example of the scheduled sequential joint transmission procedure 1200. AAP 1201 and ATAP 1202 may listen to each other's beacons and determine the difference between their local timer, such as the TSF timers at AAP 1201 and ATAP 1202. Joint transmission may be possible even if AAP 1201 and ATAP 1202 are not within range of each other on the wireless WiFi interface. The beacons may be exchanged over the DS or other type of wireless or wired interface.

AAP 1201 may set up a JTS using a joint transmission request 1210 transmitted either wirelessly or on a wired connection. The joint transmission request 1210 may be sent on the same WiFi medium 1205 as the pending JTS. Alternatively, the joint transmission request 1210 may also be sent on an alternative medium 1204 over an alternative interface provided that it may be delivered to ATAP 1202. For example, the joint transmission request 1210 may be transmitted using a different interface conforming to LTE, UMTS, WiMAX, Ethernet, or a different WiFi standard, or the same WiFi standards but on a different channel.

The AAP may provide schedule information for the JTS for the transmission of one or more transmit opportunities using the joint transmission request 1210. This schedule information may be referenced to the local timer at either the ATAP or the AAP, or may be referenced to any other timer that is agreed upon. This schedule may be, for example, time and duration or any other type of indication of a period such as, for example, transmit opportunities (TXOPs), power save multi-poll (PSMP) downlink (DL) slots, scheduled automatic power save delivery (S-APSD) slots, or service periods for example, in 802.11ad. The AAP and/or the ATAP may announce such a schedule in their beacons, short beacons, or any other type of frame.

ATAP 1202 may respond by sending a joint transmission response 1212 either accepting or rejecting the JTS on the same medium used for transmitting the joint transmission request 1210. If the JTS is rejected, AAP 1201 may select the next suitable AP to which to transmit a joint transmission request 1210. Alternatively, AAP 1201 may adjust the joint transmission parameters and specifications according to a reject reason code and send a new joint transmission request 1210 to the same AP. If the selected AP accepts the JTS, ATAP 1202 may remain the same for the JTS for a WTRU or a set of WTRUs, unless AAP 1201 selects a new ATAP or ATAP 1202 indicates to AAP 1201 that it may no longer accommodate the JTS by sending a joint transmission response 1212 to the AP with a result field indicating the change. Alternatively, ATAP 1202 may choose an alternative medium 1204, such as the same WiFi medium 1205 for the JTS.

AAP 1201 may then forward JTDPs 1211 to ATAP 1202. If JTDPs 1211 are forwarded together in aggregated packets with the joint transmission request 1210, the joint transmission response may be aggregated with JTDP ACK/block ACK (BA) 1213 frames for the forwarded JTDPs 1211. Alternatively, the joint transmission request 1210 frames may include fields containing JTDPs, and the joint transmission response 1212 frames may include a field indicating JTDP ACK/BA 1213 frames for the forwarded JTDPs 1211.

JTDPs may be forwarded to ATAP 1202 by AAP 1201 according to the data forwarding options included in the joint transmission capabilities or according to an agreement during the joint transmission request 1210 and joint transmission response 1212 exchange. Forwarding of JTDPs

1211 may be done with the coordination information such as a joint transmission request 1210 in aggregated frames. The forwarding of JTDPs 1211 may be completed and acknowledged before the joint transmission of those JTDPs commences. The forwarded JTDPs may be MPDUs or MSDUs. These MPDUs or MSDUs may be encapsulated in the frame body and transmitted as, for example, Ethernet, WiFi, LTE, or WiMax frames.

If MSDUs are forwarded to ATAP 1202, ATAP 1202 may construct MPDUs using the MSDUs and the information and TxSpec provided by AAP 1201. When AAP 1201 forwards MPDUs to ATAP 1202 along with TxSpec, ATAP 1202 may extract MPDUs directly. For joint transmission, ATAP 1202 may save the MPDUs in a separate queue and pass the MPDUs to the physical (PHY) layer at an appropriate time using primitives such as PHY-TXSTART.request (TXVECTOR), where TXVECTOR may be derived from the TxSpec that ATAP 1202 has been determined locally or obtained from AAP 1201.

In joint transmissions that are transparent for the RSTA, the PPDUs that are transmitted by AAP 1201 and ATAP 1202 may be identical including the address fields in the MAC headers and the group IDs in the PLCP headers.

AAP 1201 and/or ATAP 1202 may notify R-WTRU 1203 with the pending scheduled sequential JTS and its schedule using a joint transmission notification frame 1214. Alternatively or additionally, AAP 1201 and/or ATAP 1202 may include a joint transmission notification IE in their beacon, short beacon or any other type of frames to achieve the same purpose. If R-WTRU 1203 is notified using a uni-cast frame, R-WTRU 1203 may transmit ACK 1215 the reception of the joint transmission notification frame 1214.

AAP 1201 and ATAP 1202 may start the joint transmissions 1216 and 1219 at the scheduled time, using TXVECTORs that may be derived from the TxSpec locally determined or determined by the AAP. In the scheduled sequential JTS, the PPDUs containing packet data 1217 and 1220 transmitted by both AAP 1201 and ATAP 1202 may be identical. It may be transparent to the R-WTRU 1203 that the packet data 1217 and 1220 that it is receiving is a scheduled sequential joint transmission.

Alternatively, packet data 1217 and 1220 may be different by using, for example, STBC, HARQ schemes as may be specified in the joint transmission options. It may be transparent to R-WTRU 1203 that the packet data 1217 and 1218 that it is receiving is a scheduled sequential transmission. In joint sequential transmissions, the joint transmissions may not necessarily be transparent to R-WTRU 1203. The TA addresses and the frame body, for example, in the sequential transmissions may be different. R-WTRU 1203 may be notified of the non-transparent joint sequential transmissions by AAP 1201 and/or the ATAP 1202 using a joint transmission notification frame 1214.

If HARQ sequential transmission is used, either AAP 1201 or ATAP 1202 may start with transmitting its packet data 1217 and 1220. R-WTRU 1203 may send back an ACK/feedback 1218. Either AAP 1201 or ATAP 1202, whichever has not transmitted, may cancel its transmission if the first transmission has already been acknowledged. Otherwise, it may adjust its own PPDU on the basis of the feedback from R-WTRU 1203 and transmit after an interval, such as an interframe space (IFS) from the feedback from R-WTRU 1203. If STBC is used, AAP 1201 and ATAP 1202 may transmit at the same time according to the STBC scheme. R-WTRU 1203 may process the received signals according the STBC decoding method.

When having received the jointly transmitted packet data 1217 and 1220, the R-WTRU 1203 may acknowledge the reception by transmitting an individual ACK 1221 on the AAP 1201 and ATAP 1202 transmission portions of the joint sequential transmission, a short ACK, or a BA to AAP 1201. R-WTRU 1203 may also skip the acknowledgement according to the ACK policies specified. If a joint transmission has failed, AAP 1201 may decide to retransmit the packet data 1217, either individually or jointly at a later scheduled time.

R-WTRU 1203 may also wait until the entire joint sequential transmission completes and then send ACKs 1218 and 1221 to AAP 1201. AAP 1201 or ATAP 1202 may cancel their pending transmissions if the RSTA has already transmitted an ACK in response to receiving an earlier transmission portion of the joint sequential transmissions indicating that the JTDP has been correctly received. If a joint transmission has failed, the AAP may decide to retransmit the frame, either individually or jointly at a later scheduled time.

FIG. 13 provides an example design of the JT-RTS frame, which may be a modified version of the request to send (RTS) frame for use in contention-based joint transmissions 1300. The JT-RTS fame may include but is not limited to the following fields: a frame control field 1301, a duration field 1302, an RA field 1303, a TA field 1304, a reference field 1305, and an FCS field 1306. This frame may also be implemented as any type of control frame, management frame, or any other type of frame, a field, or a subfield thereof.

Frame control field 1301 may contain type information indicating that this is a JT-RTS frame. Alternatively, the type may be an RTS while the other parts of the frame, such as all other fields, including PLCP header, initial scrambling seeds, and/or FCS encoding, may indicate that this is an RTS for a joint transmission.

Duration field 1302 may contain a duration that is sufficient to have the AAP, ATAP and R-WTRU to transmit JT-CTS, regular RTS/CTS exchange, and all the joint transmission, the ACK/BAs, plus the appropriate IFSs between the transmitted frames. The RA field may contain the address of the ATAP, and the TA field may contain the address of the AAP.

Reference field 1305 may contain the references to the pending JTS, such the ID or the sequence number of the JTS for the particular AAP or for the AAP/ATAP pair.

FIG. 14 shows an example design of the JT-CTS frame, which may be a modified version of the clear to send (CTS) frame for use in contention-based joint transmissions 1400. The JT-CTS frame may include but is not limited to the following fields: frame control field 1401, duration field 1402, RA field 1403, a reference field 1404, and FCS field 1405. This frame may also be implemented as any type of control frame, management frame, or any other type of frame, a field, or subfield thereof.

Frame control field 1401 may contain type information indicating that this is a JT-CTS frame. Alternatively, the type may be CTS, while the other parts of the frame, such as all other fields, including PLCP header, initial scrambling seeds, and/or FCS encoding may indicate that this is an CTS for a joint transmission.

Duration field 1402 may contain the duration that is sufficient to have the AAP, ATAP and R-WTRU to transmit a regular RTS/CTS exchange, and all the joint transmission and ACK/BAs plus the appropriate IFSs between the transmitted frames. The duration field may be set to Duration_in_JT-RTS-aSIFSTime-JT-CTS_Duration, where Duration_in_JT-RTS is the value contained in the JT-RTS frame,

aSIFSTime is the duration of a SIFS and JT-CTS Duration is the duration needed to transmit a JT-CTS frame.

RA field **1403** may contain the address of the AAP. The reference field may contain the references to the pending JTS, such as the ID or the sequence number of the JTS for the particular AAP or for the AAP/ATAP pair.

FIG. **15** shows an example of a contention-based concurrent joint transmission procedure **1500**. AAP **1501** and ATAP **1502** may listen to each other's beacons and determine each other's joint transmission capabilities. AAP **1501** may set up a JTS using a concurrent joint transmission request **1510**. Joint transmission request **1510** may be sent on the same WiFi medium **1505** as the pending JTS. Alternatively, joint transmission request **1510** may also be sent on an alternative medium **1504** over an alternative interface provided that it can be delivered to ATAP **1502**. For example, joint transmission request **1510** may be transmitted using a different interface conforming to, for example, LTE, UMTS, WiMAX, Ethernet, or a different WiFi standard, or the same WiFi standards but on a different channel. ATAP **1502** may respond by sending a joint transmission response **1512**, either accepting or rejecting the JTS, on the same medium used for transmitting the joint transmission request **1510**. Alternatively, ATAP **1502** may choose a different medium, such as the same WiFi medium as the pending JTS. If the JTDPs are forwarded **1511** together in aggregated packets with the joint transmission request **1510**, joint transmission response **1512** may be aggregated with ACK/BA frames **1513** for the forwarded JTDPs. Alternatively, joint transmission request **1510** frames may include fields containing the JTDP, and the joint transmission response **1512** frames may include a field indicating ACK/BA for the forwarded JTDP.

If ATAP **1502** accepts JTS, JTDPs may be forwarded **1511** to ATAP **1502** by AAP **1501** according to the data forwarding options included in the joint transmission capabilities or according to an agreement during the joint transmission request **1510** and joint transmission response **1512** exchange. The JTDPs may also be forwarded **1511** together with the coordination information such as a joint transmission request **1510** in aggregated frames. The JTDP forwarding **1511** may be completed and acknowledged before the joint transmission of that JTDP commences. The forwarded JTDPs may be MSDUs or MPDUs. In joint transmissions that are transparent for R-WTRU **1503**, the PPDUs that are transmitted by AAP **1501** and ATAP **1502** may be identical, including the address fields in the MAC headers and the group IDs in the PLCP headers.

AAP **1501** and/or ATAP **1502** may notify R-WTRU **1503** of the pending contention-based concurrent JTS using a joint transmission notification **1514** frame. Alternatively, AAP **1501** and/or ATAP **1502** may include a joint transmission notification **1514** IE in their beacon, short beacon or any other type of frame to achieve the same purpose. If joint transmission notification **1514** IE is included in a beacon or short beacon, AAP **1501** and/or ATAP **1502** may include it only for the period when it knows that R-WTRU **1503** is not in a power saving mode, and therefore may receive joint transmission notification **1514** IE. If AAP **1501** and/or ATAP **1502** notify R-WTRU **1503** using a uni-cast frame, R-WTRU **1503** may acknowledge the reception of joint transmission notification **1514** frame. R-WTRU **1503** may respond to the joint transmission notification **1514** frame with ACK **1515**.

AAP **1501** may initiate the JTS by transmitting JT-RTS frame **1516** to ATAP **1502** and may update its network allocation vector (NAV) counter using a duration contained in the Duration Field of JT-RTS frame **1516**. ATAP **1502** may respond to JT-RTS **1516** with JT-CTS **1517** frame.

After updating their NAV counter using the duration value of the JT-RTS, AAP **1501** may cancel the NAV associated with JT-RTS frame **1516** if ATAP **1502** and other APs/WTRUs in the BSS did not detect any transmission after 2xaSIFS_time+JT-CTS_duration+Interval counting from the end of the JT-RTS frame **1516**, where aSIFS_time is the duration of a SIFS, JT-CTS_duration is the duration of transmitting a JT-CTS frame and Interval is some arbitrary time interval and may be implemented as Interval=2*aSlotTime+aPHY-RX-START-Delay where aSlotTime is the duration of a Slot.

Alternatively, these other APs/WTRUs in the BSS may also elect to go to sleep for power saving. In addition, AAP **1501** that has updated its NAV counter using the duration value of the JT-RTS may cancel the NAV associated with JT-RTS frame **1516** if AAP **1501** have not detected a RTS frame after 2xaSIFS_time+JT-CTS_duration counting from the end of the JT-RTS frame, but do not detect any transmission after 4xaSIFS_time+JT-CTS_Duration+RTS_Duration+CTS_Duration+Interval counting from the end of the JT-RTS frame, where RTS_Duration and the CTS_Duration are the duration needed to transmit a RTS and a CTS frame.

R-WTRU **1503**, which may have been notified of the pending JTS, may detect from JT-RTS frame **1516** that this JTS is intended for itself by comparing the combination of the TA and the Reference to the JTS in JT-RTS frame **1516**. If R-WTRU **1503** has detected that the JT-RTS frame **1516** is meant to initiate a JTS for itself, R-WTRU **1503** may not go into a power saving mode and may not need to set its NAV counter.

After a SIFS duration, AAP **1501** and ATAP **1502** may concurrently transmit a regular RTS **1518** and **1519** with the RA address being the address of the RSTA and the TA address being the address of AAP **1501** and the Duration field set to a duration that may be sufficient for AAP **1501**, ATAP **1502**, and R-WTRU **1503** to transmit a CTS **1520**, all joint transmissions, the appropriate response frames, and the appropriate IFSs. Alternatively, AAP **1501** and ATAP **1502** may start the joint concurrent transmissions of data directly without first going through an RTS/CTS exchange.

ATAP **1502** receiving RTS **1518** may modify their NAV counter using a Duration value. For an AP/WTRU that has modified its NAV counter using a JT-CTS and then an RTS and a SIFS time after the JT-CTS, it may cancel the medium reservation if it did not detect any transmission after 3xaSIFS_time+RTS_Duration+CTS_Duration+Interval counting from the end of the JT-CTS time.

R-WTRU **1503** may respond to RTS **1518** and/or **1519** by transmitting CTS frame **1520**. Both AAP **1501** and ATAP **1502** may be required to monitor the medium for a CTS that is addressed to AAP **1520**. If AAP **1501** and ATAP **1502** do not receive such a CTS from the RSTA, they may send out a CF-End frame concurrently, or separately, to cancel the medium reservation for the JTS at any time during the reserved period. The TA field of the CF-End frame may be set to the MAC address of the AAP. If the AAP/ATAP has received a CTS from R-WTRU **1503**, they may commence the joint concurrent transmissions of data to R-WTRU **1503**. If a JT TXOP has been reserved using the JT-RTS/JT-CTS and/or RTS/CTS exchanges, the AAP **1501** and ATAP **1502** may concurrently transmit multiple data packets **1521** and **1522** during the TXOP.

R-WTRU **1503** may then acknowledge the reception of one or multiple packets by sending an ACK **1523**, a BA or any other frame as allowed in the frame exchange

sequences. It may also skip the acknowledgement as the ACK policies dictate. After the completion of the JTS, AAP **1501** and ATAP **1502** may concurrently or separately send out a CF-End frame to cancel the TXOP that may remain provided that the remaining TXOP is sufficient for such transmissions. Alternatively, AAP **1501** may send out the CF-End first and ATAP **1502** may repeat the CF-End. If a joint transmission has failed, AAP **1501** may determine to retransmit the frame, either individually or jointly in a later contention-based or scheduled-based joint transmission session.

FIG. **16** provides an example of the contention-based sequential joint transmission procedure **1600**. AAP **1601** and ATAP **1602** may listen to each others beacons and determine each others joint transmission capabilities. AAP **1601** may set up a JTS using a sequential joint transmission request **1611**. Joint transmission request **1611** may be sent on the same WiFi medium **1605** as the pending JTS. Alternatively, joint transmission request **1611** may also be sent on an alternative medium **1604** over an alternative interface provided that it can be delivered to ATAP **1602**. For example, joint transmission request **1611** may be transmitted using a different interface conforming to, for example, LTE, UMTS, WiMAX, Ethernet, or a different WiFi standard, or the same WiFi standards but on a different channel. ATAP **1602** may respond by sending a joint transmission response **1612**, either accepting or rejecting the JTS, on the same medium used for transmitting the joint transmission request **1611**. Alternatively, ATAP **1602** may choose a different medium, such as the same WiFi medium as the pending JTS. If the JTDPs are forwarded **1613** together in aggregated packets with the joint transmission request **1611**, joint transmission response **1612** may be aggregated with ACK/BA frames **1614** for the JTDPs forwarded **1613**. Alternatively, joint transmission request **1611** frames may include fields containing the JTDP, and the joint transmission response **1612** frames may include a field indicating ACK/BA **1614** for the forwarded JTDP.

If ATAP **1602** accepts JTS, JTDPs may be forwarded **1613** to ATAP **1602** by AAP **1601** according to the data forwarding options included in the joint transmission capabilities or according to an agreement during the joint transmission request **1611** and joint transmission response **1612** exchange. The JTDPs may also be forwarded **1613** together with the coordination information such as a joint transmission request **1611** in aggregated frames. The JTDP forwarding **1613** may be completed and acknowledged before the joint transmission of that JTDP commences. The forwarded JTDPs may be MSDUs or MPDUs. In joint transmissions that are transparent for R-WTRU **1603**, the PPDUs that are transmitted by AAP **1601** and ATAP **1602** may be identical, including the address fields in the MAC headers and the group IDs in the PLCP headers. They may also be different in TA addresses, frame body, and/or MCS, etc. The MPDUs transmitted by ATAP **1602** may be determined by AAP **1601** along with the TxSpec. Alternatively, AAP **1601** may forward the MSDUs to ATAP **1602** and ATAP **1602** may construct the MPDU as well as the PPDUs on the basis of the channel conditions between itself and R-WTRU **1603**, local characteristics, and/or feedback from the R-WTRU **1603**, etc.

AAP **1601** and/or ATAP **1602** may notify R-WTRU **1603** of the pending contention-based sequential JTS using a joint transmission notification **1615** frame. Alternatively, AAP **1601** and/or ATAP **1602** may include a joint transmission notification **1615** IE in their beacon, short beacon or any other type of frame to achieve the same purpose. If joint transmission notification **1615** IE is included in a beacon or short beacon, AAP **1601** and/or ATAP **1602** may include it only for the period when it knows that R-WTRU **1603** is not in a power saving mode, and therefore may receive joint transmission notification **1614** IE. If AAP **1601** and/or ATAP **1602** notify R-WTRU **1603** using a uni-cast frame, R-WTRU may acknowledge the reception of joint transmission notification **1615** frame. R-WTRU **1303** may respond to the joint transmission notification **1615** frame with ACK **1616**.

AAP **1601** may initiate the JTS by transmitting JT-RTS **1617** to ATAP **1602**, which is a modified version of the RTS frame with the following settings. A duration field may contain a duration that is sufficient to have the AAP, ATAP and R-WTRU to transmit 2 JT-CTS frames, a JT-RTS frame and all the joint sequential transmission, the ACK/BAs, plus the appropriate IFSs between the transmitted frames. An RA field may contain the address of the ATAP. A TA field may contain the address of the AAP. A Reference field may contain the references to the pending sequential JTS, such as the ID or the sequence number of the JTS for the particular AAP or for the AAP/ATAP pair. AAP **1601** may update its NAV counter using the duration contained in the duration field of the JT-RTS frame and may cancel the NAV associated with the JT-RTS frame if ATAP **1602** and other APs/WTRUs in the BSS did not detect any transmission after 2xaSIFS_time+JT-CTS_duration+Interval counting from the end of the JT-RTS frame, where aSIFS_time is the duration of a SIFS, JT-CTS_duration is the duration of transmitting a JT-CTS frame and Interval is some arbitrary time interval and may be implemented as Interval=2*aSlotTime+PHY_RX_Delay where aSlotTime is the duration of a Slot.

Alternatively, other APs/WTRUs in the BSS may also elect to go to sleep for power saving. In addition, the APs/WTRUs that have updated their NAV counter using the duration value of the JT-RTS may cancel the NAV associated with the JT-RTS frame if these APs/WTRUs have not detected a JT-RTS frame after 2xaSIFS_time+JT-CTS_duration counting from the end of the JT-RTS frame, but do not detect any transmission after 4xaSIFS_time+JT-CTS_duration+JT-RTS_Duration+JT-CTS_Duration+Interval counting from the end of the JT-RTS frame, where JT-RTS_Duration and the JT-CTS_Duration are the duration needed to transmit a JT-RTS and a JT-CTS frame.

The RSR-WTRU **1603**, which has been notified of the pending JTS, may detect from JT-RTS frame **1617** that this JTS is intended for itself by comparing the combination of the TA and the reference field to the JTS in JT-RTS frame **1617**. If R-WTRU **1603** has detected that JT-RTS **1617** is meant to initiate a JTS for itself, it should not go into power saving mode and may not need to set its NAV counter. It may recognize from the reference field that the pending JTS is a sequential JTS.

ATAP **1602** may respond to JT-RTS **1617** with JT-CTS **1618** frame with the following settings. The duration field may be set to Duration_in_JT-RTS-aSIFSTime-JT-CTS_Duration, where Duration_in_JT-RTS is the value contained in the JT-RTS frame, aSIFSTime is the duration of a SIFS and JT-CTS Duration is the duration needed to transmit a JT-CTS frame.

After a SIFS duration, AAP **1602** and ATAP **1603** may concurrently transmit JT-RTS **1619** and **1620** with the RA address being the address of R-WTRU **1603** and the TA address being the address of AAP **1601** and the duration field set to a duration that is sufficient for AAP **1601**, ATAP **1602**, and R-WTRU to transmit a JT-CTS, all joint transmissions

and the appropriate IFSs. Similarly, the JT-RTS may contain a Reference to the sequential JTS. Alternatively, AAP **1601** and ATAP **1602** may start the joint sequential transmissions of data directly without first performing an RTS/CTS exchange.

AAP **1601** and ATAP **1602** may modify their NAV counter using the duration value. R-WTRU **1603** may respond to JT-RTS **1619** and **1620** by transmitting JT-CTS frame **1621**. AAP **1601** and ATAP **1602** may be required to monitor the medium for a JT-CTS that is addressed to AAP **1601**. If AAP **1601** and/or ATAP **1602** do not receive such JT-CTS **1621** from R-WTRU **1603**, they may send out a CF-End frame, concurrently or separately, to cancel the medium reservation for the JTS at any time during the reserved period. The TA field of the CF-End frame may be set to the MAC address of the AAP. If AAP **1601** or ATAP **1602** has received JT-CTS **1621** from R-WTRU **1603**, they may commence the joint sequential transmissions of data **1622** and **1623** to R-WTRU **1603**. If a JT TXOP has been reserved using the JT-RTS/JT-CTS and/or RTS/CTS exchanges, AAP **1601** and ATAP **1602** may transmit multiple packets during the TXOP.

If HARQ sequential transmission is used, either AAP **1601** or ATAP **1602** may begin with transmitting its packet data **1622** and **1623**, R-WTRU **1603** may send back an ACK/feedback **1622**. AAP **1601** or ATAP **1602**, whichever has not transmitted, may cancel its transmission if the first transmission has already acknowledged. Otherwise, it may adjust its own PPDU on the basis of the ACK/feedback **1622** from R-WTRU **1603** and transmit after an IFS from ACK/feedback **1622** from R-WTRU **1603**. If STBC is used, AAP **1601** or ATAP **1602** may transmit at the same time according to the STBC scheme. The R-WTRU **1603** may process the received signals according the STBC decoding method.

R-WTRU **1603** may then acknowledge the reception of one or multiple packets by sending an ACK **1624**, a BA or any other frames, as allowed in the frame exchange sequences. It may also skip the acknowledgement as the ACK policies dictate. After the completion of the JTS, AAP **1601** and ATAP **1602** may, concurrently or separately, send out a CF-End frame to cancel the TXOP that may remain provided that the remaining TXOP is sufficient for such transmissions. Alternatively, AAP **1601** may send out the CF-End first and ATAP **1602** may repeat the CF-End. If a joint transmission has failed, AAP **1601** may decide to retransmit the frame, either individually or jointly in a later contention-based or scheduled-based joint transmission session.

As described above, the AP with which the WTRU is associated may also coordinate with another WTRU, for example, an Assistant WTRU (A-WTRU), to conduct joint transmissions to the WTRU so that the downlink (DL) transmission may take place at a higher rate and therefore provide the WTRU with a higher DL throughput performance.

These multi-WTRU DL joint transmission procedures follow those for multi-AP joint transmissions as described above. The AAP may coordinate the multi-WTRU JTS with WTRUs or the A-WTRU instead of with another ATAP. The A-WTRU may or may not be associated with the AP.

FIG. **17**A shows a high level signal flow diagram of an example control information exchange used for coordinated joint transmission by an AAP and A-WTRU **1700**. In the example of FIG. **17**A, AAP **1702** and A-WTRU **1703** may exchange coordination control information **1711***a* and **1711***b* to prepare to conduct multi-WTRU joint transmission as described above. Control information **1711***a* may include a joint transmission request. Control information **1711***b* may include a joint transmission response. Additionally or alternatively, AAP **1702** may forward data packets **1712** to A-WTRU **1703**. AAP **1702** and A-WTRU **1703** may then transmit the data packets **1713***a* and **1713***b* to receiving WTRU **1701** in the joint transmission session. The exchange of the coordination information as well as the forwarding of the associated data packets may take places in at least two ways. First, they may be transmitted wirelessly using the same or a separate wireless interfaces including but not limited to another WLAN, UMTS, LTE, WiMAX interface. Second, they may be transmitted over a wired backhaul link.

The AAP may send coordination control information to the A-WTRU concerning the joint transmission using similar coordination control information frames designs as described above. FIG. **17**B shows an example joint transmission request frame that may be used for conducting coordination between the AAP and the A-WTRU. The joint transmission request IE may include but is not limited to the following fields and/or information: element ID field **1720**, length field **1721**, ID field **1722**, options field **1723**, schedule field **1724**, Transmission Specification (TxSpec) field **1725**, and request type field **1726**.

Element ID field **1720** that may indicate that the IE is a joint transmission request IE. Length field **1721** may contain the length of the joint transmission request IE.

ID field **1722** may contain one or more IDs of: receiving WTRUs that may be the recipient of the joint transmission, a requesting AAP, an A-WTRU being requested, and/or a session ID that may include a sequence number identifying a particular joint transmission session to a particular receiving WTRU or requested by a particular AAP. The ID(s) may be implemented as a MAC address, an AID, or any other type of IDs that the WTRUs may agree on.

Options field **1723** may contain various options for the joint transmissions. Example contents of Options field **1723** are shown in Table 12.

TABLE 12

Example Options	Description
Number of joint transmission packets	The number of packets expected to be transmitted during the joint transmission sessions
Size of joint transmission packets/time/TXOP	The size of the joint transmission packets may be specified in bytes, in transmission time or in TXOP expressed in microseconds or any other time units
Data rate (or MCS) expected for the joint transmission session	Data rate (or MCS) used
Duration of joint transmission session	Duration used
Concurrent Joint Transmission	The A-WTRU may conduct concurrent joint transmission
Sequential Joint Transmission	The A-WTRU may conduct sequential joint transmission. The A-WTRU may use one or more of the following specifications to construct the PPDU or PSDU frames containing the data packets forwarded to it by the AAP

TABLE 12-continued

Example Options	Description
	according to the channel conditions between itself and the receiving WTRU and/or its own transmitting capabilities. The example specifications may include STBC, different MCS, HARQ, and/or different channel coding.
Scheduled Joint Transmission	The A-WTRU may conduct joint transmission at a scheduled time according to the Schedule specified by the AAP

Coordination Information Forwarding Option	If the ATAP is associated with the AAP, then
	Regular data exchange over the WiFi interface
	Joint Transmission Forwarding: a forwarding method that is specially designed for forwarding data and control packets associated with Joint Transmissions
	Forwarding over DS
	Forwarding over wireless
	Forwarding transmission format: Ethernet, 802.11 legacy/a/b/g/n/ac/af/ah, X-1, UMTS, LTE, etc.
	Forwarding transmission band and channel: channel numbers as well as frequency bands such as sub 1 GHz as for 802.11af and 802.11ah, 2.4 GHz, 5 GHz, 60 GHz, etc.
	If the ATAP is not associated with the AAP, then
	TDLS
	DLS
	OCT
	Joint Transmission Forwarding: a forwarding method that is specially designed for forwarding data and control packets associated with Joint Transmissions
	Forwarding over DS
	Forwarding over wireless
	Forwarding transmission format: Ethernet, 802.11 legacy/a/b/g/n/ac/af/ah, X-1, UMTS, LTE, etc.
	Forwarding transmission band and channel: channel numbers as well as frequency bands such as sub 1 GHz as for 802.11af and 802.11ah, 2.4 GHz, 5 GHz, 60 GHz, etc.

Data Forwarding Options	If the ATAP is associated with the AAP, then
	Regular data exchange over the WiFi interface
	Joint Transmission Forwarding: a forwarding method that may be designed for forwarding data and control packets associated with Joint Transmissions
	Forwarding over DS
	Forwarding over wireless
	Forwarding transmission format: Ethernet, 802.11 legacy/a/b/g/n/ac/af/ah, X-1, UMTS, LTE, etc.
	Forwarding transmission band and channel: channel numbers as well as frequency bands such as sub 1 GHz as for 802.11af and 802.11ah, 2.4 GHz, 5 GHz, 60 GHz, etc.
	If the ATAP is not associated with the AAP, then
	TDLS
	DLS
	OCT
	Joint Transmission Forwarding: a forwarding method that is specially designed for forwarding data and control packets associated with Joint Transmissions
	Forwarding over DS
	Forwarding over wireless
	Forwarding transmission format: Ethernet, 802.11 legacy/a/b/g/n/ac/af/ah, X-1, UMTS, LTE, etc.

TABLE 12-continued

Example Options	Description
	Forwarding transmission band and channel: channel numbers as well as frequency bands such as sub 1 GHz as for 802.11af and 802.11ah, 2.4 GHz, 5 GHz, 60 GHz, etc.

Schedule field **1724** may contain various options for the joint transmissions. Example contents of Schedule field **1724** are shown in Table 13.

TABLE 13

Scheduled start	The scheduled start time of the joint transmission session; the time may be referenced to either APs' TSF timer, GMT or any other reference clock
Schedule transmission times	The scheduled transmission times of the joint transmission packets; the times may be referenced to either APs' TSF timer, GMT or any other reference clock
Scheduled frequency	How often a joint transmission takes place
Scheduled end	The scheduled end of the joint transmission session
Current TSF timer	The current TSF timer of the AAP; the times in this schedule may use the AAP's TSF timer as the reference. Alternatively, the reference clock may be specified using this field as well.
Estimated mutual clock drift	This subfield contains the estimated clock drift between the reference clock and the local clock at the A-WTRU. The estimated clock drift may also be estimated by monitoring the beacons, short beacons or sync packets or any other types of frames that contains clock reference time.

TxSpecs field **1725** may contain various options for the joint transmissions. The transmission specifications that are associated with the joint transmissions are included in the TxSpecs field. The TxSpec may be implemented very similarly to the TXVECTOR or as a modified version of the TXVECTOR and may specify MCS, transmit power, channel matrix, pre-coding matrix, etc. If sequential joint transmission is used, the AAP may include TxSpec for the A-WTRU on how to construct the MPDU, such as FCS length, address field values, etc. The A-WTRU may construct the PLCP header and the associated PSDUs/PPDUs based on the TxSpec and the forwarded packets received from the AAP. Example contents of the TxSpecs field **1725** are shown in Table 14.

TABLE 14

Channel access method	Scheduled Contention-based Signaled by the AAP
AAP transmission specifications	Various transmissions specifications, at which the AAP transmits the original data packet such as MCS, transmit power, channel matrix, pre-coding matrix, etc. The A-WTRU may be able to determine its most optimal setting to transmit the packets to the receiving WTRUs in the joint transmission session based on the AAP's transmission specifications and the channel conditions between the A-VVTRU and the receiving WTRU.

Request type field **1726** may contain various options for the joint transmissions. Example contents of Request type field **1726** are shown in Table 15.

TABLE 15

Request type	New joint transmission request Joint transmission request renewal: renewal of the current or previous joint transmission session request End: the end of the joint transmission session

Although the joint transmission request frame described above is in the form of an IE, any field, subfield, or subset of the elements discussed may be implemented as any part of a management frame, control frame, data frame, or any other type of frame, including all explicit and implicit signaling such as any part of the PLCP/MAC header, frame body, and/or scrambler initialization seeds, etc. The joint transmission request may also be implemented as frames or fields of frames in another type of communication system, for example, LTE, UMTS, any WiFi standards, Ethernet, etc. For example, it may be implemented using the Ethertype 89-0d, with a Payload Type set to 4 or any other numbers between 4-255 to indicate that it contains Joint Transmission Protocol related frames or multi-AP transmission protocol related frames. Additional fields may be included to indicate that the frame contained is of the subtype JTDP. One or more Session IDs may be used to identify a particular joint transmission session to a one or more receiving WTRUs. An ID of the frame, for example, the sequence number of the packet in the joint transmission session identified by the session ID, an ID of the AAP, and/or an ID of the A-WTRU may be included in an additional field.

Once the A-WTRU receives the joint transmission request from the AAP, it may respond with a joint transmission response frame or a management frame, control frame, or any other type of frame containing the Joint Transmission Response IE. The joint transmission response frame may take the same format as shown in the example of FIG. **6**. The A-WTRU may accept or reject the JTS.

FIG. **18** shows an example flow diagram for determining joint transmission capabilities in WTRUs and preparing for joint transmission **1800**. In the example of FIG. **18**, AAP **1802** may query an A-WTRU **1803** on its joint transmission (JT) capabilities **1811** and/or on its channel conditions **1812** associated with one or more WTRUs. When a WTRU is associated with an AP, the AP is fully aware of the WTRU's capability; an AP may need to query a WTRU's capability if that WTRU is not associated with it. A-WTRU **1803** may respond with a joint transmission feedback **1813**. WTRU **1801** may then receive notification of the pending joint transmission session **1814** from AAP **1802**. WTRU **1801** before participating in the reception of joint transmissions may indicate its joint transmission and reception capability by transmitting to AAP **1802** and/or A-WTRU **1803** a joint transmission capability indication **1815***a* and **1815***b* in any management frame, control frame, or any other type of frame such as Probe Request, Association Request, etc. Alternatively, if concurrent joint transmission is conducted, the joint transmission session may take place transparently to the receiving WTRU. WTRU **1801** may also indicate that it is capable of receiving sequential joint transmissions.

An AAP may query an A-WTRU on its capabilities and its channel conditions to one or more other WTRUs using a joint transmission query frame or any type of frame containing a joint transmission query IE. The joint transmission query frame may be in the same format as defined in the example of FIG. **7**B.

When a WTRU is queried by an AP, for example, the AAP, the A-WTRU may respond to the joint transmission query frame by sending a joint transmission feedback frame or any other type of frame containing the joint transmission feedback IE. The joint transmission feedback frame may be in the same format as defined in the example of FIG. **7**C.

When the AAP and the A-WTRU have agreed on a JTS, the AAP may inform the receiving of the pending JTS using a joint transmission notification frame or any other type of frame containing the joint transmission notification IE. This may be used in a non-transparent JTS, in which a receiving WTRU may not be aware that it is receiving similar or related data from more than two APs or other WTRUs. For example, in a non-transparent JTS, the AAP and the A-WTRU may transmit MPDUs that may be associated with a particular data packet, but with different TA addresses in the header. It may also be important to notify the receiving WTRU of the pending scheduled joint transmission so that the receiving WTRU does not go into sleep state for power saving. The joint transmission notification IE may be in the same format as defined in the example of FIG. **7**D.

The AAP may send the JTDPs to the A-WTRU that may be transmitted to the receiving WTRU during the joint transmission session. The JTDP may be in the same format as defined in the example of FIG. **8**.

When concurrent joint transmission is used, the AAP may forward to the A-WTRU the original MPDUs, as well as the transmission specifications used, identical to the ones that the AAP may be transmitting to the receiving WTRUs during the joint transmission. In concurrent joint transmission, both the AAP and the A-WTRU may transmit identical PPDUs that may include the address fields in the MAC headers.

When sequential or scheduled joint transmission is used, the AAP and the A-WTRU may transmit different PPDUs. The AAP may forward the original MSDUs to the A-WTRU along with the transmission specifications for the AAP and/or for the A-WTRU. The AAP may determine the transmission specification for the A-WTRU when transmitting during the joint transmission session. Alternatively or additionally, the A-WTRU may determine its own transmission specifications based on the channel condition between itself to the receiving WTRU and/or the transmission specifications used by the AAP. In order for an AAP to forward JTDPs to an A-WTRU, the same association procedure of FIG. **9** described above may be used. The procedure in FIG. **9** may be used in order for the A-WTRU to authenticate and then establish RSNA with the receiving WTRU in order to enter State **4** in order to transmit and receive all classes of frames to and from the A-WTRU. Alternatively, if the A-WTRU is within the same BSS as the receiving WTRU, it may establish a TDLS or DLS connection with the receiving WTRU so that the A-WTRU and the receiving WTRU may exchange frames of all classes. The AAP and the receiving WTRU may be authenticated and associated, and they may also be in State **4** of authenticated and RSNA Established or Not Required.

FIG. **19** shows an example procedure for selecting an A-WTRU for coordinated joint transmission in the downlink **1900**. In the example procedure of FIG. **19**, the AAP may include a joint transmission capability indication in its beacon, probe response, association response, or any other type of management and control frame to announce **1901** its capabilities.

The AAP may then be requested or decide to conduct joint transmission with a particular receiving WTRU **1902**. A receiving WTRU that may want to participate in the reception of joint transmissions may indicate its joint transmission and reception capability by including a joint transmission capability indication in any management frame, control frame, or any other type of frame such as probe request, association request, etc. Alternatively, if concurrent joint transmission is conducted, the joint transmission session may take place transparently to the receiving WTRU. For sequential joint transmissions, either scheduled or unscheduled, however, the receiving WTRU must indicate that it is capable to receive sequential joint transmissions. The AAP may detect that joint transmission may be needed to provide more uniform coverage for a receiving WTRU in its BSS. Alternatively or additionally, the WTRU may also desire a better performance such as a higher throughput and request the AAP to conduct joint transmissions to achieve that.

The AAP, upon deciding or being requested to conduct joint transmissions may send a joint transmission query frame **1903** to one or more WTRUs to obtain the channel conditions between them and one or more receiving WTRUs based on the capabilities and/or radio measurement that it has obtained from the receiving WTRU. This measurement may be similar to a beacon measurement. The AAP may send the joint transmission query to the WTRUs which are not known to have joint transmission capabilities. The AAP may also query the joint transmission capabilities of the WTRUs if they are not known beforehand.

These WTRUs that are queried may respond with joint transmission feedback frame **1904** providing channel quality indication, other measurements, and/or preferred joint transmissions options and/or joint transmission TxSpec that the responding AP/WTRU has determined locally based on its local situation such as channel conditions, traffic load, transmit power limits, etc.

Based on the joint transmission feedback that the AAP received from all the WTRUs, the AAP may select one or more WTRUs as the A-WTRU **1905** for a joint transmission session with one or more receiving WTRUs. The selection criteria for an A-WTRU may be similar to those for an ATAP as described above.

Alternatively or additionally, at any time an AAP may exit the above procedure and may conduct a joint transmission capability procedure as described in FIG. **7**A by transmitting a joint transmission query frame to one or more neighboring WTRUs to obtain their joint transmission capabilities as described above.

Once the AAP has selected the A-WTRU for a joint transmission session for one or more receiving WTRUs, the AP and A-WTRU(s) may conduct multi-WTRU joint transmission. Similar to the multi-AP joint transmission, the AAP and the A-WTRU may conduct various types of joint transmissions including contention-based concurrent joint transmissions, contention-based sequential joint transmission, scheduled concurrent joint transmissions, and scheduled sequential joint transmissions. The procedures for these joint transmissions may follow those for multi-AP joint transmission with the A-WTRU replacing the ATAP as described in the examples of FIGS. **11**, **12**, **15**, and **16**.

When the A-WTRU and the receiving WTRU are in the same BSS and are associated with the AAP, the joint transmission procedure may be optimized. For example, for scheduled concurrent and sequential joint transmissions, the AP may include the JTS information such as schedule information, JTS ID or sequence number, etc., in its beacon, short beacon or any other type of management frame or control frame, or any other type of frame that is received by all WTRUs of the BSS. Because this information may not have been transmitted separately in uni-cast frames, frames such as joint transmission request may be shortened, and frames such as joint transmission notifications may not be necessary, which may lead to higher MAC efficiency and higher system throughput.

FIG. **20** shows an example procedure used by a C-WTRU for selecting an A-WTRU for coordinated uplink joint transmission **2000**. The Multi-WTRU UL joint transmission signaling and procedures may follow those of multi-AP and multi-WTRU joint transmissions in the DL. A C-WTRU may use the same A-WTRU for multi-WTRU joint transmission in the UL as the A-WTRU used by the AAP in the multi-WTRU DL Joint Transmission.

The C-WTRU may request a list of candidate A-WTRUs from the AAP **2001**. An AAP that wants to participate in the reception of joint transmissions may indicate its joint transmission and reception capability by including a joint transmission capability indication in any management frame, control frame, or any other type of frame such as a beacon, probe response, association response, etc. Alternatively, if concurrent joint transmission is conducted, the joint transmission session may take place transparently to the AAP. For sequential joint transmissions, either scheduled or unscheduled, however, the AAP must indicate that it is capable to receive sequential joint transmissions.

The C-WTRU may then be requested or decide to conduct joint transmission with a particular receiving WTRU **2002**. The decision to conduct multi-WTRU joint transmission in the UL may result from the AAP detecting that joint transmission is needed to provide more uniform coverage for a WTRU in its BSS. Alternatively or additionally, the WTRU may desire improved performance such as a higher throughput and request that the AAP receive joint transmissions in order to improve performance.

The C-WTRU, upon deciding or being requested to conduct joint transmissions may send a joint transmission query frame **2003** to one or more WTRUs to obtain the channel conditions between them and the AP based on the capabilities and/or radio measurement that it has obtained from the AP. The C-WTRU may query the joint transmission capabilities of the WTRUs if they are not known beforehand.

WTRUs that are queried may respond with a joint transmission feedback frame **2004** providing channel quality indications, other measurements, and/or a preferred joint transmissions options and/or joint transmission TxSpec that the responding WTRU may have determined locally based on its local situation, including but not limited to channel conditions, traffic load, and/or transmit power limits.

Based on the Joint Transmission Feedback that the C-WTRU received from all the WTRUs queried, the C-WTRU may select one or more WTRUs as the A-WTRU for joint transmission session to the AP **2005**.

The forwarding of coordination information and the JTDPs from the C-WTRU to the A-WTRU may be transmitted over various medium and interfaces including wireless or wired. The coordination information may be implemented as fields of frames in another type of communication systems such as LTE, UMTS, WiMAX, any WiFi standards, Ethernet, etc. For example, it may be implemented using the Ethertype 89-0d, with a Payload Type set to 6 or any other numbers between 4-255 to indicate that it contains joint transmission protocol or multi-AP transmission protocol data frames. In addition, the forwarded coordination information and the JTDPs may also be sent over the TDLS, DLS or OCT connections.

Once the C-WTRU has selected the A-WTRU for a joint transmission session for one or more receiving APs, the WTRUs may conduct multi-WTRU joint transmission. Similar to the multi-WTRU joint transmission in the DL, the C-WTRU and the A-WTRU may conduct various types of joint transmissions including contention-based concurrent joint transmissions, contention-based sequential joint transmission, scheduled concurrent joint transmissions, and scheduled sequential joint transmissions. The procedures for these joint transmissions may follow those for multi-WTRU joint transmission with the C-WTRU replacing the AAP, and the receiving AP replacing the receiving WTRU (R-WTRU) as described in the examples of FIGS. **11**, **12**, **15**, and **16**.

FIG. **21**A shows an example procedure for enabling coordinated sectorized operation or beamformed transmissions through AP/PCP/WTRU negotiations in accordance with a second embodiment **2100**, which may be used in combination with any of the embodiments described herein. Performing a sectorized transmission or a beamformed transmission that also may be conducted jointly by multiple APs may not only increase throughput, but also reduce interference. When several BSS are overlapping the APs, WTRUs, or PCPs may be able to conduct concurrent coordinated sectorized operation or beamformed transmissions while ensuring that the transmitted signals are not interfering with each other at the respective receiving WTRUs.

When used herein, a sectorized operation refers to when a WTRU and AP transmit and receive within a sector, which is an angular portion of the AP's coverage to which a WTRU may associate. Sectors are based on area.

When used herein beamformed transmissions refer to transmission using a signal processing technique used by both WTRUs and APs that controls the directionality of the transmission and reception of radio signals. Each AP or WTRU may have specific channels for directional transmission and/or reception.

WTRUs may observe sectorized operation or beamformed transmissions from an overlapping BSS or an overlapping PBSS, which may interfere with that WTRU's transmission or reception of data packets. System capacity

may be significantly increased if overlapping BSSs coordinate in such a way that their sectorized or beamformed transmissions/receptions limit their interference for any other concurrent sectorized or beamformed transmissions/receptions in other PBSSs, BSS, etc.

APs, WTRUs, or PCPs in overlapping BSSs may record information in received frames that are not addressed to them **2101**. The APs, WTRUs, or PCPs may then report interference they experience in a beamformed or sectorized reception report **2102**. The AP/PCP in the BSS may then receive the beamformed or sectorized reception report **2103**, and then combine the beamformed or sectorized reception reports **2104**. The APs/PCPs may then construct a transmission conflict list **2105** based on the beamformed or sectorized reception reports and the reported interference contained in those beamformed or sectorized reception reports. The APs/PCPs may then report the transmission conflict list information with other APs/PCPs **2106**. The APs/PCPs may then schedule coordinated sectorized or beamformed transmissions based on the reported transmission conflict list information **2107**. Inter-BSS or inter-PBSS coordinated beamformed or sectorized transmissions may be achieved through WTRU negotiations using the procedure described above and may be applied to enable concurrent sectorized operation or beamformed transmissions within a WLAN BSS or OBSS. These coordinated sectorized or beamformed transmissions may reduce interference. For example, in this embodiment, an AP/PCP may divide its BSS coverage into sectors and transmit and receive from only one or more sectors at a given time in accordance with the schedule derived from the transmission conflict list created in step **2106**.

FIG. **21**B shows an example of a system using sectorized or beamformed transmissions and receptions. The system of FIG. **21**B may consist of a first BSS that includes AP**1 2121**, WTRU**1 2122**, WTRU**2 2123**, sector **4 2114**, sector **5 2115**, and sector **6 2116**. A second BSS may include AP**2 2126**, WTRU**3 2124**, and WTRU**4 2125**, sector **1 2111**, sector **2 2112**, and sector **3 2113**. As shown in FIG. **21**B, the sectors may overlap.

In the example of FIG. **21**B, the sectorized transmission and receptions may interfere with each other in the overlapping BSSs (OBSSs). AP**1 2121** when transmitting in sector **4 2114** to WTRU**2 2123** may interfere with the sectorized transmissions from AP**2 2126** to WTRU**3 2124**. Similarly when AP**2 2126** transmits in sector **2 2112**, it may interfere with the reception at AP**1 2121**. In this example, transmit power associated with the sectorized or beamformed transmission may often be concentrated in certain directions. Due to the strongly directional transmissions, multiple sectorized transmissions may take place concurrently to increase aggregated system throughput. The directional transmissions may also cause severe interference for a receiver that may be located inside the transmission beams.

When coordinated sectorized operation or beamforming is used, the WTRU**1 2122** may report using a beamformed or sectorized reception report that it experiences interference from sector **3 2113** of the second BSS when AP**2 2126** transmits to WTRU**4 2125**. WTRU**1 2122** may also report using a beamformed or sectorized reception report that it experiences interference when AP**2 2126** transmits sectorized/beamformed or omnidirectional beacons. Similarly WTRU**2 2123** may report using a beamformed or sectorized reception report that it experiences interference from sector **2 2112** of the second BSS when AP**2 2126** transmits beacons in sector **2 2112**. AP**1 2121** may also record any interference it experiences when it is in omni-directional reception mode. When using receiver sectorization in sector **5 2115**, AP**1 2121** may also record any interference from sector **2** of the second BSS when AP**2 2126** transmits beacons either omni-directionally or in a sectorization operation mode.

As stated above, when a WTRU, PCP or AP receives a frame that is not addressed to them, they may record information in the received frames in accordance with the procedure described in FIG. **21**A. An example of such information is shown in Table 16.

TABLE 16

Information	Description
Transmitter Address	
Receiver Address	
BSSID	
Beamformed or not-beamformed	Whether the received packet is transmitted in beamformed or not. Such information may be obtained from the PLCP header, such as beamformed indication in a SU VHT frame, or Group ID that is not 0 or 63 in a MU-MIMO VHT frame or other fields designed to indicate beamformed transmissions.
Sector ID	The Sector ID may be obtained from the frame that is a sectorized beacon frame, sectorized short beacon, or from frames belonging to an Initiator Sector Sweep (ISS), Responder Sector Sweep (RSS), and Sector Sweep Feedback, or any other type of frames such as management, control, and data frames.
Reception Mode	Whether the current reception mode at the receiving WTRU, PCP or AP is omni-directional, quasi-omni, directional, etc.
Reception Mode Information	The reception mode information may include detailed descriptions of the reception mode, such as receiver beamforming patterns/weights, or whether the receiving WTRU was receiving directionally towards a sector of its PCP, AP or another WTRU, or whether the receiving PCP or AP was receiving directionally towards a WTRU, another PCP or AP.

As stated above, the APs, PCPs, or WTRUs may then send the recorded information on their observed transmissions to the PCP or AP in their BSS periodically using a sectorized reception report in accordance with the procedure described in FIG. **21**A. The sectorized reception report may be sent in a frame and implemented as an information element, a management frame, control frame, data frame, or any other type of frame, fields, or subfields of any type of frame.

FIG. **22** shows an example design of a beamformed or sectorized reception report IE **2200**. A beamformed or sectorized reception report may contain the following fields and/or information: an element ID field **2201** that may indicate that the IE is a sectorized reception report IE, a length field **2202** that may contain the length of the sectorized reception report IE, an ID field **2203**, a reception mode field **2204**, a reception mode information field **2205**, a number of reporting fields field **2206**, and one or more reporting fields **2207** and **2208**.

The ID field **2203** may indicate the IDs of the reporting WTRUs. The IDs may be implemented as a MAC address, a BSSID, an SSID, an AID, or any other type of IDs that the WTRUs may have agreed upon. Alternatively, the ID of the reporting WTRU may be indicated in the any address field of the MAC header, such as the TA. The target of the beamformed or sectorized reception report may be indicated in any address field of the MAC header such as the RA field. The ID field may include a sector ID that may include the ID of the sector of the PCP/AP/PBSS/BSS in which the reporting WTRU is located.

The reception mode field **2204** may indicate the mode that the reporting AP, PCP, or WTRU is in when observing the reported transmissions that are not destined for it. Reception mode may be omni-directional (standard), quasi-omni-directional or directional. One beamformed or sectorized reception report frame/IE may contain reception reports for one or more reception modes of the reporting WTRU. For example, a reporting WTRU may send a separate beamformed or sectorized reception report frame for each reception mode that it has been operating in the past reporting period. In another example, the reporting WTRU may include multiple beamformed or sectorized reception report IEs in a frame, with each IE for a different reception mode. In a third example, a beamformed or sectorized reception report may contain reporting fields for multiple reception modes. In the case there are reception reports for multiple reception modes, the beamformed or sectorized reception report IE may include multiple reception mode fields, reception mode information fields, and multiple series of reporting fields, one for each Reception Mode.

The reception mode information field **2205** may contain detailed information on the reception mode(s) specified in the reception mode field. For example, for a directional reception mode, one or more of the following details may be indicated: beamforming weights; direction towards the AP or PCP, (P)BSS; ID of the sector of the AP, PCP or WTRU in which the receiving WTRU received a beamformed transmission; and ID of the RX sector that the receiving WTRU was using in directional reception mode.

The number of reporting fields field **2206** may indicate the number of reporting fields included for the reception mode specified. There may be n reporting fields **2207** and **2208**, for example, for each reception mode. Each reporting field may be referred to as reporting field **1**-*n*.

FIG. **23** shows an example of a reporting field **2300**. A reporting field may contain the following fields: BSSID field **2301**, Tx ID field **2302**, Rx ID field **2303**, Tx mode field **2304**, Tx mode information field **2305**, Tx time field **2306**, and measurements field **2307**.

The BSSID field **2301** may indicate the BSSID of the BSS or PBSS in which the received packets are transmitted.

The Tx ID field **2302** may indicate the ID of the transmitting AP, PCP, or WTRU. The ID may be implemented as a MAC address, a BSSID, an AID, a partial AID, a Group ID, or any other type of IDs that the WTRUs may have agreed upon. The Tx ID may be taken from the TA field of the received packets.

The Rx ID field **2303** may indicate the ID of the receiving AP, PCP, or WTRU for which the received packets were destined. The ID may be implemented as a MAC address, a BSSID, an AID, a partial AID, a Group ID, or any other type of IDs that the WTRUs agreed upon. The Rx ID may be taken from the RA field of the received packets.

The Tx mode field **2304** may contain a transmission mode of the received packet. The transmission mode may be omni-directional or directional. Such information may be obtained from the PLCP header, such as beamformed indication in a SU VHT frame, or Group ID that is not 0 or 63 in a MU-MIMO VHT frame, or any other fields designed to indicate such information.

The Tx mode information field **2305** may contain detailed information on the reception mode(s) specified in the reception mode field. For example, for directional reception mode, one or more of the following details may be indicated: beamforming weights, which may be obtained from, for example, a sounding packet; an ID of the sector of the transmitting AP, PCP, or WTRU that was used for transmitting the received packets; and an ID of the sector of the AP/PCP/BSS/PBSS that the AP, PCP, or WTRU receiving the packets is located.

The Tx time field **2306** may include the starting times, durations, and/or ending times of the received packets on the wireless medium.

The measurements field **2307** may contain the measurements of the received packets, including but not limited to an average or peak RSSI or RCPI.

As described above, the PCP or AP may then combine the beamformed or sectorized reception report frames in accordance with the procedure described in FIG. **21**A. The PCP or AP may combine the beamformed or sectorized reception report from a subset of WTRUs according to some criteria. For example, the beamformed or sectorized reception report frames from the WTRUs located in a particular sector of the PCP/AP/PBSS/BSS may be combined together. In another example, the beamformed or sectorized reception report frames from the subset of WTRUs that experience interference from the same PBSS/BSS may be combined. In addition, the PCP or the AP may combine the beamformed or sectorized reception report frames with its own interference observations to construct a transmission sector conflict list in accordance with the procedure described in FIG. **21**A. Table 17 is an example design of a transmission sector conflict table based on a transmission conflict list.

TABLE 17

Sector ID (Or a subset of WTRUs)	(P)BSS 1	(P)BSS 2	. . . (P)BSS N
1	Sector 4, 5 Or WTRU1, WTRU2, AP1 (omni-directional tx)	NA	. . . Sector 1 Or WTRU16 to WTRU20 (beamformed tx)
2	Sector 5, 6 Or WTRU93 to WTRU1 (beamformed tx)	NA	. . . Sector 15 Or WTRU21 to AP5 & AP5 to WTRU21 (beamformed tx)
. . .	. . .	. . .	. . . . .
M	NA	Sector 23 Or WTRU75 (omni-directional tx)	. . . NA

A transmission sector conflict table indicates that when one particular sector (or a subset of a WTRUs) of the current PBSS/BSS/AP/PCP is transmitting or receiving a packet, the reception of that packet may experience interference from (P)BSS**1**-(P)BSSN if the indicated conflict sectors are transmitting/receiving as well. Alternatively or additionally, the interfering WTRUs (either omni-directional or directional transmission and receptions) in these (P)BSSs may be identified. In another example, the beamformed or sectorized transmissions from a particular transmitting WTRU to a particular receiving WTRU may be marked as conflicting with the transmissions/receptions for a particular (P)BSS Sector or a subset of WTRUs.

The conflict sectors/WTRUs may be deduced from the beamformed or sectorized reception report from the reporting WTRUs. When a WTRU reports that it receives either omni-directional or directional transmissions from other WTRUs in a particular sector of a different (P)BSS, the WTRU may need to transmit at a different time in that sector in order to avoid interference. An example of the transmission sector conflict table for the example system shown in FIG. **21**B is illustrated in Table 18.

TABLE 18

Sector ID (Or ID of a subset of WTRUs)	BSS 2	. . .
3	Sector 2 AP1 (omni-directional & directional tx)	. . .
4	Sector 2 AP1 (omni-directional & directional tx)	. . .
5	Sector 5 AP2 to WTRU4 (directional tx)	. . .

The transmission sector conflict list or table may be shared among APs/PCPs using transmission sector conflict frames that may be implemented as control, management or any other type of frames or fields, subfields or IEs in other frames. The APs/PCPs may share the transmission conflict information using the transmission sector conflict report frames with each other or with one or more coordinating PCPs/APs, such as a WiFi Controller or Admission Controller. FIG. **24** shows an example design of a transmission sector conflict IE for sharing a transmission sector conflict list or table **2400**. The transmission sector conflict IE may contain the following fields: an element ID field **2401** that may indicate that the IE is a transmission sector conflict report IE, a length field **2402** that may contain the length of the transmission sector conflict report IE, an ID field **2403**, an option field **2404**, a number of fields field **2405**, and a reporting field **1**-N **2406**.

The option field **2404** may include the options of reporting the conflicting transmissions. For example, a sector in an OBSS may be indicated as interfering for a particular sector of the reporting (P)BSS. In another example, the MAC addresses of a transmitting and receiving WTRUs may be indicated as the interfering directional transmission for a particular sector.

The number of fields **2405** field may include the number of included reporting fields contained in the transmission sector conflict IE. Each reporting field **2406** may be referred to as reporting field **1**-N **2406**, and may contain the reports of interferers for one or more sector or beam (or a subset of WTRUs). One or more reporting fields may be used to report interferers for one sector or beam or a subset of WTRUs.

Each reporting field **2406** may include a sector ID field **2407**, a duration/schedule field **2408**, a number of interferers **2409** field, an option field **2410**, and one or more interferer fields that may be referred to as interferer field **1**-M **2411**.

The sector ID field **2407** may include the ID of the (P)BSS sector for which the interferers are being reported. Alternatively, it may include the ID(s) of a subset of WTRUs, such as Group ID.

The duration/schedule field **2408** may contain the targeted duration or the schedule of the targeted transmission time for the sector or the subset of the WTRUs identified by sector ID field **2407**. This field may indicate a desired duration/schedule for the identified sector or subset of WTRUs by the PCP/AP.

The number of interferers field **2409** may include the number of interferers being reported within the reporting field.

Each reporting field may also contain an option field **2410** for reporting the conflicting transmissions. Each interferer field **2411** may contain the information for one or more interferers depending on the specifications of the option field **2410**.

The interferer field **2411** may contain the following subfields: a BSSID subfield **2412** that may indicate the BSSID of the interfering (P)BSS, an interferer ID subfield **2413**, a Tx mode subfield **2414**, and a Tx mode information subfield **2415**.

The interferer ID subfield **2413** may indicate the ID of one or more or a group of interferers according to specifications in the option field. For example, this field may contain the ID of the sector that is interfering. In another example, this field may contain a transmitting and receiving WTRU pair whose directional transmissions cause interference for a sector in the report BSS.

The Tx mode subfield **2414** may contain information identical to that contained in similar fields in the sectorized reception report frame.

The Tx mode information field **2415** may contain information identical to that contained in similar fields in the Sectorized Reception Report frame.

The coordinated sectorized or beamformed transmissions may be scheduled in distributed or centralized fashion in accordance with the procedure described in FIG. **21**A. In the distributed method, the APs/PCPs may decide a schedule based on a pre-determined order after receiving the transmission sector conflict report frames from other APs/PCPs of overlapping (P)BSS. For example, such an order may be the order of their MAC addresses/BSSID/SSID. The AP/PCP of the lowest (or highest) MAC address may determine its schedule for transmitting its sectors. Then the PCP/AP of the second lowest (or second highest) MAC address may determine its schedule for transmitting its sectors based the schedule of the first PCP/AP and the transmission sector conflict report. The remaining APs/PCPs may follow the same process until the schedules for all sectors of all APs/PCPs are determined.

In another example, the AP/PCP of the lowest (or highest) MAC address may determine its schedule for transmitting for one of its sectors. Then the AP/PCP of the second lowest (or second highest) MAC address may schedule its first sector based on the transmissions scheduled so far and the transmission sector conflict report frames. The AP/PCP of the lowest (or highest) MAC address may then determine its schedule for transmitting for a second sector when all APs/PCPs have determined the schedule for their first sector. The process may continue until all APs/PCPs have scheduled all transmissions for all of their sectors.

In the centralized method, one or more coordinating APs/PCPs, which may be one of the APs/PCPs actively participating in the coordinated sectorized or beamformed transmissions, may determine the transmission schedules for all conflict sectors in all overlapping (P)BSSs. The schedules for transmitting in different sectors may then be distributed to all other APs/PCPs. For example, in a PBSS headed by a PCP, the transmission sector conflict report frame may be shared with their AP, which may become the coordinating AP. The coordinating AP may then subsequently determine the schedule for all sectors in the PBSSs and distribute the scheduling to the PCPs. The PCPs then may subsequently distribute the scheduling of sector transmissions to the WTRUs, either explicitly or implicitly, by transmitting a trigger frame such as a directional sectorized beacon frame or short beacon frame.

In both the distributed and centralized method, scheduling concurrent transmissions may take into account of the interference for both the transmitting and receiving WTRUs since the receiving WTRUs often may respond with a response frame, such as an ACK, a BA, or a short ACK.

FIG. **25**A-**25**B show examples of coordinated sectorized or beamformed transmissions **2500**. The system of FIG. **25**A may consist of a first BSS that includes AP**1** **2501***a*, WTRU**1** **2503***a*, WTRU**2** **2504***a*, sector **4** **2514***a*, sector **5** **2515***a*, and sector **6** **2516***a*. A second BSS may include AP**2** **2502***a*, WTRU**3** **2505***a*, and WTRU**4** **2506***a*, sector **1** **2511***a*, sector **2** **2512***a*, and sector **3** **2513***a*. As shown in FIG. **25**A, the sectors may overlap. In the first BSS AP**1** **2501***a* may perform sectorized transmission of data packets in sector **6** **2516***a* to WTRU**1** **2503***a* at time=i. In the second BSS, AP**2** **2502***a* may perform sectorized transmission of data packets in sector **1** **2511***a* to WTRU**3** **2505***a* also at time=i. In this way, two coordinated sectorized transmissions may take place concurrently without interfering with each other.

The system of FIG. **25**B may consist of a first BSS that includes AP**1** **2501***b*, WTRU**1** **2503***b*, WTRU**2** **2504***b*, sector **4** **2514***b*, sector **5** **2515***b*, and sector **6** **2516***b*. A second BSS may include AP**2** **2502***b*, WTRU**3** **2505***b*, and WTRU**4** **2506***b*, sector **1** **2511***b*, sector **2** **2512***b*, and sector **3** **2513***b*. As shown in FIG. **25**B, the sectors may overlap. In the first BSS AP**1** **2501***b* may perform sectorized transmission of data packets in sector **4** **2514***b* to WTRU**2** **2504***b* at time=j. In the second BSS, AP**2** **2502***b* may perform sectorized transmission of data packets in sector **3** **2513***b* to WTRU**4** **2506***b* also at time=j. In this way, two coordinated sectorized transmissions may take place concurrently without interfering with each other.

In both the distributed or centralized methods, interference may still occur because not all interfering frames may be decoded by the WTRUs experiencing the interference, such as when the interfering WTRU is too far of a distance from the receiving WTRU. In order to address this issue, APs/PCPs may conduct measurements before scheduling concurrent sectorized or beamformed transmissions of multiple sectors in overlapping (P)BSSs, or when interference is detected at scheduled coordinated sectorized or beamformed transmissions.

When an AP/PCP wants to add a coordinated sectorized or beamformed transmission in a sector at a time frame (t**1**, t**2**), the AP/PCP may instruct the WTRUs in that sector to measure any interference from all neighboring (P)BSSs for a predefined or configurable duration. Alternatively or additionally, an interval in the scheduling may be set aside specifically for measurement. The AP/PCP may also send a request to all other APs/PCP (or a coordinating AP/PCP) requesting that all APs/PCPs do not transmit and measure for interference during a given interval. During the same interval, the requesting AP/PCP may conduct regular transmissions and receptions with its WTRUs within the desired sectors. All APs/PCPs/WTRUs may measure interference and update the transmission sector conflict frames. The AP/PCP may then use the updated transmission sector conflict frames to determine the schedule for the new sector.

FIG. **26** shows an example of a coordinated sectorized and beamforming capability IE that may be used to indicate support for sectorized operation and/or beamformed transmission and reception **2600**. Each WTRU, AP, an PCP that may be capable of coordinated sectorized operation and/or beamformed transmission may indicate its capability by including a coordinated sectorized and beamforming capability IE or field in any type of management, control or other type of frame such as probe request/response, association request/response frame, beacon, short beacon, etc. The WTRU may also use one or more bits in existing or new fields such as bit **30**-**31** in the VHT capabilities info field, to indicate that it is capable of WiFi coordinated sectorized or beamforming. The coordinated sectorized and beamforming capability IE may include but is not limited to the following fields:

(1) An element ID field **2601** that may indicate that the IE is a coordinated sectorized and beamforming capability IE;

(2) A length field **2602** that may contain the length of the IE;

(3) A sectorized operation field **2603** that may contain one or more bits to indicate whether the WTRU is capable of sectorized operation such as support for sectorization transmission;

(4) A sectorized reception report field **2604** that may contain one or more bits to indicate whether the WTRU is capable of providing and receiving beamformed or sectorized reception reports;

(5) A coordinated beamforming capable field **2605** that may contain one or more bits to indicate whether the WTRU is capable of coordinated beamforming;

(6) A coordinated beamforming options field **2606** that may contain the options for coordinated beamforming such as a beamforming method option for pre-coding matrix assignment or through training, a coordinated beamforming scheduling option for centralized or distributed coordination, or a coordination capability option that may be capable of acting as coordination node for centralized coordinated beamforming.

Similarly, PCPs and AP may include a coordinated sectorized and beamforming capability IE in its beacon, short beacon, association response and probe response to indicate its current mode of coordinated beamforming operations. The design of the coordinated sectorized and beamforming capability IE may be identical to that presented in FIG. **26** except the Element ID field.

An AP/PCP may require that the WTRUs be capable of sectorized operation and/or coordinated beamforming to associate with the (P)BSS. If a WTRU which does not support sectorized operation or coordinated beamforming attempts to associate with the PCP/AP, the PCP/AP's MAC layer may reject the association by issuing a MLME-ASSOCIATE.response primitive with the ResultCode "REFUSED_SECTORIZED_OPERATION_NOT_SUPPORTED" or "REFUSED_COORDINATED_BEAMFORMING_NOT_SUPPORTED". Similarly, the associated association response frame as well as the MLME-ASSOCIATE.confirm primitive may contain the same two reason codes as ResultCode Codes when rejecting the Association request from a WTRU.

FIG. **27** shows an example system in which WTRUs are equipped with more than one WLAN interface in accordance with a third embodiment **2700**, which may be used in combination with any of the embodiments described herein. This embodiment may enable a joint transmission and/or beamformed/sectorized transmission to be performed over more than one wireless interface. A device may have multiple WiFi interfaces with different WiFi interfaces adhering to different WiFi standards. For example, a device may have an 802.11ac interface for larger area coverage as well as an 802.11ad interface for multi-giga bits connections to WTRUs that are in close range. In another example, a device may have an 802.11ah interface for coverage area of radii of up to 1 km as well as an 802.11n interface. In the example of FIG. **27**, the AP**1** **2706** has an 802.11ac interface **2705** with WiFi controller **2701** and a 802.11ad **2704** with WTRU **2707**. Similarly, AP**2** **2707** has an 802.11ac interface **2702** with WiFi controller **2701** and a 802.11ad **2703** with WTRU **2707**. This embodiment may leverage the different characteristics of each WLAN interface such as coverage range, capabilities, and data rates to provide more uniform coverage for all WTRUs in a WLAN (P)BSS and OBSSs. These WLAN interfaces may also adhere to the same (for example, multiple 802.11ac devices tuning to different channels) or different WLAN standards (for example, one WLAN interface may be 802.11ac WTRU while a second WLAN interface may be 802.11ah WTRU).

These different characteristics of different WiFi devices may be leveraged to achieve coordination and data forwarding to provide more uniform coverage in WiFi. For example, 802.11ac/ac+connections on a device may be leveraged to provide coordinated beamforming or coordinated sectorized operation for 802.11ad WTRUs, PCPs and APs on the same device. As described above, the 802.11ad WTRUs, PCPs and APs may use the 802.11ac/ac+connections to exchange the coordination frames such as beamformed or sectorized reception report frames, transmission sector conflict report frames, coordinated sectorized and beamforming capability frames, as well as scheduling frames and data for the sectors of the (P)BSS. Similarly, 802.11ac/ac+WTRUs and APs (or in general terms, WTRUs and APs adhering to any 802.11xx standards) may use another 802.11xx connection to exchange coordination frames such as sectorized reception report frames, transmission sector conflict report frames, coordinated sectorized and beamforming capability frames, as well as scheduling and data frames for the sectors of the (P)BSS. Another 802.11xx connection may also be leveraged to exchange pre-coding matrices. The exchange of coordination, scheduling and data frames may be peer-to-peer or it may be towards a centralized WiFi controller as shown in FIG. **27**.

In addition, it may also be possible that a device may have multiple WiFi interfaces which may adhere to the same WiFi standards. This may be in addition to WiFi interfaces that adhere to different WiFi Standards. These WiFi interfaces may be tuned to different channels such that one of the WiFi interface may be used for transmitting data frames, conducting joint transmissions, coordinated beamforming, sectorized transmissions, while the other WiFi interface is used to transmit coordination, scheduling and data frames for joint transmissions as described above, and for coordinated beamforming or sectorized operation as described above, in order to achieve more uniform coverage in WiFi networks.

The distributed nature of channel access in IEEE 802.11 networks may create a hidden node problem. FIG. **28** provides an example of the hidden node problem **2800** wherein WTRU**2** **2802** and AP **2804** may hear the transmissions from WTRU**1** **2801**, while WTRU**3** **2803** may not hear the transmissions from WTRU**1** **2801**. WTRU**3** **2803** may thus be a hidden node with respect to communication between WTRU**1** **2801** and AP **2804**. In this case, when WTRU**1** **2801** transmits a packet to AP **2804**, there may be a chance that the hidden node WTRU**3** **2803** would attempt another transmission to AP **2804** causing a collision. For a single AP in 802.11, request-to-send (RTS) and clear-to-send (CTS) signaling exchanges may be used to solve the hidden node problem. The hidden node scenario remains a problem for multiple APs coordinated communications as well, as the channel access continues to be implemented in a distributed fashion. Also for some frequency bands (e.g. 60 GHz band) direct transmission of the RTS/CTS packets, which may be omni-directional, may be time consuming. In that case, a different frequency band may be used to transmit the RTS/CTS packets to address the hidden node problem.

FIG. **29** shows an example procedure for transmission of RTS/CTS packets over different frequency bands in accordance with a fourth embodiment **2900**, which may be used in combination with any of the embodiments described herein. This embodiment may provide further mechanisms for coordinating joint and/or sectorized transmissions. This procedure may implement RTS/CTS across different frequency bands and may be used to solve the hidden node problem in the 60 GHz band. In the example of FIG. **29**, there are three WTRUs: WTRU A **2901**, WTRU B **2902**, and WTRU C **2903**. WTRUs are used in this example for illustration purposes, but each WTRU may also be replaced by an AP. Also in this example, each WTRU/AP may be able to transmit/receive in both 5 GHz band and 60 GHz band.

Transmitting WTRU A **2901** may send out a RTS frame in 5 GHz band **2910**, in an attempt to reserve the 60 GHz band for a specified duration. Receiving WTRU B **2902** may then send out a CTS frame in 5 GHz band **2911** after a SIFS period, confirming the reservation of the 60 GHz band for WTRU A **2901** for the specified duration, and begin preparation for reception in 60 GHz. WTRU C **2903**, which may not be involved as a transmitter or a receiver, may set its NAV on 60 GHz **2912** accordingly, and may withhold from transmitting within the specified duration.

After receiving the CTS frame in 5 GHz band **2911** from WTRU B **2902**, WTRU C **2903** may update its NAV on 60 GHz **2913** accordingly, and may withhold from transmitting within the specified duration. WTRU A **2901** may proceed with data transmissions on 60 GHz **2915** to WTRU B **2902**, after a cross band interframe spacing (CBIFS) time period **2914**. Acknowledgement **2916** of the 60 GHz transmissions may be sent over 5 GHz band to confirm successful communication from WTRU A **2901** over the 60 GHz band and or to clear the 60 GHz NAV settings originally setup by WTRU A **2901**. Alternatively or additionally, the acknowledgement may be transmitted on the 60 GHz channel if desired.

FIG. **30** shows an example of how the RTS/CTS format may be modified to support the procedure above **3000**. The RTS **3001** may include a frame control field **3010**, a duration field **3011**, a receiver address field **3012**, a transmitter address field **3013**, a desired band (5G/60G) field **3014**, and an FCS field **3015**. The desired band (5G/60G) field **3014** may be used to indicate that the RTS frame is to reserve channel over 60 GHz band (or 5 GHz band), or which channel within the 60 GHz band. Similarly, the CTS **3002** may include a frame control field **3020**, a duration field **3021**, a transmitter address field **3022**, a desired band (5G/60G) field **3023**, an extra feedback field **3024**, and an FCS field **3025**. The desired band (5G/60G) field **3023** may

be used to confirm successful reservation of the channel over 60 GHz band, or the specified channel within the 60 GHz band. In addition, an extra feedback field **3024** may be sent in the CTS to help expedite the beamforming training process over 60 GHz band. Information may include but is not limited to the spatial beamforming vector from history and/or location information of the WTRU, which may be obtained from global positioning system (GPS) that is attached to WTRU.

In the above examples, the 5 GHz component and the 60 GHz component may reside in the same physical device, for example the same WTRU. It is noted that the two components may reside in two different physical devices, for example, a 5G WTRU and a 60G WTRU.

In traditional IEEE 802.11, RTS/CTS signaling exchange may be needed to solve hidden node problem. RTS may first be sent out from the potential transmitter. Every other station, except the potential receiver, hearing the RTS would need to set their NAVs accordingly and hold their transmissions. The potential receiver may respond with a CTS packet, confirming the RTS request. The combination of RTS and CTS may help the transceiver pair to reserve the radio resource and protect the following transmission from the hidden node problem.

FIG. **31** provides an example in multi-AP WiFi, in which a similar procedure may be used to handle the hidden node problem **3100**. In the example of FIGS. **31**, AP**1** **3101** and AP**2** **3102** may transmit multi-AP RTS (MRTS) **3111***a* and **3111***b* to make a request for radio resources. In response, the receiver, in this case WTRU**1** **3103**, may reply with a multi-AP CTS (MCTS) **3112** to confirm the request. Actual data transmissions **3113***a* and **3113***b* from AP**1** **3101** and AP**2** **3102** to WTRU**1** **3103** may ensue. Alternatively, the MRTS may be transmitted **3111***a* and **3111***b* may be transmitted simultaneously, or in a staggered manner one after the other.

In the same time, upon hearing MRTS **3111***a* and **3111***b*, WTRU**2** **3104** may set its NAV **3114***a* accordingly until an ACK **3115** as estimated by AP**1** **3101** and AP**2** **3102**. Upon hearing MCTS **3112**, WTRU**2** **3104** may update its NAV **3114***b* accordingly until the end of ACK **3115** as specified in the MCTS **3112**. WTRU**3** **3105** may only hear MCTS **3112** and accordingly may set its NAV **3116** until the end of ACK **3115** as specified in MCTS **3112**. WTRU**4** **3106** may hear only MRTS **3111***a* and **3111***b* and accordingly may set its NAV **3117** until the end of ACK **3115** as estimated by AP**1** **3101** and AP**2** **3102** upon hearing the MRTS **3111***a* and **3111***b*. This procedure ensures that each WTRU/AP is aware of the data transmissions **3113***a* and **3113***b* and avoids collision.

FIG. **32** provides an example frame format for MRTS and MCTS **3200**. MRTS **3201** may include but is not limited to the following fields: frame control field **3211**, duration field **3212**, receiver address field **3213**, transmitter address **1** field **3214**, transmitter **2** address field **3215**, and an FCS field **3216**. MCTS **3202** may include but is not limited to the following fields: frame control field **3221**, duration field **3222**, transmitter address **1** field **3223**, transmitter **2** address field **3224**, and an FCS field **3225**. The address of all transmitters may be specified in both the MRTS and the MCTS packet and may be MAC addresses, or logical address that represents the group of transmitter **1** and transmitter **2** (e.g. AP**1** and AP**2**).

FIG. **33**A-**33**D show several examples in which multiple APs may receive a transmitted signal from a single WTRU and jointly or separately decode the signal in uplink uniform WiFi (UniFi) **3300**.

FIG. **33**A shows an example of joint decoding by a super AP, the information received by AP**1** **3302** and AP **3303** from WTRU **3301** may be sent to super AP **3304** for decoding. Super AP **3304** may be a WiFi controller for example.

FIG. **33**B shows an example of joint decoding by a primary AP. AP**1** **3312** and AP**2** **3313** in the UniFi set may forward the information received from WTRU **3311** to a single or "primary" AP and the decoding may be performed at the primary AP, which in this example is AP**1** **3312**. The forwarding may be over a wired ESS backhaul or over-the-air in a separate transmission.

FIG. **33**C shows an example of separate decoding by multiple APs. In this example AP**1** **3322** and AP**2** **3323** may decode the information received from WTRU **3321** separately. Any AP that successfully decodes the information may send the information to the transport layer or higher. Duplications may be handled at this layer.

FIG. **33**D shows an example of separate decoding by a single AP. In this example, WTRU **3331** may select a single AP with the highest probability of decoding success at the time of transmission and transmit to this AP. This may be viewed as an AP selection algorithm. In this example, WTRU **3331** selects AP**2** **3333** over AP**1** **3332**.

FIG. **34**A-**34**B show example CSMA/CA procedures in which a single WTRU may transmit to multiple APs **3400**. In FIG. **34**A, WTRU **3401** may transmit a UniFi_RTS frame **3411** to the AP**1** **3402** and AP**2** **3403** to reserve the channel for transmission. Upon reception of the RTS from WTRU **3401**, AP**1** **3402** and AP**2** **3403** may transmit UniFi CTS **3412** and **3413** to WTRU **3401** to confirm WTRU's **3401** reservation of the resource. In the example of FIG. **34**A, AP**1** **3402** and AP**2** **3403** may independently transmit UniFi_CTS **3412** and **3413** respectively after a specific duration. Upon receipt of UniFi_CTS **3412** and **3413** from all APs, WTRU **3401** may transmit data to the available APs.

UniFi_CTS **3412** and **3413** may be transmitted as UniFi_CTS frames orthogonalized in the code domain by an orthogonal cover code (OCC) or orthogonalized in time based on an agreed upon transmission delay, for example, in the order of the AP IDs in the RTS. In this case, AP**1** **3402** may send out a UniFi_CTS after a SIFS time lag while AP**2** **3403** may send out a UniFi_CTS after a (2*SIFS+duration_UniFi_CTS)) time lag. To account for propagation delay, the transmission from one of more of the APs may be time adjusted in a manner similar to that described in the first embodiment described above.

WTRU **3401** may then transmit data **3414** to AP**1** **3402** and AP**2** **3403**. The APs may respond with an acknowledgement **3415** of the data sent if successful. This acknowledgment may be: a single ACK from the primary AP, a single ACK from each AP orthogonalized in time, or by an orthogonal cover code, or a joint ACK from both APs using CDD.

In FIG. **34**B, WTRU **3401** may transmit a UniFi_RTS frame **3421** to the AP**1** **3402** and AP**2** **3403** to reserve the channel for transmission. Upon reception of the RTS from WTRU **3401**, if AP**1** **3402** and AP**2** **3403** are able to coordinate with each other on their availability, they may send out a joint UniFi CTS **3422** with information on the available APs. The joint UniFi CTS may be sent from both APs using cyclic delay diversity (CDD). AP**1** **3402** and AP**2** **3403** may transmit joint UniFi CTS **3422** to WTRU **3401** to confirm WTRU's **3401** reservation of the resource. Upon receipt of joint UniFi CTS **3422**, WTRU **3401** may transmit data to the available APs. In this example WTRU **3401** may transmit data **3423** to AP**1** **3402** and AP**2** **3403**. The APs may

respond with an acknowledgement **3414** of the data sent if successful. This acknowledgment may be: a single ACK from the primary AP, a single ACK from each AP orthogonalized in time, or by an orthogonal cover code, or a joint ACK from both APs using CDD. In the example of FIG. **34**B, a joint ACK **3414** is shown.

In scenarios where there may be multiple APs and multiple WTRUs with different overlapping UniFi sets, a UniFi transmission may be permitted such as when all APs in the UniFi set are available. In this case, the WTRU may transmit if and only if all the APs in the requested UniFi set return a CTS. There may also be an additional signal from the WTRU to indicate all the APS are available and the WTRU is commencing transmission. This may be a CTS-to-self or modified CTS-to-self frame. In another example, UniFi transmission may be permitted when the designated AP in the UniFi set is available. In this case, the WTRU may designate a primary AP, which may for example be the AP with the lowest path loss. The WTRU may then transmit to this AP and any other AP available. As in the all AP available case, there may need to be an additional signal to indicate the commencement of data transmission. In yet another example, if any AP in the UniFi set is available, the WTRU may transmit to any AP indicating that it is available.

FIG. **35** shows an example UniFi_RTS frame format **3500** for use in the procedures of FIG. **34**A-**34**B. The UniFi_RTS frame may include but is not limited to the following fields: frame control field **3501**, duration field **3502**, receiver **1** address field **3503**, transmitter **1** address field **3504**, UniFi RTS No. of Rx field **3506**, receiver **2** address field **3507**, and an FCS field **3508**. The UniFi RTS No. of Rx field **3506** may contain information indicating that the transmission is a UniFi transmission, and a UniFi set identifier. This UniFi set identifier may be a set of fields indicating the number of APs in the UniFi set and the individual AP IDs for each of the APs in the UniFi set i.e. {2, AP**1**, AP**2**}. Alternatively, the UniFi set may be a single UniFi ID that serves as a group identifier for the UniFi AP set. The UniFi_ID may be assigned during the UniFi transmission setup by a UniFi group identifier assignment frame.

The UniFi_CTS may be a legacy CTS which the WTRU implicitly interprets as a UniFi CTS based on the fact that it sent out a UniFi_RTS. Alternatively, a modified CTS with additional information indicating that the CTS is based on a UniFi RTS may be used.

FIG. **36** shows an independent UniFi_CTS frame **3600** that may be used in the procedure of FIG. **34**A. The independent UniFi_CTS frame may include but is not limited to the following fields: frame control field **3601**, duration field **3602**, transmitter address field **3603**, UniFi RTS No. of Rx field **3604**, receiver x address field **3605**, and an FCS field **3606**. The UniFi RTS No. of Rx field **3604** may contain a field indicating the number of APs expected in the UniFi set and the address of the AP returning the CTS. Because this is an independent UniFi_CTS frame, when the requested resource is in use by an AP, no UniFi_CTS may be transmitted by that specific AP. The independent UniFi_CTS frames transmitted by the APs may be distinguishable at the WTRU.

FIG. **37** show joint UniFi_CTS frame **3700** that may be used in the procedure of FIG. **34**B. The joint UniFi_CTS frame may include but is not limited to the following fields: frame control field **3701**, duration field **3702**, transmitter address field **3703**, UniFi RTS No. of Rx field **3704**, receiver x address field **3705**, receiver **2** address field **3706**, and an FCS field **3707**. The UniFi RTS No. of Rx field **3704** may contain a field indicating the number of APs expected in the UniFi set, and the addresses of the APs returning the CTS as shown in FIG. **37**. Note that this may be a UniFi set identifier.

FIG. **38** shows an example of a data frame with a group ID and additional AP IDs **3800**. The PLCP header of the transmitted data may be modified to include a flag indicating an uplink UniFi transmission. In addition, the PLCP header of the transmitted data may be modified to include a UniFi set identifier that identifies the APs the transmission is meant for. This may be performed by either explicitly listing the AP IDs of the APs available for reception, using a AP group identifier UniFi ID representing the APs available for reception, or using a single selected AP ID (in the case of separate decoding with a single selected AP). In the example of FIG. **38**, the following fields are used: frame control field **3801**, duration id field **3802**, address**1** unifi grp ID field **3803**, address**2** field **3804**, address**3** field **3805**, sequence control field **3806**, address**4** field **3807**, QoS control field **3808**, HT control field **3809**, address AP**1** field **3810**, address APx field **3811**, frame body field **3812**, and FCS field **3813**.

FIGS. **39**A-**39**B shows examples of the modified ACKs that may be used **3900**. FIG. **39**A shows an example of a joint ACK that may include multiple receive addresses. The joint ACK of FIG. **39**A may include but is not limited to the following fields: frame control field **3901**, duration field **3902**, receiver address field **3903**, receiver **2** address field **3904**, receiver n address field **3905**, and FCS field **3906**.

Alternatively, multiple separate ACKs may be aggregated into a single frame. FIG. **39**B shows an example of an aggregated ACK, which may include but is not limited to the following fields: frame control field **3911**, duration field **3912**, receiver address **1** field **3913**, FCS field **3914**, frame control field **3915**, duration field **3916**, receiver address **1** field **3917**, and FCS field **3918**.

FIG. **40** shows an example of grouping for spatial coordinated multi-AP transmission (SCMAT) in accordance with a fifth embodiment **4000**, which may be used in combination with any of the embodiments described herein. SCMAT may be used to allow multiple APs communicating with one or multiple WTRUs to leverage spatial characteristics in joint and/or beamformed/sectorized transmissions. Grouping of APs and WTRUs involved may be established and provided before the actual UniFi transmissions. In the example of FIG. **40**, WTRU**1** **4001** may hear both AP**1** **4002** and AP**2** **4003**. Similarly, WTRU**2** **4004** may hear both AP**1** **4002** and AP**2** **4003**. AP**1** **4002** and AP**2** **4003** may communicate with each other either through a wireless connection or wired connection. Accordingly, all devices involved in the SCMAT transmission may hear each other. The APs and WTRUs may be grouped together so that they may perform SCMAT transmissions. APs and WTRUs with SCMAT capabilities may announce SCMAT capability in frames such as probe response, beacon, and association response frames. This SCMAT capability information may be for example defined in VHT capabilities element.

Grouping criteria may not be unique and several example criteria are described below. For example, the APs may choose to group WTRUs according to receive power. For example, WTRU**1** **4001** may be able to receive a signal from AP**1** **4002** that is either stronger or equal to the signal from AP**2** **4003**. Similarly, WTRU**2** **4004** may be able to receive a signal from AP**2** **4003** that is either stronger or equal to the signal from AP**1** **4002**. Moreover, it may also require that both WTRUs involved in SCMAT transmission be able to hear both APs. Otherwise, if the WTRUs can only hear its own AP, there may be no need for SCMAT transmission.

In a second example, the APs may choose to group WTRUs according to degree of spatial separation. For example, the objective of SCMAT may be to permit multiple APs transmit simultaneously to multiple WTRUs. The AP may be able to select a set of spatial weights, which enhance signal strengths to the desired WTRU, and suppress the signal strengths to other non-desired WTRU(s) at the same time. In this case, the spatial separation between the desired WTRU and non-desired WTRU may be as high as possible.

In a third example, The APs may choose to group WTRUs with relatively large packet sizes, and the packet size of each spatial transmission link may be similar. It may not be efficient if the packet size is too small, due to the extra overhead. Moreover, one requirement of SCMAT transmission may be that WTRUs reply with an ACK after all the DL data transmission. Therefore, if the packet size of each spatial link differs a lot, it may not be efficient overall.

In a fourth example, the APs may choose to group WTRUs according to QoS requirements. For example, some packets may have strict requirements for delay and jitter; it may be good to arrange the transmission of these packets as soon as possible. Another choice may be to group packets with similar QoS category.

Grouping mechanism may be based on the selected grouping criteria. Power criterion may be utilized as an example to explain possible grouping mechanisms. WTRUs with SCMAT capability and associated with AP**1** **4002** may report RSSI or other signal measurements of AP**2** **4003** to AP**1** **4002**, if the RSSI or other measurements exceed certain thresholds. In this way, AP**1** **4002** may collect the information from all the WTRUs in its BSS that may hear AP**2** **4003**. AP**1** **4002** may choose to send this information to AP**2** **4003** through a wireless connection, or wired connection, which for example may be accomplished via a controller. AP**2** **4003** may perform a similar procedure and send relevant information to AP**1** **4002** through a wireless connection or wired connection or via a controller. AP**1** **4002** and AP**2** **4003** may then negotiate with each other to choose the candidates of a SCMAT group.

In order to form a SCMAT group, AP**1** **4002** and AP**2** **4003** may transmit SCMAT group management frames to the candidate WTRUs, WTRU**1** **4001** and WTRU**2** **4004** as shown in FIG. **40**. The system of FIG. **40** is meant to serve as an example and forming a SCMAT group may extend to any number of WTRUs. The SCMAT group management frame may be an Action frame of category VHT. It may follow the group ID management frame format defined in with modifications which allow more than one AP defined in one group.

An example format of a SCMAT group management frame is shown in Table 19 below.

TABLE 19

Order	Information
1	Category
2	VHT Action
3	Membership Status Array
4	User Position Array

The category field may be set to the value for VHT. The VHT Action field may be set to the value for SCMAT group management. The membership status array field may use, for example, a bitmap format following a group ID management frame. The maximum number of allowed SCMAT group IDs may be defined by a standard specification or the WLAN system. For example, if up to 64 SCMAT groups are allowed, the membership status array field may contain 64 bits, where bit n defines the membership status in SCMAT group ID n−1. Setting bit n to 0 means the WTRU/AP may not be a member of the group n−1, while setting bit n to 1 means the WTRU/AP is a member of the group n−1.

The user position array field may be used to define the user position in the group. Since SCMAT transmission involves both APs and WTRUs, there may be a clear partition between the transmitters (APs) and receivers (WTRUs). For example, if the system allows each SCMAT group to have up to 2^{2N} devices, including both APs and WTRUs, then the user position array field may contain 2N× M bits. Here M may be the maximum number of allowed SCMAT group IDs.

FIG. **41** provides an example of a user position array field **4100**. As shown in FIG. **41**, each SCMAT group **4101**, **4102**, and **4103** has 2N bits, where bit **0** to bit N−1 defines the position of APs and bit N to bit 2N−1 defines the position of WTRUs. In this way, AP with user position value k may transmit a packet to WTRU with user position value equaling to N+k, k=0, . . . N−1.

An alternative choice may be to keep N bits to identify the user position of WTRUs for each group since user position of APs may be defined with other methods. Note that using SCMAT group ID may not be enough to define a unique group. For example, in a system with 3 APs and 4 WTRUs, AP**1** and AP**2** may use SCMAT group ID k to identify the group including AP**1**, AP**2**, WTRU**1**, and WTRU**2**. At the same time, AP**1** and AP**3** might use the same ID k to identify another group with members AP**1**, AP**3**, WTRU**3**, and WTRU**4**. When AP**1** refers to group ID k, then WTRU**1**, WTRU**2**, WTRU**3**, WTRU**4** may believe this is the group ID for them.

FIG. **42**A provides an example of a partial MAC header for a SCMAT group management frame **4200**. The SCMAT group management frame may include but is not limited to the following example fields: a frame control field **4211**, duration field **4212**, addr**1** field **4213**, addr**2** field **4214**, addr**3** field **4215**, and addr**4** field. Each device may check SCMAT group ID and APs' MAC address to uniquely identify the group. There are two example methods to include AP MAC address in the SCMAT group. In a first example method, an AP MAC address may be added in the SCMAT group ID management frame. For example, 'order 5' may be added in Table 19 as AP MAC address. The MAC addresses for both APs may be included in this field. The order of AP MAC addresses may be utilized to imply the user position of the APs.

In a second example method, the four address fields defined in the MAC header may be reused. In this way, the four address fields may be re-defined. As shown in FIG. **42**, addr**1** **4213** may be the MAC address of AP**1**; addr**2** **4214** may be the MAC address of AP**2**. Addr**3** **4215** may be modified as MAC address of WTRU**1**, addr**4** **4216** may be modified as MAC address of WTRU**2**. On receiving a packet, the device may notice that this is a SCMAT group management frame. The device may revisit the address field in MAC header and compare its own MAC address with the four address fields. Once it matches with one of them, it may keep the SCMAT group ID and addr**1** **4213** and addr**2** **4214** in a list to further identify the SCMAT group. In this way, the WTRUs that are associated with AP**2** may listen to AP**1** as well. The order of address mapping may be different from what is described here. However, it should be prefixed by the specification.

FIG. **42**B provides an example procedure to utilize a SCMAT group management frame to form a SCMAT group.

In this example, the SCMAT group management frame may be configured as follows: addr**1** may be a MAC address of AP**1** **4223**, addr**2** may be the MAC address of AP**2** **4224**, addr**3** may be modified as a MAC address of WTRU**1** **4221**, and addr**4** may be modified as a MAC address of WTRU**2** **4222**. AP**1** **4223** may be the initiator AP and may set itself an AP user position value **0**. AP**1** **4223** may inform AP**2** **4224** and set AP**2** **4224** user position value **1** **4231**. This may be done with a wired connection or wireless connection. With a wireless connection, a SCMAT group management frame may transmitted from AP**1** to AP**2** **4232**. If the user position array field contains 2N×M bits, then the user position of AP**2** may be assigned explicitly. If the user position array field contains N×M bits, then the user position array field may only be used to identify the position for WTRUs. In this case, the AP**2** may look at addr**3** and addr**4** of MAC header, and implicitly get the user position. AP**1** **4223** may then send a SCMAT group management frame **4233** to WTRU**1** **4221**. AP**2** **4224** may send a SCMAT group management frame **4234** to WTRU**2** **4222**. It may also be possible for AP**1** **4223** to send a SCMAT group management frame **4235** to WTRU**2** **4222**, and AP**2** **4224** to send a SCMAT group management frame **4236** to WTRU**1** **4221**, even though they are not associated.

FIG. **43** provides an example of frame format defined for SCMAT related transmission **4300**. This frame may include but is not limited to a preamble **4301**, SIG field **4302**, frame body **4303**, MAC header **4304**, MAC body **4305**, frame control field **4306**, duration field **4307**, addr**1** field **4308**, addr**2** field **4309**, addr**3** field **4310**, and addr**4** field **4311**. This frame format may be utilized by SCMAT related transmissions, for example, NDPA frames, NDP frames; ADD-SCMAT frames, A-SCMAT frames ACK frames. The SCMAT data frames may utilize this frame format too. In this example, one bit is added to the SIG field, which indicates that this is a SCMAT frame. SCMAT group ID may be included in the SIG field as well. Depending on the definition of SCMAT group ID, the four address fields in MAC header may be redefined to identify the two or more involved APs.

Although features and elements are described above in particular combinations, one of ordinary skill in the art will appreciate that each feature or element can be used alone or in any combination with the other features and elements. Although the solutions described herein consider 802.11 specific protocols, it is understood that the solutions described herein are not restricted to this scenario and are applicable to other wireless systems as well. In addition, the methods described herein may be implemented in a computer program, software, or firmware incorporated in a computer-readable medium for execution by a computer or processor. Examples of computer-readable media include electronic signals (transmitted over wired or wireless connections) and computer-readable storage media. Examples of computer-readable storage media include, but are not limited to, a read only memory (ROM), a random access memory (RAM), a register, cache memory, semiconductor memory devices, magnetic media such as internal hard disks and removable disks, magneto-optical media, and optical media such as CD-ROM disks, and digital versatile disks (DVDs). A processor in association with software may be used to implement a radio frequency transceiver for use in a WTRU, UE, terminal, base station, RNC, or any host computer.

What is claimed is:

1. A method for use in an IEEE 802.11 wireless transmit/receive unit (WTRU), the method comprising:

transmitting, to an access point (AP), a request frame that includes a first sectorized beamforming capability information element (IE) indicating that the IEEE 802.11 WTRU supports sectorized operation in at least one sector associated with the IEEE 802.11 WTRU;

receiving, from the AP, a response frame that includes a second sectorized beamforming capability IE indicating that the AP supports the sectorized operation in the at least one sector associated with the IEEE 802.11 WTRU;

receiving a sectorized beacon frame that includes a scheduling of sector transmission in the at least one sector; and

transmitting, to the AP, data packets based on the scheduling of sector transmission in the sectorized beacon frame.

2. The method of claim **1**, wherein the scheduling of sector transmission comprises a sector identification (ID) and duration of the sectorized operation.

3. The method of claim **2**, further comprising:

transmitting the data packet based on the sector ID and the duration of the sectorized operation.

4. The method of claim **1**, wherein the request frame is an association request frame.

5. The method of claim **1**, wherein the response frame is an association response frame.

6. An IEEE 802.11 wireless transmit/receive unit (WTRU) comprising:

a transmitter configured to transmit, to an access point (AP), a request frame that includes a first sectorized beamforming capability information element (IE) indicating that the IEEE 802.11 WTRU supports sectorized operation in at least one sector associated with the IEEE 802.11 WTRU;

a receiver configured to receive, from the AP, a response frame that includes a second sectorized beamforming capability IE indicating that the AP supports the sectorized operation in the at least one sector associated with the IEEE 802.11 WTRU;

the receiver further configured to receive a sectorized beacon frame that includes a scheduling of sector transmission in the at least one sector; and

the transmitter further configured to transmit, to the AP, data packets based on the scheduling of sector transmission in the sectorized beacon frame.

7. The IEEE 802.11 WTRU of claim **6**, wherein the scheduling of sector transmission comprises a sector identification (ID) and duration of the sectorized operation.

8. The IEEE 802.11 WTRU of claim **7**, wherein the transmitter is further configured to transmit the data packet based on the sector ID and the duration of the sectorized operation.

9. The IEEE 802.11 WTRU of claim **6**, wherein the request frame is an association request frame.

10. The IEEE 802.11 WTRU of claim **6**, wherein the response frame is an association response frame.

11. A wireless transmit/receive unit (WTRU) comprising:

a receiver configured to receive, from an access point (AP), a management frame that includes a sectorized beamforming capability information element (IE) indicating that the AP supports sectorized operation in at least one sector associated with the WTRU;

the receiver further configured to receive a sectorized beacon frame that includes at least one sector identification (ID) associated with the at least one sector; and

a transmitter configured to transmit, based on the at least one sector ID, a packet in a sectorized transmission to the AP.

12. The WTRU of claim **11**, wherein the transmitter is further configured to transmit, to the AP, a second management frame that includes a second sectorized beamforming capability IE indicating that the WTRU supports the sectorized operation in the at least one sector associated with the WTRU.

* * * * *