US010687400B2

(12) United States Patent
Miskin et al.

(10) Patent No.: US 10,687,400 B2
(45) Date of Patent: Jun. 16, 2020

(54) **AC LIGHT EMITTING DIODE AND AC LED DRIVE METHODS AND APPARATUS**

(71) Applicant: **Lynk Labs, Inc.**, Elgin, IL (US)

(72) Inventors: **Michael Miskin**, Sleepy Hollow, IL (US); **James N. Andersen**, Elmwood Park, IL (US); **Robert L. Kottritsch**, Shefford (GB)

(73) Assignee: **Lynk Labs, Inc.**, Elgin, IL (US)

(*) Notice: Subject to any disclaimer, the term of this patent is extended or adjusted under 35 U.S.C. 154(b) by 0 days.

(21) Appl. No.: **16/693,081**

(22) Filed: **Nov. 22, 2019**

(65) **Prior Publication Data**

US 2020/0120778 A1 Apr. 16, 2020

Related U.S. Application Data

(60) Continuation of application No. 16/449,273, filed on Jun. 21, 2019, which is a continuation of application No. 16/443,759, filed on Jun. 17, 2019, which is a continuation of application No. 16/407,076, filed on May 8, 2019, now Pat. No. 10,492,252, which is a continuation of application No. 16/148,945, filed on

(Continued)

(51) **Int. Cl.**

H05B 37/02	(2006.01)
H05B 45/37	(2020.01)
H05B 45/10	(2020.01)
H05B 45/40	(2020.01)
H05B 45/50	(2020.01)

(52) **U.S. Cl.**

CPC ***H05B 45/37*** (2020.01); ***H05B 45/10*** (2020.01); ***H05B 45/40*** (2020.01); ***H05B 45/50*** (2020.01)

(58) **Field of Classification Search**

CPC . H02J 3/14; H02M 2001/0006; H04W 84/12; H05B 39/086; H05B 39/088; H05B 47/105; H05B 47/19; H01H 35/146; H01H 9/168; H01Q 1/3291; H01Q 1/2241; H01Q 1/3233; H01Q 1/325; H01Q 1/22

See application file for complete search history.

(56) **References Cited**

U.S. PATENT DOCUMENTS

3,869,641 A	3/1975	Goldberg
4,218,627 A	8/1980	Kiesel

(Continued)

FOREIGN PATENT DOCUMENTS

DE	44 42 677	11/1994
DE	19500694	8/1996

(Continued)

OTHER PUBLICATIONS

U.S. Appl. No. 15/797,806, filed Oct. 30, 2017, inventors: Michael Miskin and James N. Andersen, 59 pages.

(Continued)

Primary Examiner — Monica C King

(74) *Attorney, Agent, or Firm* — Haynes and Boone, LLP

(57) **ABSTRACT**

An LED device for use with an AC voltage power source configured such that at least one LED emits light during a positive phase of power provided from an AC power supply and at least one LED emits light during the negative phase of power provided from an AC power supply. The LED device includes a first power connection lead and a second power connection lead, both leads capable of being connected to and receiving power from an AC power supply.

26 Claims, 48 Drawing Sheets

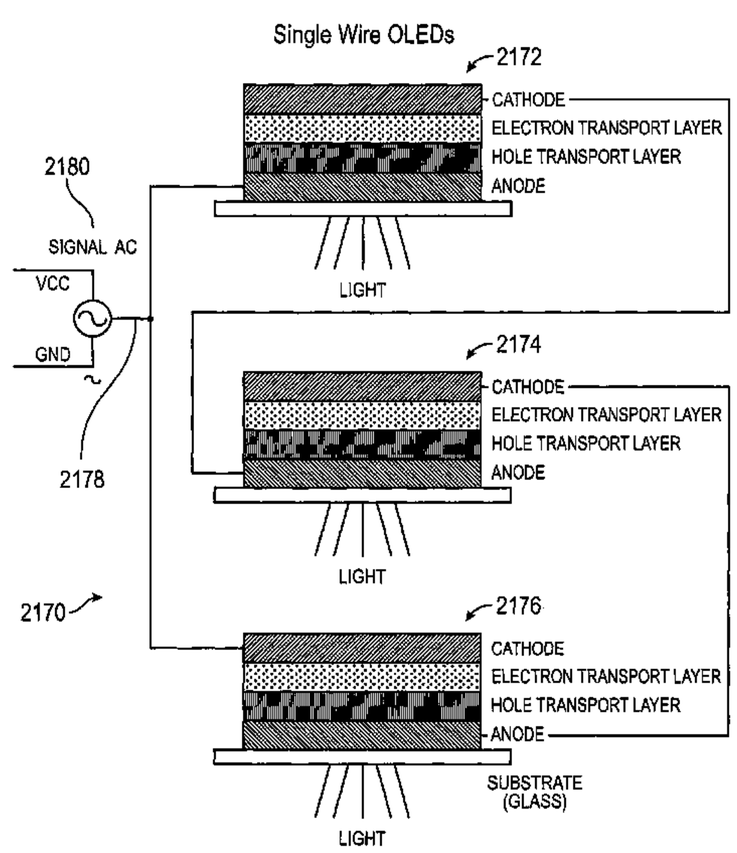

Related U.S. Application Data

Oct. 1, 2018, now Pat. No. 10,492,251, which is a continuation of application No. 15/334,029, filed on Oct. 25, 2016, now Pat. No. 10,091,842, which is a continuation-in-part of application No. 14/948,635, filed on Nov. 23, 2015, now Pat. No. 9,615,420, which is a division of application No. 13/697,646, filed as application No. PCT/US2011/036359 on May 12, 2011, now Pat. No. 9,198,237, which is a continuation-in-part of application No. PCT/US2010/062235, filed on Dec. 28, 2010, which is a continuation-in-part of application No. 12/287,267, filed on Oct. 6, 2008, now Pat. No. 8,179,055, and a continuation-in-part of application No. 12/364,890, filed on Feb. 3, 2009, now Pat. No. 8,148,905, which is a continuation of application No. 11/066,414, filed on Feb. 25, 2005, now Pat. No. 7,489,086, said application No. PCT/US2010/062235 is a continuation-in-part of application No. PCT/US2010/001597, filed on May 28, 2010, which is a continuation-in-part of application No. 12/287,267, filed on Oct. 6, 2008, now Pat. No. 8,179,055, said application No. PCT/US2010/062235 is a continuation-in-part of application No. PCT/US2010/001269, filed on Apr. 30, 2010, which is a continuation-in-part of application No. 12/287,267, filed on Oct. 6, 2008, now Pat. No. 8,179,055.

(60) Provisional application No. 61/333,963, filed on May 12, 2010, provisional application No. 61/284,927, filed on Dec. 28, 2009, provisional application No. 61/335,069, filed on Dec. 31, 2009, provisional application No. 60/997,771, filed on Oct. 6, 2007, provisional application No. 60/547,653, filed on Feb. 25, 2004, provisional application No. 60/559,867, filed on Apr. 6, 2004, provisional application No. 61/217,215, filed on May 28, 2009, provisional application No. 61/215,144, filed on May 1, 2009.

(56) **References Cited**

U.S. PATENT DOCUMENTS

4,271,408 A 6/1981 Teshima et al.
4,298,869 A 11/1981 Okuno
4,380,721 A 4/1983 Bullock et al.
4,506,318 A 3/1985 Nilssen
4,535,203 A 8/1985 Jenkins et al.
4,751,398 A 6/1988 Ertz, III
5,180,952 A 1/1993 Nilssen
5,309,062 A 5/1994 Perkins et al.
5,442,258 A 8/1995 Shibata
5,559,681 A 9/1996 Duarte
5,575,459 A 11/1996 Anderson
5,600,225 A 2/1997 Goto
5,621,913 A 4/1997 Tuttle et al.
5,640,061 A 6/1997 Bornhorst et al.
5,675,485 A 10/1997 Seong
5,699,218 A 12/1997 Kadah
5,739,639 A 4/1998 Johnson
5,790,013 A 8/1998 Hauck
5,821,699 A 10/1998 Moisin
5,963,012 A 10/1999 Garcia et al.
6,040,663 A 3/2000 Bucks et al.
6,107,744 A 8/2000 Bavaro et al.
6,113,248 A 9/2000 Mistopoulos et al.
6,118,426 A 9/2000 Albert et al.
6,127,799 A 10/2000 Krishnan
6,157,551 A 12/2000 Barak et al.
6,183,104 B1 2/2001 Ferrara
6,362,789 B1 3/2002 Trumbull et al.
6,380,693 B1 4/2002 Kastl
6,412,971 B1 7/2002 Wojnarowski et al.
6,430,064 B1 8/2002 Tsuchimoto et al.
6,541,919 B1 4/2003 Roach et al.
6,577,072 B2 6/2003 Saito et al.
6,580,228 B1 6/2003 Chen et al.
6,614,103 B1 9/2003 Durocher et al.
6,697,130 B2 2/2004 Weindorf et al.
6,762,562 B2 7/2004 Leong
6,781,570 B1 8/2004 Arrigo et al.
6,936,968 B2 8/2005 Cross et al.
6,949,772 B2 9/2005 Shimizu et al.
6,961,190 B1 11/2005 Tamaoki et al.
7,019,662 B2 3/2006 Shackle
7,038,400 B2 5/2006 Rimmer et al.
7,053,560 B1 5/2006 Ng
7,061,188 B1 6/2006 Katyl et al.
7,067,992 B2 6/2006 Leong et al.
7,144,131 B2 12/2006 Rains
7,204,607 B2 4/2007 Yano et al.
7,218,527 B1 5/2007 Jaconsen
7,288,902 B1 10/2007 Melanson
7,350,936 B2 4/2008 Ducharme et al.
7,365,718 B2 4/2008 Tsuchida et al.
7,489,086 B2 2/2009 Miskin et al.
7,521,872 B2 4/2009 Bruning
7,646,029 B2 1/2010 Mueller et al.
7,808,189 B2 10/2010 Hollnberger et al.
7,859,196 B2 12/2010 Lee et al.
7,936,132 B2 5/2011 Quek et al.
8,033,686 B2 10/2011 Recker et al.
8,148,905 B2 4/2012 Miskin et al.
8,179,055 B2 5/2012 Miskin et al.
8,237,581 B2 8/2012 Ries, II
8,531,118 B2 9/2013 Miskin et al.
8,613,997 B2 12/2013 Day
8,648,539 B2 2/2014 Miskin et al.
8,841,855 B2 9/2014 Miskin
9,198,237 B2 11/2015 Miskin et al.
9,247,597 B2 1/2016 Miskin et al.
9,249,953 B2 2/2016 Miskin
9,516,716 B2 12/2016 Miskin et al.
9,615,420 B2 4/2017 Miskin
9,693,405 B2 6/2017 Miskin
9,750,098 B2 8/2017 Miskin et al.
9,807,827 B2 10/2017 Miskin et al.
1,015,455 A1 12/2018 Miskin et al.
2002/0008973 A1 1/2002 Boys et al.
2002/0030455 A1 3/2002 Ghanem
2002/0047646 A1 4/2002 Lys et al.
2002/0060526 A1 5/2002 Timmermans et al.
2002/0089305 A1 7/2002 Park et al.
2002/0090983 A1 7/2002 Chen
2002/0113246 A1 8/2002 Nagai et al.
2002/0114155 A1 8/2002 Katogi et al.
2002/0180344 A1 12/2002 Lichtfuss
2002/0181208 A1 12/2002 Credelle et al.
2002/0190689 A1 12/2002 Nakamura et al.
2003/0001657 A1 1/2003 Worley, Sr. et al.
2003/0043611 A1 3/2003 Bockle et al.
2003/0057886 A1 3/2003 Lys et al.
2003/0071259 A1 4/2003 Yoshida
2003/0109286 A1 6/2003 Hack et al.
2003/0122502 A1 7/2003 Clauberg et al.
2003/0169014 A1 9/2003 Kadah
2003/0173408 A1 9/2003 Mosher, Jr. et al.
2003/0175004 A1 9/2003 Garito et al.
2003/0179585 A1 9/2003 Lefebvre
2004/0041800 A1 3/2004 Daniels
2004/0070520 A1 4/2004 Sharp et al.
2004/0079953 A1 4/2004 Mednik et al.
2004/0080941 A1 4/2004 Jiang et al.
2004/0105264 A1 6/2004 Spero
2004/0140771 A1 7/2004 Kim et al.
2004/0183380 A1 9/2004 Otake
2004/0189218 A1 9/2004 Leong et al.
2004/0196636 A1 10/2004 Kim
2004/0201988 A1 10/2004 Allen
2004/0206970 A1 10/2004 Martin

(56) **References Cited**

U.S. PATENT DOCUMENTS

2004/0256467	A1	12/2004	Clemens et al.
2005/0040773	A1	2/2005	Lebens et al.
2005/0110426	A1	5/2005	Shao
2005/0122062	A1	6/2005	Hsu
2005/0151511	A1	7/2005	Chary
2005/0162096	A1	7/2005	Bertrand
2005/0168156	A1	8/2005	Li et al.
2005/0173990	A1	8/2005	Anderson et al.
2005/0218838	A1	10/2005	Lys
2005/0230600	A1	10/2005	Olson et al.
2006/0038542	A1	2/2006	Park et al.
2006/0087843	A1	4/2006	Setomoto et al.
2006/0103913	A1	5/2006	Handschy et al.
2006/0138971	A1	6/2006	Uang et al.
2006/0158130	A1	7/2006	Furukawa
2007/0069663	A1	3/2007	Burdalski et al.
2007/0228999	A1	10/2007	Kit
2007/0273299	A1	11/2007	Miskin et al.
2008/0116816	A1	5/2008	Neuman et al.
2008/0136347	A1	6/2008	Lin et al.
2008/0158915	A1	7/2008	Williams
2008/0198613	A1	8/2008	Cruickshank
2008/0203405	A1	8/2008	Rooymans
2008/0203936	A1	8/2008	Mariyama et al.
2008/0211421	A1	9/2008	Lee et al.
2008/0218098	A1	9/2008	Lee et al.
2009/0221185	A1	1/2009	Ng
2009/0295300	A1	12/2009	King
2010/0039794	A1	2/2010	Ghanem et al.
2010/0163890	A1	7/2010	Miskin
2010/0207536	A1	8/2010	Burdalski et al.
2011/0210670	A1	9/2011	Sauerlander et al.
2011/0234114	A1	9/2011	Miskin et al.
2012/0043897	A1	2/2012	Miskin et al.
2012/0206050	A1	8/2012	Spero
2012/0268008	A1	10/2012	Miskin et al.
2012/0293083	A1	11/2012	Miskin et al.
2014/0239809	A1	8/2014	Miskin
2014/0301073	A1	10/2014	Miskin
2014/0301074	A1	10/2014	Miskin
2016/0095180	A1	3/2016	Miskin
2017/0105256	A1	4/2017	Miskin
2017/0188426	A1	6/2017	Miskin et al.
2017/0208656	A1	7/2017	Miskin et al.
2017/0273154	A1	9/2017	Miskin
2017/0295616	A1	10/2017	Miskin
2017/0354005	A1	12/2017	Miskin et al.

FOREIGN PATENT DOCUMENTS

DE	100 32 864	1/2002
EP	0 243 411	6/1992
EP	0 770 896	5/1997
EP	0 798 650	10/1997
EP	0 837 406	4/1998
EP	0 940 903	9/1999
EP	1 050 793	11/2000
EP	1 191 608	3/2002
EP	1 215 944	6/2002
EP	1 331 666	7/2003
JP	07283848	10/1995
JP	08-137429	5/1996
JP	10111333	4/1998
JP	3049746	6/1998
JP	3057488	8/1998
JP	3053498	10/1998
JP	11-016683	1/1999
JP	10164659	3/1999
JP	3067620	9/1999
JP	11-330561	11/1999
JP	3064160	12/1999
JP	3068444	5/2000
JP	2000174857	6/2000
JP	2000260212	9/2000
JP	2003132708	5/2003
JP	2004039415	2/2004
WO	WO 88/05213	7/1988
WO	WO 96/02970	2/1996
WO	WO 99/14705	3/1999
WO	WO 99/20085	4/1999
WO	WO 02/31406	4/2002
WO	WO 02/093542	11/2002
WO	WO 03/027970	4/2003
WO	WO 03/103157	12/2003
WO	WO 2005048658	5/2005
WO	WO 2008124701	10/2008
WO	WO 2010/106375	9/2010
WO	WO 2016164928	10/2016

OTHER PUBLICATIONS

Master Thesis of Srinivasa M. Baddela titled "High Frequency AC Operation of LEDs to Resolve the Current Sharing Problem When Connected in Parallel".

Srinivasa M. Baddela and Donald S. Zinger, "Parallel Connected LEDs Operated at High Frequency to Improve Current Sharing," IAS 2004, pp. 1677-1681.

M. Rico-Secades, et al., "Driver for high efficiency LED based on flyback stage with current mode control for emergency lighting system," Industry Applications Conference, Oct. 2004, pp. 1655-1659.

Patent Owners Preliminary Response under 37 CFR 42.107 for Case IPR2016-01116 for Inter Partes Review of U.S. Pat. No. 8,531,118, 66 pages.

Lynk Labs, Inc.'s Initial Response to Invalidity Contentions, Northern District of Illinois Civil Action No. 15-cv-04833, 88 pages.

Decision on Institution of Inter Partes Review under 37 CFR 42.108 for U.S. Pat. No. 8,531,118, 47 pages.

Written Opinion and International Search Report for International App. No. PCT/US2005/006146, 12 pages.

Robert W. Erickson & Dragen Maksimovic, "Fundamentals of Power Electronics" (Kluwer Academic Publishers, 2nd ed.), p. 576.

Office Action, U.S. Appl. No. 16/460,790, dated Aug. 5, 2019, 17 pages.

Office Action, U.S. Appl. No. 16/460,790, dated Sep. 26, 2019, 22 pages.

Office Action received in U.S. Appl. No. 16/443,759, dated Aug. 8, 2019, 7 pages.

FIG. 1

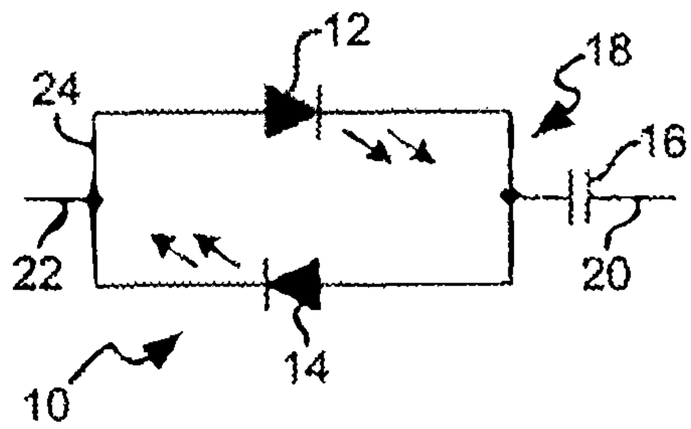

FIG. 2

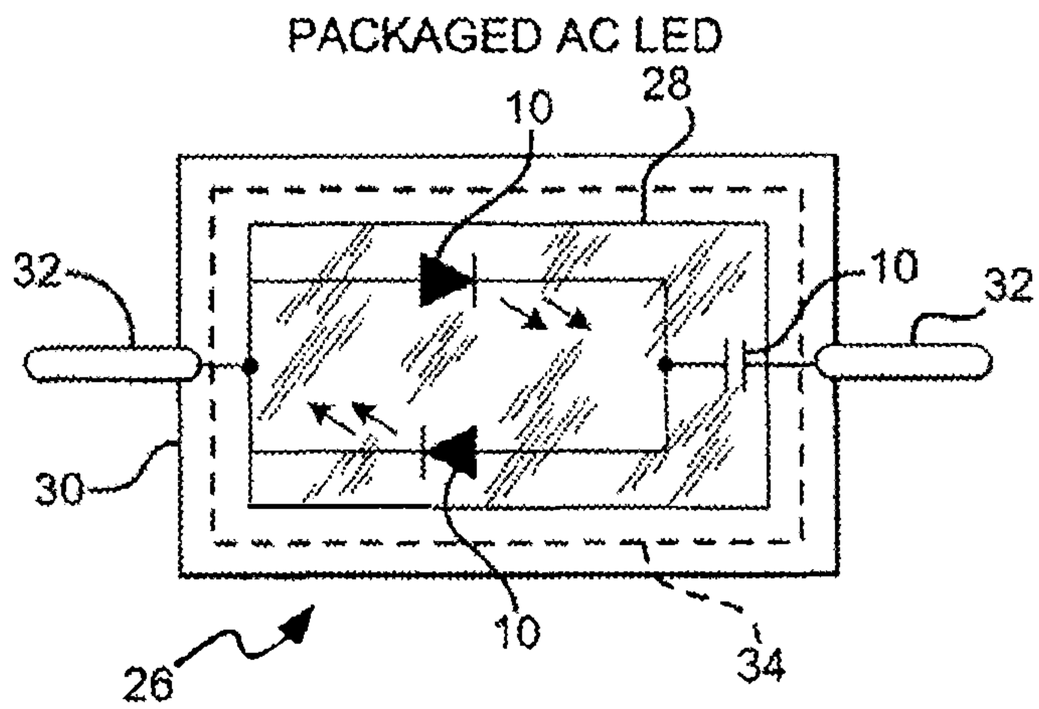

FIG. 3

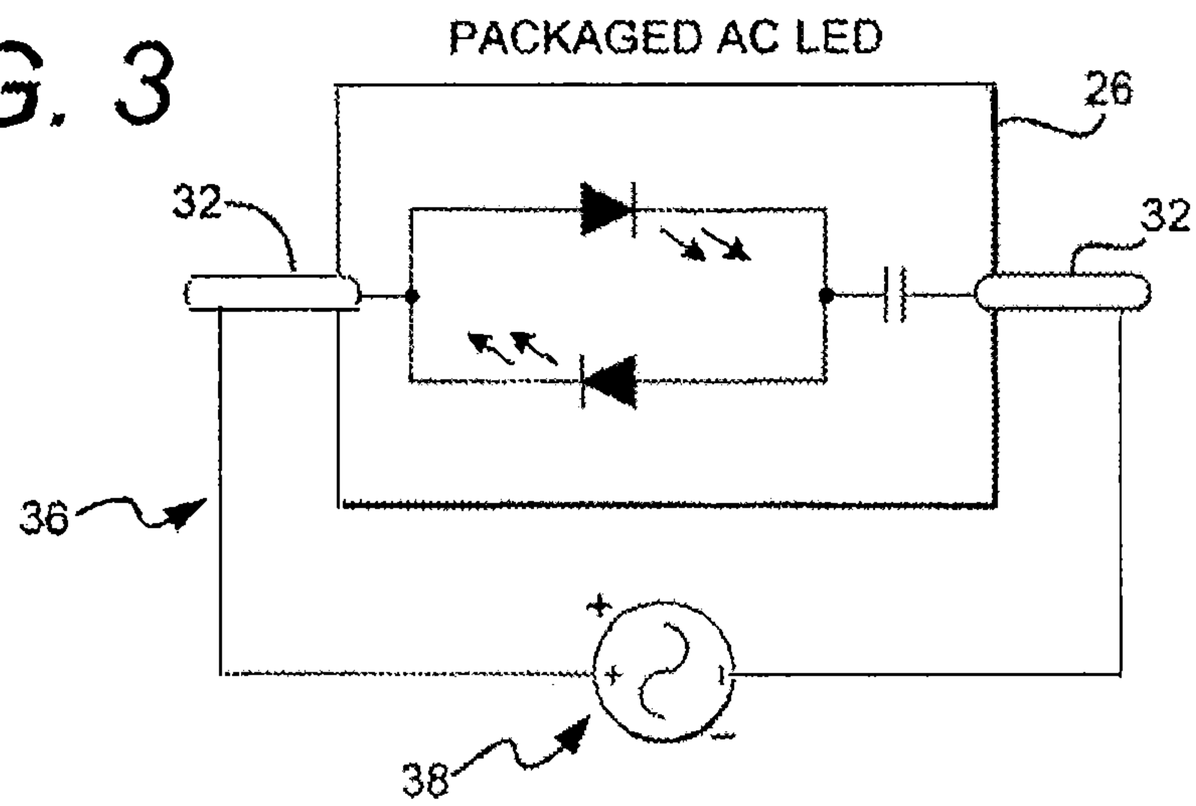

FIG. 4

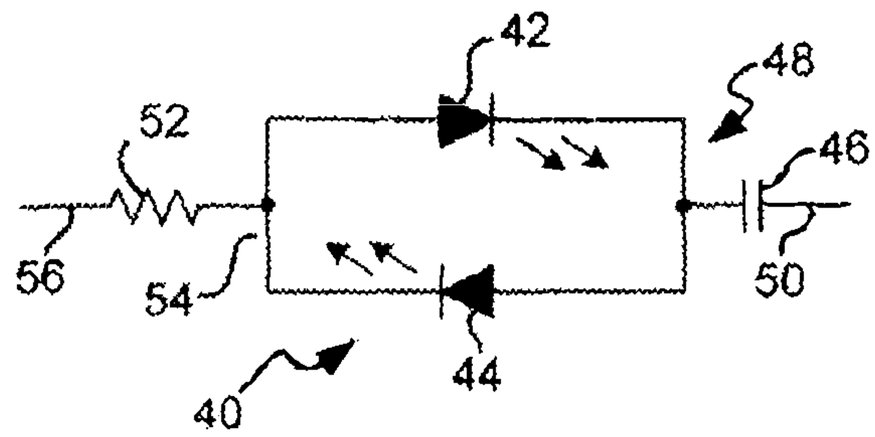

FIG. 5

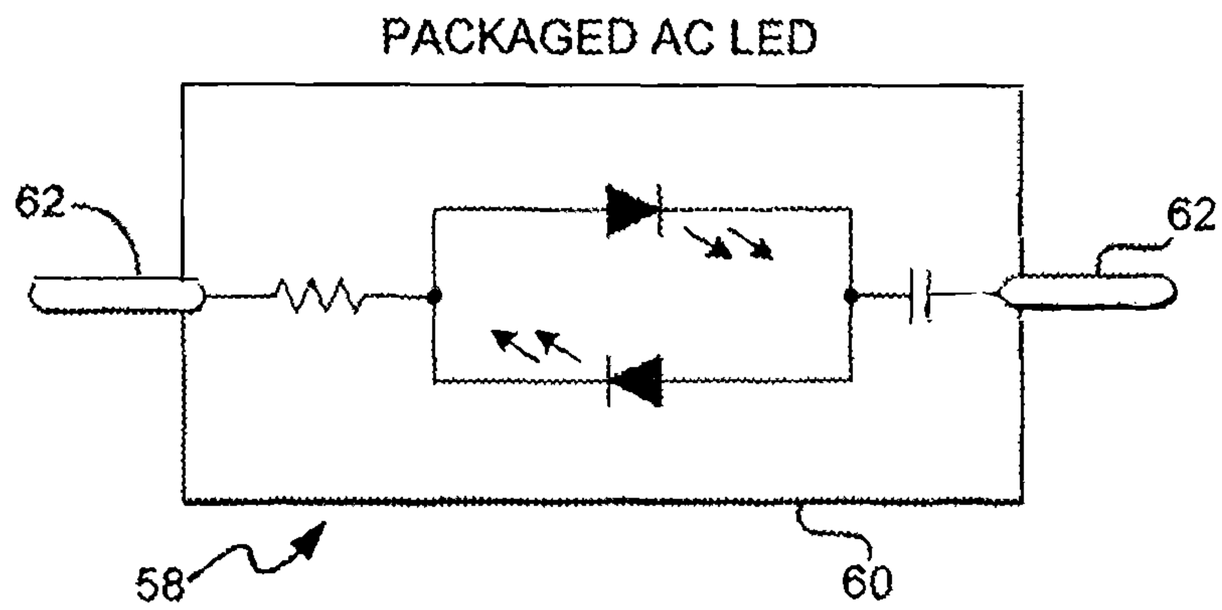

FIG. 6

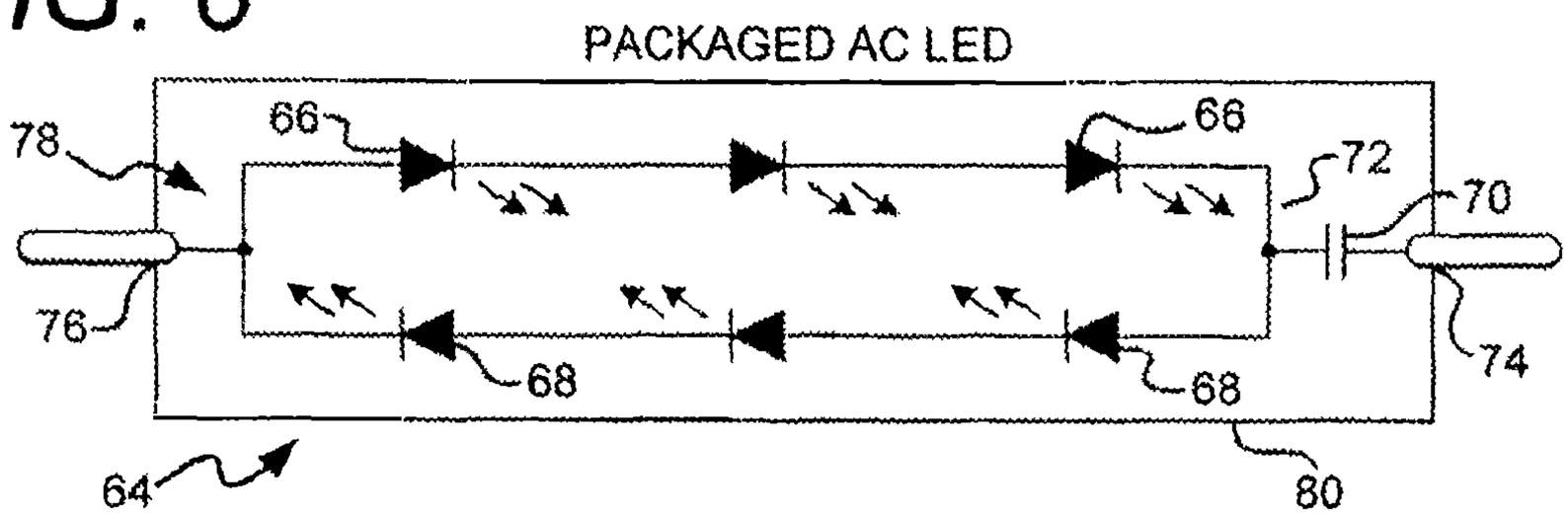

FIG. 7

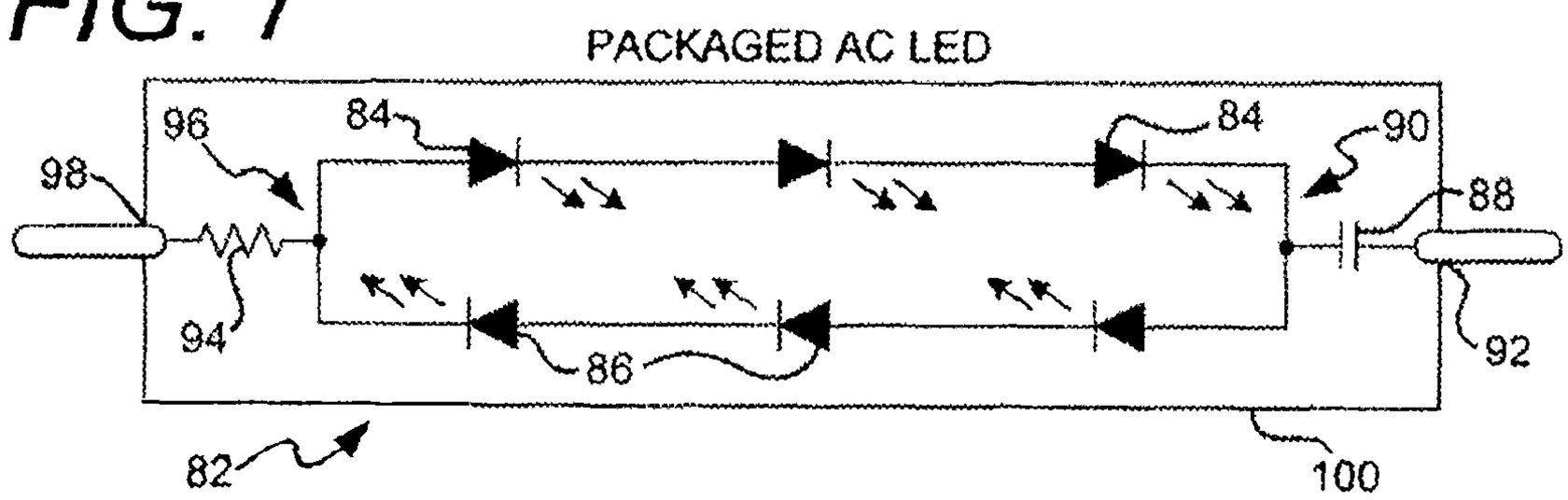

FIG. 8

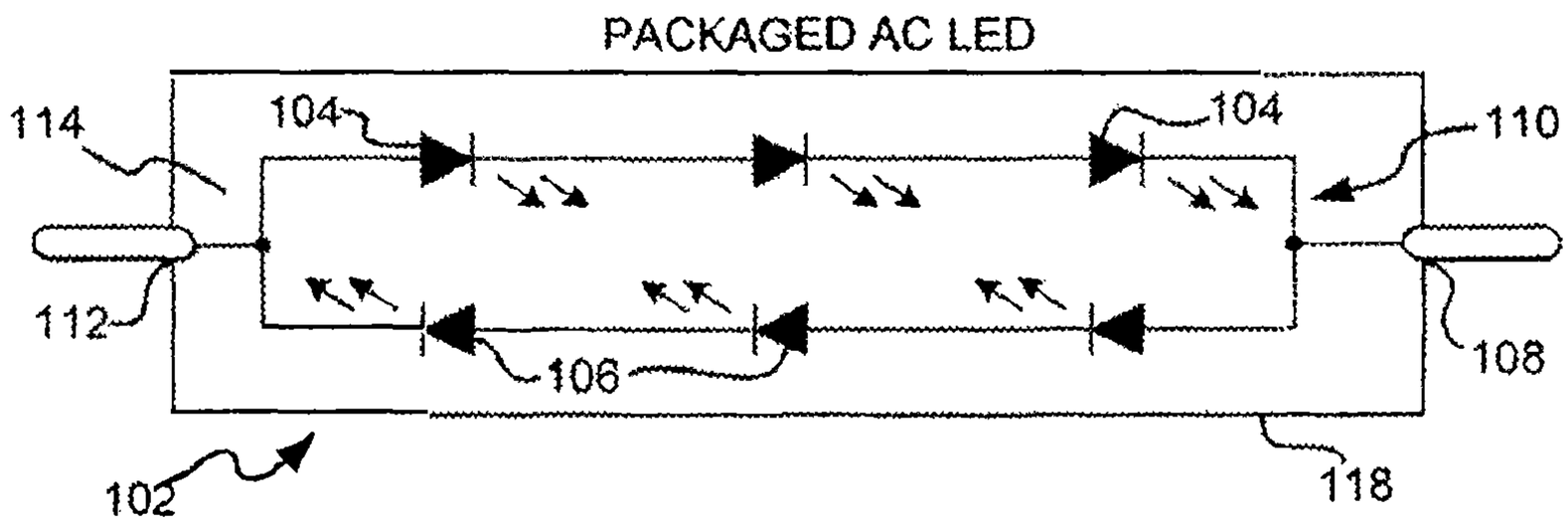

FIG. 9

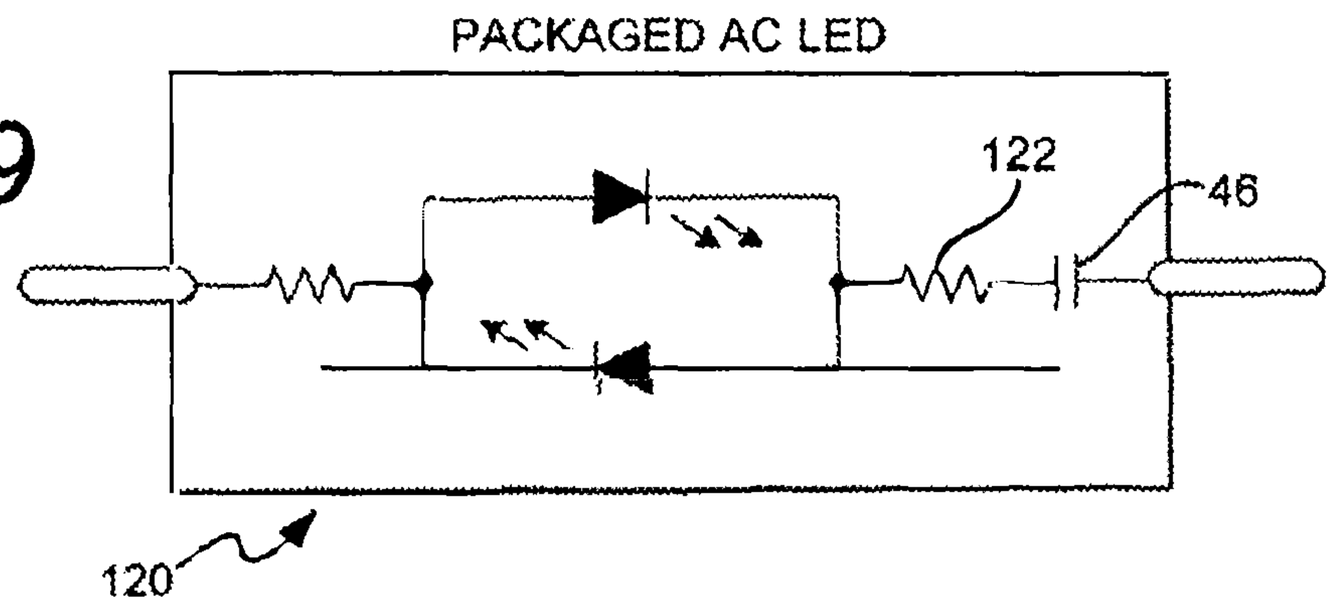

FIG. 10

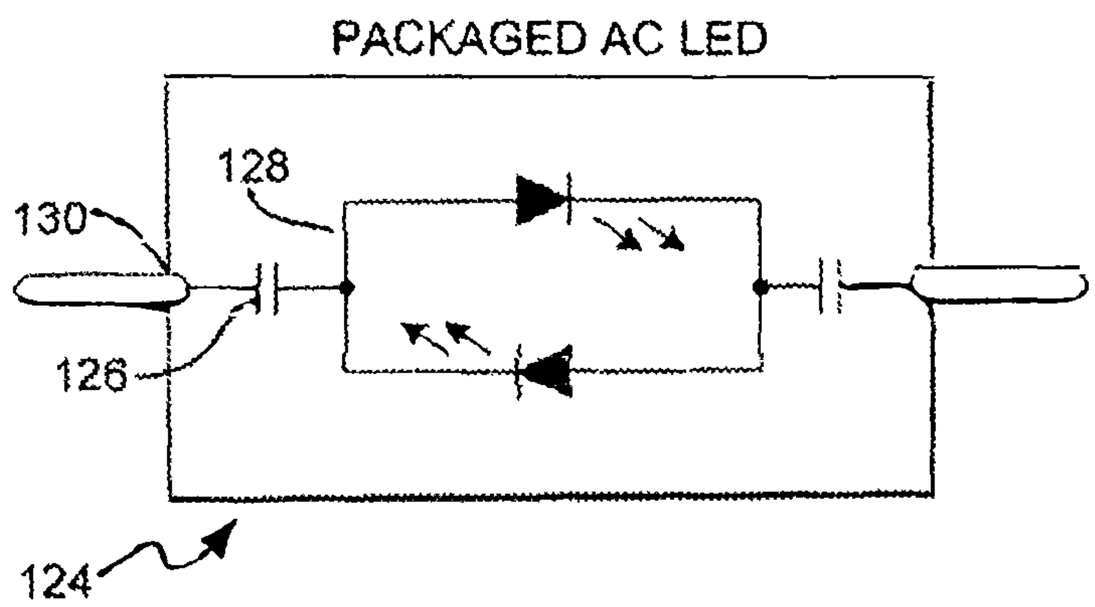

FIG. 11

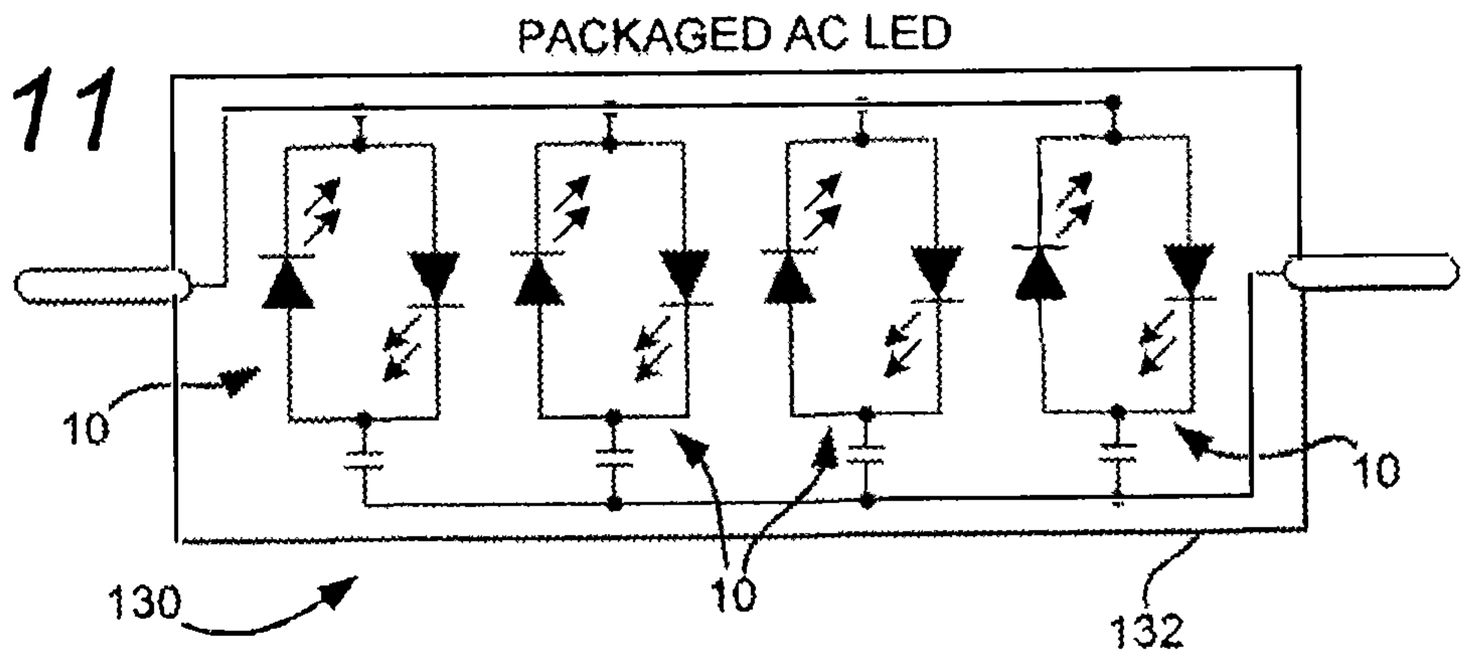

FIG. 12

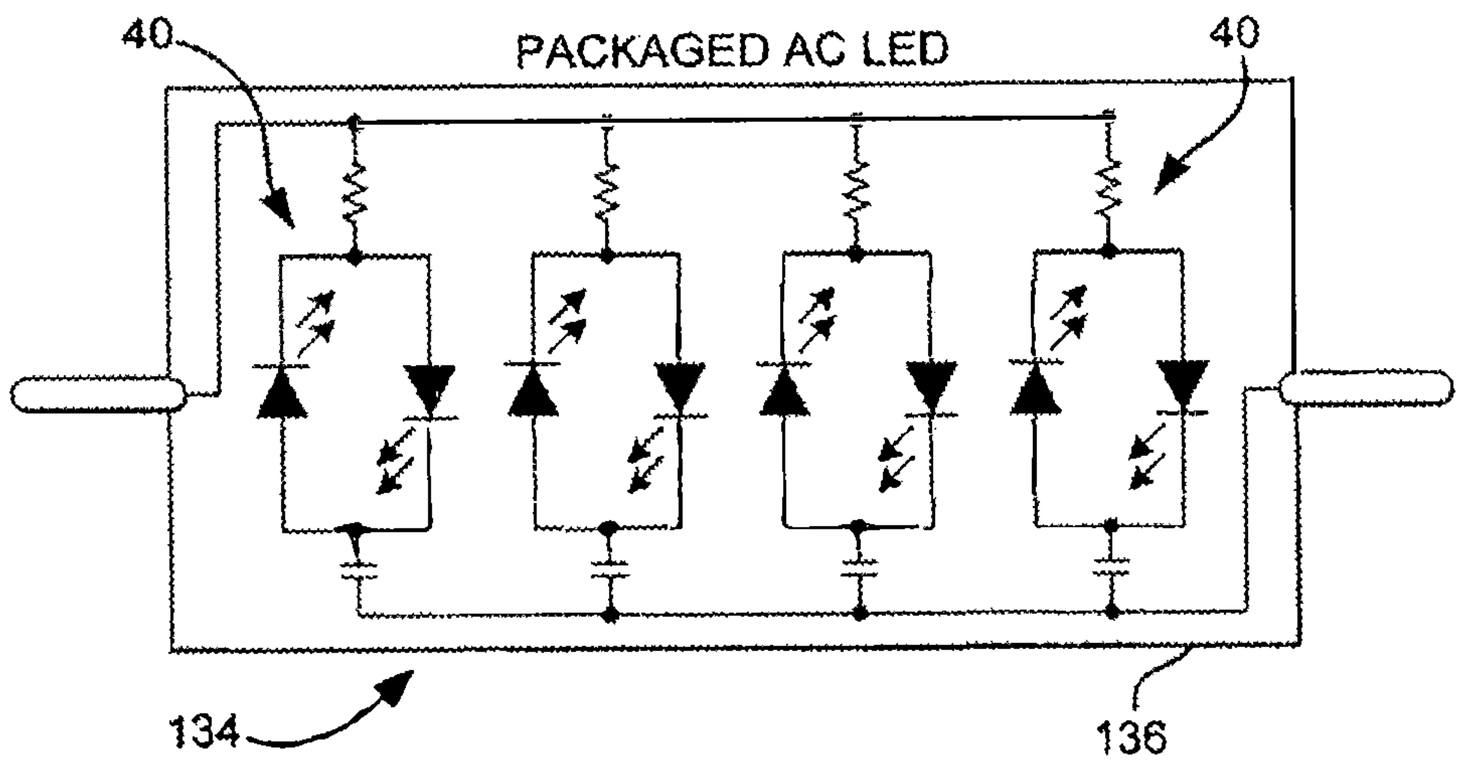

FIG. 13

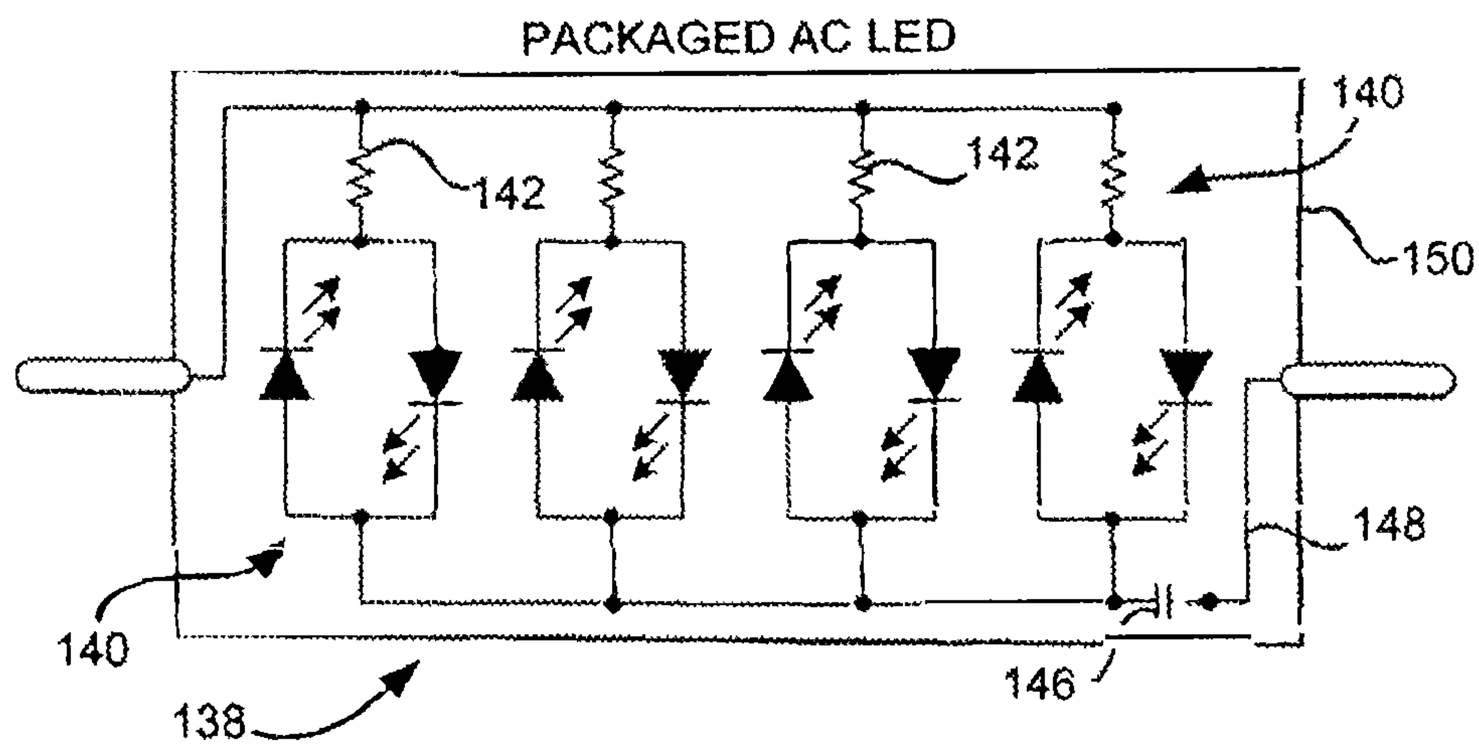

FIG. 14

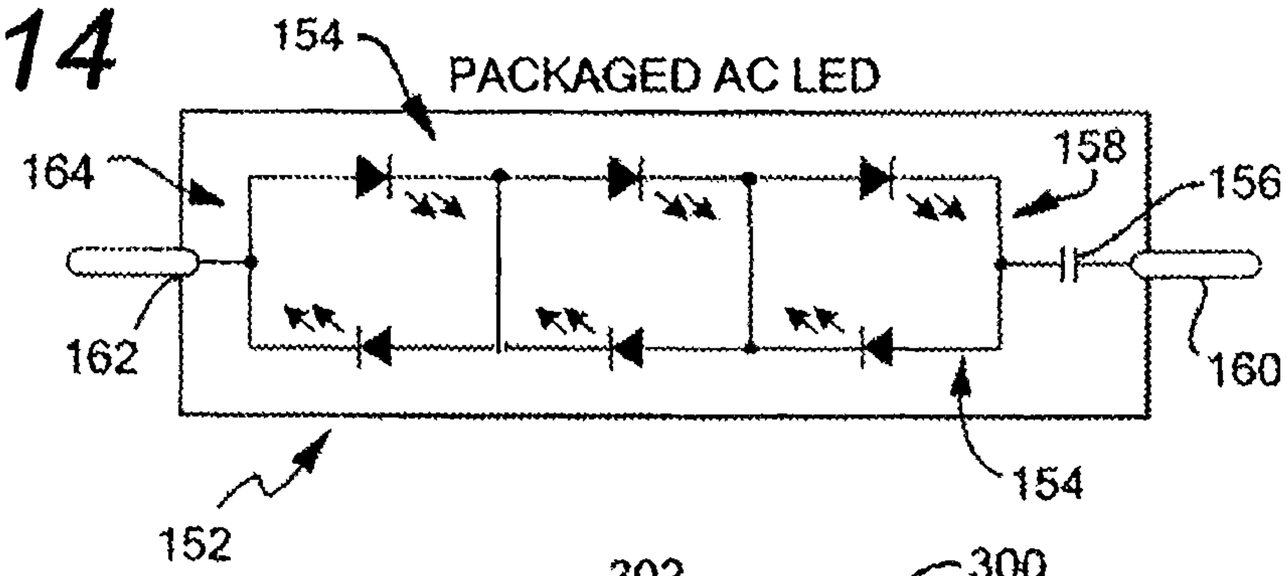

FIG. 15

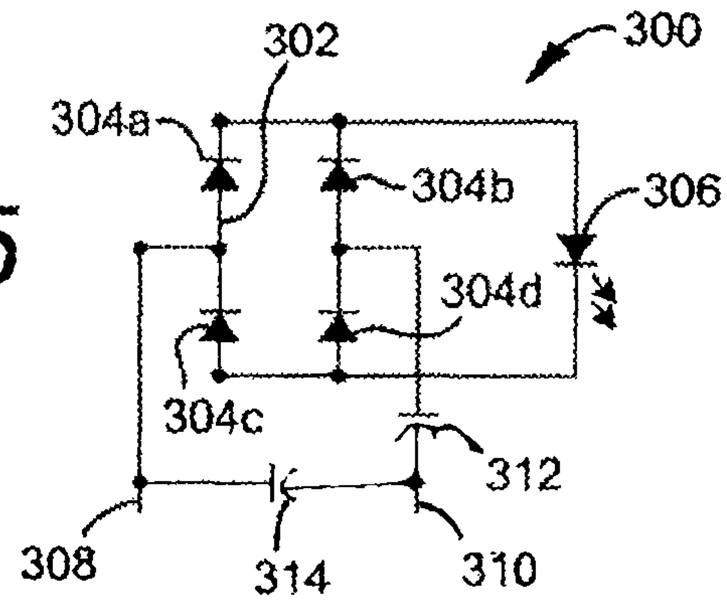

FIG. 16

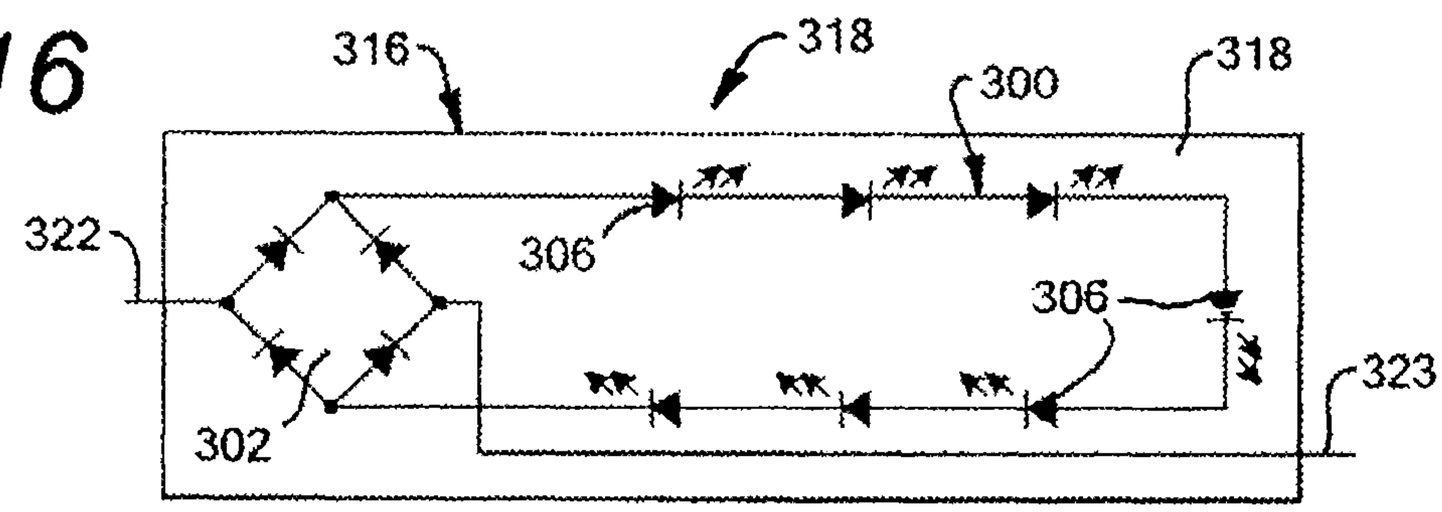

FIG. 17

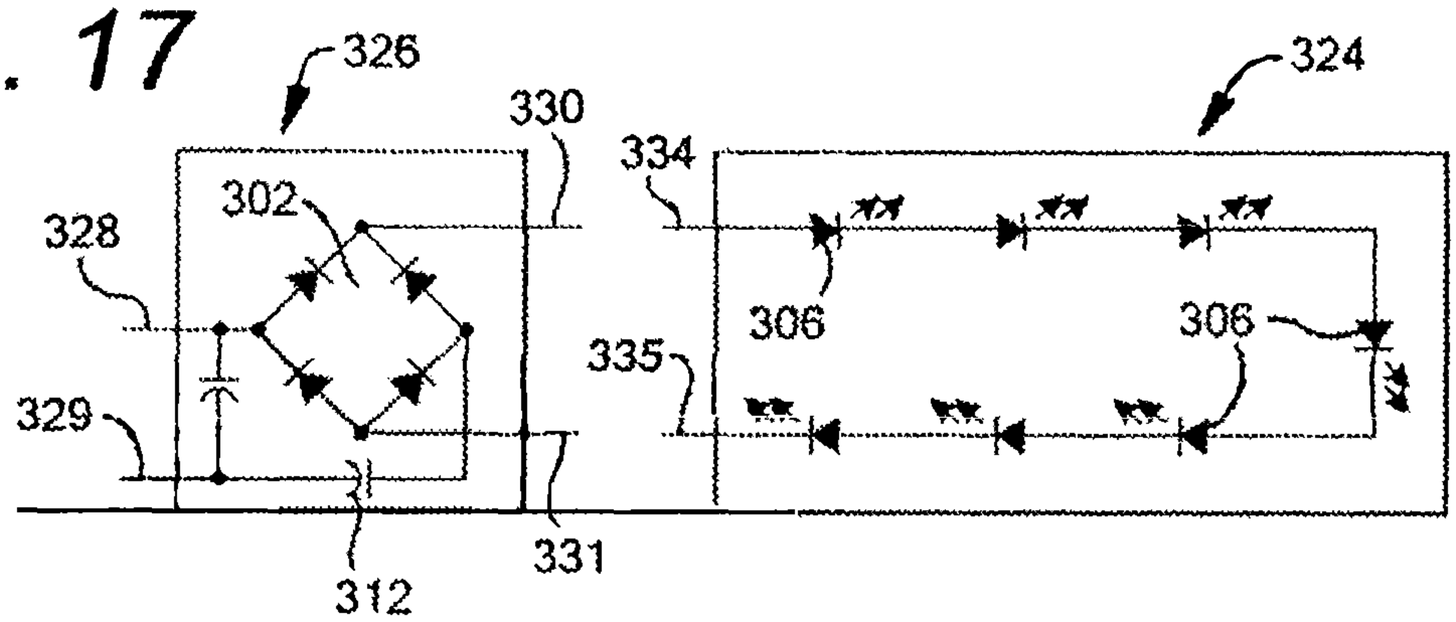

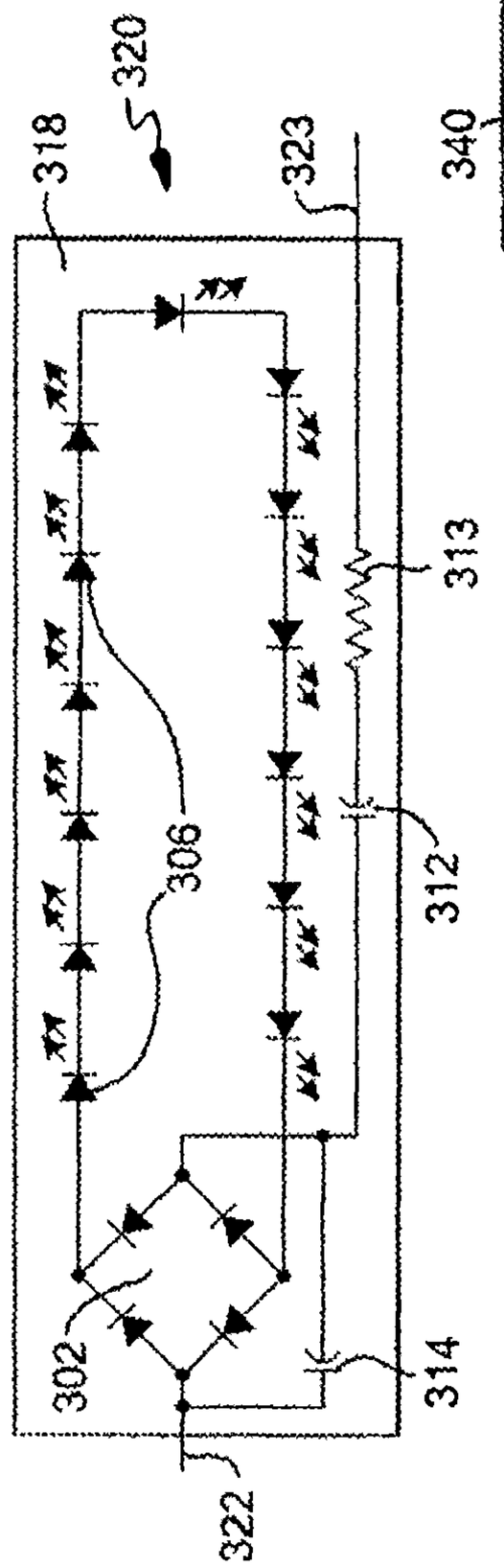

FIG. 18

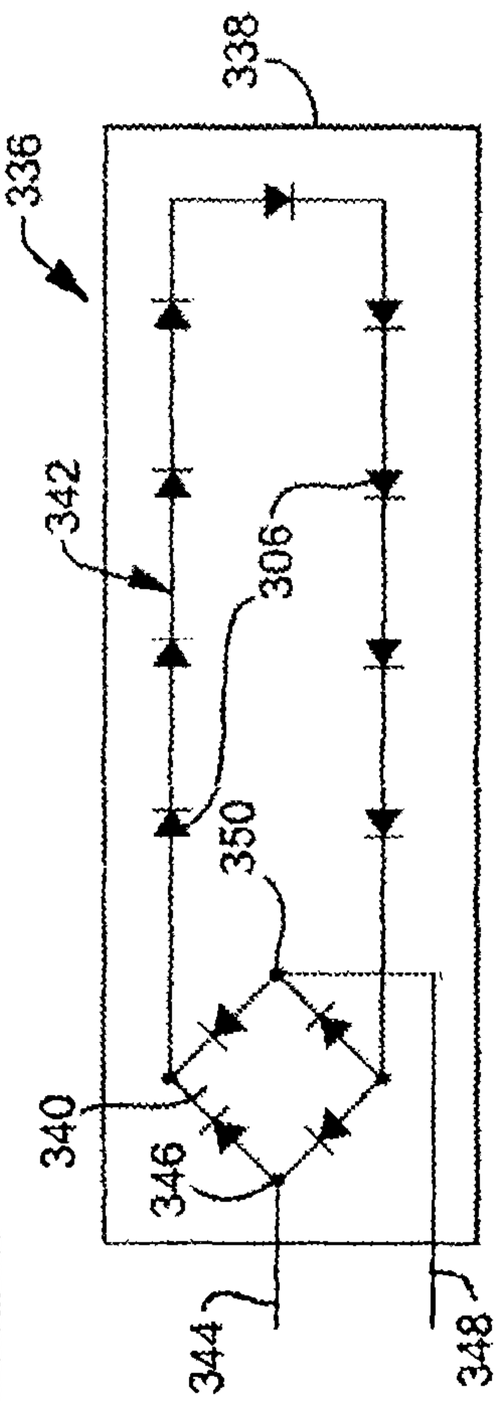

FIG. 19

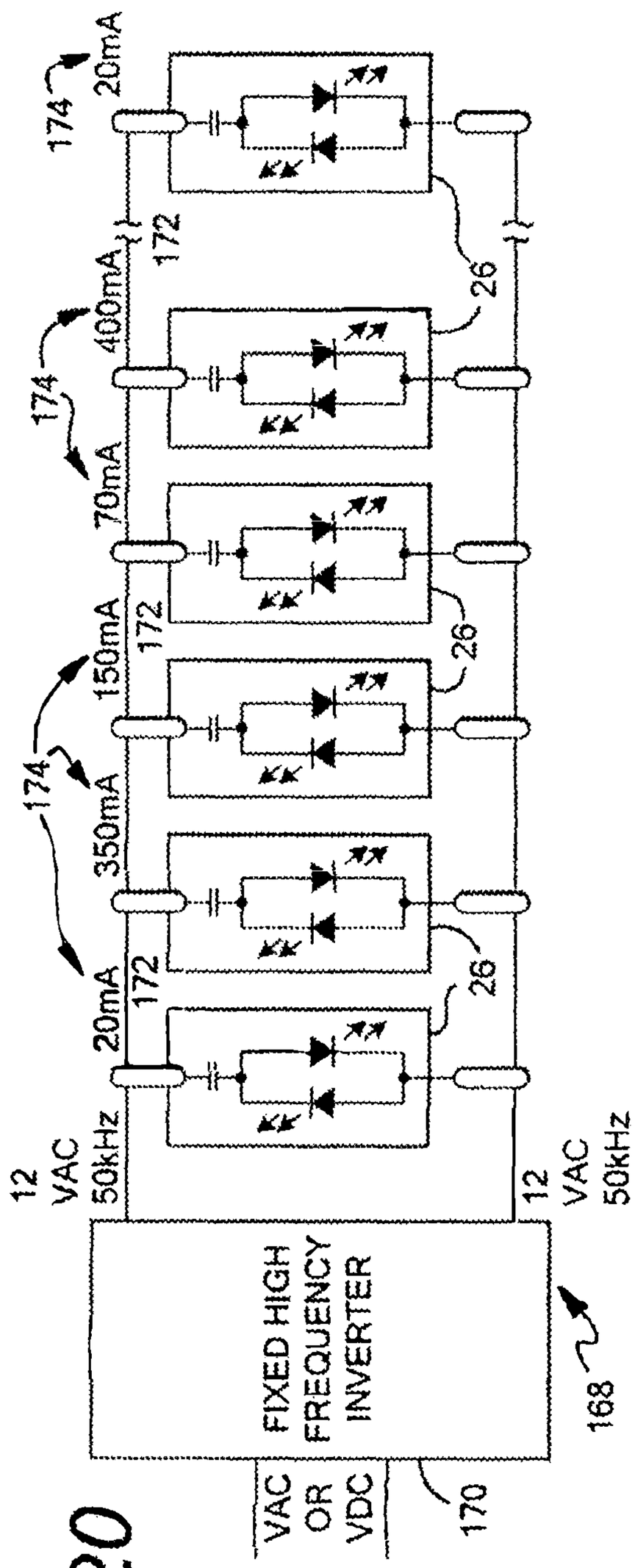

FIG. 20

FIG. 21

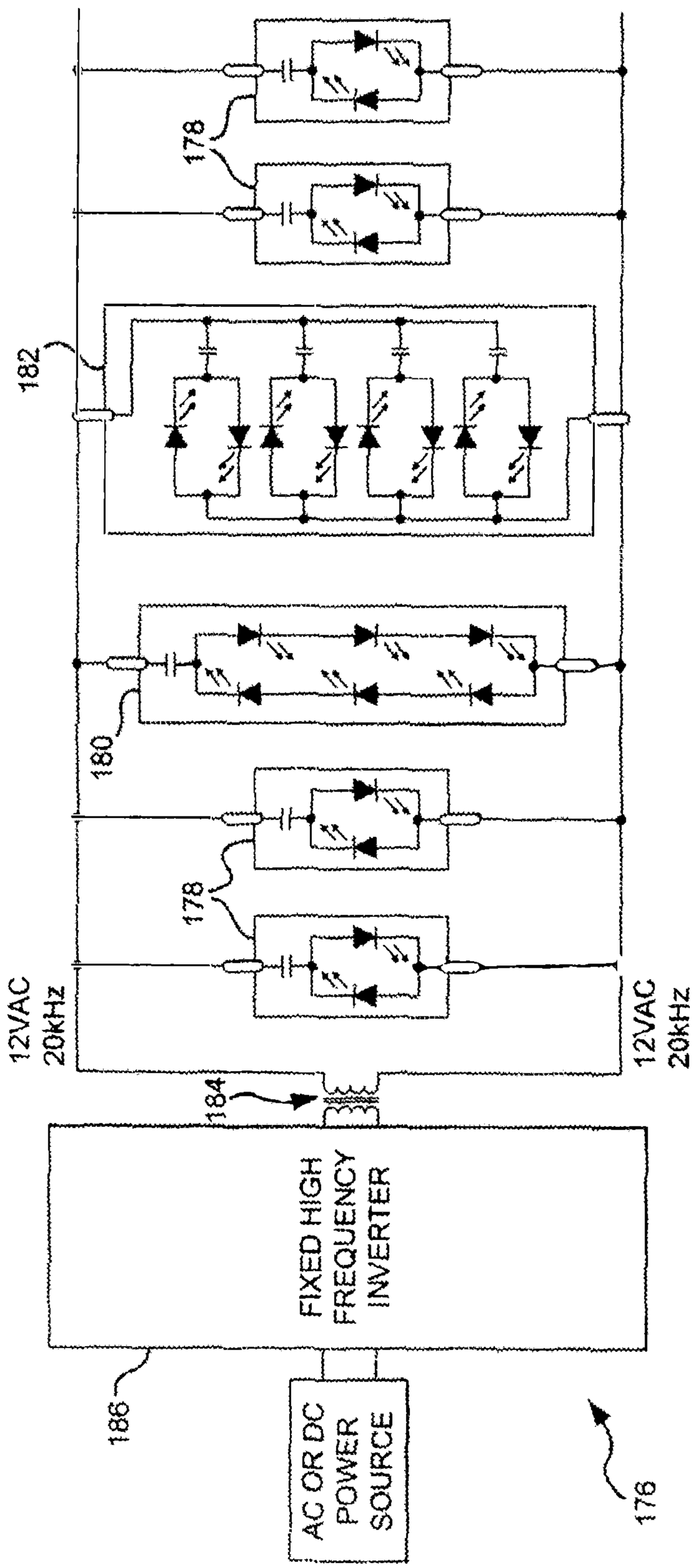
178
182
180
178
12VAC
20kHz
12VAC
20kHz
184
FIXED HIGH
FREQUENCY
INVERTER
186
AC OR DC
POWER
SOURCE
176

FIG. 22

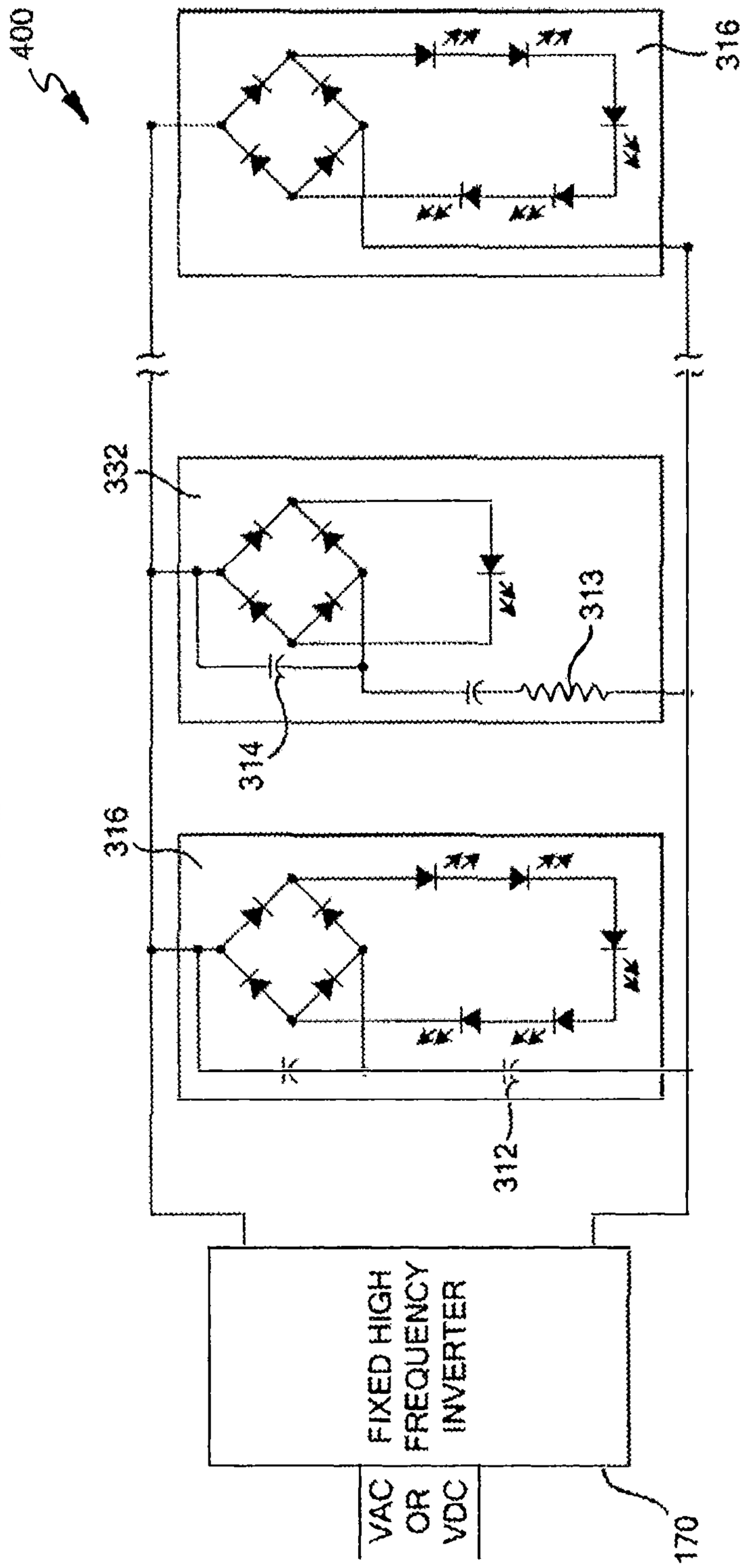
400
316
332
313
314
316
312
FIXED HIGH FREQUENCY INVERTER
VAC OR VDC
170

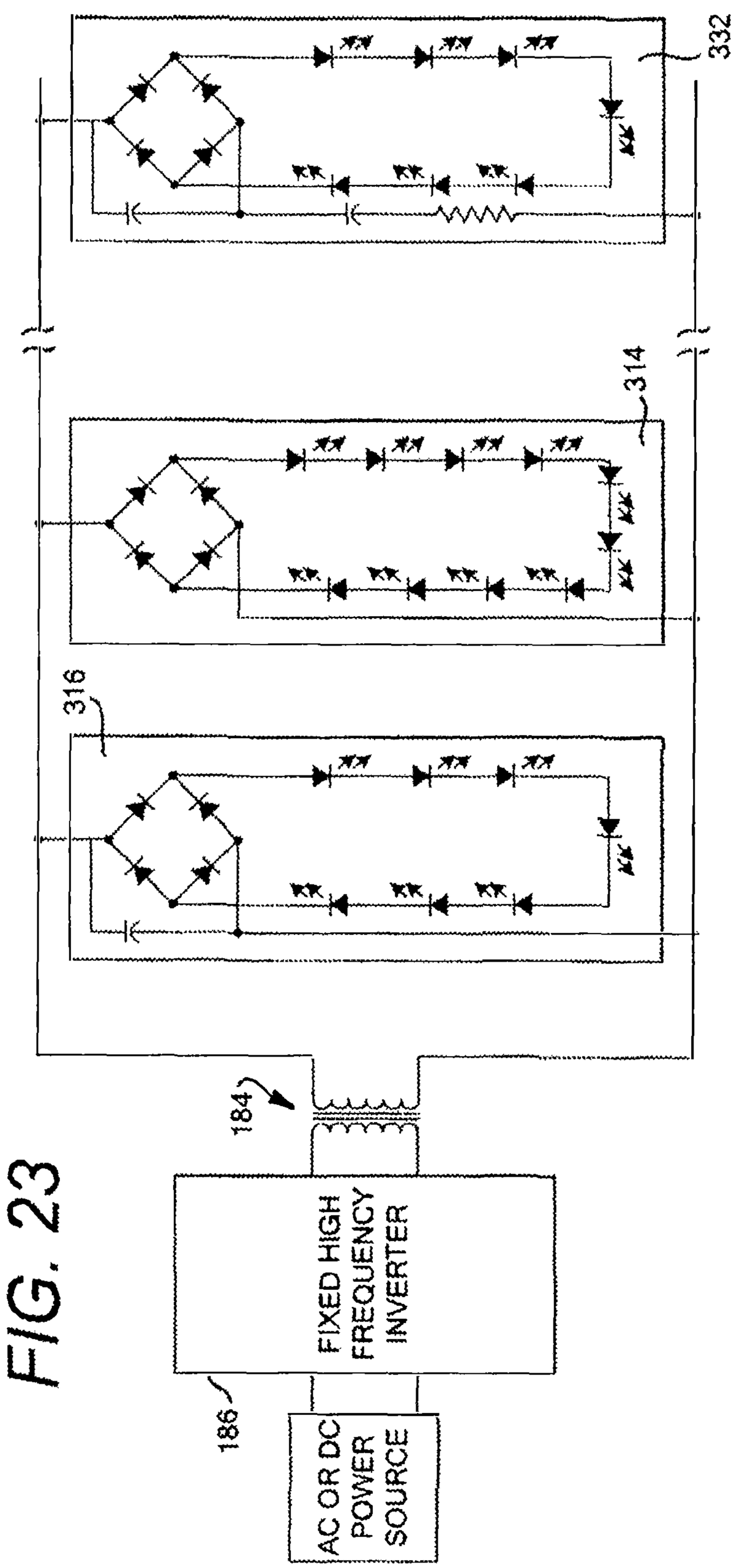
332
314
316
184
FIXED HIGH FREQUENCY INVERTER
186
AC OR DC POWER SOURCE

FIG. 23

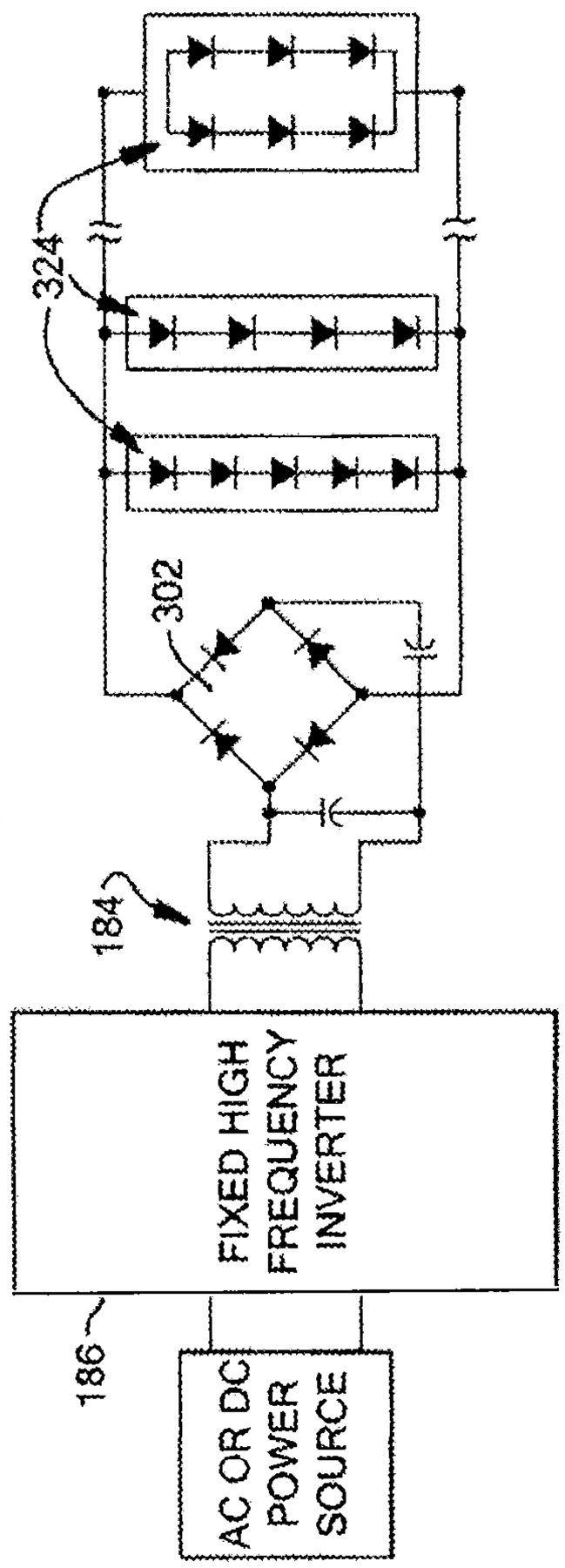
324
302
184
FIXED HIGH FREQUENCY INVERTER
186
AC OR DC POWER SOURCE

FIG. 24

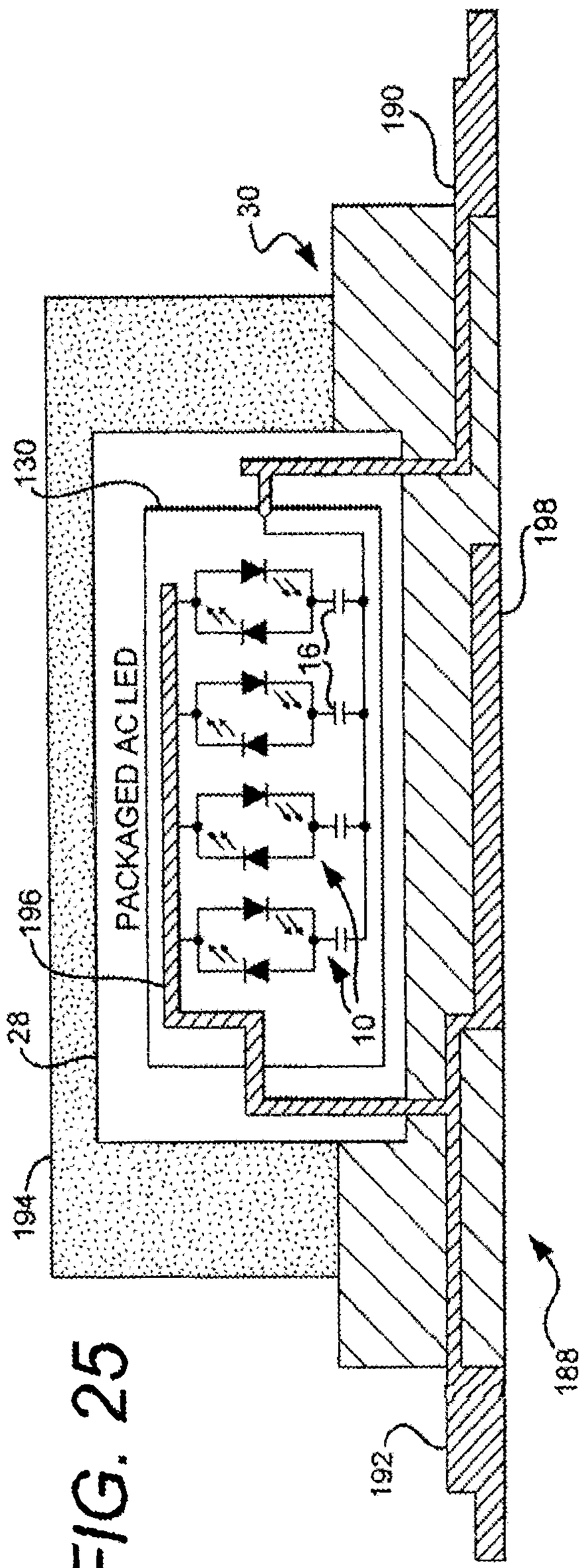
190
30
130
198
PACKAGED AC LED
16
196
10
28
194
188
192

FIG. 25

FIG. 26

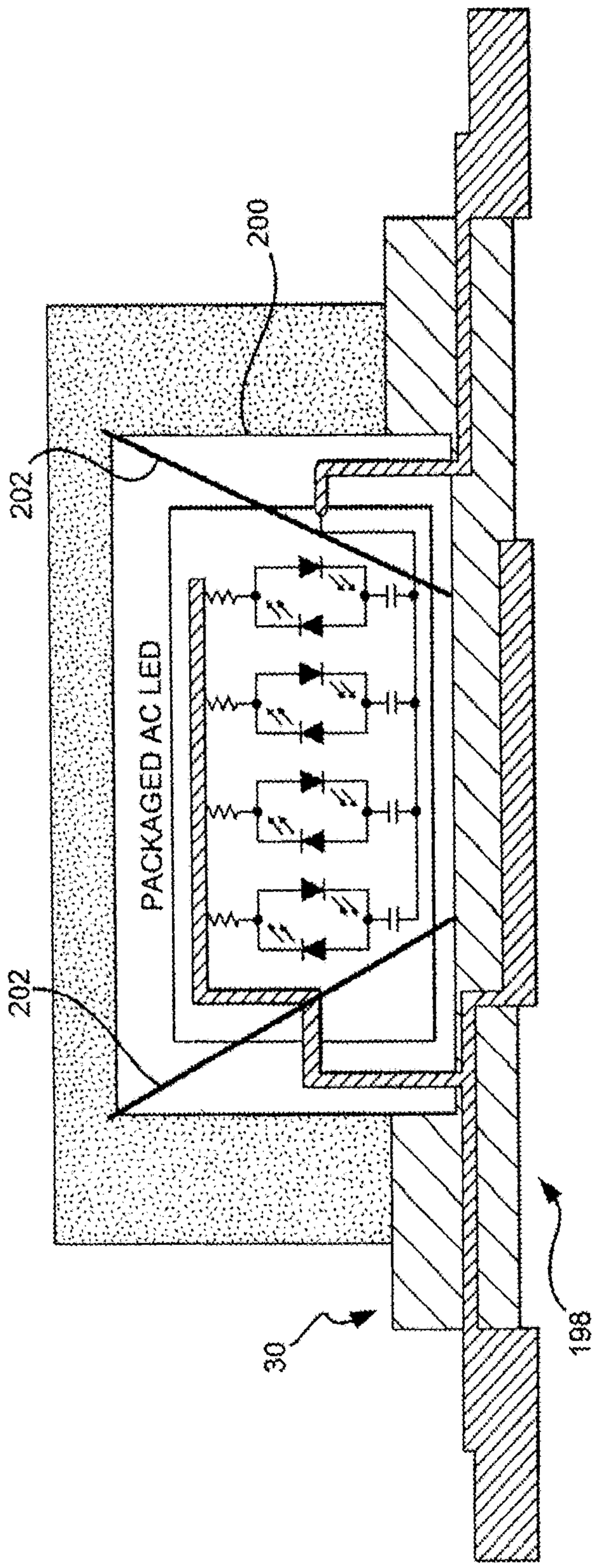

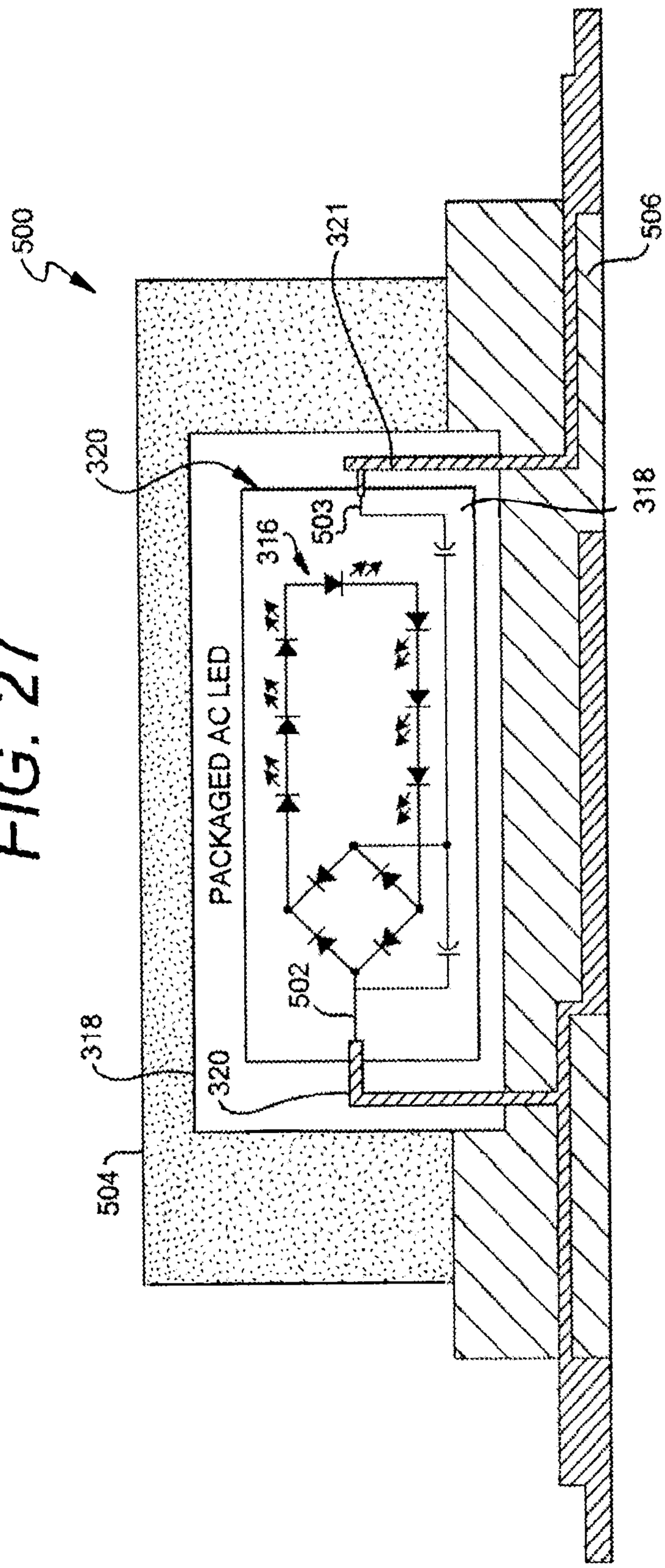

FIG. 27

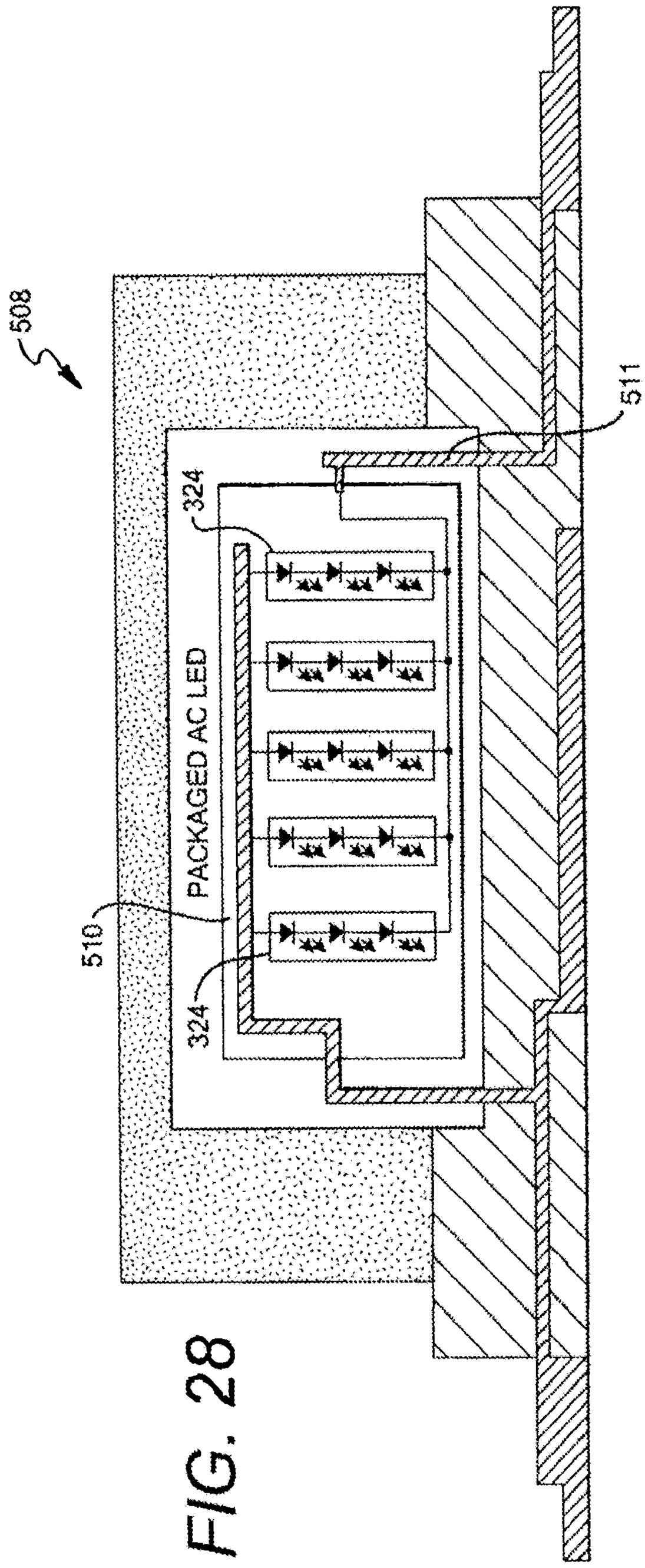
508
511
324
PACKAGED AC LED
510
324

FIG. 28

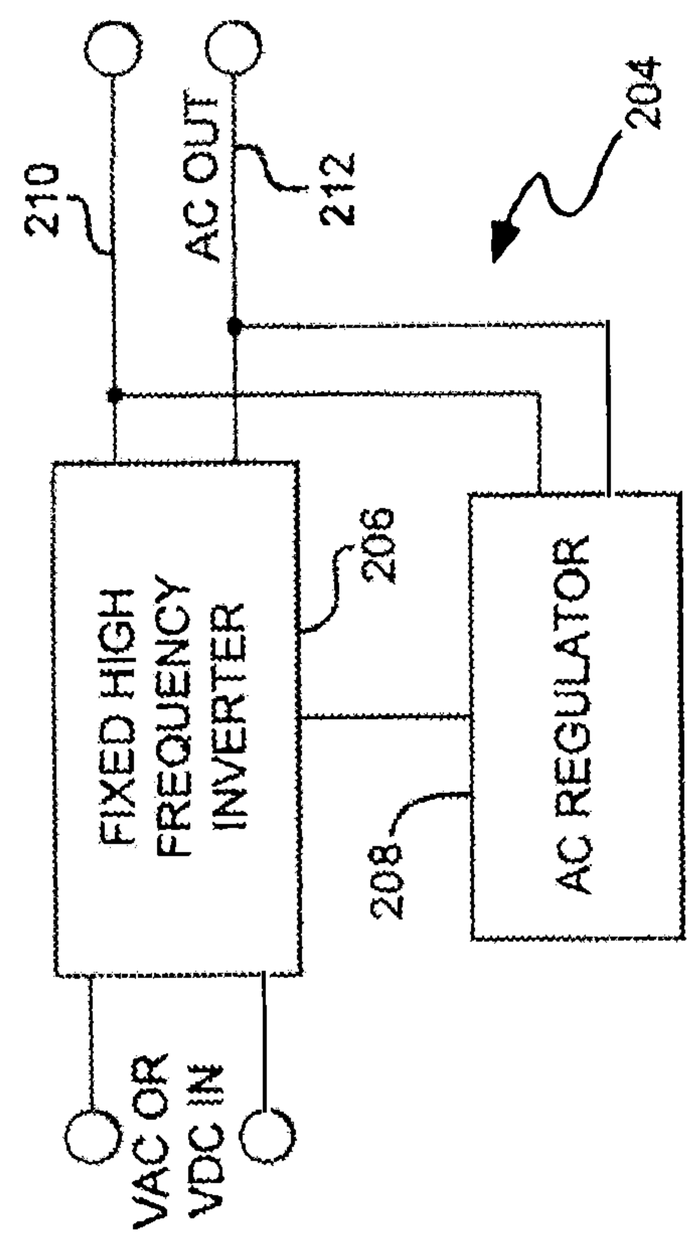
210
AC OUT
212
204
FIXED HIGH FREQUENCY INVERTER
206
208
AC REGULATOR
VAC OR VDC IN

FIG. 29

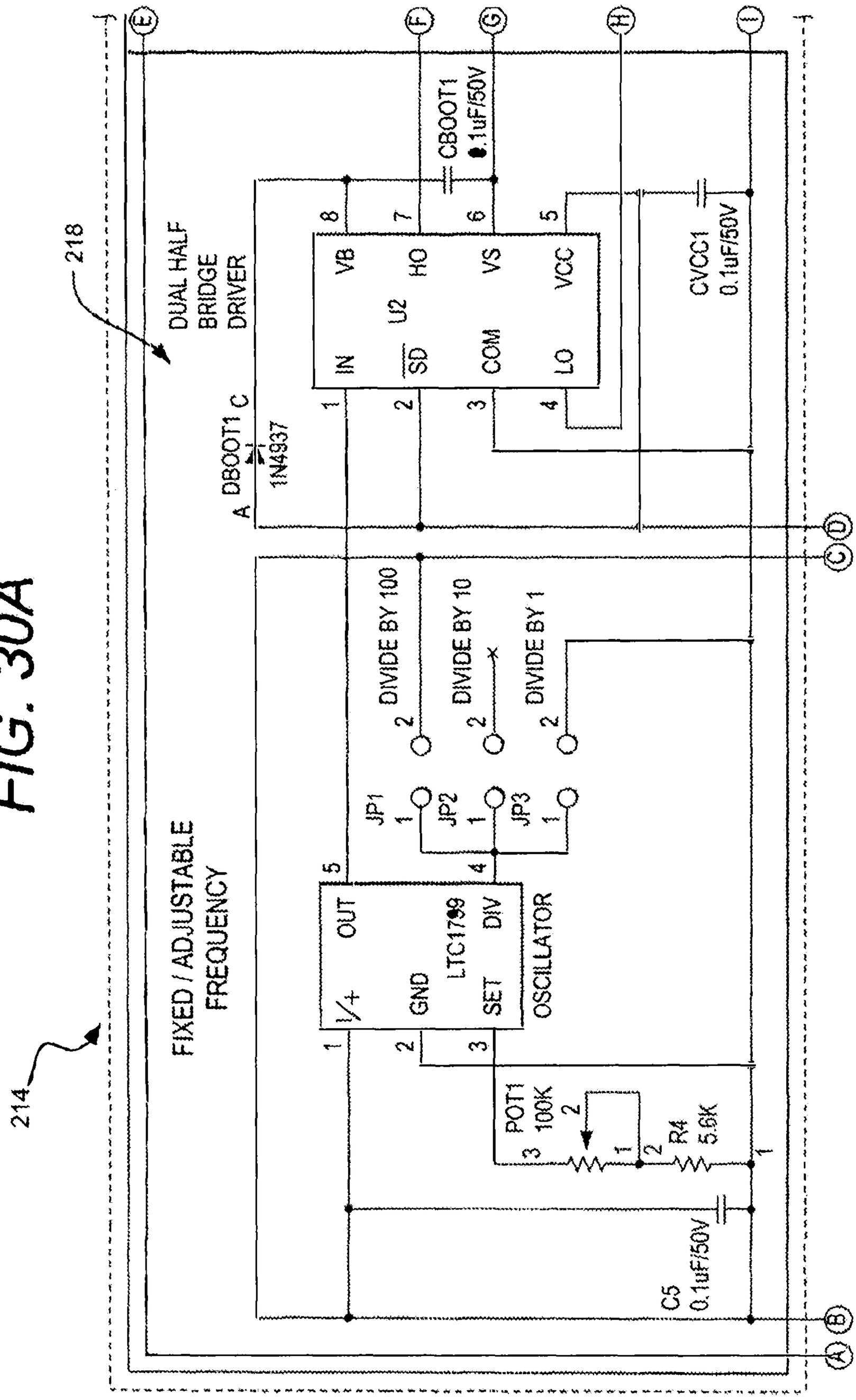
FIG. 30A
214
218
DUAL HALF BRIDGE DRIVER
FIXED / ADJUSTABLE FREQUENCY OSCILLATOR
U2
IN
SD
COM
LO
VB
HO
VS
VCC
CBOOT1 0.1uF/50V
CVCC1 0.1uF/50V
DBOOT1
1N4937
A
C
DIVIDE BY 100
DIVIDE BY 10
DIVIDE BY 1
JP1
JP2
JP3
LTC1799
OUT
GND
SET
DIV
POT1 100K
R4 5.6K
C5 0.1uF/50V
E
F
G
H
I
D
B
A

FIG. 30B

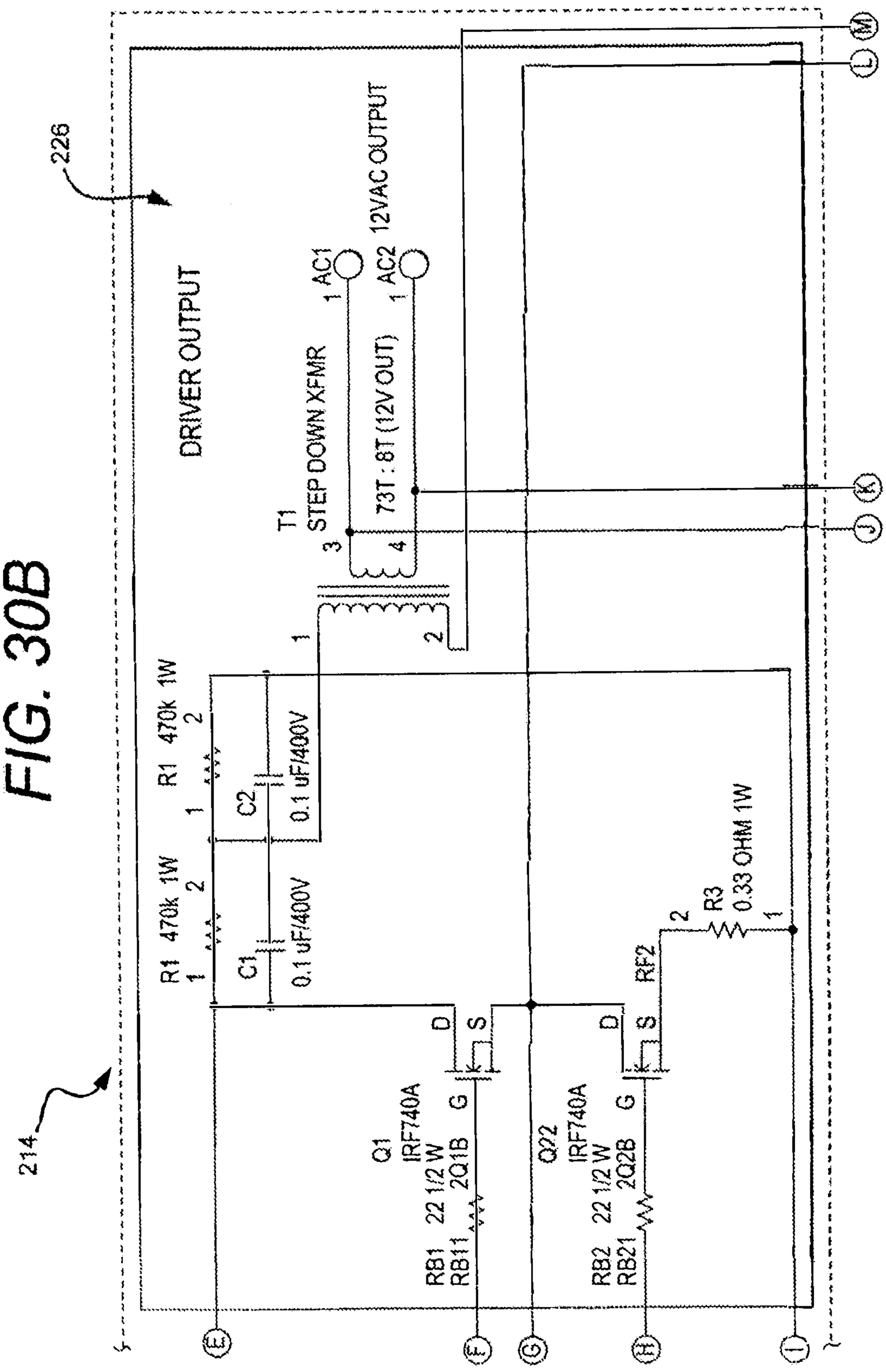
226
214
DRIVER OUTPUT
12VAC OUTPUT
AC1
AC2
T1
STEP DOWN XFMR
73T : 8T (12V OUT)
R1 470k 1W
C2
0.1 uF/400V
C1
0.1 uF/400V
Q1
IRF740A
RB1 22 1/2 W
RB11 2Q1B
Q2
IRF740A
RB2 22 1/2 W
RB21 2Q2B
RF2
R3
0.33 OHM 1W
D
S
G
E
F
G
H
I
J
K
L
M

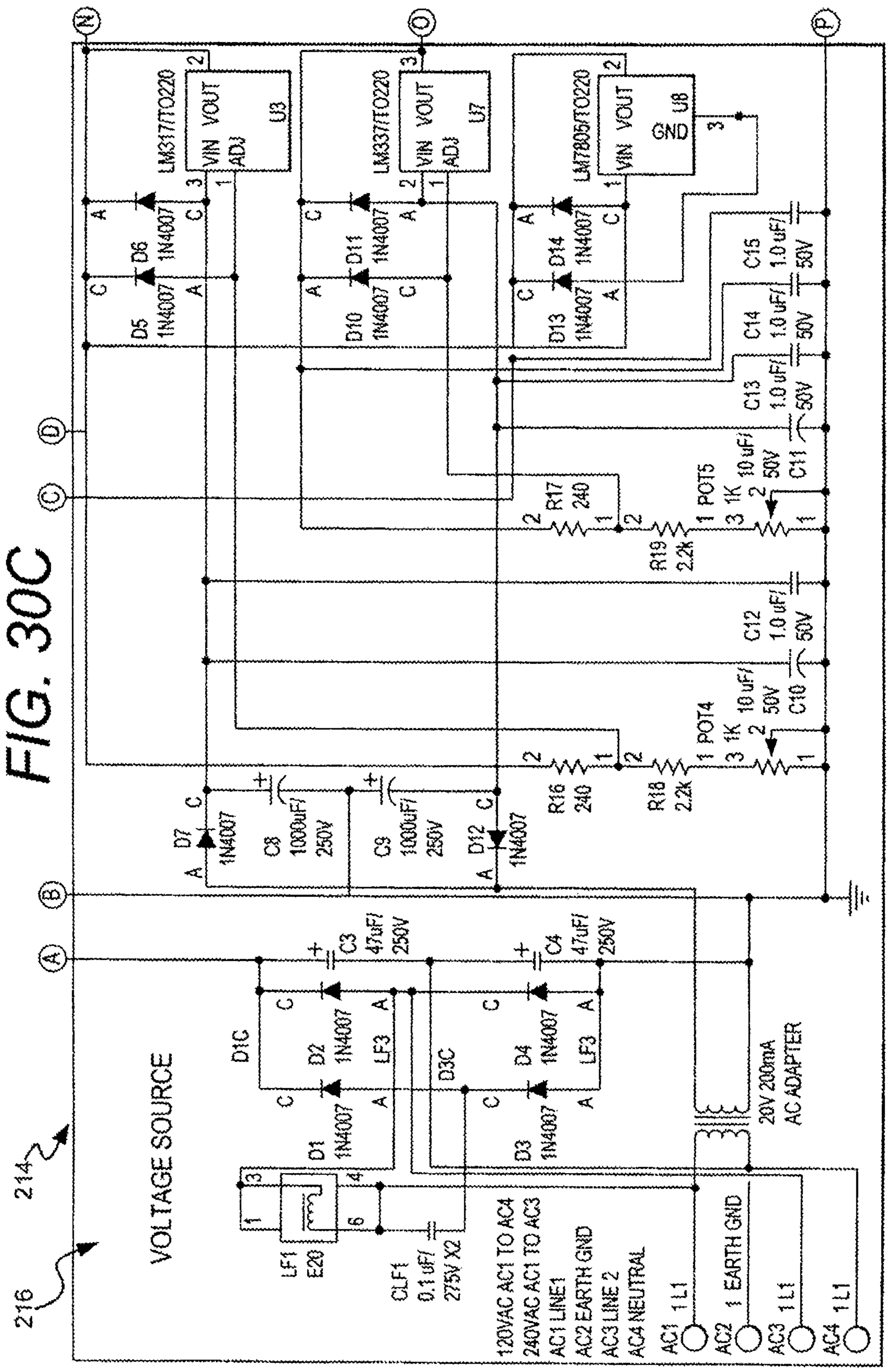
VOLTAGE SOURCE
214
216
LF1
E20
CLF1
0.1 uF/
275V X2
D1C
D1
1N4007
D2
1N4007
LF3
D3C
D3
1N4007
D4
1N4007
LF3
C3
47uF/
250V
C4
47uF/
250V
120VAC AC1 TO AC4
240VAC AC1 TO AC3
AC1 LINE1
AC2 EARTH GND
AC3 LINE 2
AC4 NEUTRAL
AC1 1 L1
AC2 1 EARTH GND
AC3 1 L1
AC4 1 L1
20V 200mA
AC ADAPTER
D7
1N4007
C8
1000uF/
250V
C9
1000uF/
250V
D12
1N4007
R16
240
R18
2.2k
POT4
1K
C10
10 uF/
50V
C12
1.0 uF/
50V
R17
240
R19
2.2k
POT5
1K
C11
10 uF/
50V
C13
1.0 uF/
50V
C14
1.0 uF/
50V
C15
1.0 uF/
50V
D5
1N4007
D6
1N4007
D10
1N4007
D11
1N4007
D13
1N4007
D14
1N4007
LM317/TO220
U3
LM337/TO220
U7
LM7805/TO220
U8
VIN VOUT
ADJ
GND
A
B
C
D
N
O
P

FIG. 30C

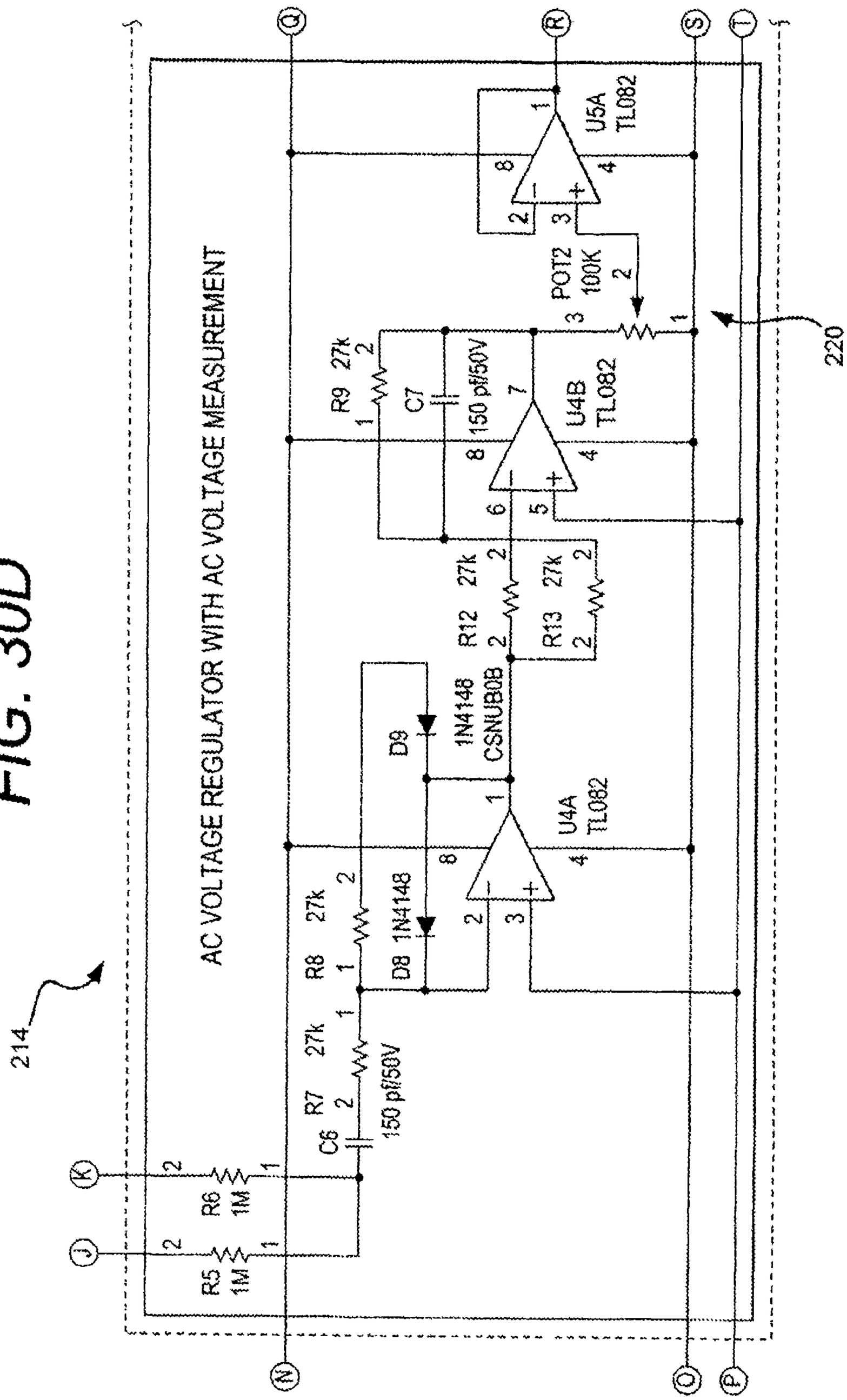
AC VOLTAGE REGULATOR WITH AC VOLTAGE MEASUREMENT
214
220
R5 1M
R6 1M
R7 27k
C6 150 pf/50V
R8 27k
D8 1N4148
D9 1N4148
U4A TL082
R9 27k
C7 150 pf/50V
U4B TL082
R12 27k
R13 27k
CSNUB0B
U5A TL082
POT2 100K
J
K
N
O
P
Q
R
S
T

FIG. 30D

FIG. 30E

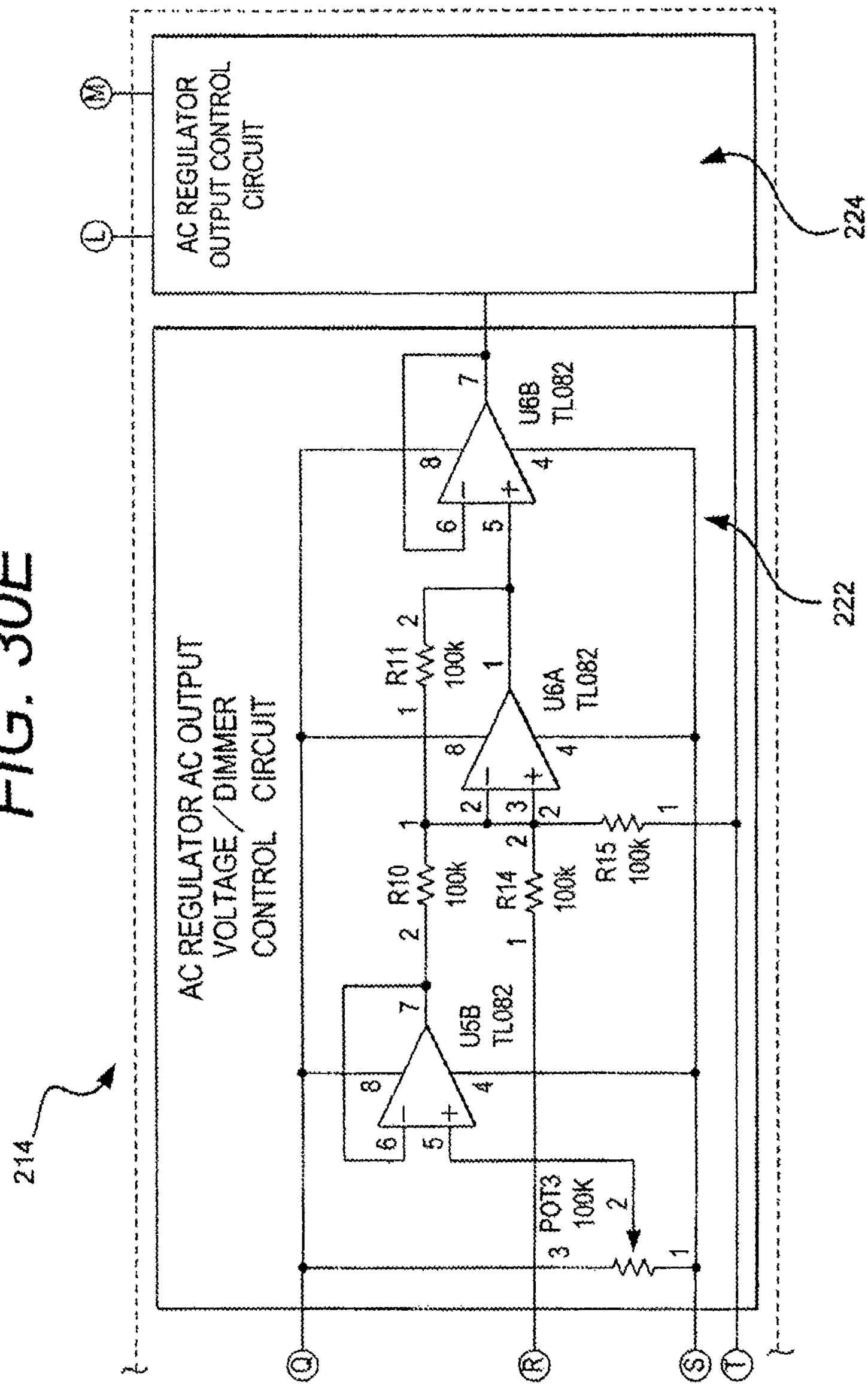
AC REGULATOR OUTPUT CONTROL CIRCUIT
AC REGULATOR AC OUTPUT VOLTAGE/DIMMER CONTROL CIRCUIT
U6B TL082
U6A TL082
U5B TL082
R11 100k
R10 100k
R14 100k
R15 100k
POT3 100K
214
222
224
Q
R
S
T
L
M

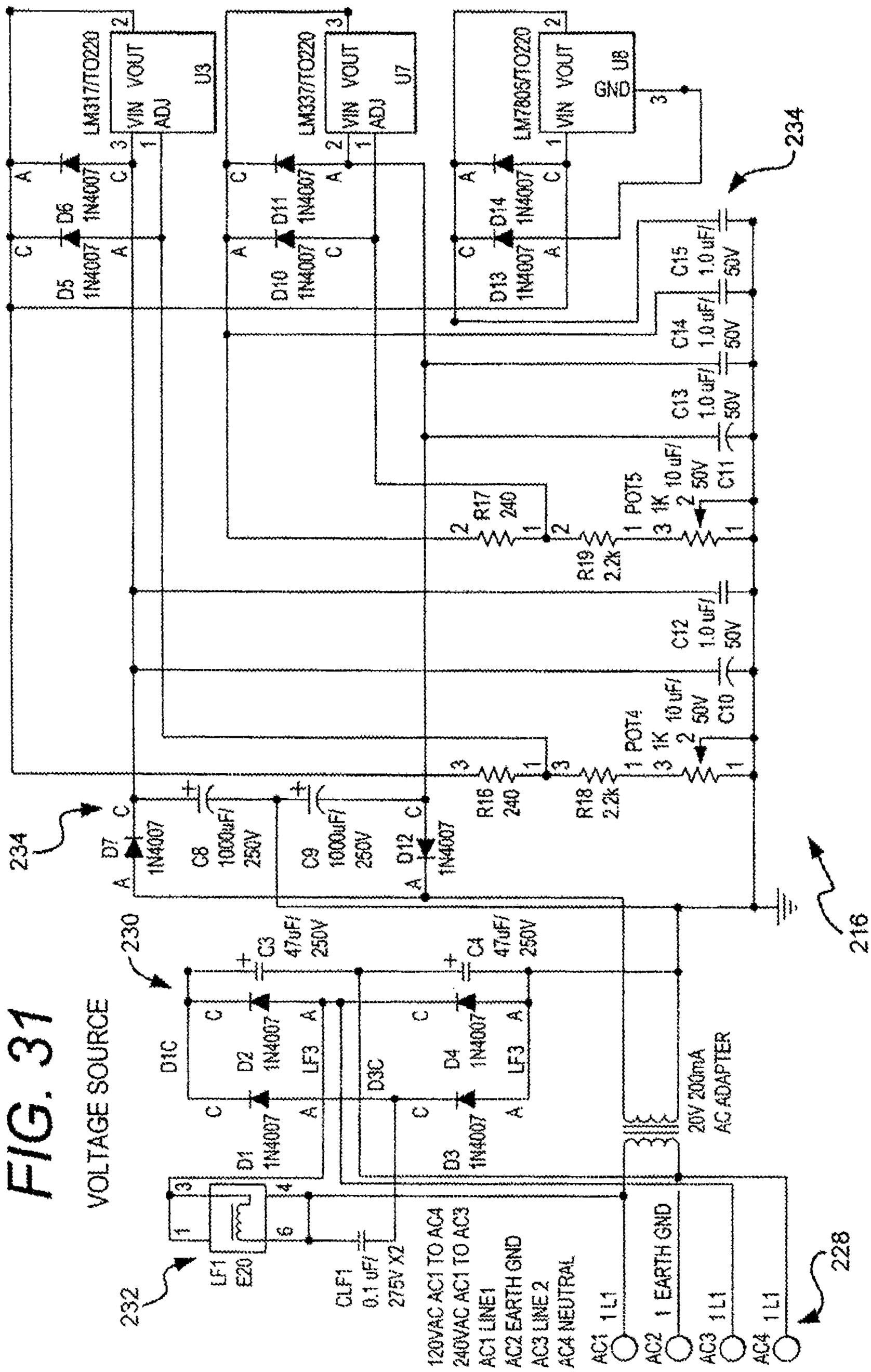

FIG. 31
VOLTAGE SOURCE

FIG. 32

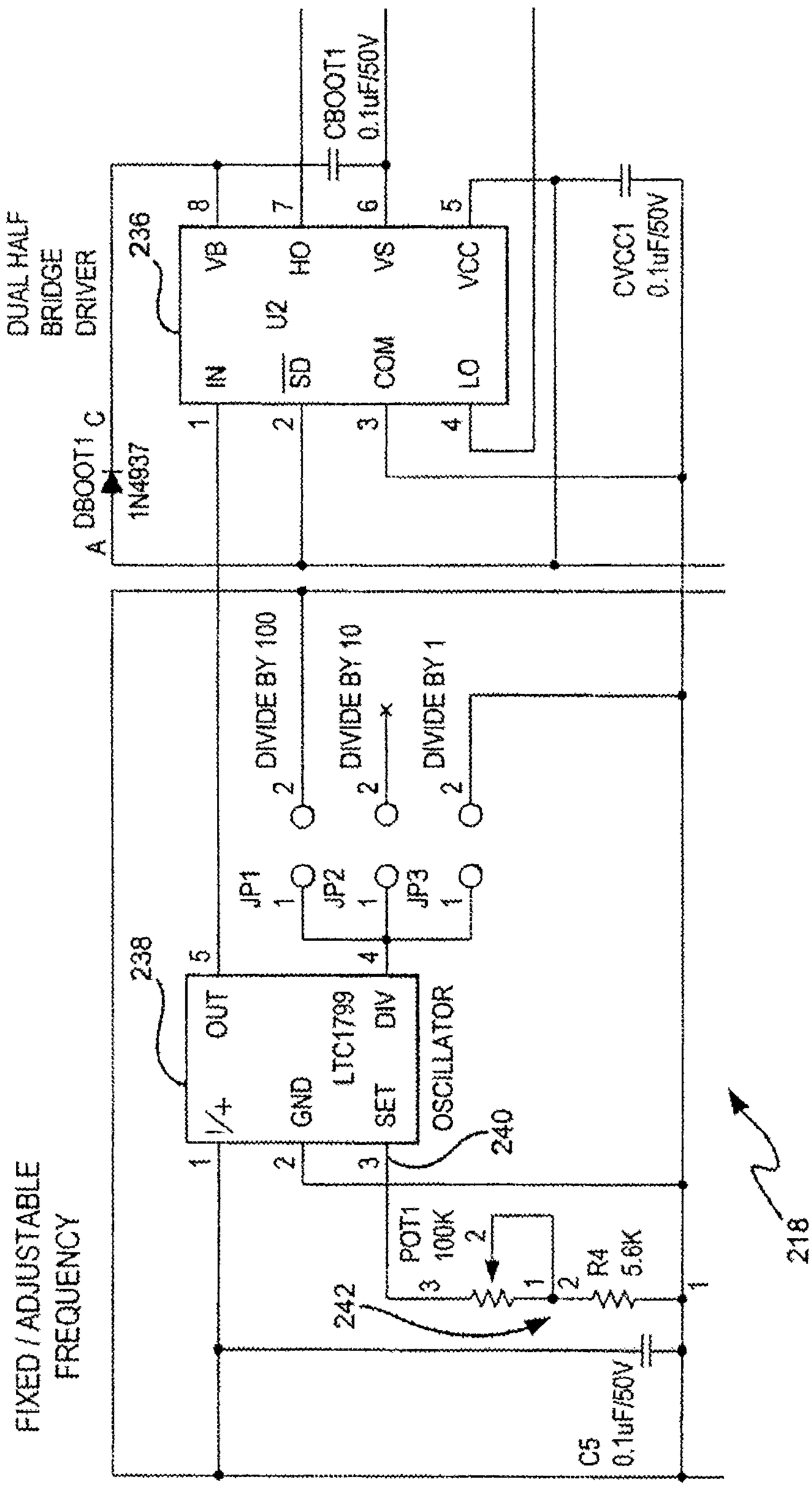
DUAL HALF BRIDGE DRIVER
236
U2
VB
HO
VS
VCC
IN
SD
COM
LO
CBOOT1 0.1uF/50V
CVCC1 0.1uF/50V
DBOOT1
1N4937
FIXED / ADJUSTABLE FREQUENCY
238
LTC1799
OUT
DIV
GND
SET
OSCILLATOR
240
DIVIDE BY 100
DIVIDE BY 10
DIVIDE BY 1
JP1
JP2
JP3
POT1 100K
R4 5.6K
242
C5 0.1uF/50V
218

FIG. 33

AC VOLTAGE REGULATOR WITH VOLTAGE MEASUREMENT

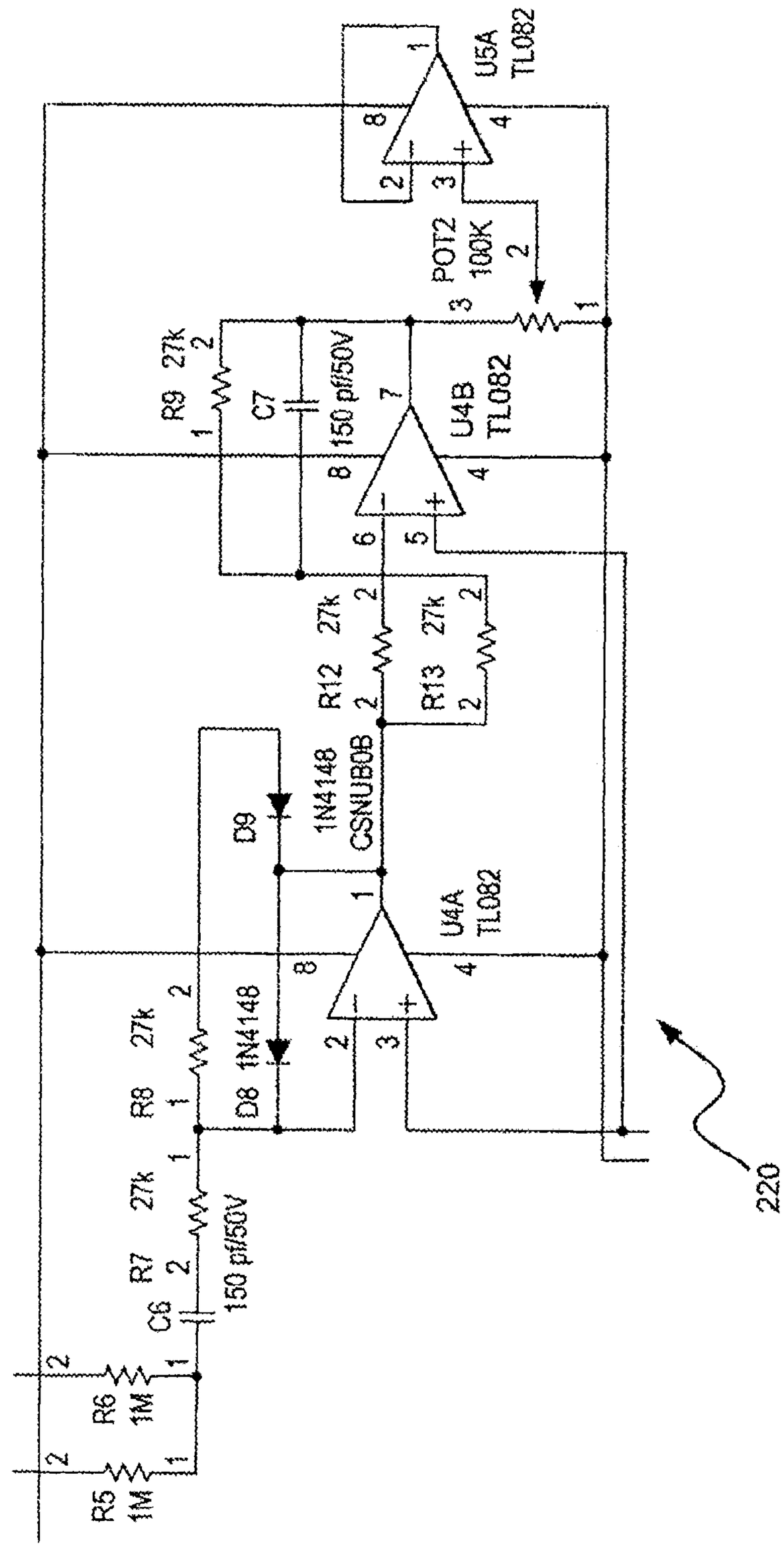

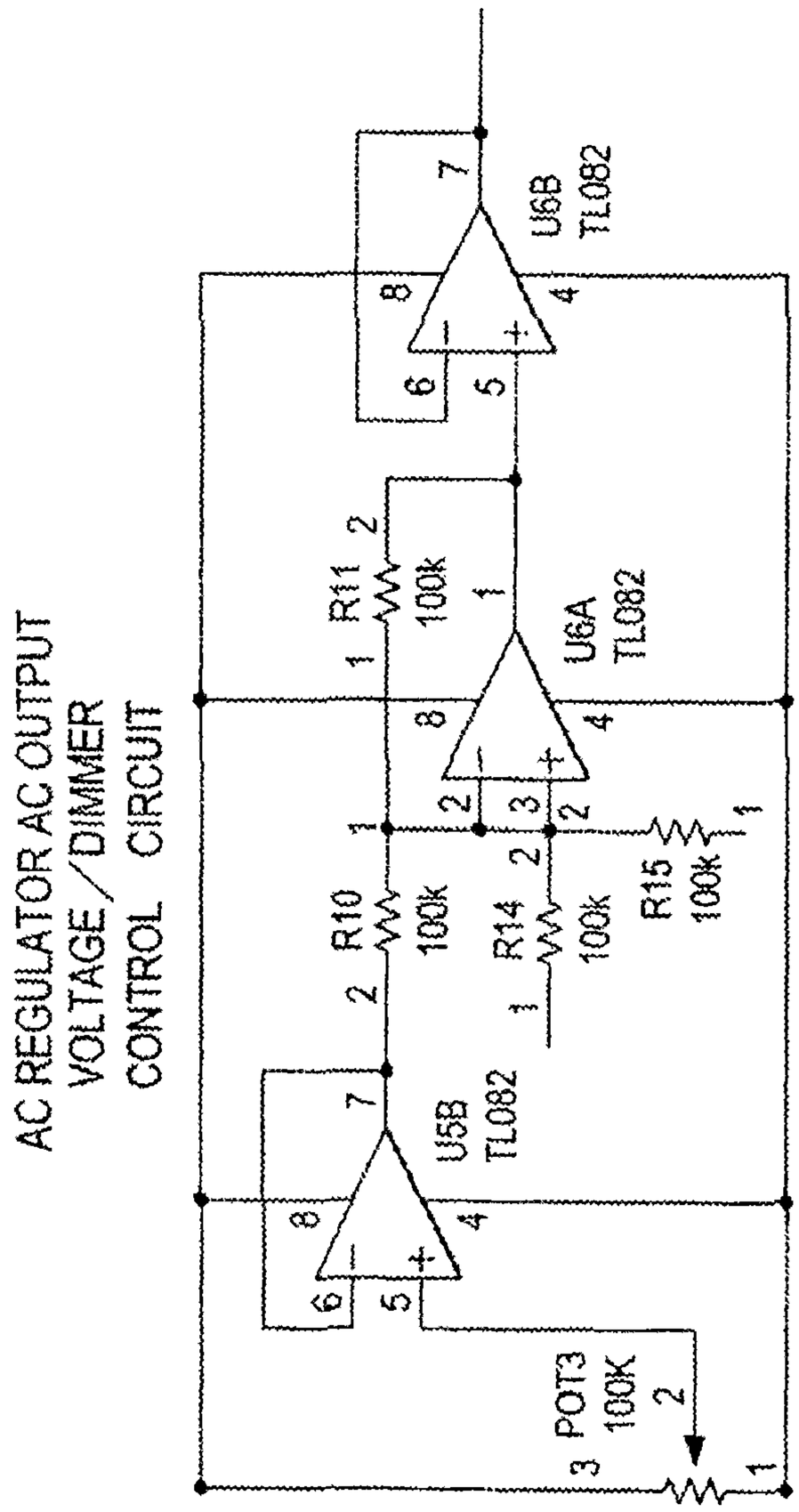
AC REGULATOR AC OUTPUT
VOLTAGE / DIMMER
CONTROL CIRCUIT
U6B
TL082
U6A
TL082
U5B
TL082
R11
100k
R10
100k
R14
100k
R15
100k
POT3
100K
228

FIG. 34

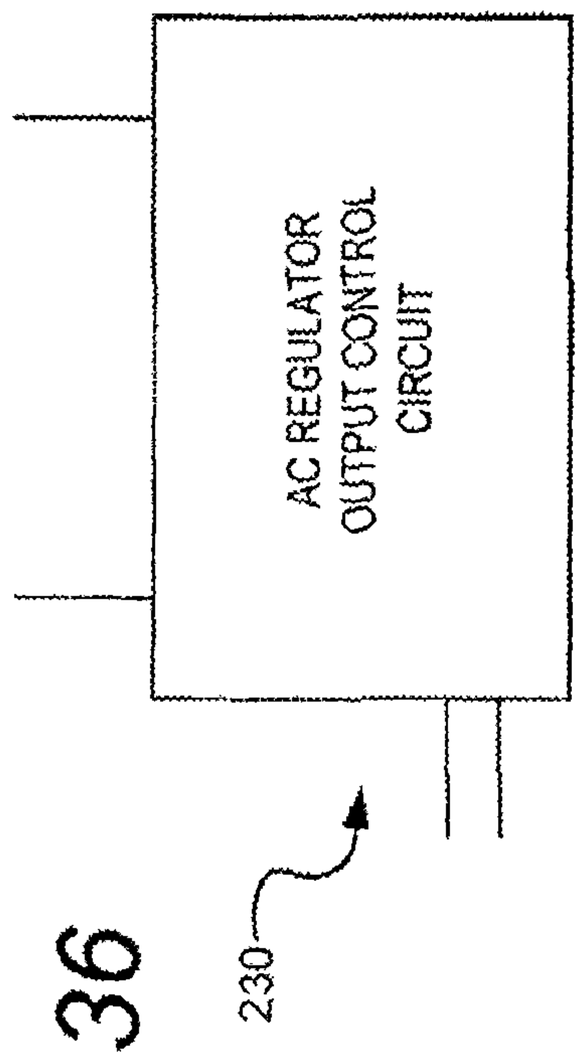
AC REGULATOR
OUTPUT CONTROL
CIRCUIT
230

FIG. 36

FIG. 35

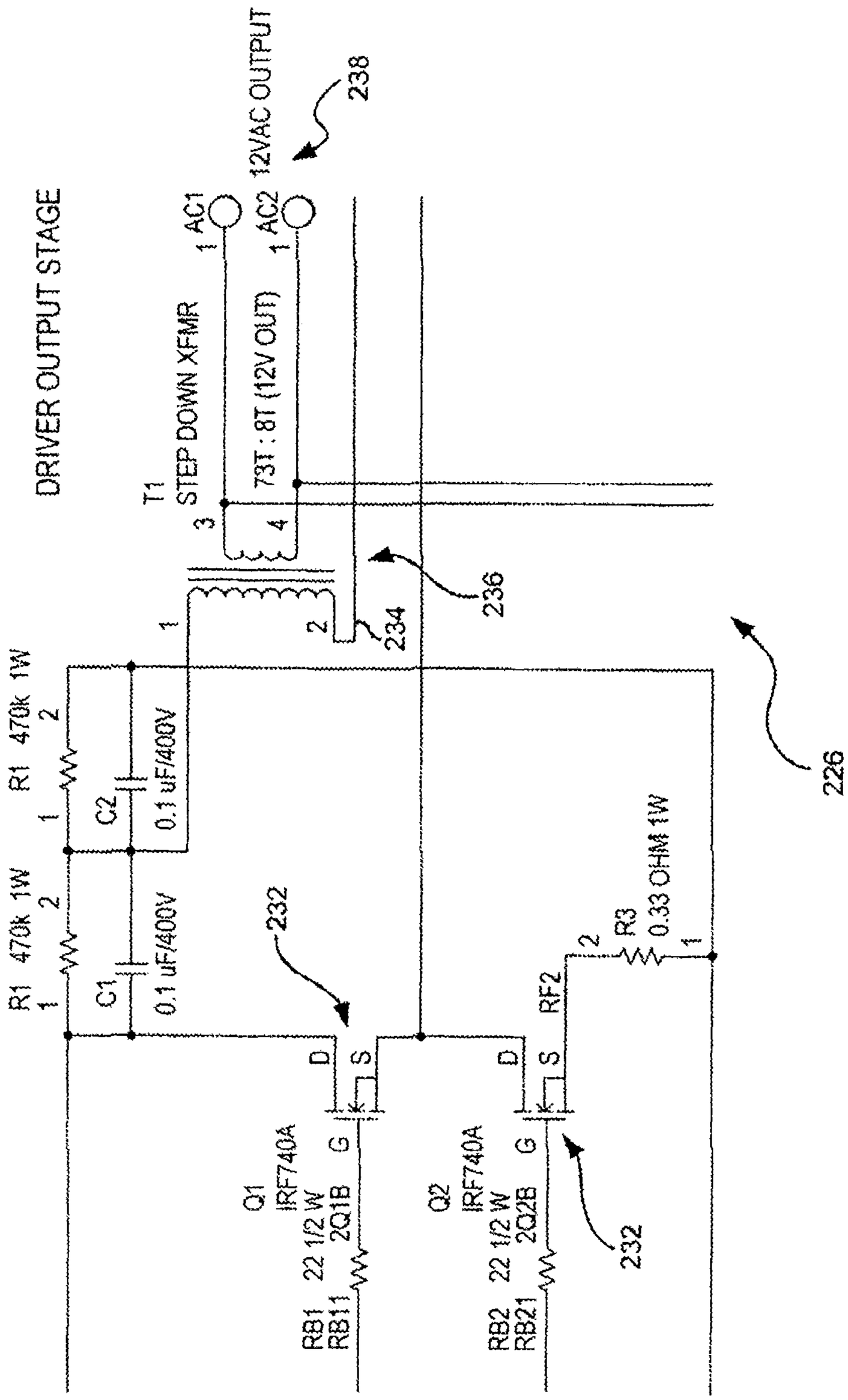
DRIVER OUTPUT STAGE
12VAC OUTPUT
238
T1
STEP DOWN XFMR
73T : 8T (12V OUT)
AC1
AC2
3
4
1
2
234
236
226
R1 470k 1W
C1
0.1 uF/400V
C2
232
D
S
G
Q1
IRF740A
Q2
RB1
RB11
22 1/2 W
2Q1B
RB2
RB21
2Q2B
RF2
R3
0.33 OHM 1W

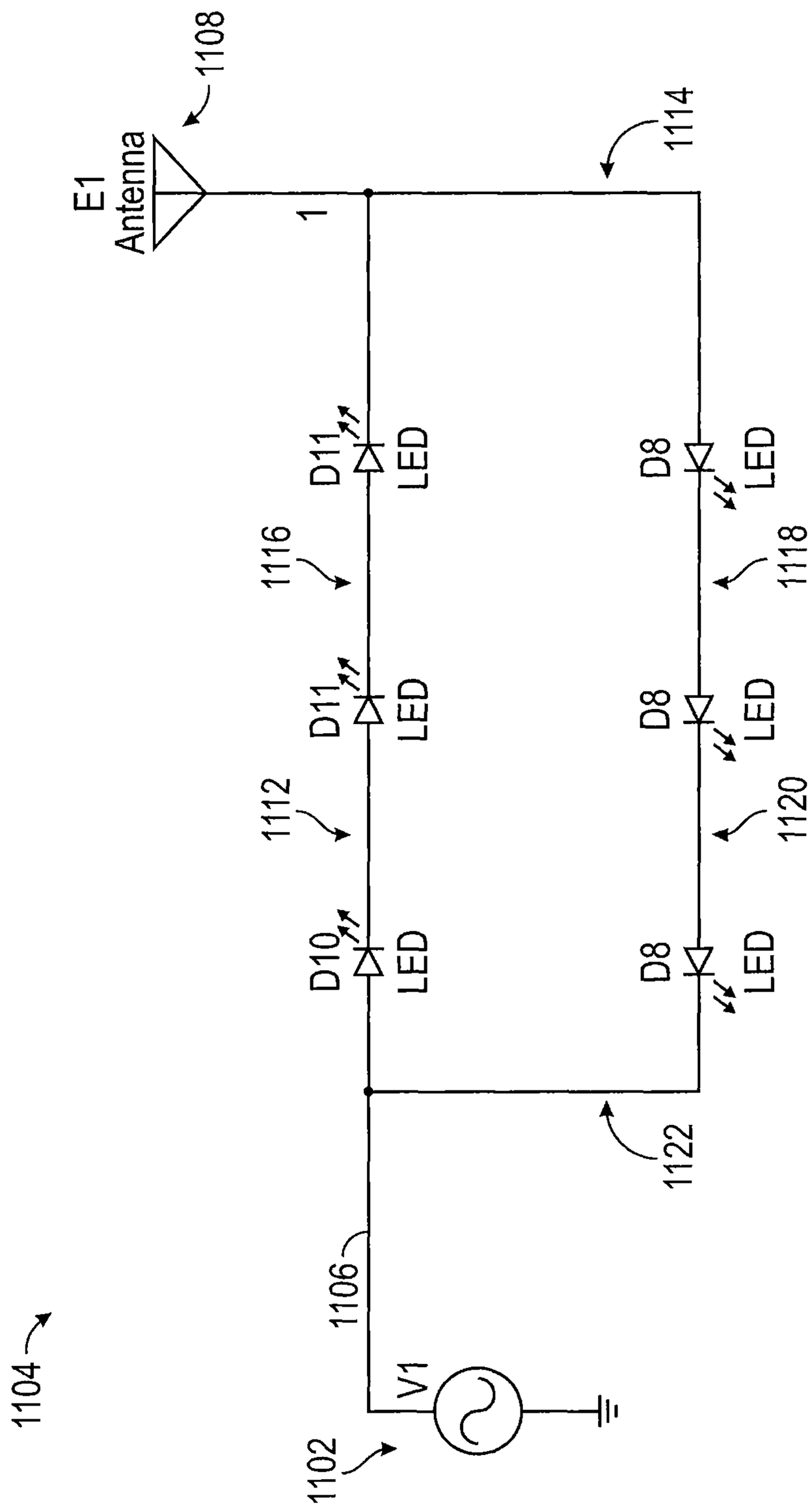
1104
1102
V1
1106
1122
D10
LED
1112
D11
LED
1116
D11
LED
1
E1
Antenna
1108
1114
D8
LED
1120
D8
LED
1118
D8
LED

FIG. 37

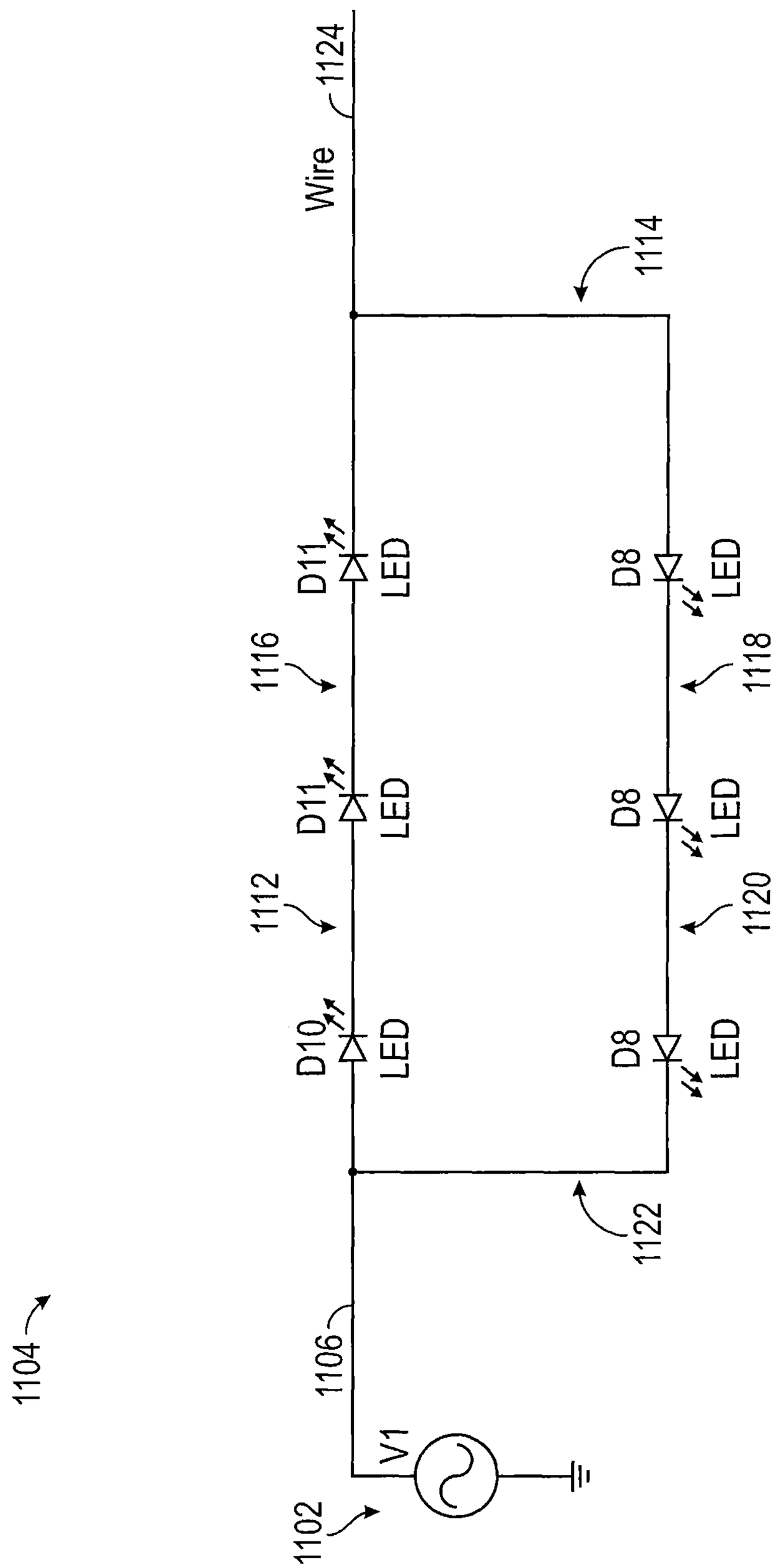
1104
1102
V1
1106
1122
D10
LED
1112
D11
LED
1116
D11
LED
Wire
1124
D8
LED
1120
D8
LED
1118
D8
LED
1114

FIG. 38

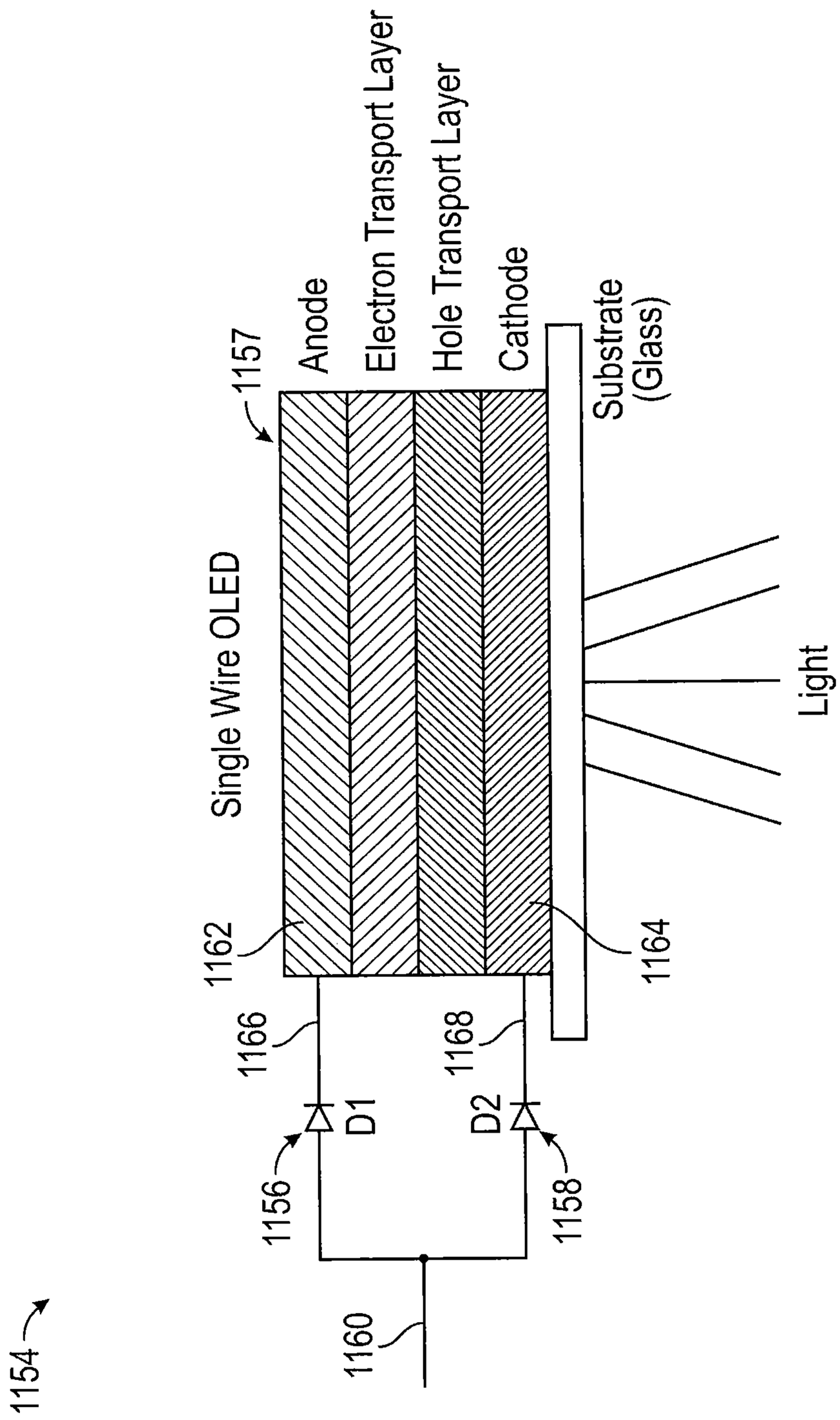
1154
1157
Single Wire OLED
Anode
Electron Transport Layer
Hole Transport Layer
Cathode
Substrate (Glass)
Light
1162
1164
1166
1168
D1
D2
1156
1158
1160

FIG. 39

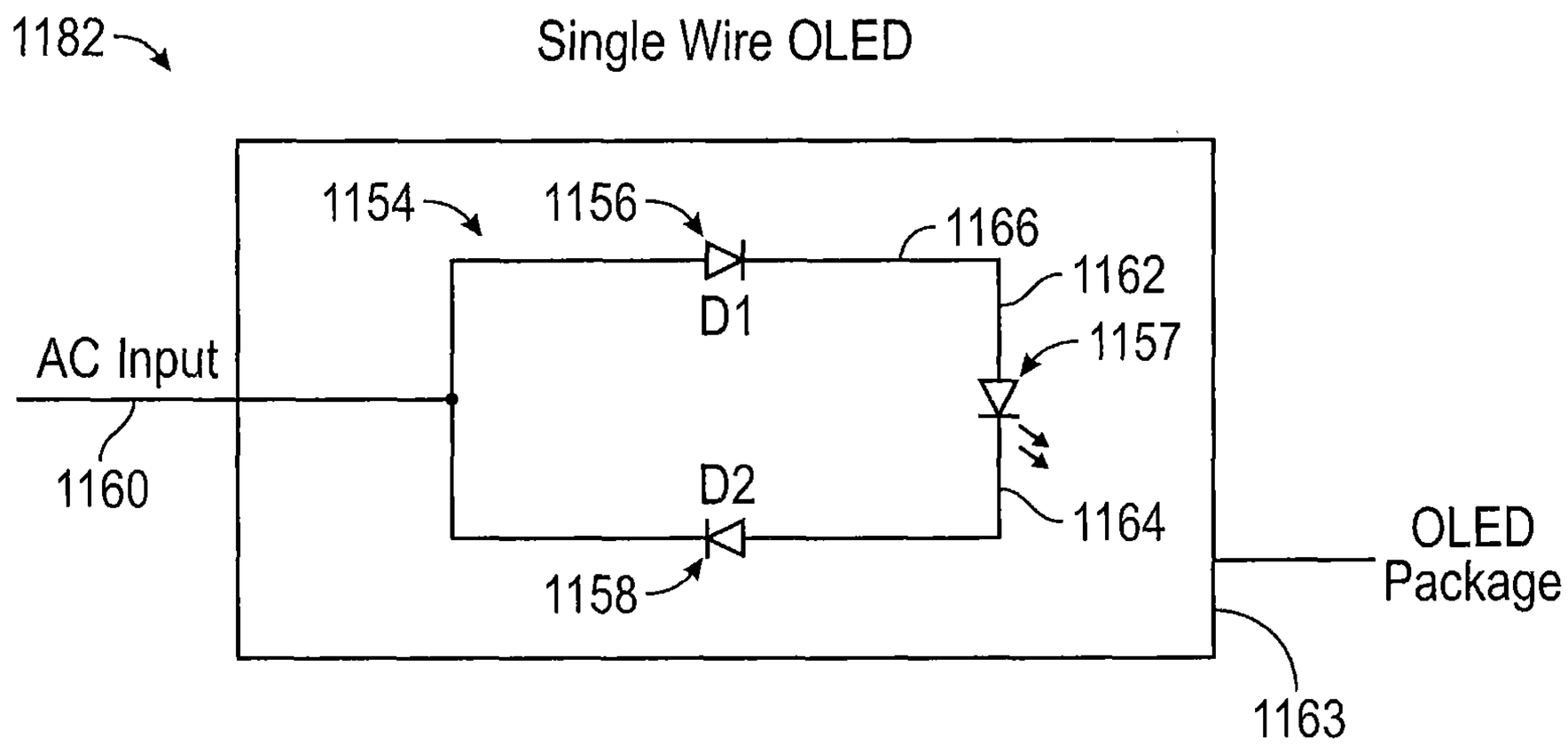
1182
Single Wire OLED
1154
1156
1166
1162
D1
1157
AC Input
1160
D2
1164
OLED
Package
1158
1163

FIG. 40

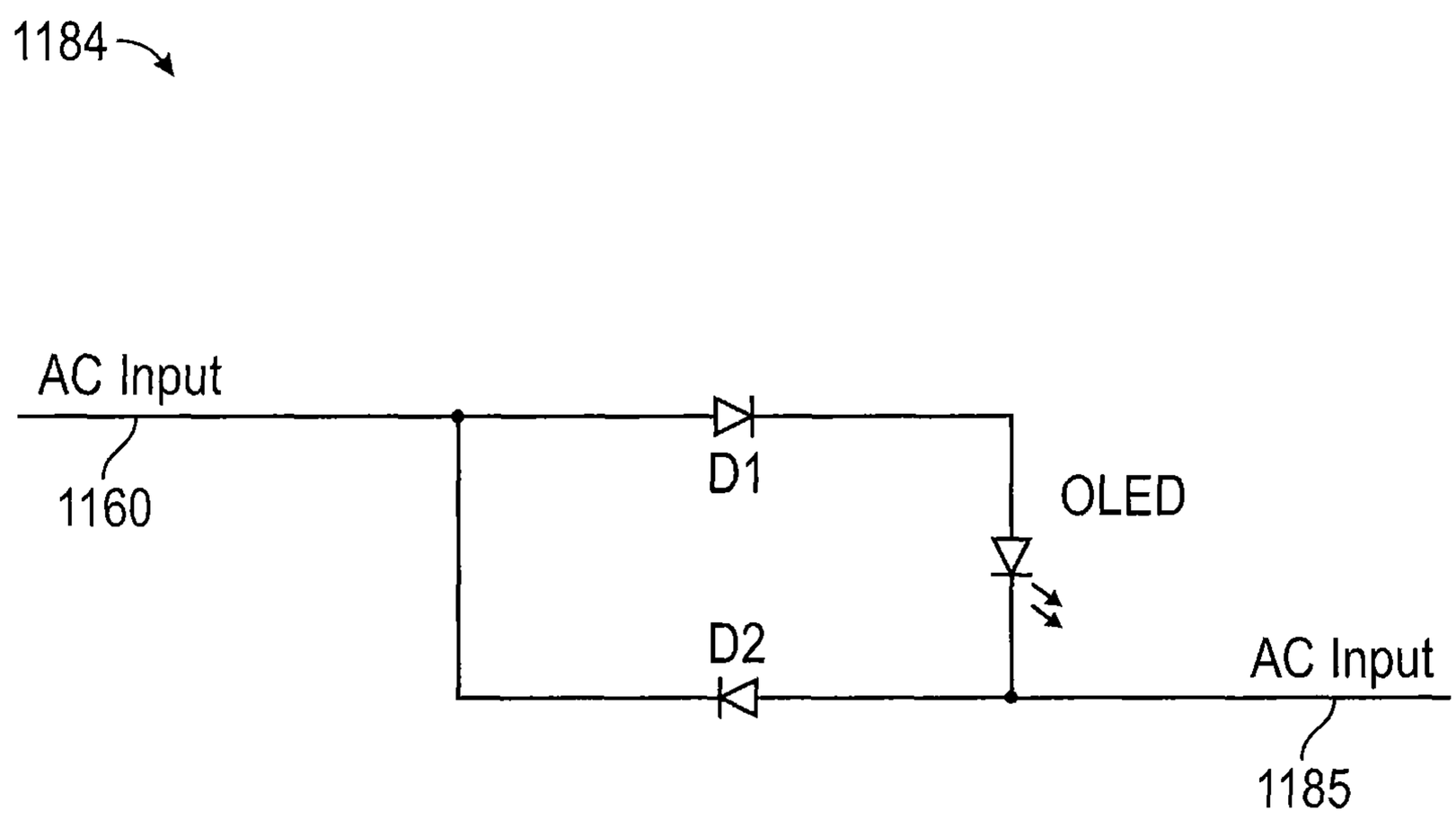
1184
AC Input
1160
D1
OLED
D2
AC Input
1185

FIG. 41

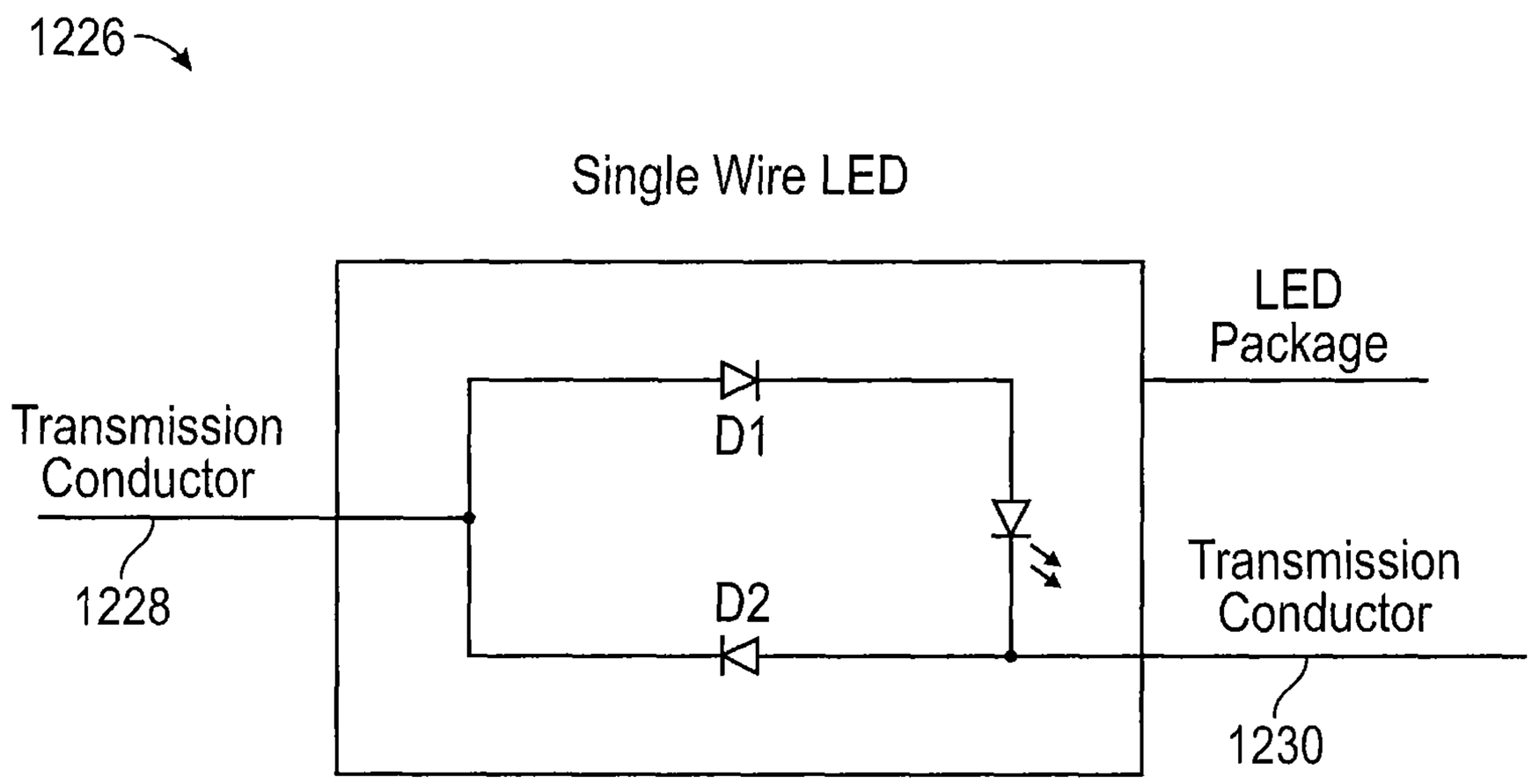
1226
Single Wire LED
LED
Package
Transmission
Conductor
D1
1228
D2
Transmission
Conductor
1230

FIG. 42

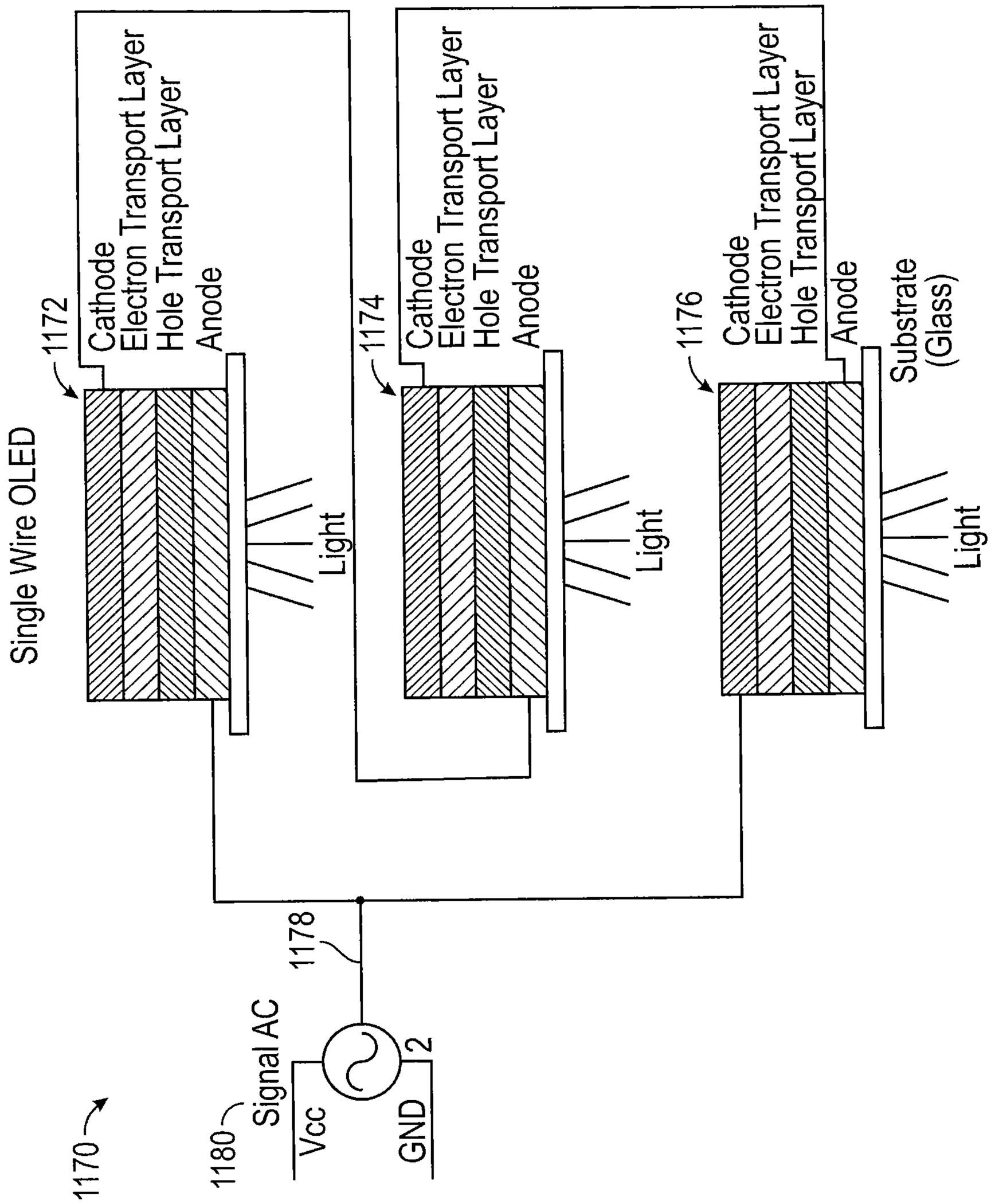
1170
Single Wire OLED
1172
Cathode
Electron Transport Layer
Hole Transport Layer
Anode
Light
1174
Cathode
Electron Transport Layer
Hole Transport Layer
Anode
Light
1176
Cathode
Electron Transport Layer
Hole Transport Layer
Anode
Substrate (Glass)
Light
1178
1180
Signal AC
Vcc
GND
2

FIG. 43

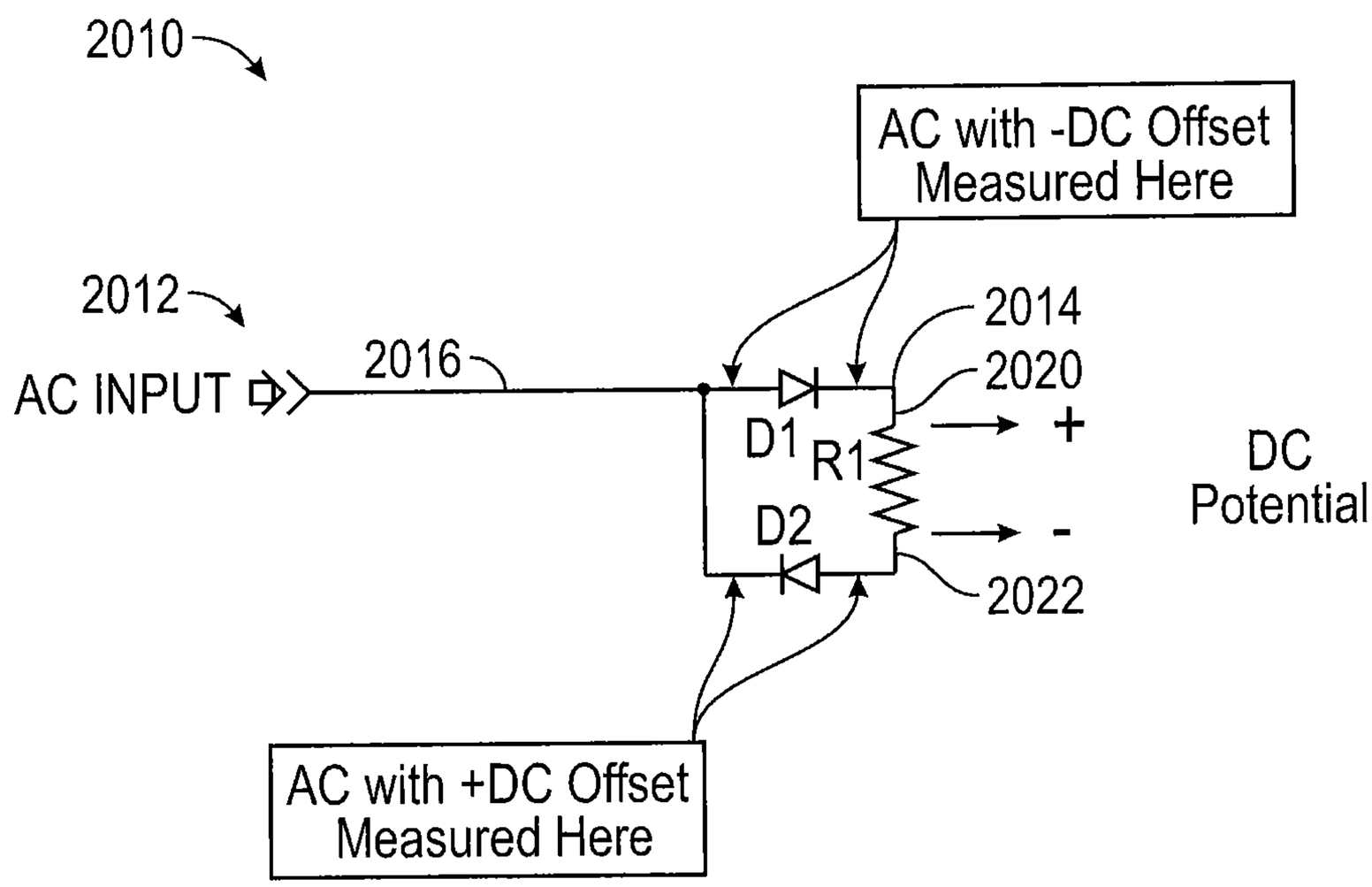
2010
AC with -DC Offset Measured Here
2012
2014
2016
2020
AC INPUT
D1
R1
+
DC Potential
D2
-
2022
AC with +DC Offset Measured Here

FIG. 44

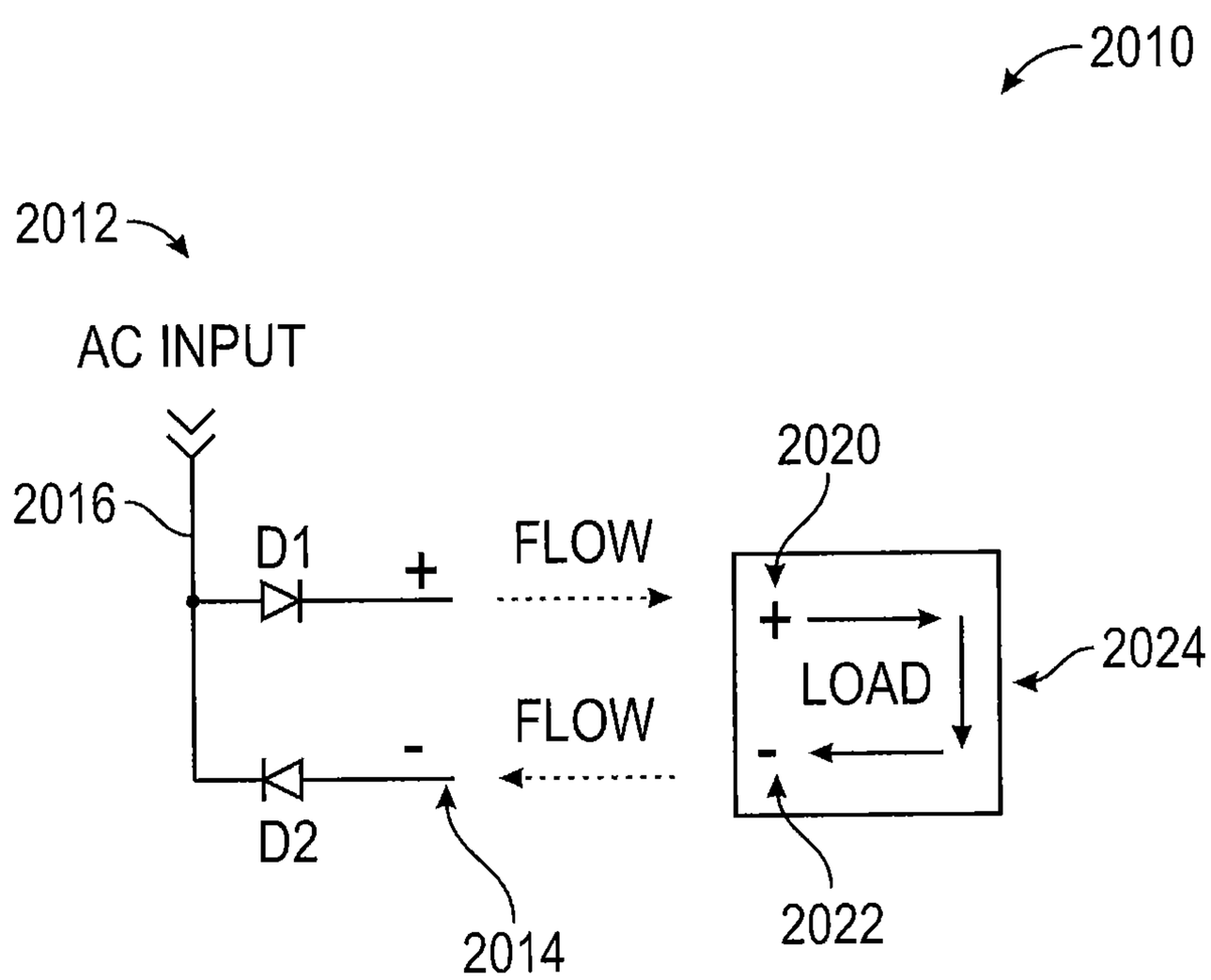
2010
2012
AC INPUT
2016
2020
D1
+
FLOW
+
LOAD
2024
FLOW
-
-
D2
2014
2022

FIG. 45

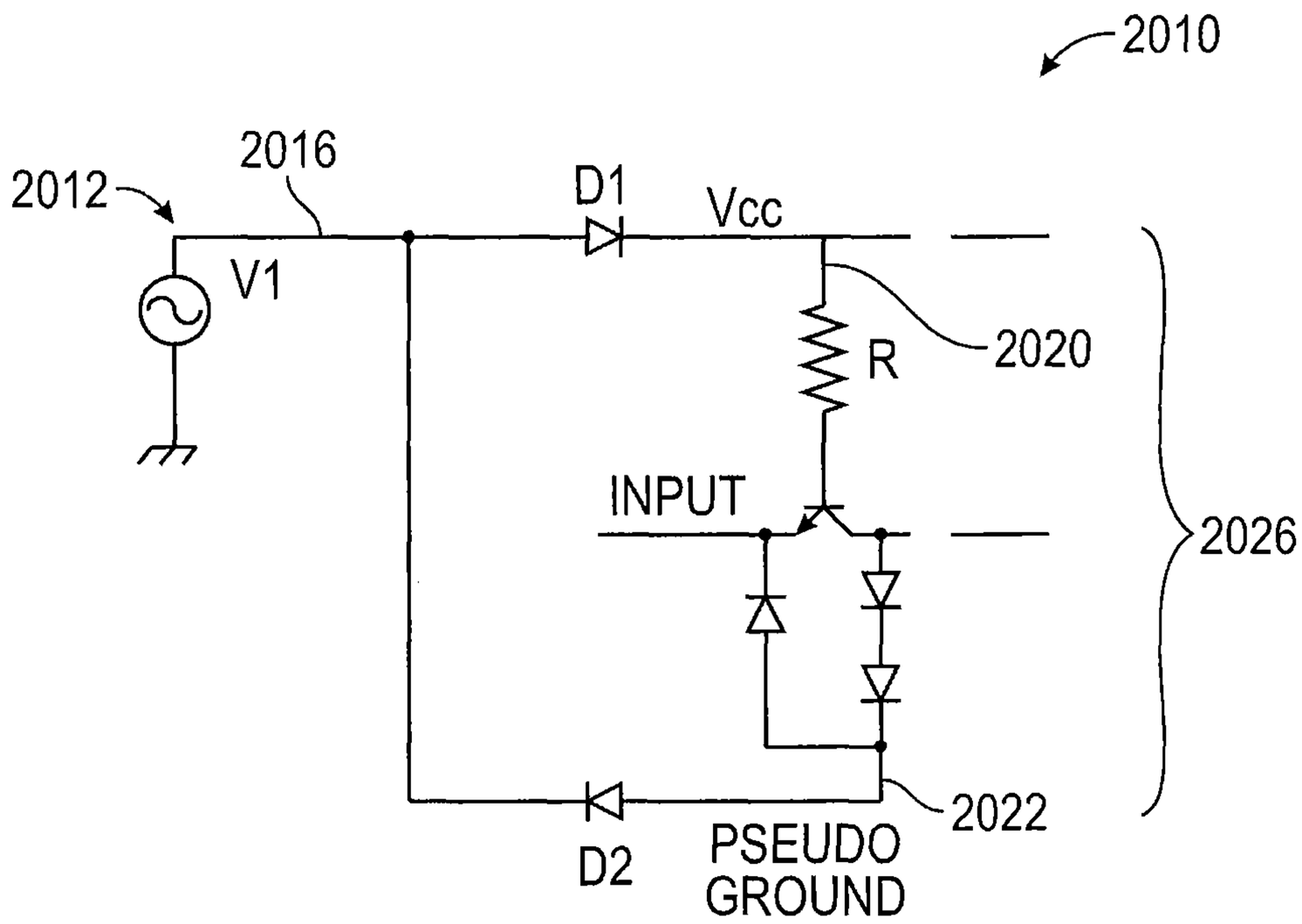
2010
2012
2016
D1
Vcc
V1
R
2020
INPUT
2026
2022
D2
PSEUDO
GROUND

FIG. 46

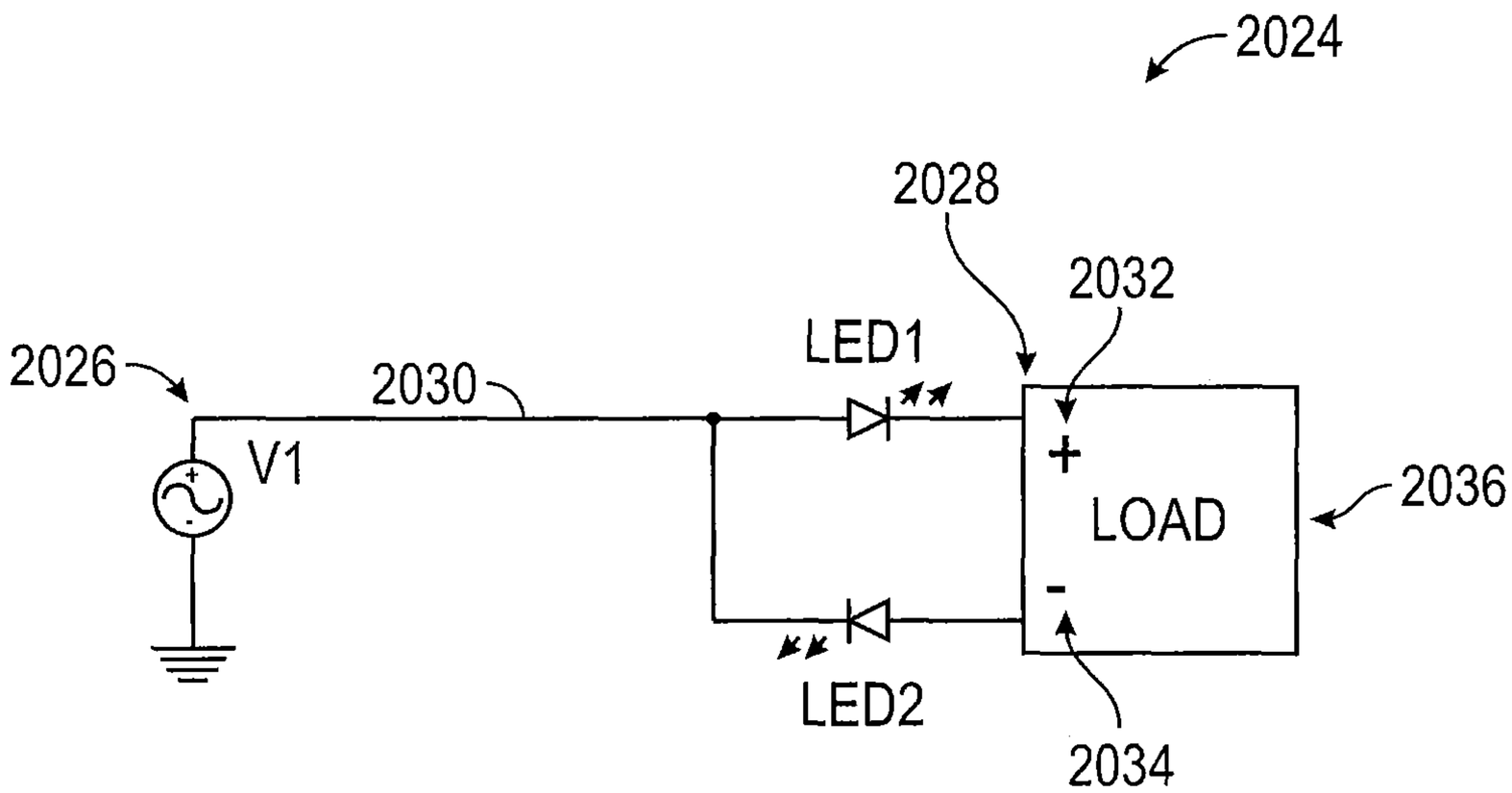
2024
2028
2032
LED1
2026
2030
V1
+
LOAD
2036
-
LED2
2034

FIG. 47

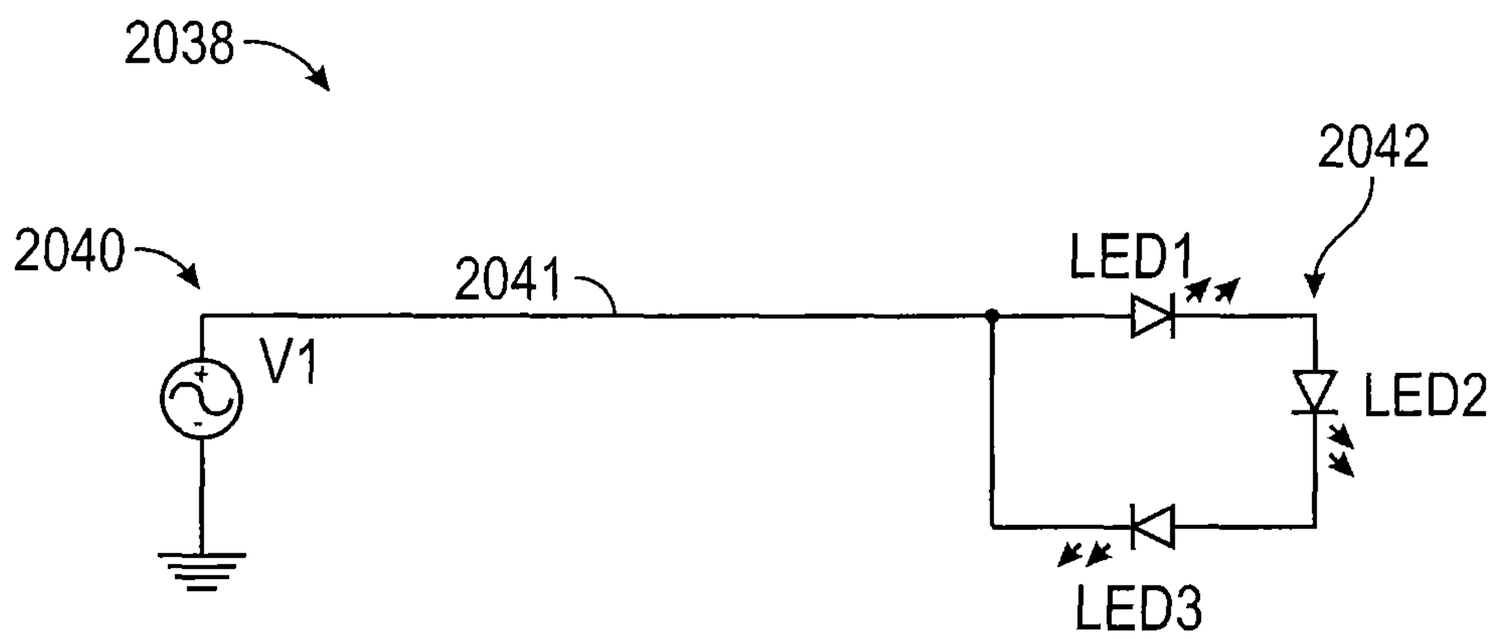
2038
2042
2040
2041
LED1
V1
LED2
LED3

FIG. 48

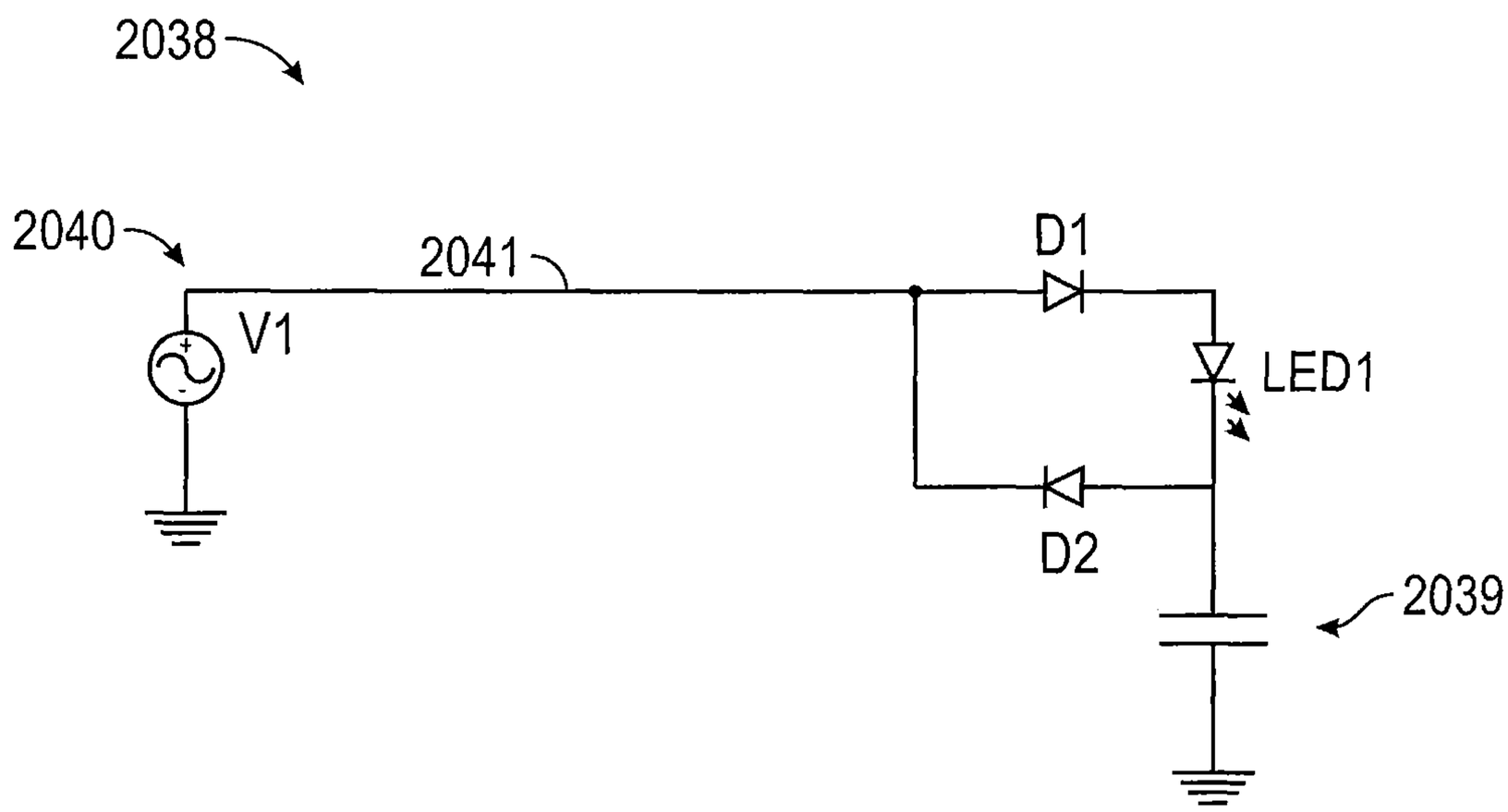
2038
2040
2041
D1
V1
LED1
D2
2039

FIG. 49

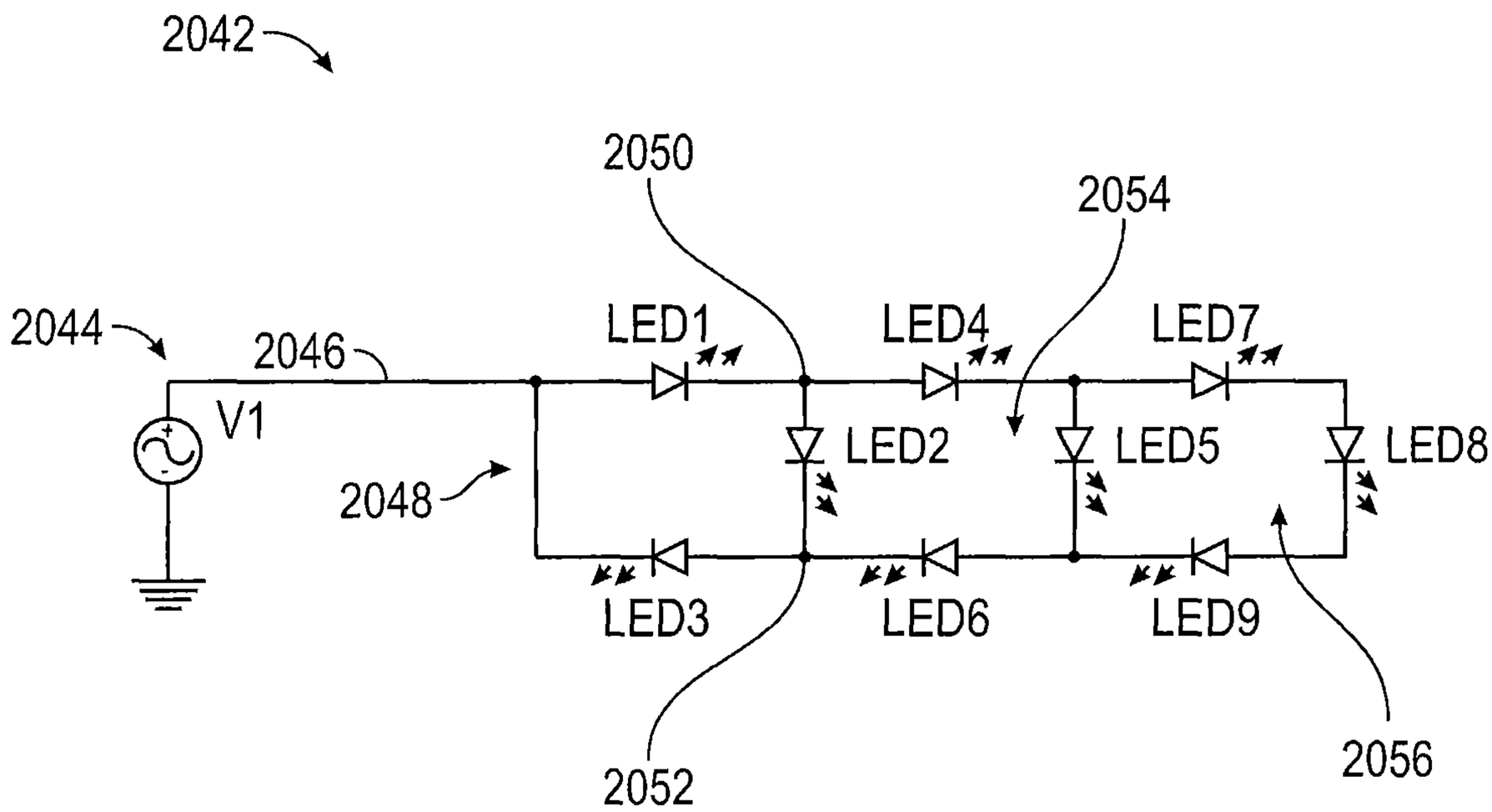
2042
2050
2054
2044
2046
LED1
LED4
LED7
V1
LED2
LED5
LED8
2048
LED3
LED6
LED9
2052
2056

FIG. 50

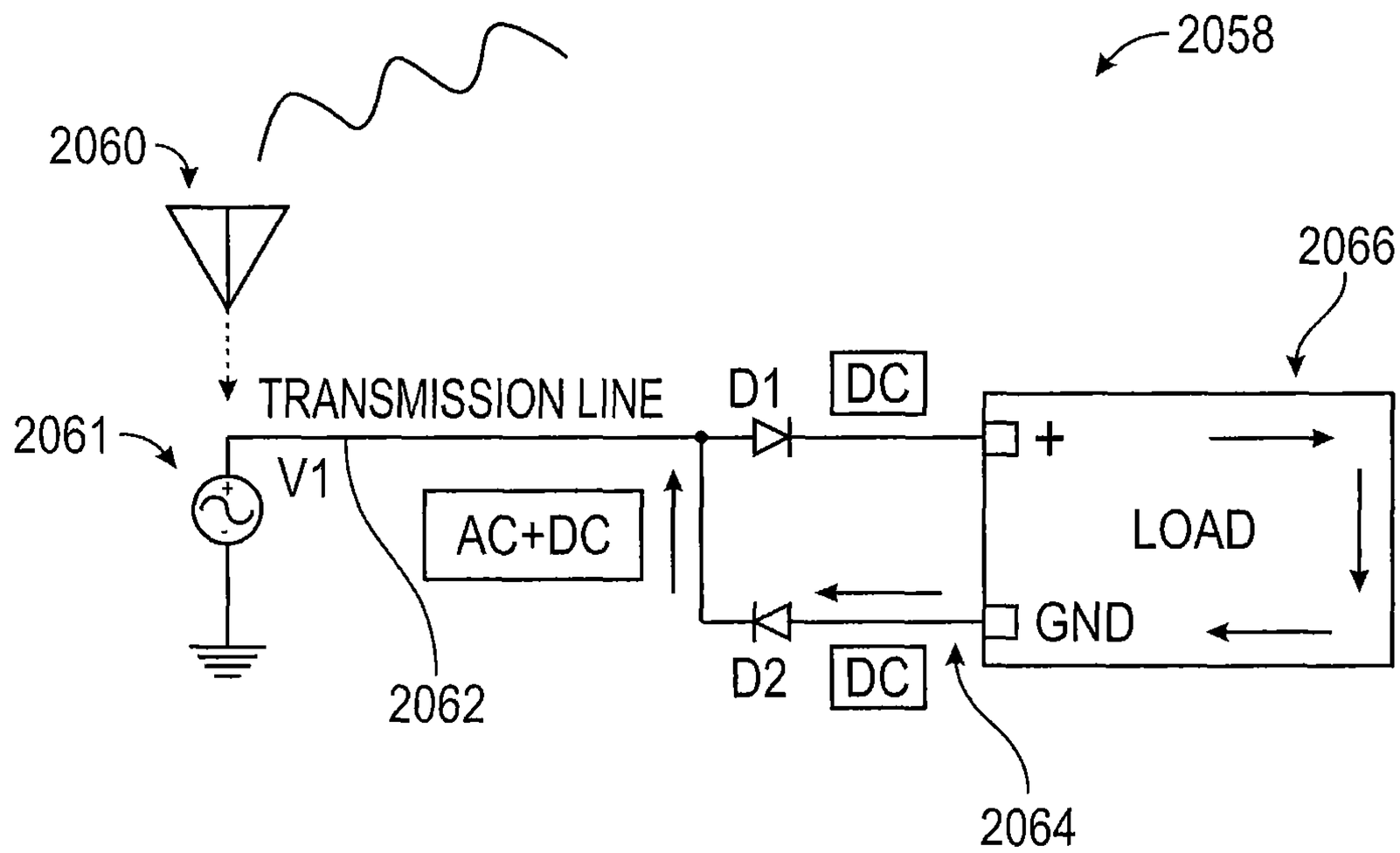
2058
2060
2066
TRANSMISSION LINE
D1
DC
2061
V1
+
AC+DC
LOAD
GND
D2
DC
2062
2064

FIG. 51

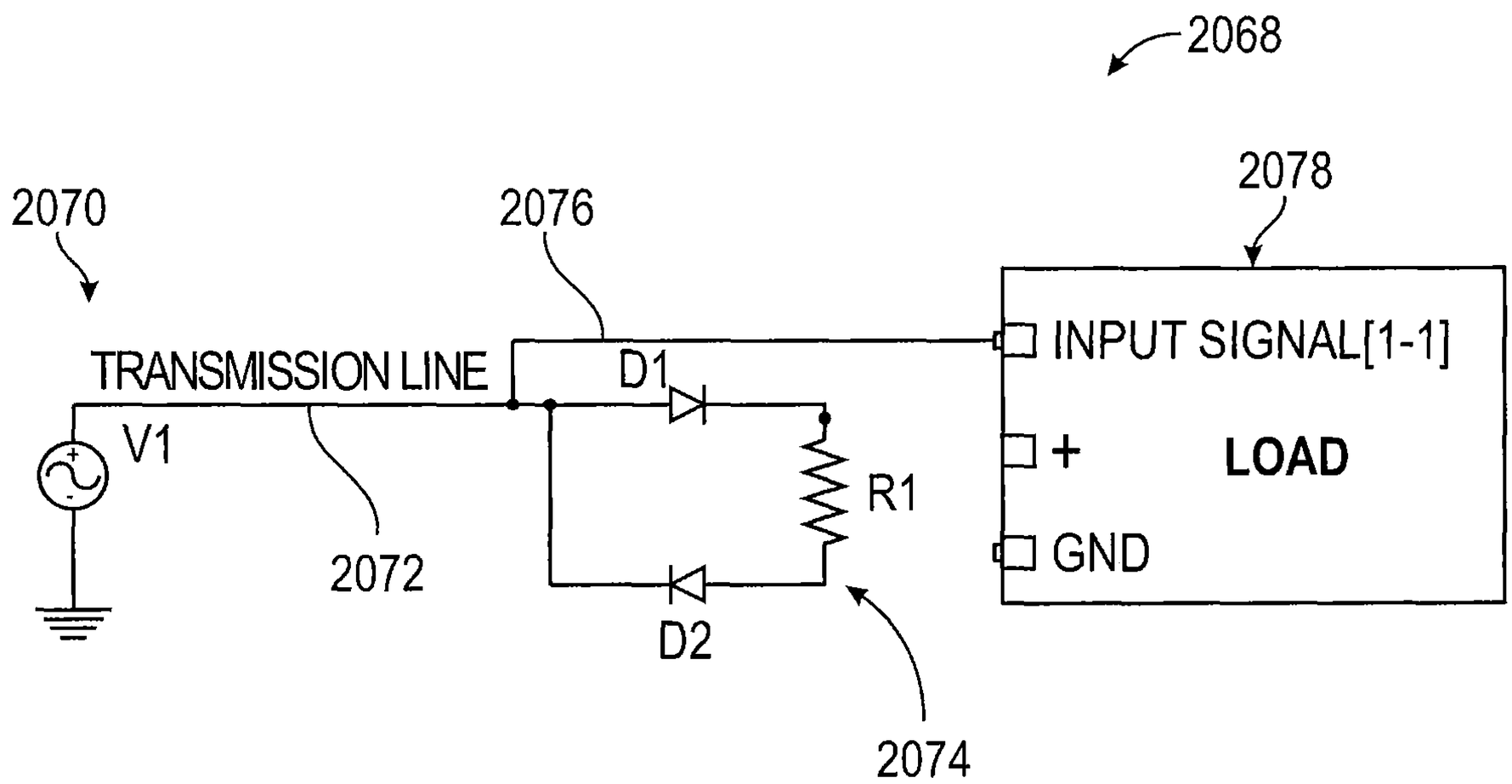
2068
2070
2076
2078
TRANSMISSION LINE
D1
INPUT SIGNAL[1-1]
V1
+
LOAD
R1
GND
2072
D2
2074

FIG. 52

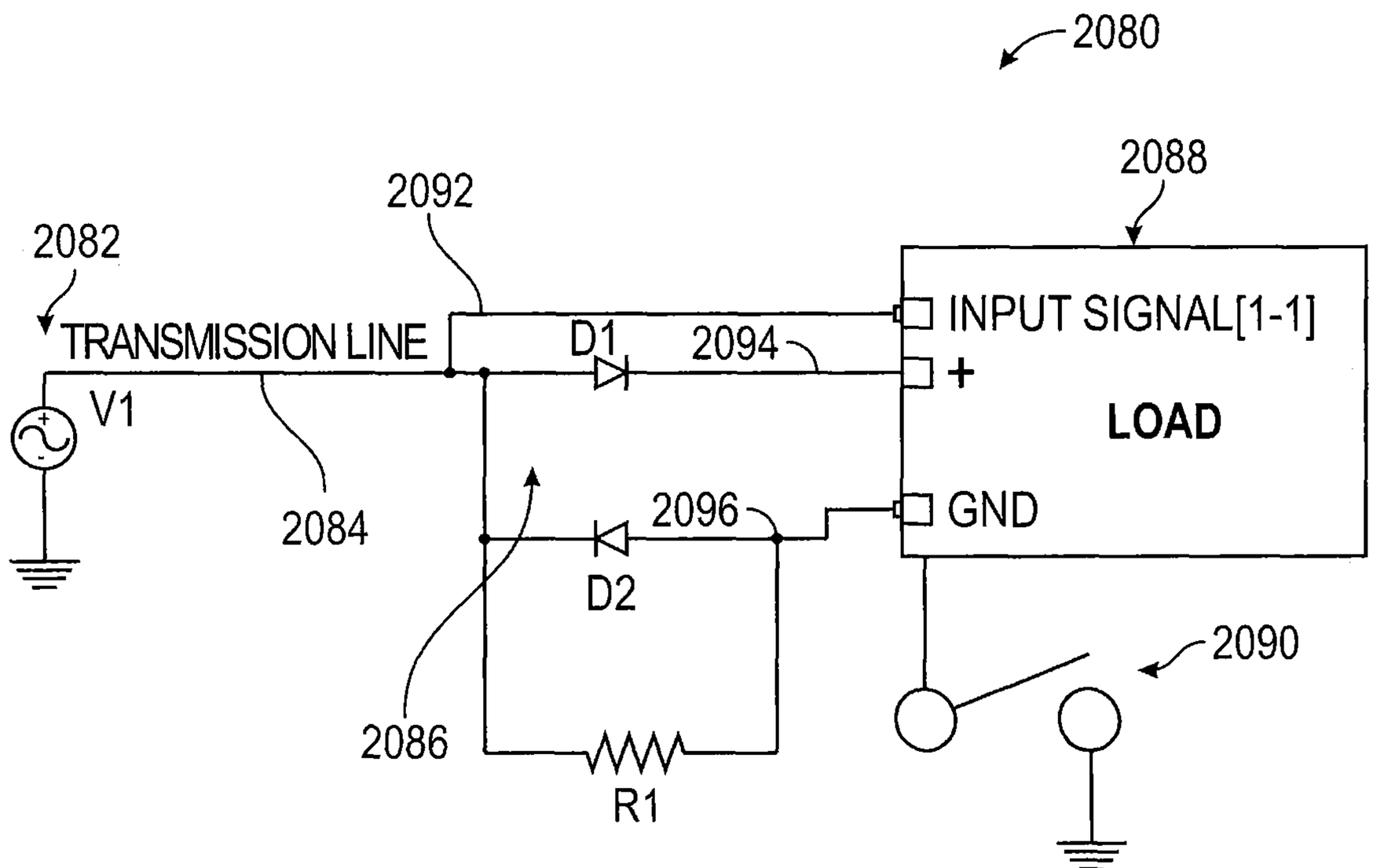
2080
2088
2092
2082
TRANSMISSION LINE
D1
2094
INPUT SIGNAL[1-1]
+
V1
LOAD
2084
2096
GND
D2
2090
2086
R1

FIG. 53

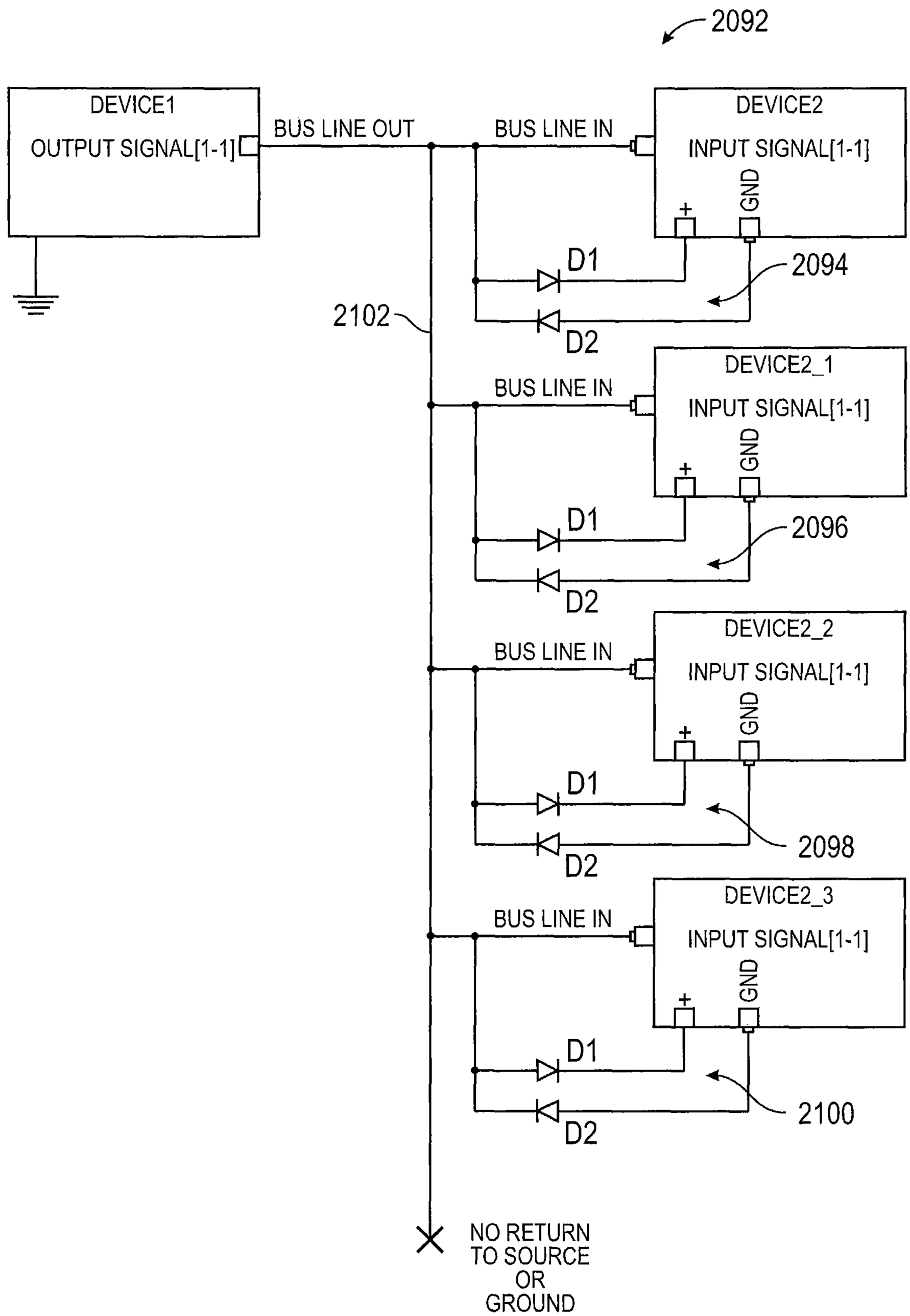
2092
DEVICE1
OUTPUT SIGNAL[1-1]
BUS LINE OUT
BUS LINE IN
DEVICE2
INPUT SIGNAL[1-1]
+
GND
D1
D2
2094
2102
DEVICE2_1
INPUT SIGNAL[1-1]
2096
DEVICE2_2
INPUT SIGNAL[1-1]
2098
DEVICE2_3
INPUT SIGNAL[1-1]
2100
NO RETURN
TO SOURCE
OR
GROUND

FIG. 54

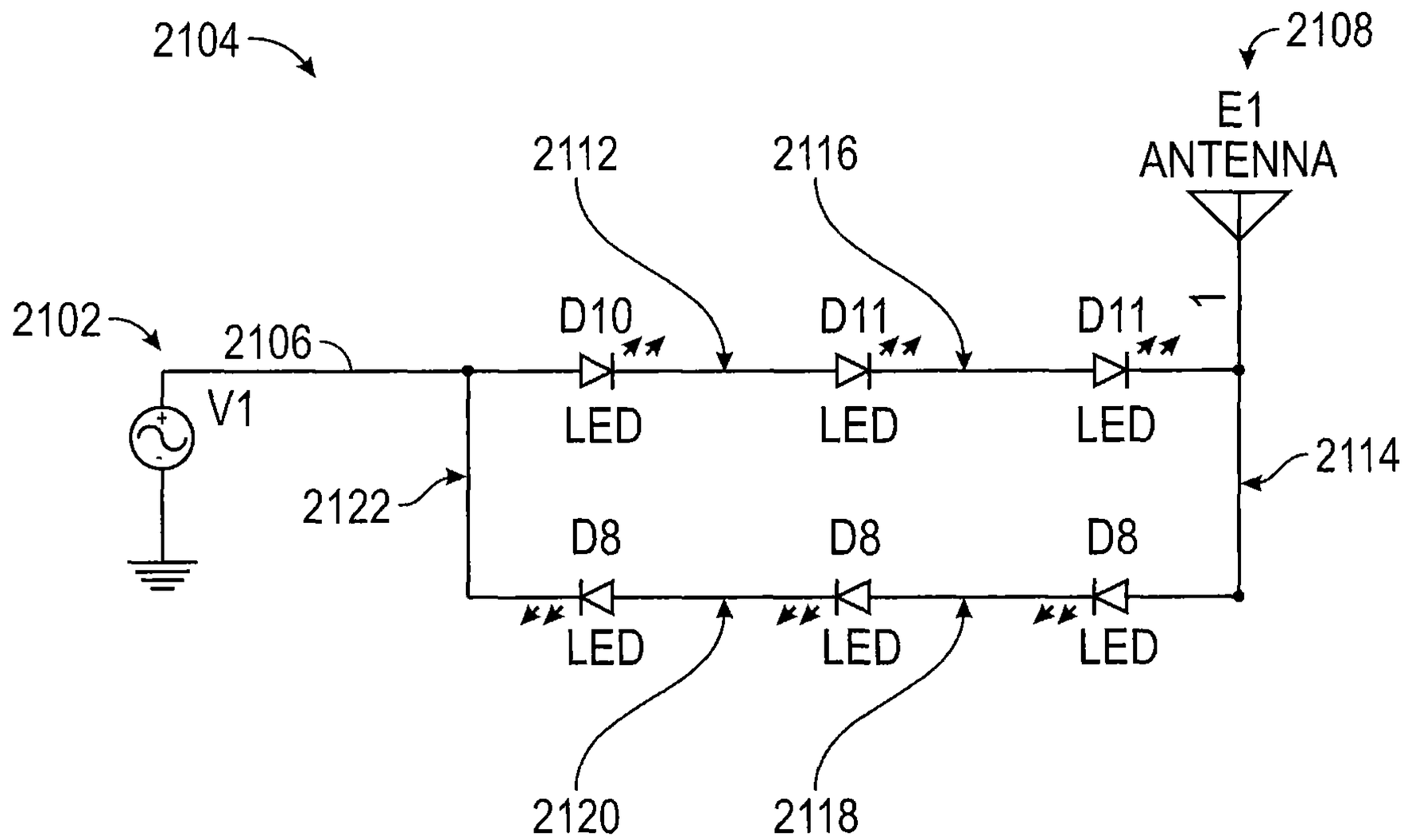
2104
2108
E1
ANTENNA
2112
2116
2102
2106
D10
D11
D11
V1
LED
LED
LED
2114
2122
D8
D8
D8
LED
LED
LED
2120
2118

FIG. 55

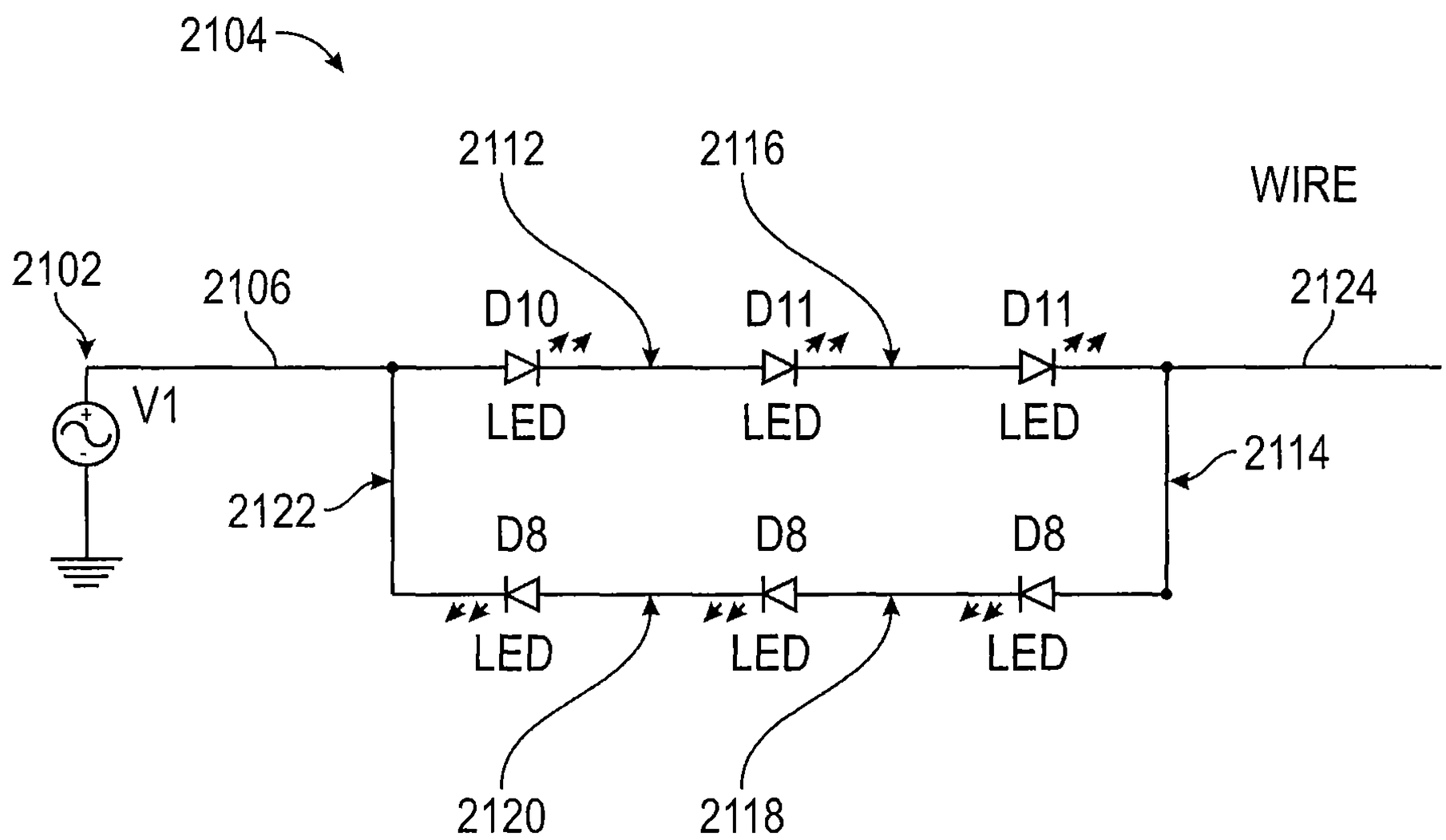
2104
2112
2116
WIRE
2102
2106
D10
D11
D11
2124
V1
LED
LED
LED
2114
2122
D8
D8
D8
LED
LED
LED
2120
2118

FIG. 56

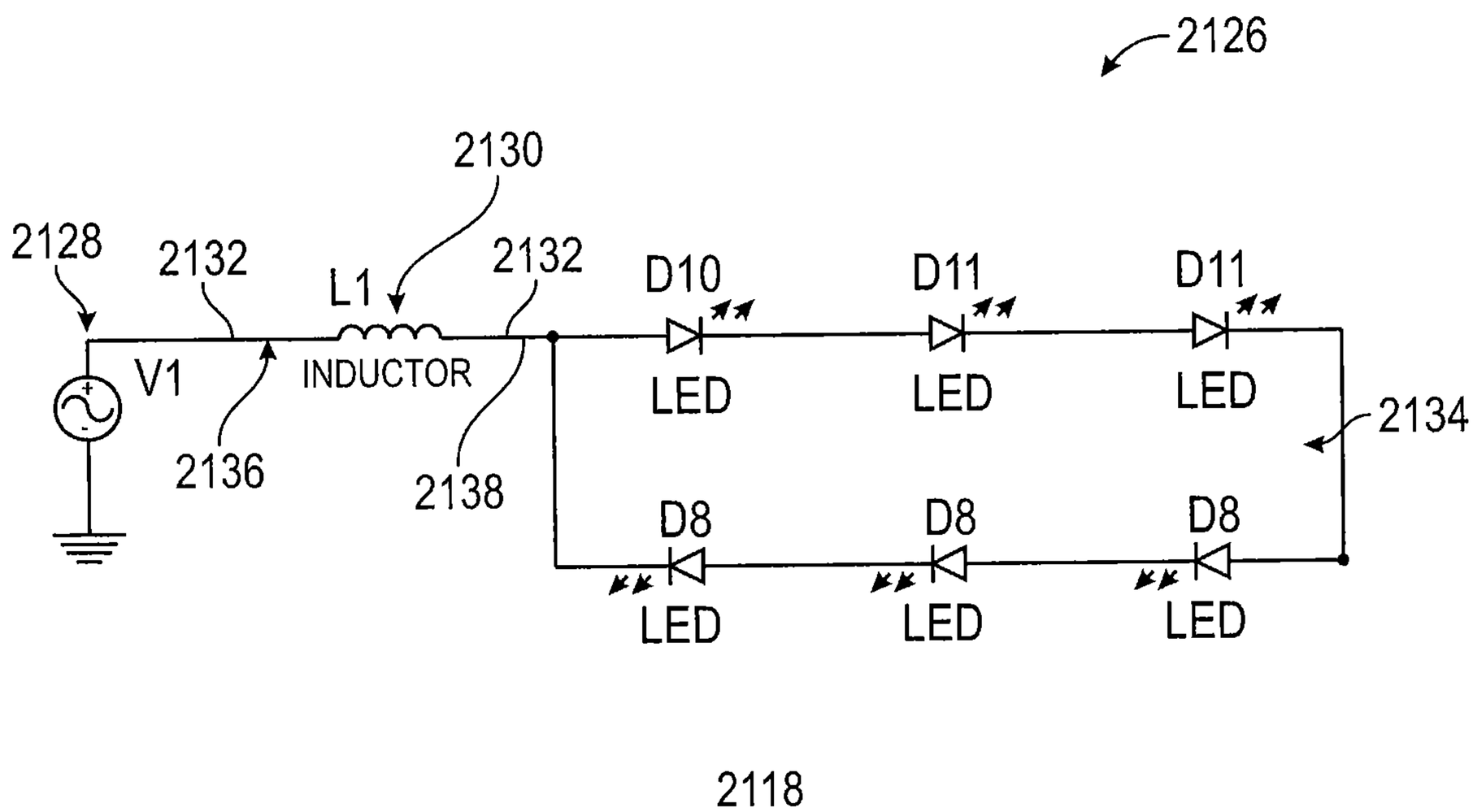
2126
2130
2128
2132
L1
2132
D10
D11
D11
V1
INDUCTOR
LED
LED
LED
2134
2136
2138
D8
D8
D8
LED
LED
LED
2118

FIG. 57

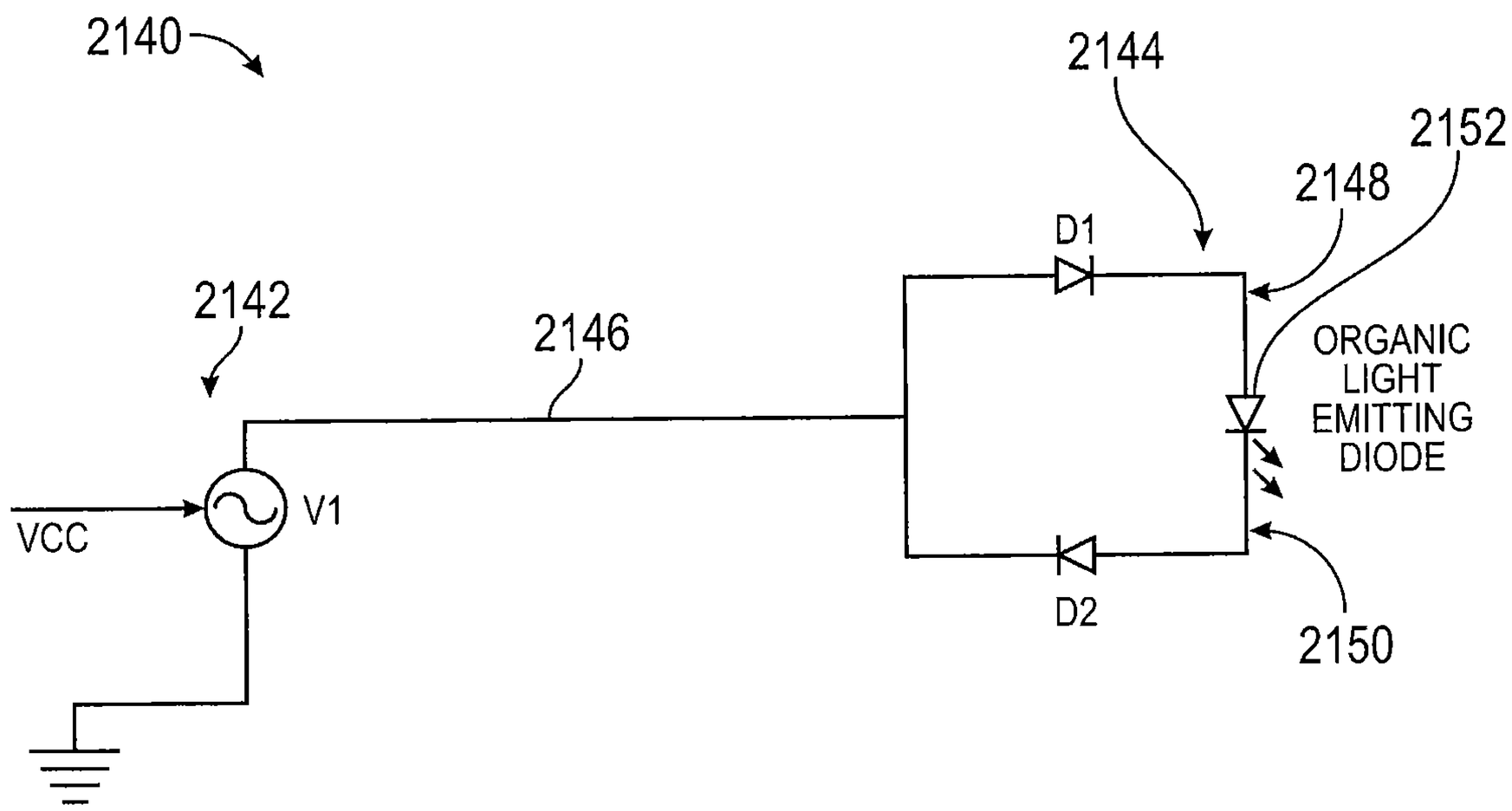
2140
2144
2152
2148
D1
2142
2146
ORGANIC
LIGHT
EMITTING
DIODE
VCC
V1
D2
2150

FIG. 58

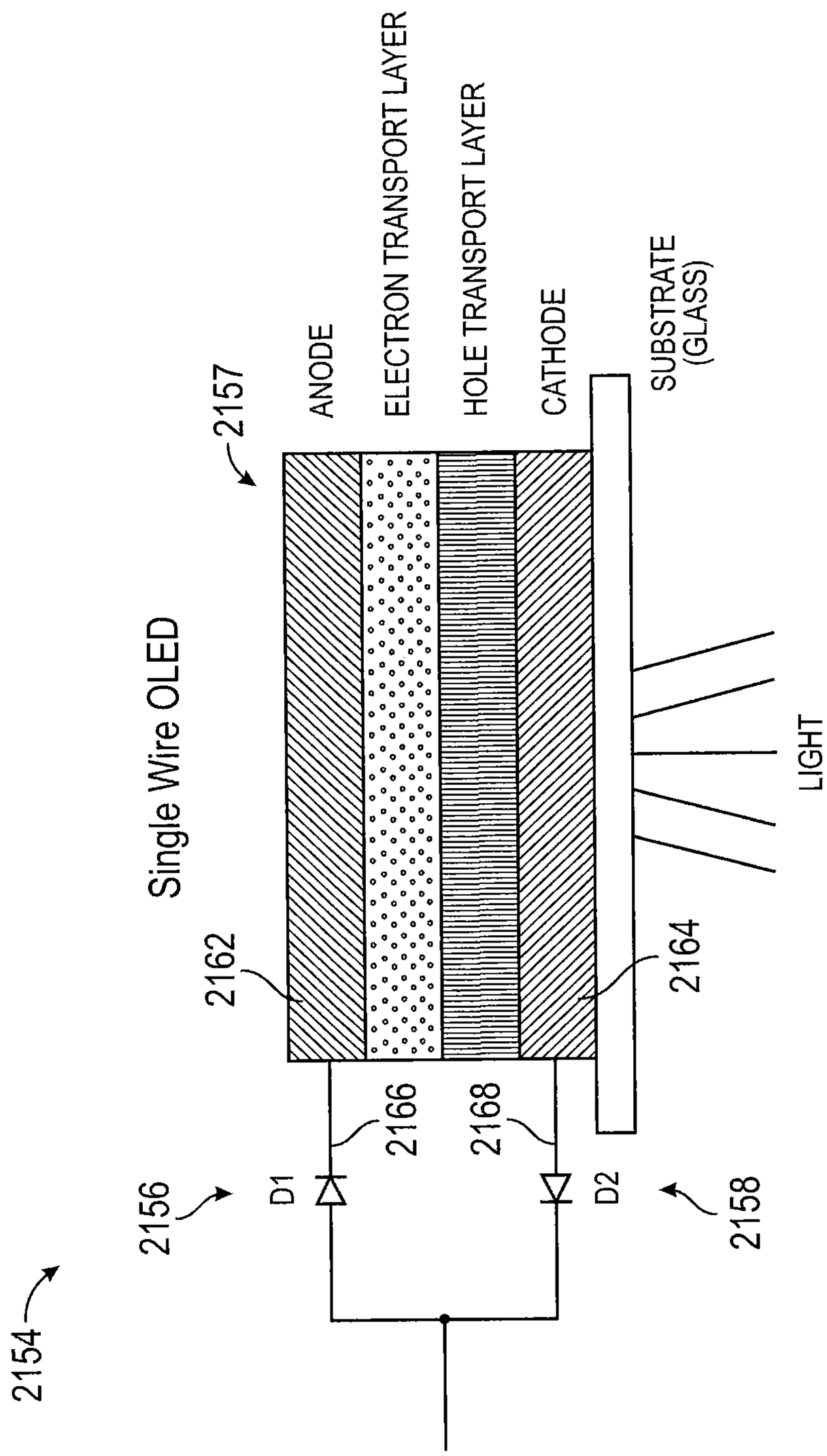
Single Wire OLED
2157
ANODE
ELECTRON TRANSPORT LAYER
HOLE TRANSPORT LAYER
CATHODE
SUBSTRATE (GLASS)
LIGHT
2162
2164
2166
2168
2156
D1
D2
2158
2154

FIG. 59

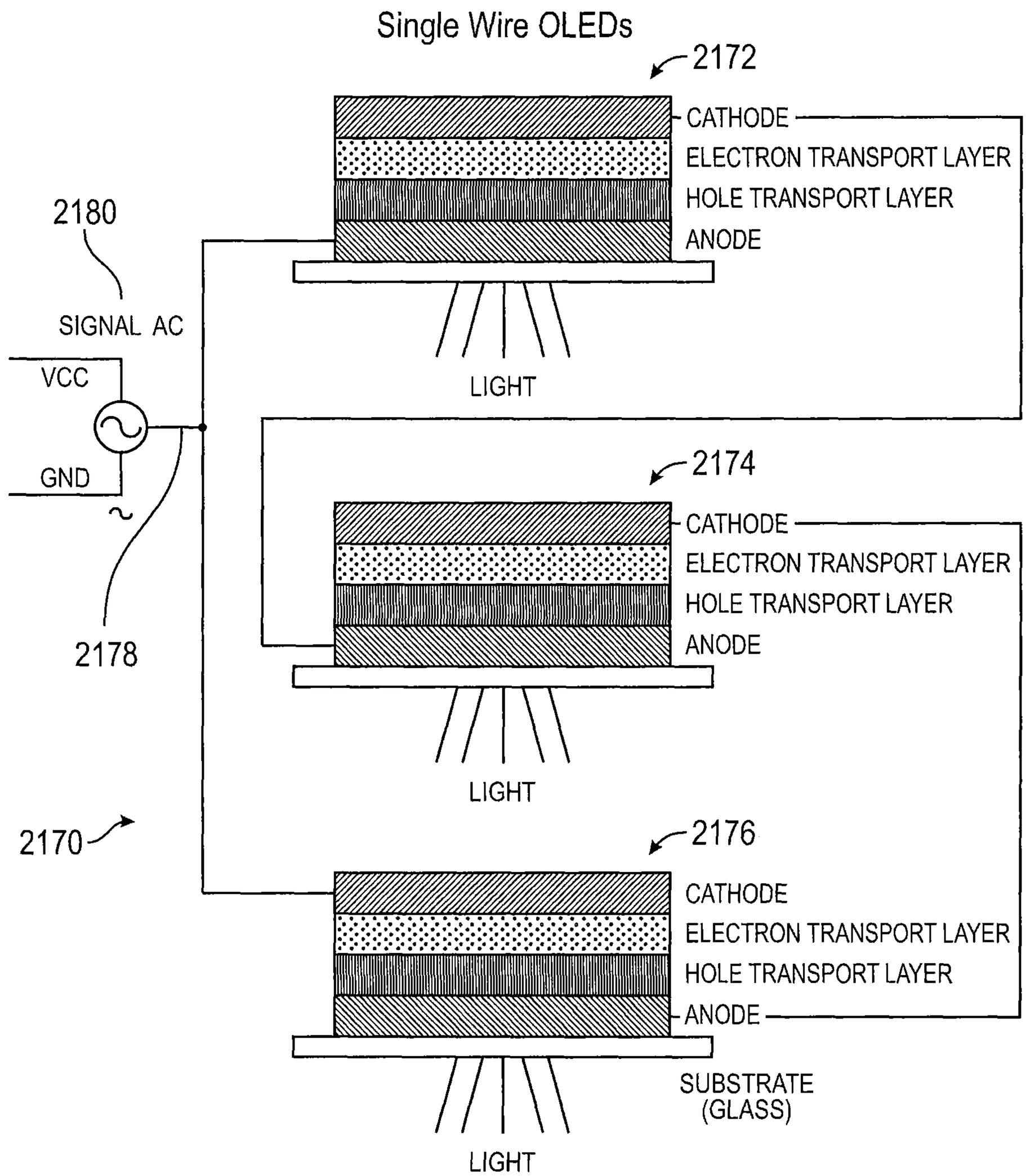
Single Wire OLEDs
2172
CATHODE
ELECTRON TRANSPORT LAYER
HOLE TRANSPORT LAYER
ANODE
LIGHT
2180
SIGNAL AC
VCC
GND
2178
2174
CATHODE
ELECTRON TRANSPORT LAYER
HOLE TRANSPORT LAYER
ANODE
LIGHT
2170
2176
CATHODE
ELECTRON TRANSPORT LAYER
HOLE TRANSPORT LAYER
ANODE
SUBSTRATE
(GLASS)
LIGHT

FIG. 60

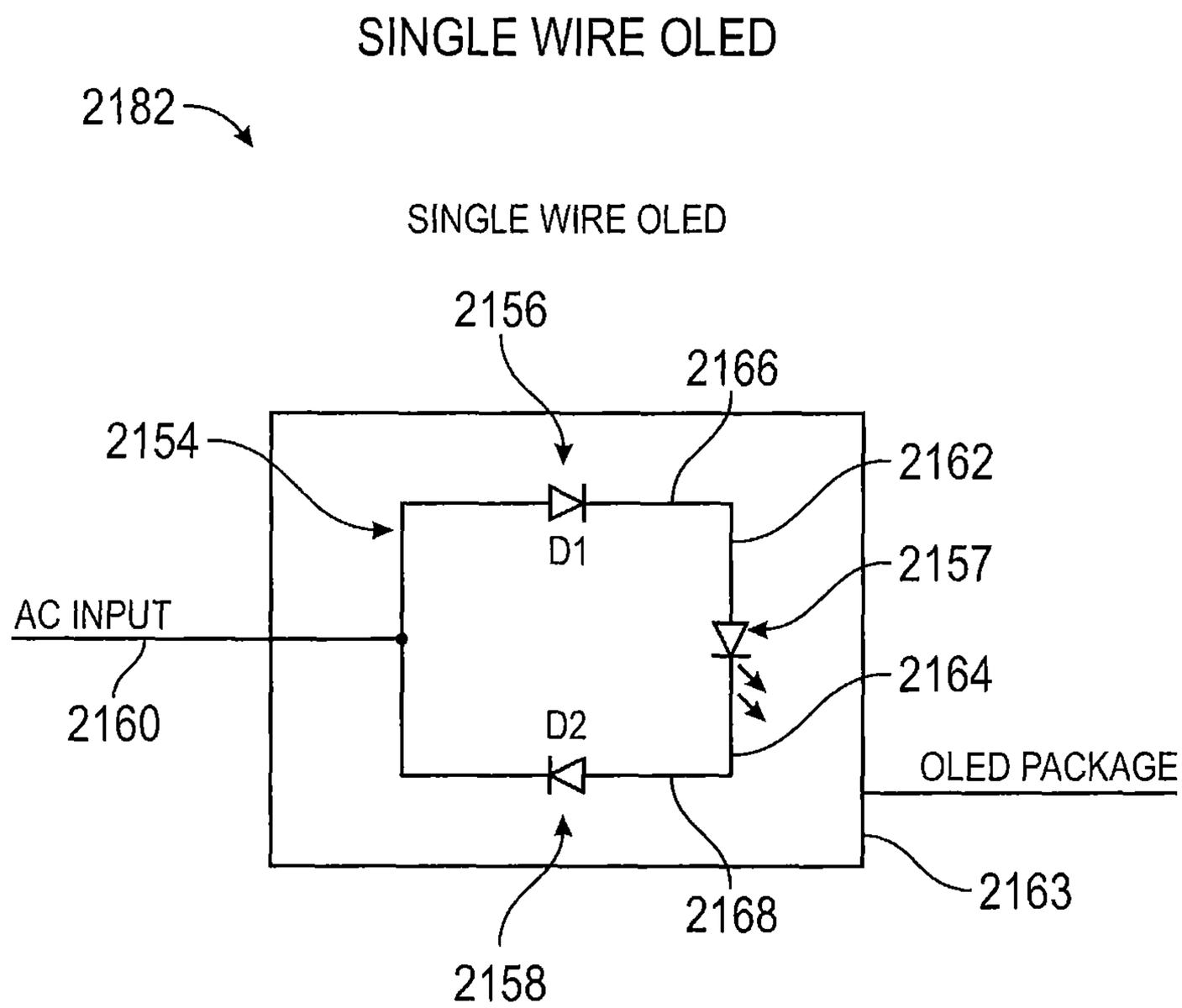
SINGLE WIRE OLED
2182
SINGLE WIRE OLED
2156
2166
2154
2162
D1
2157
AC INPUT
2164
2160
D2
OLED PACKAGE
2168
2163
2158

FIG. 61

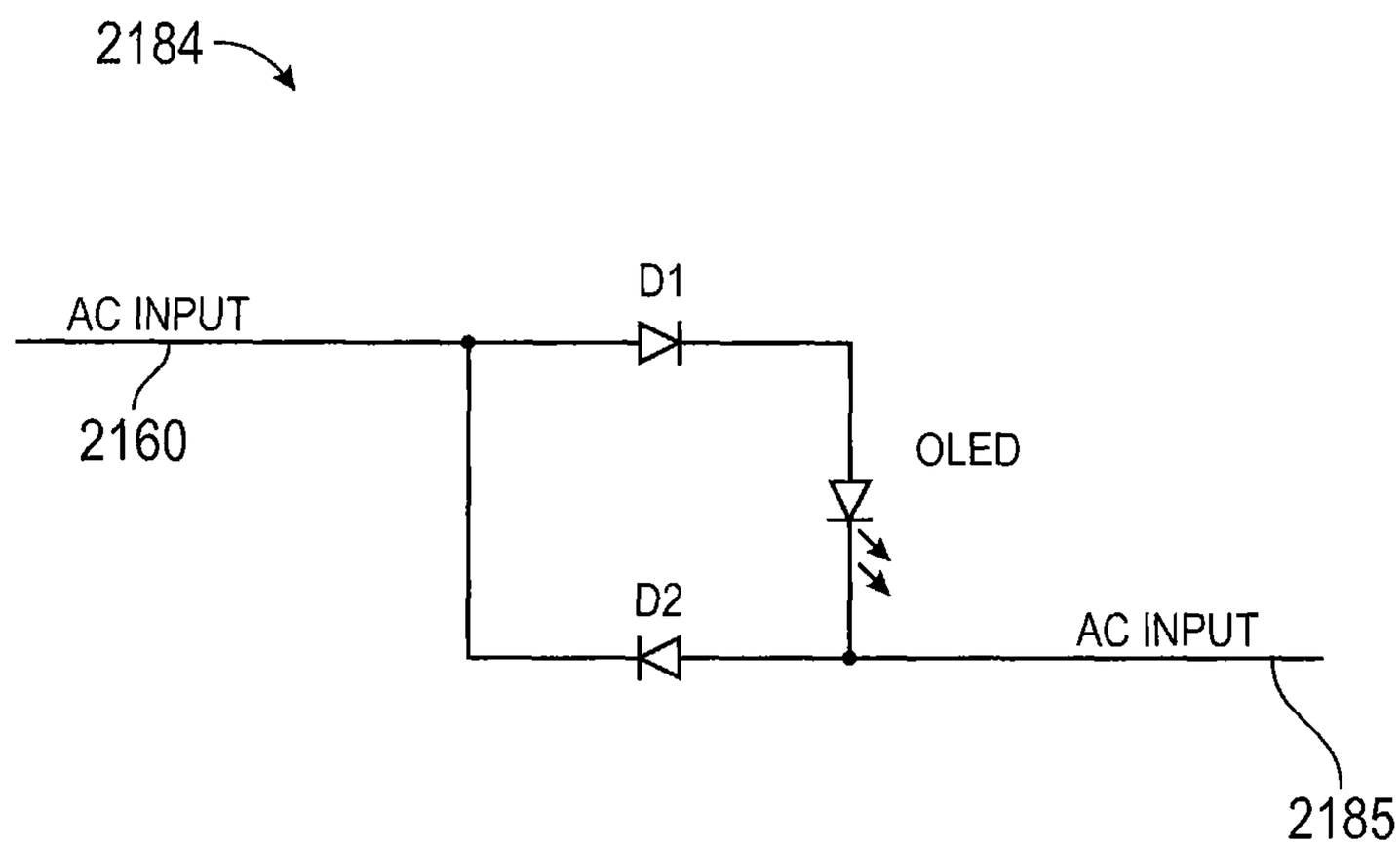

FIG. 62

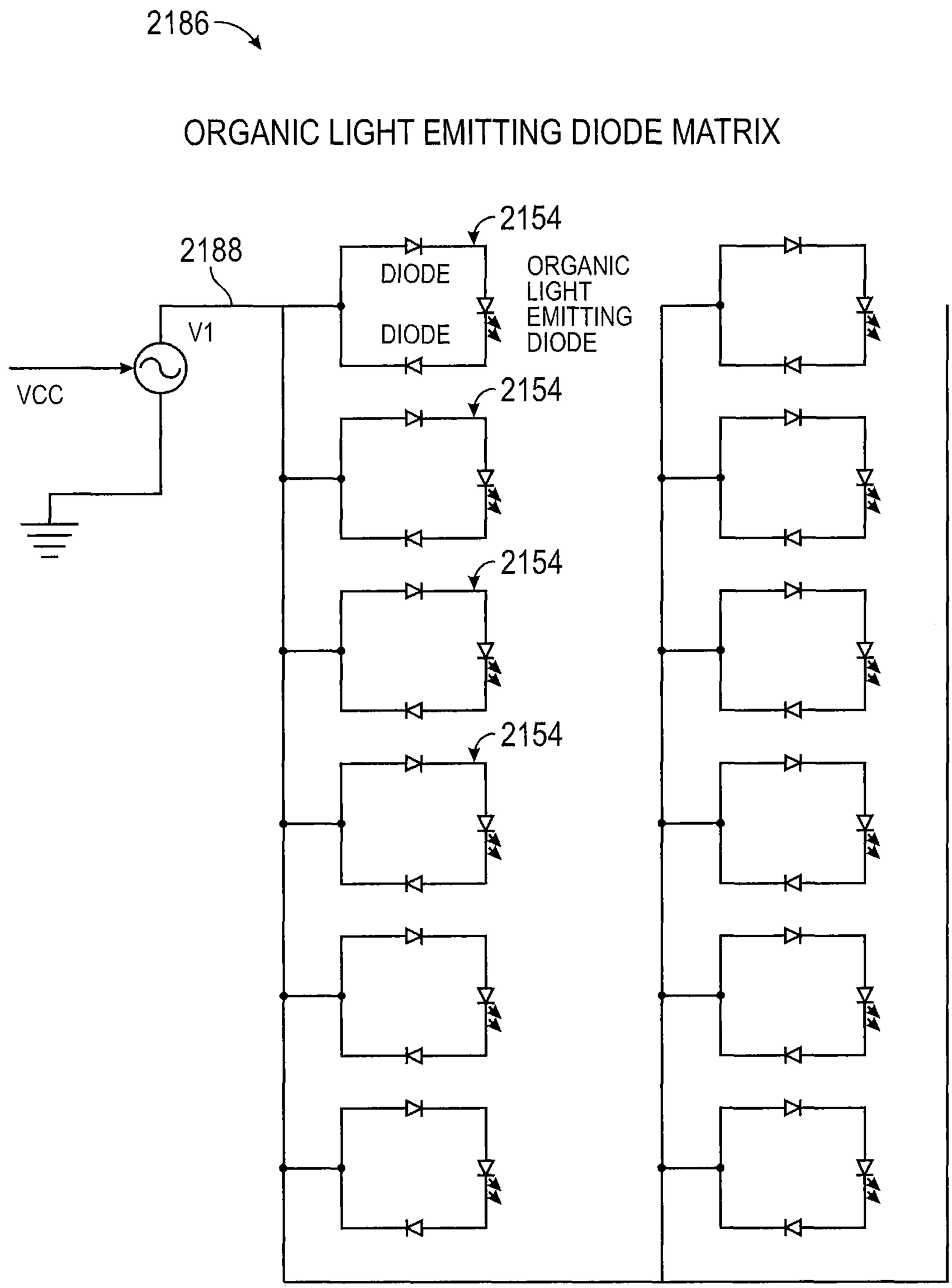
2186
ORGANIC LIGHT EMITTING DIODE MATRIX
2188
V1
VCC
2154
DIODE
DIODE
ORGANIC
LIGHT
EMITTING
DIODE
2154
2154
2154

FIG. 63

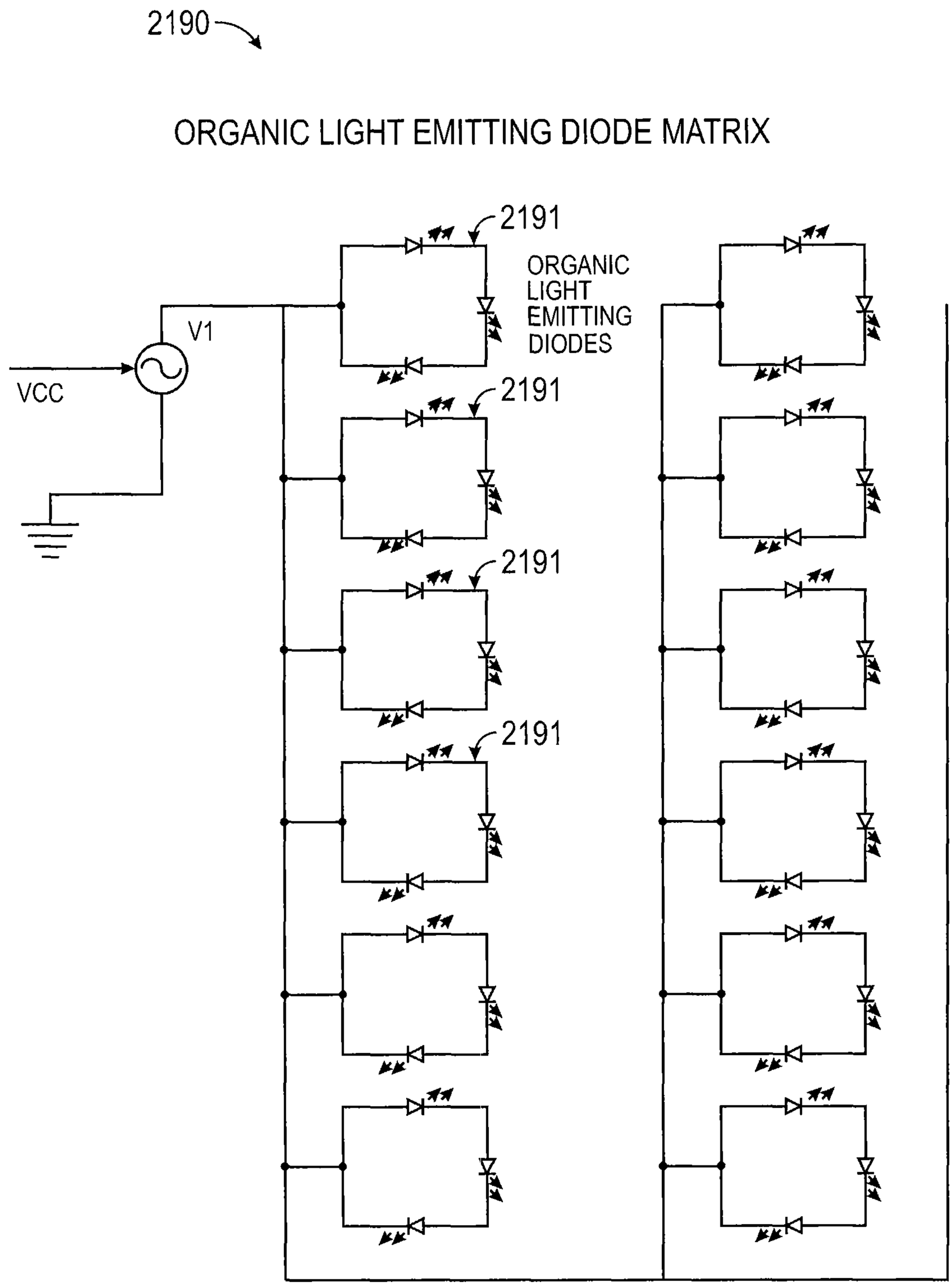
2190
ORGANIC LIGHT EMITTING DIODE MATRIX
2191
ORGANIC LIGHT EMITTING DIODES
V1
VCC
2191
2191
2191

FIG. 64

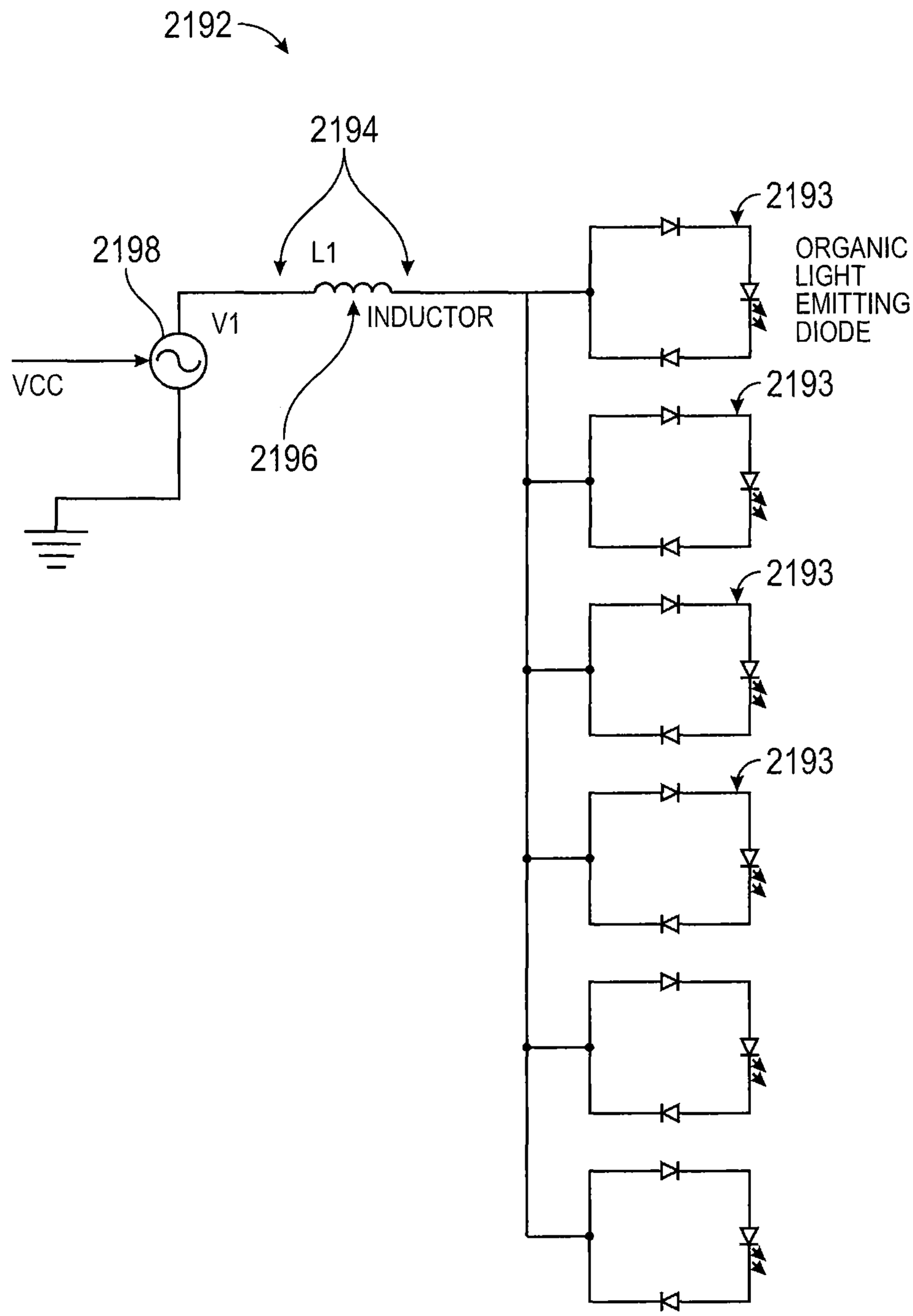
2192
2194
2198
L1
V1
INDUCTOR
VCC
2196
2193
ORGANIC
LIGHT
EMITTING
DIODE
2193
2193
2193

FIG. 65

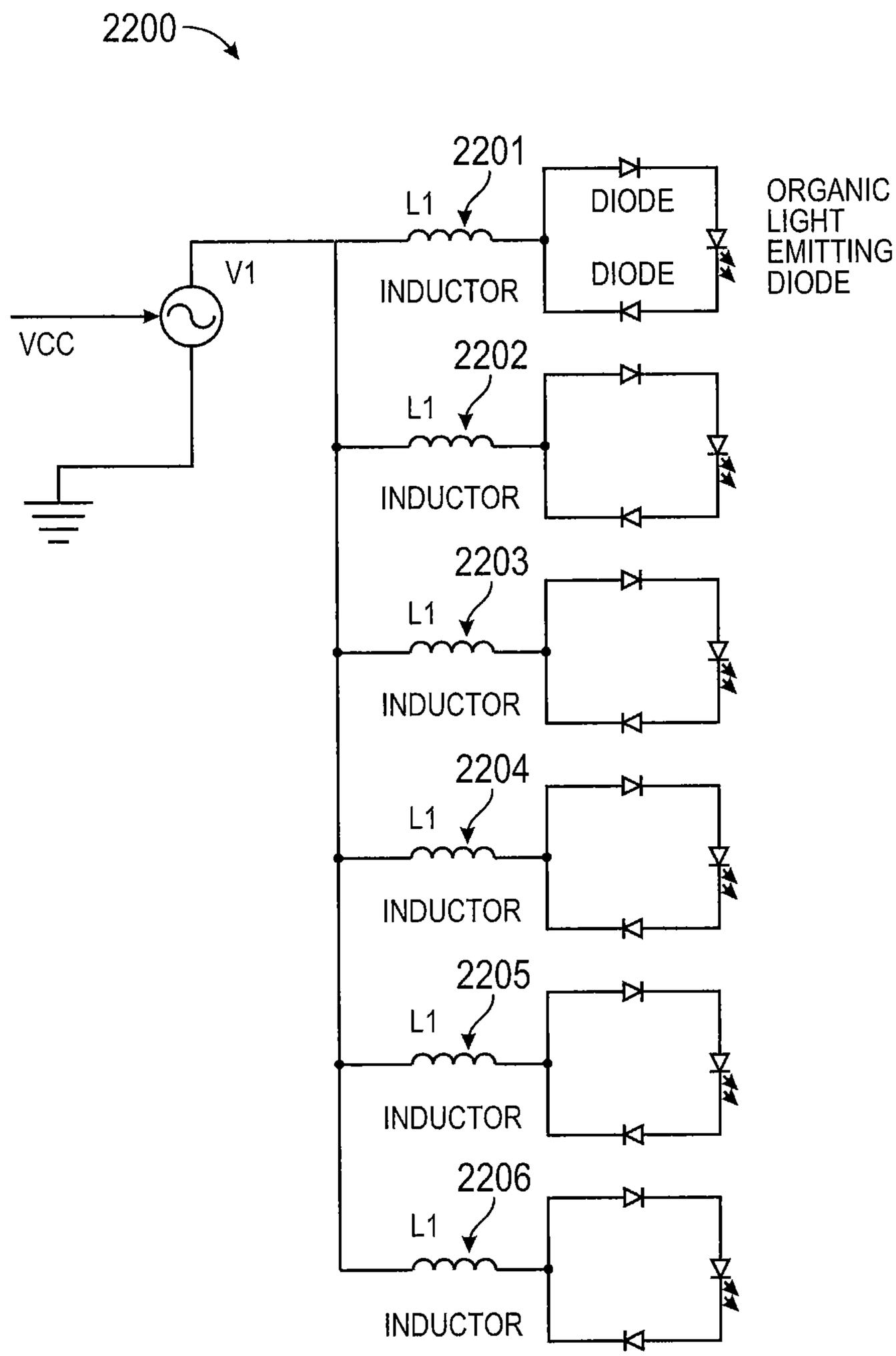
2200
2201
L1
DIODE
DIODE
ORGANIC
LIGHT
EMITTING
DIODE
V1
INDUCTOR
VCC
2202
L1
INDUCTOR
2203
L1
INDUCTOR
2204
L1
INDUCTOR
2205
L1
INDUCTOR
2206
L1
INDUCTOR

FIG. 66

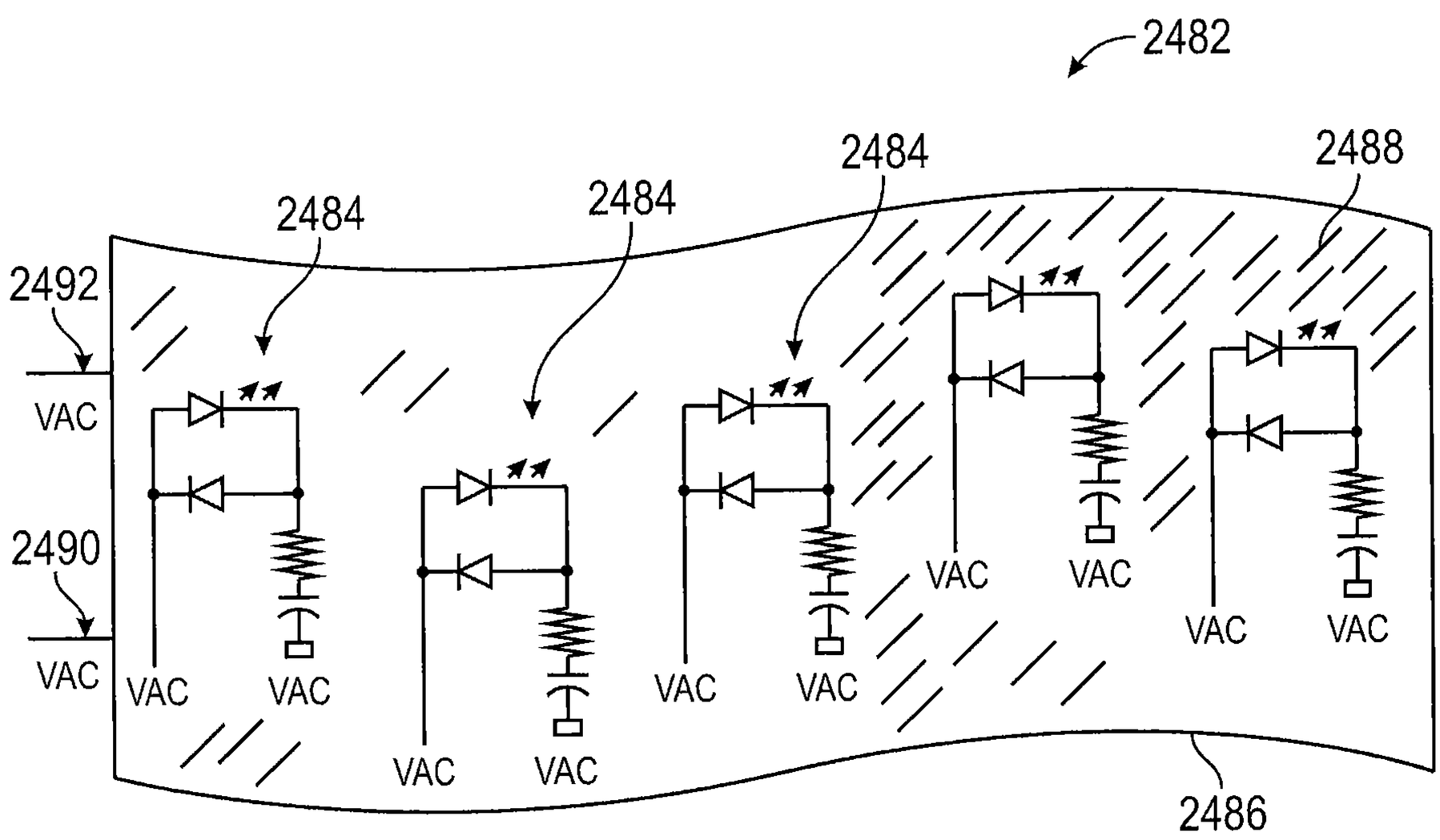
2482
2484
2484
2484
2488
2492
VAC
2490
VAC
VAC
VAC
VAC
VAC
VAC
VAC
VAC
VAC
VAC
VAC
VAC
VAC
2486

FIG. 67

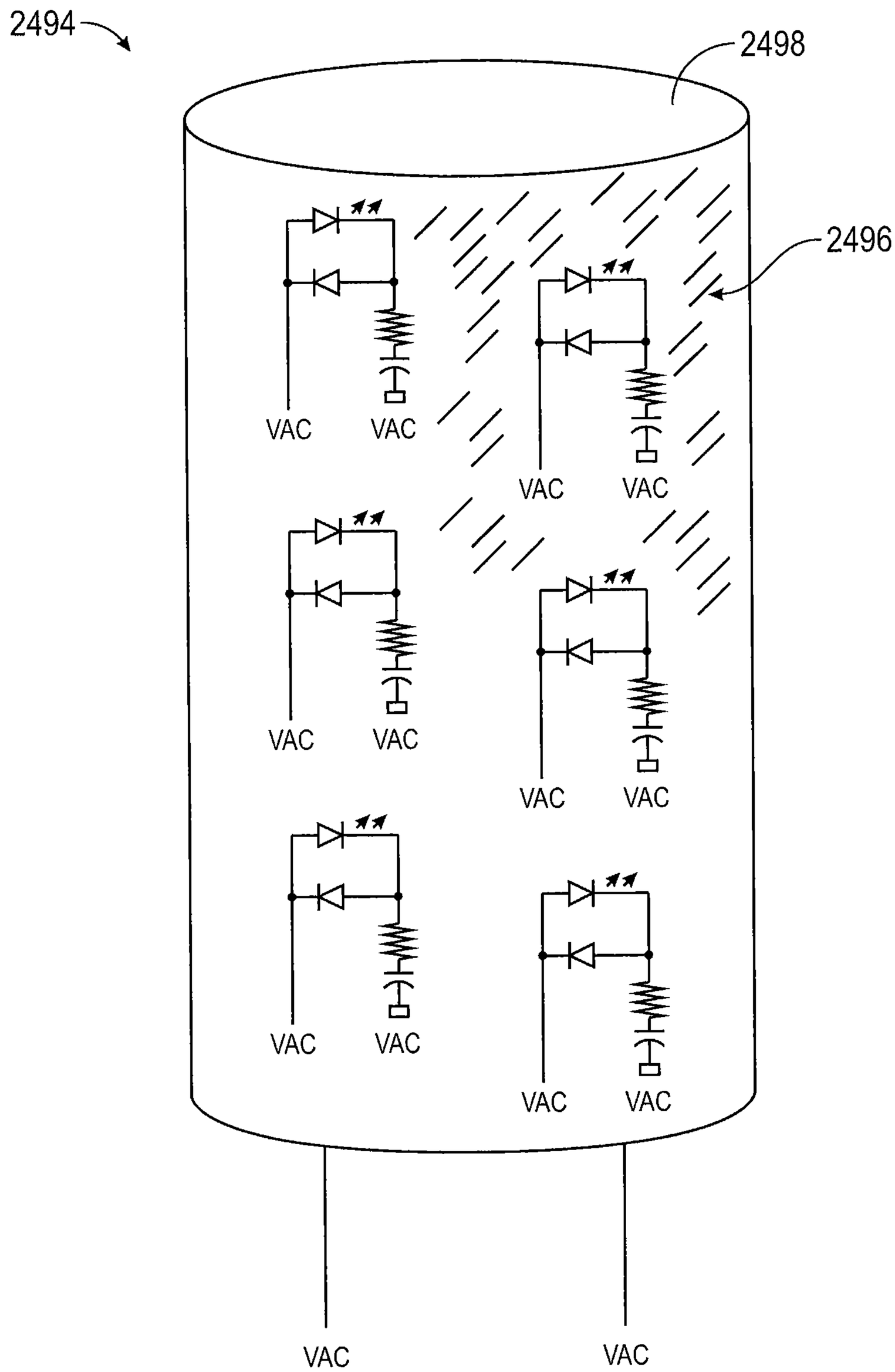
2494
2498
2496
VAC
VAC
VAC
VAC
VAC
VAC
VAC
VAC
VAC
VAC
VAC
VAC
VAC
VAC

FIG. 68

AC LIGHT EMITTING DIODE AND AC LED DRIVE METHODS AND APPARATUS

RELATED APPLICATIONS

The present application is a continuation of U.S. patent application Ser. No. 16/449,273 filed Jun. 21, 2019, which is a continuation of U.S. patent application Ser. No. 16/443,759 filed Jun. 17, 2019, which is a continuation of U.S. patent application Ser. No. 16/407,076 filed May 8, 2019, which is a continuation of U.S. patent application Ser. No. 16/148,945 filed Oct. 1, 2018, which is a continuation of U.S. patent application Ser. No. 15/334,029 filed Oct. 25, 2016, which is continuation-in-part of U.S. patent application Ser. No. 14/948,635 filed Nov. 23, 2015, which is a divisional application of U.S. patent application Ser. No. 13/697,646 filed Nov. 13, 2012 which is a 371 National Phase Application of International Application No. PCT/US2011/0363359 filed May 12, 2011 which claims priority to U.S. Provisional Application No. 61/333,963 filed May 12, 2010 and is a continuation-in-part of International Application No. PCT/US2010/062235 filed Dec. 28, 2010 which claims priority to U.S. Provisional Application No. 61/284,927 filed Dec. 28, 2009 and U.S. Provisional Application No. 61/335,069 filed Dec. 31, 2009 and is a continuation-in-part of U.S. patent application Ser. No. 12/287,267, filed Oct. 6, 2008, which claims priority to U.S. Provisional Application No. 60/997,771, filed Oct. 6, 2007; U.S. patent application Ser. No. 12/364,890 filed Feb. 3, 2009 which is a continuation of U.S. application Ser. No. 11/066,414 (now U.S. Pat. No. 7,489,086) filed Feb. 25, 2005 which claims priority to U.S. Provisional Application No. 60/547,653 filed Feb. 25, 2004 and U.S. Provisional Application No. 60/559,867 filed Apr. 6, 2004; International Application No. PCT/US2010/001597 filed May 28, 2010 which is a continuation-in-part of U.S. application Ser. No. 12/287,267, and claims priority to U.S. Provisional Application No. 61/217,215, filed May 28, 2009; International Application No. PCT/US2010/001269 filed Apr. 30, 2010 which is a continuation-in-part of U.S. application Ser. No. 12/287,267, and claims priority to U.S. Provisional Application No. 61/215,144, filed May 1, 2009; the contents of each of these applications are expressly incorporated herein by reference.

TECHNICAL FIELD

The present invention generally relates to light emitting diodes ("LEDs") and LED drivers. The present invention specifically relates to alternating current ("AC") driven LEDs, LED circuits and AC drive circuits and methods.

FEDERALLY SPONSORED RESEARCH OR DEVELOPMENT

None.

BACKGROUND OF THE INVENTION

1. Field of the Invention

The present invention generally relates to light emitting diodes ("LEDs") and LED drivers. The present invention specifically relates to alternating current ("AC") driven LEDs, LED circuits and AC drive circuits and methods.

2. Description of the Related Art

LEDs are semiconductor devices that produce light when a current is supplied to them. LEDs are intrinsically DC

devices that only pass current in one polarity and historically have been driven by DC voltage sources using resistors, current regulators and voltage regulators to limit the voltage and current delivered to the LED. Some LEDs have resistors built into the LED package providing a higher voltage LED typically driven with 5V DC or 12V DC.

With proper design considerations LEDs may be driven more efficiently with AC than with DC drive schemes. LED based lighting may be used for general lighting, specialty lighting, signs and decoration such as for Christmas tree lighting. For example, U.S. Pat. No. 5,495,147 entitled LED LIGHT STRING SYSTEM to Lanzisera (hereinafter "Lanzisera") and U.S. Pat. No. 4,984,999 entitled STRING OF LIGHTS SPECIFICATION to Leake (hereinafter "Leake") describes different forms of LED based light strings. In both Lanzisera and Leake, exemplary light strings are described employing purely parallel wiring of discrete LED lamps using a step-down transformer and rectifier power conversion scheme. This type of LED light string converts input electrical power, usually assumed to be the common U.S. household power of 110 VAC, to a low voltage, rectified to nearly DC input.

Pat. Pending Application No. 0015968A1 entitled PREFERRED EMBODIMENT TO LED LIGHT STRING to Allen (hereinafter "Allen") discloses AC powered LED-based light strings. Allen describes LED light strings employing series parallel blocks with a voltage matching requirement for direct AC drive placing fundamental restrictions on the number of diodes (LEDs) on each diode series block, depending on the types of diodes used. Allen discloses that for the forward voltage to be "matched," in each series block, the peak input voltage must be less than or equal to the sum of the maximum forward voltages for each series block in order to prevent over-driving.

LEDs can be operated from an AC source more efficiently if they are connected in an "opposing parallel" configuration as shown by WO98/02020 and JP11/330561. More efficient LED lighting systems can be designed using high frequency AC drivers as shown by Patent Publication Number 20030122502 entitled Light Emitting Diode Driver ("Clauberg et. al.") Clauberg et. al. discloses that higher frequency inverters may be used to drive an opposing parallel LED pair, an opposing parallel LED string and/or an opposing parallel LED matrix by coupling the LEDs to a high frequency inverter through a resonant impedance circuit that includes a first capacitor coupled in series to one or more inductors with the impedance circuit coupled in series to opposing parallel LEDs with each set of LEDs having a second series capacitor in series to the impedance circuit. In this system additional opposing parallel configurations of LEDs with capacitors may not be added to or removed from the output of the driver without effecting the lumens output of the previously connected LED circuits unless the driver or components at the driver and/or the opposing parallel LED capacitors were replaced with proper values. By adding or removing the opposing parallel LED circuits the voltage would increase or drop at the inductor and the current would increase or drop through the first series capacitor as the load changed therefore the inductor and all capacitors or entire driver would need to be replaced or adjusted each time additional LEDs were added to or removed from the system.

High frequency AC voltage power supplies and/or transformers can be used to drive LEDs by interfacing a bridge between the power supply and a DC driven LED circuit(s) or having no bridge between the high frequency transformer and an AC driven LED circuit(s).

High frequency AC transformers can be made smaller and more cost effectively than constant current or constant voltage DC drivers or power supplies currently being used to power LEDs.

The higher the frequency, the smaller the transformer can be made. With proper design consideration and based on the wattage and the frequency of the AC voltage output, a high frequency AC voltage transformer can be made small enough to be mounted directly onto a LED lighting PCB assembly.

Patent application number US2004/0080941 entitled Light Emitting Diodes For High AC Voltage Operation And General Lighting discloses that a plurality of opposing parallel series strings of LEDs can be integrated into a single chip and driven with high voltage low frequency mains AC power sources as long as there are enough LEDs in each opposing parallel series string of LEDs to drop the total source voltage across the series LEDs within the chip. Patent numbers WO2004023568 and JP2004006582 disclose that a plurality of opposing parallel series strings or opposing parallel series matrix of LEDs can be integrated into a single chip and mounted on an insulating substrate and driven with a high drive voltage and low drive current as long as there are enough LEDs in each opposing parallel series string of LEDs to drop the total source voltage across the series LEDs within the chip. These patents and application disclose that for single chip or packaged LED circuits a plurality of opposing parallel series strings are required with the total number of LEDs in each series string needing to be equal to or greater than the AC voltage source in order to drop the total forward voltage and provide the required drive current when driven direct with low frequency AC mains power sources.

The present invention addresses the above-noted shortcomings of the prior art while providing additional benefits and advantages

This invention continues the line of inventions of Nikola Tesla, and Stanislav and Konstantin Avramenko. It is possible to transfer power through one wire, even to operate an electric motor. It is also possible to transfer power without any wires.

The self reference method and device goes one step ahead. For power and signal applications there are benefits in using self referencing circuits and devices without the need to bring extra objects to dissipate the energy already in place or provide a DC return path to ground or an AC power source. With precautions to protect integrated circuits and low power electronic devices, it is possible to design efficient systems when the heat, energy and the error budgets are important. It is also possible to design solid state electric power transformers that can be used in place of magnetic transformers. By reducing the number of connections inside these systems, more efficient designs are possible. It is even conceivable to design portable systems without batteries. DC powered electronic devices require a magnetic transformer and rectification when powered with 120 volt or 240 volt AC power. Additionally, they typically require a drop in supply voltage. A transformer typically reduces the high voltage and rectifies it to DC current. Solid state LED lighting can be powered with AC or DC depending on the design on the device. If rectification is not required, resistors can be used in place of a transformer to drop higher voltages. The resistors generate heat and transformers can be cumbersome as well as generate heat.

One wire electric transmission is due to displacement currents. The dipoles in matter and in the electromagnetic vacuum can move back and forth in the presence of a longitudinal alternating electric field. A positive charge moving in the direction of the electric field contributes equally to the current as a negative charge moving in the opposite direction. There does not have to be a net displacement of charge, from left to right say, to have an electric current. There is no need for a return path.

There is no fundamental need to return all charges to a common dump either. One has to be careful not to produce intense electric fields that break the stability of the material circuits, but beyond that, there is no need to return all charges to a big reservoir like the earth. For portable devices this is a good thing, otherwise they would be impossible to construct. To perform all the tasks required, it is enough to have either real dipoles in material substances, or virtual dipoles in the electromagnetic vacuum. Once the function has been satisfied, the device goes back to the state it had when the process started. Circuits according to the invention have one or more of the following attributes: circulation/symmetry breaking/dipoles; difference of time constant between charge and discharge; AC to DC rectification; tunable load to resonant frequency; frequency/voltage dependence; series inductance; series capacitance; and, an open system harnessing electromagnetic field energy.

SUMMARY OF THE INVENTION

According to one broad aspect of the invention a lighting system is provided having one or more LED circuits. Each LED circuit has at least two diodes connected to each other in opposing parallel relation, wherein at least one of which such diodes is an LED. As used throughout the application, the term diode may mean any type of diode capable of allowing current to pass in a single direction, including but not limited to, a standard diode, a schottky diode, a zener diode, and a current limiting diode. A driver is connected to the one or more LED circuits, the driver providing an AC voltage and current to the one or more LED circuits. The driver and the LED circuits form a driven circuit. The driver and the LED circuits are also configured such that LED circuits may be added to or subtracted (intentionally or by component failure) from the driven circuit:

(a) without significantly affecting the pre-determined desired output range of light from any individual LED; and,

(b) without the need to: (i) change the value of any discrete component; or, (ii) to add or subtract any discrete components, of any of the pre-existing driven circuit components which remain after the change.

In another embodiment of the invention at least one capacitor is connected to and part of each LED circuit. In yet another embodiment, at least one resistor is connected to and is part of each opposing parallel LED circuit noted above. The resistor is connected in series with the at least one capacitor.

According to another aspect of the invention an LED circuit (sometimes referred to as an "AC LED") can comprise two opposing parallel LEDs, an opposing parallel LED string or an opposing parallel LED matrix. These opposing parallel LEDs may have a capacitor in series connected to at least one junction of the connected opposing parallel configurations within a single chip, a single package, an assembly or a module.

When a real capacitor is connected in series in one or more lines between an LED and an AC power source, there is a displacement current through that capacity of magnitude: $I=2\pi CV$. The capacitor in the LED circuits of the invention regulates the amount of current and forward voltage delivered to the one or more opposing parallel LEDs

based on the voltage and frequency provided by the AC driver. Based on the number of LEDs in the LED circuit the opposing parallel connections provide two or more junctions to which at least one series capacitor may be connected in series of at least one power connection lead. In some embodiments, LED circuits may also use a series resistor in addition to the capacitor providing an "RC" resistor capacitor network for certain LED circuit driver coupling that does not provide protection against surge currents to the LED circuits.

According to another aspect of the invention an LED circuit may comprise a single LED or a series string of diodes and/or LEDs connected to a full bridge rectifier capable of rectifying a provided AC voltage and current for use by the series string of diodes and/or LEDs. The rectifier may be formed as part of the LED circuit, or may be formed separately, having leads provided on both the output of the driver and the input of the LED circuit to allow the LED circuit to connect directly to the driver. In order to protect the LED circuit from voltage spikes a capacitor may be connected across the inputs of the bridge rectifier. The capacitor may also be used for smoothing the AC waveform to reduce ripple. A capacitor may likewise be connected between one rectifier input and the AC voltage and current source in order to limit the DC current flow to protect the LEDs. The bridge diode and LED circuit may be packaged separate or together, and may be configured within a single chip or two chips, a single package or two packages, an assembly, or a module.

According to another aspect of the invention, a single bridge rectifier may be used to drive parallel LEDs or series strings of diodes and/or LEDs. Alternatively, it is contemplated by the invention that each LED circuit requiring a bridge rectifier to utilize both the high and low phases of an AC power wave may include its own full bridge rectifier integrated or otherwise connected thereto. In embodiments where each LED circuit includes its own rectifier, additional LED circuits may be added in parallel across an AC voltage and current source to any existing LED circuits without concern of connecting to any existing bridge rectifiers or, where used, capacitors. Providing each LED circuit with its own bridge rectifier has the further advantage of scaling capacitors included in the circuit for voltage protection and/or current limiting to be matched to a particular LED or string of diodes and/or LEDs.

It should be noted that "package" or "packaged" is defined herein as an integrated unit meant to be used as a discrete component in either of the manufacture, assembly, installation, or modification of an LED lighting device or system. Such a package includes LED's of desired characteristics with capacitors and or resistors (when used) sized relative to the specifications of the chosen LED's to which they will be connected in series and with respect to a predetermined AC voltage and frequency.

Preferred embodiments of a package may include an insulating substrate whereon the LEDs, capacitors and/or resistors are formed or mounted. In such preferred embodiments of a package, the substrate will include electrodes or leads for uniform connection of the package to a device or system associated with an AC driver or power source or any individually packaged rectifiers used to rectify AC voltage and current. The electrodes, leads, and uniform connection may include any currently known means including mechanical fit, and/or soldering. The substrate may be such as sapphire, silicon carbide, galium nitride, ceramics, printed circuit board material, or other materials for hosting circuit components.

A package in certain applications may preferably also include a heat sink, a reflective material, a lens for directing light, phosphor, nano-chrystals or other light changing or enhancing substances. In sum, according to one aspect of the invention, the LED circuits and AC drivers of the present invention permit pre-packaging of the LED portion of a lighting system to be used with standardized drivers (and when necessary full wave rectifiers) of known specified voltage and frequency output. Such packages can be of varied make up and can be combined with each other to create desired systems given the scalable and compatible arrangements possible with, and resulting from, the invention.

According to one aspect of the invention, AC driven LED circuits (or "driven circuits") permit or enable lighting systems where LED circuits may be added to or subtracted (either by choice or by way of a failure of a diode) from the driven circuit without significantly affecting the pre-determined desired output range of light from any individual LED and, without the need to: (i) change the value of any discrete component; or, (ii) to add or subtract any discrete components, of any of the pre-existing driven circuit components which remain after the change. During design of a lighting system, one attribute of the LEDs chosen will be the amount of light provided during operation. In this context, it should be understood that depending on the operating parameters of the driver chosen, the stability or range of the voltage and frequency of the driver will vary from the nominal specification based upon various factors including but not limited to, the addition or subtraction of the LED circuits to which it becomes connected or disconnected. Accordingly, as sometimes referred to herein, drivers according to the invention are described as providing "relatively constant" or "fixed" voltage and frequency. The extent of this relative range may be considered in light of the acceptable range of light output desired from the resulting circuit at the before, during, or after a change has been made to the lighting system as a whole. Thus it will be expected that a pre-determined range of desired light output will be determined within which the driven LED circuits of the invention will perform whether or not additional or different LED circuits have been added or taken out of the driven circuit as a whole or whether additional or different LED circuits have been added proximate any existing LED circuits or positioned remotely.

According to another aspect of the invention an LED circuit may be at least one pre-packaged LED and one pre-packaged diode connected together opposing parallel of each other, two opposing parallel pre-packaged LEDs, an opposing parallel LED string of pre-packaged LEDs, an opposing parallel LED matrix of pre-packaged LEDs optionally having a capacitor in series of at least one junction of the connected LED circuits. It is contemplated that the LED circuit may also be at least one of a single LED or series string of diodes and/or LEDs having a bridge rectifier connected across the the single LED or string of diodes. In embodiments where a series string of diodes and/or LEDs and a rectifier is utilized, each LED may likewise be pre-packaged. The rectifier may optionally having a capacitor connected across the rectifier inputs and/or a capacitor connected between to an input of the rectifier for connection between the rectifier and a AC voltage and current source. In either embodiment, utilizing an LED circuit capacitor may allow for direct coupling of at least one LED circuit to the LED driver without additional series components such as capacitors and/or inductors between the LED circuit driver and the LED circuits. The LED circuit

driver provides a relatively fixed voltage and relatively fixed frequency AC output even with changes to the load using feedback AC voltage regulator circuitry. The LED circuit's may be directly coupled and scaled in quantity to the LED circuit driver without affecting the other LED circuit's lumen output as long as the LED circuit driver maintains a relatively fixed voltage and relatively fixed frequency AC output.

According to an aspect of the invention, an LED circuit driver provides a relatively fixed voltage and relatively fixed frequency AC output such as mains power sources. The LED circuit driver output voltage and frequency delivered to the LED circuit may be higher than, lower than, or equal to mains power voltage and frequencies by using an LED circuit inverter driver. The LED circuit inverter driver providing higher frequencies is preferable for LED circuits that are integrated into small form LED packages that include integrated capacitors or resistor capacitor "RC" networks. The LED circuit inverter driver has feedback circuitry such as a resistor divider network or other means allowing it to sense changes to the load and re-adjust the frequency and/or voltage output of the LED circuit driver to a desired relatively fixed value. The LED circuit driver may also provide a soft-start feature that reduces or eliminates any surge current from being delivered to the LED circuit when the LED circuit driver is turned on. Higher frequency and lower voltage LED circuit inverter drivers are preferred enabling smaller package designs of LED circuits as the capacitor at higher frequencies would be reduced in size making it easier to integrate into a single LED circuit chip, package, assembly or module.

According to the invention LED circuits may have a resistor capacitor ("RC") network connected together in series or separate from the the LED circuits. The maximum resistor value needed is only that value of resistance needed to protect the one or more LEDs within the LED circuit from surge currents that may be delivered by LED circuit drivers that do not provide soft start or other anti surge current features. Direct mains power coupling would require RC network type LED circuits as the mains power source delivers surge currents when directly coupled to an LED circuit.

The higher frequency LED circuit inverter driver may be a halogen or high intensity discharge (HID) lamp type driver with design modifications for providing a relatively fixed voltage and relatively fixed frequency output as the LED circuit load changes. Meaning if the LED circuit inverter driver is designed to have an output voltage of 12V at a frequency of 50 Khz the LED circuit driver would provide this output as a relatively constant output to a load having one or more than one LED circuits up to the wattage limit of the LED circuit driver even if LED circuits were added to or removed from the output of the LED circuit driver.

The higher frequency inverter having a relatively fixed voltage and relatively fixed frequency output allows for smaller components to be used and provides a known output providing a standard reference High Frequency LED circuit driver enabling LED circuits to be manufactured in volume in existing or reasonably similar LED package sizes with integrated capacitors or RC networks based on the number of LEDs desired in the LED circuit package.

Patent publication number 20030122502 entitled Light Emitting Diode driver (Clauberg and Erhardt) does not disclose the use of a high frequency inverter driver having a means or keeping a relatively fixed voltage and relatively frequency in response to changes in the load. According to the present invention described herein, by not having additional components such as an inductor or capacitor in series between the LED circuit and the LED circuit driver one LED circuit at a time may be added to or removed from the LED circuit driver output without having to change any components, the LED circuit driver or make adjustments to the LED circuit driver. Additionally, according to this invention the lumen output of the existing LED circuits stays relatively constant due to the self-regulating nature of each individual LED circuit when driven with the relatively fixed frequency and voltage of the LED circuit driver. This level of scalability, single chip LED circuit packaging and standardization is not possible with the prior art using an inductor in series between the LEDs or other components due to the voltage or current increase or drop across the inductors and capacitors in response to changes in the load.

Prior art for single chip LED circuits, for example those disclosed in WO2004023568 and JP2004006582 do not provide a way to reduce the number of LEDs within the chip below the total forward voltage drop requirements of the source. The present invention however, enables an LED circuit to be made with any number of LEDs within a single chip, package or module by using, where desired, transformers, capacitors, or RC networks to reduce the number of LEDs needed to as few as one single LED. Improved reliability, integration, product and system scalability and solid state lighting design simplicity may be realized with LED circuits and the LED circuit drivers. Individual LED circuits being the same or different colors, each requiring different forward voltages and currents may be driven from a single source LED circuit driver. Each individual LED circuit can self-regulate current by matching the capacitor or RC network value of the LED circuit to the known relatively fixed voltage and frequency of the LED circuit driver whether the LED circuit driver is a mains power source, a high frequency LED circuit driver or other LED circuit driver capable of providing a relatively fixed voltage and relatively fixed frequency output.

When a real capacitor is connected in series in one or more lines between an LED and an AC power source, there is a displacement current through that capacity of magnitude: $I=2\pi fCV$. This means that one can predetermine the amount of current to be delivered through a capacitance based upon a known voltage and frequency of an AC source, allowing for each LED circuit containing a series capacitor to have the specific or ideal current required to provide the desired amount of light from the LED circuit.

According to other aspects of the invention, the LED circuit driver may be coupled to a dimmer switch that regulates voltage or frequency or may have integrated circuitry that allows for adjustability of the otherwise relatively fixed voltage and/or relatively fixed frequency output of the LED circuit driver. The LED circuits get brighter as the voltage and/or frequency of the LED circuit driver output is increased to the LED circuits.

One form of the invention is at least one LED and one diode connected together opposing parallel of each other, two opposing parallel LEDs, an opposing parallel LED string and/or opposing parallel LED matrix having a capacitor in series of at least one connected junction of the connected opposing parallel LED configurations within a single chip, a single package, an assembly or a module. When desired, the LED circuit with capacitor may be placed on an insulating substrates such as but not necessarily ceramic or sapphire and/or within various LED package sizes; materials and designs based of product specifications or assembled on printed circuit board material. Any integrated LED circuit capacitors should be scaled to a prede-

termined value enabling the LED circuit to self-regulate a reasonably constant and specific current when coupled to an LED circuit driver that provides a relatively fixed voltage and frequency output. Utilized LED circuit capacitors may be of a value needed to provide the typical operating voltage and current of the LED circuit when designed for coupling to a specific LED circuit driver.

Another form of the invention is an LED circuit comprising at least one LED and one diode connected together opposing parallel of each other, two opposing parallel LEDs, an opposing parallel LED string and/or opposing parallel LED matrix having a series resistor capacitor ("RC") network connected together in series or independently in series between at least one connected junction of the opposing parallel LEDs and the respective power connection of the LED circuit. When desired, the opposing parallel LEDs and RC network may be placed on an insulating substrate such as but not necessarily ceramic or sapphire and/or within various LED package sizes; materials and designs based of product specifications or assembled on printed circuit board material. The LED circuit RC network may be of a value needed to provide the typical operating voltage and current of the LED circuit when designed for coupling to a specific LED circuit driver.

Another form of the invention is an LED circuit comprising a matrix of two opposing parallel LEDs connected together in parallel with every two opposing parallel LEDs having an individual capacitor in series to the power source connection if desired. The entire parallel array of opposing parallel LED circuits, including capacitors when used, may be may be placed on an insulating substrate such as but not necessarily ceramic or sapphire and/or within various LED package sizes; materials and designs based of product specifications or assembled on printed circuit board material. The opposing parallel matrix of LED circuits integrated in the LED circuit package may be RC network type LED circuits.

Another form of the invention is an LED circuit comprising a matrix of opposing parallel LEDs connected together in parallel with every set of opposing parallel LEDs having an individual RC network in series to the power connection lead if desired.

Another form of the invention is an LED circuit comprising a matrix of opposing parallel LEDs connected together in parallel, a capacitor connected in series to at least one side of the line going to the matrix of opposing parallel LEDs with every set of opposing parallel LEDs having an individual resistor in series to the power connection if desired.

Yet another form of the invention is an LED circuit comprising opposing parallel series strings of LEDs connected together and driven direct with a high frequency AC voltage equal to or less than to total series voltage drop of the opposing parallel series strings of LEDs within the LED circuit.

Yet another form of the invention is a LED circuit comprising a single LED or a series string of diodes and/or LEDs and a bridge rectifier connected across the LED or string of diodes and/or LEDs. The rectifier may optionally include a capacitor connected across the inputs of the rectifier. The rectifier may additionally, or alternatively, optionally include a capacitor connected in series with one input, the capacitor being capable of connecting the rectifier input to an AC voltage and current source.

Yet another form of the invention is a LED circuit comprising a single LEDs or a series strings of diodes and/or LEDs connected in parallel across the output of a bridge rectifier. The rectifier may optionally include a capacitor connected across the inputs of the rectifier. The rectifier may additionally, or alternatively, optionally include a capacitor connected in series with one input, the capacitor being capable of connecting the rectifier input to an AC voltage and current source.

Another form of the invention comprises a method of driving LED circuits direct from an AC power source ("LED circuit driver") having a relatively fixed voltage and relatively fixed frequency. The LED circuit driver may be a mains power source, the output of a transformer, a generator or an inverter driver that provides a relatively fixed voltage and relatively fixed frequency as the load changes and may be a higher or lower frequency than the frequencies of mains power sources. The LED circuit driver provides a relatively fixed voltage and relatively fixed frequency output even when one or more LED circuits are added to or removed from the output of the LED circuit driver. Higher frequency inverters with lower output voltages are used as one LED circuit driver in order to reduce component size and simplify manufacturing and standardization of LED circuits through the availability of higher frequency LED circuit drivers. The LED circuit driver may also include circuitry that reduces or eliminates surge current offering a soft-start feature by using MOSFET transistors, IGBT transistors or other electronic means. The LED circuit driver may also be pulsed outputs at a higher or lower frequency than the primary frequency.

Another form of the invention is an LED lighting system comprising an LED circuit array having a plurality of different LED circuits each drawing the same or different currents, each having the same or different forward operating voltages, and each delivering the same or different lumen outputs that may be the same or different colors and an LED circuit driver coupled to the LED circuit array. The LED circuit driver delivering a relatively fixed t frequency and voltage output allows for mixing and matching of LED circuits requiring different forward voltages and drive currents. The LED circuits may be connected to the output of an LED circuit driver in parallel one LED circuit at a time within the limit of the wattage rating of the LED circuit driver with no need to change or adjust the LED circuit driver as would typically be required with DC drivers and LEDs when increasing or reducing the load with LEDs and other components. Never having to go back to the power source allows for more efficient integration and scalability of lighting systems designed with LED circuits and allows for a single driver to independently provide power to multiple independently controlled LED circuits in the system. Introducing an inductor and/or an additional capacitor such as the impedance circuit described in prior art between the LED circuit drive source and the LED circuits would require changes to the driver or components and prohibit scalability, standardization and mass production of AC-LEDs with integrated capacitors or RC networks.

With the LED circuit driver providing a known relatively constant AC voltage and frequency, mass production of various LED circuits with specific capacitor or RC network values would deliver 20 mA, 150 mA or 350 mA or any other desired current to the LED circuit based on the output of the specified LED circuit driver. The relatively fixed voltage and frequency allows for standardization of LED circuits through the standardization of LED circuit drivers.

In another aspect, a transistor is coupled to at least one power connection of the LED circuit or built into the LED circuit package in series between the power connection lead and the LED circuit with the transistor being operable to control (e.g., varying or diverting) the flow of the alternating current through the LED circuit through a capacitance within the transistor.

The foregoing forms as well as other forms, features and advantages of the present invention will become further apparent from the following detailed description of the presently preferred embodiments, read in conjunction with the accompanying drawings. The detailed description and drawings are merely illustrative of the present invention rather than limiting, the scope of the present invention being defined by the appended claims and equivalents thereof.

BRIEF DESCRIPTION OF THE DRAWINGS

FIG. **1** shows a schematic view of a preferred embodiment of the invention.

FIG. **2** shows a schematic view of a preferred embodiment of the invention.

FIG. **3** shows a schematic view of a preferred embodiment of the invention.

FIG. **4** shows a schematic view of a preferred embodiment of the invention.

FIG. **5** shows a schematic view of a preferred embodiment of the invention.

FIG. **6** shows a schematic view of a preferred embodiment of the invention.

FIG. **7** shows a schematic view of a preferred embodiment of the invention.

FIG. **8** shows a schematic view of a preferred embodiment of the invention.

FIG. **9** shows a schematic view of a preferred embodiment of the invention.

FIG. **10** shows a schematic view of a preferred embodiment of the invention.

FIG. **11** shows a schematic view of a preferred embodiment of the invention.

FIG. **12** shows a schematic view of a preferred embodiment of the invention.

FIG. **13** shows a schematic view of a preferred embodiment of the invention.

FIG. **14** shows a schematic view of a preferred embodiment of the invention.

FIG. **15** shows a schematic view of a preferred embodiment of the present invention.

FIG. **16** shows a schematic view of a preferred embodiment of the present invention.

FIG. **17** shows a schematic view of a preferred embodiment of the present invention.

FIG. **18** shows a schematic view of a preferred embodiment of the present invention.

FIG. **19** shows a schematic view of a preferred embodiment of the invention.

FIG. **20** shows a schematic view of a preferred embodiment of the invention.

FIG. **21** shows a schematic view of a preferred embodiment of the invention.

FIG. **22** shows a schematic view of a preferred embodiment of the invention.

FIG. **23** shows a schematic view of a preferred embodiment of the invention.

FIG. **24** shows a schematic view of a preferred embodiment of the present invention.

FIG. **25** shows a schematic view of a preferred embodiment of the present invention.

FIG. **26** shows a schematic view of a preferred embodiment of the present invention.

FIG. **27** shows a schematic view of a preferred embodiment of the present invention.

FIG. **28** shows a schematic view of a preferred embodiment of the present invention.

FIG. **29** shows a schematic view of a preferred embodiment of the invention.

FIG. **30**A shows a schematic view of a preferred embodiment of the invention.

FIG. **30**B shows a schematic view of a preferred embodiment of the invention.

FIG. **30**C shows a schematic view of a preferred embodiment of the invention.

FIG. **30**D shows a schematic view of a preferred embodiment of the invention.

FIG. **30**E shows a schematic view of a preferred embodiment of the invention.

FIG. **31** shows a schematic view of a preferred embodiment of the invention.

FIG. **32** shows a schematic view of a preferred embodiment of the invention.

FIG. **33** shows a schematic view of a preferred embodiment of the invention.

FIG. **34** shows a schematic view of a preferred embodiment of the invention.

FIG. **35** shows a schematic view of a preferred embodiment of the invention.

FIG. **36** shows a schematic view of a preferred embodiment of the invention.

FIG. **37** shows a schematic view of a preferred embodiment of the invention.

FIG. **38** shows a schematic view of a preferred embodiment of the invention.

FIG. **39** shows a schematic view of a preferred embodiment of the invention.

FIG. **40** shows a schematic view of a preferred embodiment of the invention.

FIG. **41** shows a schematic view of a preferred embodiment of the invention.

FIG. **42** shows a schematic view of a preferred embodiment of the invention.

FIG. **43** shows a schematic view of a preferred embodiment of the invention.

FIG. **44** shows a schematic view of a preferred embodiment of the invention.

FIG. **45** shows a schematic view of a preferred embodiment of the invention.

FIG. **46** shows a schematic view of a preferred embodiment of the invention.

FIG. **47** shows a schematic view of a preferred embodiment of the invention.

FIG. **48** shows a schematic view of a preferred embodiment of the invention.

FIG. **49** shows a schematic view of a preferred embodiment of the invention.

FIG. **50** shows a schematic view of a preferred embodiment of the invention.

FIG. **51** shows a schematic view of a preferred embodiment of the invention.

FIG. **52** shows a schematic view of a preferred embodiment of the invention.

FIG. **53** shows a schematic view of a preferred embodiment of the invention.

FIG. **54** shows a schematic view of a preferred embodiment of the invention.

FIG. **55** shows a schematic view of a preferred embodiment of the invention.

FIG. **56** shows a, schematic view of a preferred embodiment of the invention.

FIG. **57** shows a schematic view of a preferred embodiment of the invention.

FIG. **58** shows a schematic view of a preferred embodiment of the invention.

FIG. **59** shows a schematic view of a preferred embodiment of the invention.

FIG. **60** shows a schematic view of a preferred embodiment of the invention.

FIG. **61** shows a schematic view of a preferred embodiment of the invention.

FIG. **62** shows a schematic view of a preferred embodiment of the invention.

FIG. **63** shows a schematic view of a preferred embodiment of the invention.

FIG. **64** shows a schematic view of a preferred embodiment of the invention.

FIG. **65** shows a schematic view of a preferred embodiment of the invention.

FIG. **66** shows a schematic view of a preferred embodiment of the invention.

FIG. **67** shows a schematic view of a preferred embodiment of the invention.

FIG. **68** shows a schematic view of a preferred embodiment of the invention.

DETAILED DESCRIPTION OF PREFERRED EMBODIMENTS

While this invention is susceptible to embodiments in many different forms, there is described in detail herein, preferred embodiments of the invention with the understanding that the present disclosures are to be considered as exemplifications of the principles of the invention and are not intended to limit the broad aspects of the invention to the embodiments illustrated.

The present invention is directed to an LED light emitting device and LED light system capable of operating during both the positive and negative phase of an AC power supply. In order to operate during both phases provided by an AC power, as is shown herein, the circuit must allow current to flow during both the positive and negative phases and LED light emitting devices may be configured such that at least one LED is capable of emitting light during one or both of the positive or negative phases. In order to accomplish this, the LED circuit itself may be configured so as to allow current to pass during both phases, or the device may include a bridge rectifier to rectify AC power for use by single LEDs, series strings of LEDs, and parallel series strings of LEDs. Rectification may be accomplished within the light emitting device, or prior to any power being provided to the same. Once integrated into a light system, the present invention further contemplates a driver having the ability to provide a substantially constant voltage at a substantially constant frequency, and that the driver be configured in a manner which will allow LED light emitting devices to be added to or subtracted from the system, regardless of configuration, without having to add, subtract, or change the values of discrete circuit components and without affecting the light output of any individual LED.

FIG. **1** discloses a schematic diagram of a light emitting device **10** for an AC driver according to one embodiment of the invention. The device **10** includes a first LED **12** connected to a second LED **14** in opposing parallel configuration, a capacitor **16** connected in series between a first junction **18** of the two opposing parallel LEDs, a first power connection **20** connected to the two opposing parallel LEDs, and a second power connection **22** connected to a second junction **24** of the two opposing parallel connected LEDs. A diode may be used in place of LED **12** or LED **14**.

FIG. **2** discloses a schematic diagram of a light emitting device **26** for an LED circuit driver according to an embodiment of the invention. The device **26** includes the device **10** as disclosed in FIG. **1** mounted on an insulating substrate **28** such as, but not necessarily, ceramic or sapphire, and integrated into an LED package **30** that may be various LED package sizes; materials and designs based of product specifications or on printed circuit board material. The device **26** provides power connection leads **32** and may have a first or additional lens **34** that may be made of a plastic, polymer or other material used for light dispersion and the lens may be coated or doped with a phosphor or nano-particle that would produce a change in the color or quality of light emitted from the device **10** through the lens **34**.

FIG. **3** discloses a schematic diagram of a device **36** having a schematic diagram of the embodiment shown as light emitting device **26** driven directly by an AC driver **38** that is connected to the power connections **32** of the device **26** without any additional components in series between the AC driver **38** and the device **26** such as a capacitor, inductor or resistor. The AC driver **38** provides a relatively constant AC voltage and frequency output to the device **26** no matter what the total load of the device **26** may be, or the number of devices **26** added or subtracted as long as the load does not exceed the wattage limitation of the AC driver **38**. The AC driver **38** may be a generator, a mains power source, or an inverter capable of providing a relatively fixed voltage and relatively fixed frequency output to different size loads. The AC driver may provide a low or high voltage and a low or high frequency to the device **26** according to the invention as long as the capacitor **16** is the proper value for the desired operation of the device **26**.

FIG. **4** discloses a schematic diagram of a light emitting device **40** for coupling to an LED circuit driver according to an embodiment of the invention. The device **40** includes a first LED **42** connected to a second LED **44** in opposing parallel configuration. A capacitor **46** is connected in series between a first junction **48** of the two opposing parallel LEDs and a first power connection **50**. A resistor **52** is connected in series between a second junction **54** of the two opposing parallel LEDs and a second power connection **56**. A diode may be used in place of LED **42** or LED **44** and the resistor **52** may be put in series on either end of the capacitor **46** as an alternate location.

FIG. **5** discloses a schematic diagram of a light emitting device **58** for LED circuit drivers according to an embodiment of the invention. The device **58** includes the device **40** as disclosed in FIG. **4** integrated into a package as disclosed in the device **26** in FIG. **2**. The device **58** provides power connection leads for connecting to an AC driver **38** as disclosed in FIG. **3**.

FIG. **6** discloses a diagram of a light emitting device **64** for coupling to an LED circuit driver according to an embodiment of the invention. The device **64** includes a first series string of LEDs **66** connected to a second series string of LEDs **68** in opposing parallel configuration, a capacitor **70** connected in series between a first junction **72** of the opposing parallel series string of LEDs and a first power connection **74**, and a second power connection **76** connected to a second junction **78** of the opposing parallel series string of LEDs. A diode may be used in place of one or more LEDs **66** and one or more of LEDs **68** and the LEDs **66** and **68** are integrated into a package **80** as described in the package **30** disclosed in FIG. **2** along with capacitor **70**.

FIG. **7** discloses a diagram of a light emitting device **82** for AC drive according to an embodiment of the invention. The device **82** includes a first series string of LEDs **84**

connected to a second series string of LEDs **86** in opposing parallel configuration, a capacitor **88** connected in series between a first junction **90** of the opposing parallel series string of LEDs and a first power connection **92**, and a resistor **94** connected in series between a second junction **96** of the opposing parallel series string of LEDs and a second power connection **98**. A diode may be used in place of one or more LEDs **84** and one or more of LEDs **86** and the LEDs **84** and **86** are integrated into a package **100** as described in the package **30** disclosed in FIG. **2** along with capacitor **88** and resistor **94**. The resistor **94** may be put in series on either end of the capacitor **88** as an alternate location.

FIG. **8** discloses a diagram of a light emitting device **102** according to an embodiment of the invention. The device **102** includes a first series string of LEDs **104** connected to a second series string of LEDs **106** in opposing parallel configuration. A first power connection **108** is connected to a first junction **110** of the opposing parallel series string of LEDs and a second power connection **112** is connected to a second junction **114** of the opposing parallel series string of LEDs. A diode may be used in place of one or more LEDs **104** and one or more of LEDs **106** and the LEDs **104** and **106** are integrated into a package **118** as described in the package **30** disclosed in FIG. **2**.

FIG. **9** discloses a circuit diagram of a light emitting device **120** according to an embodiment of the invention. The device **120** is similar to the device disclosed in FIG. **5** and includes a second series resistor **122** that can be placed in series on either side of the first capacitor **46**.

FIG. **10** discloses a diagram of a light emitting device **124** according to an embodiment of the invention. The device **124** is similar to the device disclosed in FIG. **2** and includes a second series capacitor **126** connected in series between the junction **128** of the opposing parallel LEDs and a power connection **130**.

FIG. **11** discloses a diagram of a light emitting device **130** according to an embodiment of the invention. The device **130** has a matrix of individual light emitting devices **10** as described in FIG. **1** integrated into a package **132** similar to package **30** as described in FIG. **2**.

FIG. **12** discloses a diagram of a light emitting device **134** according to an embodiment of the invention. The device **134** has a matrix of individual light emitting devices **40** as described in FIG. **4** integrated into a package **136** similar to package **30** as described in FIG. **2**.

FIG. **13** discloses a diagram of a light emitting device **138** according to an embodiment of the invention. The device **138** has a matrix of individual sets of 2 opposing parallel light emitting devices **140** with each set having an individual series resistor to connect to a first power connection **140** and a capacitor **146** connected in series between a second power connection and the matrix of devices **140**. The capacitor **146** may alternately be in series between the first power connection **144** and all resistors **142**. The matrix of devices **140**, resistors **142** and capacitor **146** are integrated into a package **150** similar to package **30** as described in FIG. **2**.

FIG. **14** discloses a diagram of a light emitting device **152** according to an embodiment of the invention. The device **152** includes another version of a series opposing parallel LED matrix **154** and a capacitor **156** connected in series between a first junction **158** of the opposing parallel LED matrix **154** and a first power connection, and a second power connection **162** connected to a second junction **164** of the opposing parallel LED matrix. A first power connection **108** is connected to a first junction **110** of the opposing parallel series string of LEDs and a second power connection **112** is connected to a second junction **114** of the opposing parallel series string of LEDs. A diode may be used in place of one or more LEDs **104** and one or more of LEDs **106** and the LEDs **104** and **106** are integrated into a package **118** as described in the package **30** disclosed in FIG. **2**.

FIG. **15** discloses a schematic diagram of a light emitting device **300** according to an embodiment of the invention. Device **300** includes bridge rectifier circuit **302** having diodes **304***a*-**304***d* with at least one LED connected across the output of the rectifier circuit, shown as LED **306**. While inputs **308** and **310** of the bridge rectifier may be provided for direct connection to an AC power supply, it is contemplated by the invention that one input, shown as input **310**, may have a capacitor (shown as capacitor **312**) or a resistor (shown in FIG. **18** as resistor **313**) connected in series in order to control and limit the current passing through the at least one LED. Additionally, capacitor **314** may be connected across the rectifier inputs to protect against voltage spikes.

FIGS. **16** and **18** each disclose a schematic diagram of a light emitting device **316** and **332** for an LED circuit driver according to an embodiment of the invention. The device **316** includes the device **300** as disclosed in FIG. **15** (with additional LEDs **306** added in series) mounted on an insulating substrate **318** such as, but not necessarily, ceramic or sapphire, and forming an LED package **320** that may be various sizes; materials and designs based of product specifications or on printed circuit board material. As shown in FIG. **16**, The device **316**, **332** provides power connection leads **322** and **323** and may have a first or additional lens that may be made of a plastic, polymer or other material used for light dispersion and the lens may be coated or doped with a phosphor or nano-particle that would produce a change in the color or quality of light emitted from device **300** through the lens. LED package **320** may include rectifier **302** to drive LEDs **306**. Rectifier **306** may be mounted on insulating substrate **318** along with any LEDs. As should be appreciated by those having ordinary skill in the art, it is contemplated by the invention that any diode or LED may be swapped for the other within the package so long as the package includes at least one LED to emit light when in operation. Any capacitors **312**, **314** or resistors **313** included in the light emitting devices may like wise be mounted on substrate **318** and included in LED package **320**.

Rather than be packaged together and mounted on a single substrate, and no matter whether the LEDs and diodes are integrated into a single package or are discrete individual LEDs and/or diodes wire-bonded together, as disclosed in FIG. **17** rectifier **302** may be discretely packaged separate from any discrete LED packages **324** where discrete LED package **324** includes one LED **306** or multiple LEDs connected in series or parallel. Rectifier **302** may be packaged into rectifier package **326** for plug and use into a light system, or alternatively may be included as part of a driver used to drive the series LEDs. When packaged separate, package **326** may be provided with input power connections **328** and **329** which to connect the inputs of the rectifier to an AC power supply. In order to connect to one (or more) single or series LEDs and provide power thereto, package **326** may also be provided with output power connections **330** and **331** which may connect to LED package inputs **334** and **335**. Any capacitors **312**, **314** or resistors **313** included in the light emitting devices may like wise be mounted on substrate **316** and included in rectifier package **326**.

Regardless of whether rectifier **302** and LEDs **306** are integrated or mounted in a single package or are discretely packaged and connected, in order to drop higher voltages any number of LEDs may be connected in series or parallel

in a device to match a desired voltage and light output. For example, in a lighting device that is run off of a 120 V source and contains LEDs having a forward operating voltage of 3V each connected to a bridge rectifier having diodes also having a forward operating voltage of 3V each, approximately 38 LEDs may be placed in series to drop the required voltage.

FIG. **19** discloses an embodiment of an LED lighting device encapsulated in a housing. As shown in FIG. **19**, LED device **336** may include a housing **338** encapsulating at least one bridge rectifier **340**, at least one LED circuit **342** connected across the output of the bridge rectifier. Device **334** includes first power connection lead connected **344** to a first input of the rectifier **346** and a second power connection lead **348** connected to a second input of the rectifier **350**. At least a portion of each power connection is contained within the housing while at least a portion of each power connection extends beyond the housing to allow device **336** to connect to an AC power source. Rectifier **340** and LED circuit **342** may be connected, assembled, and/or packaged within housing **336** using any of the methods described in conjunction with FIGS. **15-18** or any other means known in the art. It should be appreciated by those having ordinary skill in the art that the devices and packages described in FIGS. **2**, **3**, and **5-14** may likewise incorporate a housing to encapsulate any device and/or package therein.

FIG. **20** discloses a schematic diagram of a lighting system **168** according to an embodiment of the invention. The device **168** includes a plurality of devices **26** as described in FIG. **2** connected to a high frequency inverter AC drive Method **170** as described in FIG. **3** which in this example provides a relatively constant 12V AC source at a relatively constant frequency of 50Khz to the devices **26**. Each or some of the devices **26** may have integrated capacitors **172** of equal or different values enabling the devices **26** to operate at different drive currents **174** from a single source AC drive Method.

FIG. **21** discloses a schematic diagram of a lighting system **176** according to an embodiment of the invention. The lighting system **176** includes a plurality of devices **178**, **180** and **182** each able to have operate at different currents and lumens output while connected directly to the transformer **184** output of a fixed high frequency AC drive Method **186**.

Any of the aforementioned AC drive methods may likewise be used with the devices embodied in FIGS. **15-19**.

For example, FIG. **22** discloses a schematic diagram of a lighting system **400** according to an embodiment of the invention. System **400** includes a plurality of devices **316**, **332** as described in FIGS. **16** and **18** connected to a high frequency inverter AC drive Method **170** similar to that described in FIGS. **3** and **20** which provides a relatively constant 12V AC source at a relatively constant frequency of 50 Khz to the devices **316**, **332**. Each or some of the devices **316**, **332** may have integrated capacitors **312**, **314** and resistors **313** of equal or different values enabling the devices **300** to operate at different drive currents from a single source AC drive Method. As should be appreciated by those having ordinary skill in the art, while the example of 12V AC at 50 Khz is given herein, it is contemplated by the invention that any voltage at substantially any frequency may be provided by the driver by utilizing a proper transformer and/or inverter circuit.

Similarly, AC drive Method **186** may be utilized may be used with a single or plurality of devices **214** as disclosed in FIG. **23**. As with the embodiment shown in FIG. **21**, each device **316**, **332** may be connected directly to transformer **184** output to receive a substantially fixed frequency voltage.

FIG. **24** discloses an embodiment of the invention where AC drive Method **186** is provided to a rectifier and LED series strings are discretely packaged. As previously disclosed, rectifier **302** may be discretely packaged in a rectifier package **326**, separate from both AC drive Method **186** (or alternatively AC drive Method **170**) and discrete LED packages **324**, or alternatively may be included in AC drive Method **186**.

FIG. **25** discloses another schematic view diagram of a light emitting device **188** identical to the device **130** disclosed in FIG. **11** and integrated into a package **30** as described in FIG. **2** for an AC drive Method according to an embodiment of the invention. The device **188** includes the device **130** as disclosed in FIG. **11** mounted on an insulating substrate **28** such as but not necessarily ceramic or sapphire and integrated into an LED package **30** that may be various LED package sizes; materials and designs based of product specifications or on printed circuit board material. The device **188** provides power connection leads **190** and **192** and may have a first or additional lens **194** that may be made of a plastic, polymer or other material used for light dispersion and the lens may be coated or doped with a phosphor or nano-crystals that would produce a change in the color or quality of light emitted from the device **130** through the lens **194**. The device **130** has a matrix of devices **10**. The power connection opposite the capacitors **16** within the device **130** and part of each device **10** is connected to a power connection **196** that is connected to a solderable heat sinking material **198** and integrated into the package **30**. The power connection **196** connected to the heat sink **198** may be of a heavier gauge within the device **130** or **188** than other conductors. The schematic view of the device **188** provides a side view of the package **30** and an overhead view of the device **130** in this FIG. **25**.

FIG. **26** discloses another schematic view diagram of a light emitting device **198** similar to the device **188** described in FIG. **25** with a different light emitting device **200** identical to the device **136** disclosed in FIG. **12** and integrated into a package **30** as described in FIG. **2** for an AC drive Method according to an embodiment of the invention. The device **198** includes a reflective device integrated into the package **30** for optimized light dispersion. The light emitting device **200** may be facing down towards the reflector **202** and opposite direction of light output from the lens **194** if the reflector **202** is integrated into the package **30** properly for such a design.

FIG. **27** discloses another schematic view diagram of a light emitting device **500** similar to that shown in FIG. **24** according to an embodiment of the invention. The device **500** includes the devices **316**, **332** similar to those disclosed in FIGS. **16** and **18**, mounted on an insulating substrate **318** such as but not necessarily ceramic or sapphire and integrated into an LED package **320** that may be various LED package sizes; materials and designs based of product specifications or on printed circuit board material. The device **500** provides power connection leads **502** and **503** which connect to package power connect leads **322** and **323** and may have a first or additional lens **504** that may be made of a plastic, polymer or other material used for light dispersion and the lens may be coated or doped with a phosphor or nano-crystals that would produce a change in the color or quality of light emitted from the device through the lens **504**. Power

connection **322** may be connected to heat sink **506** and may be of a heavier gauge within the device than other conductors.

FIG. **28** discloses another schematic view diagram of a light emitting device **508** similar to that shown in FIG. **26**. Device **508** is contemplated for use in embodiments where the rectifier is discretely packaged or included as part of AC drive Method **170** or **186**. In device **508**, power connection leads **510** and **511** connect to the outputs of rectifier **302** (not shown) to provide power to LED packages **324**.

FIG. **29** shows a block diagram of an LED circuit driver **204** having a high frequency inverter **206** stage that provides a relatively constant voltage and relatively constant frequency output. The high frequency inverter **206** stage has an internal dual half bridge driver with an internal or external voltage controlled oscillator that can be set to a voltage that fixes the frequency. A resistor or center tapped series resistor diode network within the high frequency inverter **206** stage feeds back a voltage signal to the set terminal input of the oscillator. An AC regulator **208** senses changes to the load at the output lines **210** and **212** of the inverter **206** and feeds back a voltage signal to the inverter **208** in response changes in the load which makes adjustments accordingly to maintain a relatively constant voltage output with the relatively constant frequency output.

FIG. **30** shows a schematic diagram of an LED circuit driver **214** having a voltage source stage **216**, a fixed/adjustable frequency stage **218**, an AC voltage regulator and measurement stage **220**, an AC level response control stage **222**, an AC regulator output control stage **224** and a driver output stage **226**.

FIG. **31** shows a schematic diagram of the voltage source stage **216** described in FIG. **20**. The voltage source stage **216** provides universal AC mains inputs **228** that drive a diode bridge **230** used to deliver DC to the LED circuit driver system **214**. Direct DC could eliminate the need for the universal AC input **228**. Power factor correction means **232** may be integrated into the LED circuit driver **216** as part of the circuit. The voltage source stage **216** includes a low voltage source circuit **234** that may include more than one voltage and polarity.

FIG. **32** shows a schematic diagram of the fixed/adjustable frequency stage **218** as described in FIG. **20**. The fixed/adjustable frequency stage **218** includes a bridge driver **236** that may include an integrated or external voltage controlled oscillator **238**. The oscillator **238** has a set input pin **240** that sets the frequency of the oscillator to a fixed frequency through the use of a resistor or adjustable resistor **242** to ground. The adjustable resistor **242** allows for adjusting the fixed frequency to a different desired value through manual or digital control but keeps the frequency relatively constant based on the voltage at the set terminal **240**.

FIG. **33** is a schematic diagram of the AC voltage regulator with voltage measurement stage **220** as described in FIG. **20**. The AC voltage regulator with voltage measurement circuit **220** monitors the voltage at the driver output **226** as shown in FIG. **20** and sends a voltage level signal to the AC level response control stage **222** as shown in FIG. **20**.

FIG. **34** is a schematic diagram of the AC level response control **228** stage. The AC level response control stage **228** receives a voltage level signal from the AC voltage regulator with voltage measurement circuit **220** as shown in FIG. **23** and drives the AC regulator output control stage **224** as shown in FIG. **20**.

FIG. **35** is a schematic diagram of the AC regulator output control stage **230**. The AC regulator output control stage **230** varies the resistance between the junction of the drive transistors **232** and the transformer input pin **234** of the driver output **226** as shown in FIG. **26**. The AC regulator output control stage **230** is a circuit or component such as but not necessarily a transistor, a voltage dependent resistor or a current dependent resistor circuit having a means of varying its resistance in response to the voltage or current delivered to it.

FIG. **36** is a schematic diagram of the driver output stage **226**. The driver output stage **226** includes drive transistors **232** and the transformer **236** that delivers an AC voltage output **238** to LED circuits at a relatively constant voltage and frequency.

FIGS. **37** and **38** discloses a circuit **1104** to illustrate another aspect of the invention. Accordingly, an alternating electric field is provided to a first transmission conductor by a signal generator **1102** and a second transmission conductor is provided by an antenna **1108** (see FIG. **37**) or wire **1124** (see FIG. **38**) that is connected to a relatively less positive side **1114-1122** within the directional circuit **1110**. A difference in DC potential between a relatively more positive side **1112** within the directional circuit, and relatively less positive side **1114-1122** is provided. Another aspect of the invention is sensing proximity with impedance changes within the directional circuits described herein (as it could be with any embodiment disclosed herein) by approaching any of the directional circuits or transmission conductors (also any of which are described herein), for example approaching **1108** (shown in FIG. **37**) and/or **1124** (as shown in FIG. **38**) with a conductive substance such as a person, including the touch of a person (human touch), or metallic material thereby changing the circulation of current flow within the directional circuit by changes in impedance through the capacitance of the conductive substance.

FIGS. **39**, and **40-41** disclose another embodiment of the invention having a directional organic light emitting diode ("OLEO") circuit **1154** that includes a first diode D1 **1156**, a second diode D2 **1158**, and an OLED **1157**. The first diode D1 **1156** has an anode and the second diode D2 **1158** has a cathode, which are commonly connected to a input transmission conductor **1160**. The cathode of diode D1 **1156** is connected to the relatively more positive side **1162** anode of an OLED **1157** while the anode of diode D2 **11** is connected to the relatively less positive side cathode **1164** of the OLED **1157** to form the loop circuit **1154** among the diodes D1, D2 and the OLED **1157**. The directional OLEO circuit **154** is a loop circuit which includes one or more circuit elements (e.g. diodes or OLEDs **1156**, **1157** and **1158**) causing the loop circuit to be asymmetric to current flow. Circuit element **1157** is an OLED. The directional OLEO circuit **1154** does not have a continuous conductive path to earth ground, or battery ground. The directional OLEO circuit **1154** develops a DC potential in response to a alternating electric field imposed on input **1160**. The directional OLEO circuit **1154** is self referencing between a relatively high potential output and a relatively lower potential output. The directional OLEO circuit **1154** has a resistance, inductance and capacitance that is responsive to the voltage and frequency of the alternating electric field. The directional OLEO circuit **1154** has transmission conductors **1166**,**1168** connected to the directional OLEO circuit **1154**.

FIG. **40** discloses a circuit **1182** with the same embodiment of the invention shown in FIG. **39** (see FIG. **39**) encasing the directional OLEO circuit **1154** within a package **1163**.

FIG. **41** discloses a circuit **1184** with the same embodiment of the invention shown in FIG. **39** (see FIG. **39**) with a second transmission conductor **1185** providing an input

within the directional circuit **1184** at a point other than the input of the first transmission conductor input of **1160**. The transmission conductors **1160** and **1185** (or any transmission conductors described herein) can act as an antenna and cause the directional OLEO circuit **1184** to react to the proximity of conductive substances near the transmission conductors **1160** and **1185**. In preferred embodiments, the circuits disclosed in FIGS. **39-41** and **43** below may be connected to ground through capacitance at a point within the directional circuit such as transmission conductor **1185** (e.g. FIG. **41**). This ground connection seems to provide increased circulation current, as it is noted that the OLEDs get brighter for a given alternating electromagnetic source.

FIG. **42** discloses a circuit **1226** identical to circuit **1210** but that the circuit has a first transmission conductor **1228** and a second transmission conductor **1230**. Each transmission conductor **1228**,**230** can be driven with an alternating electric field and can cause the circuit **1226** to react to the proximity of a conductive substance that approaches the transmission conductors **1228** and **1230** with only one or both conductors being driven.

FIG. **43** discloses another embodiment of the invention having a directional organic light emitting diode ("OLEO") circuit **1170** that includes a first OLEO **1172**, a second OLEO **1174**, and a third OLEO **1176**. The first OLEO **1172** has an anode and the third OLEO **1176** has a cathode, which are commonly connected to an input transmission conductor **1178** having AC signal source from a signal generator **1180**. The cathode of the first OLEO **1172** is connected to the anode of the second OLEO **1174** while the cathode of the second OLEO **1174** is connected to the anode of the third OLEO **1176** to form the loop circuit **1170** among the OLEDs 1, 2 and 3 (**1172-1176**). The directional OLEO circuit **1170** can be designed with more than 3 OLEDs.

FIG. **44** discloses a preferred circuit **2010** according to the invention. The circuit **2010** includes a first source for providing an alternating electric field. The source may be 120V or 240V line power, RF energy or the output of a standard AC signal generator such as generator **2012** of FIG. **44**. This generator **2012** may produce its signal with reference to ground as indicated in FIG. **44**. Circuit **2010** also discloses a directional circuit **2014** connected to the generator **2012** by a transmission conductor **2016**. According to the invention the conductor **2016** may be any form of conventional conductive path whether twisted wire bundles, single wires, etc. The point is that the transmission conductor **2016** provides a single transmission path to the directional circuit **2014**. Important to the invention is the fact that there is no conductive return path provided back from the directional circuit **2016** to the generator **2012**.

In the broad sense, the directional circuit **2014** is a loop circuit which includes one or more circuit elements causing the loop circuit to be asymmetric to current flow. Again it is important that the directional circuit **2014** has no continuous conductive path to earth ground, or a battery ground. As such, and as disclosed in FIG. **44** the directional circuit **2014** develops a DC potential across a load, such as resistor R1 in response to the alternating electric field. This DC potential is not referenced to ground but merely to the potential differences created by the circulation of current (see FIG. **45**) in the loop across the load (resistor R1 of FIG. **44**). Accordingly, the DC potential is self referencing. As far as the resistor R1 is concerned, circuit **2010** presents it with a relatively higher DC potential output at **2020** and a relatively lower potential output at **2022**.

FIG. **45** discloses circuit **2010** with the load represented as a generic load **2024** (rather than resistor R1) to show the circulation path of current flow (indicated by the arrows) in any generic load circuit utilizing the DC potential of circuit **2010**.

FIGS. **44** and **45** disclose that the loads connected to the directional circuit **2014** do not have a continuous conductive path to earth ground or a battery ground. They also disclose that the directional circuit **2014** has circuit elements causing the directional circuit to be asymmetric to current flow. In the preferred embodiment disclosed, these circuit elements are diodes D1 and D2. However, it is contemplated that numerous other circuit elements could provide the same functionality, in particular, semiconductors with "pn" junctions; electrets, plasma, organic; or combinations thereof.

The circuit **2010** is preferably used for delivering power and sensing proximity. The circuit **2010** is also preferably useful in TTL logic applications as disclosed in FIG. **46** showing a standard TTL logic output circuit **2026** powered by circuit **2010**. In that application, the DC voltages necessary range from 0V to +/−5V.

FIGS. **44-46** each disclose that directional circuit **2014** includes first and second diodes D1 and D2, with D1 having an anode and diode D2 having a cathode which are commonly connected to the transmission conductor **2016**. the cathode of the first diode D1 is connected to the relatively more positive side of the load **2020** while the anode of the second diode is connected to the relatively less positive side load **2022** to form the directional loop circuit among the diodes and the load.

FIG. **47** discloses a circuit **2024** according to the invention having a standard AC signal generator **2026** and a directional circuit **2028** includes first and second light emitting diodes (LEDs), the first LED 1 has an anode and the second LED 2 has a cathode, which are commonly connected to the conductor **2030** from the generator **2026**. The cathode of LED 1 is connected to the relatively more positive voltage side **2032** of the load **2036** while the anode of LED 2 is connected to the relatively less positive side **2034** of the load **2036** to form the loop circuit **2028** among the LEDs 1 and 2. In this embodiment the load is configured to optimize the lumen produced by the directional circuit, for example the LEDs 1, 2 used to deliver power to the load **2036** which can be a third LED as shown in FIG. **48**.

FIG. **48** discloses a circuit **2038** according to the invention. In this embodiment, a generator **2040** produces an alternating electric field on transmission conductor **2040**. The conductor **2041** is connected to a directional circuit **2042** having circuit elements causing an asymmetrical response to the alternating field and current flow. In particular, circuit **2042** includes three LEDs 1, 2, 3, configured to provide circulation according to the direction of the arrows (see FIG. **48**). In this embodiment, all three LEDs 1-3 provide light as an output that can be considered as a load. This shows that relative nature of the positioning of elements in the various directional circuits disclosed herein according to the invention. If light is desired, then each of the diodes may be considered both loads and circuit elements which cause asymmetrical current flow. For example, FIG. **49** discloses the same circuit **2038** with only the substitution of LEDs 1 and 3 by diodes D1 and D2. In this circuit, optimization of the light emitted by LED 2 is of paramount concern, whereas the diodes 1, 2 provide directionality and a DC offset to the AC signal source as will be disclosed in more detail below. In preferred embodiments, the directional circuits, including directional circuit **2014**, disclosed herein throughout this invention may be connected to ground through capacitance **2039** at a point within the directional circuit other than the AC signal input point **40** as

shown in FIG. **49**. This ground connection seems to provide increased circulation current, as it is noted that the LEDs get brighter for a given alternating electromagnetic source. The capacitor **2039** may alternatively be placed on the other side of the AC line **2041**. The capacitor is used to drop the voltage from the AC source.

FIG. **50** discloses a circuit **2042** having an AC signal generator **2044** inducing an alternating electric field onto transmission conductor **2046** which is connected to a first directional circuit **2048** having LEDs 1-3. LED 2 acting as a load to circuit **2048**, provides the relatively high DC potential at point **2050** and a relatively lower DC potential at point **2052** to another directional circuit **2054** comprised of LEDs 4-6. This is repeated for another directional circuit **2056** and LEDs 7-9. Again, the circuit components LEDs 1-9 provide both directionality and useful work as a load in the form of producing light. According to another aspect of the invention, the circuit **2042** discloses the multiplexing possibilities of the directional circuits **2048**, **2052**, **2056**. According to another aspect of the invention, the circuit **2042** discloses a parallel LED directional circuit.

FIG. **51** discloses a circuit **2058** to illustrate another aspect of the invention, in particular the transmission of information or data as one may use the terms. Accordingly, the alternating electric field is provided (as it could be with any embodiment disclosed herein) by either an antenna **2060** or a signal generator **2061**. The alternating signal source is imposed on transmission conductor **2062**. A directional circuit **2064** is comprised of a load **2066** and two diodes D1 and D2. The circuit **2058** discloses the directional DC current flow as well as an AC plus DC current flow and potential indicated by "AC+DC" in FIG. **51**. This DC plus AC component is important to the transmission of information or data signals from the generators **2060**, **2061**.

In particular, FIG. **52** discloses a circuit **2068** having a signal generator **2070**, a transmission conductor **2072**, and a directional circuit **2074**. The directional circuit has asymmetrical diode elements D1 and D2 and a load R1. In this and the other embodiment disclosed herein (see FIG. **51**), the directional circuit **2074** is constructed to permit a DC voltage level to accrue on the transmission conductor **2072** along with the AC signal to provide an offset to the signal. This offset is preferential to the signal as the signal is ungrounded. It is believed that this may prevent noise in the system to be added to the line **2072** as a second alternating field but with reference to ground. Accordingly the noise adds to the DC level but not to the signal level in the same proportions.

Also as disclosed in FIG. **52**, an output **2076** is provided which will transmit the AC signals from transmission line **2072** to an information or data signal receiver **2078** which will detect the signal riding the DC level. The DC level can easily be distinguished and handled by such a receiver as is conventional. It should be understood that the signal receiver **2078** may be of any conventional type of TTL logic device, modem, or telecommunications receiver and is believed to operate best with the preferred systems of the invention when it is not connected to earth ground or a battery ground, or a current sink or charge collector (as is the case for the working loads disclosed through out this disclosure).

According to another embodiment, FIG. **53** discloses another information or data communication circuit **2080**. The circuit **2080** includes a signal generator **2082**, a transmission conductor **2084**, a directional circuit **2086**, a data receiver **2088**, and a ground switch **2090**. In this embodiment, the directional circuit **2086** provides both the DC power for the receiver **2088**, and a data signal through output **2092** connected between the receiver input and the common connection between the conductor **2084** and directional circuit input to anode of diode D1 and cathode D2. In the meantime, the receiver is powered on the DC potential difference between D1 the relatively more positive side **2094** and D2 the relatively less positive side **2096** of the directional circuit. In this embodiment, resistor R1 is provided according to another aspect of the invention to regulate or select as desired the level of DC offset the AC data signal will have at line **2092**.

According to another aspect of the invention, the ground switch **2090** is provided to provide a non-continuous connection to a circuit, such as the ground circuit disclosed in FIG. **53**, to dissipate excessive accumulations of charge or voltage potentials in the circuit **2080**. It is contemplated that the switch **2090** be actuated based upon a timing (such as a pre-selected clock pulse) criteria, or by a sensor (not shown) of an undesirable DC level developing in the circuit **2080**. Once engaged, the circuit **2090** would dissipate the excess energy to a ground, ground, plane, capacitor, battery ground, or the like.

FIG. **54** discloses a circuit **2092** wherein directional circuits **2094-2100** are connected through a common bus conductor **2102** to provide DC power and signals from generator **2104** as described previously herein.

FIGS. **55** and **56** disclose a circuit **2104** to illustrate another aspect of the invention. Accordingly, an alternating electric field is provided to a first transmission conductor by a signal generator **2102** and a second transmission conductor is provided by an antenna **2108** (see FIG. **55**) or wire **2124** (see FIG. **56**) that is connected to a relatively less positive side **2114-2122** within the directional circuit **2110**. A difference in DC potential between a relatively more positive side **2112** within the directional circuit, and relatively less positive side **2114-2122** is provided. Another aspect of the invention is sensing proximity with impedance changes within the directional circuits described herein (as it could be with any embodiment disclosed herein) by approaching any of the directional circuits or transmission conductors (also any of which are described herein), for example approaching **2108** (shown in FIG. **55**) and/or **2124** (as shown in FIG. **56**) with a conductive substance such as a person, including the touch of a person (human touch), or metallic material thereby changing the circulation of current flow within the directional circuit by changes in impedance through the capacitance of the conductive substance.

FIG. **57** discloses a circuit **2126** to illustrate another aspect of the invention. Accordingly, an alternating electric field is provided to a transmission conductor **2132** by a signal generator **2128** that provides a first voltage level output equal to that provided by the signal generator **2128**. A lump inductance **2130** is provided in series of the transmission conductor **2132** between the signal generator **2128** and directional circuit **2134**. The lump inductance **2130** provides an increased voltage level from the relatively lower voltage on the transmission conductor **2132** at the point **2136** between the signal generator **2128** and lump inductance **2136** and a relatively higher voltage level on the transmission conductor **2132** at the point **2138** between the lump inductance **2130** and the directional circuit **2134** thereby providing an increase in current flow within the directional circuit **2134** or electromagnetic field energy radiating from the circuit **2126**. The amount of current flow within the directional circuits described herein and electromagnetic field energy external of the directional circuits described herein is dependent on the frequency of an AC

signal provided to the transmission conductor **2132** (or any of which are described herein). In preferred embodiments, the circuits disclosed in FIGS. **44-57** may be connected to ground through capacitance. This ground connection seems to provide increased circulation current, as it is noted that the LEDs get brighter for a given alternating electromagnetic source.

FIG. **58** discloses a circuit **2140** according to the invention having a standard AC signal generator **2142** and a directional circuit **2144** that includes first and second diodes D1, D2, the first diode D1 has an anode and the second diode D2 has a cathode, which are commonly connected to the transmission conductor **2146** from the generator **2142**. The cathode of diode D1 is connected to the relatively more positive side **2148** of an organic light emitting diode (OLED) **2152** while the anode of diode D2 is connected to the relatively less positive side **150** of the OLED **2152** to form the loop circuit **2144** among the diodes D1, D2 and the OLED **2152**.

FIGS. **59**, and **61-62** disclose another embodiment of the invention having a directional organic light emitting diode ("OLED") circuit **2154** that includes a first diode D1 **2156**, a second diode D2 **2158**, and an OLED **2157**. The first diode D1 **2156** has an anode and the second diode D2 **2158** has a cathode, which are commonly connected to an input transmission conductor **2160**. The cathode of diode D1 **2156** is connected to the relatively more positive side **2162** anode of an OLED **2157** while the anode of diode D2 **2158** is connected to the relatively less positive side cathode **2164** of the OLED **2157** to form the loop circuit **2154** among the diodes D1, D2 and the OLED **2157**. The directional OLED circuit **2154** is a loop circuit which includes one or more circuit elements (e.g. diodes or OLEDs **2156**, **2157** and **2158**) causing the loop circuit to be asymmetric to current flow. Circuit element **2157** is an OLED. The directional OLED circuit **2154** does not have a continuous conductive path to earth ground, or battery ground. The directional OLED circuit **2154** develops a DC potential in response to an alternating electric field imposed on input **2160**. The directional OLED circuit **2154** is self referencing between a relatively high potential output and a relatively lower potential output. The directional OLED circuit **2154** bas a resistance, inductance and capacitance that is responsive to the voltage and frequency of the alternating electric field. The directional OLED circuit **2154** has transmission conductors **2166**, **2168** connected to the directional OLED circuit **2154**.

FIG. **60** discloses another embodiment of the invention having a directional organic light emitting diode ("OLED") circuit **2170** that includes a first OLED **2172**, a second OLED **2174**, and a third OLED **2176**. The first OLED **2172** has an anode and the third OLED **2176** has a cathode, which are commonly connected to an input transmission conductor **2178** having AC signal source from a signal generator **2180**. The cathode of the first OLED **2172** is connected to the anode of the second OLED **2174** while the cathode of the second OLED **2174** is connected to the anode of the third OLED **2176** to form the loop circuit **2170** among the OLEDs 1, 2 and 3 (**2172-2176**). The directional OLED circuit **2170** can be designed with more than 3 OLEDs.

FIG. **61** discloses a circuit **2182** with the same embodiment of the invention shown in FIG. **59** (see FIG. **59**) encasing the directional OLED circuit **2154** within a package **2163**.

FIG. **62** discloses a circuit **2184** with the same embodiment of the invention shown in FIG. **59** (see FIG. **59**) with a second transmission conductor **2185** providing an input within the directional circuit **2184** at a point other than the input of the first transmission conductor input of **2160**. The transmission conductors **2160** and **2185** (or any transmission conductors described herein) can act as an antenna and cause the directional OLED circuit **2184** to react to the proximity of conductive substances near the transmission conductors **2160** and **2185**. In preferred embodiments, the circuits disclosed in FIGS. **59-66** may be connected to ground through capacitance at a point within the directional circuit such as transmission conductor **2185** (e.g. FIG. **62**). This ground connection seems to provide increased circulation current, as it is noted that the OLEDs get brighter for a given alternating electromagnetic source.

FIG. **63** discloses a matrix circuit **2186** comprised of twelve circuits **2154** (e.g. FIG. **61**). The circuits in the matrix **2186** are connected commonly to a transmission conductor **2188**.

FIG. **64** discloses a matrix circuit **2190** identical to matrix circuit **2186** but that the circuits **2191** employ only LEDs or optionally OLEDs.

FIG. **65** discloses a matrix circuit **2192** identical to matrix circuit **2186** but that the circuits **2193** in the matrix **2192** are connected commonly to one end of a lump inductance **2196** placed in series of the transmission conductor **2194** between the signal generator **2198** and the matrix circuit.

FIG. **66** discloses a matrix circuit **2200** identical to matrix circuit **2192** but that the circuits in the matrix **2200** are connected to individual lump inductances **2201-2206** which can be of equal or different values.

FIG. **67** shows a device **2482** comprising individual light emitting diode circuits **2484** on a flexible printed circuit board having a mirror like reflective material or coating **2488** designed into or on the flexible printed circuit board in an area at least near the light emitting diodes for providing more efficient light output from the circuit board areas surrounding the light emitting diodes by having the flexible printed circuit board reflect light rather than absorb it. Power connection points **2490** and **2492** are provided to the board.

FIG. **68** shows a device **2494** comprising a device **2496** identical to the device shown in FIG. **67** adhered to a device **2498** having a cylindrical shape for providing improved uniformity and increased angle of light output from device **2496**.

A circuit includes a first source for providing an alternating electric field, a directional circuit is connected to the first source for providing an alternating electric field by a transmission conductor there being no conductive DC path is provided back from the directional circuit to the first source for providing an alternating electric field. The directional circuit being a loop circuit which includes one or more circuit elements causing the loop circuit to be asymmetric to current flow; the directional circuit having no continuous conductive path to earth ground, or battery ground, the directional circuit thereby developing a DC potential in response to the alternating electric field which is self referencing between a relatively high potential output and a relatively lower potential output. One or more loads connected to the directional circuit, the one or more loads also not having a continuous conductive path to earth ground or a battery ground. The load is not provided with a continuous connection to earth ground, or battery ground. The load may be provided with a capacitive connection to earth ground, or battery ground. The DC current flow within the directional circuit is adjustable by tuning the directional circuit to different frequencies of an alternating electric field thereby causing the directional circuit to reach a resonant state. The current flow increases within the directional circuit and the electromagnetic field is concentrated within the directional

circuit when the directional circuit is tuned to a resonant frequency. The directional circuit being tuned out of its resonant frequency and providing a larger electromagnetic field surrounding the exterior of the directional circuit enables the directional circuit to be responsive to the proximity of objects having a capacitance that enter the electromagnetic field. The directional circuit is tuned towards resonance as conductive objects enter the electromagnetic field of the directional circuit.

The above-described embodiments of the present invention are intended to be examples only. Alterations, modifications and variations may be effected to the particular embodiments by those of ordinary skill in the art without departing from the scope of the invention, which is defined by the claims appended hereto.

What is claimed is:

1. A lighting system comprising:

a data communication circuit comprising an LED circuit and an antenna;

wherein the LED circuit comprises a plurality of LEDs connected in series, parallel, or opposing parallel;

wherein the LED circuit and the antenna are integrated in a package;

wherein the data communication circuit is integrated into a lighting device;

wherein the lighting device is adapted to be connected to a socket;

wherein the lighting device is configured to transmit data signals to or receive data signals from at least one telecommunications device; and

wherein the telecommunications device comprises a circuit configured to detect human touch via capacitive sensing.

2. The lighting system of claim **1**, wherein the package comprises a reflective material.

3. The lighting system of claim **1**, further comprising the telecommunications device.

4. The lighting system of claim **1**, wherein the telecommunications device is portable.

5. The lighting system of claim **4**, wherein the portable telecommunications device further comprises at least one OLED, and wherein the portable telecommunications device is configured to receive power wirelessly.

6. The lighting system of claim **1**, further comprising a current limiting device coupled to the LED circuit.

7. A lighting system comprising:

an LED circuit array comprising an LED circuit comprising a plurality of LEDs connected in series;

a capacitor;

a bridge rectifier configured to receive an input AC voltage from a mains power source;

a driver connected to the bridge rectifier and configured to provide a rectified output AC voltage to the LED circuit array;

wherein a forward voltage of the LEDs of the LED circuit array matches the rectified input AC voltage output of the driver; and

wherein the LED circuit array, the capacitor, the bridge rectifier, and the driver are all mounted on a single substrate.

8. The lighting system of claim **7**, further comprising power factor correction circuitry.

9. The lighting system of claim **7**, wherein the LEDs are coated or doped with at least one of a phosphor, nanocrystals, or a light changing or enhancing substance.

10. The lighting system of claim **7**, wherein the rectified output AC voltage provided to the LED circuit array is relatively close to the input AC voltage input received from the mains power source.

11. The lighting system of claim **7**, wherein the capacitor is configured to smooth the rectified output AC voltage.

12. The lighting system of claim **7**, further comprising a data communication circuit comprising an antenna, wherein the data communication circuit is integrated with the substrate.

13. The lighting system of claim **12**, wherein the capacitor is a first capacitor, wherein the data communication circuit further comprises an inductor and a second capacitor.

14. An LED lighting device comprising:

a plurality of LED circuits connected in parallel, wherein each LED circuit comprises at least two LEDs;

wherein the LED circuits are mounted on a reflective substrate;

an LED driver configured to receive one of at least two different input voltage levels from an AC mains power source; and

wherein the LED circuits and the LED driver are integrated in a single package.

15. The LED lighting device of claim **14**, further comprising a 3-way switch.

16. The LED lighting device of claim **14**, further comprising a data communication circuit comprising an antenna, an inductor and a capacitor, wherein the data communication circuit is integrated in the single package.

17. The LED lighting device of claim **14**, wherein the LEDs are coated or doped with at least one of a phosphor, nano-crystals, or a lighting changing or enhancing substance.

18. The lighting device of claim **14**, wherein the driver comprises power factor correction circuitry.

19. The lighting device of claim **14**, wherein the driver comprises soft start circuitry.

20. The lighting device of claim **14**, wherein the driver comprises at least one field effect transistor.

21. A lighting device comprising:

a data communication circuit having at least one LED circuit, wherein the at least one LED circuit has at least two LEDs connected in series, parallel or opposing parallel, and wherein the at least two LEDs are a same color or different colors;

wherein the data communication circuit having the at least one LED circuit is integrated into the lighting device;

wherein the lighting device can transmit data signals to or receive the data signals from at least one portable telecommunications device; and

wherein the portable telecommunications device comprises a circuit that can detect a human touch via capacitive sensing, and wherein the portable telecommunications device further comprises at least one LED that provides light based upon detection of the human touch.

22. The lighting device of claim **21**, further comprising the portable telecommunications device.

23. The lighting device of claim **21**, wherein the portable telecommunications device further includes at least one OLED.

24. The lighting device of claim **21**, wherein the portable telecommunications device is configured to receive power wirelessly.

25. The lighting device of claim **21**, wherein the at least one LED circuit is mounted on a reflective printed circuit board.

26. The lighting device of claim **21**, wherein the lighting device further comprises:

integrated circuitry that allows adjustment of a brightness of the at least one LED circuit.

* * * * *