US006402328B1

(12) **United States Patent**
Bechtel et al.

(10) **Patent No.: US 6,402,328 B1**
(45) **Date of Patent: Jun. 11, 2002**

(54) **AUTOMATIC DIMMING MIRROR USING SEMICONDUCTOR LIGHT SENSOR WITH INTEGRAL CHARGE COLLECTION**

(75) Inventors: **Jon H. Bechtel**; **Joseph S. Stam**; **Robert R. Turnbull**, all of Holland, MI (US); **Robert H. Nixon**, Burbank; **Eric R. Fossum**, La Crescenta, both of CA (US)

(73) Assignee: **Gentex Corporation**, Zeeland, MI (US)

(*) Notice: Subject to any disclaimer, the term of this patent is extended or adjusted under 35 U.S.C. 154(b) by 0 days.

(21) Appl. No.: **09/307,941**

(22) Filed: **May 7, 1999**

Related U.S. Application Data

(63) Continuation-in-part of application No. 09/236,969, filed on Jan. 25, 1999.

(51) **Int. Cl.**[7] **G02B 5/08**

(52) **U.S. Cl.** **359/603**; 359/604; 359/601; 359/602; 359/609

(58) **Field of Search** ..... 359/603, 604, 359/601–602, 609, 613, 245, 265–268, 273; 250/206, 206.2, 208.2, 214 R, 214 W

(56) **References Cited**

U.S. PATENT DOCUMENTS

3,601,614 A		8/1971	Platzer, Jr.	
3,680,951 A	*	8/1972	Jordan et al.	35/281
3,746,430 A		7/1973	Brean et al.	
4,208,668 A		6/1980	Krimmel	
4,315,159 A		2/1982	Niwa et al.	
4,443,057 A		4/1984	Bauer et al.	
4,465,370 A		8/1984	Yuasa et al.	
4,580,875 A		4/1986	Bechtel et al.	
4,632,509 A	*	12/1986	Ohmi et al.	350/283
4,669,826 A		6/1987	Itoh et al.	
4,678,938 A		7/1987	Nakamura	
4,690,508 A		9/1987	Jacob	
4,697,883 A		10/1987	Suzuki et al.	
4,793,690 A	*	12/1988	Gahan et al.	350/279
4,799,768 A		1/1989	Gahan	
4,819,071 A		4/1989	Nakamura	
4,886,960 A		12/1989	Molyneux et al.	

(List continued on next page.)

FOREIGN PATENT DOCUMENTS

EP	0 285 724 B1	12/1992
EP	0 675 345 A2	3/1995
EP	0 711 683 A1	10/1995
EP	0 869 032 A2	10/1998
WO	WO 97/35743	10/1997

Primary Examiner—Mohammad Sikder
(74) *Attorney, Agent, or Firm*—Price, Heneveld, Cooper, DeWitt & Litton; Brian J. Rees

(57) **ABSTRACT**

Automatically dimming rearview mirrors allow a vehicle operator to view a scene generally behind the operator at a reflectivity level automatically adjusted to ambient light and glare levels. An automatically dimming mirror includes a dimming element having a variably reflective surface, the degree of reflectivity based on a control signal. An ambient light sensor is positioned to receive light from a region generally in front of the vehicle. The ambient light sensor outputs a discrete ambient light signal based on the amount of light incident on the ambient light sensor over an integration period. A glare sensor is positioned to view the scene generally behind the vehicle operator. The glare sensor outputs a discrete glare signal based on the amount of light incident on the glare sensor over an integration period. A dimming logic determines an ambient light level based on the ambient light signal. The glare integration period is determined based on the ambient light level. The glare signal resulting from the glare integration period determines a mirror glare level used to set the dimming element control signal. The use of variable integration times increases the dynamic range of the light sensors, improving the mirror dimming response.

31 Claims, 24 Drawing Sheets

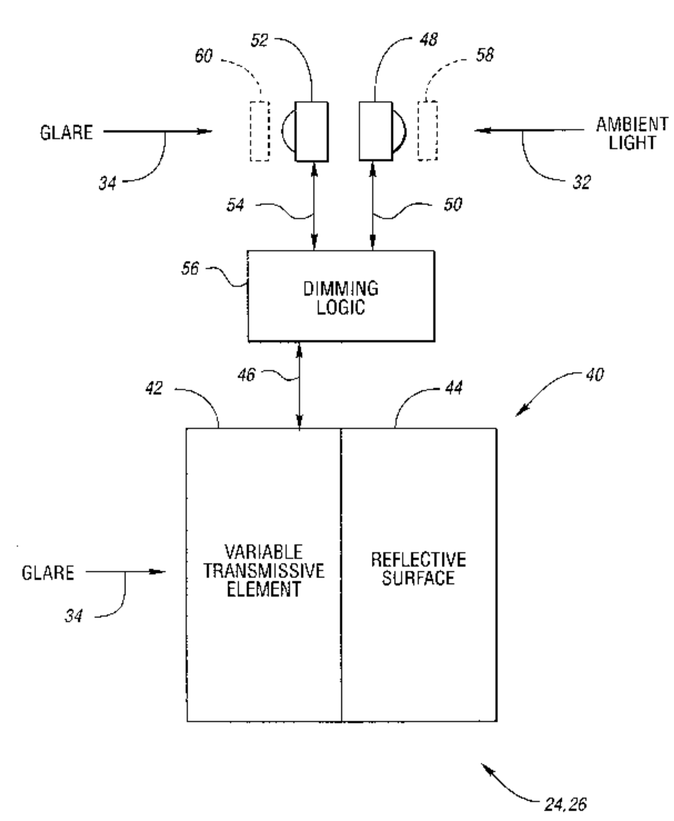

U.S. PATENT DOCUMENTS

4,902,108 A * 2/1990 Byker 350/357
4,916,307 A * 4/1990 Nishibe et al. ..... 250/214 C
4,917,477 A 4/1990 Bechtel et al.
5,036,437 A 7/1991 Macks
5,140,455 A 8/1992 Varaprasad et al.
5,204,778 A 4/1993 Bechtel
5,214,274 A 5/1993 Yang
5,214,275 A * 5/1993 Freeman et al. 250/208.4
5,220,317 A 6/1993 Lynam et al.
5,235,178 A 8/1993 Hegyi
5,243,215 A 9/1993 Enomoto et al.
5,338,691 A 8/1994 Enomoto et al.
5,386,128 A 1/1995 Fossum et al.
5,410,455 A 4/1995 Hashimoto
5,416,318 A 5/1995 Hegyi
5,426,294 A 6/1995 Kobayashi et al.
5,451,822 A 9/1995 Bechtel et al.
5,471,515 A 11/1995 Fossum et al.
5,488,416 A 1/1996 Kyuma
5,550,677 A 8/1996 Schofield et al.
5,625,210 A 4/1997 Lee et al.
5,644,418 A 7/1997 Woodward
5,666,028 A 9/1997 Bechtel et al.
5,712,685 A 1/1998 Dumas
5,715,093 A 2/1998 Schierbeek et al.
5,724,187 A 3/1998 Varaprasad et al.
5,760,962 A * 6/1998 Schofield et al. 359/604
5,789,737 A 8/1998 Street
5,796,094 A 8/1998 Schofield et al.
5,808,350 A 9/1998 Jack et al.
5,841,126 A 11/1998 Fossum et al.
5,841,159 A 11/1998 Lee et al.
5,883,606 A * 3/1999 Knapp 345/7
5,904,493 A 5/1999 Lee et al.
6,027,955 A 2/2000 Lee et al.

* cited by examiner

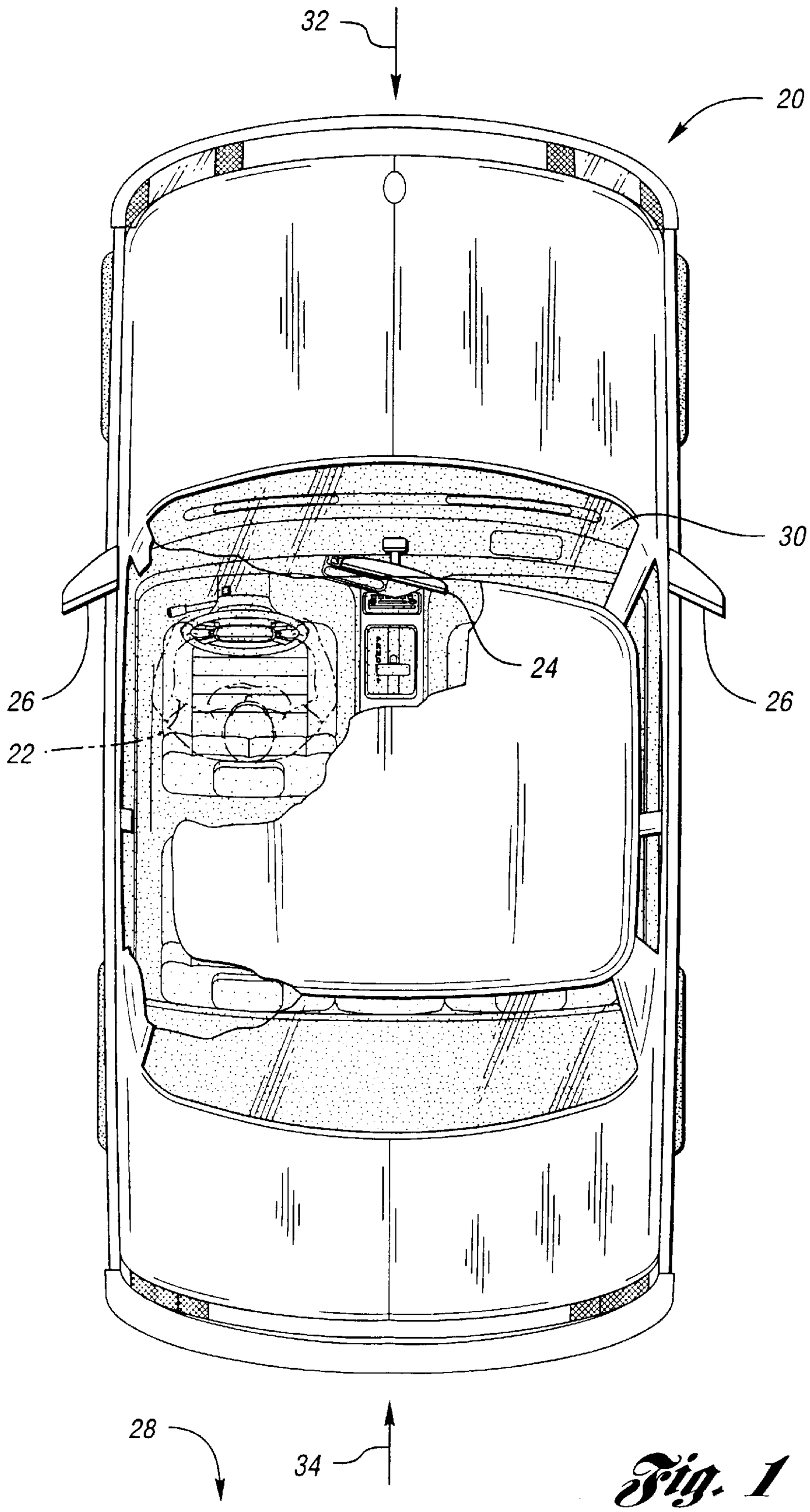

Fig. 1

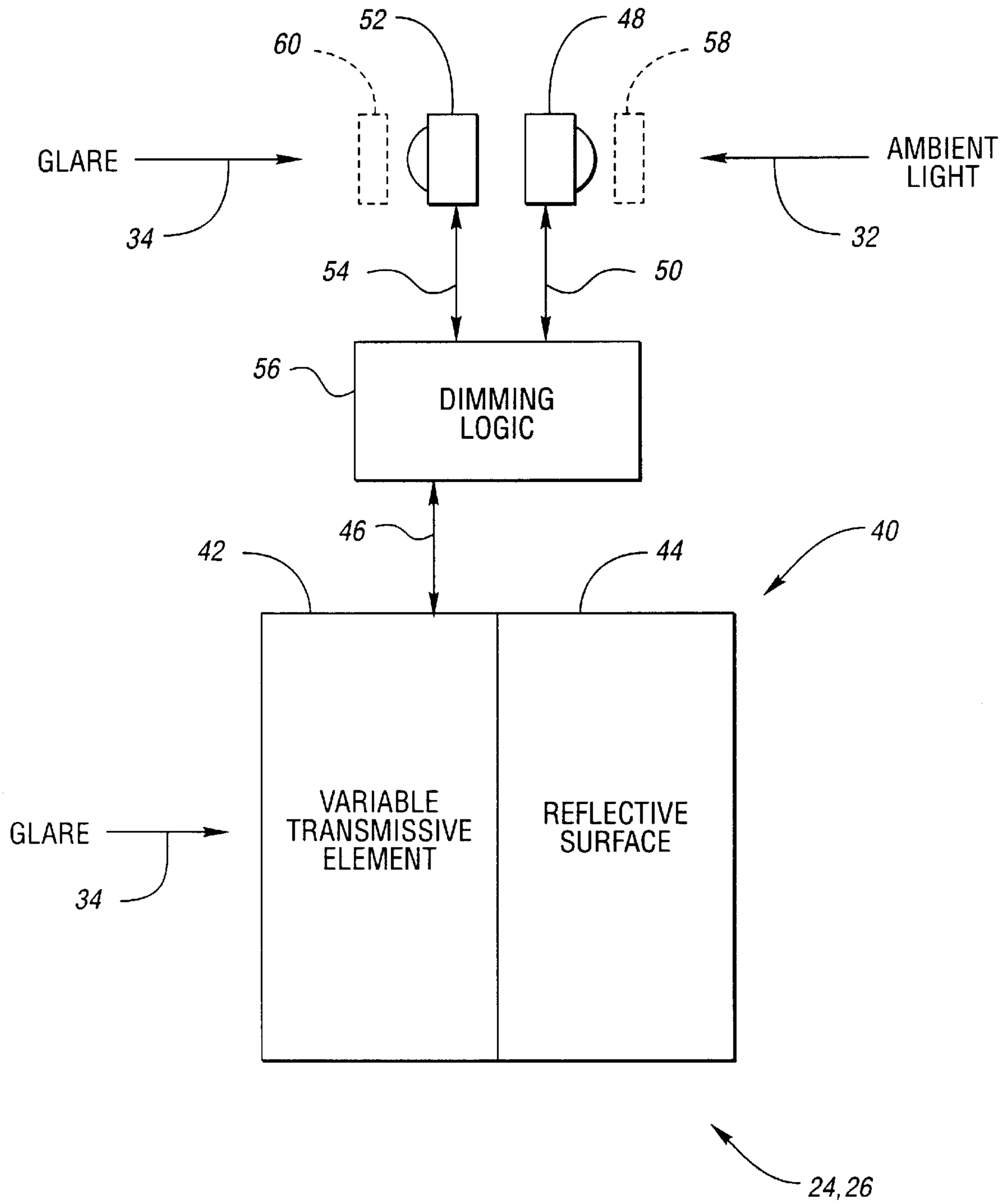
52
48
60
58
GLARE
AMBIENT LIGHT
34
32
54
50
56
DIMMING LOGIC
46
40
42
44
GLARE
VARIABLE TRANSMISSIVE ELEMENT
REFLECTIVE SURFACE
34
24,26

Fig. 2

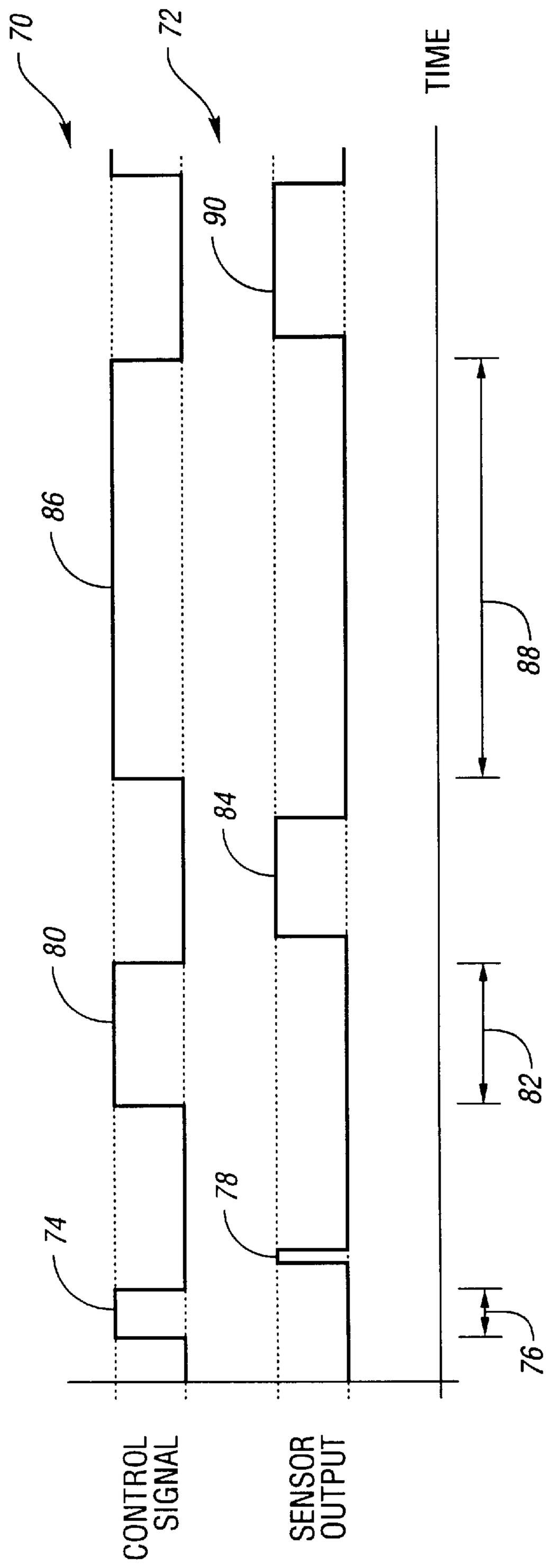
70
72
TIME
90
86
88
84
80
82
78
74
76
CONTROL SIGNAL
SENSOR OUTPUT

Fig. 3

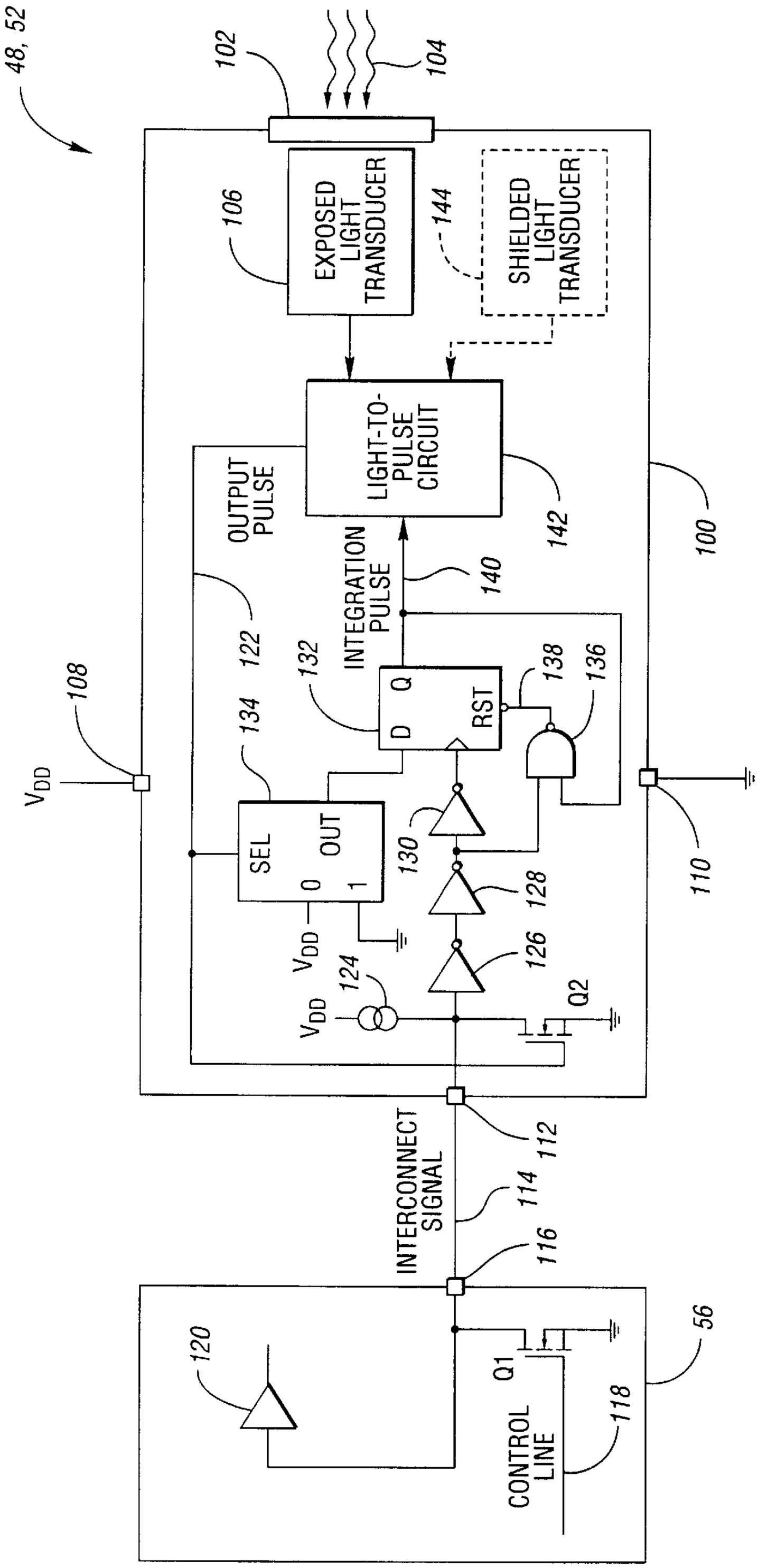
48, 52
102
104
106
EXPOSED LIGHT TRANSDUCER
144
SHIELDED LIGHT TRANSDUCER
LIGHT-TO-PULSE CIRCUIT
142
100
OUTPUT PULSE
122
INTEGRATION PULSE
140
132
D
Q
RST
138
136
134
SEL
OUT
0
1
130
128
126
124
Q2
108
V_{DD}
110
112
INTERCONNECT SIGNAL
114
116
120
Q1
CONTROL LINE
118
56

Fig. 4

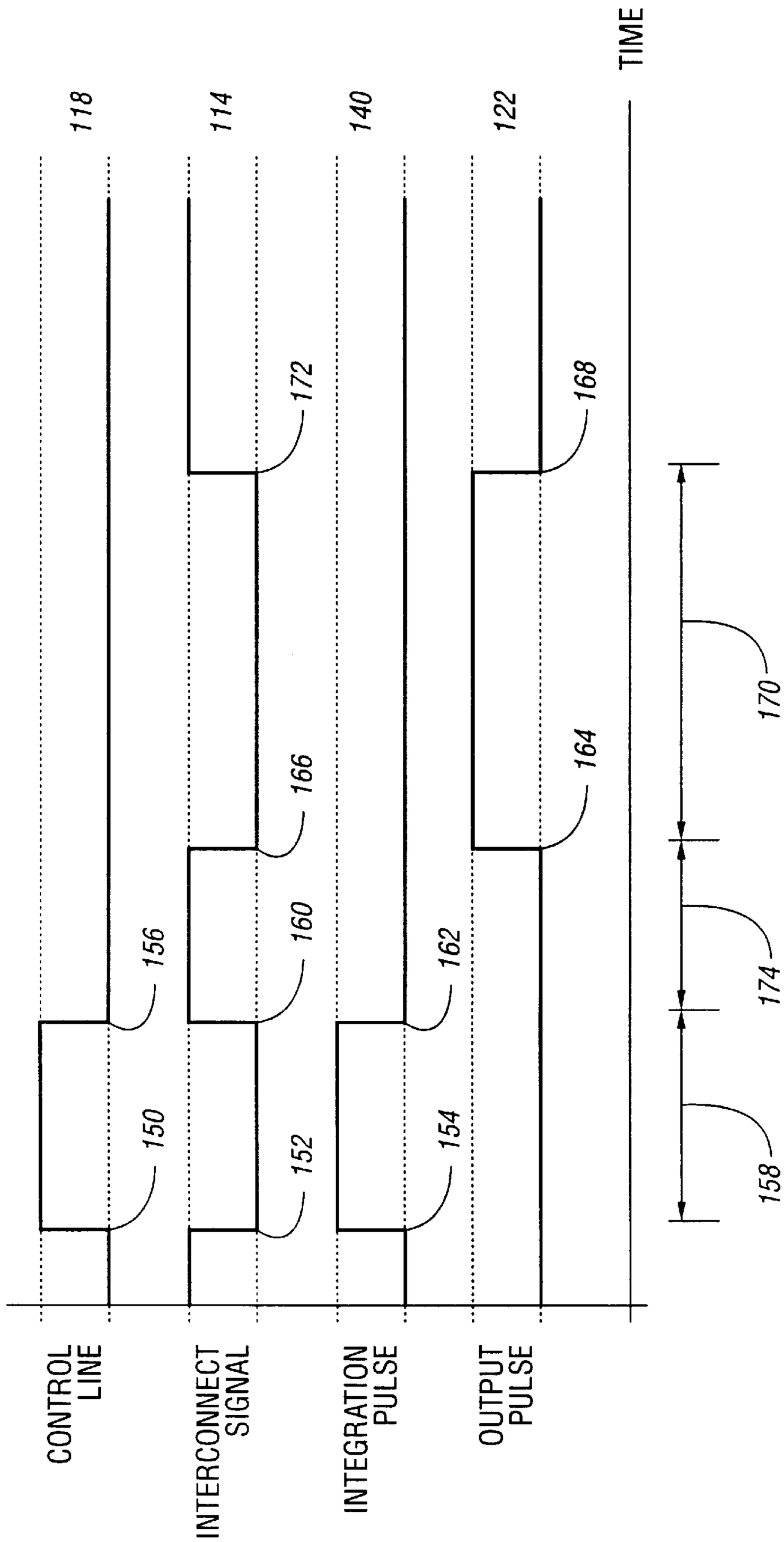
TIME
118
114
140
122
172
168
166
164
160
162
156
154
152
150
170
174
158
CONTROL LINE
INTERCONNECT SIGNAL
INTEGRATION PULSE
OUTPUT PULSE

Fig. 5

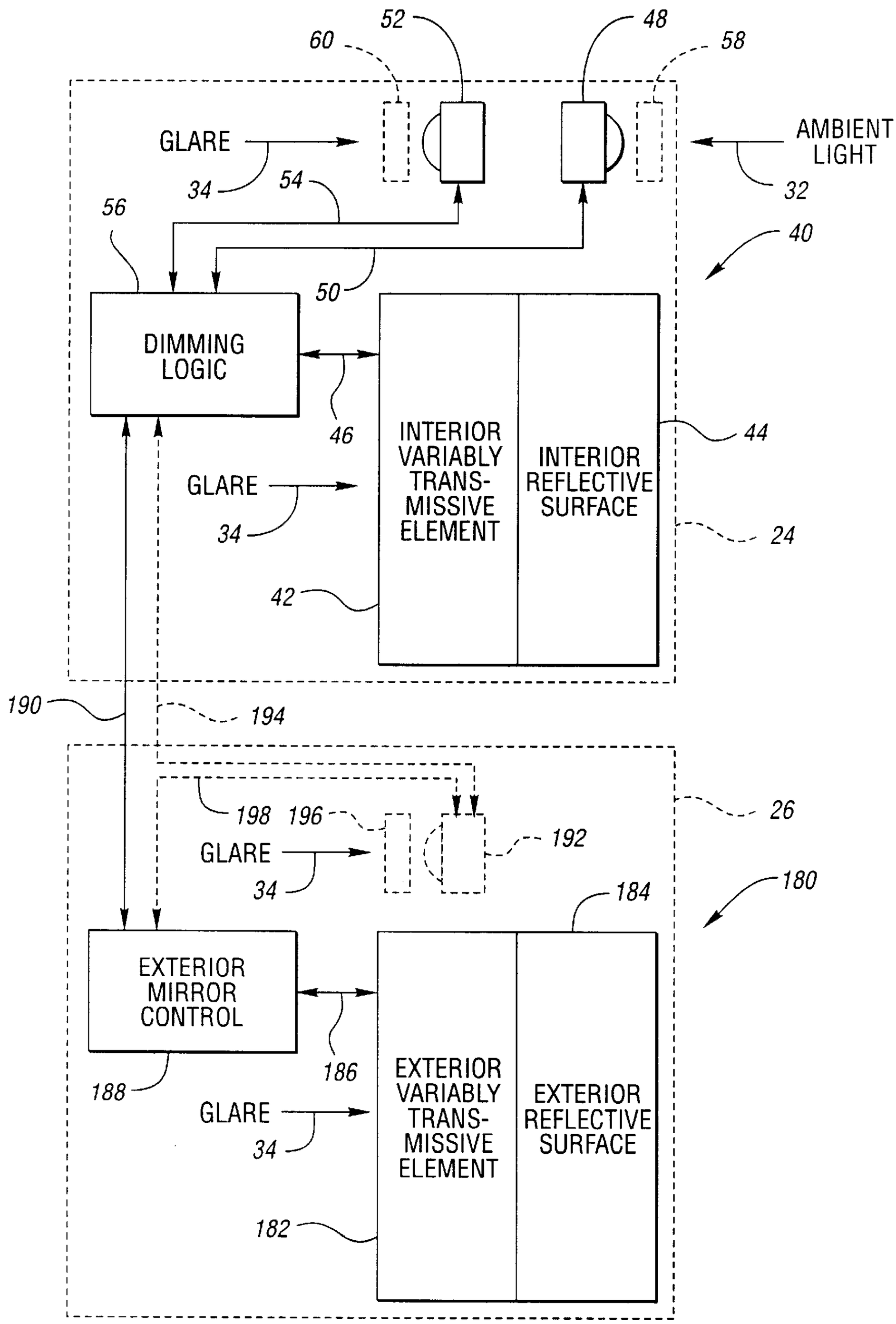
52
48
60
58
GLARE
AMBIENT LIGHT
34
54
32
56
40
50
DIMMING LOGIC
46
INTERIOR VARIABLY TRANS-MISSIVE ELEMENT
INTERIOR REFLECTIVE SURFACE
44
GLARE
34
24
42
190
194
198
196
26
192
GLARE
34
180
184
EXTERIOR MIRROR CONTROL
186
188
EXTERIOR VARIABLY TRANS-MISSIVE ELEMENT
EXTERIOR REFLECTIVE SURFACE
GLARE
34
182

Fig. 6

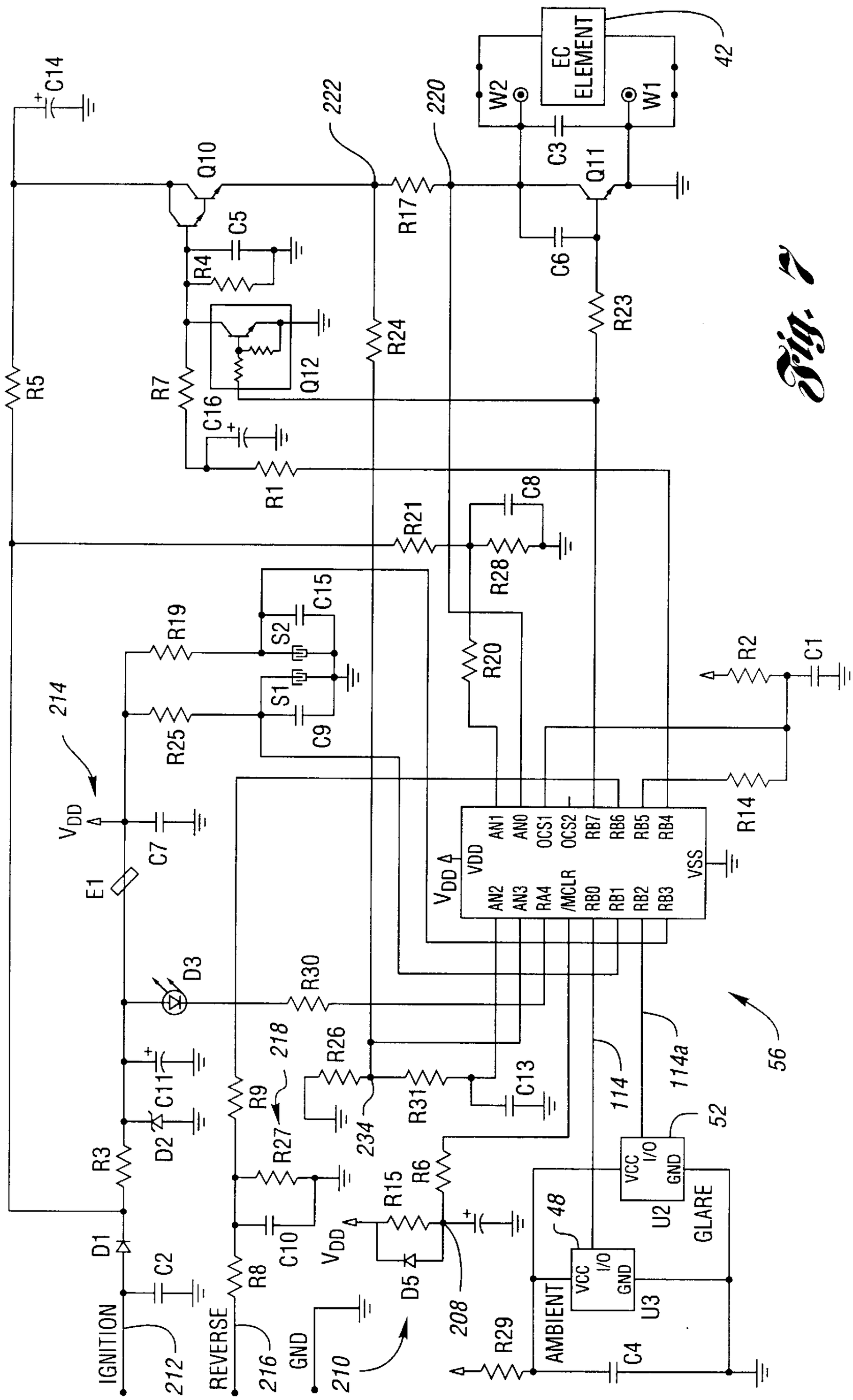
EC ELEMENT
42
W2
W1
C3
Q11
C6
R23
C14
Q10
222
220
R17
C5
R4
R24
Q12
R5
R7
C16
R1
R21
C8
R28
R20
C15
S2
S1
R19
R25
C9
214
VDD
C7
E1
R14
R2
C1
VDD
VDD
AN1
AN0
OCS1
OCS2
RB7
RB6
RB5
RB4
AN2
AN3
RA4
/MCLR
RB0
RB1
RB2
RB3
VSS
D3
R30
R26
218
R9
R27
234
R31
C13
114
114a
56
C11
D2
R3
D1
C2
R8
C10
R15
R6
D5
208
R29
C4
AMBIENT
48
VCC
I/O
GND
U3
VCC
I/O
GND
U2
52
GLARE
IGNITION
212
REVERSE
216
GND
210

Fig. 7

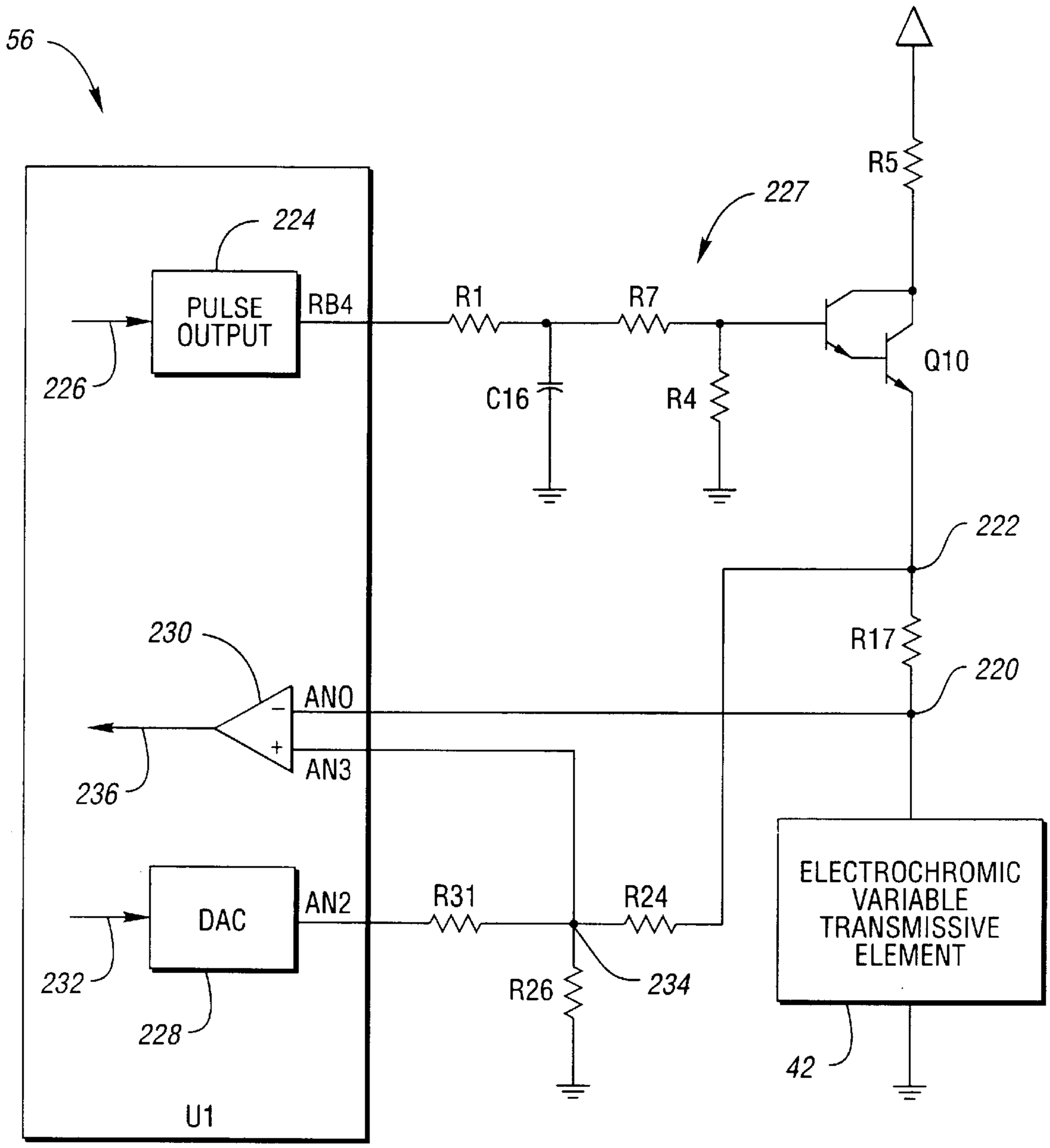
56
224
PULSE OUTPUT
RB4
226
R1
R7
227
R5
C16
R4
Q10
222
230
R17
220
AN0
AN3
236
DAC
AN2
R31
R24
ELECTROCHROMIC VARIABLE TRANSMISSIVE ELEMENT
232
R26
234
228
42
U1

Fig. 8

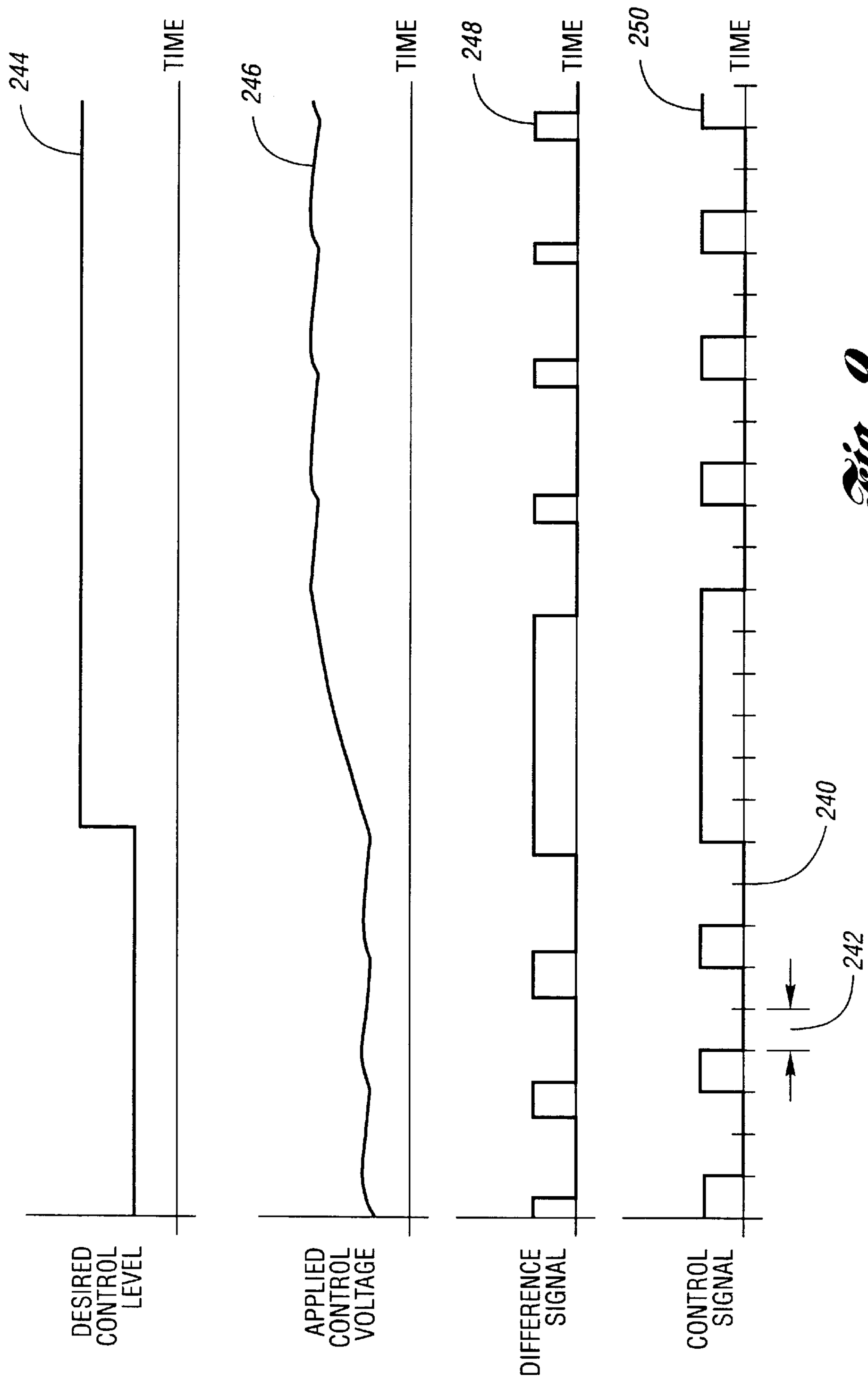
244
TIME
DESIRED CONTROL LEVEL
246
TIME
APPLIED CONTROL VOLTAGE
248
TIME
DIFFERENCE SIGNAL
250
TIME
CONTROL SIGNAL
240
242

Fig. 9

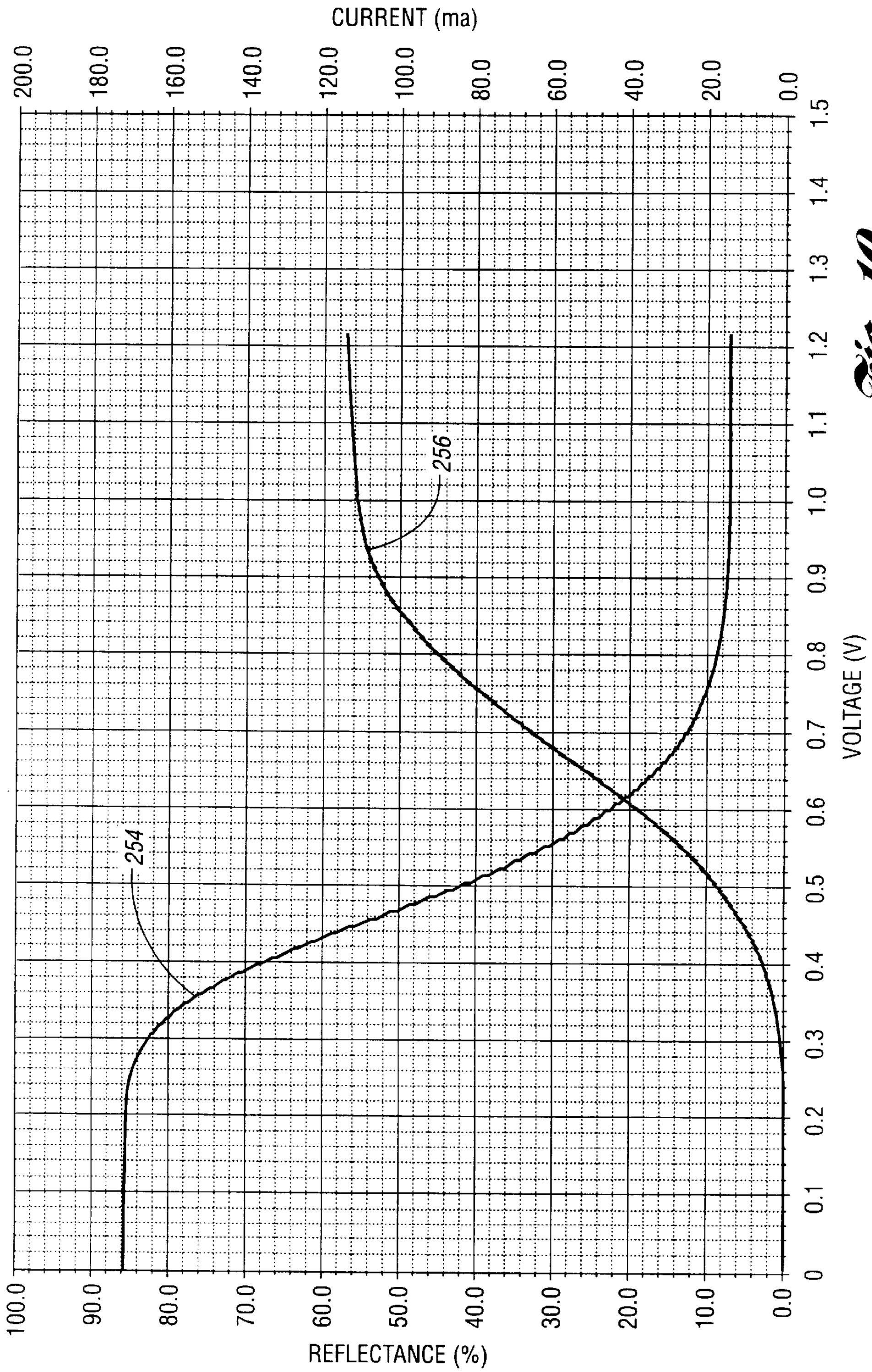
CURRENT (ma)
200.0
180.0
160.0
140.0
120.0
100.0
80.0
60.0
40.0
20.0
0.0
1.5
1.4
1.3
1.2
1.1
1.0
0.9
0.8
0.7
0.6
0.5
0.4
0.3
0.2
0.1
0
VOLTAGE (V)
256
254
100.0
90.0
80.0
70.0
60.0
50.0
40.0
30.0
20.0
10.0
0.0
REFLECTANCE (%)

Fig. 10

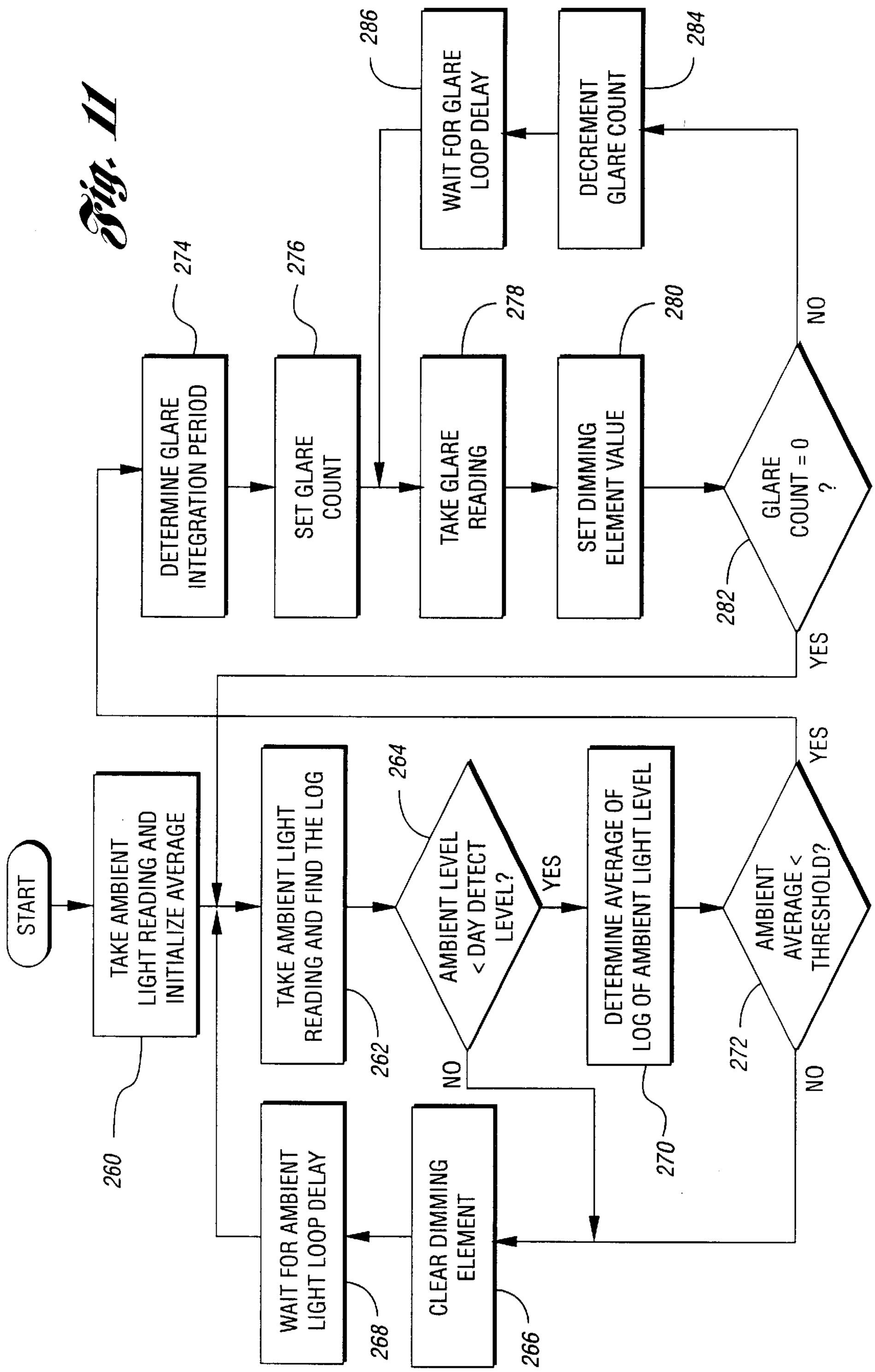
START
TAKE AMBIENT LIGHT READING AND INITIALIZE AVERAGE
260
TAKE AMBIENT LIGHT READING AND FIND THE LOG
262
AMBIENT LEVEL < DAY DETECT LEVEL?
264
YES
NO
WAIT FOR AMBIENT LIGHT LOOP DELAY
268
CLEAR DIMMING ELEMENT
266
DETERMINE AVERAGE OF LOG OF AMBIENT LIGHT LEVEL
270
AMBIENT AVERAGE < THRESHOLD?
272
YES
NO
DETERMINE GLARE INTEGRATION PERIOD
274
SET GLARE COUNT
276
TAKE GLARE READING
278
SET DIMMING ELEMENT VALUE
280
GLARE COUNT = 0 ?
282
YES
NO
DECREMENT GLARE COUNT
284
WAIT FOR GLARE LOOP DELAY
286

Fig. 11

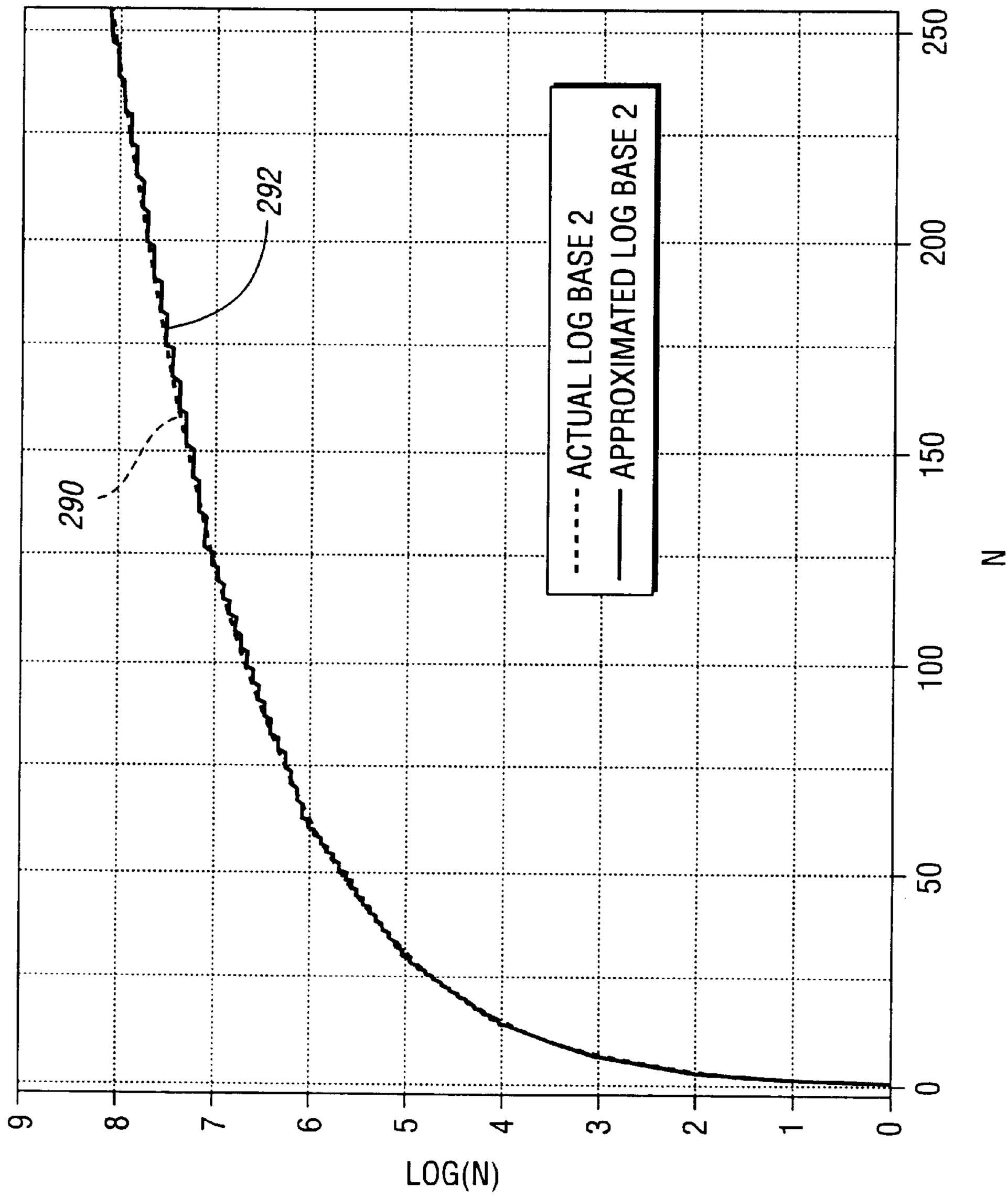
ACTUAL LOG BASE 2
APPROXIMATED LOG BASE 2
290
292
LOG(N)
N
0
1
2
3
4
5
6
7
8
9
0
50
100
150
200
250

Fig. 12

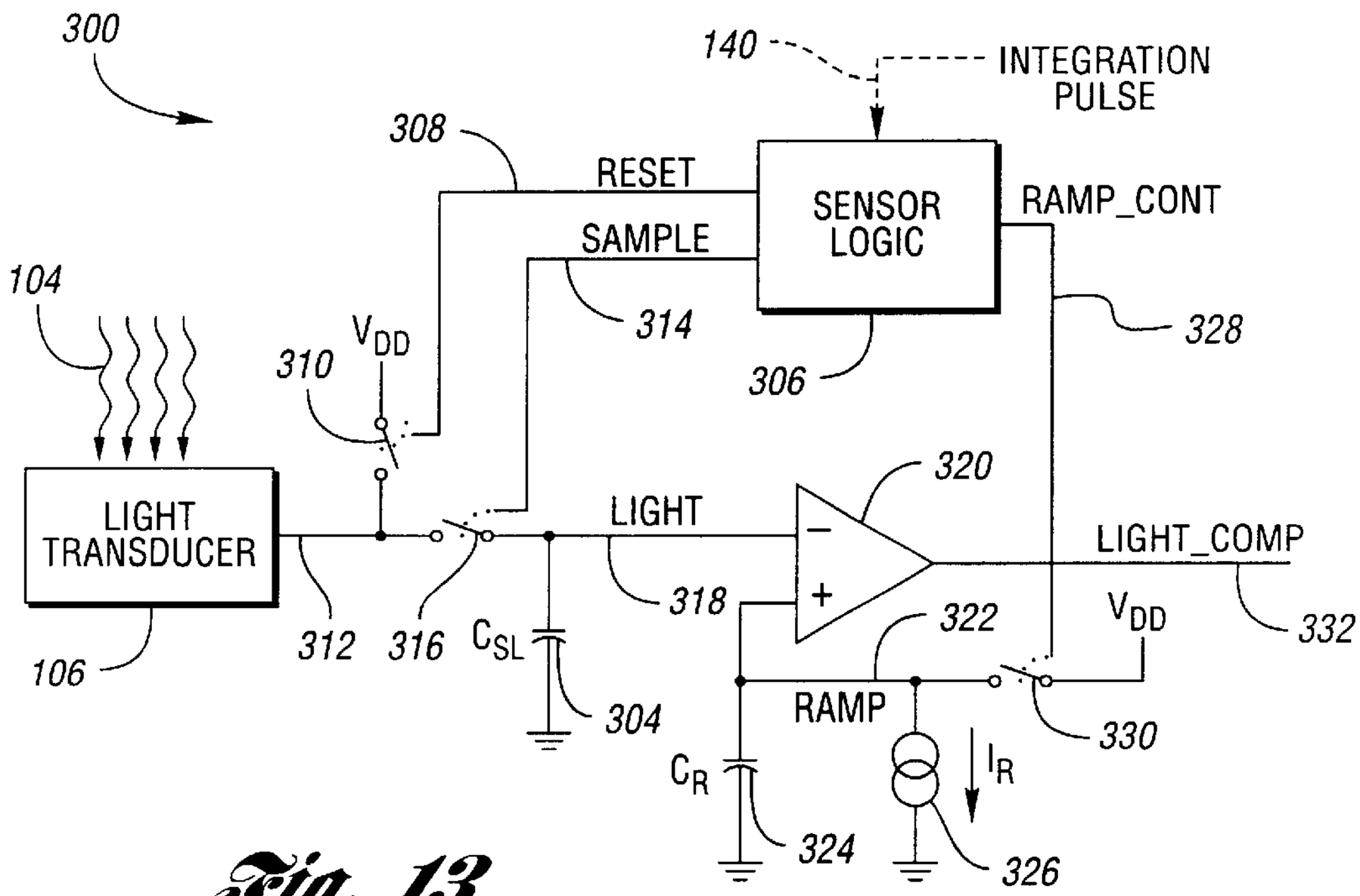
300
140
INTEGRATION PULSE
308
RESET
SENSOR LOGIC
RAMP_CONT
SAMPLE
104
314
328
V_{DD}
310
306
320
LIGHT TRANSDUCER
LIGHT
LIGHT_COMP
318
322
V_{DD}
332
106
312
316
C_{SL}
304
RAMP
330
C_R
I_R
324
326

Fig. 13

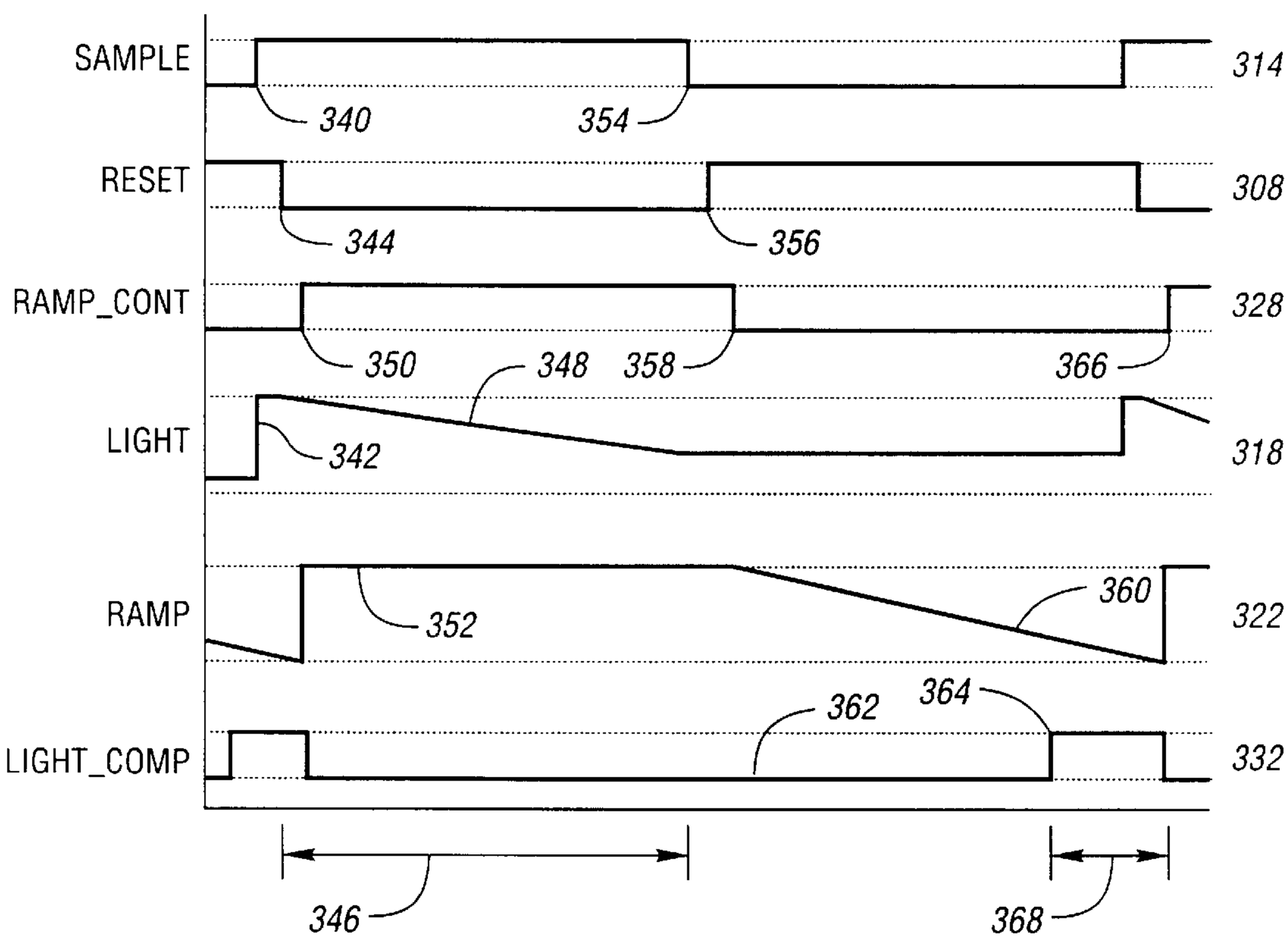
SAMPLE
314
340
354
RESET
308
344
356
RAMP_CONT
328
350
348
358
366
LIGHT
318
342
RAMP
360
322
352
362
364
LIGHT_COMP
332
346
368

Fig. 14

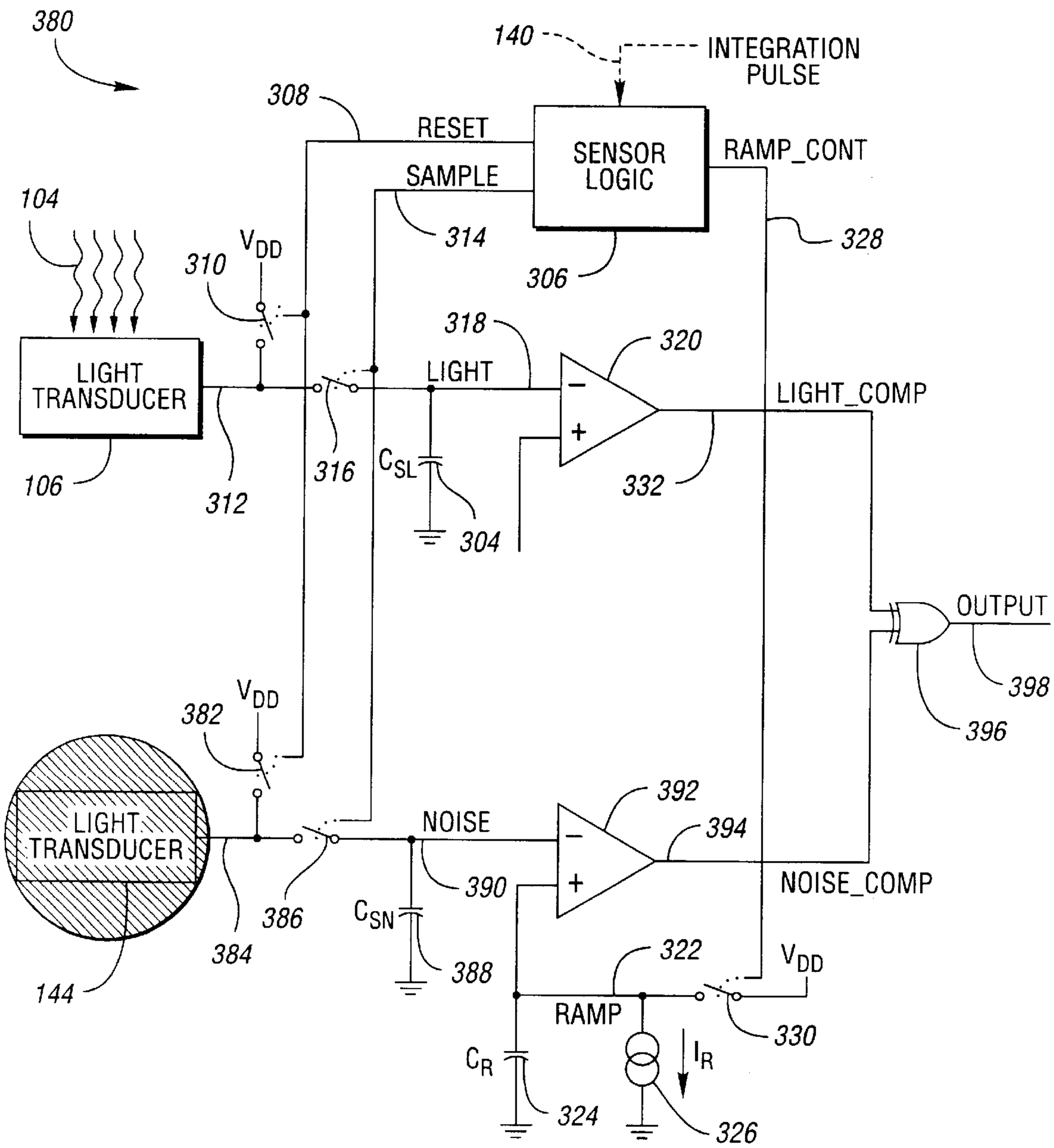
380
140
INTEGRATION PULSE
308
RESET
SENSOR LOGIC
RAMP_CONT
SAMPLE
104
314
328
306
310
V_{DD}
318
320
LIGHT TRANSDUCER
LIGHT
LIGHT_COMP
106
312
316
C_{SL}
332
304
OUTPUT
398
396
382
V_{DD}
392
LIGHT TRANSDUCER
NOISE
394
390
NOISE_COMP
386
C_{SN}
384
388
322
V_{DD}
144
RAMP
330
C_R
I_R
324
326

Fig. 15

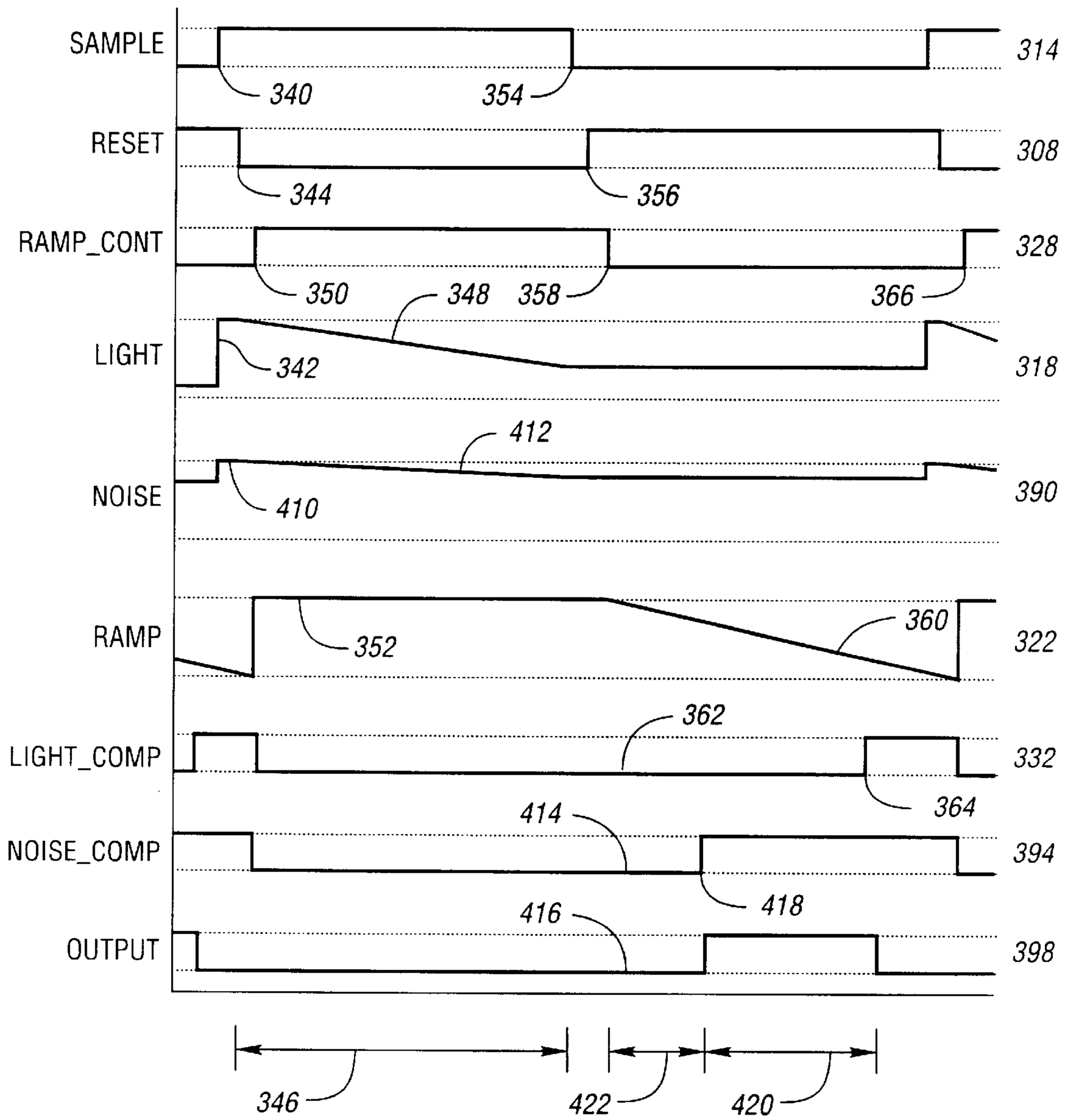
SAMPLE
314
340
354
RESET
308
344
356
RAMP_CONT
328
350
348
358
366
LIGHT
318
342
412
NOISE
390
410
RAMP
322
352
360
LIGHT_COMP
332
362
364
NOISE_COMP
394
414
418
OUTPUT
398
416
346
422
420

Fig. 16

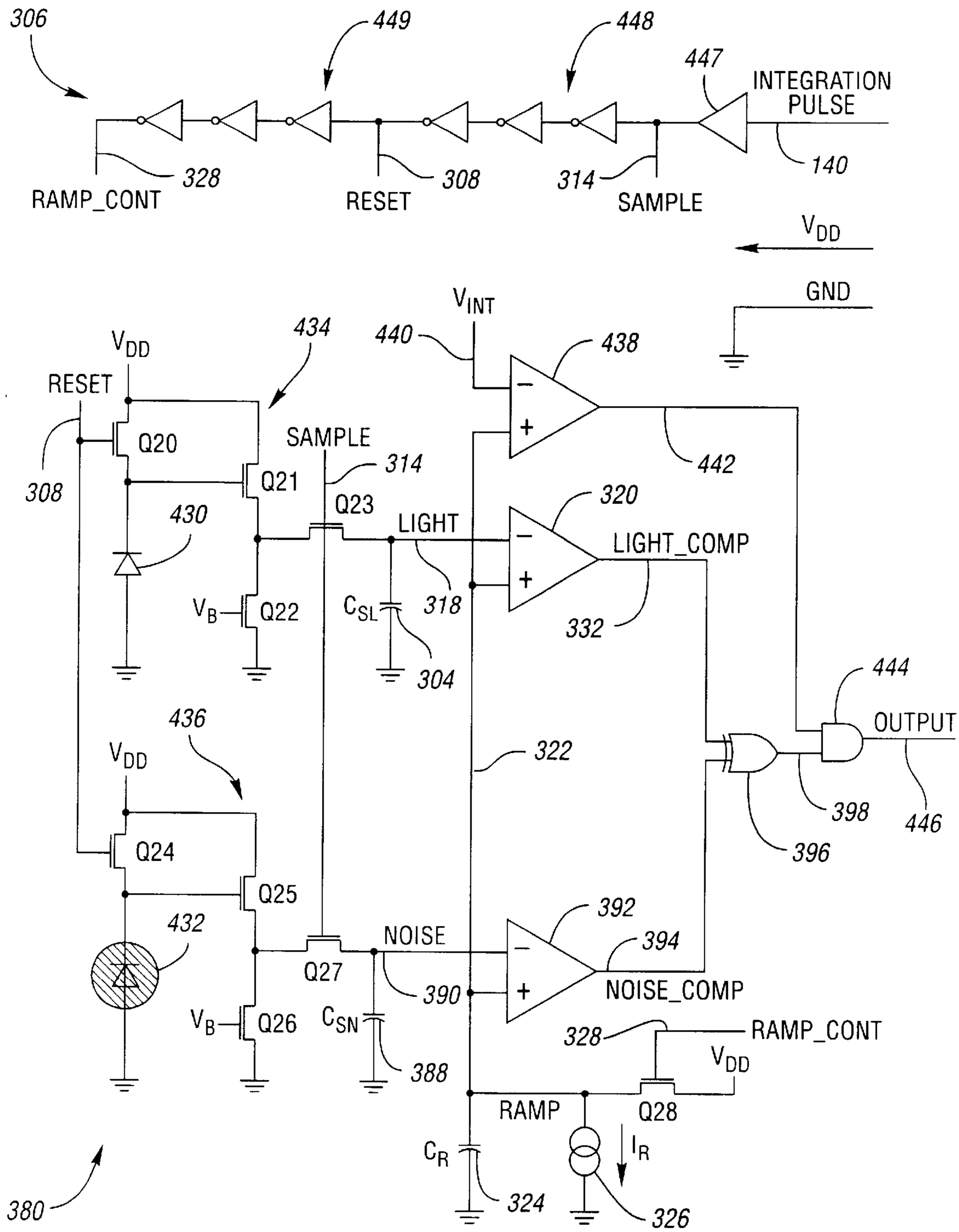
306
449
448
447
INTEGRATION PULSE
328
308
314
140
RAMP_CONT
RESET
SAMPLE
VDD
GND
VINT
434
440
438
VDD
RESET
Q20
SAMPLE
314
442
308
Q21
Q23
320
430
LIGHT
LIGHT_COMP
VB
Q22
CSL
318
332
304
444
436
OUTPUT
VDD
322
398
446
Q24
396
Q25
392
432
NOISE
394
Q27
390
NOISE_COMP
VB
Q26
CSN
328
RAMP_CONT
VDD
388
RAMP
Q28
CR
IR
380
324
326

Fig. 17

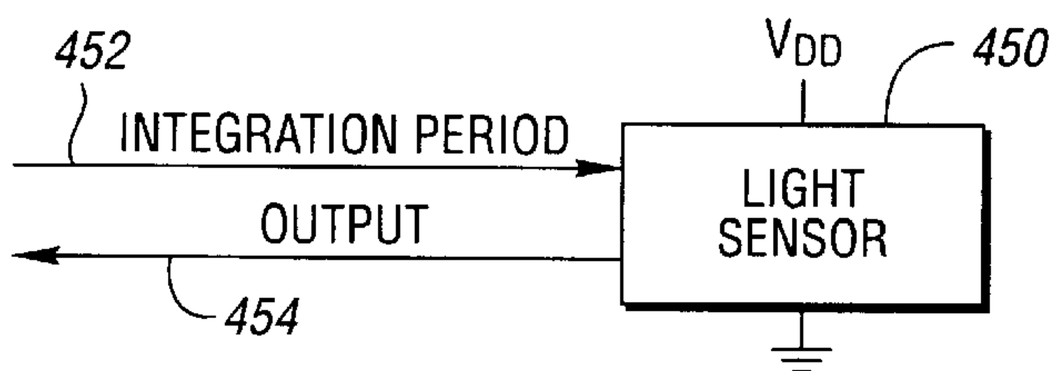

Fig. 18

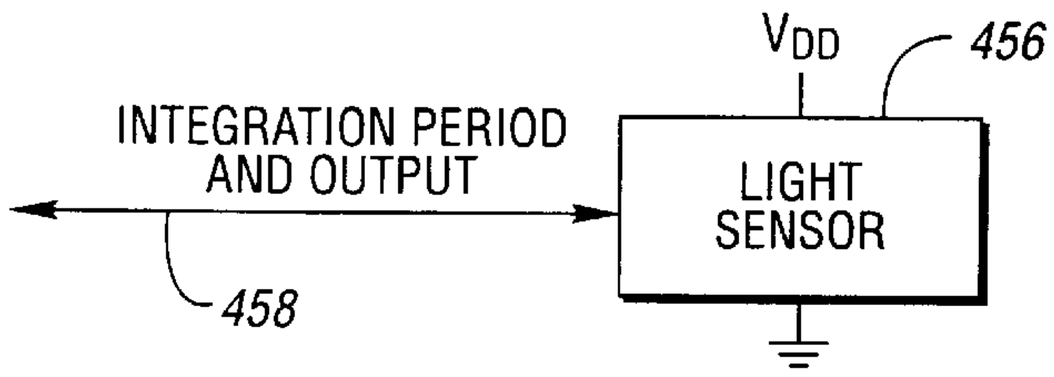

Fig. 19

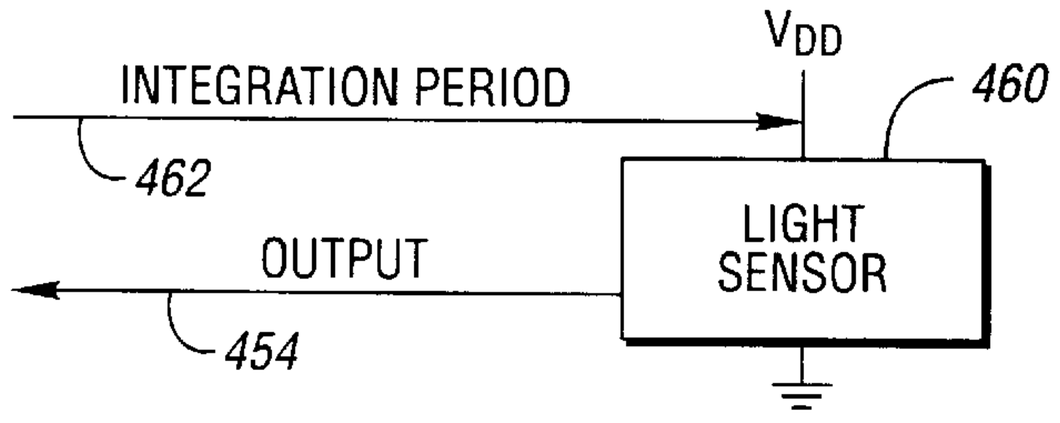

Fig. 20

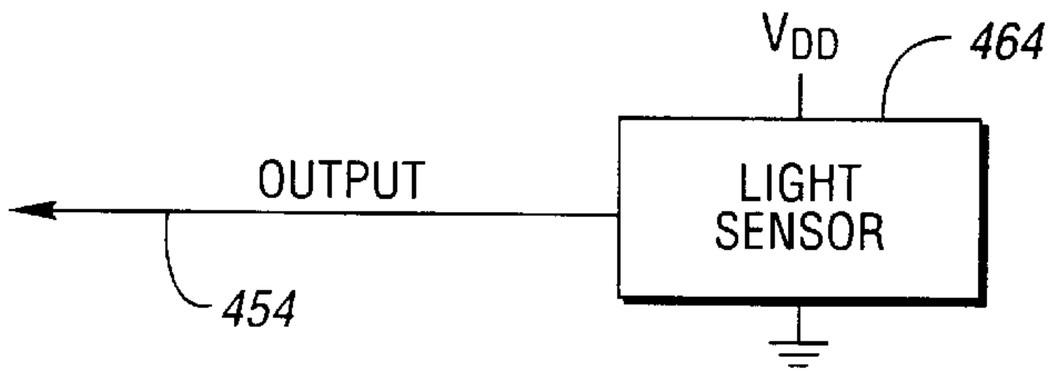

Fig. 21

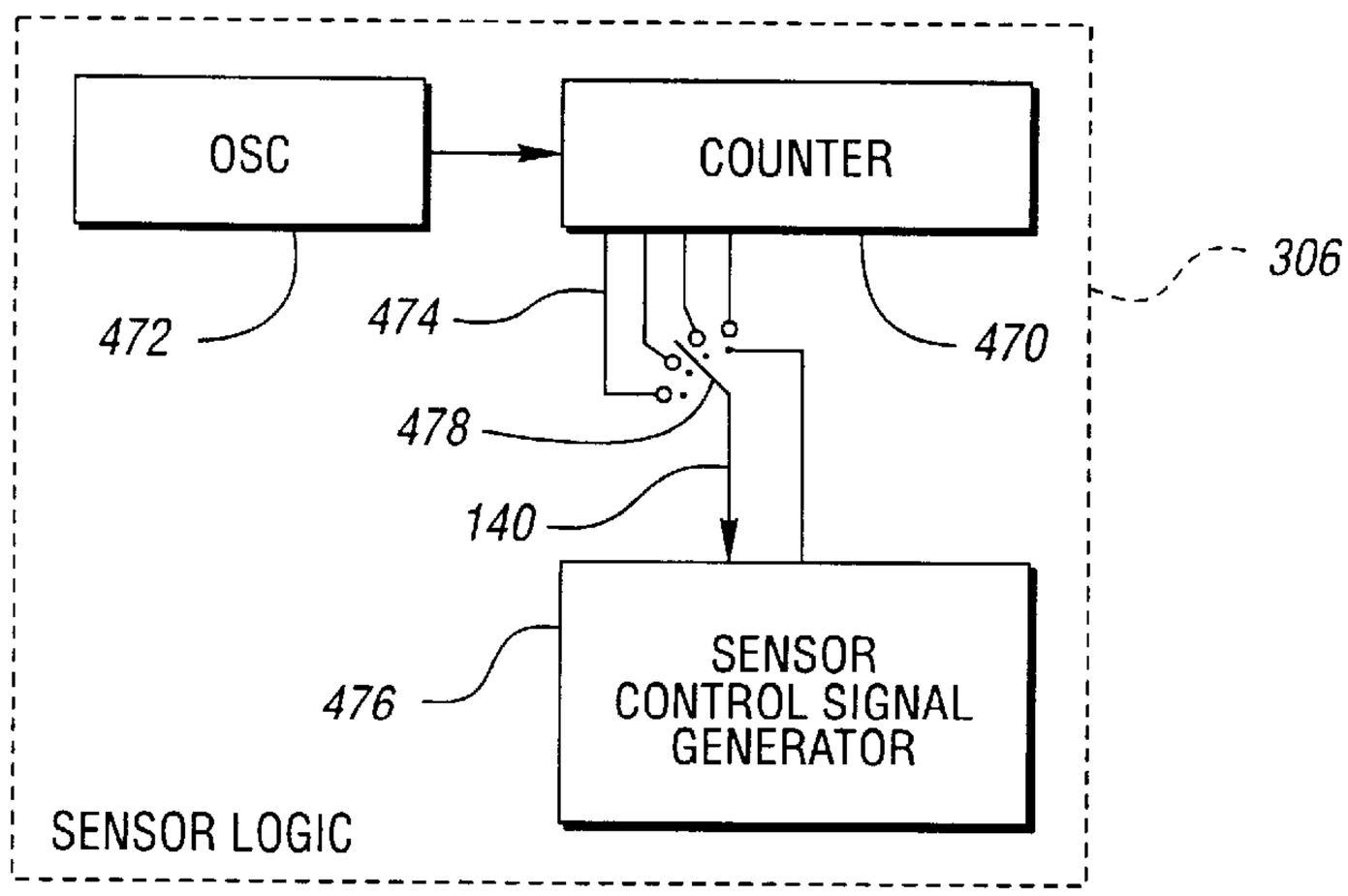

Fig. 22

Fig. 23

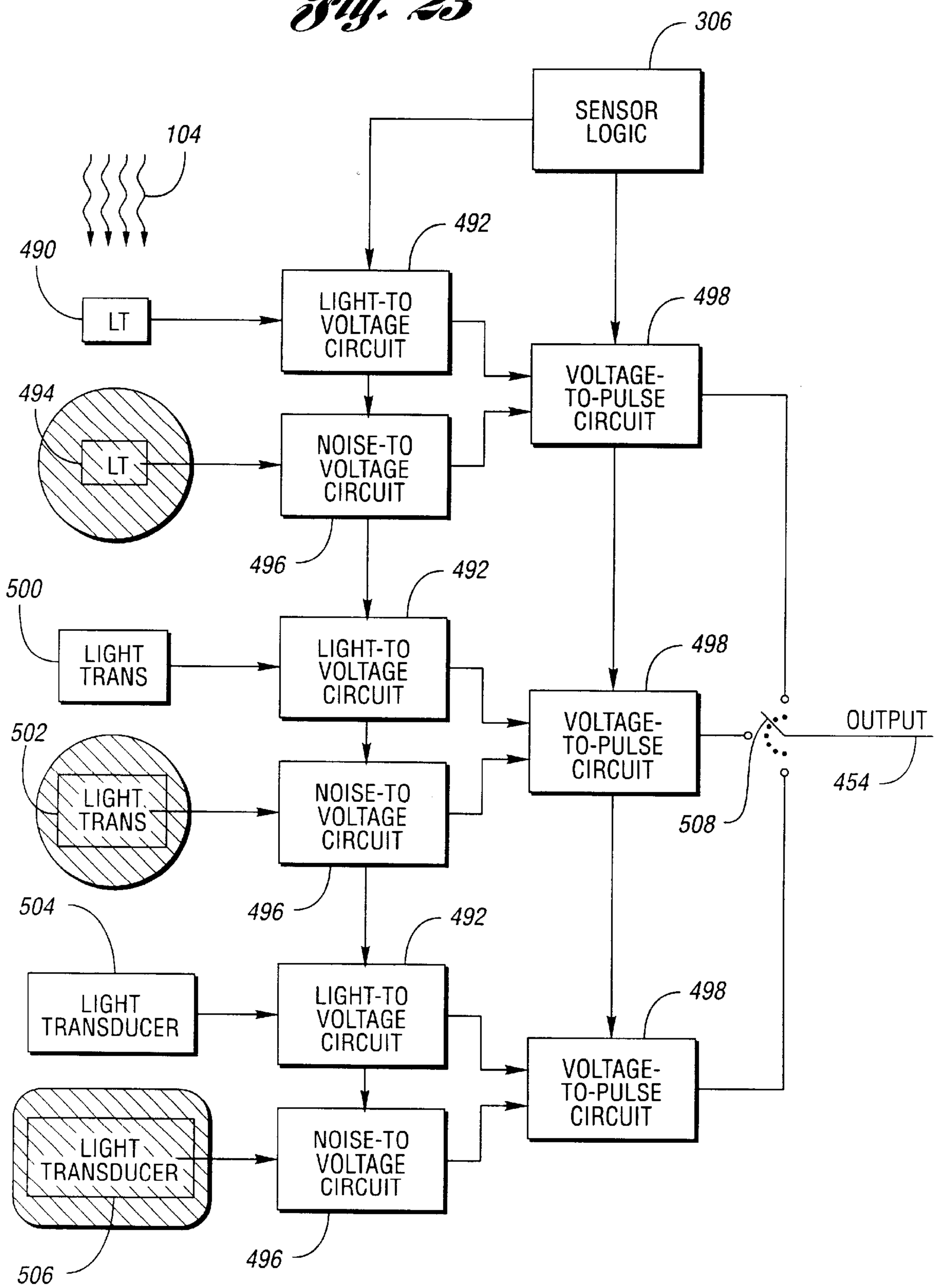
306
SENSOR LOGIC
104
490
LT
492
LIGHT-TO VOLTAGE CIRCUIT
498
VOLTAGE-TO-PULSE CIRCUIT
494
LT
NOISE-TO VOLTAGE CIRCUIT
496
492
500
LIGHT TRANS
LIGHT-TO VOLTAGE CIRCUIT
498
VOLTAGE-TO-PULSE CIRCUIT
OUTPUT
502
LIGHT TRANS
NOISE-TO VOLTAGE CIRCUIT
454
508
496
504
492
LIGHT TRANSDUCER
LIGHT-TO VOLTAGE CIRCUIT
498
VOLTAGE-TO-PULSE CIRCUIT
LIGHT TRANSDUCER
NOISE-TO VOLTAGE CIRCUIT
506
496

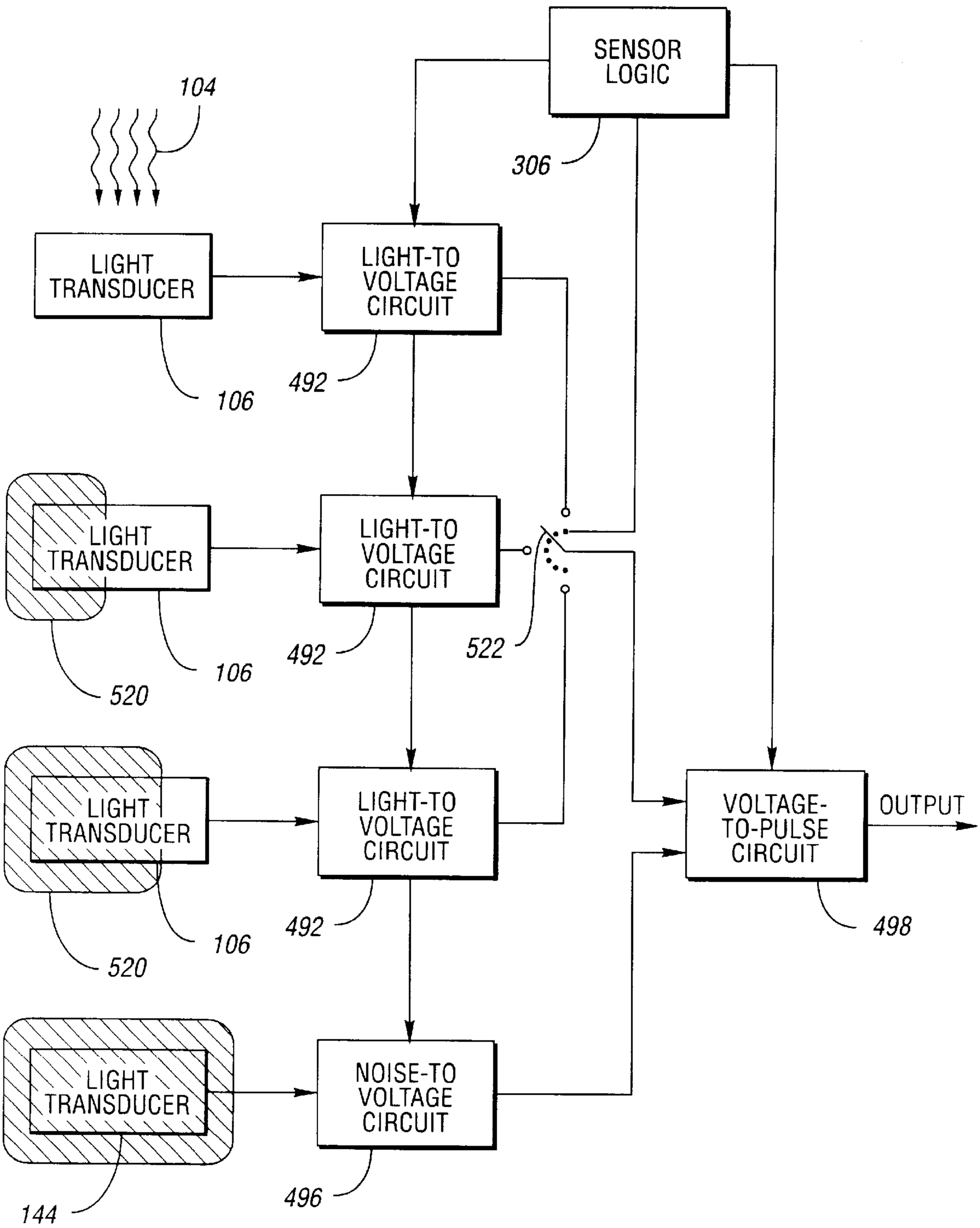
SENSOR LOGIC
306
104
LIGHT TRANSDUCER
LIGHT-TO VOLTAGE CIRCUIT
106
492
LIGHT TRANSDUCER
LIGHT-TO VOLTAGE CIRCUIT
520
106
492
522
LIGHT TRANSDUCER
LIGHT-TO VOLTAGE CIRCUIT
520
106
492
VOLTAGE-TO-PULSE CIRCUIT
OUTPUT
498
LIGHT TRANSDUCER
NOISE-TO VOLTAGE CIRCUIT
144
496

Fig. 24

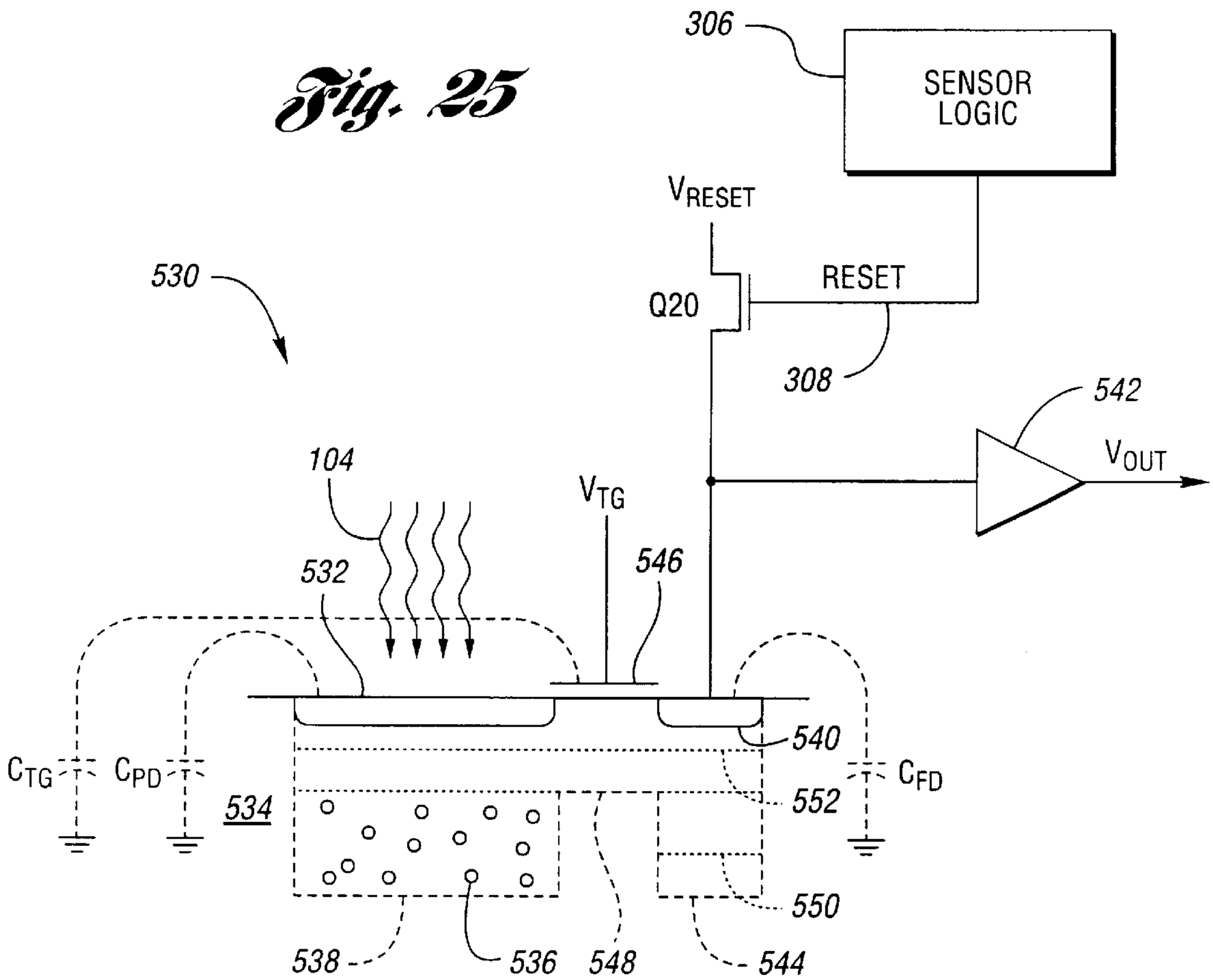
306
SENSOR LOGIC
VRESET
RESET
Q20
308
530
542
VOUT
104
VTG
532
546
540
CTG
CPD
CFD
534
552
550
538
536
548
544

Fig. 25

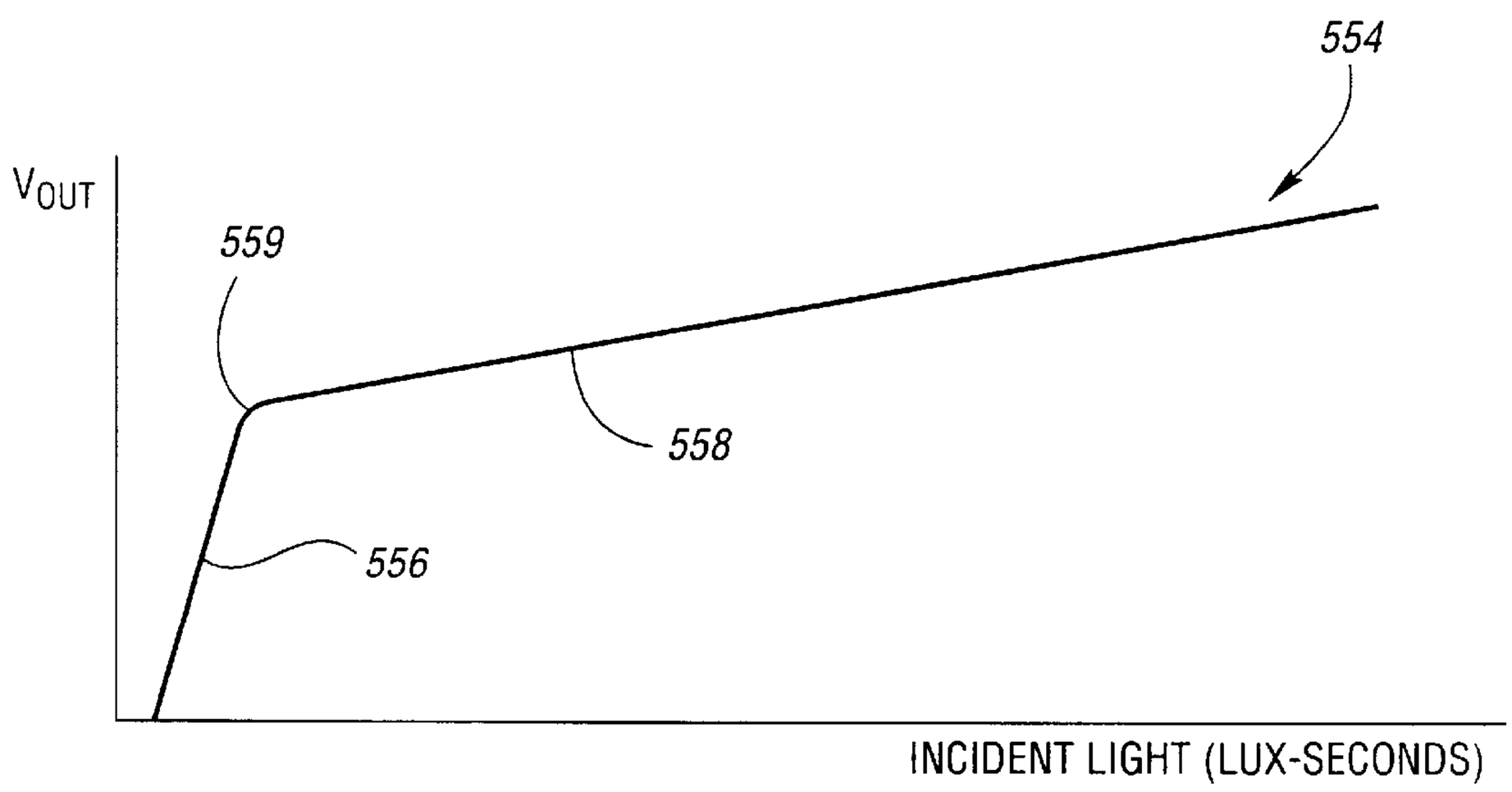
554
VOUT
559
558
556
INCIDENT LIGHT (LUX-SECONDS)

Fig. 26

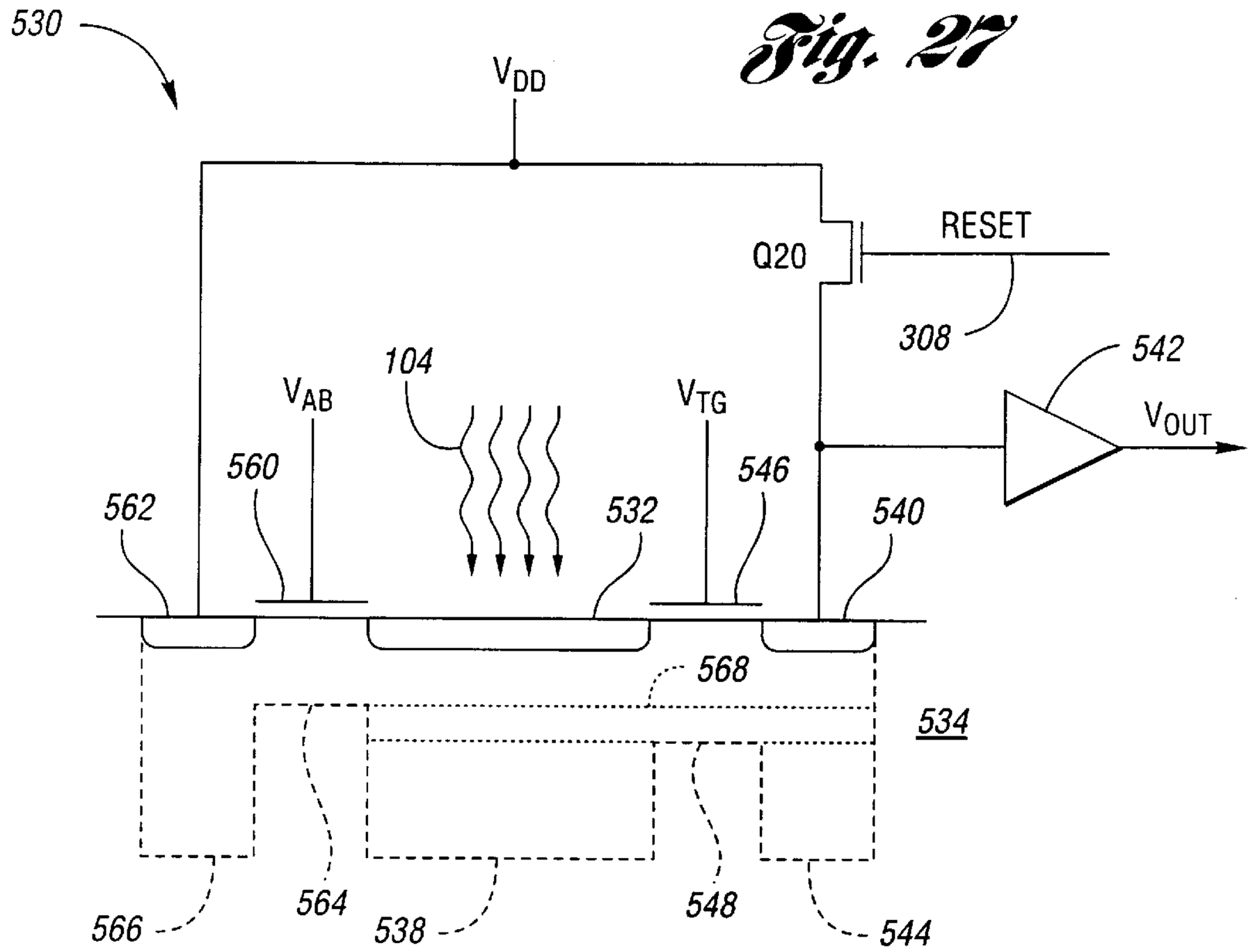
530
V_{DD}
RESET
Q20
308
542
V_{OUT}
104
V_{AB}
V_{TG}
560
546
562
532
540
568
534
566
564
538
548
544

Fig. 27

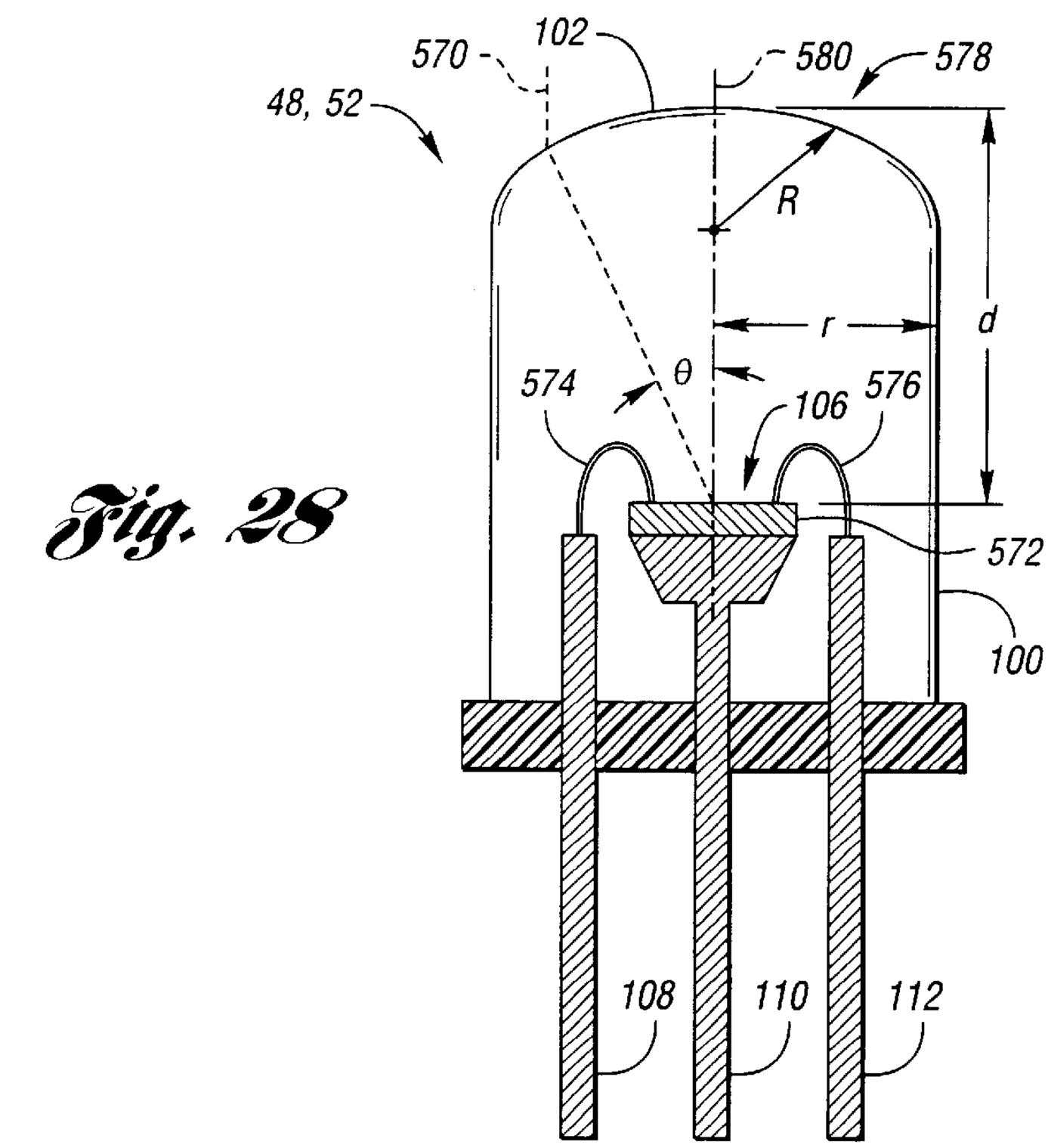
102
570
580
578
48, 52
R
r
d
θ
574
106
576
572
100
108
110
112

Fig. 28

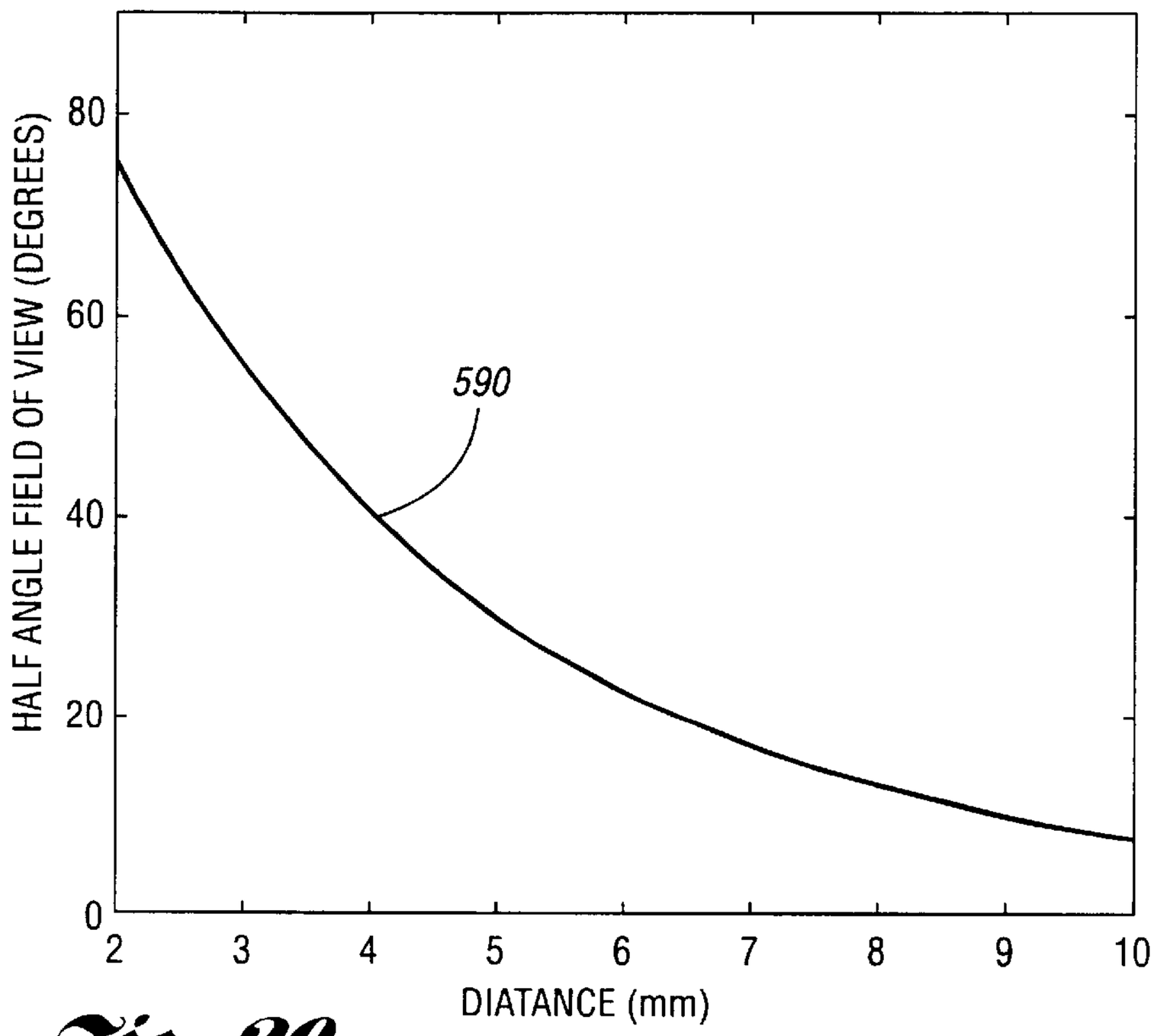
HALF ANGLE FIELD OF VIEW (DEGREES)
80
60
40
20
0
590
2
3
4
5
6
7
8
9
10
DIATANCE (mm)

Fig. 29

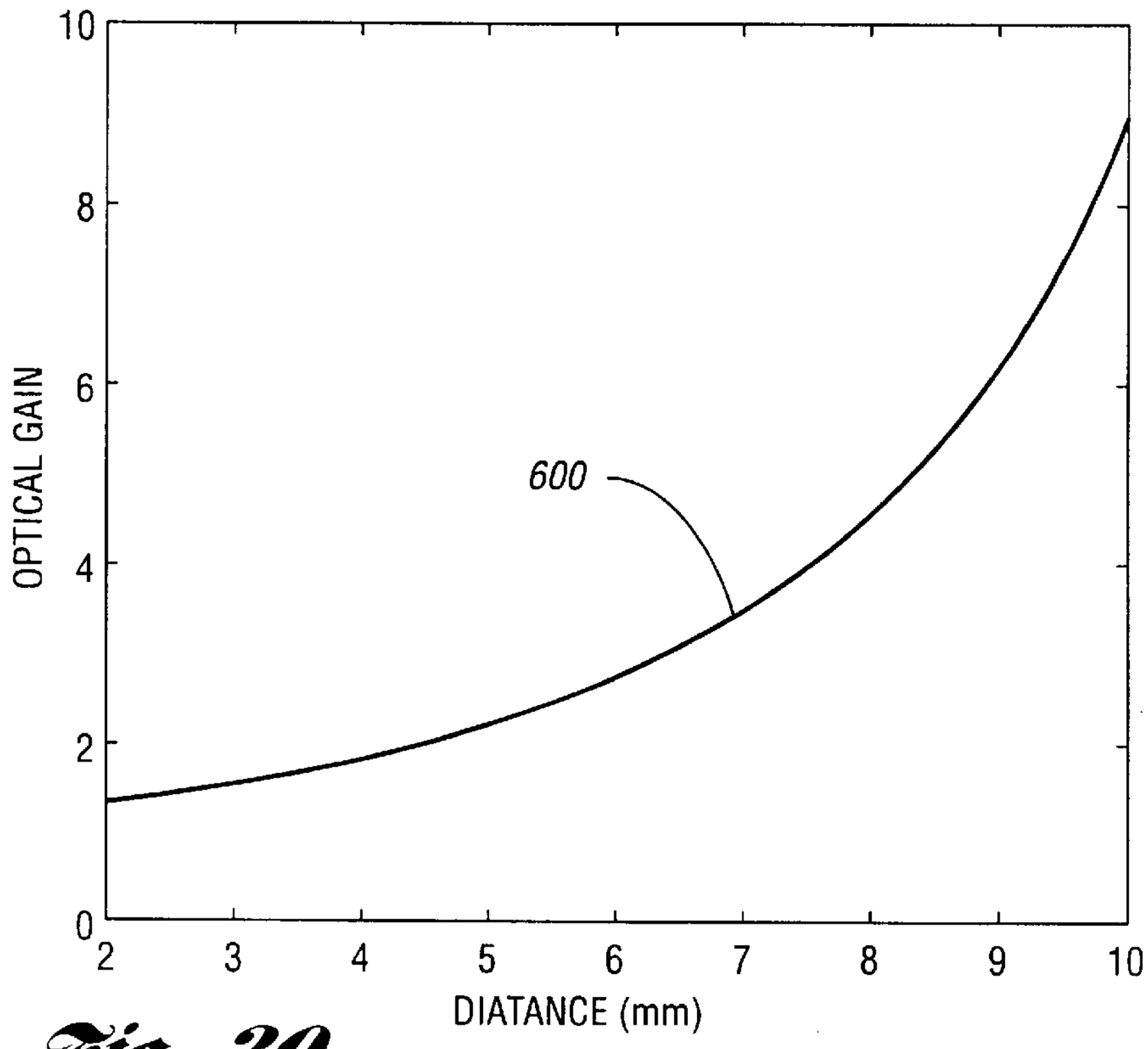
OPTICAL GAIN
10
8
6
4
2
0
600
2
3
4
5
6
7
8
9
10
DIATANCE (mm)

Fig. 30

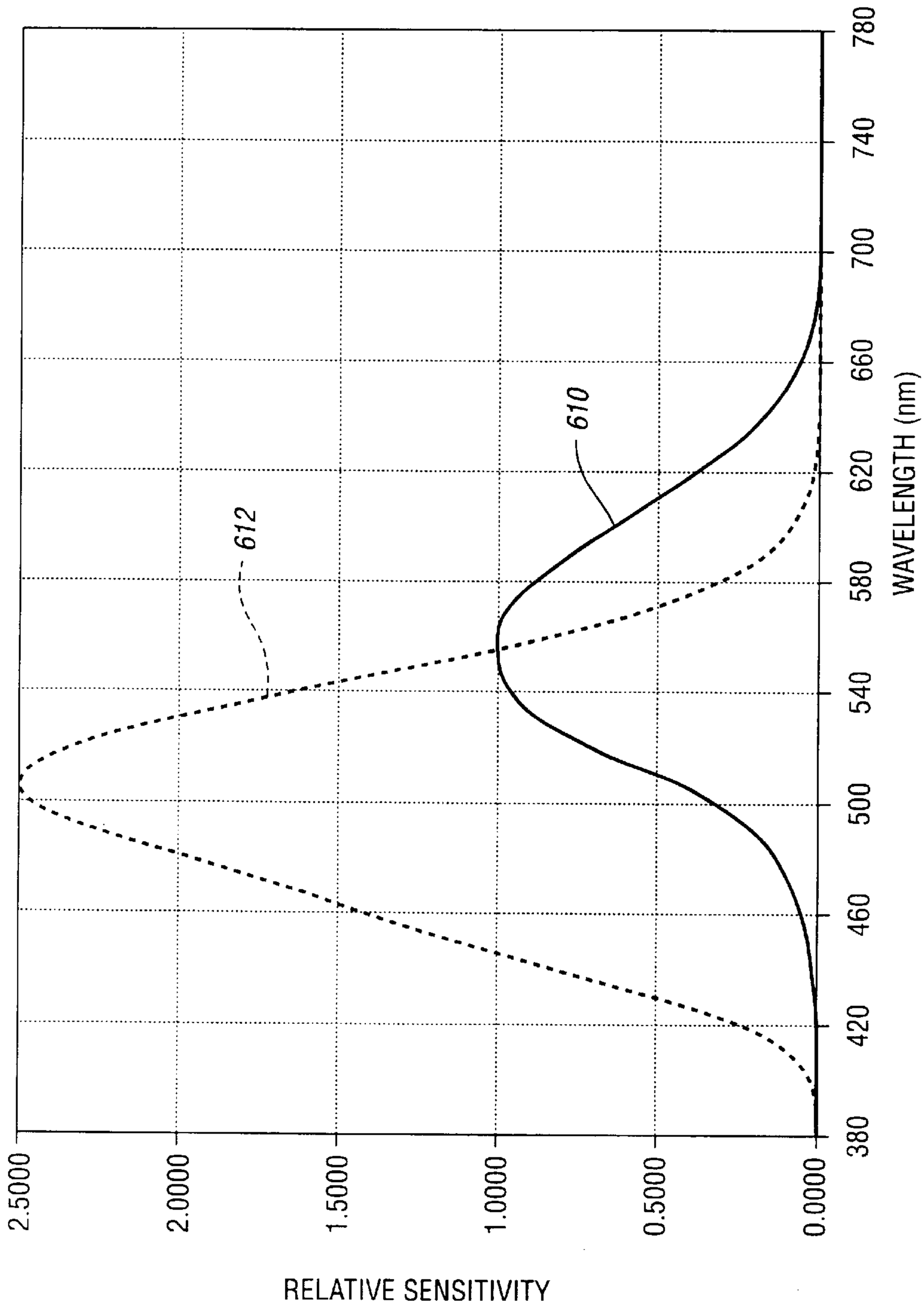
2.5000
2.0000
1.5000
1.0000
0.5000
0.0000
RELATIVE SENSITIVITY
380
420
460
500
540
580
620
660
700
740
780
WAVELENGTH (nm)
610
612

Fig. 31

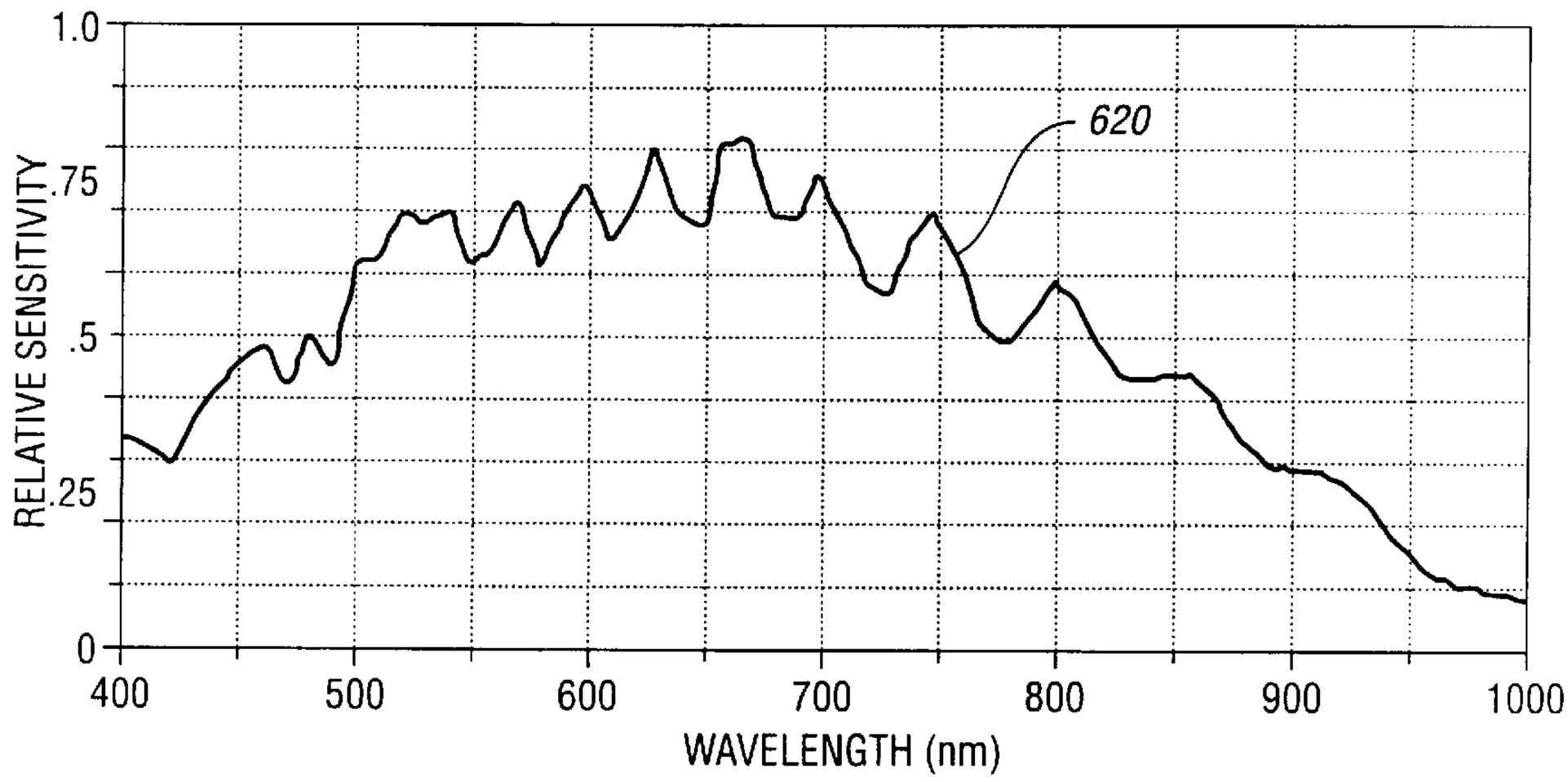
1.0
.75
.5
.25
0
RELATIVE SENSITIVITY
620
400
500
600
700
800
900
1000
WAVELENGTH (nm)

Fig. 32

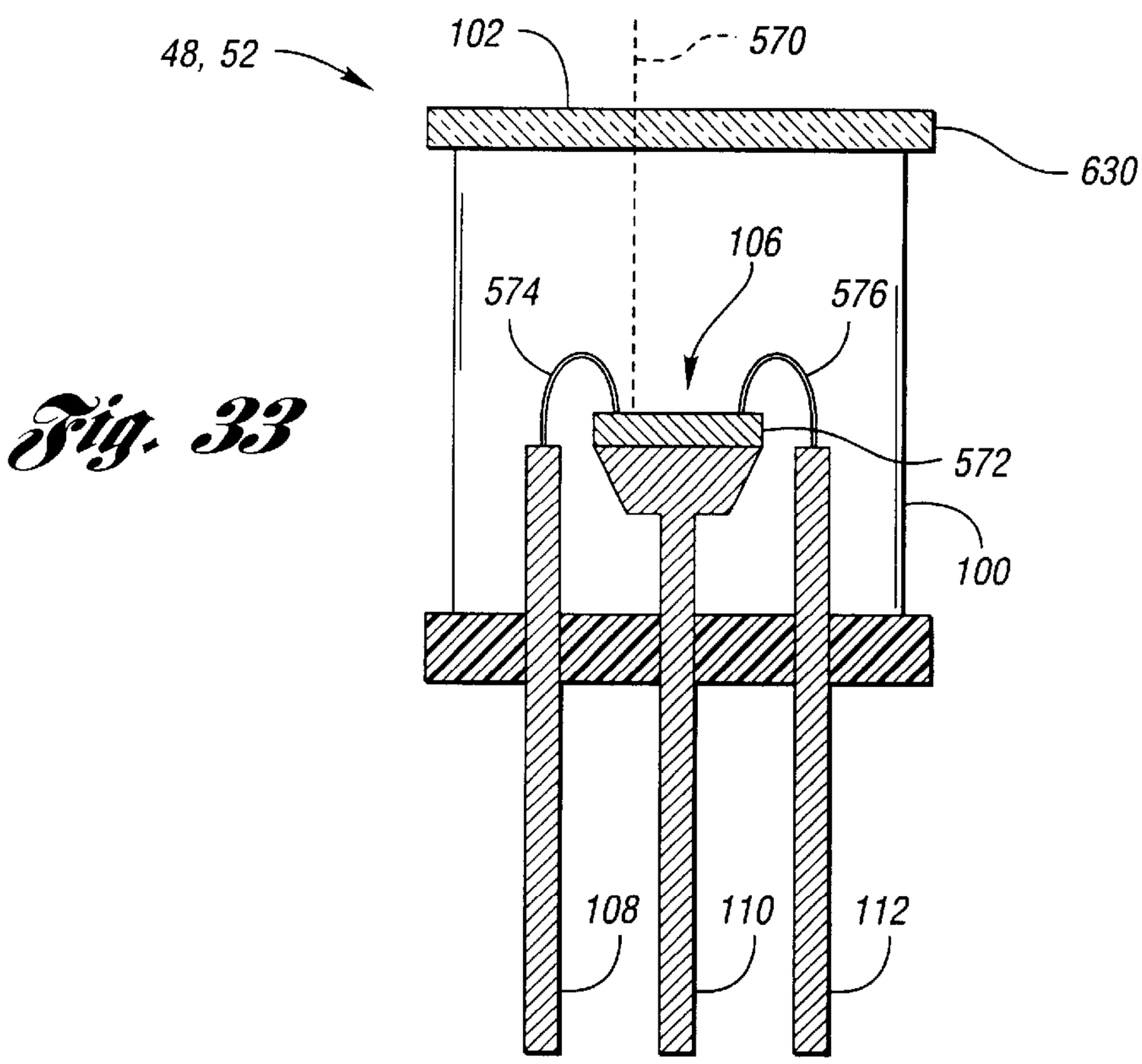
48, 52
102
570
630
106
574
576
572
100
108
110
112

Fig. 33

AUTOMATIC DIMMING MIRROR USING SEMICONDUCTOR LIGHT SENSOR WITH INTEGRAL CHARGE COLLECTION

CROSS-REFERENCE TO RELATED APPLICATION

This application is a continuation-in-part of copending U.S. patent application Ser. No. 09/236,969, filed Jan. 25, 1999, titled "Automatic Dimming Mirror Using Semiconductor Light Sensor With Integral Charge Collection", the specification of which is expressly incorporated herein by reference in its entirety.

TECHNICAL FIELD

The present invention relates to automotive rearview mirrors that automatically dim in response to glare.

BACKGROUND ART

Vehicle operators use interior and exterior rearview mirrors to view scenes behind the vehicle without having to face in a rearward direction and to view areas around the vehicle that would otherwise be blocked by vehicle structures. As such, rearview mirrors are an important source of information to the vehicle operator. Bright lights appearing in a scene behind the vehicle, such as from another vehicle approaching from the rear, may create glare in a rearview mirror that can temporarily visually impair or dazzle the operator. This problem is generally worsened during conditions of low ambient light such as occur at night, when the eyes of the vehicle operator have adjusted to the darkness.

Various solutions have evolved to deal with the problem of glare in automotive rearview mirrors. Initially, a prismatic mirror was provided that could be manually changed between a setting of high reflectivity and a setting of low reflectivity. When the operator experienced glare, the operator could manually change the rearview mirror setting to low reflectivity to reduce the glare. The operator could then manually switch the rearview mirror back to high reflectivity after the glare had subsided. Difficulties with manually controlled mirrors include the glare experienced before the mirror could be switched as well as operator distraction caused by finding and operating the mirror control.

Automatically dimming rearview mirrors were designed to eliminate the need for the operator to manually switch the mirror. The earliest designs used a single glare sensor facing rearward to detect the level of light striking the mirror. This design proved to be inadequate since the threshold perceived by the operator for dimming the mirror, known as the glare threshold, varied as a function of the ambient light level. An improvement included a second light sensor for detecting the ambient light level. The glare threshold in these systems is based on the amount of ambient light detected. Among the dual sensor designs proposed include those described in U.S. Pat. Nos. 3,601,614 to Platzer; 3,746,430 to Brean et al.; 4,580,875 to Bechtel et al.; 4,793,690 to Gahan et al.; 4,886,960 to Molyneux et al.; 4,917,477 to Bechtel et al.; 5,204,778 to Bechtel; 5,451,822 to Bechtel et al.; and 5,715,093 to Schierbeek et al.; each of which is hereby incorporated by reference.

Another related approach is described in U.S. Pat. No. 5,760,962 to Schofield et al., which is hereby incorporated by reference, in which an imaging array is used to gather light from behind and beside the vehicle. Ambient light is detected by examining pixels generally looking sideways. The cost of the imaging array, the required lens, and complicated signal processing logic make the use of an imaging array prohibitively expensive for many automotive applications. Also, light collected from a side view less accurately represents the ambient light experienced by the vehicle operator than does light from a forward view.

Improvements in glare reduction additionally occurred when prismatic mirrors having two states were replaced with mirror assemblies including dimming elements capable of providing many levels of reflectivity reduction. The most commercially successful type of variable dimming element is the electrochromic dimmer. Electrochromic devices produce various levels of opaqueness in response to an applied voltage. When placed in front of a reflective surface, an electrochromic device provides a variably reflective surface, the degree of reflectivity based on a control voltage. Typical electrochromic mirrors are described in U.S. Pat. Nos. 4,902,108 to Byker and 5,724,187 to Varaprasad et al. as well as in commonly assigned U.S. patent applications Ser. No. 08/616,967 titled "Improved EC Layer And Devices Comprising Same" to Tonar et al., filed Mar. 15, 1996; and U.S. patent application Ser. No. 08/832,596 titled "An Improved Electrochromic Medium Capable of Producing A Pre-Selected Color" to Baumann et al., filed Apr. 2, 1997, each of which is hereby incorporated by reference.

A key element in the design of an automatic dimming mirror is the type of light transducer used to implement ambient light and glare detection. A primary characteristic of interest in selecting a light transducer type is the dynamic range. The ratio between the intensity of bright sunlight and moonlight is roughly 1,000,000:1, indicating the wide range that must be sensed by the ambient light sensor. Both the ambient light and the glare light sensors must operate within the ranges of temperature, humidity, shock, and vibration experienced within a vehicle passenger compartment. If a sensor is to be mounted in an outside mirror, even harsher operating conditions can be expected. Sensors and support electronics must also be inexpensive to allow the cost of an automatically dimmed mirror to fall within the range deemed acceptable by an automobile purchaser. Transducers should have good noise immunity or be compatible with noise compensation electronics within the sensor for sensitivity at low light levels. Transducers should further have a spectral response similar to the frequency response of the human eye. As a final desirable characteristic, the sensor must be easily integratable into the types of digital control systems commonly found in automotive applications.

One type of light transducer is the cadmium sulfide (CdS) cell. CdS cells are photosensitive resistors exhibiting increasing conductance with increasing light levels. CdS cells have the advantages of being low in cost, having good sensitivity to low light levels, and having a spectral response somewhat similar to that of the human eye. Disadvantages with CdS cells include a high degree of variance between cells, slow response at low light levels, poor environmental stability, and difficulty being assembled by automated electronic manufacturing equipment. CdS cells for sensing ambient light and glare may be incorporated into a full or partial bridge to increase dynamic range. However, the bridge output represents a fixed relationship between ambient light and glare that is often not appropriate throughout the range of ambient light levels.

Another type of light transducer used in automatic dimming mirrors is the discrete photodiode configured as a light-dependent current source. Photodiodes have less variance between parts, better environmental stability, and are more easily adapted to automated manufacturing than are CdS cells. However, photodiodes tend to be expensive and produce very low currents at low light levels. These low currents require special amplification techniques to achieve a useful signal, increasing the cost of the automatic mirror.

A relatively new type of light sensor incorporates a silicon-based light transducer and conditioning electronics on a single substrate. The light transducer generates charge at a rate proportional to the amount of incident light. This light-induced charge is collected over an integration period. The resulting potential indicates the level of light to which the sensor is exposed over the integration period. Light sensors with integral charge collection have many advantages. By varying the integration time, the sensor dynamic range is greatly extended. Also, the ability to incorporate additional electronics on the same substrate as the transducer increases noise immunity and permits the sensor output to be formatted for use by a digital circuit. Component integration additionally reduces the system cost. Silicon devices are more temperature invariant than CdS cells and can be packaged to provide the necessary protection from humidity, shock, and vibration. One disadvantage of silicon-based light transducers is a frequency response different than that of the human eye. Types of charge accumulating light transducers include photodiodes and photogate transistors. A variety of charge integrating photodiode devices have been described including those in U.S. Pat. Nos. 4,916,307 to Nishibe et al.; 5,214,274 to Yang; 5,243,215 to Enomoto et al.; 5,338,691 to Enomoto et al.; and 5,789,737 to Street. Photogate transistor devices are described in U.S. Pat. Nos. 5,386,128 to Fossum et al. and 5,471,515 to Fossum et al. Each of these patents is hereby incorporated by reference.

One difficulty with all types of light sensors is the occurrence of operating anomalies at high temperatures. Some devices become extremely non-linear at high temperatures. Some devices, such as CdS cells, may suffer a permanent change in operating characteristics. Devices may even provide completely false readings such as indicating bright light in low light conditions due to excessive thermal noise. Traditionally, the only way to deal with this problem has been to incorporate a temperature sensor and associated electronics into the automatic dimming mirror.

What is needed is an automatic dimming mirror that derives the benefits provided by semiconductor light sensors with integral charge collection. The mirror should operate over a wide range of lighting conditions and be less susceptible to temperature variations.

DISCLOSURE OF INVENTION

It is an object of the present invention to provide an automatically dimming mirror capable of operating over a wide range of lighting conditions.

Another object of the present invention is to provide an automatically dimming mirror utilizing charge integrating semiconductor light sensors.

Still another object of the present invention is to provide an automatically dimming mirror with less susceptibility to temperature variations.

Yet another object of the present invention is to provide an automatically dimming mirror that is inexpensive to produce.

A further object of the present invention is to provide an automotive rearview mirror system with improved exterior mirror performance.

In carrying out the above objects and other objects and features of the present invention, a rearview mirror for an automotive vehicle allowing a vehicle operator to view a scene generally behind the vehicle operator is provided. The mirror includes a dimming element having a variably reflective surface. The degree of reflectivity is based on signals from an ambient light sensor positioned to receive light from a region generally in front of the vehicle and from a glare sensor positioned to view the scene generally behind the vehicle operator. At least one of the ambient light sensor and the glare sensor accumulates charge in response to incident light over a variable integration period.

In another rearview mirror, the ambient light sensor outputs a discrete ambient light signal based on the amount of light incident on the ambient light sensor over an ambient light integration period. The glare sensor outputs a discrete glare signal based on the amount of light incident on the glare sensor over a glare integration period. Dimming logic determines an ambient light level based on the ambient light signal. The glare signal resulting from the glare integration period determines a mirror glare level used to set the dimming element control signal.

In an embodiment of the present invention, the ambient light sensor has an input for receiving an ambient light integration period signal specifying the ambient light integration period. The dimming logic outputs the ambient light integration period signal based on at least one previously determined ambient light level.

In another embodiment of the present invention, the dimming logic generates a sequence of ambient light integration period signals, each integration period signal specifying a different light integration period. The ambient light level is determined based on a resulting ambient light signal having a pulse width within at least one preset width threshold.

In still another embodiment of the present invention, at least one of the ambient light sensor and the glare sensor is a light sensor including an exposed light transducer which accumulates charge in proportion to light incident over an integration period. Sensor logic determines the light integration period prior to beginning integration. Charge accumulated in the exposed light transducer is reset at the beginning of the light integration period. Charge accumulated by the exposed light transducer over the light integration period is measured and a pulse having a width based on the measured accumulated charge is output.

In yet another embodiment of the present invention, the light transducer further includes a light transducer shielded from ambient light. The shielded light transducer accumulates charge in proportion to noise over the integration period. Sensor logic resets the charge accumulated in the shielded light transducer at the beginning of the light integration period. The charge accumulated by the shielded light transducer over the integration period is measured and a pulse having a width based on the difference between the measured accumulated exposed light transducer charge and the measured accumulated shielded light transducer charge is output.

In a further embodiment of the present invention, the light sensor receives an integration pulse having a width determining the integration period. The output pulse is generated after the integration pulse is received. The difference in time between the end of the integration pulse and the start of the output pulse indicates the amount of thermal noise in the light sensor. In a refinement, the rearview mirror dimming logic determines the amount of time between the end of the integration pulse and the start of the output pulse. The light sensor temperature is determined based on the elapsed time. The dimming logic may disable automatic dimming of the dimming element reflective surface if the light sensor temperature exceeds a preset limit.

In a still further embodiment of the present invention, at least one of the ambient light sensor and the glare sensor is

a light transducer including an enclosure having a window for receiving ambient light. The enclosure admits a power pin, a ground pin, and a signal pin. An exposed light transducer within the enclosure accumulates charge in proportion to light received through the window and incident on the exposed light transducer. A light-to-pulse circuit within the enclosure outputs a pulse having a pulse width based on charge accumulated by the exposed light transducer over an integration period. Sensor logic within the enclosure receives an integration pulse on the signal pin, determines the integration period based on the width of the integration pulse, and outputs the output pulse on the signal pin.

In yet a still further embodiment of the present invention, the dimming logic includes at least one signal pin, each signal pin connected to the signal pin of the ambient light sensor or the glare sensor. For each dimming logic signal pin, the dimming logic sets the signal pin to output mode. An integration period is determined and an integration pulse generated on the signal pin. The signal pin is set to input mode. The light sensor output pulse is received and a light level determined based on the light sensor output pulse duration.

In an additional embodiment of the present invention, a glare lens is provided for the glare sensor. The glare lens provides the glare sensor with a narrower field of view and a higher optical gain than the ambient light sensor.

A rearview mirror system for an automotive vehicle is also provided. The rearview mirror system includes an interior rearview mirror and at least one exterior rearview mirror. In one embodiment, each mirror contains a dimming element, an ambient light sensor, a glare sensor, and a dimming logic. The dimming logic determines the glare integration period based on the ambient light level and uses the resulting glare level to determine the dimming element control signal. In another embodiment, each exterior mirror contains a glare sensor but no ambient light sensor. Each exterior mirror determines the glare integration period based on an ambient light signal from the interior rearview mirror. Each exterior mirror determines a dimming control value based on glare level obtained from the exterior mirror glare sensor. In still another embodiment, exterior mirrors contain no light sensors and receive a signal indicating the degree of reflectivity for exterior dimming elements from the interior rearview mirror.

The above objects and other objects, features, and advantages of the present invention are readily apparent from the following detailed description of the best mode for carrying out the invention when taken in connection with the accompanying drawings.

BRIEF DESCRIPTION OF DRAWINGS

FIG. **1** is a drawing illustrating vehicle rearview mirrors that may incorporate the present invention;

FIG. **2** is a block diagram of an embodiment of the present invention;

FIG. **3** is a timing diagram illustrating integration control and sensor output for a light sensor that may be used to implement the present invention;

FIG. **4** is a schematic diagram of circuitry permitting dimming logic and a light sensor to be interconnected by a single line carrying both integration control and sensor output;

FIG. **5** is a timing diagram illustrating operation of the circuitry of FIG. **4**;

FIG. **6** is a block diagram of a rearview mirror system with interior and exterior rearview mirrors according to embodiments of the present invention;

FIG. **7** is a schematic diagram illustrating an embodiment of the dimming logic;

FIG. **8** is a schematic diagram illustrating operation of electrochromic element transmittance control;

FIG. **9** is a timing diagram illustrating electrochromic element transmittance control;

FIG. **10** is a graph indicating dimmer reflectance as a function of dimmer control signal duty cycle;

FIG. **11** is a flow diagram illustrating operation of dimming logic according to an embodiment of the present invention;

FIG. **12** is a graph illustrating binary logarithmic approximation implemented in an embodiment of the dimming logic;

FIG. **13** is a schematic diagram illustrating operation of a light sensor having a pulse output according to an embodiment of the present invention;

FIG. **14** is a timing diagram illustrating operation of the light sensor of FIG. **13**;

FIG. **15** is a schematic diagram illustrating operation of a light sensor with noise compensation according to an embodiment of the present invention;

FIG. **16** is a timing diagram illustrating operation of the light sensor of FIG. **15**;

FIG. **17** is a schematic diagram of an implementation of the light sensor of FIG. **15** using photodiodes as light transducers;

FIGS. **18–21** are block diagrams of various embodiments for light sensor packaging, output, and control;

FIG. **22** is a block diagram of sensor logic for internally determining the integration period signal;

FIG. **23** is a block diagram illustrating the use of light transducers having different effective areas to achieve increased dynamic range according to an embodiment of the present invention;

FIG. **24** is a block diagram illustrating the use of light transducers having different apertures to achieve increased dynamic range according to an embodiment of the present invention;

FIG. **25** is a schematic diagram illustrating different transducer capacitances for different amounts of light-induced charge to achieve increased dynamic range according to an embodiment of the present invention;

FIG. **26** is a graph of the output potential as a function of accumulated incident light for the transducer of FIG. **25**;

FIG. **27** is a schematic diagram illustrating a photodiode transducer incorporating an anti-bloom gate according to an embodiment of the present invention;

FIG. **28** is a drawing illustrating an enclosure for a light sensor according to an embodiment of the present invention;

FIG. **29** is a graph illustrating light sensor field of view as a function of light transducer distance from the lens;

FIG. **30** is a graph illustrating light sensor optical gain as a function of light transducer distance from the lens;

FIG. **31** is a graph illustrating frequency response of the human eye;

FIG. **32** is a graph illustrating frequency response of a typical light transducer; and

FIG. **33** is a drawing of an enclosure incorporating an infrared filter according to an embodiment of the present invention.

BEST MODE FOR CARRYING OUT THE INVENTION

Referring now to FIG. **1**, a drawing illustrating vehicle rearview mirrors that may incorporate the present invention

is shown. Vehicle **20** is driven by operator **22**. Operator **22** uses interior rearview mirror **24** and one or more exterior rearview mirrors **26** to view a rearward scene, shown generally by **28**. Most of the time, operator **22** is looking forward through windshield **30**. The eyes of operator **22** therefore adjust to ambient light **32** coming from a generally forward direction. A relatively bright light source in rearward scene **28** may produce light which can reflect from mirrors **24,26** to temporarily visually impair, distract, or dazzle operator **22**. This relatively strong light is known as glare **34**.

To reduce the impact of glare **34** on operator **22**, the reflectance of mirrors **24,26** may be reduced. Prior to automatically dimming mirrors, interior rearview mirror **24** would contain a prismatic reflective element that could be manually switched by operator **22**. Automatically dimming mirrors include a sensor for glare **34** and, typically, for ambient light **32**, and dim one or more mirrors **24,26** in response to the level of glare **34**.

Referring now to FIG. **2**, a block diagram of an embodiment of the present invention is shown. A dimming element, shown generally by **40**, includes variable transmittance element **42** and reflective surface **44**. Dimming element **40** is positioned such that reflective surface **44** is viewed through variable transmittance element **42**. Dimming element **40** exhibits variable reflectance of light in response to dimming element control signal **46**. Ambient light sensor **48** is positioned to receive ambient light **32** from generally in front of vehicle **20**. Ambient light sensor **48** produces discrete ambient light signal **50** indicating the amount of ambient light **32** incident on ambient light sensor **48** over an ambient light integration period. Glare sensor **52** is positioned to detect glare **34** from generally behind vehicle **20** and may optionally be placed to view glare **34** through variable transmittance element **42**. Glare sensor **52** produces discrete glare signal **54** indicating the amount of glare **34** incident on glare sensor **52** over a glare integration period. Dimming logic **56** receives ambient light signal **50** and determines an ambient light level. Dimming logic **56** determines the glare integration period based on the level of ambient light **32**. Dimming logic **56** receives glare signal **54** and determines the level of glare **34**. Dimming logic **56** outputs dimming element control signal **46**, setting the reflectance of dimming element **40** to reduce the effects of glare **34** perceived by operator **22**.

Either glare sensor **52**, ambient light sensor **48** or, preferably, both are semiconductor light sensors with integral charge collection. Such sensors include light transducers which convert incident light into charge. This charge is collected over an integration period to produce a potential which is converted by sensor **48,52** into a discrete output. Designs suitable for this application are described in U.S. Pat. No. 4,916,307 entitled "Light Intensity Detecting Circuit With Dark Current Compensation" by Nishibe et al.; and U.S. Pat. No. 5,214,274 entitled "Image Sensor Array With Threshold Voltage Detectors And Charged Storage Capacitors" to Yang; each of which is incorporated herein by reference. Preferred embodiments for light sensors **48,52** are described with regard to FIGS. **13–33** below.

One difficulty with silicon-based sensors is the difference in spectral sensitivity between silicon and the human eye. Ambient light filter **58** may be placed before or incorporated within ambient light sensor **50**. Similarly, glare filter **60** may be placed before or incorporated within glare sensor **52**. Filters **58,60** attenuate certain portions of the spectrum that may include visible light, infrared, and ultraviolet radiation such that light striking sensors **48,52** combines with the frequency response of light transducers within sensors **48,52** to more closely approximate the response of the human eye and to compensate for tinting in vehicle windows such as windshield **30**. The use of filters **58,60** to compensate for the spectral sensitivity of light transducers within sensors **48,52** is described with regards to FIGS. **31–33** below.

Variable transmittance element **42** may be implemented using a variety of devices. Dimming may be accomplished mechanically as described in U.S. Pat. No. 3,680,951 titled "Photoelectrically-Controlled Rear-View Mirror" to Jordan et al.; and U.S. Pat. No. 4,443,057 titled "Automatic Rear-view Mirror For Automotive Vehicles" to Bauer et al.; each of which is incorporated herein by reference. Variable transmittance element **42** may be formed using liquid crystal cells as is described in U.S. Pat. No. 4,632,509 titled "Glare-Shielding Type Reflector" to Ohmi et al., which is incorporated herein by reference. Preferably, variable transmittance element **42** is an electrochromic cell which varies transmittance in response to an applied control voltage such as is described in U.S. Pat. No. 4,902,108 titled "Single-Compartment, Self-Erasing, Solution-Phase Electrochromic Devices, Solutions For Use Therein, And Uses Thereof" to Byker, which is incorporated herein by reference. Many other electrochromic devices may be used to implement dimming element **40**, some of which are mentioned in the Background Art section of this application. As will be recognized by one of ordinary skill in the art, the present invention does not depend on the type or construction of dimming element **40**. If dimming element **40** includes electrochromic variable transmittance element **42**, reflective surface **44** may be incorporated into variable transmittance element **42** or may be external to variable transmittance element **42**.

Each interior rearview mirror **24** and exterior rearview mirror **26** must include dimming element **40** for automatic dimming. Preferably, interior rearview mirror **24** also includes dimming logic **56**, light sensors **48,52**, and, if used, filters **58** and **60**. Various embodiments for controlling exterior rearview mirrors **26** are described with regard to FIG. **6** below.

Referring now to FIG. **3**, a timing diagram illustrating integration control and sensor output for a light sensor that may be used to implement the present invention is shown. Charge accumulating light sensors **48,52** exhibit increased dynamic range through variable integration periods. A control signal, shown generally by **70**, is used to specify the integration period. The resulting sensor output, shown generally by **72**, includes an output pulse for each integration period. The total amount of light-induced charge which can be effectively measured is limited. Therefore, in the presence of bright light, a short integration time is desirable to prevent saturation. However, if a short integration time is used in low light conditions, the charge signal may be lost in noise inherent in sensor **48,52**.

Control signal **70** includes a sequence of integration periods having varying lengths. In the example shown in FIG. **3**, short integration pulse **74** having short integration period **76** is generated. A semiconductor light sensor may output a short pulse in a completely dark environment due to noise. Therefore, any pulse in sensor output **72**, such as short signal pulse **78**, having a duration less than a threshold is ignored. Next, medium integration pulse **80** having medium integration period **82** is generated. Resulting medium signal pulse **84** has a duration indicative of the amount of light incident on sensor **48,52** during medium integration period **82**. Long integration pulse **86** having long integration period **88** is generated. If light sensor **48,52** is

sufficiently bright, saturation will result. Therefore, long signal pulse **90** having a duration greater than a threshold is also ignored.

Control signal **70** may be generated outside of light sensor **48,52** or may be generated by control logic within light sensor **48,52**. If generated externally, control signal **70** and sensor output **72** may share a common signal line or may use separate signal lines. Various options and embodiments are described with regard to FIGS. **4–28** below.

Referring now to FIG. **4**, a schematic diagram of circuitry permitting dimming logic and a light sensor to be interconnected by a single line carrying both integration control and sensor output is shown. Light sensor **48,52** includes enclosure **100** with window **102** admitting light **104** incident on exposed light transducer **106**. Enclosure **100** admits power pin **108**, ground pin **110**, and signal pin **112**. The use of only three pins **108,110,112** greatly reduces the cost of light sensor **48,52**. A three-pin package that may be used to implement light sensor **48,52** is described with regards to FIG. **28** below.

Light sensor **48,52** is connected to dimming logic **56** through interconnection signal **114** between signal pin **112** in light sensor **48,52** and signal pin **116** in dimming logic **56**. As will be described below, signal pins **112,116** are tri-state ports permitting interconnect signal **114** to provide both an input to light sensor **48,52** and an output from light sensor **48,52**. Dimming logic **56** may include FET Q1 connected between signal pin **116** and ground. FET Q1 is controlled by control line **118** connected to the base of Q1. Buffer **120** is also connected to signal pin **116**.

Within light sensor **48,52**, FET Q2 is connected between signal pin **112** and ground. FET Q2 is controlled by output pulse **122** connected to the gate of Q2. Constant current source **124** is connected to signal pin **112** so that if neither Q1 or Q2 are on, interconnect signal **114** is pulled high. Constant current source **124** nominally sources about 0.5 mA to pull up interconnect signal **114**. The input of Schmidt trigger inverter **126** is connected to signal pin **112**. Schmidt trigger inverter **126** is followed by inverters **128** and **130** in series. The output of inverter **130** clocks D flip-flop **132**. The output of multiplexer **134** is connected to the D input of flip-flop **132**. The select input of multiplexer **134** is driven by output pulse **122** such that when output pulse **122** is asserted the D input of flip-flop **134** is unasserted and when output pulse **122** is not asserted the D input of flip-flop **134** is asserted. The output of NAND gate **136** is connected to low asserting reset **138** of flip-flop **132**. The output of flip-flop **132** is integration pulse **140**. Integration pulse **140** and the output of inverter **128** are inputs to NAND gate **136**. Light-to-pulse circuit **142** accepts integration pulse **140** and the output of exposed light transducer **106** and produces output pulse **122**. Embodiments for light-to-pulse circuit **142** are described with regard to FIGS. **13–17** and **23–27** below.

In a preferred embodiment, light sensor **48,52** includes shielded light transducer **144** which does not receive light **104**. Light-to-pulse circuit **142** uses the output of shielded light transducer **144** to reduce the effects of noise in exposed light transducer **106**.

Referring now to FIG. **5**, a timing diagram illustrating operation of the circuitry of FIG. **4** is shown. Initially, low asserting interconnect signal **114** is high. The state of flip-flop **132** must be zero for, if the state is one, both inputs to NAND gate **136** would be high, asserting reset **138** and forcing the state of flip-flop **132** to zero.

At time **150**, dimming logic **56** asserts control line **118** turning transistor Q1 on. Interconnect signal **114** is then pulled low at time **152**. The output of inverter **130** transitions from low to high setting the state of flip-flop **132** to one which causes integration pulse **140** to become asserted at time **154**. Light-to-pulse circuit **142** begins integrating light **104** incident on exposed light transducer **106**. At time **156**, control line **118** is brought low turning transistor Q1 off. The difference between time **156** and time **150** is integration period **158** requested by dimming logic **56**. Since both Q1 and Q2 are off, interconnect signal **114** is pulled high by current source **124** at time **160**. Since the output of inverter **128** and integration pulse **140** are both high, reset **138** is asserted causing the state of flip-flop **132** to change to zero and integration pulse **140** to become unasserted at time **162**. This signals light-to-pulse circuit **142** to stop integrating light **104** incident on exposed light transducer **106**.

At time **164**, light-to-pulse circuit **142** asserts output pulse **122** to begin outputting light intensity information. Asserting output pulse **122** turns transistor Q2 on, pulling interconnect signal **144** low at time **166**. This causes inverter **130** to output a low-to-high transition clocking a zero as the state of flip-flop **132**. Light-to-pulse circuit **142** deasserts output pulse **122** at time **168**. The difference between time **168** and time **164** is light intensity period **170** indicating the amount of light **104** incident on exposed light transducer **106** over integration period **158**. Transistor Q2 is turned off when output pulse **122** goes low at time **168**. Since both transistors Q1 and Q2 are off, interconnect signal **114** is pulled high at time **172**. Buffer **120** in dimming logic **56** detects the transitions in interconnect signal **114** at times **166** and **172**. The difference in time between times **172** and **166** is used by dimming logic **56** to determine the intensity of light **104** received by light sensor **48,52**.

If shielded light transducer **144** is included in light sensor **48,52**, the difference in time between the deassertion of integration pulse **140** at time **162** and the assertion of output pulse **122** at time **164** is due, in part, to the thermal noise in light sensor **48,52**. This difference is expressed as thermal noise period **174**. Thermal noise period **174** may be used by dimming logic **56** to determine the temperature of light sensor **48,52** or may be more simply used to determine if the noise level in sensor **48,52** is too high for a reliable reading. Dimming logic **56** may disable automatic dimming of dimming element **40** if the temperature of light sensor **48,52** exceeds a preset limit. The ability of light sensor **48,52** to use the output from shielded light transducer **144** to generate output pulse **122** indicative of the amount of thermal noise in light sensor **48,52** is described with regard to FIGS. **15–17** below.

Referring now to FIG. **6**, a block diagram of a rearview mirror system with interior and exterior rearview mirrors according to embodiments of the present invention is shown. Dimming element **40** in interior rearview mirror **24** operates as described with regard to FIG. **2** above. Each exterior rearview mirror **26** includes exterior dimming element **180** having exterior variable transmittance element **182** operative to attenuate light from rearward scene **28** both prior to and after reflecting from exterior reflective surface **184**. Exterior dimming element **180** provides variable reflectance based on exterior dimming element control signal **186**. Exterior dimming element **180** may operate in any manner described with regard to dimming element **40** and, preferably, is an electrochromic mirror. Exterior mirror control **188** generates exterior dimming element control signal **186**. Exterior mirror control **188** may be part of exterior rearview mirror **26**, interior rearview mirror **24**, or may be located outside of any mirror **24,26**. Various embodiments for controlling exterior dimming element **180** depend

on the amount of sensing and control to be included within exterior rearview mirror **26**.

In one embodiment, dimming logic **56** in interior rearview mirror **24** determines exterior dimming element control signal **186** based on output from ambient light sensor **48** and glare sensor **52**. Exterior dimming element control signal **186** may be generated directly by dimming logic **56** or exterior mirror control **188** may generate exterior dimming element control signal **186** based on a reflectance level calculated in dimming logic **56** and transmitted to exterior mirror control **188** through inter-mirror signal **190**.

In another embodiment, exterior rearview mirror **26** includes exterior glare sensor **192** positioned to receive glare **34** from rearward scene **28** and operative to output exterior glare signal **194** based on the amount of glare **34** incident on glare sensor **192** over a glare integration period. Since light sensors **48**,**52** with silicon-based charge accumulating transducers **106**,**144** have a lower cross-sensitivity to temperature, mounting light sensors **48**,**52** outside the body of vehicle **20** is more practical than with other types of light transducers. Dimming logic **56** uses exterior glare signal **194** and ambient light signal **50** to determine the reflectance level for exterior dimming element **180**. Again, exterior dimming element control signal **186** may be generated directly by dimming logic **56** or may be developed by exterior mirror control **188** based on the reflectance level contained in inter-mirror signal **190**. Exterior glare filter **196**, similar to glare filter **60**, may be placed before exterior glare sensor **192** or built into exterior glare sensor **192** to provide exterior glare sensor **192** with a response closer to the response of the human eye. Inter-mirror signal **190** and exterior glare signal **194** may be in the form of a pulse width modulated signal, pulse density signal, serial data stream, or digitized and communicated over an automotive bus such as the CAN bus.

In still another embodiment, exterior glare sensor **192** produces exterior glare signal **198** which is routed directly to exterior mirror control **188**. Exterior mirror control **188** determines exterior dimming element control signal **186** based on exterior glare signal **198** and the level of ambient light **32** determined by dimming logic **56** and sent to exterior mirror control **188** through inter-mirror signal **190**.

In yet another embodiment, exterior rearview mirror **26** determines reflectance for exterior dimming element **180** independent of glare **34** or ambient light **32** sensed by interior rearview mirror **24**. In this embodiment, exterior rearview mirror **26** operates as described with regard to FIG. **2** above.

Referring now to FIG. **7**, a schematic diagram illustrating an embodiment of the dimming logic is shown. The circuit represents an effective yet inexpensive implementation for automatically dimming interior rearview mirror **24**. Dimming logic **56** utilizes a small, low cost microcontroller, indicated by U**1**, such as the PIC 16C620 from Microchip Technology, Inc. of Chandler, Ariz. Ambient light sensor **48** communicates with microcontroller U**1** through interconnection signal **114** connected to microcontroller input RB**0**. Similarly, glare sensor **52** communicates with microcontroller U**1** through separate interconnection signal **114***a* connected to microcontroller input RB**2**. As described with regard to FIGS. **4** and **5** above, each interconnection signal **114** carries integration period **158** from microcontroller U**1** to light sensor **48**,**52** as well as light intensity period **170** from light sensor **48**,**52** to microcontroller U**1**. Resistor R**29** and capacitor C**4** connected between V_{DD} and ground provide filtered power for light sensors **48**,**52**.

Parallel resistor R**15** and diode D**5** are connected between V_{DD} and node **208**. Capacitor C**12** is connected between node **208** and ground. Resistor R**6** connects common node **208** to input /MCLR of microcontroller U**1**. Components D**5**, R**15**, R**6**, and C**12** form a power-on reset circuit shown generally by **210**.

Power is supplied to dimming logic **56** through ignition line **212**. Diode D**1** protects from reversed polarity on ignition line **212** and diode D**2** clamps the voltage derived from ignition line **212** to approximately five volts. Capacitors C**2**, C**7** and C**11**, resistor R**3**, and ferrite element El form a power conditioning circuit shown generally by **214**. Reverse line **216** is asserted when vehicle **20** is placed into reverse. Capacitor C**10** and resistors R**8**, R**9**, and R**27** form a reverse signal conditioning circuit, shown generally by **218**. Reverse signal conditioning circuit **218** low pass filters reverse line **216** and provides electrostatic discharge protection for digital input pin RB**6** on microcontroller U**1**. Microcontroller U**1** uses the signal on reverse line **216** to clear variable transmittance element **42** whenever vehicle **20** is placed in reverse. Microcontroller U**1** is clocked by an RC oscillator formed by resistor R**2** connected between the OSC**1** pin and V_{DD} and capacitor C**1** connected between the OSC**1** pin and ground. Resistor R**30** and LED D**3** connected in series between V_{DD} and open drain output RA**4** of microcontroller U**1** form an indicator lamp that may be mounted on interior rearview mirror **24** to alert operator **22** of the operating state of dimming logic **56**. Switches S**1** and S**2** are connected to digital inputs RB**1** and RB**3**, respectively, of microcontroller U**1** to permit selecting control options.

Referring now to FIG. **8**, a schematic diagram illustrating operation of electrochromic dimmer control is shown. A portion of dimmer logic **56** has been redrawn to more clearly illustrate control of electrochromic variable transmittance element **42**. Electrochromic variable transmittance element **42** is preferably similar in operation to those described in U.S. Pat. No. 4,902,108 titled "Single-Compartment, Self-Erasing, Solution-Phase Electrochromic Devices, Solutions For Use Therein, And Uses Thereof" to Byker, which is incorporated herein by reference. Electrochromic variable transmittance element **42** darkens in response to a control voltage applied at input node **220**. If the applied control voltage is removed, electrochromic variable transmittance element **42** will self discharge, transmitting an increasing amount of light. Electrochromic variable transmittance element **42** may be rapidly cleared by shorting input node **220** to ground. While the application described pertains particularly to automotive rearview mirrors, it will be understood by one of ordinary skill in the art that all or part of dimmer logic **56** may be used in a wide variety of electrochromic mirror and window applications.

Resistor R**17** connects input node **220** to the emitter of Darlington pair Q**10** at node **222**. The collector of Q**10** is connected to a power supply through current limiting resistor R**5**, typically **27** Ω. The base of Darlington pair Q**10** is connected to digital output RB**4** of microcontroller U**1** through resistors R**1** and R**7**. The base of Q**10** is also connected to ground through resistor R**4** and through resistor R**7** and capacitor C**16**. Digital output pin RB**4** is driven by pulse output **224** in response to pulse control **226** generated by software running on microcontroller U**1**. Pulse output **224** may produce a pulse signal such as, for example, a pulse width modulated signal. Preferably, pulse output **224** functions as a switch, setting output pin RB**4** to either a high voltage or a low voltage once during each transition period as described with regards to FIG. **9** below. Capacitor C**16** and resistors R**1**, R**4**, and R**7** form a low pass filter, shown generally by **227**, to smooth the signal appearing on digital

output RB4. This smoothing results in a substantially constant applied control voltage at input node **220** for a fixed desired control level. Additionally, the base-to-emitter diode drops in Q**10** together with the voltage divider formed between resistor R**4** and the sum of resistors R**1** and R**7** set the operating voltage for electrochromic variable transmittance element **42**. Typical values for components are 1 kΩ for R**1** and R**4**, 100 Ω for R**7**, and 100 μF for C**16**. With digital output RB**4** at 5 volts and nominal current draw by electrochromic variable transmittance element **42**, input node **220** is approximately 1.2 volts.

The performance of dimming logic **56** can be improved through feedback of electrochromic variable transmittance element **42** applied control voltage at input node **220**. Microcontroller U**1** includes comparison logic to cause pulse output **224** to deliver a low voltage if the applied control voltage is greater than the desired control level and to deliver a high voltage otherwise. Typically, the high voltage is near V_{DD} and the low voltage is near ground. This comparison may be made by comparing a digital number representing the desired control level with the digitized applied control voltage obtained using an analog-to-digital converter. Alternately, digital-to-analog converter (DAC) **228** and comparator **230** are used. DAC **228** produces a desired voltage level on analog output AN**2** in response to the desired control level on DAC control **232** supplied by software running on microcontroller U**1**. Resistor R**31** is connected between analog output AN**2** and node **234** and resistor R**26** is connected between node **234** and ground. One input of comparator **230**, at analog input AN**3**, is connected to node **234**. The other input of comparator **230**, at analog input AN**0**, is connected to input node **220**. The output of comparator **230** indicates if the desired voltage level is greater than the applied control voltage. Values for resistors R**31** and R**26** are chosen so that the voltage at node **234** is within the range of expected applied control voltages at input node **220** throughout the range of desired control voltages output from DAC **228**. Typical values for R**31** and R**26** are 390 kΩand 200 kΩ, respectively.

Positive feedback is achieved by connecting resistor R**24** between node **234** and node **222**. Resistor R**17** is used to sense the drive current through electrochromic variable transmittance element **42** and, hence, is typically a low value such as 10 Ω. Resistor R**24** is typically a high value such as 1.3 MΩ. As the drive current through resistor R**17** increases, the voltage across resistor R**17** increases pulling up the voltage at node **234**. This increase in the voltage on the positive input terminal of comparator **230** has the regenerative effect of increasing the duty cycle from pulse output **224**. This regenerative effect provides better system response at higher temperatures when electrochromic variable transmittance element **42** has an increased current draw together with an increase in maximum operating voltage. Positive feedback also offsets the effects of internal resistances within electrochromic variable transmittance element **42**.

Referring now to FIG. **9**, a timing diagram illustrating electrochromic element transmittance control is shown. During automatic dimming operation, software executing in microcontroller U**1** is initiated at transition points, one of which is indicated by **240**, separated by fixed transition period **242**. Desired control level **244** indicates the desired level of transmittance for electrochromic variable transmittance element **42**. Desired control level **244** may be an analog value or, preferably, is a digital number determined by microcontroller U**1**. Desired control level **244** is compared to applied control voltage **246** by comparison logic. Comparator **230** accepts applied control voltage **246** and the desired control voltage appearing at node **234**. Comparator output **236** produces difference signal **248** which is asserted when the desired voltage level representing desired control level **244** is greater than applied control voltage **246**. Comparator output **236** is used to generate control signal **250** on output RB**4**. If desired control level **244** is greater than applied control voltage **246**, digital output RB**4** is switched high. If desired control level **244** is less than applied control voltage **246**, digital output RB**4** is switched low. Preferably, low pass filter **227** filters control signal **250** to produce applied control voltage **246**.

The duration of transition period **242** is set to inhibit flicker in electrochromic element **42** that may be noticed, for example, by vehicle operator **22**. Transition period **242** may preferably be between two seconds and two microseconds. For the system described with regards to FIGS. **7** and **8** above, five milliseconds may be used for transition period **242**.

Referring now to FIG. **10**, a graph indicating dimmer reflectance as a function of applied control voltage is shown. Curve **254** plots reflection as a percentage for dimming element **40** containing electrochromic variable transmittance element **42** as a function of applied control voltage **256**. Curve **254** indicates a decrease in reflection from about 86% to about 8% as the applied control voltage is increased from about 0.2 V to about 0.9 V. FIG. **10** also includes curve **256** illustrating current draw as a function of applied control voltage **256** for typical electrochromic variable transmittance element **42**.

Referring again to FIG. **7**, additional circuitry is provided to rapidly clear variably transmissive electrochromic element **40**. Transistor Q**11** is connected across variably transmissive electrochromic element **40** with collector at node **220** and emitter at ground. The base of transistor Q**11** is connected through resistor R**23** to digital output RB**7**. When digital output RB**7** is asserted, transistor Q**11** turns on, acting as a switch to rapidly discharge electrochromic variable transmittance element **42**. Capacitor C**6** is connected between the collector and base of transistor Q**11** to reduce electromagnetic interference created as transistor Q**11** switches. Transistor Q**12** is connected between the base of transistor Q**10** and ground and is also controlled by digital output RB**7**. Transistor Q**11** turns on with transistor Q**12** to shut off transistor Q**10** thereby preventing simultaneously attempting to darken and clear electrochromic variable transmittance element **42**. Resistor R**7** is placed between capacitor C**16** and the collector of transistor Q**12** to limit the discharge current from capacitor C**16** through transistor Q**12**.

Referring now to FIG. **11**, a flow diagram illustrating operation of dimming logic according to an embodiment of the present invention is shown. As will be appreciated by one of ordinary skill in the art, the operations illustrated are not necessarily sequential operations. Also, though the operations are preferably implemented by software executing in microcontroller U**1**, operations may be performed by software, hardware, or a combination of both. The present invention transcends any particular implementation and aspects are shown in sequential flow chart form for ease of illustration.

An ambient light reading is taken and the average ambient light is initialized in block **260**. When the automatic dimming system is initially powered up, the average ambient light level is initialized by taking a first reading of ambient light **32** using ambient light sensor **48**. Acquiring an ambient

light reading and the average ambient light level are described with regard to blocks **262** and **270**, respectively, below.

An ambient light reading is taken and the log of the ambient light reading is found in block **262**. The use of semiconductor ambient light sensor **48** with integral charge collection produces ambient light signal **50** having good resolution over a wide range of ambient light levels **32**. As described with regard to FIG. **3** above, this is accomplished by taking various readings of ambient light **32** using different integration periods **76**,**82**,**88**. In a preferred embodiment, four separate integration periods are used such as, for example, 600 μs, 2.4 ms, 9.6 ms, and 38.4 ms. Each of these integration periods differs by a factor of four from adjacent periods. Therefore, for example, the 2.4 ms integration period causes ambient light sensor **48** to act four times more sensitive to ambient light **32** than does integrating with the 600 μs integration period. Typically, the shortest integration pulse **74** is first used by ambient light sensor **48** to produce short signal pulse **78**.

The width of short signal pulse **78** is measured by dimming logic **56**. Since ambient light sensor **48** in complete darkness may still develop short signal pulse **78** having a width less than 100 μs, a minimum threshold is set for accepting short signal pulse **78** as accurately reflecting the level of ambient light **32**. Typically, this threshold may be 300 μs. If short signal pulse **78** does not exceed the threshold, the next longest integration period is used by ambient light sensor **48**. If the longest integration time does not yield a suitably long signal pulse, ambient light **32** is at an extremely low level and mirror **24**,**26** can be operated at maximum sensitivity to glare **34**.

Using the logarithm of ambient light signal **50** permits the use of an inexpensive microcontroller such as **U1** which may have only 8-bit internal registers and no multiplication instructions. Since microcontrollers are binary devices, base two logarithms require fewer instructions to compute than base ten logarithms or natural logarithms. An algorithm is now described for obtaining an 8-bit, binary logarithm having the most significant four bits representing an integer part and the least significant four bits a fractional part. The 8-bit ambient light signal **50** resulting from the proper integration period is examined bit-by-bit starting with the most significant bit until the first binary one is found. The bit position containing the first binary one becomes the integer portion of the logarithm. The four most significant bits following the bit position containing the first binary one become the fractional portion of the logarithm. This value is incremented by one-sixteenth to better approximate the logarithm. An example of the binary logarithm approximation is now provided. Suppose ambient light signal **50** is determined to be 44 (00101101 in base two). The most significant asserted bit is bit five, so the integer portion of the resultant value is binary 0101. The next four bits following bit five are 0110 so the fractional part of the resultant value is 0110 for a total value of 0101.0110. After incrementing, the binary logarithm approximation becomes 0101.0111.

Referring now to FIG. **12**, a graph illustrating binary log approximation according to the above algorithm is shown. The binary logarithm is plotted for values of N between 1 and 255. Curve **290** shows the actual binary logarithm. Curve **292** shows the approximated binary logarithm.

Ambient light signal **50** must be scaled to compensate for different possible integration periods. This may be accomplished by adding a scaling factor to the binary logarithm of ambient light signal **50**. For example, if the longest integration time (38.4 ms) is used to measure ambient light **32**, a scale factor of 0 is added. If the next longest integration time (9.6 ms) is used, a scale of factor of 2 is added. If the next longest integration time (2.4 ms) is used, 4 is added. If the shortest integration time (600 μs) is used, 6 is added. Since the largest value resulting from the binary logarithm approximation is 8 (1000.0000), no overflow results from adding the scale factor.

Referring again to FIG. **11**, the logarithm of the ambient light level is compared to the day detect level in block **264**. The day detect level is used to prevent dimming of or to more rapidly clear dimming element **40** during rapid transitions from dark to bright such as if vehicle **20** emerges from a tunnel into daylight. If the logarithm of ambient light **32** exceeds a preset day detect level, variable transmittance element **42** is cleared to set dimming element **40** to maximum reflectance in block **266**. Processing is then delayed in block **268**. A wait loop is entered having a time sufficiently long to make the period between taking ambient light readings equal a constant ambient light loop delay. This period may be, for example, 400 ms. Following the wait in block **268**, another reading of ambient light **32** is taken in block **262**. If the logarithm of ambient light **32** does not exceed the day detect level, an average is obtained in block **270**.

The average of the logarithm of ambient light level is determined in block **270**. Averaging readings first converted to the logarithm of ambient light **32** reduces the effect of a temporary bright light in front of vehicle **20** from dramatically skewing the average reading of an otherwise dark ambient light **32**. A running average of the log of ambient light signals **50** may be obtained from a digital low pass filter such as is described by Equation 1:

$$y(n) = \frac{1}{64}x(n) + \frac{63}{64}y(n-1) \tag{1}$$

where x(n) is the most recently obtained binary log approximation of ambient light signal **50** correctly scaled for the integration period, y(n−1) is the previous filter output, and y(n) is the current filter output. The use of averaged logarithms with analog light signals is described in U.S. Pat. No. 5,204,778 titled "Control System For Automotive Rearview Mirrors" to Bechtel, which is incorporated herein by reference.

The average of the log of the ambient light level is compared to a threshold in block **272**. If ambient light **32** is sufficiently bright, vehicle operator **22** will not be dazzled by any reasonable amount of glare **34** allowing mirror **24**,**26** to be set to maximum reflectance. Therefore, if the average of the log of ambient light signal **50** is not less than the threshold, dimming element **40** is cleared in block **266** and the wait of block **268** is executed. If the average of the log of ambient light signals **50** is less than the threshold, glare processing occurs beginning in block **274**.

Typically, the threshold used for comparison in block **272** is less than the day detect level used in the comparison of block **264**.

The glare integration period is determined in block **274**. The integration period for glare sensor **52** is determined based on ambient light signal **50**. The glare integration period is inversely proportional to the binary antilogarithm of the average of the log of ambient light signal **50** as described by Equation 2:

$$T_G(n)=\text{antilog}_2(K_1-y(n))-K_2 \tag{2}$$

where $T_G(n)$ is the integration period for glare sensor **52** for the filter output at sample time n, K_1 is a multiplicative

constant, and K_2 is an additive constant. Constants K_1 and K_2 are determined experimentally. If the average of the log of ambient light signal **50** is below a certain level, a maximum glare sensitivity integration period is used.

A glare count is set in block **276**. The glare count indicates the number of glare readings taken between ambient light readings. The product of the glare count and the glare loop delay should equal the time between taking ambient light readings. For example, the glare count may be three and the time between taking glare readings may be 133 ms.

A glare reading is taken in block **278**. The pulse width returning from glare sensor **52** as glare signal **54** is measured for the glare integration period determined in block **274**.

The dimming element value is set in block **280**. Glare signal **54** is used to determine desired control level **244** setting the reflectance for dimming element **40**. This may be accomplished, for example, through the use of a look-up table. The precise relationship between the level of glare **34** and the setting for variable transmittance element **42** depends upon factors including the construction of mirror **24**,**26**, the configuration of vehicle **20**, and preferential settings by operator **22**. Desired control level **244** may be used to control variable transmittance element **42** as described with regards to FIGS. **7**–**10** above.

A check of the glare count is made in block **282**. If the glare count is zero, the next ambient light reading is taken in block **262**. If the glare count is not zero, the glare count is decremented in block **284**. A wait loop is then entered in block **286**. The glare loop delay period is set so that glare readings are taken at regular, predetermined intervals.

Referring now to FIG. **13**, a schematic diagram illustrating operation of a light sensor having a pulse output according to an embodiment of the present invention is shown. Light-to-pulse circuit **300** includes exposed light transducer **106** for converting light **104** incident on exposed light transducer **106** into charge accumulated in light storage capacitor **304**, indicated by C_{SL}. Exposed light transducer **106** may be any device capable of converting light **104** into charge, such as the photogate sensor described in U.S. Pat. No. 5,471,515 titled "Active Pixel Sensor With Intra-Pixel Charge Transfer" to E. Fossum et al., which is incorporated herein by reference. Preferably, light transducer **106** is a photodiode such as is described with regards to FIGS. **25** and **26** below. Except as noted, the following discussion does not depend on a particular type or construction for exposed light transducer **106**.

Light-to-pulse circuit **300** operates under the control of sensor logic **306**. Sensor logic **306** generates reset signal **308** controlling switch **310** connected between exposed light transducer output **312** and V_{DD}. Sensor logic **306** also produces sample signal **314** controlling switch **316** between exposed light transducer output **312** and light storage capacitor **304**. The voltage across light storage capacitor **304**, light storage capacitor voltage **318**, is fed into one input of comparator **320**. The other input of comparator **320** is ramp voltage **322** across ramp capacitor **324**. Ramp capacitor **324** is in parallel with current source **326** generating current I_R. Sensor logic **306** further produces ramp control signal **328** controlling switch **330** connected between ramp voltage **322** and V_{DD}. Comparator **320** produces comparator output **332** based on the relative levels of light storage capacitor voltage **318** and ramp voltage **322**. Sensor logic **306** may generate reset signal **308**, sample signal **314**, and ramp control signal **330** based on internally generated timing or on externally generated integration pulse **140** as described with regard to FIGS. **18**–**21** below.

Referring now to FIG. **14**, a timing diagram illustrating operation of the light sensor of FIG. **13** is shown. A measurement cycle is started at time **340** when sample signal **314** is asserted while reset signal **308** is asserted. This closes switch **316** to charge light storage capacitor **304** to V_{DD} as indicated by voltage level **342** in light storage capacitor voltage **318**. Reset signal **308** is then deasserted at time **344**, opening switch **310** and beginning integration period **346**. During integration period **346**, light **104** incident on exposed light transducer **106** generates negative charge causing declining voltage **348** in light storage capacitor voltage **318**. At time **350**, ramp control signal **328** is asserted closing switch **330** and charging ramp capacitor **324** so that ramp voltage **322** is V_{DD} as indicated by voltage level **352**.

Sample signal **314** is deasserted at time **354**, causing switch **316** to open, thereby ending integration period **346**. At some time **356** following time **354** and prior to the next measurement cycle, reset signal **308** must be asserted closing switch **310**. At time **358**, ramp control signal **328** is deasserted opening switch **330**. This causes ramp capacitor **324** to discharge at a constant rate through current source **326** as indicated by declining voltage **360** in ramp voltage **322**. Initially, as indicated by voltage level **362**, comparator output **332** is unasserted because ramp voltage **322** is greater than light storage capacitor voltage **318**. At time **364**, declining voltage **360** in ramp voltage **322** drops below light storage capacitor voltage **318** causing comparator output **332** to become asserted. Comparator output **322** remains asserted until time **366** when ramp control signal **328** is asserted closing switch **330** and pulling ramp voltage **322** to V_{DD}. The difference between time **366** and time **364**, indicated by pulse duration **368**, is inversely related to the amount of light **104** received by exposed light transducer **106** during integration period **346**.

Referring now to FIG. **15**, a schematic diagram illustrating operation of a light sensor with noise compensation according to an embodiment of the present invention is shown. A light-to-pulse circuit, shown generally by **380**, improves upon light-to-pulse circuit **300** by incorporating shielded light transducer **144** and associated electronics. Shielded light transducer **144** preferably has the same construction as exposed light transducer **106**. However, shielded light transducer **144** does not receive light **104**. Charge generated by shielded light transducer **144**, therefore, is only a function of noise. This noise is predominantly thermal in nature. If shielded light transducer **144** has the same construction as exposed light transducer **106**, the noise signal produced by shielded light transducer **144** will closely approximate the same noise within the signal produced by exposed light transducer **106**. By subtracting the signal produced by shielded light transducer **144** from the signal produced by exposed light transducer **106**, the effect of noise in light transducer **106** can be greatly reduced.

Reset signal **308** controls switch **382** connected between shielded transducer output **384** and V_{DD}. Sample signal **314** controls switch **386** connected between shielded transducer output **384** and noise storage capacitor **388**, indicated by C_{SN}. The voltage across noise storage capacitor **388**, noise storage capacitor voltage **390**, is one input to comparator **392**. The second input to comparator **392** is ramp voltage **322**. The output of comparator **392**, noise comparator output **394**, and comparator output **332** serve as inputs to exclusive-OR gate **396**. Exclusive-OR gate **396** generates exclusive-OR output **398** indicating the intensity of light **104**.

Referring now to FIG. **16**, a timing diagram illustrating operation of the light sensor of FIG. **15** is shown. Light-to-pulse circuit **380** functions in the same manner as light-to-pulse circuit **300** with regard to reset signal **308**, sample signal **314**, light storage capacitor voltage **318**, ramp voltage

322, ramp control signal 328, and comparator output 332. At time 340, sample signal 314 is asserted while reset signal 308 is asserted. Switches 382 and 386 are both closed charging noise storage capacitor 388 to V_{DD} as indicated by voltage level 410 in noise storage capacitor voltage 390. At time 344, reset signal 308 is deasserted opening switch 382 and causing declining voltage 412 in noise storage capacitor voltage 390 from charge produced by shielded light transducer 144 due to noise. At time 354, sample signal 314 is deasserted ending integration period 346 for noise collection. At time 358, ramp control signal 328 is deasserted causing declining voltage 360 in ramp voltage 322. Initially, as indicated by voltage level 414, noise comparator output 394 is unasserted because ramp voltage 322 is greater than noise storage capacitor voltage 390. Since comparator output 332 is also unasserted, output 398 from comparator 396 is unasserted as indicated by voltage level 416. At time 418, ramp voltage 322 drops below the level of noise storage capacitor voltage 390, causing noise comparator output 394 to become asserted. Since noise comparator output 394 and comparator output 332 are different, output 398 from comparator 396 is asserted. At time 364, ramp voltage 322 drops beneath the level of light storage capacitor voltage 318, causing comparator output 332 to become asserted. Since both noise comparator output 394 and comparator output 332 are now asserted, output 398 from exclusive-OR gate 396 now becomes unasserted. The difference between time 364 and time 418, output pulse duration 420, has a time period proportional to the intensity of light 104 incident on exposed light transducer 106 less noise produced by shielded light transducer 144 over integration period 346. The duration between time 418 and time 358, noise duration 422, is directly proportional to the amount of noise developed by shielded light transducer 144 over integration period 346. Since the majority of this noise is thermal noise, noise duration 422 is indicative of shielded light transducer 144 temperature. At time 366, ramp control signal 328 is asserted, deasserting both noise comparator output 394 and comparator output 332.

Referring now to FIG. 17, a schematic diagram of an implementation of the light sensor of FIG. 15 using photodiodes as light transducers is shown. Light-to-pulse circuit 380 is implemented using exposed photodiode 430 for exposed light transducer 106 and shielded photodiode 432 for shielded light transducer 144. The anode of exposed photodiode 430 is connected to ground and the cathode connected through transistor Q20 to V_{DD}. The base of transistor Q20 is controlled by reset signal 308. Hence, transistor Q20 functions as switch 310. Transistors Q21 and Q22 are connected in series between V_{DD} and ground to form a buffer, shown generally by 434. The base of transistor Q21 is connected to the collector of exposed photodiode 430. The base of load transistor Q22 is connected to fixed voltage V_B. The output of buffer 434 is connected through transistor Q23 to light storage capacitor 304. The base of transistor Q23 is driven by sample signal 314, permitting transistor Q23 to function as switch 316. The anode of shielded photodiode 432 is connected to ground and the cathode is connected to V_{DD} through transistor Q24. The base of transistor Q24 is driven by reset signal 308 permitting transistor Q24 to function as switch 382. Transistors Q25 and Q26 form a buffer, shown generally by 436, isolating the output from shielded photodiode 432 in the same manner that buffer 434 isolates exposed photodiode 430. Transistor Q27 connects the output of buffer 436 to noise storage capacitor 388. The base of transistor Q27 is driven by sample signal 314 permitting transistor Q27 to function as switch 386. Typically, light storage capacitor 304 and noise storage capacitor 388 are 2 pF. Ramp capacitor 324, typically 10 pF, is charged to V_{DD} through transistor Q28. The base of transistor Q28 is driven by ramp control signal 328 permitting transistor Q28 to function as switch 330. Ramp capacitor 324 is discharged through current source 326 at an approximately constant current I_R of 0.1 μA when transistor Q28 is off.

Sensor power-up response is improved and the effective dynamic range extended by including circuitry to inhibit output if ramp voltage 322 drops beneath a preset voltage. Light-to-pulse circuit 380 includes comparator 438 comparing ramp voltage 322 with initialization voltage (V_{INIT}) 440. Comparator output 442 is ANDed with exclusive-OR output 396 by AND gate 444 to produce AND gate output 446. During operation, if ramp voltage 322 is less than initialization voltage 440, output 446 is deasserted. The use of comparator 438 and AND gate 444 guarantee that output 446 is not asserted regardless of the state of light-to-pulse circuit 380 following power-up. In a preferred embodiment, the initialization voltage is 0.45 V.

Sensor logic 306 generates control signals 308, 314, 328 based on integration pulse 140 which may be generated internally or provided from an external source. Buffer 447 receives integration pulse 140 and produces sample control 314. An odd number of sequentially connected inverters, shown generally as inverter train 448, accepts sample control 314 and produces reset control 308. A second set of odd numbered sequentially connected inverters, shown generally as inverter train 449, accepts reset signal 308 and produces ramp control signal 328. The circuit shown in FIG. 17 has a resolution of at least 8 bits and a sensitivity of approximately 1 volt per lux-second. The maximum output pulse duration 420 is independent of integration period 346 provided by the duration of integration pulse 140.

Referring now to FIGS. 18–21, various embodiments for light sensor packaging, output, and control are shown. Each embodiment may include light-to-pulse circuitry as described with regard to FIGS. 13–17 above. In FIG. 18, light sensor package 450 accepts four pins for supply voltage V_{DD}, ground, integration period signal 452, and output signal 454. Integration period signal 452 may be integration pulse 140 used by light-to-pulse circuit 380 to produce output 398 which is sent as output signal 454. In FIG. 19, light sensor package 456 requires only three pins for V_{DD}, ground, and combined integration period and output signal 458. Combined signal 458 may be interconnect signal 114 as described with regard to FIGS. 4 and 5 above. In FIG. 20, light sensor package 460 admits three pins for output signal 454, ground, and combined V_{DD} and integration period signal 462. As is known in the art, combined signal 462 may be separated into power supply voltage V_{DD} and integration period signal 452 through the use of filters. In FIG. 21, light sensor package 464 admits three pins for V_{DD}, ground, and output signal 454. Integration period signal 452 is generated within light sensor package 464 as described with regard to FIG. 22 below.

Referring now to FIG. 22, a block diagram of sensor logic for internally determining the integration period signal is shown. Sensor logic 306 may include free-running counter 470 driven by internal oscillator 472. Counter 470 may have taps, one of which is indicated by 474, connected to different counter bits. For example, one tap 474 may be connected to the nth bit, the next tap 474 to the $n^{th}+2$ bit, the next tap 474 connected to the $n^{th}+4$ bit, and so on, with each successive tap thereby providing a pulse with a period four times longer than the preceding tap 474. Sensor control signal generator

476 controls switch 478 to determine which tap 474 will be used to produce integration pulse 140. Typically, sensor control signal generator 476 sequences through each tap 474 repeatedly. Sensor control signal generator 476 then uses integration pulse 140 to generate control signals such as reset signal 308, sample signal 314, and ramp control signal 328 as described with regards to FIG. 17 above.

Referring now to FIG. 23, a block diagram illustrating the use of light transducers having different effective areas to achieve increased dynamic range is shown. As an alternative to or together with varying the integration time, pairs of exposed light transducer 106 and shielded light transducer 144 having different effective areas may be used. If photodiodes 430,432 are used as light transducers 106,144, the effective area is the photodiode collector area. Small exposed light transducer 490 produces charge which is converted to a voltage by light-to-voltage circuit 492. Light-to-voltage circuit 492 may be implemented using switches 310, 316, and light storage capacitor 304 as described with regard to FIG. 15 above. Charge produced by small shielded light transducer 494 is converted to voltage by noise-to-voltage circuit 496. Noise-to-voltage circuit 496 may be implemented using switches 382, 386 and noise storage capacitor 388 as described with regard to FIG. 15 above. The outputs of light-to-voltage circuit 492 and noise-to-voltage circuit 496 are converted to a pulse with a width based on charge accumulated by small exposed light transducer 490 less charge due to noise integrated by small shielded light transducer 494 over an integration period by voltage-to-pulse circuit 498. Voltage-to-pulse circuit 498 may be implemented using comparators 320, 392, capacitor 324, current source 326, and gate 396 as described with regard to FIG. 15 above. Medium exposed light transducer 500 has an effective area larger than the effective area for small exposed light transducer 490, resulting in increased sensitivity. For example, if the effective area of medium exposed light transducer 500 is four times larger than the effective area of small exposed light transducer 490, medium exposed light transducer 500 will be four times more sensitive to light 104 than will be small exposed light transducer 490. Medium shielded light transducer 502 has an effective area the same as medium exposed light transducer 500. Additional light-to-voltage circuit 492, noise-to-voltage circuit 496, and voltage-to-pulse circuit 498 produce a noise-corrected output pulse with width based on light 104 incident on medium exposed light transducer 500. Similarly, large exposed light transducer 504 and large shielded light transducer 506 provide still increased sensitivity over medium exposed light transducer 500 and medium shielded light transducer 502 by having still greater effective area.

Switch 508 under the control of sensor logic 306 sets which output from voltage-to-pulse circuits 498 will be used for output signal 454. Output signal 454 may be selected based on a signal generated within sensor logic 306 or may be based on a signal provided from outside of sensor logic 306.

In an alternative embodiment, only one shielded fight transducer 144 is used. The output of shielded light transducer 144 is scaled prior to each noise-to-voltage circuit 496 in proportion to the varying effective areas of exposed light transducers 106. It will be recognized by one of ordinary skill in the art that, though the examples shown in FIG. 23 has three pairs of exposed light transducer 106 and shielded light transducer 144, any number of pairs may be used.

Referring now to FIG. 24, a block diagram illustrating the use of light transducers having different apertures to achieve increased dynamic range is shown. As an alternative to or together with specifying the integration period, exposed light transducers 106 having the same effective area may each have a different aperture admitting area for admitting light 104. Varying apertures may be produced using partial shield 520 blocking light 104 from reaching a portion of exposed light transducer 106. Each exposed light transducer 106 produces charge converted to a voltage by a corresponding light-to-voltage circuit 492. Switch 522 under the control of sensor logic 306 selects which output of light-to-voltage circuits 492 to forward to voltage-to-pulse circuit 498. Voltage-to-pulse circuit 498 produces output signal 454 compensated for noise sensed by shielded light transducer 144 and processed by noise-to-voltage circuit 496. Sensor logic 306 may select output of light-to-voltage circuits 492 based on an internally generated control signal or on a control signal received from outside of sensor logic 306.

Referring now to FIG. 25, a schematic diagram illustrating different transducer capacitances for different amounts of light-induced charge to achieve increased dynamic range is shown. A photodiode, shown generally by 530, is formed by n-type diffusion 532 in p-type substrate 534. Light 104 incident on photodiode 530 generates charge 536 which may be accumulated in photodiode well 538 beneath n-type diffusion 532. Photodiode 530 has intrinsic photodiode capacitance C_{PD}. Floating diffusion 540 is also formed by diffusing n-type material in substrate 534. Floating diffusion 540 is connected through transistor Q20 to reset voltage V_{RESET}. The gate of transistor Q20 is connected to reset signal 308 under the control of sensor logic 306. Floating diffusion 540 is also connected to the input of buffer 542. The output of buffer 542 is transducer output V_{OUT}. Floating diffusion 540 defines diffusion well 544 formed in a region of substrate 534 when reset signal 308 is asserted. Floating diffusion 540 has an intrinsic floating diffusion capacitance C_{FD}. Transmission gate 546 is positioned between diffusion 532 and floating diffusion 540. Transmission gate 546 is held at voltage V_{TG} to form transmission well 548 thereunder. Transmission well 548 has a depth shallower than photodiode well 538 and diffusion well 544. Transmission gate 546 has an intrinsic transmission gate capacitance C_{TG}.

When reset signal 308 is asserted, bringing floating diffusion 540 to V_{RESET}, charge is eliminated in diffusion well 544. Further, when charge is reset in diffusion well 544, any charge 536 in photodiode well 538 above the depth of transmission well 548 flows through transmission well 548, through floating diffusion 540, and is eliminated. During a light integration period, reset signal 308 is unasserted, causing the voltage of floating diffusion 540 to float based on the amount of charge 536 in diffusion well 544. As light 104 strikes diffusion 532, charge 536 is created. Since charge 536 in photodiode well 538 up to the level of transmission well 548 was not eliminated by charge reset, additional charge 536 produced by incident light 104 flows from photodiode well 538 through transmission well 548 and into diffusion well 544. At charge level 550, beneath the level of transmission well 548, only diffusion well 544 is filling with charge 536. Hence, the voltage of floating diffusion 540 is inversely proportional to floating gate capacitance C_{FD}. When enough charge 536 has been generated to fill diffusion well 544 above the level of transmission well 548 such as, for example level 552, diffusion well 544, transmission well 548, and photodiode well 538 all fill with charge 536. Hence, the voltage of floating diffusion 540 is now inversely proportional to the sum of floating diffusion capacitance C_{FD}, transmission gate capacitance C_{TG}, and photodiode capacitance C_{PD}.

Referring now to FIG. 26, a graph of output potential as a function of accumulated incident light for the transducer of

FIG. **25** is shown. A curve, shown generally by **554**, shows transducer output V_{OUT} as a function of light **104** incident on diffusion **532** and, possibly, floating diffusion **540** over the integration period. During steep portion **556**, charge **536** is accumulating in diffusion well **544** alone. Since the conversion gain is based only on floating diffusion capacitance C_{FD}, photodiode **530** appears to have a high sensitivity to incident light **104**. During shallow portion **558**, charge **536** is accumulated in diffusion well **544**, transmission well **548**, and photodiode well **538**. Since the conversion gain is now dependent on the parallel combination of capacitances C_{FD}, C_{TG}, and C_{PD}, photodiode **530** now appears less sensitive to incident light **104**. By adjusting voltages V_{RESET} and V_{TG}, knee point **559** between steep portion **556** and shallow portion **558** can be shifted affecting the dynamic range. For example, if the maximum voltage swing for floating diffusion **540** is 1 volt; the ratio of C_{FD} to the sum of C_{FD}, C_{TG}, and C_{PD} is 1:100; and knee point **559** is set at 0.5 volts, the dynamic range of photodiode **530** is increased about 50 times over the dynamic range of a similar photodiode without dual capacitance.

Referring now to FIG. **27**, a schematic diagram illustrating a photodiode transducer incorporating an anti-bloom gate according to an embodiment of the present invention is shown. Anti-bloom gate **560** is formed between diffusion **532** and source voltage diffusion **562** tied to V_{DD}. Anti-bloom gate **560** is tied to anti-bloom voltage V_{AB}. Anti-bloom gate **560** forms anti-bloom well **564** in substrate **534** between photodiode well **538** and source diffusion well **566**. Anti-bloom voltage V_{AB} is less that transmission gate voltage V_{TG} well **564**, making anti-bloom well **564** shallower than transmission well **548**. When accumulated charge generated by photodiode **530** exceeds charge level **568** equal to the depth of anti-bloom well **564**, the excess charge flows beneath anti-bloom gate **560** into source voltage diffusion **562** and is eliminated. Anti-bloom gate **560** prevents output voltage V_{OUT} from dropping below a level detectable by comparator **320** in light-to-pulse circuit **380**.

Referring now to FIG. **28**, a drawing illustrating enclosure for a light sensor according to an embodiment of the present invention is shown. Light sensor **48**,**52** includes enclosure **100** having window **102** for admitting light, one ray of which is indicated by **570**. Enclosure **100** admits power pin **108**, ground pin **110**, and signal pin **112**. Semiconductor die **572**, encapsulated within enclosure **100**, incorporates light transducers **106**,**144** and associated electronics as described with regards to FIGS. **4**–**5** and **13**–**26** above. Pins **108**,**110**, **112** may be wire bonded to die **527**, as shown by wire **574** for power pin **108** and wire **576** for signal pin **112**, or may be directly bonded to die **527**, as shown for ground pin **110**.

Preferably, enclosure **100** is the same type used to construct three-terminal light emitting diodes (LEDs). A preferred format is commonly referred to as the T-1¾ or 5 mm package. Encapsulating electronics in such packages is well known in the art of optical electronics manufacturing.

A lens, shown generally by **578**, is preferably used to focus light onto exposed light transducer **106**. Lens **578** may be placed in front of light sensor **48**,**52** or, preferably, may be incorporated into window **102** as shown in FIG. **28**. Lens **578** defines the field of view of light sensor **48**,**52** and provides improved sensitivity through optical gain.

Referring now to FIG. **29**, a graph illustrating light sensor field of view as a function of light transducer distance from the lens is shown. The field of view for exposed light transducer **106** in light sensor **48**,**52** is defined as view angle θ made by marginal ray **570** with respect to optical axis **580** through exposed light transducer **106**. The half angle field of view for spherical lens **578** is expressed by Equation 3:

$$\theta = 90 - \arccos\left(\frac{r}{R}\right) + \frac{n_2}{n_1} \cdot \sin\left(\arccos\left(\frac{r}{R}\right) - \arctan\left(\frac{d - \left(R - \sqrt{R^2 - r^2}\right)}{r}\right)\right) \tag{3}$$

where r is the lens aperture radius, R is the radius of curvature of lens **578**, n_2 is the index of refraction of material within enclosure **100**, n_1, is the index of refraction outside of enclosure **100**, d is the distance from the center of lens **578** to exposed light transducer **106**, and θ is measured in degrees. Typically, T-1¾ enclosure **100** is filled with epoxy and sensor **48**,**52** operates in air making the ratio of n_2 to n_1, approximately 1.5. Curve **590** plots half angle field of view θ as a function of distance d for a T-1¾ enclosure having a spherical lens **578** with radius R of 5.0 mm. As light transducer **106** moves farther from lens **578**, the field of view decreases.

Referring now to FIG. **30**, a graph illustrating light sensor optical gain as a function of light transducer distance from the lens is shown. Assuming paraxial approximation for rays **570**, the optical gain of lens **578** can be estimated by considering the ratio of additional optical energy collected by light transducer **106** with lens **578** to the optical energy collected by light transducer **106** without lens **578**. This can be computed by considering a cone of light with a base at the surface of lens **578** and a point at the focal point of lens **578**. The optical gain G may then be expressed as a function of the ratio of the cross section of the cone to the area of light transducer **106** which reduces to Equation 4:

$$G = \frac{f^2}{(f - d)^2} \tag{4}$$

Curve **600** shows optical gain G as a function of distance d for a T-1¾ enclosure having a spherical lens **578** with radius R of 5.0 mm and a focal length of 15.0 mm. As light transducer **106** moves farther from lens **578**, the optical gain increases.

The distance d between lens **578** and light transducer **106** can be adjusted for optimal performance of ambient light sensor **48** and glare sensor **52**. Ambient light sensor **48** should have a wide field of view but need not be as sensitive as glare sensor **52**. Glare sensor **52** should have a narrower field of view but must be more sensitive and, therefore, benefits from a higher optical gain. For the lens described with regards to FIGS. **29** and **30** above, a distance d of between 2 mm and 3 mm is suitable for ambient light sensor **48** and a distance d of between 6 mm and 7 mm is suitable for glare sensor **52**. In addition to modifying lens parameters, other lens types such as aspheric, cylindrical, and the like are possible within the spirit and scope of the present invention.

Referring now to FIG. **31**, a graph illustrating frequency response of the human eye is shown. Curve **610** is the relative photopic or daylight frequency response of the human eye. Curve **612** is the relative scotopic or night frequency response of the human eye. In addition to being more sensitive to light intensity, scotopic response **612** is shifted more towards violet than photopic response **610**. In order to preserve night vision, which degrades rapidly when exposed to bright light particularly in the range of scotopic curve **612**, exposed light transducer **106** should have a frequency response similar to scotopic curve **612**. If this is

not practical, exposed light transducer **106** should at least have an attenuated infrared response. This is increasingly more important as high intensity discharge (HID) headlamps, which emit more blueish light than do incandescent or halogen lamps, gain in popularity.

Referring now to FIG. **32**, a graph illustrating frequency response of a typical light transducer is shown. The relative frequency response of a typical photodiode is shown as curve **620**. When compared to scotopic response curve **612**, the frequency response of exposed light transducer **106** contains significantly more infrared sensitivity. As described with regards to FIG. **2** above, filter **58,60** my be placed before or incorporated into sensor **48,52** so that the output of exposed light transducer **106** more closely resembles scotopic frequency response **612** of the human eye.

Referring now to FIG. **33**, a drawing of an enclosure incorporating an infrared filter according to an embodiment of the present invention is shown. Window **102** in enclosure **100** includes infrared filter **630** operative to attenuate infrared components of light rays **570** striking exposed light transducer **106**. Infrared filter **630** may be a hot mirror available from Optical Coating Laboratories, Inc. of Santa Rosa, Calif. A lens, such as described with regards to FIGS. **28–30** above, may be placed in front of infrared filter **630**. Additional filtering for exposed light transducer **106** is described in U.S. Pat. No. 4,799,768 titled "Automatic Rearview Mirror with Filtered Light Sensors" to Gahan, which is incorporated herein by reference.

While embodiments of the invention have been illustrated and described, it is not intended that these embodiments illustrate and describe all possible forms of the invention. Rather, it is intended that the following claims cover all modifications and alternative designs, and all equivalents, that fall within the spirit and scope of this invention.

What is claimed is:

1. A rearview mirror for an automotive vehicle allowing a vehicle operator to view a scene generally behind the vehicle operator, the mirror comprising:

a dimming element having a variably reflective surface, the degree of reflectivity based on a control signal;

an ambient light sensor positioned to receive light from a region generally in front of the vehicle, the ambient light sensor operative to output a discrete ambient light signal based on the amount of light incident on the ambient light sensor over an ambient light integration period;

a glare sensor positioned to view the scene generally behind the vehicle operator, the glare sensor operative to output a discrete glare signal based on the amount of light incident on the glare sensor over a glare integration period; and

a dimming logic in communication with the dimming element, the ambient light sensor, and the glare sensor, the dimming logic operative to

(a) determine an ambient light level based on the ambient light signal,

(b) determine the glare integration period based on the determined ambient light level,

(c) determine a mirror glare level based on the glare signal, and

(d) determine the dimming element control signal based on the determined mirror glare level.

2. A rearview mirror as in claim **1** wherein the ambient light sensor has an input for receiving an ambient light integration period signal specifying the ambient light integration period, the dimming logic further operative to determine the ambient light integration period based on at least one previously determined ambient light level and to output the ambient light integration period signal based on the determined ambient light integration period.

3. A rearview mirror as in claim **1** wherein the ambient light sensor has an input for receiving an ambient light integration period signal specifying the ambient light integration period and wherein the ambient light signal is a pulse having a pulse width indicative of the ambient light level, the dimming logic further operative to:

generate a sequence of integration period signals, each integration period signal in the sequence specifying a different light integration period; and

determine the ambient light level based on a resulting ambient light signal having a pulse width within at least one preset width threshold.

4. A rearview mirror as in claim **1** wherein at least one of the ambient light sensor and the glare sensor is a light sensor comprising:

a light transducer exposed to light operative to accumulate charge in proportion to light incident over a light integration period; and

a sensor logic in communication with the exposed light transducer, the sensor logic operative to

(a) determine the light integration period prior to beginning integration,

(b) reset the charge accumulated in the exposed light transducer at the beginning of the determined light integration period,

(c) measure the charge accumulated by the exposed light transducer over the determined light integration period, and

(d) output a pulse having a width based on the measured accumulated exposed light transducer charge.

5. A rearview mirror as in claim **4** wherein the light sensor further comprises a light transducer shielded from ambient light, the shielded light transducer having the same construction as the exposed light transducer, the shielded light transducer operative to accumulate charge in proportion to noise over the integration period, wherein the sensor logic is further operative to:

reset the charge accumulated in the shielded light transducer at the beginning of the determined light integration period;

measure the charge accumulated by the shielded light transducer over the determined light integration period; and

output a pulse having a width based on the difference between the measured accumulated exposed light transducer charge and the measured accumulated shielded light transducer charge.

6. A rearview mirror as in claim **5** wherein the light sensor is further operative to:

receive an integration pulse, the width of the integration pulse determining the integration period; and

generate the output pulse after the integration pulse, the difference in time between the end of the integration pulse and the start of the output pulse indicative of the amount of thermal noise in the light sensor.

7. A rearview mirror as in claim **6** wherein the dimming logic is further operative to:

determine the amount of time between the end of the integration pulse and the start of the output pulse; and

determine the light sensor temperature based on the determined amount of time.

8. A rearview mirror as in claim **7** wherein the dimming logic is further operative to disable automatic dimming of

the dimming element reflective surface if the light sensor temperature exceeds a preset limit.

9. A rearview mirror as in claim **1** wherein at least one of the ambient light sensor and the glare sensor is a light sensor comprising:

an enclosure having a window for receiving light, the enclosure admitting a power pin, a ground pin, and a signal pin;

an exposed light transducer disposed within the enclosure, the exposed light transducer operative to accumulate charge in proportion to light received through the window incident on the exposed light transducer;

a light-to-pulse circuit disposed within the enclosure and in communication with the exposed light transducer, the power pin, and the ground pin, the light-to-pulse circuit operative to output an output pulse, the output pulse width based on charge accumulated by the exposed light transducer over an integration period; and

a sensor logic disposed within the enclosure, the sensor logic in communication with the light-to-pulse circuit, the power pin, the ground pin, and the signal pin, the sensor logic operative to

(a) receive an integration pulse on the signal pin,

(b) determine the integration period based on the width of the integration pulse, and

(c) output the output pulse on the signal pin.

10. A rearview mirror as in claim **9** wherein the dimming logic comprises at least one signal pin, each dimming logic signal pin connected to the signal pin of the light sensor, for each signal pin the dimming logic further operative to:

set the dimming logic signal pin to output mode;

determine an integration period;

generate an integration pulse on the dimming logic signal pin, the width of the integration pulse based on the determined integration period;

set the dimming logic signal pin to input mode;

receive the light sensor output pulse; and

determine a light level received by the light sensor based on the light sensor output pulse.

11. A rearview mirror as in claim **10** wherein the dimming logic determines an integration period by cycling through a sequence of predetermined integration periods.

12. A rearview mirror as in claim **1** wherein the dimming element is an electrochromic element.

13. A rearview mirror as in claim **12** wherein the dimming logic generates the dimming element control signal as a constant voltage between transition points, the time between adjacent transition points being a fixed transition period, wherein, at each transition point, the dimming logic outputs a high voltage if an actual electrochromic element input voltage is less than a desired electrochromic element input voltage and outputs a low voltage otherwise.

14. A rearview mirror as in claim **13** wherein the dimming logic comprises a low pass filter operative to filter the dimming element control signal to produce the actual electrochromic element input voltage.

15. A rearview mirror as in claim **13** wherein the desired electrochromic element input voltage is a digital number, the dimming logic comprising an analog-to-digital converter operative to digitize the actual electrochromic element input voltage.

16. A rearview mirror as in claim **13** wherein the desired electrochromic element input voltage is a digital number, the dimming logic comprising:

a digital-to-analog converter operative to produce a desired voltage level representing the desired electrochromic element input voltage number; and

a comparator accepting the desired voltage level and the actual electrochromic element input voltage, the comparator operative to indicate if the desired voltage level is greater than the actual electrochromic element input voltage.

17. A rearview mirror as in claim **13** wherein the transition period is set to inhibit flicker in the electrochromic element that may be noticed by the vehicle operator.

18. A rearview mirror as in claim **13** wherein the transition period is between two seconds and two microseconds.

19. A rearview mirror as in claim **13** further comprising a switch connected across the electrochromic element, the dimming logic further operative to close the switch when the actual electrochromic element input voltage exceeds the desired electrochromic element input voltage by more than a preset amount.

20. A rearview mirror as in claim **1** wherein the dimming logic is further operative to output a signal based on the determined ambient light level.

21. A rearview mirror as in claim **1** further comprising a glare lens for the glare sensor, the glare lens providing the glare sensor with a narrower field of view than the ambient light sensor field of view, the glare lens further providing the glare sensor with a higher optical gain than the ambient light sensor optical gain.

22. A rearview mirror as in claim **1** wherein the dimming logic determines the glare integration period based on the binary logarithm of the ambient light level, the dimming logic further operative to:

obtain the ambient light level as a binary number;

determine a first binary number portion based on the bit position of the most significant binary one in the ambient light level binary number;

determine a second binary number portion based on the bit pattern following the most significant binary one in the ambient light level binary number; and

determine as the ambient light level binary logarithm as the concatenation of the first binary number portion and the second binary number portion.

23. A dimming logic operative to generate a control signal for controlling variable transmissivity of an electrochromic element based on a desired control voltage, the electrochromic element dimming in response to an applied control voltage, the dimming logic operative to generate the control signal as a constant voltage between transition points, the time between adjacent transition points being a fixed transition period wherein, at each transition point, the dimming logic outputs a high voltage if the applied control voltage is less than the desired control voltage and outputs a low voltage otherwise.

24. A dimming logic as in claim **23** wherein the dimming logic comprises a low pass filter operative to filter the control signal to produce the applied control voltage.

25. A dimming logic as in claim **23** wherein the desired control voltage is a digital number, the dimming logic comprising an analog-to-digital converter operative to digitize the applied control voltage.

26. A dimming logic as in claim **23** wherein the desired electrochromic element input voltage is a digital number, the dimming logic comprising:

a digital-to-analog converter operative to produce a desired voltage level representing the desired control voltage number; and

a comparator accepting the desired voltage level and the applied control voltage, the comparator operative to indicate if the desired voltage level is greater than the applied control voltage.

27. A dimming logic as in claim **23** wherein the transition period is set to inhibit flicker in the electrochromic element.

28. A dimming logic as in claim **23** wherein the transition period is between two seconds and two microseconds.

29. A dimming logic as in claim **23** further comprising a switch connected across the electrochromic element, the dimming logic further operative to close the switch when the applied control voltage exceeds the desired control voltage by more than a preset amount.

30. A dimming logic as in claim **29** wherein the comparison logic comprises an analog-to-digital converter operative to digitize the applied control voltage.

31. A dimming logic as in claim **29** wherein the comparison logic comprises:

a digital-to-analog converter operative to produce a desired voltage level representing the desired control level; and

a comparator accepting the desired voltage level and the applied control voltage, the comparator operative to indicate if the applied control voltage is greater than the desired voltage level.

* * * * *