US008965476B2

(12) **United States Patent**
Freeman et al.

(10) **Patent No.: US 8,965,476 B2**
(45) **Date of Patent: Feb. 24, 2015**

(54) **TISSUE PENETRATION DEVICE**

(75) Inventors: **Dominique M. Freeman**, La Honda, CA (US); **Thomas Shoup**, Los Altos, CA (US); **Jeffrey Perry**, Sunnyvale, CA (US); **Mark Castle**, Pleasanton, CA (US); **Rodney Kugizaki**, Tucson, AZ (US); **Robert Englert**, Pleasanton, CA (US); **Don Alden**, Sunnyvale, CA (US)

(73) Assignee: **Sanofi-Aventis Deutschland GmbH**, Frankfurt am Main (DE)

(*) Notice: Subject to any disclaimer, the term of this patent is extended or adjusted under 35 U.S.C. 154(b) by 0 days.

(21) Appl. No.: **13/088,569**

(22) Filed: **Apr. 18, 2011**

(65) **Prior Publication Data**

US 2012/0283539 A1 Nov. 8, 2012

Related U.S. Application Data

(60) Provisional application No. 61/325,129, filed on Apr. 16, 2010.

(51) **Int. Cl.**
A61B 5/05 (2006.01)
A61B 5/15 (2006.01)
(Continued)

(52) **U.S. Cl.**
CPC ***A61B 5/1411*** (2013.01); ***A61B 5/150022*** (2013.01); ***A61B 5/150083*** (2013.01); ***A61B 5/150091*** (2013.01); ***A61B 5/150099*** (2013.01); ***A61B 5/150137*** (2013.01); ***A61B 5/150152*** (2013.01); ***A61B 5/150167*** (2013.01); ***A61B 5/15019*** (2013.01); ***A61B 5/150267*** (2013.01); ***A61B 5/150282*** (2013.01); ***A61B 5/15029*** (2013.01); ***A61B 5/150358*** (2013.01);
(Continued)

(58) **Field of Classification Search**
USPC 600/309, 316, 345–347, 365; 435/4, 14; 436/68; 422/50, 420–429; 204/403.01–403.15; 702/23; 604/64–66
See application file for complete search history.

(56) **References Cited**

U.S. PATENT DOCUMENTS

2,061 A	4/1841	Osdel	.....	606/182
55,620 A	6/1866	Capewell	.....	606/181

(Continued)

FOREIGN PATENT DOCUMENTS

CN	1946340 A	4/2007		
DE	2206674	8/1972	.....	C07D 39/10

(Continued)

OTHER PUBLICATIONS

G. Jarzabek, Z. Borkowska, On the Real Surface of Smooth Solid Electrodes, 1997, Electrochimica Acta, vol. 42, No. 19, pp. 2915-1918.

(Continued)

Primary Examiner — Michael D'Angelo
(74) *Attorney, Agent, or Firm* — Mintz, Levin, Cohn, Ferris, Glovsky and Popeo, P.C.

(57) **ABSTRACT**

A body fluid testing device has at least one penetrating member and a penetrating member driver configured to be coupled to the at least one penetrating member. A plurality of analyte sensors are coupled to a spoked disk substrate. Each of a penetrating member can pass between spokes of the disk substrate to provide that a used penetrating member can be removed and a new penetrating inserted without removing the disk. A disposable houses the at least one penetrating member and the plurality of analyte sensors.

8 Claims, 72 Drawing Sheets

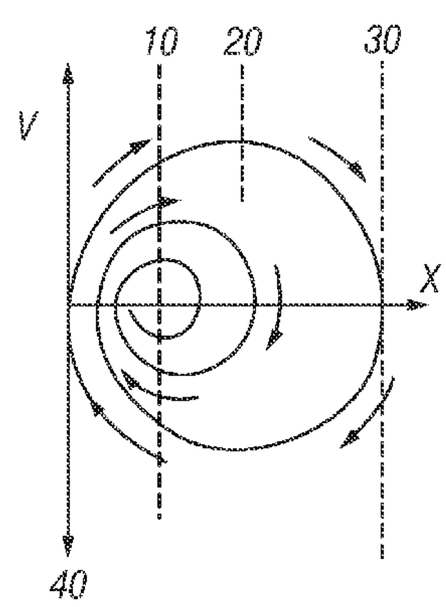

(51) **Int. Cl.**

A61B 5/151	(2006.01)
A61B 5/157	(2006.01)
A61B 5/145	(2006.01)

(52) **U.S. Cl.**

CPC ***A61B5/150412*** (2013.01); ***A61B 5/150427*** (2013.01); ***A61B 5/150511*** (2013.01); ***A61B 5/150809*** (2013.01); ***A61B 5/150824*** (2013.01); ***A61B 5/150946*** (2013.01); ***A61B 5/150954*** (2013.01); ***A61B 5/15113*** (2013.01); ***A61B 5/15123*** (2013.01); ***A61B 5/15146*** (2013.01); ***A61B 5/15151*** (2013.01); ***A61B 5/15153*** (2013.01); ***A61B 5/15155*** (2013.01); ***A61B 5/15163*** (2013.01); ***A61B 5/15169*** (2013.01); ***A61B 5/15171*** (2013.01); ***A61B 5/15178*** (2013.01); ***A61B 5/1519*** (2013.01); ***A61B 5/15192*** (2013.01); ***A61B 5/15194*** (2013.01); ***A61B 5/157*** (2013.01); *A61B 5/14532* (2013.01); *A61B 5/15016* (2013.01); *A61B 5/150175* (2013.01); *A61B 5/150213* (2013.01); *A61B 5/150259* (2013.01); *A61B 5/150748* (2013.01); *A61B 5/15109* (2013.01); *A61B 5/15176* (2013.01); *A61B 5/15184* (2013.01); *A61B 5/15186* (2013.01); *A61B 2562/0295* (2013.01)

USPC **600/345**

(56) **References Cited**

U.S. PATENT DOCUMENTS

657,646	A	9/1900	Haviland	435/4
1,135,465	A	4/1915	Pollock	606/181
1,733,847	A	10/1929	Wilmot	292/332
2,258,857	A	10/1941	McCann	601/81
2,628,319	A	2/1953	Vang	310/15
2,714,890	A	8/1955	Alfred	606/169
2,763,935	A	9/1956	Whaley	33/511
2,801,633	A	8/1957	Ehrlich	606/181
2,880,876	A	4/1959	Dujardin	210/523
3,046,987	A	7/1962	Ehrlich	128/314
3,030,959	A	9/1962	Grunert	128/329
3,063,451	A	11/1962	Kowalk	600/576
3,086,288	A	4/1963	Balamuth	30/277.4
3,090,384	A	5/1963	Baldwin et al.	604/272
3,208,452	A	9/1965	Stern	606/182
3,358,689	A	12/1967	Higgins	128/329
3,412,729	A	11/1968	Smith, Jr.	128/2.05
3,424,154	A	1/1969	Kinsley	604/70
3,448,307	A	6/1969	Rudolph	310/23
3,494,358	A	2/1970	Grossenbacher	128/218
3,607,097	A	9/1971	Auphan et al.	422/66
3,620,209	A	11/1971	Kravitz	601/79
3,626,929	A	12/1971	Sanz	128/2 R
3,628,026	A	12/1971	Cronin	250/214.1
3,665,672	A	5/1972	Speelman	53/435
3,673,475	A	6/1972	Britton	318/122
3,712,293	A	1/1973	Mielke, Jr.	128/2 G
3,734,812	A	5/1973	Yazawa	428/107
3,742,954	A	7/1973	Strickland	128/302
3,780,960	A	12/1973	Tokuno	242/555.2
3,832,776	A	9/1974	Sawyer	273/272
3,836,148	A	9/1974	Manning	273/368
3,851,543	A	12/1974	Krom	74/493
3,853,010	A	12/1974	Christen	73/864.24
3,924,818	A	12/1975	Pfeifle	242/364.7
3,938,526	A	2/1976	Anderson	128/303.1
3,953,172	A	4/1976	Shapiro	23/230
3,971,365	A	7/1976	Smith	128/2.17
4,057,394	A	11/1977	Genshaw	23/230
4,077,406	A	3/1978	Sandhage	604/61
4,109,655	A	8/1978	Chaconac	128/253
4,139,011	A	2/1979	Benoit	606/182
4,154,228	A	5/1979	Feldstein	606/169
4,168,130	A	9/1979	Barth	404/99
4,184,486	A	1/1980	Papa	600/373
4,190,420	A	2/1980	Covington	422/63
4,191,193	A	3/1980	Seo	600/488
4,193,690	A	3/1980	Levenson	356/301
4,203,446	A	5/1980	Hofert	606/182
4,207,870	A	6/1980	Eldridge	128/766
4,223,674	A	9/1980	Fluent	604/504
4,224,125	A	9/1980	Nakamura	204/195 B
4,224,949	A	9/1980	Scott	128/734
4,230,118	A	10/1980	Holman	128/314
4,240,439	A	12/1980	Abe	600/412
4,254,083	A	3/1981	Columbus	422/55
4,258,001	A	3/1981	Pierce	422/56
4,259,653	A	3/1981	McGonigal	310/15
4,299,230	A	11/1981	Kubota	600/300
4,301,412	A	11/1981	Hill	324/442
4,321,397	A	3/1982	Nix	548/366
4,338,174	A	7/1982	Tamura	204/195
4,340,669	A	7/1982	Bauer	435/14
4,350,762	A	9/1982	De Luca	435/10
4,353,984	A	10/1982	Yamada	435/14
4,356,826	A	11/1982	Kubota	600/300
4,360,016	A	11/1982	Sarrine	128/763
4,388,922	A	6/1983	Telang	604/319
4,391,905	A	7/1983	Bauer	435/14
4,391,906	A	7/1983	Bauer	435/14
4,392,933	A	7/1983	Nakamura	204/403.14
4,394,512	A	7/1983	Batz	548/365
4,397,556	A	8/1983	Muller	356/301
4,407,008	A	9/1983	Schmidt	356/301
4,411,266	A	10/1983	Cosman	128/303.18
4,414,975	A	11/1983	Ryder	128/314
4,418,037	A	11/1983	Katsuyama	422/56
4,420,564	A	12/1983	Tsuji	435/288
4,425,039	A	1/1984	Grant	356/35.5
4,426,451	A	1/1984	Columbus	436/518
4,426,884	A	1/1984	Polchaninoff	73/172
4,440,301	A	4/1984	Intengan	206/456
4,442,836	A	4/1984	Meinecke	128/314
4,442,972	A	4/1984	Sahay	236/1 EA
4,449,529	A	5/1984	Burns	606/182
4,462,405	A	7/1984	Ehrlich	606/182
4,469,110	A	9/1984	Slama	128/770
4,490,139	A	12/1984	Huizenga et al.	604/57
4,517,978	A	5/1985	Levin	128/314
4,518,384	A	5/1985	Tarello	604/61
4,523,994	A	6/1985	Shono	549/352
4,525,164	A	6/1985	Loeb et al.	
4,535,769	A	8/1985	Burns	128/314
4,535,773	A	8/1985	Yoon	606/185
4,537,197	A	8/1985	Hulka	128/633
4,539,988	A	9/1985	Shirley	128/314
4,545,382	A	10/1985	Higgins	128/635
4,553,541	A	11/1985	Burns	128/314
4,561,445	A	12/1985	Berke	128/642
4,577,630	A	3/1986	Nitzsche	128/314
4,580,564	A	4/1986	Anderson	502/8
4,580,565	A	4/1986	Cornell	128/314
4,586,819	A	5/1986	Tochigi	356/301
4,586,926	A	5/1986	Osborne	604/272
4,590,411	A	5/1986	Kelly	318/687
4,595,479	A	6/1986	Kimura	204/294
4,600,014	A	7/1986	Beraha	128/754
4,603,209	A	7/1986	Tsien	549/352
4,608,997	A	9/1986	Conway	128/763
4,615,340	A	10/1986	Cronenberg	128/635
4,616,649	A	10/1986	Burns	128/314
4,619,754	A	10/1986	Niki	204/290
4,622,974	A	11/1986	Coleman	128/634
4,624,253	A	11/1986	Burns	128/314
4,627,445	A	12/1986	Garcia	600/583
4,637,393	A	1/1987	Ray	128/305
4,637,403	A	1/1987	Garcia	600/583
4,643,189	A	2/1987	Mintz	128/314
4,648,408	A	3/1987	Hutcheson	128/770
4,648,714	A	3/1987	Benner	356/301
4,653,511	A	3/1987	Goch	128/763

(56) **References Cited**

U.S. PATENT DOCUMENTS

4,653,513	A	3/1987	Dombrowski	600/578
4,655,225	A	4/1987	Dahne	600/316
4,661,768	A	4/1987	Carusillo	324/678
4,666,438	A	5/1987	Raulerson	604/277
4,676,244	A	6/1987	Enstrom	128/314
4,677,979	A	7/1987	Burns	128/314
4,678,277	A	7/1987	Delhaye	356/301
4,682,892	A	7/1987	Chawla	356/353
4,695,273	A	9/1987	Brown	
4,702,594	A	10/1987	Grant	356/35.5
4,711,245	A	12/1987	Higgins	128/635
4,712,460	A	12/1987	Allen et al.	83/208
4,712,548	A	12/1987	Enstrom	128/314
4,714,462	A	12/1987	DiDomenico	604/67
4,715,374	A	12/1987	Maggio	128/314
4,731,330	A	3/1988	Hilll	436/16
4,731,726	A	3/1988	Allen, III	600/300
4,734,360	A	3/1988	Phillips	435/435
4,735,203	A	4/1988	Ryder	128/314
4,737,458	A	4/1988	Batz	435/28
4,750,489	A	6/1988	Berkman	606/166
4,753,776	A	6/1988	Hillman	422/101
4,756,884	A	7/1988	Hillman	422/73
4,757,022	A	7/1988	Shults	204/403.05
4,758,323	A	7/1988	Davis	204/403
4,774,192	A	9/1988	Teriniello	436/530
4,784,486	A	11/1988	Van Wagenen	356/301
4,787,398	A	11/1988	Garcia	600/583
4,790,979	A	12/1988	Teriniello	422/56
4,794,926	A	1/1989	Munsch	606/183
4,797,283	A	1/1989	Allen	424/443
4,814,142	A	3/1989	Gleisner	422/56
4,814,661	A	3/1989	Ratzlaff	310/328
4,817,603	A	4/1989	Turner	606/182
4,818,493	A	4/1989	Coville	422/102
4,820,010	A	4/1989	Sciefres	385/43
4,820,399	A	4/1989	Senda	204/403
4,823,806	A	4/1989	Bajada	600/557
4,824,639	A	4/1989	Hildenbrand	422/56
RE32,922	E	5/1989	Levin	128/314
4,825,711	A	5/1989	Jensen	73/865.8
4,827,763	A	5/1989	Bourland	73/172
4,829,011	A	5/1989	Gibbons	436/512
4,830,959	A	5/1989	McNeill	435/53
4,836,904	A	6/1989	Armstron	204/294
4,840,893	A	6/1989	Hill	435/6
4,844,095	A	7/1989	Chiodo	128/314
4,845,392	A	7/1989	Mumbower	310/14
4,850,973	A	7/1989	Jordan	604/157
4,857,274	A	8/1989	Simon	422/72
4,868,129	A	9/1989	Gibbons	436/179
4,869,249	A	9/1989	Crossman	128/314
4,869,265	A	9/1989	McEwen	128/774
4,873,993	A	10/1989	Meserol	128/780
4,877,026	A	10/1989	de Laforcade	128/305
4,882,013	A	11/1989	Turner	204/1
4,883,055	A	11/1989	Merrick	128/633
4,883,068	A	11/1989	Dechow	128/760
4,886,499	A	12/1989	Cirelli	604/131
4,889,529	A	12/1989	Haindl	604/274
4,892,097	A	1/1990	Ranalletta	606/182
4,895,147	A	1/1990	Bodicky	606/182
4,895,156	A	1/1990	Schulze	600/342
4,897,173	A	1/1990	Nankai	204/403
4,900,424	A	2/1990	Birch	204/409
4,900,666	A	2/1990	Phillips	435/25
4,911,794	A	3/1990	Parce	204/1 T
4,920,977	A	5/1990	Haynes	128/770
4,924,879	A	5/1990	O'brien	600/583
4,935,346	A	6/1990	Phillips	435/14
4,938,218	A	7/1990	Goodman	128/633
4,940,468	A	7/1990	Petillo	606/170
4,944,304	A	7/1990	Nishina	128/667
4,945,045	A	7/1990	Forrest	435/25
4,946,795	A	8/1990	Gibbons	436/179
4,948,727	A	8/1990	Cass	435/18
4,948,961	A	8/1990	Hillman	250/252.1
4,952,373	A	8/1990	Sugarman	422/99
4,952,515	A	8/1990	Gleisner	436/169
4,953,552	A	9/1990	DeMarzo	128/635
4,953,976	A	9/1990	Adler-Golden	356/301
4,963,498	A	10/1990	Hillman	436/69
4,966,581	A	10/1990	Landau	604/72
4,966,646	A	10/1990	Zdeblick	156/633
4,966,671	A	10/1990	Nylander	204/153.14
4,975,581	A	12/1990	Robinson	250/339
4,976,724	A	12/1990	Nieto	606/182
4,977,910	A	12/1990	Miyahara	134/7
4,983,178	A	1/1991	Schnell	606/181
4,984,085	A	1/1991	Landowski	358/213
4,990,154	A	2/1991	Brown	606/182
4,995,402	A	2/1991	Smith	600/584
4,999,582	A	3/1991	Parks	324/438
5,001,054	A	3/1991	Wagner	435/14
5,001,873	A	3/1991	Rufin	451/39
5,004,923	A	4/1991	Hillman	250/341
5,010,772	A	4/1991	Bourland	73/862.04
5,010,774	A	4/1991	Kikuo	73/862.04
5,014,718	A	5/1991	Mitchen	128/771
5,019,974	A	5/1991	Beckers	364/413.02
5,026,388	A	6/1991	Ingalz	606/182
D318,331	S	7/1991	Phillips	D24/169
5,028,142	A	7/1991	Ostoich et al.	366/273
5,029,583	A	7/1991	Meserol	600/316
5,035,704	A	7/1991	Lambert	606/182
5,039,617	A	8/1991	McDonald	436/69
5,043,143	A	8/1991	Shaw	422/65
5,046,496	A	9/1991	Betts	600/352
5,047,044	A	9/1991	Smith	606/182
5,049,373	A	9/1991	Ballou	549/352
5,049,487	A	9/1991	Phillips	435/4
5,054,487	A	10/1991	Clarke	128/633
5,054,499	A	10/1991	Swierczek	128/770
5,057,082	A	10/1991	Burchette, Jr.	128/633
5,057,277	A	10/1991	Mauze	422/56
5,059,394	A	10/1991	Phillips	422/68.1
5,059,789	A	10/1991	Salcudean	250/206.1
5,060,174	A	10/1991	Gross	702/139
5,062,898	A	11/1991	McDermott	134/7
5,064,411	A	11/1991	Gordon, III	604/48
5,070,874	A	12/1991	Barnes	128/633
5,070,886	A	12/1991	Mitchen	128/771
5,073,500	A	12/1991	Saito et al.	436/53
5,074,872	A	12/1991	Brown	606/182
5,077,017	A	12/1991	Gorin	422/100
5,077,199	A	12/1991	Basagni	435/14
5,080,865	A	1/1992	Leiner	422/68.1
5,086,229	A	2/1992	Rosenthal	250/341
5,089,112	A	2/1992	Skotheim	204/403
5,092,842	A	3/1992	Bechtold	604/135
5,094,943	A	3/1992	Siedel	435/25
5,096,669	A	3/1992	Lauks	204/403.02
5,097,810	A	3/1992	Fishman	600/556
5,100,427	A	3/1992	Crossman	606/182
5,100,428	A	3/1992	Mumford	606/182
5,104,380	A	4/1992	Holman	604/117
5,104,382	A	4/1992	Brinkerhoff et al.	604/164.12
5,104,619	A	4/1992	de Castro et al.	422/56
5,104,813	A	4/1992	Besemer	436/179
5,107,764	A	4/1992	Gasparrini	101/425
5,108,564	A	4/1992	Szuminsky	204/153.12
5,108,889	A	4/1992	Smith	435/4
5,116,759	A	5/1992	Klainer	435/288
5,120,420	A	6/1992	Nankai	204/403
5,122,244	A	6/1992	Hoenes	204/153
5,126,034	A	6/1992	Carter	204/403
5,128,015	A	7/1992	Szuminsky	204/403
5,128,171	A	7/1992	Gleisner	427/2
5,132,801	A	7/1992	Yamano	358/213
5,133,730	A	7/1992	Biro	606/182
5,135,719	A	8/1992	Hillman	422/101
5,139,685	A	8/1992	de Castro et al.	210/767
5,140,161	A	8/1992	Hillman	250/341
5,141,868	A	8/1992	Shanks	435/288

(56) **References Cited**

U.S. PATENT DOCUMENTS

5,144,139	A	9/1992	Hillman	250/341
5,145,565	A	9/1992	Kater	250/341
5,146,091	A	9/1992	Knudson	250/341.6
5,152,296	A	10/1992	Simons	128/670
5,152,775	A	10/1992	Ruppert	606/182
5,153,671	A	10/1992	Miles	356/301
5,156,611	A	10/1992	Haynes	606/181
5,162,525	A	11/1992	Masilamani	549/352
5,163,442	A	11/1992	Ono	128/760
5,164,598	A	11/1992	Hillman	250/341
5,167,619	A	12/1992	Wuchinich	604/22
5,170,364	A	12/1992	Gross	702/139
5,174,726	A	12/1992	Findlay	417/205
D332,490	S	1/1993	Brown	D24/146
5,178,142	A	1/1993	Harjunmaa	128/633
5,179,005	A	1/1993	Phillips	435/14
5,181,910	A	1/1993	Scanlon	604/67
5,181,914	A	1/1993	Zook	604/307
5,183,042	A	2/1993	Harjunmaa	128/633
5,185,256	A	2/1993	Nankai	435/174
5,187,100	A	2/1993	Matzinger	436/16
5,188,118	A	2/1993	Terwilliger	600/566
5,189,751	A	3/1993	Giuliani	15/22.1
5,192,415	A	3/1993	Yoshioka	204/403
5,194,391	A	3/1993	Mauze	436/166
5,196,025	A	3/1993	Ranalletta	606/182
5,201,324	A	4/1993	Swierczek	128/770
5,205,920	A	4/1993	Oyama	204/403
5,208,163	A	5/1993	Charlton et al.	436/63
5,209,028	A	5/1993	McDermott	51/426
5,211,652	A	5/1993	Derbyshire	606/182
5,212,879	A	5/1993	Biro	29/437
5,215,587	A	6/1993	McConnellogue	118/699
5,216,597	A	6/1993	Beckers	364/413.02
5,217,476	A	6/1993	Wishinsky	606/167
5,217,480	A	6/1993	Haber	606/182
5,218,966	A	6/1993	Yamasawa	600/499
5,222,504	A	6/1993	Solomon	600/557
5,228,972	A	7/1993	Osaka	204/415
5,229,282	A	7/1993	Yoshioka	435/177
5,230,866	A	7/1993	Shartle	422/103
5,231,993	A	8/1993	Haber	128/770
5,241,969	A	9/1993	Carson	600/566
5,247,932	A	9/1993	Chung	128/633
5,249,583	A	10/1993	Mallaby	600/567
5,250,066	A	10/1993	Lambert	606/181
5,251,126	A	10/1993	Kahn	364/413.11
5,253,656	A	10/1993	Rincoe	128/782
5,256,998	A	10/1993	Becker	335/229
5,264,103	A	11/1993	Yoshioka	204/403
5,264,105	A	11/1993	Gregg	204/403
5,264,106	A	11/1993	McAleer	204/403
5,266,179	A	11/1993	Nankai	204/401
5,266,359	A	11/1993	Spielvogel	427/388.4
D342,573	S	12/1993	Cerola	D24/147
5,267,974	A	12/1993	Lambert	604/195
5,272,087	A	12/1993	El Murr	435/291
5,277,181	A	1/1994	Mendelson	128/633
5,279,294	A	1/1994	Anderson	600/322
5,279,791	A	1/1994	Aldrich	422/58
5,282,822	A	2/1994	Macors	606/182
5,286,362	A	2/1994	Hoenes	204/403
5,286,364	A	2/1994	Yacynych	204/418
5,288,636	A	2/1994	Pollman	435/288
5,294,261	A	3/1994	McDermott	134/7
5,296,378	A	3/1994	Sakata	436/63
5,300,779	A	4/1994	Hillman	250/341
5,304,192	A	4/1994	Crouse	606/181
5,304,193	A	4/1994	Zhadanov	606/182
5,304,347	A	4/1994	Mann	422/67
5,304,468	A	4/1994	Phillips	435/14
5,306,623	A	4/1994	Kiser	435/14
5,307,263	A	4/1994	Brown	600/301
5,312,590	A	5/1994	Gunasingham	422/56
5,314,441	A	5/1994	Cusack	606/182
5,314,442	A	5/1994	Morita	606/182
5,315,793	A	5/1994	Peterson	451/2
5,316,012	A	5/1994	Siegal	128/744
5,318,583	A	6/1994	Rabenau	606/182
5,318,584	A	6/1994	Lange	606/182
5,320,607	A	6/1994	Ishibashi	604/115
5,320,808	A	6/1994	Holen	422/64
5,324,302	A	6/1994	Crouse	606/181
5,324,303	A	6/1994	Strong	606/181
5,330,634	A	7/1994	Wong	205/777.5
5,332,479	A	7/1994	Uenoyama	204/153.12
5,341,206	A	8/1994	Pittaro	356/301
5,342,382	A	8/1994	Brinkerhoff	606/184
5,344,703	A	9/1994	Kovar	428/312.6
5,350,392	A	9/1994	Purcell	606/182
5,352,351	A	10/1994	White	204/406
5,354,287	A	10/1994	Wacks	604/232
5,354,447	A	10/1994	Uenoyama	204/403
5,356,420	A	10/1994	Czernecki	606/182
5,360,410	A	11/1994	Wacks	604/232
5,365,699	A	11/1994	Armstrong	451/7
5,366,469	A	11/1994	Steg	606/182
5,366,470	A	11/1994	Ramel	606/183
5,366,609	A	11/1994	White	204/403
5,368,047	A	11/1994	Suzuki	600/578
5,370,509	A	12/1994	Golding	417/423.1
5,371,687	A	12/1994	Holmes	364/514
5,372,135	A	12/1994	Mendelson	600/322
5,375,397	A	12/1994	Ferrand	54/66
5,378,628	A	1/1995	Graetzel	435/288
5,382,346	A	1/1995	Uenoyama	204/403
5,383,885	A	1/1995	Bland	606/182
5,389,534	A	2/1995	von Gentzkow	435/180
5,390,450	A	2/1995	Goenka	451/39
5,393,903	A	2/1995	Graetzel	556/137
5,395,339	A	3/1995	Talonn	604/111
5,395,387	A	3/1995	Burns	606/181
5,397,334	A	3/1995	Schenk	606/182
5,401,376	A	3/1995	Foos	204/415
5,402,798	A	4/1995	Swierczek	128/770
5,405,283	A	4/1995	Goenka	451/39
5,405,510	A	4/1995	Betts	205/782
5,405,511	A	4/1995	White	204/153.1
5,407,545	A	4/1995	Hirose	204/153.12
5,407,554	A	4/1995	Saurer	204/403
5,407,818	A	4/1995	von Gentzkow	435/180
5,409,583	A	4/1995	Yoshioka	204/153.12
5,409,664	A	4/1995	Allen	422/56
5,410,059	A	4/1995	Fraser	546/10
5,410,474	A	4/1995	Fox	600/300
5,415,169	A	5/1995	Siczek	600/427
5,418,142	A	5/1995	Kiser	435/14
5,423,847	A	6/1995	Strong	606/182
5,424,545	A	6/1995	Block	350/343
5,426,032	A	6/1995	Phillips	435/14
5,436,161	A	7/1995	Bergstrom	435/291
5,437,999	A	8/1995	Diebold	435/288
5,438,271	A	8/1995	White	324/444
5,443,701	A	8/1995	Willner	204/153
5,445,920	A	8/1995	Saito	430/311
D362,719	S	9/1995	Kaplan	D24/147
5,453,360	A	9/1995	Yu	435/435
5,454,828	A	10/1995	Schraga	606/181
5,456,875	A	10/1995	Lambert	264/328.1
5,459,325	A	10/1995	Hueton	250/458.1
5,460,182	A	10/1995	Goodman	600/342
5,462,533	A	10/1995	Daugherty	604/164
5,464,418	A	11/1995	Schraga	606/182
5,465,722	A	11/1995	Fort	600/447
5,471,102	A	11/1995	Becker	310/50
5,472,427	A	12/1995	Rammler	604/164.01
5,474,084	A	12/1995	Cunniff	600/557
5,476,474	A	12/1995	Davis	606/182
5,480,387	A	1/1996	Gabriel	604/134
5,487,748	A	1/1996	Marshall	606/182
D367,109	S	2/1996	Ryner	D24/224
5,490,505	A	2/1996	Diab	600/323
5,496,274	A	3/1996	Graves	604/86
5,496,453	A	3/1996	Uenoyama	205/777.5

(56) **References Cited**

U.S. PATENT DOCUMENTS

5,498,542 A 3/1996 Corey 435/283.1
5,501,836 A 3/1996 Myerson 42/57
5,501,893 A 3/1996 Laermer 428/161
5,507,288 A 4/1996 Bocker 128/633
5,507,629 A 4/1996 Jarvik 417/423.3
5,508,171 A 4/1996 Walling 205/777.5
5,509,410 A 4/1996 Hill 128/637
5,510,266 A 4/1996 Bonner 436/43
5,512,159 A 4/1996 Yoshioka 204/403
5,514,152 A 5/1996 Smith 606/182
5,515,170 A 5/1996 Matzinger 356/423
5,518,006 A 5/1996 Mawhirt 128/770
D371,198 S 6/1996 Savage D24/169
5,524,636 A 6/1996 Sarvazyan 128/774
5,525,511 A 6/1996 D'Costa 435/287.9
5,525,518 A 6/1996 Lundsgaard 436/68
5,526,120 A 6/1996 Jina 356/446
5,527,333 A 6/1996 Nikkels 606/182
5,527,334 A 6/1996 Kanner 606/182
5,529,074 A 6/1996 Greenfield 600/557
5,540,676 A 7/1996 Freiberg 606/3
5,540,709 A 7/1996 Ramel 606/183
5,543,326 A 8/1996 Heller 435/287.9
5,545,174 A 8/1996 Schenk 606/182
5,545,291 A 8/1996 Smith 438/107
5,547,702 A 8/1996 Gleisner 427/2.13
D373,419 S 9/1996 Muramatsu D24/165
5,554,153 A 9/1996 Costello 606/9
5,554,166 A 9/1996 Lange 606/182
5,558,834 A 9/1996 Chu 422/55
5,562,384 A 10/1996 Alvite 414/226.01
5,562,696 A 10/1996 Nobles 606/185
5,563,031 A 10/1996 Yu 435/4
5,563,042 A 10/1996 Phillips 435/14
5,569,286 A 10/1996 Peckham 606/181
5,569,287 A 10/1996 Tezuka 606/182
5,571,132 A 11/1996 Mawhirt 606/182
5,575,284 A 11/1996 Athan 600/323
5,575,403 A 11/1996 Charlton 221/31
5,575,895 A 11/1996 Ikeda 204/403
5,582,697 A 12/1996 Ikeda 204/403
5,584,846 A 12/1996 Mawhirt 606/181
5,591,139 A 1/1997 Lin 604/264
5,593,852 A 1/1997 Heller 435/14
5,599,501 A 2/1997 Carey 422/64
5,605,837 A 2/1997 Karimi 436/14
D378,612 S 3/1997 Clark D24/169
5,608,006 A 3/1997 Myerson 525/54.1
5,609,749 A 3/1997 Yamauchi 205/777.5
5,611,809 A 3/1997 Marshall 606/181
5,611,810 A 3/1997 Arnold 606/185
5,613,978 A 3/1997 Harding 606/181
5,616,135 A 4/1997 Thorne 604/192
5,617,851 A 4/1997 Lipkovker 600/573
5,618,297 A 4/1997 Hart 606/185
5,620,579 A 4/1997 Genshaw 204/402
5,620,863 A 4/1997 Tomasco 435/14
5,624,458 A 4/1997 Lipscher 606/181
5,624,459 A 4/1997 Kortenbach 606/185
5,624,537 A 4/1997 Turner 204/403
D379,516 S 5/1997 Rutter D24/146
5,628,764 A 5/1997 Schraga 606/182
5,628,765 A 5/1997 Morita 606/182
5,628,890 A 5/1997 Carter 204/403
5,628,961 A 5/1997 Davis 422/63
5,630,828 A 5/1997 Mawhirt 606/187
5,630,986 A 5/1997 Charlton 422/64
5,632,410 A 5/1997 Moulton 221/79
5,640,954 A 6/1997 Pfeiffer 128/635
D381,591 S 7/1997 Rice D10/81
5,643,306 A 7/1997 Schraga 606/182
5,643,308 A 7/1997 Markman 606/187
5,645,555 A 7/1997 Davis 606/182
5,647,851 A 7/1997 Pokras 604/131
5,650,062 A 7/1997 Ikeda 205/778
5,653,863 A 8/1997 Genshaw 205/777.5
5,657,760 A 8/1997 Ying et al. 128/660.03
5,658,444 A 8/1997 Black 204/415
5,660,791 A 8/1997 Brenneman 422/58
D383,550 S 9/1997 Larson D24/225
5,662,127 A 9/1997 De Vaughn 128/765
5,662,672 A 9/1997 Pambianchi 606/181
5,666,966 A 9/1997 Horie 128/760
5,676,143 A 10/1997 Simonsen 128/633
5,678,306 A 10/1997 Bozeman 29/888.025
5,680,858 A 10/1997 Hansen 128/635
5,680,872 A 10/1997 Sesekura 128/760
5,682,233 A 10/1997 Brinda 356/246
5,682,884 A 11/1997 Hill 128/637
5,683,562 A 11/1997 Schaffar 204/403
5,691,898 A 11/1997 Rosenberg 700/85
5,692,514 A 12/1997 Bowman 600/504
5,695,947 A 12/1997 Guo 435/11
5,700,695 A 12/1997 Yassinzadeh 436/180
5,705,045 A 1/1998 Park 204/403
5,707,384 A 1/1998 Kim 606/181
5,708,247 A 1/1998 McAleer 204/403
5,709,668 A 1/1998 Wacks 604/232
5,709,699 A 1/1998 Warner 606/181
5,710,011 A 1/1998 Forrow 435/25
5,714,123 A 2/1998 Sohrab 422/99
5,714,390 A 2/1998 Hallowitz 436/526
5,719,034 A 2/1998 Kiser 435/14
5,720,862 A 2/1998 Hamamoto 204/403
5,720,924 A 2/1998 Eikmeier 422/102
D392,391 S 3/1998 Douglas D24/225
D392,740 S 3/1998 Yung D24/169
5,723,284 A 3/1998 Ye 435/4
5,727,548 A 3/1998 Hill 128/637
5,729,905 A 3/1998 Mathiasmeier ..... 33/3 R
5,730,753 A 3/1998 Morita 606/181
5,733,085 A 3/1998 Shida 411/442
5,733,300 A 3/1998 Pambianchi 606/181
D393,716 S 4/1998 Brenneman D24/147
D393,717 S 4/1998 Brenneman D24/147
5,735,868 A 4/1998 Lee 606/189
5,736,103 A 4/1998 Pugh 422/68.1
5,738,244 A 4/1998 Charlton 221/26
5,741,228 A 4/1998 Lambrecht 604/93
5,741,634 A 4/1998 Nozoe 435/4
RE35,803 E 5/1998 Lange 606/182
5,746,217 A 5/1998 Erickson 128/760
5,746,761 A 5/1998 Turchin 606/181
5,746,898 A 5/1998 Preidel 204/403
5,753,429 A 5/1998 Pugh 435/4
5,753,452 A 5/1998 Smith 435/14
5,755,228 A 5/1998 Wilson 600/459
5,755,733 A 5/1998 Morita 606/182
5,758,643 A 6/1998 Wong 600/309
5,759,364 A * 6/1998 Charlton et al. 204/403.14
5,762,770 A 6/1998 Pritchard 204/403
5,770,086 A 6/1998 Indriksons 210/643
5,770,369 A 6/1998 Meade 435/6
5,772,586 A 6/1998 Heinonen 600/300
5,772,677 A 6/1998 Mawhirt 606/181
5,773,270 A 6/1998 D'Orazio 435/177
5,776,157 A 7/1998 Thorne 606/182
5,776,719 A 7/1998 Douglas 435/28
5,779,365 A 7/1998 Takaki 436/161
5,780,304 A 7/1998 Matzinger 436/169
5,782,770 A 7/1998 Mooradian 600/476
5,782,852 A 7/1998 Foggia 606/182
5,788,651 A 8/1998 Weilandt 600/567
5,788,652 A 8/1998 Rahn 600/577
5,789,255 A 8/1998 Yu 536/95
5,794,219 A 8/1998 Brown 705/37
5,795,725 A 8/1998 Buechler 435/7.1
5,795,774 A 8/1998 Matsumoto 435/287.9
5,797,940 A 8/1998 Mawhirt 606/167
5,797,942 A 8/1998 Schraga 606/182
5,798,030 A 8/1998 Raguse 204/403
5,798,031 A 8/1998 Charlton 204/403
5,800,781 A 9/1998 Gavin 422/73
5,801,057 A 9/1998 Smart 436/68

(56) **References Cited**

U.S. PATENT DOCUMENTS

5,807,375	A	9/1998	Gross	604/890.1
5,810,199	A	9/1998	Charlton	221/31
D399,566	S	10/1998	Sohrab	D24/169
5,820,551	A	10/1998	Hill	600/347
5,822,715	A	10/1998	Worthington	702/19
5,823,973	A	10/1998	Racchini	600/573
5,824,491	A	10/1998	Priest	435/28
5,827,181	A	10/1998	Dias	600/322
5,828,943	A	10/1998	Brown	434/258
5,829,589	A	11/1998	Nguyen	206/366
5,830,219	A	11/1998	Bird	606/130
5,832,448	A	11/1998	Brown	705/2
5,840,020	A	11/1998	Heinonen	600/309
5,840,171	A	11/1998	Birch	205/335
5,843,691	A	12/1998	Douglas	435/14
5,843,692	A	12/1998	Phillips	435/14
5,846,216	A	12/1998	Gonzales	604/2
5,846,486	A	12/1998	Pugh	422/56
5,846,490	A	12/1998	Yokota	422/66
5,849,174	A	12/1998	Sanghera	205/775
5,853,373	A	12/1998	Griffith	600/554
5,854,074	A	12/1998	Charlton	436/46
D403,975	S	1/1999	Douglas	D10/81
5,855,377	A	1/1999	Murphy	279/50
5,855,801	A	1/1999	Lin	216/2
5,856,174	A	1/1999	Lipshutz	435/286.5
5,856,195	A	1/1999	Charlton	436/50
5,857,967	A	1/1999	Frid	600/301
5,857,983	A	1/1999	Douglas	600/538
5,858,804	A	1/1999	Zanzucchi	506/9
5,860,922	A	1/1999	Gordon	600/431
5,863,800	A	1/1999	Eikmeier	436/48
5,866,353	A	2/1999	Berneth	435/26
5,868,135	A	2/1999	Kaufman	128/630
5,868,772	A	2/1999	LeVaughn	606/181
5,869,972	A	2/1999	Birch	324/439
5,871,494	A	2/1999	Simons	606/181
5,872,713	A	2/1999	Douglas	702/85
5,873,856	A	2/1999	Hjertman et al.	
5,873,887	A	2/1999	King	606/182
5,876,351	A	3/1999	Rohde	600/523
5,876,957	A	3/1999	Douglas	435/28
5,879,163	A	3/1999	Brown	434/236
5,879,310	A	3/1999	Sopp	600/578
5,879,311	A	3/1999	Duchon	600/583
5,879,373	A	3/1999	Roeper	606/344
5,880,829	A	3/1999	Kauhaniemi	356/246
5,882,494	A	3/1999	van Antwerp	204/403
5,885,211	A	3/1999	Eppstein	600/309
5,886,056	A	3/1999	Hershkowitz	518/703
5,887,133	A	3/1999	Brown	395/200.3
5,890,128	A	3/1999	Diaz	705/2
RE36,191	E	4/1999	Solomon	395/308
5,891,053	A	4/1999	Sesekura	600/583
5,892,569	A	4/1999	Van de Velde	351/221
5,893,848	A	4/1999	Negus	606/41
5,893,870	A	4/1999	Talen	606/201
5,897,493	A	4/1999	Brown	600/300
5,897,569	A	4/1999	Kellogg	606/169
5,899,855	A	5/1999	Brown	600/301
5,899,915	A	5/1999	Saadat	606/170
5,900,130	A	5/1999	Benvegnu	204/453
5,902,731	A	5/1999	Ouyang	435/26
5,906,921	A	5/1999	Ikeda	435/25
D411,619	S	6/1999	Duchon	D24/146
5,908,416	A	6/1999	Costello	606/9
5,911,937	A	6/1999	Hekal	264/255
5,912,134	A	6/1999	Shartle	435/7.24
5,913,310	A	6/1999	Brown	128/897
5,916,156	A	6/1999	Hildenbrand	600/347
5,916,229	A	6/1999	Evans	606/171
5,916,230	A	6/1999	Brenneman	606/172
5,918,603	A	7/1999	Brown	128/897
5,919,711	A	7/1999	Boyd	436/178
5,921,963	A	7/1999	Erez	604/192
5,922,188	A	7/1999	Ikeda	204/777.5
5,922,530	A	7/1999	Yu	435/4
5,922,591	A	7/1999	Anderson	435/287.2
RE36,268	E	8/1999	Szuminsky	205/777.5
5,931,794	A	8/1999	Pitesky	600/556
5,933,136	A	8/1999	Brown	345/327
5,935,075	A	8/1999	Casscells	600/474
5,938,635	A	8/1999	Kuhle	604/506
5,938,679	A	8/1999	Freeman	606/181
5,940,153	A	8/1999	Castaneda	349/58
5,942,102	A	8/1999	Hodges	205/775
5,942,189	A	8/1999	Wolfbeis	422/82.08
5,947,957	A	9/1999	Morris	606/13
5,951,300	A	9/1999	Brown	434/236
5,951,492	A	9/1999	Douglas	600/583
5,951,493	A	9/1999	Douglas	600/583
5,951,582	A	9/1999	Thorne	606/182
5,951,836	A	9/1999	McAleer	204/403
5,954,738	A	9/1999	LeVaughn	606/181
5,956,501	A	9/1999	Brown	395/500.32
5,957,846	A	9/1999	Chiang	600/447
5,958,199	A	9/1999	Miyamoto	204/403
5,959,098	A	9/1999	Goldberg	536/25.3
5,960,403	A	9/1999	Brown	705/2
5,961,451	A	10/1999	Reber	600/322
5,964,718	A	10/1999	Duchon	600/583
5,965,380	A	10/1999	Heller	435/14
5,968,063	A	10/1999	Chu	606/185
5,968,760	A	10/1999	Phillips	435/14
5,968,836	A	10/1999	Matzinger	436/169
5,971,941	A	10/1999	Simons	606/573
5,972,199	A	10/1999	Heller	205/777.5
5,972,294	A	10/1999	Smith	422/58
5,972,715	A	10/1999	Celentano	436/164
5,974,124	A	10/1999	Schlueter	379/106.02
5,976,085	A	11/1999	Kimball	600/309
5,983,193	A	11/1999	Heinonen	705/2
5,985,116	A	11/1999	Ikeda	204/403
5,985,559	A	11/1999	Brown	435/6
5,986,754	A	11/1999	Harding	356/246
5,993,400	A	11/1999	Rincoe	600/595
5,993,434	A	11/1999	Dev	604/501
D417,504	S	12/1999	Love	D24/169
5,997,476	A	12/1999	Brown	600/300
5,997,509	A	12/1999	Rosengart et al.	
5,997,561	A	12/1999	Boecker	606/182
5,997,817	A	12/1999	Crismore	422/58
5,997,818	A	12/1999	Hacker	422/681
6,001,067	A	12/1999	Shults	600/584
6,007,497	A	12/1999	Huitema	600/567
D418,602	S	1/2000	Prokop	D24/169
6,014,577	A	1/2000	Henning	600/345
6,015,392	A	1/2000	Douglas	600/583
6,018,289	A	1/2000	Sekura	340/309.4
6,020,110	A	2/2000	Williams	430/315
6,022,324	A	2/2000	Skinner	600/566
6,022,366	A	2/2000	Schraga	606/181
6,022,748	A	2/2000	Charych	436/527
6,023,629	A	2/2000	Tamada	600/347
6,023,686	A	2/2000	Brown	705/37
6,027,459	A	2/2000	Shain	600/573
6,030,399	A	2/2000	Ignotz	606/167
6,030,827	A	2/2000	Davis	435/287
6,030,967	A	2/2000	Marui	514/215
6,032,059	A	2/2000	Henning	600/345
6,032,119	A	2/2000	Brown	705/2
6,033,421	A	3/2000	Theiss	606/186
6,033,866	A	3/2000	Guo	435/14
6,036,924	A	3/2000	Simons	422/100
6,037,178	A	3/2000	Leiner	436/50
6,041,253	A	3/2000	Kost	604/20
6,045,567	A	4/2000	Taylor	606/181
6,046,055	A	4/2000	Wolfbeis	436/172
6,048,352	A	4/2000	Douglas	606/181
D424,696	S	5/2000	Ray	D24/169
6,056,701	A	5/2000	Duchon	600/583
6,059,815	A	5/2000	Lee	606/209
6,060,327	A	5/2000	Keen	436/518
6,061,128	A	5/2000	Zweig	356/243.4

(56) **References Cited**

U.S. PATENT DOCUMENTS

6,063,039	A	5/2000	Cunningham	600/573
6,066,103	A	5/2000	Duchon	600/583
6,066,243	A	5/2000	Anderson	422/82.01
6,066,296	A	5/2000	Brady	422/63
6,067,463	A	5/2000	Jeng	600/336
6,068,615	A	5/2000	Brown	604/207
D426,638	S	6/2000	Ray	D24/169
6,070,761	A	6/2000	Bloom	222/81
6,071,249	A	6/2000	Cunningham	600/578
6,071,250	A	6/2000	Douglas	600/583
6,071,251	A	6/2000	Cunningham	600/584
6,071,294	A	6/2000	Simons	606/181
6,071,391	A	6/2000	Gotoh	204/403
6,074,360	A	6/2000	Haar	604/57
6,077,408	A	6/2000	Miyamoto	204/403
6,080,106	A	6/2000	Lloyd	600/300
6,080,172	A	6/2000	Fujiwara	606/166
D428,150	S	7/2000	Ruf	D24/146
6,083,196	A	7/2000	Trautman	604/46
6,083,710	A	7/2000	Heller	435/14
6,084,660	A	7/2000	Shartle	356/39
6,085,576	A	7/2000	Sunshine	73/29.01
6,086,544	A	7/2000	Hibner	600/568
6,086,545	A	7/2000	Roe	600/570
6,086,562	A	7/2000	Jacobsen	604/156
6,090,078	A	7/2000	Erskine	604/198
6,091,975	A	7/2000	Daddona	600/345
6,093,146	A	7/2000	Filangeri	600/300
6,093,156	A	7/2000	Cunningham	600/573
D428,993	S	8/2000	Lubs	D24/165
6,099,484	A	8/2000	Douglas	600/583
6,099,802	A	8/2000	Pugh	422/58
6,100,107	A	8/2000	Lei	438/50
6,101,478	A	8/2000	Brown	705/2
6,102,933	A	8/2000	Lee	606/209
6,103,033	A	8/2000	Say	156/73.1
6,103,509	A	8/2000	Sode	435/190
6,104,940	A	8/2000	Watanabe	600/345
6,106,751	A	8/2000	Talbot	264/81
6,107,083	A	8/2000	Collins	435/288
6,113,578	A	9/2000	Brown	604/207
6,117,115	A	9/2000	Lee	606/189
6,117,630	A	9/2000	Reber	435/4
6,118,126	A	9/2000	Zanzucchi	250/458.1
6,119,033	A	9/2000	Spigelman	600/426
6,120,462	A	9/2000	Hibner	600/566
6,120,676	A	9/2000	Heller	205/777.5
6,121,009	A	9/2000	Heller	435/14
6,122,536	A	9/2000	Sun	600/341
6,126,804	A	10/2000	Andresen	204/601
6,126,899	A	10/2000	Woudenberg	422/50
6,129,823	A	10/2000	Hughes	204/403.01
6,132,449	A	10/2000	Lum	606/181
6,133,837	A	10/2000	Riley	340/573.1
6,134,461	A	10/2000	Say	600/345
6,136,013	A	10/2000	Marshall	606/167
6,139,562	A	10/2000	Mauze	606/171
6,143,164	A	11/2000	Heller	600/583
6,144,837	A	11/2000	Quy	434/307 R
6,144,976	A	11/2000	Silva et al.	708/100
6,149,203	A	11/2000	Hanlon	283/72
6,151,586	A	11/2000	Brown	705/14
6,152,875	A	11/2000	Hakamata	600/319
6,152,942	A	11/2000	Brenneman	606/181
6,153,069	A	11/2000	Pottgen	204/403
RE36,991	E	12/2000	Yamamoto	204/403
6,155,267	A	12/2000	Nelson	128/899
6,155,992	A	12/2000	Henning	600/583
6,156,051	A	12/2000	Schraga	600/181
6,157,442	A	12/2000	Raskas	356/39
6,159,147	A	12/2000	Lichter	600/300
6,159,424	A	12/2000	Kauhaniemi	422/63
6,161,095	A	12/2000	Brown	705/2
6,162,397	A	12/2000	Jurik	422/56
6,162,611	A	12/2000	Heller	435/14
6,167,362	A	12/2000	Brown	703/11
6,167,386	A	12/2000	Brown	705/37
6,168,563	B1	1/2001	Brown	600/301
6,168,957	B1	1/2001	Matzinger	436/518
6,171,325	B1	1/2001	Mauze	606/171
6,172,743	B1	1/2001	Kley et al.	356/39
6,175,752	B1	1/2001	Say	600/345
6,176,847	B1	1/2001	Humphreys	604/246
6,176,865	B1	1/2001	Mauze	606/171
6,177,000	B1	1/2001	Peterson	205/777.5
6,177,931	B1	1/2001	Alexander	725/52
6,183,489	B1	2/2001	Douglas	606/181
6,186,145	B1	2/2001	Brown	128/897
6,190,612	B1	2/2001	Berger	422/82.07
6,191,852	B1	2/2001	Paffhausen	356/244
6,192,891	B1	2/2001	Gravel	128/920
6,193,673	B1	2/2001	Viola	600/568
6,193,873	B1	2/2001	Ohara	205/792
6,194,900	B1	2/2001	Freeman	324/321
6,197,040	B1	3/2001	LeVaughn	606/182
6,197,257	B1	3/2001	Raskas	422/82.05
6,200,289	B1	3/2001	Hochman et al.	
6,200,773	B1	3/2001	Ouyang	435/26
6,203,504	B1	3/2001	Latterell	600/576
6,206,841	B1	3/2001	Cunningham	600/584
6,210,133	B1	4/2001	Aboul-Hosn	417/423.1
6,210,272	B1	4/2001	Brown	463/1
6,210,369	B1	4/2001	Wilmot	604/157
6,210,420	B1	4/2001	Mauze	606/182
6,210,421	B1	4/2001	Bocker	606/182
6,212,417	B1	4/2001	Ikeda	204/403.14
6,214,626	B1	4/2001	Meller	436/165
6,214,804	B1	4/2001	Felgner	514/44
6,218,571	B1	4/2001	Zheng	562/61
6,219,574	B1	4/2001	Cormier	604/20
6,221,023	B1	4/2001	Matsuba	600/486
6,221,238	B1	4/2001	Grundig	205/777.5
6,224,617	B1	5/2001	Saadat et al.	606/170
6,225,078	B1	5/2001	Ikeda	435/25
6,228,100	B1	5/2001	Schraga	606/183
6,230,051	B1	5/2001	Cormier	604/20
6,230,501	B1	5/2001	Bailey	62/51.1
6,231,531	B1	5/2001	Lum	601/46
6,233,471	B1	5/2001	Berner	600/345
6,233,539	B1	5/2001	Brown	703/11
6,234,772	B1	5/2001	Wampler	417/423.12
6,240,393	B1	5/2001	Brown	705/1
D444,235	S	6/2001	Roberts	D24/169
6,241,862	B1	6/2001	McAleer	204/403
6,242,207	B1	6/2001	Douglas	435/25
6,245,060	B1	6/2001	Loomis	606/9
6,245,215	B1	6/2001	Douglas	205/775
6,246,992	B1	6/2001	Brown	705/2
6,248,065	B1	6/2001	Brown	600/300
6,251,083	B1	6/2001	Yum	600/584
6,251,121	B1	6/2001	Saadat	606/180
6,251,260	B1	6/2001	Heller	205/777.5
6,251,344	B1	6/2001	Goldstein	422/123
D444,557	S	7/2001	Levaughn	D24/146
6,254,831	B1	7/2001	Barnard	422/82.08
6,256,533	B1	7/2001	Vuzhakov	604/21
6,258,111	B1	7/2001	Ross	606/171
6,258,229	B1	7/2001	Winarta	204/403
6,258,254	B1	7/2001	Miyamoto	205/777.5
6,261,241	B1	7/2001	Burbank	600/564
6,261,245	B1	7/2001	Kawai	600/576
6,261,519	B1	7/2001	Harding	422/58
6,264,635	B1	7/2001	Wampler	604/151
6,268,161	B1	7/2001	Han	435/14
6,268,162	B1	7/2001	Phillips	435/14
6,269,314	B1	7/2001	Iitawaki	702/23
6,270,455	B1	8/2001	Brown	600/300
6,270,637	B1	8/2001	Crismore	204/403
6,272,359	B1	8/2001	Kivela	455/567
6,272,364	B1	8/2001	Kurnik	600/345
6,275,717	B1	8/2001	Gross	600/345
6,280,254	B1	8/2001	Wu	439/630
6,281,006	B1	8/2001	Heller	435/287.9
6,283,926	B1	9/2001	Cunningham	600/573

(56) **References Cited**

U.S. PATENT DOCUMENTS

6,283,982 B1 9/2001 Levaughn 606/172
6,284,478 B1 9/2001 Heller 435/14
6,285,448 B1 9/2001 Kuenstner 356/39
6,285,454 B1 9/2001 Douglas 356/446
6,289,254 B1 9/2001 Shimizu 700/96
6,290,683 B1 9/2001 Erez 604/273
6,294,897 B1 9/2001 Champlin 320/153
6,295,506 B1 9/2001 Heinonen 702/104
6,299,578 B1 10/2001 Kurnik 600/309
6,299,596 B1 10/2001 Ding 604/96.01
6,299,757 B1 10/2001 Feldman 205/775
6,302,844 B1 10/2001 Walker 600/300
6,302,855 B1 10/2001 Lav 600/584
6,305,804 B1 10/2001 Rice 351/221
6,306,104 B1 10/2001 Cunningham 600/573
6,306,152 B1 10/2001 Verdonk 606/182
6,306,347 B1 10/2001 Mason 422/58
6,309,351 B1 10/2001 Kurnik 600/309
6,309,370 B1 10/2001 Haim et al.
6,309,535 B1 10/2001 Williams 205/777.5
6,312,612 B1 11/2001 Sherman 216/2
6,315,738 B1 11/2001 Nishikawa 600/583
6,318,970 B1 11/2001 Backhouse 417/92
6,319,210 B1 11/2001 Douglas 600/583
6,322,574 B1 11/2001 Lloyd 606/181
6,322,808 B1 11/2001 Trautman 424/448
6,322,963 B1 11/2001 Bauer 435/4
6,329,161 B1 12/2001 Heller 435/14
6,330,426 B2 12/2001 Brown ..... 434/307 R
6,331,163 B1 12/2001 Kaplan 600/486
6,332,871 B1 12/2001 Douglas 600/583
6,334,363 B1 1/2002 Testud 73/862
6,334,778 B1 1/2002 Brown 434/258
6,334,856 B1 1/2002 Allen et al. 604/191
6,335,203 B1 1/2002 Patel 436/169
6,336,900 B1 1/2002 Alleckson 600/485
6,338,790 B1 1/2002 Feldman 205/777.5
6,346,120 B1 2/2002 Yamazaki 623/3.13
6,349,229 B1 2/2002 Watanabe 600/345
6,350,273 B1 2/2002 Minagawa 606/186
6,350,451 B1 2/2002 Horn 424/184.1
6,352,514 B1 3/2002 Douglas 600/583
6,352,523 B1 3/2002 Brown 604/207
6,353,753 B1 3/2002 Flock 600/473
6,358,196 B1 3/2002 Rayman
6,364,889 B1 4/2002 Kheiri 606/181
6,364,890 B1 4/2002 Lum 606/181
6,368,273 B1 4/2002 Brown 600/300
6,375,469 B1 4/2002 Brown 434/236
6,375,626 B1 4/2002 Allen et al. 600/584
6,375,627 B1 4/2002 Mauze 600/584
6,379,301 B1 4/2002 Worthington 600/309
6,379,317 B1 4/2002 Kintzig 600/573
6,379,324 B1 4/2002 Gartstein 604/22
6,379,969 B1 4/2002 Mauze 436/68
6,381,577 B1 4/2002 Brown 705/2
D456,910 S 5/2002 Clark D24/225
6,387,709 B1 5/2002 Mason 436/164
6,391,005 B1 5/2002 Lum 604/117
6,395,227 B1 5/2002 Kiser 422/56
6,398,522 B2 6/2002 Skill 417/410.3
6,398,562 B1 6/2002 Butler 439/91
6,399,394 B1 6/2002 Dahm 436/180
6,402,701 B1 6/2002 Kaplan 600/567
6,402,704 B1 6/2002 Mcmorrow 600/576
6,409,740 B1 6/2002 Kuhr 606/182
6,413,410 B1 7/2002 Hodges 205/775
6,413,411 B1 7/2002 Pottgen 205/777.5
6,415,821 B2 7/2002 Kamholz 137/827
6,419,661 B1 7/2002 Kuhr et al.
6,420,128 B1 7/2002 Ouyang 435/14
6,421,633 B1 7/2002 Heinonen 703/11
6,423,014 B1 7/2002 Churchill 600/587
6,428,664 B1 8/2002 Bhullar 204/403.03
6,436,055 B1 8/2002 Roe 600/584
6,436,256 B1 8/2002 Williams 204/403.06
6,436,721 B1 8/2002 Kuo 436/514
6,440,645 B1 8/2002 Yon-Hin 430/322
6,444,115 B1 9/2002 Hodges 205/792
6,447,119 B1 9/2002 Stewart et al. 351/212
6,447,265 B1 9/2002 Antaki 417/354
6,451,040 B1 9/2002 Purcell 606/181
6,453,810 B1 9/2002 Rossmeisl 101/123
6,458,258 B2 10/2002 Taniike 204/403
6,461,496 B1 10/2002 Feldman 205/777.5
6,462,162 B2 10/2002 van Antwerp 528/77
6,464,649 B1 10/2002 Duchon 600/583
6,471,903 B2 10/2002 Sherman 264/328.1
6,472,220 B1 10/2002 Simons 436/63
6,475,360 B1 11/2002 Hodges 204/403.14
6,475,372 B1 11/2002 Ohara 205/777.5
6,475,436 B1 11/2002 Schabbach 422/64
6,477,394 B2 11/2002 Rice 600/318
6,477,424 B1 11/2002 Thompson 607/60
6,484,046 B1 11/2002 Say 600/345
6,485,439 B1 11/2002 Roe 600/578
6,485,461 B1 11/2002 Mason 604/132
6,485,923 B1 11/2002 Yani 435/14
6,488,827 B1 12/2002 Shartle 204/403
6,488,872 B1 12/2002 Beebe et al. 264/31
6,488,891 B2 12/2002 Mason 422/58
6,489,052 B1 12/2002 Acker 600/584
6,489,133 B2 12/2002 Phillips 435/14
6,491,709 B2 12/2002 Sharma 606/181
6,491,870 B2 12/2002 Patel 422/58
6,494,830 B1 12/2002 Wessel 600/300
6,497,845 B1 12/2002 Sacherer 422/104
6,501,404 B2 12/2002 Walker 341/143
6,501,976 B1 12/2002 Sohrab 600/347
6,503,210 B1 1/2003 Hirao 600/576
6,503,231 B1 1/2003 Prausnitz 604/272
6,503,290 B1 1/2003 Jarosinski 75/252
6,503,381 B1 1/2003 Gotoh 204/403.14
6,506,165 B1 1/2003 Sweeney 600/562
6,506,168 B1 1/2003 Fathallah 600/578
6,506,575 B1 1/2003 Knappe 435/25
6,508,785 B1 1/2003 Eppstein 604/113
6,512,986 B1 1/2003 Harmon 702/84
6,514,270 B1 2/2003 Schraga 606/182
6,514,460 B1 2/2003 Fendrock 422/55
6,519,241 B1 2/2003 Theimer 370/338
6,520,326 B2 2/2003 McIvor 206/305
6,521,110 B1 2/2003 Hodges 204/403.14
6,521,182 B1 2/2003 Shartle 422/58
6,527,521 B2 3/2003 Noda 417/355
6,527,716 B1 3/2003 Eppstein 600/309
6,527,778 B2 3/2003 Athanasiou 606/80
6,529,377 B1 3/2003 Nelson 361/699
6,530,892 B1 3/2003 Kelly 600/583
6,530,937 B1 3/2003 Schraga 606/182
6,531,322 B1 3/2003 Jurik 436/95
6,533,949 B1 3/2003 Yeshurun 216/11
6,537,207 B1 3/2003 Rice 600/121
6,537,242 B1 3/2003 Palmer 604/22
6,537,264 B1 3/2003 Cormier et al. 604/506
6,537,292 B1 3/2003 Lee 606/182
6,540,672 B1 4/2003 Simonsen 600/300
6,540,675 B2 4/2003 Aceti 600/309
6,540,762 B1 4/2003 Bertling 606/182
6,540,891 B1 4/2003 Stewart 204/403.14
6,541,266 B2 4/2003 Modzelewski 436/95
6,547,954 B2 4/2003 Ikeda 205/777.5
6,549,796 B2 4/2003 Sohrab 600/345
6,551,494 B1 4/2003 Heller 205/777.5
6,553,244 B2 4/2003 Lesho 600/347
6,554,381 B2 4/2003 Locher 347/7
6,555,061 B1 4/2003 Leong 422/58
D475,136 S 5/2003 Taniguchi D24/165
6,558,320 B1 5/2003 Causey 600/300
6,558,361 B1 5/2003 Yeshurun 604/272
6,558,402 B1 5/2003 Chelak 606/182
6,558,528 B1 5/2003 Matzinger 205/777.5
6,560,471 B1 5/2003 Heller 600/347
6,561,978 B1 5/2003 Conn 600/309

(56) **References Cited**

U.S. PATENT DOCUMENTS

6,561,989 B2 5/2003 Whitson 600/573
6,562,210 B1 5/2003 Bhullar 204/403.3
6,565,509 B1 5/2003 Say 600/365
6,565,808 B2 5/2003 Hudak 422/58
6,569,157 B1 5/2003 Shain 606/12
6,571,651 B1 6/2003 Hodges 73/864.72
6,572,566 B2 6/2003 Effenhauser 600/584
6,572,822 B2 6/2003 Jurik 422/56
6,574,490 B2 6/2003 Abbink 600/316
6,575,905 B2 6/2003 Knobbe 600/365
6,576,101 B1 6/2003 Heller 204/403.14
6,576,117 B1 6/2003 Iketaki 205/777.5
6,576,416 B2 6/2003 Haviland 435/4
6,579,690 B1 6/2003 Bonnecaze 435/14
6,582,573 B2 6/2003 Douglas 204/403.1
6,584,338 B1 6/2003 Van Muiswinkel 600/419
D477,670 S 7/2003 Jurik D24/225
6,586,199 B2 7/2003 Ouyang 435/26
6,587,705 B1 7/2003 Berner 600/347
6,589,260 B1 7/2003 Schmelzeisen-Redeker 606/181
6,589,261 B1 7/2003 Abulhaj 606/181
6,591,124 B2 7/2003 Sherman 600/345
6,591,125 B1 7/2003 Buse 600/347
6,592,744 B1 7/2003 Hodges 205/775
6,592,745 B1 7/2003 Feldman 205/777.5
6,595,919 B2 7/2003 Berner 600/365
6,599,281 B1 7/2003 Struys et al.
6,599,407 B2 7/2003 Taniike 204/403.1
6,599,693 B1 7/2003 Webb 435/4
6,599,769 B2 7/2003 Kondo 438/28
6,601,534 B2 8/2003 Hebrank 119/6.8
6,602,205 B1 8/2003 Erickson 600/573
6,602,268 B2 8/2003 Kuhr 606/181
6,602,678 B2 8/2003 Kwon 435/14
6,604,050 B2 8/2003 Trippel 702/19
6,607,362 B2 8/2003 Lum 417/53
6,607,494 B1 8/2003 Fowler 600/570
6,607,658 B1 8/2003 Heller 205/777.5
6,612,111 B1 9/2003 Hodges 60/593
6,616,616 B2 9/2003 Fritz 600/583
6,616,819 B1 9/2003 Liamos 204/403.02
6,618,934 B1 9/2003 Feldman 29/830
6,620,112 B2 9/2003 Klitmose 600/583
6,620,310 B1 9/2003 Ohara 205/792
6,623,501 B2 9/2003 Heller 606/181
6,626,851 B2 9/2003 Hirao 600/576
6,632,349 B1 10/2003 Hodges 205/792
6,635,222 B2 10/2003 Kent 422/22
6,638,415 B1 10/2003 Hodges 205/775
6,638,772 B1 10/2003 Douglas 436/518
6,641,533 B2 11/2003 Causey 600/300
6,645,142 B2 11/2003 Braig 600/300
6,645,219 B2 11/2003 Roe 606/182
6,645,368 B1 11/2003 Beaty 205/792
6,649,416 B1 11/2003 Kauer 436/164
6,650,915 B2 11/2003 Routt 600/319
6,652,720 B1 11/2003 Mansouri 204/403.11
6,652,734 B1 11/2003 Hodges 205/777.5
6,652,814 B1 11/2003 House 422/104
D484,600 S 12/2003 Kaar D24/169
6,656,428 B1 12/2003 Clark et al. 422/404
6,656,697 B1 12/2003 Ouyang 435/7.9
6,656,702 B1 12/2003 Yugawa 435/26
6,659,966 B2 12/2003 Essenpreis 600/583
6,660,018 B2 12/2003 Lum 606/181
6,662,439 B1 12/2003 Bhullar 29/825
6,669,669 B2 12/2003 Flaherty 604/132
6,671,527 B2 12/2003 Peterson 600/316
D484,980 S 1/2004 Hartwein D24/165
6,673,617 B2 1/2004 Patel 436/8
6,676,995 B2 1/2004 Dick 427/286
6,679,841 B2 1/2004 Bojan 600/309
6,679,852 B1 1/2004 Forster 600/583
6,682,933 B2 1/2004 Patel 436/8
6,689,411 B2 2/2004 Dick 427/2.13
6,706,000 B2 3/2004 Perez 600/583
6,706,049 B2 3/2004 Moerman 606/181
6,706,159 B2 3/2004 Moerman 204/403.03
6,706,232 B2 3/2004 Hasegawa 264/403.09
6,709,692 B2 3/2004 Sudor 427/2.1
6,713,660 B1 3/2004 Roe 604/361
6,716,577 B1 4/2004 Yu 435/6
6,719,887 B2 4/2004 Hasegawa 204/403.09
6,719,923 B2 4/2004 Stiene 252/511
6,721,586 B2 4/2004 Kiser 600/345
6,723,046 B2 4/2004 Lichtenstein 600/300
6,723,111 B2 4/2004 Abulhaj 606/181
6,723,371 B2 4/2004 Chih-hui 472/2.13
6,723,500 B2 4/2004 Yu 435/4
6,726,818 B2 4/2004 Cui 204/403.01
6,729,546 B2 5/2004 Roustaei 235/462.45
6,730,494 B1 5/2004 Toranto 435/28
6,731,966 B1 5/2004 Spigelman 600/407
6,733,493 B2 5/2004 Gruzdev 606/9
6,736,777 B2 5/2004 Kim 600/365
6,738,654 B2 5/2004 Sohrab 600/345
6,740,215 B1 5/2004 Nakaminami 204/403.14
6,743,211 B1 6/2004 Prausnitz 604/239
6,743,597 B1 6/2004 Guo 435/14
6,743,635 B2 6/2004 Neel 436/95
6,745,750 B2 6/2004 Egler 435/14
6,746,872 B2 6/2004 Zheng 436/16
6,749,618 B2 6/2004 Levaughn 606/182
6,749,740 B2 6/2004 Liamos 205/792
6,749,792 B2 6/2004 Olson 264/328.1
6,749,887 B1 6/2004 Dick 427/2.13
6,751,491 B2 6/2004 Lew 600/345
6,752,817 B2 6/2004 Flora 606/181
6,753,187 B2 6/2004 Cizdziel 436/169
6,759,190 B2 7/2004 Lin 435/4
6,764,496 B2 7/2004 Schraga 606/182
6,764,581 B1 7/2004 Forrow 204/403
6,767,441 B1 7/2004 Cai 204/403.03
6,773,671 B1 8/2004 Lewis 422/58
6,776,888 B2 8/2004 Yamamoto 204/403.06
6,780,645 B2 8/2004 Hayter 436/8
6,780,647 B2 8/2004 Fujiwara 436/169
6,783,502 B2 8/2004 Orloff 600/583
6,783,537 B1 8/2004 Kuhr 606/182
6,784,274 B2 8/2004 van Antwerp 528/77
6,786,874 B2 9/2004 Grace 600/573
6,787,013 B2 9/2004 Chang 204/412
6,787,109 B2 9/2004 Haar 422/82.05
6,790,327 B2 9/2004 Ikeda 204/403.1
6,790,599 B1 9/2004 Madou 430/320
6,792,791 B2 9/2004 Sato 73/1.02
6,793,632 B2 9/2004 Sohrab 600/573
6,793,633 B2 9/2004 Douglas 600/583
6,793,802 B2 9/2004 Lee 205/777.5
6,797,150 B2 9/2004 Kermani 205/777.5
6,800,488 B2 10/2004 Khan 436/166
6,801,041 B2 10/2004 Karinka 324/444
6,801,804 B2 10/2004 Miller 604/20
6,802,199 B2 10/2004 Hilgers 72/370.1
6,802,811 B1 10/2004 Slepian 600/309
6,802,957 B2 10/2004 Jung 205/777.5
6,805,780 B1 10/2004 Ryu 204/403.01
6,808,499 B1 10/2004 Churchill 600/587
6,808,908 B2 10/2004 Yao 435/181
6,808,937 B2 10/2004 Ligler 436/518
6,809,807 B1 10/2004 Erickson 356/213
6,811,406 B2 11/2004 Grube 439/66
6,811,557 B2 11/2004 Schraga 606/182
6,811,659 B2 11/2004 Vachon 204/224
6,811,753 B2 11/2004 Hirao 422/101
6,811,792 B2 11/2004 Roser 424/423
6,812,031 B1 11/2004 Carlsson 436/52
6,814,843 B1 11/2004 Bhullar 204/403.01
6,814,844 B2 11/2004 Bhullar 204/403.1
6,814,845 B2 11/2004 Wilson 204/486
6,815,186 B2 11/2004 Clark 435/183
6,816,742 B2 11/2004 Kim 600/345
6,818,180 B2 11/2004 Douglas 422/58
6,821,483 B2 11/2004 Phillips 422/58

(56) **References Cited**

U.S. PATENT DOCUMENTS

6,823,750	B2	11/2004	Hodges	73/864.72
6,825,047	B1	11/2004	Woudenberg	436/518
6,827,250	B2	12/2004	Uhland	228/110.1
6,827,829	B2	12/2004	Kawanaka	204/403.02
6,829,507	B1	12/2004	Lidman	607/19
6,830,551	B1	12/2004	Uchigaki	600/584
6,830,668	B2	12/2004	Musho	204/400
6,830,669	B2	12/2004	Miyazaki	204/409
6,830,934	B1	12/2004	Hardling	436/166
6,833,540	B2	12/2004	MacKenzie	250/214
6,835,184	B1	12/2004	Sage et al.	604/46
6,835,553	B2	12/2004	Han	435/14
6,835,570	B2	12/2004	Patel	436/8
6,837,858	B2	1/2005	Cunningham	600/573
6,837,976	B2	1/2005	Cai	204/403.14
6,837,988	B2	1/2005	Leong	205/792
6,840,912	B2	1/2005	Kloepfer	600/583
6,841,052	B2	1/2005	Musho	204/401
6,843,254	B2	1/2005	Tapper	128/898
6,843,902	B1	1/2005	Penner	205/76
6,844,149	B2	1/2005	Goldman	435/4
6,847,451	B2	1/2005	Pugh	356/436
6,849,052	B2	2/2005	Uchigaki	600/584
6,849,168	B2	2/2005	Crumly	204/416
6,849,216	B2	2/2005	Rappin	264/134
6,849,456	B2	2/2005	Patel	436/8
6,850,790	B2	2/2005	Berner	600/347
6,852,119	B1	2/2005	Abulhaj	606/182
6,852,212	B2	2/2005	Maxwell	205/775
6,852,500	B1	2/2005	Hoss	435/14
6,853,854	B1	2/2005	Proniewicz	600/319
6,855,243	B2	2/2005	Khan	205/777.5
6,856,125	B2	2/2005	Kermani	324/71.1
6,856,928	B2	2/2005	Harmon	702/84
6,858,015	B2	2/2005	List	600/583
6,858,401	B2	2/2005	Phillips	435/14
6,859,738	B2	2/2005	Bush	702/25
6,862,466	B2	3/2005	Ackerman	600/347
6,862,534	B2	3/2005	Sterling	702/23
6,863,800	B2	3/2005	Karinka	205/777.5
6,863,801	B2	3/2005	Hodges	205/792
6,865,408	B1	3/2005	Abbink	600/310
6,866,641	B2	3/2005	Marshall	600/583
6,866,675	B2	3/2005	Perez	606/181
6,866,758	B2	3/2005	Bhullar	204/403.2
6,866,822	B1	3/2005	House	422/82.05
6,869,418	B2	3/2005	Marano-Ford	604/192
6,872,200	B2	3/2005	Mann	604/890.1
6,872,297	B2	3/2005	Mansouri	205/775
6,872,298	B2	3/2005	Kermani	205/777.5
6,872,299	B2	3/2005	Kermani	205/777.5
6,872,358	B2	3/2005	Hagen	422/61
6,875,208	B2	4/2005	Santini	604/890.1
6,875,223	B2	4/2005	Argauer	606/181
6,875,327	B1	4/2005	Miyazaki	204/403.14
6,875,613	B2	4/2005	Shartle	436/63
6,878,120	B2	4/2005	Roe	600/583
6,878,251	B2	4/2005	Hodges	204/403.14
6,878,255	B1	4/2005	Wang	204/452
6,878,262	B2	4/2005	Taniike	205/777.5
6,880,968	B1	4/2005	Haar	374/131
6,881,203	B2	4/2005	Delmore	604/272
6,881,322	B2	4/2005	Tokunaga	205/775
6,881,378	B1	4/2005	Zimmer	422/58
6,881,541	B2	4/2005	Petersen	435/6
6,881,550	B2	4/2005	Phillips	435/14
6,881,551	B2	4/2005	Heller	435/14
6,881,578	B2	4/2005	Otake	436/44
6,882,940	B2	4/2005	Potts	702/23
6,884,592	B2	4/2005	Matzinger	435/7.1
6,885,196	B2	4/2005	Taniike	324/444
6,885,883	B2	4/2005	Parris	600/347
6,887,202	B2	5/2005	Currie	600/309
6,887,239	B2	5/2005	Elstrom	606/41
6,887,253	B2	5/2005	Schraga	606/181
6,887,426	B2	5/2005	Phillips	422/56
6,887,709	B2	5/2005	Leong	436/8
6,889,069	B2	5/2005	Routt	600/319
6,890,319	B1	5/2005	Crocker	604/131
6,890,421	B2	5/2005	Ohara	205/777.5
6,890,484	B2	5/2005	Bautista	422/58
6,891,936	B2	5/2005	Kai	379/106.02
6,892,085	B2	5/2005	McIvor	600/347
6,893,396	B2	5/2005	Schulze	600/300
6,893,545	B2	5/2005	Gotoh	204/403.5
6,893,552	B1	5/2005	Wang	205/777.5
6,895,263	B2	5/2005	Shin	600/316
6,895,264	B2	5/2005	Rice	600/319
6,895,265	B2	5/2005	Silver	600/345
6,896,793	B2	5/2005	Erdosy	205/775
6,897,788	B2	5/2005	Khair	340/870.16
6,902,905	B2	6/2005	Burson	435/14
6,904,301	B2	6/2005	Raskas	600/310
6,905,733	B2	6/2005	Russell	427/393.5
6,908,008	B2	6/2005	Pugh	221/135
6,908,535	B2	6/2005	Rankin	204/406
6,908,591	B2	6/2005	MacPhee	422/22
6,908,593	B1	6/2005	Shartle	422/58
6,911,130	B2	6/2005	Brenneman	204/400
6,911,131	B2	6/2005	Miyazaki	204/403.14
6,911,621	B2	6/2005	Bhullar	219/121.69
6,911,937	B1	6/2005	Sparrow	239/188
6,913,210	B2	7/2005	Baasch	239/407
6,913,668	B2	7/2005	Matzinger	156/256
6,916,410	B2	7/2005	Katsuki	204/403
6,918,901	B1	7/2005	Theeuwes	604/500
6,918,918	B1	7/2005	Schraga	606/182
6,922,576	B2	7/2005	Raskas	600/316
6,922,578	B2	7/2005	Eppstein	600/347
6,923,764	B2	8/2005	Aceti	600/309
6,923,894	B2	8/2005	Huang	204/403.06
6,923,936	B2	8/2005	Swanson	422/22
6,924,093	B2	8/2005	Haviland	435/4
6,925,317	B1	8/2005	Samuels	600/344
6,925,393	B1	8/2005	Kalatz	702/27
6,929,631	B1	8/2005	Brugger	604/502
6,929,649	B2	8/2005	Pugh	606/182
6,929,650	B2	8/2005	Fukuzawa	606/182
6,931,327	B2	8/2005	Goode	702/22
6,931,328	B2	8/2005	Braig	702/23
RE38,803	E	9/2005	Rodgers, Jr.	
6,939,310	B2	9/2005	Matzinger	600/573
6,939,312	B2	9/2005	Hodges	600/583
6,939,450	B2	9/2005	Karinka	204/409
6,939,685	B2	9/2005	Ouyang	435/26
6,940,591	B2	9/2005	Sopp	356/244
6,942,518	B2	9/2005	Liamos	439/495
6,942,769	B2	9/2005	Cheng	204/400
6,942,770	B2	9/2005	Cai	204/403.04
6,944,486	B2	9/2005	Braig	600/310
6,945,943	B2	9/2005	Pugh	600/584
6,946,067	B2	9/2005	Hodges	205/792
6,946,098	B2	9/2005	Miekka	422/22
6,946,299	B2	9/2005	Neel	436/95
6,949,111	B2	9/2005	Schraga	606/182
6,949,221	B2	9/2005	Kiser	422/56
6,951,631	B1	10/2005	Catt	422/56
6,951,728	B2	10/2005	Qian	435/14
6,952,603	B2	10/2005	Gerber	600/310
6,952,604	B2	10/2005	DeNuzzio	600/345
6,953,693	B2	10/2005	Neel	436/149
6,954,662	B2	10/2005	Freger	600/316
6,958,072	B2	10/2005	Schraga	606/182
6,958,129	B2	10/2005	Galen	422/57
6,958,809	B2	10/2005	Sterling	356/39
6,959,211	B2	10/2005	Rule	600/310
6,959,247	B2	10/2005	Neel	702/19
6,960,287	B2	11/2005	Charlton	205/775
6,960,289	B2	11/2005	Hodges	205/778
6,960,323	B2	11/2005	Guo	422/60
6,964,871	B2	11/2005	Bell	436/95
6,965,791	B1	11/2005	Hitchcock	600/345
6,966,880	B2	11/2005	Boecker	600/583
6,966,977	B2	11/2005	Hasegawa	204/403.07

(56) **References Cited**

U.S. PATENT DOCUMENTS

6,967,105	B2	11/2005	Nomura	436/169
6,968,375	B1	11/2005	Brown	709/224
6,969,359	B2	11/2005	Duchon	600/583
6,969,450	B2	11/2005	Taniike	204/403.01
6,969,451	B2	11/2005	Shin	204/412
6,973,706	B2	12/2005	Say	29/595
6,975,893	B2	12/2005	Say	600/347
6,977,032	B2	12/2005	Hasegawa	204/403.05
6,977,722	B2	12/2005	Wohlstadter et al.	356/246
6,979,544	B2	12/2005	Keen	435/6
6,979,571	B2	12/2005	Modzelewski	436/164
6,982,027	B2	1/2006	Yagi	204/403.06
6,982,431	B2	1/2006	Modlin	250/573
6,983,176	B2	1/2006	Gardner	600/310
6,983,177	B2	1/2006	Rule	600/310
6,984,307	B2	1/2006	Zweig	205/777.5
6,986,777	B2	1/2006	Kim	606/182
6,986,869	B2	1/2006	Tuohy	422/56
6,988,996	B2	1/2006	Roe	600/584
6,989,243	B2	1/2006	Yani	435/14
6,989,891	B2	1/2006	Braig	356/39
6,990,365	B1	1/2006	Parker	600/328
6,990,366	B2	1/2006	Say	600/345
6,990,367	B2	1/2006	Kiser	600/345
6,990,849	B2	1/2006	Bohm	73/53.01
6,991,918	B2	1/2006	Keith	435/31
6,991,940	B2	1/2006	Carroll	436/514
6,994,825	B2	2/2006	Haviland	422/58
6,997,317	B2	2/2006	Catelli	206/438
6,997,343	B2	2/2006	May	221/232
6,997,344	B2	2/2006	Brown	221/258
6,997,936	B2	2/2006	Marshall	606/181
6,998,247	B2	2/2006	Monfre	435/14
6,998,248	B2	2/2006	Yani	435/14
6,999,810	B2	2/2006	Berner	600/345
7,001,343	B2	2/2006	Erickson	600/573
7,001,344	B2	2/2006	Freeman	600/583
7,003,337	B2	2/2006	Harjunmaa	600/316
7,003,340	B2	2/2006	Say	600/345
7,003,341	B2	2/2006	Say	600/345
7,004,928	B2	2/2006	Aceti	604/191
7,005,048	B1	2/2006	Watanabe	204/403.04
7,005,273	B2	2/2006	Heller	435/25
7,005,459	B2	2/2006	Hekal	523/102
7,005,857	B2	2/2006	Stiene	324/449
7,006,857	B2	2/2006	Braig	600/310
7,006,858	B2	2/2006	Silver	600/345
7,008,384	B2	3/2006	Tapper	600/573
7,010,432	B2	3/2006	Kermani	702/19
7,011,630	B2	3/2006	Desai	600/309
7,011,954	B2	3/2006	Ouyang	435/7.9
7,014,615	B2	3/2006	Erickson	600/573
7,015,262	B2	3/2006	Leong	523/205
7,016,713	B2	3/2006	Gardner	600/310
7,018,568	B2	3/2006	Tierney	252/511
7,018,848	B2	3/2006	Douglas	436/524
7,022,217	B2	4/2006	Hodges	205/777.5
7,022,218	B2	4/2006	Taniike	205/777.5
7,022,286	B2	4/2006	Lemke	422/67
7,024,236	B2	4/2006	Ford	600/345
7,024,248	B2	4/2006	Penner	607/60
7,024,399	B2	4/2006	Sumner	706/45
7,025,425	B2	4/2006	Kovatchev	300/365
7,025,774	B2	4/2006	Freeman	606/181
7,027,848	B2	4/2006	Robinson	600/310
7,029,444	B2	4/2006	Shin	600/365
7,033,322	B2	4/2006	Silver	600/486
7,033,371	B2	4/2006	Alden	606/181
7,039,560	B2	5/2006	Kawatahara	702/187
7,041,057	B1	5/2006	Faupel	600/365
7,041,063	B2	5/2006	Abreu	600/549
7,041,068	B2	5/2006	Freeman	600/583
7,041,210	B2	5/2006	Hodges	205/792
7,041,254	B2	5/2006	Haviland	422/58
7,041,468	B2	5/2006	Drucker	435/14
7,043,287	B1	5/2006	Khalil	600/310
7,043,821	B2	5/2006	Hodges	29/594
7,044,911	B2	5/2006	Drinan	600/300
7,045,046	B2	5/2006	Chambers	204/400
7,045,054	B1	5/2006	Buck	205/778
7,045,097	B2	5/2006	Kovacs	422/82.08
7,045,310	B2	5/2006	Buck	435/7.93
7,045,361	B2	5/2006	Heiss	436/172
7,047,070	B2	5/2006	Wilkinson	604/20
7,047,795	B2	5/2006	Sato	73/64.56
7,049,087	B2	5/2006	Jenny	435/13
7,049,130	B2	5/2006	Carroll	435/287.2
7,050,843	B2	5/2006	Shartle	600/345
7,051,495	B2	5/2006	Lang	53/475
7,052,268	B2	5/2006	Powell	425/542
7,052,591	B2	5/2006	Gao	204/490
7,052,652	B2	5/2006	Zanzucchi	422/82.05
7,052,864	B2	5/2006	Durkop	435/25
7,054,682	B2	5/2006	Young	604/20
7,054,759	B2	5/2006	Fukunaga	702/23
D522,656	S	6/2006	Orr	D24/169
D523,555	S	6/2006	Loerwald	D24/146
7,056,425	B2	6/2006	Hasegawa	204/403.04
7,056,495	B2	6/2006	Roser	424/45
7,058,437	B2	6/2006	Buse	600/347
7,059,352	B2	6/2006	Bohm	137/828
7,060,059	B2	6/2006	Keith	604/504
7,060,168	B2	6/2006	Taniike	204/403.04
7,060,192	B2	6/2006	Yuzhakov	216/11
7,061,593	B2	6/2006	Braig	356/39
7,063,234	B2	6/2006	Giraud	221/271
7,063,774	B2	6/2006	Bhullar	204/403.02
7,063,775	B2	6/2006	Yamaoka	204/403.06
7,063,776	B2	6/2006	Huang	204/403.14
7,066,884	B2	6/2006	Custer	600/309
7,066,885	B2	6/2006	Erickson	600/309
7,070,564	B2	7/2006	Matzinger	600/300
7,070,680	B2	7/2006	Bae	204/403.04
7,073,246	B2	7/2006	Bhullar	29/595
7,074,307	B2	7/2006	Simpson	204/403.04
7,074,308	B2	7/2006	Mao	204/403.14
7,077,328	B2	7/2006	Krishnaswamy	235/472.01
7,077,828	B2	7/2006	Kuhr	604/207
7,078,480	B2	7/2006	Nagel	530/322
7,079,252	B1	7/2006	Debreezeny	356/451
7,081,188	B1	7/2006	Cho	204/403.04
7,083,712	B2	8/2006	Morita	205/775
7,086,277	B2	8/2006	Tess	73/53.01
7,087,149	B1	8/2006	Muguruma	205/778
7,090,764	B2	8/2006	Iyengar	205/775
7,096,053	B2	8/2006	Loeb	600/317
7,096,124	B2	8/2006	Sterling	702/23
7,097,631	B2	8/2006	Trautman	604/46
7,098,038	B2	8/2006	Fukuoka	436/164
7,103,578	B2	9/2006	Beck	705/75
7,105,066	B2	9/2006	Schraga et al.	606/182
7,107,253	B1	9/2006	Sumner	706/45
7,108,680	B2	9/2006	Rohr	604/151
7,108,778	B2	9/2006	Simpson	205/778
7,109,271	B2	9/2006	Liu	525/283
7,110,112	B2	9/2006	Uchida	356/364
7,110,803	B2	9/2006	Shults	600/347
7,112,265	B1	9/2006	McAleer	204/403.09
7,112,451	B2	9/2006	Takahashi	436/514
7,113,172	B2	9/2006	Hohl	345/168
7,115,362	B2	10/2006	Douglas	435/4
7,118,351	B2	10/2006	Effenhauser	417/208
7,118,667	B2	10/2006	Lee	205/777.5
7,118,668	B1	10/2006	Edelbrock	205/777.5
7,118,916	B2	10/2006	Matzinger	436/34
7,118,919	B2	10/2006	Yatscoff	436/56
7,120,483	B2	10/2006	Russell	600/345
7,122,102	B2	10/2006	Wogoman	204/400
7,122,110	B2	10/2006	Deng	205/777.5
7,122,111	B2	10/2006	Tokunaga	205/792
7,125,481	B2	10/2006	Musho	205/775
7,129,038	B2	10/2006	Gopalan	435/4
RE39,390	E	11/2006	Hasegawa	204/403.09
D531,725	S	11/2006	Loerwald	D24/146

(56) **References Cited**

U.S. PATENT DOCUMENTS

7,131,342	B2	11/2006	Hodges	73/864.72
7,131,984	B2	11/2006	Sato	606/182
7,132,041	B2	11/2006	Deng	205/777.5
7,133,710	B2	11/2006	Acosta	600/316
7,134,550	B2	11/2006	Groth	206/366
7,134,999	B2	11/2006	Brauker	600/309
7,135,100	B1	11/2006	Lau	204/403.14
7,137,957	B2	11/2006	Erickson	600/573
7,138,041	B2	11/2006	Su	204/403.04
7,138,089	B2	11/2006	Aitken	422/82.01
7,141,034	B2	11/2006	Eppstein	604/22
7,141,058	B2	11/2006	Briggs	606/181
7,144,404	B2	12/2006	Whitson	606/181
7,144,485	B2	12/2006	Hsu	204/403.02
7,144,495	B2	12/2006	Teodorezyk	205/792
7,144,496	B2	12/2006	Meserol	205/792
7,144,709	B2	12/2006	Ouyang	435/7.9
7,147,825	B2	12/2006	Matsuda	422/58
7,150,755	B2	12/2006	Levaughn	606/181
7,150,975	B2	12/2006	Tamada	435/14
7,150,995	B2	12/2006	Xie	436/67
7,153,696	B2	12/2006	Fukuoka	436/164
7,155,371	B2	12/2006	Kawatahara	702/187
7,156,117	B2	1/2007	Bohm	137/14
7,156,810	B2	1/2007	Cho	600/365
7,157,723	B2	1/2007	Colvin	250/458.1
7,160,251	B2	1/2007	Neel	600/365
7,160,313	B2	1/2007	Galloway	606/167
7,160,678	B1	1/2007	Kayyem	435/6
7,162,289	B2	1/2007	Shah	600/345
7,163,616	B2	1/2007	Vreeke	205/777.5
7,166,074	B2	1/2007	Reghabi	600/365
7,166,208	B2	1/2007	Zweig	205/777.5
7,167,734	B2	1/2007	Khalil	600/310
7,167,735	B2	1/2007	Uchida	600/310
7,167,818	B2	1/2007	Brown	703/11
7,169,116	B2	1/2007	Day	600/583
7,169,117	B2	1/2007	Allen	600/584
7,169,289	B2	1/2007	Schulein	205/777.5
7,169,600	B2	1/2007	Hoss	435/287.1
7,172,728	B2	2/2007	Otake	422/58
7,174,199	B2	2/2007	Berner	600/347
7,175,641	B1	2/2007	Schraga	606/181
7,175,642	B2	2/2007	Briggs	606/181
7,179,233	B2	2/2007	Chang	600/584
7,182,910	B2	2/2007	Allen	422/50
7,183,068	B2	2/2007	Burson	435/14
7,183,102	B2	2/2007	Monfre	200/51.09
7,188,034	B2	3/2007	Staib	702/22
7,189,576	B2	3/2007	Fukuoka	436/170
7,190,988	B2	3/2007	Say	600/345
7,192,405	B2	3/2007	DeNuzzio	600/583
7,192,450	B2	3/2007	Brauker	623/23.76
7,195,704	B2	3/2007	Kermani	205/777.5
7,198,606	B2	4/2007	Boecker	600/583
7,199,594	B2	4/2007	Kermani	324/663
7,202,854	B2	4/2007	Hohl	345/168
7,206,620	B2	4/2007	Erickson	600/310
7,206,623	B2	4/2007	Blank	600/344
D542,681	S	5/2007	Young	D10/80
7,211,052	B2	5/2007	Roe	600/584
7,211,096	B2	5/2007	Kuhr	606/182
7,212,925	B2	5/2007	Genshaw	702/23
7,213,720	B2	5/2007	Giraud	220/839
7,215,982	B2	5/2007	Oshima	600/310
7,215,983	B2	5/2007	Cho	600/316
7,223,248	B2	5/2007	Erikson	600/584
7,225,008	B1	5/2007	Ward	600/345
D543,878	S	6/2007	Castillo	D10/81
D545,438	S	6/2007	Huang	D24/186
7,225,535	B2	6/2007	Feldman	29/831
7,226,414	B2	6/2007	Ballerstadt	600/365
7,226,461	B2	6/2007	Boecker	606/181
7,226,978	B2	6/2007	Tapsak	525/296
7,227,156	B2	6/2007	Colvin	250/458.1
7,228,159	B2	6/2007	Petersson	600/316
7,228,162	B2	6/2007	Ward	600/345
7,228,163	B2	6/2007	Ackerman	600/347
7,229,458	B2	6/2007	Freeman	606/181
7,232,451	B2	6/2007	Boecker	606/181
7,232,510	B2	6/2007	Miyazaki	204/403.1
7,233,816	B2	6/2007	Blank	600/310
7,235,056	B2	6/2007	Duchon	600/583
7,235,170	B2	6/2007	Watanabe	205/777.5
7,235,378	B2	6/2007	Yonehara	435/14
7,236,812	B1	6/2007	Ballerstadt	600/316
7,236,814	B2	6/2007	Shioi	600/344
D545,705	S	7/2007	Voege	D10/81
D546,216	S	7/2007	Bolognesi	D10/81
D546,218	S	7/2007	Grasso	D10/81
7,238,192	B2	7/2007	List	606/182
7,238,534	B1	7/2007	Zimmer	436/169
7,241,265	B2	7/2007	Cummings	600/300
7,244,264	B2	7/2007	Roe	606/181
7,244,265	B2	7/2007	Freeman	606/181
7,244,266	B2	7/2007	Garthe	606/181
7,247,138	B2	7/2007	Reghabi	606/365
7,247,144	B2	7/2007	Douglas	600/583
7,250,037	B2	7/2007	Shermer	604/134
7,250,056	B2	7/2007	Hamamoto	606/181
7,250,095	B2	7/2007	Black	204/403.14
7,250,105	B1	7/2007	Davies	205/777.5
7,251,513	B2	7/2007	Kondoh	600/322
7,251,514	B2	7/2007	Cho	600/316
7,251,515	B2	7/2007	Cho	600/316
7,251,516	B2	7/2007	Walker	600/316
7,251,517	B2	7/2007	Cho	600/316
7,251,573	B2	7/2007	Sanduleanu et al.	600/310
7,252,804	B2	8/2007	Miyashita	422/104
7,254,426	B2	8/2007	Cho	600/316
7,254,427	B2	8/2007	Cho	600/316
7,254,428	B2	8/2007	Cho	600/316
7,254,429	B2	8/2007	Schurman	600/316
7,254,430	B2	8/2007	Cho	600/316
7,254,432	B2	8/2007	Fine	600/335
7,258,673	B2	8/2007	Racchini	600/583
7,258,693	B2	8/2007	Freeman	606/181
7,262,061	B2	8/2007	Petrich	436/169
7,264,139	B2	9/2007	Brickwood	221/270
7,264,627	B2	9/2007	Perez	606/181
7,266,400	B2	9/2007	Fine	600/316
7,267,665	B2	9/2007	Steil	604/131
7,267,750	B2	9/2007	Watanabe	204/403.04
7,270,247	B2	9/2007	Charlton	221/59
7,271,912	B2	9/2007	Sterling	356/436
7,273,484	B2	9/2007	Thoes	606/181
7,276,027	B2	10/2007	Haar	600/309
7,276,029	B2	10/2007	Goode	600/365
7,276,146	B2	10/2007	Wilsey	205/792
7,276,147	B2	10/2007	Wilsey	205/792
7,276,380	B2	10/2007	Fukuyama	436/164
7,277,740	B2	10/2007	Rohleder	600/316
7,278,983	B2	10/2007	Ireland	604/66
7,279,130	B2	10/2007	Brown	422/64
7,282,058	B2	10/2007	Levin	606/181
7,287,318	B2	10/2007	Bhullar	29/825
7,288,073	B2	10/2007	Effenhauser	600/584
7,288,102	B2	10/2007	Griffin	606/182
7,288,174	B2	10/2007	Cui	204/403.14
7,289,836	B2	10/2007	Colvin	600/316
7,291,117	B2	11/2007	Boecker	600/583
7,291,159	B2	11/2007	Schmelzeisen-Redeker et al.	606/181
7,291,256	B2	11/2007	Teodorezyk	205/777.5
7,291,497	B2	11/2007	Holmes	435/287.2
7,294,246	B2	11/2007	Gundel	204/403.14
7,295,867	B2	11/2007	Berner	600/345
7,297,122	B2	11/2007	Boecker	600/583
7,297,151	B2	11/2007	Boecker	606/181
7,297,152	B2	11/2007	Fukuzawa	606/181
7,297,241	B2	11/2007	Kontschieder	204/403.01
7,297,248	B2	11/2007	Bae	205/777.5
7,297,627	B2	11/2007	Shah	438/622
7,299,079	B2	11/2007	Rebec	600/316

(56) **References Cited**

U.S. PATENT DOCUMENTS

7,299,080	B2	11/2007	Acosta	600/316
7,299,081	B2	11/2007	Mace	600/345
7,299,082	B2	11/2007	Feldman	600/347
7,300,402	B2	11/2007	Iliff	600/300
7,301,629	B2	11/2007	Bambot	356/337
7,303,573	B2	12/2007	D'Agostino	606/181
7,303,726	B2	12/2007	McAllister	422/68.1
7,303,922	B2	12/2007	Jeng	436/164
7,305,896	B2	12/2007	Howell	73/864.02
7,306,560	B2	12/2007	Iliff	600/300
7,308,164	B1	12/2007	Banks	385/12
7,308,292	B2	12/2007	Colvin	600/310
7,310,542	B2	12/2007	Jeon	600/344
7,310,543	B2	12/2007	Smart	600/345
7,310,544	B2	12/2007	Brister	600/345
7,311,718	B2	12/2007	Schraga	606/181
7,311,812	B2	12/2007	Forrow	204/403.06
7,312,042	B1	12/2007	Petyt	435/7.1
7,313,425	B2	12/2007	Finarov	600/310
7,314,453	B2	1/2008	Kuo	600/584
7,315,752	B2	1/2008	Kraemer	600/316
7,316,700	B2	1/2008	Alden	606/181
7,316,766	B2	1/2008	Chen	204/403.01
7,316,929	B2	1/2008	Purcell	436/8
7,317,938	B2	1/2008	Lorenz	600/316
7,317,939	B2	1/2008	Fine	600/322
7,322,942	B2	1/2008	Roe	600/583
7,322,996	B2	1/2008	Taylor	606/181
7,322,997	B2	1/2008	Shi	606/181
7,322,998	B2	1/2008	Kuhr	606/182
7,323,098	B2	1/2008	Miyashita	205/777.5
7,323,141	B2	1/2008	Kirchhevel	422/68.1
7,323,315	B2	1/2008	Marfurt	435/7.25
7,324,012	B2	1/2008	Mann	340/870.07
7,328,052	B2	2/2008	Samsoondar	600/310
7,331,931	B2	2/2008	Freeman	600/583
7,335,292	B2	2/2008	Hodges	205/775
7,335,294	B2	2/2008	Heller	205/792
7,337,918	B2	3/2008	Fowler	221/65
7,338,639	B2	3/2008	Burke	422/82.1
7,343,188	B2	3/2008	Sohrab	600/345
7,344,499	B1	3/2008	Prausnitz	600/309
7,344,500	B2	3/2008	Talbot	600/365
7,344,507	B2	3/2008	Briggs	600/583
7,344,626	B2	3/2008	Harding	204/403.01
7,347,925	B2	3/2008	Hsieh	205/777.5
7,347,926	B2	3/2008	Morita	205/792
7,347,973	B2	3/2008	Douglas	422/61
RE40,198	E	4/2008	Buck	205/777.5
7,351,213	B2	4/2008	Wong	600/584
7,351,323	B2	4/2008	Iketaki	205/777.5
7,351,375	B2	4/2008	Noda	422/82.01
7,351,770	B2	4/2008	Liu	525/283
7,357,808	B2	4/2008	Kennedy	606/181
7,357,851	B2	4/2008	Reid	204/403.04
7,361,182	B2	4/2008	Fukuda	606/181
7,361,307	B2	4/2008	Shartle	422/82.01
7,371,247	B2	5/2008	Boecker	606/181
7,372,277	B2	5/2008	Diamond	324/444
7,374,544	B2	5/2008	Freeman	600/583
7,374,546	B2	5/2008	Roe	600/583
7,378,007	B2	5/2008	Moerman	204/403.03
7,378,720	B2	5/2008	Fu	435/287.2
7,402,616	B2	7/2008	Rodgers	523/160
7,404,815	B2	7/2008	Kollias	604/501
7,410,468	B2	8/2008	Freeman	600/583
7,429,630	B2	9/2008	Liu	525/283
7,431,814	B2	10/2008	Hodges	204/403.02
7,431,820	B2	10/2008	Hodges	205/777.5
7,438,694	B2	10/2008	Boozer	600/583
D579,652	S	11/2008	Lim	D3/201
D579,653	S	11/2008	Lim	D3/201
7,458,956	B1	12/2008	Adams	
7,462,265	B2	12/2008	Leach	204/403.14
7,465,380	B2	12/2008	Rodgers	204/403.14
7,468,125	B2	12/2008	Kraft	205/792
D585,314	S	1/2009	Schvetz	D10/78
7,473,264	B2	1/2009	Allen	606/181
7,474,390	B2	1/2009	Robinson	356/42
7,474,391	B2	1/2009	Baskeyfield	356/42
7,481,776	B2	1/2009	Boecker	600/583
7,481,818	B2	1/2009	Allen	606/181
D586,465	S	2/2009	Faulkner	D24/146
D586,466	S	2/2009	Smith	D24/186
D586,678	S	2/2009	Schvetz	D10/81
D586,916	S	2/2009	Faulkner	D24/146
7,485,128	B2	2/2009	Boecker	606/181
7,491,178	B2	2/2009	Boecker	600/583
7,498,132	B2	3/2009	Yu	435/6
7,501,052	B2	3/2009	Iyengar	205/777.5
7,501,093	B2	3/2009	Demelo	422/58
7,521,019	B2	4/2009	Polak	422/82.06
7,524,293	B2	4/2009	Freeman	600/583
7,537,571	B2	5/2009	Freeman	600/583
7,547,287	B2	6/2009	Boecker	600/583
7,548,772	B2	6/2009	Shartle	600/345
7,553,511	B2	6/2009	Hleong	427/2.28
7,563,232	B2	7/2009	Freeman	600/583
D598,126	S	8/2009	Alvarez-Icaza	D24/225
7,572,356	B2	8/2009	Rodgers	204/403.05
7,575,558	B2	8/2009	Boecker	600/573
D600,349	S	9/2009	Bell	D24/169
D600,812	S	9/2009	Lei	D24/169
D600,813	S	9/2009	Bell	D24/169
D601,255	S	9/2009	Schvetz	D24/169
D601,258	S	9/2009	Bell	D24/169
7,582,063	B2	9/2009	Wurster	600/584
7,582,099	B2	9/2009	Freeman	606/181
7,586,590	B2	9/2009	Baskeyfield	356/42
7,588,670	B2	9/2009	Rodgers	204/403.14
7,589,828	B2	9/2009	Robinson	356/42
7,592,151	B2	9/2009	Liu	435/14
7,593,097	B2	9/2009	Robinson	356/42
7,604,592	B2	10/2009	Freeman	600/309
7,604,722	B2	10/2009	Hodges	204/403.02
7,608,175	B2	10/2009	Hodges	204/403.02
7,618,522	B2	11/2009	Davies	204/403.14
7,645,263	B2	1/2010	Angel et al.	
7,648,468	B2	1/2010	Boecker	600/583
7,648,469	B2	1/2010	Boecker	600/583
7,653,492	B2	1/2010	Davies	702/22
7,654,127	B2	2/2010	Krulevitch	73/1.16
7,655,119	B2	2/2010	Davies	204/403.14
7,665,303	B2	2/2010	Bohm	60/643
7,666,287	B2	2/2010	Zhao	204/600
D611,151	S	3/2010	Lei	D24/169
D611,372	S	3/2010	Salter	D10/81
D611,489	S	3/2010	Bell	D14/486
D611,853	S	3/2010	Salter	D10/81
D612,274	S	3/2010	Heidemann	D10/78
D612,275	S	3/2010	Salter	D10/81
D612,279	S	3/2010	Heidemann	D10/103
7,674,232	B2	3/2010	Boecker	600/583
7,682,318	B2	3/2010	Alden	600/583
7,713,214	B2	5/2010	Freeman et al.	600/583
7,749,174	B2	7/2010	Alden et al.	
7,833,172	B2	11/2010	Hein et al.	600/583
7,879,058	B2	2/2011	Ikeda	606/182
7,901,365	B2	3/2011	Freeman et al.	600/583
7,976,778	B2	7/2011	Drucker et al.	
8,079,960	B2	12/2011	Briggs et al.	600/583
8,162,968	B2	4/2012	Boozer et al.	606/182
8,197,421	B2	6/2012	Freeman et al.	
8,206,319	B2	6/2012	Freeman et al.	600/583
8,231,548	B2	7/2012	Hoenes	600/583
8,251,922	B2	8/2012	List et al.	600/584
8,282,576	B2	10/2012	Marsot et al.	
8,388,639	B2	3/2013	Nicholls et al.	
8,491,500	B2	7/2013	Briggs et al.	
2001/0011157	A1	8/2001	Latterell	600/576
2001/0016682	A1	8/2001	Berner	600/345
2001/0017269	A1	8/2001	Heller	205/777.5
2001/0018353	A1	8/2001	Ishigaki	455/566
2001/0023349	A1	9/2001	Van Tassel et al.	606/53

(56) **References Cited**

U.S. PATENT DOCUMENTS

2001/0027328 A1 10/2001 Lum 606/186
2001/0031931 A1 10/2001 Cunningham 600/573
2001/0037072 A1 11/2001 Virtanen
2001/0037355 A1 11/2001 Britt 709/201
2001/0042004 A1 11/2001 Taub 705/11
2001/0045355 A1 11/2001 Gephart 204/400
2001/0054319 A1 12/2001 Heller 73/849
2002/0002326 A1 1/2002 Causey 600/300
2002/0002344 A1 1/2002 Douglas 600/583
2002/0004196 A1 1/2002 Whitson 600/573
2002/0016568 A1 2/2002 Lebel 604/131
2002/0016606 A1 2/2002 Moerman 606/181
2002/0016923 A1 2/2002 Knaus 713/200
2002/0019606 A1 2/2002 Lebel 604/66
2002/0019747 A1 2/2002 Ware 705/2
2002/0019748 A1 2/2002 Brown 705/2
2002/0020646 A1 2/2002 Groth et al.
2002/0025469 A1 2/2002 Heller 429/43
2002/0029058 A1 3/2002 Levaughn 606/181
2002/0040208 A1 4/2002 Flaherty 604/288.01
2002/0040230 A1 4/2002 Kuhr 606/181
2002/0042090 A1 4/2002 Heller 435/14
2002/0042594 A1 4/2002 Lum 604/117
2002/0044890 A1 4/2002 Black 422/56
2002/0052618 A1 5/2002 Haar 606/181
2002/0053523 A1 5/2002 Liamos 205/787
2002/0057993 A1 5/2002 Maisey 422/82.01
2002/0058902 A1 5/2002 Kollias et al. 604/20
2002/0076349 A1 6/2002 Aitken 422/58
2002/0078091 A1 6/2002 Vu 707/513
2002/0081559 A1 6/2002 Brown ..... 434/307 R
2002/0081588 A1 6/2002 De Lumley-woodyear
et al. 435/6
2002/0082543 A1 6/2002 Park 604/21
2002/0084196 A1 7/2002 Liamos 205/792
2002/0087056 A1 7/2002 Aceti
2002/0092612 A1 7/2002 Davies 156/292
2002/0099308 A1 7/2002 Bojan 600/573
2002/0103499 A1 8/2002 Perez 606/182
2002/0109600 A1 8/2002 Mault et al.
2002/0111634 A1 8/2002 Stoianovici et al.
2002/0120216 A1 8/2002 Fritz 600/583
2002/0120261 A1 8/2002 Morris 606/41
2002/0123335 A1 9/2002 Luna 455/419
2002/0130042 A1 9/2002 Moerman 204/403.01
2002/0133377 A1 9/2002 Brown 705/3
2002/0136667 A1 9/2002 Subramanian 422/100
2002/0136863 A1 9/2002 Subramanian 428/156
2002/0137998 A1 9/2002 Smart 600/347
2002/0138040 A1 9/2002 Flora 604/116
2002/0141032 A1 10/2002 Guarr et al. 359/265
2002/0148739 A2 10/2002 Liamos 205/787
2002/0156355 A1 10/2002 Gough 600/345
2002/0160520 A1 10/2002 Orloff 436/72
2002/0161289 A1 10/2002 Hopkins 600/322
2002/0168290 A1 11/2002 Yuzhakov 422/56
2002/0169393 A1 11/2002 Cunningham 600/573
2002/0169394 A1 11/2002 Eppstein 600/573
2002/0176984 A1 11/2002 Smart 428/336
2002/0177761 A1 11/2002 Orloff 600/309
2002/0177763 A1 11/2002 Burns 600/345
2002/0188224 A1 12/2002 Roe 600/584
2003/0014010 A1 1/2003 Carpenter 604/117
2003/0018282 A1 1/2003 Effenhauser 600/583
2003/0018300 A1 1/2003 Duchon 604/164.01
2003/0028125 A1 2/2003 Yuzhakov
2003/0028126 A1 2/2003 List 600/583
2003/0032077 A1 2/2003 Itoh 435/14
2003/0038047 A1 2/2003 Sleva 206/370
2003/0050537 A1 3/2003 Wessel 600/300
2003/0050573 A1 3/2003 Kuhr 600/567
2003/0050656 A1 3/2003 Schraga 606/182
2003/0057391 A1 3/2003 Krulevitch 251/11
2003/0060730 A1 3/2003 Perez 600/576
2003/0069509 A1 4/2003 Matzinger et al. 600/504
2003/0069753 A1 4/2003 Brown 705/2
2003/0072647 A1 4/2003 Lum 415/1
2003/0073089 A1 4/2003 Mauze 435/6
2003/0073229 A1 4/2003 Greenstein 435/287.2
2003/0073931 A1 4/2003 Boecker 600/573
2003/0083685 A1 5/2003 Freeman 606/181
2003/0083686 A1 5/2003 Freeman 606/181
2003/0088160 A1 5/2003 Halleck 600/300
2003/0088191 A1 5/2003 Freeman 600/583
2003/0089730 A1 5/2003 May 221/232
2003/0092982 A1 5/2003 Eppstein
2003/0093010 A1 5/2003 Essenpreis 600/583
2003/0100040 A1 5/2003 Bonnecaze 435/14
2003/0106810 A1 6/2003 Douglas 205/777.5
2003/0109777 A1 6/2003 Kloepfer 600/367
2003/0109860 A1 6/2003 Black 606/10
2003/0111357 A1 6/2003 Black 205/775
2003/0113827 A1 6/2003 Burkoth 435/14
2003/0116447 A1 6/2003 Sturridge 205/777.5
2003/0120297 A1 6/2003 Beyerlein 606/185
2003/0135333 A1 7/2003 Aceti 702/31
2003/0136189 A1 7/2003 Lauman ..... 73/304 C
2003/0139653 A1 7/2003 Manser 600/300
2003/0143113 A2 7/2003 Yuzhakov 422/56
2003/0144608 A1 7/2003 Kojima 600/583
2003/0144609 A1 7/2003 Kennedy 600/583
2003/0146110 A1 8/2003 Karinka 205/777.5
2003/0149348 A1 8/2003 Raskas 600/310
2003/0149377 A1 8/2003 Erickson 600/573
2003/0150745 A1 8/2003 Teodorczyk et al. 205/775
2003/0153900 A1 8/2003 Aceti 604/890.1
2003/0159944 A1 8/2003 Pottgen 205/777.5
2003/0163351 A1 8/2003 Brown 705/2
2003/0178322 A1 9/2003 Iyengar 205/775
2003/0191376 A1 10/2003 Samuels 600/309
2003/0191415 A1 10/2003 Moerman 600/584
2003/0195435 A1 10/2003 Williams 600/583
2003/0195540 A1 10/2003 Moerman 606/181
2003/0199744 A1 10/2003 Buse 600/347
2003/0199789 A1 10/2003 Boecker 600/575
2003/0199790 A1 10/2003 Boecker 600/576
2003/0199791 A1 10/2003 Boecker 600/576
2003/0199891 A1 10/2003 Argauer 606/181
2003/0199893 A1 10/2003 Boecker 606/181
2003/0199894 A1 10/2003 Boecker 606/181
2003/0199895 A1 10/2003 Boecker 606/181
2003/0199896 A1 10/2003 Boecker 606/181
2003/0199897 A1 10/2003 Boecker 606/181
2003/0199898 A1 10/2003 Boecker 606/181
2003/0199899 A1 10/2003 Boecker 606/181
2003/0199900 A1 10/2003 Boecker 606/181
2003/0199901 A1 10/2003 Boecker 606/181
2003/0199902 A1 10/2003 Boecker 606/181
2003/0199903 A1 10/2003 Boecker 606/181
2003/0199904 A1 10/2003 Boecker 606/181
2003/0199905 A1 10/2003 Boecker 606/181
2003/0199906 A1 10/2003 Boecker 606/181
2003/0199907 A1 10/2003 Boecker 606/181
2003/0199908 A1 10/2003 Boecker 606/181
2003/0199909 A1 10/2003 Boecker 606/181
2003/0199910 A1 10/2003 Boecker 606/181
2003/0199911 A1 10/2003 Boecker 606/181
2003/0199912 A1 10/2003 Pugh 606/182
2003/0201194 A1 10/2003 Heller 205/777.5
2003/0203352 A1 10/2003 Haviland 435/4
2003/0206828 A1 11/2003 Bell 422/44
2003/0208140 A1 11/2003 Pugh 600/584
2003/0210811 A1 11/2003 Dubowsky 382/128
2003/0211619 A1 11/2003 Olson et al. 436/44
2003/0212344 A1 11/2003 Yuzhakov 600/583
2003/0212345 A1 11/2003 McAllister 600/584
2003/0212346 A1 11/2003 McAllister 600/584
2003/0212347 A1* 11/2003 Sohrab 600/584
2003/0212379 A1 11/2003 Bylund 604/504
2003/0212423 A1 11/2003 Pugh 606/181
2003/0212424 A1 11/2003 Briggs 606/181
2003/0212579 A1 11/2003 Brown 705/2
2003/0216767 A1 11/2003 List 606/181
2003/0217918 A1 11/2003 Davies 204/403.14

(56) **References Cited**

U.S. PATENT DOCUMENTS

2003/0220552 A1 11/2003 Reghabi 600/365
2003/0220663 A1 11/2003 Fletcher 606/182
2003/0223906 A1 12/2003 McAllister 422/58
2003/0225317 A1 12/2003 Schell 600/300
2003/0225429 A1 12/2003 Garthe 606/182
2003/0225430 A1 12/2003 Schraga 606/182
2003/0228637 A1 12/2003 Wang 435/7.9
2003/0229514 A2 12/2003 Brown 705/2
2003/0232370 A1 12/2003 Trifiro 435/6
2003/0233055 A1 12/2003 Erickson 600/573
2003/0233112 A1 12/2003 Alden 606/181
2003/0233113 A1 12/2003 Alden 606/182
2004/0006285 A1 1/2004 Douglas 600/583
2004/0007585 A1 1/2004 Griffith 221/232
2004/0009100 A1 1/2004 Simons 422/102
2004/0010279 A1 1/2004 Freeman 606/182
2004/0015064 A1 1/2004 Parsons 600/347
2004/0019250 A1 1/2004 Catelli 600/1
2004/0019259 A1 1/2004 Brown 600/300
2004/0026243 A1 2/2004 Davies 204/403.14
2004/0026244 A1 2/2004 Hodges 204/409
2004/0030353 A1 2/2004 Schmelzeisen-Redeker et al. 606/201
2004/0031682 A1 2/2004 Wilsey 204/403.1
2004/0034318 A1 2/2004 Fritz 604/19
2004/0038045 A1 2/2004 Smart 428/446
2004/0039303 A1 2/2004 Wurster 600/584
2004/0039342 A1 2/2004 Eppstein 604/200
2004/0039407 A1 2/2004 Schraga 606/181
2004/0039408 A1 2/2004 Abulhaj 606/181
2004/0049219 A1 3/2004 Briggs 606/181
2004/0049220 A1 3/2004 Boecker 606/181
2004/0050694 A1 3/2004 Yang 204/403.02
2004/0054267 A1 3/2004 Feldman 600/316
2004/0055898 A1 3/2004 Heller et al. 205/777.5
2004/0059256 A1 3/2004 Perez 600/583
2004/0060818 A1 4/2004 Feldman 204/403.01
2004/0061841 A1 4/2004 Black 355/30
2004/0064068 A1 4/2004 DeNuzzio 600/583
2004/0065669 A1 4/2004 Giraud et al.
2004/0068093 A1 4/2004 Merrigan et al.
2004/0068283 A1 4/2004 Fukuzawa et al. 606/181
2004/0069657 A1 4/2004 Hodges 205/787
2004/0087990 A1 5/2004 Boecker 606/181
2004/0092842 A1 5/2004 Boecker 600/575
2004/0092994 A1 5/2004 Briggs 606/181
2004/0092995 A1 5/2004 Boecker 606/181
2004/0096991 A1 5/2004 Zhang 436/518
2004/0098009 A1 5/2004 Boecker 606/181
2004/0098010 A1 5/2004 Davison 606/181
2004/0102803 A1 5/2004 Boecker 606/183
2004/0106855 A1 6/2004 Brown 600/301
2004/0106858 A1 6/2004 Say 600/345
2004/0106859 A1 6/2004 Say 600/345
2004/0106860 A1 6/2004 Say 600/345
2004/0106904 A1 6/2004 Gonnelli 604/173
2004/0106941 A1 6/2004 Roe 606/181
2004/0107116 A1 6/2004 Brown 705/2
2004/0115754 A1 6/2004 Chang 435/14
2004/0115831 A1 6/2004 Meathrel 436/514
2004/0116780 A1 6/2004 Brown 600/300
2004/0116829 A1 6/2004 Raney 600/573
2004/0117207 A1 6/2004 Brown 705/2
2004/0117208 A1 6/2004 Brown 705/2
2004/0117209 A1 6/2004 Brown 705/2
2004/0117210 A1 6/2004 Brown 705/2
2004/0122339 A1 6/2004 Roe
2004/0127818 A1 7/2004 Roe 600/583
2004/0127819 A1 7/2004 Roe 600/583
2004/0127928 A1 7/2004 Whitson 606/181
2004/0127929 A1 7/2004 Roe 606/181
2004/0132167 A1 7/2004 Rule 435/287.1
2004/0133125 A1 7/2004 Miyashita 600/573
2004/0133127 A1 7/2004 Roe 600/583
2004/0137640 A1 7/2004 Hirao 436/514
2004/0138541 A1 7/2004 Ward 600/345
2004/0138588 A1 7/2004 Saikley 600/583
2004/0138688 A1 7/2004 Giraud 606/181
2004/0146958 A1 7/2004 Bae 435/14
2004/0154932 A1 8/2004 Deng 205/777.5
2004/0157017 A1 8/2004 Mauze 428/35.7
2004/0157149 A1 8/2004 Hofmann 430/131
2004/0157319 A1 8/2004 Keen 435/287.2
2004/0157338 A1 8/2004 Burke 436/147
2004/0157339 A1 8/2004 Burke 436/149
2004/0158137 A1 8/2004 Eppstein 600/347
2004/0158271 A1 8/2004 Hamamoto 606/181
2004/0161737 A1 8/2004 Yang 435/5
2004/0162473 A1 8/2004 Sohrab 600/345
2004/0162474 A1 8/2004 Kiser 600/345
2004/0162506 A1 8/2004 Duchon 600/583
2004/0162573 A1 8/2004 Kheiri 606/182
2004/0167383 A1 8/2004 Kim 600/365
2004/0171057 A1 9/2004 Yang et al. 435/6
2004/0171968 A1 9/2004 Katsuki 600/583
2004/0172000 A1 9/2004 Roe 604/361
2004/0173472 A1 9/2004 Jung 205/777.5
2004/0173488 A1 9/2004 Griffin 206/363
2004/0176705 A1 9/2004 Stevens 600/584
2004/0176732 A1 9/2004 Frazier 604/345
2004/0178066 A1 9/2004 Miyazaki 204/403.01
2004/0178067 A1 9/2004 Miyazaki 204/403.1
2004/0178216 A1 9/2004 Brickwood 221/268
2004/0180379 A1 9/2004 van Duyne 435/7.1
2004/0182703 A1 9/2004 Bell 204/403.11
2004/0185568 A1 9/2004 Matsumoto 436/8
2004/0186359 A1 9/2004 Beaudoin 600/310
2004/0186394 A1 9/2004 Roe 600/598
2004/0186500 A1 9/2004 Koilke 606/181
2004/0193201 A1 9/2004 Kim 606/181
2004/0193377 A1 9/2004 Brown 702/19
2004/0194302 A1 10/2004 Bhullar 29/847
2004/0197231 A1 10/2004 Katsuki 422/68.1
2004/0197821 A1 10/2004 Bauer 437/7.1
2004/0199062 A1 10/2004 Petersson 600/316
2004/0199409 A1 10/2004 Brown 705/3
2004/0200720 A1 10/2004 Musho 204/403.01
2004/0200721 A1 10/2004 Bhullar 204/403.01
2004/0202576 A1 10/2004 Aceti 422/82.05
2004/0204662 A1 10/2004 Perez 600/583
2004/0206625 A1 10/2004 Bhullar 204/403.1
2004/0206636 A1 10/2004 Hodges 205/792
2004/0206658 A1 10/2004 Hammerstedt 206/524.1
2004/0209307 A1 10/2004 Valkirs 435/7.1
2004/0209350 A1 10/2004 Sakata 435/287.1
2004/0209354 A1 10/2004 Mathies 435/287.2
2004/0210279 A1 10/2004 Gruzdev 607/89
2004/0211666 A1 10/2004 Pamidi 204/403.01
2004/0214253 A1 10/2004 Paek 435/7.92
2004/0215224 A1 10/2004 Sakata 606/181
2004/0215225 A1 10/2004 Nakayama 606/182
2004/0216516 A1 11/2004 Sato 73/64.56
2004/0217019 A1 11/2004 Cai 205/792
2004/0219500 A1 11/2004 Brown ..... 434/307 R
2004/0219535 A1 11/2004 Bell 435/6
2004/0220456 A1 11/2004 Eppstein 600/309
2004/0220495 A1 11/2004 Cahir 600/562
2004/0220564 A1 11/2004 Ho 606/47
2004/0220603 A1 11/2004 Rutynowski 606/181
2004/0222092 A1 11/2004 Musho 204/401
2004/0224369 A1 11/2004 Cai 435/7.7
2004/0225230 A1 11/2004 Liamos 600/583
2004/0225311 A1 11/2004 Levaughn 606/181
2004/0225312 A1 11/2004 Orloff 606/182
2004/0230216 A1 11/2004 Levaughn 606/181
2004/0231983 A1 11/2004 Shen 204/403.01
2004/0231984 A1 11/2004 Lauks 204/416
2004/0232009 A1 11/2004 Okuda 205/789
2004/0236250 A1 11/2004 Hodges 600/583
2004/0236251 A1 11/2004 Roe 600/583
2004/0236268 A1 11/2004 Mitragotri 604/20
2004/0236362 A1 11/2004 Shraga 606/181
2004/0238357 A1 12/2004 Bhullar 204/400
2004/0238358 A1 12/2004 Forrow 204/403.01

(56) **References Cited**

U.S. PATENT DOCUMENTS

2004/0238359 A1 12/2004 Ikeda 204/403.1
2004/0241746 A1 12/2004 Adlassnig 435/7.1
2004/0242977 A1 12/2004 Dosmann 600/315
2004/0243164 A1 12/2004 D'Agostino 606/181
2004/0243165 A1 12/2004 Koike 606/181
2004/0245101 A1 12/2004 Willner 204/403
2004/0248282 A1 12/2004 Sobha 435/287.2
2004/0248312 A1 12/2004 Vreeke 436/95
2004/0249254 A1 12/2004 Racchini 600/347
2004/0249310 A1 12/2004 Shartle 600/583
2004/0249311 A1 12/2004 Haar 600/584
2004/0249405 A1 12/2004 Watanabe 606/181
2004/0249406 A1 12/2004 Griffin 606/182
2004/0251131 A1 12/2004 Ueno 204/403
2004/0253634 A1 12/2004 Wang 435/7.1
2004/0254434 A1 12/2004 Goodnow 600/365
2004/0254599 A1 12/2004 Lipoma 606/181
2004/0256228 A1 12/2004 Huang 204/434
2004/0256248 A1 12/2004 Burke 205/792
2004/0256685 A1 12/2004 Chou 257/414
2004/0258564 A1 12/2004 Charlton 422/58
2004/0260204 A1 12/2004 Boecker 600/584
2004/0260324 A1 12/2004 Fukuzawa 606/181
2004/0260325 A1 12/2004 Kuhr 606/181
2004/0260326 A1 12/2004 Lipoma 606/182
2004/0260511 A1 12/2004 Burke 702/182
2004/0267105 A1 12/2004 Monfre 600/344
2004/0267121 A1 12/2004 Sarvazyan et al.
2004/0267160 A9 12/2004 Perez 600/583
2004/0267229 A1 12/2004 Moerman 604/500
2004/0267299 A1 12/2004 Kuriger 606/181
2004/0267300 A1 12/2004 Mace 606/182
2005/0000806 A1 1/2005 Hsieh 203/403.1
2005/0000807 A1 1/2005 Wang 204/403.81
2005/0000808 A1 1/2005 Cui 203/403.14
2005/0003470 A1 1/2005 Nelson 435/14
2005/0004437 A1 1/2005 Kaufmann 600/300
2005/0004494 A1 1/2005 Perez 600/583
2005/0008537 A1 1/2005 Mosolu 422/56
2005/0008851 A1 1/2005 Ezoe 428/336
2005/0009191 A1 1/2005 Swenson 436/43
2005/0010090 A1 1/2005 Acosta 600/316
2005/0010093 A1 1/2005 Ford 600/345
2005/0010134 A1 1/2005 Douglas 600/573
2005/0010137 A1 1/2005 Hodges 600/583
2005/0010198 A1 1/2005 Marchitto 606/9
2005/0011759 A1 1/2005 Moerman 204/403.03
2005/0013731 A1 1/2005 Burke 422/56
2005/0014997 A1 1/2005 Ruchti 600/310
2005/0015020 A1 1/2005 Levaughn 600/583
2005/0016844 A1 1/2005 Burke 204/403.1
2005/0019212 A1 1/2005 Bhullar 422/56
2005/0019219 A1 1/2005 Oshiman 422/82.12
2005/0019805 A1 1/2005 Groll 435/6
2005/0019945 A1 1/2005 Groll 436/169
2005/0019953 A1 1/2005 Groll 436/514
2005/0021066 A1 1/2005 Kuhr 606/181
2005/0027181 A1 2/2005 Goode 600/365
2005/0027211 A1 2/2005 Kuhr 600/583
2005/0027562 A1 2/2005 Brown 705/2
2005/0033340 A1 2/2005 Lipoma 606/181
2005/0033341 A1 2/2005 Vreeke 606/181
2005/0034983 A1 2/2005 Chambers 204/403.01
2005/0036020 A1 2/2005 Li 347/100
2005/0036146 A1 2/2005 Braig 356/246
2005/0036906 A1 2/2005 Nakahara et al. 422/58
2005/0036909 A1 2/2005 Erickson 422/61
2005/0037482 A1 2/2005 Braig 435/287
2005/0038329 A1 2/2005 Morris 600/319
2005/0038330 A1 2/2005 Jansen 600/345
2005/0038463 A1 2/2005 Davar 606/181
2005/0038464 A1 2/2005 Shraga 606/182
2005/0038465 A1 2/2005 Shraga 606/182
2005/0038674 A1 2/2005 Braig 705/2
2005/0042766 A1 2/2005 Ohman 436/174
2005/0043894 A1 2/2005 Fernandez 702/19
2005/0043965 A1 2/2005 Heller 705/2
2005/0045476 A1 3/2005 Neel 204/403.2
2005/0049472 A1 3/2005 Manda 600/345
2005/0049473 A1 3/2005 Desai 600/347
2005/0050859 A1 3/2005 Coppeta 53/471
2005/0054082 A1 3/2005 Pachl 435/287.2
2005/0054908 A1 3/2005 Blank 600/316
2005/0059872 A1 3/2005 Shartle 600/347
2005/0059895 A1 3/2005 Brown 600/481
2005/0060194 A1 3/2005 Brown 705/2
2005/0061668 A1 3/2005 Brenneman 204/403.01
2005/0064528 A1 3/2005 Kwon 435/14
2005/0067280 A1 3/2005 Reid 204/403.14
2005/0067737 A1 3/2005 Rappin 264/272.19
2005/0070771 A1 3/2005 Rule 600/316
2005/0070819 A1 3/2005 Poux 600/576
2005/0070945 A1 3/2005 Schraga 606/182
2005/0072670 A1 4/2005 Hasegawa 204/403.01
2005/0077176 A1 4/2005 Hodges 204/403.01
2005/0077584 A1 4/2005 Uhland 257/414
2005/0079542 A1 4/2005 Cullen 435/7.1
2005/0080652 A1 4/2005 Brown 705/2
2005/0085839 A1 4/2005 Allen 606/181
2005/0085840 A1 4/2005 Yi 606/182
2005/0086083 A1 4/2005 Brown 705/2
2005/0090754 A1 4/2005 Wolf 600/509
2005/0090850 A1 4/2005 Thoes 606/182
2005/0096520 A1 5/2005 Maekawa 600/365
2005/0096565 A1 5/2005 Chang 600/584
2005/0096586 A1 5/2005 Trautman 604/46
2005/0096587 A1 5/2005 Santini 604/66
2005/0096686 A1 5/2005 Allen 606/181
2005/0098431 A1 5/2005 Hodges 204/403.01
2005/0098432 A1 5/2005 Grundel 204/403.2
2005/0098433 A1 5/2005 Grundel 204/403.2
2005/0098434 A1 5/2005 Grundel 204/403.02
2005/0100880 A1 5/2005 Chang 435/4
2005/0101841 A9 5/2005 Kaylor 600/300
2005/0101979 A1 5/2005 Alden 606/181
2005/0101980 A1 5/2005 Alden 606/181
2005/0101981 A1 5/2005 Alden 606/181
2005/0103624 A1 5/2005 Bhullar 204/403.01
2005/0106713 A1 5/2005 Phan 435/287.2
2005/0109637 A1 5/2005 Iyengar 205/775
2005/0112712 A1 5/2005 Ouyang 435/14
2005/0112782 A1 5/2005 Buechler 436/518
2005/0113658 A1 5/2005 Jacobson 600/342
2005/0113717 A1 5/2005 Matzinger 600/573
2005/0114062 A1 5/2005 Davies 702/104
2005/0114154 A1 5/2005 Wolkowiez 705/1
2005/0114444 A1 5/2005 Brown 709/203
2005/0118056 A1 6/2005 Swanson 423/23
2005/0118062 A1 6/2005 Otake 422/68.1
2005/0119681 A1 6/2005 Marshall 606/181
2005/0123443 A1 6/2005 Fujiwara 422/58
2005/0123680 A1 6/2005 Kang 427/248.1
2005/0124869 A1 6/2005 Hefti 600/316
2005/0125017 A1 6/2005 Kudrna 606/181
2005/0125018 A1 6/2005 Galloway 606/181
2005/0125019 A1 6/2005 Kudrna 606/182
2005/0126929 A1 6/2005 Mansouri 205/778
2005/0130248 A1 6/2005 Willner 435/14
2005/0130249 A1 6/2005 Parris 435/14
2005/0130292 A1 6/2005 Ahn 435/287.1
2005/0131286 A1 6/2005 Parker 600/328
2005/0131440 A1 6/2005 Starnes
2005/0131441 A1 6/2005 Iio 606/182
2005/0133368 A1 6/2005 Davies 204/403.01
2005/0136471 A1 6/2005 Bhullar 435/6
2005/0136501 A1 6/2005 Kuriger 435/14
2005/0136529 A1 6/2005 Yang 435/287
2005/0136550 A1 6/2005 Yang 436/514
2005/0137536 A1 6/2005 Gonnelli 604/173
2005/0140659 A1 6/2005 Hohl 345/169
2005/0143675 A1 6/2005 Neel 600/583
2005/0143713 A1 6/2005 Delmore 604/506
2005/0143771 A1 6/2005 Stout 606/181
2005/0145490 A1 7/2005 Shinno 204/403

(56) **References Cited**

U.S. PATENT DOCUMENTS

2005/0145491	A1	7/2005	Amano	204/403
2005/0145520	A1	7/2005	Ilo	206/365
2005/0149088	A1	7/2005	Fukuda	606/181
2005/0149089	A1	7/2005	Trissel	606/181
2005/0149090	A1	7/2005	Morita	606/181
2005/0150762	A1	7/2005	Butters	204/403
2005/0150763	A1	7/2005	Butters	204/403
2005/0154277	A1	7/2005	Ting	600/407
2005/0154374	A1	7/2005	Hunter	604/890
2005/0154410	A1	7/2005	Conway	606/181
2005/0154616	A1	7/2005	Iliff	705/3
2005/0158850	A1	7/2005	Kubo	435/287.2
2005/0159656	A1	7/2005	Hockersmith	600/315
2005/0159768	A1	7/2005	Boehm	606/182
2005/0163176	A1	7/2005	You et al.	372/36
2005/0164299	A1	7/2005	Stewart	435/7.1
2005/0164322	A1	7/2005	Heller	435/14
2005/0164329	A1	7/2005	Wallace-Davis	435/25
2005/0165285	A1	7/2005	Iliff	600/300
2005/0165393	A1	7/2005	Eppstein	606/41
2005/0165622	A1	7/2005	Neel	705/2
2005/0169810	A1	8/2005	Hagen	422/102
2005/0169961	A1	8/2005	Hunter	424/423
2005/0170448	A1	8/2005	Burson	435/14
2005/0171567	A1	8/2005	DeHart	606/181
2005/0172021	A1	8/2005	Brown	709/224
2005/0172022	A1	8/2005	Brown	709/224
2005/0173245	A1	8/2005	Feldman	204/403.01
2005/0173246	A1	8/2005	Hodges	204/403.11
2005/0175509	A1	8/2005	Nakaminami	422/82.03
2005/0176084	A1	8/2005	Burkoth	435/14
2005/0176133	A1	8/2005	Miyashita	435/287.1
2005/0176153	A1	8/2005	O'hara	436/70
2005/0177071	A1	8/2005	Nakayama	600/583
2005/0177201	A1	8/2005	Freeman	607/46
2005/0177398	A1	8/2005	Watanabe	705/3
2005/0178218	A1	8/2005	Montagu	73/864.34
2005/0181010	A1	8/2005	Hunter	424/423
2005/0181497	A1	8/2005	Saito	435/287.1
2005/0182307	A1	8/2005	Currie	600/300
2005/0187439	A1	8/2005	Blank	600/310
2005/0187442	A1	8/2005	Cho et al.	
2005/0187444	A1	8/2005	Hubner	600/322
2005/0192488	A1	9/2005	Bryenton	600/301
2005/0196821	A1	9/2005	Monfre	435/14
2005/0197666	A1	9/2005	Raney	606/181
2005/0201897	A1	9/2005	Zimmer	422/82.05
2005/0202567	A1	9/2005	Zanzucchi	436/95
2005/0203358	A1	9/2005	Monfre	600/331
2005/0203364	A1	9/2005	Monfre	600/365
2005/0204939	A1	9/2005	Krejci	101/129
2005/0205136	A1	9/2005	Freeman	137/554
2005/0205422	A1	9/2005	Moser	204/403.06
2005/0205816	A1	9/2005	Hayenga	251/61.1
2005/0209515	A1	9/2005	Hockersmith	600/316
2005/0209564	A1	9/2005	Bonner	604/173
2005/0209625	A1	9/2005	Chan	606/181
2005/0211571	A1	9/2005	Schulein	205/777.5
2005/0211572	A1	9/2005	Buck	205/778
2005/0214881	A1	9/2005	Azarnia	435/7.92
2005/0214892	A1	9/2005	Kovatchev	435/25
2005/0215871	A1	9/2005	Feldman	600/309
2005/0215872	A1	9/2005	Berner	600/347
2005/0215923	A1	9/2005	Wiegel	600/573
2005/0215925	A1	9/2005	Chan	600/583
2005/0216046	A1	9/2005	Yeoh	606/181
2005/0218024	A1	10/2005	Lang	206/438
2005/0221276	A1	10/2005	Rozakis	435/4
2005/0221470	A1	10/2005	Matsumoto	435/287.1
2005/0222599	A1	10/2005	Czernecki	606/182
2005/0227372	A1	10/2005	Khan	436/514
2005/0228242	A1	10/2005	Kawamura	600/300
2005/0228883	A1	10/2005	Brown	709/224
2005/0230252	A1	10/2005	Tsai	204/450
2005/0230253	A1	10/2005	Marquant	204/451
2005/0232813	A1	10/2005	Karmali	422/58
2005/0232815	A1	10/2005	Ruhl	422/66
2005/0234368	A1	10/2005	Wong	600/583
2005/0234486	A1	10/2005	Allen	606/181
2005/0234487	A1	10/2005	Shi	600/181
2005/0234488	A1	10/2005	Allen	606/181
2005/0234489	A1	10/2005	Allen	606/181
2005/0234490	A1	10/2005	Allen	606/181
2005/0234491	A1	10/2005	Allen	606/181
2005/0234492	A1	10/2005	Tsai	606/181
2005/0234494	A1	10/2005	Conway	606/181
2005/0234495	A1	10/2005	Schraga	606/181
2005/0235060	A1	10/2005	Brown	709/224
2005/0239154	A1	10/2005	Feldman	435/14
2005/0239156	A1	10/2005	Drucker	435/14
2005/0239194	A1	10/2005	Takahashi	435/287.2
2005/0240090	A1	10/2005	Ruchti	600/316
2005/0240119	A1	10/2005	Draudt	600/583
2005/0240207	A1	10/2005	Marshall	606/181
2005/0240778	A1	10/2005	Saito	713/186
2005/0245798	A1	11/2005	Yamaguchi	600/345
2005/0245843	A1	11/2005	Day	600/583
2005/0245844	A1	11/2005	Mace	600/583
2005/0245845	A1	11/2005	Roe	600/583
2005/0245954	A1	11/2005	Roe	606/181
2005/0245955	A1	11/2005	Schraga	606/181
2005/0256534	A1	11/2005	Alden	606/182
2005/0258035	A1	11/2005	Harding	204/403.01
2005/0258036	A1	11/2005	Harding	204/403.01
2005/0258050	A1	11/2005	Harding	205/775
2005/0265094	A1	12/2005	Harding	365/203
2005/0276133	A1	12/2005	Harding	365/203
2005/0278945	A1	12/2005	Feldman	29/830
2005/0279631	A1	12/2005	Celentano	204/403.01
2005/0279647	A1	12/2005	Beaty	205/792
2005/0283094	A1	12/2005	Thym	600/583
2005/0284110	A1	12/2005	Lang	53/473
2005/0284757	A1	12/2005	Allen	204/400
2005/0287620	A1	12/2005	Heller	435/14
2005/0288637	A1	12/2005	Kuhr	604/204
2005/0288698	A1	12/2005	Matsumoto	606/181
2005/0288699	A1	12/2005	Schraga	606/181
2006/0000549	A1	1/2006	Lang	156/320
2006/0003398	A1	1/2006	Heller	435/14
2006/0004270	A1	1/2006	Bedard	600/316
2006/0004271	A1	1/2006	Peyser	600/362
2006/0004272	A1	1/2006	Shah	600/365
2006/0006574	A1	1/2006	Lang	264/165
2006/0008389	A1	1/2006	Sacherer	422/102
2006/0015129	A1	1/2006	Shahrokni	606/181
2006/0016698	A1	1/2006	Lee	205/777.5
2006/0020228	A1	1/2006	Fowler	600/583
2006/0024774	A1	2/2006	Zocchi	435/14
2006/0025662	A1	2/2006	Buse	600/347
2006/0029979	A1	2/2006	Bai	435/7.1
2006/0029991	A1	2/2006	Hagino	435/14
2006/0030028	A1	2/2006	Nakaminami	435/287.2
2006/0030050	A1	2/2006	Milne	436/67
2006/0030761	A1	2/2006	Raskas	600/316
2006/0030788	A1	2/2006	Wong	600/583
2006/0034728	A1	2/2006	Kloepfer	422/68.1
2006/0037859	A1	2/2006	Hodges	204/400
2006/0040333	A1	2/2006	Zocchi	435/14
2006/0047220	A1	3/2006	Sakata	600/583
2006/0047294	A1	3/2006	Mori	606/181
2006/0052723	A1	3/2006	Roe	600/583
2006/0052724	A1	3/2006	Roe	600/583
2006/0052809	A1	3/2006	Karbowniczek	606/181
2006/0052810	A1	3/2006	Freeman	606/181
2006/0058827	A1	3/2006	Sakata	606/181
2006/0058828	A1	3/2006	Shi	606/181
2006/0062852	A1	3/2006	Holmes	424/484
2006/0063988	A1	3/2006	Schurman	600/316
2006/0064035	A1	3/2006	Wang	600/583
2006/0079739	A1	4/2006	Chen Wang	600/300
2006/0079810	A1	4/2006	Patel	600/583
2006/0079811	A1	4/2006	Roe	600/583
2006/0079920	A1	4/2006	Schraga	606/181
2006/0081469	A1	4/2006	Lee	204/403.02

(56) **References Cited**

U.S. PATENT DOCUMENTS

2006/0085020	A1	4/2006	Freeman	606/181
2006/0085137	A1	4/2006	Bartkowiak	702/19
2006/0086624	A1	4/2006	Tapsak	205/775
2006/0088945	A1	4/2006	Douglas	436/518
2006/0089566	A1	4/2006	DeHart	600/573
2006/0091006	A1	5/2006	Wang	204/403.02
2006/0094944	A1	5/2006	Chuang	600/347
2006/0094947	A1	5/2006	Kovatchev	600/365
2006/0094985	A1	5/2006	Aceti	600/575
2006/0094986	A1	5/2006	Neel	600/583
2006/0095061	A1	5/2006	Trautman	606/185
2006/0096859	A1	5/2006	Lau	204/403.14
2006/0099107	A1	5/2006	Yamamoto	422/57
2006/0099703	A1	5/2006	Choi	435/287.1
2006/0100542	A9	5/2006	Wong	600/583
2006/0100543	A1	5/2006	Raney	600/583
2006/0100654	A1	5/2006	Fukuda	606/181
2006/0100655	A1	5/2006	Leong	606/181
2006/0100656	A1	5/2006	Olson	606/181
2006/0106373	A1	5/2006	Cahir	606/9
2006/0108236	A1	5/2006	Kasielke	205/792
2006/0113187	A1	6/2006	Deng	204/403.01
2006/0115857	A1	6/2006	Keen	435/7.1
2006/0116562	A1	6/2006	Acosta	600/316
2006/0116704	A1	6/2006	Ashby	606/167
2006/0116705	A1	6/2006	Schraga	606/181
2006/0119362	A1	6/2006	Kermani	324/324
2006/0121547	A1	6/2006	McIntire	435/14
2006/0121625	A1	6/2006	Clemens	436/514
2006/0121759	A1	6/2006	Kasai	439/188
2006/0122099	A1	6/2006	Aoki	514/3
2006/0122536	A1	6/2006	Haar	600/581
2006/0129065	A1	6/2006	Matsumoto	600/583
2006/0129172	A1	6/2006	Crossman	606/181
2006/0129173	A1	6/2006	Wilkinson	606/181
2006/0134713	A1	6/2006	Rylatt	435/7.92
2006/0140457	A1	6/2006	Simshauser	382/124
2006/0144704	A1	7/2006	Ghesquiere	204/403.01
2006/0151323	A1	7/2006	Cho	204/403.04
2006/0151342	A1	7/2006	Yaguchi	206/306
2006/0155215	A1	7/2006	Cha	600/583
2006/0155316	A1	7/2006	Perez	606/181
2006/0155317	A1	7/2006	List	606/181
2006/0156796	A1	7/2006	Burke	73/61.44
2006/0157362	A1	7/2006	Schraga	206/363
2006/0160100	A1	7/2006	Gao	435/6
2006/0161078	A1	7/2006	Schraga	600/583
2006/0161194	A1	7/2006	Freeman	606/185
2006/0163061	A1	7/2006	Hodges	204/401
2006/0166302	A1	7/2006	Clarke	435/25
2006/0167382	A1	7/2006	Deshmukh	600/583
2006/0169599	A1	8/2006	Feldman	205/792
2006/0173254	A1	8/2006	Acosta	600/316
2006/0173255	A1	8/2006	Acosta	600/316
2006/0173379	A1	8/2006	Rasch-Menges	600/583
2006/0173380	A1	8/2006	Hoenes	600/583
2006/0173478	A1	8/2006	Schraga	606/181
2006/0175216	A1	8/2006	Freeman	206/363
2006/0178573	A1	8/2006	Kermani	600/347
2006/0178599	A1	8/2006	Faupel	600/578
2006/0178600	A1	8/2006	Kennedy	600/584
2006/0178686	A1	8/2006	Schraga	606/181
2006/0178687	A1	8/2006	Freeman	606/181
2006/0178688	A1	8/2006	Freeman	606/181
2006/0178689	A1	8/2006	Freeman	606/181
2006/0178690	A1	8/2006	Freeman	606/181
2006/0183871	A1	8/2006	Ward	525/464
2006/0183983	A1	8/2006	Acosta	600/316
2006/0184065	A1	8/2006	Deshmukh	600/583
2006/0184101	A1	8/2006	Srinivasan	604/68
2006/0188395	A1	8/2006	Taniike	422/57
2006/0189895	A1	8/2006	Neel	600/584
2006/0191787	A1	8/2006	Wang	204/400
2006/0195023	A1	8/2006	Acosta	600/316
2006/0195047	A1	8/2006	Freeman	600/583
2006/0195128	A1	8/2006	Alden	606/181
2006/0195129	A1	8/2006	Freeman	606/181
2006/0195130	A1	8/2006	Freeman	606/181
2006/0195131	A1	8/2006	Freeman	606/181
2006/0195132	A1	8/2006	Freeman	606/181
2006/0195133	A1	8/2006	Freeman	606/181
2006/0196031	A1	9/2006	Hoenes	29/432
2006/0196795	A1	9/2006	Windus-Smith	206/438
2006/0200044	A1	9/2006	Freeman	600/583
2006/0200045	A1	9/2006	Roe	600/583
2006/0200046	A1*	9/2006	Windus-Smith et al.	600/583
2006/0200181	A1	9/2006	Fukuzawa	606/181
2006/0200981	A1	9/2006	Bhullar	29/847
2006/0200982	A1	9/2006	Bhullar	29/847
2006/0201804	A1	9/2006	Chambers	204/400
2006/0204399	A1	9/2006	Freeman	422/58
2006/0205029	A1	9/2006	Heller	435/25
2006/0205060	A1	9/2006	Kim	435/287.2
2006/0206135	A1	9/2006	Uehata	606/181
2006/0211127	A1	9/2006	Iwaki	436/169
2006/0211927	A1	9/2006	Acosta	600/316
2006/0211931	A1	9/2006	Blank	600/344
2006/0219551	A1	10/2006	Edelbrock	204/403.14
2006/0222566	A1	10/2006	Brauker et al.	422/68.1
2006/0222567	A1	10/2006	Kloepfer	422/68.1
2006/0224171	A1	10/2006	Sakata	606/181
2006/0224172	A1	10/2006	Levaughn	606/181
2006/0229532	A1	10/2006	Wong	600/583
2006/0229533	A1	10/2006	Hoenes	600/584
2006/0229651	A1	10/2006	Marshall	606/181
2006/0229652	A1	10/2006	Lio et al.	606/182
2006/0231396	A1	10/2006	Yamaoka	204/403.14
2006/0231418	A1	10/2006	Harding	205/775
2006/0231421	A1	10/2006	Diamond	205/777.5
2006/0231423	A1	10/2006	Harding	205/792
2006/0231425	A1	10/2006	Harding	205/792
2006/0231442	A1	10/2006	Windus-Smith	206/438
2006/0232278	A1	10/2006	Diamond	324/444
2006/0232528	A1	10/2006	Harding	345/87
2006/0233666	A1	10/2006	Vu	422/68.1
2006/0234263	A1	10/2006	Light, II	C12Q 1/68
2006/0234369	A1	10/2006	Sih	435/287.1
2006/0235284	A1	10/2006	Lee	600/345
2006/0235454	A1	10/2006	LeVaughn	606/181
2006/0241517	A1	10/2006	Fowler	600/583
2006/0241666	A1	10/2006	Briggs	606/181
2006/0241667	A1	10/2006	Freeman	606/181
2006/0241668	A1	10/2006	Schraga	606/181
2006/0241669	A1	10/2006	Stout	606/182
2006/0247154	A1	11/2006	Palmieri	514/8
2006/0247554	A1	11/2006	Roe	600/583
2006/0247555	A1	11/2006	Harttig	600/584
2006/0247670	A1	11/2006	LeVaughn	606/181
2006/0247671	A1	11/2006	Levaughn	606/182
2006/0254932	A1	11/2006	Hodges	205/775
2006/0259057	A1	11/2006	Kim	606/181
2006/0259058	A1	11/2006	Schiff	606/181
2006/0259060	A1	11/2006	Whitson	606/182
2006/0264718	A1	11/2006	Ruchti	600/310
2006/0264996	A1	11/2006	Levaughn	606/181
2006/0264997	A1	11/2006	Colonna	606/181
2006/0266644	A1	11/2006	Pugh	204/400
2006/0266765	A1	11/2006	Pugh	222/1
2006/0271083	A1	11/2006	Boecker	606/181
2006/0271084	A1	11/2006	Schraga	606/182
2006/0276724	A1	12/2006	Freeman	600/583
2006/0277048	A1	12/2006	Kintzig	704/275
2006/0278545	A1	12/2006	Henning	206/363
2006/0279431	A1	12/2006	Bakarania	340/870.02
2006/0281187	A1	12/2006	Emery	436/169
2006/0282109	A1	12/2006	Jansen	606/181
2006/0286620	A1	12/2006	Werner	435/14
2006/0287664	A1	12/2006	Grage	606/181
2006/0293577	A1	12/2006	Morrison	600/365
2007/0004989	A1	1/2007	Dhillon	600/583
2007/0004990	A1	1/2007	Kistner	600/583
2007/0007183	A1	1/2007	Schulat	209/573
2007/0009381	A1	1/2007	Schulat	422/58
2007/0010839	A1	1/2007	Galloway	606/167

(56) **References Cited**

U.S. PATENT DOCUMENTS

2007/0010841	A1	1/2007	Teo	606/181
2007/0015978	A1	1/2007	Kanayama	600/310
2007/0016079	A1	1/2007	Freeman	600/476
2007/0016103	A1	1/2007	Calasso	600/583
2007/0016104	A1	1/2007	Jansen	600/583
2007/0016239	A1	1/2007	Sato	606/181
2007/0017805	A1	1/2007	Hodges	204/400
2007/0027370	A1	2/2007	Brauker	600/309
2007/0027427	A1	2/2007	Trautman	604/46
2007/0032812	A1	2/2007	Loerwald	606/181
2007/0032813	A1	2/2007	Flynn	606/181
2007/0038149	A1	2/2007	Calasso	600/583
2007/0038235	A1	2/2007	Freeman	606/181
2007/0043305	A1	2/2007	Boecker	600/583
2007/0043386	A1	2/2007	Freeman	606/181
2007/0049901	A1	3/2007	Wu	604/506
2007/0049959	A1	3/2007	Feaster	606/181
2007/0055174	A1	3/2007	Freeman	600/583
2007/0055297	A1	3/2007	Fukuzawa	606/181
2007/0055298	A1	3/2007	Uehata	606/181
2007/0060842	A1	3/2007	Alvarez-Icaza	600/583
2007/0060843	A1	3/2007	Alvarez-Icaza	600/583
2007/0060844	A1	3/2007	Alvarez-Icaza	600/583
2007/0060845	A1	3/2007	Perez	600/583
2007/0061393	A1	3/2007	Moore	205/777.5
2007/0062250	A1	3/2007	Krulevitch	73/1.16
2007/0062251	A1	3/2007	Anex	73/1.36
2007/0062315	A1	3/2007	Hodges	73/864.72
2007/0064516	A1	3/2007	Briggs	365/230.05
2007/0066939	A1	3/2007	Krulevitch	604/152
2007/0066940	A1	3/2007	Karunaratne	604/152
2007/0068807	A1	3/2007	Feldman	204/403.01
2007/0073188	A1	3/2007	Freeman	600/583
2007/0073189	A1	3/2007	Freeman	600/583
2007/0074977	A1	4/2007	Guo	205/792
2007/0078358	A1	4/2007	Escutia	600/573
2007/0078360	A1	4/2007	Matsumoto	600/583
2007/0078474	A1	4/2007	Kim	606/181
2007/0080093	A1	4/2007	Boozer	206/569
2007/0083130	A1	4/2007	Thomson	600/583
2007/0083131	A1	4/2007	Escutia	600/583
2007/0083222	A1	4/2007	Schraga	606/181
2007/0083335	A1	4/2007	Moerman	702/19
2007/0084749	A1	4/2007	Demelo	206/569
2007/0088377	A1	4/2007	LeVaughn et al.	606/181
2007/0092923	A1	4/2007	Chang	435/14
2007/0093728	A1	4/2007	Douglas	600/583
2007/0093752	A1	4/2007	Zhao et al.	604/131
2007/0093753	A1	4/2007	Krulevitch	604/131
2007/0093863	A1	4/2007	Pugh	606/181
2007/0093864	A1	4/2007	Pugh	606/181
2007/0095178	A1	5/2007	Schraga	83/13
2007/0100255	A1	5/2007	Boecker	600/583
2007/0100256	A1	5/2007	Sansom	600/583
2007/0100364	A1	5/2007	Sansom	606/181
2007/0102312	A1	5/2007	Cha	206/363
2007/0106178	A1	5/2007	Roe	600/583
2007/0108048	A1	5/2007	Wang	204/403.01
2007/0112281	A1	5/2007	Olson	600/583
2007/0112367	A1	5/2007	Olson	606/181
2007/0118051	A1	5/2007	Korner et al.	600/583
2007/0119710	A1	5/2007	Goldberger	204/403.01
2007/0123801	A1	5/2007	Goldberger	600/583
2007/0123802	A1	5/2007	Freeman	600/583
2007/0123803	A1	5/2007	Fujiwara et al.	600/583
2007/0129618	A1	6/2007	Goldberger	600/345
2007/0129650	A1	6/2007	Freeman	600/583
2007/0131565	A1	6/2007	Fujiwara	205/777.5
2007/0135828	A1	6/2007	Rutynowski	606/181
2007/0142747	A1	6/2007	Boecker	600/583
2007/0142748	A1	6/2007	Deshmukh	600/583
2007/0142776	A9	6/2007	Kovelman	604/136
2007/0142854	A1	6/2007	Schraga	606/181
2007/0144235	A1	6/2007	Werner	73/1.82
2007/0149875	A1	6/2007	Ouyang	600/347
2007/0149897	A1	6/2007	Ghesquiere	600/583
2007/0161960	A1	7/2007	Chen	604/187
2007/0162064	A1	7/2007	Starnes	606/181
2007/0162065	A1	7/2007	Li	606/182
2007/0167869	A1	7/2007	Roe	600/583
2007/0167870	A1	7/2007	Freeman	600/583
2007/0167871	A1	7/2007	Freeman	600/583
2007/0167872	A1	7/2007	Freeman	600/583
2007/0167873	A1	7/2007	Freeman	600/583
2007/0167874	A1	7/2007	Freeman	600/583
2007/0167875	A1	7/2007	Freeman	600/583
2007/0173739	A1	7/2007	Chan	600/583
2007/0173740	A1	7/2007	Chan	600/583
2007/0173741	A1	7/2007	Deshmukh	600/583
2007/0173742	A1	7/2007	Freeman	600/583
2007/0173743	A1	7/2007	Freeman	600/583
2007/0173874	A1	7/2007	Uschold	606/181
2007/0173875	A1	7/2007	Uschold	606/181
2007/0173876	A1	7/2007	Aylett	606/181
2007/0176120	A1	8/2007	Schwind	250/492.1
2007/0179356	A1	8/2007	Wessel	600/300
2007/0179404	A1	8/2007	Escutia	600/583
2007/0179405	A1	8/2007	Emery	600/583
2007/0179406	A1	8/2007	DeNuzzio	600/583
2007/0182051	A1	8/2007	Harttig	264/138
2007/0185412	A1	8/2007	Boecker	600/583
2007/0185515	A1	8/2007	Stout	606/181
2007/0185516	A1	8/2007	Schosnig	606/181
2007/0191702	A1	8/2007	Yodfat	600/365
2007/0191737	A1	8/2007	Freeman	600/583
2007/0191738	A1	8/2007	Raney	600/583
2007/0191739	A1	8/2007	Roe	600/583
2007/0193019	A1	8/2007	Feldman	29/592.1
2007/0193882	A1	8/2007	Dai	204/403.02
2007/0196240	A1	8/2007	Boozer	422/102
2007/0196242	A1	8/2007	Boozer	422/102
2007/0203514	A1	8/2007	Flaherty	606/707
2007/0203903	A1	8/2007	Attaran Rezaei	707/5
2007/0205103	A1	9/2007	Hodges	240/403.01
2007/0207498	A1	9/2007	Palmieri	435/7.1
2007/0213601	A1	9/2007	Freeman	600/300
2007/0213637	A1	9/2007	Boozer	604/600
2007/0213682	A1	9/2007	Haar	604/500
2007/0213756	A1	9/2007	Freeman	606/181
2007/0218543	A1	9/2007	Flaherty	435/287.1
2007/0219346	A1	9/2007	Trifiro	530/308
2007/0219432	A1	9/2007	Thompson	600/300
2007/0219436	A1	9/2007	Takase	600/310
2007/0219462	A1	9/2007	Briggs	600/583
2007/0219463	A1	9/2007	Briggs	600/583
2007/0219572	A1	9/2007	Deck	606/181
2007/0219573	A1	9/2007	Freeman	606/183
2007/0219574	A1	9/2007	Freeman	606/185
2007/0225741	A1	9/2007	Ikeda	606/182
2007/0225742	A1	9/2007	Abe	606/182
2007/0227907	A1	10/2007	Shah	205/777.5
2007/0227911	A1	10/2007	Wang	205/792
2007/0227912	A1	10/2007	Chatelier	205/792
2007/0229085	A1	10/2007	Kawai	324/450
2007/0232872	A1	10/2007	Prough	600/316
2007/0232956	A1	10/2007	Harman	600/573
2007/0233013	A1	10/2007	Schoenberg	604/192
2007/0233166	A1	10/2007	Stout	606/182
2007/0233167	A1	10/2007	Weiss	606/182
2007/0233395	A1	10/2007	Neel	702/19
2007/0235329	A1	10/2007	Harding	204/403.01
2007/0235347	A1	10/2007	Chatelier	205/792
2007/0239068	A1	10/2007	Rasch-Menges	600/573
2007/0239188	A1	10/2007	Boozer	606/181
2007/0239189	A1	10/2007	Freeman	606/181
2007/0239190	A1	10/2007	Alden	606/181
2007/0240984	A1	10/2007	Popovich	204/403.01
2007/0240986	A1	10/2007	Reymond	204/412
2007/0244380	A1	10/2007	Say	600/347
2007/0244412	A1	10/2007	Lav	600/584
2007/0244498	A1	10/2007	Steg	606/606
2007/0244499	A1	10/2007	Briggs	606/182
2007/0249921	A1	10/2007	Groll	600/347
2007/0249962	A1	10/2007	Alden	600/583

(56) **References Cited**

U.S. PATENT DOCUMENTS

2007/0249963 A1 10/2007 Alden 600/583
2007/0250099 A1 10/2007 Flora 606/181
2007/0251836 A1 11/2007 Hsu 205/792
2007/0254359 A1 11/2007 Rezania 435/325
2007/0255141 A1 11/2007 Esenaliev 600/475
2007/0255178 A1 11/2007 Alvarez-Icaza 600/583
2007/0255179 A1 11/2007 Alvarez-Icaza 600/583
2007/0255180 A1 11/2007 Alvarez-Icaza 600/583
2007/0255181 A1 11/2007 Alvarez-Icaza 600/583
2007/0255300 A1 11/2007 Vanhiel 606/181
2007/0255301 A1 11/2007 Freeman 606/181
2007/0255302 A1 11/2007 Koeppel 606/182
2007/0260271 A1 11/2007 Freeman 606/181
2007/0260272 A1 11/2007 Weiss 606/181
2007/0264721 A1 11/2007 Buck 436/150
2007/0265511 A1 11/2007 Renouf 600/319
2007/0265532 A1 11/2007 Maynard 600/477
2007/0265654 A1 11/2007 Iio et al. 606/185
2007/0273901 A1 11/2007 Baskeyfield 358/1.9
2007/0273903 A1 11/2007 Baskeyfield 358/1.9
2007/0273904 A1 11/2007 Robinson 358/1.9
2007/0273928 A1 11/2007 Robinson 358/1.9
2007/0276197 A1 11/2007 Harmon 600/300
2007/0276211 A1 11/2007 Mir 600/345
2007/0276290 A1 11/2007 Boecker 600/583
2007/0276425 A1 11/2007 Kim 606/186
2007/0276621 A1 11/2007 Davies 702/104
2007/0278097 A1 12/2007 Bhullar 204/403.01
2007/0282186 A1 12/2007 Gilmore 600/365
2007/0282362 A1 12/2007 Berg 606/181
2007/0288047 A1 12/2007 Thoes 606/182
2007/0293743 A1 12/2007 Monfre 606/182
2007/0293744 A1 12/2007 Monfre 600/316
2007/0293790 A1 12/2007 Bainczyk 600/583
2007/0293882 A1 12/2007 Harttig 606/181
2007/0293883 A1 12/2007 Horie 606/181
2007/0295616 A1 12/2007 Harding 205/777.5
2008/0004651 A1 1/2008 Nicholls 606/182
2008/0007141 A1 1/2008 Deck 310/328
2008/0009767 A1 1/2008 Effenhauser 600/583
2008/0009768 A1 1/2008 Sohrab 600/583
2008/0009892 A1 1/2008 Freeman 606/181
2008/0009893 A1 1/2008 LeVaughn 606/181
2008/0015425 A1 1/2008 Douglas et al. 606/181
2008/0015623 A1 1/2008 Deck 606/181
2008/0017522 A1 1/2008 Heller et al. 205/777.5
2008/0019870 A1 1/2008 Newman 422/68.1
2008/0021291 A1 1/2008 Zocchi 600/300
2008/0021293 A1 1/2008 Schurman 600/316
2008/0021295 A1 1/2008 Wang et al. 600/347
2008/0021296 A1 1/2008 Creaven 600/365
2008/0021346 A1 1/2008 Haar 600/583
2008/0021490 A1 1/2008 Briggs 606/181
2008/0021491 A1 1/2008 Freeman 606/181
2008/0021492 A1 1/2008 Freeman 606/181
2008/0021493 A1 1/2008 Levaughn 606/181
2008/0021494 A1 1/2008 Schmelzeisen-Redeker et al. 606/181
2008/0027385 A1 1/2008 Freeman 604/117
2008/0031778 A1 2/2008 Kramer 422/68.1
2008/0033268 A1 2/2008 Stafford 600/345
2008/0033318 A1 2/2008 Mace 600/583
2008/0033319 A1 2/2008 Kloepfer 600/583
2008/0033468 A1 2/2008 Lathrop 606/181
2008/0033469 A1 2/2008 Winheim 606/181
2008/0034834 A1 2/2008 Schell 73/1.02
2008/0034835 A1 2/2008 Schell 73/1.02
2008/0039885 A1 2/2008 Purcell 606/182
2008/0039886 A1 2/2008 Shi 606/182
2008/0039887 A1 2/2008 Conway 606/182
2008/0040919 A1 2/2008 Griss 29/777
2008/0045825 A1 2/2008 Melker 600/365
2008/0045992 A1 2/2008 Schraga 606/182
2008/0047764 A1 2/2008 Lee G08C 21/00
2008/0053201 A1 3/2008 Roesicke 73/61.41
2008/0057484 A1 3/2008 Miyata 434/739
2008/0058624 A1 3/2008 Smart 600/345
2008/0058626 A1 3/2008 Miyata 600/365
2008/0058631 A1 3/2008 Draudt 600/385
2008/0058847 A1 3/2008 Abe 606/181
2008/0058848 A1 3/2008 Griffin 606/182
2008/0058849 A1 3/2008 Conway 606/183
2008/0060424 A1 3/2008 Babic 73/61.41
2008/0064986 A1 3/2008 Kraemer 600/583
2008/0064987 A1 3/2008 Escutia 600/583
2008/0065130 A1 3/2008 Patel 606/181
2008/0065131 A1 3/2008 List 606/181
2008/0065132 A1 3/2008 Trissel 606/182
2008/0065133 A1 3/2008 Kennedy 606/182
2008/0065134 A1 3/2008 Conway 606/182
2008/0073224 A1 3/2008 Diamond 205/775
2008/0077048 A1 3/2008 Escutia 600/583
2008/0077167 A1 3/2008 Flynn 606/172
2008/0077168 A1 3/2008 Nicholls 606/182
2008/0081969 A1 4/2008 Feldman 600/322
2008/0081976 A1 4/2008 Hodges 600/345
2008/0082023 A1 4/2008 Deck 600/583
2008/0082116 A1 4/2008 Lathrop 606/181
2008/0082117 A1 4/2008 Ruf 606/182
2008/0086042 A1 4/2008 Brister 600/347
2008/0086044 A1 4/2008 Brister 606/182
2008/0086273 A1 4/2008 Shults 702/19
2008/0093227 A1 4/2008 Diamond 205/775
2008/0093228 A1 4/2008 Diamond 205/782
2008/0093230 A1 4/2008 Diamond 205/792
2008/0094804 A1 4/2008 Reynolds 600/727
2008/0097171 A1 4/2008 Smart 600/309
2008/0097241 A1 4/2008 Maltezos 600/576
2008/0097503 A1 4/2008 Creaven 606/182
2008/0098802 A1 5/2008 Burke 73/61.61
2008/0103396 A1 5/2008 Johnson 600/477
2008/0103415 A1 5/2008 Roe 600/583
2008/0103517 A1 5/2008 Takemoto 606/182
2008/0105024 A1 5/2008 Creaven 73/1.02
2008/0105568 A1 5/2008 Wu 205/780.5
2008/0108130 A1 5/2008 Nakaminami 435/287.1
2008/0108942 A1 5/2008 Brister 604/118
2008/0109024 A1 5/2008 Berkovitch 606/181
2008/0109025 A1 5/2008 Yang 606/182
2008/0109259 A1 5/2008 Thompson 705/3
2008/0114227 A1 5/2008 Haar 600/347
2008/0114228 A1 5/2008 McCluskey 600/365
2008/0118400 A1 5/2008 Neel 422/68.1
2008/0119703 A1 5/2008 Brister 600/347
2008/0119704 A1 5/2008 Brister 600/347
2008/0119706 A1 5/2008 Brister 600/365
2008/0119761 A1 5/2008 Boecker 600/583
2008/0119883 A1 5/2008 Conway 606/181
2008/0119884 A1 5/2008 Flora 606/182
2008/0121533 A1 5/2008 Hodges 205/775
2008/0125800 A1 5/2008 List 606/181
2008/0125801 A1 5/2008 List 606/181
2008/0134806 A1 6/2008 Capriccio 73/863.21
2008/0134810 A1 6/2008 Neel 73/866
2008/0135559 A1 6/2008 Byrd 220/506
2008/0140105 A1 6/2008 Zhong 606/182
2008/0144022 A1 6/2008 Schulat 356/213
2008/0146899 A1 6/2008 Ruchti 600/316
2008/0146966 A1 6/2008 LeVaughn 600/583
2008/0147108 A1 6/2008 Kennedy 606/182
2008/0149268 A1 6/2008 Zhao 156/299
2008/0149599 A1 6/2008 Bohm 216/94
2008/0152507 A1 6/2008 Bohm 417/44.1
2008/0154187 A1 6/2008 Krulevitch 604/48
2008/0154513 A1 6/2008 Kovatchev 702/19
2008/0159913 A1 7/2008 Jung 600/57
2008/0161664 A1 7/2008 Mastrototaro 600/347
2008/0161724 A1 7/2008 Roe 600/583
2008/0161725 A1 7/2008 Wong 600/583
2008/0166269 A1 7/2008 Jansen 422/63
2008/0167578 A1 7/2008 Bryer 600/583
2008/0167673 A1 7/2008 Zhong 606/181
2008/0188771 A1 8/2008 Boecker 600/583
2008/0194987 A1 8/2008 Boecker 600/583

(56) **References Cited**

U.S. PATENT DOCUMENTS

2008/0194989	A1	8/2008	Briggs	600/583
2008/0208026	A1	8/2008	Noujaim	600/365
2008/0208079	A1	8/2008	Hein	600/583
2008/0210574	A1	9/2008	Boecker	205/777.5
2008/0214909	A1	9/2008	Fuerst	600/309
2008/0214917	A1	9/2008	Boecker	600/347
2008/0214919	A1	9/2008	Harmon	600/365
2008/0214956	A1	9/2008	Briggs	600/575
2008/0228212	A1	9/2008	List	606/182
2008/0249435	A1	10/2008	Haar	600/583
2008/0249554	A1	10/2008	Freeman	606/181
2008/0255598	A1	10/2008	LeVaughn et al.	606/183
2008/0262387	A1	10/2008	List	600/583
2008/0262388	A1	10/2008	List	600/583
2008/0267822	A1	10/2008	List	422/68.1
2008/0269723	A1	10/2008	Mastrototaro	604/890.1
2008/0269791	A1	10/2008	Hoenes	606/181
2008/0275365	A1	11/2008	Guthrie	600/584
2008/0275384	A1	11/2008	Mastrototaro	604/66
2008/0277291	A1	11/2008	Heller	205/777.5
2008/0277292	A1	11/2008	Heller	205/777.5
2008/0277293	A1	11/2008	Heller	205/777.5
2008/0277294	A1	11/2008	Heller	205/777.5
2008/0286149	A1	11/2008	Roe	422/58
2008/0294068	A1	11/2008	Briggs	600/583
2008/0300614	A1	12/2008	Freeman	606/181
2008/0318193	A1	12/2008	Alvarez-Icaza	434/262
2008/0319284	A1	12/2008	Alvarez-Icaza	600/309
2008/0319291	A1	12/2008	Freeman	600/347
2009/0005664	A1	1/2009	Freeman	600/347
2009/0020438	A1	1/2009	Hodges	205/782
2009/0024009	A1	1/2009	Freeman	600/309
2009/0024059	A1	1/2009	Hoerauf	600/583
2009/0026075	A1	1/2009	Harding	204/403.14
2009/0026091	A1	1/2009	Harding	205/777.5
2009/0027040	A1	1/2009	Kermani	324/123
2009/0029479	A1	1/2009	Docherty	436/149
2009/0043177	A1	2/2009	Milledge	600/309
2009/0043183	A1	2/2009	Kermani	600/365
2009/0048536	A1	2/2009	Freeman	600/583
2009/0054813	A1	2/2009	Freeman	600/584
2009/0057146	A1	3/2009	Teodorezyk	204/403.01
2009/0069716	A1	3/2009	Freeman	600/583
2009/0076415	A1	3/2009	Moerman	
2009/0084687	A1	4/2009	Chatelier	205/792
2009/0099477	A1	4/2009	Hoenes et al.	
2009/0105572	A1	4/2009	Malecha	600/365
2009/0105573	A1	4/2009	Malecha	600/365
2009/0112123	A1	4/2009	Freeman	600/583
2009/0112155	A1	4/2009	Zhao	604/67
2009/0112180	A1	4/2009	Krulevitch	604/506
2009/0112185	A1	4/2009	Krulevitch	604/523
2009/0112247	A1	4/2009	Freeman et al.	
2009/0118752	A1	5/2009	Perez et al.	
2009/0119760	A1	5/2009	Hung et al.	
2009/0124932	A1	5/2009	Freeman	606/181
2009/0131829	A1	5/2009	Freeman	600/583
2009/0131830	A1	5/2009	Freeman	600/583
2009/0131964	A1	5/2009	Freeman	606/181
2009/0131965	A1	5/2009	Freeman	606/181
2009/0137930	A1	5/2009	Freeman	606/181
2009/0138032	A1	5/2009	Freeman	606/181
2009/0139300	A1	6/2009	Pugh	73/1.36
2009/0177117	A1	7/2009	Amano et al.	600/583
2009/0184004	A1	7/2009	Chatelier	205/777.5
2009/0187351	A1	7/2009	Orr	702/19
2009/0192410	A1	7/2009	Freeman	600/583
2009/0192411	A1	7/2009	Freeman	600/583
2009/0196580	A1	8/2009	Freeman	386/124
2009/0204025	A1	8/2009	Marsot	600/573
2009/0216100	A1	8/2009	Ebner	600/347
2009/0237262	A1	9/2009	Smith	600/347
2009/0240127	A1	9/2009	Ray	600/365
2009/0247838	A1	10/2009	Cummings	600/309
2009/0247982	A1	10/2009	Krulevitch	604/500
2009/0259146	A1	10/2009	Freeman	600/583
2009/0270765	A1	10/2009	Ghesquiere et al.	
2009/0280551	A1	11/2009	Cardosi	435/190
2009/0281457	A1	11/2009	Faulkner	600/583
2009/0281458	A1	11/2009	Faulkner	600/583
2009/0281459	A1	11/2009	Faulkner	600/583
2009/0301899	A1	12/2009	Hodges	205/777.5
2009/0302872	A1	12/2009	Haggett	324/715
2009/0302873	A1	12/2009	Haggett	324/724
2009/0322630	A1	12/2009	Friman	343/720
2009/0325307	A1	12/2009	Haggett	436/150
2010/0016700	A1	1/2010	Sieh	600/365
2010/0018878	A1	1/2010	Davies	205/782
2010/0030110	A1	2/2010	Choi	600/583
2010/0041084	A1	2/2010	Stephens	435/14
2010/0094170	A1	4/2010	Wilson et al.	
2010/0094324	A1	4/2010	Huang et al.	
2010/0113981	A1	5/2010	Oki et al.	600/587
2010/0198107	A1	8/2010	Groll et al.	600/583
2010/0256525	A1	10/2010	List et al.	600/583
2010/0274273	A1	10/2010	Schraga et al.	
2010/0292611	A1*	11/2010	Lum et al.	600/583
2010/0324452	A1	12/2010	Freeman et al.	600/583
2010/0324582	A1	12/2010	Nicholls et al.	
2011/0077478	A1	3/2011	Freeman et al.	
2011/0077553	A1	3/2011	Alroy	600/573
2011/0098541	A1	4/2011	Freeman et al.	600/309
2011/0178429	A1	7/2011	Jacobs	
2011/0184448	A1	7/2011	Brown et al.	
2012/0149999	A1	6/2012	Freeman et al.	600/309
2012/0184876	A1	7/2012	Freeman et al.	
2012/0232425	A1	9/2012	Freeman et al.	600/583
2012/0271197	A1	10/2012	Castle et al.	600/583
2012/0296233	A9	11/2012	Freeman	600/583
2013/0261500	A1	10/2013	Jacobs	

FOREIGN PATENT DOCUMENTS

DE	3538313	A1	4/1986	B08B 5/02
DE	4212315	A1	10/1993	A61B 5/14
DE	4320347		12/1994	C07D 239/82
DE	4344452		6/1995	C07D 471/04
DE	4420232		12/1995	
DE	29800611	U	7/1998	A61B 17/32
DE	19819407		11/1999	G01N 33/48
DE	20009475		10/2000	A61B 5/15
DE	29824204		10/2000	G01N 33/48
DE	10053974		12/2000	A61M 1/00
DE	10032042		1/2002	
DE	10057832		2/2002	
DE	10057832	C1	2/2002	A61B 5/145
DE	10142232		3/2003	
DE	10208575		8/2003	
DE	10208575	C1	8/2003	A61B 5/145
DE	10208575	C1	8/2003	
DE	10245721		12/2003	
DE	10361560		7/2005	
DE	10361560	A1	7/2005	A61B 5/15
EP	0112498	A2	7/1984	A47L 1/00
EP	137975	A2	4/1985	A61B 5/14
EP	0160768		11/1985	A61B 5/00
EP	199484		10/1986	
EP	0199484	A2	10/1986	A61B 5/14
EP	0254246		1/1988	G01N 21/03
EP	0289 269		11/1988	
EP	0317847	A1	5/1989	A61B 5/14
EP	0320109		6/1989	
EP	359831		3/1990	
EP	364208		4/1990	
EP	0364208	A1	4/1990	G01N 33/58
EP	0170375		5/1990	
EP	0136362		12/1990	G01N 27/327
EP	406304		1/1991	
EP	0449525		10/1991	A61B 5/14
EP	0453283		10/1991	
EP	0263948		2/1992	
EP	0449147	A2	8/1992	A61M 5/32
EP	505475		9/1992	
EP	505494		9/1992	

(56) **References Cited**

FOREIGN PATENT DOCUMENTS

EP	505504		9/1992	
EP	0530994		3/1993	C07D 239/80
EP	0374355		6/1993	
EP	552223		7/1993	
EP	0351891		9/1993	
EP	0593096		4/1994	G01N 27/327
EP	0630609	A2	12/1994	A61B 5/14
EP	0415388		5/1995	
EP	0654659		5/1995	G01N 3/52
EP	0505494		7/1995	
EP	0662367	A1	7/1995	B24C 1/00
EP	0359831		8/1995	
EP	0471986		10/1995	
EP	0368474		12/1995	
EP	0461601		12/1995	
EP	0429076		1/1996	C12M 1/140
EP	0552223		7/1996	G01N 33/48
EP	0735363		10/1996	
EP	759553		2/1997	
EP	0505504		3/1997	
EP	0777123		6/1997	G01N 33/487
EP	0406304		8/1997	
EP	0537761		8/1997	
EP	0795601		9/1997	
EP	0562370		11/1997	G01N 27/327
EP	0415393		12/1997	
EP	817809		1/1998	
EP	0823239		2/1998	A61N 1/36
EP	0560336		5/1998	
EP	847447		6/1998	
EP	0878 708		11/1998	G01N 27/327
EP	874984		11/1998	
EP	0505475		3/1999	
EP	898936		3/1999	
EP	0898936	A2	3/1999	A61B 5/14
EP	0901018		3/1999	G01N 33/48
EP	0470649		6/1999	
EP	937249		8/1999	
EP	938493		9/1999	
EP	951939		10/1999	
EP	0951939	A2	10/1999	B01L 11/00
EP	0847447		11/1999	
EP	0964059		12/1999	
EP	0964060		12/1999	C12Q 1/00
EP	0969097		1/2000	
EP	985376		3/2000	
EP	0985376	A1	3/2000	A61B 5/15
EP	1021950		7/2000	
EP	0894869		2/2001	
EP	1074832		2/2001	G01N 27/327
EP	1093854		4/2001	
EP	1101443	A2	5/2001	A61B 5/15
EP	1114995		7/2001	G01N 33/487
EP	0736607		8/2001	G01N 27/327
EP	0874984		11/2001	
EP	1157660		11/2001	A61B 5/15
EP	0730037		12/2001	
EP	0636879		1/2002	
EP	1174083		1/2002	
EP	01174083		1/2002	A61B 5/15
EP	0851224		3/2002	G01N 27/327
EP	0759553		5/2002	G01N 27/416
EP	0856586		5/2002	
EP	0817809		7/2002	C08G 77/26
EP	0872728		7/2002	
EP	0795748		8/2002	G01N 27/327
EP	0685737		9/2002	G01N 27/327
EP	0958495		11/2002	
EP	0937249		12/2002	G01N 33/52
EP	1337182		8/2003	
EP	0880692		1/2004	G01N 27/327
EP	01374770		1/2004	A61B 5/15
EP	1374770		2/2004	
EP	1401233		4/2004	
EP	1404232		4/2004	
EP	1404233		4/2004	
EP	1246688		5/2004	B01D 71/10
EP	1486766		12/2004	G01N 1/00
EP	1502614		2/2005	
EP	1643908		4/2006	
EP	1790288		5/2007	A61B 5/151
EP	1881322	A1	1/2008	G01N 33/487
EP	1921992		5/2008	
EP	2039294		3/2009	A61B 5/151
EP	2130493	A1	12/2009	A61B 5/15
FI	WO 2007/010087	A2	1/2007	A61B 5/151
FR	2555432		5/1985	
FR	2622457		11/1987	A61M 5/20
GB	1558111		12/1979	A61B 5/05
GB	2168815		6/1986	G01N 27/30
GB	2331936		6/1999	
GB	2335860		10/1999	
GB	2335990		10/1999	
GB	WO 2005045414	A1	5/2005	C12Q 1/00
IL	WO 2010109461	A1	9/2010	A61B 5/151
JP	04-194660		7/1992	
JP	HEI 4 194660		7/1992	G01N 27/28
JP	1996010208		12/1992	
JP	9-276235		10/1997	A61B 5/00
JP	10-104906		1/1998	
JP	1014906		1/1998	A61B 5/14
JP	2000-116768		4/2000	A61M 1/02
JP	WO 2007/088905	A1	8/2007	A61B 5/1473
NL	WO 2008/085052	A2	7/2008	A61B 5/15
WO	WO 80/01389		7/1980	
WO	WO 85/04089		9/1985	
WO	WO86/05966		10/1986	A61B 5/00
WO	WO 86/07632		12/1986	
WO	WO 91/09139		6/1991	
WO	WO92/03099		3/1992	A61B 17/32
WO	WO92/06971		4/1992	C07D 401/06
WO	WO92/07263		4/1992	C12Q 1/00
WO	WO92/07468		5/1992	A01N 43/90
WO	WO93/00044		1/1993	A61B 17/32
WO	WO 93/02720		2/1993	A61M 5/00
WO	WO 93/06979		4/1993	
WO	WO93/09723		5/1993	A61B 17/32
WO	WO 93/12726		7/1993	A61B 17/34
WO	WO 93/25898		12/1993	
WO	WO 94/27140		11/1994	
WO	WO 94/29703		12/1994	
WO	WO 94/29704		12/1994	
WO	WO 94/29731		12/1994	
WO	WO 95/00662		1/1995	
WO	WO 95/06240		3/1995	G01N 21/77
WO	WO 95/10223		4/1995	
WO	WO95/12583		5/1995	C07D 239/80
WO	WO 95/22597		8/1995	
WO	WO96/14799		5/1996	A61B 17/32
WO	WO 96/30431		10/1996	
WO	WO96/37148		11/1996	A61B 5/15
WO	WO 97/02359		1/1997	
WO	WO 97/02487		1/1997	
WO	WO 97/11883		4/1997	B65B 1/00
WO	WO 97/18464		5/1997	
WO	WO97/28741		8/1997	A61B 5/15
WO	WO 97/30344		8/1997	
WO	WO 97/42882		11/1997	
WO	WO 97/42888		11/1997	A61B 5/00
WO	WO 97/45720		12/1997	
WO	WO 98/03431		1/1998	
WO	WO98/14436		4/1998	C07B 59/00
WO	WO 98/19159		5/1998	
WO	WO98/19609		5/1998	A61B 17/32
WO	WO 98/20332		5/1998	
WO	WO 98/20348		5/1998	
WO	WO98/20867		5/1998	A61K 31/00
WO	WO 98/24366		6/1998	
WO	WO 98 24373		6/1998	A61B 17/00
WO	WO 98/35225		8/1998	
WO	WO98/45276		10/1998	C07D 239/80
WO	WO 99/03584		1/1999	
WO	WO 99/05966		2/1999	
WO	WO99/07295		2/1999	

(56) **References Cited**

FOREIGN PATENT DOCUMENTS

WO	WO 99/07431		2/1999	A61M 25/06
WO	WO 99/62576		3/1999	
WO	WO 99/17854		4/1999	G06F 3/28
WO	WO 99/18532		4/1999	G06F 19/00
WO	WO 99/19507		4/1999	
WO	WO 99/19717		4/1999	
WO	WO 99/27483		6/1999	G06F 19/00
WO	WO 99/27852		6/1999	
WO	WO 99/13100		12/1999	
WO	WO 99/64580		12/1999	
WO	WO 00/06024		2/2000	A61N 5/16
WO	WO 00/09184		2/2000	
WO	WO 00/11578		3/2000	G06F 17/40
WO	WO 00/15103		3/2000	A61B 5/00
WO	WO 00/17799		3/2000	G06F 17/60
WO	WO 00/17800		3/2000	G06F 17/60
WO	WO 00/18293		4/2000	A61B 5/00
WO	WO 00/19346		4/2000	G06F 17/60
WO	WO 00/20626		4/2000	C12Q 1/00
WO	WO00/29577		5/2000	C07K 14/705
WO	WO 00/30186		5/2000	H01L 41/09
WO	WO 00/32097		6/2000	A61B 5/00
WO	WO 00/32098		6/2000	A61B 5/00
WO	WO 00/33236		6/2000	G06F 159/00
WO	WO 00/39914		7/2000	
WO	WO 00/42422		7/2000	
WO	WO 00/44084		7/2000	H02K 37/12
WO	WO00/46854		8/2000	G02F 1/1333
WO	WO 00/50771		8/2000	F03G 7/00
WO	WO00/55915		9/2000	H01L 21/98
WO	WO 00/60340		10/2000	G01N 27/237
WO	WO 00/64022		10/2000	H02H 3/33
WO	WO 00/67245		11/2000	
WO	WO 00/67268		11/2000	H01H 1/00
WO	WO 00/72452		11/2000	G06F 17/60
WO	WO 01/00090		1/2001	A61B 5/15
WO	WO 01/15807	A1	3/2001	B01L 3/100
WO	WO 01/16578	A1	3/2001	G01N 21/35
WO	WO 01/75433		3/2001	
WO	WO 01/23885		4/2001	G01N 33/487
WO	WO 01/25775		4/2001	G01N 27/30
WO	WO 01/26813		4/2001	B01L 3/00
WO	WO01/29037		4/2001	A61K 31/44
WO	WO 01/33216		5/2001	G01N 33/487
WO	WO 01/34029		5/2001	A61B 5/15
WO	WO 01/36955		5/2001	G01N 27/327
WO	WO 01/37174		5/2001	G06F 17/60
WO	WO 01/45014	A1	6/2001	G06F 17/60
WO	WO 01/40788		7/2001	G01N 27/237
WO	WO 01/57510		8/2001	G01N 27/30
WO	WO 01/63271		8/2001	G01N 27/327
WO	WO 01/64105		9/2001	
WO	WO 01/66010		9/2001	A61B 5/15
WO	WO 01/69505		9/2001	G06F 17/60
WO	WO-0166010	A1	9/2001	
WO	WO 01/72220	A1	10/2001	A61B 5/00
WO	WO 01/72225		10/2001	A61B 5/15
WO	WO 01/73124		10/2001	C12Q 1/68
WO	WO 01/73395		10/2001	G01N 1/00
WO	WO 01/89691		11/2001	
WO	WO 01/91634	A2	12/2001	A61B 5/00
WO	WO 01/95806		12/2001	A61B 5/15
WO	WO 02/00101		1/2002	
WO	WO 02/02796		1/2002	
WO	WO 02/08750		1/2002	
WO	WO 02/08753		1/2002	
WO	WO 02/08950		1/2002	
WO	WO 02/18940		3/2002	
WO	WO 02/21317		3/2002	G06F 17/00
WO	WO 02/25551		3/2002	G06F 17/60
WO	WO 02/32559		4/2002	
WO	WO 02/41227		5/2002	G06F 17/60
WO	WO 02/41779		5/2002	
WO	WO 02/44948		6/2002	
WO	WO 02/49507		6/2002	A61B 10/00
WO	WO/0249507		6/2002	A61B 10/00
WO	WO 02/056769		7/2002	A61B 5/00
WO	WO 02/059734		8/2002	
WO	WO 02/069791		9/2002	
WO	WO 02/077638		10/2002	
WO	WO 02/100251		12/2002	
WO	WO 02/100252		12/2002	
WO	WO 02/100253		12/2002	
WO	WO 02/100254		12/2002	
WO	WO 02/100460		12/2002	
WO	WO 02/100461		12/2002	
WO	WO 02/101343		12/2002	
WO	WO 02/101359		12/2002	
WO	WO 03/000321		1/2003	
WO	WO 03/023389		3/2003	
WO	WO 03/042691		5/2003	
WO	WO 03039369	A	5/2003	A61B 10/00
WO	WO 03/045557		6/2003	
WO	WO 03/046542		6/2003	
WO	WO 03/049609		6/2003	
WO	WO 03/050534		6/2003	
WO	WO 03/066128		8/2003	
WO	WO 03/070099		8/2003	A61B 5/15
WO	WO 03/071940		9/2003	
WO	WO 03/082091		10/2003	A61B 5/00
WO	WO 03/088824		10/2003	A61B 5/15
WO	WO 03/088834		10/2003	A61B 5/00
WO	WO 03/088835		10/2003	A61B 5/15
WO	WO 03/088851	A1	10/2003	A61B 17/14
WO	WO 03/094752		11/2003	
WO	WO 03/101297		12/2003	A61B 5/15
WO	WO 2004/008130		1/2004	
WO	WO 2004/022133		3/2004	
WO	WO-2004017964	A1	3/2004	
WO	WO 2004/026130		4/2004	
WO	WO 2004/040285	A2	5/2004	G01N 27/00
WO	WO 2004/040287	A1	5/2004	
WO	WO 2004/040948		5/2004	
WO	WO 2004/041082		5/2004	
WO	WO 2004/045375		6/2004	A61B 5/15
WO	WO 2004/054455		7/2004	
WO	WO 2004/060174		7/2004	
WO	WO 2004/060446		7/2004	
WO	WO 2004/091693		10/2004	
WO	WO 2004/098405		11/2004	
WO	WO 2004/003147		12/2004	
WO	WO 2004/107964		12/2004	
WO	WO 2004/107975		12/2004	
WO	WO 2004/112602		12/2004	
WO	WO 2004/112612		12/2004	A61B 5/15
WO	WO-2004103147	A2	12/2004	
WO	WO 2005/001418		1/2005	
WO	WO 2005/006939		1/2005	
WO	WO 2005/011774		2/2005	
WO	WO 2005/013824		2/2005	A61B 5/15
WO	WO 2005/016125		2/2005	
WO	WO 2005/018425		3/2005	
WO	WO 2005/018430		3/2005	
WO	WO 2005/018454		3/2005	A61M 5/15
WO	WO 2005/018709		3/2005	
WO	WO 2005/018710		3/2005	
WO	WO 2005/018711		3/2005	A61B 17/32
WO	WO 2005/022143		3/2005	
WO	WO 2005/023088		3/2005	
WO	WO 2005/033659		4/2005	
WO	WO 2005/034720		4/2005	
WO	WO 2005/034721		4/2005	
WO	WO 2005/034741		4/2005	A61B 5/00
WO	WO 2005/034778		4/2005	A61M 17/32
WO	WO 2005/035017		4/2005	
WO	WO 2005/035018		4/2005	A61B 17/34
WO	WO 2005/037095		4/2005	
WO	WO 2005/046477		5/2005	
WO	WO 2005/065399		7/2005	
WO	WO 2005/065414		7/2005	
WO	WO 2005/065415		7/2005	
WO	WO 2005/072604		8/2005	A61B 5/00
WO	WO2005/084546	A2	9/2005	A61B 5/15
WO	WO 2005/084557		9/2005	A61B 17/14

(56) **References Cited**

FOREIGN PATENT DOCUMENTS

WO	WO 2005/104948	11/2005	A61B 5/15
WO	WO 2005/114185	12/2005	G01N 21/64
WO	WO 2005/116622	12/2005	
WO	WO 2005/119234	12/2005	
WO	WO 2005/120197	12/2005	A61B 17/14
WO	WO 2005/120199	12/2005	A61B 5/00
WO	WO 2005/120365	12/2005	A61B 17/32
WO	WO 2005/121759	12/2005	
WO	WO 2006/001797	1/2006	A61B 17/14
WO	WO 2006/001973	1/2006	A61B 5/15
WO	WO-2006005545 A1	1/2006	
WO	WO 2006005545 A2	1/2006	
WO	WO 2006/011062	2/2006	
WO	WO 2006/013045	2/2006	A61B 5/15
WO	WO 2006/015615	2/2006	C12Q 1/00
WO	WO 2006/027702 A2	3/2006	
WO	WO 2006/031920	3/2006	A61B 5/00
WO	WO 2006/032391	3/2006	A61B 5/15
WO	WO 2006/072004	7/2006	A63H 5/00
WO	WO 2006/105146	10/2006	A61B 5/05
WO	WO 2006/116441	11/2006	A61B 5/151
WO	WO 2007/025635	3/2007	A61B 5/15
WO	WO 2007/044834	4/2007	A61B 5/00
WO	WO 2007/054335	5/2007	A61B 5/15
WO	WO 2007/070719	6/2007	A61B 5/00
WO	WO 2007/084367	7/2007	A61B 5/00
WO	WO 2007/106470	9/2007	G01N 1/00
WO	WO 2007/119900	10/2007	A61B 5/157
WO	WO 2008/112268	9/2008	A61B 17/32
WO	WO 2008/112279	9/2008	A61B 5/155
WO	WO-2008112268 A2	9/2008	
WO	WO-2008112279 A1	9/2008	

OTHER PUBLICATIONS

Woltbeis et al. (Sol-gel based glucose biosensors employing optical oxygen transducers, and a method for compensating for variable oxygen background, Biosensors & Bioelectronics 15 (2000) pp. 69-76).

Machine translation of DE 10053974 pp. 1-4, provided by epo.org.

A. Bott, W. Heineman, Chronocoulometry, Current Separations, 2004, 20, pp. 121.

* cited by examiner

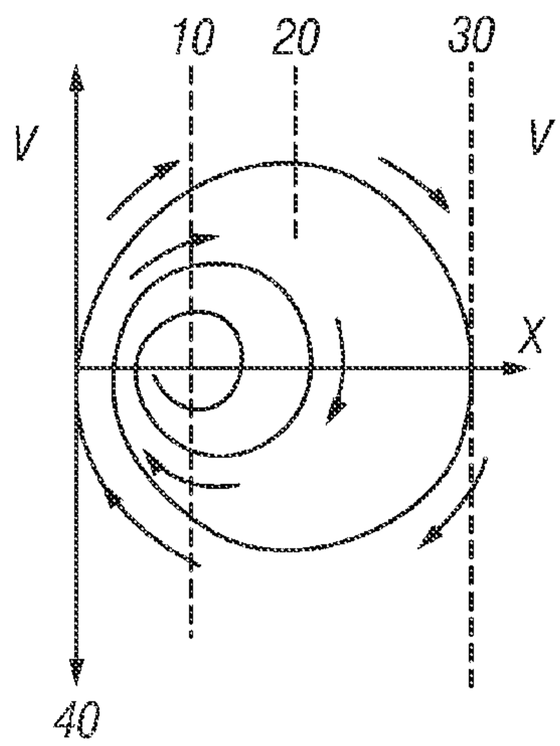

FIG. 1

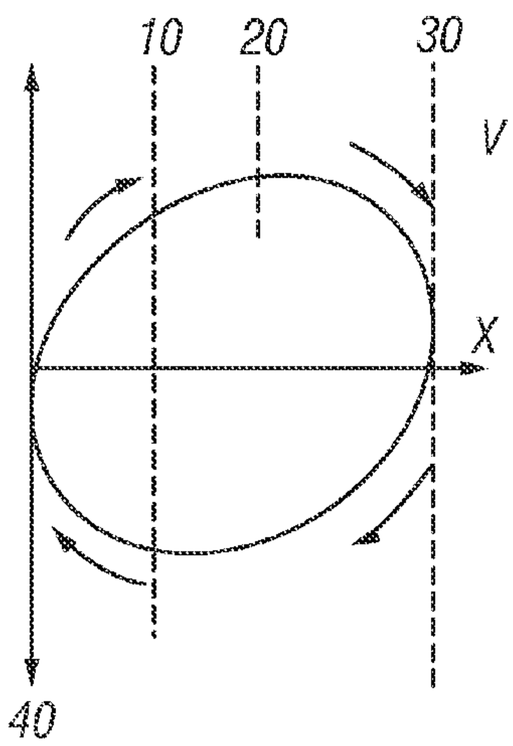

FIG. 2

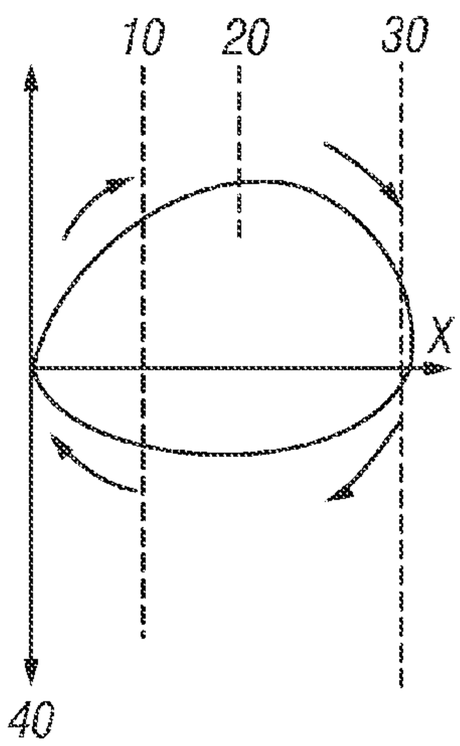

FIG. 3

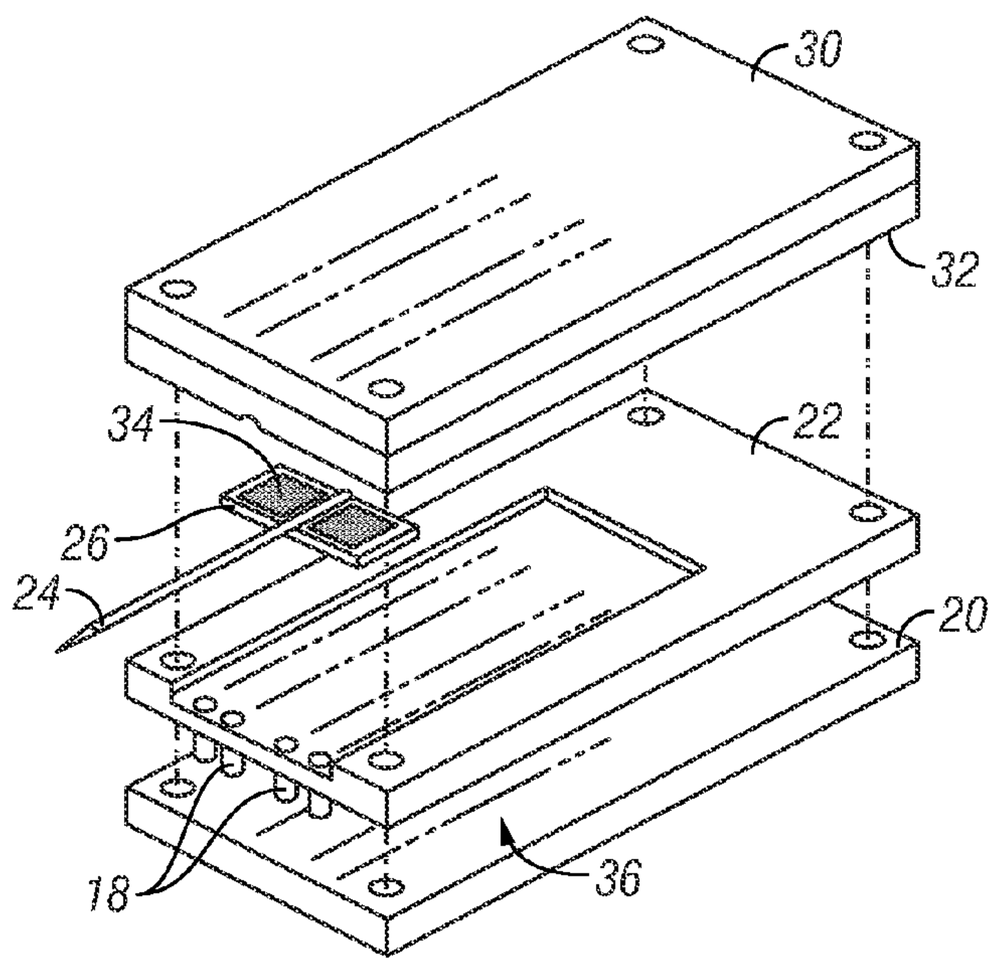

FIG. 4

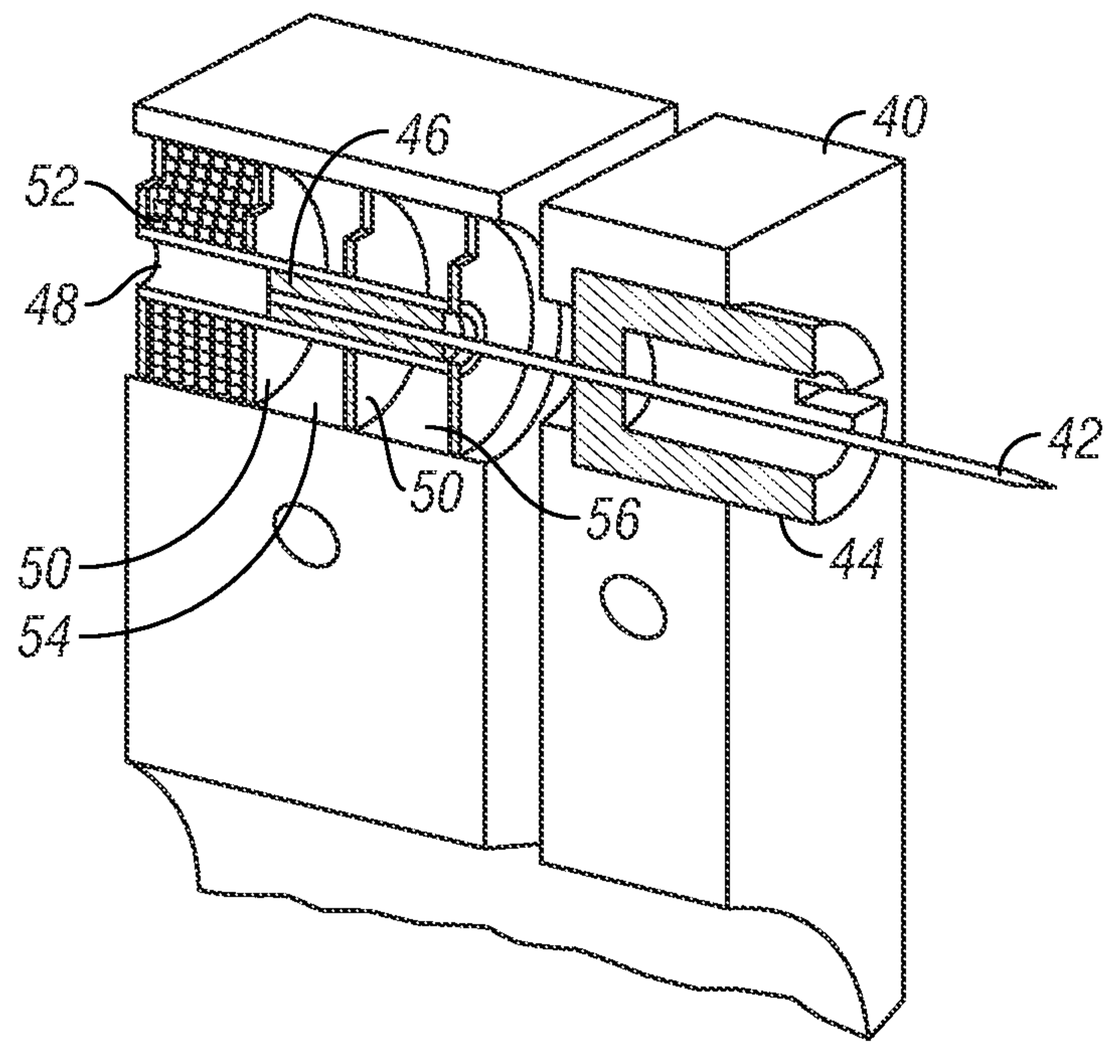

FIG. 5

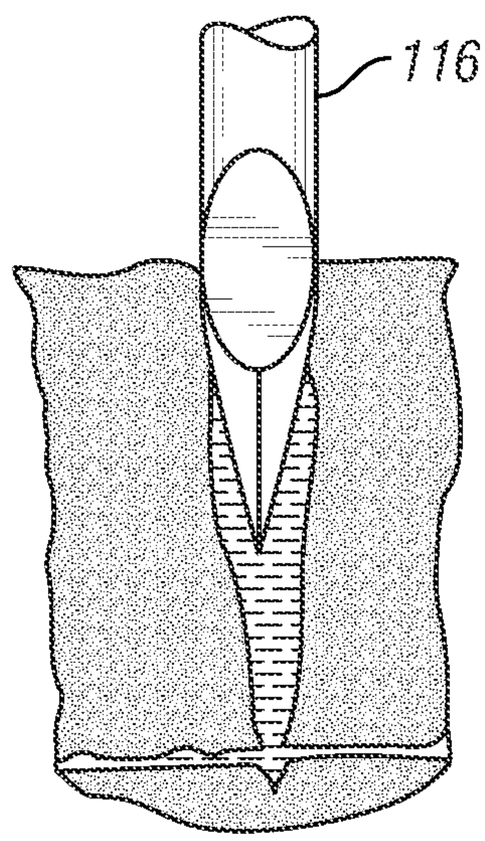

FIG. 10

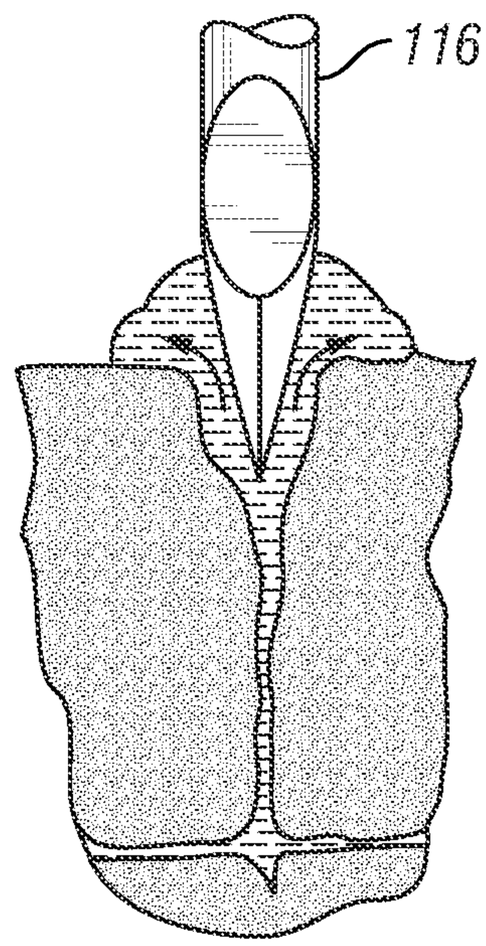

FIG. 11

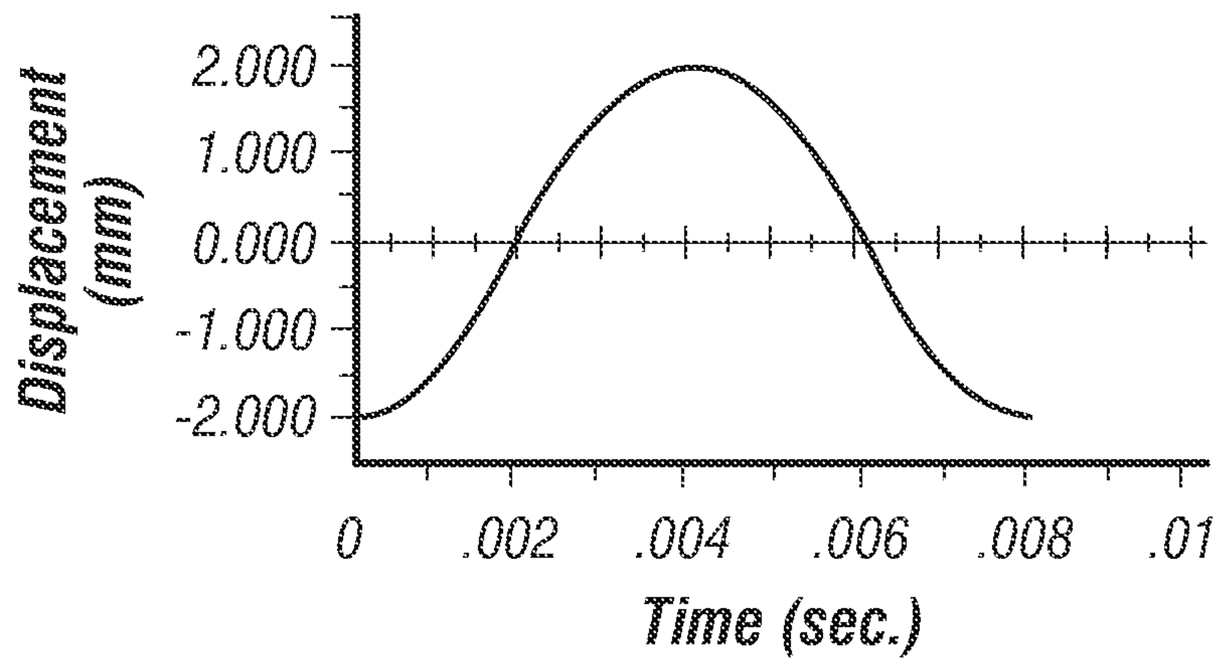
Displacement (mm)
2.000
1.000
0.000
-1.000
-2.000
0
.002
.004
.006
.008
.01
Time (sec.)

FIG. 6

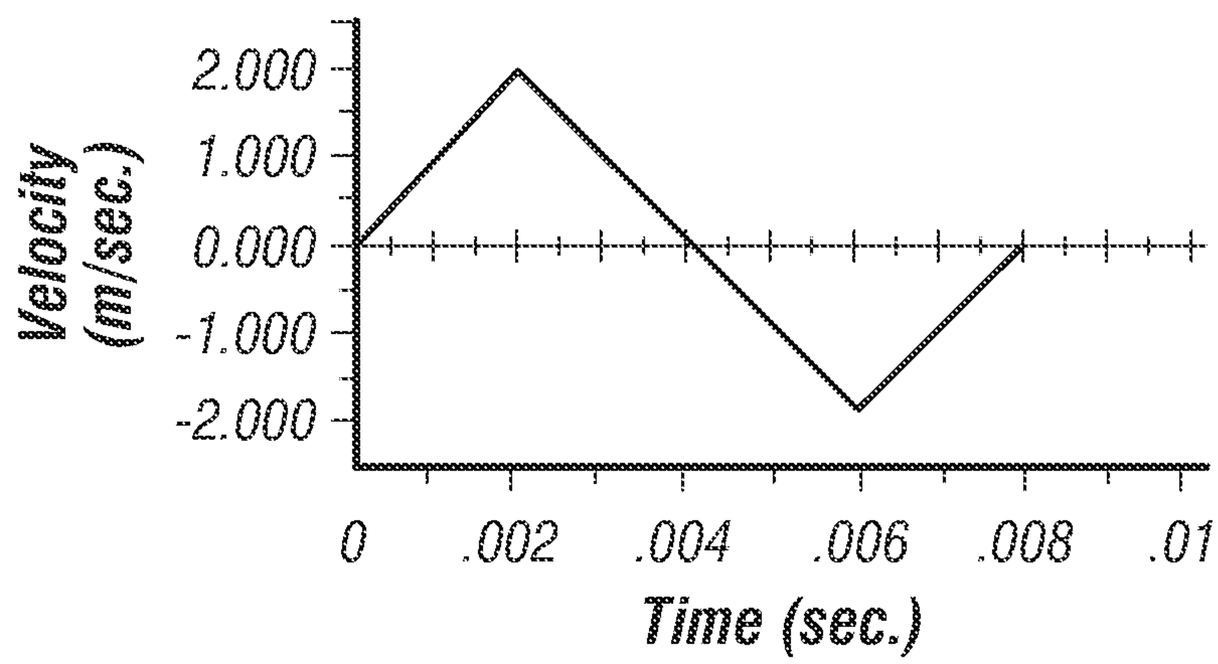
Velocity (m/sec.)
2.000
1.000
0.000
-1.000
-2.000
0
.002
.004
.006
.008
.01
Time (sec.)

FIG. 7

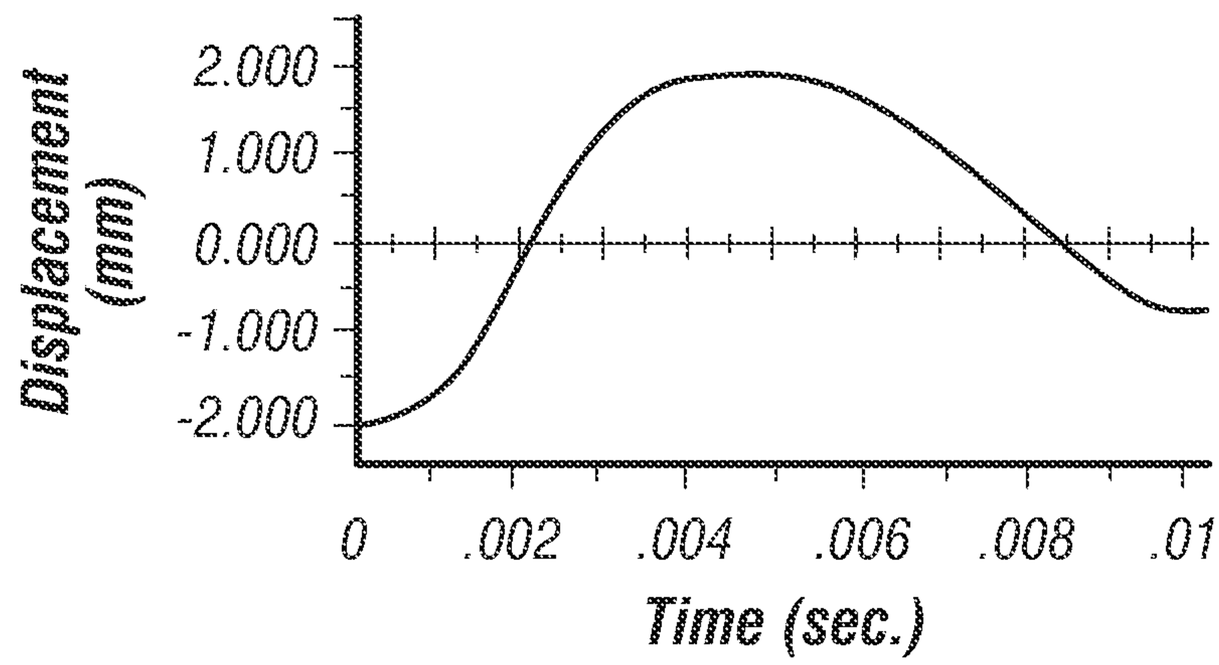
Displacement (mm)
2.000
1.000
0.000
-1.000
-2.000
0
.002
.004
.006
.008
.01
Time (sec.)

FIG. 8

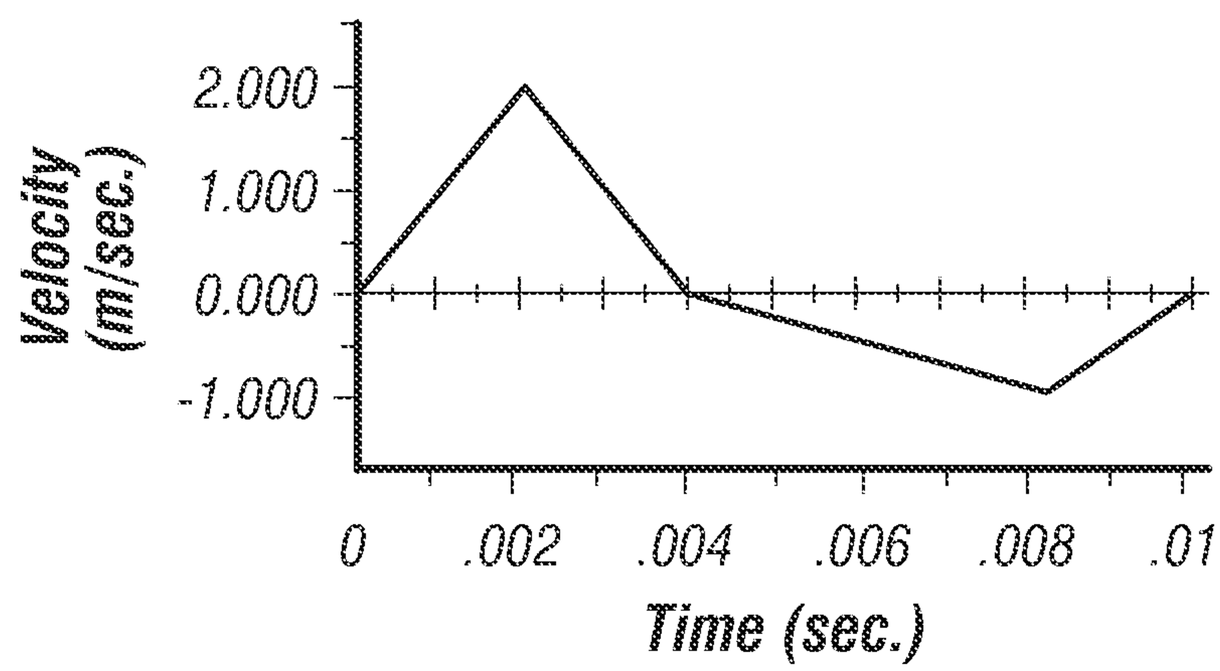
Velocity (m/sec.)
2.000
1.000
0.000
-1.000
0
.002
.004
.006
.008
.01
Time (sec.)

FIG. 9

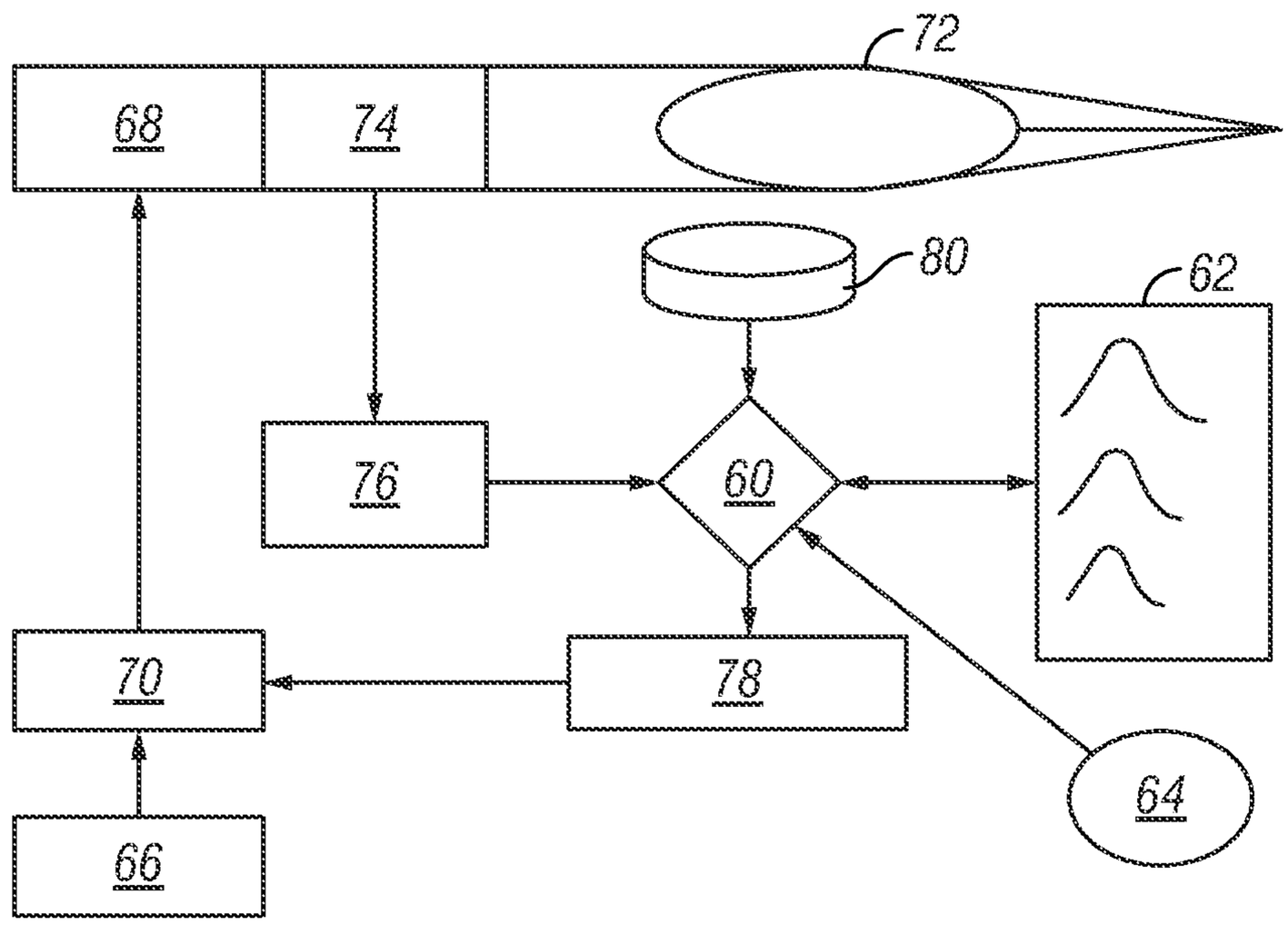

FIG. 12

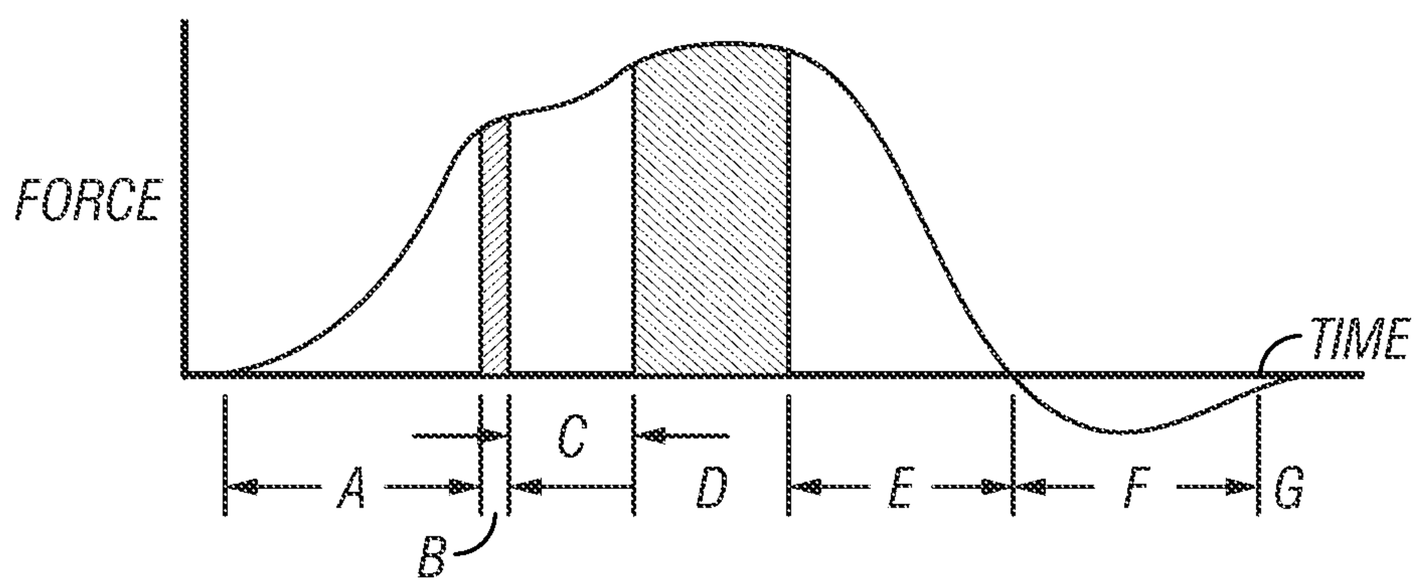

FIG. 13

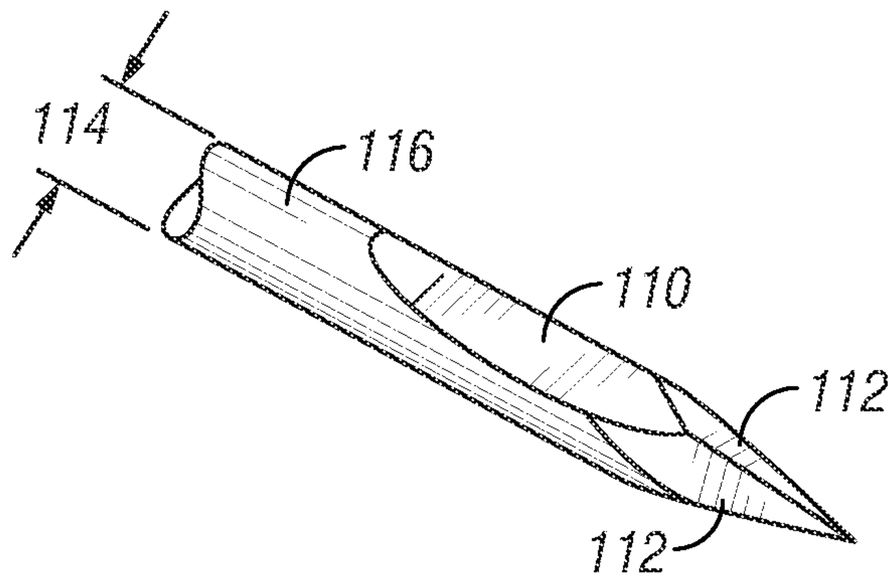

FIG. 14

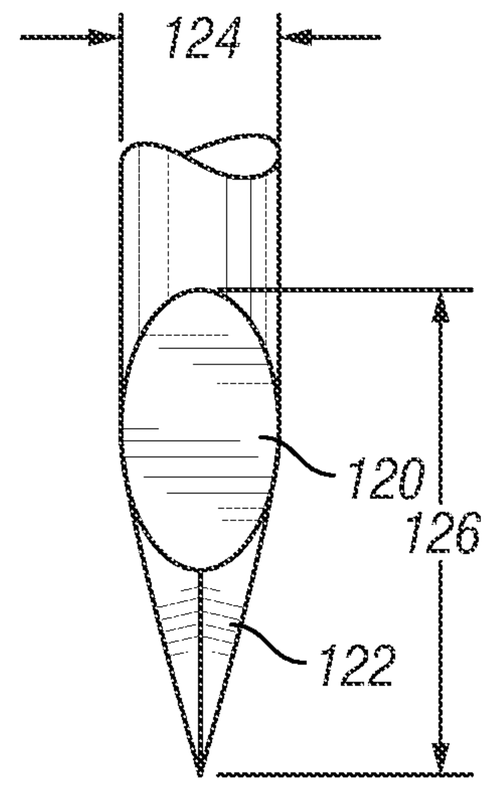

FIG. 15

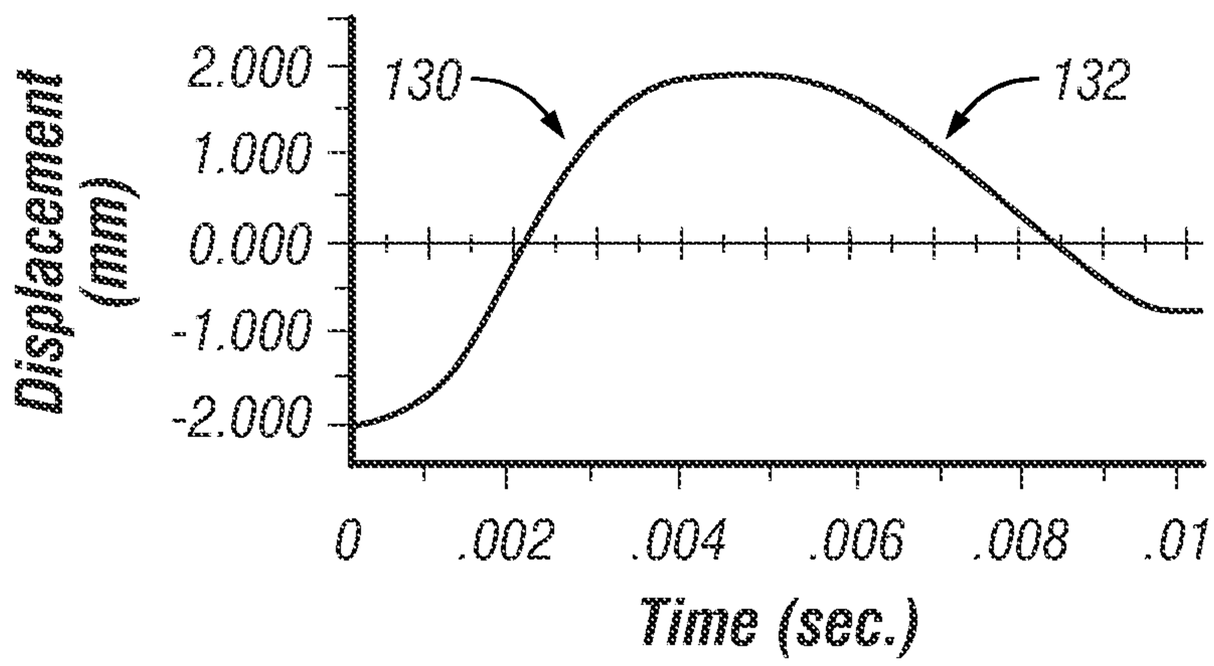

FIG. 16

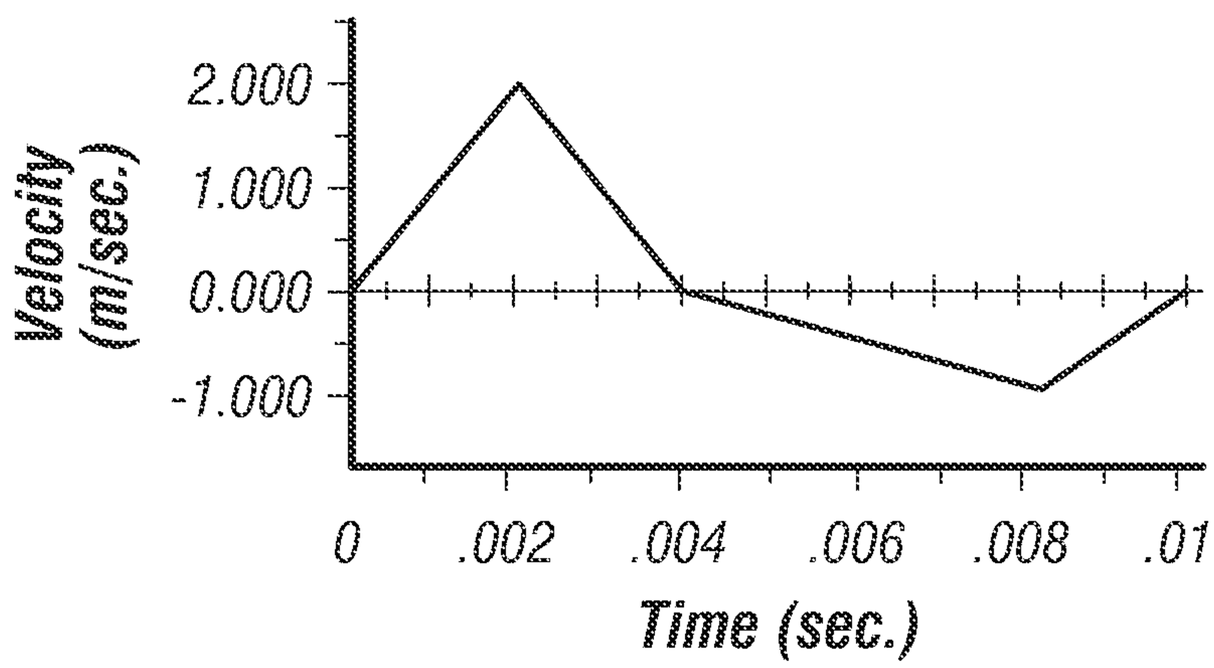

FIG. 17

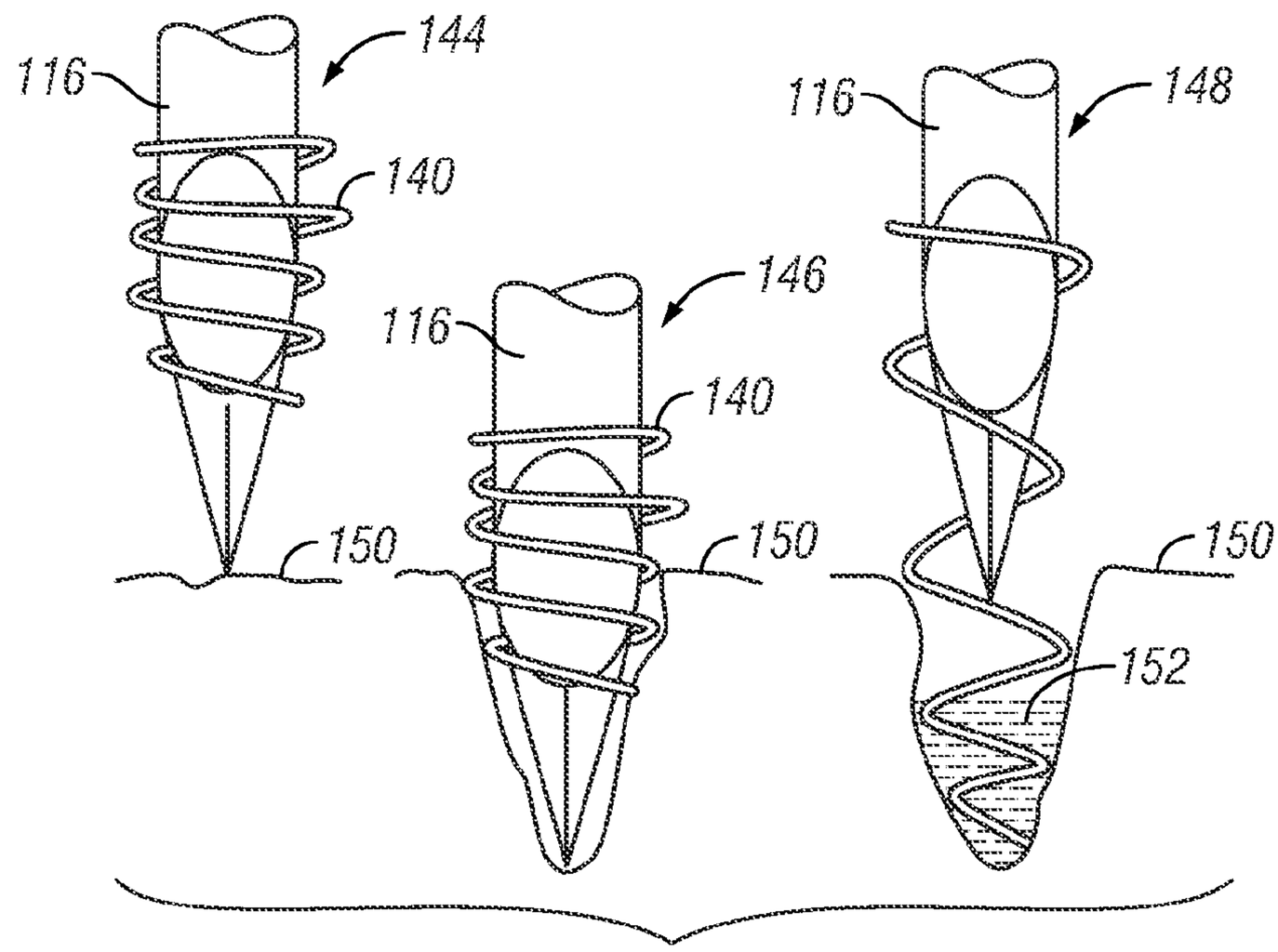
116
144
140
150
116
146
140
150
116
148
150
152

FIG. 18

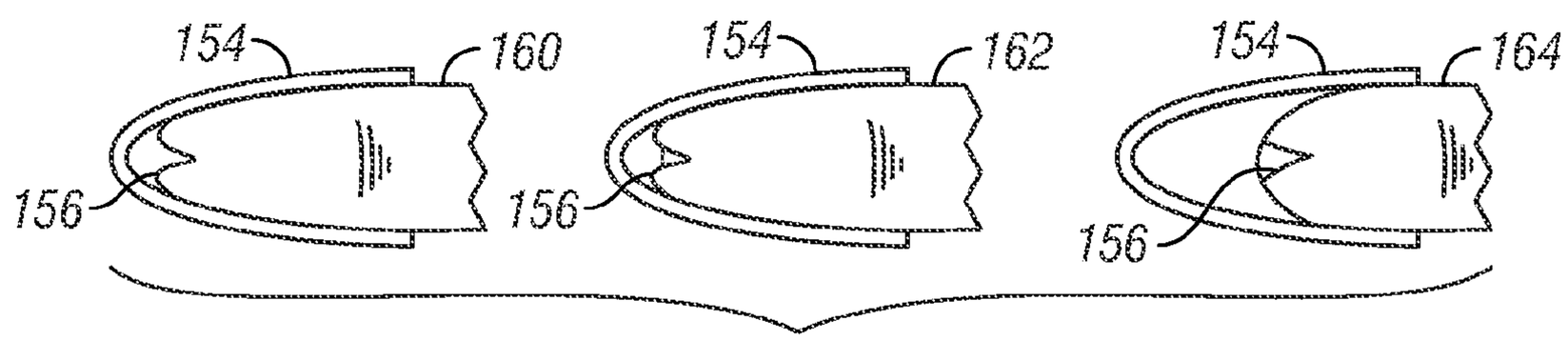
154
160
156
154
162
156
154
164
156

FIG. 19

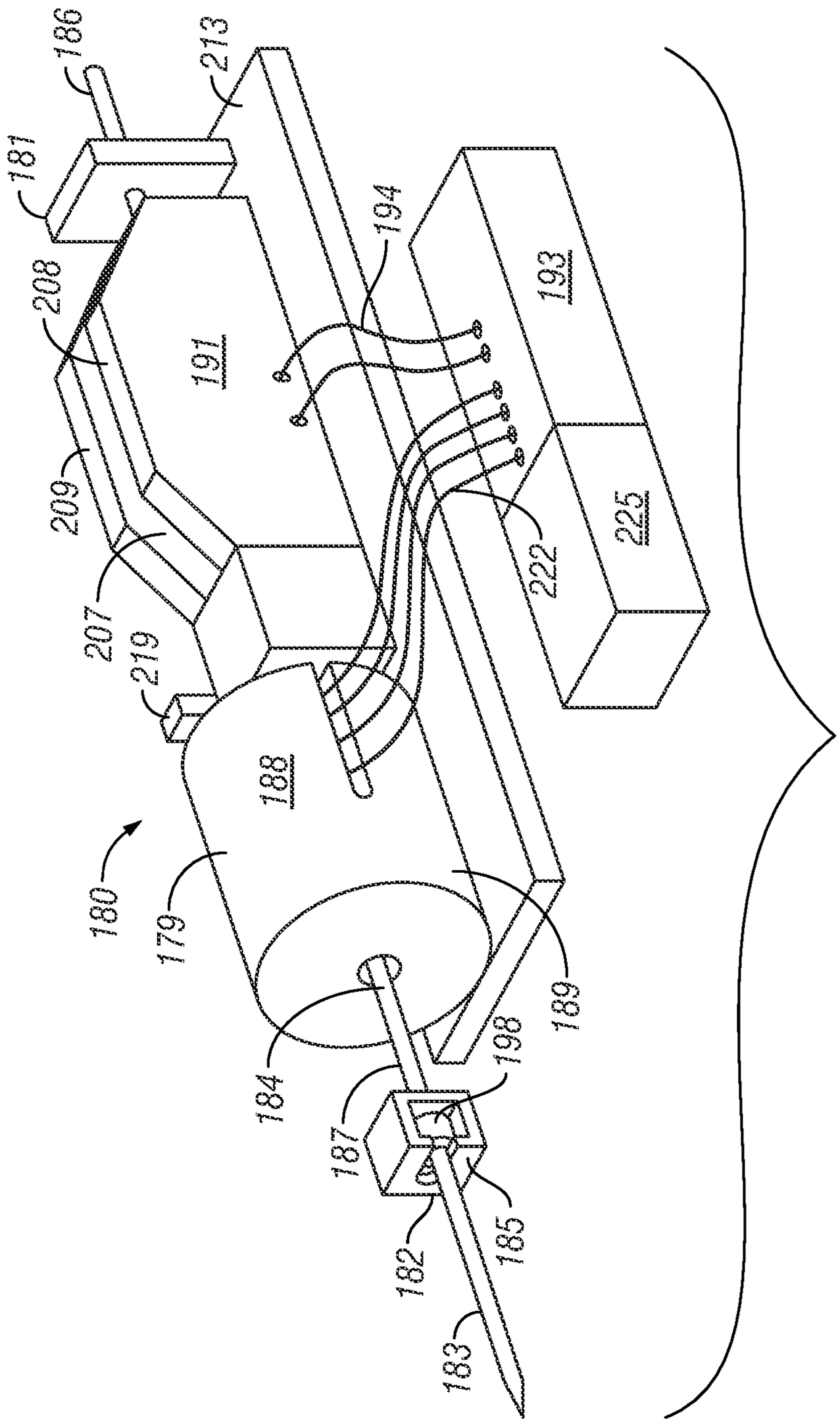
186
213
181
208
191
194
193
209
207
219
222
225
188
180
179
189
198
184
187
182
185
183

FIG. 20

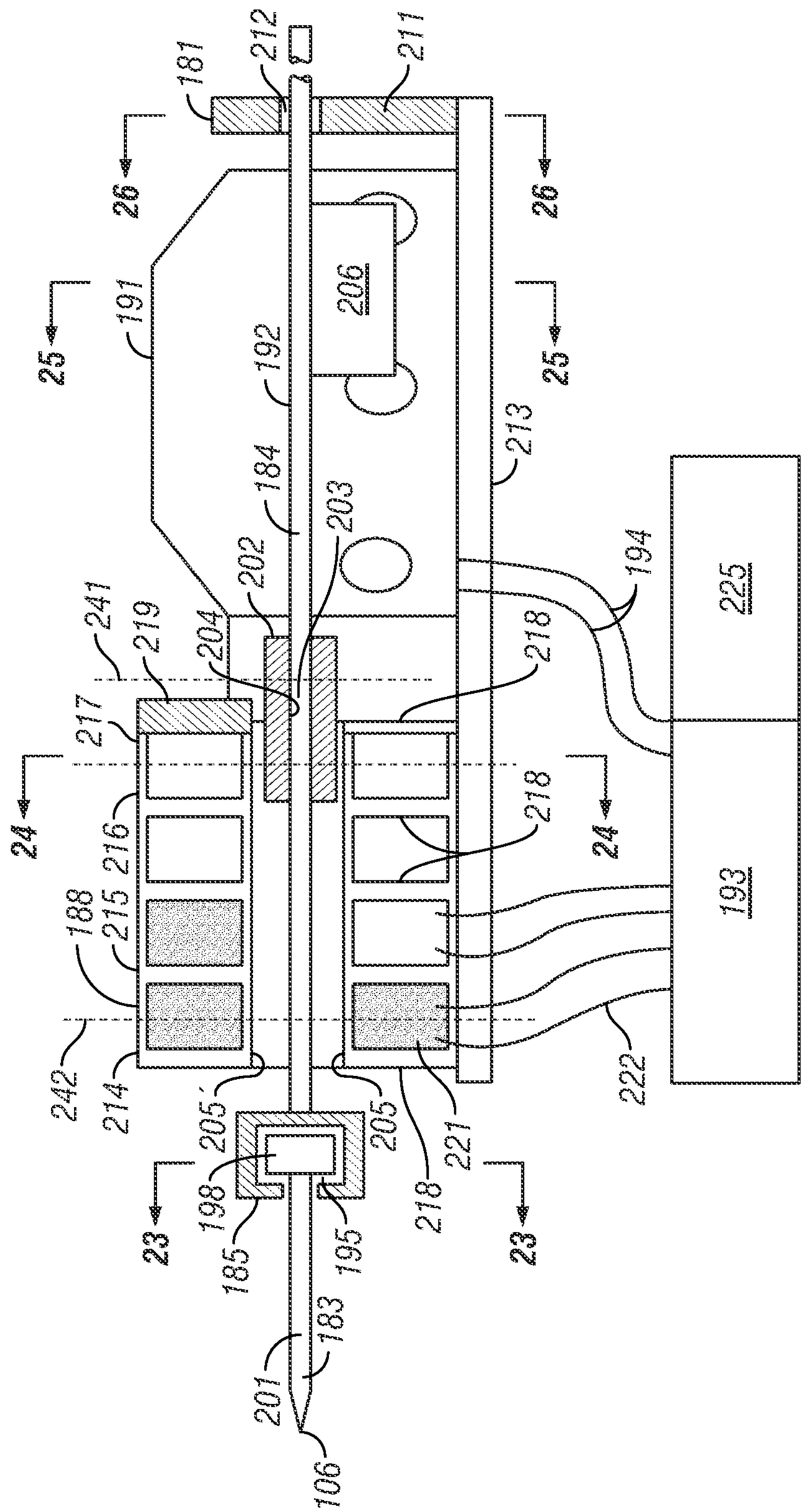
181
212
211
26
26
191
206
25
25
192
213
184
203
202
194
225
241
219
204
218
217
24
24
216
218
188
215
193
242
214
205
205
222
221
218
198
185
195
23
23
183
201
106

FIG. 21

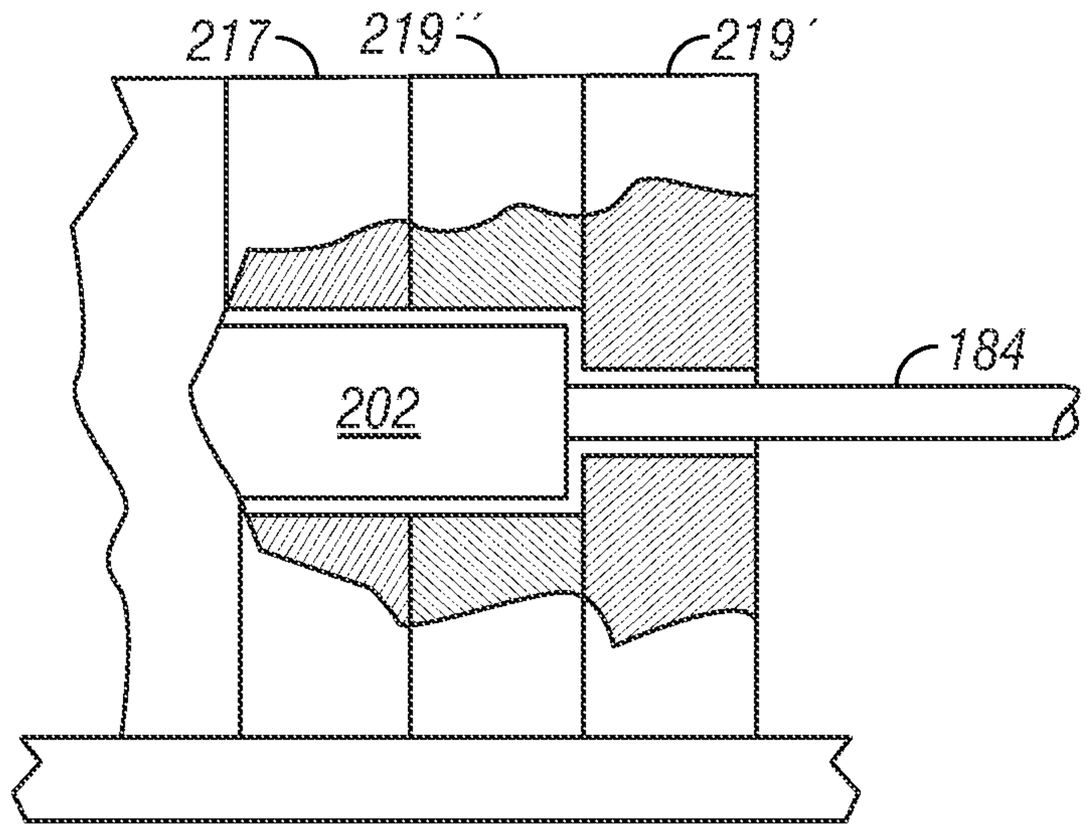

FIG. 22

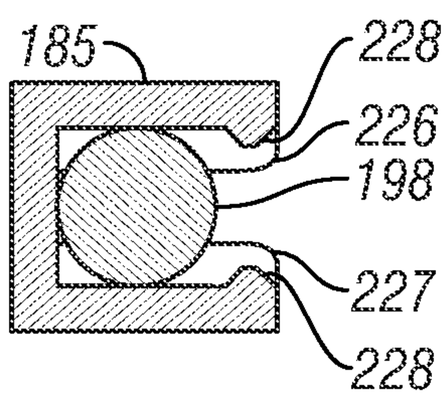

FIG. 23

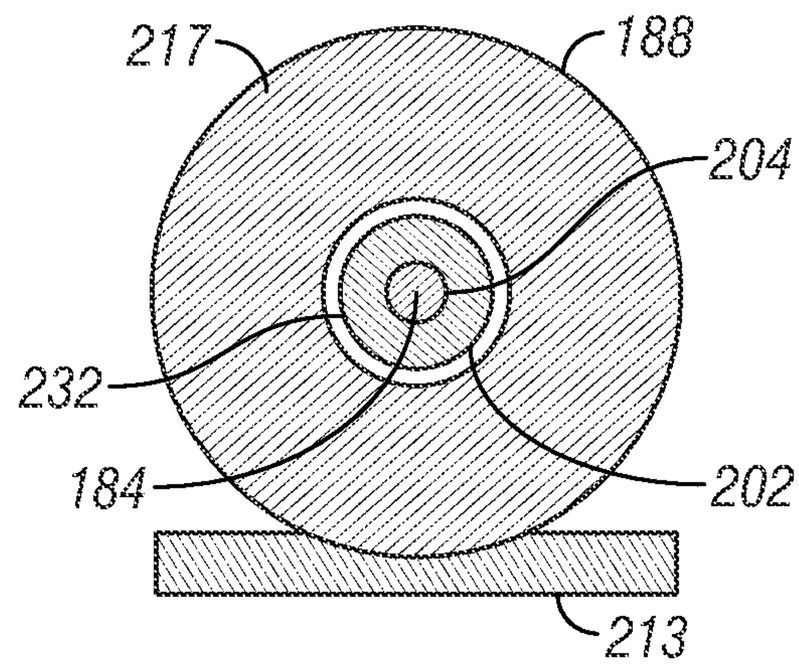

FIG. 24

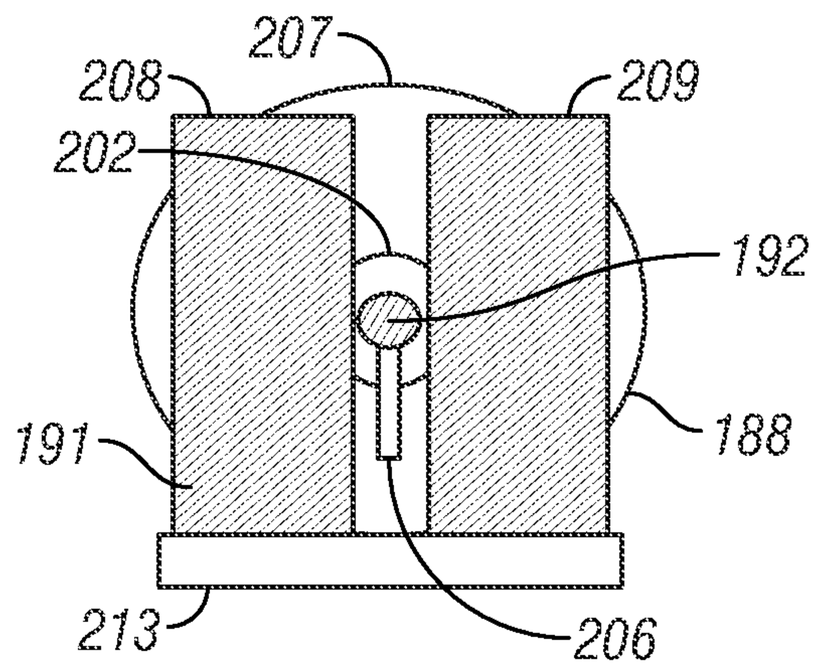

FIG. 25

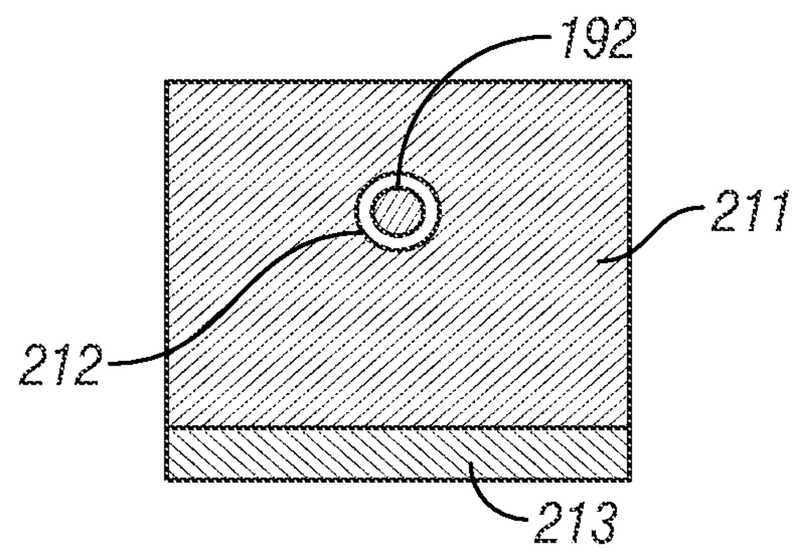

FIG. 26

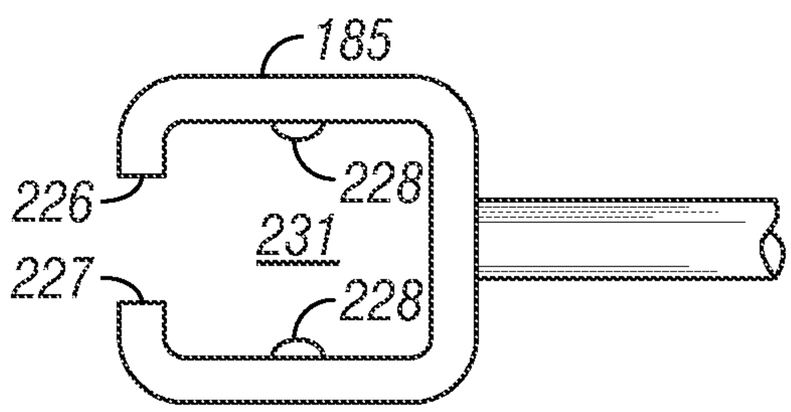

FIG. 27

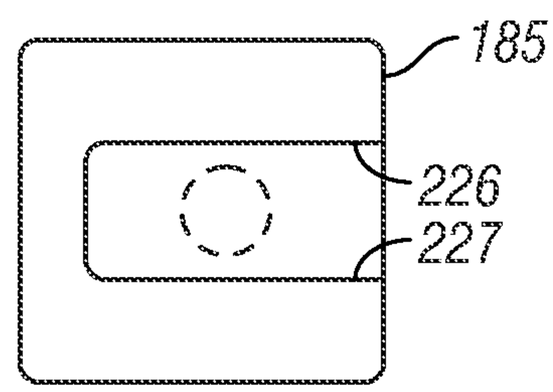

FIG. 28

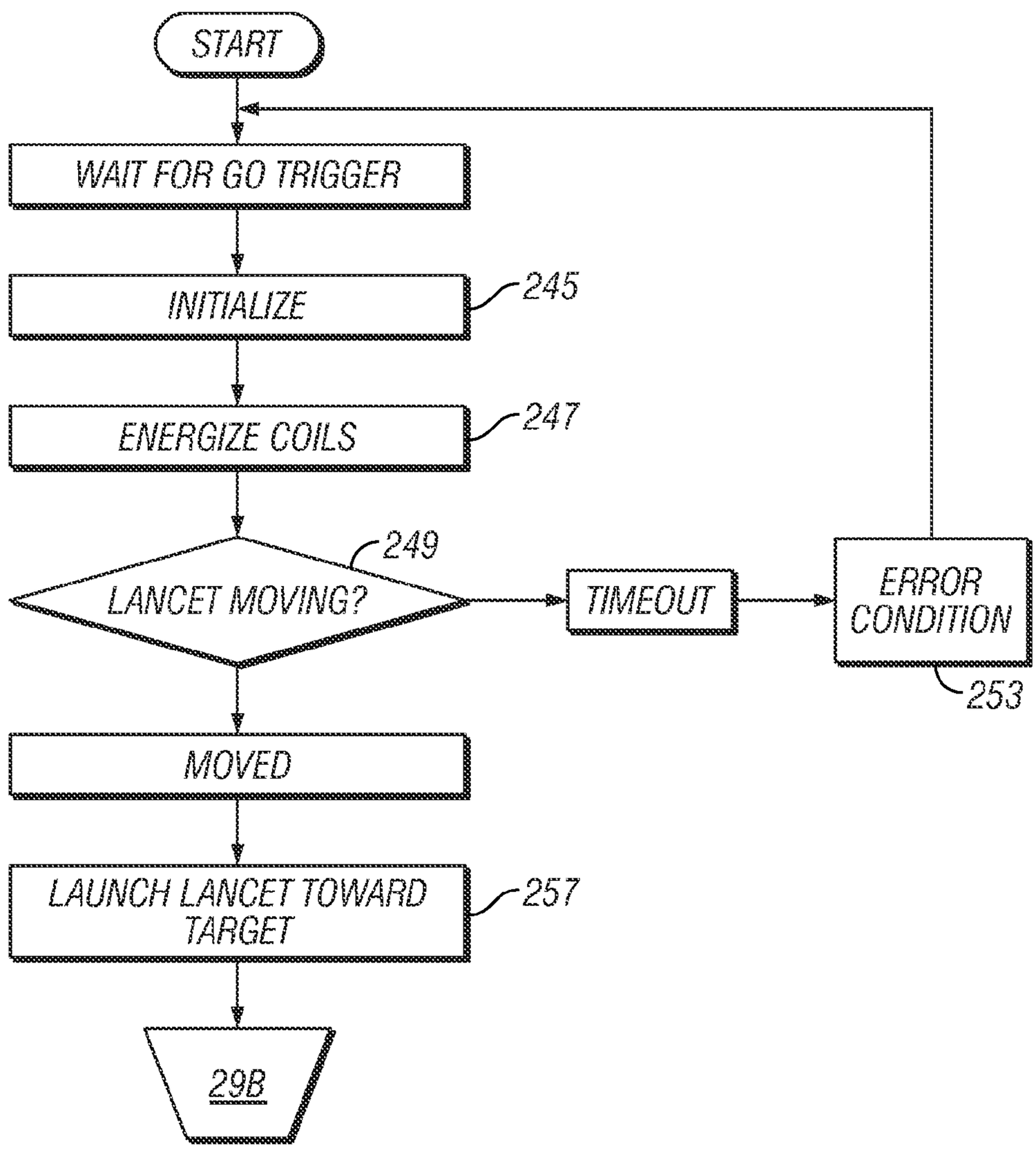
START
WAIT FOR GO TRIGGER
INITIALIZE
245
ENERGIZE COILS
247
LANCET MOVING?
249
TIMEOUT
ERROR CONDITION
253
MOVED
LAUNCH LANCET TOWARD TARGET
257
29B

FIG. 29A

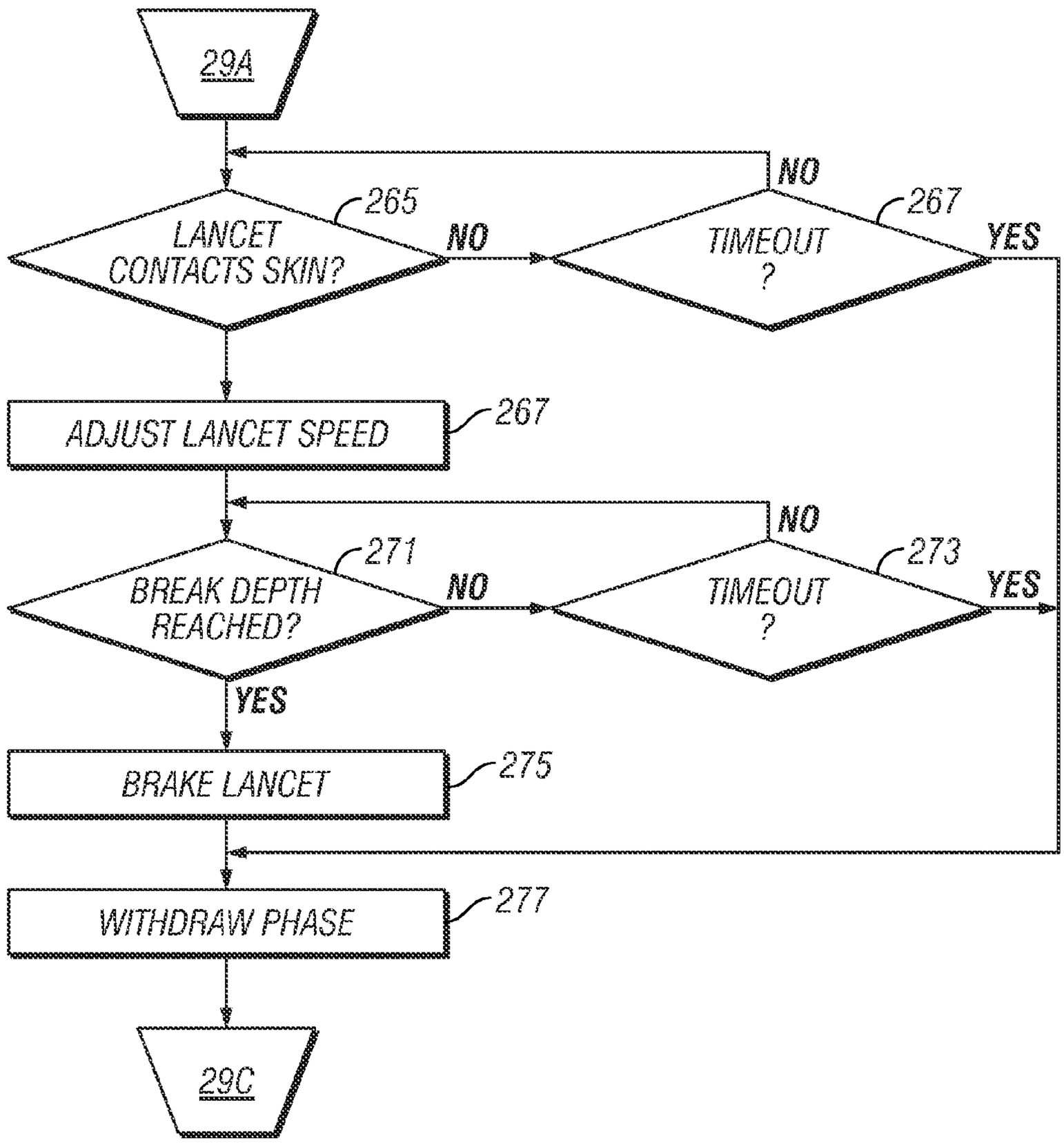
29A
LANCET CONTACTS SKIN?
265
NO
TIMEOUT ?
267
NO
YES
ADJUST LANCET SPEED
267
BREAK DEPTH REACHED?
271
NO
TIMEOUT ?
273
NO
YES
YES
BRAKE LANCET
275
WITHDRAW PHASE
277
29C

FIG. 29B

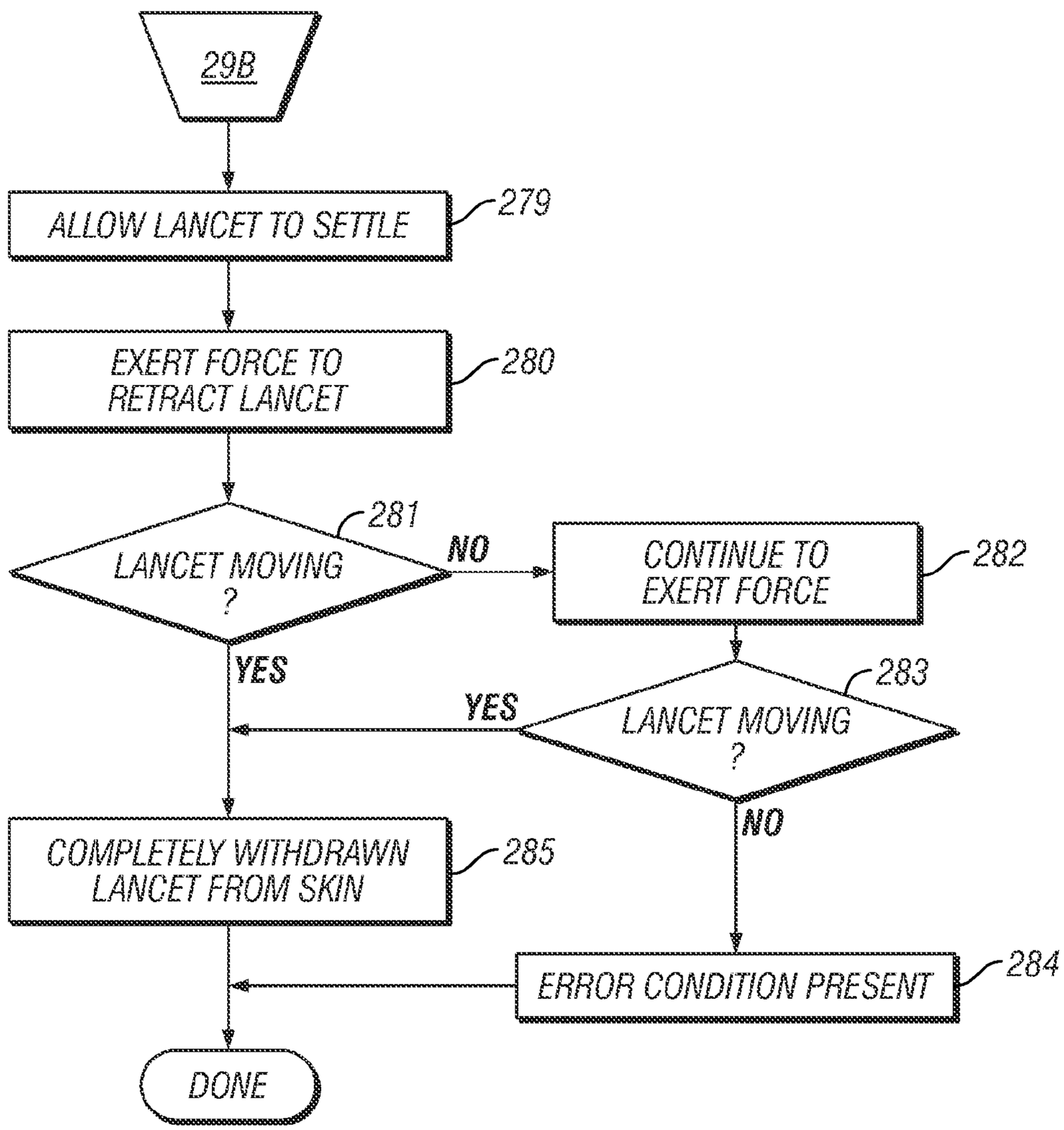
29B
ALLOW LANCET TO SETTLE
279
EXERT FORCE TO RETRACT LANCET
280
LANCET MOVING ?
281
NO
CONTINUE TO EXERT FORCE
282
YES
LANCET MOVING ?
283
YES
NO
COMPLETELY WITHDRAWN LANCET FROM SKIN
285
ERROR CONDITION PRESENT
284
DONE

FIG. 29C

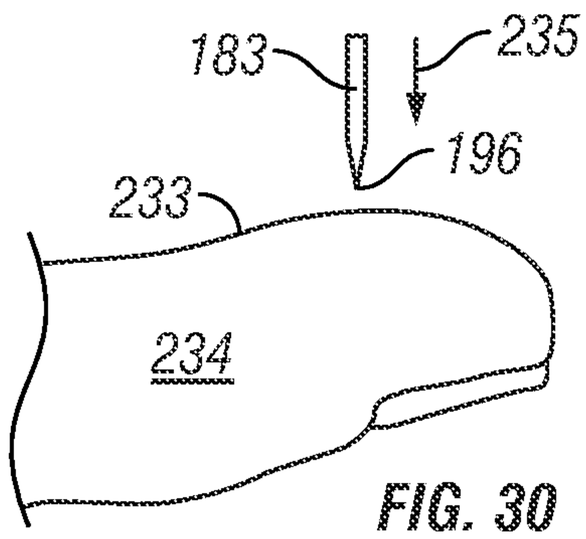

FIG. 30

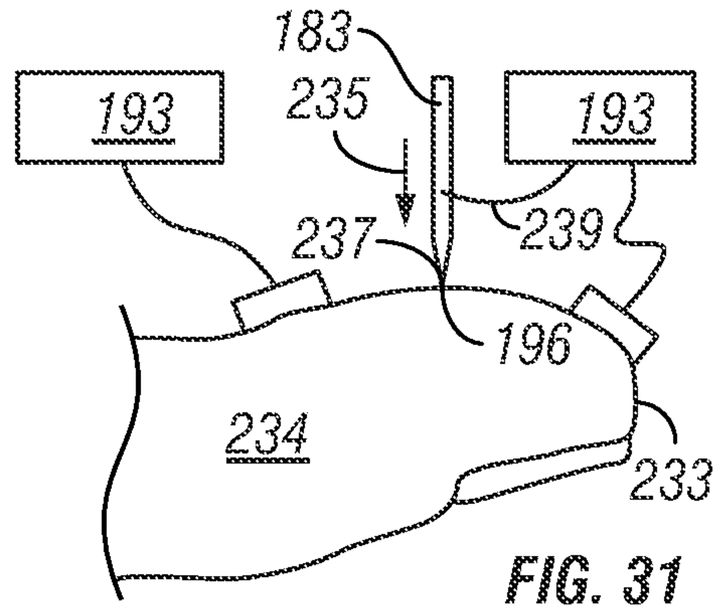

FIG. 31

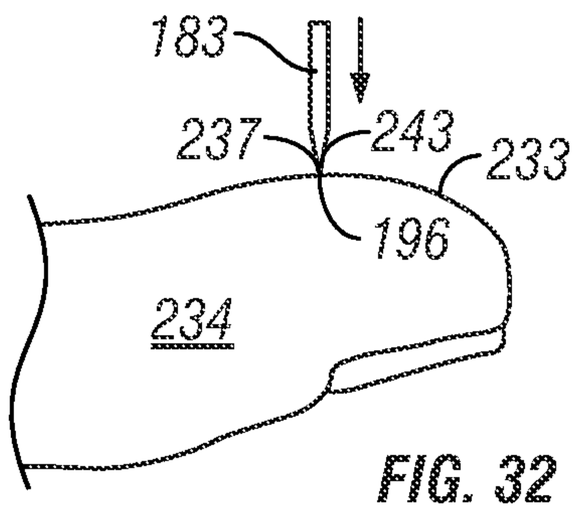

FIG. 32

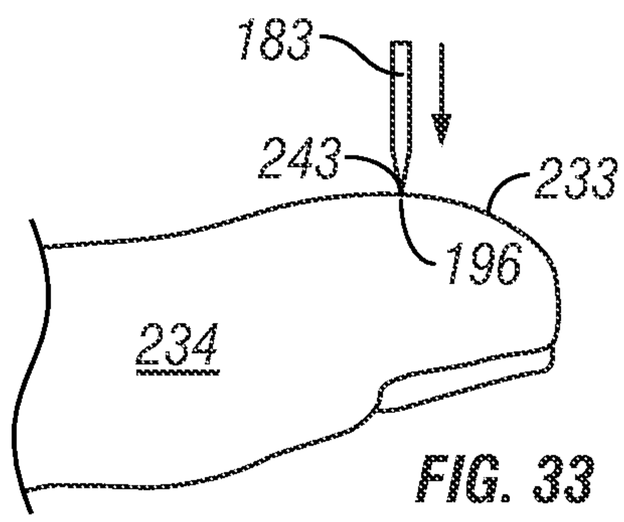

FIG. 33

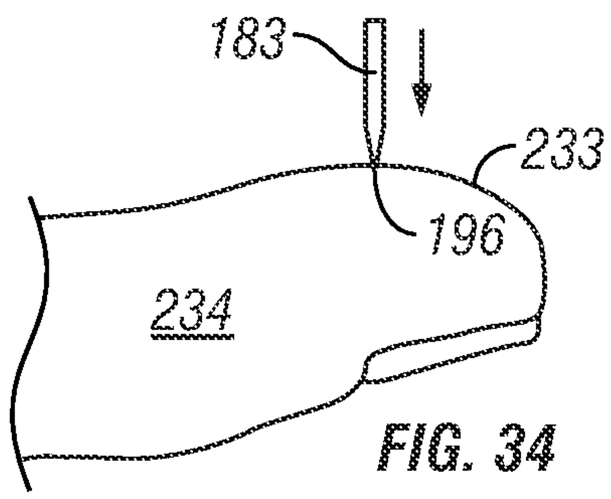

FIG. 34

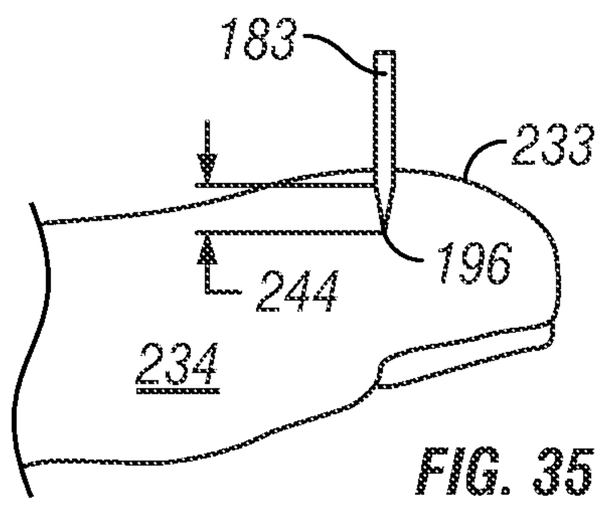

FIG. 35

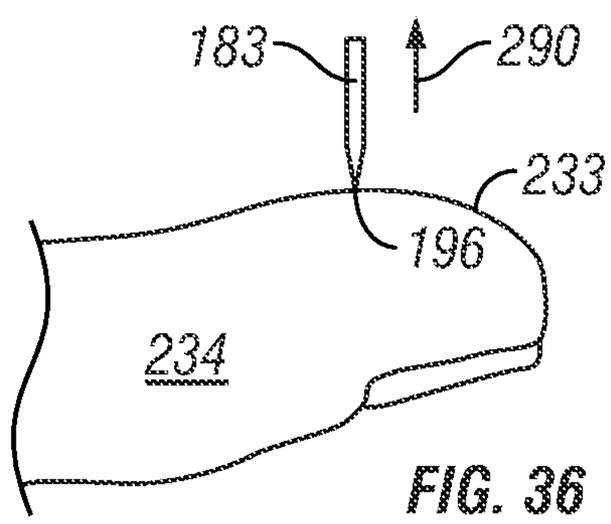

FIG. 36

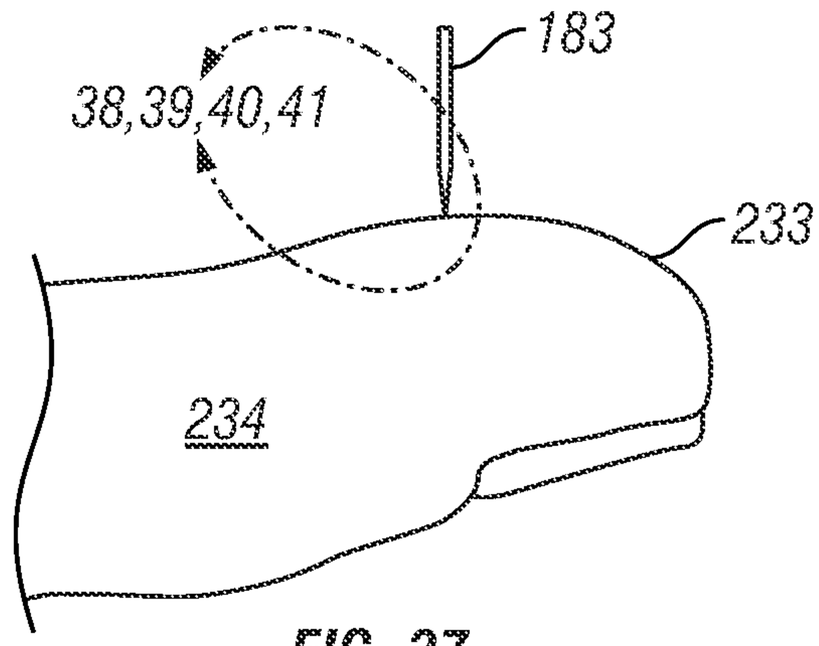

FIG. 37

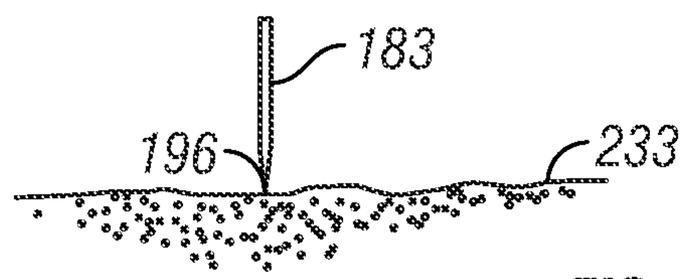

FIG. 38

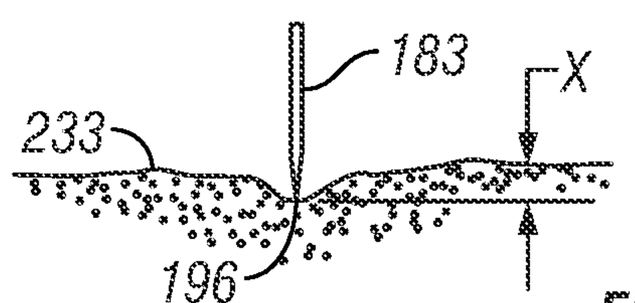

FIG. 39

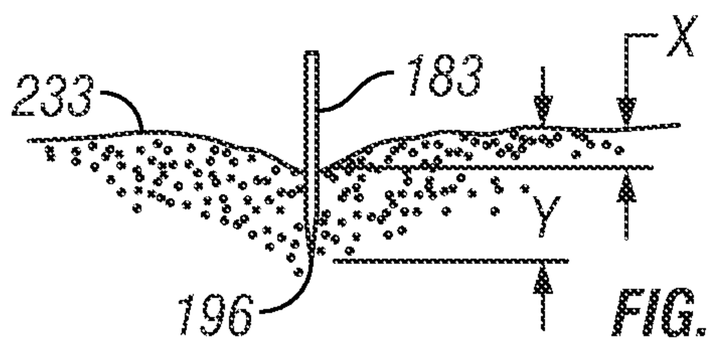

FIG. 40

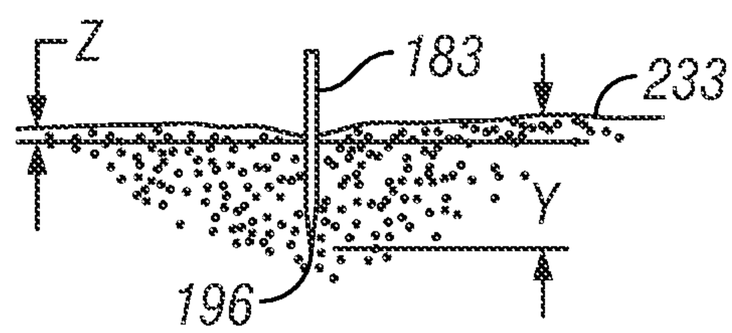

FIG. 41

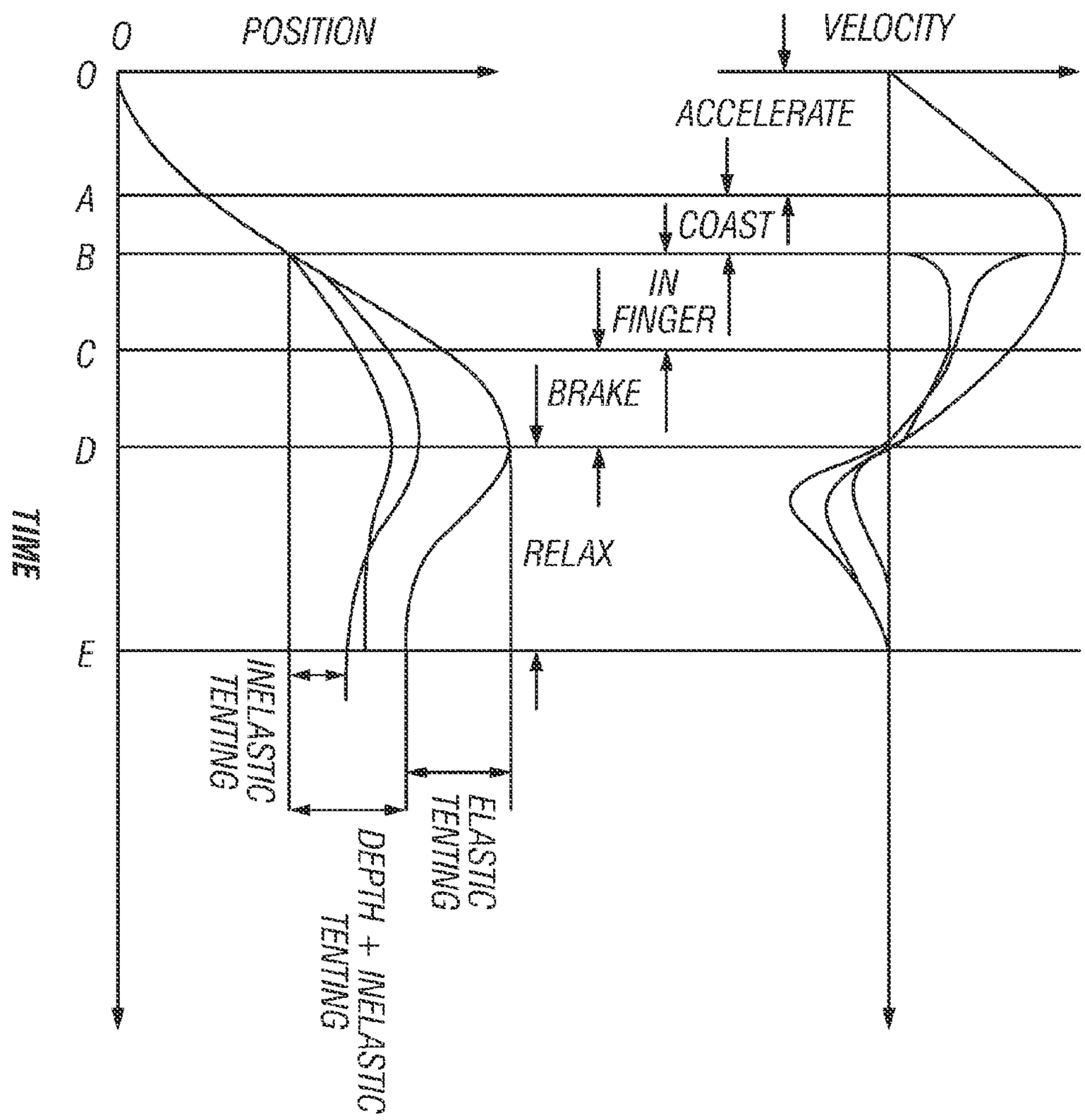
0
POSITION
VELOCITY
0
ACCELERATE
A
COAST
B
IN
FINGER
C
BRAKE
D
RELAX
TIME
E
INELASTIC
TENTING
ELASTIC
TENTING
DEPTH + INELASTIC
TENTING

FIG. 42

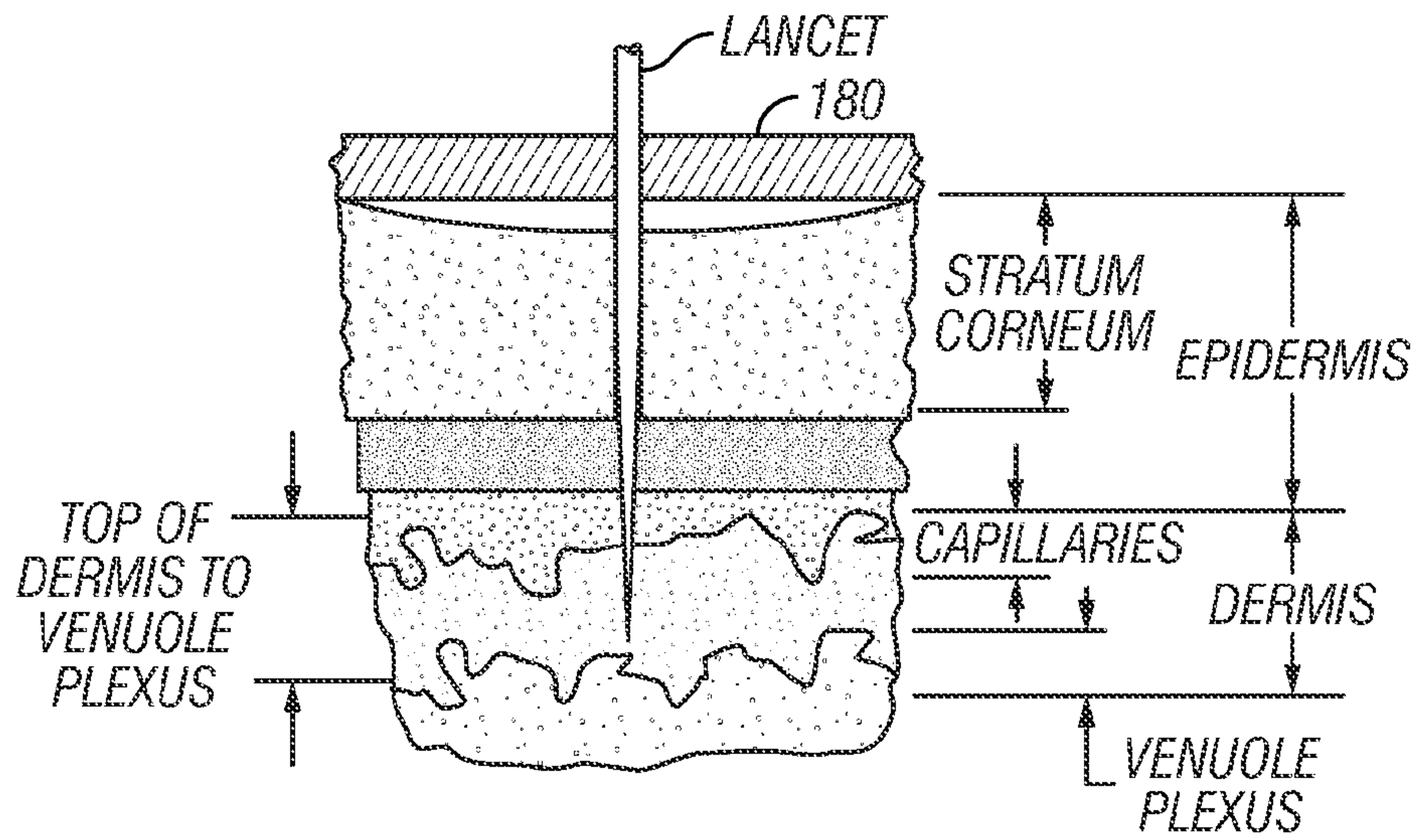

FIG. 43

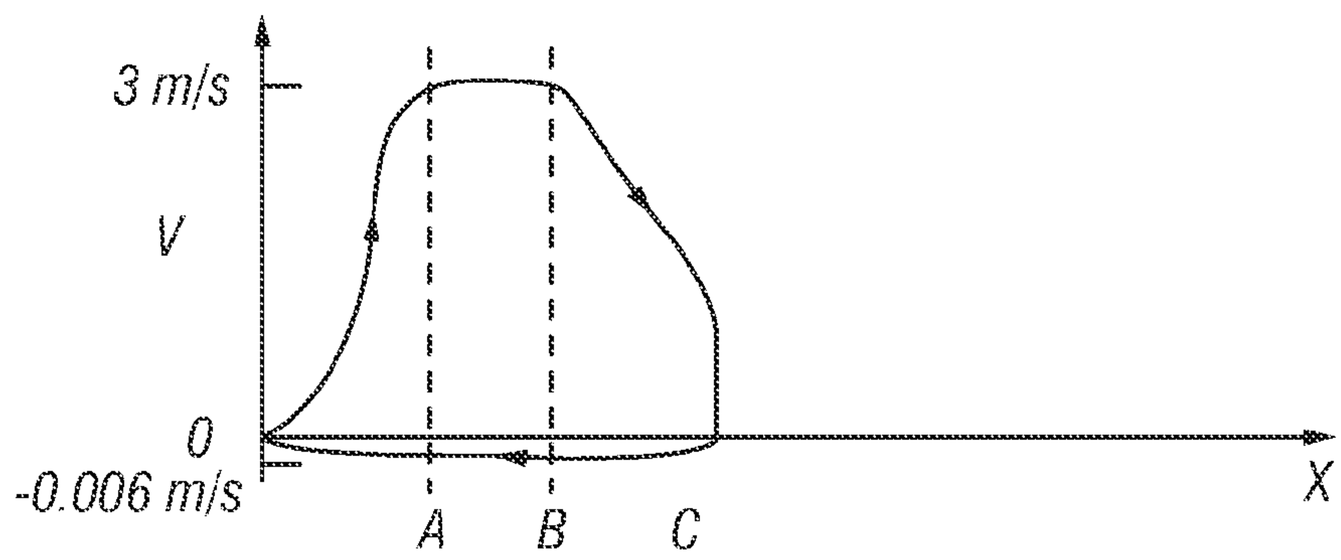

FIG. 44

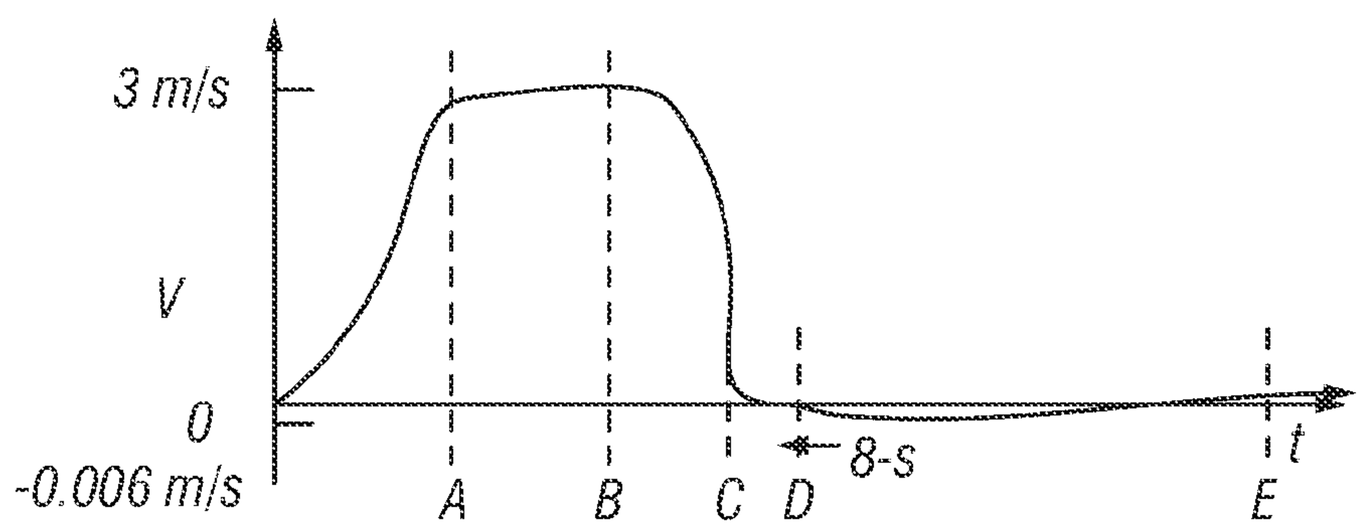

FIG. 45

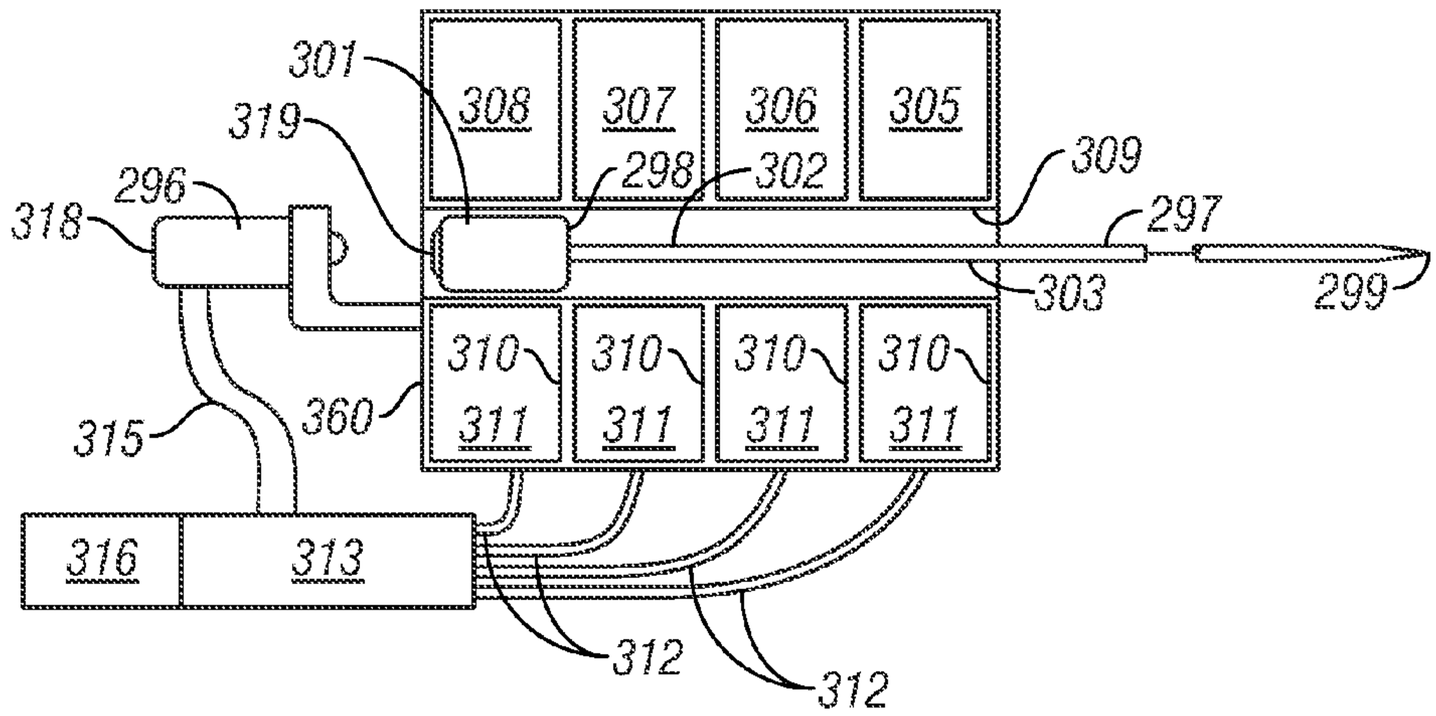
301
319
296
318
308
307
306
305
298
302
309
297
303
299
310
311
360
315
316
313
312
312

FIG. 46

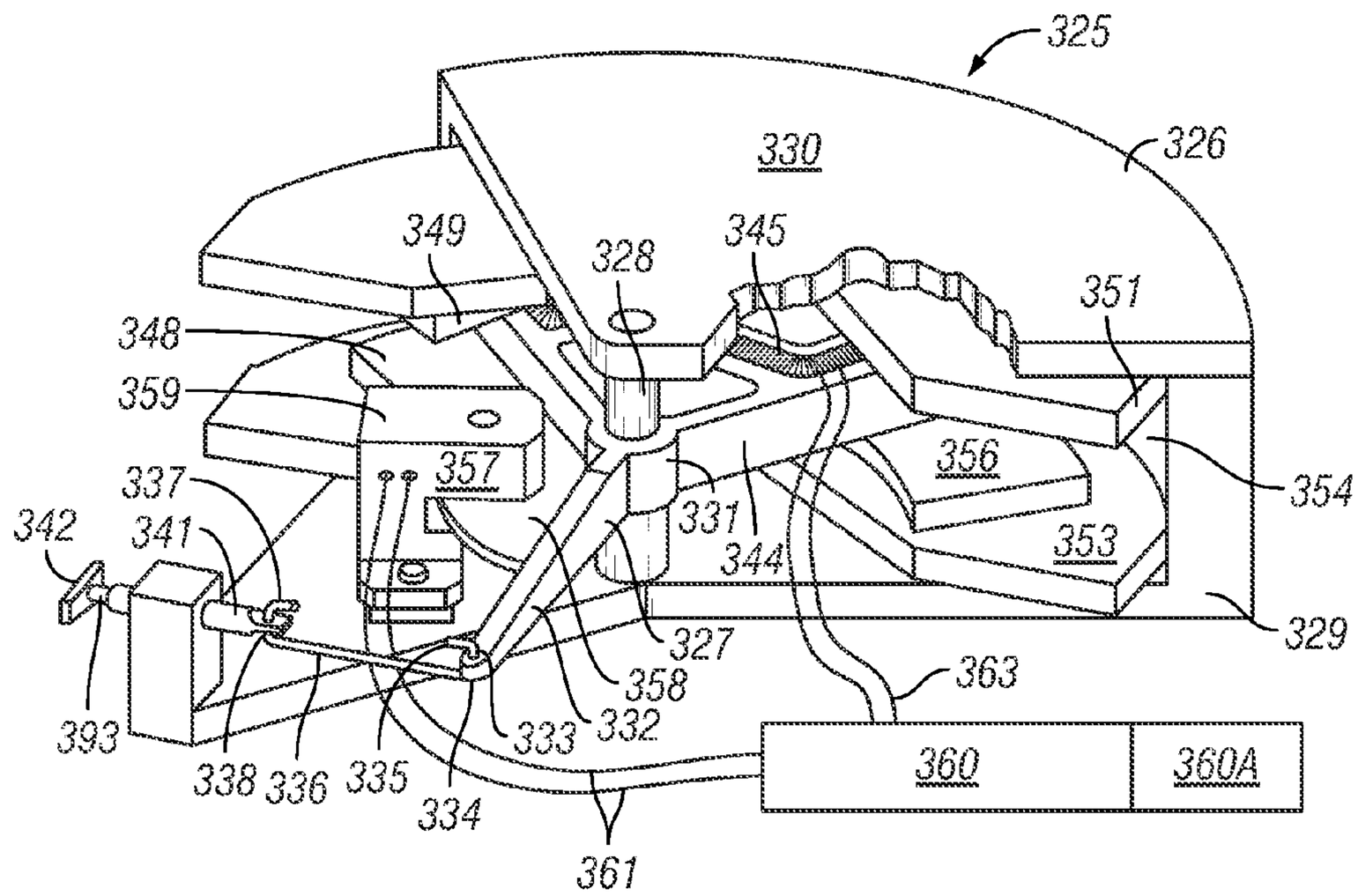
325
330
326
349
328
345
351
348
359
357
356
354
337
342
341
331
344
353
329
327
358
363
393
333
332
338
336
335
334
360
360A
361

FIG. 47

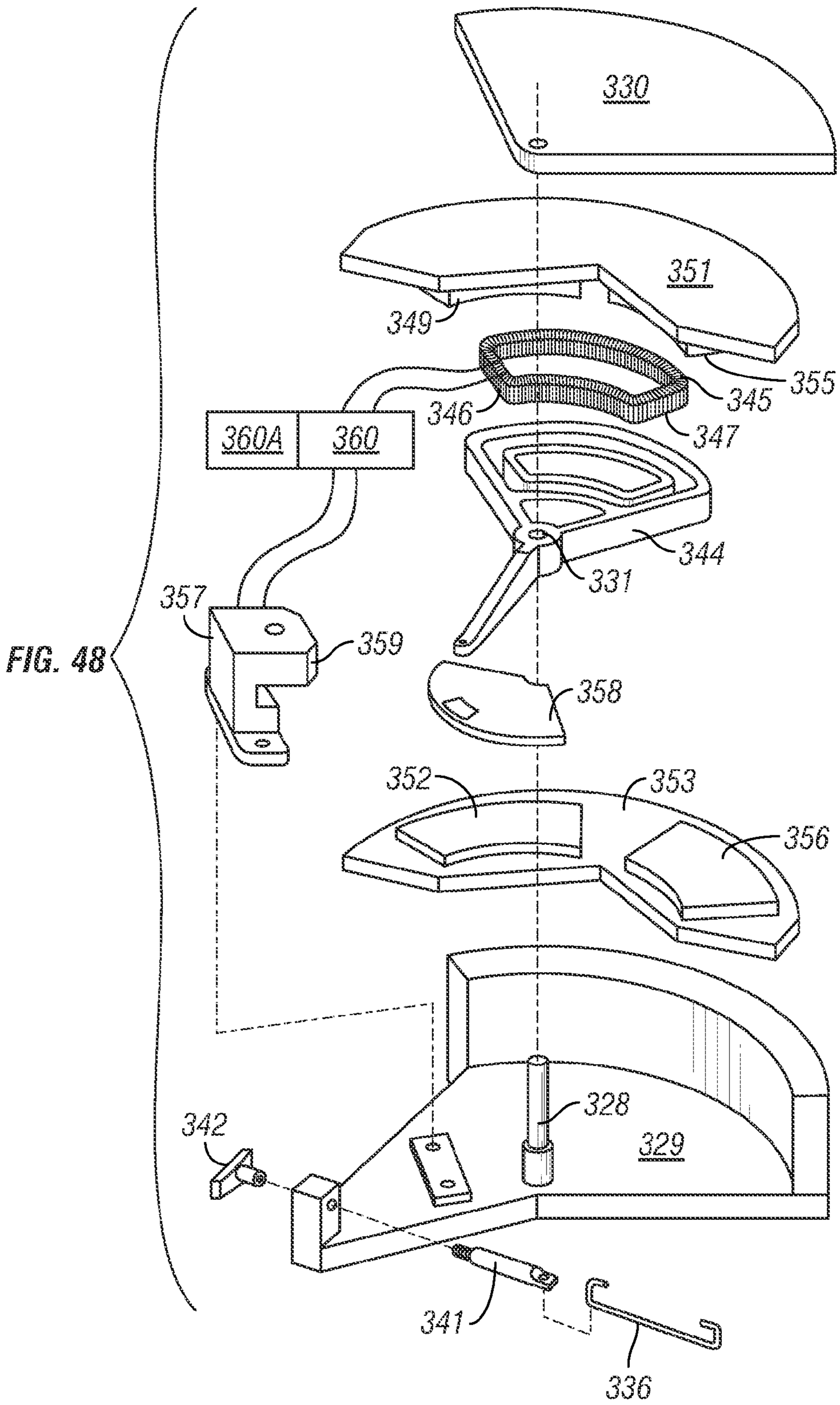
330
351
349
355
345
346
347
360A
360
344
331
357
359
358
352
353
356
328
329
342
341
336

FIG. 48

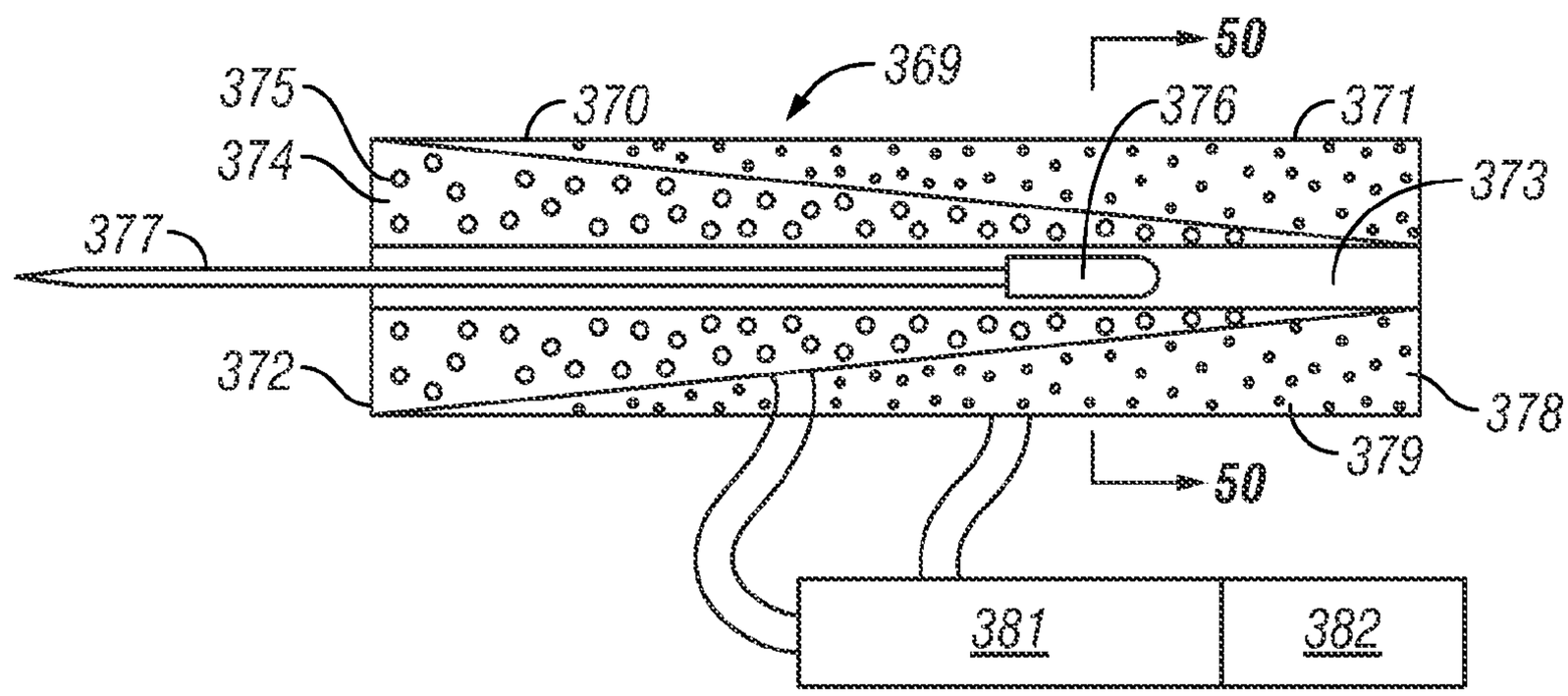
50
369
375
370
376
371
374
373
377
372
378
379
50
381
382

FIG. 49

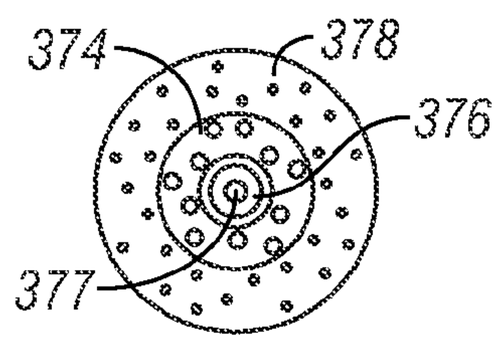
374
378
376
377

FIG. 50

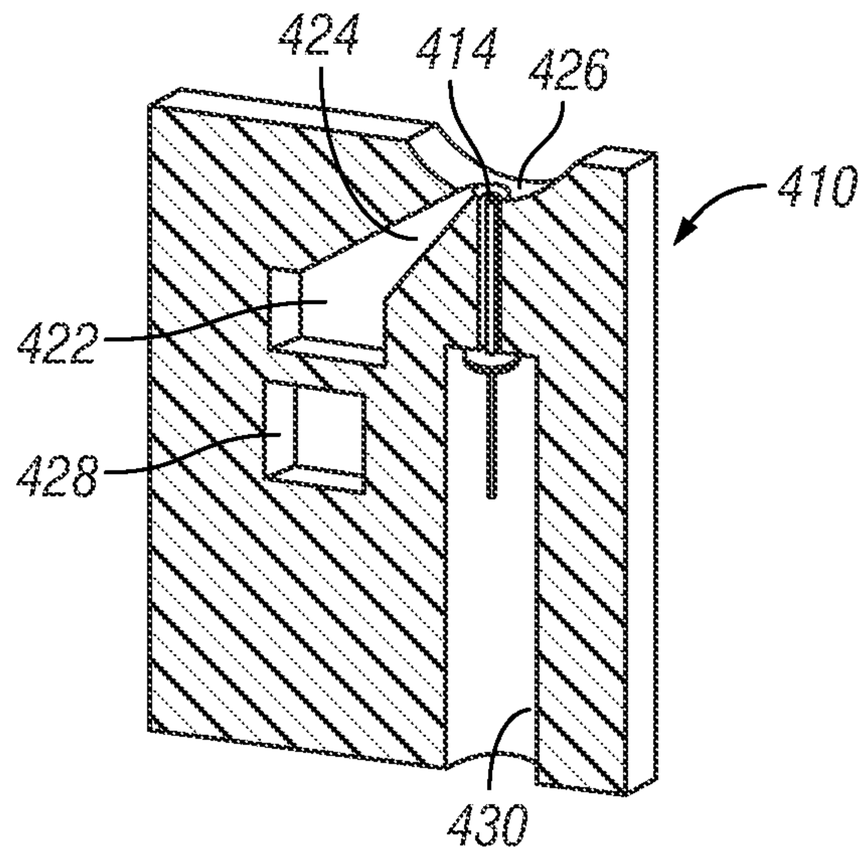
424
414
426
410
422
428
430

FIG. 51

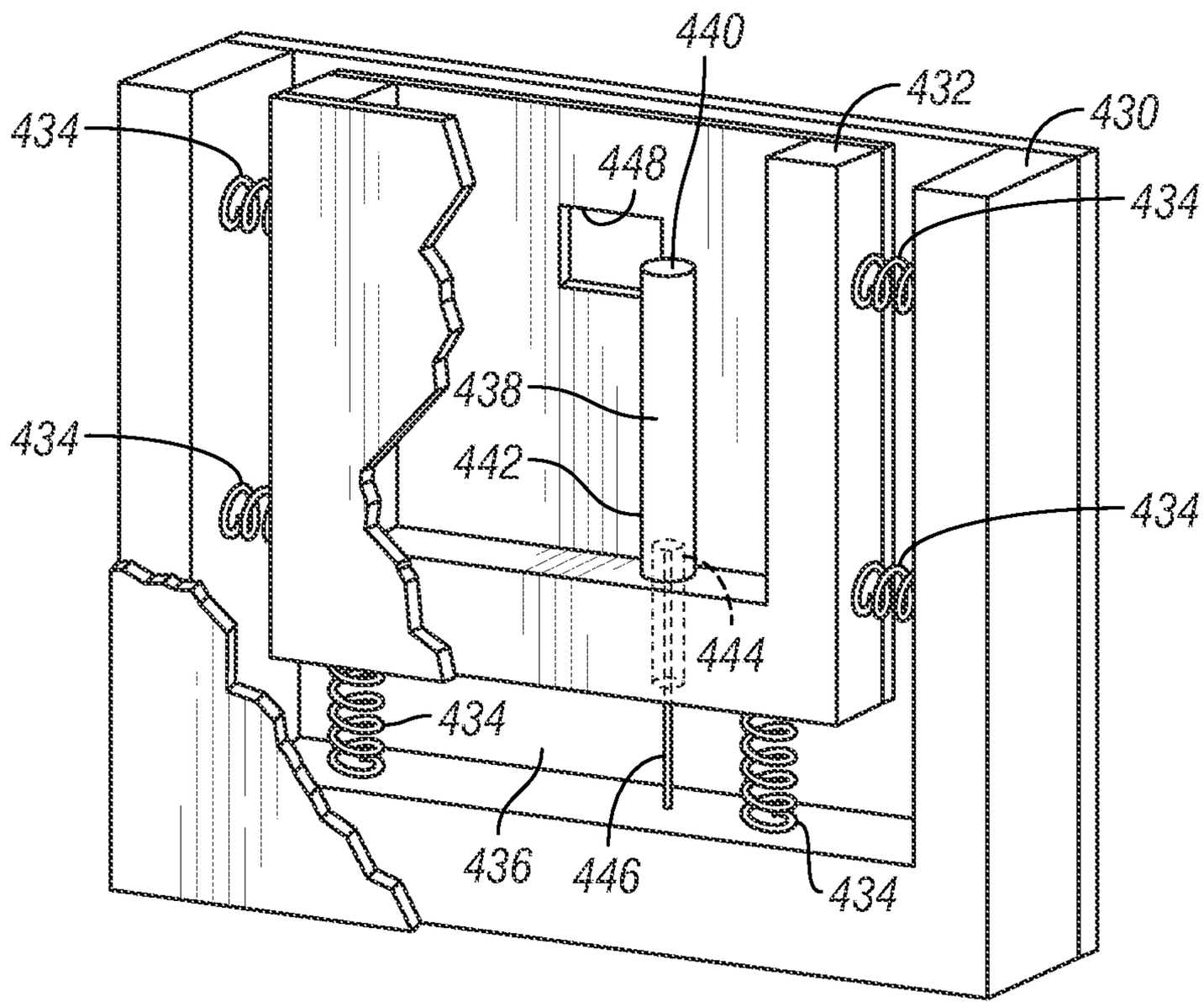
440
432
430
434
448
434
438
434
442
434
444
434
436
446
434

FIG. 52

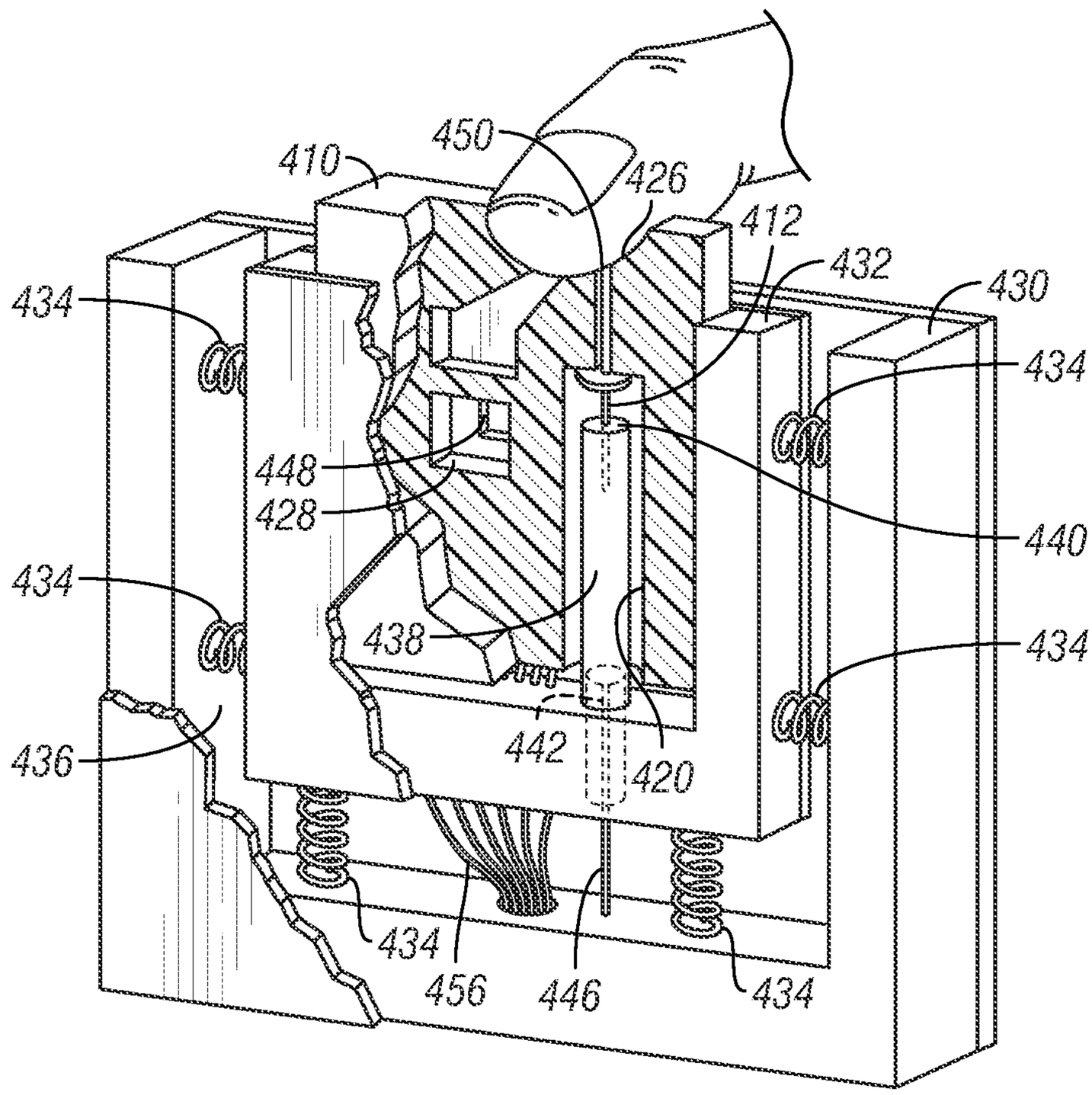
450
410
426
412
432
430
434
434
448
428
440
434
438
434
442
420
436
434
456
446
434

FIG. 53

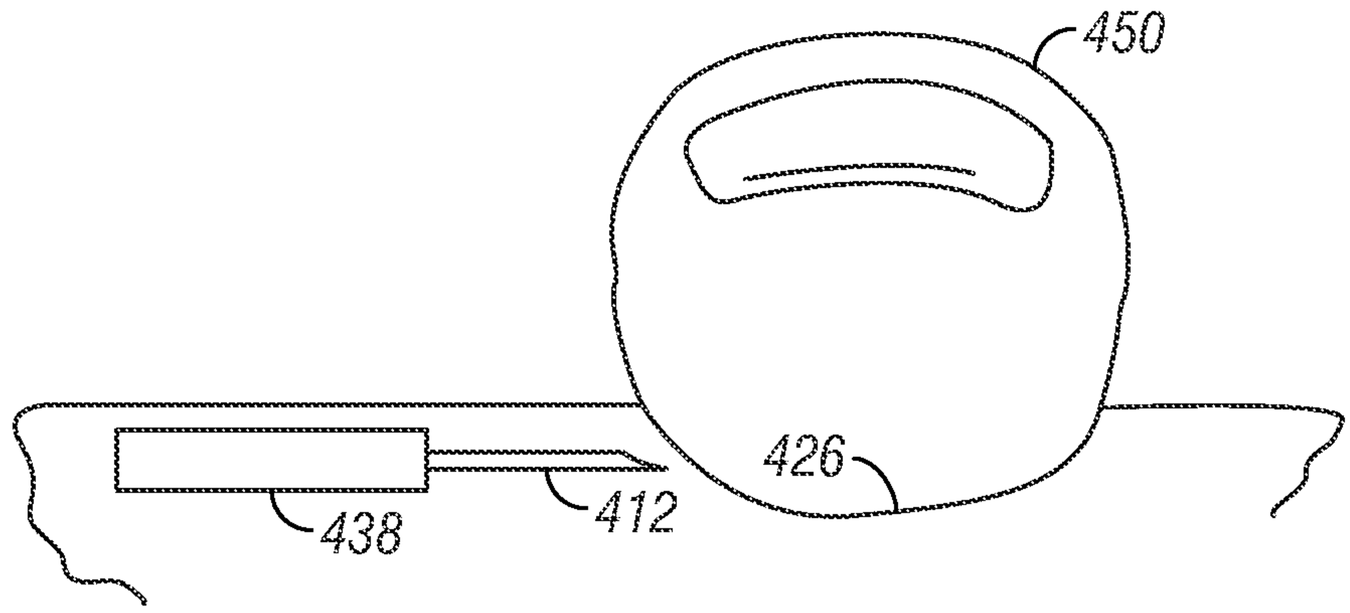

FIG. 54

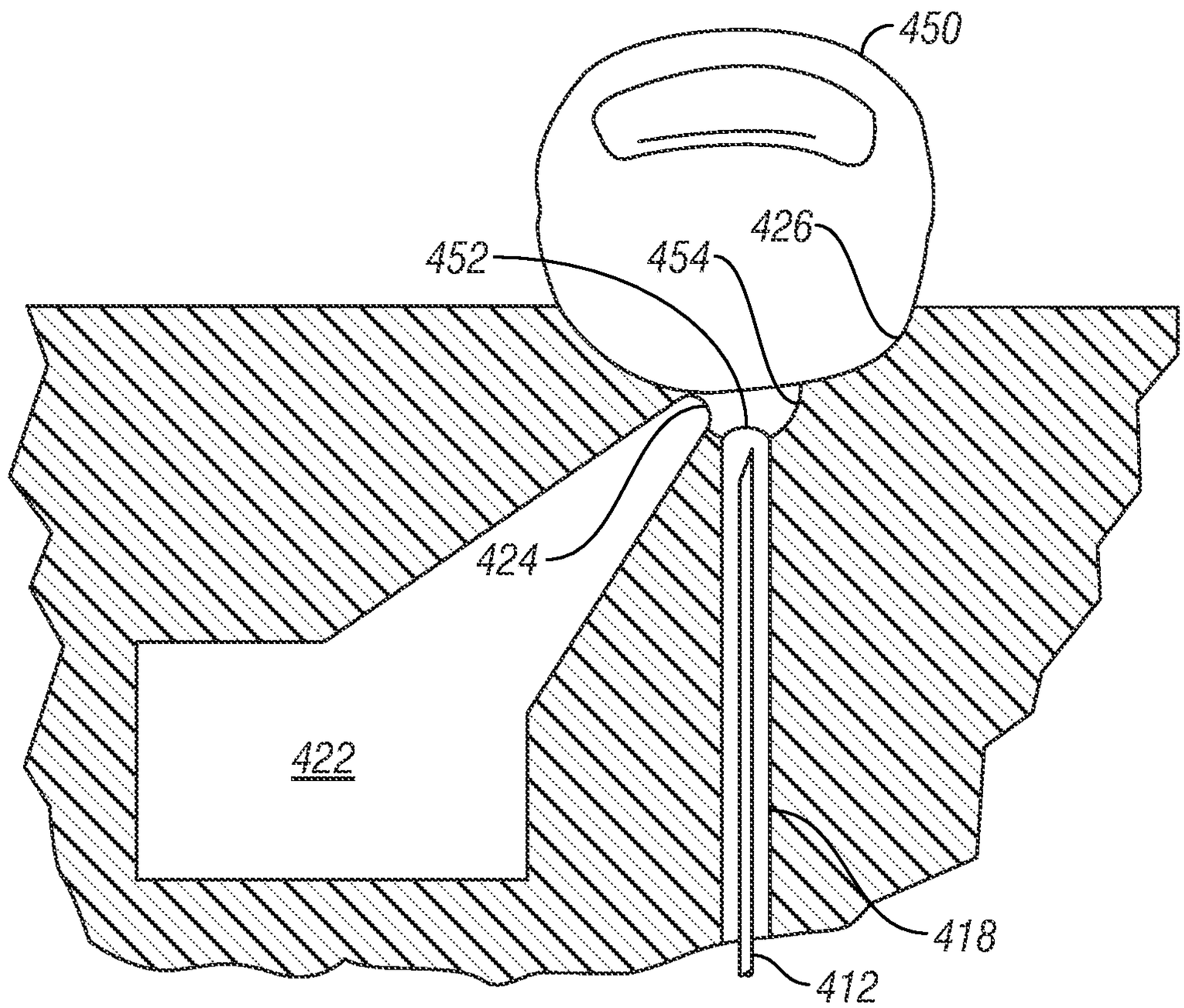

FIG. 55

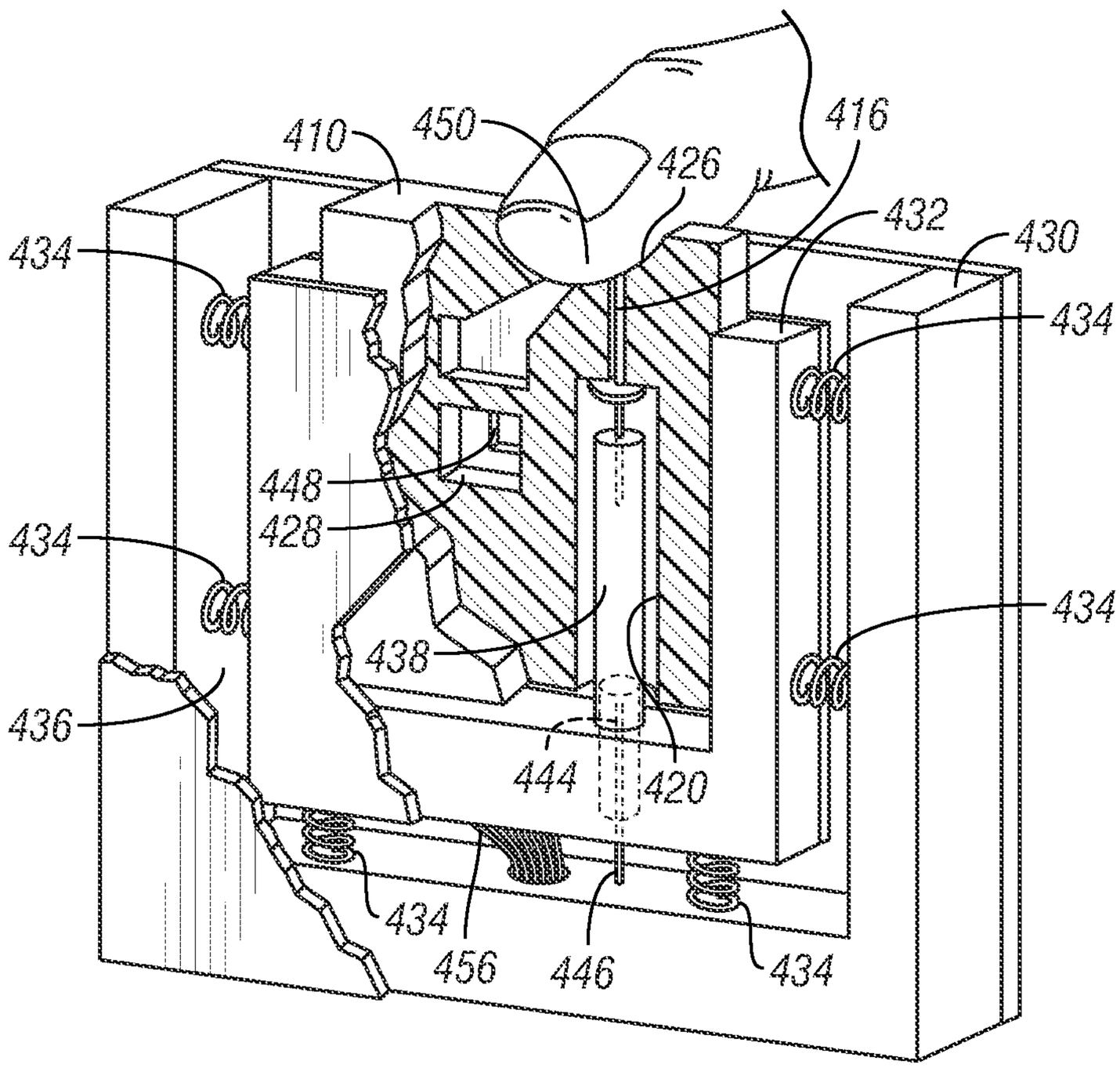
410
450
426
416
432
430
434
434
448
428
434
434
438
436
444
420
434
456
446
434

FIG. 56

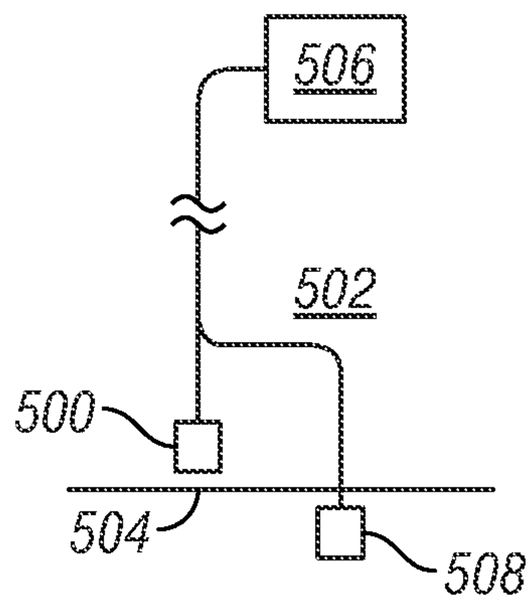

FIG. 57

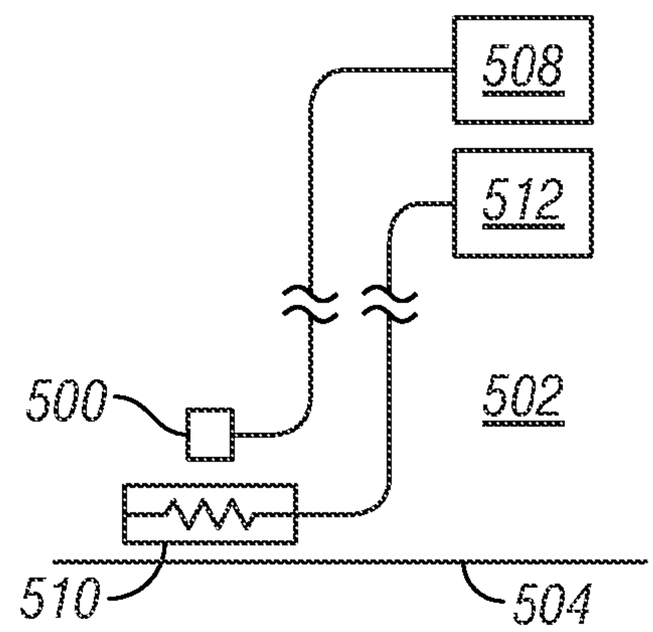

FIG. 58

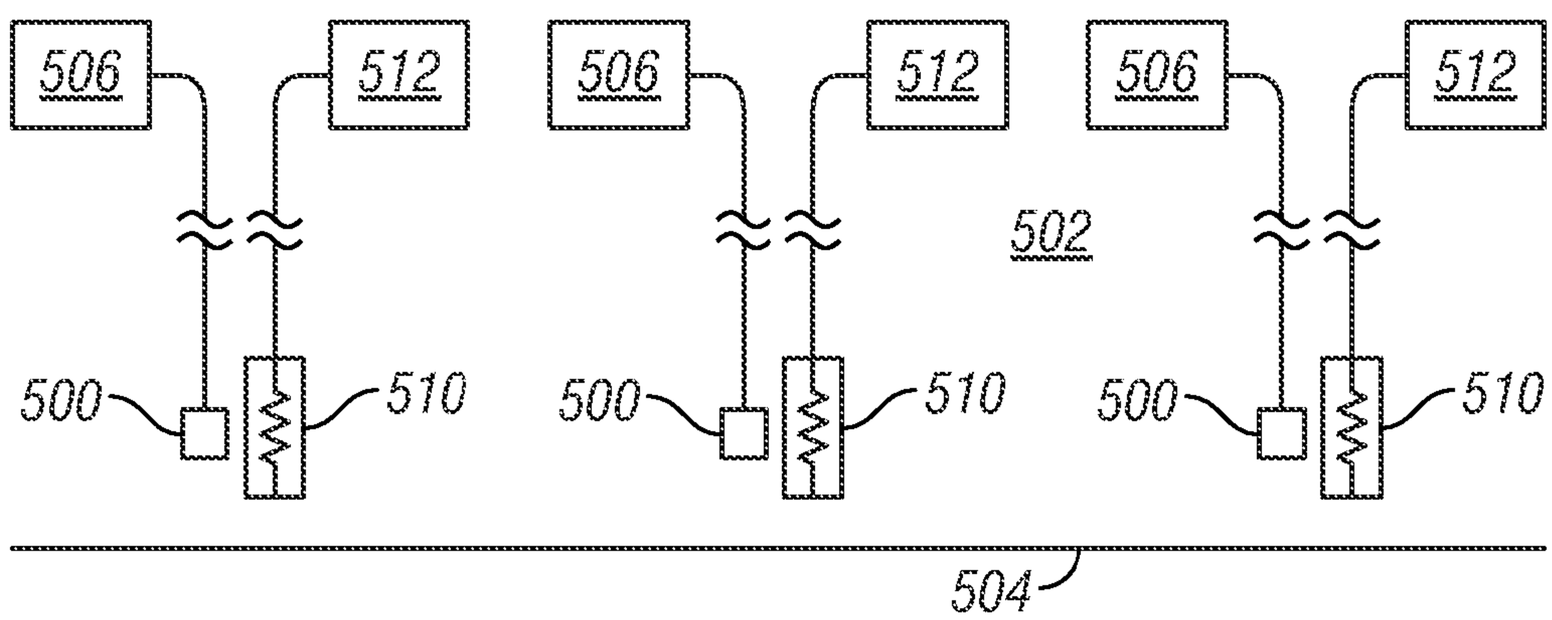

FIG. 59

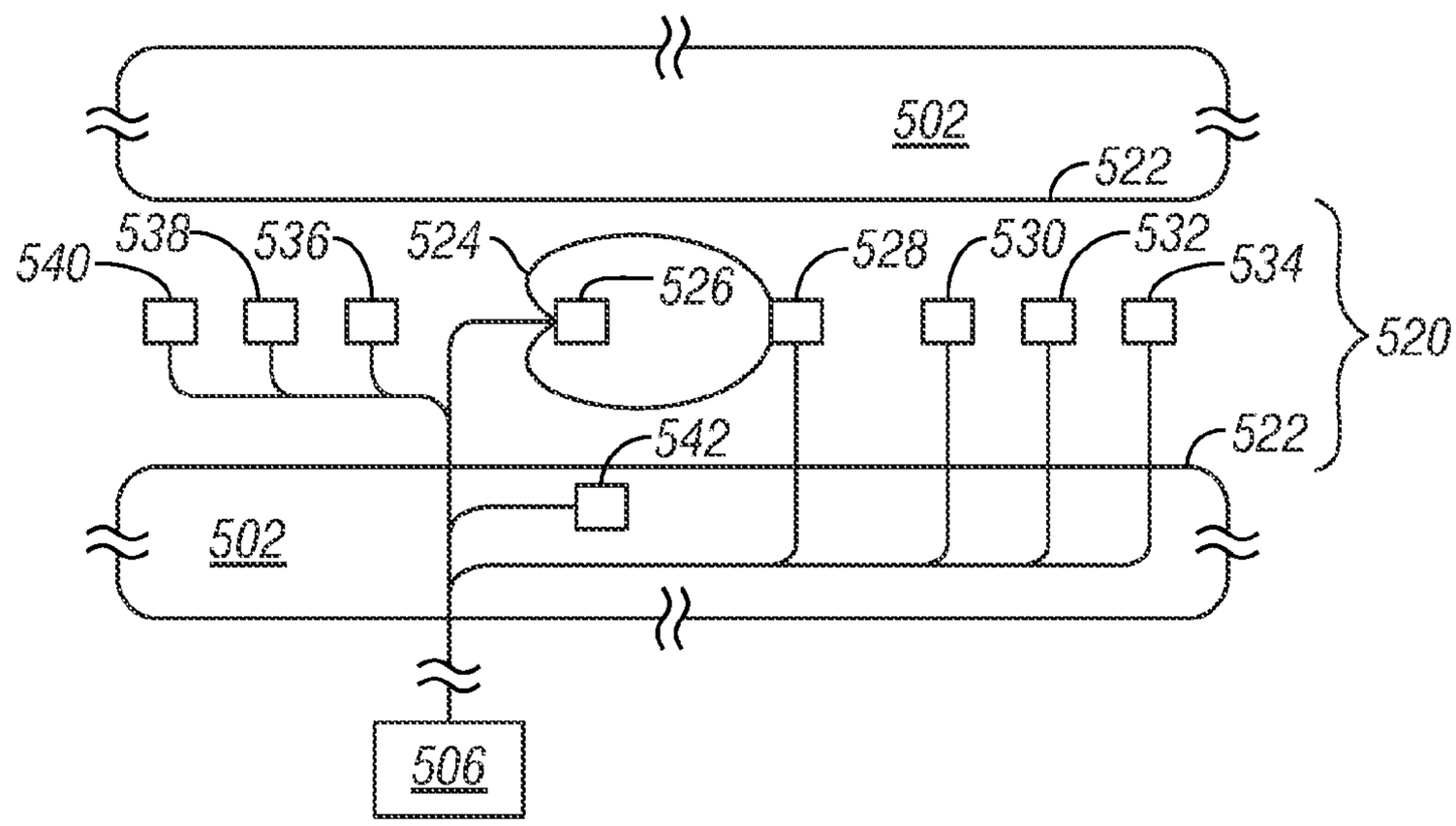
502
522
540
538
536
524
526
528
530
532
534
520
542
522
502
506

FIG. 60

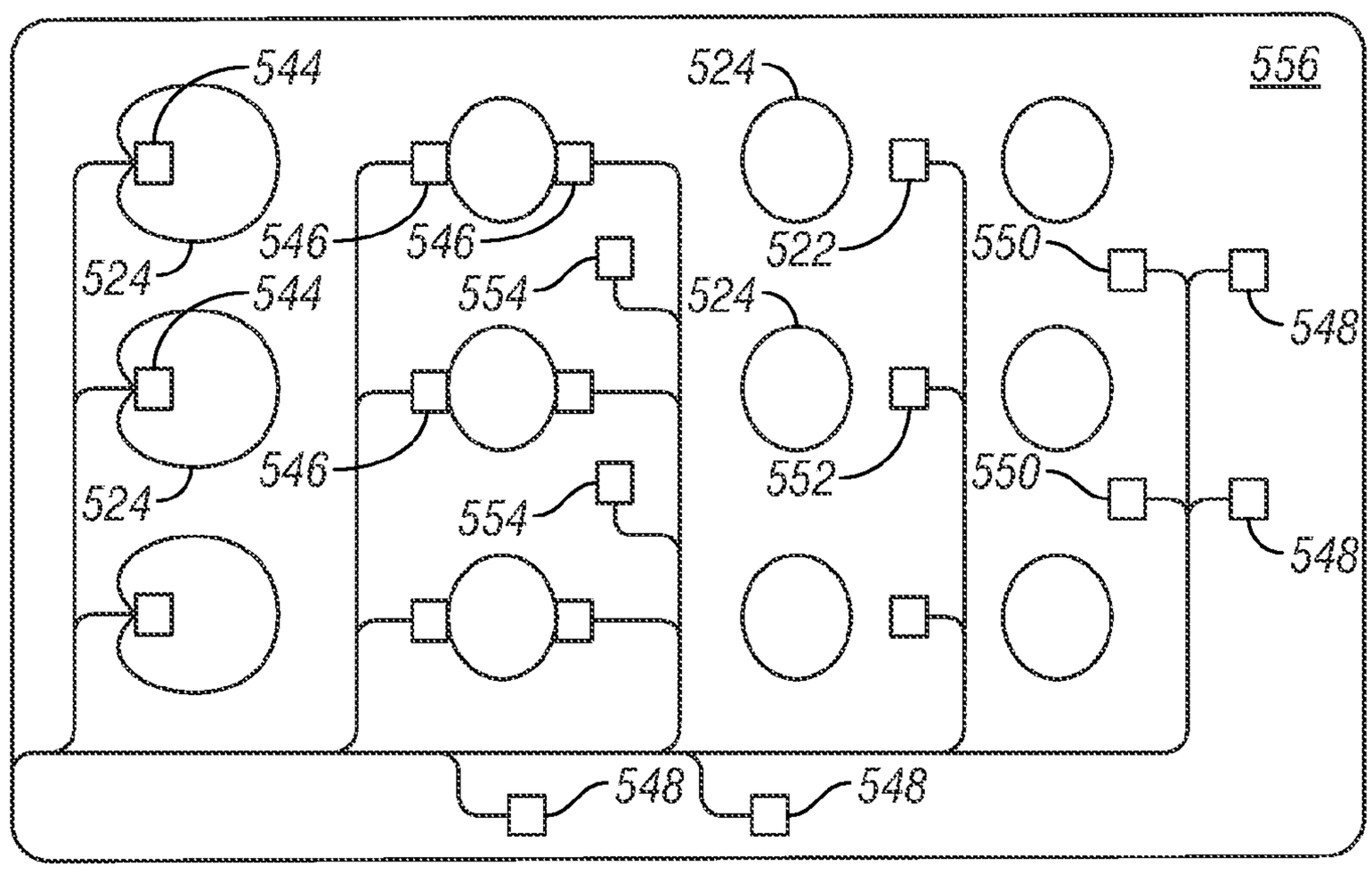
544
524
556
546
546
522
550
554
524
548
544
524
546
552
550
554
548
548
548

FIG. 61

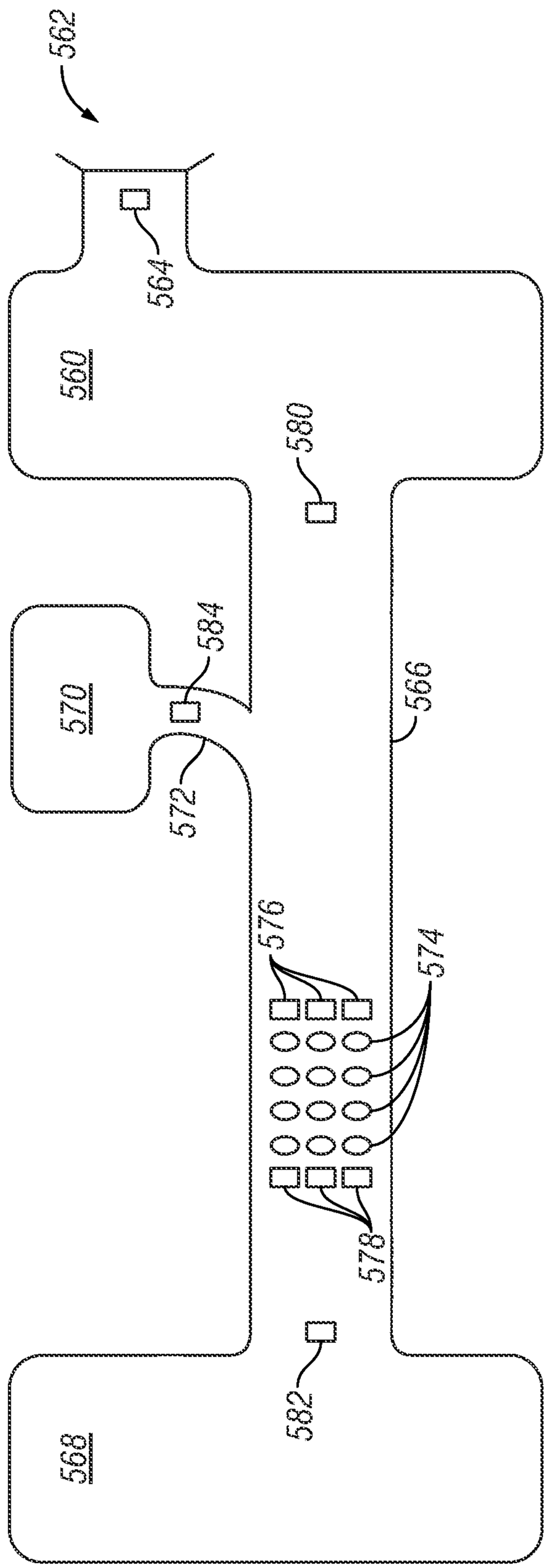

FIG. 62

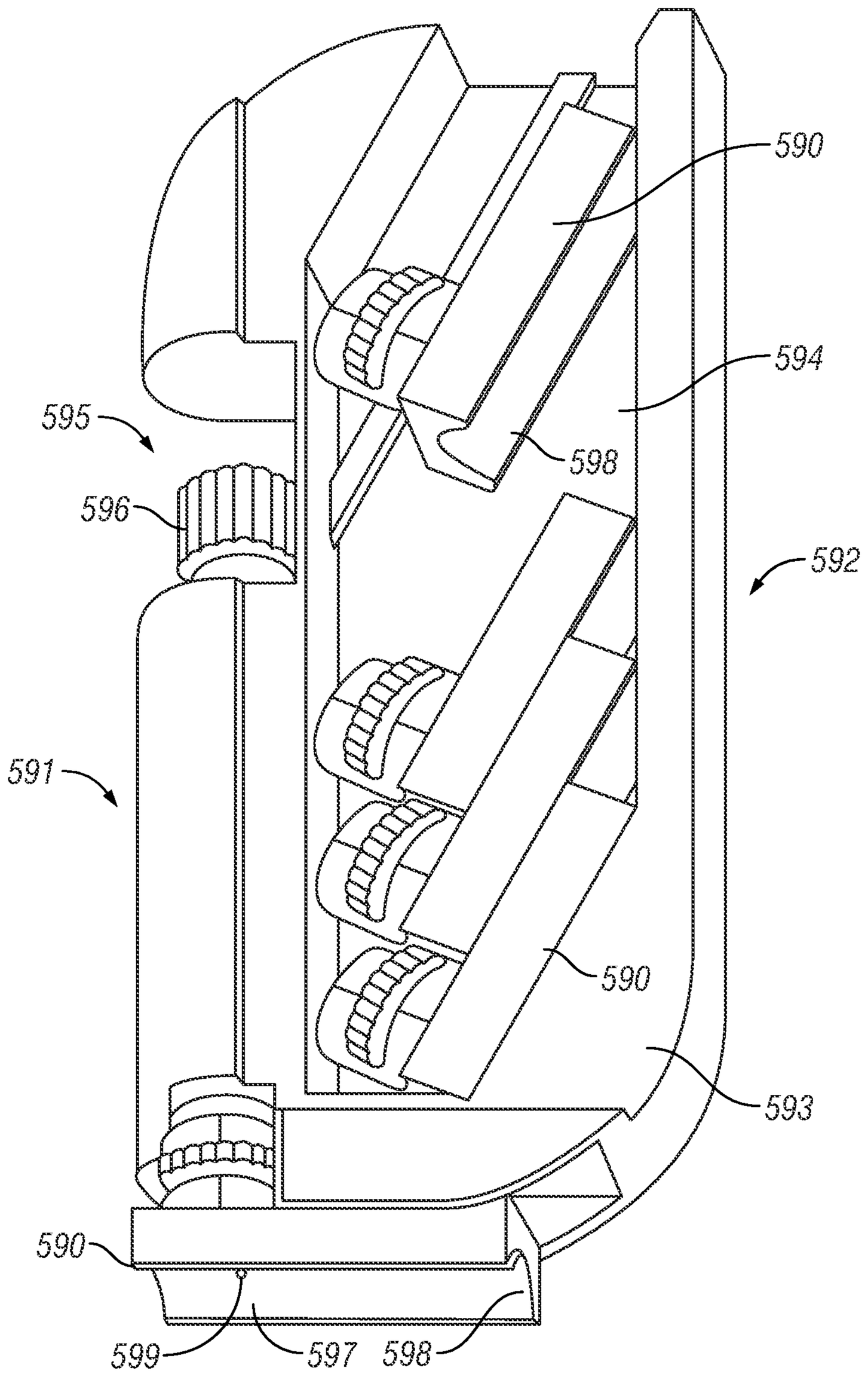

FIG. 63

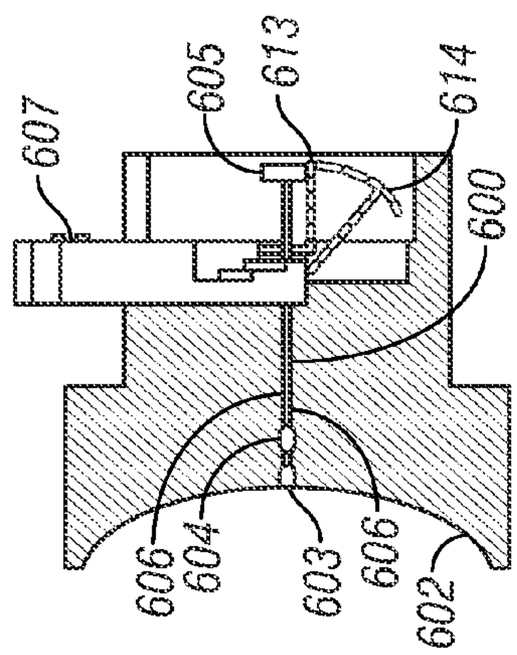

FIG. 65

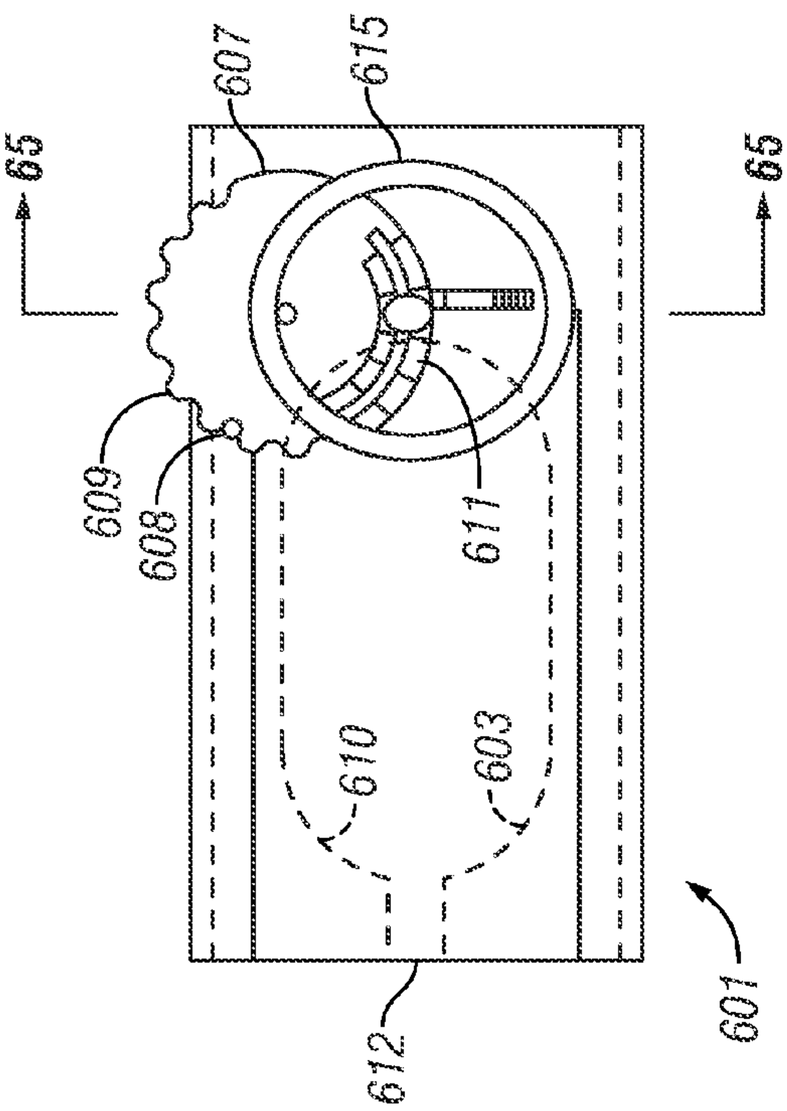

FIG. 64

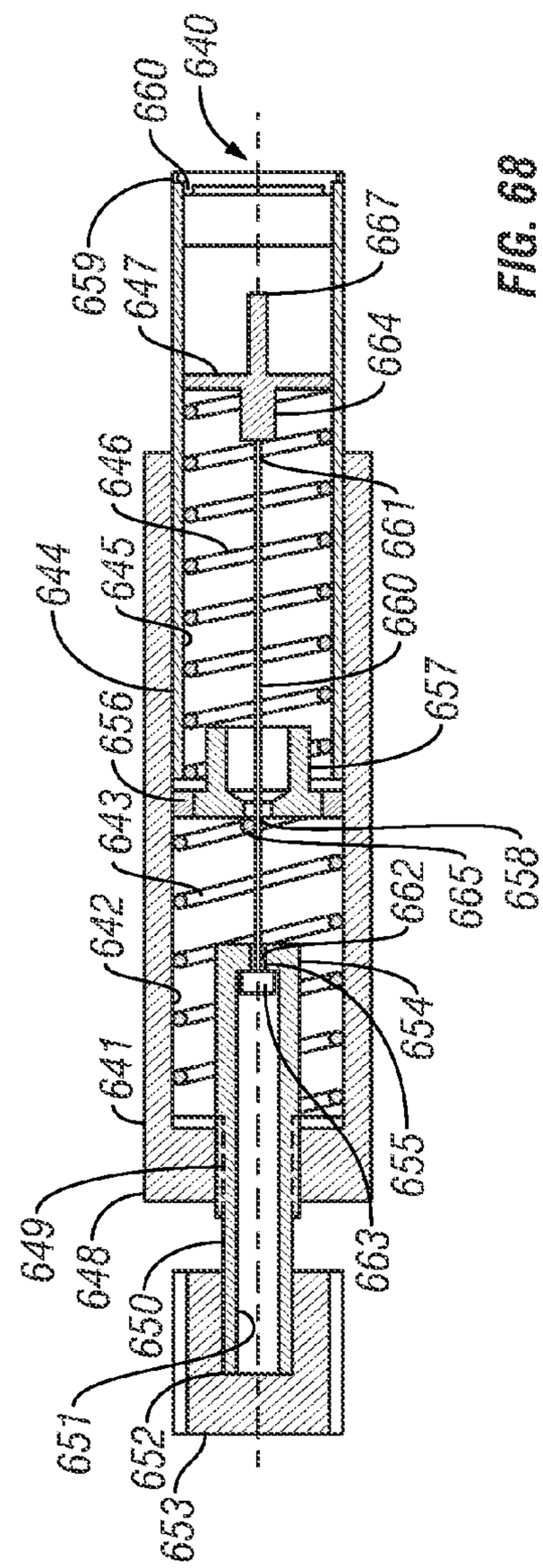

FIG. 68

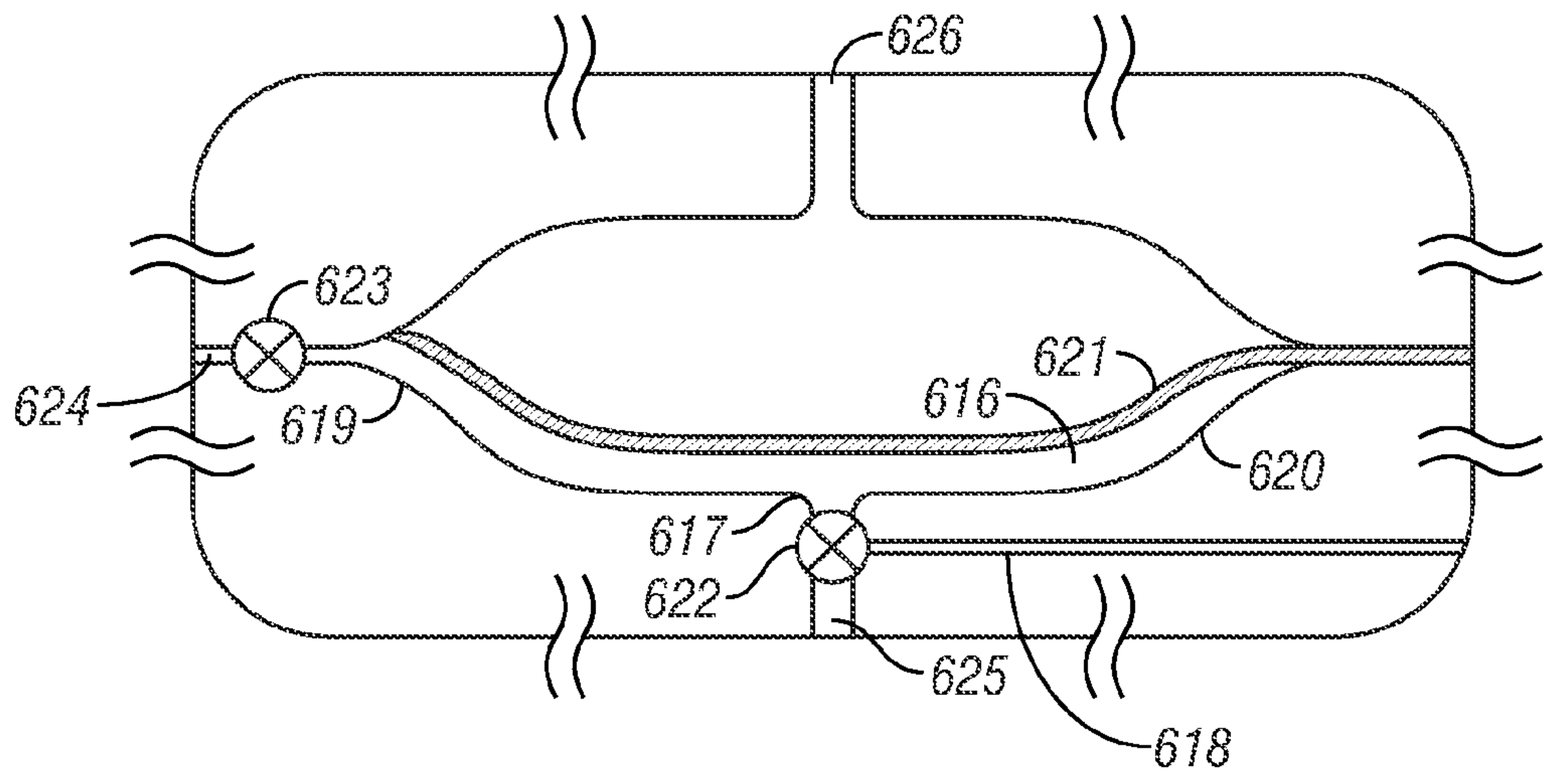
626
623
624
619
621
616
620
617
622
625
618

FIG. 66

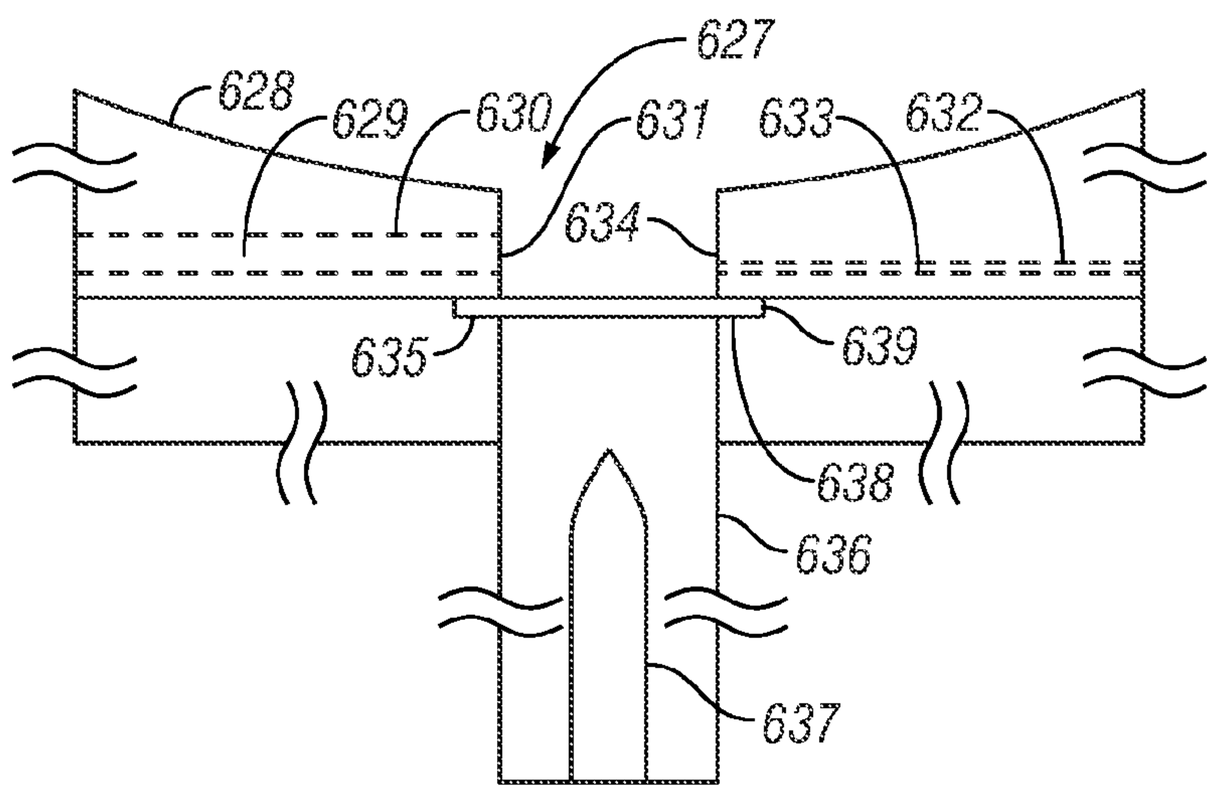
627
628
629
630
631
633
632
634
635
639
638
636
637

FIG. 67

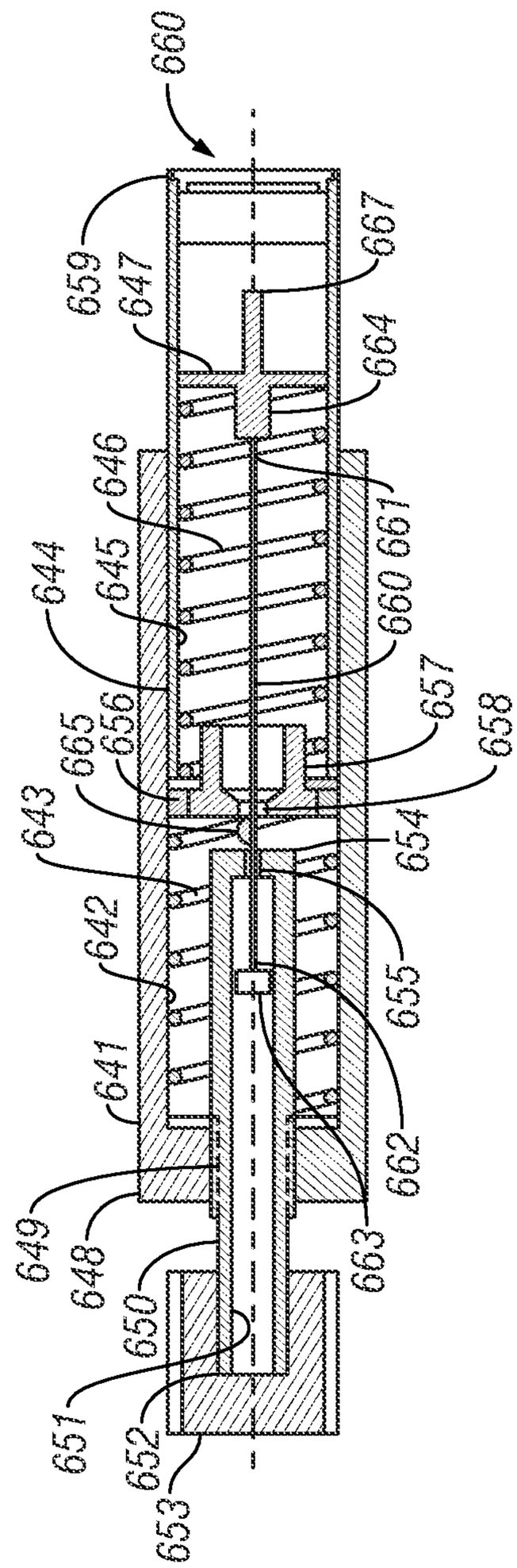
660
659
647
667
664
646
661
660
644
645
657
665
656
658
643
654
642
655
641
662
649
648
663
650
651
652
653

FIG. 69

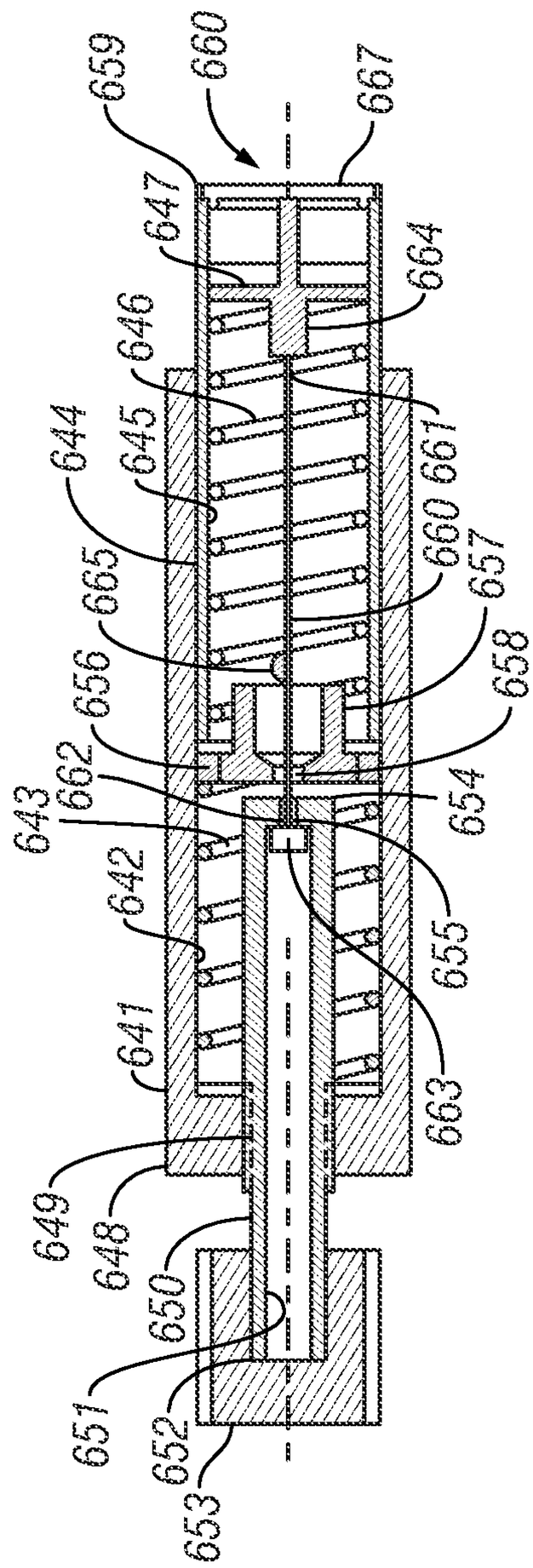
659
660
667
647
664
646
661
644
645
660
665
657
656
658
662
654
643
642
655
641
663
649
648
650
651
652
653

FIG. 70

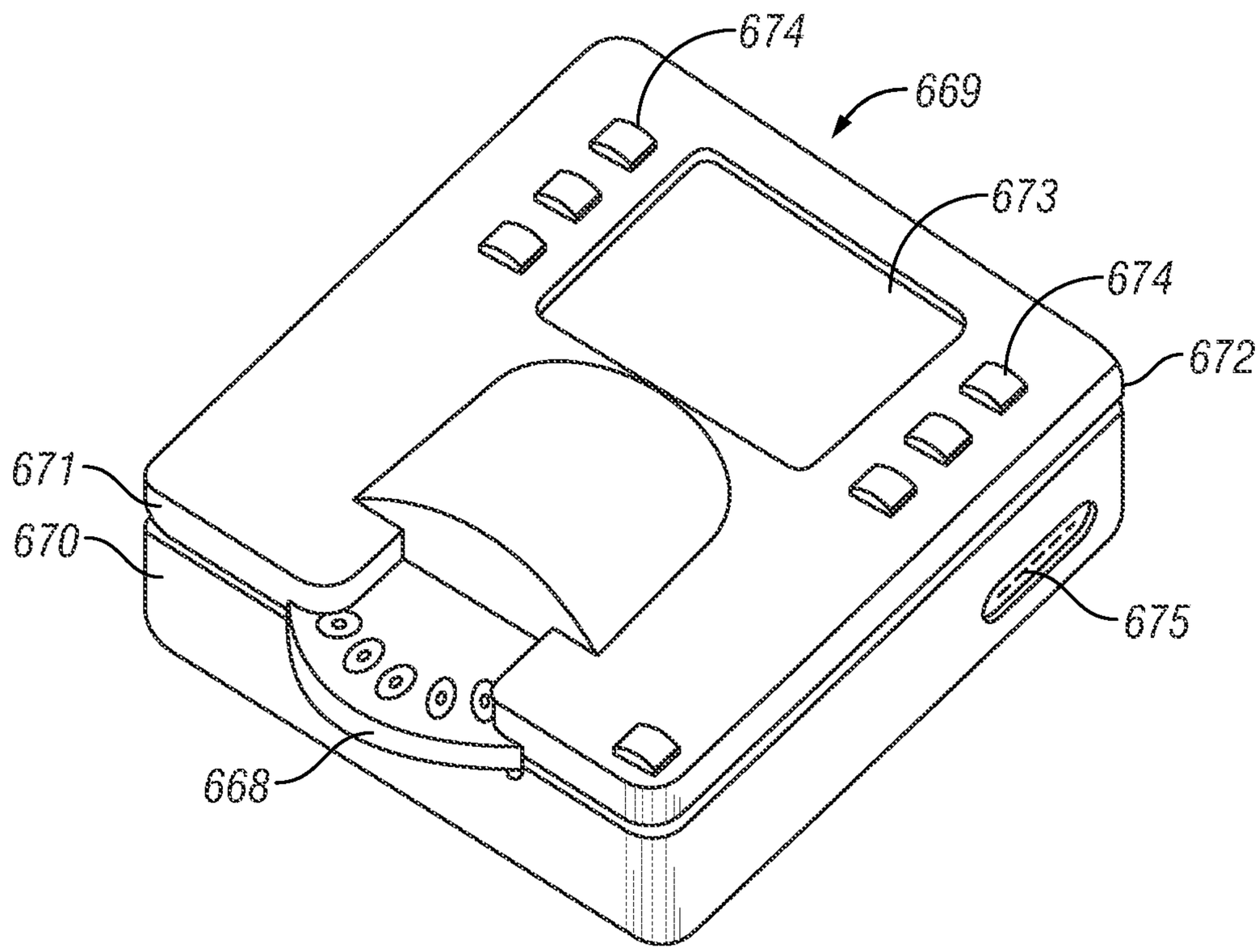

FIG. 71

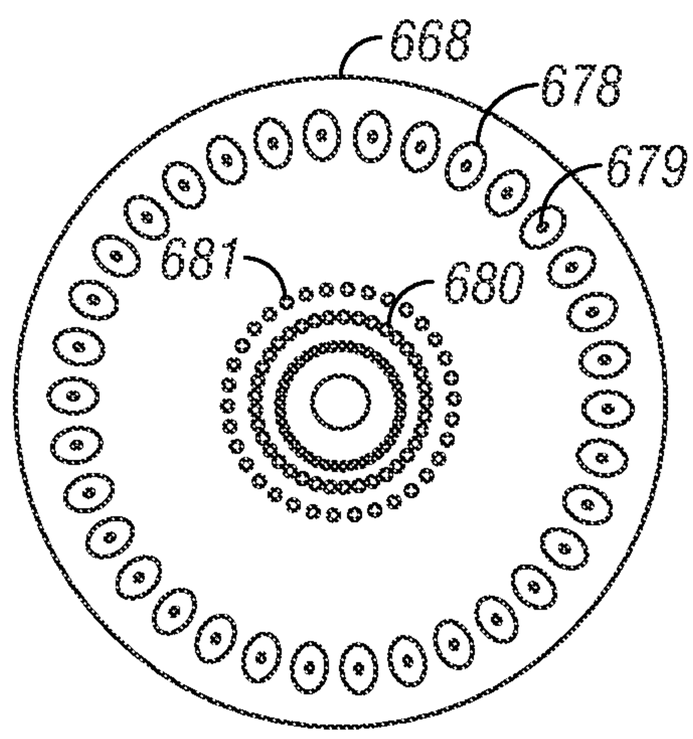

FIG. 72

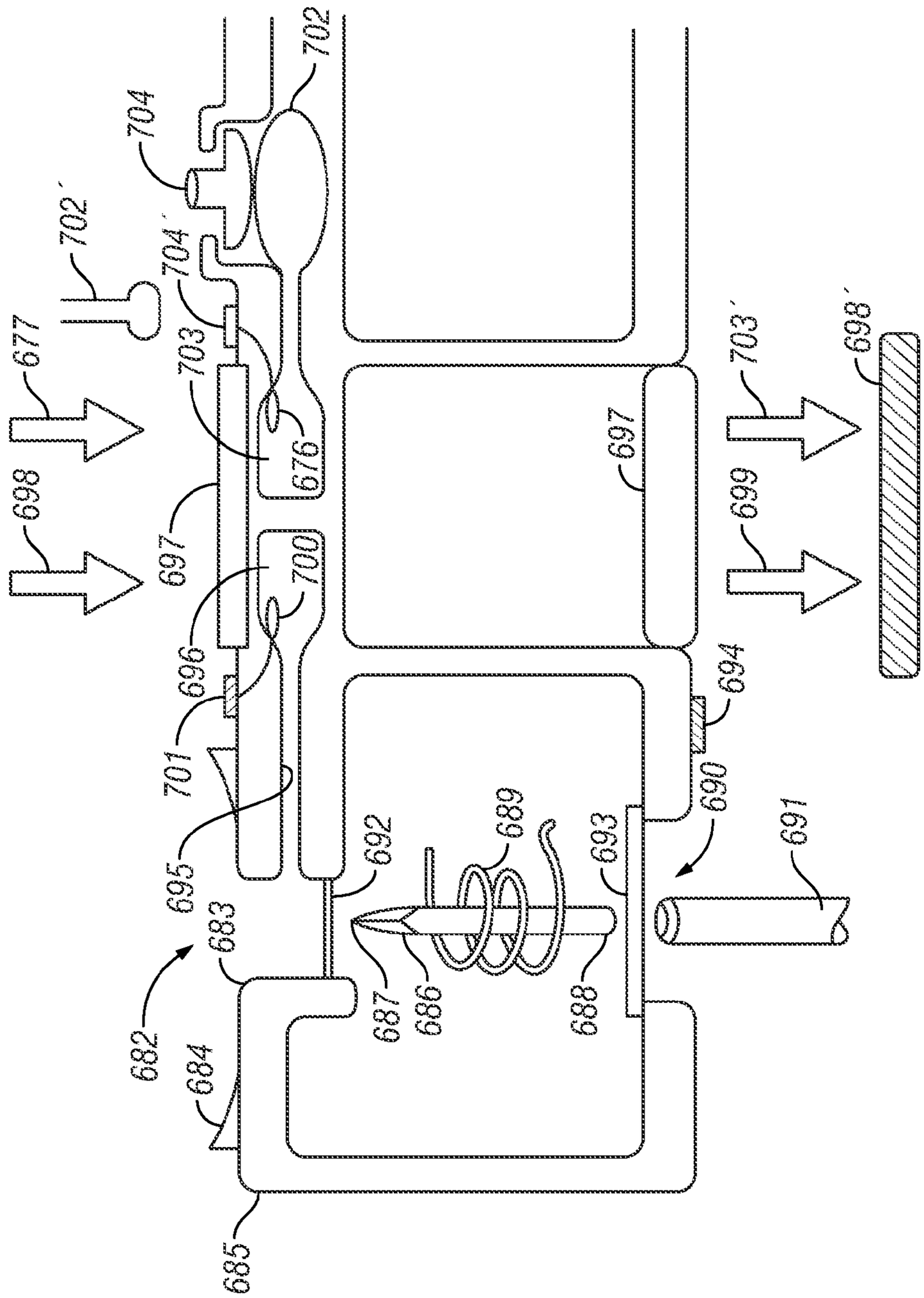
677
698
702'
704
702
704'
703
676
697
700
696
701
695
683
682
684
685
692
687
686
689
688
693
690
691
694
697
699
703'
698'

FIG. 73

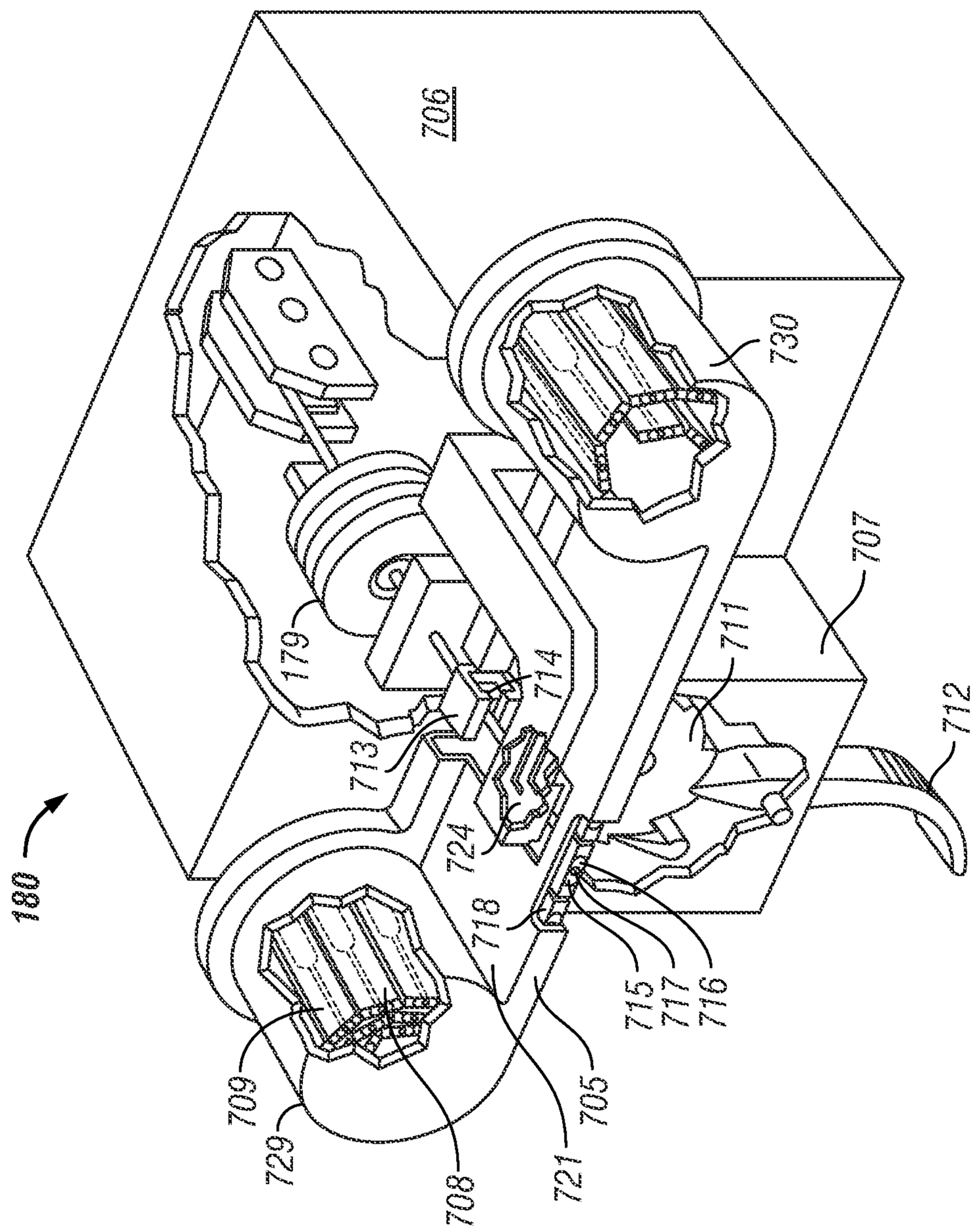
706
730
707
711
712
179
714
713
724
718
715
717
716
705
721
708
729
709
180

FIG. 74

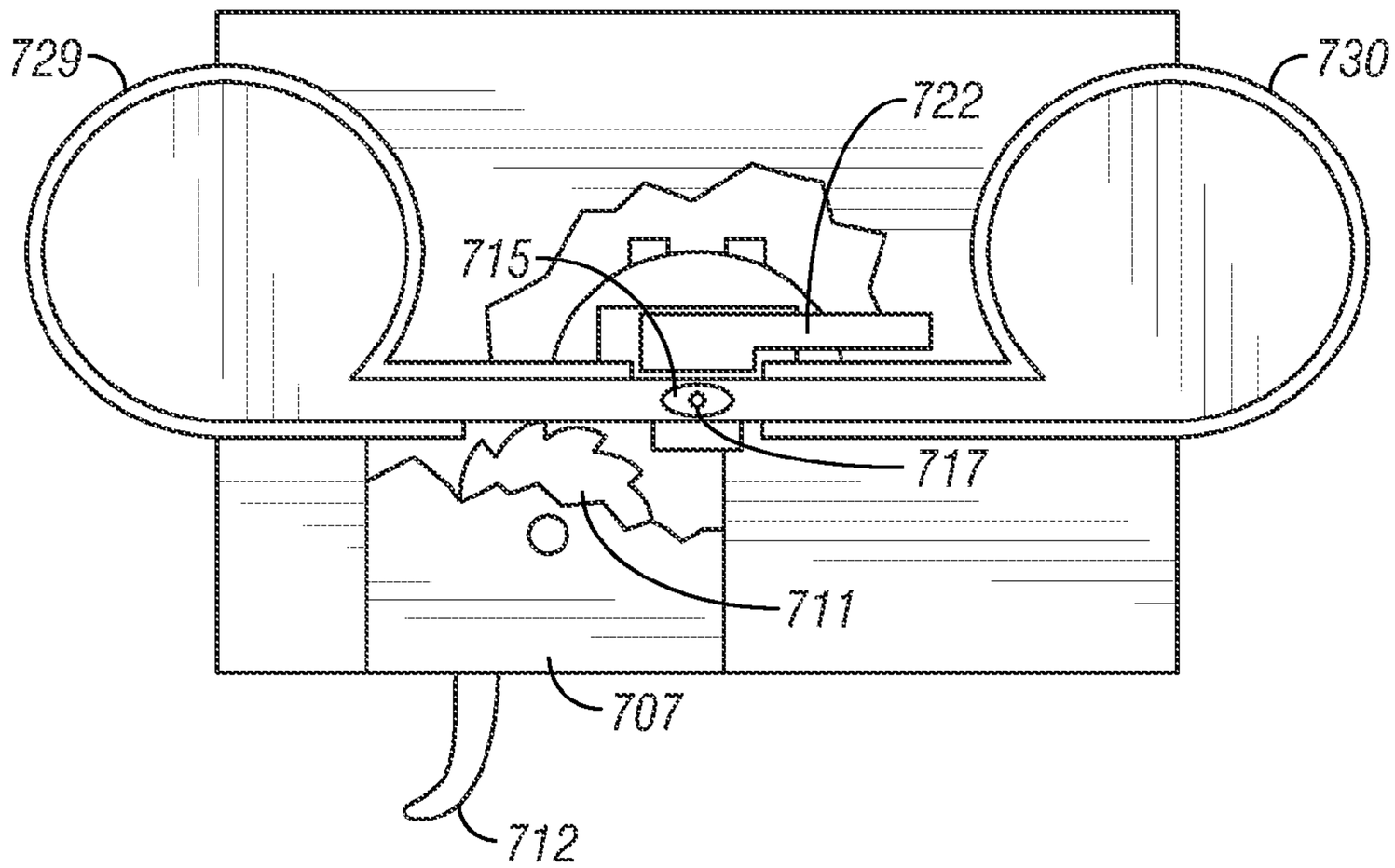

FIG. 75

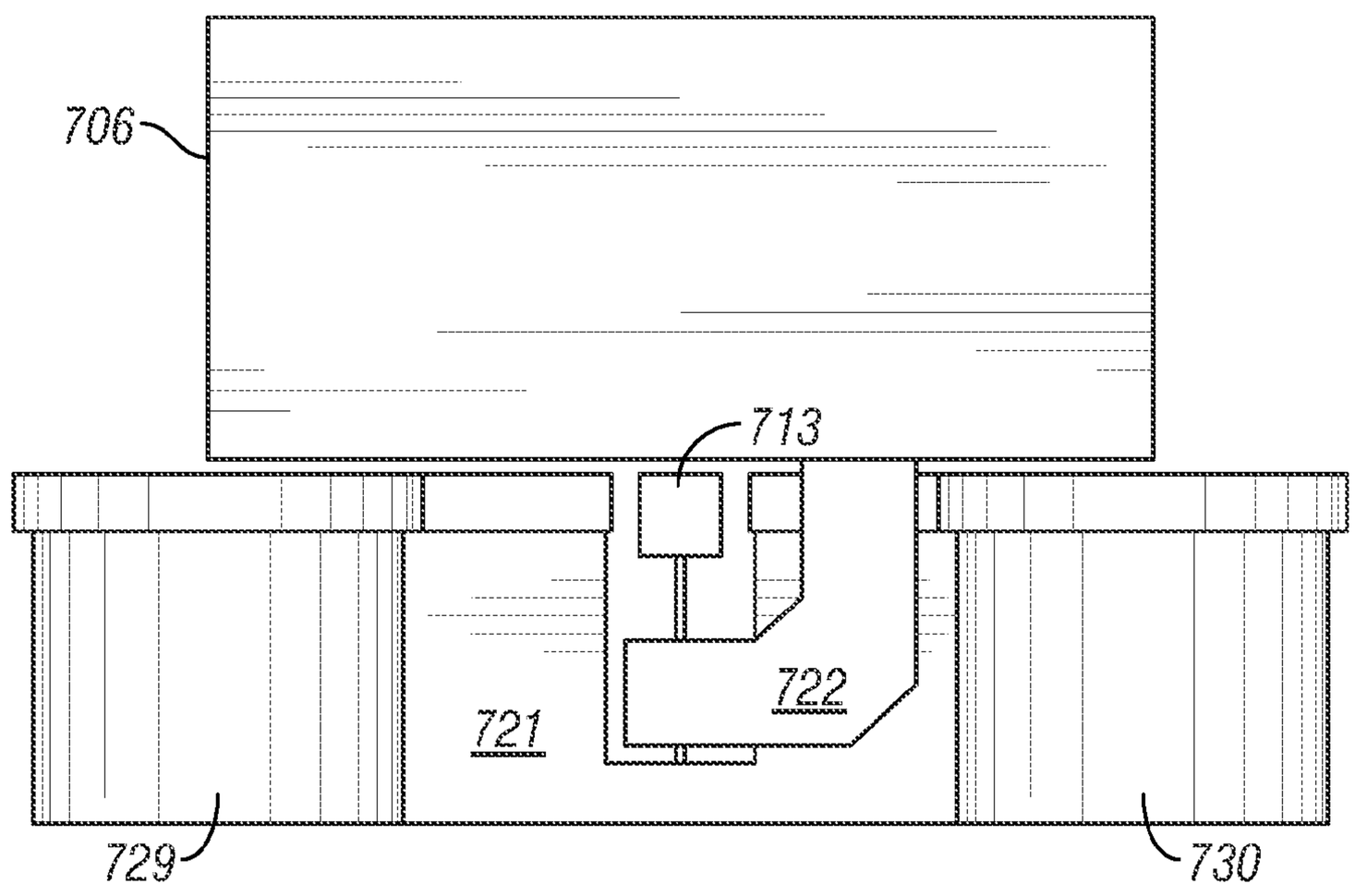

FIG. 76

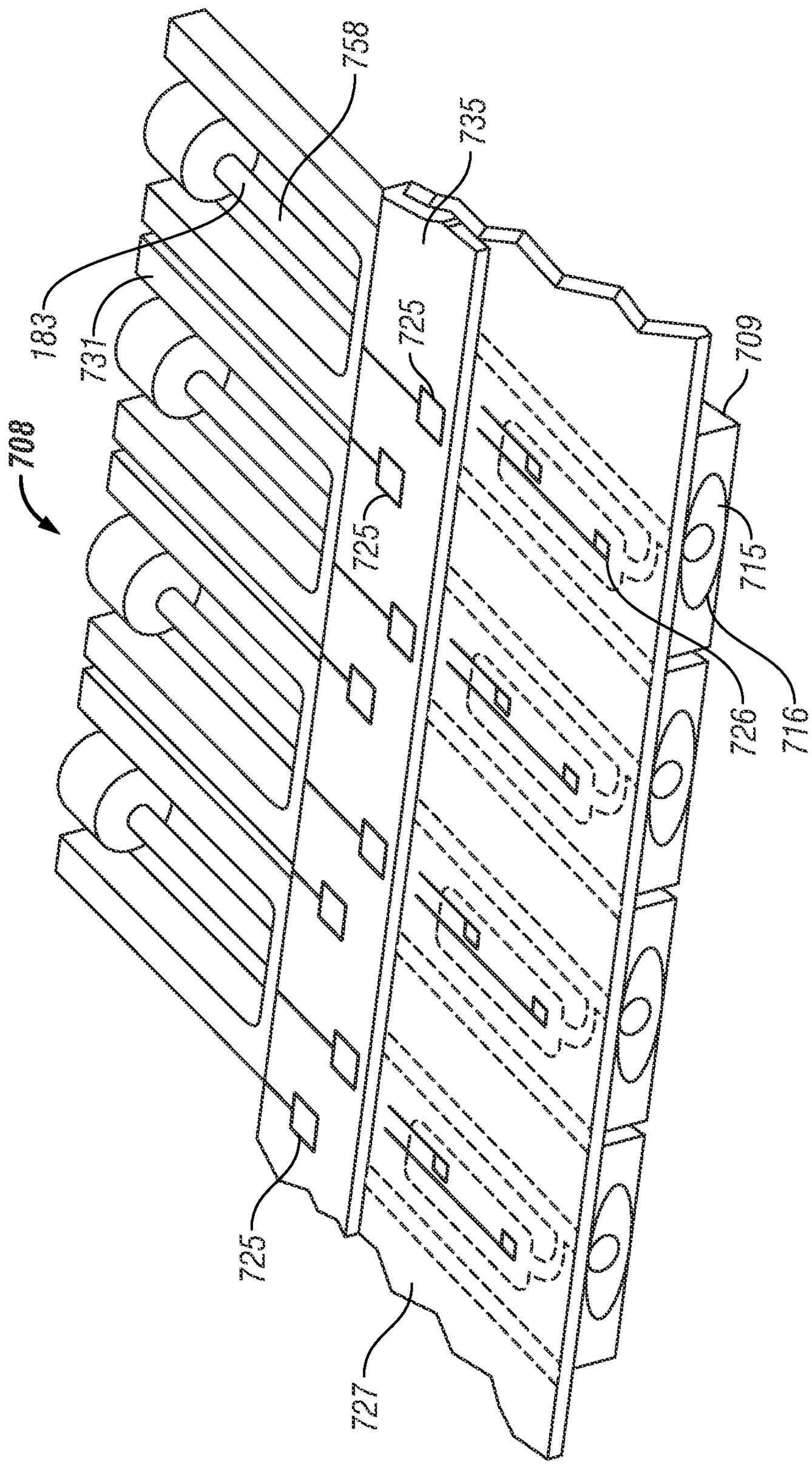

FIG. 77

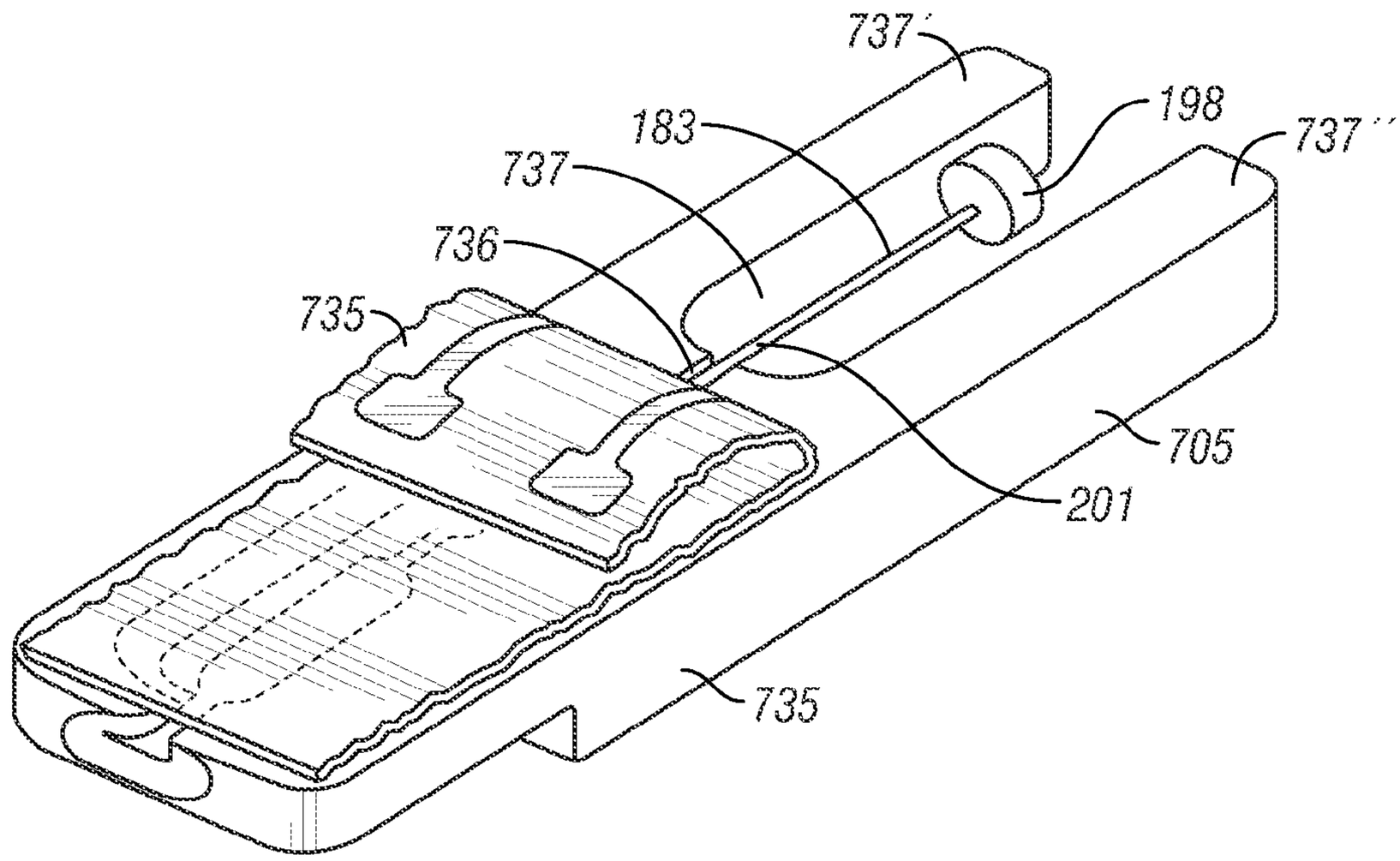

FIG. 78

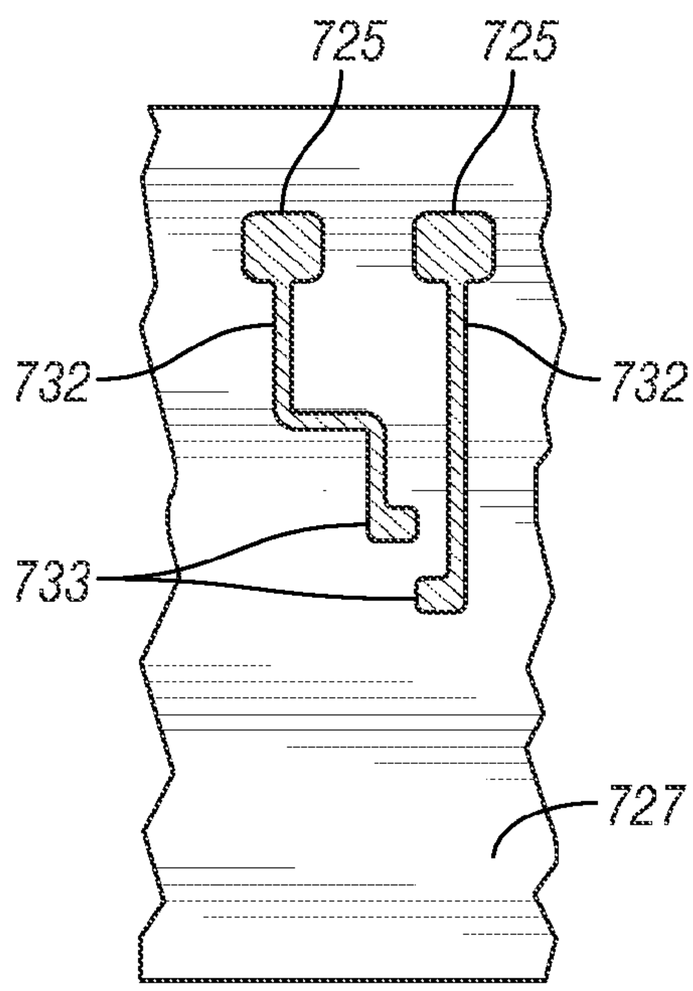

FIG. 79

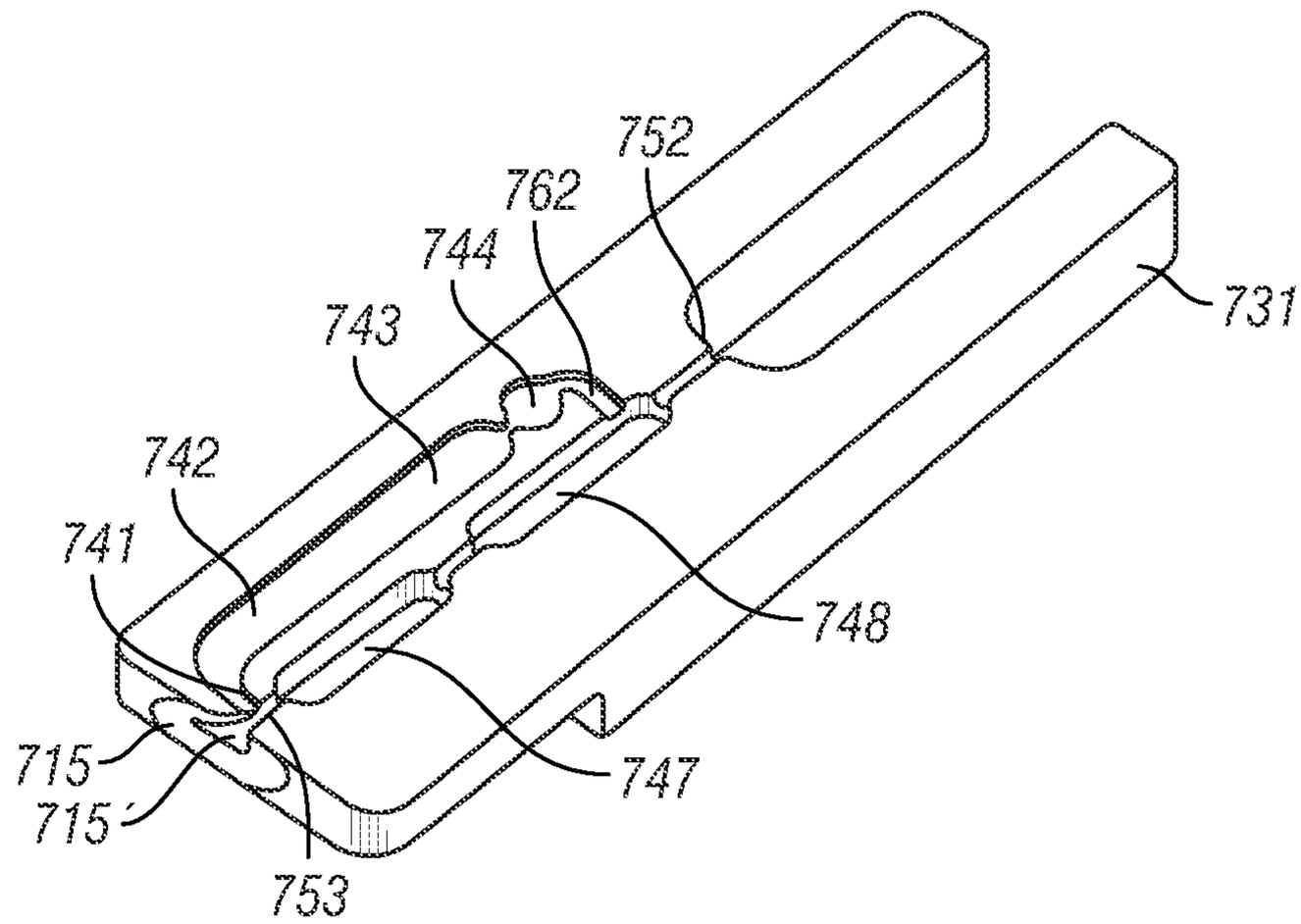
752
762
744
743
731
742
741
748
715
715'
747
753

FIG. 80

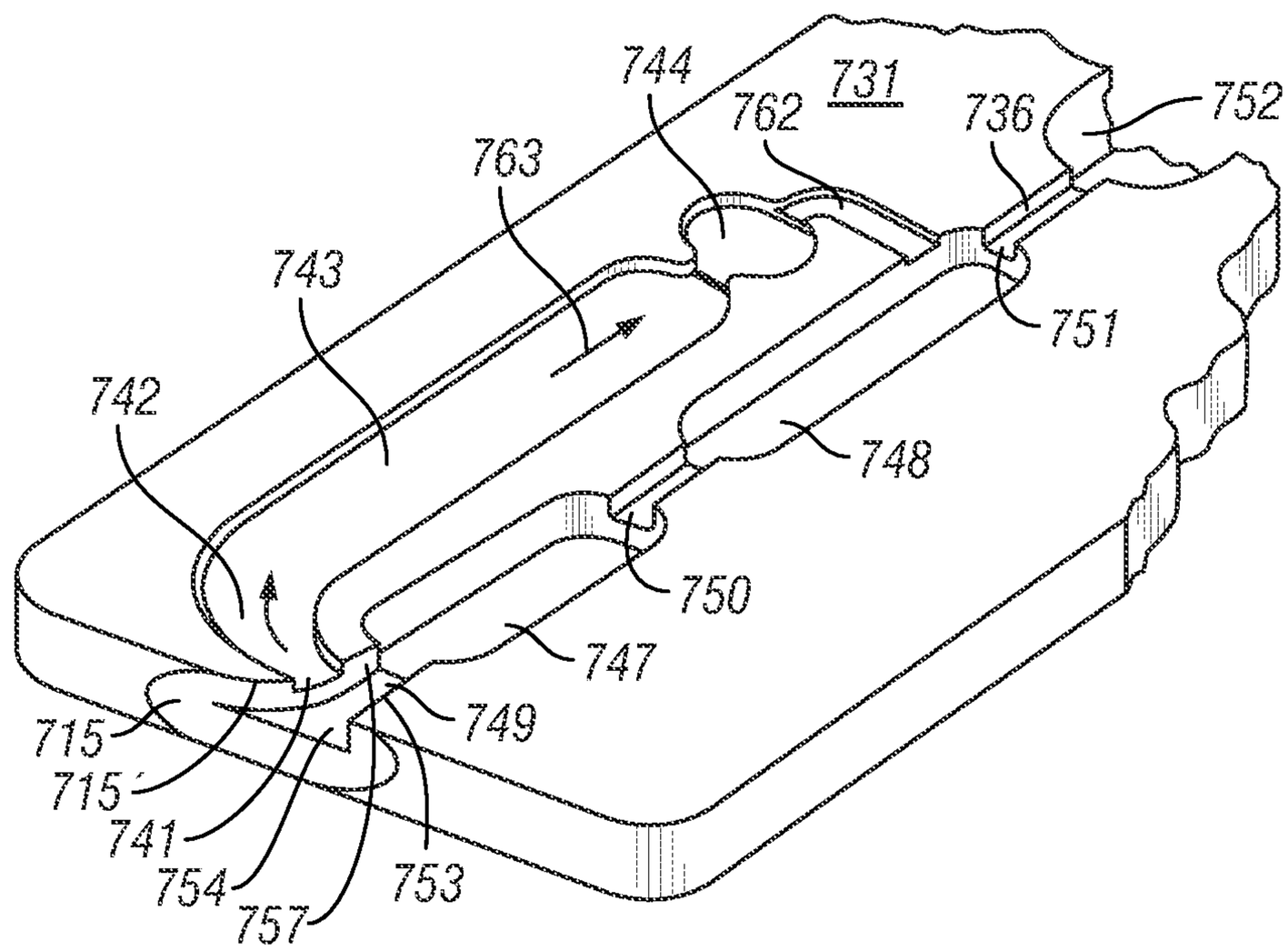
744
731
762
736
752
763
743
751
742
748
750
747
749
715
715'
741
754
757
753

FIG. 81

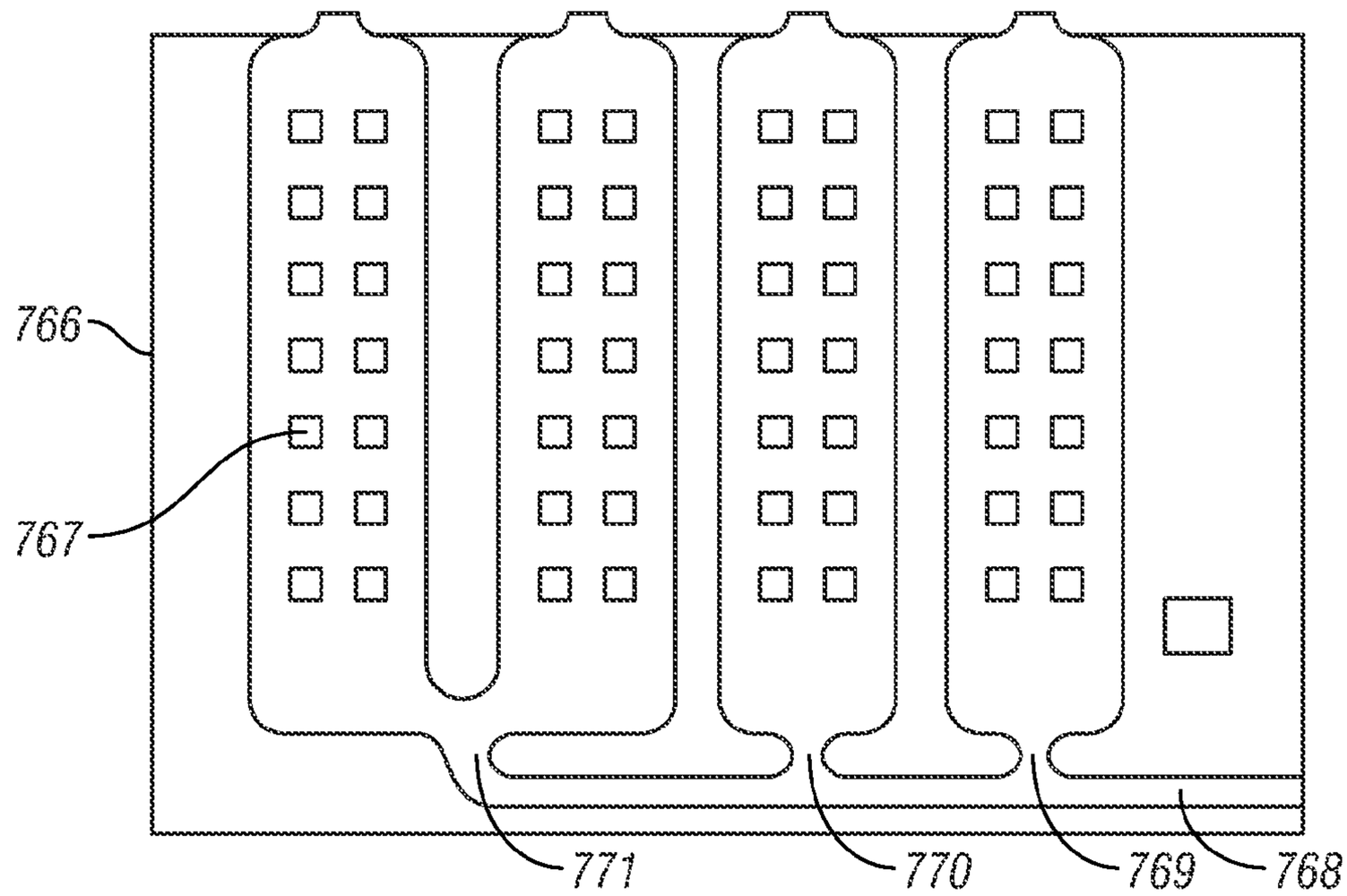

FIG. 82

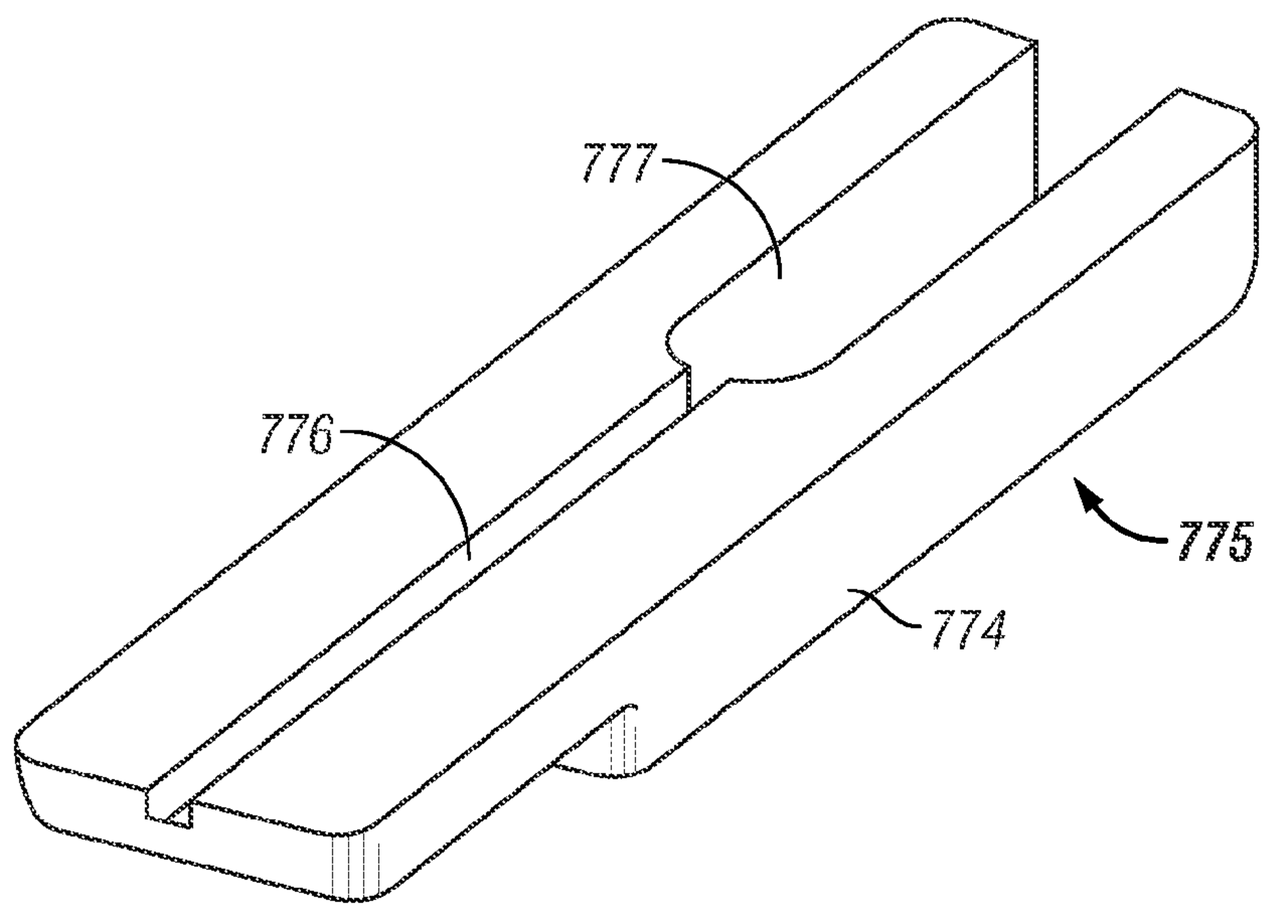

FIG. 83

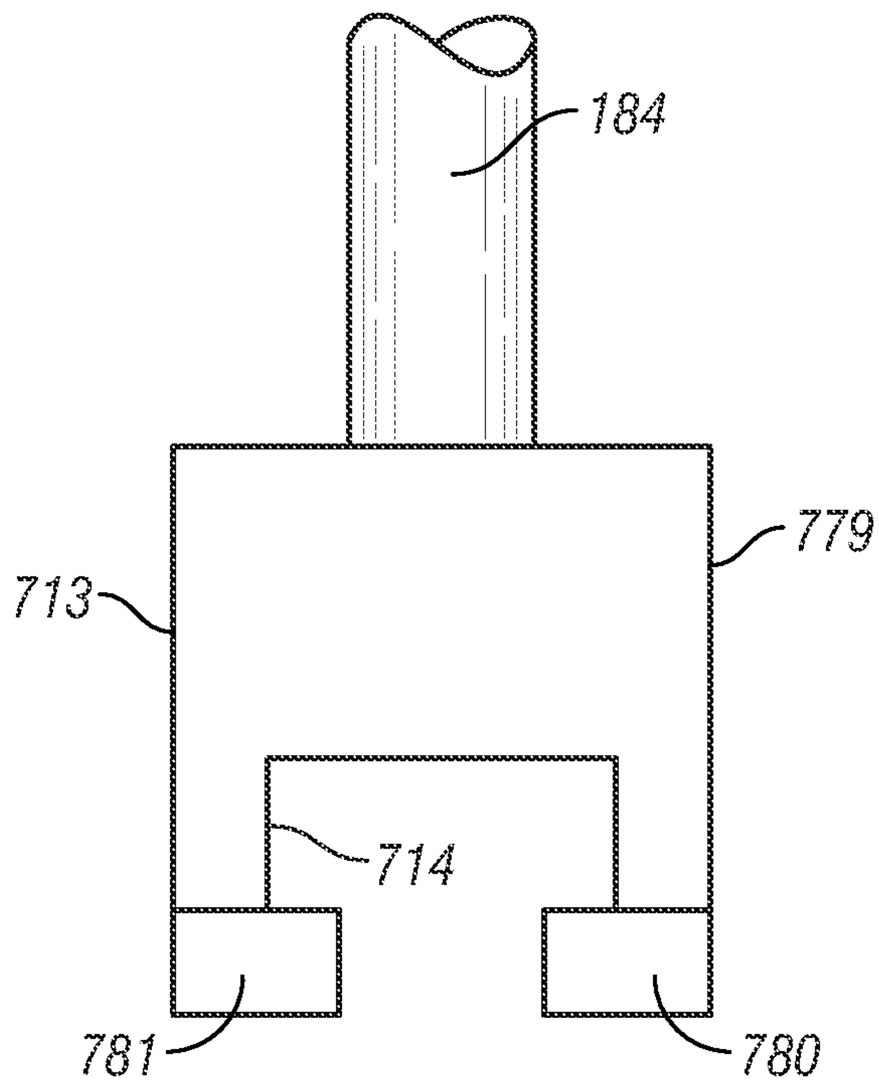

FIG. 84

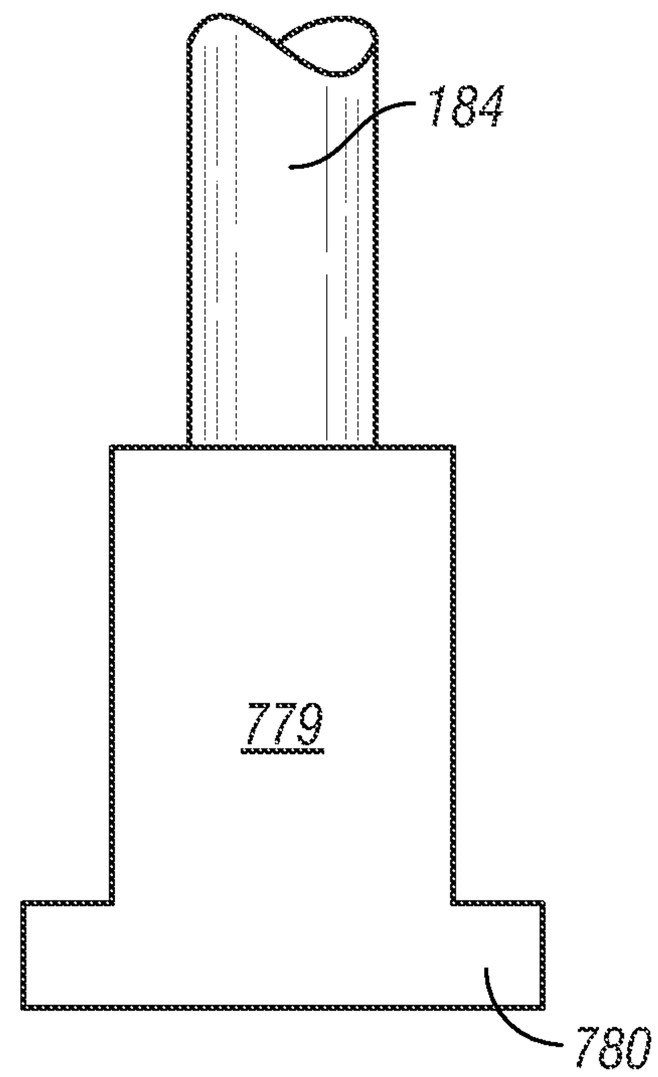

FIG. 85

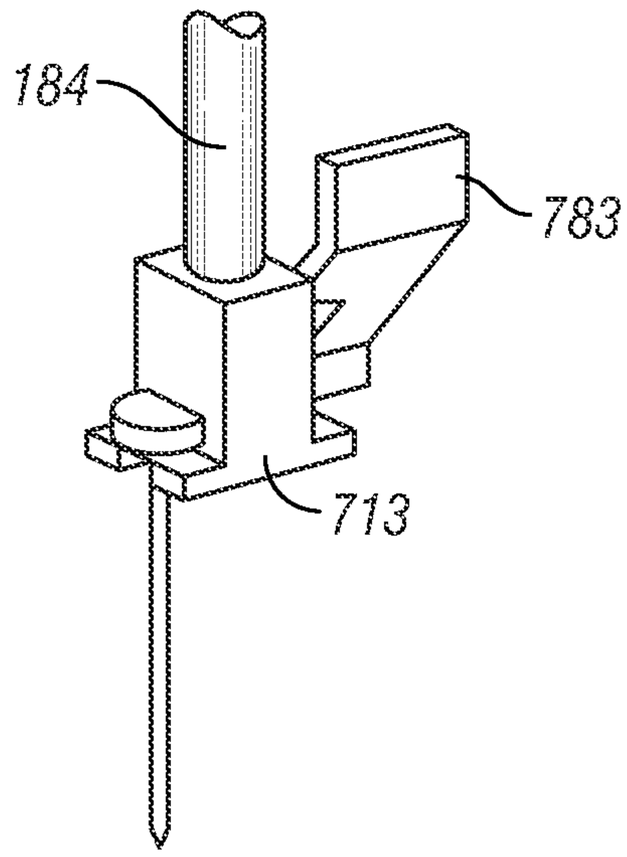

FIG. 86

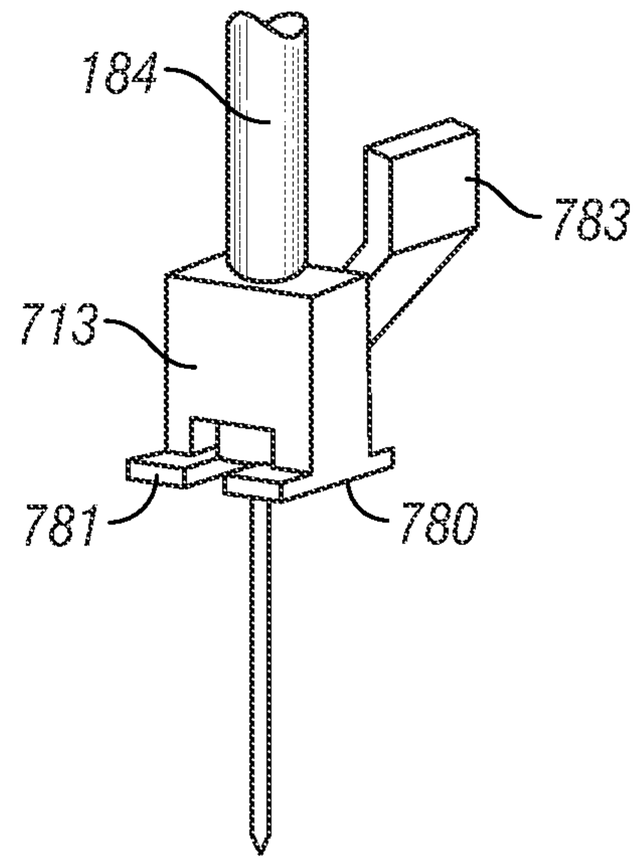

FIG. 87

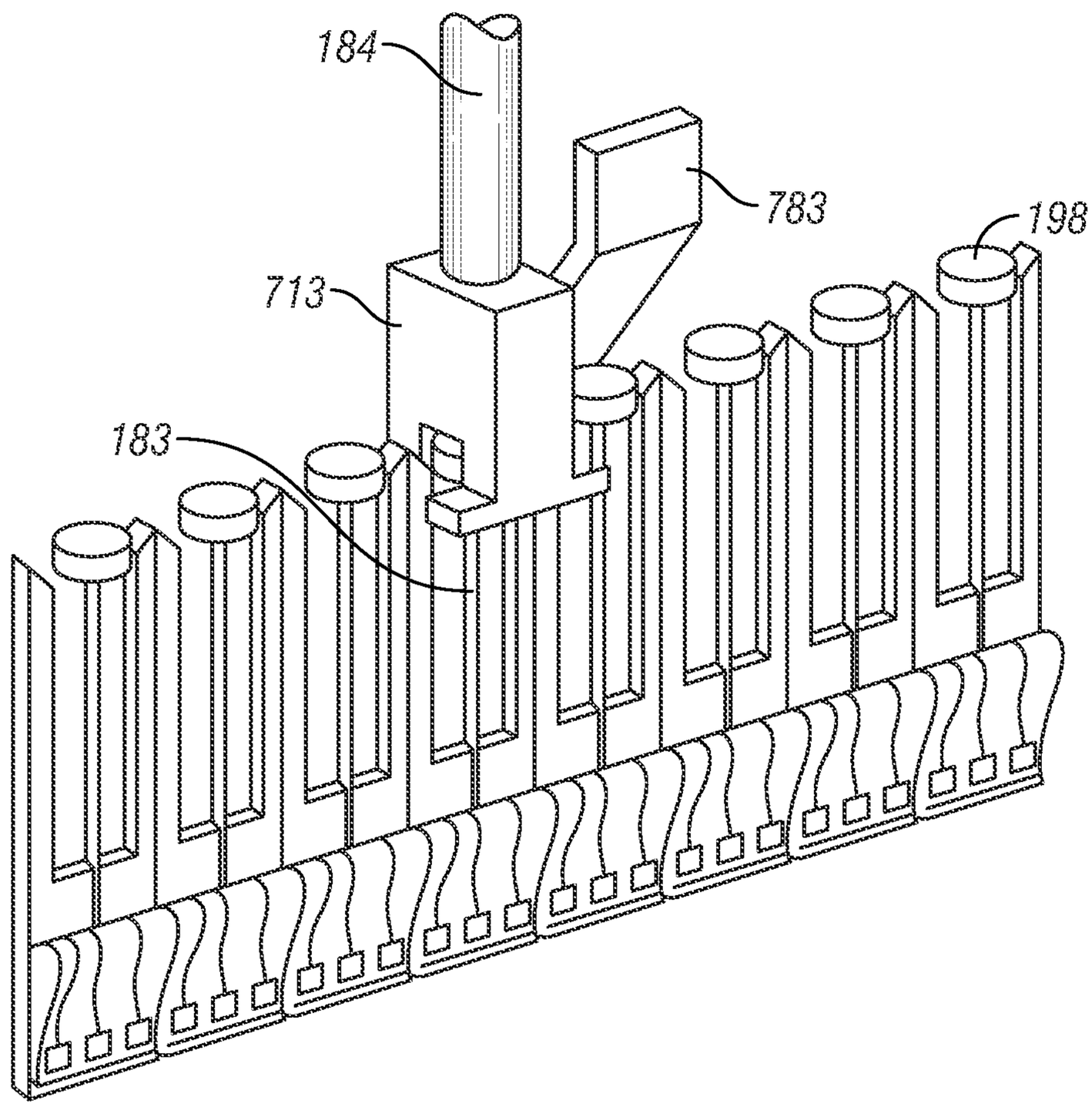

FIG. 88

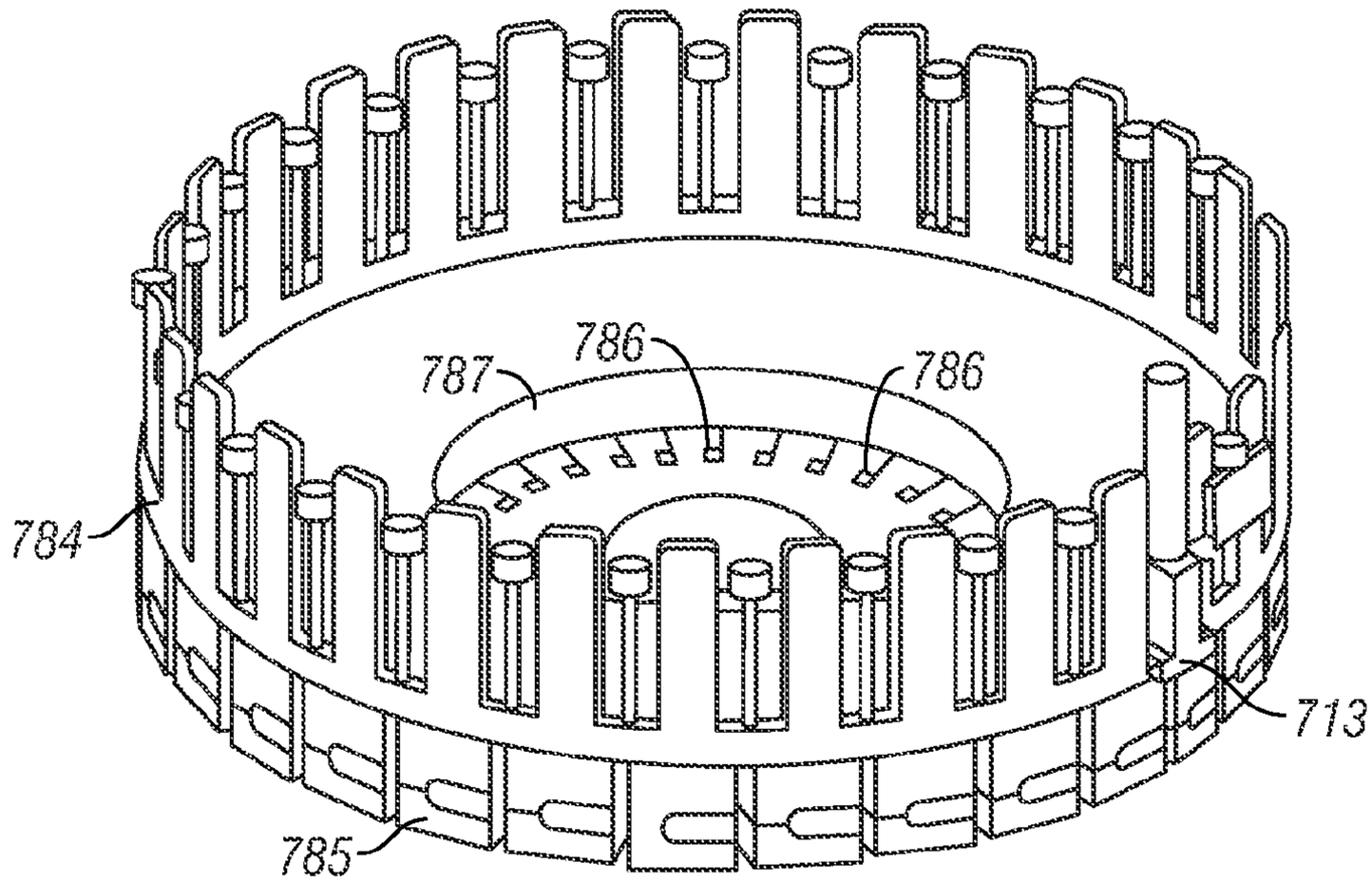

FIG. 89

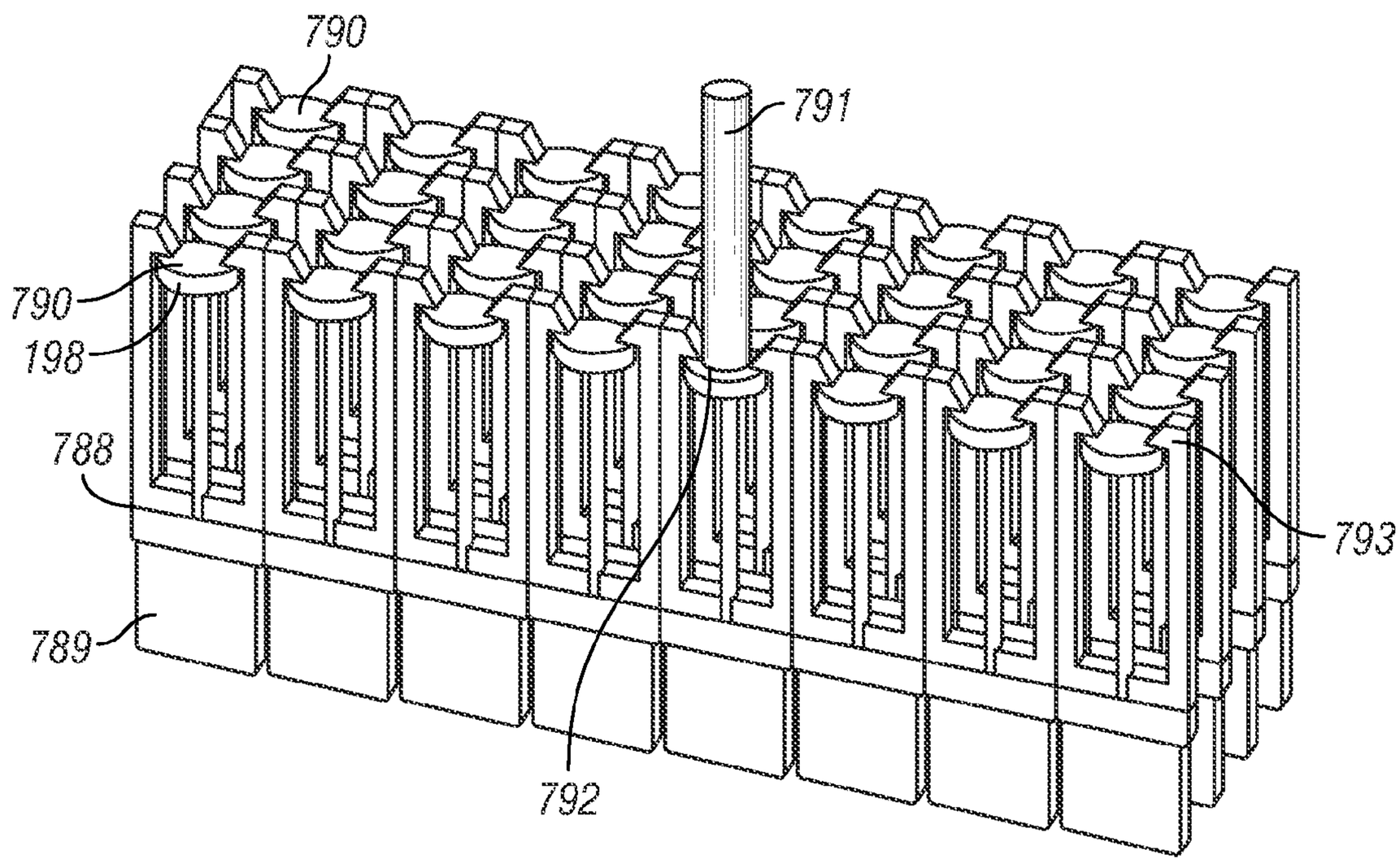

FIG. 90

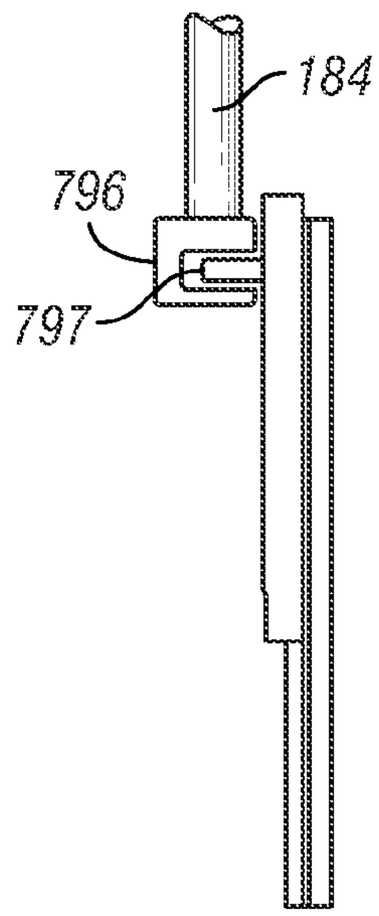

FIG. 91

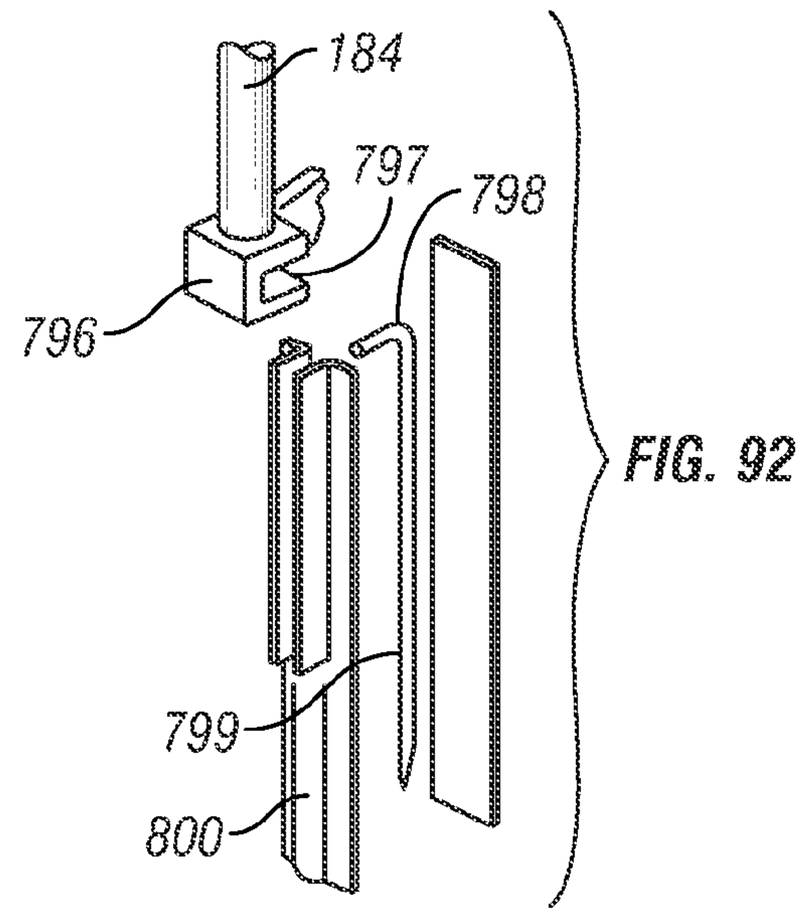

FIG. 92

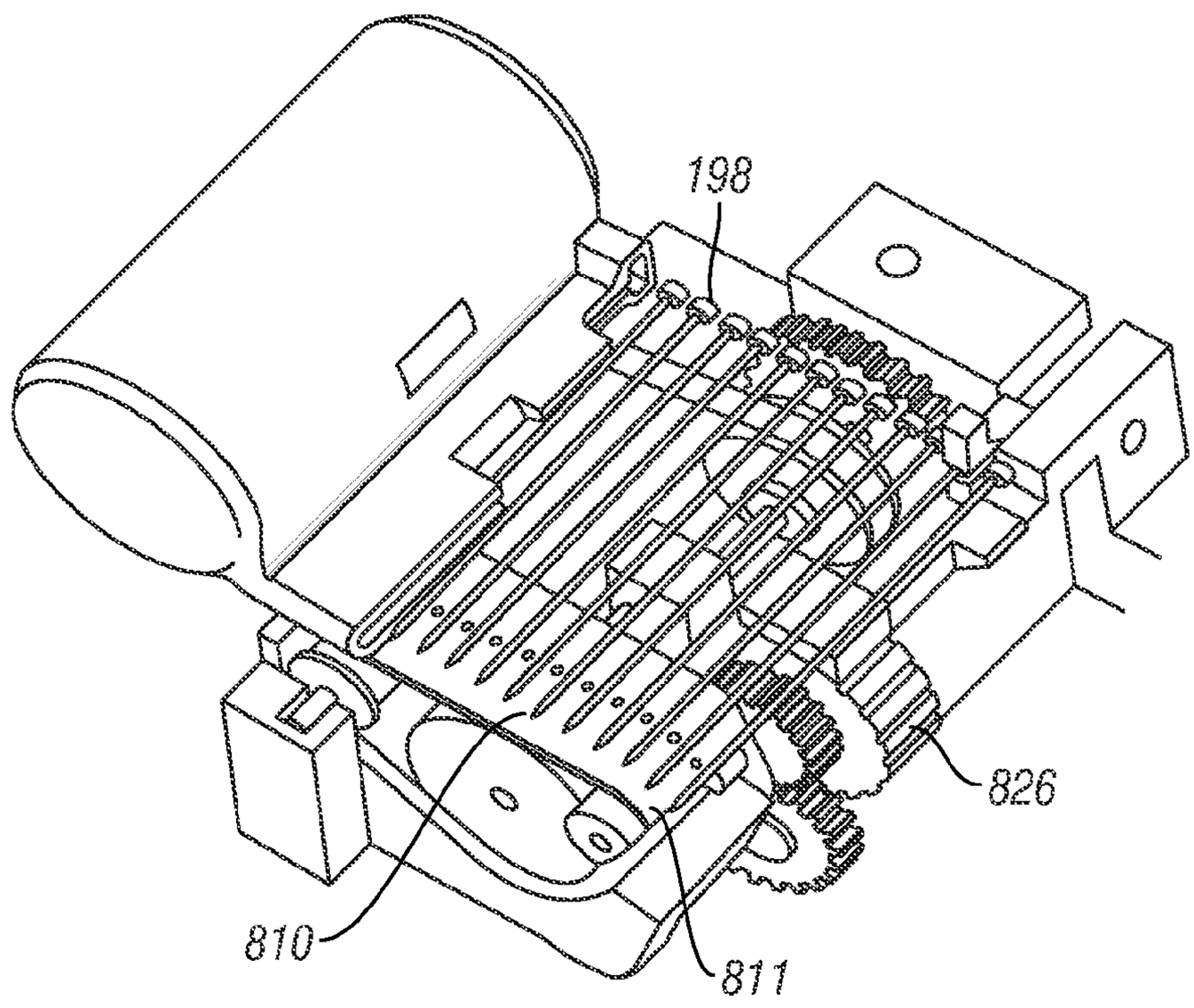

FIG. 96

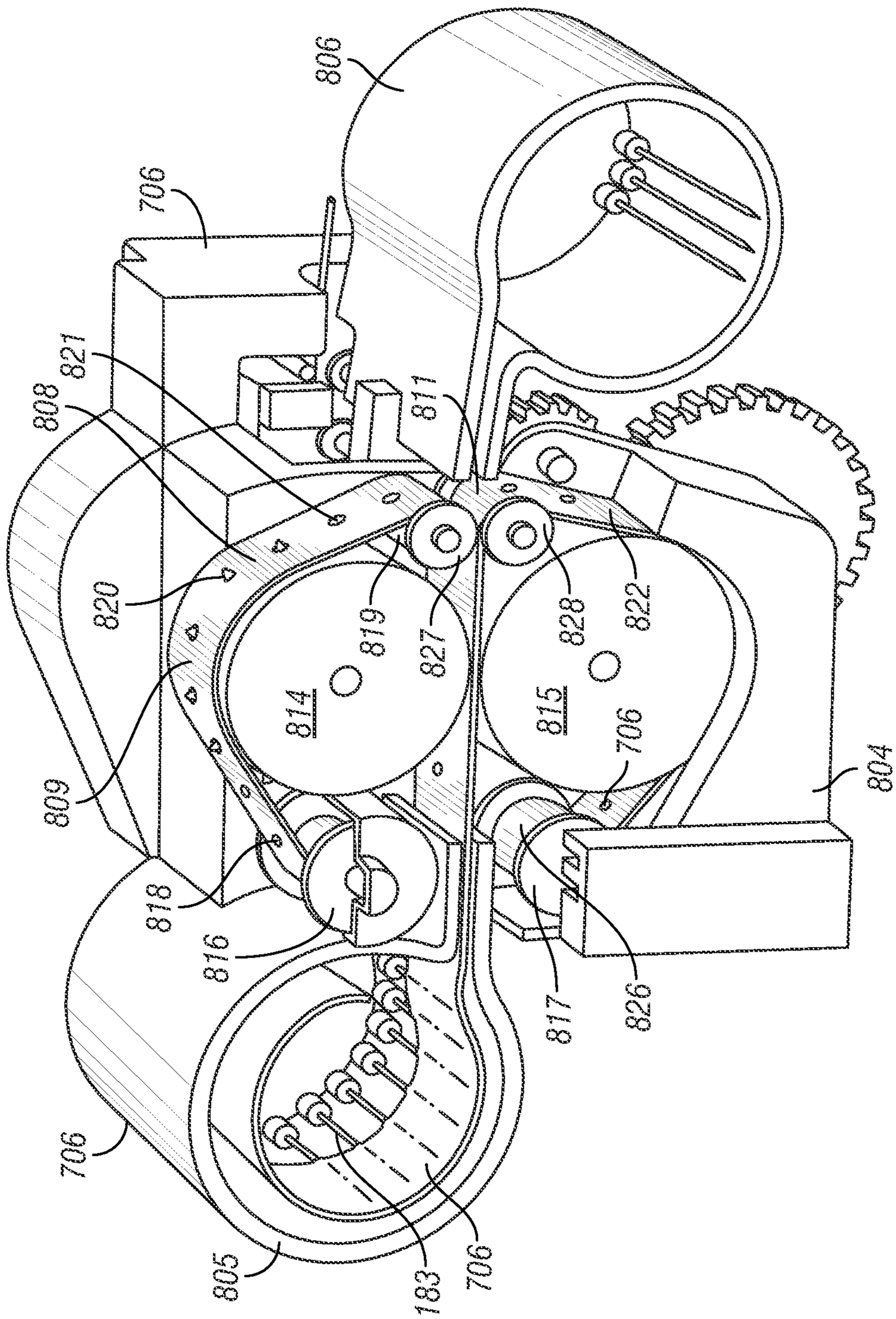
806
706
821
808
811
820
819
827
828
822
814
815
706
809
804
818
816
817
826
706
805
183
706

FIG. 93

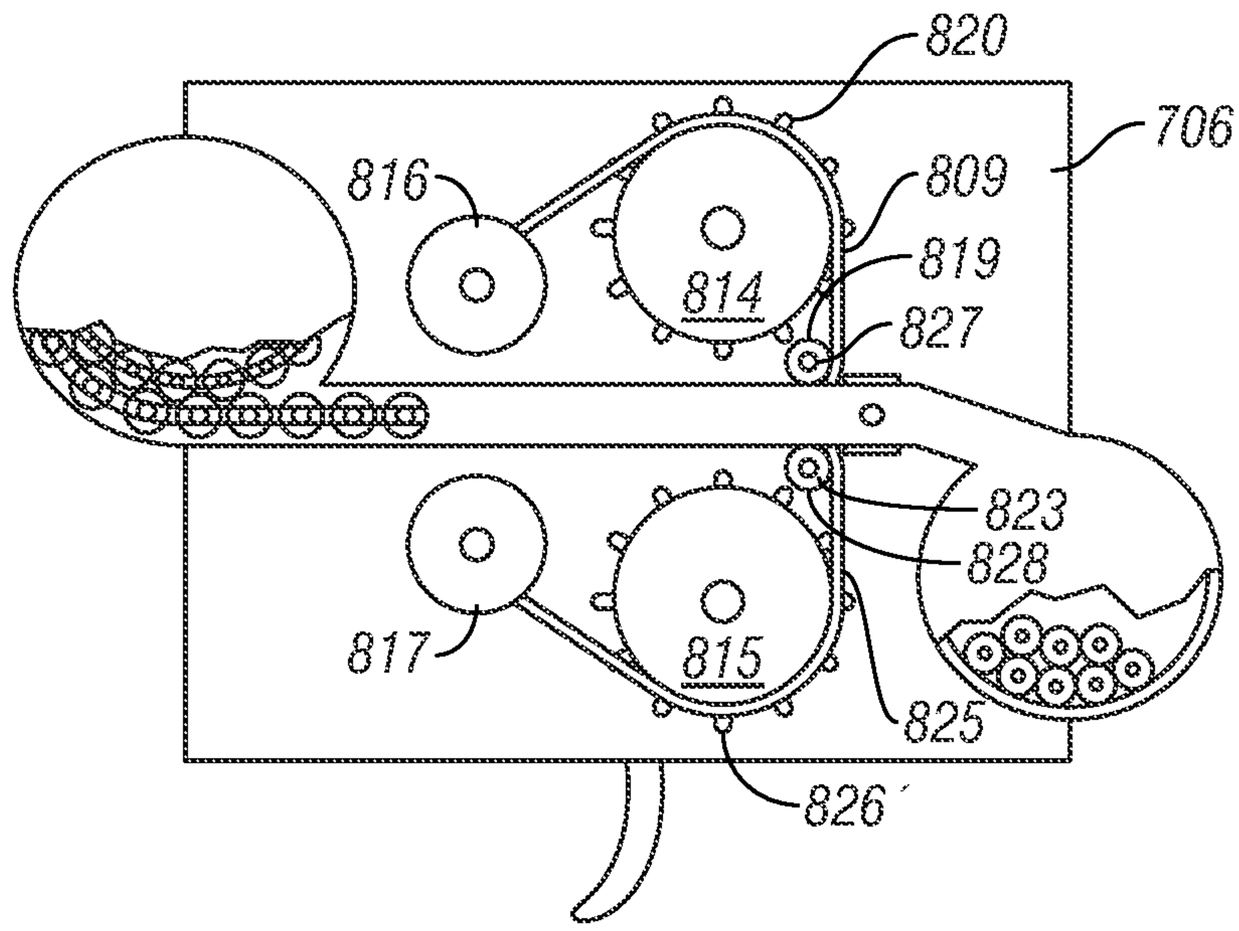
820
706
816
809
819
814
827
823
828
817
815
825
826

FIG. 94

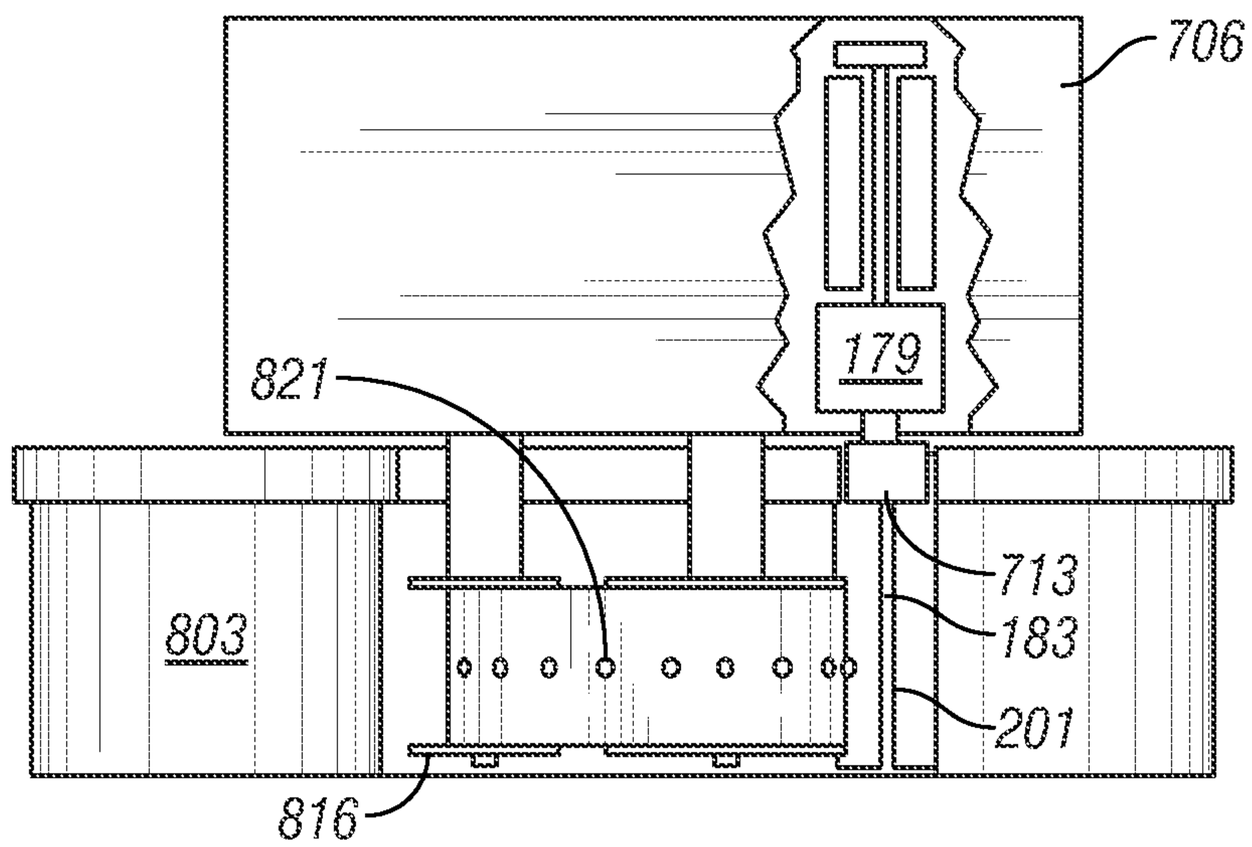
706
179
821
713
803
183
201
816

FIG. 95

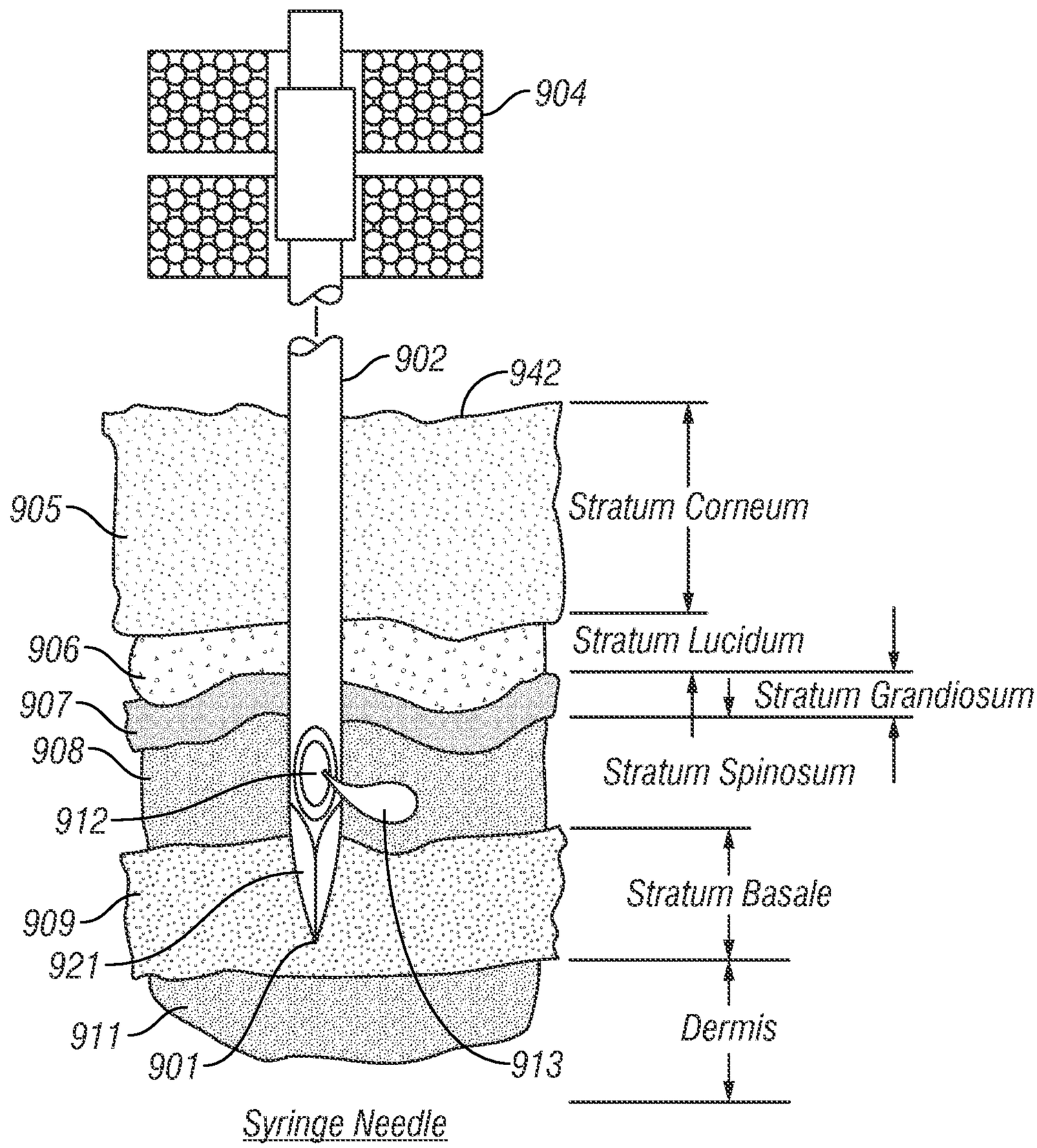
904
902
942
905
Stratum Corneum
906
Stratum Lucidum
907
Stratum Grandiosum
908
Stratum Spinosum
912
909
Stratum Basale
921
911
Dermis
901
913
Syringe Needle

FIG. 97

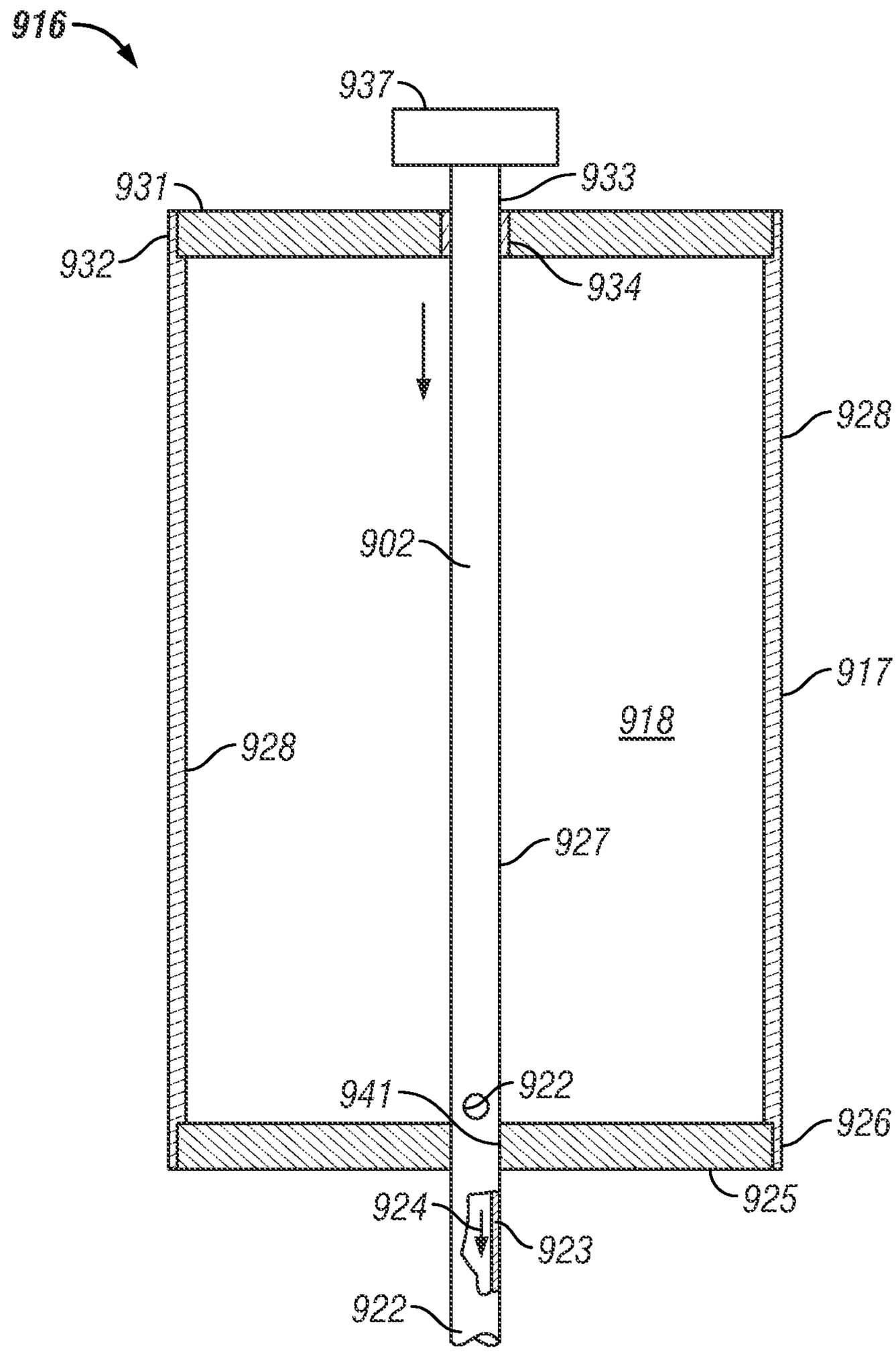
916
937
931
933
932
934
928
902
917
918
928
927
941
922
926
925
924
923
922

FIG. 98

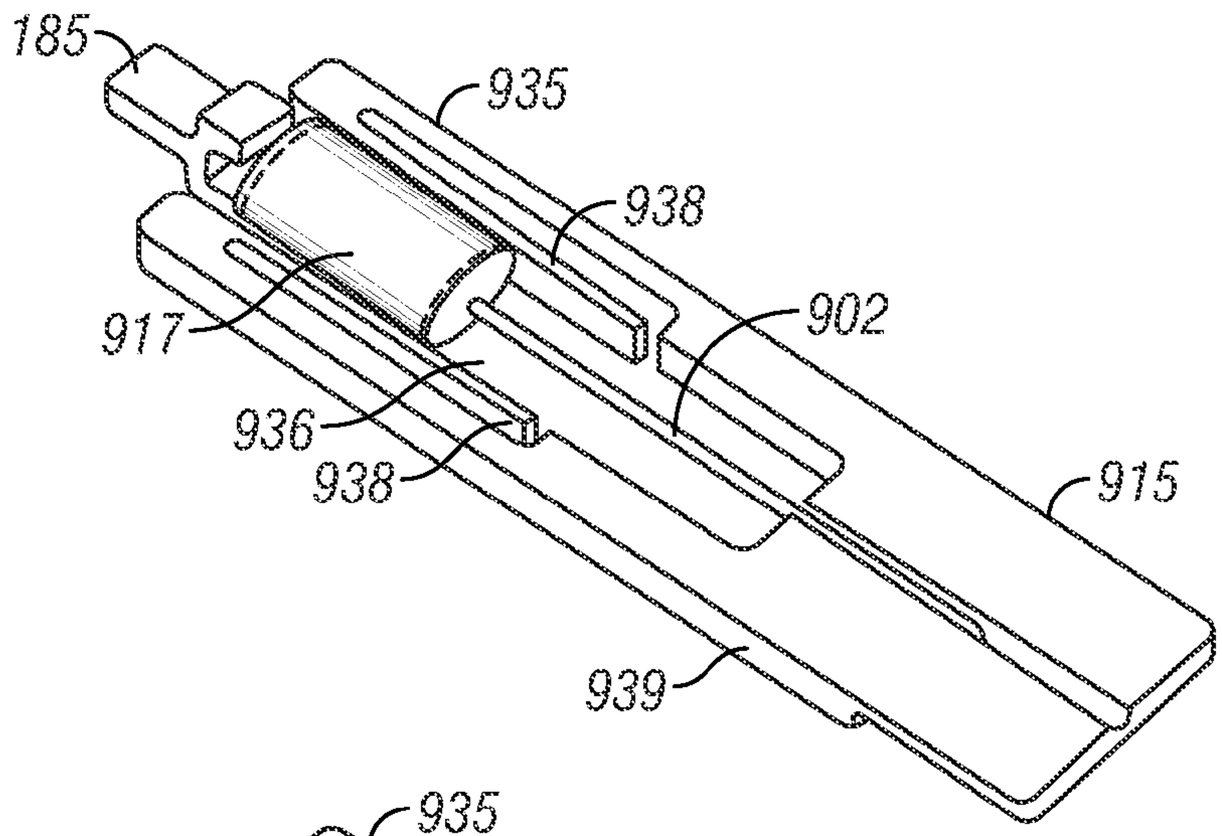

FIG. 99

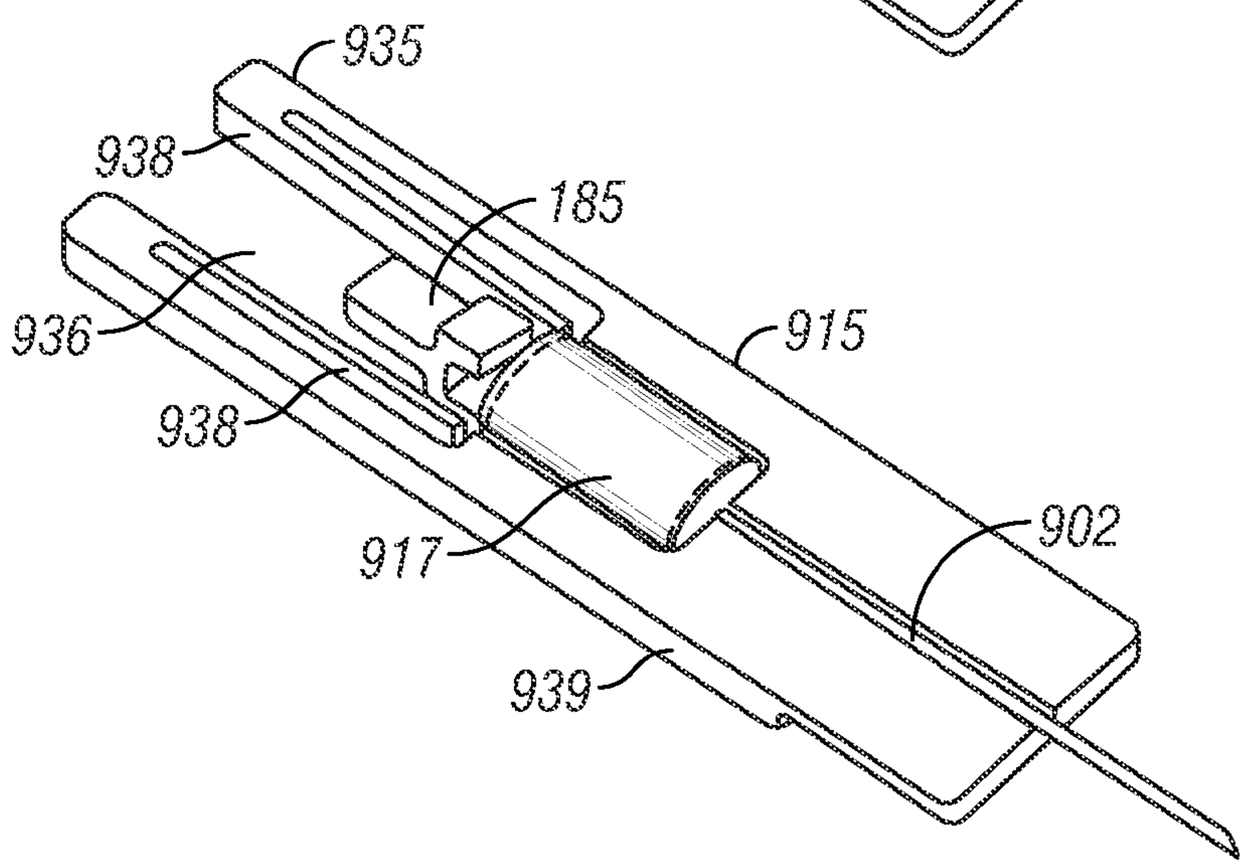

FIG. 100

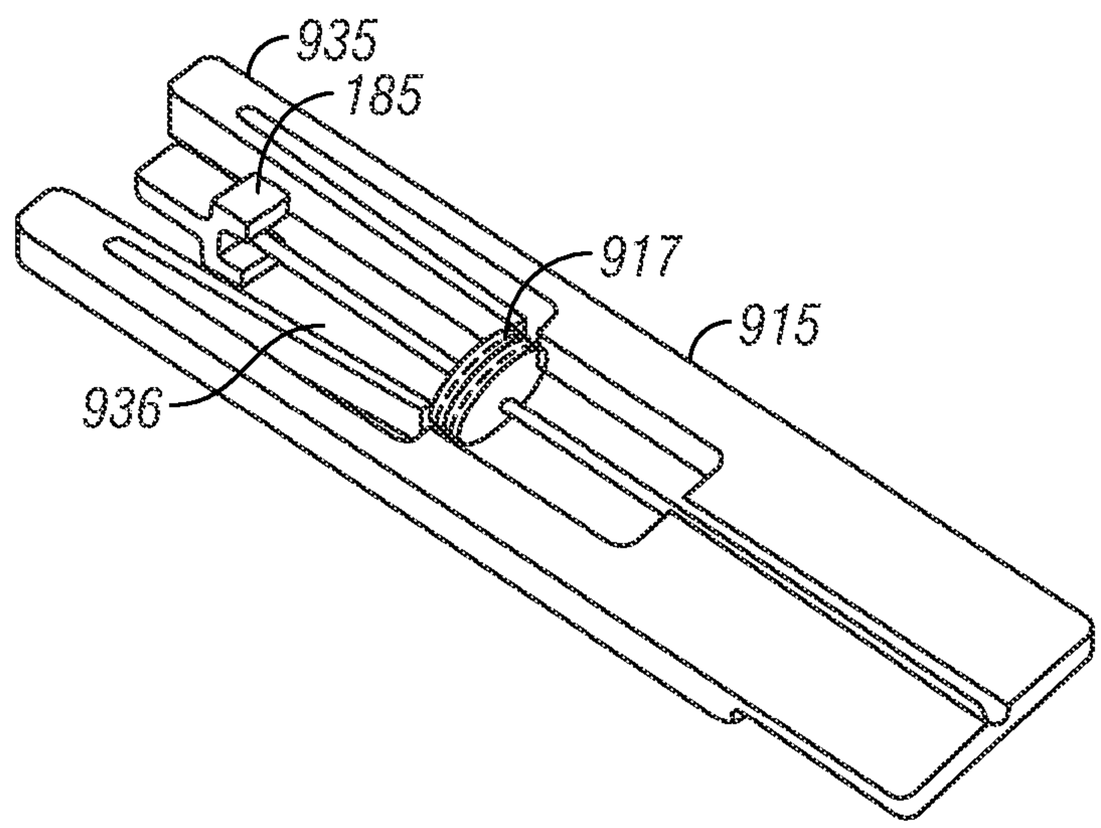

FIG. 101

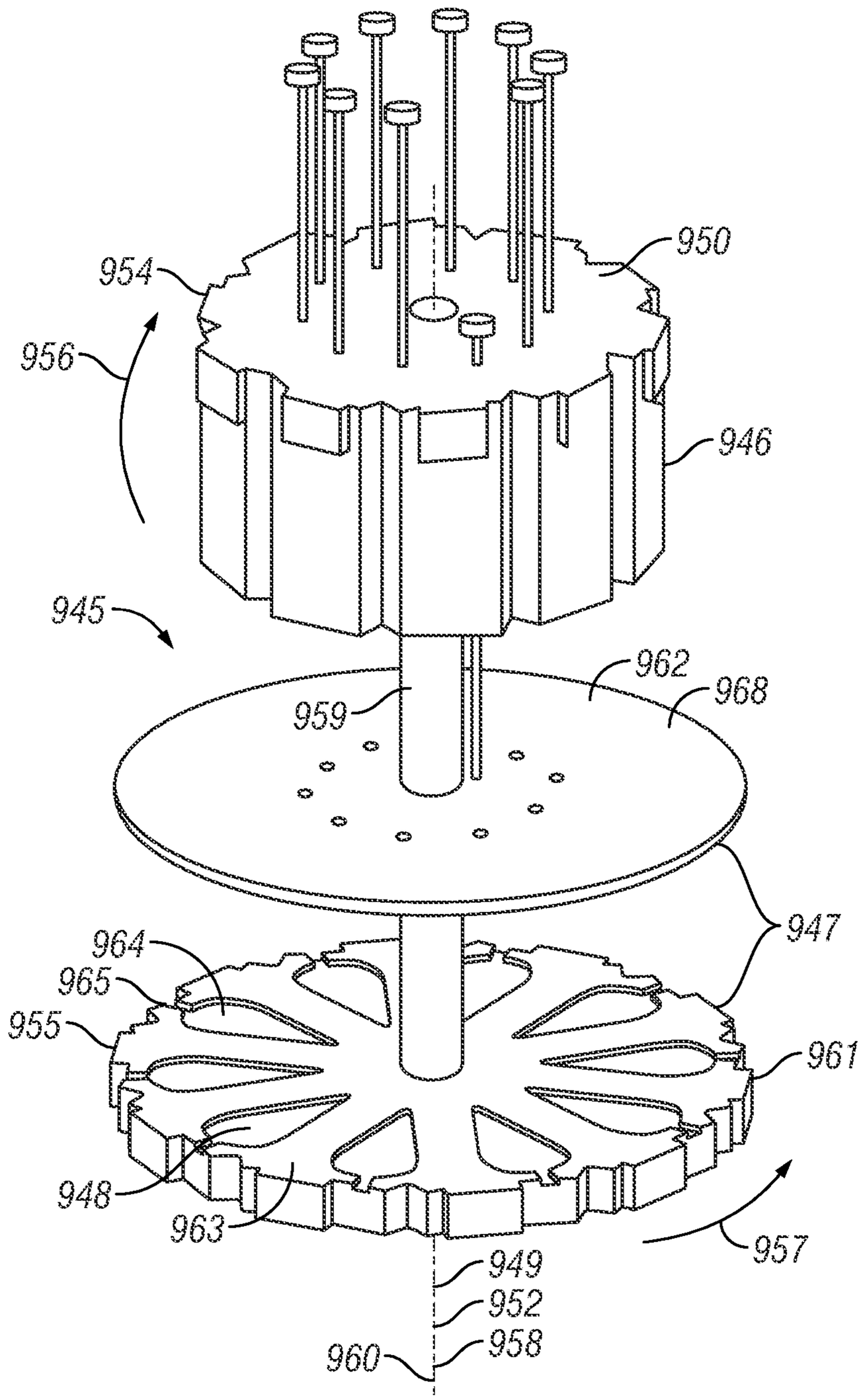
950
954
956
946
945
962
968
959
947
964
965
955
961
948
963
957
949
952
958
960

FIG. 102

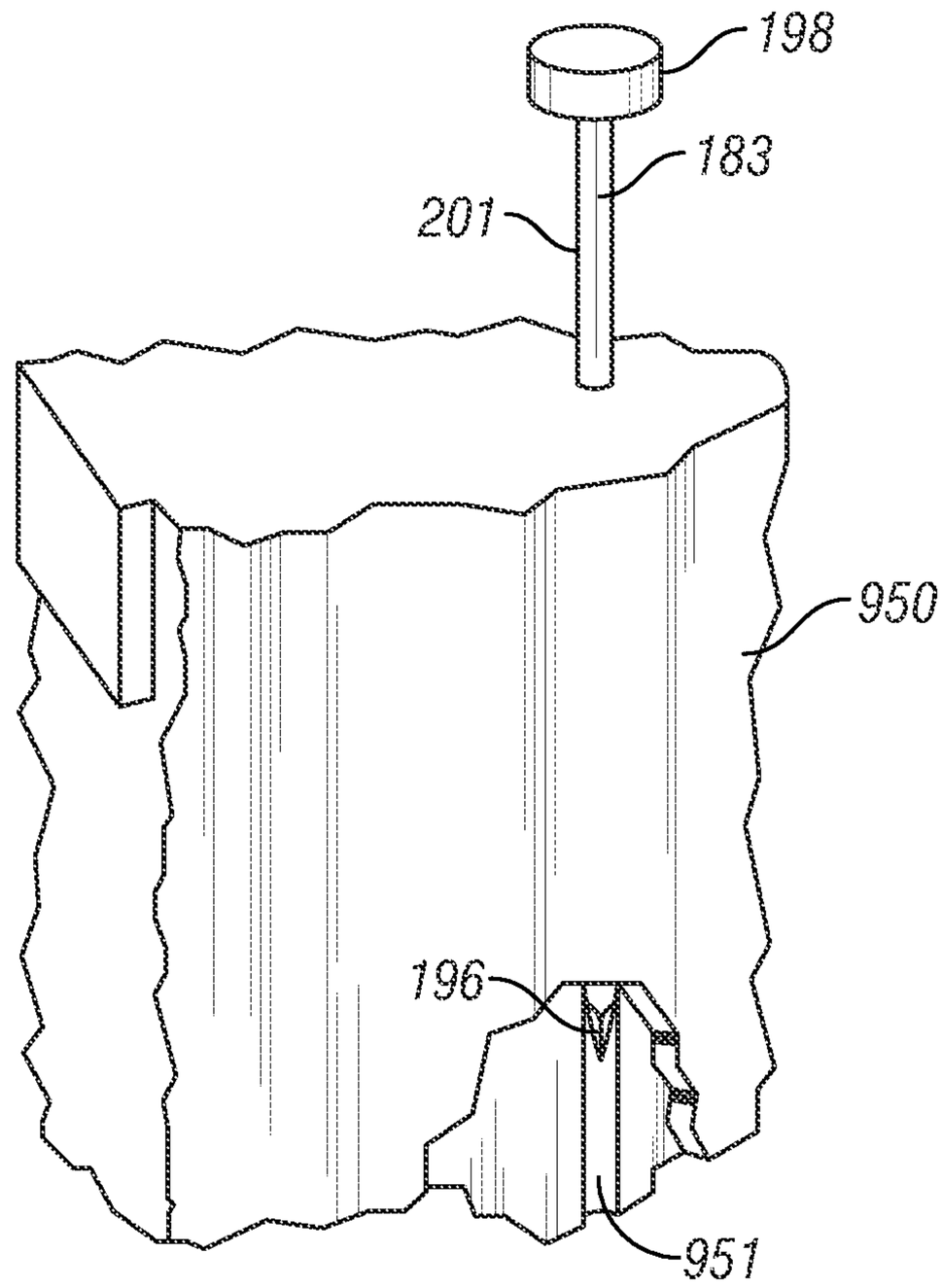

FIG. 103

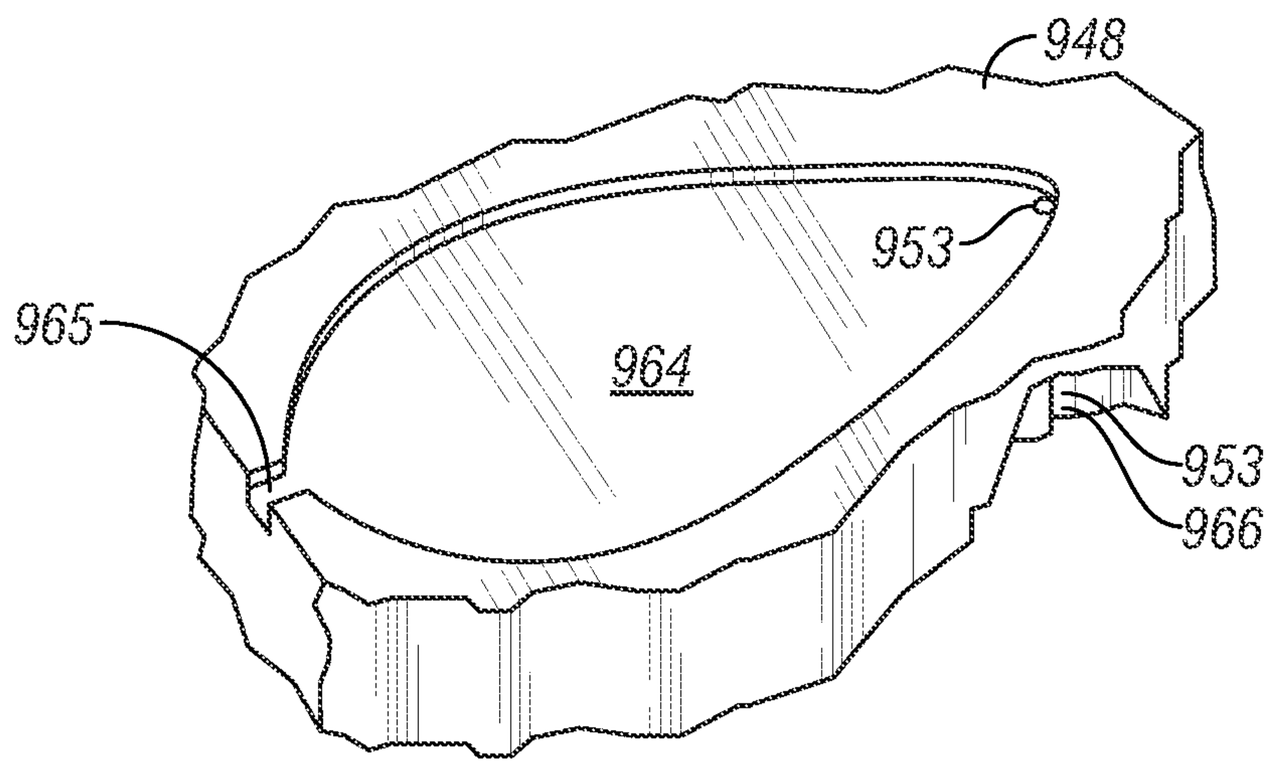

FIG. 104

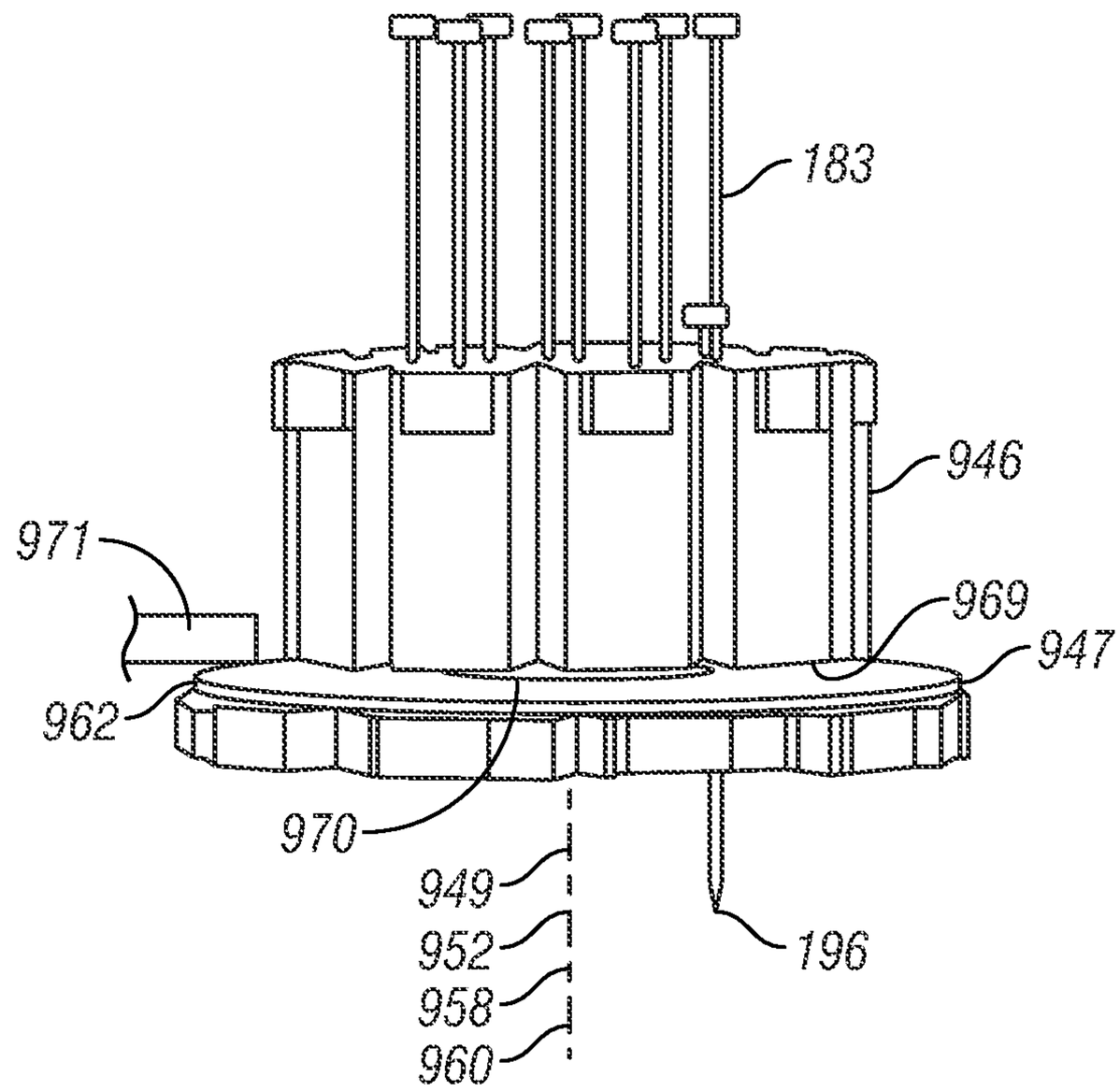

FIG. 105

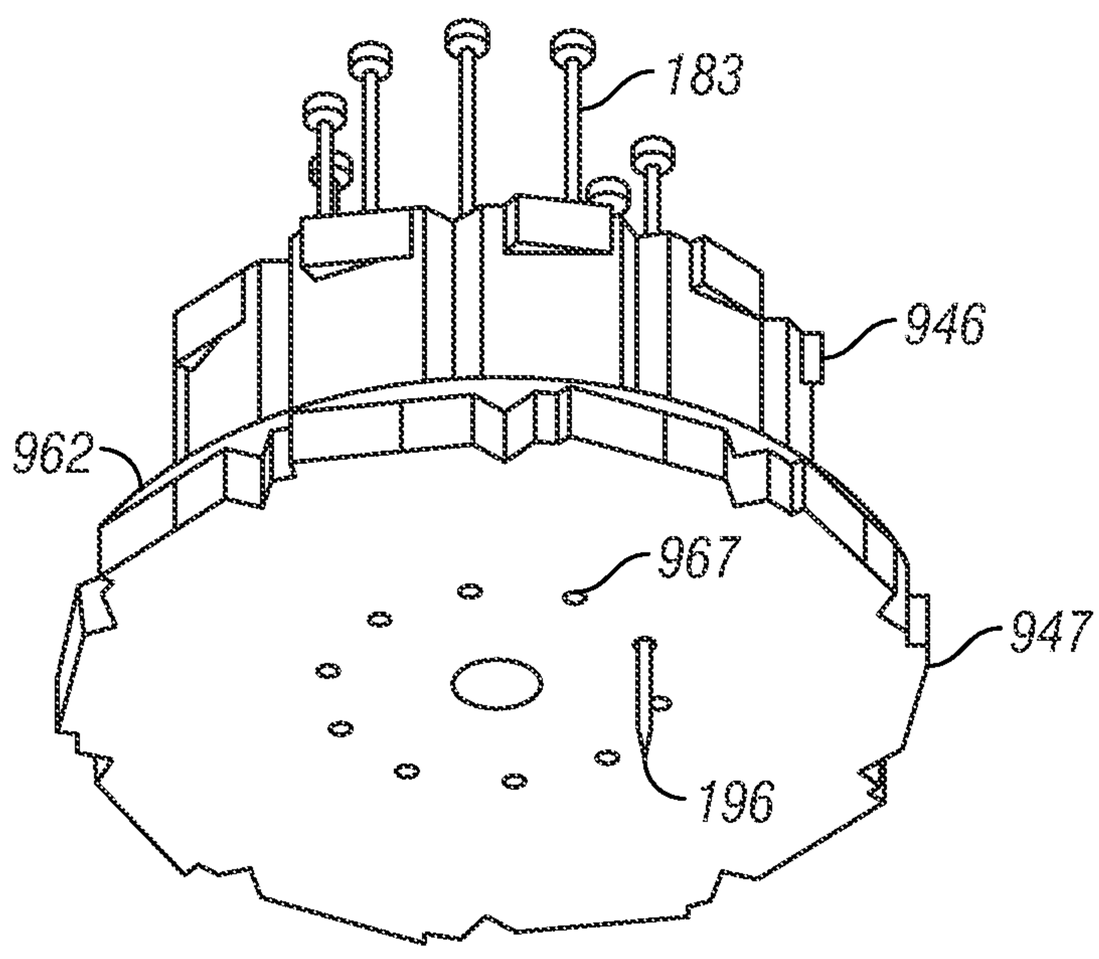

FIG. 106

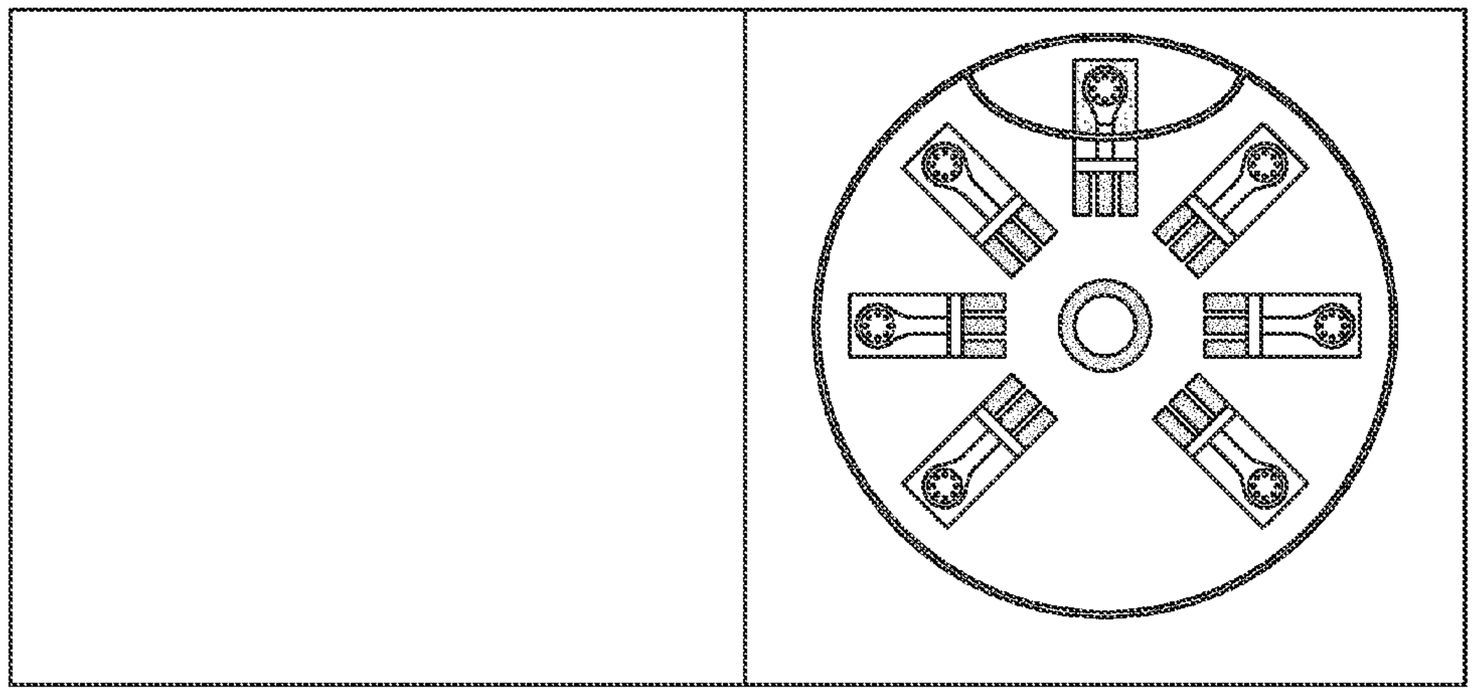

FIG. 107

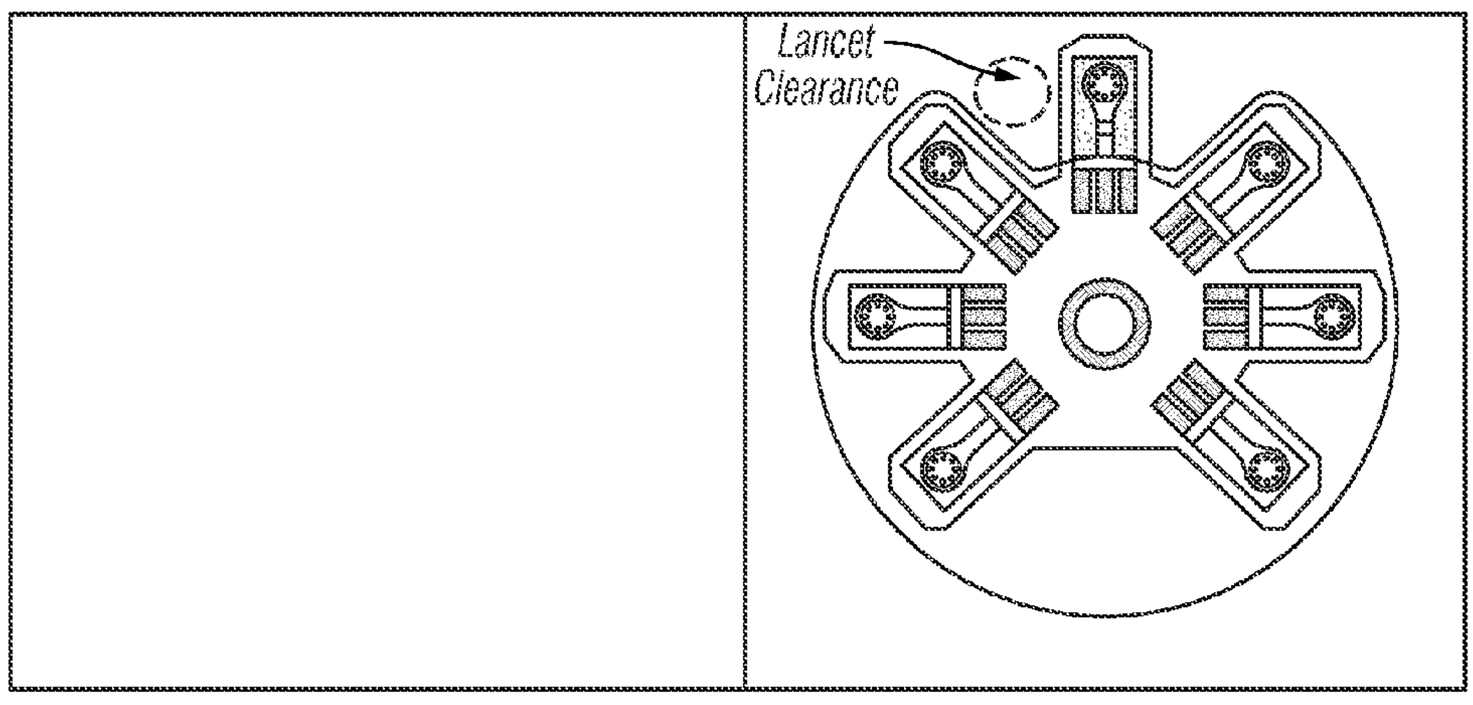

FIG. 108

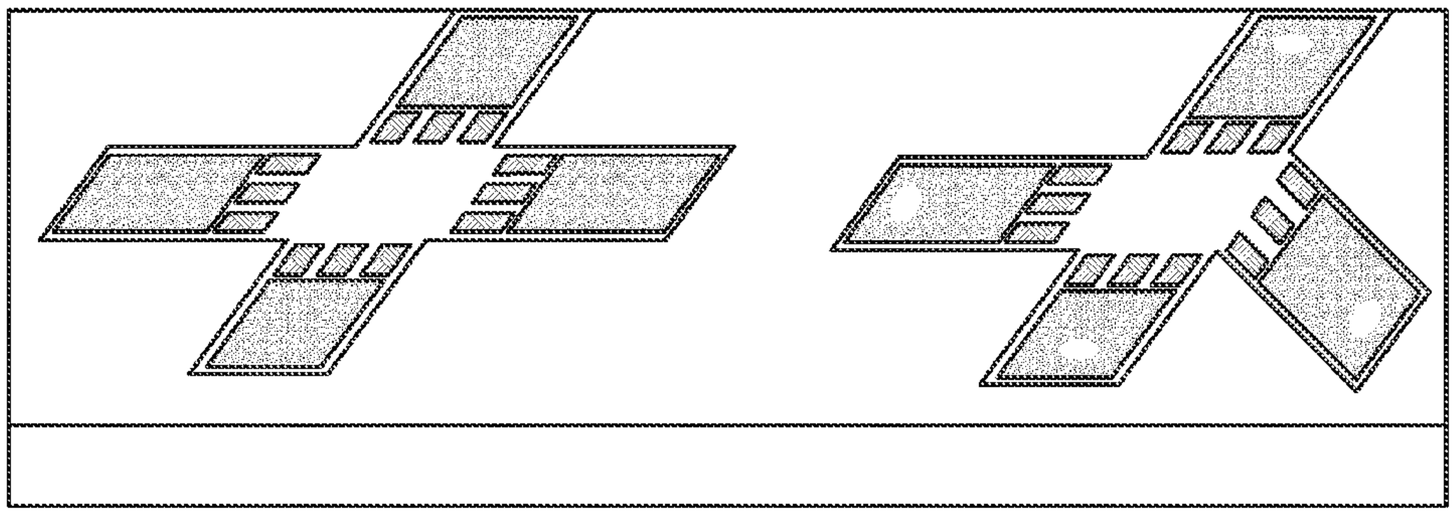

FIG. 109

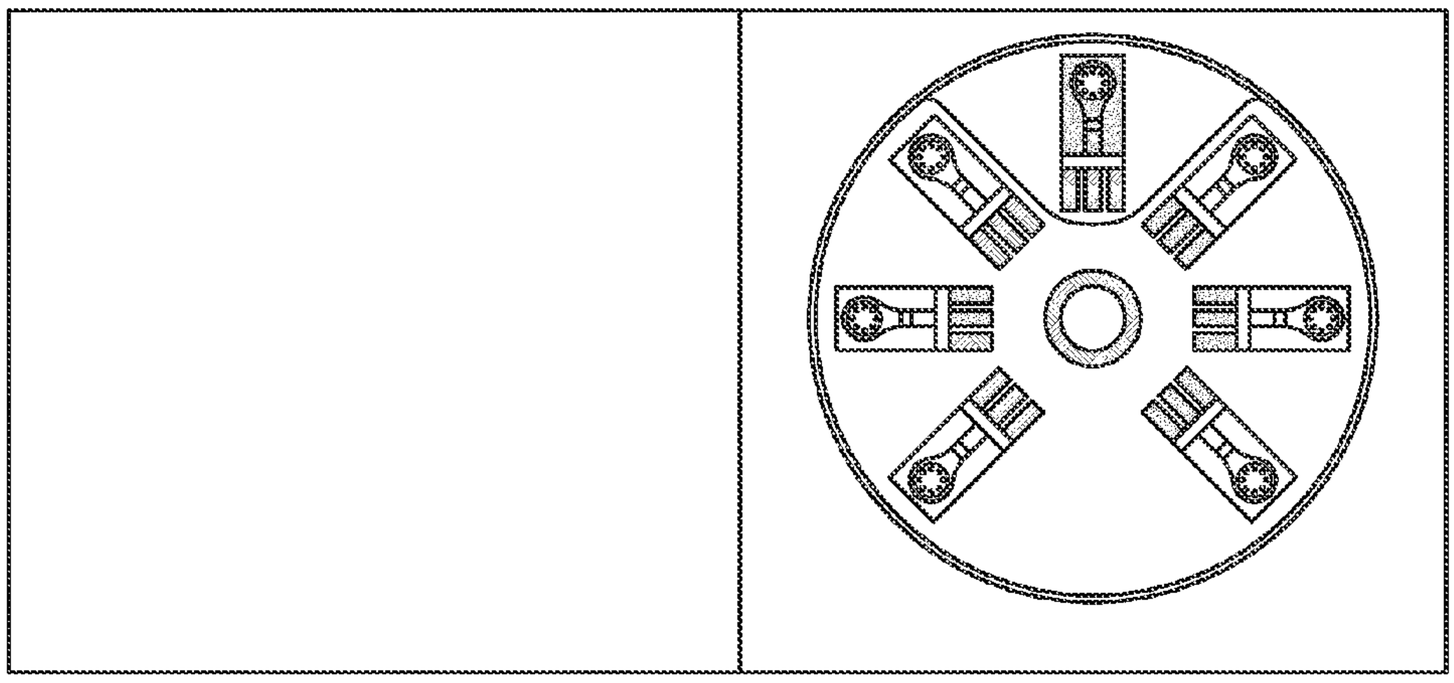

FIG. 110

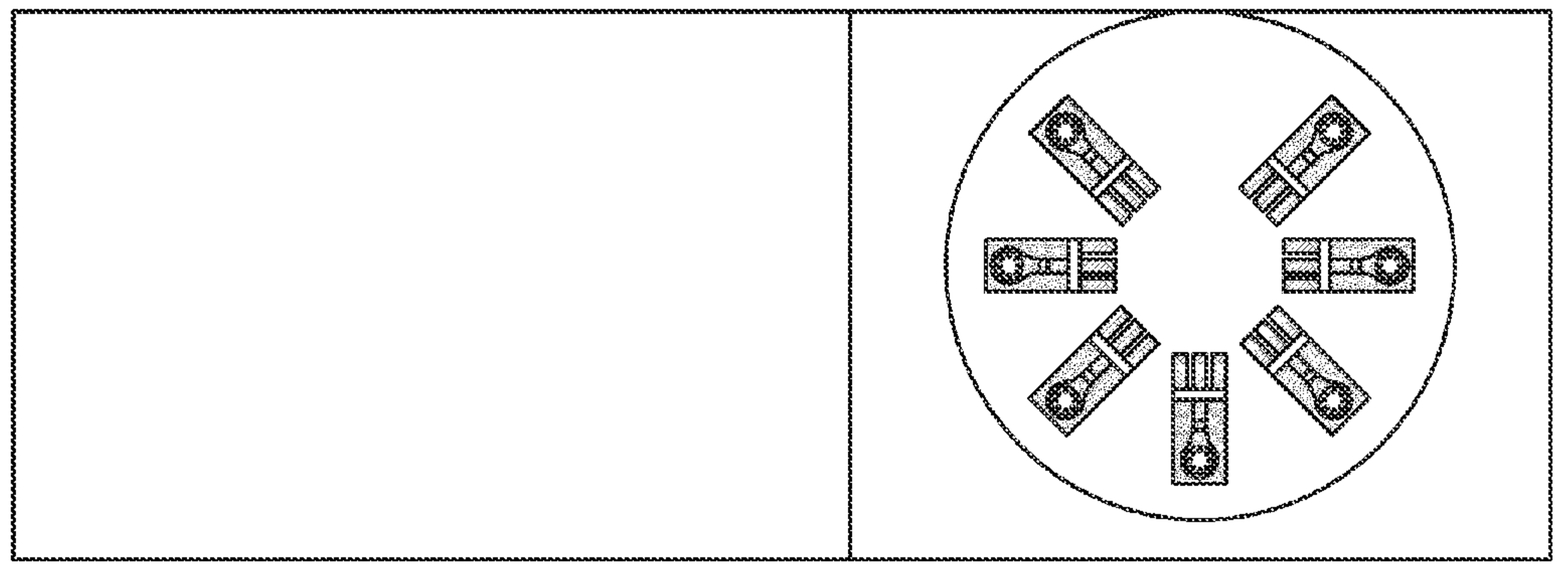

FIG. 111

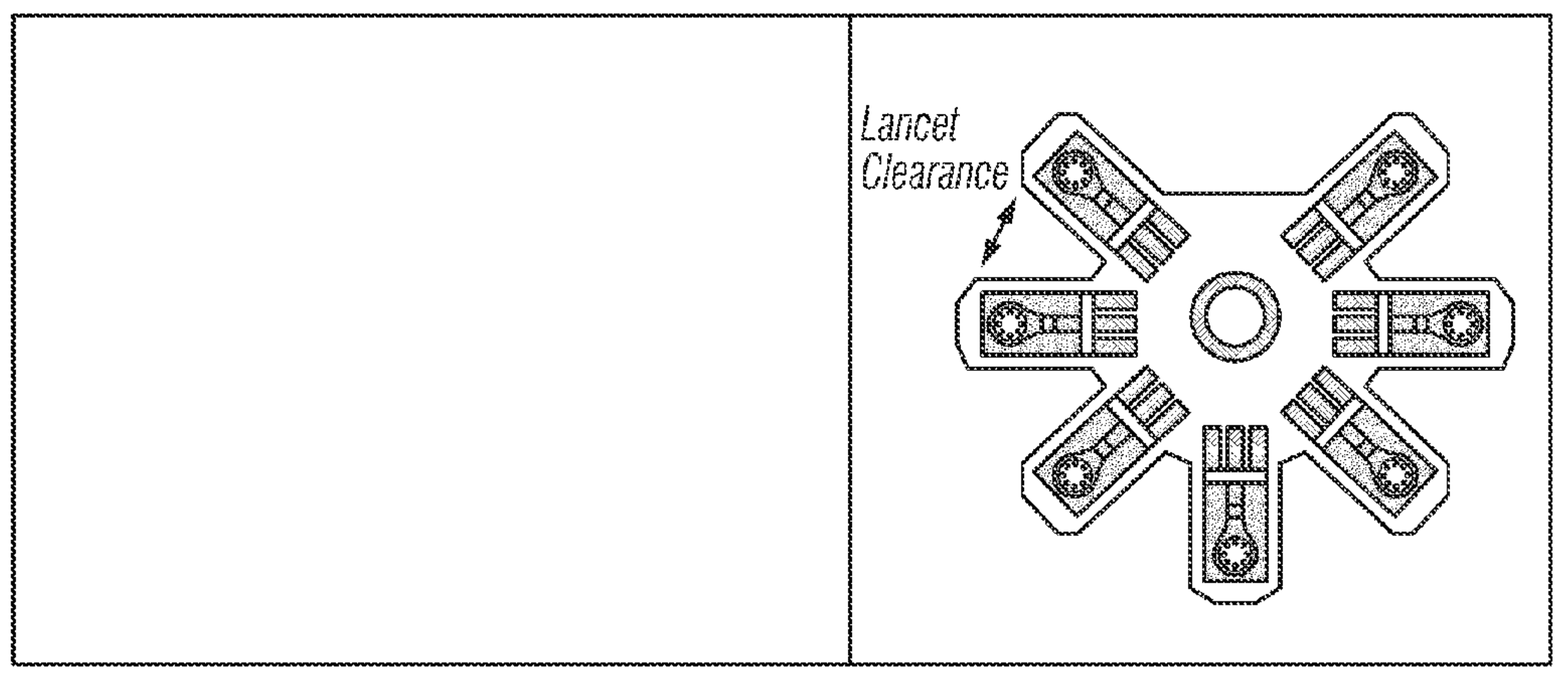

FIG. 112

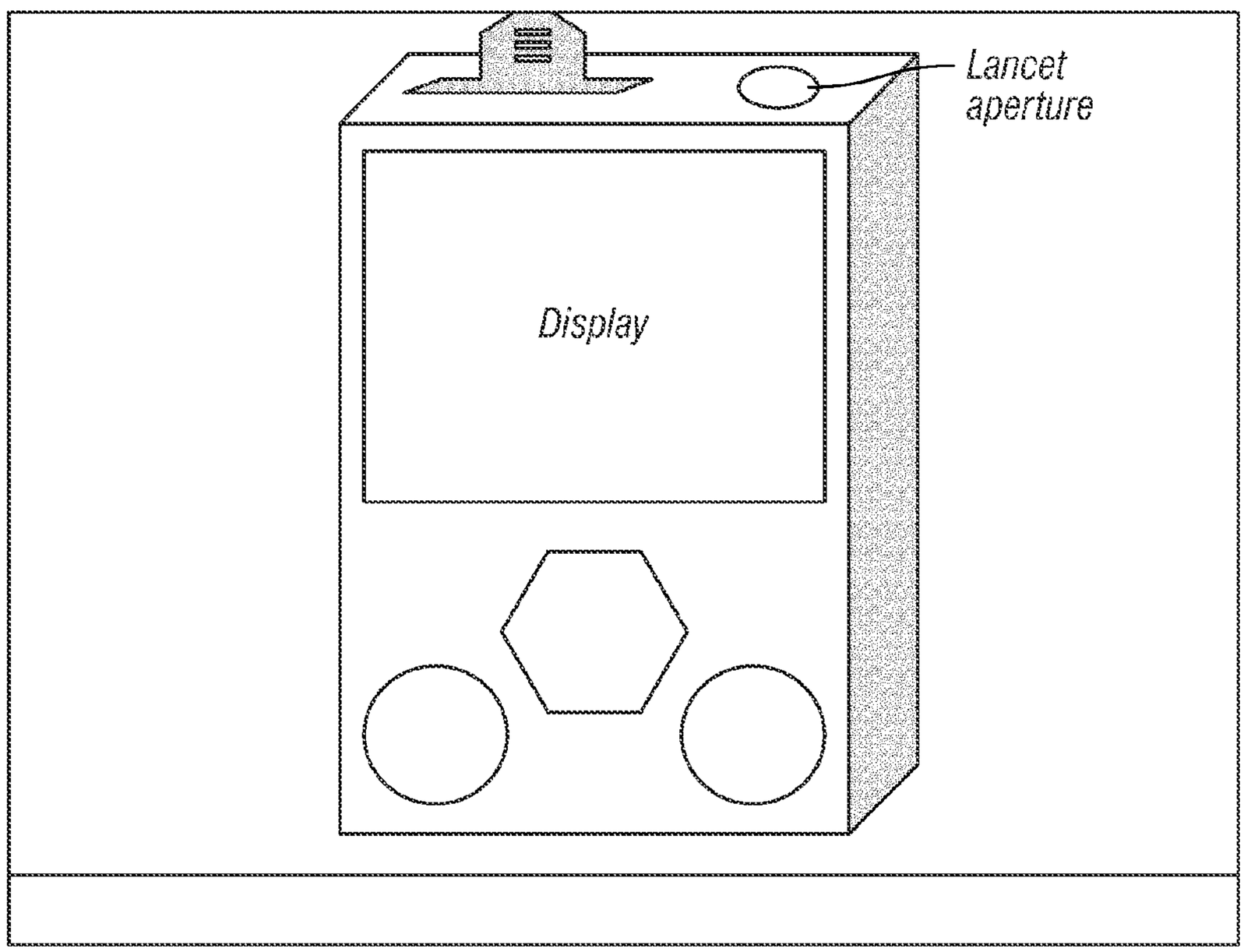

FIG. 113

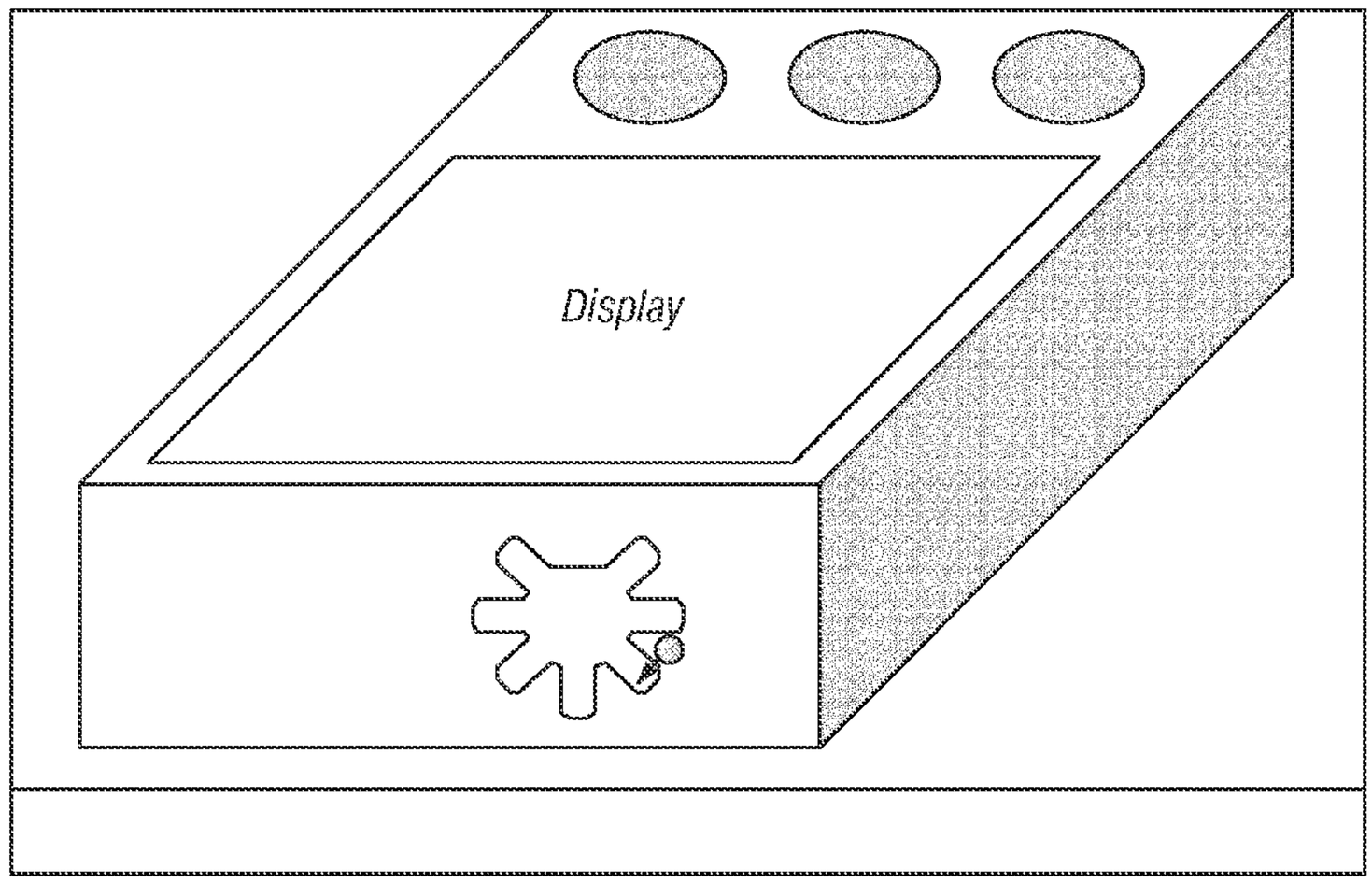

FIG. 114

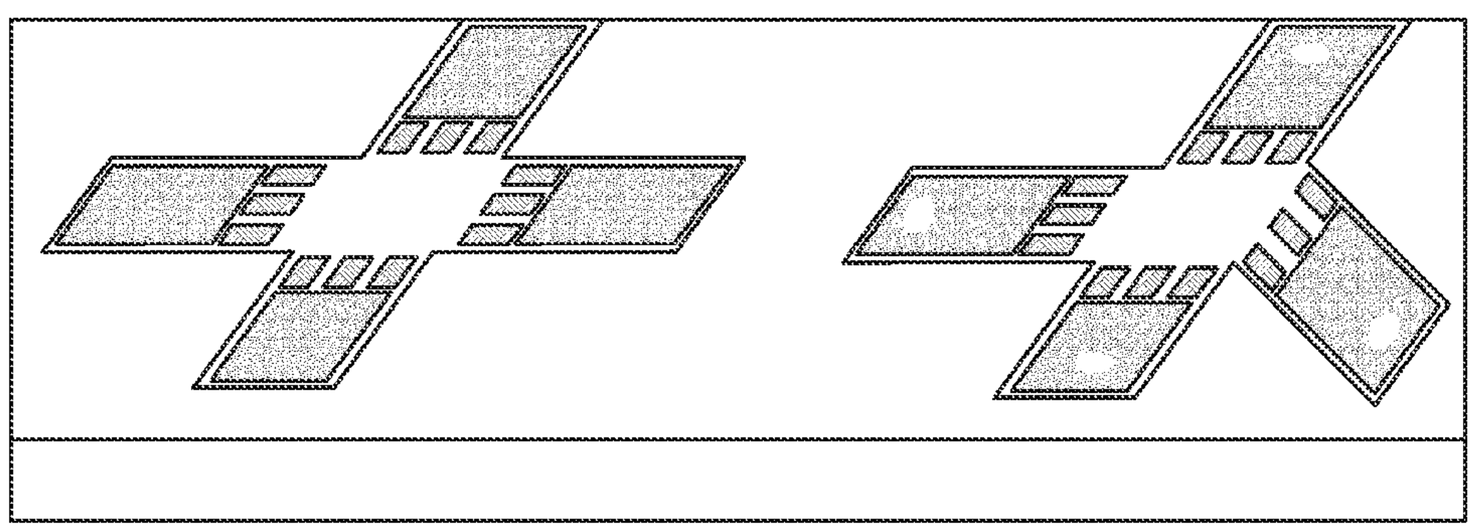

FIG. 115

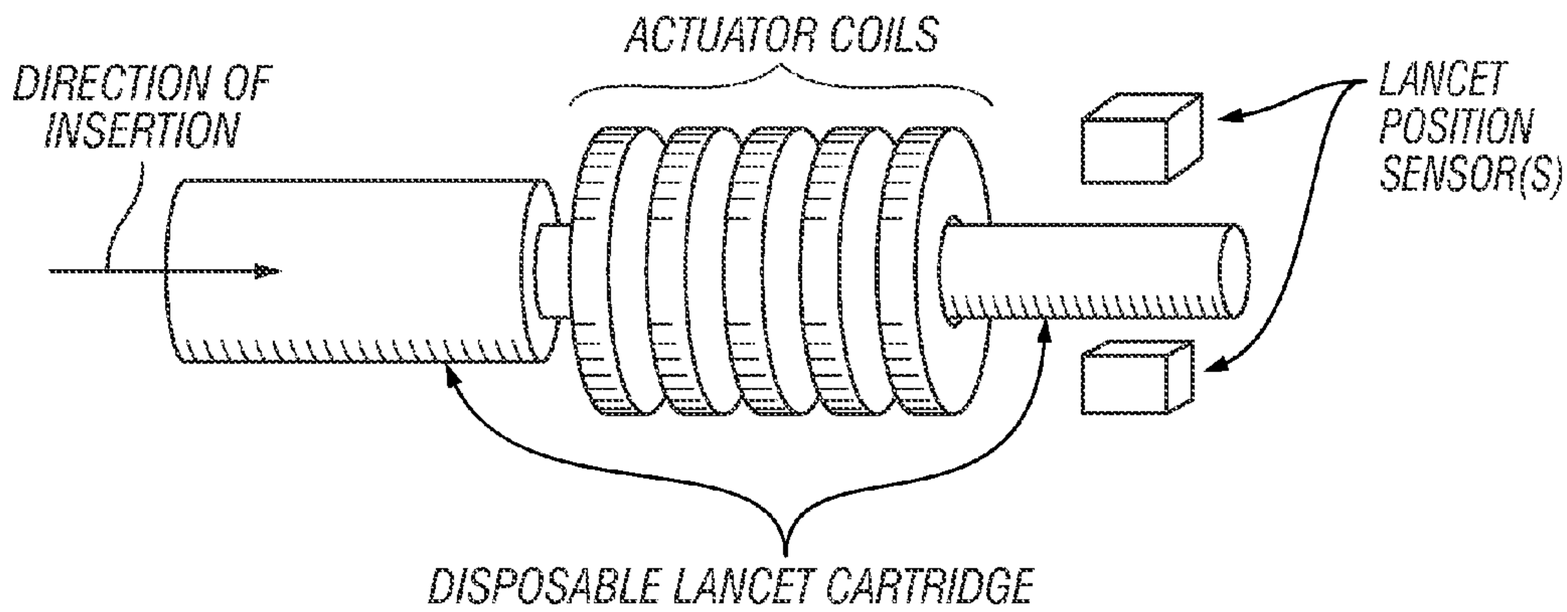

FIG. 116

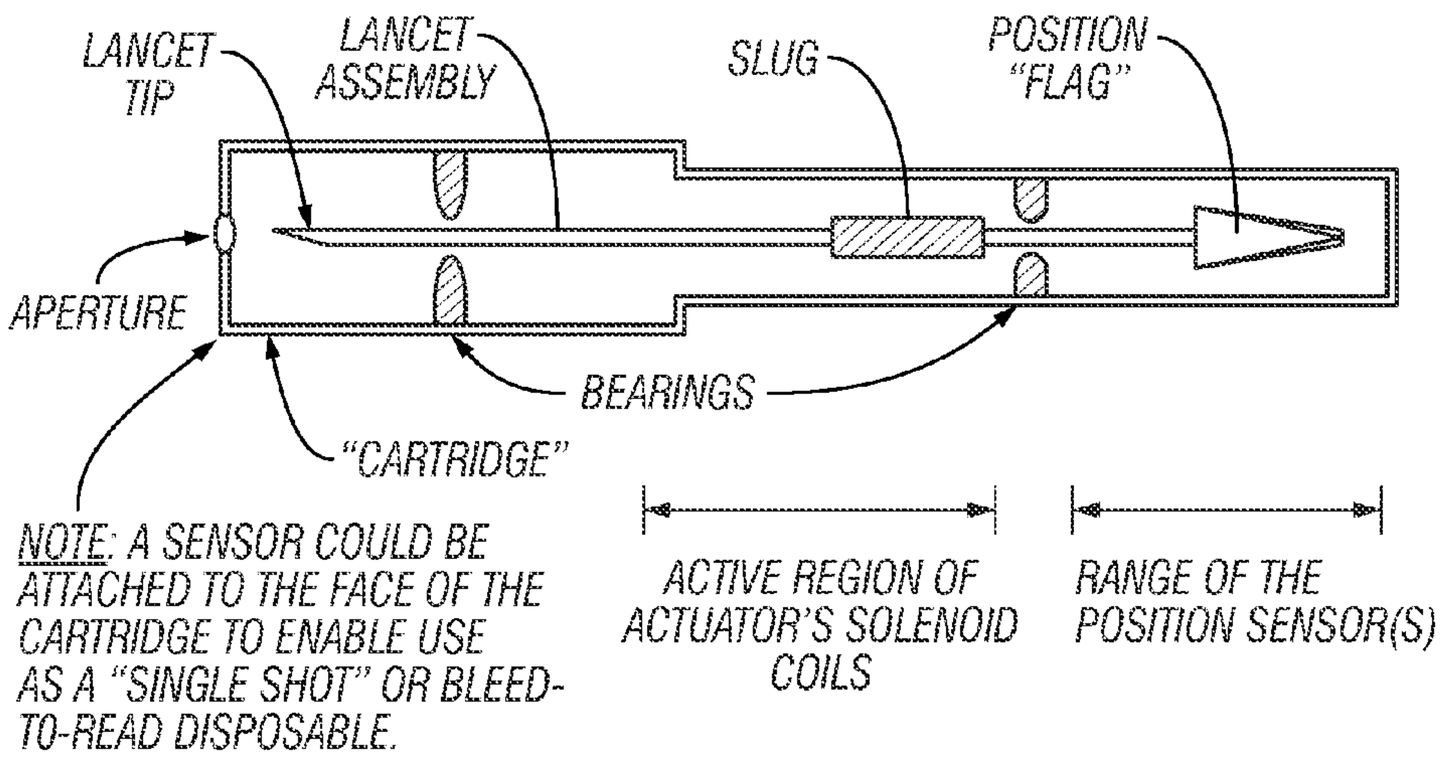

FIG. 117

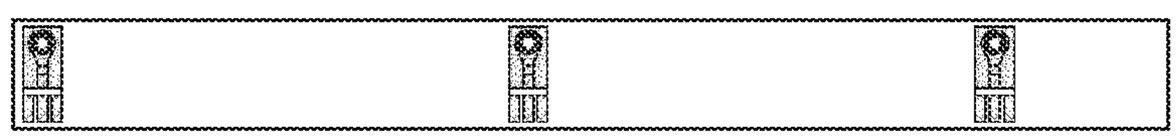

FIG. 118

FIG. 119

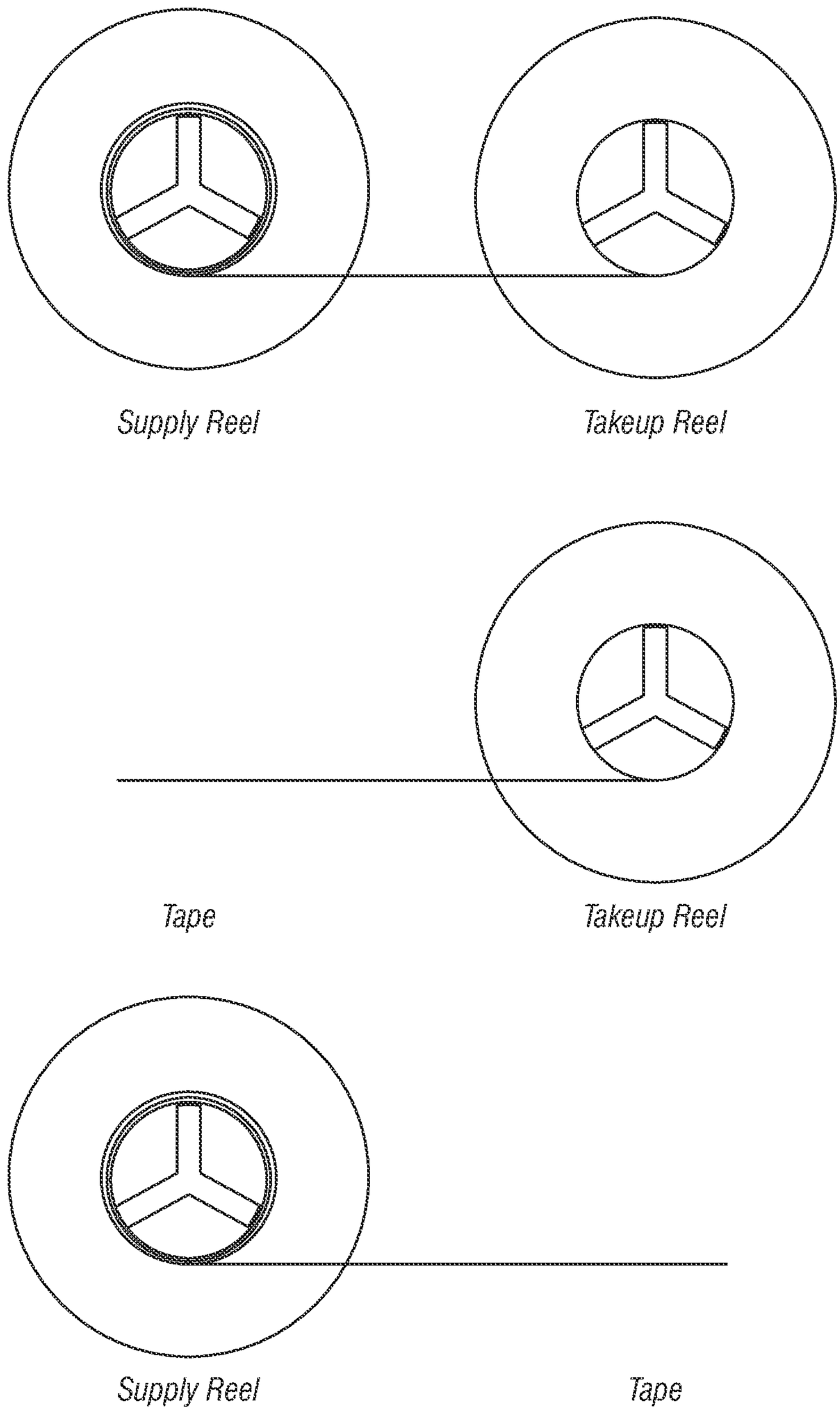

FIG. 120

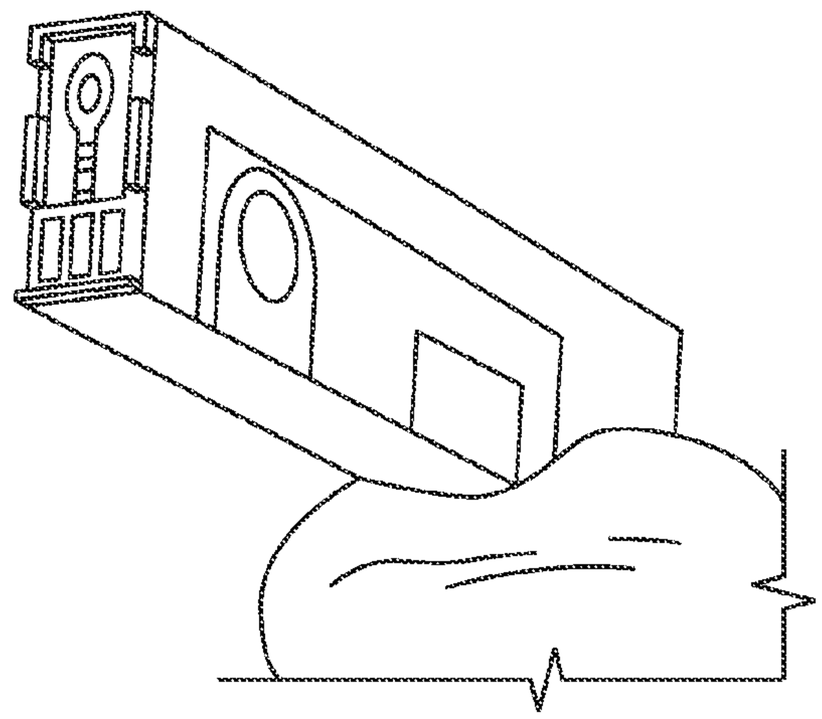

FIG. 121

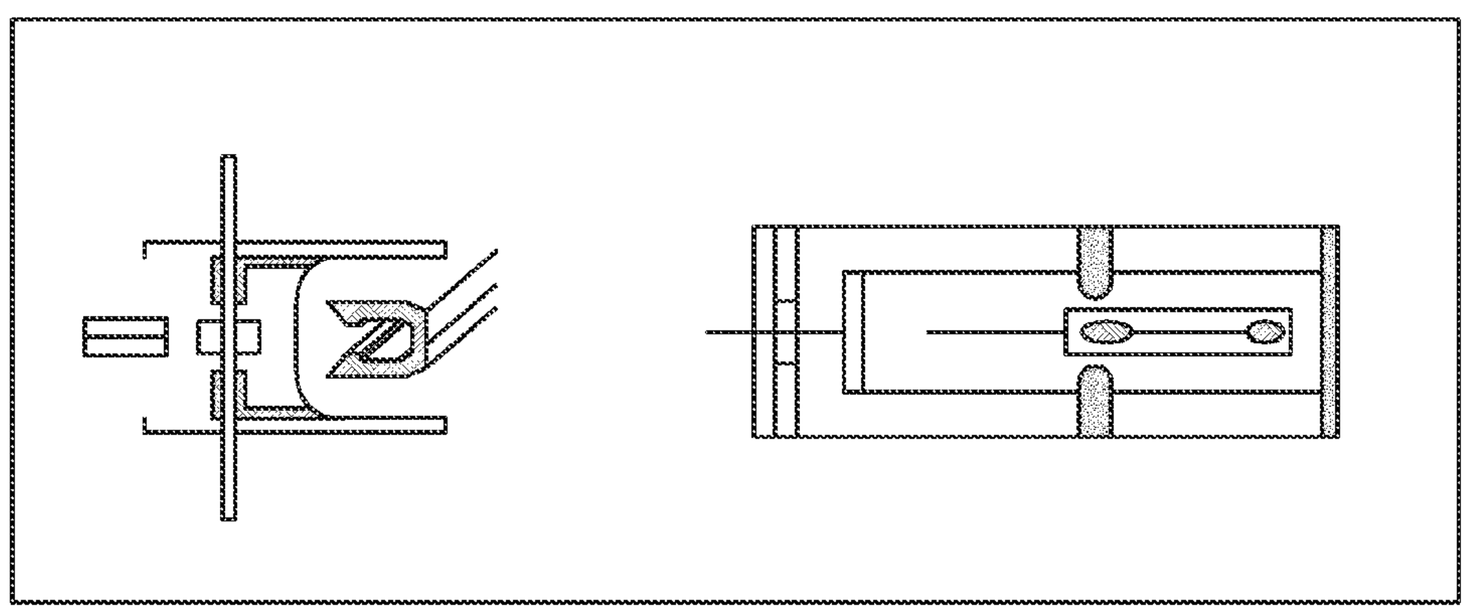

FIG. 122

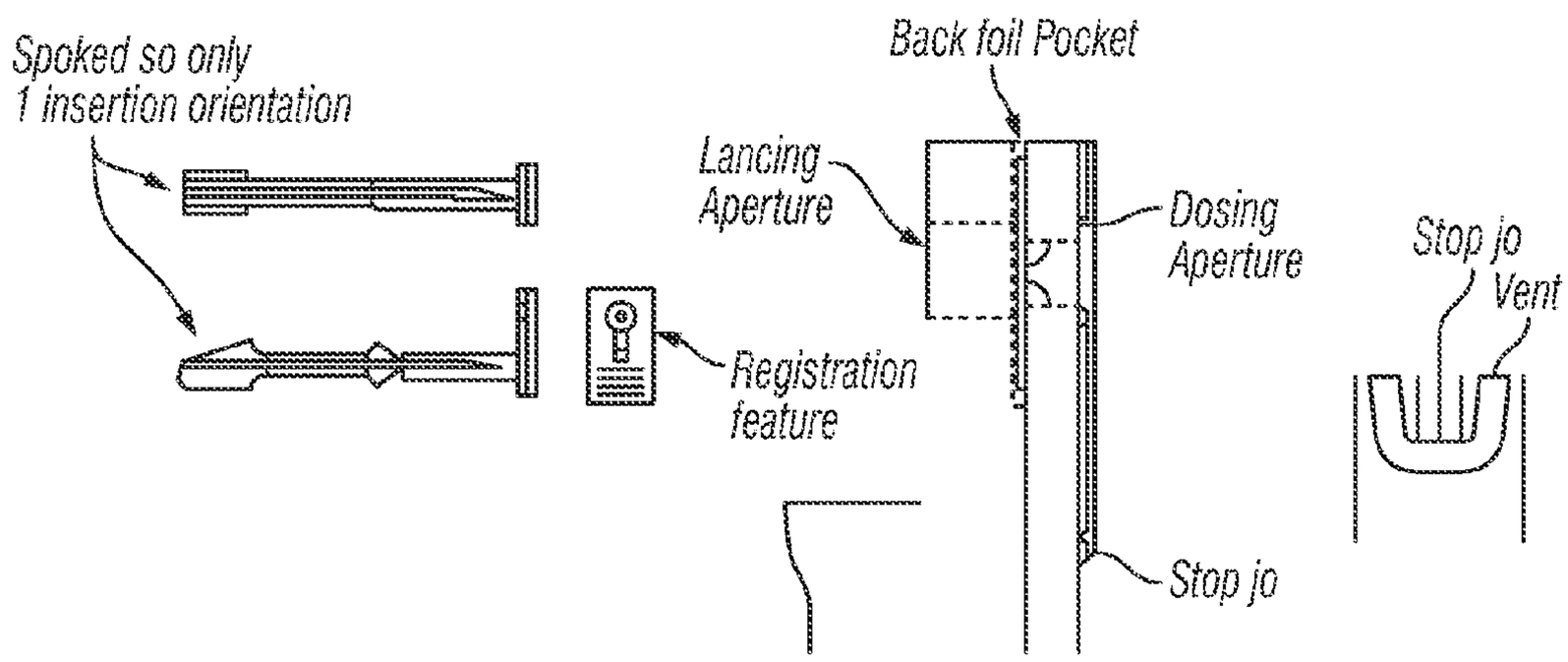

FIG. 123

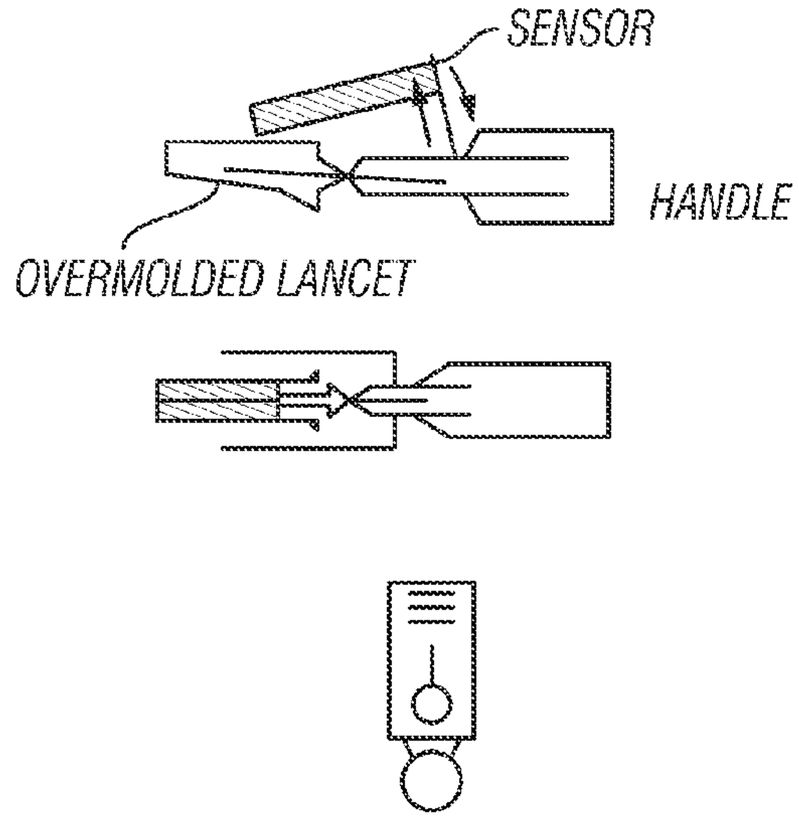

FIG. 124

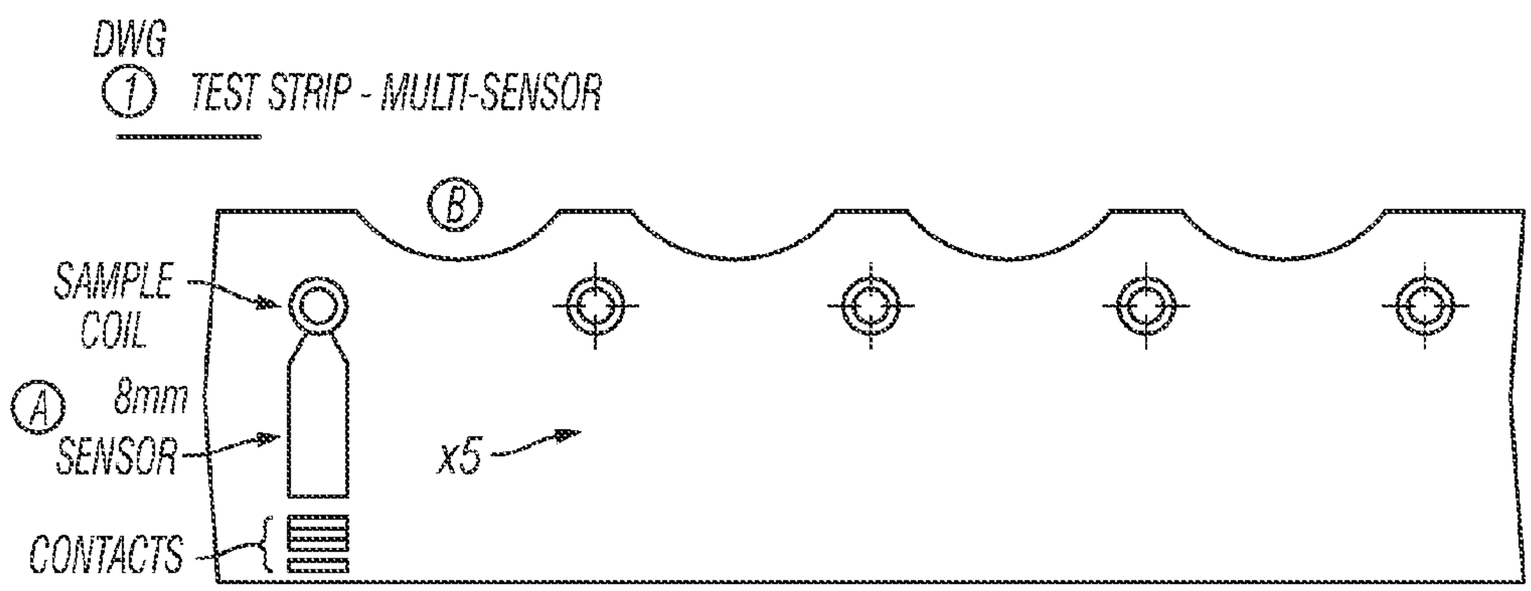

FIG. 125

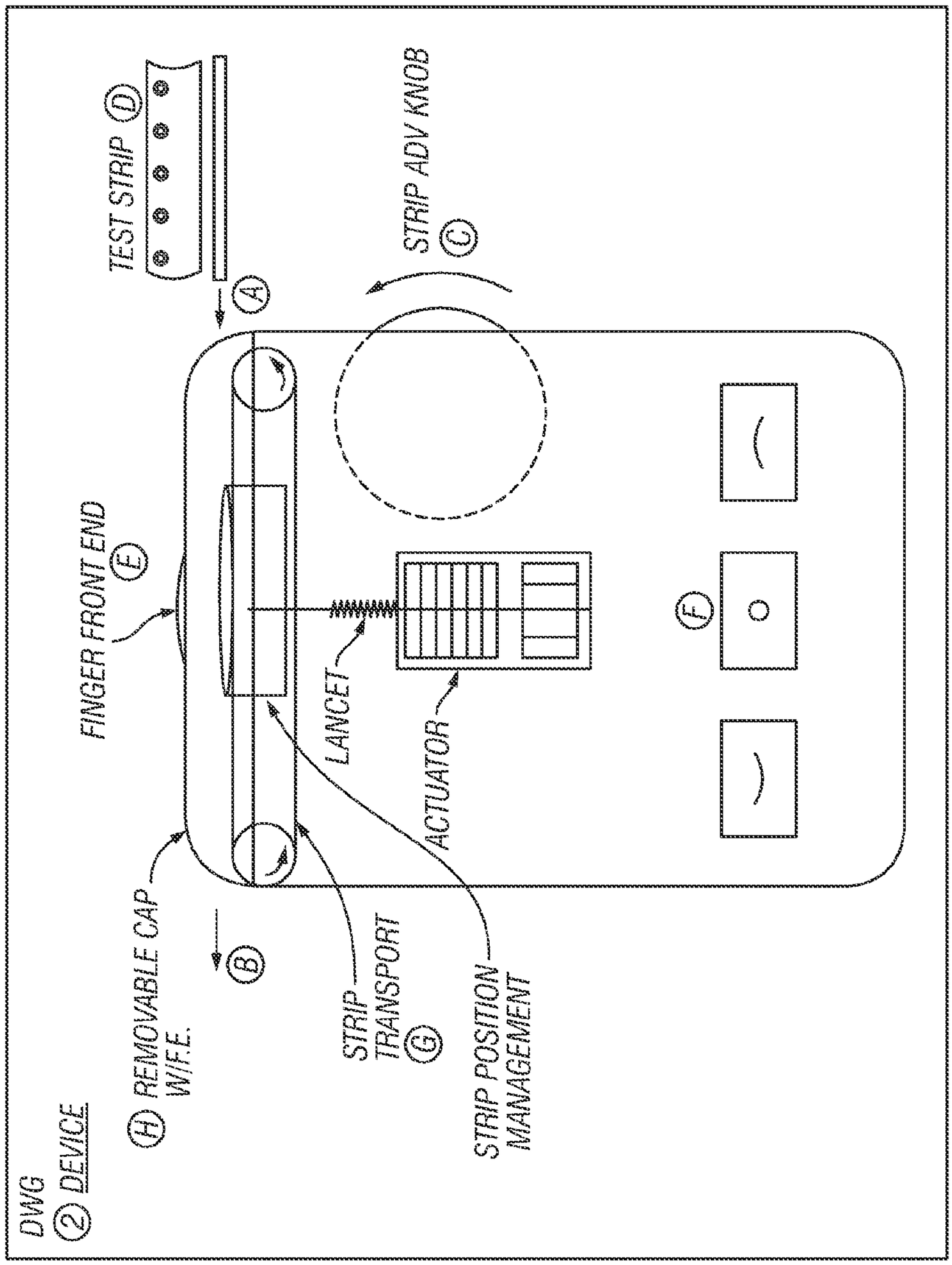
DWG
2 DEVICE
H REMOVABLE CAP W/F.E.
B
A
TEST STRIP D
FINGER FRONT END E
STRIP ADV KNOB C
LANCET
ACTUATOR
F
STRIP TRANSPORT G
STRIP POSITION MANAGEMENT

FIG. 126

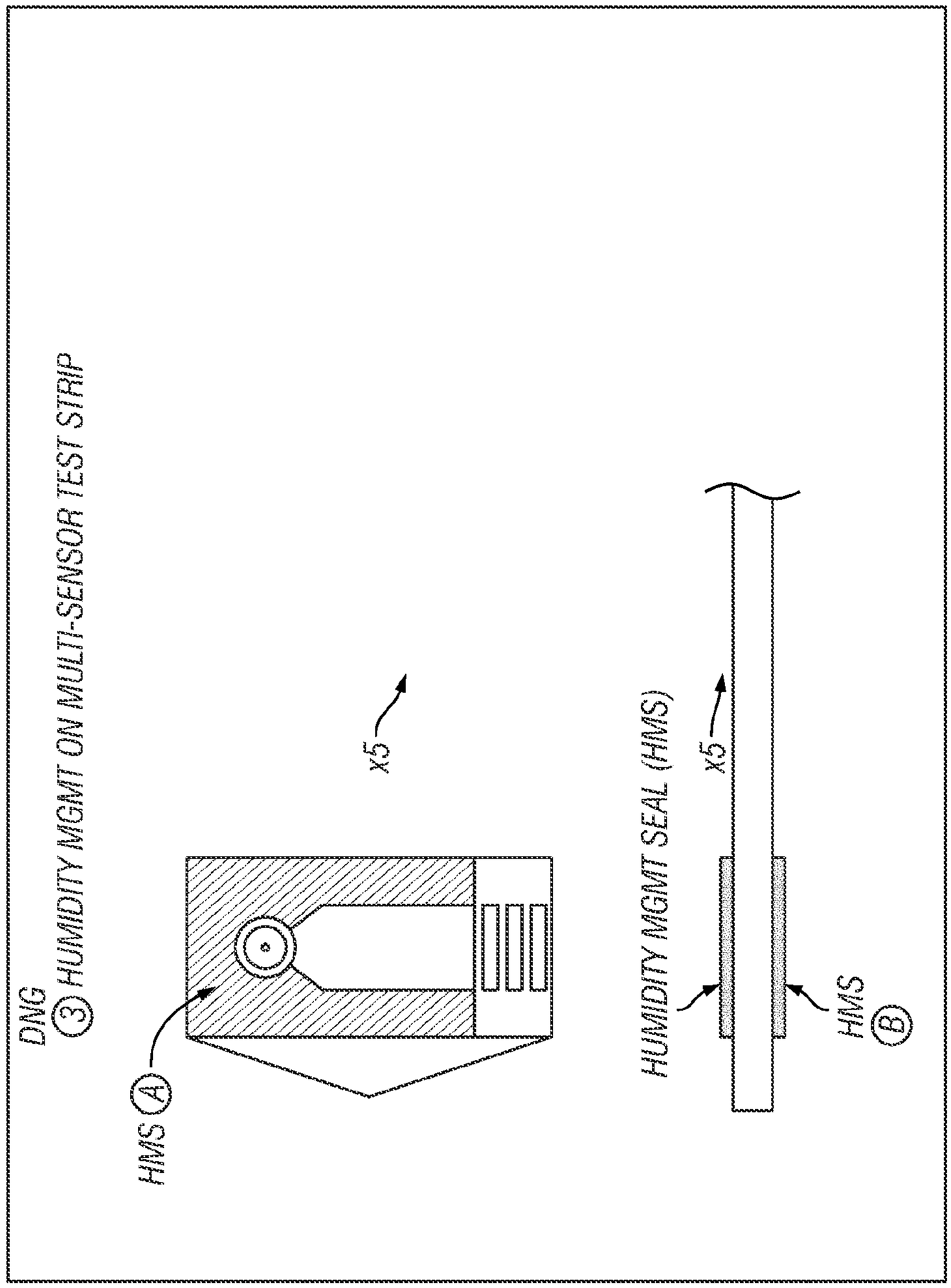
DNG
③ HUMIDITY MGMT ON MULTI-SENSOR TEST STRIP
X5
HMS Ⓐ
HUMIDITY MGMT SEAL (HMS)
X5
HMS Ⓑ

FIG. 127

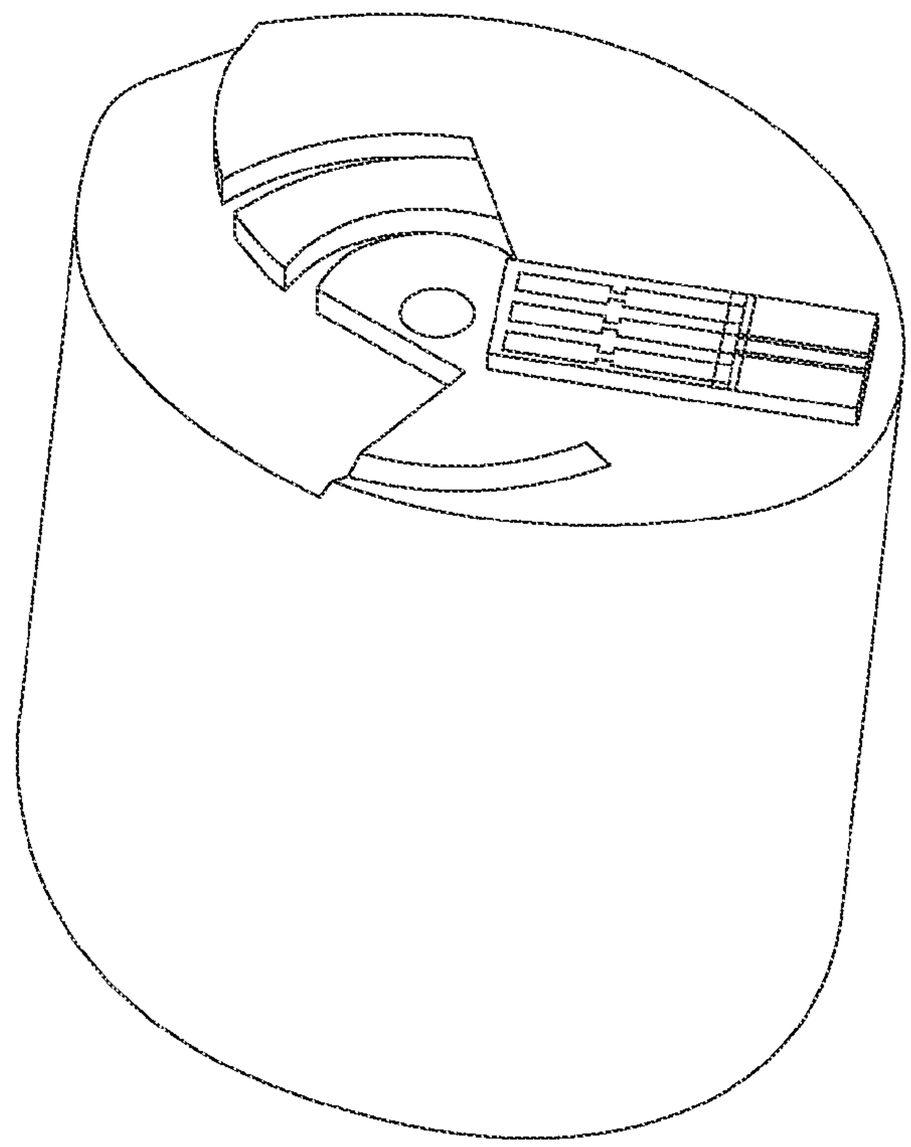

FIG. 128

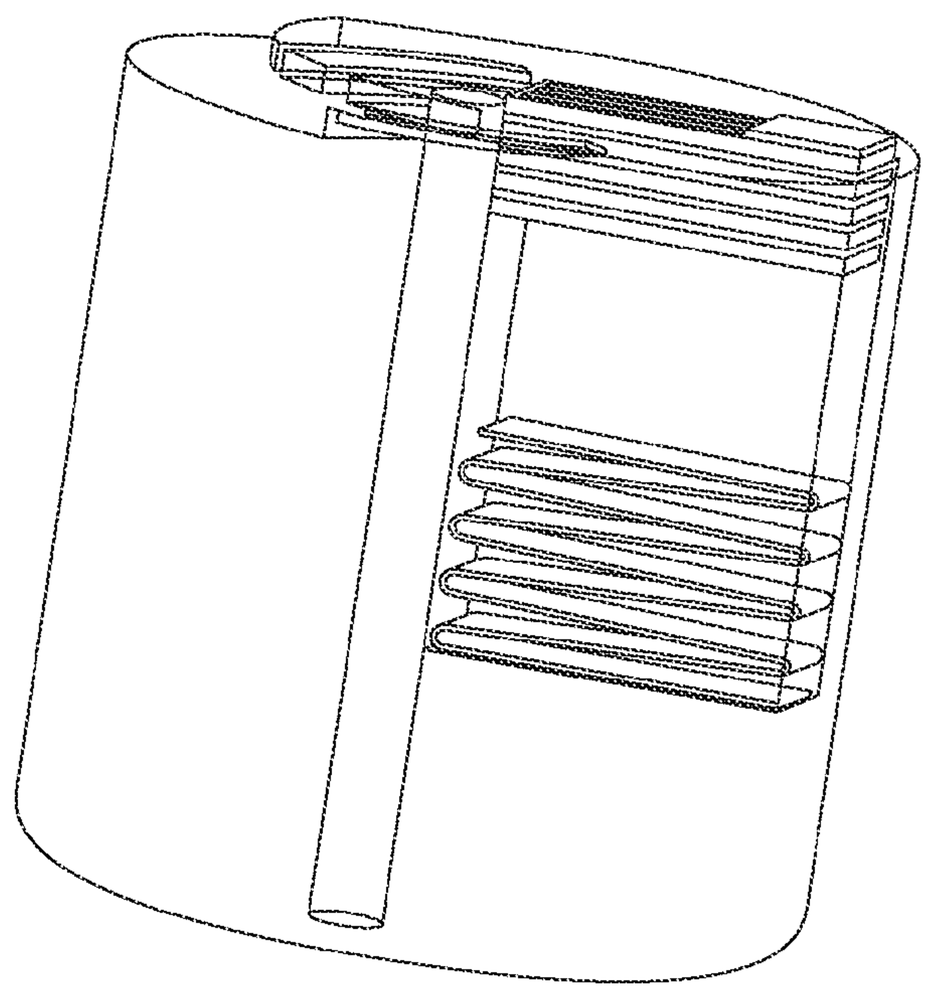

FIG. 129

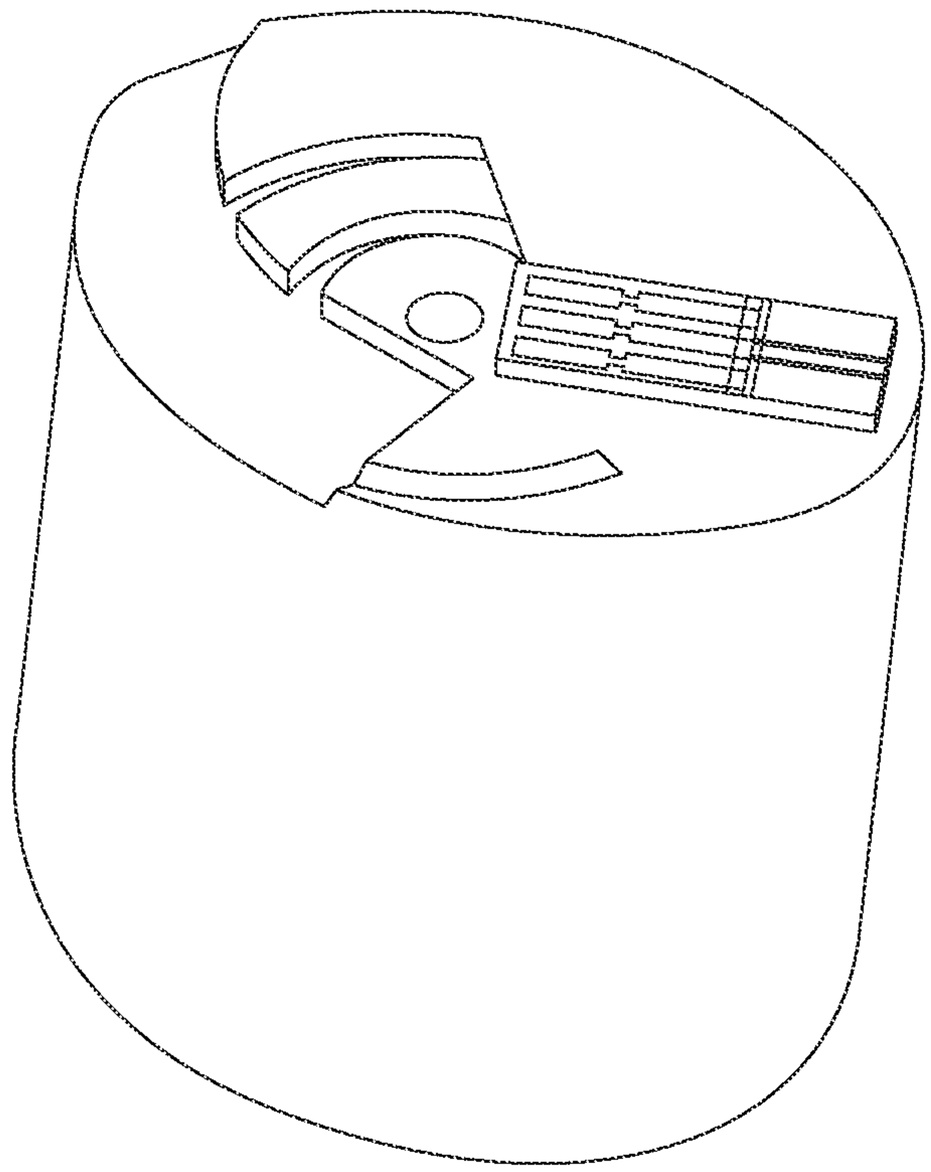

FIG. 130

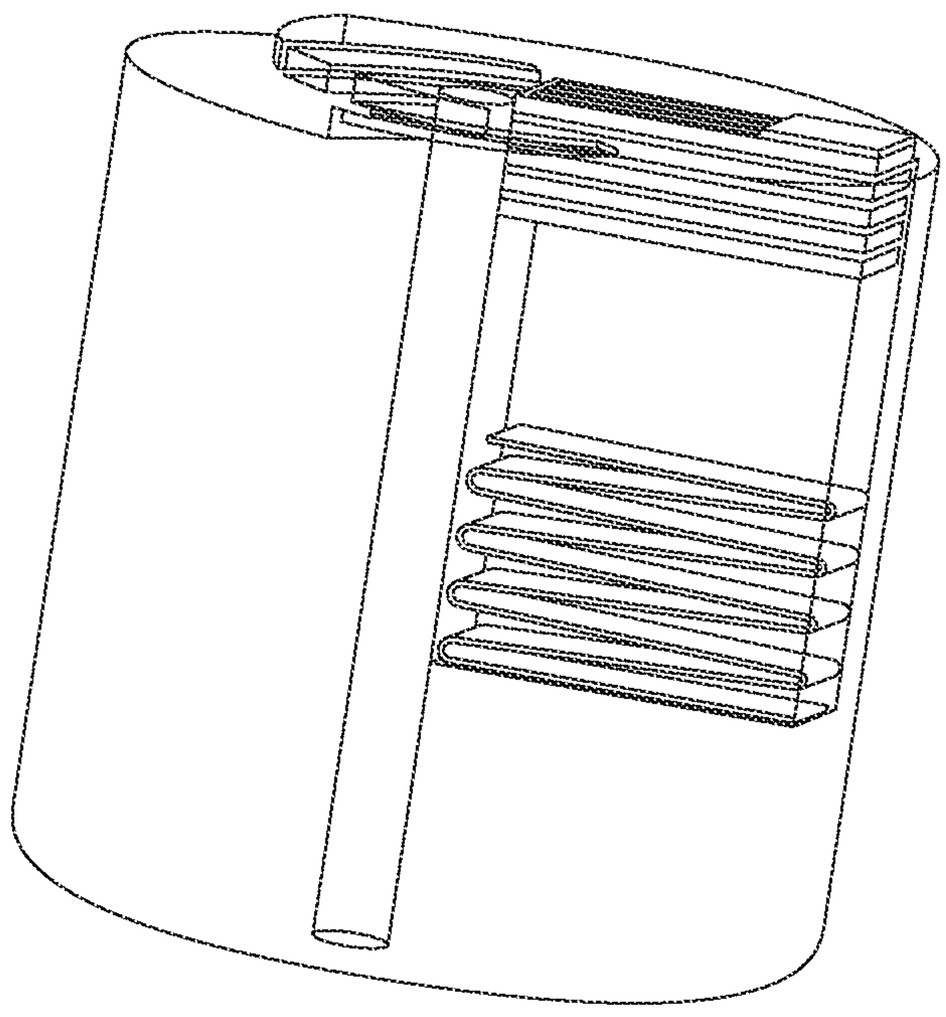

FIG. 131

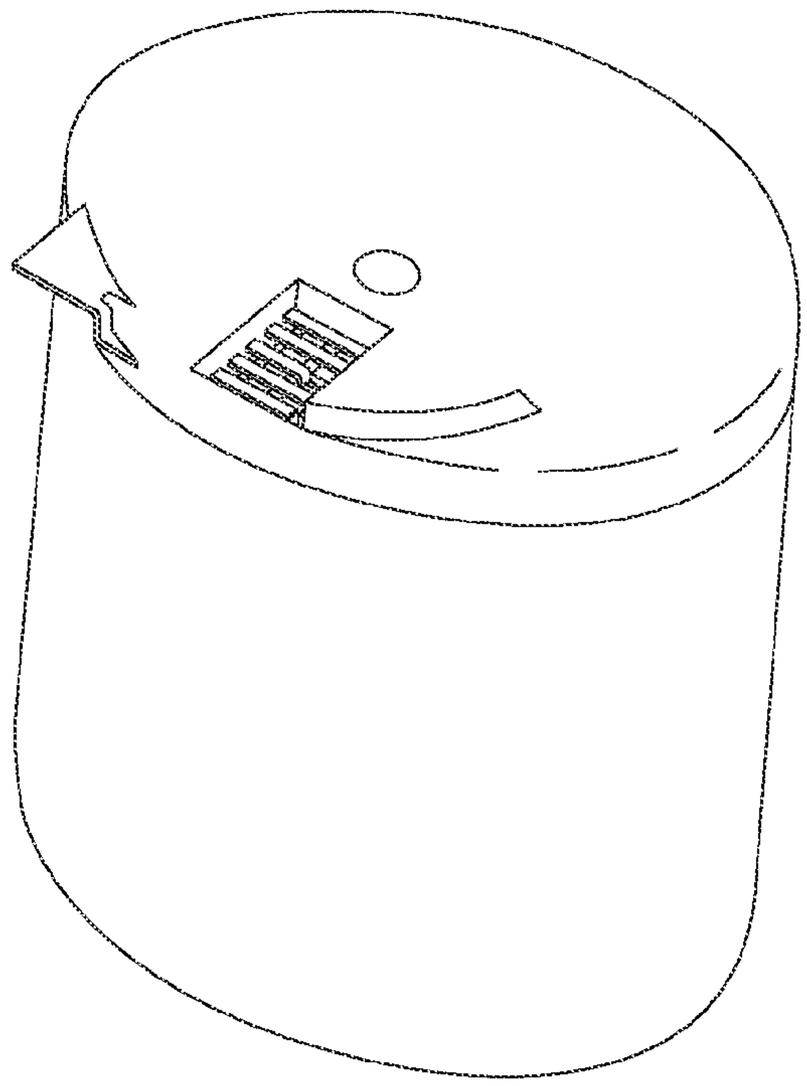

FIG. 132

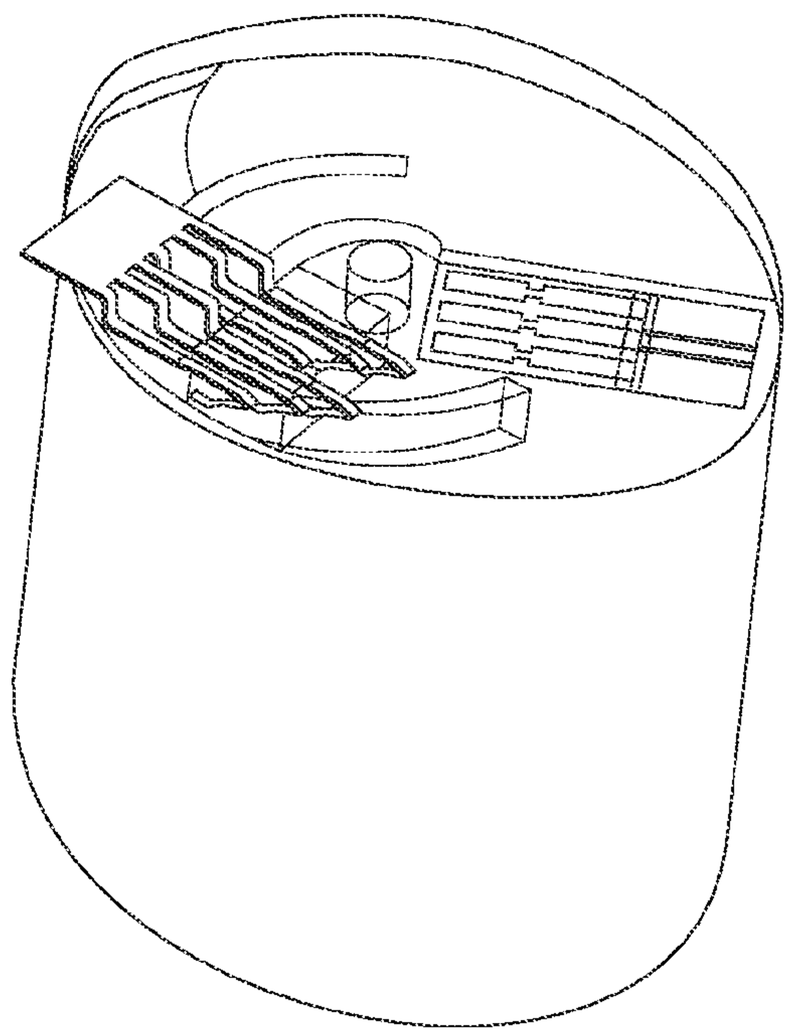

FIG. 133

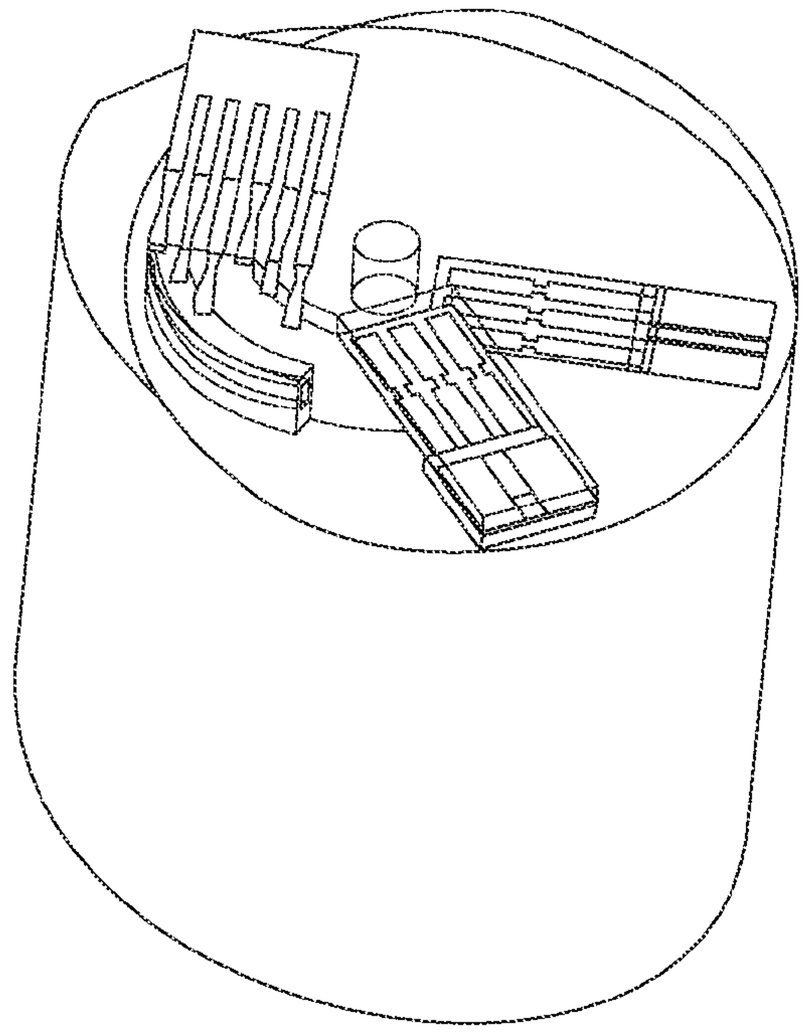

FIG. 134

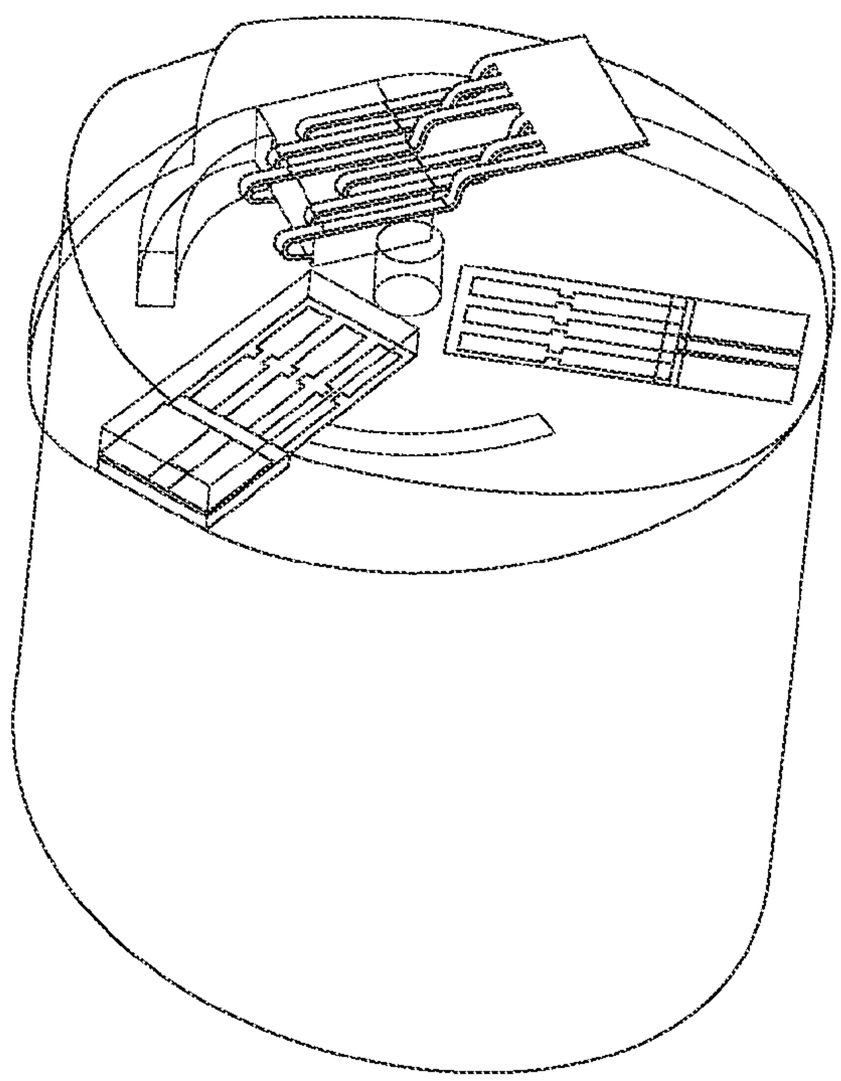

FIG. 135

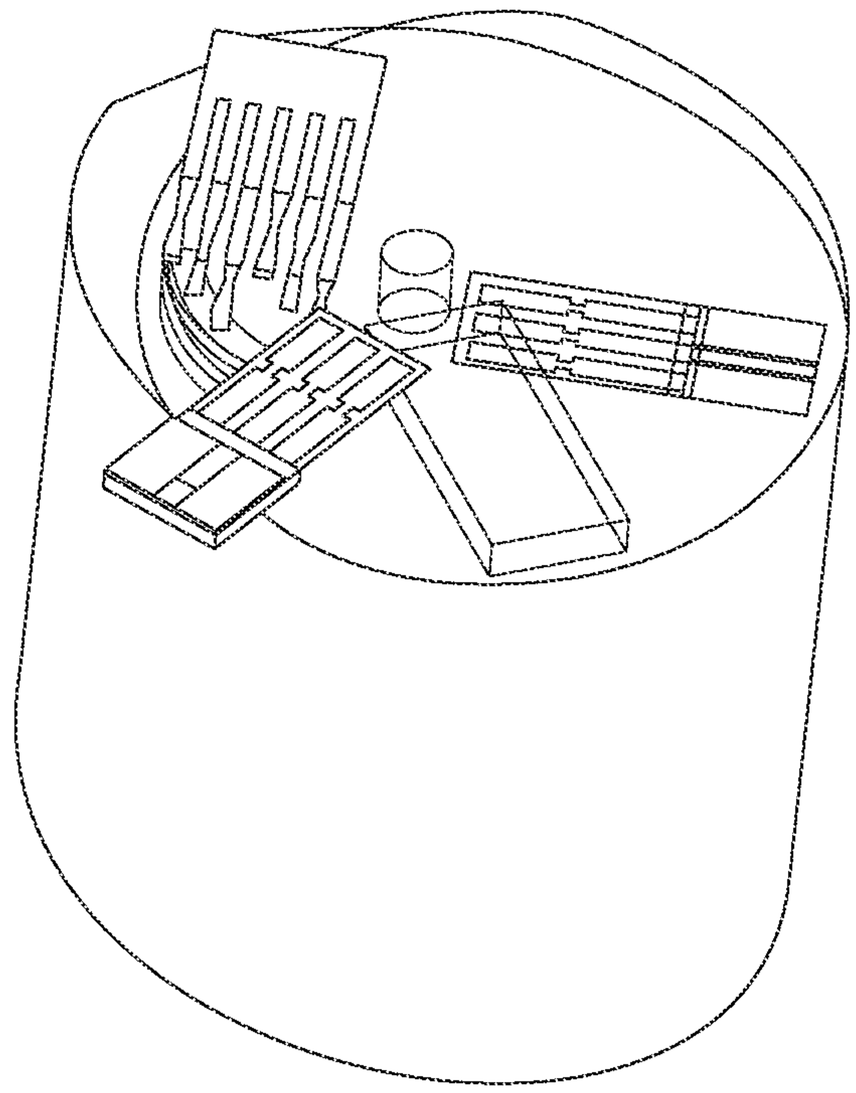

FIG. 136

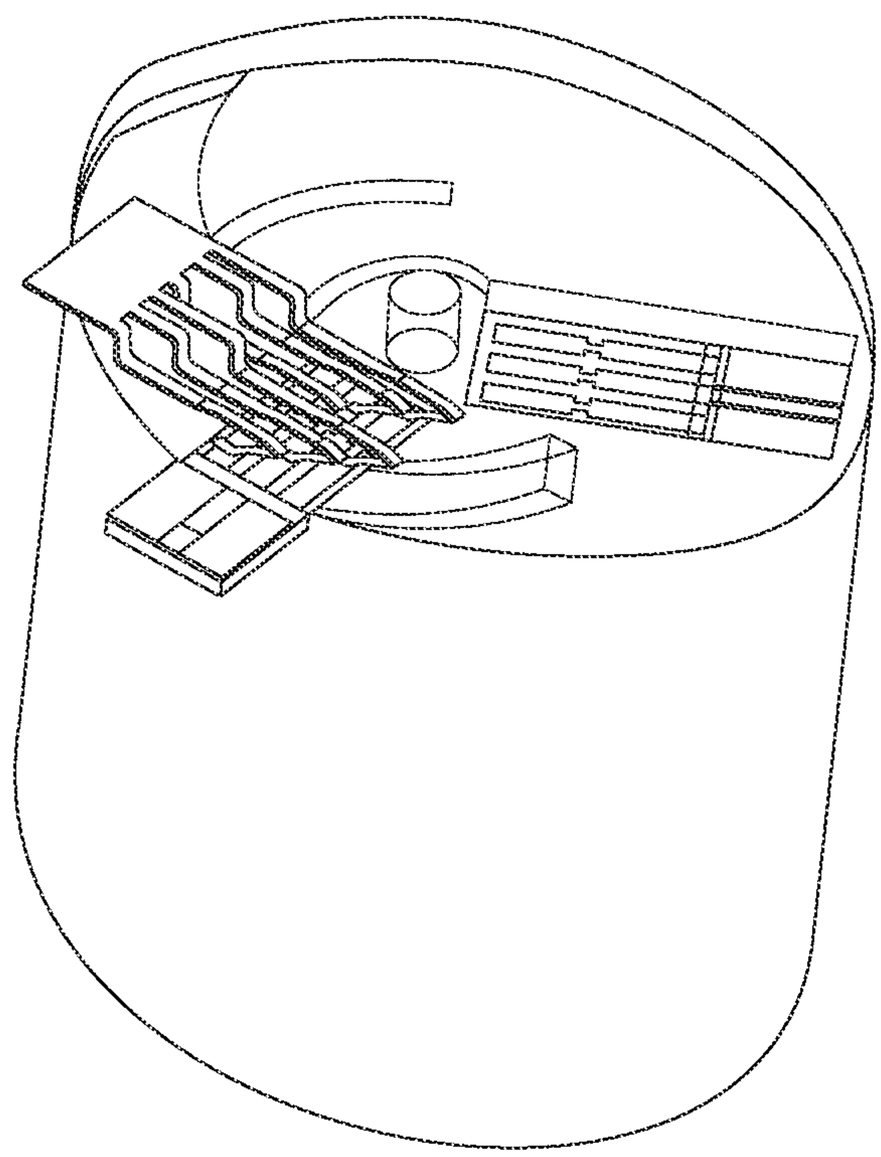

FIG. 137

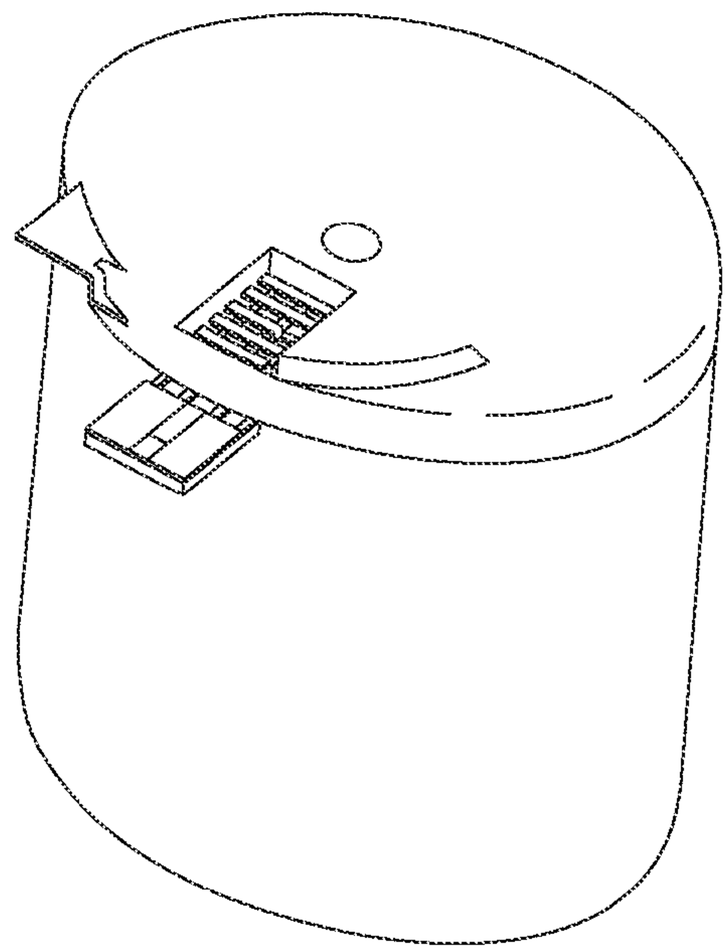

FIG. 138

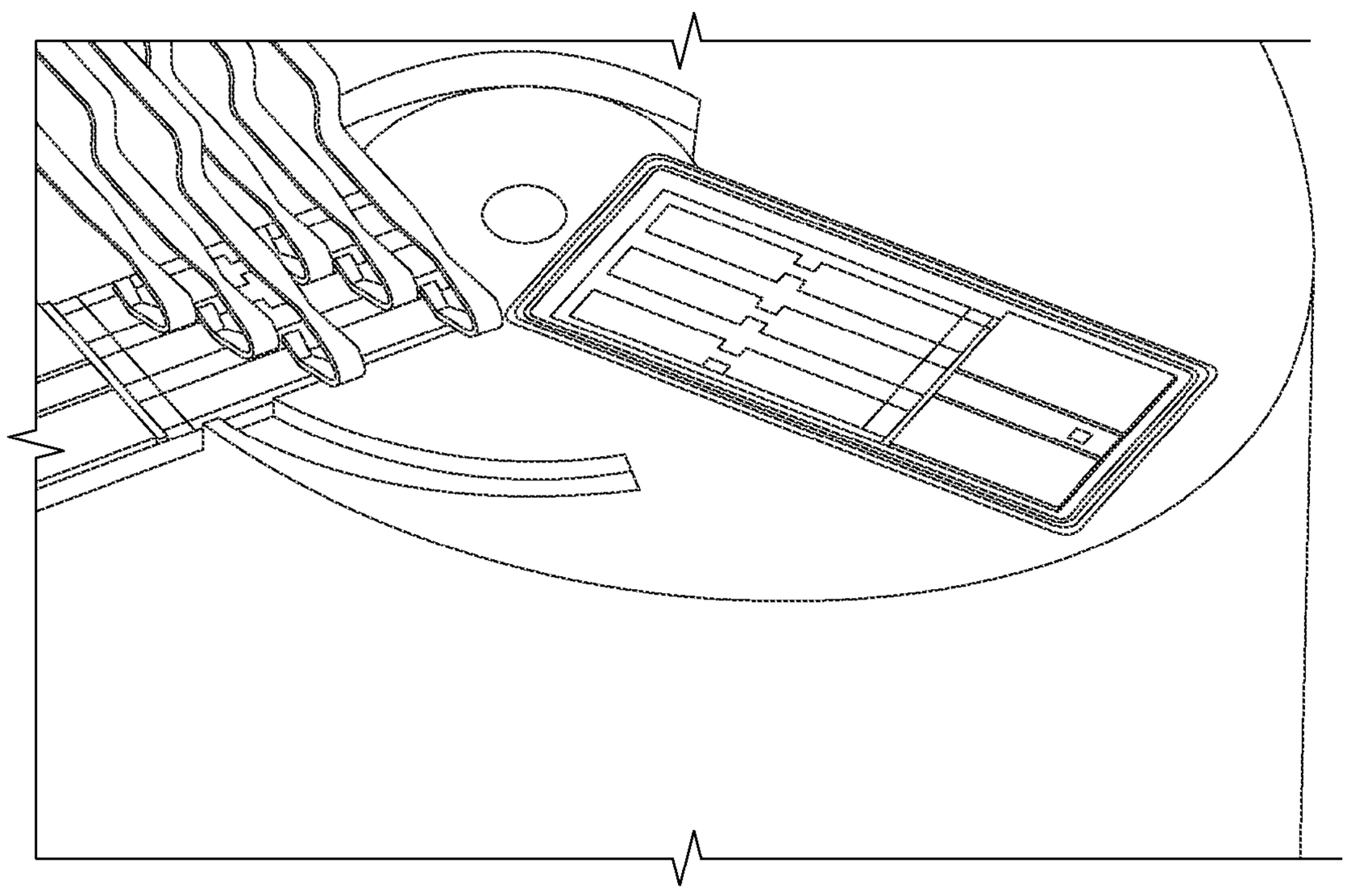

FIG. 139

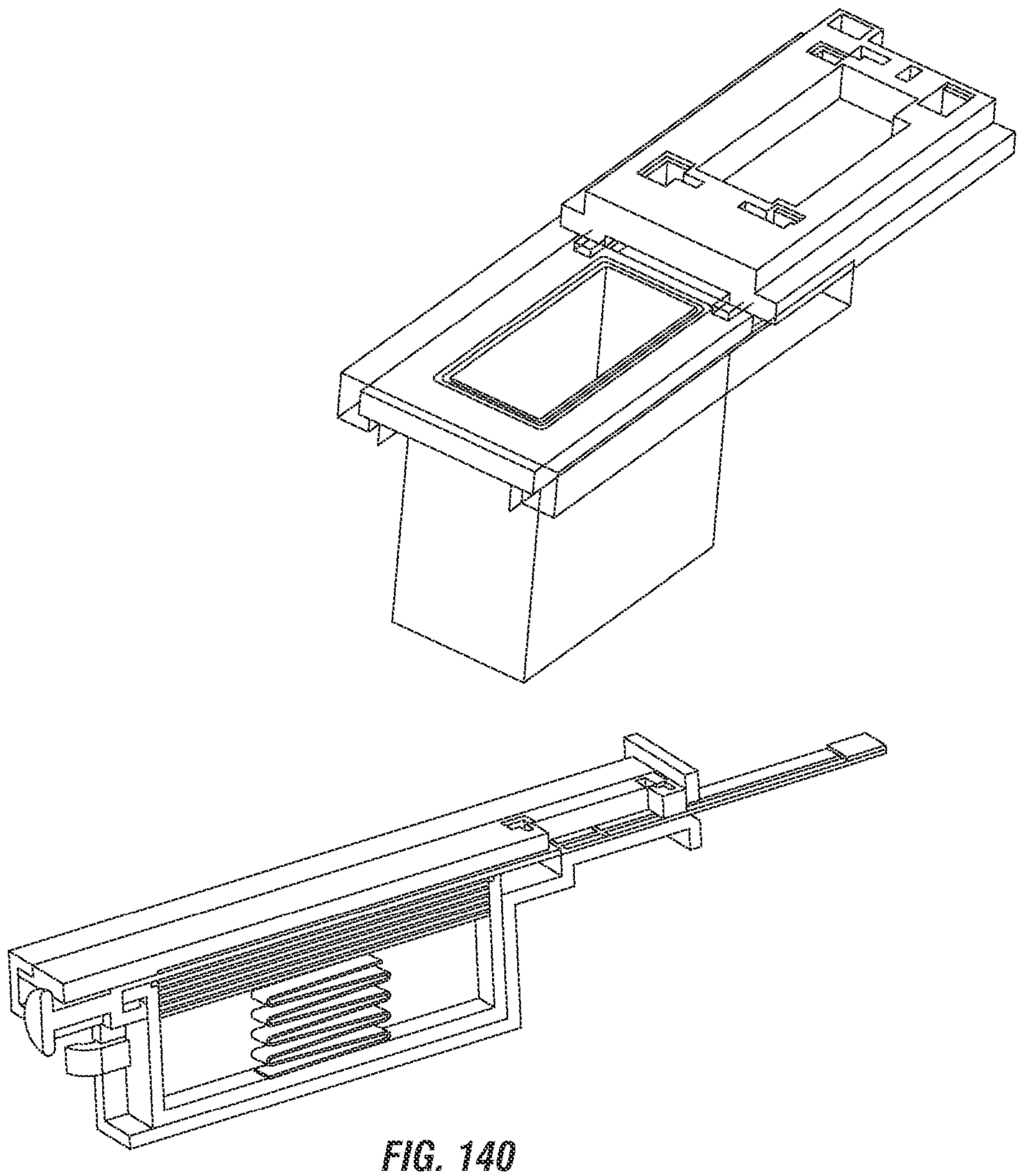

FIG. 140

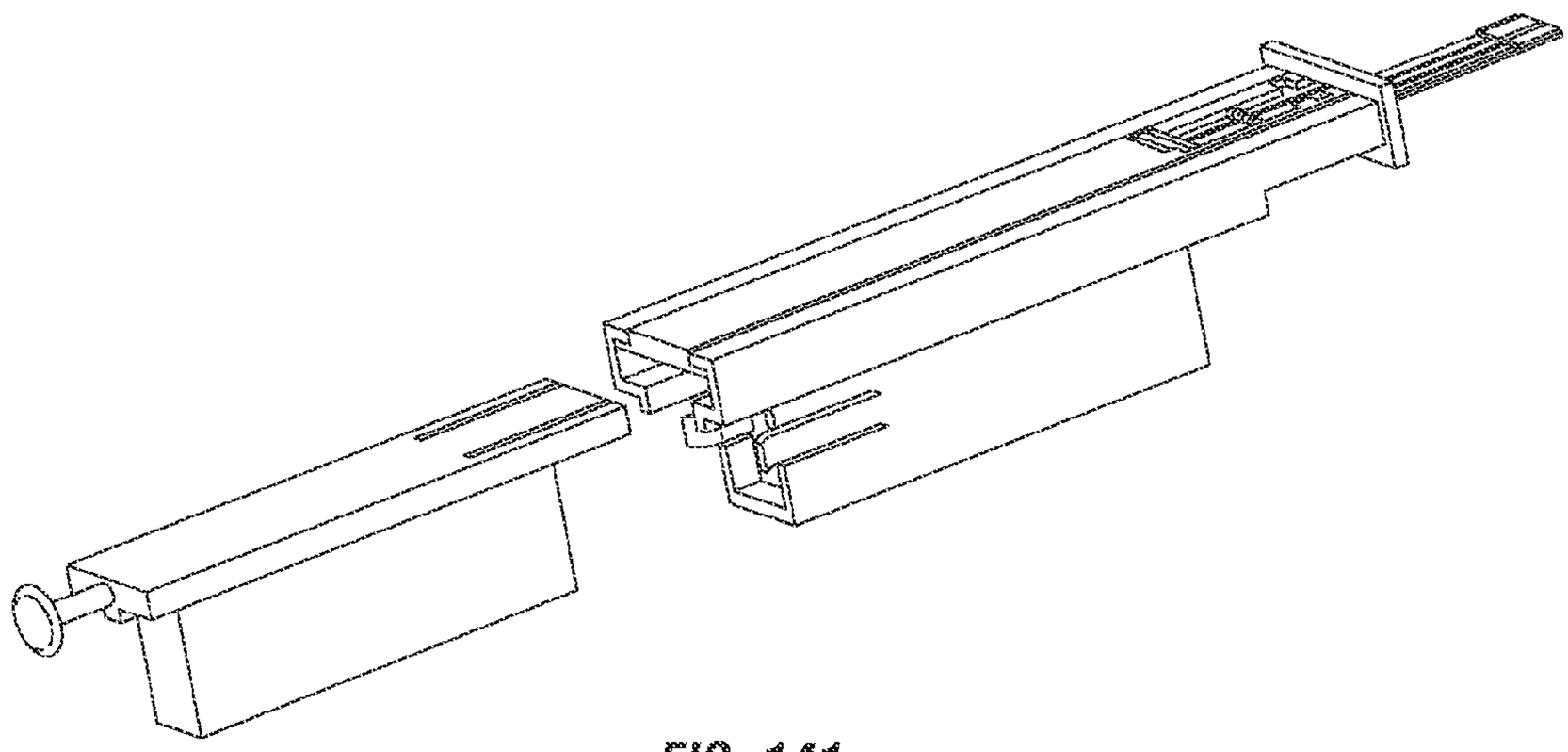

FIG. 141

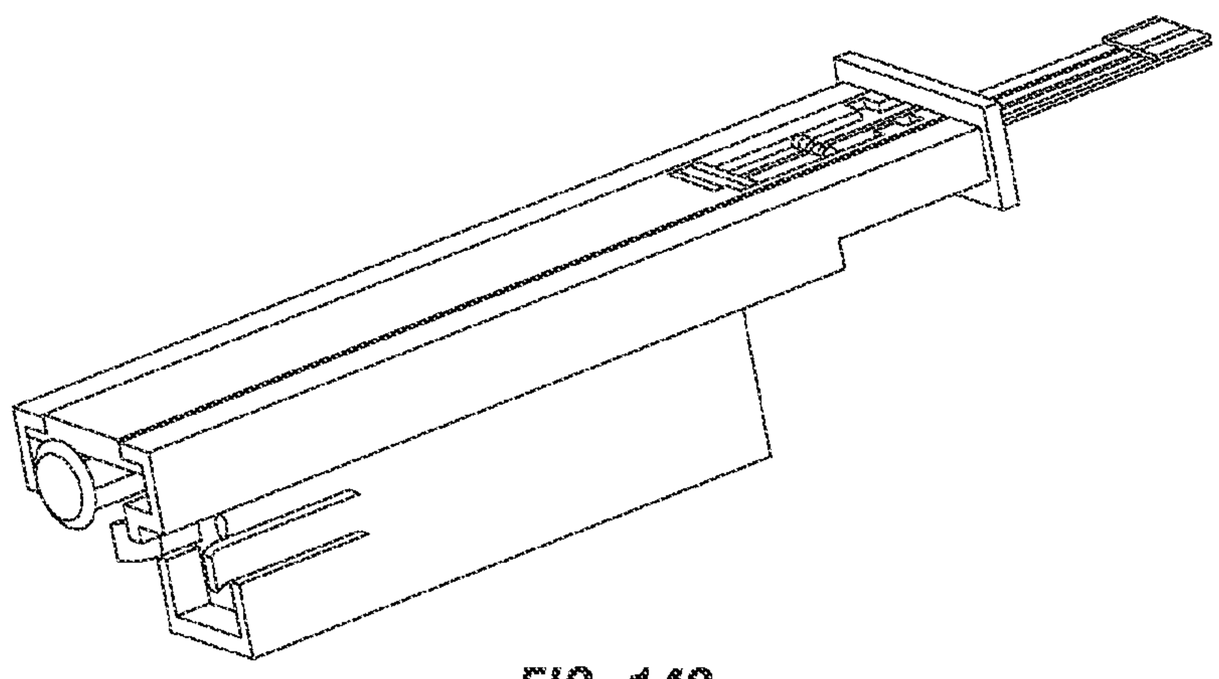

FIG. 142

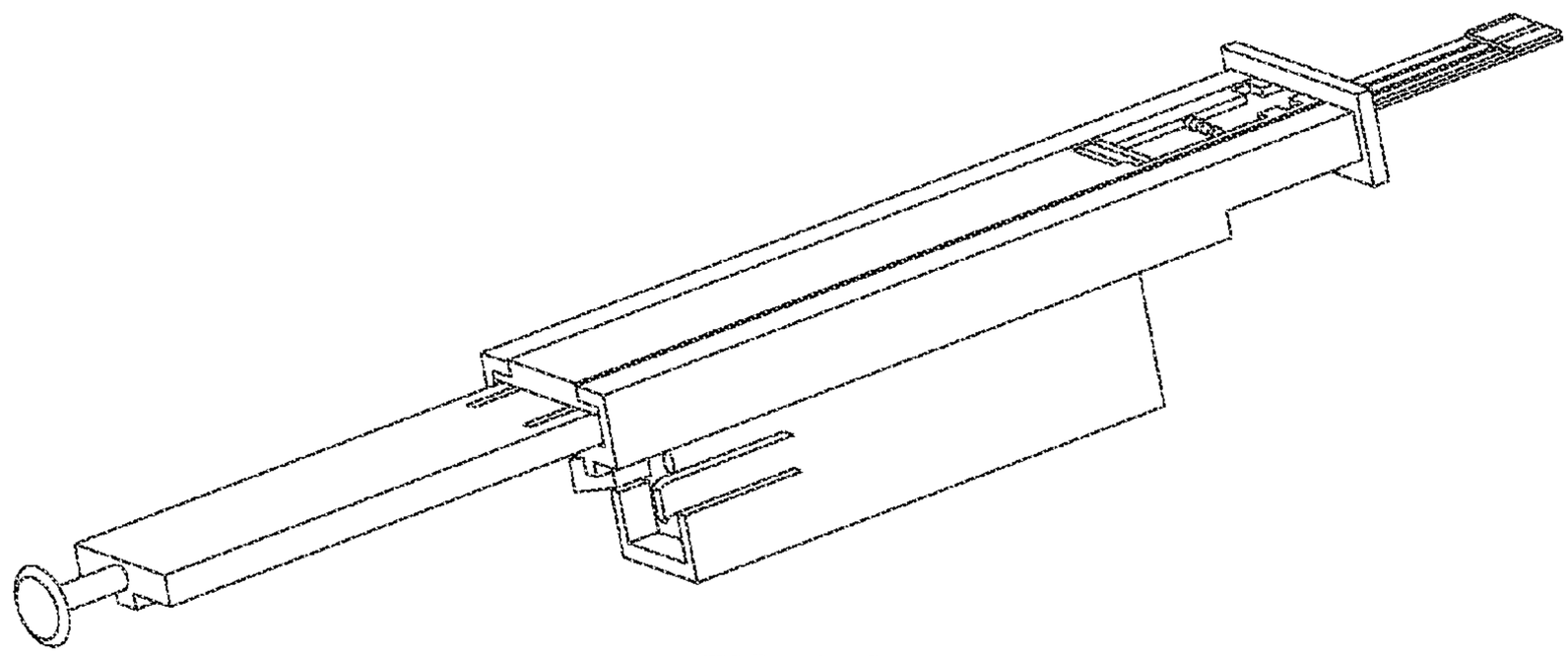

FIG. 143

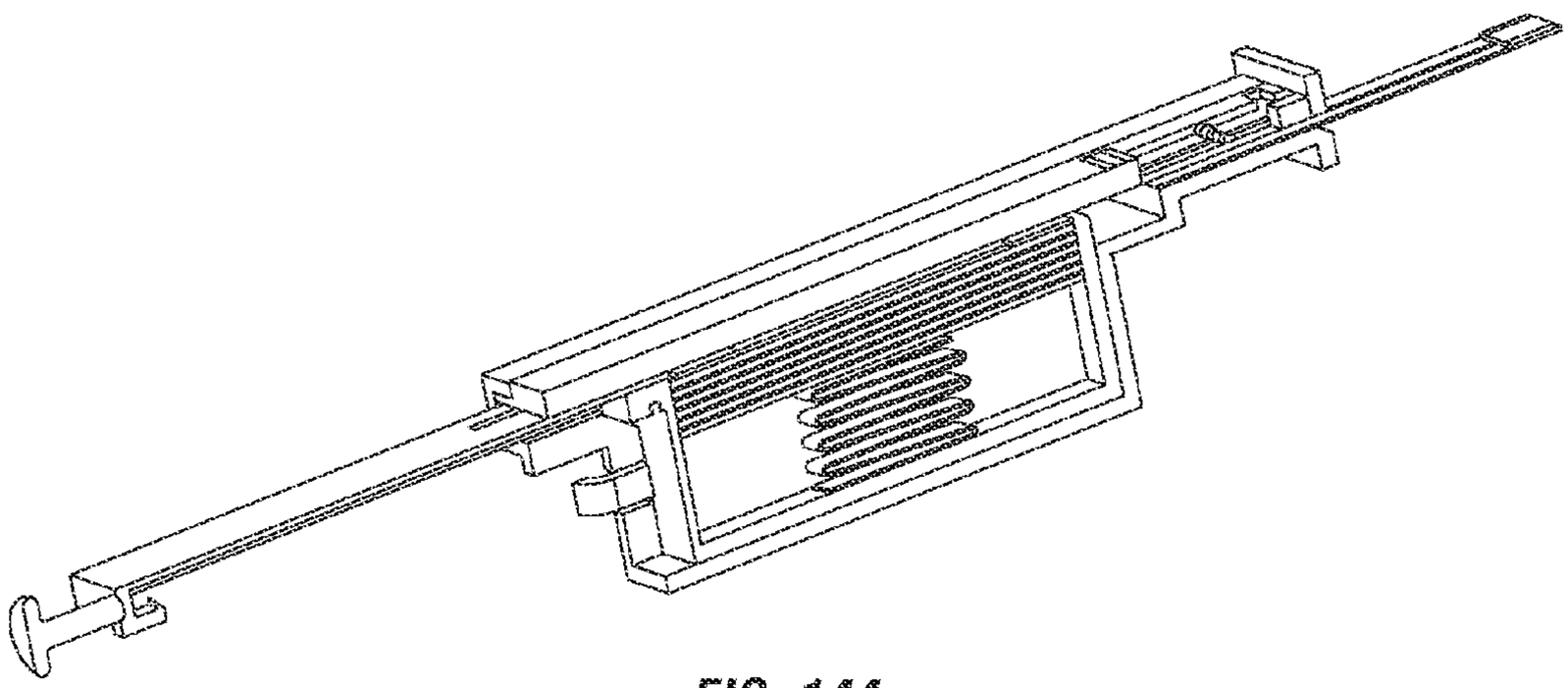

FIG. 144

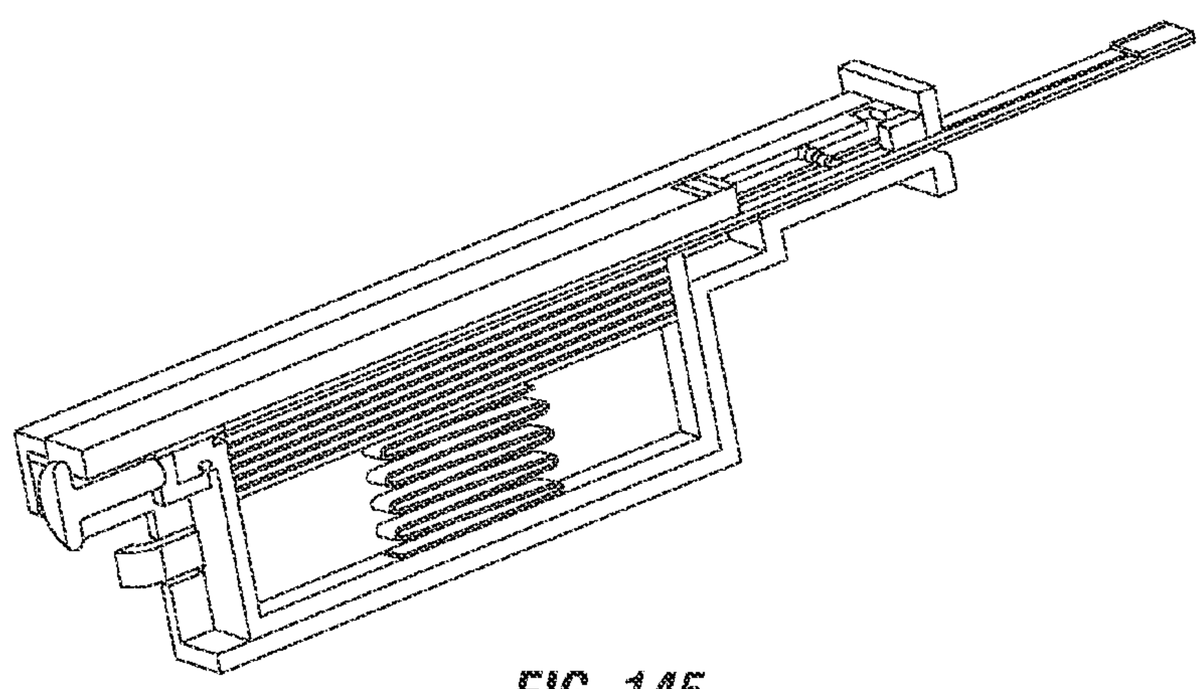

FIG. 145

TISSUE PENETRATION DEVICE

CROSS-REFERENCE TO RELATED APPLICATIONS

This application claims the benefit of U.S. Provisional Application No. 61/325,129 filed Apr. 16, 2010, which application is incorporated herein by reference.

BACKGROUND

Lancing devices are known in the medical health-care products industry for piercing the skin to produce blood for analysis. Biochemical analysis of blood samples is a diagnostic tool for determining clinical information. Many point-of-care tests are performed using whole blood, the most common being monitoring diabetic blood glucose level. Other uses for this method include the analysis of oxygen and coagulation based on Prothrombin time measurement. Typically, a drop of blood for this type of analysis is obtained by making a small incision in the fingertip, creating a small wound, which generates a small blood droplet on the surface of the skin.

Early methods of lancing included piercing or slicing the skin with a needle or razor. Current methods utilize lancing devices that contain a multitude of spring, cam and mass actuators to drive the lancet. These include cantilever springs, diaphragms, coil springs, as well as gravity plumbs used to drive the lancet. Typically, the device is pre-cocked or the user cocks the device. The device is held against the skin and the user, or pressure from the users skin, mechanically triggers the ballistic launch of the lancet. The forward movement and depth of skin penetration of the lancet is determined by a mechanical stop and/or dampening, as well as a spring or cam to retract the lancet. Such devices have the possibility of multiple strikes due to recoil, in addition to vibratory stimulation of the skin as the driver impacts the end of the launcher stop, and only allow for rough control for skin thickness variation. Different skin thickness may yield different results in terms of pain perception, blood yield and success rate of obtaining blood between different users of the lancing device.

Success rate generally encompasses the probability of producing a blood sample with one lancing action, which is sufficient in volume to perform the desired analytical test. The blood may appear spontaneously at the surface of the skin, or may be "milked" from the wound. Milking generally involves pressing the side of the digit, or in proximity of the wound to express the blood to the surface. The blood droplet produced by the lancing action must reach the surface of the skin to be viable for testing. For a one-step lance and blood sample acquisition method, spontaneous blood droplet formation is requisite. Then it is possible to interface the test strip with the lancing process for metabolite testing.

When using existing methods, blood often flows from the cut blood vessels but is then trapped below the surface of the skin, forming a hematoma. In other instances, a wound is created, but no blood flows from the wound. In either case, the lancing process cannot be combined with the sample acquisition and testing step. Spontaneous blood droplet generation with current mechanical launching system varies between launcher types but on average it is about 50% of lancet strikes, which would be spontaneous. Otherwise milking is required to yield blood. Mechanical launchers are unlikely to provide the means for integrated sample acquisition and testing if one out of every two strikes does not yield a spontaneous blood sample.

Many diabetic patients (insulin dependent) are required to self-test for blood glucose levels five to six times daily.

Reducing the number of steps required for testing would increase compliance with testing regimes. A one-step testing procedure where test strips are integrated with lancing and sample generation would achieve a simplified testing regimen. Improved compliance is directly correlated with long-term management of the complications arising from diabetes including retinopathies, neuropathies, renal failure and peripheral vascular degeneration resulting from large variations in glucose levels in the blood. Tight control of plasma glucose through frequent testing is therefore mandatory for disease management.

Another problem frequently encountered by patients who must use lancing equipment to obtain and analyze blood samples is the amount of manual dexterity and hand-eye coordination required to properly operate the lancing and sample testing equipment due to retinopathies and neuropathies particularly, severe in elderly diabetic patients. For those patients, operating existing lancet and sample testing equipment can be a challenge. Once a blood droplet is created, that droplet must then be guided into a receiving channel of a small test strip or the like. If the sample placement on the strip is unsuccessful, repetition of the entire procedure including re-lancing the skin to obtain a new blood droplet is necessary.

What is needed is a device, which can reliably, repeatedly and painlessly generate spontaneous blood samples. In addition, a method for performing analytical testing on a sample that does not require a high degree of manual dexterity or hand-eye coordination is required. Integrating sample generation (lancing) with sample testing (sample to test strip) will result in a simple one-step testing procedure resulting in better disease management through increased compliance with self testing regimes.

SUMMARY

Accordingly, an object of the present invention is to provide a device, and method, that reliably, repeatedly and painlessly generates spontaneous blood samples.

Another object of the present invention is to provide a device to perform analytical testing on a sample that does not require a high degree of manual dexterity or hand-eye coordination.

A further object of the present invention is provide a device for integrating sample generation (lancing) with sample testing (sample to test strip) that results in a simple one-step testing procedure resulting in better disease management through increased compliance with self testing regimes.

These and other objects of the present invention are achieved in, a body fluid testing device with at least one penetrating member and a penetrating member driver configured to be coupled to the at least one penetrating member. A plurality of analyte sensors are coupled to a spoked disk substrate. Each of a penetrating member can pass between spokes of the disk substrate to provide that a used penetrating member can be removed and a new penetrating inserted without removing the disk. A disposable houses the at least one penetrating member and the plurality of analyte sensors.

In another embodiment of the present invention, a disposable for a single shot glucose device has an over-molded penetrating member. The over-mold includes a device interface for the penetrating member and the over-mold being a device interface for the penetrating member. A sensor is included as is a a disposable for managing handling, location and use of the lancet and a sensor.

BRIEF DESCRIPTION OF THE DRAWINGS

FIGS. **1-3** are graphs of lancet velocity versus position for embodiments of spring driven, cam driven, and controllable force drivers.

FIG. **4** illustrates an embodiment of a controllable force driver in the form of a flat electric lancet driver that has a solenoid-type configuration.

FIG. **5** illustrates an embodiment of a controllable force driver in the form of a cylindrical electric lancet driver using a coiled solenoid-type configuration.

FIG. **6** illustrates a displacement over time profile of a lancet driven by a harmonic spring/mass system.

FIG. **7** illustrates the velocity over time profile of a lancet driver by a harmonic spring/mass system.

FIG. **8** illustrates a displacement over time profile of an embodiment of a controllable force driver.

FIG. **9** illustrates a velocity over time profile of an embodiment of a controllable force driver.

FIG. **10** illustrates the lancet needle partially retracted, after severing blood vessels; blood is shown following the needle in the wound tract.

FIG. **11** illustrates blood following the lancet needle to the skin surface, maintaining an open wound tract.

FIG. **12** is a diagrammatic view illustrating a controlled feed-back loop.

FIG. **13** is a graph of force vs. time during the advancement and retraction of a lancet showing some characteristic phases of a lancing cycle.

FIG. **14** illustrates a lancet tip showing features, which can affect lancing pain, blood volume, and success rate.

FIG. **15** illustrates an embodiment of a lancet tip.

FIG. **16** is a graph showing displacement of a lancet over time.

FIG. **17** is a graph showing an embodiment of a velocity profile, which includes the velocity of a lancet over time including reduced velocity during retraction of the lancet.

FIG. **18** illustrates the tip of an embodiment of a lancet before, during and after the creation of an incision braced with a helix.

FIG. **19** illustrates a finger wound tract braced with an elastomer embodiment.

FIG. **20** is a perspective view of a tissue penetration device having features of the invention.

FIG. **21** is an elevation view in partial longitudinal section of the tissue penetration device of FIG. **20**.

FIG. **22** is an elevation view in partial section of an alternative embodiment.

FIG. **23** is a transverse cross sectional view of the tissue penetration device of FIG. **21** taken along lines **23-23** of FIG. **21**.

FIG. **24** is a transverse cross sectional view of the tissue penetration device of FIG. **21** taken along lines **24-24** of FIG. **21**.

FIG. **25** is a transverse cross sectional view of the tissue penetration device of FIG. **21** taken along lines **25-25** of FIG. **21**.

FIG. **26** is a transverse cross sectional view of the tissue penetration device of FIG. **21** taken along lines **26-26** of FIG. **21**.

FIG. **27** is a side view of the drive coupler of the tissue penetration device of FIG. **21**.

FIG. **28** is a front view of the drive coupler of the tissue penetration device of FIG. **21** with the lancet not shown for purposes of illustration.

FIGS. **29**A-**29**C show a flowchart illustrating a lancet control method.

FIG. **30** is a diagrammatic view of a patient's finger and a lancet tip moving toward the skin of the finger.

FIG. **31** is a diagrammatic view of a patient's finger and the lancet tip making contact with the skin of a patient's finger.

FIG. **32** is a diagrammatic view of the lancet tip depressing the skin of a patient's finger.

FIG. **33** is a diagrammatic view of the lancet tip further depressing the skin of a patient's finger.

FIG. **34** is a diagrammatic view of the lancet tip penetrating the skin of a patient's finger.

FIG. **35** is a diagrammatic view of the lancet tip penetrating the skin of a patient's finger to a desired depth.

FIG. **36** is a diagrammatic view of the lancet tip withdrawing from the skin of a patient's finger.

FIGS. **37-41** illustrate a method of tissue penetration that may measure elastic recoil of the skin.

FIG. **42** is a graphical representation of position and velocity vs. time for a lancing cycle.

FIG. **43** illustrates a sectional view of the layers of skin with a lancet disposed therein.

FIG. **44** is a graphical representation of velocity vs. position of a lancing cycle.

FIG. **45** is a graphical representation of velocity vs. time of a lancing cycle.

FIG. **46** is an elevation view in partial longitudinal section of an alternative embodiment of a driver coil pack and position sensor.

FIG. **47** is a perspective view of a flat coil driver having features of the invention.

FIG. **48** is an exploded view of the flat coil driver of FIG. **47**.

FIG. **49** is an elevational view in partial longitudinal section of a tapered driver coil pack having features of the invention.

FIG. **50** is a transverse cross sectional view of the tapered coil driver pack of FIG. **49** taken along lines **50-50** in FIG. **49**.

FIG. **51** shows an embodiment of a sampling module which houses a lancet and sample reservoir.

FIG. **52** shows a housing that includes a driver and a chamber where the module shown in FIG. **51** can be loaded.

FIG. **53** shows a tissue penetrating sampling device with the module loaded into the housing.

FIG. **54** shows an alternate embodiment of a lancet configuration.

FIG. **55** illustrates an embodiment of a sample input port, sample reservoir and ergonomically contoured finger contact area.

FIG. **56** illustrates the tissue penetration sampling device during a lancing event.

FIG. **57** illustrates a thermal sample sensor having a sample detection element near a surface over which a fluid may flow and an alternative position for a sampled detection element that would be exposed to a fluid flowing across the surface.

FIG. **58** shows a configuration of a thermal sample sensor with a sample detection element that includes a separate heating element.

FIG. **59** depicts three thermal sample detectors such as that shown in FIG. **58** with sample detection elements located near each other alongside a surface.

FIG. **60** illustrates thermal sample sensors positioned relative to a channel having an analysis site.

FIG. **61** shows thermal sample sensors with sample detection analyzers positioned relative to analysis sites arranged in an array on a surface.

FIG. **62** schematically illustrates a sampling module device including several possible configurations of thermal sample sensors including sample detection elements positioned relative to sample flow channels and analytical regions.

FIG. **63** illustrates a tissue penetration sampling device having features of the invention.

FIG. **64** is a top view in partial section of a sampling module of the tissue penetration sampling device of FIG. **63**.

FIG. **65** is a cross sectional view through line **65-65** of the sampling module shown in FIG. **64**.

FIG. **66** schematically depicts a sectional view of an alternative embodiment of the sampling module.

FIG. **67** depicts a portion of the sampling module surrounding a sampling port.

FIGS. **68-70** show in sectional view one implementation of a spring powered lancet driver in three different positions during use of the lancet driver.

FIG. **71** illustrates an embodiment of a tissue penetration sampling device having features of the invention.

FIG. **72** shows a top surface of a cartridge that includes multiple sampling modules.

FIG. **73** shows in partial section a sampling module of the sampling cartridge positioned in a reader device.

FIG. **74** is a perspective view in partial section of a tissue penetration sampling device with a cartridge of sampling modules.

FIG. **75** is a front view in partial section of the tissue penetration sampling device of FIG. **56**.

FIG. **76** is a top view of the tissue penetration sampling device of FIG. **75**.

FIG. **77** is a perspective view of a section of a sampling module belt having a plurality of sampling modules connected in series by a sheet of flexible polymer.

FIG. **78** is a perspective view of a single sampling module of the sampling module belt of FIG. **59**.

FIG. **79** is a bottom view of a section of the flexible polymer sheet of the sampling module of FIG. **78** illustrating the flexible conductors and contact points deposited on the bottom surface of the flexible polymer sheet.

FIG. **80** is a perspective view of the body portion of the sampling module of FIG. **77** without the flexible polymer cover sheet or lancet.

FIG. **81** is an enlarged portion of the body portion of the sampling module of FIG. **80** illustrating the input port, sample flow channel, analytical region, lancet channel and lancet guides of the sampling module.

FIG. **82** is an enlarged elevational view of a portion of an alternative embodiment of a sampling module having a plurality of small volume analytical regions.

FIG. **83** is a perspective view of a body portion of a lancet module that can house and guide a lancet without sampling or analytical functions.

FIG. **84** is an elevational view of a drive coupler having a T-slot configured to accept a drive head of a lancet.

FIG. **85** is an elevational view of the drive coupler of FIG. **84** from the side and illustrating the guide ramps of the drive coupler.

FIG. **86** is a perspective view of the drive coupler of FIG. **84** with a lancet being loaded into the T-slot of the drive coupler.

FIG. **87** is a perspective view of the drive coupler of FIG. **86** with the drive head of the lancet completely loaded into the T-slot of the drive coupler.

FIG. **88** is a perspective view of a sampling module belt disposed within the T-slot of the drive coupler with a drive head of a lancet of one of the sampling modules loaded within the T-slot of the drive coupler.

FIG. **89** is a perspective view of a sampling module cartridge with the sampling modules arranged in a ring configuration.

FIG. **90** is a perspective view of a sampling module cartridge with the plurality of sampling modules arranged in a block matrix with lancet drive heads configured to mate with a drive coupler having adhesive coupling.

FIG. **91** is a side view of an alternative embodiment of a drive coupler having a lateral slot configured to accept the L-shaped drive head of the lancet that is disposed within a lancet module and shown with the L-shaped drive head loaded in the lateral slot.

FIG. **92** is an exploded view of the drive coupler, lancet with L-shaped drive head and lancet module of FIG. **91**.

FIG. **93** is a perspective view of the front of a lancet cartridge coupled to the distal end of a controlled electromagnetic driver.

FIG. **94** is an elevational front view of the lancet cartridge of FIG. **93**.

FIG. **95** is a top view of the lancet cartridge of FIG. **93**.

FIG. **96** is a perspective view of the lancet cartridge of FIG. **93** with a portion of the cartridge body and lancet receptacle not shown for purposes of illustration of the internal mechanism.

FIGS. **97-101** illustrate an embodiment of an agent injection device.

FIGS. **102-106** illustrate an embodiment of a cartridge for use in sampling having a sampling cartridge body and a lancet cartridge body.

FIGS. **107** through **110** illustrate embodiments of the present invention with multiple test sensors for blood glucose assembled on a single disposable.

FIGS. **111** through **115** illustrate embodiments of the present invention with FIG. **111** with a disk that has multiple sensors for testing blood glucose.

FIGS. **116** and **117** illustrate embodiments of the present invention where a lancet is fully is contained within a cartridge that is inserted into a bore of an actuator solenoid coils.

FIGS. **118** through **120** illustrate embodiments of the present invention with a plurality of singulated, spaced sensors on a flexible transport carrier.

FIGS. **121** through **124** illustrate embodiments of the present invention with over-molded lancets.

FIGS. **125** through **127** illustrate embodiments of the present invention with a multi-sensor test strip that has integrated sample collection structures and associated electrical contacts.

FIGS. **128** through **139** illustrate embodiments of the present invention with a housing that includes a sealed chamber that contains a stack of blood glucose sensors.

FIG. **140** through **145** illustrate embodiments of the present invention with a plurality of blood glucose sensors that are dispersed through the action of a linear sliding motion.

DETAILED DESCRIPTION

Variations in skin thickness including the stratum corneum and hydration of the epidermis can yield different results between different users with existing tissue penetration devices, such as lancing devices wherein the tissue penetrating element of the tissue penetration device is a lancet. Many current devices rely on adjustable mechanical stops or damping, to control the lancet's depth of penetration.

Displacement velocity profiles for both spring driven and cam driven tissue penetration devices are shown in FIGS. **1** and **2**, respectively. Velocity is plotted against displacement X of the lancet. FIG. **1** represents a displacement/velocity profile typical of spring driven devices. The lancet exit velocity increases until the lancet hits the surface of the skin **10**. Because of the tensile characteristics of the skin, it will bend or deform until the lancet tip cuts the surface **20**, the lancet will then penetrate the skin until it reaches a full stop **30**. At this point displacement is maximal and reaches a limit of penetration and the lancet stops. Mechanical stops absorb

excess energy from the driver and transfer it to the lancet. The energy stored in the spring can cause recoil resulting in multiple piercing as seen by the coiled profile in FIG. **1**. This results in unnecessary pain from the additional tissue penetration as well as from transferring vibratory energy into the skin and exciting nerve endings. Retraction of the lancet then occurs and the lancet exits the skin **40** to return into the housing. Velocity cannot be controlled in any meaningful way for this type of spring-powered driver.

FIG. **2** shows a displacement/velocity profile for a cam driven driver, which is similar to that of FIG. **1**, but because the return path is specified in the cam configuration, there is no possibility of multiple tissue penetrations from one actuation. Cam based drivers can offer some level of control of lancet velocity vs. displacement, but not enough to achieve many desirable displacement/velocity profiles.

Advantages are achieved by utilizing a controllable force driver to drive a lancet, such as a driver, powered by electromagnetic energy. A controllable driver can achieve a desired velocity versus position profile, such as that shown in FIG. **3**. Embodiments of the present invention allow for the ability to accurately control depth of penetration, to control lancet penetration and withdrawal velocity, and therefore reduce the pain perceived when cutting into the skin. Embodiments of the invention include a controllable driver that can be used with a feedback loop with a position sensor to control the power delivered to the lancet, which can optimize the velocity and displacement profile to compensate for variations in skin thickness

Pain reduction can be achieved by using a rapid lancet cutting speed, which is facilitated by the use of a lightweight lancet. The rapid cutting minimizes the shock waves produced when the lancet strikes the skin in addition to compressing the skin for efficient cutting. If a controllable driver is used, the need for a mechanical stop can be eliminated. Due to the very light mass of the lancet and lack of a mechanical stop, there is little or no vibrational energy transferred to the finger during cutting.

The lancing devices such as those whose velocity versus position profiles are shown in FIGS. **1** and **2** typically yield 50% spontaneous blood. In addition, some lancing events are unsuccessful and yield no blood, even on milking the finger. A spontaneous blood droplet generation is dependent on reaching the blood capillaries and venuoles, which yield the blood sample. It is therefore an issue of correct depth of penetration of the cutting device. Due to variations in skin thickness and hydration, some types of skin will deform more before cutting starts, and hence the actual depth of penetration will be less, resulting in less capillaries and venuoles cut. A controllable force driver can control the depth of penetration of a lancet and hence improve the spontaneity of blood yield. Furthermore, the use of a controllable force driver can allow for slow retraction of the lancet (slower than the cutting velocity) resulting in improved success rate due to the would channel remaining open for the free passage of blood to the surface of the skin.

Spontaneous blood yield occurs when blood from the cut vessels flow up the wound tract to the surface of the skin, where it can be collected and tested. Tissue elasticity parameters may force the wound tract to close behind the retracting lancet preventing the blood from reaching the surface. If however, the lancet were to be withdrawn slowly from the wound tract, thus keeping the wound open, blood could flow up the patent channel behind the tip of the lancet as it is being withdrawn (ref. FIGS. **10** and **11**). Hence the ability to control the lancet speed into and out of the wound allows the device to compensate for changes in skin thickness and variations in skin hydration and thereby achieves spontaneous blood yield with maximum success rate while minimizing pain.

An electromagnetic driver can be coupled directly to the lancet minimizing the mass of the lancet and allowing the driver to bring the lancet to a stop at a predetermined depth without the use of a mechanical stop. Alternatively, if a mechanical stop is required for positive positioning, the energy transferred to the stop can be minimized. The electromagnetic driver allows programmable control over the velocity vs. position profile of the entire lancing process including timing the start of the lancet, tracking the lancet position, measuring the lancet velocity, controlling the distal stop acceleration, and controlling the skin penetration depth.

Referring to FIG. **4**, an embodiment of a tissue penetration device is shown. The tissue penetration device includes a controllable force driver in the form of an electromagnetic driver, which can be used to drive a lancet. The term Lancet, as used herein, generally includes any sharp or blunt member, preferably having a relatively low mass, used to puncture the skin for the purpose of cutting blood vessels and allowing blood to flow to the surface of the skin. The term Electromagnetic driver, as used herein, generally includes any device that moves or drives a tissue penetrating element, such as a lancet under an electrically or magnetically induced force. FIG. **4** is a partially exploded view of an embodiment of an electromagnetic driver. The top half of the driver is shown assembled. The bottom half of the driver is shown exploded for illustrative purposes.

FIG. **4** shows the inner insulating housing **22** separated from the stationary housing or PC board **20**, and the lancet **24** and flag **26** assembly separated from the inner insulating housing **22** for illustrative purposes. In addition, only four rivets **18** are shown as attached to the inner insulating housing **22** and separated from the PC board **20**. In an embodiment, each coil drive field core in the PC board located in the PC Board **20** and **30** is connected to the inner insulating housing **22** and **32** with rivets.

The electromagnetic driver has a moving part comprising a lancet assembly with a lancet **24** and a magnetically permeable flag **26** attached at the proximal or drive end and a stationary part comprising a stationary housing assembly with electric field coils arranged so that they produce a balanced field at the flag to reduce or eliminate any net lateral force on the flag. The electric field coils are generally one or more metal coils, which generate a magnetic field when electric current passes through the coil. The iron flag is a flat or enlarged piece of magnetic material, which increases the surface area of the lancet assembly to enhance the magnetic forces generated between the proximal end of the lancet and a magnetic field produced by the field coils. The combined mass of the lancet and the iron flag can be minimized to facilitate rapid acceleration for introduction into the skin of a patient, to reduce the impact when the lancet stops in the skin, and to facilitate prompt velocity profile changes throughout the sampling cycle.

The stationary housing assembly consists of a PC board **20**, a lower inner insulating housing **22**, an upper inner insulating housing **32**, an upper PC board **30**, and rivets **18** assembled into a single unit. The lower and upper inner insulating housing **22** and **32** are relieved to form a slot so that lancet assembly can be slid into the driver assembly from the side perpendicular to the direction of the lancet's advancement and retraction. This allows the disposal of the lancet assembly and reuse of the stationary housing assembly with another lancet assembly while avoiding accidental lancet launches during replacement.

The electric field coils in the upper and lower stationary housing **20** and **30** are fabricated in a multi-layer printed circuit (PC) board. They may also be conventionally wound wire coils. A Teflon® material, or other low friction insulating material is used to construct the lower and upper inner insulating housing **22** and **32**. Each insulating housing is mounted on the PC board to provide electrical insulation and physical protection, as well as to provide a low-friction guide for the lancet. The lower and upper inner insulating housing **22** and **32** provide a reference surface with a small gap so that the lancet assembly **24** and **26** can align with the drive field coils in the PC board for good magnetic coupling.

Rivets **18** connect the lower inner insulating housing **22** to the lower stationary housing **20** and are made of magnetically permeable material such as ferrite or steel, which serves to concentrate the magnetic field. This mirrors the construction of the upper inner insulating housing **32** and upper stationary housing **30**. These rivets form the poles of the electric field coils. The PC board is fabricated with multiple layers of coils or with multiple boards. Each layer supports spiral traces around a central hole. Alternate layers spiral from the center outwards or from the edges inward. In this way each layer connects via simple feed-through holes, and the current always travels in the same direction, summing the ampere-turns.

The PC boards within the lower and upper stationary housings **20** and **30** are connected to the lower and upper inner insulating housings **22** and **32** with the rivets **18**. The lower and upper inner insulating housings **22** and **32** expose the rivet heads on opposite ends of the slot where the lancet assembly **24** and **26** travels. The magnetic field lines from each rivet create magnetic poles at the rivet heads. An iron bar on the opposite side of the PC board within each of the lower and upper stationary housing **20** and **30** completes the magnetic circuit by connecting the rivets. Any fastener made of magnetically permeable material such as iron or steel can be used In place of the rivets. A single component made of magnetically permeable material and formed in a horseshoe shape can be used in place of the rivet/screw and iron bar assembly. In operation, the magnetically permeable flag **26** attached to the lancet **24** is divided into slits and bars **34**. The slit patterns are staggered so that coils can drive the flag **26** in two, three or more phases.

Both lower and upper PC boards **20** and **30** contain drive coils so that there is a symmetrical magnetic field above and below the flag **26**. When the pair of PC boards is turned on, a magnetic field is established around the bars between the slits of the magnetically permeable iron on the flag **26**. The bars of the flag experience a force that tends to move the magnetically permeable material to a position minimizing the number and length of magnetic field lines and conducting the magnetic field lines between the magnetic poles.

When a bar of the flag **26** is centered between the rivets **18** of a magnetic pole, there is no net force on the flag, and any disturbing force is resisted by imbalance in the field. This embodiment of the device operates on a principle similar to that of a solenoid. Solenoids cannot push by repelling iron; they can only pull by attracting the iron into a minimum energy position. The slits **34** on one side of the flag **26** are offset with respect to the other side by approximately one half of the pitch of the poles. By alternately activating the coils on each side of the PC board, the lancet assembly can be moved with respect to the stationary housing assembly. The direction of travel is established by selectively energizing the coils adjacent the metal flag on the lancet assembly. Alternatively, a three phase, three-pole design or a shading coil that is offset by one-quarter pitch establishes the direction of travel. The lower and upper PC boards **20** and **30** shown in FIG. **4** contain electric field coils, which drive the lancet assembly and the circuitry for controlling the entire electromagnetic driver.

The embodiment described above generally uses the principles of a magnetic attraction drive, similar to commonly available circular stepper motors (Hurst Manufacturing BA Series motor, or "Electrical Engineering Handbook" Second edition p 1472-1474, 1997). These references are hereby incorporated by reference. Other embodiments can include a linear induction drive that uses a changing magnetic field to induce electric currents in the lancet assembly. These induced currents produce a secondary magnetic field that repels the primary field and applies a net force on the lancet assembly. The linear induction drive uses an electrical drive control that sweeps a magnetic field from pole to pole, propelling the lancet before it. Varying the rate of the sweep and the magnitude of the field by altering the driving voltage and frequency controls the force applied to the lancet assembly and its velocity.

The arrangement of the coils and rivets to concentrate the magnetic flux also applies to the induction design creating a growing magnetic field as the electric current in the field switches on. This growing magnetic field creates an opposing electric current in the conductive flag. In a linear induction motor the flag is electrically conductive, and its magnetic properties are unimportant. Copper or aluminum are materials that can be used for the conductive flags. Copper is generally used because of its good electrical conductivity. The opposing electrical field produces an opposing magnetic field that repels the field of the coils. By phasing the power of the coils, a moving field can be generated which pushes the flag along just below the synchronous speed of the coils. By controlling the rate of sweep, and by generating multiple sweeps, the flag can be moved at a desired speed.

FIG. **5** shows another embodiment of a solenoid type electromagnetic driver that is capable of driving an iron core or slug mounted to the lancet assembly using a direct current (DC) power supply. The electromagnetic driver includes a driver coil pack that is divided into three separate coils along the path of the lancet, two end coils and a middle coil. Direct current is alternated to the coils to advance and retract the lancet. Although the driver coil pack is shown with three coils, any suitable number of coils may be used, for example, 4, 5, 6, 7 or more coils may be used.

The stationary iron housing **40** contains the driver coil pack with a first coil **52** is flanked by iron spacers **50** which concentrate the magnetic flux at the inner diameter creating magnetic poles. The inner insulating housing **48** isolates the lancet **42** and iron core **46** from the coils and provides a smooth, low friction guide surface. The lancet guide **44** further centers the lancet **42** and iron core **46**. The lancet **42** is protracted and retracted by alternating the current between the first coil **52**, the middle coil, and the third coil to attract the iron core **46**. Reversing the coil sequence and attracting the core and lancet back into the housing retracts the lancet. The lancet guide **44** also serves as a stop for the iron core **46** mounted to the lancet **42**.

As discussed above, tissue penetration devices which employ spring or cam driving methods have a symmetrical or nearly symmetrical actuation displacement and velocity profiles on the advancement and retraction of the lancet as shown in FIGS. **6** and **7**. In most of the available lancet devices, once the launch is initiated, the stored energy determines the velocity profile until the energy is dissipated. Controlling impact, retraction velocity, and dwell time of the lancet within the tissue can be useful in order to achieve a high success rate while accommodating variations in skin properties and mini-

mize pain. Advantages can be achieved by taking into account that tissue dwell time is related to the amount of skin deformation as the lancet tries to puncture the surface of the skin and variance in skin deformation from patient to patient based on skin hydration.

The ability to control velocity and depth of penetration can be achieved by use of a controllable force driver where feedback is an integral part of driver control. Such drivers can control either metal or polymeric lancets or any other type of tissue penetration element. The dynamic control of such a driver is illustrated in FIG. **8** which illustrates an embodiment of a controlled displacement profile and FIG. **9** which illustrates an embodiment of a the controlled velocity profile. These are compared to FIGS. **6** and **7**, which illustrate embodiments of displacement and velocity profiles, respectively, of a harmonic spring/mass powered driver.

Reduced pain can be achieved by using impact velocities of greater than 2 m/s entry of a tissue penetrating element, such as a lancet, into tissue.

Retraction of the lancet at a low velocity following the sectioning of the venuole/capillary mesh allows the blood to flood the wound tract and flow freely to the surface, thus using the lancet to keep the channel open during retraction as shown in FIGS. **10** and **11**. Low-velocity retraction of the lancet near the wound flap prevents the wound flap from sealing off the channel. Thus, the ability to slow the lancet retraction directly contributes to increasing the success rate of obtaining blood. Increasing the sampling success rate to near 100% can be important to the combination of sampling and acquisition into an integrated sampling module such as an integrated glucose-sampling module, which incorporates a glucose test strip.

Referring again to FIG. **5**, the lancet and lancet driver are configured so that feedback control is based on lancet displacement, velocity, or acceleration. The feedback control information relating to the actual lancet path is returned to a processor such as that illustrated in FIG. **12** that regulates the energy to the driver, thereby precisely controlling the lancet throughout its advancement and retraction. The driver may be driven by electric current, which includes direct current and alternating current.

In FIG. **5**, the electromagnetic driver shown is capable of driving an iron core or slug mounted to the lancet assembly using a direct current (DC) power supply and is also capable of determining the position of the iron core by measuring magnetic coupling between the core and the coils. The coils can be used in pairs to draw the iron core into the driver coil pack. As one of the coils is switched on, the corresponding induced current in the adjacent coil can be monitored. The strength of this induced current is related to the degree of magnetic coupling provided by the iron core, and can be used to infer the position of the core and hence, the relative position of the lancet.

After a period of time, the drive voltage can be turned off, allowing the coils to relax, and then the cycle is repeated. The degree of magnetic coupling between the coils is converted electronically to a proportional DC voltage that is supplied to an analog-to-digital converter. The digitized position signal is then processed and compared to a desired "nominal" position by a central processing unit (CPU). The CPU to set the level and/or length of the next power pulse to the solenoid coils uses error between the actual and nominal positions.

In another embodiment, the driver coil pack has three coils consisting of a central driving coil flanked by balanced detection coils built into the driver assembly so that they surround an actuation or magnetically active region with the region centered on the middle coil at mid-stroke. When a current pulse is applied to the central coil, voltages are induced in the adjacent sense coils. If the sense coils are connected together so that their induced voltages oppose each other, the resulting signal will be positive for deflection from mid-stroke in one direction, negative in the other direction, and zero at mid-stroke. This measuring technique is commonly used in Linear Variable Differential Transformers (LVDT). Lancet position is determined by measuring the electrical balance between the two sensing coils.

In another embodiment, a feedback loop can use a commercially available LED/photo transducer module such as the OPB703 manufactured by Optek Technology, Inc., 1215 W. Crosby Road, Carrollton, Tex., 75006 to determine the distance from the fixed module on the stationary housing to a reflective surface or target mounted on the lancet assembly. The LED acts as a light emitter to send light beams to the reflective surface, which in turn reflects the light back to the photo transducer, which acts as a light sensor. Distances over the range of 4 mm or so are determined by measuring the intensity of the reflected light by the photo transducer. In another embodiment, a feedback loop can use a magnetically permeable region on the lancet shaft itself as the core of a Linear Variable Differential Transformer (LVDT).

A permeable region created by selectively annealing a portion of the lancet shaft, or by including a component in the lancet assembly, such as ferrite, with sufficient magnetic permeability to allow coupling between adjacent sensing coils. Coil size, number of windings, drive current, signal amplification, and air gap to the permeable region are specified in the design process. In another embodiment, the feedback control supplies a piezoelectric driver, superimposing a high frequency oscillation on the basic displacement profile. The piezoelectric driver provides improved cutting efficiency and reduces pain by allowing the lancet to "saw" its way into the tissue or to destroy cells with cavitation energy generated by the high frequency of vibration of the advancing edge of the lancet. The drive power to the piezoelectric driver is monitored for an impedance shift as the device interacts with the target tissue. The resulting force measurement, coupled with the known mass of the lancet is used to determine lancet acceleration, velocity, and position.

FIG. **12** illustrates the operation of a feedback loop using a processor. The processor **60** stores profiles **62** in non-volatile memory. A user inputs information **64** about the desired circumstances or parameters for a lancing event. The processor **60** selects a driver profile **62** from a set of alternative driver profiles that have been preprogrammed in the processor **60** based on typical or desired tissue penetration device performance determined through testing at the factory or as programmed in by the operator. The processor **60** may customize by either scaling or modifying the profile based on additional user input information **64**. Once the processor has chosen and customized the profile, the processor **60** is ready to modulate the power from the power supply **66** to the lancet driver **68** through an amplifier **70**. The processor **60** measures the location of the lancet **72** using a position sensing mechanism **74** through an analog to digital converter **76**. Examples of position sensing mechanisms have been described in the embodiments above. The processor **60** calculates the movement of the lancet by comparing the actual profile of the lancet to the predetermined profile. The processor **60** modulates the power to the lancet driver **68** through a signal generator **78**, which controls the amplifier **70** so that the actual profile of the lancet does not exceed the predetermined profile by more than a preset error limit. The error limit is the accuracy in the control of the lancet.

After the lancing event, the processor **60** can allow the user to rank the results of the lancing event. The processor **60**

stores these results and constructs a database **80** for the individual user. Using the database **80**, the processor **60** calculates the profile traits such as degree of painlessness, success rate, and blood volume for various profiles **62** depending on user input information **64** to optimize the profile to the individual user for subsequent lancing cycles. These profile traits depend on the characteristic phases of lancet advancement and retraction. The processor **60** uses these calculations to optimize profiles **62** for each user. In addition to user input information **64**, an internal clock allows storage in the database **80** of information such as the time of day to generate a time stamp for the lancing event and the time between lancing events to anticipate the user's diurnal needs. The database stores information and statistics for each user and each profile that particular user uses.

In addition to varying the profiles, the processor **60** can be used to calculate the appropriate lancet diameter and geometry necessary to realize the blood volume required by the user. For example, if the user requires a 1-5 micro liter volume of blood, the processor selects a 200 micron diameter lancet to achieve these results. For each class of lancet, both diameter and lancet tip geometry, is stored in the processor to correspond with upper and lower limits of attainable blood volume based on the predetermined displacement and velocity profiles.

The lancing device is capable of prompting the user for information at the beginning and the end of the lancing event to more adequately suit the user. The goal is to either change to a different profile or modify an existing profile. Once the profile is set, the force driving the lancet is varied during advancement and retraction to follow the profile. The method of lancing using the lancing device comprises selecting a profile, lancing according to the selected profile, determining lancing profile traits for each characteristic phase of the lancing cycle, and optimizing profile traits for subsequent lancing events.

FIG. **13** shows an embodiment of the characteristic phases of lancet advancement and retraction on a graph of force versus time illustrating the force exerted by the lancet driver on the lancet to achieve the desired displacement and velocity profile. The characteristic phases are the lancet introduction phase A-C where the lancet is longitudinally advanced into the skin, the lancet rest phase D where the lancet terminates its longitudinal movement reaching its maximum depth and becoming relatively stationary, and the lancet retraction phase E-G where the lancet is longitudinally retracted out of the skin. The duration of the lancet retraction phase E-G is longer than the duration of the lancet introduction phase A-C, which in turn is longer than the duration of the lancet rest phase D.

The introduction phase further comprises a lancet launch phase prior to A when the lancet is longitudinally moving through air toward the skin, a tissue contact phase at the beginning of A when the distal end of the lancet makes initial contact with the skin, a tissue deformation phase A when the skin bends depending on its elastic properties which are related to hydration and thickness, a tissue lancing phase which comprises when the lancet hits the inflection point on the skin and begins to cut the skin B and the lancet continues cutting the skin C. The lancet rest phase D is the limit of the penetration of the lancet into the skin. Pain is reduced by minimizing the duration of the lancet introduction phase A-C so that there is a fast incision to a certain penetration depth regardless of the duration of the deformation phase A and inflection point cutting B which will vary from user to user. Success rate is increased by measuring the exact depth of penetration from inflection point B to the limit of penetration in the lancet rest phase D. This measurement allows the lancet to always, or at least reliably, hit the capillary beds which are a known distance underneath the surface of the skin.

The lancet retraction phase further comprises a primary retraction phase E when the skin pushes the lancet out of the wound tract, a secondary retraction phase F when the lancet starts to become dislodged and pulls in the opposite direction of the skin, and lancet exit phase G when the lancet becomes free of the skin. Primary retraction is the result of exerting a decreasing force to pull the lancet out of the skin as the lancet pulls away from the finger. Secondary retraction is the result of exerting a force in the opposite direction to dislodge the lancet. Control is necessary to keep the wound tract open as blood flows up the wound tract. Blood volume is increased by using a uniform velocity to retract the lancet during the lancet retraction phase E-G regardless of the force required for the primary retraction phase E or secondary retraction phase F, either of which may vary from user to user depending on the properties of the user's skin.

FIG. **14** shows a standard industry lancet for glucose testing which has a three-facet geometry. Taking a rod of diameter **114** and grinding 8 degrees to the plane of the primary axis to create the primary facet **110** produces the lancet **116**. The secondary facets **112** are then created by rotating the shaft of the needle 15 degrees, and then rolling over 12 degrees to the plane of the primary facet. Other possible geometry's require altering the lancet's production parameters such as shaft diameter, angles, and translation distance.

FIG. **15** illustrates facet and tip geometry **120** and **122**, diameter **124**, and depth **126** which are significant factors in reducing pain, blood volume and success rate. It is known that additional cutting by the lancet is achieved by increasing the shear percentage or ratio of the primary to secondary facets, which when combined with reducing the lancet's diameter reduces skin tear and penetration force and gives the perception of less pain. Overall success rate of blood yield, however, also depends on a variety of factors, including the existence of facets, facet geometry, and skin anatomy.

FIG. **16** shows another embodiment of displacement versus time profile of a lancet for a controlled lancet retraction. FIG. **17** shows the velocity vs. time profile of the lancet for the controlled retraction of FIG. **16**. The lancet driver controls lancet displacement and velocity at several steps in the lancing cycle, including when the lancet cuts the blood vessels to allow blood to pool **130**, and as the lancet retracts, regulating the retraction rate to allow the blood to flood the wound tract while keeping the wound flap from sealing the channel **132** to permit blood to exit the wound.

In addition to slow retraction of a tissue-penetrating element in order to hold the wound open to allow blood to escape to the skin surface, other methods are contemplated. FIG. **18** shows the use of an embodiment of the invention, which includes a retractable coil on the lancet tip. A coiled helix or tube **140** is attached externally to lancet **116** with the freedom to slide such that when the lancet penetrates the skin **150**, the helix or tube **140** follows the trajectory of the lancet **116**. The helix begins the lancing cycle coiled around the facets and shaft of the lancet **144**. As the lancet penetrates the skin, the helix braces the wound tract around the lancet **146**. As the lancet retracts, the helix remains to brace open the wound tract, keeping the wound tract from collapsing and keeping the surface skin flap from closing **148**. This allows blood **152** to pool and flow up the channel to the surface of the skin. The helix is then retracted as the lancet pulls the helix to the point where the helix is decompressed to the point where the diameter of the helix becomes less than the diameter of the wound tract and becomes dislodged from the skin.

The tube or helix **140** is made of wire or metal of the type commonly used in angioplasty stents such as stainless steel, nickel titanium alloy or the like. Alternatively the tube or helix **140** or a ring can be made of a biodegradable material, which braces the wound tract by becoming lodged in the skin. Biodegradation is completed within seconds or minutes of insertion, allowing adequate time for blood to pool and flow up the wound tract. Biodegradation is activated by heat, moisture, or pH from the skin.

Alternatively, the wound could be held open by coating the lancet with a powder or other granular substance. The powder coats the wound tract and keeps it open when the lancet is withdrawn. The powder or other granular substance can be a coarse bed of microspheres or capsules which hold the channel open while allowing blood to flow through the porous interstices.

In another embodiment the wound can be held open using a two-part needle, the outer part in the shape of a "U" and the inner part filling the "U." After creating the wound the inner needle is withdrawn leaving an open channel, rather like the plugs that are commonly used for withdrawing sap from maple trees.

FIG. **19** shows a further embodiment of a method and device for facilitating blood flow utilizing an elastomer to coat the wound. This method uses an elastomer **154**, such as silicon rubber, to coat or brace the wound tract **156** by covering and stretching the surface of the finger **158**. The elastomer **154** is applied to the finger **158** prior to lancing. After a short delay, the lancet (not shown) then penetrates the elastomer **154** and the skin on the surface of the finger **158** as is seen in **160**. Blood is allowed to pool and rise to the surface while the elastomer **154** braces the wound tract **156** as is seen in **162** and **164**. Other known mechanisms for increasing the success rate of blood yield after lancing can include creating a vacuum, suctioning the wound, applying an adhesive strip, vibration while cutting, or initiating a second lance if the first is unsuccessful.

FIG. **20** illustrates an embodiment of a tissue penetration device, more specifically, a lancing device **180** that includes a controllable driver **179** coupled to a tissue penetration element. The lancing device **180** has a proximal end **181** and a distal end **182**. At the distal end **182** is the tissue penetration element in the form of a lancet **183**, which is coupled to an elongate coupler shaft **184** by a drive coupler **185**. The elongate coupler shaft **184** has a proximal end **186** and a distal end **187**. A driver coil pack **188** is disposed about the elongate coupler shaft **184** proximal of the lancet **183**. A position sensor **191** is disposed about a proximal portion **192** of the elongate coupler shaft **184** and an electrical conductor **194** electrically couples a processor **193** to the position sensor **191**. The elongate coupler shaft **184** driven by the driver coil pack **188** controlled by the position sensor **191** and processor **193** form the controllable driver, specifically, a controllable electromagnetic driver.

Referring to FIG. **21**, the lancing device **180** can be seen in more detail, in partial longitudinal section. The lancet **183** has a proximal end **195** and a distal end **196** with a sharpened point at the distal end **196** of the lancet **183** and a drive head **198** disposed at the proximal end **195** of the lancet **183**. A lancet shaft **201** is disposed between the drive head **198** and the sharpened point **197**. The lancet shaft **201** may be comprised of stainless steel, or any other suitable material or alloy and have a transverse dimension of about 0.1 to about 0.4 mm. The lancet shaft may have a length of about 3 mm to about 50 mm, specifically, about 15 mm to about 20 mm. The drive head **198** of the lancet **183** is an enlarged portion having a transverse dimension greater than a transverse dimension of the lancet shaft **201** distal of the drive head **198**. This configuration allows the drive head **198** to be mechanically captured by the drive coupler **185**. The drive head **198** may have a transverse dimension of about 0.5 to about 2 mm.

A magnetic member **202** is secured to the elongate coupler shaft **184** proximal of the drive coupler **185** on a distal portion **203** of the elongate coupler shaft **184**. The magnetic member **202** is a substantially cylindrical piece of magnetic material having an axial lumen **204** extending the length of the magnetic member **202**. The magnetic member **202** has an outer transverse dimension that allows the magnetic member **202** to slide easily within an axial lumen **205** of a low friction, possibly lubricious, polymer guide tube **205'** disposed within the driver coil pack **188**. The magnetic member **202** may have an outer transverse dimension of about 1.0 to about 5.0 mm, specifically, about 2.3 to about 2.5 mm. The magnetic member **202** may have a length of about 3.0 to about 5.0 mm, specifically, about 4.7 to about 4.9 mm. The magnetic member **202** can be made from a variety of magnetic materials including ferrous metals such as ferrous steel, iron, ferrite, or the like. The magnetic member **202** may be secured to the distal portion **203** of the elongate coupler shaft **184** by a variety of methods including adhesive or epoxy bonding, welding, crimping or any other suitable method.

Proximal of the magnetic member **202**, an optical encoder flag **206** is secured to the elongate coupler shaft **184**. The optical encoder flag **206** is configured to move within a slot **207** in the position sensor **191**. The slot **207** of the position sensor **191** is formed between a first body portion **208** and a second body portion **209** of the position sensor **191**. The slot **207** may have separation width of about 1.5 to about 2.0 mm. The optical encoder flag **206** can have a length of about 14 to about 18 mm, a width of about 3 to about 5 mm and a thickness of about 0.04 to about 0.06 mm.

The optical encoder flag **206** interacts with various optical beams generated by LEDs disposed on or in the position sensor body portions **208** and **209** in a predetermined manner. The interaction of the optical beams generated by the LEDs of the position sensor **191** generates a signal that indicates the longitudinal position of the optical flag **206** relative to the position sensor **191** with a substantially high degree of resolution. The resolution of the position sensor **191** may be about 200 to about 400 cycles per inch, specifically, about 350 to about 370 cycles per inch. The position sensor **191** may have a speed response time (position/time resolution) of 0 to about 120,000 Hz, where one dark and light stripe of the flag constitutes one Hertz, or cycle per second. The position of the optical encoder flag **206** relative to the magnetic member **202**, driver coil pack **188** and position sensor **191** is such that the optical encoder **191** can provide precise positional information about the lancet **183** over the entire length of the lancet's power stroke.

An optical encoder that is suitable for the position sensor **191** is a linear optical incremental encoder, model HEDS 9200, manufactured by Agilent Technologies. The model HEDS 9200 may have a length of about 20 to about 30 mm, a width of about 8 to about 12 mm, and a height of about 9 to about 11 mm. Although the position sensor **191** illustrated is a linear optical incremental encoder, other suitable position sensor embodiments could be used, provided they posses the requisite positional resolution and time response. The HEDS 9200 is a two channel device where the channels are 90 degrees out of phase with each other. This results in a resolution of four times the basic cycle of the flag. These quadrature outputs make it possible for the processor to determine the direction of lancet travel. Other suitable position sensors

include capacitive encoders, analog reflective sensors, such as the reflective position sensor discussed above, and the like.

A coupler shaft guide **211** is disposed towards the proximal end **181** of the lancing device **180**. The guide **211** has a guide lumen **212** disposed in the guide **211** to slidingly accept the proximal portion **192** of the elongate coupler shaft **184**. The guide **211** keeps the elongate coupler shaft **184** centered horizontally and vertically in the slot **202** of the optical encoder **191**.

The driver coil pack **188**, position sensor **191** and coupler shaft guide **211** are all secured to a base **213**. The base **213** is longitudinally coextensive with the driver coil pack **188**, position sensor **191** and coupler shaft guide **211**. The base **213** can take the form of a rectangular piece of metal or polymer, or may be a more elaborate housing with recesses, which are configured to accept the various components of the lancing device **180**.

As discussed above, the magnetic member **202** is configured to slide within an axial lumen **205** of the driver coil pack **188**. The driver coil pack **188** includes a most distal first coil **214**, a second coil **215**, which is axially disposed between the first coil **214** and a third coil **216**, and a proximal-most fourth coil **217**. Each of the first coil **214**, second coil **215**, third coil **216** and fourth coil **217** has an axial lumen. The axial lumens of the first through fourth coils are configured to be coaxial with the axial lumens of the other coils and together form the axial lumen **205** of the driver coil pack **188** as a whole. Axially adjacent each of the coils **214-217** is a magnetic disk or washer **218** that augments completion of the magnetic circuit of the coils **214-217** during a lancing cycle of the device **180**. The magnetic washers **218** of the embodiment of FIG. **21** are made of ferrous steel but could be made of any other suitable magnetic material, such as iron or ferrite. The outer shell **189** of the driver coil pack **188** is also made of iron or steel to complete the magnetic path around the coils and between the washers **218**. The magnetic washers **218** have an outer diameter commensurate with an outer diameter of the driver coil pack **188** of about 4.0 to about 8.0 mm. The magnetic washers **218** have an axial thickness of about 0.05, to about 0.4 mm, specifically, about 0.15 to about 0.25 mm.

Wrapping or winding an elongate electrical conductor **221** about an axial lumen until a sufficient number of windings have been achieved forms the coils **214-217**. The elongate electrical conductor **221** is generally an insulated solid copper wire with a small outer transverse dimension of about 0.06 mm to about 0.88 mm, specifically, about 0.3 mm to about 0.5 mm. In one embodiment, **32** gauge copper wire is used for the coils **214-217**. The number of windings for each of the coils **214-217** of the driver pack **188** may vary with the size of the coil, but for some embodiments each coil **214-217** may have about 30 to about 80 turns, specifically, about 50 to about 60 turns. Each coil **214-217** can have an axial length of about 1.0 to about 3.0 mm, specifically, about 1.8 to about 2.0 mm. Each coil **214-217** can have an outer transverse dimension or diameter of about 4.0, to about 2.0 mm, specifically, about 9.0 to about 12.0 mm. The axial lumen **205** can have a transverse dimension of about 1.0 to about 3.0 mm.

It may be advantageous in some driver coil **188** embodiments to replace one or more of the coils with permanent magnets, which produce a magnetic field similar to that of the coils when the coils are activated. In particular, it may be desirable in some embodiments to replace the second coil **215**, the third coil **216** or both with permanent magnets. In addition, it may be advantageous to position a permanent magnet at or near the proximal end of the coil driver pack in order to provide fixed magnet zeroing function for the magnetic member (Adams magnetic Products 23A0002 flexible magnet material (800) 747-7543).

FIGS. **20** and **21** show a permanent bar magnet **219** disposed on the proximal end of the driver coil pack **188**. As shown in FIG. **21**, the bar magnet **219** is arranged so as to have one end disposed adjacent the travel path of the magnetic member **202** and has a polarity configured so as to attract the magnetic member **202** in a centered position with respect to the bar magnet **219**. Note that the polymer guide tube **205'** can be configured to extend proximally to insulate the inward radial surface of the bar magnet **219** from an outer surface of the magnetic member **202**. This arrangement allows the magnetic member **219** and thus the elongate coupler shaft **184** to be attracted to and held in a zero point or rest position without the consumption of electrical energy from the power supply **225**.

Having a fixed zero or start point for the elongate coupler shaft **184** and lancet **183** can be critical to properly controlling the depth of penetration of the lancet **183** as well as other lancing parameters. This can be because some methods of depth penetration control for a controllable driver measure the acceleration and displacement of the elongate coupler shaft **184** and lancet **183** from a known start position. If the distance of the lancet tip **196** from the target tissue is known, acceleration and displacement of the lancet is known and the start position of the lancet is know, the time and position of tissue contact and depth of penetration can be determined by the processor **193**.

Any number of configurations for a magnetic bar **219** can be used for the purposes discussed above. In particular, a second permanent bar magnet (not shown) could be added to the proximal end of the driver coil pack **188** with the magnetic fields of the two bar magnets configured to complement each other. In addition, a disc magnet **219'** could be used as illustrated in FIG. **22**. Disc magnet **219'** is shown disposed at the proximal end of the driver coiled pack **188** with a polymer non-magnetic disc **219"** disposed between the proximal-most coil **217** and disc magnet **219'** and positions disc magnet **219'** away from the proximal end of the proximal-most coil **217**. The polymer non-magnetic disc spacer **219"** is used so that the magnetic member **202** can be centered in a zero or start position slightly proximal of the proximal-most coil **217** of the driver coil pack **188**. This allows the magnetic member to be attracted by the proximal-most coil **217** at the initiation of the lancing cycle instead of being passive in the forward drive portion of the lancing cycle.

An inner lumen of the polymer non-magnetic disc **219"** can be configured to allow the magnetic member **202** to pass axially there through while an inner lumen of the disc magnet **219'** can be configured to allow the elongate coupler shaft **184** to pass through but not large enough for the magnetic member **202** to pass through. This results in the magnetic member **202** being attracted to the disc magnet **219'** and coming to rest with the proximal surface of the magnetic member **202** against a distal surface of the disc magnet **219'**. This arrangement provides for a positive and repeatable stop for the magnetic member, and hence the lancet. A similar configuration could also be used for the bar magnet **219** discussed above.

Typically, when the electrical current in the coils **214-217** of the driver coil pack **188** is off, a magnetic member **202** made of soft iron is attracted to the bar magnet **219** or disc magnet **219'**. The magnetic field of the driver coil pack **188** and the bar magnet **219** or disc magnet **219'**, or any other suitable magnet, can be configured such that when the electrical current in the coils **214-217** is turned on, the leakage magnetic field from the coils **214-217** has the same polarity as the bar magnet **219** or disc magnet **219'**. This results in a

magnetic force that repels the magnetic member **202** from the bar magnet **219** or disc magnet **219'** and attracts the magnetic member **202** to the activated coils **214-217**. For this configuration, the bar magnet **219** or disc magnet thus act to facilitate acceleration of the magnetic member **202** as opposed to working against the acceleration.

Electrical conductors **222** couple the driver coil pack **188** with the processor **193** which can be configured or programmed to control the current flow in the coils **214-217** of the driver coil pack **188** based on position feedback from the position sensor **191**, which is coupled to the processor **193** by electrical conductors **194**. A power source **225** is electrically coupled to the processor **193** and provides electrical power to operate the processor **193** and power the coil driver pack **188**. The power source **225** may be one or more batteries that provide direct current power to the **193** processor.

FIG. **23** shows a transverse cross sectional view of drive coupler **185** in more detail. The drive head **198** of the lancet **183** is disposed within the drive coupler **185** with a first retaining rail **226** and second retaining rail **227** capturing the drive head **198** while allowing the drive head **198** to be inserted laterally into the drive coupler **185** and retracted laterally with minimal mechanical resistance. The drive coupler **185** may optionally be configured to include snap ridges **228** which allow the drive head **198** to be laterally inserted and retracted, but keep the drive head **198** from falling out of the drive coupler **185** unless a predetermined amount of externally applied lateral force is applied to the drive head **198** of the lancet **183** towards the lateral opening **231** of the drive coupler **185**. FIG. **27** shows an enlarged side view into the coupler opening **231** of the drive coupler **185** showing the snap ridges **228** disposed in the lateral opening **231** and the retaining rails **226** and **227**. FIG. **28** shows an enlarged front view of the drive coupler **185**. The drive coupler **185** can be made from an alloy such as stainless steel, titanium or aluminum, but may also be made from a suitable polymer such as ABS, PVC, polycarbonate plastic or the like. The drive coupler may be open on both sides allowing the drive head and lancet to pass through.

Referring to FIG. **24**, the magnetic member **202** is disposed about and secured to the elongate coupler shaft **184**. The magnetic member **202** is disposed within the axial lumen **232** of the fourth coil **217**. The driver coil pack **188** is secured to the base **213**. In FIG. **25** the position sensor **191** is secured to the base **213** with the first body portion **208** of the position sensor **191** disposed opposite the second body portion **209** of the position sensor **191** with the first and second body portions **208** and **209** of the position sensor **191** separated by the gap or slot **207**. The elongate coupler shaft **184** is slidably disposed within the gap **207** between the first and second body portions **208** and **209** of the position sensor **191**. The optical encoder flag **206** is secured to the elongate coupler shaft **184** and disposed between the first body portion **208** and second body portion **209** of the position sensor **191**. Referring to FIG. **26**, the proximal portion **192** of the elongate coupler shaft **184** is disposed within the guide lumen **212** of the coupler shaft guide **211**. The guide lumen **212** of the coupler shaft guide **211** may be lined with a low friction material such as Teflon® or the like to reduce friction of the elongate coupler shaft **184** during the power stroke of the lancing device **180**.

Referring to FIGS. **29**A-**29**C, a flow diagram is shown that describes the operations performed by the processor **193** in controlling the lancet **183** of the lancing device **180** discussed above during an operating cycle. FIGS. **30-36** illustrate the interaction of the lancet **183** and skin **233** of the patient's finger **234** during an operation cycle of the lancet device **183**. The processor **193** operates under control of programming steps that are stored in an associated memory. When the programming steps are executed, the processor **193** performs operations as described herein. Thus, the programming steps implement the functionality of the operations described with respect to the flow diagram of FIG. **29**. The processor **193** can receive the programming steps from a program product stored in recordable media, including a direct access program product storage device such as a hard drive or flash ROM, a removable program product storage device such as a floppy disk, or in any other manner known to those of skill in the art. The processor **193** can also download the programming steps through a network connection or serial connection.

In the first operation, represented by the flow diagram box numbered **245** in FIG. **29**A, the processor **193** initializes values that it stores in memory relating to control of the lancet, such as variables that it uses to keep track of the controllable driver **179** during movement. For example, the processor may set a clock value to zero and a lancet position value to zero or to some other initial value. The processor **193** may also cause power to be removed from the coil pack **188** for a period of time, such as for about 10 ms, to allow any residual flux to dissipate from the coils.

In the initialization operation, the processor **193** also causes the lancet to assume an initial stationary position. When in the initial stationary position, the lancet **183** is typically fully retracted such that the magnetic member **202** is positioned substantially adjacent the fourth coil **217** of the driver coil pack **188**, shown in FIG. **21** above. The processor **193** can move the lancet **183** to the initial stationary position by pulsing an electrical current to the fourth coil **217** to thereby attract the magnetic member **202** on the lancet **183** to the fourth coil **217**. Alternatively, the magnetic member can be positioned in the initial stationary position by virtue of a permanent magnet, such as bar magnet **219**, disc magnet **219'** or any other suitable magnet as discussed above with regard to the tissue penetration device illustrated in FIGS. **20** and **21**.

In the next operation, represented by the flow diagram box numbered **247**, the processor **193** energizes one or more of the coils in the coil pack **188**. This should cause the lancet **183** to begin to move (i.e., achieve a non-zero speed) toward the skin target **233**. The processor **193** then determines whether or not the lancet is indeed moving, as represented by the decision box numbered **249**. The processor **193** can determine whether the lancet **183** is moving by monitoring the position of the lancet **183** to determine whether the position changes over time. The processor **193** can monitor the position of the lancet **183** by keeping track of the position of the optical encoder flag **206** secured to the elongate coupler shaft **184** wherein the encoder **191** produces a signal coupled to the processor **193** that indicates the spatial position of the lancet **183**.

If the processor **193** determines (via timeout without motion events) that the lancet **183** is not moving (a "No" result from the decision box **249**), then the process proceeds to the operation represented by the flow diagram box numbered **253**, where the processor deems that an error condition is present. This means that some error in the system is causing the lancet **183** not to move. The error may be mechanical, electrical, or software related. For example, the lancet **183** may be stuck in the stationary position because something is impeding its movement.

If the processor **193** determines that the lancet **183** is indeed moving (a "Yes" result from the decision box numbered **249**), then the process proceeds to the operation represented by the flow diagram box numbered **257**. In this operation, the processor **193** causes the lancet **183** to continue to accelerate and launch toward the skin target **233**, as indicated

by the arrow **235** in FIG. **30**. The processor **193** can achieve acceleration of the lancet **183** by sending an electrical current to an appropriate coil **214-217** such that the coil **214-217** exerts an attractive magnetic launching force on the magnetic member **202** and causes the magnetic member **202** and the lancet **183** coupled thereto to move in a desired direction. For example, the processor **193** can cause an electrical current to be sent to the third coil **216** so that the third coil **216** attracts the magnetic member **202** and causes the magnetic member **202** to move from a position adjacent the fourth coil **217** toward the third coil **216**. The processor preferably determines which coil **214-217** should be used to attract the magnetic member **202** based on the position of the magnetic member **202** relative to the coils **214-217**. In this manner, the processor **193** provides a controlled force to the lancet that controls the movement of the lancet.

During this operation, the processor **193** periodically or continually monitors the position and/or velocity of the lancet **183**. In keeping track of the velocity and position of the lancet **183** as the lancet **183** moves towards the patient's skin **233** or other tissue, the processor **193** also monitors and adjusts the electrical current to the coils **214-217**. In some embodiments, the processor **193** applies current to an appropriate coil **214-217** such that the lancet **183** continues to move according to a desired direction and acceleration. In the instant case, the processor **193** applies current to the appropriate coil **214-217** that will cause the lancet **183** to continue to move in the direction of the patient's skin **233** or other tissue to be penetrated.

The processor **193** may successively transition the current between coils **214-217** so that as the magnetic member **202** moves past a particular coil **214-217**, the processor **193** then shuts off current to that coil **214-217** and then applies current to another coil **214-217** that will attract the magnetic member **202** and cause the magnetic member **202** to continue to move in the desired direction. In transitioning current between the coils **214-217**, the processor **193** can take into account various factors, including the speed of the lancet **183**, the position of the lancet **183** relative to the coils **214-217**, the number of coils **214-217**, and the level of current to be applied to the coils **214-217** to achieve a desired speed or acceleration.

In the next operation, the processor **193** determines whether the cutting or distal end tip **196** of the lancet **183** has contacted the patient's skin **233**, as shown in FIG. **31** and as represented by the decision box numbered **265** in FIG. **29**B. The processor **193** may determine whether the lancet **183** has made contact with the target tissue **233** by a variety of methods, including some that rely on parameters which are measured prior to initiation of a lancing cycle and other methods that are adaptable to use during a lancing cycle without any predetermined parameters.

In one embodiment, the processor **193** determines that the skin has been contacted when the end tip **196** of the lancet **183** has moved a predetermined distance with respect to its initial position. If the distance from the tip **961** of the lancet **183** to the target tissue **233** is known prior to initiation of lancet **183** movement, the initial position of the lancet **183** is fixed and known, and the movement and position of the lancet **183** can be accurately measured during a lancing cycle, then the position and time of lancet contact can be determined.

This method requires an accurate measurement of the distance between the lancet tip **196** and the patient's skin **233** when the lancet **183** is in the zero time or initial position. This can be accomplished in a number of ways. One way is to control all of the mechanical parameters that influence the distance from the lancet tip **196** to the patient's tissue or a surface of the lancing device **180** that will contact the patient's skin **233**. This could include the start position of the magnetic member **202**, magnetic path tolerance, magnetic member **202** dimensions, driver coil pack **188** location within the lancing device **180** as a whole, length of the elongate coupling shaft **184**, placement of the magnetic member **202** on the elongate coupling shaft **184**, length of the lancet **183** etc.

If all these parameters, as well as others can be suitably controlled in manufacturing with a tolerance stack-up that is acceptable, then the distance from the lancet tip **196** to the target tissue **233** can be determined at the time of manufacture of the lancing device **180**. The distance could then be programmed into the memory of the processor **193**. If an adjustable feature is added to the lancing device **180**, such as an adjustable length elongate coupling shaft **184**, this can accommodate variations in all of the parameters noted above, except length of the lancet **183**. An electronic alternative to this mechanical approach would be to calibrate a stored memory contact point into the memory of the processor **193** during manufacture based on the mechanical parameters described above.

In another embodiment, moving the lancet tip **196** to the target tissue **233** very slowly and gently touching the skin **233** prior to actuation can accomplish the distance from the lancet tip **196** to the tissue **233**. The position sensor can accurately measure the distance from the initialization point to the point of contact, where the resistance to advancement of the lancet **183** stops the lancet movement. The lancet **183** is then retracted to the initialization point having measured the distance to the target tissue **233** without creating any discomfort to the user.

In another embodiment, the processor **193** may use software to determine whether the lancet **183** has made contact with the patient's skin **233** by measuring for a sudden reduction in velocity of the lancet **183** due to friction or resistance imposed on the lancet **183** by the patient's skin **233**. The optical encoder **191** measures displacement of the lancet **183**. The position output data provides input to the interrupt input of the processor **193**. The processor **193** also has a timer capable of measuring the time between interrupts. The distance between interrupts is known for the optical encoder **191**, so the velocity of the lancet **183** can be calculated by dividing the distance between interrupts by the time between the interrupts.

This method requires that velocity losses to the lancet **183** and elongate coupler **184** assembly due to friction are known to an acceptable level so that these velocity losses and resulting deceleration can be accounted for when establishing a deceleration threshold above which contact between lancet tip **196** and target tissue **233** will be presumed. This same concept can be implemented in many ways. For example, rather than monitoring the velocity of the lancet **183**, if the processor **193** is controlling the lancet driver in order to maintain a fixed velocity, the power to the driver **188** could be monitored. If an amount of power above a predetermined threshold is required in order to maintain a constant velocity, then contact between the tip of the lancet **196** and the skin **233** could be presumed.

In yet another embodiment, the processor **193** determines skin **233** contact by the lancet **183** by detection of an acoustic signal produced by the tip **196** of the lancet **183** as it strikes the patient's skin **233**. Detection of the acoustic signal can be measured by an acoustic detector **236** placed in contact with the patient's skin **233** adjacent a lancet penetration site **237**, as shown in FIG. **31**. Suitable acoustic detectors **236** include piezo electric transducers, microphones and the like. The acoustic detector **236** transmits an electrical signal generated

by the acoustic signal to the processor **193** via electrical conductors **238**. In another embodiment, contact of the lancet **183** with the patient's skin **233** can be determined by measurement of electrical continuity in a circuit that includes the lancet **183**, the patient's finger **234** and an electrical contact pad **240** that is disposed on the patient's skin **233** adjacent the contact site **237** of the lancet **183**, as shown in FIG. **31**. In this embodiment, as soon as the lancet **183** contacts the patient's skin **233**, the circuit **239** is completed and current flows through the circuit **239**. Completion of the circuit **239** can then be detected by the processor **193** to confirm skin **233** contact by the lancet **183**.

If the lancet **183** has not contacted the target skin **233**, then the process proceeds to a timeout operation, as represented by the decision box numbered **267** in FIG. **29**B. In the timeout operation, the processor **193** waits a predetermined time period. If the timeout period has not yet elapsed (a "No" outcome from the decision box **267**), then the processor continues to monitor whether the lancet has contacted the target skin **233**. The processor **193** preferably continues to monitor the position and speed of the lancet **183**, as well as the electrical current to the appropriate coil **214-217** to maintain the desired lancet **183** movement.

If the timeout period elapses without the lancet **183** contacting the skin (a "Yes" output from the decision box **267**), then it is deemed that the lancet **183** will not contact the skin and the process proceeds to a withdraw phase, where the lancet is withdrawn away from the skin **233**, as discussed more fully below. The lancet **183** may not have contacted the target skin **233** for a variety of reasons, such as if the patient removed the skin **233** from the lancing device or if something obstructed the lancet **183** prior to it contacting the skin.

The processor **193** may also proceed to the withdraw phase prior to skin contact for other reasons. For example, at some point after initiation of movement of the lancet **183**, the processor **193** may determine that the forward acceleration of the lancet **183** towards the patient's skin **233** should be stopped or that current to all coils **214-217** should be shut down. This can occur, for example, if it is determined that the lancet **183** has achieved sufficient forward velocity, but has not yet contacted the skin **233**. In one embodiment, the average penetration velocity of the lancet **183** from the point of contact with the skin to the point of maximum penetration may be about 2.0 to about 10.0 m/s, specifically, about 3.8 to about 4.2 m/s. In another embodiment, the average penetration velocity of the lancet may be from about 2 to about 8 meters per second, specifically, about 2 to about 4 m/s.

The processor **193** can also proceed to the withdraw phase if it is determined that the lancet **183** has fully extended to the end of the power stroke of the operation cycle of lancing procedure. In other words, the process may proceed to withdraw phase when an axial center **241** of the magnetic member **202** has moved distal of an axial center **242** of the first coil **214** as show in FIG. **21**. In this situation, any continued power to any of the coils **214-217** of the driver coil pack **188** serves to decelerate the magnetic member **202** and thus the lancet **183**. In this regard, the processor **193** considers the length of the lancet **183** (which can be stored in memory) the position of the lancet **183** relative to the magnetic member **202**, as well as the distance that the lancet **183** has traveled.

With reference again to the decision box **265** in FIG. **29**B, if the processor **193** determines that the lancet **183** has contacted the skin **233** (a "Yes" outcome from the decision box **265**), then the processor **193** can adjust the speed of the lancet **183** or the power delivered to the lancet **183** for skin penetration to overcome any frictional forces on the lancet **183** in order to maintain a desired penetration velocity of the lancet. The flow diagram box numbered **267** represents this.

As the velocity of the lancet **183** is maintained after contact with the skin **233**, the distal tip **196** of the lancet **183** will first begin to depress or tent the contacted skin **237** and the skin **233** adjacent the lancet **183** to form a tented portion **243** as shown in FIG. **32** and further shown in FIG. **33**. As the lancet **183** continues to move in a distal direction or be driven in a distal direction against the patient's skin **233**, the lancet **183** will eventually begin to penetrate the skin **233**, as shown in FIG. **34**. Once penetration of the skin **233** begins, the static force at the distal tip **196** of the lancet **183** from the skin **233** will become a dynamic cutting force, which is generally less than the static tip force. As a result in the reduction of force on the distal tip **196** of the lancet **183** upon initiation of cutting, the tented portion **243** of the skin **233** adjacent the distal tip **196** of the lancet **183** which had been depressed as shown in FIGS. **32** and **24** will spring back as shown in FIG. **34**.

In the next operation, represented by the decision box numbered **271** in FIG. **29**B, the processor **193** determines whether the distal end **196** of the lancet **183** has reached a brake depth. The brake depth is the skin penetration depth for which the processor **193** determines that deceleration of the lancet **183** is to be initiated in order to achieve a desired final penetration depth **244** of the lancet **183** as show in FIG. **35**. The brake depth may be pre-determined and programmed into the processor's memory, or the processor **193** may dynamically determine the brake depth during the actuation. The amount of penetration of the lancet **183** in the skin **233** of the patient may be measured during the operation cycle of the lancet device **180**. In addition, as discussed above, the penetration depth necessary for successfully obtaining a useable sample can depend on the amount of tenting of the skin **233** during the lancing cycle. The amount of tenting of the patient's skin **233** can in turn depend on the tissue characteristics of the patient such as elasticity, hydration etc. A method for determining these characteristics is discussed below with regard to skin **233** tenting measurements during the lancing cycle and illustrated in FIGS. **37-41**.

Penetration measurement can be carried out by a variety of methods that are not dependent on measurement of tenting of the patient's skin. In one embodiment, the penetration depth of the lancet **183** in the patient's skin **233** is measured by monitoring the amount of capacitance between the lancet **183** and the patient's skin **233**. In this embodiment, a circuit includes the lancet **183**, the patient's finger **234**, the processor **193** and electrical conductors connecting these elements. As the lancet **183** penetrates the patient's skin **233**, the greater the amount of penetration, the greater the surface contact area between the lancet **183** and the patient's skin **233**. As the contact area increases, so does the capacitance between the skin **233** and the lancet **183**. The increased capacitance can be easily measured by the processor **193** using methods known in the art and penetration depth can then be correlated to the amount of capacitance. The same method can be used by measuring the electrical resistance between the lancet **183** and the patient's skin.

If the brake depth has not yet been reached, then a "No" results from the decision box **271** and the process proceeds to the timeout operation represented by the flow diagram box numbered **273**. In the timeout operation, the processor **193** waits a predetermined time period. If the timeout period has not yet elapsed (a "No" outcome from the decision box **273**), then the processor continues to monitor whether the brake depth has been reached. If the timeout period elapses without the lancet **183** achieving the brake depth (a "Yes" output from the decision box **273**), then the processor **193** deems that the

lancet **183** will not reach the brake depth and the process proceeds to the withdraw phase, which is discussed more fully below. This may occur, for example, if the lancet **183** is stuck at a certain depth.

With reference again to the decision box numbered **271** in FIG. **29**B, if the lancet does reach the brake depth (a "Yes" result), then the process proceeds to the operation represented by the flow diagram box numbered **275**. In this operation, the processor **193** causes a braking force to be applied to the lancet to thereby reduce the speed of the lancet **183** to achieve a desired amount of final skin penetration depth **244**, as shown in FIG. **26**. Note that FIGS. **32** and **33** illustrate the lancet making contact with the patient's skin and deforming or depressing the skin prior to any substantial penetration of the skin. The speed of the lancet **183** is preferably reduced to a value below a desired threshold and is ultimately reduced to zero. The processor **193** can reduce the speed of the lancet **183** by causing a current to be sent to a **214-217** coil that will exert an attractive braking force on the magnetic member **202** in a proximal direction away from the patient's tissue or skin **233**, as indicated by the arrow **290** in FIG. **36**. Such a negative force reduces the forward or distally oriented speed of the lancet **183**. The processor **193** can determine which coil **214-217** to energize based upon the position of the magnetic member **202** with respect to the coils **214-217** of the driver coil pack **188**, as indicated by the position sensor **191**.

In the next operation, the process proceeds to the withdraw phase, as represented by the flow diagram box numbered **277**. The withdraw phase begins with the operation represented by the flow diagram box numbered **279** in FIG. **29**C. Here, the processor **193** allows the lancet **183** to settle at a position of maximum skin penetration **244**, as shown in FIG. **35**. In this regard, the processor **193** waits until any motion in the lancet **183** (due to vibration from impact and spring energy stored in the skin, etc.) has stopped by monitoring changes in position of the lancet **183**. The processor **193** preferably waits until several milliseconds (ms), such as on the order of about 8 ms, have passed with no changes in position of the lancet **183**. This is an indication that movement of the lancet **183** has ceased entirely. In some embodiments, the lancet may be allowed to settle for about 1 to about 2000 milliseconds, specifically, about 50 to about 200 milliseconds. For other embodiments, the settling time may be about 1 to about 200 milliseconds.

It is at this stage of the lancing cycle that a software method can be used to measure the amount of tenting of the patient's skin **233** and thus determine the skin **233** characteristics such as elasticity, hydration and others. Referring to FIGS. **37-41**, a lancet **183** is illustrated in various phases of a lancing cycle with target tissue **233**. FIG. **37** shows tip **196** of lancet **183** making initial contact with the skin **233** at the point of initial impact.

FIG. **38** illustrates an enlarged view of the lancet **183** making initial contact with the tissue **233** shown in FIG. **37**. In FIG. **39**, the lancet tip **196** has depressed or tented the skin **233** prior to penetration over a distance of X, as indicated by the arrow labeled X in FIG. **39**. In FIG. **40**, the lancet **183** has reached the full length of the cutting power stroke and is at maximum displacement. In this position, the lancet tip **196** has penetrated the tissue **233** a distance of Y, as indicated by the arrow labeled Y in FIG. **39**. As can be seen from comparing FIG. **38** with FIG. **40**, the lancet tip **196** was displaced a total distance of X plus Y from the time initial contact with the skin **233** was made to the time the lancet tip **196** reached its maximum extension as shown in FIG. **40**. However, the lancet tip **196** has only penetrated the skin **233** a distance Y because of the tenting phenomenon.

At the end of the power stroke of the lancet **183**, as discussed above with regard to FIG. **26** and box **279** of FIG. **29**C, the processor **193** allows the lancet to settle for about 8 msec. It is during this settling time that the skin **233** rebounds or relaxes back to approximately its original configuration prior to contact by the lancet **183** as shown in FIG. **41**. The lancet tip **196** is still buried in the skin to a depth of Y, as shown in FIG. **41**, however the elastic recoil of the tissue has displaced the lancet rearward or retrograde to the point of inelastic tenting that is indicated by the arrows Z in FIG. **41**. During the rearward displacement of the lancet **183** due to the elastic tenting of the tissue **233**, the processor reads and stores the position data generated by the position sensor **191** and thus measures the amount of elastic tenting, which is the difference between X and Z.

The tenting process and retrograde motion of the lancet **183** during the lancing cycle is illustrated graphically in FIG. **42** which shows both a velocity versus time graph and a position versus time graph of a lancet tip **196** during a lancing cycle that includes elastic and inelastic tenting. In FIG. **42**, from point **0** to point A, the lancet **183** is being accelerated from the initialization position or zero position. From point A to point B, the lancet is in ballistic or coasting mode, with no additional power being delivered. At point B, the lancet tip **196** contacts the tissue **233** and begins to tent the skin **233** until it reaches a displacement C. As the lancet tip **196** approaches maximum displacement, braking force is applied to the lancet **183** until the lancet comes to a stop at point D. The lancet **183** then recoils in a retrograde direction during the settling phase of the lancing cycle indicated between D and E. Note that the magnitude of inelastic tenting indicated in FIG. **42** is exaggerated for purposes of illustration.

The amount of inelastic tenting indicated by Z tends to be fairly consistent and small compared to the magnitude of the elastic tenting. Generally, the amount of inelastic tenting Z can be about 120 to about 140 microns. As the magnitude of the inelastic tenting has a fairly constant value and is small compared to the magnitude of the elastic tenting for most patients and skin types, the value for the total amount of tenting for the penetration stroke of the lancet **183** is effectively equal to the rearward displacement of the lancet during the settling phase as measured by the processor **193** plus a predetermined value for the inelastic recoil, such as 130 microns. Inelastic recoil for some embodiments can be about 100 to about 200 microns. The ability to measure the magnitude of skin **233** tenting for a patient is important to controlling the depth of penetration of the lancet tip **196** as the skin is generally known to vary in elasticity and other parameters due to age, time of day, level of hydration, gender and pathological state.

This value for total tenting for the lancing cycle can then be used to determine the various characteristics of the patient's skin **233**. Once a body of tenting data is obtained for a given patient, this data can be analyzed in order to predict the total lancet displacement, from the point of skin contact, necessary for a successful lancing procedure. This enables the tissue penetration device to achieve a high success rate and minimize pain for the user. A rolling average table can be used to collect and store the tenting data for a patient with a pointer to the last entry in the table. When a new entry is input, it can replace the entry at the pointer and the pointer advances to the next value. When an average is desired, all the values are added and the sum divided by the total number of entries by the processor **193**. Similar techniques involving exponential decay (multiply by 0.95, add 0.05 times current value, etc.) are also possible.

With regard to tenting of skin **233** generally, some typical values relating to penetration depth are now discussed. FIG. **43** shows a cross sectional view of the layers of the skin **233**. In order to reliably obtain a useable sample of blood from the skin **233**, it is desirable to have the lancet tip **196** reach the venuolar plexus of the skin. The stratum corneum is typically about 0.1 to about 0.6 mm thick and the distance from the top of the dermis to the venuole plexus can be from about 0.3 to about 1.4 mm. Elastic tenting can have a magnitude of up to about 2 mm or so, specifically, about 0.2 to about 2.0 mm, with an average magnitude of about 1 mm. This means that the amount of lancet displacement necessary to overcome the tenting can have a magnitude greater than the thickness of skin necessary to penetrate in order to reach the venuolar plexus. The total lancet displacement from point of initial skin contact may have an average value of about 1.7 to about 2.1 mm. In some embodiments, penetration depth and maximum penetration depth may be about 0.5 mm to about 5 mm, specifically, about 1 mm to about 3 mm. In some embodiments, a maximum penetration depth of about 0.5 to about 3 mm is useful.

Referring back to FIG. **29**C, in the next operation, represented by the flow diagram box numbered **280** in FIG. **29**C, the processor **193** causes a withdraw force to be exerted on the lancet **183** to retract the lancet **183** from the skin **233**, as shown by arrow **290** in FIG. **36** The processor **193** sends a current to an appropriate coil **214-217** so that the coil **214-217** exerts an attractive distally oriented force on the magnetic member **202**, which should cause the lancet **183** to move backward in the desired direction. In some embodiments, the lancet **183** is withdrawn with less force and a lower speed than the force and speed during the penetration portion of the operation cycle. Withdrawal speed of the lancet in some embodiments can be about 0.004 to about 0.5 m/s, specifically, about 0.006 to about 0.01 m/s. In other embodiments, useful withdrawal velocities can be about 0.001 to about 0.02 meters per second, specifically, about 0.001 to about 0.01 meters per second. For embodiments that use a relatively slow withdrawal velocity compared to the penetration velocity, the withdrawal velocity may up to about 0.02 meters per second. For such embodiments, a ratio of the average penetration velocity relative to the average withdrawal velocity can be about 100 to about 1000. In embodiments where a relatively slow withdrawal velocity is not important, a withdrawal velocity of about 2 to about 10 meters per second may be used.

In the next operation, the processor **193** determines whether the lancet **183** is moving in the desired backward direction as a result of the force applied, as represented by the decision box numbered **281**. If the processor **193** determines that the lancet **183** is not moving (a "No" result from the decision box **281**), then the processor **193** continues to cause a force to be exerted on the lancet **183**, as represented by the flow diagram box numbered **282**. The processor **193** may cause a stronger force to be exerted on the lancet **183** or may just continue to apply the same amount of force. The processor then again determines whether the lancet is moving, as represented by the decision box numbered **283**. If movement is still not detected (a "No" result from the decision box numbered **283**), the processor **193** determines that an error condition is present, as represented by the flow diagram box numbered **284**. In such a situation, the processor preferably de-energizes the coils to remove force from the lancet, as the lack of movement may be an indication that the lancet is stuck in the skin of the patient and, therefore, that it may be undesirable to continue to attempt pull the lancet out of the skin.

With reference again to the decision boxes numbered **281** and **283** in FIG. **29**C, if the processor **193** determines that the lancet is indeed moving in the desired backward direction away from the skin **233**, then the process proceeds to the operation represented by the flow diagram box numbered **285**. In this operation, the backward movement of the lancet **183** continues until the lancet distal end has been completely withdrawn from the patient's skin **233**. As discussed above, in some embodiments the lancet **183** is withdrawn with less force and a lower speed than the force and speed during the penetration portion of the operation cycle. The relatively slow withdrawal of the lancet **183** may allow the blood from the capillaries of the patient accessed by the lancet **183** to follow the lancet **183** during withdrawal and reach the skin surface to reliably produce a usable blood sample. The process then ends.

Controlling the lancet motion over the operating cycle of the lancet **183** as discussed above allows a wide variety of lancet velocity profiles to be generated by the lancing device **180**. In particular, any of the lancet velocity profiles discussed above with regard to other embodiments can be achieved with the processor **193**, position sensor **191** and driver coil pack **188** of the lancing device **180**.

Another example of an embodiment of a velocity profile for a lancet can be seen in FIGS. **44** and **45**, which illustrates a lancet profile with a fast entry velocity and a slow withdrawal velocity. FIG. **44** illustrates an embodiment of a lancing profile showing velocity of the lancet versus position. The lancing profile starts at zero time and position and shows acceleration of the lancet towards the tissue from the electromagnetic force generated from the electromagnetic driver. At point A, the power is shut off and the lancet **183** begins to coast until it reaches the skin **233** indicated by B at which point, the velocity begins to decrease. At point C, the lancet **183** has reached maximum displacement and settles momentarily, typically for a time of about 8 milliseconds.

A retrograde withdrawal force is then imposed on the lancet by the controllable driver, which is controlled by the processor to maintain a withdrawal velocity of no more than about 0.006 to about 0.01 meters/second. The same cycle is illustrated in the velocity versus time plot of FIG. **45** where the lancet is accelerated from the start point to point A. The lancet **183** coasts from A to B where the lancet tip **196** contacts tissue **233**. The lancet tip **196** then penetrates the tissue and slows with braking force eventually applied as the maximum penetration depth is approached. The lancet is stopped and settling between C and D. At D, the withdrawal phase begins and the lancet **183** is slowly withdrawn until it returns to the initialization point shown by E in FIG. **45**. Note that retrograde recoil from elastic and inelastic tenting was not shown in the lancing profiles of FIGS. **44** and **45** for purpose of illustration and clarity.

In another embodiment, the withdrawal phase may use a dual speed profile, with the slow 0.006 to 0.01 meter per second speed used until the lancet is withdrawn past the contact point with the tissue, then a faster speed of 0.01 to 1 meters per second may be used to shorten the complete cycle.

Referring to FIG. **46**, another embodiment of a lancing device including a controllable driver **294** with a driver coil pack **295**, position sensor and lancet **183** are shown. The lancet **297** has a proximal end **298** and a distal end **299** with a sharpened point at the distal end **299** of the lancet **297**. A magnetic member **301** disposed about and secured to a proximal end portion **302** of the lancet **297** with a lancet shaft **303** being disposed between the magnetic member **301** and the sharpened point **299**. The lancet shaft **303** may be comprised of stainless steel, or any other suitable material or alloy. The

lancet shaft **303** may have a length of about 3 mm to about 50 mm specifically, about 5 mm to about 15 mm.

The magnetic member **301** is configured to slide within an axial lumen **304** of the driver coil pack **295**. The driver coil pack **295** includes a most distal first coil **305**, a second coil **306**, which is axially disposed between the first coil **305** and a third coil **307**, and a proximal-most fourth coil **308**. Each of the first coil **305**, second coil **306**, third coil **307** and fourth coil **308** has an axial lumen. The axial lumens of the first through fourth coils **305-308** are configured to be coaxial with the axial lumens of the other coils and together form the axial lumen **309** of the driver coil pack **295** as a whole. Axially adjacent each of the coils **305-308** is a magnetic disk or washer **310** that augments completion of the magnetic circuit of the coils **305-308** during a lancing cycle of the driven coil pack **295**. The magnetic washers **310** of the embodiment of FIG. **46** are made of ferrous steel but could be made of any other suitable magnetic material, such as iron or ferrite. The magnetic washers **310** have an outer diameter commensurate with an outer diameter of the driver coil pack **295** of about 4.0 to about 8.0 mm. The magnetic washers **310** have an axial thickness of about 0.05, to about 0.4 mm, specifically, about 0.15 to about 0.25 mm. The outer shell **294** of the coil pack is also made of iron or steel to complete the magnetic path around the coils and between the washers **310**.

Wrapping or winding an elongate electrical conductor **311** about the axial lumen **309** until a sufficient number of windings have been achieved forms the coils **305-308**. The elongate electrical conductor **311** is generally an insulated solid copper wire. The particular materials, dimensions number of coil windings etc. of the coils **305-308**, washers **310** and other components of the driver coil pack **295** can be the same or similar to the materials, dimensions number of coil windings etc. of the driver coil pack **188** discussed above.

Electrical conductors **312** couple the driver coil pack **295** with a processor **313** which can be configured or programmed to control the current flow in the coils **305-308** of the driver coil pack **295** based on position feedback from the position sensor **296**, which is coupled to the processor **313** by electrical conductors **315**. A power source **316** is electrically coupled to the processor **313** and provides electrical power to operate the processor **313** and power the driver coil pack **295**. The power source **316** may be one or more batteries (not shown) that provide direct current power to the processor **313** as discussed above.

The position sensor **296** is an analog reflecting light sensor that has a light source and light receiver in the form of a photo transducer **317** disposed within a housing **318** with the housing **318** secured in fixed spatial relation to the driver coil pack **295**. A reflective member **319** is disposed on or secured to a proximal end **320** of the magnetic member **301**. The processor **313** determines the position of the lancet **299** by first emitting light from the light source of the photo transducer **317** towards the reflective member **319** with a predetermined solid angle of emission. Then, the light receiver of the photo transducer **317** measures the intensity of light reflected from the reflective member **319** and electrical conductors **315** transmit the signal generated therefrom to the processor **313**.

By calibrating the intensity of reflected light from the reflective member **319** for various positions of the lancet **297** during the operating cycle of the driver coil pack **295**, the position of the lancet **297** can thereafter be determined by measuring the intensity of reflected light at any given moment. In one embodiment, the sensor **296** uses a commercially available LED/photo transducer module such as the OPB703 manufactured by Optek Technology, Inc., 1215 W. Crosby Road, Carrollton, Tex., 75006. This method of analog reflective measurement for position sensing can be used for any of the embodiments of lancet actuators discussed herein. In addition, any of the lancet actuators or drivers that include coils may use one or more of the coils to determine the position of the lancet **297** by using a magnetically permeable region on the lancet shaft **303** or magnetic member **301** itself as the core of a Linear Variable Differential Transformer (LVDT).

Referring to FIGS. **47** and **48**, a flat coil lancet driver **325** is illustrated which has a main body housing **326** and a rotating frame **327**. The rotating frame **327** pivots about an axle **328** disposed between a base **329**, a top body portion **330** of the main body housing **326** and disposed in a pivot guide **331** of the rotating frame **327**. An actuator arm **332** of the rotating frame **327** extends radially from the pivot guide **331** and has a linkage receiving opening **333** disposed at an outward end **334** of the actuator arm **332**. A first end **335** of a coupler linkage **336** is coupled to the linkage receiving opening **333** of the actuator arm **332** and can rotate within the linkage receiving opening **333**. A second end **337** of the coupler linkage **336** is disposed within an opening at a proximal end **338** of a coupler translation member **341**. This configuration allows circumferential forces imposed upon the actuator arm **332** to be transferred into linear forces on a drive coupler **342** secured to a distal end **343** of the coupler translation member **341**. The materials and dimensions of the drive coupler **342** can be the same or similar to the materials and dimensions of the drive coupler **342** discussed above.

Opposite the actuator arm **332** of the rotating frame **327**, a translation substrate in the form of a coil arm **344** extends radially from the pivot guide **331** of the rotating frame **327**. The coil arm **344** is substantially triangular in shape. A flat coil **345** is disposed on and secured to the coil arm **344**. The flat coil **345** has leading segment **346** and a trailing segment **347**, both of which extend substantially orthogonal to the direction of motion of the segments **346** and **347** when the rotating frame **327** is rotating about the pivot guide **331**. The leading segment **346** is disposed within a first magnetically active region **348** generated by a first upper permanent magnet **349** secured to an upper magnet base **351** and a first lower permanent magnet **352** secured to a lower magnet base **353**. The trailing segment **347** is disposed within a second magnetically active region **354** generated by a second upper permanent magnet **355** secured to the upper magnet base **351** and a second lower permanent magnet secured to the lower magnet base **353**.

The magnetic field lines or circuit of the first upper and lower permanent magnets **349**, **352**, **355** and **356** can be directed upward from the first lower permanent magnet **352** to the first upper permanent magnet **349** or downward in an opposite direction. The magnetic field lines from the second permanent magnets **355** and **356** are also directed up or down, and will have a direction opposite to that of the first upper and lower permanent magnets **349** and **352**. This configuration produces rotational force on the coil arm **344** about the pivot guide **331** with the direction of the force determined by the direction of current flow in the flat coil **345**.

A position sensor **357** includes an optical encoder disk section **358** is secured to the rotating frame **327** which rotates with the rotating frame **327** and is read by an optical encoder **359** which is secured to the base **329**. The position sensor **357** determines the rotational position of the rotating frame **327** and sends the position information to a processor **360** which can have features which are the same or similar to the features of the processor **193** discussed above via electrical leads **361**. Electrical conductor leads **363** of the flat coil **345** are also electrically coupled to the processor **360**.

As electrical current is passed through the leading segment **346** and trailing segment **347** of the flat coil **345**, the rotational forces imposed on the segments **346** and **347** are transferred to the rotating frame **327** to the actuator arm **332**, through the coupler linkage **336** and coupler translation member **341** and eventually to the drive coupler **342**. In use, a lancet (not shown) is secured into the drive coupler **342**, and the flat coil lancet actuator **325** activated. The electrical current in the flat coil **345** determines the forces generated on the drive coupler **342**, and hence, a lancet secured to the coupler **342**. The processor **360** controls the electrical current in the flat coil **345** based on the position and velocity of the lancet as measured by the position sensor **357** information sent to the processor **360**. The processor **360** is able to control the velocity of a lancet in a manner similar to the processor **193** discussed above and can generate any of the desired lancet velocity profiles discussed above, in addition to others.

FIGS. **49** and **50** depict yet another embodiment of a controlled driver **369** having a driver coil pack **370** for a tissue penetration device. The driver coil pack **370** has a proximal end **371**, a distal end **372** and an axial lumen **373** extending from the proximal end **371** to the distal end **372**. An inner coil **374** is disposed about the axial lumen **373** and has a tapered configuration with increasing wraps per inch of an elongate conductor **375** in a distal direction. The inner coil **374** extends from the proximal end **371** of the coil driver pack **370** to the distal end **372** of the driver coil pack **370** with a major outer diameter or transverse dimension of about 1 to about 25 mm, specifically about 1 to about 12 mm.

The outer diameter or transverse dimension of the inner coil **374** at the proximal end **371** of the driver coil pack **370** is approximately equal to the diameter of the axial lumen **373** at the proximal end **371** of the coil pack **370**. That is, the inner coil **374** tapers to a reduce outer diameter proximally until there are few or no wraps of elongate electrical conductor **375** at the proximal end **371** of the driver coil pack **370**. The tapered configuration of the inner coil **374** produces an axial magnetic field gradient within the axial lumen **373** of the driver coil pack **370** when the inner coil **374** is activated with electrical current flowing through the elongate electrical conductor **375** of the inner coil **374**.

The axial magnetic field gradient produces a driving force for a magnetic member **376** disposed within the axial lumen **373** that drives the magnetic member **376** towards the distal end **372** of the driver coil pack **370** when the inner coil **374** is activated. The driving force on the magnetic member produced by the inner coil **374** is a smooth continuous force, which can produce a smooth and continuous acceleration of the magnetic member **376** and lancet **377** secured thereto. In some embodiments, the ratio of the increase in outer diameter versus axial displacement along the inner coil **374** in a distal direction can be from about 1 to about 0.08, specifically, about 1 to about 0.08.

An outer coil **378** is disposed on and longitudinally coextensive with the inner coil **374**. The outer coil **378** can have the same or similar dimensions and construction as the inner coil **374**, except that the outer coil **378** tapers proximally to an increased diameter or transverse dimension. The greater wraps per inch of elongate electrical conductor **379** in a proximal direction for the outer coil **378** produces a magnetic field gradient that drives the magnetic member **376** in a proximal direction when the outer coil **378** is activated with electrical current. This produces a braking or reversing effect on the magnetic member **376** during an operational cycle of the lancet **377** and driver coil pack **370**. The elongate electrical conductors **375** and **379** of the inner coil **374** and outer coil **378** are coupled to a processor **381**, which is coupled to an electrical power source **382**. The processor **381** can have properties similar to the other processors discussed above and can control the velocity profile of the magnetic member **376** and lancet **377** to produce any of the velocity profiles above as well as others. The driver coil pack **370** can be used as a substitute for the coil driver pack discussed above, with other components of the lancing device **180** being the same or similar.

Embodiments of driver or actuator mechanisms having been described, we now discuss embodiments of devices which can house lancets, collect samples of fluids, analyze the samples or any combination of these functions. These front-end devices may be integrated with actuators, such as those discussed above, or any other suitable driver or controllable driver.

Generally, most known methods of blood sampling require several steps. First, a measurement session is set up by gathering various articles such as lancets, lancet drivers, test strips, analyzing instrument, etc. Second, the patient must assemble the paraphernalia by loading a sterile lancet, loading a test strip, and arming the lancet driver. Third, the patient must place a finger against the lancet driver and using the other hand to activate the driver. Fourth, the patient must put down the lancet driver and place the bleeding finger against a test strip, (which may or may not have been loaded into an analyzing instrument). The patient must insure blood has been loaded onto the test strip and the analyzing instrument has been calibrated prior to such loading. Finally, the patient must dispose of all the blood-contaminated paraphernalia including the lancet. As such, integrating the lancing and sample collection features of a tissue penetration sampling device can achieve advantages with regard to patient convenience.

FIG. **51** shows a disposable sampling module **410**, which houses the lancet **412**. The lancet **412** has a head on a proximal end **416** which connects to the driver **438** and a distal end **414**, which lances the skin. The distal end **414** is disposed within the conduit **418**. The proximal end **416** extends into the cavity **420**. The sample reservoir **422** has a narrow input port **424** on the ergonomically contoured surface **426**, which is adjacent to the distal end **414** of the lancet **412**. The term ergonomically contoured, as used herein, generally means shaped to snugly fit a finger or other body portion to be lanced or otherwise tested placed on the surface. The sampling module **410** is capable of transporting the blood sample from the sample reservoir **422** through small passages (not shown), to an analytical region **428**. The analytical region **428** can include chemical, physical, optical, electrical or other means of analyzing the blood sample. The lancet, sample flow channel, sample reservoir and analytical region are integrated into the sampling module **410** in a single packaged unit.

FIG. **52** shows the chamber **430** in the housing **410'** where the sampling module **410** is loaded. The sampling module **410** is loaded on a socket **432** suspended with springs **434** and sits in slot **436**. A driver **438** is attached to the socket **432**. The driver **438** has a proximal end **440** and a distal end **442**. The driver **438** can be either a controllable driver or non-controllable driver any mechanical, such as spring or cam driven, or electrical, such as electromagnetically or electronically driven, means for advancing, stopping, and retracting the lancet. There is a clearance **444** between the distal end **442** of the driver **438** and the sensor **446**, which is attached to the chamber **430**. The socket **432** also contains an analyzer **448**, which is a system for analyzing blood. The analyzer **448** corresponds to the analytical region **428** on the module **410** when it is loaded into the socket **432**.

FIG. **53** shows a tissue penetration sampling device **411** with the sampling module **410** loaded into the socket **432** of housing **410'**. The analytical region **428** and analyzer **448** overlap. The driver **438** fits into the cavity **420**. The proximal end **440** of the driver **438** abuts the distal end **416** of the lancet **412**. The patient's finger **450** sits on the ergonomically contoured surface **426**.

FIG. **54** shows a drawing of an alternate lancet configuration where the lancet **412** and driver **438** are oriented to lance the side of the finger **450** as it sits on the ergonomically contoured surface **426**.

FIG. **55** illustrates the orifice **452** and ergonomically contoured surface **426**. The conduit **418** has an orifice **452**, which opens on a blood well **454**. The sample input port **424** of the reservoir **422** also opens on the blood well **454**. The diameter of the sample input port **424** is significantly greater than the diameter of the orifice **452**, which is substantially the same diameter as the diameter of the lancet **412**. After the lancet is retracted, the blood flowing from the finger **450** will collect in the blood well **454**. The lancet **412** will have been retracted into the orifice **452** effectively blocking the passage of blood down the orifice **452**. The blood will flow from the blood well **454** through the sample input port **424** into the reservoir **422**.

FIG. **56** shows a drawing of the lancing event. The patient applies pressure by pushing down with the finger **450** on the ergonomically contoured surface **426**. This applies downward pressure on the sampling module **410**, which is loaded into the socket **432**. As the socket **432** is pushed downward it compresses the springs **434**. The sensor **446** makes contact with the distal end **442** of the driver **438** and thereby electrically detects the presence of the finger on the ergonomically contoured surface. The sensor can be a piezoelectric device, which detects this pressure and sends a signal to circuit **456**, which actuates the driver **438** and advances and then retracts the lancet **412** lancing the finger **450**. In another embodiment, the sensor **446** is an electric contact, which closes a circuit when it contacts the driver **438** activating the driver **438** to advance and retract the lancet **412** lancing the finger **450**.

An embodiment of a method of sampling includes a reduced number of steps that must be taken by a patient to obtain a sample and analysis of the sample. First, the patient loads a sampling module **410** with an embedded sterile lancet into the housing device **410'**. Second, the patient initiates a lancing cycle by turning on the power to the device or by placing the finger to be lanced on the ergonomically contoured surface **426** and pressing down. Initiation of the sensor makes the sensor operational and gives control to activate the launcher.

The sensor is unprompted when the lancet is retracted after its lancing cycle to avoid unintended multiple lancing events. The lancing cycle consists of arming, advancing, stopping and retracting the lancet, and collecting the blood sample in the reservoir. The cycle is complete once the blood sample has been collected in the reservoir. Third, the patient presses down on the sampling module, which forces the driver **38** to make contact with the sensor, and activates the driver **438**. The lancet then pierces the skin and the reservoir collects the blood sample.

The patient is then optionally informed to remove the finger by an audible signal such as a buzzer or a beeper, and/or a visual signal such as an LED or a display screen. The patient can then dispose of all the contaminated parts by removing the sampling module **410** and disposing of it. In another embodiment, multiple sampling modules **410** may be loaded into the housing **410'** in the form of a cartridge (not shown). The patient can be informed by the tissue penetration sampling device **411** as to when to dispose of the entire cartridge after the analysis is complete.

In order to properly analyze a sample in the analytical region **428** of the sampling module **410**, it may be desirable or necessary to determine whether a fluid sample is present in a given portion of the sample flow channel, sample reservoir or analytical area. A variety of devices and methods for determining the presence of a fluid in a region are discussed below.

In FIG. **57**, a thermal sensor **500** embedded in a substrate **502** adjacent to a surface **504** over which a fluid may flow. The surface may be, for example, a wall of a channel through which fluid may flow or a surface of a planar device over which fluid may flow. The thermal sensor **500** is in electrical communication with a signal-conditioning element **506**, which may be embedded in the substrate **502** or may be remotely located. The signal-conditioning element **506** receives the signal from the thermal sensor **500** and modifies it by means such as amplifying it and filtering it to reduce noise. FIG. **57** also depicts a thermal sensor **508** located at an alternate location on the surface where it is directly exposed to the fluid flow.

FIG. **58** shows a configuration of a thermal sensor **500** adjacent to a separate heating element **510**. The thermal sensor **500** and the heating element **510** are embedded in a substrate **502** adjacent to a surface **504** over which a fluid may flow. In an alternate embodiment, one or more additional thermal sensors may be adjacent the heating element and may provide for increased signal sensitivity. The thermal sensor **500** is in electrical communication with a signal-conditioning element **506**, which may be embedded in the substrate **502** or may be remotely located.

The signal-conditioning element **506** receives the signal from the thermal sensor **500** and modifies it by means such as amplifying it and filtering it to reduce noise. The heating element **510** is in electrical communication with a power supply and control element **512**, which may be embedded in the substrate **502** or may be remotely located. The power supply and control element **512** provides a controlled source of voltage and current to the heating element **510**.

FIG. **59** depicts a configuration of thermal sensors **500** having three thermal sensor/heating element pairs (**500/510**), or detector elements, (with associated signal conditioning elements **506** and power supply and control elements **512** as described in FIG. **58**) embedded in a substrate **502** near each other alongside a surface **504**. The figure depicts the thermal sensors **500** arranged in a linear fashion parallel to the surface **504**, but any operable configuration may be used. In alternate embodiments, fewer than three or more than three thermal sensor/heating element pairs (**500/510**) may be used to indicate the arrival of fluid flowing across a surface **504**. In other embodiments, self-heating thermal sensors are used, eliminating the separate heating elements.

Embodiments of the present invention provide a simple and accurate methodology for detecting the arrival of a fluid at a defined location. Such detection can be particularly useful to define the zero- or start-time of a timing cycle for measuring rate-based reactions. This can be used in biochemical assays to detect a variety of analytes present in a variety of types of biological specimens or fluids and for rate-based reactions such as enzymatic reactions. Examples of relevant fluids include, blood, serum, plasma, urine, cerebral spinal fluid, saliva, enzymatic substances and other related substances and fluids that are well known in the analytical and biomedical art. The reaction chemistry for particular assays to

analyze biomolecular fluids is generally well known, and selection of the particular assay used will depend on the biological fluid of interest.

Assays that are relevant to embodiments of the present invention include those that result in the measurement of individual analytes or enzymes, e.g., glucose, lactate, creatinine kinase, etc, as well as those that measure a characteristic of the total sample, for example, clotting time (coagulation) or complement-dependent lysis. Other embodiments for this invention provide for sensing of sample addition to a test article or arrival of the sample at a particular location within that article.

Referring now to FIG. **60**, a substrate **502** defines a channel **520** having an interior surface **522** over which fluid may flow. An analysis site **524** is located within the channel **520** where fluid flowing in the channel **520** may contact the analysis site **524**. In various embodiments, the analysis site **524** may alternatively be upon the interior surface **522**, recessed into the substrate **502**, or essentially flush with the interior surface **522**. FIG. **60**, depicts several possible locations for thermal sensors relative the substrate, the channel, and the analysis site; also, other locations may be useful and will depend upon the design of the device, as will be apparent to those of skill in art.

In use, thermal sensors may be omitted from one or more of the locations depicted in FIG. **60**, depending on the intended design. A recess in the analysis site **524** may provide the location for a thermal sensor **526**, as may the perimeter of the analysis site provide the location for a thermal sensor **528**. One or more thermal sensors **530**, **532**, **534** may be located on the upstream side of the analysis site **524** (as fluid flows from right to left in FIG. **60**), or one or more thermal sensors **536**, **538**, **540** may be located on the downstream side of the analysis site **524**.

The thermal sensor may be embedded in the substrate near the surface, as thermal sensor **542** is depicted. In various other embodiments, the thermal sensor(s) may be located upon the interior surface, recessed into the interior surface, or essentially flush with the interior surface. Each thermal sensor may also be associated with a signal conditioning element, heating element, and power supply and control elements, as described above, and a single signal conditioning element, heating element, or power supply and control element may be associated with more than one thermal sensor.

FIG. **61** shows possible positions for thermal sensors relative to analysis sites **524** arranged in an array on a surface **556**. A recess in the analysis site **524** may provide the location for a thermal sensor **544**, as may the perimeter of the analysis site provide the location for a thermal sensor **546**. The edge of the surface surrounding the array of analysis sites may provide the position for one or more thermal sensors **548**. Thermal sensors may be positioned between analysis sites in a particular row **550** or column **552** of the array, or may be arranged on the diagonal **554**.

In various embodiments, the thermal sensor(s) may be may be embedded in the substrate near the surface or may be located upon the surface, recessed into the surface, or essentially flush with the surface. Each thermal sensor may also be associated with a signal conditioning elements, heating elements, and power supply and control elements, as described above, and a single signal conditioning element, heating element, or power supply and control element may be associated with more than one thermal sensor.

The use of small thermal sensors can be useful in miniaturized systems, such as microfluidic devices, which perform biomolecular analyses on very small fluid samples. Such analyses generally include passing a biomolecular fluid through, over, or adjacent to an analysis site and result in information about the biomolecular fluid being obtained through the use of reagents and/or test circuits and/or components associated with the analysis site.

FIG. **62** depicts several possible configurations of thermal sensors relative to channels and analysis sites. The device schematically depicted in FIG. **62** may be, e.g., a microfluidic device for analyzing a small volume of a sample fluid, e.g. a biomolecular fluid. The device has a sample reservoir **560** for holding a quantity of a sample fluid. The sample fluid is introduced to the sample reservoir **560** via a sample inlet port **562** in fluid communication with the sample reservoir **560**. A thermal sensor **564** is located in or near the sample inlet port **562**. A primary channel **566** originates at the sample reservoir **560** and terminates at an outflow reservoir **568**.

One or more supplemental reservoirs **570** are optionally present and are in fluid communication with the primary channel **566** via one or more supplemental channels **572**, which lead from the supplemental reservoir **570** to the primary channel **566**. The supplemental reservoir **570** functions to hold fluids necessary for the operation of the assay, such as reagent solutions, wash solutions, developer solutions, fixative solutions, et cetera. In the primary channel **566** at a predetermined distance from the sample reservoir **560**, an array of analysis sites **574** is present.

Thermal sensors are located directly upstream (as fluid flows from right to left in the figure) from the array **576** and directly downstream from the array **578**. Thermal sensors are also located in the primary channel adjacent to where the primary channel originates at the sample reservoir **580** and adjacent to where the primary channel terminates at the outflow reservoir **582**. The supplemental channel provides the location for another thermal sensor **584**.

When the device is in operation, the thermal sensor **564** located in or near the sample inlet port **562** is used to indicate the arrival of the sample fluid, e.g. the biomolecular fluid, in the local environment of the thermal sensor, as described herein, and thus provides confirmation that the sample fluid has successfully been introduced into the device. The thermal sensor **580** located in the primary channel **566** adjacent to where the primary channel **566** originates at the sample reservoir **560** produces a signal indicating that sample fluid has started to flow from the sample reservoir **560** into the primary channel **566**. The thermal sensors **576** in the primary channel **566** just upstream from the array of analysis sites **574** may be used to indicate that the fluid sample is approaching the array **574**. Similarly, the thermal sensors **578** in the primary channel **566** just downstream from the array of analysis sites **574** may be used to indicate that the fluid sample has advanced beyond the array **574** and has thus contacted each analysis site.

The thermal sensor **584** in the supplemental channel **572** provides confirmation that the fluid contained within the supplemental reservoir **570** has commenced to flow therefrom. The thermal sensor **582** in the primary channel **566** adjacent to where the primary channel **566** terminates at the outflow reservoir **568** indicates when sample fluid arrives near the outflow reservoir **568**, which may then indicate that sufficient sample fluid has passed over the array of analysis sites **574** and that the analysis at the analysis sites is completed.

Embodiments of the invention provide for the use of a thermal sensor to detect the arrival of the fluid sample at a determined region, such as an analysis site, in the local environment of the thermal sensor near the thermal sensor. A variety of thermal sensors may be used. Thermistors are thermally-sensitive resistors whose prime function is to detect a predictable and precise change in electrical resistance when

subjected to a corresponding change in temperature Negative Temperature Coefficient (NTC) thermistors exhibit a decrease in electrical resistance when subjected to an increase in temperature and Positive Temperature Coefficient (PTC) thermistors exhibit an increase in electrical resistance when subjected to an increase in temperature.

A variety of thermistors have been manufactured for over the counter use and application. Thermistors are capable of operating over the temperature range of −100 degrees to over 600 degrees Fahrenheit. Because of their flexibility, thermistors are useful for application to micro-fluidics and temperature measurement and control.

A change in temperature results in a corresponding change in the electrical resistance of the thermistor. This temperature change results from either an external transfer of heat via conduction or radiation from the sample or surrounding environment to the thermistor, or as an internal application of heat due to electrical power dissipation within the device. When a thermistor is operated in "self-heating" mode, the power dissipated in the device is sufficient to raise its temperature above the temperature of the local environment, which in turn more easily detects thermal changes in the conductivity of the local environment.

Thermistors are frequently used in "self heating" mode in applications such as fluid level detection, airflow detection and thermal conductivity materials characterization. This mode is particularly useful in fluid sensing, since a self-heating conductivity sensor dissipates significantly more heat in a fluid or in a moving air stream than it does in still air.

Embodiments of the invention may be designed such that the thermal sensor is exposed directly to the sample. However, it may also be embedded in the material of the device, e.g., in the wall of a channel meant to transport the sample. The thermal sensor may be covered with a thin coating of polymer or other protective material.

Embodiments of the device need to establish a baseline or threshold value of a monitored parameter such as temperature. Ideally this is established during the setup process. Once fluid movement has been initiated, the device continuously monitors for a significant change thereafter. The change level designated as "significant" is designed as a compromise between noise rejection and adequate sensitivity. The actual definition of the "zero- or start-time" may also include an algorithm determined from the time history of the data, i.e., it can be defined ranging from the exact instant that a simple threshold is crossed, to a complex mathematical function based upon a time sequence of data.

In use, a signal is read from a thermal sensor in the absence of the sample or fluid. The fluid sample is then introduced. The sample flows to or past the site of interest in the local environment of the thermal sensor, and the thermal sensor registers the arrival of the sample. The site of interest may include an analysis site for conducting, e.g., an enzymatic assay. Measuring the arrival of fluid at the site of interest thus indicates the zero- or start-time of the reaction to be performed. For detection of fluid presence, these sites may be any of a variety of desired locations along the fluidic pathway. Embodiments of the invention are particularly well suited to a microfluidic cartridge or platform, which provide the user with an assurance that a fluid sample has been introduced and has flowed to the appropriate locations in the platform.

A rate-based assay must measure both an initiation time, and some number of later time points, one of which is the end-point of the assay. Therefore, baseline or threshold value can be established, and then continuously monitored for a significant change thereafter; one such change is the arrival of the fluid sample that initiates the enzyme reaction. Baseline values are frequently established during the device setup process. The threshold is designed as a compromise between noise rejection and adequate sensitivity. The defined zero- or "start-time" can be defined ranging from the exact instant that a simple threshold is crossed, to the value algorithmically determined using a filter based on a time sequence of data.

Embodiments of the invention accomplish this in a variety of ways. In one embodiment, an initial temperature measurement is made at a thermal sensor without the sample present. The arrival of a sample changes causes the thermal sensor to register a new value. These values are then compared.

Another embodiment measures the change in thermal properties (such as thermal conductivity or thermal capacity) in the local environment of a thermal sensor caused by the arrival of a fluid sample. In general this is the operating principle of a class of devices known as "thermal conductivity sensors" or "heat flux sensors". At least two hardware implementations have been used and are described above. One implementation utilizes a thermal sensor in a "self-heating mode." In "self-heating mode," a self-heating thermal sensor may utilize a positive temperature coefficient thermistor placed in or near the flow channel, e.g. located in the wall of the flow channel.

An electrical current is run through the thermistor, causing the average temperature of the thermistor to rise above that of the surrounding environment. The temperature can be determined from the electrical resistance, since it is temperature dependent. When fluid flows through the channel, it changes the local thermal conductivity near the thermistor (usually to become higher) and this causes a change in the average temperature of the thermistor. It also changes the thermal capacity, which modifies the thermal dynamic response. These changes give rise to a signal, which can be detected electronically by well-known means, and the arrival of the fluid can thereby be inferred.

A second hardware implementation requires a separate heating element in or near the flow channel, plus a thermal sensor arrangement in close proximity. Passing a current through the element provides heat to the local environment and establishes a local temperature detected by the thermocouple device. This temperature or its dynamic response is altered by the arrival of the fluid or blood in or near the local environment, similar to the previously described implementation, and the event is detected electronically.

The heating element can be operated in a controlled input mode, which may include controlling one or more of the following parameters—applied current, voltage or power—in a prescribed manner. When operating in controlled input mode, fluctuations of the temperature of the thermal sensor are monitored in order to detect the arrival of the fluid.

Alternatively, the heating element can be operated in such a fashion as to control the temperature of the thermal sensor in a prescribed manner. In this mode of operation, the resulting fluctuations in one or more of the input parameters to the heating element (applied current, voltage, and power) can be monitored in order to detect the arrival of the fluid.

In either of the above-described operating modes, the prescribed parameter can be held to a constant value or sequence of values that are held constant during specific phases of operation of the device. The prescribed parameter can also varied as a known function or waveform in time.

The change in the monitored parameters caused by the arrival of the fluid can be calculated in any of a number of ways, using methods well known in the art of signal processing. The signal processing methods allow the relation of the signal received prior to arrival of the fluid with the signal received upon arrival of the fluid to indicate that the fluid has

arrived. For example, and after suitable signal filtering is applied, changes in the monitored value or the rate of change of the value of the signal can be monitored to detect the arrival of the fluid. Additionally, the arrival of fluid will cause a dynamic change in the thermodynamic properties of the local environment, such as thermal conductivity or thermal capacity. When the input parameter is a time varying function this change of thermodynamic properties will cause a phase shift of the measured parameter relative to the controlled parameter. This phase shift can be monitored to detect the arrival of the fluid.

It should also be noted that sensitivity to thermal noise and operating power levels could be reduced in these either of these modes of operation by a suitable choice of time-varying waveforms for the prescribed parameter, together with appropriate and well-known signal processing methods applied to the monitored parameters. However, these potential benefits may come at the cost of slower response time.

Referring to FIG. **63**, an alternative embodiment of a tissue penetration sampling device is shown which incorporates disposable sampling module **590**, a lancet driver **591**, and an optional module cartridge **592** are shown. The optional module cartridge comprises a case body **593** having a storage cavity **594** for storing sampling modules **590**. A cover to this cavity has been left out for clarity. The cartridge further comprises a chamber **595** for holding the lancet driver **591**. The lancet driver has a preload adjustment knob **596**, by which the trigger point of the lancet driver may be adjusted. This insures a reproducible tension on the surface of the skin for better control of the depth of penetration and blood yield. In one embodiment, the sampling module **590** is removably attached to the lancet driver **591**, as shown, so that the sampling module **590** is disposable and the lancet driver **591** is reusable. In an alternative embodiment, the sampling module and lancet driver are contained within a single combined housing, and the combination sample acquisition module/lancet driver is disposable. The sampling module **590** includes a sampling site **597**, preferably having a concave depression **598**, or cradle, that can be ergonomically designed to conform to the shape of a user's finger or other anatomical feature (not shown).

The sampling site further includes an opening **599** located in the concave depression. The lancet driver **591** is used to fire a lancet contained within and guided by the sampling module **590** to create an incision on the user's finger when the finger is placed on the sampling site **597**. In one embodiment, the sampling site forms a substantially airtight seal at the opening when the skin is firmly pressed against the sampling site; the sampling site may additionally have a soft, compressible material surrounding the opening to further limit contamination of the blood sample by ambient air. "Substantially airtight" in this context means that only a negligible amount of ambient air may leak past the seal under ordinary operating conditions, the substantially airtight seal allowing the blood to be collected seamlessly.

Referring to FIGS. **64** and **65**, the lancet **600** is protected in the integrated housing **601** that provides a cradle **602** for positioning the user's finger or other body part, a sampling port **603** within the cradle **602**, and a sample reservoir **603'** for collecting the resulting blood sample. The lancet **600** is a shaft with a distal end **604** sharpened to produce the incision with minimal pain. The lancet **600** further has an enlarged proximal end **605** opposite the distal end. Similar lancets are commonly known in the art.

Rather than being limited to a shaft having a sharp end, the lancet may have a variety of configurations known in the art, with suitable modifications being made to the system to accommodate such other lancet configurations, such configurations having a sharp instrument that exits the sampling port to create a wound from which a blood sample may be obtained.

In the figures, the lancet **600** is slidably disposed within a lancet guide **606** in the housing **601**, and movement of the lancet **600** within the lancet guide **606** is closely controlled to reduce lateral motion of the lancet, thereby reducing the pain of the lance stick. The sample acquisition module also includes a return stop **613**, which retains the lancet within the sample acquisition module. The sampling module has an attachment site **615** for attachment to the lancet driver.

The sampling module further includes a depth selector allowing the user to select one of several penetration depth settings. The depth selector is shown as a multi-position thumbwheel **607** having a graduated surface. By rotating the thumbwheel **607**, the user selects which part of the graduated surface contacts the enlarged proximal end **605** of the lancet to limit the movement of the lancet **600** within the lancet guide **606**.

The thumbwheel is maintained in the selected position by a retainer **608** having a protruding, rounded surface which engages at least one of several depressions **609** (e.g. dimples, grooves, or slots) in the thumbwheel **607**. The depressions **609** are spatially aligned to correspond with the graduated slope of the thumbwheel **607**, so that, when the thumbwheel **607** is turned, the depth setting is selected and maintained by the retainer **608** engaging the depression **609** corresponding to the particular depth setting selected.

In alternate embodiments, the retainer may be located on the depth selector and the depressions corresponding to the depth setting located on the housing such that retainer may functionally engage the depressions. Other similar arrangements for maintaining components in alignment are known in the art and may be used. In further alternate embodiments, the depth selector may take the form of a wedge having a graduated slope, which contacts the enlarged proximal end of the lancet, with the wedge being retained by a groove in the housing.

The sample reservoir **603'** includes an elongate, rounded chamber **610** within the housing **601** of the sample acquisition module. The chamber **610** has a flat or slightly spherical shape, with at least one side of the chamber **610** being formed by a smooth polymer, preferably absent of sharp corners. The sample reservoir **603'** also includes a sample input port **611** to the chamber **610**, which is in fluid communication with the sampling port **603**, and a vent **612** exiting the chamber.

A cover (not shown), preferably of clear material such as plastic, positions the lancet **600** and closes the chamber **603'**, forming an opposing side of the chamber **603'**. In embodiments where the cover is clear, the cover may serve as a testing means whereby the sample may be analyzed in the reservoir via optical sensing techniques operating through the cover. A clear cover will also aid in determining by inspection when the sample reservoir is full of the blood sample.

FIG. **66** shows a portion of the sampling module illustrating an alternate embodiment of the sample reservoir. The sample reservoir has a chamber **616** having a sample input port **617** joining the chamber **616** to a blood transport capillary channel **618**; the chamber **616** also has a vent **619**. The chamber has a first side **620** that has a flat or slightly spherical shape absent of sharp corners and is formed by a smooth polymer. An elastomeric diaphragm **621** is attached to the perimeter of the chamber **616** and preferably is capable of closely fitting to the first side of the chamber **620**.

To control direction of blood flow, the sample reservoir is provided with a first check valve **622** located at the entrance

617 of the sample reservoir and a second check valve 623 leading to an exit channel 624 located at the vent 619. Alternately, a single check valve (at the location 622) may be present controlling both flow into the chamber 616 via the blood transport capillary channel 618 and flow out of the chamber 616 into an optional alternate exit channel 625. The sample reservoir has a duct 626 connecting to a source of variable pressure facilitating movement of the diaphragm 621.

When the diaphragm 621 is flexed away from the first side of the chamber 620 (low pressure supplied from the source via duct 626), the first check valve 622 is open and the second check valve 623 is closed, aspiration of the blood sample into the sample reservoir follows. When the diaphragm 621 is flexed in the direction of the first side of the chamber 620 (high pressure supplied from the source via duct 626) with the first check valve 622 closed and the second check valve 623 open, the blood is forced out of the chamber 616. The direction of movement and actuation speed of the diaphragm 621 can be controlled by the pressure source, and therefore the flow of the sample can be accelerated or decelerated. This feature allows not only reduced damage to the blood cells but also for the control of the speed by which the chamber 616 is filled.

While control of the diaphragm 621 via pneumatic means is described in this embodiment, mechanical means may alternately be used. Essentially, this micro diaphragm pump fulfills the aspiration, storage, and delivery functions. The diaphragm 621 may be used essentially as a pump to facilitate transfer of the blood to reach all areas required. Such required areas might be simple sample storage areas further downstream for assaying or for exposing the blood to a chemical sensor or other testing means. Delivery of the blood may be to sites within the sampling module or to sites outside the sampling module, i.e. a separate analysis device.

In an alternate embodiment, a chemical sensor or other testing means is located within the sampling module, and the blood is delivered to the chemical sensor or other testing means via a blood transfer channel in fluid communication with the sample reservoir. The components of the sampling module may be injection molded and the diaphragm may be fused or insertion molded as an integral component.

FIG. 67 depicts a portion of the disposable sampling module surrounding the sampling port 627, including a portion of the sampling site cradle surface 628. The housing of the sampling module includes a primary sample flow channel 629 that is a capillary channel connecting the sample input port to the sample reservoir. The primary sample flow channel 629 includes a primary channel lumenal surface 630 and a primary channel entrance 631, the primary channel entrance 631 opening into the sample input port 627. The sampling module may optionally include a supplemental sample flow channel 632 that is also a capillary channel having a supplemental channel lumenal surface 633 and a supplemental channel entrance 634, the supplemental channel entrance 634 opening into the sample input port 627.

The primary sample flow channel 629 has a greater cross-sectional area than the supplemental sample flow channel 632, preferably by at least a factor of two. Thus, the supplemental sample flow channel 632 draws fluid faster than the primary sample flow channel 629. When the first droplet of blood is received into the sample input port 627, the majority of this droplet is drawn through the supplemental sample flow channel 632. However, as the blood continues to flow from the incision into the sample input port 627, most of this blood is drawn through the primary sample flow channel 629, since the supplemental sample flow channel 632 is of limited capacity and is filled or mostly filled with the first blood droplet. This dual capillary channel configuration is particularly useful in testing where there is a concern with contamination of the sample, e.g. with debris from the lancet strike or (particularly in the case of blood gas testing) with air.

In order to improve blood droplet flow, some priming or wicking of the surface with blood is at times necessary to begin the capillary flow process. Portions of the surfaces of the sample input port 627 and the primary and supplemental (if present) sample flow channels 629, 632 are treated to render those surfaces hydrophilic. The surface modification may be achieved using mechanical, chemical, corona, or plasma treatment. Examples of such coatings and methods are marketed by AST Products (Billerica, Mass.) and Spire Corporation (Bedford, Mass.).

However, a complete blanket treatment of the surface could prove detrimental by causing blood to indiscriminately flow all over the surface and not preferentially through the capillary channel(s). This ultimately will result in losses of blood fluid. The particular surfaces which receive the treatment are selected to improve flow of blood from an incised finger on the sampling site cradle surface 628 through the sample input port 627 and at least one of the sample flow channels 629, 632 to the sample reservoir. Thus, the treatment process should be masked off and limited only to the selected surfaces. The masking process of selectively modifying the sampling surface from hydrophobic to hydrophilic may be done with mechanical masking techniques such as with metal shielding, deposited dielectric or conductive films, or electrical shielding means.

In some embodiments, the treated surfaces are limited to one or more of the following: the surface of the sampling port which lies between the sampling site cradle surface and the primary and supplemental sample flow channel, the surface immediately adjacent to the entrances to the primary and/or supplemental sample flow channels 631, 634 (both within the sample input port and within the sample flow channel), and the lumenal surface of the primary and/or supplemental sample flow channels 630, 633.

Upon exiting the incision blood preferentially moves through the sample input port 627 into the supplementary sample flow channel 632 (if present) and into the primary sample flow channel 629 to the sample reservoir, resulting in efficient capture of the blood. Alternatively, the substrate material may be selected to be hydrophilic or hydrophobic, and a portion of the surface of the substrate material may be treated for the opposite characteristic.

In an embodiment, FIG. 67 a membrane 635 at the base of the sample input port 627 is positioned between the retracted sharpened distal end of the lancet 636 and the entrance to the sample flow channels 631, 634. The membrane 635 facilitates the blood sample flow through the sample flow channels 629, 632 by restricting the blood from flowing into the area 636 surrounding the distal end of the lancet 637. The blood thus flows preferentially into the sample reservoir. In an embodiment, the membrane 635 is treated to have a hydrophobic characteristic. In another embodiment, the membrane 635 is made of polymer-based film 638 that has been coated with a silicone-based gel 639.

For example, the membrane structure may comprise a polymer-based film 638 composed of polyethylene terephthalate, such as the film sold under the trademark MYLAR. The membrane structure may further comprise a thin coating of a silicone-based gel 639 such as the gel sold under the trademark SYLGARD on at least one surface of the film. The usefulness of such a film is its ability to reseal after the lancet has penetrated it without physically affecting the lancet's

cutting tip and edges. The MYLAR film provides structural stability while the thin SYLGARD silicone laminate is flexible enough to retain its form and close over the hole made in the MYLAR film. Other similar materials fulfilling the structural stability and flexibility roles may be used in the manufacture of the membrane in this embodiment.

The membrane **635** operates to allow the sharpened distal end of the lancet **637** to pierce the membrane as the sharpened distal end of the lancet **637** travels into and through the sample input port **627**. In an embodiment, the silicone-based gel **639** of the membrane **635** automatically seals the cut caused by the piercing lancet. Therefore, after an incision is made on a finger of a user, the blood from the incision is prevented from flowing through the membrane **635**, which aids the blood to travel through the primary sample flow channel **629** to accumulate within the sample reservoir. Thus the film prevents any blood from flowing into the lancet device assembly, and blood contamination and loss into the lancet device mechanism cavity are prevented. Even without the resealing layer **639**, the hydrophobic membrane **635** deters the flow of blood across the membrane **635**, resulting in improved flow through the primary sample flow channel **629** and reduced or eliminated flow through the pierced membrane **635**.

FIGS. **68-70** illustrate one implementation of a lancet driver **640** at three different points during the use of the lancet driver. In this description of the lancet driver, proximal indicates a position relatively close to the site of attachment of the sampling module; conversely, distal indicates a position relatively far from the site of attachment of the sampling module. The lancet driver has a driver handle body **641** defining a cylindrical well **642** within which is a preload spring **643**. Proximal to the preload spring **643** is a driver sleeve **644**, which closely fits within and is slidably disposed within the well **642**. The driver sleeve **644** defines a cylindrical driver chamber **645** within which is an actuator spring **646**. Proximal to the actuator spring **646** is a plunger sleeve **647**, which closely fits within and is slidably disposed within the driver sleeve **644**.

The driver handle body **641** has a distal end **648** defining a threaded passage **649** into which a preload screw **650** fits. The preload screw defines a counterbore **651**. The preload screw **650** has a distal end **652** attached to a preload adjustment knob **653** and a proximal end **654** defining an aperture **655**. The driver sleeve **644** has a distal end **656** attached to a catch fitting **657**. The catch fitting **657** defines a catch hole **658**. The driver sleeve **644** has a proximal end **659** with a sloped ring feature **660** circling the interior surface of the driver sleeve's proximal end **659**.

The lancet driver includes a plunger stem **660** having a proximal end **661** and a distal end **662**. At its distal end **662**, an enlarged plunger head **663** terminates the plunger stem **660**. At its proximal end **661**, the plunger stem **660** is fixed to the plunger tip **667** by adhesively bonding, welding, crimping, or threading into a hole **665** in the plunger tip **667**. A plunger hook **665** is located on the plunger stem **660** between the plunger head **663** and the plunger tip **667**. The plunger head **663** is slidably disposed within the counterbore **651** defined by the preload screw **650**. The plunger stem **660** extends from the plunger head **663**, through the aperture **655** defined by the proximal end **654** of the preload screw, thence through the hole **658** in the catch fitting **657**, to the joint **664** in the plunger tip **667**. For assembly purposes, the plunger base joint **664** may be incorporated into the plunger sleeve **647**, and the plunger stem **660** attached to the plunger base **664** by crimping, swaging, gluing, welding, or some other means. Note that the lancet driver **640** could be replaced with any of the controlled electromagnetic drivers discussed above.

The operation of the tissue penetration sampling device may be described as follows, with reference to FIGS. **63-70**. In operation, a fresh sampling module **590** is removed from the storage cavity **594** and adjusted for the desired depth setting using the multi-position thumbwheel **607**. The sampling module **590** is then placed onto the end of the lancet driver **591**. The preload setting may be checked, but will not change from cycle to cycle once the preferred setting is found; if necessary, the preload setting may be adjusted using the preload adjustment knob **596**.

The combined sampling module and lancet driver assembly is then pressed against the user's finger (or other selected anatomical feature) in a smooth motion until the preset trigger point is reached. The trigger point corresponds to the amount of preload force that needs to be overcome to actuate the driver to drive the lancet towards the skin. The preload screw allows the preload setting to be adjusted by the user such that a consistent, preset (by the user) amount of preload force is applied to the sampling site **597** each time a lancing is performed.

When the motion to press the assembly against the user's finger is begun (see FIG. **68**), the plunger hook **665** engages catch fitting **657**, holding the actuator spring **646** in a cocked position while the force against the finger builds as the driver sleeve **644** continues to compress the preload spring **643**. Eventually (see FIG. **69**) the sloped back of the plunger hook **665** slides into the hole **655** in the proximal end of the preload screw **654** and disengages from the catch fitting **657**. The plunger sleeve **647** is free to move in a proximal direction once the plunger hook **665** releases, and the plunger sleeve **647** is accelerated by the actuator spring **646** until the plunger tip **667** strikes the enlarged proximal end of the lancet **212**.

Upon striking the enlarged proximal end of the lancet **605**, the plunger tip **667** of the actuated lancet driver reversibly engages the enlarged proximal end of the lancet **605**. This may be accomplished by mechanical means, e.g. a fitting attached to the plunger tip **667** that detachably engages a complementary fitting on the enlarged proximal end of the lancet **605**, or the enlarged proximal end of the lancet **605** may be coated with an adhesive that adheres to the plunger tip **667** of the actuated lancet driver. Upon being engaged by the plunger tip **667**, the lancet **600** slides within the lancet guide **606** with the sharpened distal end of the lancet **604** emerging from the housing **601** through the sampling port **603** to create the incision in the user's finger.

At approximately the point where the plunger tip **667** contacts the enlarged proximal end of the lancet **605**, the actuator spring **646** is at its relaxed position, and the plunger tip **667** is traveling at its maximum velocity. During the extension stroke, the actuator spring **646** is being extended and is slowing the plunger tip **667** and lancet **600**. The end of stroke occurs (see FIG. **70**) when the enlarged proximal end of the lancet **605** strikes the multi-position thumbwheel **607**.

The direction of movement of the lancet **600** is then reversed and the extended actuator spring then quickly retracts the sharpened distal end of the lancet **604** back through the sampling port **603**. At the end of the return stroke, the lancet **600** is stripped from the plunger tip **667** by the return stop **613**. The adhesive adheres to the return stop **613** retaining the lancet in a safe position.

As blood seeps from the wound, it fills the sample input port **603** and is drawn by capillary action into the sample reservoir **603'**. In this embodiment, there is no reduced pressure or vacuum at the wound, i.e. the wound is at ambient air

pressure, although embodiments which draw the blood sample by suction, e.g. supplied by a syringe or pump, may be used. The vent **612** allows the capillary action to proceed until the entire chamber is filled, and provides a transfer port for analysis of the blood by other instrumentation. The finger is held against the sample acquisition module until a complete sample is observed in the sample reservoir.

As the sampling module **600** is removed from the lancet driver **591**, a latch **614** that is part of the return stop **613** structure engages a sloped ring feature **660** inside the lancet driver **591**. As the lancet driver **591** is removed from the sampling module **600**, the latch forces the return stop **613** to rotate toward the lancet **600**, bending it to lock it in a safe position, and preventing reuse.

As the sampling module **600** is removed from the lancet driver **591**, the driver sleeve **644** is forced to slide in the driver handle body **641** by energy stored in the preload spring **643**. The driver sleeve **644**, plunger sleeve **647**, and actuator spring **646** move outward together until the plunger head **663** on the plunger stem **660** contacts the bottom of the counterbore **651** at the proximal end of the preload screw **654**. The preload spring **643** continues to move the driver sleeve **644** outward compressing the actuator spring **646** until the plunger hook **665** passes through the hole **658** in the catch fitting **657**. Eventually the two springs reach equilibrium and the plunger sleeve **647** comes to rest in a cocked position.

After the sampling module **600** is removed from the lancet driver **591**, it may be placed in a separate analysis device to obtain blood chemistry readings. In a preferred embodiment, the integrated housing **601** or sample reservoir **603'** of the sampling module **600** contains at least one biosensor, which is powered by and/or read by the separate analysis device. In another embodiment, the analysis device performs an optical analysis of the blood sample directly through the clear plastic cover of the sampling module. Alternatively, the blood sample may be transferred from the sampling module into an analysis device for distribution to various analysis processes.

Alternate embodiments of the invention offer improved success rates for sampling, which reduces the needless sacrifice of a sample storage reservoir or an analysis module due to inadequate volume fill. Alternate embodiments allow automatic verification that sufficient blood has been collected before signaling the user (e.g. by a signal light or an audible beep) that it is okay to remove the skin from the sampling site. In such alternate embodiments, one or more additional lancet(s) (denoted backup lancets) and/or lancet driver(s) (denoted backup lancet drivers) and/or sample reservoir(s) (denoted backup sample reservoirs) are present with the "primary" sampling module.

In one such preferred embodiment, following detection of inadequate blood sample volume (e.g., by light or electronic methods), a backup sampling cycle is initiated automatically. The "backup sampling cycle" includes disconnecting the primary sample reservoir via a simple valving system, bringing the backup components online, lancing of the skin, collection of the blood, and movement of the blood to the backup sample reservoir.

Blood flows into the backup sample reservoir until the required volume is obtained. The cycle repeats itself, if necessary, until the correct volume is obtained. Only then is the sample reservoir made available as a source of sampled blood for use in measurements or for other applications. The series of reservoirs and/or lancets and/or lancet drivers may easily be manufactured in the same housing and be transparent to the user.

In one embodiment, up to three sample reservoirs (the primary plus two backup) are present in a single sample acquisition module, each connected via a capillary channel/valving system to one or more sampling ports. Another embodiment has four sample reservoirs (the primary plus three backup) present in a single sample acquisition module, each connected via a capillary channel/valving system to one or more sampling ports. With three or four sample reservoirs, at least an 80% sampling success rate can be achieved for some embodiments.

Another embodiment includes a miniaturized version of the tissue penetration sampling device. Several of the miniature lancets may be located in a single sampling site, with corresponding sample flow channels to transfer blood to one or more reservoirs. The sample flow channels may optionally have valves for controlling flow of blood. The device may also include one or more sensors, such as the thermal sensors discussed above, for detecting the presence of blood, e.g. to determine if a sufficient quantity of blood has been obtained. In such an embodiment, the disposable sampling module, the lancet driver, and the optional module cartridge will have dimensions no larger than about 150 mm long, 60 mm wide, and 25 mm thick.

In other embodiments, the size of the tissue penetration sampling device including the disposable sampling module, the lancet driver, and the optional cartridge will have dimensions no larger than about 100 mm long, about 50 mm wide, and about 20 mm thick, and in still other embodiments no larger than about 70 mm long, about 30 mm wide, and about 10 mm thick. The size of the tissue penetration sampling device including the disposable sampling module, the lancet driver, and the optional cartridge will generally be at least about 10 mm long, about 5 mm wide, and about 2 mm thick.

In another miniature embodiment, the dimensions of the lancet driver without the cartridge or sampling module are no larger than about 80 mm long, 10 mm wide, and 10 mm thick, or specifically no larger than about 50 mm long, 7 mm wide, and 7 mm thick, or even more specifically no larger than about 15 mm long, 5 mm wide, and 3 mm thick; dimensions of the lancet driver without the cartridge or sampling module are generally at least about 1 mm long, 0.1 mm wide, and 0.1 mm thick, or specifically at least about 2 mm long, 0.2 mm wide, and 0.2 mm thick, or more specifically at least about 4 mm long, 0.4 mm wide, and 0.4 mm thick.

In yet another miniature embodiment, dimensions of the miniature sampling module without the lancet driver or cartridge are no larger than about 15 mm long, about 10 mm wide, and about 10 mm thick, or no larger than about 10 mm long, about 7 mm wide, and about 7 mm thick, or no larger than about 5 mm long, about 3 mm wide, and about 2 mm thick; dimensions of the miniature sampling module without the lancet driver or cartridge are generally at least about 1 mm long, 0.1 mm wide, and 0.1 mm thick, specifically at least about 2 mm long, 0.2 mm wide, and 0.2 mm thick, or more specifically at least about 4 mm long, 0.4 mm wide, and 0.4 mm thick.

In another embodiment, the miniaturized sampling module and the lancet driver form a single unit having a shared housing, and the combined sample acquisition module/lancet driver unit is disposable. Such a combined unit is no larger than about 80 mm long, about 30 mm wide, and about 10 mm thick, specifically no larger than about 50 mm long, about 20 mm wide, and about 5 mm thick, more specifically, no larger than about 20 mm long, about 5 mm wide, and about 3 mm thick; the combined unit is generally at least about 2 mm long, about 0.3 mm wide, and about 0.2 mm thick, specifically at least about 4 mm long, 0.6 mm wide, and 0.4 mm thick, more specifically, at least about 8 mm long, 1 mm wide, and 0.8 mm thick.

Referring to FIG. **71**, another embodiment of a tissue penetration sampling device is shown, incorporating a disposable sampling module **608** cartridge and analyzer device **669** is shown. The analyzer device **669** includes a deck **670** having a lid **671** attached to the deck by hinges along the rear edge of the system **672**. A readout display **673** on the lid **671** functions to give the user information about the status of the analyzer device **669** and/or the sampling module cartridge **668**, or to give readout of a blood test. The analyzer device **669** has several function buttons **674** for controlling function of the analyzer device **669** or for inputting information into the reader device **669**. Alternatively, the reader device may have a touch-sensitive screen, an optical scanner, or other input means known in the art.

An analyzer device with an optical scanner may be particularly useful in a clinical setting, where patient information may be recorded using scan codes on patients' wristbands or files. The analyzer reader device may have a memory, enabling the analyzer device to store results of many recent tests. The analyzer device may also have a clock and calendar function, enabling the results of tests stored in the memory to be time and date-stamped. A computer interface **675** enables records in memory to be exported to a computer. The analyzer device **669** has a chamber located between the deck **670** and the lid **671**, which closely accommodates a sampling module cartridge **668**. Raising the lid **671**, allowing a sampling module cartridge **668** to be inserted or removed, accesses the chamber.

FIG. **72** is an illustration showing some of the features of an embodiment of a sampling module cartridge. The sampling module cartridge **668** has a housing having an orientation sensitive contact interface for mating with a complementary surface on the analyzer device. The contact interface functions to align the sampling module cartridge with the analyzer device, and also allows the analyzer device to rotate the sampling module cartridge in preparation for a new sampling event. The contact interface may take the form of cogs or grooves formed in the housing, which mate with complementary cogs, or grooves in the chamber of the analyzer device.

The sampling module cartridge has a plurality of sampling sites **678** on the housing, which are shown as slightly concave depressions near the perimeter of the sampling module cartridge **668**. Each sampling site defines an opening **679** contiguous with a sample input port entering the sampling module. In an alternate embodiment, the sampling sites and sample input ports are located on the edge of the sampling module cartridge. Optical windows **680** allow transmission of light into the sampling module cartridge for the purpose of optically reading test results. Alternatively, sensor connection points allow transmission of test results to the analyzer device via electrical contact. Access ports **681**, if present, allow transmission of force or pressure into the sampling module cartridge from the analyzer device. The access ports may be useful in conjunction with running a calibration test or combining reagents with sampled blood or other bodily fluids.

The described features are arranged around the sampling module cartridge, and the sampling module cartridge is radially partitioned into many sampling modules, each sampling module having the components necessary to perform a single blood sampling and testing event. A plurality of sampling modules are present on a sampling module cartridge, generally at least ten sampling modules are present on a single disposable sampling module cartridge; at least about 20, or more on some embodiments, and at least about 34 sampling modules are present on one embodiment, allowing the sampling module cartridge to be maintained in the analyzer device for about a week before replacing with a new sampling module cartridge (assuming five sampling and testing events per day for seven days). With increasing miniaturization, up to about 100, or more preferably up to about 150, sampling modules may be included on a single sampling module cartridge, allowing up to a month between replacements with new sampling module cartridges. It may be necessary for sampling sites to be located in several concentric rings around the sampling module cartridge or otherwise packed onto the housing surface to allow the higher number of sampling modules on a single sampling module cartridge.

In other embodiments, the sampling module cartridge may be any other shape which may conveniently be inserted into a analyzer device and which are designed to contain multiple sampling modules, e.g. a square, rectangular, oval, or polygonal shape. Each sampling module is miniaturized, being generally less than about 6.0 cm long by about 1.0 cm wide by about 1.0 cm thick, so that thirty five more or less wedge-shaped sampling modules can fit around a disk having a radius of about 6.0 cm. In some embodiments, the sampling modules can be much smaller, e.g. less than about 3.0 cm long by about 0.5 cm wide by about 0.5 cm thick.

FIG. **73** depicts, in a highly schematic way, a single sampling module, positioned within the analyzer device. Of course, it will occur to the person of ordinary skill in the art that the various recited components may be physically arranged in various configurations to yield a functional system. FIG. **73** depicts some components, which might only be present in alternate embodiments and are not necessarily all present in any single embodiment. The sampling module has a sample input port **682**, which is contiguous with an opening **683** defined by a sampling site **684** on the cartridge housing **685**. A lancet **686** having a lancet tip **687** adjacent to the sample input port **682** is operably maintained within the housing such that the lancet **686** can move to extend the lancet tip **687** through the sample input port **682** to outside of the sampling module cartridge.

The lancet **686** also has a lancet head **688** opposite the lancet tip. The lancet **686** driven to move by a lancet driver **689**, which is schematically depicted as a coil around the lancet **686**. The lancet driver **689** optionally is included in the sampling module cartridge as pictured or alternatively is external to the sampling module cartridge. The sampling module may further include a driver port **690** defined by the housing adjacent to the lancet head **688**—the driver port **690** allows an external lancet driver **691** access to the lancet **686**.

In embodiments where the lancet driver **689** is in the sampling module cartridge, it may be necessary to have a driver connection point **694** upon the housing accessible to the analyzer device. The driver connection point **694** may be a means of triggering the lancet driver **689** or of supplying motive force to the lancet driver **689**, e.g. an electrical current to an electromechanical lancet driver. Note that any of the drivers discussed above, including controllable drivers, electromechanical drivers, etc., can be substituted for the lancet driver **689** shown.

In one embodiment a pierceable membrane **692** is present between the lancet tip **687** and the sample input port **682**, sealing the lancet **686** from any outside contact prior to use. A second membrane **693** may be present adjacent to the lancet head **688** sealing the driver port **690**. The pierceable membrane **692** and the second membrane **693** function to isolate the lancet **686** within the lancet chamber to maintain sterility of the lancet **686** prior to use. During use the lancet tip **687** and the external lancet driver **691** pierce the pierceable membrane **692** and the second membrane **693**, if present respectively.

A sample flow channel **695** leads from the sample input port **682** to an analytical region **696**. The analytical region **696**

is associated with a sample sensor capable of being read by the analyzer device. If the sample sensor is optical in nature, the sample sensor may include optically transparent windows **697** in the housing above and below the analytical region **696**, allowing a light source in the analyzer device to pass light **698** through the analytical region. An optical sensor **698'**, e.g. a CMOS array, is present in the analyzer device for sensing the light **699** that has passed through the analytical region **696** and generating a signal to be analyzed by the analyzer device.

In a separate embodiment, only one optically transparent window is present, and the opposing side of the analytical region is silvered or otherwise reflectively coated to reflect light back through the analytical region and out the window to be analyzed by the analyzer device. In an alternate embodiment, the sensor is electrochemical **700**, e.g. an enzyme electrode, and includes a means of transmitting an electric current from the sampling module cartridge to the analyzer device, e.g. an electrical contact **701**, or plurality of electrical contacts **701**, on the housing accessible to the analyzer device.

In one embodiment, the pierceable membrane **692** may be made of polymer-based film that has been coated with a silicone-based gel. For example, the membrane structure may comprise a polymer-based film composed of polyethylene terephthalate, such as the film sold under the trademark MYLAR®. The membrane structure may further comprise a thin coating of a silicone-based gel such as the gel sold under the trademark SYLGARD® on at least one surface of the film.

The usefulness of such a film is its ability to reseal after the lancet tip has penetrated it without physically affecting the lancet's cutting tip and edges. The MYLAR® film provides structural stability while the thin SYLGARD® silicone laminate is flexible enough to retain its form and close over the hole made in the MYLAR® film. Other similar materials fulfilling the structural stability and flexibility roles may be used in the manufacture of the pierceable membrane in this embodiment.

The pierceable membrane **692** operates to allow the lancet tip **687** to pierce the pierceable membrane **692** as the lancet tip **687** travels into and through the sampling port **682**. In the described embodiment, the silicone-based gel of the membrane **692** automatically seals the cut caused by the lancet tip **687**. Therefore, after an incision is made on a finger of a user and the lancet tip **687** is retracted back through the pierceable membrane **692**, the blood from the incision is prevented from flowing through the pierceable membrane **692**, which aids the blood to travel through the sample flow channel **695** to accumulate within the analytical region **696**.

Thus the pierceable membrane **692** prevents blood from flowing into the lancet device assembly, and blood contamination and loss into the lancet device mechanism cavity are prevented. In yet another embodiment, used sample input ports are automatically sealed off before going to the next sample acquisition cycle by a simple button mechanism. A similar mechanism seals off a sample input port should sampling be unsuccessful.

In an alternate embodiment, a calibrant supply reservoir **702** is also present in each sampling module. The calibrant supply reservoir **702** is filled with a calibrant solution and is in fluid communication with a calibration chamber **703**. The calibration chamber **703** provides a source of a known signal from the sampling module cartridge to be used to validate and quantify the test conducted in the analytical region **696**. As such, the configuration of the calibration chamber **703** closely resembles the analytical region **696**.

During use, the calibrant solution is forced from the calibrant supply reservoir **702** into the calibration chamber **703**. The figure depicts a stylized plunger **704** above the calibrant supply reservoir **702** ready to squeeze the calibrant supply reservoir **702**. In practice, a variety of methods of transporting small quantities of fluid are known in the art and can be implemented on the sampling module cartridge. The calibration chamber **703** is associated with a calibrant testing means.

FIG. **73** shows two alternate calibrant testing means—optical windows **697** and an electrochemical sensor **676**. In cases where the sampling module is designed to perform several different tests on the blood, both optical and electrochemical testing means may be present. The optical windows **697** allow passage of light **677** from the analyzer device through the calibration chamber **703**, whereupon the light **703'** leaving the calibration chamber **703** passes onto an optical sensor **698'** to result in a signal in the analyzer device.

The electrochemical sensor **676** is capable of generating a signal that is communicated to the analyzer device via, e.g. an electrical contact **704'**, which is accessible to a contact probe **702'** on the analyzer device that can be extended to contact the electrical contact **704'**. The calibrant solution may be any solution, which, in combination with the calibrant testing means, will provide a suitable signal, which will serve as calibration measurement to the analyzer device. Suitable calibrant solutions are known in the art, e.g. glucose solutions of known concentration. The calibration measurement is used to adjust the results obtained from sample sensor from the analytical region **696**.

To maintain small size in some sampling module cartridge embodiments, allowing small quantities of sampled blood to be sufficient, each component of the sampling module must be small, particularly the sample flow channel and the analytical region. The sample flow channel can be less than about 0.5 mm in diameter, specifically less than about 0.3 mm in diameter, more specifically less than about 0.2 mm in diameter, and even more specifically less than about 0.1 mm in diameter.

The sample flow channel may generally be at least about 50 micrometers in diameter. The dimensions of the analytical region may be less than about 1 mm by about 1 mm by about 1 mm, specifically less than about 0.6 mm by about 0.6 mm by about 0.4 mm, more specifically less than about 0.4 mm by 0.4 mm by 0.2 mm, and even more specifically less than about 0.2 mm by about 0.2 mm by about 0.1 mm. The analytical region can generally be at least about 100 micrometers by 100 micrometers by 50 micrometers.

The sampling module cartridge is able to return a valid testing result with less than about 5 microliters of blood taken from the skin of a patient, specifically less than about 1 microliter, more specifically less than about 0.4 microliters, and even more specifically less than about 0.2 microliters. Generally, at least 0.05 microliters of blood is drawn for a sample.

The cartridge housing may be made in a plurality of distinct pieces, which are then assembled to provide the completed housing. The distinct pieces may be manufactured from a wide range of substrate materials. Suitable materials for forming the described apparatus include, but are not limited to, polymeric materials, ceramics (including aluminum oxide and the like), glass, metals, composites, and laminates thereof. Polymeric materials are particularly preferred herein and will typically be organic polymers that are homopolymers or copolymers, naturally occurring or synthetic, crosslinked or uncrosslinked.

It is contemplated that the various components and devices described herein, such as sampling module cartridges, sampling modules, housings, etc., may be made from a variety of materials, including materials such as the following: polycar-

bonates; polyesters, including poly (ethylene terephthalate) and poly(butylene terephthalate); polyamides, (such as nylons); polyethers, including polyformaldehyde and poly (phenylene sulfide); polyimides, such as that manufactured under the trademarks KAPTON (DuPont, Wilmington, Del.) and UPILEX (Ube Industries, Ltd., Japan); polyolefin compounds, including ABS polymers, Kel-F copolymers, poly (methyl methacrylate), poly(styrene-butadiene) copolymers, poly(tetrafluoroethylene), poly(ethylenevinyl acetate) copolymers, poly(N-vinylcarbazole) and polystyrene.

The various components and devices described herein may also be fabricated from a "composite," i.e., a composition comprised of unlike materials. The composite may be a block composite, e.g., an A-B-A block composite, an A-B-C block composite, or the like. Alternatively, the composite may be a heterogeneous combination of materials, i.e., in which the materials are distinct from separate phases, or a homogeneous combination of unlike materials. A laminate composite with several different bonded layers of identical or different materials can also be used.

Other preferred composite substrates include polymer laminates, polymer-metal laminates, e.g., polymer coated with copper, a ceramic-in-metal or a polymer-in-metal composite. One composite material is a polyimide laminate formed from a first layer of polyimide such as KAPTON polyimide, available from DuPont (Wilmington, Del.), that has been co-extruded with a second, thin layer of a thermal adhesive form of polyimide known as KJ®, also available from DuPont (Wilmington, Del.).

Any suitable fabrication method for the various components and devices described herein can be used, including, but not limited to, molding and casting techniques, embossing methods, surface machining techniques, bulk machining techniques, and stamping methods. Further, injection-molding techniques well known in the art may be useful in shaping the materials used to produce sample modules and other components.

For some embodiments, the first time a new sampling module cartridge **668** is used, the user removes any outer packaging material from the sampling module cartridge **668** and opens the lid **671** of the analyzer device **669**, exposing the chamber. The sampling module cartridge **668** is slipped into the chamber and the lid **671** closed. The patient's skin is positioned upon the sampling site **678** and the integrated process of lancing the skin, collecting the blood sample, and testing the blood sample is initiated, e.g. by pressing a function button **674** to cause the lancet driver to be triggered. The patient's skin is maintained in position upon the sampling site **678**, adjacent the sample input port **682**, until an adequate volume of blood has been collected, whereupon the system may emit a signal (e.g. an audible beep) that the patient's skin may be lifted from the sampling site **678**.

When the testing of the sample is complete, the analyzer device **669** automatically reads the results from the sampling module cartridge **668** and reports the results on the readout display **673**. The analyzer device **669** may also store the result in memory for later downloading to a computer system. The sampling module cartridge **668** may then automatically be advanced to bring the next sampling module inline for the next use. Each successive time the system is used (optionally until the sampling module cartridge **668** is used up), the patient's skin may be placed upon the sampling site **678** of the (already installed) sampling module cartridge **668**, thus simplifying the process of blood sampling and testing.

A method of providing more convenient blood sampling, wherein a series of blood samples may be collected and tested using a single disposable sampling module cartridge which is designed to couple to an analyzer device is described. Embodiments of the sampling module cartridge include a plurality of sampling modules. Each sampling module can be adapted to perform a single blood sampling cycle and is functionally arranged within the sampling module cartridge to allow a new sampling module to be brought online after a blood sampling cycle is completed.

Each blood sampling cycle may include lancing of a patient's skin, collection of a blood sample, and testing of the blood sample. The blood sampling cycle may also include reading of information about the blood sample by the analyzer device, display and/or storage of test results by the analyzer device, and/or automatically advancing the sampling module cartridge to bring a new sampling module online and ready for the next blood sampling cycle to begin.

A method embodiment starts with coupling of the sampling module cartridge and analyzer device and then initiating a blood sampling cycle. Upon completion of the blood sampling cycle, the sampling module cartridge is advanced to bring a fresh, unused sampling module online, ready to perform another blood sampling cycle. Generally, at least ten sampling modules are present, allowing the sampling module cartridge to be advanced nine times after the initial blood sampling cycle.

In some embodiments, more sampling modules are present and the sampling module cartridge may be advanced about 19 times, and about 34 times in some embodiments, allowing about 19 or about 34 blood sampling cycles, respectively, after the initial blood sampling cycle. After a series of blood sampling cycles has been performed and substantially all (i.e. more than about 80%) of the sampling modules have been used, the sampling module cartridge is decoupled from the analyzer device and discarded, leaving the analyzer device ready to be coupled with a new sampling module cartridge.

Referring to FIGS. **74-76**, a tissue penetration sampling device **180** is shown with the controllable driver **179** of FIG. **20** coupled to a sampling module cartridge **705** and disposed within a driver housing **706**. A ratchet drive mechanism **707** is secured to the driver housing **706**, coupled to the sampling module cartridge **705** and configured to advance a sampling module belt **708** within the sampling module cartridge **705** so as to allow sequential use of each sampling module **709** in the sampling module belt **708**. The ratchet drive mechanism **707** has a drive wheel **711** configured to engage the sampling modules **709** of the sampling module belt **708**. The drive wheel **711** is coupled to an actuation lever **712** that advances the drive wheel **711** in increments of the width of a single sampling module **709**. A T-slot drive coupler **713** is secured to the elongated coupler shaft **184**.

A sampling module **709** is loaded and ready for use with the drive head **198** of the lancet **183** of the sampling module **709** loaded in the T-slot **714** of the drive coupler **713**. A sampling site **715** is disposed at the distal end **716** of the sampling module **709** disposed about a lancet exit port **717**. The distal end **716** of the sampling module **709** is exposed in a module window **718**, which is an opening in a cartridge cover **721** of the sampling module cartridge **705**. This allows the distal end **716** of the sampling module **709** loaded for use to be exposed to avoid contamination of the cartridge cover **721** with blood from the lancing process.

A reader module **722** is disposed over a distal portion of the sampling module **709** that is loaded in the drive coupler **713** for use and has two contact brushes **724** that are configured to align and make electrical contact with sensor contacts **725** of the sampling module **709** as shown in FIG. **77**. With electrical contact between the sensor contacts **725** and contact brushes **724**, the processor **193** of the controllable driver **179** can read

a signal from an analytical region **726** of the sampling module **709** after a lancing cycle is complete and a blood sample enters the analytical region **726** of the sampling module **709**. The contact brushes **724** can have any suitable configuration that will allow the sampling module belt **708** to pass laterally beneath the contact brushes **724** and reliably make electrical contact with the sampling module **709** loaded in the drive coupler **713** and ready for use. A spring loaded conductive ball bearing is one example of a contact brush **724** that could be used. A resilient conductive strip shaped to press against the inside surface of the flexible polymer sheet **727** along the sensor contact region **728** of the sampling module **709** is another embodiment of a contact brush **724**.

The sampling module cartridge **705** has a supply canister **729** and a receptacle canister **730**. The unused sampling modules of the sampling module belt **708** are disposed within the supply canister **729** and the sampling modules of the sampling module belt **708** that have been used are advanced serially after use into the receptacle canister **730**.

FIG. **77** is a perspective view of a section of the sampling module belt **708** shown in the sampling module cartridge **705** in FIG. **74**. The sampling module belt **708** has a plurality of sampling modules **709** connected in series by a sheet of flexible polymer **727**. The sampling module belt **708** shown in FIG. **77** is formed from a plurality of sampling module body portions **731** that are disposed laterally adjacent each other and connected and sealed by a single sheet of flexible polymer **727**. The flexible polymer sheet **727** can optionally have sensor contacts **725**, flexible electrical conductors **732**, sample sensors **733** or any combination of these elements formed on the inside surface **734** of the flexible polymer sheet **727**. These electrical, optical or chemical elements can be formed by a variety of methods including vapor deposition and the like.

The proximal portion **735** of the flexible polymer sheet **727** has been folded over on itself in order to expose the sensor contacts **725** to the outside surface of the sampling module **709**. This makes electrical contact between the contact brushes **724** of the reader module **722** and the sensor contacts **725** easier to establish as the sampling modules **709** are advanced and loaded into position with the drive coupler **713** of the controllable driver **179** ready for use. The flexible polymer sheet **727** can be secured to the sampling module body portion **731** by adhesive bonding, solvent bonding, ultrasonic thermal bonding or any other suitable method.

FIG. **78** shows a perspective view of a single sampling module **709** of the sampling module belt **708** of FIG. **77** during the assembly phase of the sampling module **709**. The proximal portion **735** of the flexible polymer sheet **727** is being folded over on itself as shown in order to expose the sensor contacts **725** on the inside surface of the flexible polymer sheet **727**. FIG. **79** is a bottom view of a section of the flexible polymer sheet **727** of the sampling module **709** of FIG. **78** illustrating the sensor contacts **725**, flexible conductors **732** and sample sensors **733** deposited on the bottom surface of the flexible polymer sheet **727**.

A lancet **183** is shown disposed within the lancet channel **736** of the sampling module **709** of FIG. **78** as well as within the lancet channels **736** of the sampling modules **709** of the sampling module belt **708** of FIG. **77**. The lancet **183** has a tip **196** and a shaft portion **201** and a drive head **198**. The shaft portion **201** of the lancet slides within the lancet channel **736** of the sampling module **709** and the drive head **198** of the lancet **183** has clearance to move in a proximal and distal direction within the drive head slot **737** of the sampling module **709**. Disposed adjacent the drive head slot **737** and at least partially forming the drive head slot are a first protective strut **737'** and a second protective strut **737"** that are elongated and extend substantially parallel to the lancet **183**.

In one lancet **183** embodiment, the drive head **198** of the lancet **183** can have a width of about 0.9 to about 1.1 mm. The thickness of the drive head **198** of the lancet **183** can be about 0.4 to about 0.6 mm. The drive head slot **714** of the sampling module **709** should have a width that allows the drive head **198** to move freely within the drive head slot **714**. The shaft portion **201** of the lancet **183** can have a transverse dimension of about 50 μm to about 1000 μm. Typically, the shaft portion **201** of the lancet **183** has a round transverse cross section, however, other configurations are contemplated.

The sampling module body portions **731** and the sheet of flexible polymer **727** can both be made of polymethylmethacrylate (PMMA), or any other suitable polymer, such as those discussed above. The dimensions of a typical sampling module body portion **731** can be about 14 to about 18 mm in length, about 4 to about 5 mm in width, and about 1.5 to about 2.5 mm in thickness. In other embodiments, the length of the sample module body portion can be about 0.5 to about 2.0 inch and the transverse dimension can be about 0.1 to about 0.5 inch. The thickness of the flexible polymer sheet **727** can be about 100 to about 150 microns. The distance between adjacent sampling modules **709** in the sampling module belt **708** can vary from about 0.1 mm to about 0.3 mm, and in some embodiments, from about 0.2 to about 0.6.

FIGS. **80** and **81** show a perspective view of the body portion **731** of the sampling module **709** of FIG. **77** without the flexible polymer cover sheet **727** or lancet **183** shown for purposes of illustration. FIG. **81** is an enlarged view of a portion of the body portion **731** of the sampling module **709** of FIG. **80** illustrating the sampling site **715**, sample input cavity **715'**, sample input port **741**, sample flow channel **742**, analytical region **743**, control chamber **744**, vent **762**, lancet channel **736**, lancet channel stopping structures **747** and **748** and lancet guides **749-751** of the sampling module **709**.

The lancet channel **736** has a proximal end **752** and a distal end **753** and includes a series of lancet bearing guide portions **749-751** and sample flow stopping structures **747-748**. The lancet guides **749-751** may be configured to fit closely with the shaft of the lancet **183** and confine the lancet **183** to substantially axial movement. At the distal end **753** of the lancet channel **736** the distal-most lancet guide portion **749** is disposed adjacent the sample input port **741** and includes at its distal-most extremity, the lancet exit port **754** which is disposed adjacent the sample input cavity **715'**. The sample input cavity can have a transverse dimension, depth or both, of about 2 to 5 times the transverse dimension of the lancet **183**, or about 0.2 to about 2 mm, specifically, about 0.4 to about 1.5 mm, and more specifically, about 0.5 to about 1.0 mm. The distal-most lancet guide **749** can have inner transverse dimensions of about 300 to about 350 microns in width and about 300 to about 350 microns in depth. Proximal of the distal-most lancet guide portion **749** is a distal sample flow stop **747** that includes a chamber adjacent the distal-most lancet **749**. The chamber has a transverse dimension that is significantly larger than the transverse dimension of the distal-most lancet guide **749**. The chamber can have a width of about 600 to about 800 microns, and a depth of about 400 to about 600 microns and a length of about 2000 to about 2200 microns. The rapid transition of transverse dimension and cross sectional area between the distal-most lancet bearing guide **749** and the distal sample flow stop **747** interrupts the capillary action that draws a fluid sample through the sample input cavity **715'** and into the lancet channel **736**.

A center lancet bearing guide **750** is disposed proximal of the distal lancet channel stop **747** and can have dimensions

similar to those of the distal-most lancet bearing guide **749**. Proximal of the center lancet guide **750** is a proximal lancet channel stop **748** with a chamber. The dimensions of the proximal lancet channel stop can be the same or similar to those of the distal lancet channel stop **747**. The proximal lancet channel stop **748** can have a width of about 600 to about 800 microns, and a depth of about 400 to about 600 microns and a length of about 2800 to about 3000 microns. Proximal of the proximal lancet channel stop **748** is a proximal lancet guide **751**. The proximal lancet guide **751** can dimensions similar to those of the other lancet guide **749** and **750** portions with inner transverse dimensions of about 300 to about 350 microns in width and about 300 to about 350 microns in depth. Typically, the transverse dimension of the lancet guides **749-751** are about 10 percent larger than the transverse dimension of the shaft portion **201** of the lancet **183** that the lancet guides **749-751** are configured to guide.

A proximal fracturable seal (not shown) can be positioned between the proximal lancet guide **751** and the shaft portion **201** of the lancet **183** that seals the chamber of the proximal lancet channel stop **748** from the outside environment. The fracturable seal seals the chamber of the proximal lancet channel stop **748** and other interior portions of the sample chamber from the outside environment when the sampling module **709** is stored for use. The fracturable seal remains intact until the lancet **183** is driven distally during a lancet cycle at which point the seal is broken and the sterile interior portion of the sample chamber is exposed and ready to accept input of a liquid sample, such as a sample of blood. A distal fracturable seal (not shown) can be disposed between the lancet **183** and the distal-most lancet guide **749** of the sampling module **709** to seal the distal end **753** of the lancet channel **736** and sample input port **741** to maintain sterility of the interior portion of the sampling module **709** until the lancet **183** is driven forward during a lancing cycle.

Adjacent the lancet exit port **754** within the sample input cavity **715'** is the sample input port **741** that is configured to accept a fluid sample that emanates into the sample input cavity **715'** from target tissue **233** at a lancing site after a lancing cycle. The dimensions of the sample input port **741** can a depth of about 60 to about 70 microns, a width of about 400 to about 600 microns. The sample input cavity can have a transverse dimension of about 2 to about 5 times the transverse dimension of the lancet **183**, or about 400 to about 1000 microns. The sample input cavity serves to accept a fluid sample as it emanates from lanced tissue and direct the fluid sample to the sample input port **741** and thereafter the sample flow channel **742**. The sample flow channel **742** is disposed between and in fluid communication with the sample input port **741** and the analytical region **743**. The transverse dimensions of the sample flow channel **742** can be the same as the transverse dimensions of the sample input port **741** with a depth of about 60 to about 70 microns, a width of about 400 to about 600 microns. The length of the sample flow channel **742** can be about 900 to about 1100 microns. Thus, in use, target tissue is disposed on the sampling site **715** and a lancing cycle initiated. Once the target tissue **233** has been lanced and the sample begins to flow therefrom, the sample enters the sample input cavity **715'** and then the sample input port **741**. The sample input cavity **715'** may be sized and configured to facilitate sampling success by applying pressure to a perimeter of target tissue **233** before, during and after the lancing cycle and hold the wound track open after the lancing cycle to allow blood or other fluid to flow from the wound track and into the sample input cavity **715'**. From the sample input port **741**, the sample in then drawn by capillary or other forces through the sample flow channel **742** and into the analytical region **743** and ultimately into the control chamber **744**. The control chamber **744** may be used to provide indirect confirmation of a complete fill of the analytical region **743** by a sample fluid. If a fluid sample has been detected in the control chamber **744**, this confirms that the sample has completely filled the analytical region **743**. Thus, sample detectors may be positioned within the control chamber **744** to confirm filling of the analytical region **743**.

The analytical region **743** is disposed between and in fluid communication with the sample flow channel **742** and the control chamber **744**. The analytical region **743** can have a depth of about 60 to about 70 microns, a width of about 900 to about 1100 microns and a length of about 5 to about 6 mm. A typical volume for the analytical region **743** can be about 380 to about 400 nanoliters. The control chamber **744** is disposed adjacent to and proximal of the analytical region **743** and can have a transverse dimension or diameter of about 900 to about 1100 microns and a depth of about 60 to about 70 microns.

The control chamber **744** is vented to the chamber of the proximal lancet channel stop **748** by a vent that is disposed between and in fluid communication with the control chamber **744** and the chamber of the proximal lancet channel stop **748**. Vent **762** can have transverse dimensions that are the same or similar to those of the sample flow channel **742** disposed between the analytical region **743** and the sample input port **741**. Any of the interior surfaces of the sample input port **741**, sample flow channels **742** and **762**, analytical region **743**, vents **745** or control chamber **744** can be coated with a coating that promotes capillary action. A hydrophilic coating such as a detergent is an example of such a coating.

The analytical region **743** accommodates a blood sample that travels by capillary action from the sampling site **715** through the sample input cavity **715'** and into the sample input port **741**, through the sample flow channel **742** and into the analytical region **743**. The blood can then travel into the control chamber **744**. The control chamber **744** and analytical region **743** are both vented by the vent **762** that allows gases to escape and prevents bubble formation and entrapment of a sample in the analytical region **743** and control chamber **744**. Note that, in addition to capillary action, flow of a blood sample into the analytical region **743** can be facilitated or accomplished by application of vacuum, mechanical pumping or any other suitable method.

Once a blood sample is disposed within the analytical region **743**, analytical testing can be performed on the sample with the results transmitted to the processor **193** by electrical conductors **732**, optically or by any other suitable method or means. In some embodiments, it may be desirable to confirm that the blood sample has filled the analytical region **743** and that an appropriate amount of sample is present in the chamber in order to carry out the analysis on the sample.

Confirmation of sample arrival in either the analytical region **743** or the control chamber **744** can be achieved visually, through the flexible polymer sheet **727** which can be transparent. However, it may be desirable in some embodiments to use a very small amount of blood sample in order to reduce the pain and discomfort to the patient during the lancing cycle. For sampling module **709** embodiments such as described here, having the sample input cavity **715'** and sample input port **741** adjacent the lancet exit port **754** allows the blood sample to be collected from the patient's skin **233** without the need for moving the sampling module **709** between the lancing cycle and the sample collection process. As such, the user does not need to be able to see the sample in order to have it transferred into the sampling module **709**. Because of this, the position of the sample input cavity **715'**

and the sample input port **741** adjacent the lancet exit port **754** allows a very small amount of sample to be reliably obtained and tested.

Samples on the order of tens of nanoliters, such as about 10 to about 50 nanoliters can be reliably collected and tested with a sampling module **709**. This size of blood sample is too small to see and reliably verify visually. Therefore, it is necessary to have another method to confirm the presence of the blood sample in the analytical region **743**. Sample sensors **733**, such as the thermal sample sensors discussed above can positioned in the analytical region **743** or control chamber **744** to confirm the arrival of an appropriate amount of blood sample.

In addition, optical methods, such as spectroscopic analysis of the contents of the analytical region **743** or control chamber **744** could be used to confirm arrival of the blood sample. Other methods such as electrical detection could also be used and these same detection methods can also be disposed anywhere along the sample flow path through the sampling module **709** to confirm the position or progress of the sample (or samples) as it moves along the flow path as indicated by the arrows **763** in FIG. **81**. The detection methods described above can also be useful for analytical methods requiring an accurate start time.

The requirement for having an accurate start time for an analytical method can in turn require rapid filling of an analytical region **743** because many analytical processes begin once the blood sample enters the analytical region **743**. If the analytical region **743** takes too long to fill, the portion of the blood sample that first enters the analytical region **743** will have been tested for a longer time that the last portion of the sample to enter the analytical region **743** which can result in inaccurate results. Therefore, it may be desirable in these circumstances to have the blood sample flow first to a reservoir, filling the reservoir, and then have the sample rapidly flow all at once from the reservoir into the analytical region **743**.

In one embodiment of the sampling module **709**, the analytical region **743** can have a transverse cross section that is substantially greater than a transverse cross section of the control chamber **744**. The change in transverse cross section can be accomplished by restrictions in the lateral transverse dimension of the control chamber **744** versus the analytical region **743**, by step decreases in the depth of the control chamber **744**, or any other suitable method. Such a step between the analytical region **743** and the control chamber **744** is shown in FIG. **81**. In such an embodiment, the analytical region **743** can behave as a sample reservoir and the control chamber **744** as an analytical region that requires rapid or nearly instantaneous filling in order to have a consistent analysis start time. The analytical region **743** fills by a flow of sample from the sample flow channel **742** until the analytical region is full and the sample reaches the step decrease in chamber depth at the boundary with the control chamber **744**. Once the sample reaches the step decrease in cross sectional area of the control chamber **744**, the sample then rapidly fills the control chamber **744** by virtue of the enhanced capillary action of the reduced cross sectional area of the control chamber **744**. The rapid filling of the control chamber allows any analytical process initiated by the presence of sample to be carried out in the control chamber **744** with a reliable start time for the analytical process for the entire sample of the control chamber **744**.

Filling by capillary force is passive. It can also be useful for some types of analytical testing to discard the first portion of a sample that enters the sampling module **709**, such as the case where there may be interstitial fluid contamination of the first portion of the sample. Such a contaminated portion of a sample can be discarded by having a blind channel or reservoir that draws the sample by capillary action into a side sample flow channel (not shown) until the side sample flow channel or reservoir in fluid communication therewith, is full. The remainder of the sample can then proceed to a sample flow channel adjacent the blind sample flow channel to the analytical region **743**.

For some types of analytical testing, it may be advantageous to have multiple analytical regions **743** in a single sampling module **709**. In this way multiple iterations of the same type of analysis could be performed in order to derive some statistical information, e.g. averages, variation or confirmation of a given test or multiple tests measuring various different parameters could be performed in different analytical regions **743** in the same sampling module **709** filled with a blood sample from a single lancing cycle.

FIG. **82** is an enlarged elevational view of a portion of an alternative embodiment of a sampling module **766** having a plurality of small volume analytical regions **767**. The small volume analytical regions **767** can have dimensions of about 40 to about 60 microns in width in both directions and a depth that yields a volume for each analytical region **767** of about 1 nanoliter to about 100 nanoliters, specifically about 10 nanoliters to about 50 nanoliters. The array of small volume analytical regions **767** can be filled by capillary action through a sample flow channel **768** that branches at a first branch point **769**, a second branch point **770** and a third branch point **771**. Each small volume analytical region **767** can be used to perform a like analytical test or a variety of different tests can be performed in the various analytical regions **767**.

For some analytical tests, the analytical regions **767** must have maintain a very accurate volume, as some of the analytical tests that can be performed on a blood sample are volume dependent. Some analytical testing methods detect glucose levels by measuring the rate or kinetic of glucose consumption. Blood volume required for these tests is on the order of about 1 to about 3 microliters. The kinetic analysis is not sensitive to variations in the volume of the blood sample as it depends on the concentration of glucose in the relatively large volume sample with the concentration of glucose remaining essentially constant throughout the analysis. Because this type of analysis dynamically consumes glucose during the testing, it is not suitable for use with small samples, e.g. samples on the order of tens of nanoliters where the consumption of glucose would alter the concentration of glucose.

Another analytical method uses coulomb metric measurement of glucose concentration. This method is accurate if the sample volume is less than about 1 microliter and the volume of the analytical region is precisely controlled. The accuracy and the speed of the method is dependent on the small and precisely known volume of the analytical region **767** because the rate of the analysis is volume dependent and large volumes slow the reaction time and negatively impact the accuracy of the measurement.

Another analytical method uses an optical fluorescence decay measurement that allows very small sample volumes to be analyzed. This method also requires that the volume of the analytical region **767** be precisely controlled. The small volume analytical regions **767** discussed above can meet the criteria of maintaining small accurately controlled volumes when the small volume analytical regions **767** are formed using precision manufacturing techniques. Accurately formed small volume analytical regions **767** can be formed in materials such as PMMA by methods such as molding and stamping. Machining and etching, either by chemical or laser

processes can also be used. Vapor deposition and lithography can also be used to achieve the desired results.

The sampling modules **709** and **766** discussed above all are directed to embodiments that both house the lancet **183** and have the ability to collect and analyze a sample. In some embodiments of a sampling module, the lancet **183** may be housed and a sample collected in a sample reservoir without any analytical function. In such an embodiment, the analysis of the sample in the sample reservoir may be carried out by transferring the sample from the reservoir to a separate analyzer. In addition, some modules only serve to house a lancet **183** without any sample acquisition capability at all. The body portion **774** of such a lancet module **775** is shown in FIG. **83**. The lancet module **775** has an outer structure similar to that of the sampling modules **709** and **766** discussed above, and can be made from the same or similar materials.

A flexible polymer sheet **727** (not shown) can be used to cover the face of the lancet module **775** and contain the lancet **183** in a lancet channel **776** that extends longitudinally in the lancet module body portion **774**. The flexible sheet of polymer **727** can be from the same material and have the same dimensions as the flexible polymer sheet **727** discussed above. Note that the proximal portion of the flexible polymer sheet **727** need not be folded over on itself because there are no sensor contacts **725** to expose. The flexible polymer sheet **727** in such a lancet module **775** serves only to confine the lancet **183** in the lancet channel **776**. The lancet module **775** can be configured in a lancet module belt, similar to the sampling module belt **708** discussed above with the flexible polymer sheet **727** acting as the belt. A drive head slot **777** is dispose proximal of the lancet channel **776**.

With regard to the tissue penetration sampling device **180** of FIG. **74**, use of the device **180** begins with the loading of a sampling module cartridge **705** into the controllable driver housing **706** so as to couple the cartridge **705** to the controllable driver housing **706** and engage the sampling module belt **708** with the ratchet drive **707** and drive coupler **713** of the controllable driver **179**. The drive coupler **713** can have a T-slot configuration such as shown in FIGS. **84** and **85**. The distal end of the elongate coupler shaft **184** is secured to the drive coupler **713** which has a main body portion **779**, a first and second guide ramp **780** and **781** and a T-slot **714** disposed within the main body portion **779**. The T-slot **714** is configured to accept the drive head **198** of the lancet **183**. After the sampling module cartridge **705** is loaded into the controllable driver housing **706**, the sampling module belt **708** is advanced laterally until the drive head **198** of a lancet **183** of one of the sampling modules **709** is fed into the drive coupler **713** as shown in FIGS. **86-88**. FIGS. **86-88** also illustrate a lancet crimp device **783** that bends the shaft portion **201** of a used lancet **183** that is adjacent to the drive coupler **713**. This prevents the used lancet **183** from moving out through the module body **731** and being reused.

As the sampling modules **709** of the sampling module belt **708** are used sequentially, they are advanced laterally one at a time into the receptacle canister **730** where they are stored until the entire sampling module belt **708** is consumed. The receptacle canister **730** can then be properly disposed of in accordance with proper techniques for disposal of blood-contaminated waste. The sampling module cartridge **705** allows the user to perform multiple testing operations conveniently without being unnecessarily exposed to blood waste products and need only dispose of one cartridge after many uses instead of having to dispose of a contaminated lancet **183** or module **709** after each use.

FIGS. **89** and **90** illustrate alternative embodiments of sampling module cartridges. FIG. **89** shows a sampling module cartridge **784** in a carousel configuration with adjacent sampling modules **785** connected rigidly and with sensor contacts **786** from the analytical regions of the various sampling modules **785** disposed near an inner radius **787** of the carousel. The sampling modules **785** of the sampling module cartridge **784** are advanced through a drive coupler **713** but in a circular as opposed to a linear fashion.

FIG. **90** illustrates a block of sampling modules **788** in a four by eight matrix. The drive head **198** of the lancets **183** of the sampling modules **789** shown in FIG. **90** are engaged and driven using a different method from that of the drive coupler **713** discussed above. The drive heads **198** of the lancets **183** have an adhesive coating **790** that mates with and secures to the drive coupler **791** of the lancet driver **179**, which can be any of the drivers, including controllable drivers, discussed above.

The distal end **792** of the drive coupler **791** contacts and sticks to the adhesive **790** of proximal surface of the drive head **198** of the lancet **183** during the beginning of the lancet cycle. The driver coupler **791** pushes the lancet **183** into the target tissue **237** to a desired depth of penetration and stops. The drive coupler **791** then retracts the lancet **183** from the tissue **233** using the adhesive contact between the proximal surface of the drive head **198** of the lancet **183** and distal end surface of the drive coupler **791**, which is shaped to mate with the proximal surface.

At the top of the retraction stroke, a pair of hooked members **793** which are secured to the sampling module **789** engage the proximal surface of the drive head **198** and prevent any further retrograde motion by the drive head **198** and lancet **183**. As a result, the drive coupler **791** breaks the adhesive bond with the drive head **198** and can then be advanced by an indexing operation to the next sampling module **789** to be used.

FIG. **91** is a side view of an alternative embodiment of a drive coupler **796** having a lateral slot **797** configured to accept the L-shaped drive head **798** of the lancet **799** that is disposed within a lancet module **800** and shown with the L-shaped drive head **798** loaded in the lateral slot **797**. FIG. **92** is an exploded view of the drive coupler **796**, lancet **799** with L-shaped drive head **798** and lancet module **800** of FIG. **91**. This type of drive coupler **796** and drive head **798** arrangements could be substituted for the configuration discussed above with regard to FIGS. **84-88**. The L-shaped embodiment of the drive head **798** may be a less expensive option for producing a coupling arrangement that allows serial advancement of a sampling module belt or lancet module belt through the drive coupler **796** of a lancet driver, such as a controllable lancet driver **179**.

For some embodiments of multiple lancing devices **180**, it may be desirable to have a high capacity-lancing device that does not require a lancet module **775** in order to house the lancets **183** stored in a cartridge. Eliminating the lancet modules **775** from a multiple lancet device **180** allows for a higher capacity cartridge because the volume of the cartridge is not taken up with the bulk of multiple modules **775**. FIGS. **93-96** illustrate a high capacity lancet cartridge coupled to a belt advance mechanism **804**. The belt advance mechanism **804** is secured to a controlled driver **179** housing which contains a controlled electromagnetic driver.

The lancet cartridge **803** has a supply canister **805** and a receptacle canister **806**. A lancet belt **807** is disposed within the supply canister **805**. The lancet belt **807** contains multiple sterile lancets **183** with the shaft portion **201** of the lancets **183** disposed between the adhesive surface **808** of a first carrier tape **809** and the adhesive surface **810** of a second carrier tape **811** with the adhesive surfaces **808** and **810**

pressed together around the shaft portion **201** of the lancets **183** to hold them securely in the lancet belt **807**. The lancets **183** have drive heads **198** which are configured to be laterally engaged with a drive coupler **713**, which is secured to an elongate coupler shaft **184** of the controllable driver **179**.

The belt advance mechanism **804** includes a first cog roller **814** and a second cog roller **815** that have synchronized rotational motion and are advanced in unison in an incremental indexed motion. The indexed motion of the first and second cog rollers **814** and **815** advances the lancet belt **807** in units of distance equal to the distance between the lancets **183** disposed in the lancet belt **807**. The belt advance mechanism **804** also includes a first take-up roller **816** and a second take-up roller **817** that are configured to take up slack in the first and second carrier tapes **809** and **811** respectively.

When a lancet belt cartridge **803** is loaded in the belt advance mechanism **804**, a lead portion **818** of the first carrier tape **809** is disposed between a first cog roller **814** and a second cog roller **815** of the belt advance mechanism **804**. The lead portion **818** of the first carrier tape **809** wraps around the outer surface **819** of the first turning roller **827**, and again engages roller **814** with the cogs **820** of the first cog roller **814** engaged with mating holes **821** in the first carrier tape **809**. The lead portion **818** of the first carrier tape **809** is then secured to a first take-up roller **816**. A lead portion **822** of the second carrier tape **811** is also disposed between the first cog roller **814** and second cog roller **815** and is wrapped around an outer surface **823** of the second turning roller **828**, and again engages roller **815** with the cogs **826'** of the second cog roller **815** engaged in with mating holes **825** of the second carrier tape **811**. The lead portion **822** of the second carrier tape **811** is thereafter secured to a second take-up roller **817**.

As the first and second cog rollers **814** and **815** are advanced, the turning rollers **827** and **828** peel the first and second carrier tapes **809** and **811** apart and expose a lancet **183**. The added length or slack of the portions of the first and second carrier tapes **809** and **811** produced from the advancement of the first and second cog rollers **814** and **815** is taken up by the first and second take-up rollers **816** and **817**. As a lancet **183** is peeled out of the first and second carrier tapes **809** and **811**, the exposed lancet **183** is captured by a lancet guide wheel **826'** of the belt advance mechanism **804**, shown in FIG. **96**, which is synchronized with the first and second cog rollers **814** and **815**. The lancet guide wheel **826'** then advances the lancet **183** laterally until the drive head **198** of the lancet **183** is loaded into the drive coupler **713** of the controllable driver **179**. The controllable driver **179** can then be activated driving the lancet **183** into the target tissue **233** and retracted to complete the lancing cycle.

Once the lancing cycle is complete, the belt advance mechanism **804** can once again be activated which rotates the lancet guide wheel **826** and advances the used lancet **183** laterally and into the receptacle canister **806**. At the same time, a new unused lancet **183** is loaded into the drive coupler **713** and readied for the next lancing cycle. This repeating sequential use of the multiple lancing device **180** continues until all lancets **183** in the lancet belt **807** have been used and disposed of in the receptacle canister **806**. After the last lancet **183** has been consumed, the lancet belt cartridge **803** can then be removed and disposed of without exposing the user to any blood contaminated materials.

The belt advance mechanism **804** can be activated by a variety of methods, including a motorized drive or a manually operated thumbwheel which is coupled to the first and second cog rollers **814** and **815** and lancet guide wheel **826**.

Although discussion of the devices described herein has been directed primarily to substantially painless methods and devices for access to capillary blood of a patient, there are many other uses for the devices and methods. For example, the tissue penetration devices discussed herein could be used for substantially painless delivery of small amounts of drugs, or other bioactive agents such as gene therapy agents, vectors, radioactive sources etc. As such, it is contemplated that the tissue penetration devices and lancet devices discussed herein could be used to delivery agents to positions within a patient's body as well as taking materials from a patient's body such as blood, lymph fluid, spinal fluid and the like. Drugs delivered may include analgesics that would further reduce the pain perceived by the patient upon penetration of the patient's body tissue, as well as anticoagulants that may facilitate the successful acquisition of a blood sample upon penetration of the patient's tissue.

Referring to FIGS. **97-101**, a device for injecting a drug or other useful material into the tissue of a patient is illustrated. The ability to localize an injection or vaccine to a specific site within a tissue, layers of tissue or organ within the body can be important. For example, epithelial tumors can be treated by injection of antigens, cytokine, or colony stimulating factor by hypodermic needle or high-pressure injection sufficient for the antigen to enter at least the epidermis or the dermis of a patient. Often, the efficacy of a drug or combination drug therapy depends on targeted delivery to localized areas thus affecting treatment outcome.

The ability to accurately deliver drugs or vaccinations to a specific depth within the skin or tissue layer may avoid wastage of expensive drug therapies therefore impacting cost effectiveness of a particular treatment. In addition, the ability to deliver a drug or other agent to a precise depth can be a clear advantage where the outcome of treatment depends on precise localized drug delivery (such as with the treatment of intralesional immunotherapy). Also, rapid insertion velocity of a hypodermic needle to a precise predetermined depth in a patient's skin is expected to reduce pain of insertion of the needle into the skin. Rapid insertion and penetration depth of a hypodermic needle, or any other suitable elongated delivery device suitable for penetrating tissue, can be accurately controlled by virtue of a position feedback loop of a controllable driver coupled to the hypodermic needle.

FIG. **97** illustrates **901** distal end **901** of a hypodermic needle **902** being driven into layers of skin tissue **903** by an electromagnetic controllable driver **904**. The electromagnetic controllable driver **904** of FIG. **79** can have any suitable configuration, such as the configuration of electromagnetic controllable drivers discussed above. The layers of skin **903** being penetrated include the stratum corneum **905**, the stratum lucidum **906**, the stratum granulosum **907**, the stratum spinosum **908**, the stratum basale **909** and the dermis **911**. The thickness of the stratum corneum **905** is typically about 300 micrometers in thickness. The portion of the epidermis excluding the stratum corneum **905** includes the stratum lucidum **906**, stratum granulosum **907**, and stratum basale can be about 200 micrometers in thickness. The dermis can be about 1000 micrometers in thickness. In FIG. **97**, an outlet port **912** of the hypodermic needle **902** is shown disposed approximately in the stratum spinosum **908** layer of the skin **903** injecting an agent **913** into the stratum spinosum **908**.

FIGS. **98-101** illustrate an agent injection module **915** including an injection member **916**, that includes a collapsible canister **917** and the hypodermic needle **902**, that may be driven or actuated by a controllable driver, such as any of the controllable drivers discussed above, to drive the hypodermic needle into the skin **903** for injection of drugs, vaccines or the like. The agent injection module **915** has a reservoir, which can be in the form of the collapsible canister **917** having a

main chamber **918**, such as shown in FIG. **98**, for the drug or vaccine **913** to be injected. A cassette of a plurality of agent injection modules **915** (not shown) may provide a series of metered doses for long-term medication needs. Such a cassette may be configured similarly to the module cassettes discussed above. Agent injection modules **915** and needles **902** may be disposable, avoiding biohazard concerns from unspent drug or used hypodermic needles **902**. The geometry of the cutting facets **921** of the hypodermic needle shown in FIG. **79**, may be the same or similar to the geometry of the cutting facets of the lancet **183** discussed above.

Inherent in the position and velocity control system of some embodiments of a controllable driver is the ability to precisely determine the position or penetration depth of the hypodermic needle **902** relative to the controllable driver or layers of target tissue or skin **903** being penetrated. For embodiments of controllable drivers that use optical encoders for position sensors, such as an Agilent HEDS 9200 series, and using a four edge detection algorithm, it is possible to achieve an in plane spatial resolution of +/−17 μm in depth. If a total tissue penetration stroke is about 3 mm in length, such as might be used for intradermal or subcutaneous injection, a total of 88 position points can be resolved along the penetration stroke. A spatial resolution this fine allows precise placement of a distal tip **901** or outlet port **912** of the hypodermic needle **902** with respect to the layers of the skin **903** during delivery of the agent or drug **913**. In some embodiments, a displacement accuracy of better than about 200 microns can be achieved, in others a displacement accuracy of better than about 40 microns can be achieved.

The agent injection module **915** includes the injection member **916** which includes the hypodermic needle **902** and drug reservoir or collapsible canister **917**, which may couple to an elongated coupler shaft **184** via a drive coupler **185** as shown. The hypodermic needle **902** can be driven to a desired penetration depth, and then the drug or other agent **913**, such as a vaccine, is passed into an inlet port **922** of the needle **902** through a central lumen **923** of the hypodermic needle **902** as shown by arrow **924**, shown in FIG. **98**, and out of the outlet port **912** at the distal end **901** of the hypodermic needle **902**, shown in FIG. **97**.

Drug or agent delivery can occur at the point of maximum penetration, or following retraction of the hypodermic needle **902**. In some embodiments, it may be desirable to deliver the drug or agent **913** during insertion of the hypodermic needle **902**. Drug or agent delivery can continue as the hypodermic needle **902** is being withdrawn (this is commonly the practice during anesthesia in dental work). Alternatively drug delivery can occur while the needle **902** is stationary during any part of the retraction phase.

The hollow hypodermic needle **902** is fitted with the collapsible canister **917** containing a drug or other agent **913** to be dispensed. The walls **928** of this collapsible canister **917** can be made of a soft resilient material such as plastic, rubber, or any other suitable material. A distal plate **925** is disposed at the distal end **926** of the collapsible canister is fixed securely to the shaft **927** of the hypodermic needle proximal of the distal tip **901** of the hypodermic needle **902**. The distal plate **925** is sealed and secured to the shaft **927** of the hypodermic needle **902** to prevent leakage of the medication **913** from the collapsible canister **917**.

A proximal plate **931** disposed at a proximal end **932** of the collapsible canister **917** is slidingly fitted to a proximal portion **933** of the shaft **927** of the hypodermic needle **902** with a sliding seal **934**. The sliding seal **934** prevents leakage of the agent or medication **913** between the seal **934** and an outside surface of the shaft **927** of the hypodermic needle **902**. The sliding seal allows the proximal plate **931** of the collapsible canister **917** to slide axially along the needle **902** relative to the distal plate **925** of the collapsible canister **917**. A drug dose may be loaded into the main chamber **918** of the collapsible canister **917** during manufacture, and the entire assembly protected during shipping and storage by packaging and guide fins **935** surrounding the drive head slot **936** of the agent injection module **915**.

An injection cycle may begin when the agent injection module **915** is loaded into a ratchet advance mechanism (not shown), and registered at a drive position with a drive head **937** of the hypodermic needle **902** engaged in the drive coupler **185**. The position of the hypodermic needle **902** and collapsible canister **917** in this ready position is shown in FIG. **99**.

Once the drive head **937** of the agent injection module **915** is loaded into the driver coupler **185**, the controllable driver can then be used to launch the injection member **916** including the hypodermic needle **902** and collapsible canister **917** towards and into the patient's tissue **903** at a high velocity to a pre-determined depth into the patient's skin or other organ. The velocity of the injection member **916** at the point of contact with the patient's skin **903** or other tissue can be up to about 10 meters per second for some embodiments, specifically, about 2 to about 5 m/s. In some embodiments, the velocity of the injection member **916** may be about 2 to about 10 m/s at the point of contact with the patient's skin **903**. As the collapsible canister **917** moves with the hypodermic needle **902**, the proximal plate **931** of the collapsible canister **917** passes between two latch springs **938** of module body **939** that snap in behind the proximal plate **931** when the collapsible canister **917** reaches the end of the penetration stroke, as shown in FIG. **100**.

The controllable driver then reverses, applies force in the opposite retrograde direction and begins to slowly (relative to the velocity of the penetration stroke) retract the hypodermic needle **902**. The hypodermic needle **902** slides through the sliding seal **934** of the collapsible canister **917** while carrying the distal plate **925** of the collapsible canister with it in a proximal direction relative to the proximal plate **931** of the collapsible canister **917**. This relative motion between the distal plate **925** of the collapsible canister **917** and the proximal plate **931** of the collapsible canister **917** causes the volume of the main chamber **918** to decrease. The decreasing volume of the main chamber **918** forces the drug or other agent **913** disposed within the main chamber **918** of the collapsible canister **917** out of the main chamber **918** into the inlet port **922** in the shaft **927** of the hypodermic needle **902**. The inlet port **922** of the hypodermic needle **902** is disposed within an in fluid communication with the main chamber **918** of the collapsible canister **917** as shown in FIG. **80**. The drug or agent then passes through the central lumen **923** of the hollow shaft **927** of the hypodermic needle **902** and is then dispensed from the output port **912** at the distal end **901** of the hypodermic needle **902** into the target tissue **903**. The rate of perfusion of the drug or other agent **913** may be determined by an inside diameter or transverse dimension of the collapsible canister **917**. The rate of perfusion may also be determined by the viscosity of the drug or agent **913** being delivered, the transverse dimension or diameter of the central lumen **923**, the input port **922**, or the output port **912** of the hypodermic needle **902**, as well as other parameters.

During the proximal retrograde retraction stroke of the hypodermic needle **902**, drug delivery continues until the main chamber **918** of the collapsible canister **917** is fully collapsed as shown in FIG. **101**. At this point, the drive coupler **185** may continue to be retracted until the drive head

937 of the hypodermic needle 902 breaks free or the distal seal 941 between the distal plate 925 of the chamber and the hypodermic needle 902 fails, allowing the drive coupler 185 to return to a starting position. The distal tip 901 of the hypodermic needle 902 can be driven to a precise penetration depth within the tissue 903 of the patient using any of the methods or devices discussed above with regard to achieving a desired penetration depth using a controllable driver or any other suitable driver.

In another embodiment, the agent injection module 915 is loaded into a ratchet advance mechanism that includes an adjustable or movable distal stage or surface (not shown) that positions the agent injection 915 module relative to a skin contact point or surface 942. In this way, an agent delivery module 915 having a penetration stroke of predetermined fixed length, such as shown in FIGS. 99-101, reaches a presettable penetration depth. The movable stage remains stationary during a drug delivery cycle. In a variation of this embodiment, the moveable stage motion may be coordinated with a withdrawal of the hypodermic needle 902 to further control the depth of drug delivery.

In another embodiment, the latch springs 938 shown in the agent injection module 915 of FIGS. 99-101 may be molded with a number of ratchet teeth (not shown) that engage the proximal end 932 of the collapsible canister 917 as it passes by on the penetration stroke. If the predetermined depth of penetration is less than the full stroke, the intermediate teeth retain the proximal end 932 of the collapsible canister 917 during the withdrawal stroke in order to collapse the main chamber 918 of the collapsible canister 917 and dispense the drug or agent 913 as discussed above.

In yet another embodiment, drive fingers (not shown) are secured to an actuation mechanism (not shown) and replace the latch springs 938. The actuation mechanism is driven electronically in conjunction with the controllable driver by a processor or controller, such as the processor 60 discussed above, to control the rate and amount of drug delivered anywhere in the actuation cycle. This embodiment allows the delivery of medication during the actuation cycle as well as the retraction cycle.

Inherent in the position and velocity control system of a controllable driver is the ability to precisely define the position in space of the hypodermic needle 902, allowing finite placement of the hypodermic needle in the skin 903 for injection of drugs, vaccines or the like. Drug delivery can be discrete or continuous depending on the need.

FIGS. 102-106 illustrate an embodiment of a cartridge 945 that may be used for sampling that has both a lancet cartridge body 946 and an sampling cartridge body 947. The sampling cartridge body 947 includes a plurality of sampling module portions 948 that are disposed radially from a longitudinal axis 949 of the sampling cartridge body 947. The lancet cartridge body 946 includes a plurality of lancet module portions 950 that have a lancet channel 951 with a lancet 183 slidably disposed therein. The lancet module portions 950 are disposed radially from a longitudinal axis 952 of the lancet cartridge body 946.

The sampling cartridge body 947 and lancet cartridge body 946 are disposed adjacent each other in an operative configuration such that each lancet module portion 950 can be readily aligned in a functional arrangement with each sampling module portion 948. In the embodiment shown in FIGS. 102-106, the sampling cartridge body 947 is rotatable with respect to the lancet cartridge body 946 in order to align any lancet channel 951 and corresponding lancet 183 of the lancet cartridge body 946 with any of the lancet channels 953 of the sampling module portions 948 of the sampling cartridge body 947. The operative configuration of the relative location and rotatable coupling of the sampling cartridge body 947 and lancet cartridge body 946 allow ready alignment of lancet channels 951 and 953 in order to achieve a functional arrangement of a particular lancet module portion 950 and sampling module portion 948. For the embodiment shown, the relative motion used to align the particular lancet module portions 950 and sampling module portions 948 is confined to a single degree of freedom via relative rotation.

The ability of the cartridge 945 to align the various sampling module 948 portions and lancet module portions 950 allows the user to use a single lancet 183 of a particular lancet module portion 950 with multiple sampling module portions 948 of the sampling cartridge body 947. In addition, multiple different lancets 183 of lancet module portions 950 could be used to obtain a sample in a single sampling module portion 948 of the sampling cartridge body 947 if a fresh unused lancet 183 is required or desired for each lancing action and previous lancing cycles have been unsuccessful in obtaining a usable sample.

FIG. 102 shows an exploded view in perspective of the cartridge 945, which has a proximal end portion 954 and a distal end portion 955. The lancet cartridge body 946 is disposed at the proximal end portion 954 of the cartridge 945 and has a plurality of lancet module portions 950, such as the lancet module portion 950 shown in FIG. 103. Each lancet module portion 950 has a lancet channel 951 with a lancet 183 slidably disposed within the lancet channel 951. The lancet channels 951 are substantially parallel to the longitudinal axis 952 of the lancet cartridge body 946. The lancets 183 shown have a drive head 198, shaft portion 201 and sharpened tip 196. The drive head 198 of the lancets are configured to couple to a drive coupler (not shown), such as the drive coupler 185 discussed above.

The lancets 183 are free to slide in the respective lancet channels 951 and are nominally disposed with the sharpened tip 196 withdrawn into the lancet channel 951 to protect the tip 196 and allow relative rotational motion between the lancet cartridge body 946 and the sampling cartridge body 947 as shown by arrow 956 and arrow 957 in FIG. 102. The radial center of each lancet channel 951 is disposed a fixed, known radial distance from the longitudinal axis 952 of the lancet cartridge body 946 and a longitudinal axis 958 of the cartridge 945. By disposing each lancet channel 951 a fixed known radial distance from the longitudinal axes 952 and 958 of the lancet cartridge body 946 and cartridge 945, the lancet channels 951 can then be readily and repeatably aligned in a functional arrangement with lancet channels 953 of the sampling cartridge body 947. The lancet cartridge body 946 rotates about a removable pivot shaft 959 which has a longitudinal axis 960 that is coaxial with the longitudinal axes 952 and 950 of the lancet cartridge body 946 and cartridge 945.

The sampling cartridge body 947 is disposed at the distal end portion 955 of the cartridge and has a plurality of sampling module portions 948 disposed radially about the longitudinal axis 949 of the sampling cartridge body 947. The longitudinal axis 949 of the sampling cartridge body 947 is coaxial with the longitudinal axes 952, 958 and 960 of the lancet cartridge body 946, cartridge 945 and pivot shaft 959. The sampling cartridge body 947 may also rotate about the pivot shaft 959. In order to achieve precise relative motion between the lancet cartridge body 946 and the sampling cartridge body 947, one or both of the cartridge bodies 946 and 947 must be rotatable about the pivot shaft 959, however, it is not necessary for both to be rotatable about the pivot shaft 959, that is, one of the cartridge bodies 946 and 947 may be secured, permanently or removably, to the pivot shaft 959.

The sampling cartridge body **947** includes a base **961** and a cover sheet **962** that covers a proximal surface **963** of the base forming a fluid tight seal. Each sampling module portion **948** of the sampling cartridge body **947**, such as the sampling module portion **948** shown in FIG. **104** (without the cover sheet for clarity of illustration), has a sample reservoir **964** and a lancet channel **953**. The sample reservoir **964** has a vent **965** at an outward radial end that allows the sample reservoir **964** to readily fill with a fluid sample. The sample reservoir **964** is in fluid communication with the respective lancet channel **953** which extends substantially parallel to the longitudinal axis **949** of the sampling cartridge body **947**. The lancet channel **953** is disposed at the inward radial end of the sample reservoir **964**.

The lancet channels **953** of the sample cartridge body **947** allow passage of the lancet **183** and also function as a sample flow channel **966** extending from an inlet port **967** of the lancet channel **953**, shown in FIG. **106**, to the sample reservoir **964**. Note that a proximal surface **968** of the cover sheet **962** is spatially separated from a distal surface **969** of the lancet cartridge body **946** at the lancet channel site in order to prevent any fluid sample from being drawn by capillary action into the lancet channels **951** of the lancet cartridge body **946**. The spatial separation of the proximal surface **968** of the cover sheet **962** from the distal surface **969** of the lancet cartridge body **946** is achieved with a boss **970** between the two surfaces **968** and **969** that is formed into the distal surface **969** of the lancet cartridge body as shown in FIG. **105**.

The sample reservoirs **964** of the sampling cartridge body **947** may include any of the sample detection sensors, testing sensors, sensor contacts or the like discussed above with regard to other sampling module embodiments. The cover sheet **962** may be formed of PMMA and have conductors, sensors or sensor contacts formed on a surface thereof. It may also be desirable to have the cover sheet **962** made from a transparent or translucent material in order to use optical sensing or testing methods for samples obtained in the sample reservoirs. In the embodiment shown, the outer radial location of at least a portion of the sample reservoirs **964** of the sampling cartridge body **967** is beyond an outer radial dimension of the lancet cartridge body **946**. Thus, an optical detector or sensor **971**, such as shown in FIG. **105**, can detect or test a sample disposed within a sample reservoir **964** by transmitting an optical signal through the cover sheet **962** and receiving an optical signal from the sample.

The cartridge bodies **946** and **947** may have features, dimensions or materials that are the same as, or similar to, features, dimensions or materials of the sampling cartridges and lancet cartridges, or any components thereof, discussed above. The module portions **948** and **950** may also have features, dimensions or materials that are the same as, or similar to, features, dimensions or materials of the lancet or sampling modules, or any components thereof, discussed above. In addition, the cartridge **945** can be coupled to, or positioned adjacent any of the drivers discussed above, or any other suitable driver, in an operative configuration whereby the lancets of the lancet cartridge body can be selectively driven in a lancing cycle. Although the embodiment shown in FIGS. **102-106** allows for alignment of various sampling module portions **948** and lancet module portions **950** with relative rotational movement, other embodiments that function similarly are also contemplated. For example, lancet module portions, sampling module portions or both, could be arranged in a two dimensional array with relative x-y motion being used to align the module portions in a functional arrangement. Such relative x-y motion could be accomplished with position sensors and servo motors in such an alternative embodiment order to achieve the alignment.

In one embodiment, the present invention includes multiple tests for blood glucose assembled on a single disposable. A single disposable is provided for the user to handle that has no loose, individual test strips. Multiple analyte sensors are provided on one substrate and along with a cleanliness and humidity seal by means of a cassette housing, exposing a sensor as needed. Lancing and glucose testing are integrated into a single device

In one specific embodiment, a disposable plastic disk with 5 or more electrochemical sensors assembled on it such that the disk provides the user with an ability to insert a single disposable into a device which incorporates blood-glucose measurement and finger lancing. Multiple tests can be done without having to change the disposable. The disk is contained within a cassette housing, with the housing providing a barrier against humidity and preserving the cleanliness of the sensors. The disk is free to rotate within the cassette housing. Such a disk is illustrated shown in FIG. **1** in which 7 sensors, for example, are assembled on the disk and the cassette housing is shown semitransparent for clarity.

In this configuration, as the disk is rotated in preparation for a user to test, an unused sensor is exposed for use in the cutout as shown in FIG. **107**. The cassette housing contains seals which protects against degradation of the sensor by humidity while at the same time allow a new sensor to pass through the seal for use in testing as well as allowing a used sensor to pass back into the cassette housing.

As illustrated in FIG. **107**, a disk includes multiple sensors for testing an analyte in a body fluid, including but not limited to blood glucose. In FIG. **107**, the sensors have a lancing hole which allows a lancet to pass through the sensor for use in a bleed-to-read configuration. The disk is contained within a cassette housing to provide a barrier for cleanliness and protection against humidity.

The disk within the cassette housing may be a continuous flat disk with multiple sensors on it or it may be a spoked disk such that a lancet can pass between the spokes should a user wish to change lancets with the cassette in place within the device. This configuration is shown in FIG. **108**.

The number of sensors on a disk is at least 5 and may be up to 12. This is a sufficient number of sensors to allow a user to place one disk in their device and be able to have enough tests for one day's worth of testing without having to carry extra cassettes.

Another embodiment of this invention is shown in FIG. **108**. In this form, the disk substrate is spoked to allow a lancet to pass between the spokes such that a used lancet may be removed and a new lancet may be inserted without removing the disk.

In both FIGS. **107** and **108**, the disks can be made such that the sensor is suitable for bleed-then-read or bleed-to-read use. In bleed-then-read use, the sensors are fabricated such that blood is placed on the outermost edge of the sensor. In bleed-to-read use, the sensors are fabricated as shown with a pass hole which allows a lancet to pass through the sensor at right angles, piercing a user's skin, and drawing a sample of spontaneous blood which wets the sensor.

Another embodiment on the spoked disk as shown in FIG. **108** is shown in FIG. **109**. In this embodiment the disk is constructed such that one spoke can be bent out of plane to facilitate compact design of the device and to allow the lancet to pass through the disk. The ability to reposition one or more spokes also applies to an end-fill sip-in strip. FIG. **109** illustrates a variation on the spoked disk in which a spoke can be bent out of plane to facilitate access to the through hole for

lancing or otherwise reposition the active sensor for an end-fill sip-in strip. The picture on the left shows the planar spoked disk; the picture on the right shows one spoke of the disk bent out of plane. The spoked disk shown in FIG. **109** would be housed in a cassette such as in FIG. **108**, but for clarity it is not shown in FIG. **109**.

For all embodiments, electrical contact must be made with the sensor. As shown in FIGS. **110**, one embodiment exposes the electrical contacts associated with an individual sensor. This embodiment can use both a flat disk or a spoked disk and the electrical contacts can be on either side of the sensor. In such embodiments, the device makes electrical contact directly with the sensors when they are exposed for use.

In another embodiment, the sensors can be electrically connected to contacts which are incorporated into the cassette housing and those contacts are connected by other means to the device in a way which is suitable for making an electrochemical glucose measurement.

With respect to the cassette housing, one embodiment would provide a humidity seal on the sensor itself, and when the disk is rotated to place an unused sensor in position for testing the cassette housing has means to remove the humidity seal from the sensor without an overt action by the user.

Also with respect to the cassette housing, another embodiment would provide a humidity sealed environment for those unused sensors within the cassette housing. In this embodiment the cassette housing would provide a mechanical seal such that the disk can rotate within the housing without compromising the integrity of the seal against humidity.

With a cassette housing which provides a seal against humidity, one use model would prefer a seal which is sufficient to protect unused sensors for a short term, between a day and a week, which is representative of the amount of time in which a user would consume one disk's worth of sensors. In another use model, the user would prefer a seal which is sufficient to protect unused sensors for a long term, up to 3 months, which is equivalent to the shelf life of test strips in desiccating vials in common use now.

One means by which the cassette housing can provide protection against humidity is to combine a mechanical seal against the environment and to be made of desiccating plastic.

The disk configurations shown in FIGS. **1**, **2**, and **3** can be manufactured by two methods: (i) printing of the sensor on a plastic substrate to directly create the configurations shown and then assembled into the cassette housing; and (ii) printing, laminating, or otherwise manufacturing sensors, singly or in mass, and assembling individual sensors into the configurations shown on suitable substrates and then assembled into the cassette housing.

In another embodiment of the present invention, a disposable plastic disk has 5 or more sensors assembled on it such that the disk provides the user the ability to insert a single disposable into a device which incorporates blood-glucose measurement and finger lancing, and have available 5 or more tests without having to change the disposable. Such a disk is shown in FIG. **1** in which 7 sensors, for example, are assembled on the disk. In this configuration, each sensor is sealed against humidity to prevent degradation of the materials used to react with blood glucose and create an electrical current. In use, a user inserts such a disk into a blood-glucose meter which also incorporates a lancing mechanism. As the disk is rotated in preparation for a user to test, the humidity seal is passively removed by the device, i.e. the user does not overtly conduct a seal removal action.

FIG. **111** illustrates a disk with multiple sensors for testing blood glucose. Shown in this Figure are sensors with a lancing hole which allows a lancet to pass through the sensor for use in a bleed-to-read configuration.

The FIG. **112** embodiment is similar to the one of FIG. **111**. In this depiction, the disk substrate is spoked to allow a lancet to pass between the spokes such that a used lancet may be removed and a new lancet may be inserted without removing the disk.

In both FIGS. **111** and **112**, the disks can be made such that the sensor is suitable for bleed-then-read or bleed-to-read use. In bleed-then-read use, the sensors are fabricated such that blood is placed on the outermost edge of the sensor. In bleed-to-read use, the sensors are fabricated as shown with a pass hole which allows a lancet to pass through the sensor at right angles, piercing a user's skin, and drawing a sample of spontaneous blood which wets the sensor.

An embodiment of the spoked disk from FIG. **112** in a bleed-then-read configuration shown in FIG. **113**. In this configuration, one spoke of the disk is exposed for access by the user. This is shown on the top side of the glucose meter as pictured. The active sensor is exposed out of the front of the device for access by the user.

An additional embodiment of the spoked disk or the flat disk for a bleed-to-read configuration is shown in FIG. **114**. In this configuration, the spoked disk is oriented such that the axis of lancet actuation is at right angles to the plane of the disk. For the spoked disk, an access hole through which the lancet is exchanged is provided. In FIG. **114** the spoked disk is pictured with a lancet aperture through which the lancet is exchanged. The spoked disk is inside the device, but, for clarity, is shown in FIG. **114** as though it were on the end of the device.

A variation of the FIG. **112** embodiment is shown in FIG. **115**. In this embodiment the disk is constructed such that one spoke can be bent out of plane to facilitate compact design, and allow access to the through hole for lancing or otherwise reposition the active sensor for an end-fill sip-in strip. The ability to reposition one or more spokes also applies to an end-fill sip-in strip. The picture on the left shows the planar spoked disk; the picture on the right shows one spoke of the disk bent out of plane.

An extreme example of reconfiguring a flat disk is to shape it into a cone or a cylinder to facilitate other orientations or configurations of integrated lancing devices and glucose meters.

With respect to FIGS. **111**,**112**,**114**, and **115**, when used in a bleed-to-read configuration, the electrical contacts on the sensor are shown as being toward the center of the disk with the lancet hole being towards the outer border of the disk. The relative positions of these 2 features can be interchanged such that the electrical contacts are towards the outer border of the disk and the lancet hole is towards the center of the disk.

The disk configurations shown in FIGS. **111**, **112**, and **115** can be manufactured by two methods; (i) printing of the sensor on a plastic substrate to directly create the configurations shown; and (ii) printing, laminating, or otherwise manufacturing sensors, singly or in mass, and assembling individual sensors into the configurations shown on suitable substrates.

In one embodiment of the present invention, a disposable lancet is coupled to an actuator, or driver, in a manner. This embodiment employs electro-magnetic drive principles without using a mechanical gripper or chuck to secure the lancet to the actuator drive mechanism. Instead, the lancet is fully contained within a 'cartridge', which is inserted into the bore of the actuator solenoid coils, as shown in FIG. **116**.

The cartridge does not move relative to the coils during the lancing operation, so a relatively simple capture/lock mecha-

nism can be used to secure the position of the cartridge relative to the coils. FIG. **111** illustrates the disposable cartridge being inserted into a bore of actuator coils. Sensors to measure position of lancet within cartridge are also shown. Other means can be utilized to measure lancet position, including but not limited to eddy currents and the like.

FIG. **117** shows a cross-section of the Cartridge. Inside the cartridge are several bearings which provide support and a guide path for a lancet assembly. The lancet assembly includes a lancet wire, coupled to a slug, a material that the actuator solenoids can push/pull against, and optionally a 'flag', a component that can be used to determine the position of the lancet. The slug and flag are placed on the lancet in locations that ensure that they are optimally positioned within the actuator's solenoid and the position sensor(s), respectively.

FIG. **117** provides a schematic illustration of the location of the slug and flag relative to the actuator solenoid and position sensor, when the cartridge is properly positioned relative to the actuator/device. FIG. **117** is a cross-section of disposable lancet cartridge. The lancet assembly is suspended within bearings inside the cartridge. The cartridge contains an aperture co-linear with the lancet.

The flag can be implemented in several ways including: (i) with a linear encoder flag; (ii) as an absolute encoder flag; and the slug could serve as the flag, using the means to sense position via eddy currents.

The dimensions of the features or components of the lancet assembly, slug, flag and the like, can be designed in combination with the bearings to limit the range of motion of the lancet. These mechanical 'stops' can prevent the lancet from ever falling out of the cartridge.

A "bleed-to-read" sensor can be attached to the face of the cartridge, to create a "one shot" disposable. A sterility barrier, foil over-molded cap, and the like, can be placed over the aperture of the cartridge. The cartridge is easier for the user to handle and use.

In one embodiment of the present invention, sample capture and transport configurations for sensors, such as test strips, are provided, that are disposable, of a fixed interval multi sensor tape, use transport methods enabling single use testing. Structures can be provided for allowing: (i) a lancing event to be conducted, (ii) collection of a sample; (iii) transportation of a sample and measurement of a body fluid sample. These structures are closely fluidically coupled, such that a sample, expressed from a lancing event, presents itself at a prescribed location, Such structures enable the collection of this sample and its subsequent transport to a measurement cell.

FIG. **118** illustrates an embodiment of the present invention with vertical spaced sensors on a flexible transport carrier. Singulated sensors secured to a carrier tape at fixed intervals.

In this embodiment, the sensors can be individually or continuously sealed, and be two sides. This embodiment allows single use and protection of unused sensors. SMT mounting of sensors to tape can be utilized, with high volume SMT reel manufacturing. This embodiment is low cost due to separate high density sensors manufacturing.

The sensor substrate can function as the tape and be used after ribbon cutting to provide simpler manufacturing and lower sensor density. Sensor ribbons can be applied across substrate or tape, then cut to a final shape. A two sided seal can be used to reduce moisture and contaminate ingress. Sensor connector contacts pads can be below, and above of an opposite side

FIG. **119** illustrated an embodiment of horizontal spaced sensors on a flexible transport carrier, with singulated sensors secured to a carrier tape at fixed intervals.

In the FIG. **119** embodiment, individual sensors can be sealed, continuous sealing can be used, and two sided sealing employed. The FIG. **119** embodiment allows single use and protection of unused sensors. SMT mounting can be used to mount the sensors to the tape. High volume SMT reel manufacturing can be employed. This embodiment provides low cost sensors due to separate high density sensor manufacturing

Sensor substrate can also function as the tape and used after ribbon cutting to provide simpler manufacturing and lower sensor density. Sensor ribbons can be laid across the substrate or tape and cut to the final shape. A two sided seal can be used to reduce moisture and contaminate ingress. Sensor connector contacts pads can be positioned below, and above on opposite sides.

In the FIG. **120** embodiment, a substrate transport system has reel to reel sensors on a flexible carrier tape at fixed intervals dispensed through a supply and take-up reel. This embodiment provides a low cost flexible tape with singulated sensors spaced at fixed intervals. Sensor electrical contact pads can be contained in the sensor on either front or back side. This embodiment allows single use and protection of unused sensors. Sensor ribbons can be laid across substrate or tape and cut to the final shape. The reels provide high density/high count. Singulated sensors can be singulated from low cost high density sheets.

In this embodiment, a new desiccant can be positioned in each disposable. Low cost secondary packaging can be a low cost foil. A tape to reel can be utilized to provide a take-up of used sensor material and tape. A reel to tape can be used to allow a user to insert a environmentally sealed container for singulated sensor use one at a time with the tape output at the last use for manual removal.

In another embodiment of the present invention, an analyte fluid testing device has integrated electronic lancing and with a sensor including but not limited to a test strip. A cartridge is provided that uses a fresh lancet and sensor. The cartridge is presented as an easy to handle, user installed consumable. One cartridge is good for one test. The system provides blood glucose testing from lancing through result and is a bleed-to-read system which is the capability to provide a one step result to the user. Further, the system provides for a single test with each disposable cartridge.

The testing device can be of a size and form factor that is desirable for portable routine use. The instrument is required to be as compact as possible. The testing device is available at a cost point to the user that is consistent with the industry paradigm for SMBG products.

The testing device is an integrated, lancing and glucose measurement testing device with close fluidic coupling of the lancing and sampling processes. This facilitates a single step measurement experience. An penetrating member or lancing actuator can be provided that can be a bearing actuator assembly, A user changeable test cartridge is provided. The testing device provides lancing, automatic sample capture, transport and measurement in one single user step.

The single shot disposable is the cartridge portion of the above described testing device. This cartridge contains a lancet, a glucose sensor and provides for the close mechanical and fluidic coupling to achieve the requirements of a single shot device.

A multiple test version of such a device is also provided. The multiple test version uses multiple cartridges, either singulated or connected, and enhances functionality of the single

shot to store and handle the exchanging of the multiple cartridges. The multiple shot testing device meets the base requirements of the single shot.

In various embodiments, the lancet can be over-molded to mitigate the potential for a loose lancet becoming a high severity safety hazard, and to facilitate the device interface to the lancet. If an overmold is used to create the sterility barrier, the barrier is included in the manufacturing cost of the over-molded lancet/cartridge. If an overmold is used to create the sterility barrier, a foil sterility barrier is not required. The cartridge can have an integrated management of the lancet and sensor, then it is possible for the cartridge cost to be competitive with the cost of an over-molded lancet and separate sensor.

A molded cartridge can be designed to be easily handled. The cartridge can be configured to facilitate the floating of the sensor, allowing the sensor to be positioned based upon critical features on the sensor, as opposed to precisely positioning the sensor to the cartridge, The cartridge or overmold can be molded of desiccating material or can include desiccating material to facilitate humidity management for the sensor.

The manufacture of the completed cartridges can be done in a highly automated fashion, keeping the sensors in a ribbon or strip and cartridges in a chain, connected, so that sensors are not individually handled. If an overmold is used as part of the design, the lancet is only handled as part of the molding process. If an overmold is used, the process is highly simplified for manufacturing, in that the over-molded part is produced, sterilized, then the sensor is added to the overmold.

Humidity management can be maintained by; (i) having sensors individually sealed; (ii) having the entire sensor/cartridge housed in a humidity managed primary package, such as a vial or a foil package, and the like.

By making the lancet overmold, lancet sterility seal, the sensor holder and the cartridge in a single molded part, the cost, assembly, sterilization and use of the cartridge are enhanced.

The FIG. **121** embodiment incorporates a bare lancet, housed in a molded cartridge. The lancet is retained by gel retention, a pinch structure and the like. The sterility is maintained with a foil barrier for the lancet chamber and humidity management is maintained by foil sealing the sensor or sensor pocket in the cartridge.

The FIG. **121** embodiment is an over-molded lancet/cartridge with the following characteristics: (i) molding for the cartridge; (ii) insertion causes the lancet to be gripped; (iii) foil is used for sterility and humidity seals; a lancet moves into position for testing as part of insert/acquire; after use, the lancet is re-housed in the cartridge, and the like.

In one embodiment of manufacturing, molding is done for multiple sensors up in a chain, and a mold-insert lancet-foil-sterilize-affix sensor-singulate is provided. One advantage of the FIG. **121** embodiment is precise alignment of the lancet to the sensor

The over-molded lancet cartridge with foil seal of FIG. **122** provides an over-molded lancet that is part of the molded cartridge. The lancet is held in the cartridge until use with molded webs. When used, the webs are broken, freeing the lancet. Sterility sealing is done with a foil barrier on the cartridge.

The FIG. **122** embodiment has the following characteristics: |(i) one piece molding; (ii) insertion causes the lancet to be freed; (ii) foil is used for the sterility and humidity seal(s); the lancet moves into position for testing as part of insert/acquire; after use, the lancet is parked in the cartridge, and the like.

In one embodiment of manufacturing, many sensors are molded up in a chain and a mold-foil-sterilize-affix sensor-singulate is provided.

The FIG. **123** embodiment provides an over-molded lancet that is part of the molded cartridge. The sterility seal for the lancet is part of the overmold/cartridge. When in use, the lancet is removed from the sterility sealing piece and is positioned for use. The sealing piece, with the sensor attached, is positioned for a measurement.

Characteristics of the FIG. **123** embodiment include: a one piece molding; insertion causes the lancet to be freed from front piece and positions the sensor for use; (iii) an overmold is provided for the sterility seal with no foil on the lancet; (iv) the lancet moves into position for testing as part of insert/acquire; (v) the sensors are individually foil protected, or cartridges shipped in primary packaging that manages humidity; (vi) after use, the lancet is embedded into sensor piece preventing user exposure to sharps, and the like.

The FIG. **123** embodiment can be manufactured by: molding many up in a chain; using mold-sterilize-affix sensor-singulate, and the like.

The FIG. **124** embodiment provides for over-molded lancet that is part of the molded cartridge. The sterility seal for the lancet is part of the overmold/cartridge. When in use, the cartridge is inserted by the user and the sterility seal/handle is removed, exposing the lancet. The sensor is swung into place, as part of closing the device, and is positioned for a measurement. Optionally, humidity sealing of the sensor can be managed during the closing of the device or not at all if the cartridge is stored in primary packaging without humidity management.

The characteristics of the FIG. **124** embodiment include: (i) a one piece over-molded lancet/assembly; (ii) insertion causes the lancet to be freed from sterility and positions sensor in line with lancet for use; (iii) an over-mold for sterility seal with no foil on the lancet; (iv) the lancet moves into position for testing as part of insert and the user breaks the sterility seal, (v) sensors are individually foil protected or cartridges shipped in primary packaging that manages humidity; (vi) after use the lancet is embedded into the sensor housing piece, protecting user from sharps.

The FIG. **124** embodiment can be manufactured by: molding many up in a chain; mold-sterilize-affix sensor-singulate, and the like.

In another embodiment of the present invention, a body fluid testing device is provided that is integrated, battery powered, portable, and provides both lancing and analyte measure, a multi-sensor test strip and associated accessories. A test strip is provided, illustrated in FIG. **125**, having multiple sensors for conducting more than one user test per test strip. The test strip is comprised of laminated materials arranged in a strip format that can be easily handled by a user.

The multi-sensor test strip has multiple sensors (A), FIG. **125** shows five sensors, with integrated sample collection structures and associated electrical contacts. The strip has relief structures (B) to facilitate the replacement of the user installed lancet. The test strip can have reference features for precisely positioning the test strip in the device for each body fluid, including but not limited to glucose, measurement to be made.

The FIG. **226** integrated lancing and glucose measurement device is arranged to accommodate the multi-sensor test strip, a user replaceable lancet and has the critical components for lancing, sample collection and transport and glucose measurement in close fluidic coupling, structurally and/or close

proximity to facilitate bleed-to-read. The device is a portable, hand-held, battery operated electronic device with a user display and controls.

The device has features for the user to place a finger for glucose measurement, a finger front end (E), a strip insertion port (A), a strip removal port (B), a knob for loading and advancing the multi-sensor test strip (C), a mechanism for moving the MSTS for strip installation, use and removal, a removable front 'cap' (H) for user access for cleaning, user controls (F) and a display. The device further has features to enable a user to easily change out the replaceable lancet without disassembly. One way in which this may be done is through a lancet change control—when pressed, it moves an installed MSTS out of the way and enables a user to change the lancet through the front end.

Referring to FIG. **127**, each sensor structure, sample collection, blood transport and sensor, on the test strip can have structures to manage the access of humidity. There are three places the humidity management seal must address: (i) the sensor stop junction; (ii) the lancing aperture in the substrate and (iii) the sample collection aperture in the cover slip. The device automatically breachs the humidity seal and exposes a fresh sensor for a test when preparing for testing. In FIG. **127**, a seal is depicted (A) that covers the sample collection aperture and the sensor stop junction and (B) a second seal for the lancing aperture.

In one embodiment of installation of the MSTS, the following steps are taken: (i) the user removes the MSTS from a container; (ii) the user then inserts the MSTS into strip IN port (A) on the device until it is fully inserted; (iii) the user display indicates the remaining number of tests.

In performing the test, the device is first turned on. The user advances the MSTS to the first or next available sensor by rotating the sensor advance knob (C). The knob can be a ratcheting knob. When properly advanced, the MSTS will not advance further and does not advance past the position prepared for use. The meter is turned on and the display indicates readiness for testing.

The user places its finger on the finger front end (E), applying a small amount of pressure. The user initiates the measurement sequence by pressing a button (F). A result is then presented at the display

When all of the sensors on the MSTS have been used, the display indicates the need to replace it. The user advances the strip advance knob and the used MSTS exits from the strip exit port (B). The user takes the spent MSTS, removes it from the device and safely discards it.

Lancet replacement can be done at any time the user desires. The user presses the lancet access button which can be at the back of the device. The test strip is displaced automatically by the device such that the lancet clears the test strip at notches (B). Using a lancet handle, the user removes the used lancet through the lancing aperture. The user installs a new lancet by inserting it into the lancing aperture.

In another embodiment, a chamber with analyte sensors is provided. The analyte sensors measure an amount of an analyte in a body fluid. The chamber stores a plurality of analyte sensors in a stack. A desiccant is integrated into the chamber to maintain a dry atmosphere. The top of the chamber is sealed to a rotating cap that is fabricated with a cup that accommodates one sensor at a time. As the cap is rotated a fresh sensor is carried into the sensing position where its blood fill port projects beyond the edge of the chamber housing and is connected electrically to sensing electronics. The used sensor is either removed by the user immediately after use, or is ejected by the rotating cap when the next sensor is loaded.

FIG. **128** shows a housing with a sealed chamber that contains a stack of blood glucose sensors. FIG. **129** is a phantom view of the housing showing the stack of sensors and a compression spring which presses the sensors against the cap (not shown).

FIG. **130** shows the cap in place. The cap supports electrical contact fingers that provide electrical connection to the sensor during use. FIG. **134** is a phantom view of the cap showing the top sensor in the stack nested into a pocket in the sealing surface of the cap. A pusher finger can also be seen. As the cap is rotated, the pusher finger will eject a used sensor if it remains in the working position.

FIG. **135** shows the cap as it is rotated clockwise. The working sensor is being carried to the working position by the rotating cap. The next sensor in the stack has not lifted yet because it is pressing against the smooth bottom surface of the cap.

FIG. **136** shows the working sensor in the working position. A spring in the cap (not shown) presses the sensor into a relief in the top of the housing.

FIG. **137** shows the cap with its empty transfer pocket halfway back to the starting position where the next sensor will be forced into the transfer pocket. As the cap rotates to the starting position, the electrical contact fingers slide into position over the carbon contacts of the glucose sensor.

FIG. **138** shows the glucose sensor projecting from the side of the housing ready to receive a small drop of blood. The cap is in the starting position, and the electrical contacts are aligned with the connection tabs of the sensor. The ejector finger has ridden over the sensor, pressing the sensor against the side of the relief in the top of the housing. The ejector finger is now in position to clear the used sensor from the working position when the next sensor is loaded at a later time. Ribs in the cap also capture the working sensor in the correct location under the contact fingers.

FIG. **139** shows the housing, cap, and sensor in the working position with the phantom view of the cap removed. A resilient seal can be seen surrounding the top of the chamber that houses the fresh glucose sensors. This seal maintains contact with the bottom surface of the cap when the cap is in the "closed" or working position. During the loading cycle, a minimum of ambient air is transferred past the seal, resulting in a lower moisture load on the desiccant. This lower moisture exposure means an extended life for the desiccant, or the need for a smaller amount of desiccant.

In another embodiment of the present invention, another chamber with analyte sensors is provided. The analyte sensors measure an amount of an analyte in a body fluid. The chamber stores a plurality of analyte sensors, including but not limited to glucose sensors, in a stack. A desiccant is integrated into the chamber to maintain a dry atmosphere. The top of the chamber is sealed to a rotating cap that is fabricated with a cup that accommodates one sensor at a time. As the cap is rotated a fresh sensor is carried into the sensing position where its blood fill port projects beyond the edge of the chamber housing and is connected electrically to sensing electronics. The used sensor is either removed by the user immediately after use, or is ejected by the rotating cap when the next sensor is loaded.

In this embodiment, the dispensing action is a linear sliding motion rather than a rotating cap. A cassette of analyte test strips, including but not limited to glucose test strips, are provided that can be loaded into a test meter so that the strips can be indexed for use by simply sliding an injector handle.

FIGS. **140** and **142** show the preloaded cassette as it is about to slide to the right and lock into the test strip contact assembly. The slider covers the cassette and provides a seal to

prevent moisture from contacting the test strips. The slider is locked to the cassette by a small tab under the actuating handle. The tab is broken during the first use of the slider allowing the slider to open the test strip storage chamber and select the first test strip. A used test strip is shown in position in the connector assembly. Used test strips can be removed by the user and discarded after use, or the used test strip will be ejected by the next test strip as it is loaded by the slider.

FIG. **143** shows the cassette locked in place in the test strip contact assembly.

FIG. **144** shows the slider fully retracted, after breaking the locking tab, and ready to insert the next test strip from the cassette.

FIG. **145** is a section view of the slider preparing to insert the next test strip. The stack of test strips can be seen in the cassette as well as the spring that forces the test strips into the chamber formed when the slider is retracted. The locking tab on the slider can be seen even though it would normally be broken off at this point.

FIG. **146** shows the slider back in its home position after sliding a fresh test strip under the electrical contacts of the test strip connector. The test strip is now ready to test blood glucose. The slider reestablishes a seal with the top of the cassette. An elastomeric seal (not shown) is built into the top of the cassette.

The length of the cassette/connector assembly, from end of handle to surface of test strip port is approximately 55 mm for a 27 mm long test strip.

Other embodiments of the invention will be apparent to those skilled in the art from consideration of the specification and practice of the invention disclosed herein. It is intended that the specification and examples be considered as exemplary only, with a true scope and spirit of the invention being indicated by the appended claims.

What is claimed is:

1. A body fluid testing device, comprising:

at least one penetrating member;

a penetrating member driver configured to be coupled to the at least one penetrating member;

a plurality of analyte sensors on a spoked disk substrate that includes a plurality of spokes, each of a penetrating member not being on a same substrate as a sensor, wherein each of a penetrating member can pass between spokes of the disk substrate to provide that a used penetrating member can be removed and a new penetrating inserted without removing the disk, each of an analyte sensor positioned in a sample chamber;

a plurality of end-fill sip-in strips, each of an end-fill sip-in strip coupled to a sample chamber, the spoked disk substrate being oriented with an axis of lancet actuation positioned at right angles to a plane of the disk and at least a portion of the spokes being repositionable with an end-fill sip-in strip;

a disposable housing that houses the at least one penetrating member and the plurality of analyte sensors and sample chambers;

wherein the spoked disk has a plurality of spokes where at least a portion of the spokes are bent out of plane for use; and

wherein the plurality of analyte sensors are located on the plurality of spokes.

2. The device of claim **1**, wherein the plurality of sensors are arrayed on a spoked disk.

3. The device of claim **1**, wherein each of the plurality of sensors are individually sealed against humidity and in which a cassette housing removes a humidity seal as a new sensor is positioned for use.

4. The device of claim **1**, wherein each of the plurality of sensors are individually sealed against humidity and in which the device removes a humidity seal as a new sensor is positioned for use.

5. The device of claim **1**, wherein the penetrating member is configured to be coupled to the penetrating member driver without mechanically gripping or linking.

6. The device of claim **1**, further comprising:

at least one position flag configured to be by a position sensor.

7. The device of claim **1**, wherein the penetrating member includes features that work with the disposable housing to limit a range of motion of the penetrating member.

8. The device of claim **1**, further comprising:

a sterility barrier that includes desiccant properties.

* * * * *