US008988616B2

(12) **United States Patent**
**Wengreen et al.**

(10) **Patent No.: US 8,988,616 B2**
(45) **Date of Patent: *Mar. 24, 2015**

(54) **MOUNTING SYSTEMS FOR DIGITAL MEDIA PLAYERS**

(71) Applicant: **Innovelis, Inc.**, Sammamish, WA (US)

(72) Inventors: **Brian Jeffrey Wengreen**, Ravensdale, WA (US); **Eric John Wengreen**, Sammamish, WA (US)

(73) Assignee: **Innovelis, Inc.**, Sammamish, WA (US)

( * ) Notice: Subject to any disclaimer, the term of this patent is extended or adjusted under 35 U.S.C. 154(b) by 0 days.

This patent is subject to a terminal disclaimer.

(21) Appl. No.: **14/527,687**

(22) Filed: **Oct. 29, 2014**

(65) **Prior Publication Data**

US 2015/0050011 A1 Feb. 19, 2015

**Related U.S. Application Data**

(63) Continuation of application No. 14/478,665, filed on Sep. 5, 2014, now Pat. No. 8,896,768, which is a continuation of application No. 14/209,452, filed on Mar. 13, 2014, now Pat. No. 8,848,113, which is a continuation of application No. 14/169,148, filed on Jan. 30, 2014, which is a continuation of application No. 13/332,373, filed on Dec. 21, 2011, which is a continuation-in-part of application No. 13/278,759, filed on Oct. 21, 2011, now abandoned, said application No. 14/527,687 is a continuation of application No. 13/781,717, filed on Feb. 28, 2013, which is a continuation of application No. 13/779,733, filed on Feb. 27, 2013.

(60) Provisional application No. 61/416,736, filed on Nov. 23, 2010.

(51) **Int. Cl.**
*H04N 5/64* (2006.01)

(52) **U.S. Cl.**
CPC ..... *H04N 5/64* (2013.01)
USPC ..... **348/836**

(58) **Field of Classification Search**
USPC ..... 348/836, 846
See application file for complete search history.

(56) **References Cited**

U.S. PATENT DOCUMENTS

| | | | |
|---|---|---|---|
| 1,618,573 | A | 2/1927 | Cole |
| 2,584,646 | A | 2/1952 | Wagstaff |
| 3,091,378 | A | 5/1963 | O'Dwyer |
| 3,176,950 | A | 4/1965 | Hittesdorf |
| 3,279,009 | A | 10/1966 | Teasdale |

(Continued)

OTHER PUBLICATIONS

Out of Sight Bracket—Website Part 1 (downloaded on Nov. 13, 2013 from http://www.outofsightbracket.com/OutOfSightBracket/Out_of_Sight_Bracket_for_Apple_TV.html). The website says the Out of Sight Bracket is "Patent Pending." The Out of Sight Bracket might have been made by Gordon H. Beckhart.

(Continued)

*Primary Examiner* — Geepy Pe

(57) **ABSTRACT**

Mounting systems can attach a digital media player to a backside surface of a television. Mounting systems can include a tray base and sidewalls that protrude away from the backside surface of the television while the digital media player is located between the sidewalls. Mounting systems can be attached inside of a periphery of the backside surface of the television.

**30 Claims, 16 Drawing Sheets**

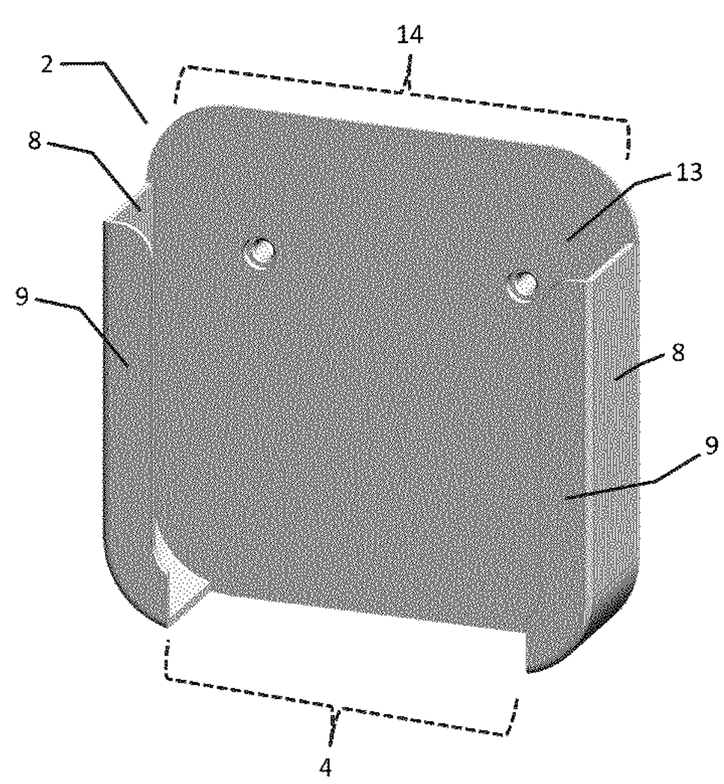

(56) **References Cited**

U.S. PATENT DOCUMENTS

| | | | |
|---|---|---|---|
| 3,294,298 | A | 12/1966 | Danielson |
| 3,477,679 | A | 11/1969 | Lovitz |
| 3,990,617 | A | 11/1976 | Carter |
| 4,519,656 | A | 5/1985 | Raz |
| 4,602,761 | A | 7/1986 | Carter |
| 4,697,780 | A | 10/1987 | Wenkman |
| 4,746,042 | A | 5/1988 | King |
| 4,771,927 | A | 9/1988 | Ventura |
| 4,825,590 | A | 5/1989 | Cullinane |
| 4,826,115 | A | 5/1989 | Novitski |
| 4,840,773 | A | 6/1989 | Wade |
| 4,852,843 | A | 8/1989 | Chandler |
| 4,974,764 | A | 12/1990 | Cantwell |
| 5,038,985 | A | 8/1991 | Chapin |
| 5,092,395 | A | 3/1992 | Amidzich |
| 5,273,690 | A | 12/1993 | McDowell |
| 5,297,318 | A | 3/1994 | Adolphson |
| D351,341 | S | 10/1994 | Hung |
| 5,400,990 | A | 3/1995 | Frankel |
| 5,535,093 | A | 7/1996 | Noguchi |
| 5,593,124 | A | 1/1997 | Wang |
| 5,619,395 | A | 4/1997 | McBride |
| 5,619,774 | A | 4/1997 | Perry |
| D388,107 | S | 12/1997 | Huckins |
| 5,850,998 | A | 12/1998 | Parsey |
| 5,899,371 | A | 5/1999 | Weliver |
| 5,914,707 | A | 6/1999 | Kono |
| 5,961,083 | A | 10/1999 | Hartman |
| 5,979,724 | A | 11/1999 | Loewenthal |
| 6,102,660 | A | 8/2000 | Lee |
| 6,105,923 | A | 8/2000 | Robertson |
| D443,493 | S | 6/2001 | Skeem |
| 6,275,885 | B1 | 8/2001 | Chin |
| 6,336,615 | B1 | 1/2002 | Jeon |
| D456,413 | S | 4/2002 | Malson |
| 6,485,144 | B1 | 11/2002 | Liao |
| 6,560,983 | B1 | 5/2003 | Schimmeyer |
| 6,691,374 | B2 | 2/2004 | Coyne |
| 6,888,940 | B1 | 5/2005 | Deppen |
| 6,939,641 | B2 | 9/2005 | Kincaid |
| 7,047,601 | B1 | 5/2006 | Vernon-Woods |
| 7,079,384 | B2 | 7/2006 | Wang |
| 7,113,218 | B2 | 9/2006 | Battles |
| 7,145,603 | B2 | 12/2006 | Whitby |
| D535,826 | S | 1/2007 | Toghanian |
| 7,222,762 | B2 | 5/2007 | Rees |
| D545,343 | S | 6/2007 | Braun |
| D560,411 | S | 1/2008 | Chung |
| D565,399 | S | 4/2008 | Grey |
| 7,367,089 | B2 | 5/2008 | Cooke |
| D570,801 | S | 6/2008 | Allen |
| D598,945 | S | 8/2009 | Gillespie |
| 7,580,255 | B2 | 8/2009 | Crooijmans |
| D624,949 | S | 10/2010 | Nakayama |
| D625,729 | S | 10/2010 | McNames |
| D628,611 | S | 12/2010 | Lewis |
| 7,854,420 | B2 | 12/2010 | Depay |
| D633,503 | S | 3/2011 | Bo |
| 7,959,121 | B1 | 6/2011 | Barnes |
| D657,362 | S | 4/2012 | Lister |
| D662,491 | S | 6/2012 | Andre |
| D667,411 | S | 9/2012 | Kim |
| 8,544,805 | B2 | 10/2013 | Virgin |
| 2005/0236541 | A1 | 10/2005 | Chang |
| 2007/0264169 | A1 | 11/2007 | Chen |
| 2008/0078793 | A1 | 4/2008 | Brown |
| 2009/0218454 | A1 | 9/2009 | Stanley |
| 2010/0288895 | A1 | 11/2010 | Shamie |
| 2010/0314277 | A1 | 12/2010 | Murray |
| 2012/0126081 | A1 | 5/2012 | Wengreen |
| 2012/0127379 | A1 | 5/2012 | Wengreen |

OTHER PUBLICATIONS

Out of Sight Bracket—Website Part 2 (downloaded on Nov. 13, 2013 from http://www.outofsightbracket.com/OutOfSightBracket/How_to_mount_your_Apple_TV_or_AirPort_Express.html). The website says the Out of Sight Bracket is "Patent Pending." The Out of Sight Bracket might have been made by Gordon H. Beckhart.

Out of Sight Bracket—Website Part 3 (downloaded on Nov. 13, 2013 from http://www.soundandvision.com/content/bracket-keeps-apple-airport-express-and-apple-tv-out-sight).

TV Tray—Website (downloaded on Nov. 13, 2013 from http://h-sq.com/products/tvtray/).

TV Tray—Installation Guide (downloaded on Nov. 13, 2013 from http://www.h-sq.com/downloads/tvtx_ug.pdf).

Cosmos Tray—Website (downloaded on Nov. 13, 2013 from http://www.amazon.com/Cosmos-MD199LL-AirPort-Express-Station/dp/B00C2JNGB2/ref=sr_1_4?ie=UTF8&qid=1384406376&sr=8-4&keywords=apple+tv+mount).

CTA Digital—Website (downloaded on Nov. 13, 2013 from http://www.ctadigital.com/downloads/KIN-WMC-final.pdf).

PDP Mounting Clip—Part 1 (downloaded on Nov. 13, 2013 from http://www.amazon.com/Kinect-Sensor-TV-Mounting-Clip-Xbox/dp/B004XV6ST4).

PDP Mounting Clip—Part 2 (downloaded on Nov. 13, 2013 from http://www.microsoftstore.com/store/msusa/en_US/pdp/Kinect-Sensor-Tv-Mounting-Clip/productID.253726200).

PDP Mounting Clip—Part 3 (downloaded on Nov. 13, 2013 from http://www.bestbuy.com/site/pdp-sensor-mounting-clip-for-kinect/3521258.p?id=1218408957863&skuId=3521258).

ScreenDeck (downloaded on Nov. 13, 2013 from http://news.cnet.com/8301-17938_105-20071226-1/screendeck-adds-top-shelf-to-your-flat-panel-tv/).

Center Stage Bracket—Part 1 (downloaded on Nov. 13, 2013 from http://www.bestbuy.com/site/center-stage-bracket-satellite-center-channel-speaker-shelf-bracket-black/5857191.p?id=1218697292805&skuId=5857191).

Center Stage Bracket—Part 2 (downloaded on Nov. 13, 2013 from http://www.bestbuy.com/site/center-stage-bracket-satellite-center-channel-speaker-shelf-bracket-black/5857191.p?id=1218697292805&skuId=5857191).

DreamGear TriMount (downloaded on Nov. 14, 2013 from http://www.dreamgear.net/shop-by-platform/universal/trimount.html).

Cisco router wall mounting instructions (downloaded on Jan. 2, 2014 from http://www.cisco.com/en/US/docs/routers/access/1800/1841/hardware/installation/guide/18inst.pdf).

Cisco wall mounting bracket (downloaded on Jan. 2, 2014 from http://www.cisco.com/en/US/docs/routers/access/800/806/hardware/installation/guide/install.pdf).

Netgear ProSafe (downloaded on Jan. 2, 2014 from http://www.storagereview.com/netgear_prosafe_wndap660_dualband_wireless_access_point_review) article includes a date of Dec. 21, 2012.

Wireless router picture (downloaded on Jan. 2, 2014 from http://www.techwarelabs.com/wp-content/gallery/engenius-esr9850-wireless-router/router-bottom.jpg).

Apple TV, downloaded on Feb. 3, 2014 from http://www.apple.com/appletv/what-is/.

Roku media players—Part 1, downloaded on Feb. 3, 2014 from http://www.roku.com/products/roku-2.

Roku media players—Part 2, downloaded on Feb. 3, 2014 from http://www.roku.com/products/compare.

Innovelis, Inc. Product—TotalMount—Apple TV Mounting Kit, downloaded from Amazon.com on Feb. 3, 2014, first available on Amazon.com on Jun. 22, 2011: http://www.amazon.com/TotalMount-Apple-Universal-Mounting-Kit/dp/B0057CVH6W/ref=sr_1_1?ie=UTF8&qid=1391473446&sr=8-1&keywords=TOTALMOUNT.

Innovelis, Inc. Product—TotalMount—Roku Mounting Kit, downloaded from Amazon.com on Feb. 3, 2014, first available on Amazon.com on Jun. 14, 2012: http://www.amazon.com/TotalMount-ROKU-UNIVERSAL-MOUNTING- Compatible/dp/B008B1125W/ref=sr_1_2?ie=UTF8&qid=1391473922&sr=8-2&keywords=totalmount.

Innovelis, Inc. Product—TotalMount—Remote Holder, downloaded from Amazon.com on Feb. 3, 2014, first available on Amazon.com on Jul. 2, 2013: http://www.amazon.com/Apple-TV-Remote-Holder-TotalMount/dp/B00DR76YJO/ref=sr_1_3?ie=UTF8&qid=1391474218&sr=8-3&keywords=totalmount.

(56) **References Cited**

OTHER PUBLICATIONS

Innovelis, Inc. Product—TotalMount—AirPort Express Mounting Kit, downloaded from Amazon.com on Feb. 3, 2014, first available on Amazon.com in approximately Sep. 2012: http://www.amazon.com/TotalMount-AirPort-Express-Mounting-Kit/dp/B009HC7BL8/ref=sr_1_4?ie=UTF8&qid=1391474218&sr=8-4&keywords=totalmount.

Innovelis, Inc. Product—TotalMount—Roku Mounting Kit (Version 1), downloaded from Amazon.com on Feb. 3, 2014, first available on Amazon.com on Jan. 19, 2012: http://www.amazon.com/TotalMount-ROKU-MOUNTING-Compatible-Roku/dp/B006ZS4R46/ref=sr_1_5?ie=UTF8&qid=1391474218&sr=8-5&keywords=totalmount.

Innovelis, Inc. Product—TotalMount—AirPort Extreme Mounting Kit, downloaded from Amazon.com on Feb. 3, 2014, first available on Amazon.com in approximately Apr. 2013: http://www.amazon.com/TotalMount-Compatible-generations-compatible-generation/dp/B00CK2CDLK/ref=sr_1_7ie=UTF8&qid=1391474218&sr=8-7&keywords=totalmount.

Innovelis, Inc. Product—TotalMount—VIZIO Mounting Kit, downloaded from Amazon.com on Feb. 3, 2014, first available on Amazon.com in approximately May 2013: http://www.amazon.com/TotalMount-VIZIO-Co-Star-Mounting-Kit/dp/B00GDMXSZ8/ref=sr_1_10?ie=UTF8&qid=1391474218&sr=8-10&keywords=totalmount.

Amazon Fire TV, downloaded on Jun. 2, 2014 from http://www.amazon.com/Fire-TV-streaming-media-player/dp/B00CX5P8FC.

Logitech HD Pro Webcam C910, downloaded on Oct. 9, 2014 from http://www.amazon.com/Logitech-Webcam-C910-1080p-Video/dp/B003M2YT96/ref=sr_1_6?ie=UTF8&qid=1287528024&sr=8-6.

HP KQ246AA 8.0 MP Deluxe Webcam, downloaded on Oct. 9, 2014 from http://www.amazon.com/HP-KQ246AA-8-0-Deluxe-Webcam/dp/B001D8AGA2/ref=sr_1_4?ie=UTF8&qid=1410543707&sr=8-4&keywords=hp+webcam.

Logitech Webcam C200, downloaded on Oct. 9, 2014 from http://www.amazon.com/Logitech-960-000415-Webcam-C200/dp/B002GP7ZTQ/ref=pd_cp_pc_0.

USB 6 LED PC Webcam, downloaded on Oct. 9, 2014 from http://www.amazon.com/Webcam-Camera-Night-Vision-Meeting/dp/B00MTGV4F8/ref=sr_1_88?s=electronics&ie=UTF8&qid=1410543946&sr=1-88&keywords=webcam+clamp.

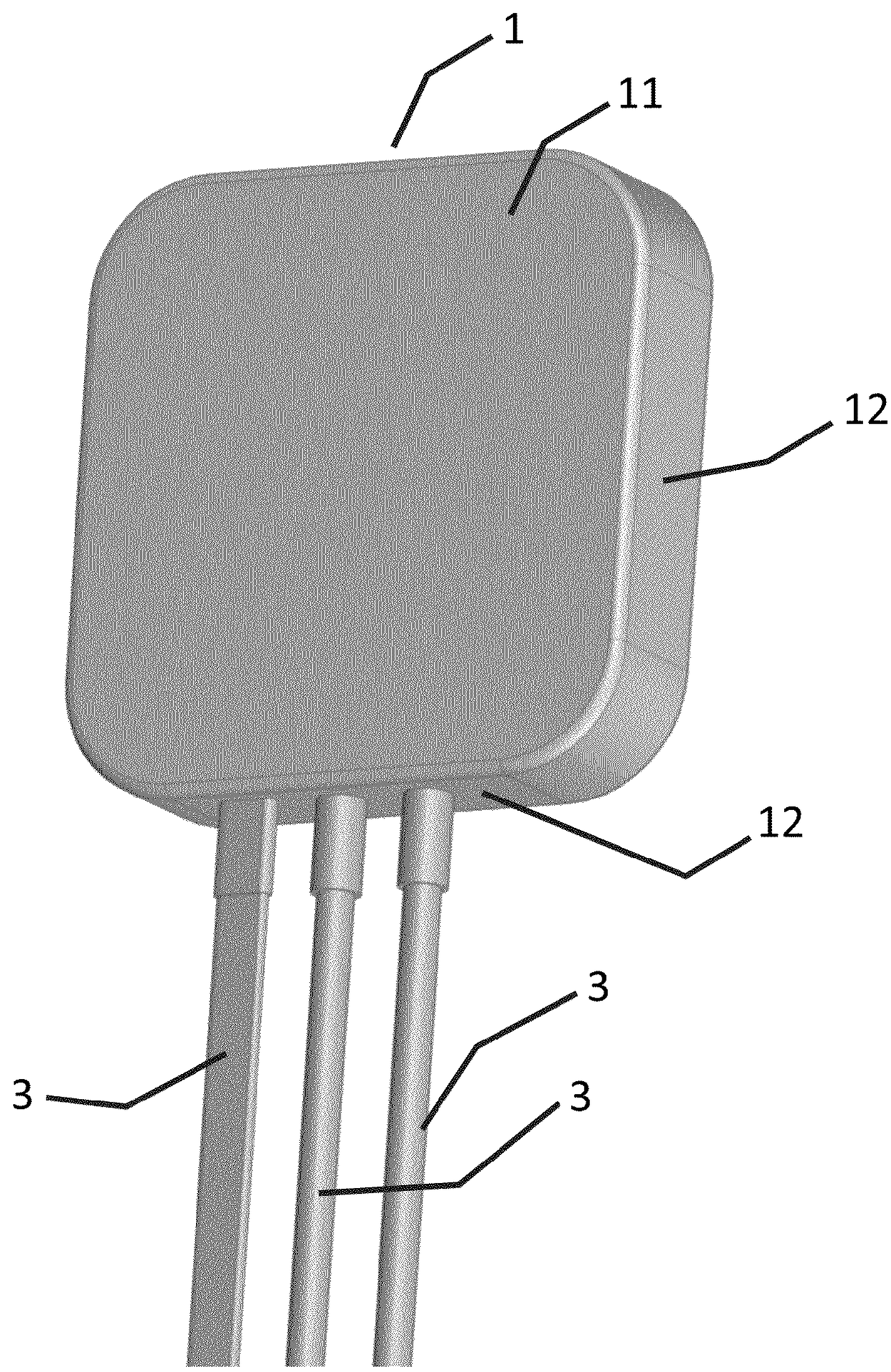


Figure 1

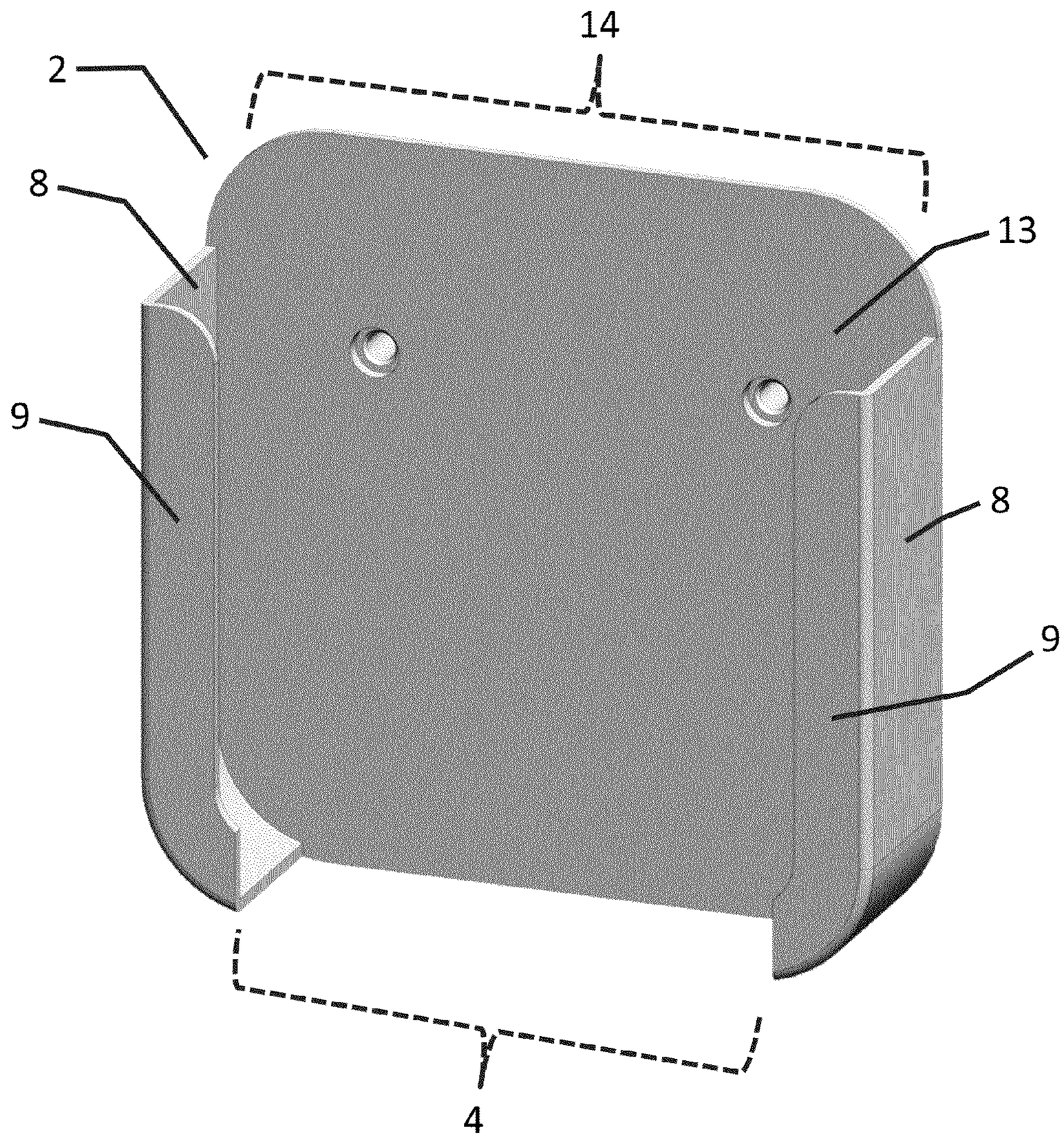


Figure 2

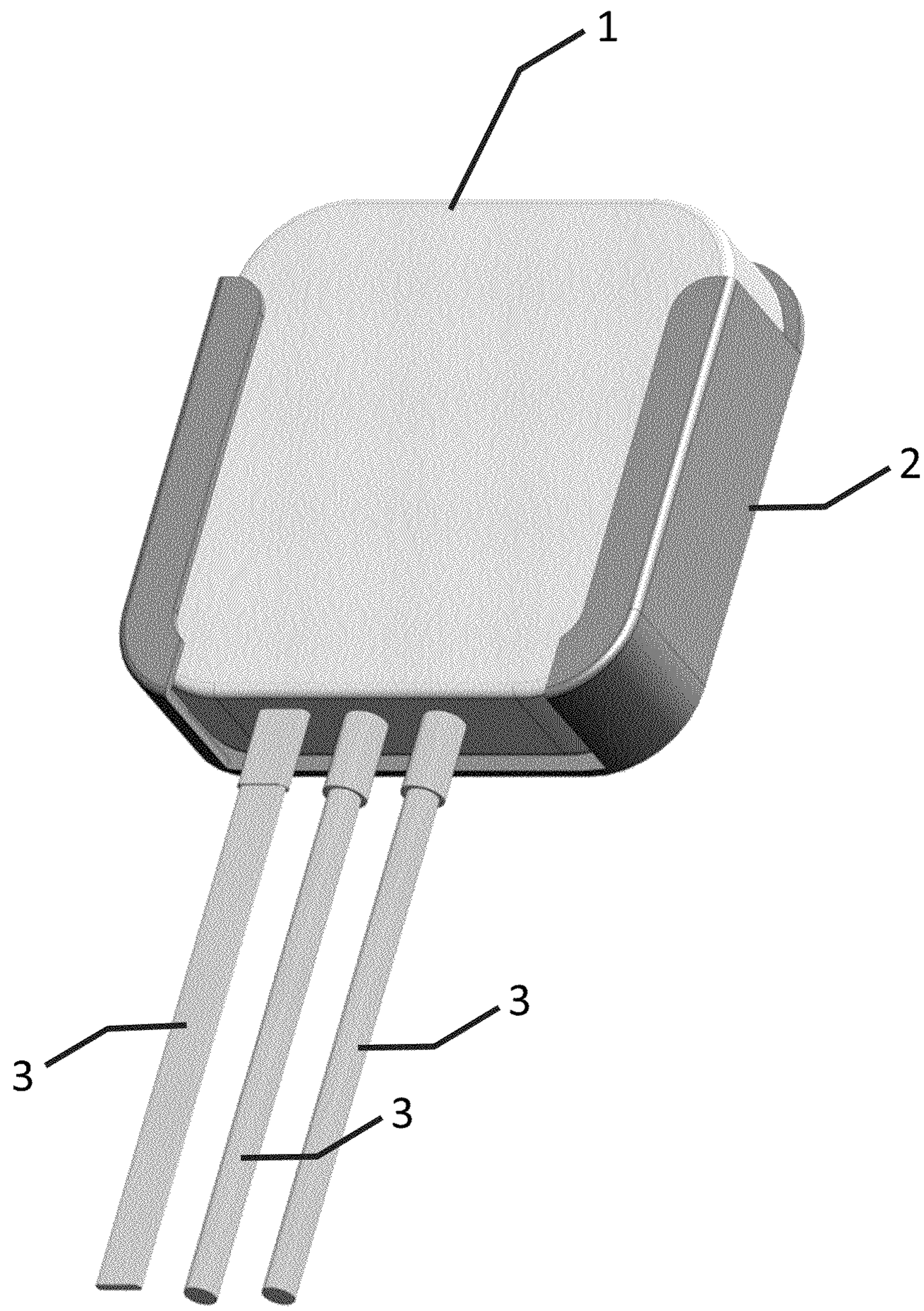


Figure 3

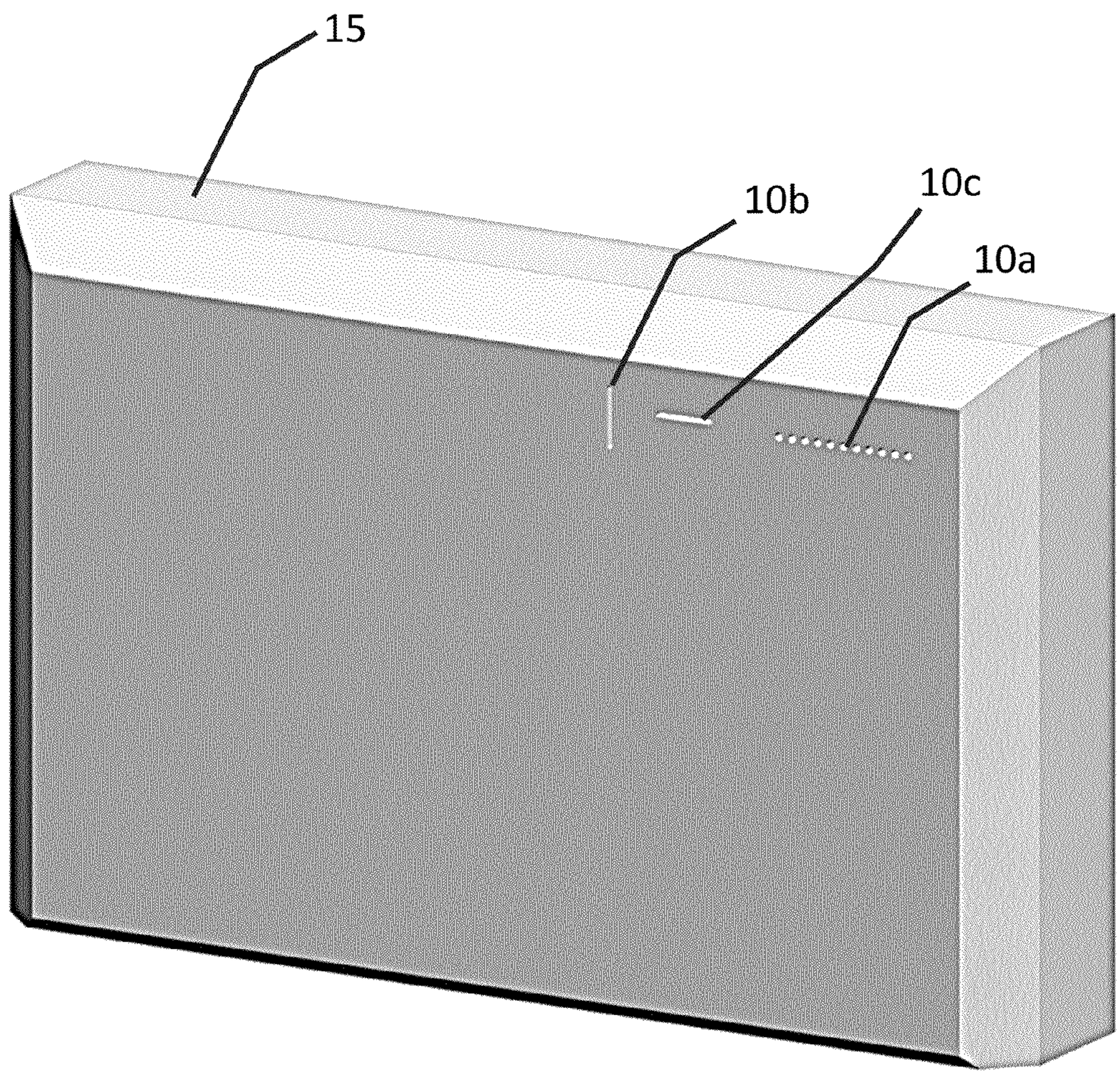


Figure 4

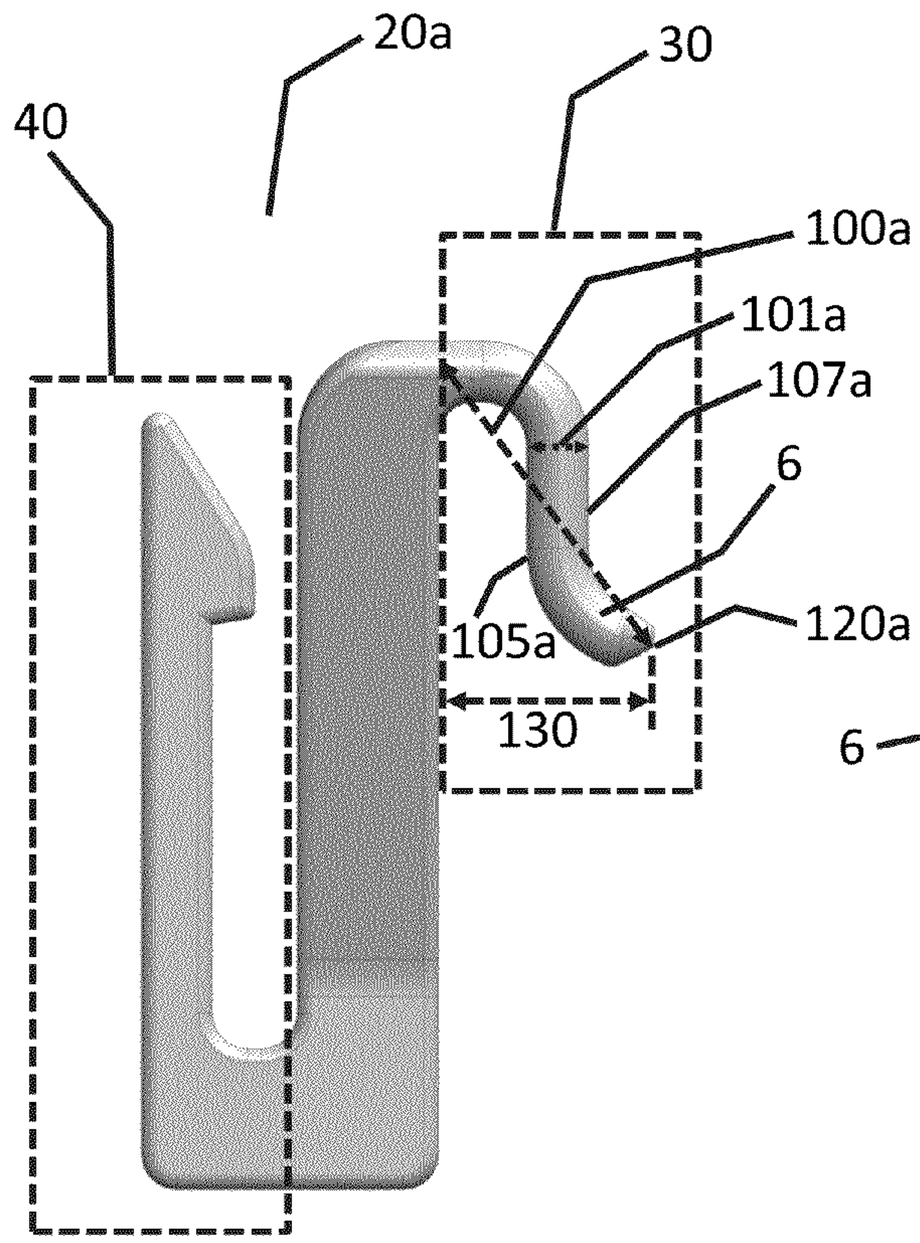


Figure 5a

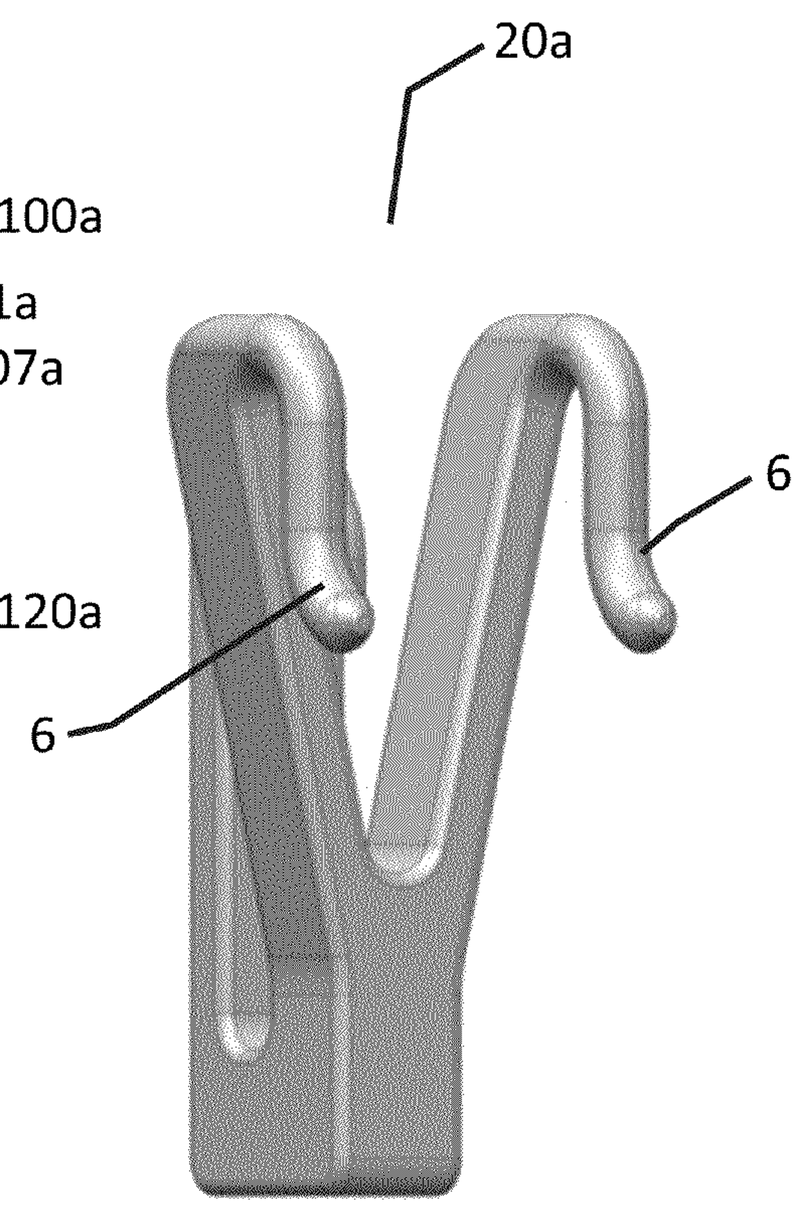


Figure 5b

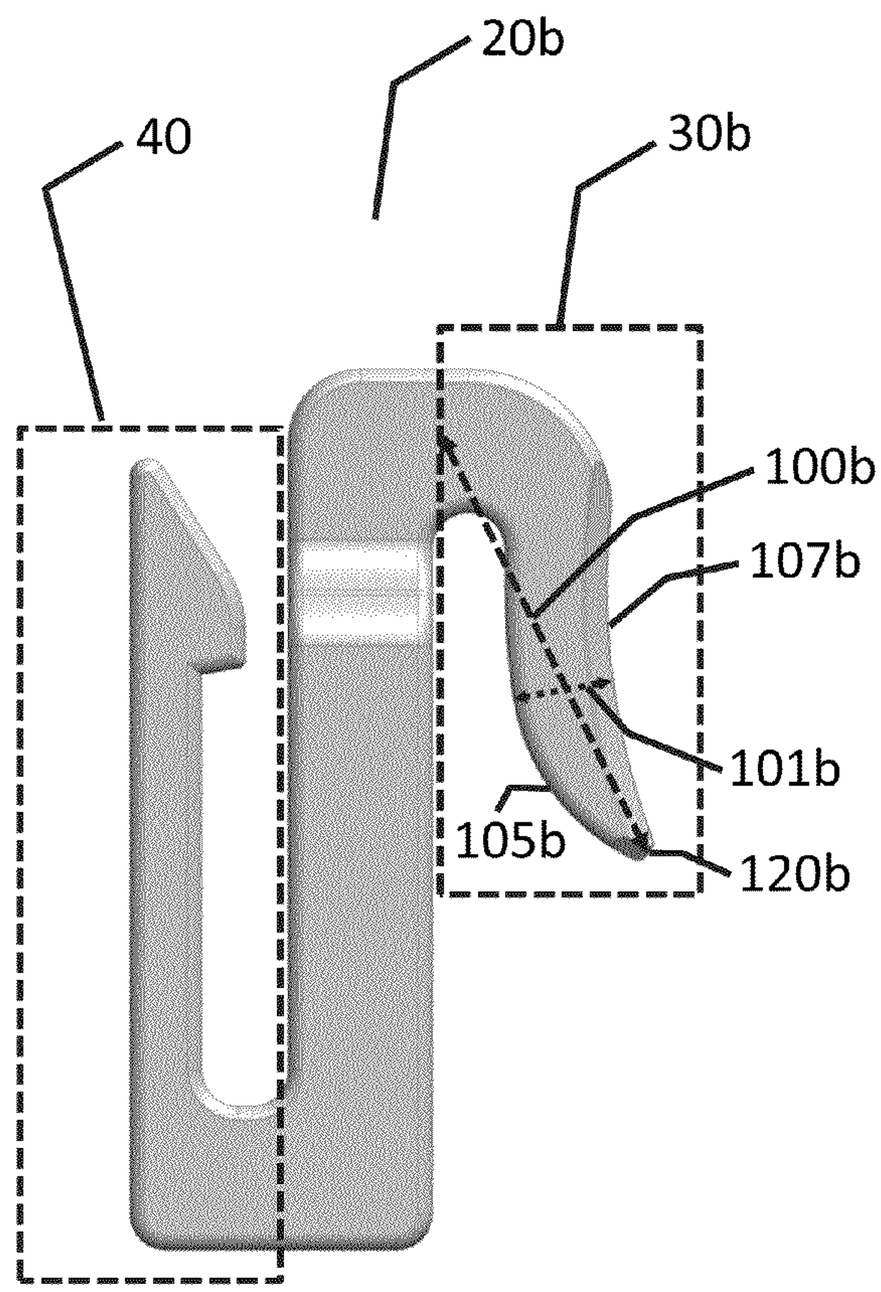


Figure 6a

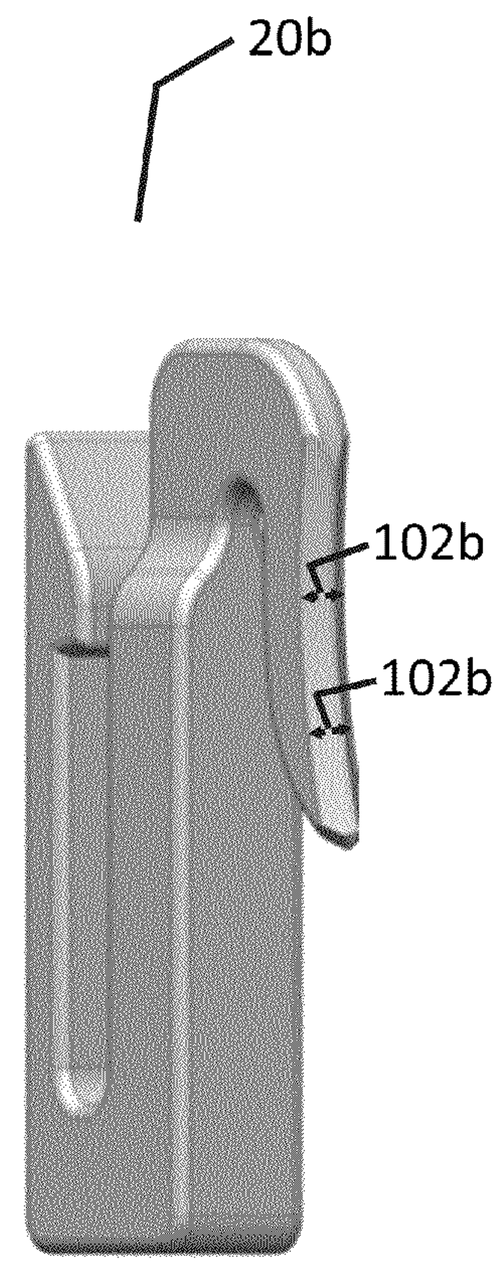


Figure 6b

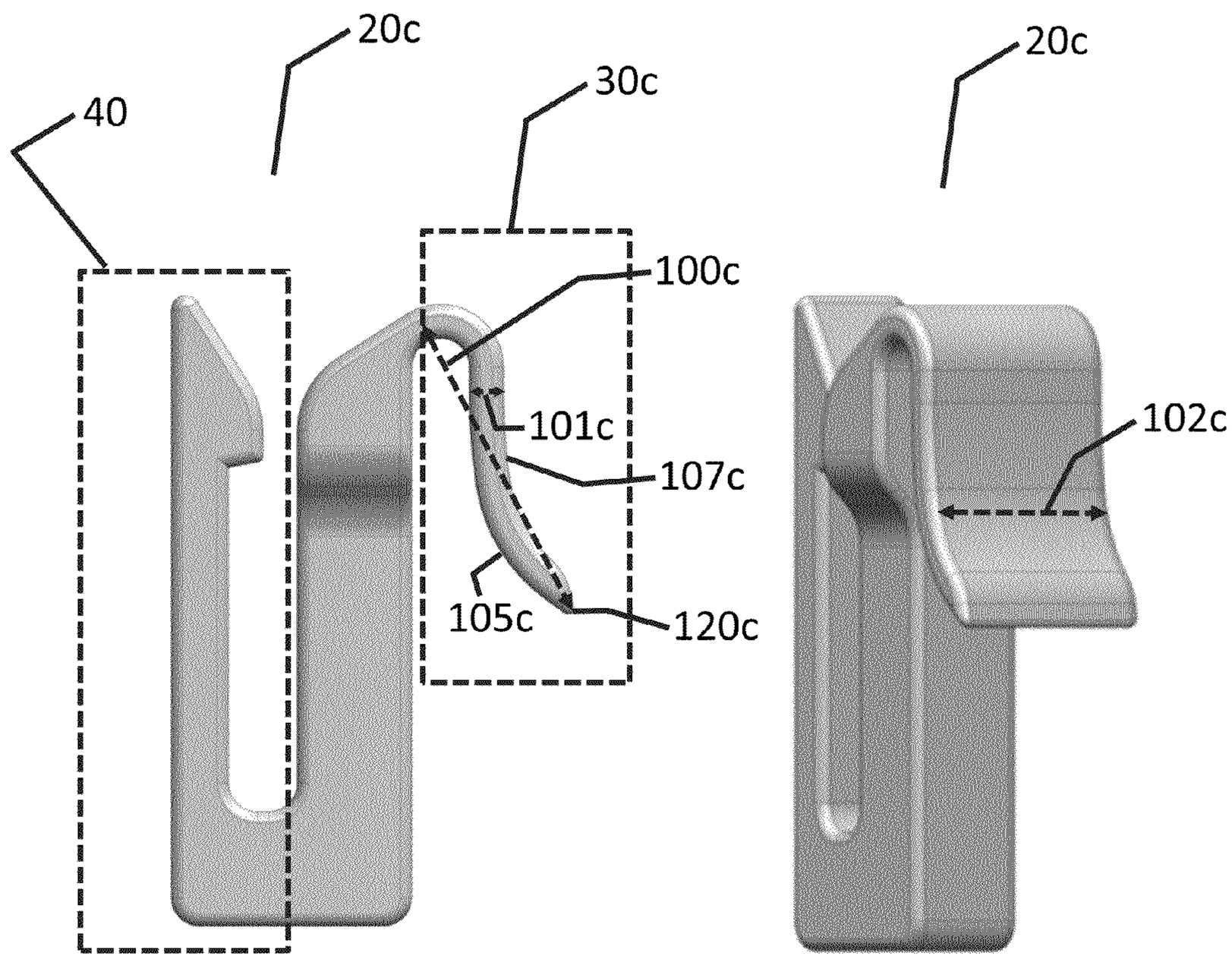


Figure 7a Figure 7b

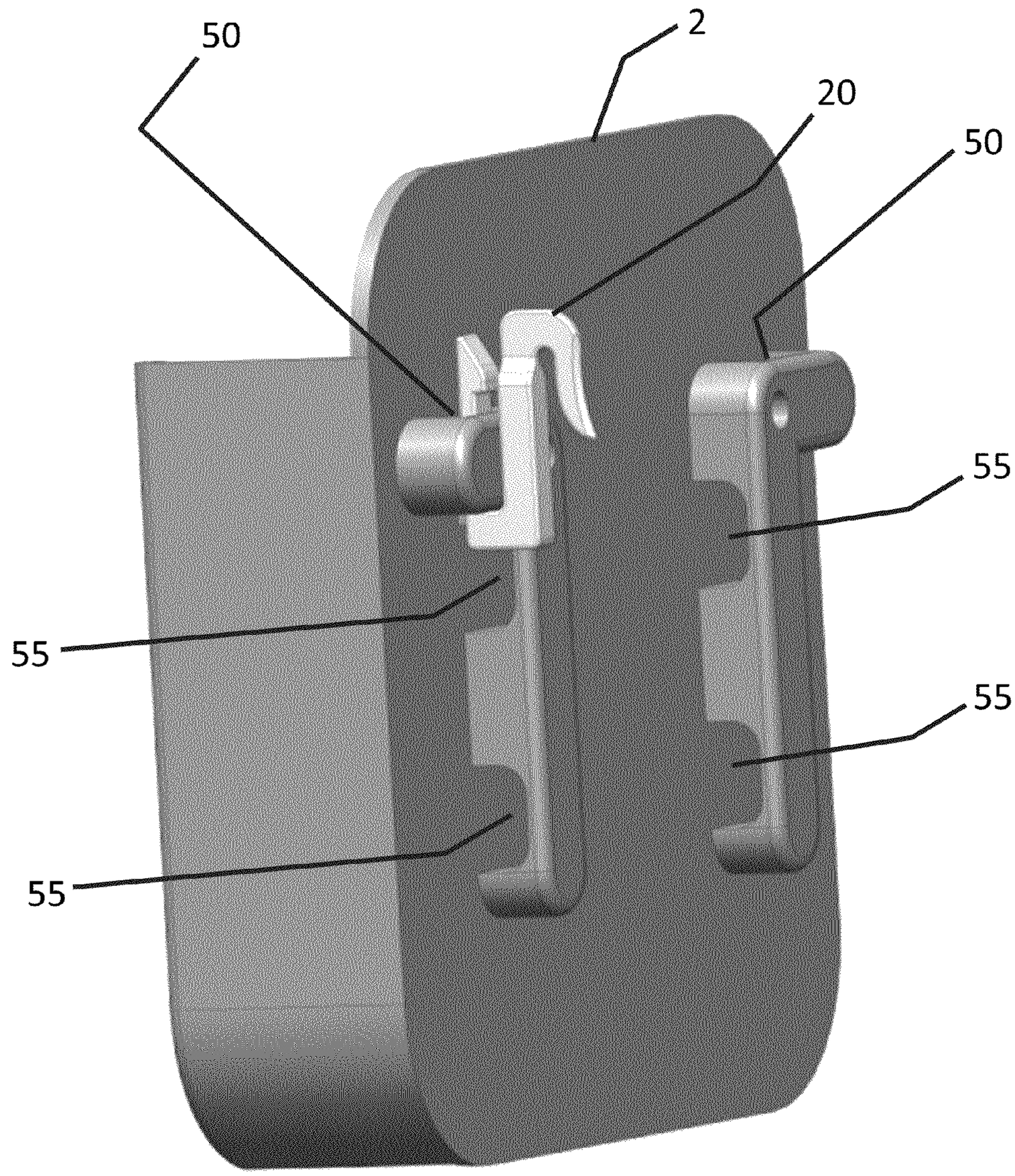


Figure 8

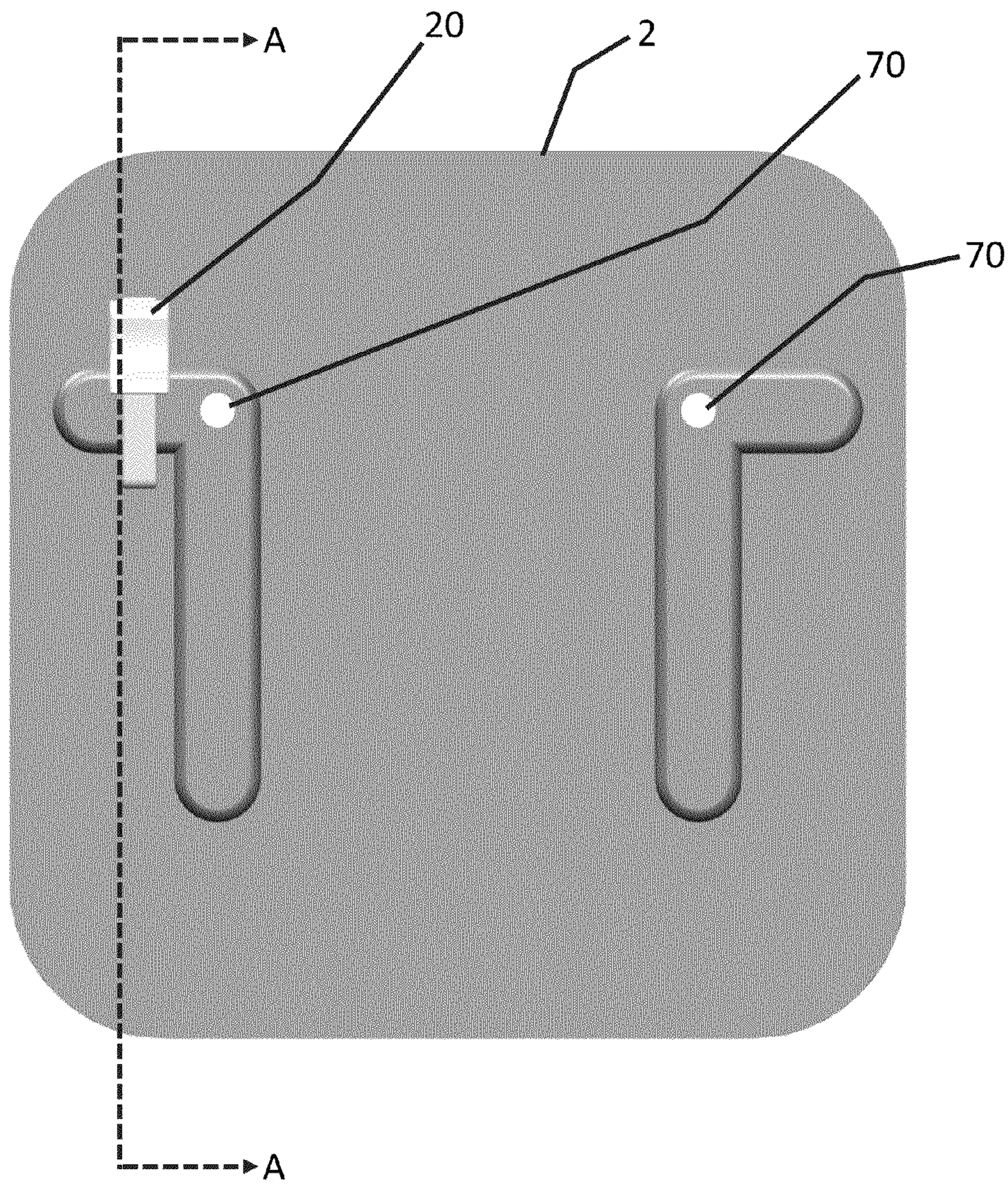


Figure 9

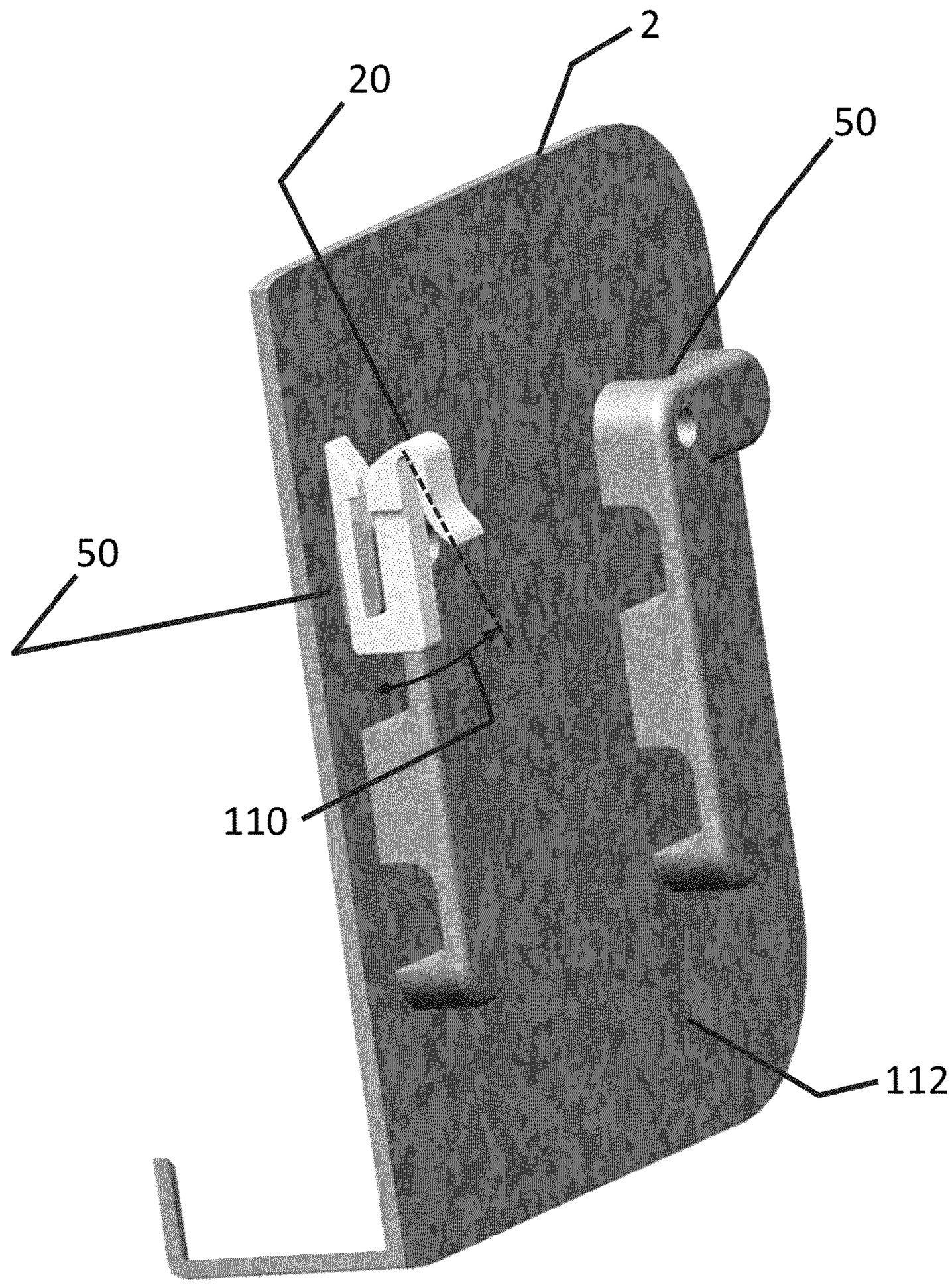


Figure 10

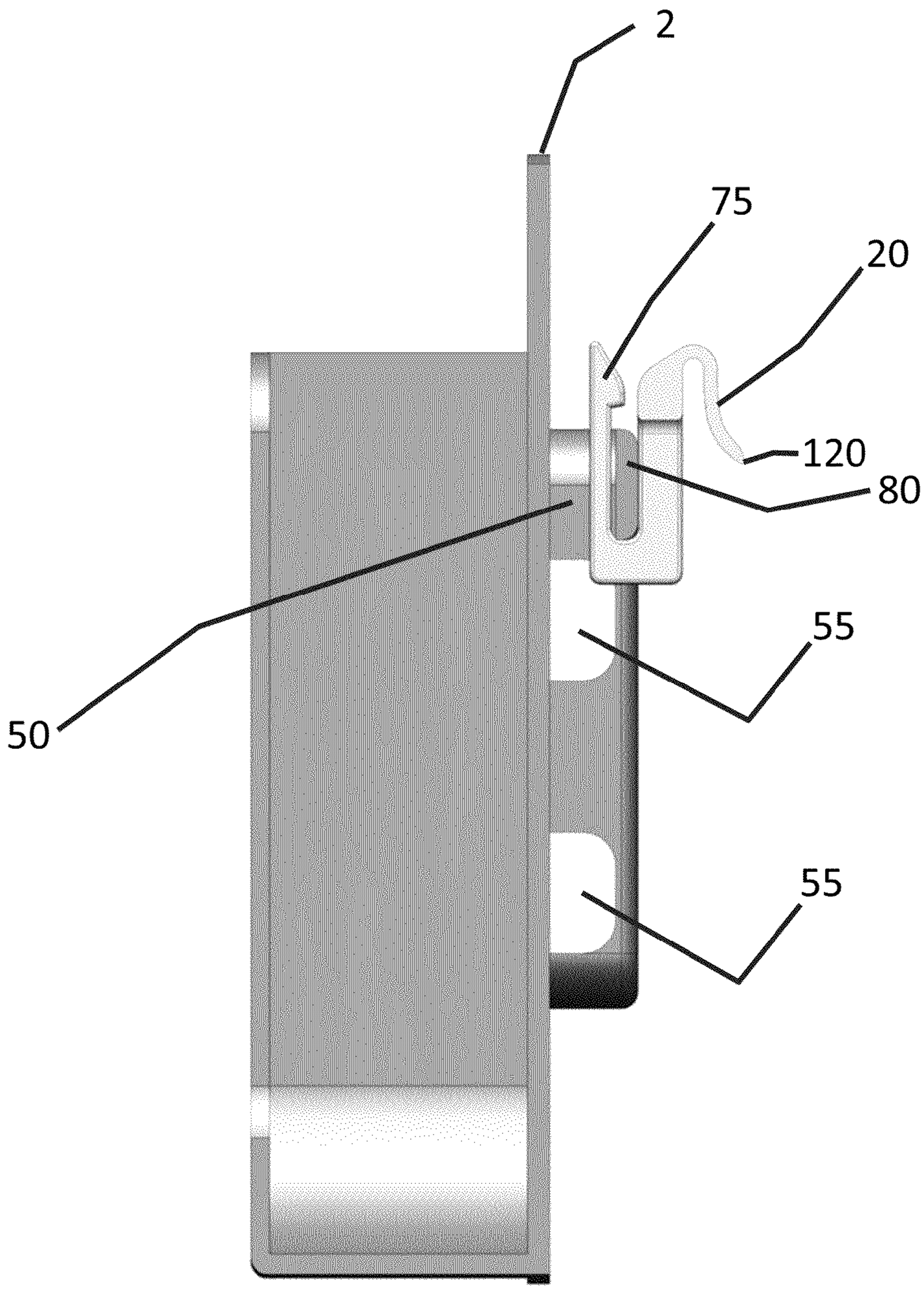


Figure 11

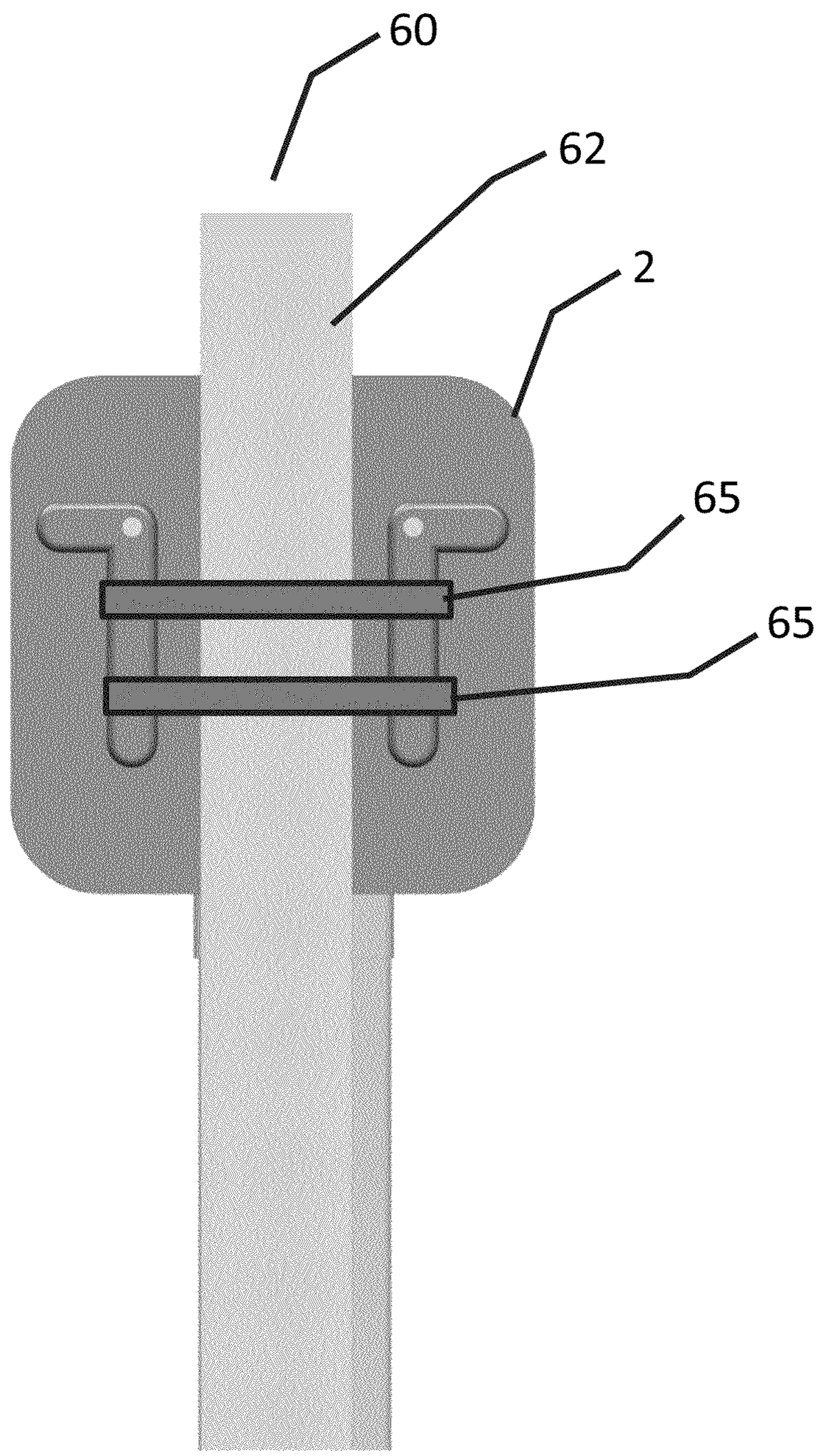


Figure 12

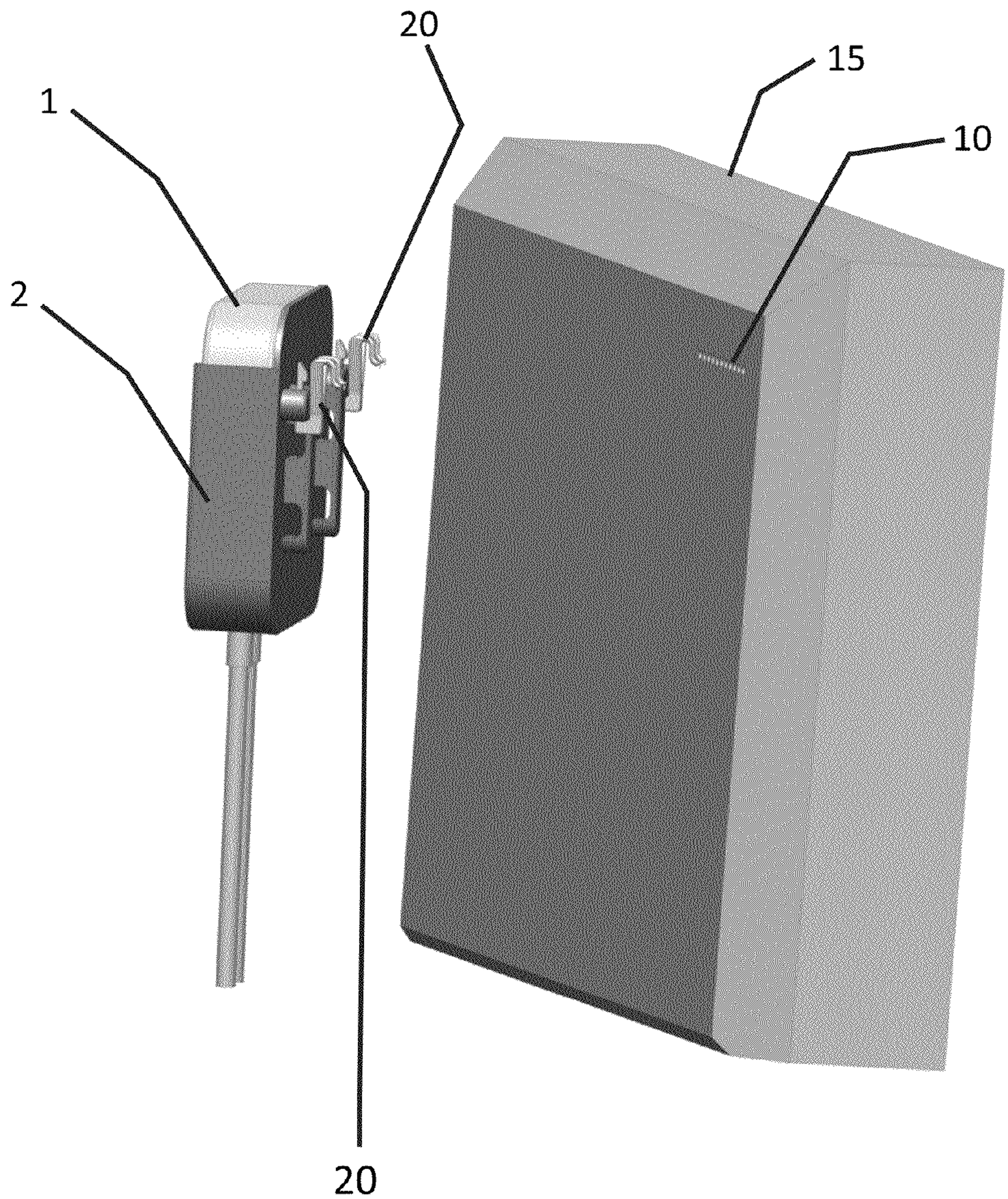


Figure 13

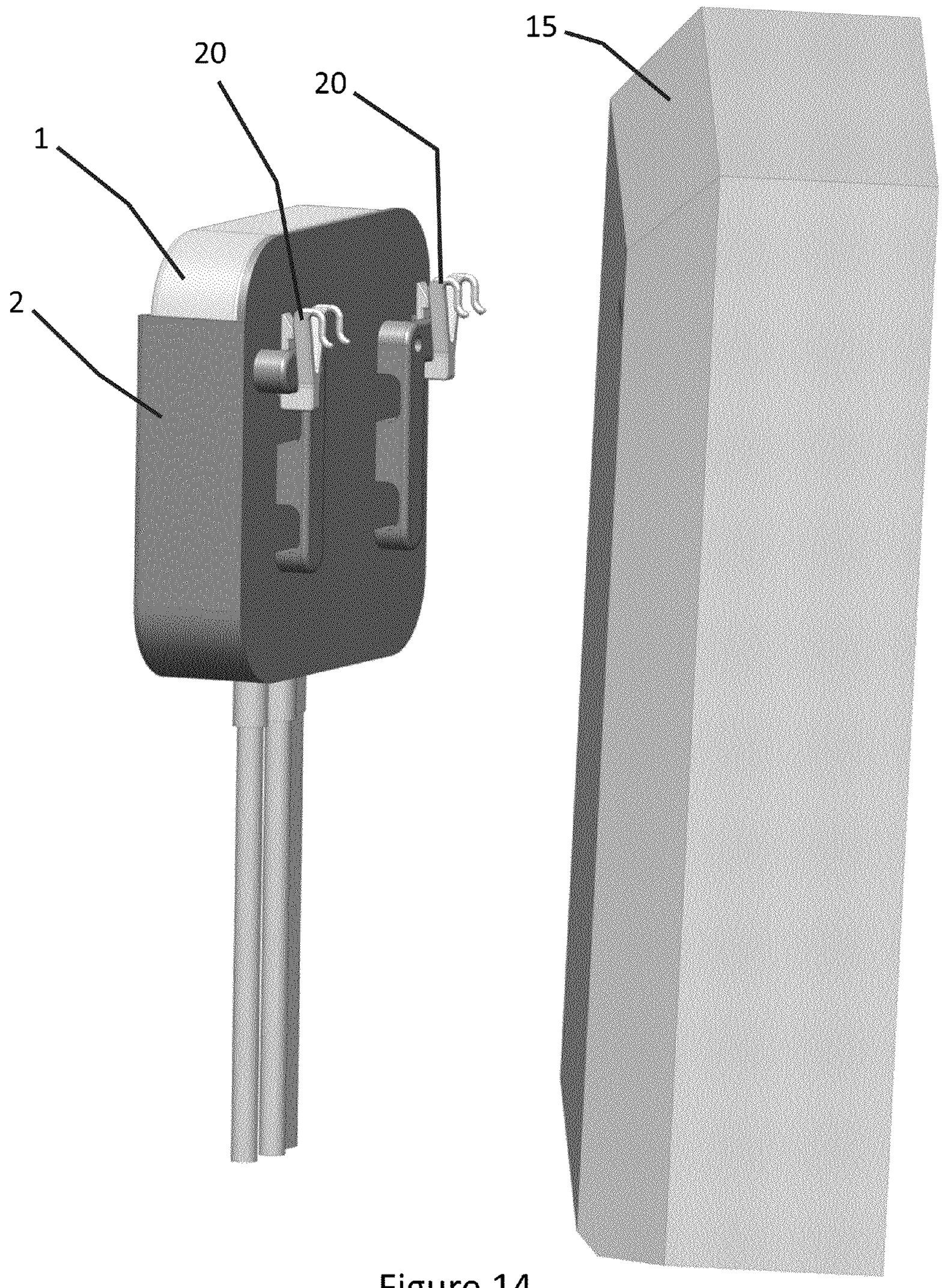


Figure 14

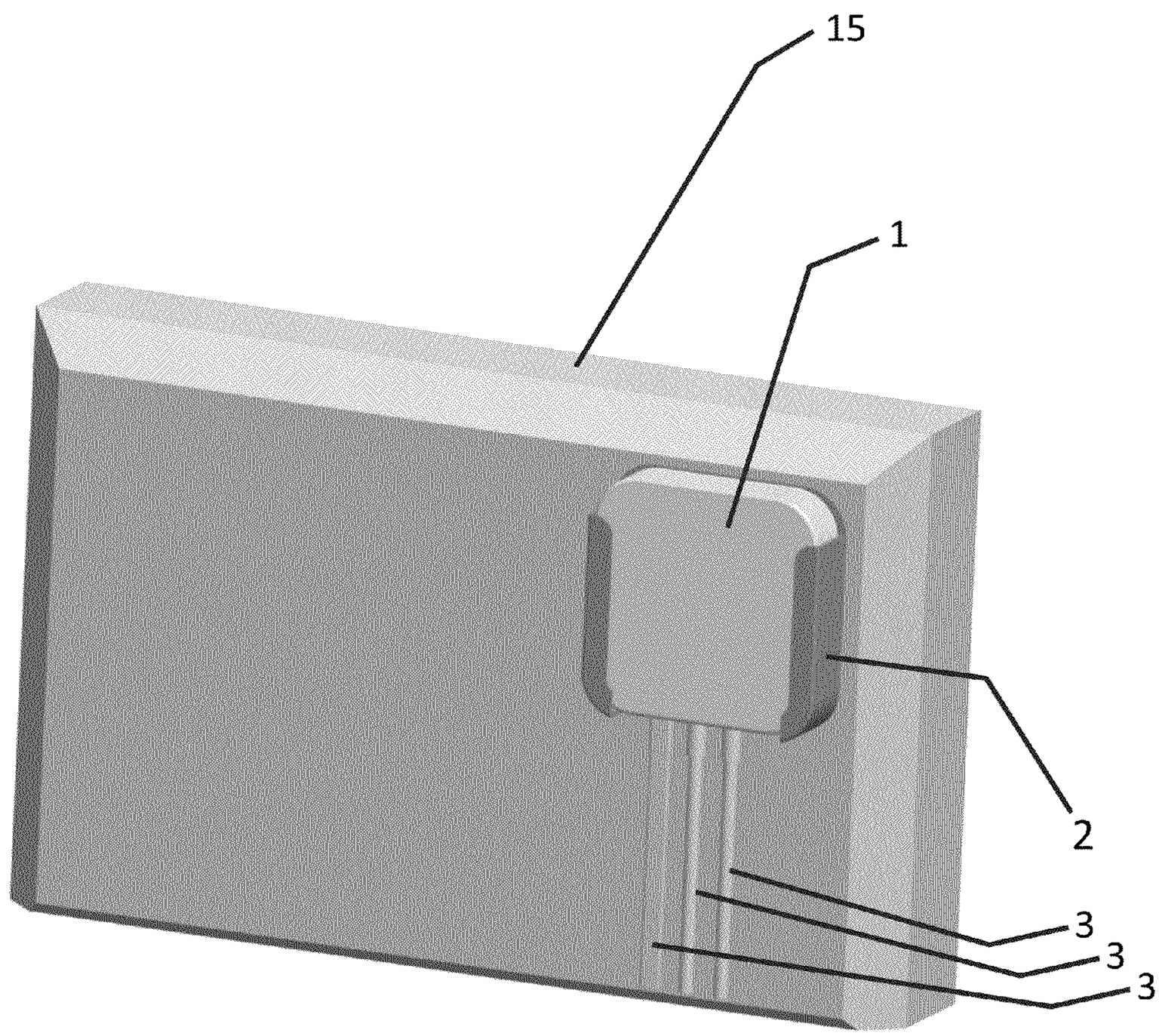


Figure 15

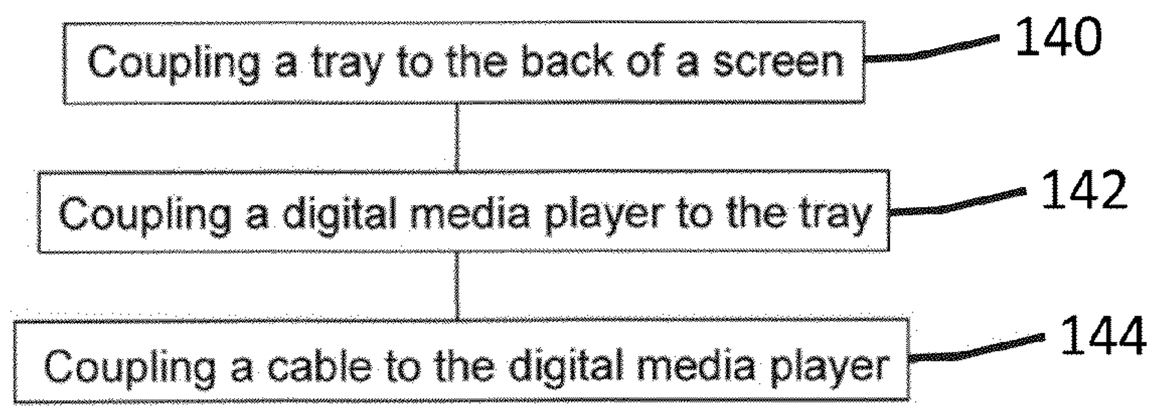


Figure 16

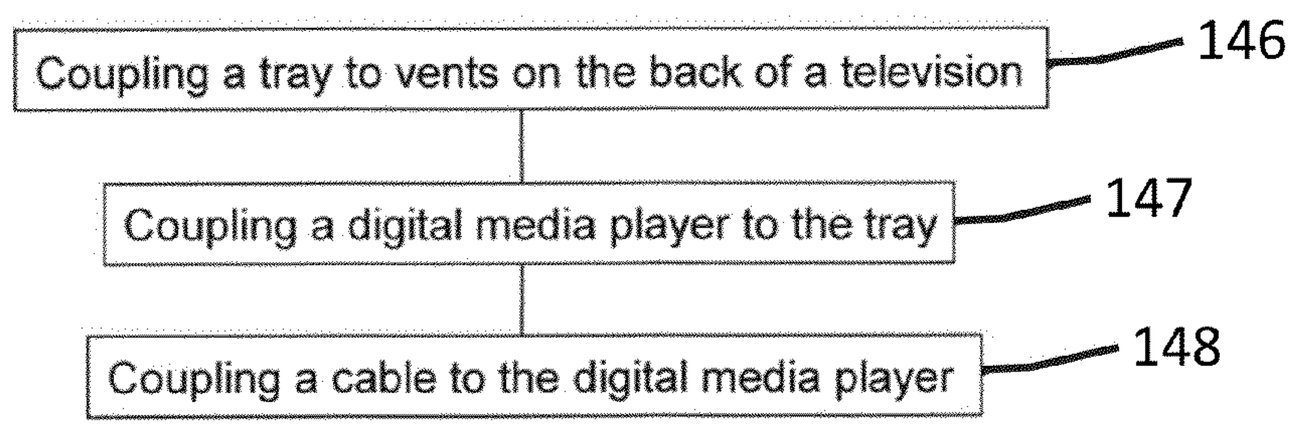


Figure 17

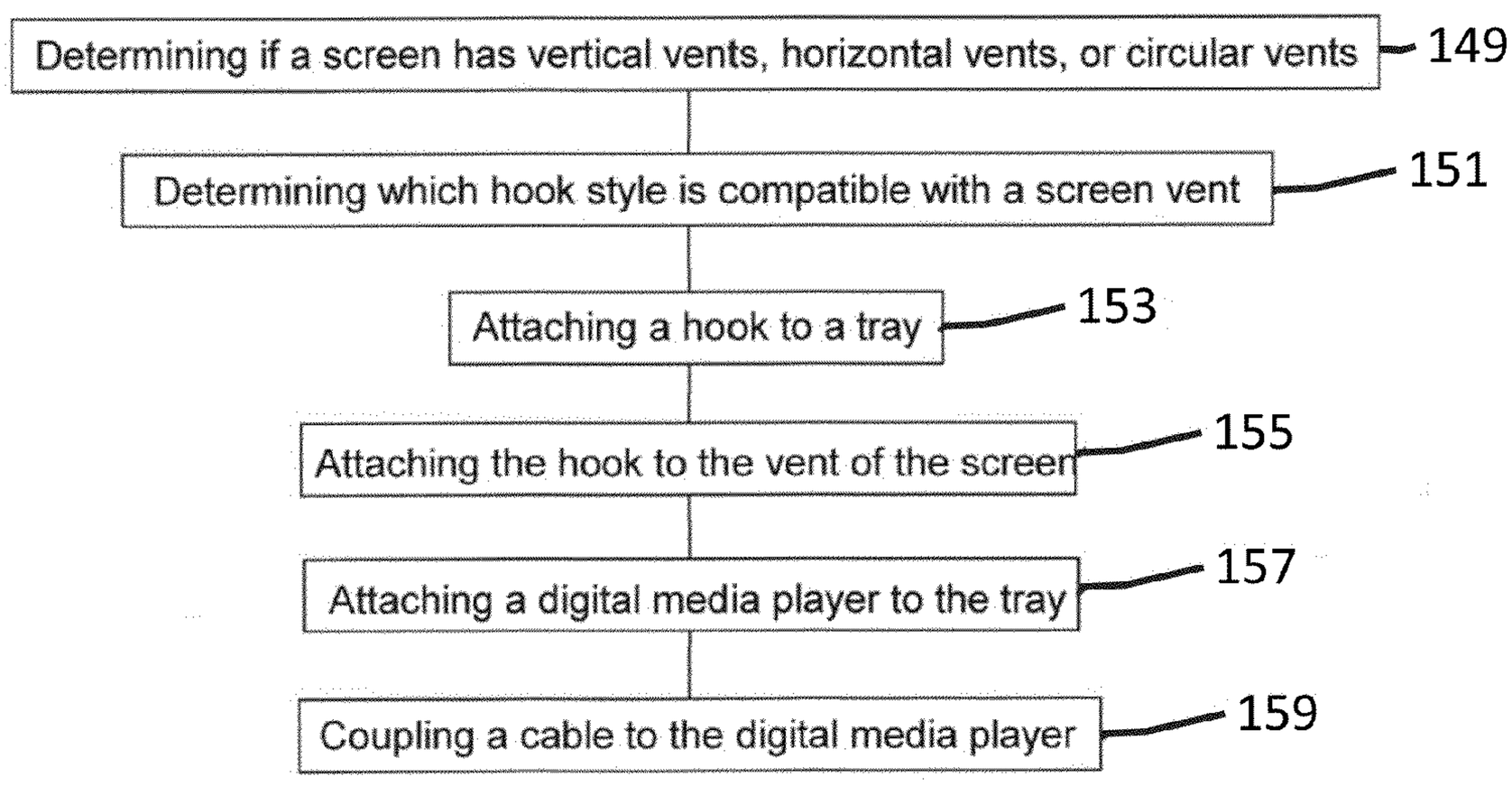


Figure 18

# MOUNTING SYSTEMS FOR DIGITAL MEDIA PLAYERS

## CROSS-REFERENCE TO RELATED APPLICATIONS

This application claims the benefit as a continuation of U.S. Nonprovisional application Ser. No. 14,478,665, filed on Sep. 5, 2014 and titled Mounting Systems for Digital Media Players, which claims the benefit as a continuation of U.S. Nonprovisional application Ser. No. 14/209,452, filed on Mar. 13, 2014 and titled Mounting Methods for Digital Media Players, which claims the benefit as a continuation of U.S. Nonprovisional application Ser. No. 14/169,148, filed on Jan. 30, 2014 and titled Mounting Methods for Digital Media Players, which claims the benefit as a continuation of U.S. Nonprovisional application Ser. No. 13/332,373, filed on Dec. 21, 2011 and titled Mounting System for Digital Media Players, which claims the benefit as a continuation-in-part of U.S. Nonprovisional application Ser. No. 13/278,759, filed on Oct. 21, 2011 and titled Mounting System for Digital Media Players, which claims the benefit of U.S. Provisional Application 61/416,736, filed on Nov. 23, 2010 and titled Mounting System for Digital Media Players.

This application claims the benefit as a continuation of U.S. Nonprovisional application Ser. No. 13/781,717, filed on Feb. 28, 2013 and titled Line of Sight Mounting Systems for Digital Media Players, which claims the benefit as a continuation of U.S. Nonprovisional application Ser. No. 13/779,733, filed on Feb. 27, 2013 and titled Line of Sight Mounting Systems for Digital Media Players.

The disclosures of application Ser. No. 14,478,665; application Ser. No. 14/209,452; application Ser. No. 14/169,148; application Ser. No. 13/332,373; application Ser. No. 13/278,759; application Ser. No. 61/416,736; application Ser. No. 13/781,717; and application Ser. No. 13/781,717 are incorporated by reference herein.

## TECHNICAL FIELD

The present invention is in the technical field of mounting systems. More specifically, the present invention is in the technical field of mounting systems for digital media players.

## BACKGROUND

Users often place digital media players near a television. Television owners desire a convenient means to mount digital media players.

## SUMMARY

We have discovered an apparatus and a method that allow users to mount digital media players.

## DESCRIPTION OF THE DRAWINGS

FIG. **1** illustrates a digital media player.

FIG. **2** illustrates one embodiment of the present invention.

FIG. **3** illustrates a digital media player inside a tray embodiment.

FIG. **4** illustrates round vents, vertical vents, and horizontal vents.

FIGS. **5**A and **5**B illustrate a circular hook embodiment, which is configured to attach to round vents.

FIGS. **6**A and **6**B illustrate a vertical hook embodiment, which is configured to attach to vertical vents.



FIGS. **7**A and **7**B illustrate a horizontal hook embodiment, which is configured to attach to horizontal vents.

FIG. **8** illustrates an embodiment where a back portion slides into a first opening in the tray.

FIG. **9** illustrates an embodiment with a hook in a first opening.

FIG. **10** illustrates cross section A-A from FIG. **9**.

FIG. **11** illustrates a side view of cross section A-A from FIG. **9**.

FIG. **12** illustrates an embodiment with fastening loops securing a tray.

FIG. **13** illustrates hooks attached to a tray as the tray approaches vents.

FIG. **14** also illustrates hooks attached to a tray as the tray approaches vents.

FIG. **15** illustrates a tray embodiment mounted on a screen by using hooks.

FIG. **16** illustrates a method embodiment of the present invention with various optional steps, the order of which may be changed.

FIG. **17** illustrates a method embodiment of the present invention with various optional steps, the order of which may be changed.

FIG. **18** illustrates a method embodiment of the present invention with various optional steps, the order of which may be changed.

## DESCRIPTION OF THE PREFERRED EMBODIMENTS

The accompanying drawings form part of the detailed description below. The drawings show specific embodiments in which the invention may be practiced, by way of example or illustration and not by way of limitation. These embodiments are described in enough detail through text and drawing figures to enable those skilled in the art to practice the claimed invention. The embodiments may be combined, other embodiments may be utilized, or structural, logical and mechanical changes may be made without departing from the scope and spirit of the claimed invention. The following description is, therefore, not to be taken in a limiting sense. The description below illustrates implementations of the invention and does not limit the invention.

In the drawings, which are not necessarily drawn to scale, like numerals describe substantially similar components throughout the several views. The drawings illustrate generally, by way of example, but not by way of limitation, various embodiments discussed in this disclosure.

Digital media players include Digital Video Disc (DVD) players, Blu-ray players, and digital media extenders such as Apple TVs. Digital media players often transmit digital signals wirelessly or through a wire such as a High-Definition Multimedia Interface (HDMI) cable to a screen that displays an image based on the digital signal. Screens include computer monitors, televisions, and image-producing portions of movie projectors. Televisions include flat-panel displays, flat-screen televisions, and tube televisions.

Owners of digital media players often prefer to mount their digital media player near their screens. For example, a person who owns a flat screen television that is mounted on the wall might want to mount her Apple TV onto her flat screen television or onto the wall behind her flat screen television.

FIG. **1** illustrates a digital media player **1**. FIG. **2** shows one embodiment of the present invention. The digital media player **1** slides into a tray **2**. FIG. **3** shows the digital media player **1** inside the tray **2**.

In one embodiment, the tray **2** is configured such that a user can connect electrical cables **3** to the digital media player **1** and then slide the digital media player **1** into the tray **2** without having to disconnect the electrical cables **3**. For example, the tray **3** in FIG. **2** includes an open portion **4** that enables the user to slide the digital media player **1** with attached electrical cables **3** into the tray **2**. In one embodiment, the tray **2** does not have sidewalls **8** nor does the tray **2** have retaining lips **9** in the open portion **4**. The open portion **4** is located such that the electrical cables **3** exit the digital media player **1** in the open portion **4**.

The digital media player has two large sides **11** and four small sides **12**. In one embodiment, the tray has two retaining lips **9** that engage the large side **11** that faces away from the tray base **13**. In this embodiment, the two retaining lips **9** are separated by the open portion **4**. In another embodiment, the tray **2** includes an open top **14** to allows the digital media player **1** to slide into the tray **2**. The open top **14** is located on the opposite side of the tray relative to the open portion **4**.

The tray **2** can attach to vents **10** in a screen **15**. This mounting method is advantageous because it can be achieved without tools. FIG. **4** shows round vents **10***a*, vertical vents **10***b*, and horizontal vents **10***c*. A round vent **10***a* has an approximately round opening. A vertical vent **10***b* has an opening that is longer vertically than the opening is horizontally. For example, a vertical vent opening may measure 3 mm vertically and 1 mm horizontally (when the screen is placed in its normal movie-viewing orientation). A horizontal vent **10***c* has an opening that is longer horizontally than the opening is vertically. For example, a horizontal vent opening may measure 3 mm horizontally and 1 mm vertically. Screen manufacturers often include vents **10** in the back of the screen **15** to allow heat to escape from inside the screen **15**.

In one embodiment, a mounting system includes three types of hooks. The first type of hook is configured for round vents **10***a*. The second type of hook is configured for vertical vents **10***b*. The third type of hook is configured for horizontal vents **10***c*. This embodiment enables the mounting system to be compatible with screens that have round vents **10***a*, vertical vents **10***b*, and horizontal vents **10***c* because the user can select the hook type that is compatible with the user's screen. In other embodiments, the mounting system only contains two hook types or even just contains one hook type.

Hooks **20** attach the tray **2** to the vents **10**. In some embodiments, the hooks are part of the tray. For example, the hooks may be formed as part of the molding process that forms the tray. In other embodiments, the hooks are permanently attached to the tray. In other embodiments, the hooks are detachably coupled to the tray such that the hooks may be removed from the tray after the hooks are attached to the tray.

FIGS. **5***a* and **5***b* show a circular hook **20***a*, which is configured to attach to round vents **10***a*. In one embodiment, the circular hook **20***a* has more than one protrusion **6** that enters vents **10**. The circular hook **20***a* has a front portion **30***a* with a substantially round cross section. The front portion **30** enters into the round vent **10***a*.

The front portion **30** of a hook **20** is configured to enter a vent **10**. In some embodiments, the entire hook is the front portion because the entire hook is sized and shaped to enter the screen's vent. In other embodiments, only part of the hook is the front portion because part of the hook is designed to enter the vent while other parts of the hook serve other purposes such as coupling the front portion to the tray **2**.

FIGS. **6***a* and **6***b* show a vertical hook **20***b* with a front portion **30***b*, which is configured to attach to vertical vents **10***b*. FIGS. **7***a* and **7***b* show a horizontal hook **20***c* with a front portion **30***c*, which is configured to attach to horizontal vents **10***c*.

The front portion **30** has a length **100**, a thickness **101**, and a width **102**. The length **100** is defined as the distance from middle of where the front portion attaches to the rest of the hook to the front portion's most distant point from the middle of where the front portion attaches to the rest of the hook. FIG. **5***a* shows an example length **100***a*. FIG. **5***a* also shows the back profile **105***a* and the front profile **107***a*. The back profile **105** is the closest profile on the front portion **30** to the back portion **40** of the hook **20**. The front profile **107** is the most distant profile on the front portion **30** to the back portion **40** of the hook **20**. The front portion's thickness **101** is the average linear distance between the back profile **105** and the front profile **107**. The width **102** of the front portion **30** is perpendicular to the thickness **101**. For example, FIG. **7***b* shows the width **102***c* of the horizontal hook **20***c*. The width **102** is determined by finding the average width of the front portion **30**.

In one embodiment, a hook **20** has a thickness **101** that is at least 50% larger than the hook's width **102**. For example, FIGS. **6***a* and **6***b* show a hook **20***b* with a thickness **101***b* that is greater than the hook's width **102***b*. In another embodiment, a hook **20** has a thickness **101** that is at least twice as large as the hook's width **102**. In yet another embodiment, a hook **20** has a thickness **101** that is at least three times as large as the hook's width **102**. In various embodiments, the hooks have a thickness that is less than 2 mm, 3 mm, or 4 mm.

In one embodiment, a hook **20** has a width **102** that is at least 50% larger than the hook's thickness **101**. For example, FIGS. **7***a* and **7***b* show a hook **20***c* with a width **102***c* that is greater than the hook's thickness **101***c*. In another embodiment, a hook **20** has a width **102** that is at least twice as large as the hook's thickness **101**. In yet another embodiment, a hook **20** has a width **102** that is at least three times as large as the hook's thickness **101**.

In one embodiment, two circular hooks **20***a* are coupled to the tray **2**. In another embodiment, at least three circular hooks **20***a* are coupled to the tray **2**. In yet another embodiment, at least four circular hooks **20***a* are coupled to the tray **2**. In yet another embodiment, at least four hooks **20** are coupled to the tray **2**. In yet another embodiment, at least ten hooks **20** are coupled to the tray **2**.

In various embodiments, the hook **20** includes an approach angle **110** that helps the hook **20** hold itself to the vent **10**. The approach angle **110** is defined as the angle between the hook's length **100** and the back of the tray **112** as illustrated in FIG. **10**. In various embodiments, the approach angle **110** is less than 60 degrees, less than 50 degrees, less than 40 degrees, less than 30 degrees, or less than 20 degrees.

In various embodiments, the distal end of the hook **20** includes a forwardly curved portion **120**. The distal end is the end of the hook **20** that is configured to enter the vent **10** before other portions of the hook **20** enter the vent **10**. The forwardly curved portion **120** helps the hook **20** enter the vent's opening. FIG. **11** shows that the forwardly curved portion **120** causes the distal end to be positioned farther away from the tray **2** than the distal end would be positioned without the forwardly curved portion **120**. The forwardly curved portion **120** curves the front portion **30** away from the tray **2** when the hook **20** is coupled to the tray **2**. In various embodiments, the forwardly curved portion **120** curves at least 10 degrees, at least 20 degrees, at least 30 degrees, or at least 40 degrees from the portion of the hook to which the forwardly curved portion **120** is attached.

A hook's extension distance **130** is the distance from the attachment plane defined by where the front portion **30** attaches to the rest of the hook **20** to the front portion's most distant point as shown in FIG. **5***a*. For the purpose of measuring the extension distance **130**, the attachment plane should be parallel to the back of the tray **112**. In various embodiments, the extension distance **130** is less than 8 mm, less than 10 mm, or less than 12 mm.

In various embodiments, the front portion **30** is flexible. A front portion **30** is herein defined as flexible if the distal end can move at least 3 mm to either side for every 10 mm of length without moving any portion of the hook besides the front portion or causing more than 1 mm of permanent deformation when tested at 74 degrees Fahrenheit and held in the side position for one to two seconds. Moving to the side is defined as moving into or out of the page in FIGS. **5***a*, **6***a*, and **7***a*.

In one embodiment, the hooks **20** are metal. In another embodiment, the hooks **20** are a non-electrically conductive material such as plastic or rubber. In one embodiment, the front portion **30** is metal covered with a nonconductive layer such as rubber, plastic, or any other nonconductive substance. The front portion **30** may have a circular cross section. In various embodiments, metal wires or rods protrude from the back of the tray **112** with an approach angle of less than 60 degrees, less than 50 degrees, less than 40 degrees, less than 30 degrees, or less than 20 degrees. FIG. **5***a* shows an embodiment wherein the front portion **30** comprises metal covered by a nonconductive layer. In various embodiments, at least two front portions **30** that each comprise at least one metal wire are attached to the tray, at least three front portions **30** that each comprise at least one metal wire are attached to the tray, at least four front portions **30** that each comprise at least one metal wire are attached to the tray, or at least five front portions **30** that each comprise at least one metal wire are attached to the tray.

The hooks **20** have a back portion **40**, which is configured to attach to the tray **2**. FIG. **8** shows an embodiment where the back portion **40** slides into a first opening **50** in the tray **2**. In various embodiments, the first opening **50** is at least 2 mm, 3 mm, 4 mm, or 5 mm wider than the back portion **40** that slides into the first opening **50** to enable the hook to slide back and forth in the first opening such that the hook **20** is able to move to align itself with the vent **10**. FIG. **10** shows cross section A-A from FIG. **9** of the hook **20** in the first opening **50**. FIG. **11** illustrates a side view of cross section A-A from FIG. **9** of the hook **20** in the first opening **50**.

In one embodiment, the following method is used to attach the tray **2** to the screen **15**. The user determines which style of hook **20** is compatible with the vents **10** on her screen **15**. The user attaches the hooks **20** to the tray **2**. The user attaches the hooks **20** to the vents **10**. The user attaches the digital media player **1** to the tray **2**. The above steps can be performed in orders different from the order listed above. For example, the user can attach the hooks **20** to the vents **10** before attaching the hooks **20** to the tray **2**. In another method, the user attaches the tray **2** to the vents **10** by using hooks **20**.

FIGS. **16-18** illustrate various method embodiments of the present invention. The steps in these methods are optional and may be performed in any order. The steps of the various methods may be combined with each other.

In one embodiment, the tray includes additional openings **55** as illustrated in FIGS. **8** and **11**. In one embodiment, the following method is used to mount the tray **2**: The user ties the tray **2** to the screen mount **60** using a fastening loop **65**.

Fastening loops **65** include cable ties, zip ties, ropes, strings, and bands such as Velcro bands. Screen mounts **60** attach screens **15** to walls such as the vertical walls that form the outer perimeter of rooms in a building such as a home or office. Screen mounts **60** often include vertical bars **62** and horizontal bars. In one embodiment, the user ties the tray **2** to the vertical bar **62**. In another embodiment, the user ties the tray **2** to the horizontal bar. The user ties the tray **2** to the bar **62** by placing a fastening loop **65** around the bar **62** and through the opening **50**, **55**. FIG. **12** shows fastening loops **65** securing the tray **2** to the vertical bar **62** by going around the vertical bar **62** and through the additional openings **55**.

In another embodiment, the tray **2** also includes screw holes **70** as shown in FIG. **9**. In another mounting method, the user places a screw through the screw hole **70**, presses the tray **2** against a wall, and then rotates the screw such that the screw advances into the wall to secure the tray **2** to the wall. In another embodiment, the user places a nail through the screw hole **70**, presses the tray **2** against a wall, and then pushes the nail's head such that the nail advances into the wall to secure the tray **2** to the wall.

In another embodiment, the tray **2** includes first openings **50**, additional openings **55**, and screw holes **70** such that the user can mount the tray **2** by attaching the tray **2** to the vents **10** by using hooks **20**, can mount the tray **2** by attaching the tray **2** to the bars **62** by using fastening loops **65**, or can mount the tray **2** by attaching the tray **2** to the wall by using screws or nails. In a related embodiment, a package in which the tray **2** is sold to customers includes hooks **20**, fastening loops **65**, and nails. In a related embodiment, the package in which the tray is sold to customers includes hooks **20**, fastening loops **65**, and screws. Thus, the package is a universal mounting system because it provides means for an extremely wide range of customers to mount their digital media players.

In one embodiment, the hooks **20** attach to the tray **2** via a snap fit. A snap fit is a self-locking joint in which one part flexes until it slips past a second part. Once the part that flexes slips past the second part, the part that flexes returns to substantially its initial shape, which prevents the two parts from inadvertently separating. FIG. **11** shows an embodiment where a flexing part **75** has moved past a second part **80**. In the embodiment shown in FIG. **11**, the second part **80** forms the outer perimeter of the first opening **50**. The snap fit is advantageous because it prevents the hook **20** from inadvertently falling off the tray **2**.

FIGS. **13** and **14** show hooks **20** attached to the tray **2** as the tray **2** approaches the vents **10**. FIG. **15** shows the tray **2** mounted on the screen **15** by using the hooks **20**.

Many other tray geometries are possible. For example, the tray may completely or partially enclose the digital media player. In an embodiment, the tray encloses all sides of the digital media player. In an embodiment, the retaining lips **9** shown in FIG. **2** extend towards each other such that they touch each other and/or join together to enable the tray to engage a larger portion of the large side **11** that faces away from the tray base **13**. In one embodiment, the tray includes side walls **8** that convert open portion **4** and/or open top **14** into at least partially closed portions. Various tray embodiments include walls that engage or cover at least a portion of any combination of the digital media player's large sides **11** and small sides **12**. In another embodiment, the tray **2** includes at least three screw holes **70**.

The tray **2** can be molded from acrylonitrile butadiene styrene (ABS) plastic with a hardness of 55 shore D, 65 shore D, 75 shore D, 85 shore D, or 95 shore D. The hooks **20** can be molded from the same ABS plastic materials that can be used for the tray. The hooks **20** can also be molded from polyurethane with a hardness of 70 shore A, 80 shore A, 90 shore A, or 95 shore A. The hooks **20** can also be molded from

silicone rubber with a hardness of 85 shore A or 95 shore A. The screws can be a metal such as stainless steel and can be fabricated through standard screw machining processes.

The above description is intended to be illustrative, and not restrictive. For example, the above embodiments and aspects thereof may be used in combination with each other. Many other embodiments will be apparent to those skilled in the art after reading the above description. While the foregoing written description of the invention enables one of ordinary skill to make and use the claimed invention, those of ordinary skill will understand and appreciate the existence of variations, permutations, combinations, equivalent means, and equivalents of the specific embodiments, methods, and examples herein. The invention should therefore not be limited by the above described embodiments, methods, and examples, but by all embodiments and methods within the scope and spirit of the invention as claimed.

We claim:

**1**. A mounting system configured to mount a digital media player to a backside surface of a television, the television comprising a frontside surface configured to display an image, the mounting system comprising:

a tray base, wherein the tray base comprises a top half and a bottom half, and the tray base comprises a left half and a right half;

a first sidewall coupled to the left half of the tray base, wherein the first sidewall extends from the top half to the bottom half of the tray base;

a second sidewall coupled to the right half of the tray base such that the first sidewall and the second sidewall are coupled at opposite sides of the tray base, wherein the second sidewall extends from the top half to the bottom half of the tray base, wherein the tray base is coupled to the backside surface of the television such that the first sidewall and the second sidewall protrude from the tray base outward relative to the backside surface of the television in a direction away from the frontside surface of the television while the tray base is coupled to the backside surface of the television,

a first retaining lip coupled to the first sidewall; and

a second retaining lip coupled to the second sidewall, wherein the first retaining lip protrudes towards the second retaining lip, and wherein the second retaining lip protrudes towards the first retaining lip, wherein the first retaining lip and the second retaining lip engage at least one surface of the digital media player that faces away from the backside surface of the television while the digital media player is at least partially located between the first sidewall and the second sidewall such that the mounting system couples the digital media player to the backside surface of the television.

**2**. The mounting system of claim **1**,

wherein the first sidewall comprises a first bottom portion that protrudes rightward to reduce a first distance between the first bottom portion and the right half of the tray base,

wherein the second sidewall comprises a second bottom portion that protrudes leftward to reduce a second distance between the second bottom portion and the left half of the tray base,

wherein the digital media player comprises a lower left corner and a lower right corner, and

wherein the first bottom portion is configured such that the first sidewall extends at least partially around the lower left corner of the digital media player, and the second bottom portion is configured such that the second sidewall extends at least partially around the lower right corner of the digital media player such that the first bottom portion of the first sidewall and the second bottom portion of the second sidewall are configured to prevent the digital media player from falling out of the mounting system by passing between the first bottom portion and the second bottom portion.

**3**. The mounting system of claim **2**, wherein the tray base is coupled inside of a periphery of the backside surface of the television.

**4**. The mounting system of claim **3**, wherein the tray base is coupled to the backside surface of the television such that the tray base is oriented parallel to the backside surface.

**5**. The mounting system of claim **2**, wherein the mounting system further comprises:

an open portion between the first bottom portion and the second bottom portion such that the bottom half of the mounting system comprises a bottom open end; and

a gap between the first retaining lip and the second retaining lip, wherein the gap forms an open back of the mounting system such that the at least one surface of the digital media player that faces away from the backside surface of the television is at least partially uncovered by the mounting system.

**6**. The mounting system of claim **5**, wherein the digital media player comprises a connection side configured to receive an electrical cable, wherein the digital media player is coupled to the mounting system such that the electrical cable exits the mounting system through the bottom open end, and

wherein the top half of the tray base comprises an at least partially open top located opposite of the bottom open end.

**7**. The mounting system of claim **5**, wherein the tray base is located at least partially between the digital media player and the backside surface of the television, and wherein the first retaining lip, the second retaining lip, and the open back are located outward from the digital media player in the direction away from the frontside surface of the television.

**8**. The mounting system of claim **7**, wherein a hook couples the tray base to a vent of the television.

**9**. The mounting system of claim **7**, wherein an adhesive pad couples the tray base to the backside surface of the television.

**10**. The mounting system of claim **2**, wherein the mounting system comprises an open portion between the first bottom portion and the second bottom portion such that the bottom half of the mounting system comprises a bottom open end that faces downward relative to the television, wherein the digital media player comprises a connection side configured to receive an electrical cable, wherein the digital media player is coupled to the mounting system such that the electrical cable exits the mounting system in a downward direction through the bottom open end such that the connection side faces downward relative to the television.

**11**. The mounting system of claim **10**, wherein the top half of the tray base comprises an open top such that the tray base comprises a top open end located opposite of the bottom open end.

**12**. The mounting system of claim **11**, wherein the mounting system is configured to enable inserting the digital media player through the top open end while being configured to prevent the digital media player from falling downward through the bottom open end.

**13**. The mounting system of claim **10**, wherein the top half of the tray base comprises an at least partially open top located opposite of the bottom open end, wherein the mounting system is configured to enable inserting the digital media player through the at least partially open top while being

configured to prevent the digital media player from falling downward through the bottom open end.

**14**. The mounting system of claim **10**, wherein the top half of the tray base comprises an at least partially open top located opposite of the bottom open end, wherein a gap between the first retaining lip and the second retaining lip forms an open back of the mounting system such that the at least one surface of the digital media player that faces away from the backside surface of the television is at least partially uncovered by the mounting system.

**15**. The mounting system of claim **2**, wherein the first retaining lip extends along the first sidewall from the top half of the tray to the first bottom portion, and wherein the second retaining lip extends along the second sidewall from the top half of the tray to the second bottom portion.

**16**. A mounting system configured to mount a digital media player to a backside surface of a television, the television comprising a frontside surface configured to display an image, the mounting system comprising:

a tray base, wherein the tray base comprises a top half and a bottom half, and the tray base comprises a left half and a right half;

a first sidewall coupled to the left half of the tray base, wherein the first sidewall extends from the top half to the bottom half of the tray base;

a second sidewall coupled to the right half of the tray base such that the first sidewall and the second sidewall are coupled at opposite sides of the tray base, wherein the second sidewall extends from the top half to the bottom half of the tray base, wherein the tray base is coupled to the backside surface of the television such that the first sidewall and the second sidewall protrude from the tray base outward relative to the backside surface of the television in a direction away from the frontside surface of the television while the tray base is coupled to the backside surface of the television, the mounting system further comprising:

a first retaining lip coupled to the first sidewall; and

a second retaining lip coupled to the second sidewall, wherein the first retaining lip and the second retaining lip engage at least one surface of the digital media player that faces away from the backside surface of the television while the digital media player is at least partially located between the first sidewall and the second sidewall such that the mounting system couples the digital media player to the backside surface of the television,

wherein a gap between the first retaining lip and the second retaining lip forms an open back of the mounting system such that the at least one surface of the digital media player that faces away from the backside surface of the television is at least partially uncovered by the mounting system, and

wherein the tray base is located at least partially between the digital media player and the backside surface of the television, and wherein the first retaining lip, the second retaining lip, and the open back are located outward from the digital media player in the direction away from the frontside surface of the television.

**17**. The mounting system of claim **16**, wherein the tray base is coupled inside of a periphery of the backside surface of the television.

**18**. The mounting system of claim **16**, wherein a hook couples the tray base to the backside surface of the television.

**19**. The mounting system of claim **16**, wherein an adhesive couples the mounting system to the television.

**20**. A mounting system configured to mount a digital media player to a backside surface of a television, the television comprising a frontside surface configured to display an image, the mounting system comprising:

a tray base, wherein the tray base comprises a top half and a bottom half, and the tray base comprises a left half and a right half;

a first sidewall coupled to the left half of the tray base, wherein the first sidewall extends from the top half to the bottom half of the tray base; and

a second sidewall coupled to the right half of the tray base such that the first sidewall and the second sidewall are coupled at opposite sides of the tray base, wherein the second sidewall extends from the top half to the bottom half of the tray base, wherein the first sidewall and the second sidewall protrude from the tray base outward relative to the backside surface of the television in a direction away from the frontside surface of the television while the tray base is coupled to the backside surface of the television and while the digital media player is located at least partially between the first sidewall and the second sidewall,

wherein the first sidewall comprises a first bottom portion that protrudes rightward to reduce a first distance between the first bottom portion and the right half of the tray base,

wherein the second sidewall comprises a second bottom portion that protrudes leftward to reduce a second distance between second the bottom portion and the left half of the tray base,

wherein the digital media player comprises a lower left corner and a lower right corner, and

wherein the first bottom portion is configured such that the first sidewall extends at least partially around the lower left corner of the digital media player, and the second bottom portion is configured such that the second sidewall extends at least partially around the lower right corner such that the first bottom portion of the first sidewall and the second bottom portion of the second sidewall are configured to prevent the digital media player from falling out of the mounting system by passing between the first bottom portion and the second bottom portion.

**21**. The mounting system of claim **20**, wherein the tray base is coupled inside of a periphery of the backside surface of the television.

**22**. The mounting system of claim **20**, wherein a hook at least partially enters a vent of the television such that the hook couples the tray base to the television.

**23**. The mounting system of claim **20**, wherein an adhesive pad couples the tray base to the backside surface of the television.

**24**. A mounting system configured to mount a digital media player to a backside surface of a television, the television comprising a frontside surface configured to display an image, the mounting system comprising:

a tray base, wherein the tray base comprises a top half and a bottom half, and the tray base comprises a left half and a right half;

a first sidewall coupled to the left half of the tray base, wherein the first sidewall extends from the top half to the bottom half of the tray base;

a second sidewall coupled to the right half of the tray base such that the first sidewall and the second sidewall are coupled at opposite sides of the tray base, wherein the second sidewall extends from the top half to the bottom half of the tray base, wherein the first sidewall and the second sidewall protrude from the tray base outward relative to the backside surface of the television in a

direction away from the frontside surface of the television while the tray base is coupled to the backside surface of the television and while the digital media player is located at least partially between the first sidewall and the second sidewall; and

a bottom sidewall coupled to the bottom half of the tray base, wherein the bottom sidewall protrudes from the tray base outward relative to the backside surface of the television in the direction away from the frontside surface of the television while the digital media player is located at least partially between the first sidewall and the second sidewall, and

wherein the bottom sidewall is configured to prevent the digital media player from falling out of the mounting system via exiting a bottom end of the mounting system.

**25**. The mounting system of claim **24**, wherein the tray base is coupled inside of a periphery of the backside surface of the television.

**26**. The mounting system of claim **24**, wherein an adhesive pad couples the tray base to the backside surface of the television.

**27**. The mounting system of claim **24**, wherein a hook couples the tray base to the television.

**28**. The mounting system of claim **1**, wherein an adhesive couples the mounting system to the television.

**29**. The mounting system of claim **1**, wherein a hook couples the mounting system to the television.

**30**. The mounting system of claim **16**, wherein the first sidewall comprises a first bottom portion that protrudes rightward to reduce a first distance between the first bottom portion and the right half of the tray base,

wherein the second sidewall comprises a second bottom portion that protrudes leftward to reduce a second distance between the second bottom portion and the left half of the tray base,

wherein the digital media player comprises a lower left corner and a lower right corner, and

wherein the first bottom portion is configured such that the first sidewall extends at least partially around the lower left corner of the digital media player, and the second bottom portion is configured such that the second sidewall extends at least partially around the lower right corner of the digital media player such that the first bottom portion of the first sidewall and the second bottom portion of the second sidewall are configured to prevent the digital media player from falling out of the mounting system by passing between the first bottom portion and the second bottom portion.

* * * * *