US009143569B2

(12) **United States Patent**
Mensinger et al.

(10) **Patent No.: US 9,143,569 B2**
(45) **Date of Patent: Sep. 22, 2015**

(54) **SYSTEMS AND METHODS FOR PROCESSING, TRANSMITTING AND DISPLAYING SENSOR DATA**

(75) Inventors: **Michael Robert Mensinger**, San Diego, CA (US); **John Michael Dobbles**, San Diego, CA (US); **Apurv U. Kamath**, San Diego, CA (US); **Beat Stadelmann**, San Diego, CA (US); **Deborah M. Ruppert**, San Diego, CA (US); **Nassar Salamanti**, Santa Rosa, CA (US); **Richard C. Yang**, Irvine, CA (US)

(73) Assignee: **DexCom, Inc.**, San Diego, CA (US)

(*) Notice: Subject to any disclaimer, the term of this patent is extended or adjusted under 35 U.S.C. 154(b) by 1914 days.

(21) Appl. No.: **12/390,304**

(22) Filed: **Feb. 20, 2009**

(65) **Prior Publication Data**

US 2009/0240120 A1 Sep. 24, 2009

Related U.S. Application Data

(60) Provisional application No. 61/030,499, filed on Feb. 21, 2008.

(51) **Int. Cl.**
A61B 5/05 (2006.01)
H04L 29/08 (2006.01)
(Continued)

(52) **U.S. Cl.**
CPC ***H04L 67/125*** (2013.01); ***A61B 5/0022*** (2013.01); ***A61B 5/7445*** (2013.01); ***G06F 19/3406*** (2013.01); ***G06F 19/3418*** (2013.01); *A61B 5/14532* (2013.01)

(58) **Field of Classification Search**
CPC ... A61B 5/145; A61B 5/14532; A61B 5/1473
USPC 600/345–347, 365, 309, 316; 435/4, 14; 422/50, 420–429; 204/403.01–403.15; 702/23; 604/64–66
See application file for complete search history.

(56) **References Cited**

U.S. PATENT DOCUMENTS

3,210,578 A 10/1965 Sherer
3,219,533 A 11/1965 Mullins
(Continued)

FOREIGN PATENT DOCUMENTS

CA 2127172 7/1998
EP 0 098 592 1/1984
(Continued)

OTHER PUBLICATIONS

Alcock & Turner. 1994. Continuous Analyte Monitoring to Aid Clinical Practice. IEEE Engineering in Med. & Biol. Mag. 13:319-325.
(Continued)

Primary Examiner — Michael D'Angelo
(74) *Attorney, Agent, or Firm* — Knobbe Martens Olson & Bear, LLP

(57) **ABSTRACT**

Systems and methods for continuous measurement of an analyte in a host are provided. The system generally includes a continuous analyte sensor configured to continuously measure a concentration of analyte in a host and a sensor electronics module physically connected to the continuous analyte sensor during sensor use, wherein the sensor electronics module is further configured to directly wirelessly communicate displayable sensor information to a plurality of different types of display devices.

15 Claims, 21 Drawing Sheets

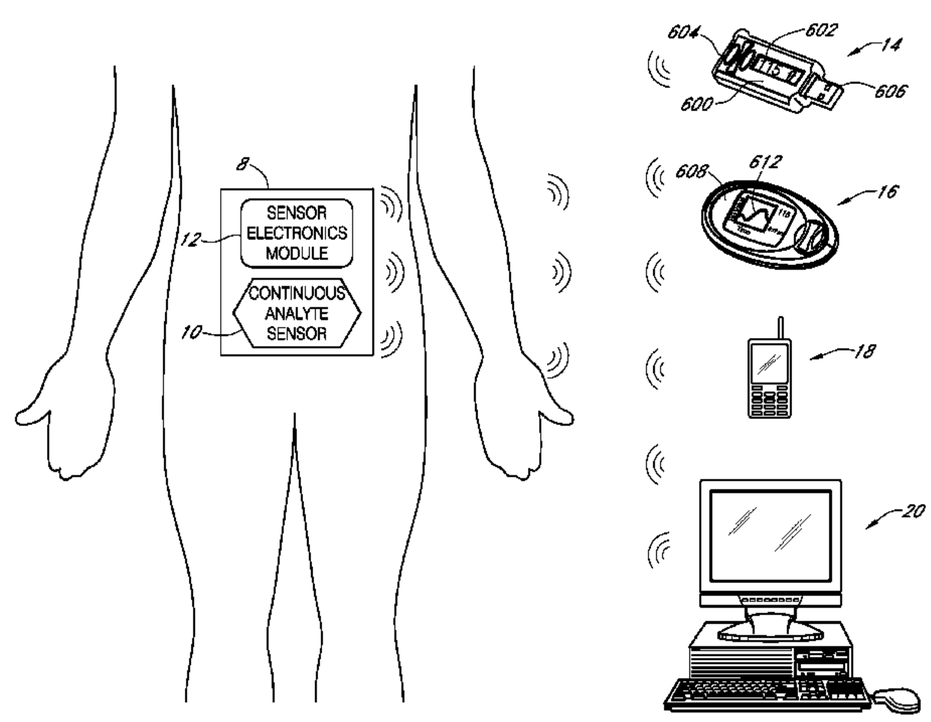

(51) **Int. Cl.**

A61B 5/00	(2006.01)
G06F 19/00	(2011.01)
A61B 5/145	(2006.01)

(56) **References Cited**

U.S. PATENT DOCUMENTS

3,381,371	A	5/1968	Russell
3,775,182	A	11/1973	Patton et al.
3,826,244	A	7/1974	Salcman et al.
3,837,339	A	9/1974	Aisenberg
3,874,850	A	4/1975	Sorensen et al.
3,898,984	A	8/1975	Mandel et al.
3,943,918	A	3/1976	Lewis
3,957,613	A	5/1976	Macur
3,964,974	A	6/1976	Banauch et al.
3,979,274	A	9/1976	Newman
4,024,312	A	5/1977	Korpman
4,040,908	A	8/1977	Clark, Jr.
4,052,754	A	10/1977	Homsy
4,073,713	A	2/1978	Newman
4,172,770	A	10/1979	Semersky et al.
4,197,840	A	4/1980	Beck et al.
4,206,755	A	6/1980	Klein
4,215,703	A	8/1980	Willson
4,240,438	A	12/1980	Updike et al.
4,245,634	A	1/1981	Albisser et al.
4,253,469	A	3/1981	Aslan
4,255,500	A	3/1981	Hooke
4,259,540	A	3/1981	Sabia
4,319,578	A	3/1982	Enger
4,374,013	A	2/1983	Enfors
4,388,166	A	6/1983	Suzuki et al.
4,403,984	A	9/1983	Ash et al.
4,442,841	A	4/1984	Uehara et al.
4,477,314	A	10/1984	Richter et al.
4,494,950	A	1/1985	Fischell
RE31,916	E	6/1985	Oswin et al.
4,534,355	A	8/1985	Potter
4,535,786	A	8/1985	Kater
4,554,927	A	11/1985	Fussell
4,655,880	A	4/1987	Liu
4,663,824	A	5/1987	Kenmochi
4,675,656	A	6/1987	Narcisse
4,684,558	A	8/1987	Keusch et al.
4,702,732	A	10/1987	Powers et al.
4,703,756	A	11/1987	Gough et al.
4,731,726	A	3/1988	Allen
4,750,496	A	6/1988	Reinhart et al.
4,753,652	A	6/1988	Langer et al.
4,757,022	A	7/1988	Shults et al.
4,777,953	A	10/1988	Ash et al.
4,786,394	A	11/1988	Enzer et al.
4,787,398	A	11/1988	Garcia et al.
4,805,625	A	2/1989	Wyler
4,810,243	A	3/1989	Howson
4,810,470	A	3/1989	Burkhardt et al.
4,820,281	A	4/1989	Lawler
4,823,808	A	4/1989	Clegg et al.
4,832,034	A	5/1989	Pizziconi
4,852,573	A	8/1989	Kennedy
4,854,322	A	8/1989	Ash et al.
4,858,615	A	8/1989	Meinema
4,871,440	A	10/1989	Nagata et al.
4,883,057	A	11/1989	Broderick
4,889,744	A	12/1989	Quaid
4,890,621	A	1/1990	Hakky
4,902,294	A	2/1990	Gosserez
4,907,857	A	3/1990	Giuliani et al.
4,919,141	A	4/1990	Zier et al.
4,925,444	A	5/1990	Orkin et al.
4,927,407	A	5/1990	Dorman
4,927,516	A	5/1990	Yamaguchi et al.
4,944,299	A	7/1990	Silvian
4,946,439	A	8/1990	Eggers
4,953,552	A	9/1990	DeMarzo
4,974,592	A	12/1990	Branco
4,974,929	A	12/1990	Curry
4,984,929	A	1/1991	Rock et al.
4,989,607	A	2/1991	Keusch et al.
4,992,794	A	2/1991	Brouwers
4,994,167	A	2/1991	Shults et al.
5,007,929	A	4/1991	Quaid
5,033,864	A	7/1991	Lasecki et al.
5,034,112	A	7/1991	Murase et al.
5,050,612	A	9/1991	Matsumura
5,055,171	A	10/1991	Peck
5,059,654	A	10/1991	Hou et al.
5,067,491	A	11/1991	Taylor, II et al.
5,088,981	A	2/1992	Howson et al.
5,096,669	A	3/1992	Lauks et al.
5,097,834	A	3/1992	Skrabal
5,101,814	A	4/1992	Palti
5,137,028	A	8/1992	Nishimura
5,165,407	A	11/1992	Wilson et al.
5,178,142	A	1/1993	Harjunmaa et al.
5,190,041	A	3/1993	Palti
5,208,147	A	5/1993	Kagenow et al.
5,235,003	A	8/1993	Ward et al.
5,243,983	A	9/1993	Tarr et al.
5,249,576	A	10/1993	Goldberger et al.
5,264,104	A	11/1993	Gregg et al.
5,265,594	A	11/1993	Olsson et al.
5,266,179	A	11/1993	Nankai et al.
5,269,891	A	12/1993	Colin
5,271,736	A	12/1993	Picha
5,281,319	A	1/1994	Kaneko et al.
5,282,848	A	2/1994	Schmitt
5,284,140	A	2/1994	Allen et al.
5,284,570	A	2/1994	Savage et al.
5,285,513	A	2/1994	Kaufman et al.
5,287,753	A	2/1994	Routh et al.
5,299,571	A	4/1994	Mastrototaro
5,304,468	A	4/1994	Phillips et al.
5,307,263	A	4/1994	Brown
5,310,469	A	5/1994	Cunningham
5,312,361	A	5/1994	Zadini et al.
5,314,471	A	5/1994	Brauker et al.
5,316,008	A	5/1994	Suga et al.
5,326,356	A	7/1994	Della Valle et al.
5,330,521	A	7/1994	Cohen
5,330,634	A	7/1994	Wong et al.
5,331,555	A	7/1994	Hashimoto et al.
5,335,658	A	8/1994	Bedingham
5,337,747	A	8/1994	Neftel
5,342,409	A	8/1994	Mullett
5,343,869	A	9/1994	Pross et al.
5,344,454	A	9/1994	Clarke et al.
5,348,788	A	9/1994	White
5,352,351	A	10/1994	White
5,354,449	A	10/1994	Band et al.
5,356,786	A	10/1994	Heller et al.
5,368,028	A	11/1994	Palti
5,368,224	A	11/1994	Richardson et al.
5,368,562	A	11/1994	Blomquist et al.
5,372,135	A	12/1994	Mendelson et al.
5,376,070	A	12/1994	Purvis et al.
5,380,536	A	1/1995	Hubbell et al.
5,380,665	A	1/1995	Cusack et al.
5,384,028	A	1/1995	Ito
5,390,671	A	2/1995	Lord et al.
5,394,879	A	3/1995	Gorman
5,397,848	A	3/1995	Yang et al.
5,404,877	A	4/1995	Nolan et al.
5,411,647	A	5/1995	Johnson et al.
5,411,866	A	5/1995	Luong
5,421,328	A	6/1995	Bedingham
5,421,923	A	6/1995	Clarke et al.
5,429,602	A	7/1995	Hauser
5,448,992	A	9/1995	Kupershmidt
5,453,278	A	9/1995	Chan et al.
5,462,051	A	10/1995	Oka et al.
5,462,064	A	10/1995	D'Angelo et al.
5,469,846	A	11/1995	Khan
5,474,552	A	12/1995	Palti

(56) **References Cited**

U.S. PATENT DOCUMENTS

5,476,776 A 12/1995 Wilkins
5,482,008 A 1/1996 Stafford et al.
5,482,446 A 1/1996 Williamson et al.
5,482,473 A 1/1996 Lord et al.
5,484,404 A 1/1996 Schulman et al.
5,491,474 A 2/1996 Suni et al.
5,494,562 A 2/1996 Maley et al.
5,496,453 A 3/1996 Uenoyama et al.
5,497,772 A 3/1996 Schulman et al.
5,502,396 A 3/1996 Desarzens et al.
5,507,288 A 4/1996 Bocker et al.
5,508,203 A 4/1996 Fuller et al.
5,513,636 A 5/1996 Palti
5,527,288 A 6/1996 Gross
5,531,679 A 7/1996 Schulman et al.
5,531,878 A 7/1996 Vadgama et al.
5,545,220 A 8/1996 Andrews et al.
5,551,850 A 9/1996 Williamson et al.
5,553,616 A 9/1996 Ham et al.
5,562,614 A 10/1996 O'Donnell
5,562,615 A 10/1996 Nassif
5,568,806 A 10/1996 Cheney, II et al.
5,569,186 A 10/1996 Lord et al.
5,575,293 A 11/1996 Miller et al.
5,575,930 A 11/1996 Tietje-Girault et al.
5,582,184 A 12/1996 Erickson et al.
5,584,876 A 12/1996 Bruchman et al.
5,586,553 A 12/1996 Halili et al.
5,590,651 A 1/1997 Shaffer et al.
5,593,440 A 1/1997 Brauker et al.
5,611,900 A 3/1997 Worden
5,628,619 A 5/1997 Wilson
5,640,470 A 6/1997 Iyer et al.
5,653,756 A 8/1997 Clarke et al.
5,658,250 A 8/1997 Blomquist et al.
5,660,163 A 8/1997 Schulman et al.
5,665,065 A 9/1997 Colman et al.
5,667,504 A 9/1997 Baumann et al.
5,676,820 A 10/1997 Wang et al.
5,682,884 A 11/1997 Hill
5,683,562 A 11/1997 Schaffar et al.
5,686,829 A 11/1997 Girault
5,695,623 A 12/1997 Michel et al.
5,743,262 A 4/1998 Lepper, Jr. et al.
5,749,832 A 5/1998 Vadgama et al.
5,749,907 A 5/1998 Mann
5,768,696 A 6/1998 Law
5,771,890 A 6/1998 Tamada
5,782,880 A 7/1998 Lahtinen et al.
5,782,912 A 7/1998 Brauker et al.
5,787,900 A 8/1998 Butler et al.
5,791,344 A 8/1998 Schulman et al.
5,791,880 A 8/1998 Wilson
5,795,774 A 8/1998 Matsumoto et al.
5,798,065 A 8/1998 Picha
5,800,383 A 9/1998 Chandler et al.
5,800,420 A 9/1998 Gross
5,800,529 A 9/1998 Brauker et al.
5,807,375 A 9/1998 Gross et al.
5,807,406 A 9/1998 Brauker et al.
5,811,487 A 9/1998 Schulz, Jr. et al.
5,814,599 A 9/1998 Mitragotri et al.
5,820,622 A 10/1998 Gross et al.
5,822,715 A 10/1998 Worthington et al.
5,836,887 A 11/1998 Oka et al.
5,836,989 A 11/1998 Shelton
5,840,026 A 11/1998 Uber et al.
5,840,148 A 11/1998 Campbell et al.
5,848,991 A 12/1998 Gross
5,851,197 A 12/1998 Marano et al.
5,858,747 A 1/1999 Schinstine et al.
5,861,019 A 1/1999 Sun et al.
5,863,400 A 1/1999 Drummond et al.
5,867,688 A 2/1999 Simmon et al.
5,882,494 A 3/1999 Van Antwerp
5,895,235 A 4/1999 Droz
5,899,855 A 5/1999 Brown
5,904,708 A 5/1999 Goedeke
5,917,346 A 6/1999 Gord
5,928,155 A 7/1999 Eggers et al.
5,928,195 A 7/1999 Malamud et al.
5,931,814 A 8/1999 Alex et al.
5,933,136 A 8/1999 Brown
5,944,661 A 8/1999 Swette et al.
5,954,954 A 9/1999 Houck et al.
5,957,854 A 9/1999 Besson et al.
5,957,903 A 9/1999 Mirzaee et al.
5,961,451 A 10/1999 Reber et al.
5,963,132 A 10/1999 Yoakum
5,964,993 A 10/1999 Blubaugh et al.
5,971,922 A 10/1999 Arita et al.
5,985,693 A 11/1999 Leedy
5,987,352 A 11/1999 Klein et al.
5,995,208 A 11/1999 Sarge et al.
5,997,501 A 12/1999 Gross
5,999,848 A 12/1999 Gord et al.
6,001,067 A 12/1999 Shults et al.
6,001,471 A 12/1999 Bries et al.
6,011,984 A 1/2000 Van Antwerp et al.
6,014,577 A 1/2000 Henning et al.
6,016,448 A 1/2000 Busacker et al.
6,018,674 A 1/2000 Aronow
6,023,629 A 2/2000 Tamada
6,024,720 A 2/2000 Chandler et al.
6,027,445 A 2/2000 Von Bahr
6,032,059 A 2/2000 Henning et al.
6,049,727 A 4/2000 Crothall
6,059,946 A 5/2000 Yukawa et al.
6,063,637 A 5/2000 Arnold et al.
6,066,448 A 5/2000 Wohlstadter et al.
6,071,391 A 6/2000 Gotoh et al.
6,081,735 A 6/2000 Diab et al.
6,081,736 A 6/2000 Colvin et al.
6,083,523 A 7/2000 Dionne et al.
6,083,710 A 7/2000 Heller et al.
6,088,608 A 7/2000 Schulman et al.
6,091,975 A 7/2000 Daddona et al.
6,093,172 A 7/2000 Funderburk et al.
6,103,033 A 8/2000 Say et al.
6,115,634 A 9/2000 Donders et al.
6,117,290 A 9/2000 Say
6,120,676 A 9/2000 Heller et al.
6,121,009 A 9/2000 Heller et al.
6,122,536 A 9/2000 Sun et al.
6,123,827 A 9/2000 Wong et al.
6,127,154 A 10/2000 Mosbach et al.
6,134,461 A 10/2000 Say et al.
6,142,939 A 11/2000 Eppstein et al.
6,164,921 A 12/2000 Moubayed et al.
6,167,614 B1 1/2001 Tuttle et al.
6,168,568 B1 1/2001 Gavriely
6,171,276 B1 1/2001 Lippe et al.
6,175,752 B1 * 1/2001 Say et al. 600/345
6,175,767 B1 1/2001 Doyle et al.
6,180,416 B1 1/2001 Kurnik et al.
6,187,062 B1 2/2001 Oweis et al.
6,189,536 B1 2/2001 Martinez et al.
6,201,980 B1 3/2001 Darrow et al.
6,201,993 B1 3/2001 Kruse et al.
6,206,856 B1 3/2001 Mahurkar
6,214,185 B1 4/2001 Offenbacher et al.
6,230,059 B1 5/2001 Duffin
6,231,879 B1 5/2001 Li et al.
6,233,471 B1 5/2001 Berner et al.
6,241,863 B1 6/2001 Monbouquette
6,248,067 B1 6/2001 Causey, III et al.
6,254,586 B1 7/2001 Mann et al.
6,263,222 B1 7/2001 Diab et al.
6,264,825 B1 7/2001 Blackburn et al.
6,272,364 B1 8/2001 Kurnik
6,274,285 B1 8/2001 Gries et al.
6,275,717 B1 8/2001 Gross et al.
6,280,408 B1 8/2001 Sipin
6,284,478 B1 9/2001 Heller et al.

(56) **References Cited**

U.S. PATENT DOCUMENTS

6,298,254 B2 10/2001 Tamada
6,299,583 B1 10/2001 Eggers et al.
6,300,002 B1 10/2001 Webb et al.
6,302,855 B1 10/2001 Lav et al.
6,325,978 B1 12/2001 Labuda et al.
6,326,160 B1 12/2001 Dunn et al.
6,329,929 B1 12/2001 Weijand et al.
6,365,670 B1 4/2002 Fry
6,366,794 B1 4/2002 Moussy et al.
6,379,301 B1 4/2002 Worthington et al.
6,387,709 B1 5/2002 Mason et al.
6,403,944 B1 6/2002 Mackenzie et al.
6,413,393 B1 7/2002 Van Antwerp et al.
6,416,651 B1 7/2002 Miller
6,424,847 B1 7/2002 Mastrototaro et al.
6,427,088 B1 7/2002 Bowman et al.
6,430,437 B1 8/2002 Marro
6,432,050 B1 8/2002 Porat et al.
6,447,448 B1 9/2002 Ishikawa et al.
6,447,542 B1 9/2002 Weadock
6,461,496 B1 10/2002 Feldman et al.
6,464,849 B1 10/2002 Say et al.
6,477,392 B1 11/2002 Honigs et al.
6,477,395 B2 11/2002 Schulman et al.
6,481,440 B2 11/2002 Gielen et al.
6,484,046 B1 11/2002 Say et al.
6,488,652 B1 12/2002 Weijand et al.
6,494,830 B1 12/2002 Wessel
6,498,043 B1 12/2002 Schulman et al.
6,498,941 B1 12/2002 Jackson
6,501,976 B1 12/2002 Sohrab
6,510,329 B2 1/2003 Heckel
6,512,939 B1 1/2003 Colvin et al.
6,520,997 B1 2/2003 Pekkarinen et al.
6,534,711 B1 3/2003 Pollack
6,537,318 B1 3/2003 Ita et al.
6,541,266 B2 4/2003 Modzelewski et al.
6,544,212 B2 4/2003 Galley et al.
6,545,085 B2 4/2003 Kilgour et al.
6,546,268 B1 4/2003 Ishikawa et al.
6,546,269 B1 4/2003 Kurnik
6,551,496 B1 4/2003 Moles et al.
6,553,241 B2 4/2003 Mannheimer et al.
6,553,244 B2 4/2003 Lesho et al.
6,558,320 B1 5/2003 Causey
6,558,321 B1 5/2003 Burd et al.
6,558,351 B1 5/2003 Steil et al.
6,560,471 B1 5/2003 Heller et al.
6,561,978 B1 5/2003 Conn et al.
6,565,509 B1 5/2003 Say et al.
6,569,521 B1 5/2003 Sheridan et al.
6,572,545 B2 6/2003 Knobbe et al.
6,572,579 B1 6/2003 Raghavan et al.
6,574,490 B2 6/2003 Abbink et al.
6,579,498 B1 6/2003 Eglise
6,579,690 B1 6/2003 Bonnecaze et al.
6,585,644 B2 7/2003 Lebel et al.
6,585,675 B1 7/2003 O'Mahony et al.
6,585,763 B1 7/2003 Keilman et al.
6,587,705 B1 7/2003 Kim et al.
6,592,745 B1 7/2003 Feldman et al.
6,605,072 B2 8/2003 Struys et al.
6,607,509 B2 8/2003 Bobroff et al.
6,609,071 B2 8/2003 Shapiro et al.
6,612,984 B1 9/2003 Kerr
6,613,379 B2 9/2003 Ward et al.
6,618,934 B1 9/2003 Feldman et al.
6,633,772 B2 10/2003 Ford et al.
6,641,533 B2 11/2003 Causey et al.
6,642,015 B2 11/2003 Vachon et al.
6,645,181 B1 11/2003 Lavi et al.
6,648,821 B2 11/2003 Lebel et al.
6,653,091 B1 11/2003 Dunn et al.
6,654,625 B1 11/2003 Say et al.
6,656,157 B1 12/2003 Duchon et al.
6,683,535 B1 1/2004 Utke
6,687,522 B2 2/2004 Tamada
6,694,191 B2 2/2004 Starkweather et al.
6,695,860 B1 2/2004 Ward et al.
6,699,218 B2 3/2004 Flaherty et al.
6,699,383 B2 3/2004 Lemire et al.
6,702,857 B2 3/2004 Brauker et al.
6,721,587 B2 4/2004 Gough
6,731,976 B2 5/2004 Penn et al.
6,740,075 B2 5/2004 Lebel et al.
6,741,877 B1 5/2004 Shults et al.
6,743,635 B2 6/2004 Neel et al.
6,749,587 B2 6/2004 Flaherty
6,773,565 B2 8/2004 Kunimoto et al.
6,793,632 B2 9/2004 Sohrab
6,802,957 B2 10/2004 Jung et al.
6,809,653 B1 10/2004 Mann et al.
6,810,290 B2 10/2004 Lebel et al.
6,811,548 B2 11/2004 Jeffrey
6,813,519 B2 11/2004 Lebel et al.
6,862,465 B2 3/2005 Shults et al.
6,869,413 B2 3/2005 Langley et al.
6,893,396 B2 5/2005 Schulze et al.
6,893,552 B1 5/2005 Wang et al.
6,895,263 B2 5/2005 Shin et al.
6,895,265 B2 5/2005 Silver
6,925,393 B1 8/2005 Kalatz et al.
6,931,327 B2 8/2005 Goode et al.
6,936,006 B2 8/2005 Sabra
6,948,492 B2 9/2005 Wermeling et al.
6,952,604 B2 10/2005 DeNuzzio et al.
6,954,662 B2 10/2005 Freger et al.
6,960,192 B1 11/2005 Flaherty et al.
6,965,791 B1 11/2005 Hitchcock et al.
6,978,171 B2 12/2005 Goetz et al.
6,989,891 B2 1/2006 Braig et al.
6,990,366 B2 1/2006 Say et al.
6,998,247 B2 2/2006 Monfre et al.
7,011,630 B2 3/2006 Desai et al.
7,016,713 B2 3/2006 Gardner et al.
7,022,072 B2 4/2006 Fox et al.
7,022,219 B2 4/2006 Mansouri et al.
7,025,743 B2 4/2006 Mann et al.
7,027,848 B2 4/2006 Robinson et al.
7,033,322 B2 4/2006 Silver
7,060,059 B2 6/2006 Keith et al.
7,061,593 B2 6/2006 Braig et al.
7,066,884 B2 6/2006 Custer et al.
7,074,307 B2 7/2006 Simpson et al.
7,081,195 B2 7/2006 Simpson et al.
7,092,891 B2 8/2006 Maus et al.
7,098,803 B2 8/2006 Mann et al.
7,108,778 B2 9/2006 Simpson et al.
7,110,803 B2 9/2006 Shults et al.
7,134,999 B2 11/2006 Brauker et al.
7,144,496 B2 12/2006 Meserol et al.
7,162,290 B1 1/2007 Levin
7,163,511 B2 1/2007 Conn et al.
7,166,074 B2 1/2007 Reghabi et al.
7,169,289 B2 1/2007 Schulein et al.
7,183,102 B2 2/2007 Monfre et al.
7,184,810 B2 2/2007 Caduff et al.
7,192,450 B2 3/2007 Brauker et al.
7,221,970 B2 5/2007 Parker
7,226,978 B2 6/2007 Tapsak et al.
7,267,665 B2 9/2007 Steil et al.
7,276,029 B2 10/2007 Goode et al.
7,295,867 B2 11/2007 Berner et al.
7,299,082 B2 11/2007 Feldman et al.
7,310,544 B2 12/2007 Brister et al.
7,315,767 B2 1/2008 Caduff et al.
7,317,939 B2 1/2008 Fine et al.
7,338,464 B2 3/2008 Blischak et al.
7,343,565 B2 3/2008 Ying et al.
7,344,500 B2 3/2008 Talbot et al.
7,354,420 B2 4/2008 Steil et al.
7,364,562 B2 4/2008 Braig et al.
7,367,942 B2 5/2008 Grage et al.
7,399,277 B2 7/2008 Saidara et al.

(56) **References Cited**

U.S. PATENT DOCUMENTS

7,426,408 B2 9/2008 DeNuzzio et al.
7,433,727 B2 10/2008 Ward et al.
7,494,465 B2 2/2009 Brister et al.
7,497,827 B2 3/2009 Brister et al.
7,519,408 B2 4/2009 Rasdal et al.
7,519,478 B2 4/2009 Bartkowiak et al.
7,523,004 B2 4/2009 Bartkowiak et al.
7,604,593 B2 10/2009 Parris et al.
7,618,369 B2 11/2009 Hayter et al.
7,647,237 B2 1/2010 Malave et al.
7,695,434 B2 4/2010 Malecha
7,731,659 B2 6/2010 Malecha
7,761,126 B2 7/2010 Gardner et al.
7,766,830 B2 8/2010 Fox et al.
7,927,274 B2 4/2011 Rasdal et al.
8,005,524 B2 8/2011 Brauker et al.
8,005,525 B2 8/2011 Goode et al.
8,010,174 B2 8/2011 Goode, Jr. et al.
8,229,535 B2 7/2012 Mensinger et al.
2001/0016682 A1 8/2001 Berner et al.
2001/0041830 A1 11/2001 Varalli et al.
2001/0051768 A1 12/2001 Schulman et al.
2002/0009810 A1 1/2002 O'Connor et al.
2002/0016535 A1 2/2002 Martin et al.
2002/0019022 A1 2/2002 Dunn et al.
2002/0019330 A1 2/2002 Murray et al.
2002/0022883 A1 2/2002 Burg
2002/0026110 A1 2/2002 Parris et al.
2002/0026111 A1 2/2002 Ackerman
2002/0042561 A1 4/2002 Schulman et al.
2002/0045808 A1 4/2002 Ford et al.
2002/0065453 A1 5/2002 Lesho et al.
2002/0084196 A1 7/2002 Liamos et al.
2002/0099282 A1 7/2002 Knobbe et al.
2002/0099997 A1 7/2002 Piret
2002/0119711 A1 8/2002 VanAntwerp et al.
2002/0123048 A1 9/2002 Gau
2002/0128546 A1 9/2002 Silver
2002/0151796 A1 10/2002 Koulik
2002/0161288 A1 10/2002 Shin et al.
2002/0182241 A1 12/2002 Boerenstein et al.
2002/0188185 A1 12/2002 Sohrab
2002/0193885 A1 12/2002 Legeay et al.
2002/0198513 A1 12/2002 Lebel et al.
2003/0004432 A1 1/2003 Assenheimer
2003/0023171 A1 1/2003 Sato et al.
2003/0028089 A1 2/2003 Galley et al.
2003/0032874 A1 2/2003 Rhodes et al.
2003/0036773 A1 2/2003 Whitehurst et al.
2003/0050546 A1 3/2003 Desai et al.
2003/0054428 A1 3/2003 Monfre et al.
2003/0060765 A1 3/2003 Campbell et al.
2003/0072741 A1 4/2003 Berglund et al.
2003/0076082 A1 4/2003 Morgan et al.
2003/0078481 A1 4/2003 McIvor et al.
2003/0091433 A1 5/2003 Tam et al.
2003/0100040 A1 5/2003 Bonnecaze et al.
2003/0100821 A1 5/2003 Heller et al.
2003/0117296 A1 6/2003 Seely
2003/0119208 A1 6/2003 Yoon et al.
2003/0120152 A1 6/2003 Omiya
2003/0125612 A1 7/2003 Fox et al.
2003/0130616 A1 7/2003 Steil et al.
2003/0134347 A1 7/2003 Heller et al.
2003/0176183 A1 9/2003 Drucker et al.
2003/0187338 A1 10/2003 Say et al.
2003/0188427 A1 10/2003 Say et al.
2003/0199744 A1 10/2003 Buse et al.
2003/0211625 A1 11/2003 Cohan
2003/0212317 A1 11/2003 Kovatchev et al.
2003/0212346 A1 11/2003 Yuzhakov et al.
2003/0212347 A1 11/2003 Sohrab
2003/0225324 A1 12/2003 Anderson et al.
2003/0228681 A1 12/2003 Ritts et al.
2003/0231550 A1 12/2003 Macfarlane
2003/0235817 A1 12/2003 Bartkowiak et al.
2004/0006263 A1 1/2004 Anderson et al.
2004/0010207 A1 1/2004 Flaherty et al.
2004/0015063 A1 1/2004 DeNuzzio et al.
2004/0015134 A1 1/2004 Lavi et al.
2004/0023317 A1 2/2004 Motamedi et al.
2004/0024327 A1 2/2004 Brodnick
2004/0030285 A1 2/2004 Lavi et al.
2004/0030294 A1 2/2004 Mahurkar
2004/0039298 A1 2/2004 Abreu
2004/0039406 A1 2/2004 Jessen
2004/0040840 A1 3/2004 Mao et al.
2004/0052689 A1 3/2004 Yao
2004/0054352 A1 3/2004 Adames et al.
2004/0068230 A1 4/2004 Estes et al.
2004/0074785 A1 4/2004 Holker
2004/0078219 A1* 4/2004 Kaylor et al. 705/2
2004/0122353 A1* 6/2004 Shahmirian et al. 604/65
2004/0143173 A1 7/2004 Reghabi et al.
2004/0146909 A1 7/2004 Duong et al.
2004/0152187 A1 8/2004 Haight et al.
2004/0152622 A1 8/2004 Keith et al.
2004/0153289 A1* 8/2004 Casey et al. 702/188
2004/0158138 A1 8/2004 Kilcoyne et al.
2004/0167801 A1 8/2004 Say et al.
2004/0173472 A1 9/2004 Jung et al.
2004/0176672 A1 9/2004 Silver et al.
2004/0186362 A1 9/2004 Brauker et al.
2004/0186365 A1 9/2004 Jin et al.
2004/0193025 A1 9/2004 Steil et al.
2004/0204687 A1 10/2004 Mogensen
2004/0219664 A1 11/2004 Heller et al.
2004/0220517 A1 11/2004 Starkweather et al.
2004/0253365 A1 12/2004 Warren et al.
2004/0254433 A1 12/2004 Bandis
2005/0003399 A1 1/2005 Blackburn et al.
2005/0010087 A1 1/2005 Banet et al.
2005/0027180 A1 2/2005 Goode et al.
2005/0027182 A1 2/2005 Siddiqui et al.
2005/0027462 A1 2/2005 Goode et al.
2005/0027463 A1 2/2005 Goode et al.
2005/0031689 A1 2/2005 Shults et al.
2005/0033132 A1 2/2005 Shults et al.
2005/0038332 A1 2/2005 Saidara et al.
2005/0043598 A1 2/2005 Goode et al.
2005/0051427 A1 3/2005 Brauker et al.
2005/0054909 A1 3/2005 Petisce et al.
2005/0056552 A1 3/2005 Simpson et al.
2005/0065464 A1 3/2005 Talbot et al.
2005/0090607 A1 4/2005 Tapsak et al.
2005/0096519 A1 5/2005 DeNuzzio et al.
2005/0103625 A1 5/2005 Rhodes et al.
2005/0107677 A1 5/2005 Ward et al.
2005/0112358 A1 5/2005 Potyrailo et al.
2005/0113653 A1 5/2005 Fox et al.
2005/0121322 A1 6/2005 Say
2005/0124873 A1 6/2005 Shults et al.
2005/0139489 A1 6/2005 Davies et al.
2005/0143635 A1 6/2005 Kamath et al.
2005/0143671 A1* 6/2005 Hastings et al. 600/513
2005/0143675 A1 6/2005 Neel et al.
2005/0176136 A1 8/2005 Burd et al.
2005/0177036 A1 8/2005 Shults et al.
2005/0177398 A1 8/2005 Watanabe et al.
2005/0181012 A1 8/2005 Saint et al.
2005/0182451 A1 8/2005 Griffin et al.
2005/0183954 A1 8/2005 Hitchcock et al.
2005/0187720 A1 8/2005 Goode et al.
2005/0192557 A1 9/2005 Brauker et al.
2005/0196747 A1 9/2005 Stiene
2005/0197585 A1* 9/2005 Brockway et al. 600/486
2005/0203360 A1 9/2005 Brauker et al.
2005/0211571 A1 9/2005 Schulein et al.
2005/0215872 A1 9/2005 Berner et al.
2005/0233407 A1 10/2005 Pamidi et al.
2005/0239154 A1 10/2005 Feldman et al.
2005/0242479 A1 11/2005 Petisce et al.
2005/0245795 A1 11/2005 Goode et al.
2005/0245799 A1 11/2005 Brauker et al.

(56) **References Cited**

U.S. PATENT DOCUMENTS

2005/0251083 A1 11/2005 Carr-Brendel et al.
2005/0261563 A1 11/2005 Zhou et al.
2006/0001550 A1 1/2006 Mann et al.
2006/0015020 A1 1/2006 Neale et al.
2006/0015024 A1 1/2006 Brister et al.
2006/0016700 A1 1/2006 Brister et al.
2006/0019327 A1 1/2006 Brister et al.
2006/0020186 A1 1/2006 Brister et al.
2006/0020188 A1 1/2006 Kamath et al.
2006/0020190 A1 1/2006 Kamath et al.
2006/0020191 A1 1/2006 Brister et al.
2006/0020192 A1 1/2006 Brister et al.
2006/0025663 A1 2/2006 Talbot et al.
2006/0036139 A1 2/2006 Brister et al.
2006/0036140 A1 2/2006 Brister et al.
2006/0036141 A1 2/2006 Kamath et al.
2006/0036142 A1 2/2006 Brister et al.
2006/0036143 A1 2/2006 Brister et al.
2006/0036144 A1 2/2006 Brister et al.
2006/0040402 A1 2/2006 Brauker et al.
2006/0051736 A1 3/2006 Shields et al.
2006/0052745 A1 3/2006 Van Antwerp et al.
2006/0068208 A1 3/2006 Tapsak et al.
2006/0079740 A1 4/2006 Silver et al.
2006/0079809 A1 4/2006 Goldberger et al.
2006/0086624 A1 4/2006 Tapsak et al.
2006/0094946 A1 5/2006 Kellogg et al.
2006/0100588 A1 5/2006 Brunnberg et al.
2006/0142651 A1 6/2006 Brister et al.
2006/0183984 A1 8/2006 Dobbles et al.
2006/0183985 A1 8/2006 Brister et al.
2006/0189856 A1 8/2006 Petisce et al.
2006/0189863 A1 8/2006 Peyser et al.
2006/0195029 A1 8/2006 Shults et al.
2006/0198864 A1 9/2006 Shults et al.
2006/0200019 A1 9/2006 Petisce et al.
2006/0200020 A1 9/2006 Brister et al.
2006/0200022 A1 9/2006 Brauker et al.
2006/0200970 A1 9/2006 Brister et al.
2006/0222566 A1 10/2006 Brauker et al.
2006/0224141 A1 10/2006 Rush et al.
2006/0229512 A1 10/2006 Petisce et al.
2006/0258929 A1 11/2006 Goode et al.
2006/0263839 A1 11/2006 Ward et al.
2006/0281982 A1* 12/2006 Grata et al. 600/316
2006/0281985 A1 12/2006 Ward et al.
2006/0293576 A1 12/2006 Van Antwerp et al.
2007/0016381 A1 1/2007 Kamath et al.
2007/0027370 A1 2/2007 Brauker et al.
2007/0027384 A1 2/2007 Brister et al.
2007/0027385 A1 2/2007 Brister et al.
2007/0032706 A1 2/2007 Kamath et al.
2007/0032717 A1 2/2007 Brister et al.
2007/0032718 A1 2/2007 Shults et al.
2007/0038044 A1 2/2007 Dobbles et al.
2007/0049873 A1 3/2007 Hansen et al.
2007/0059196 A1 3/2007 Brister et al.
2007/0060870 A1 3/2007 Tolle et al.
2007/0066873 A1 3/2007 Kamath et al.
2007/0085995 A1 4/2007 Pesach et al.
2007/0093704 A1 4/2007 Brister et al.
2007/0100222 A1* 5/2007 Mastrototaro et al. 600/365
2007/0116600 A1 5/2007 Kochar et al.
2007/0129621 A1 6/2007 Kellogg et al.
2007/0163880 A1 7/2007 Woo et al.
2007/0173706 A1 7/2007 Neinast et al.
2007/0173709 A1 7/2007 Petisce et al.
2007/0173710 A1 7/2007 Petisce et al.
2007/0179436 A1 8/2007 Braig et al.
2007/0197889 A1 8/2007 Brister et al.
2007/0197890 A1 8/2007 Boock et al.
2007/0203966 A1 8/2007 Brauker et al.
2007/0208244 A1 9/2007 Brauker et al.
2007/0208245 A1 9/2007 Brauker et al.
2007/0208246 A1 9/2007 Brauker et al.
2007/0213610 A1 9/2007 Say et al.
2007/0213611 A1 9/2007 Simpson et al.
2007/0232879 A1 10/2007 Brister et al.
2007/0235331 A1 10/2007 Simpson et al.
2007/0249916 A1 10/2007 Pesach et al.
2007/0255116 A1 11/2007 Mehta et al.
2007/0255126 A1 11/2007 Moberg et al.
2008/0021666 A1 1/2008 Goode et al.
2008/0027301 A1 1/2008 Ward et al.
2008/0029390 A1 2/2008 Roche
2008/0033254 A1 2/2008 Kamath et al.
2008/0071157 A1 3/2008 Mcgarraugh et al.
2008/0071158 A1 3/2008 Mcgarraugh et al.
2008/0072663 A1 3/2008 Keenan et al.
2008/0086040 A1 4/2008 Heller et al.
2008/0086041 A1 4/2008 Heller et al.
2008/0086043 A1 4/2008 Heller et al.
2008/0091094 A1 4/2008 Heller et al.
2008/0091095 A1 4/2008 Heller et al.
2008/0119703 A1 5/2008 Brister et al.
2008/0119704 A1 5/2008 Brister et al.
2008/0119706 A1 5/2008 Brister et al.
2008/0139910 A1 6/2008 Mastrototaro et al.
2008/0154101 A1 6/2008 Jain et al.
2008/0171941 A1* 7/2008 Huelskamp et al. 600/484
2008/0183061 A1 7/2008 Goode et al.
2008/0183399 A1 7/2008 Goode et al.
2008/0188731 A1 8/2008 Brister et al.
2008/0189051 A1 8/2008 Goode et al.
2008/0194935 A1 8/2008 Brister et al.
2008/0194936 A1 8/2008 Goode et al.
2008/0194937 A1 8/2008 Goode et al.
2008/0195967 A1 8/2008 Goode et al.
2008/0208025 A1 8/2008 Shults et al.
2008/0214915 A1 9/2008 Brister et al.
2008/0242961 A1 10/2008 Brister et al.
2008/0262334 A1 10/2008 Dunn et al.
2008/0262469 A1 10/2008 Brister et al.
2008/0287764 A1 11/2008 Rasdal et al.
2008/0287765 A1 11/2008 Rasdal et al.
2008/0287766 A1 11/2008 Rasdal et al.
2008/0296155 A1 12/2008 Shults et al.
2008/0300572 A1* 12/2008 Rankers et al. 604/504
2008/0306368 A1 12/2008 Goode et al.
2008/0306434 A1 12/2008 Dobbles et al.
2008/0306435 A1 12/2008 Kamath et al.
2008/0306444 A1 12/2008 Brister et al.
2009/0005666 A1 1/2009 Shin et al.
2009/0012379 A1 1/2009 Goode et al.
2009/0018424 A1 1/2009 Kamath et al.
2009/0030294 A1 1/2009 Petisce et al.
2009/0036758 A1 2/2009 Brauker et al.
2009/0036763 A1 2/2009 Brauker et al.
2009/0043181 A1 2/2009 Brauker et al.
2009/0043182 A1 2/2009 Brauker et al.
2009/0043525 A1 2/2009 Brauker et al.
2009/0043541 A1 2/2009 Brauker et al.
2009/0043542 A1 2/2009 Brauker et al.
2009/0062633 A1 3/2009 Brauker et al.
2009/0062635 A1 3/2009 Brauker et al.
2009/0076356 A1 3/2009 Simpson
2009/0076360 A1 3/2009 Brister et al.
2009/0076361 A1 3/2009 Kamath et al.
2009/0099436 A1 4/2009 Brister et al.
2009/0124877 A1 5/2009 Goode, Jr. et al.
2009/0124878 A1 5/2009 Goode, Jr. et al.
2009/0156924 A1 6/2009 Shariati et al.
2009/0177068 A1 7/2009 Stivoric et al.
2009/0264856 A1 10/2009 Lebel et al.
2010/0174158 A1 7/2010 Kamath et al.
2010/0179401 A1 7/2010 Rasdal et al.
2010/0179404 A1 7/2010 Kamath et al.
2010/0179407 A1 7/2010 Goode, Jr. et al.
2010/0179408 A1 7/2010 Kamath et al.
2010/0179409 A1 7/2010 Kamath et al.
2010/0234707 A1 9/2010 Goode, Jr. et al.
2010/0235106 A1 9/2010 Goode, Jr. et al.
2010/0240975 A1 9/2010 Goode, Jr. et al.
2010/0240976 A1 9/2010 Goode, Jr. et al.

(56) **References Cited**

U.S. PATENT DOCUMENTS

2010/0331656	A1	12/2010	Mensinger et al.
2010/0331657	A1	12/2010	Mensinger et al.
2011/0009727	A1	1/2011	Mensinger et al.
2011/0118579	A1	5/2011	Goode, Jr. et al.
2011/0124997	A1	5/2011	Goode, Jr. et al.
2011/0130970	A1	6/2011	Goode, Jr. et al.
2011/0137601	A1	6/2011	Goode, Jr. et al.
2011/0201910	A1	8/2011	Rasdal et al.
2011/0218414	A1	9/2011	Kamath et al.
2011/0231140	A1	9/2011	Goode, Jr. et al.
2011/0231141	A1	9/2011	Goode, Jr. et al.
2011/0231142	A1	9/2011	Goode, Jr. et al.
2011/0270158	A1	11/2011	Brauker et al.

FOREIGN PATENT DOCUMENTS

EP	0 107 634	5/1984
EP	0 127 958	12/1984
EP	0 286 118	10/1988
EP	0 288 793	11/1988
EP	0 320 109	6/1989
EP	0 352 610	1/1990
EP	0 352 631	1/1990
EP	0 353 328	2/1990
EP	0 390 390	10/1990
EP	0 396 788	11/1990
EP	0 406 473	1/1991
EP	0 440 044	8/1991
EP	0 441 252	8/1991
EP	0 441 394	8/1991
EP	0 467 078	1/1992
EP	0 155 813	7/1992
EP	0 323 605	1/1994
EP	0 595 474	7/1994
EP	0 647 849	4/1995
EP	0 424 633	1/1996
EP	0 776 628	6/1997
EP	0 880 936	12/1998
EP	0 587 008	2/1999
EP	0 967 788	12/1999
EP	0 995 805	4/2000
EP	1 102 194	5/2001
EP	1 112 717	7/2001
EP	1 112 718	7/2001
EP	1 120 084	8/2001
EP	1 120 085	8/2001
EP	1 153 571	11/2001
EP	1 205 753	5/2002
EP	1 251 137	10/2002
EP	1 258 728	11/2002
EP	1 266 607	12/2002
EP	0 680 727	6/2003
EP	0 774 658	10/2003
EP	1 413 245	4/2004
EP	1 437 086	7/2004
EP	1 672 070	6/2006
EP	1 411 346	10/2006
EP	1 722 310	11/2006
EP	1 759 726	3/2007
EP	1 234 053	4/2007
EP	1 850 226	10/2007
EP	1 862 112	12/2007
EP	1 870 026	12/2007
EP	1 905 514	4/2008
EP	1 522 255	5/2008
EP	1 918 837	5/2008
EP	1 933 246	6/2008
EP	1 949 849	7/2008
EP	1 972 270	9/2008
EP	1 982 644	10/2008
EP	1 281 351	11/2008
EP	1 457 913	12/2008
EP	2 226 086	8/2010
EP	2 223 710	9/2010
FR	2656423	6/1991
FR	2760962	9/1998
GB	2149918	6/1985
JP	62083649	4/1987
JP	62083849	4/1987
JP	2000-060826	2/2000
JP	2002-189015	7/2002
JP	2003-108679	4/2003
WO	WO 89/02720	4/1989
WO	WO 89/05977	6/1989
WO	WO 89/07263	8/1989
WO	WO 90/02938	3/1990
WO	WO 90/10861	9/1990
WO	WO 92/13271	8/1992
WO	WO 93/14693	8/1993
WO	WO 94/22367	10/1994
WO	WO 95/07109	3/1995
WO	WO 95/11454	4/1995
WO	WO 95/13838	5/1995
WO	WO 96/14026	5/1996
WO	WO 96/25089	8/1996
WO	WO 96/35697	11/1996
WO	WO 96/37246	11/1996
WO	WO 97/01986	1/1997
WO	WO 97/06727	2/1997
WO	WO 97/15227	5/1997
WO	WO 97/22291	6/1997
WO	WO 97/28737	8/1997
WO	WO 97/34521	9/1997
WO	WO 97/38625	10/1997
WO	WO 98/24358	6/1998
WO	WO 98/24366	6/1998
WO	WO 98/38904	9/1998
WO	WO 98/38906	9/1998
WO	WO 98/45427	10/1998
WO	WO 99/04043	1/1999
WO	WO 99/13574	3/1999
WO	WO 99/56613	4/1999
WO	WO 99/27100	6/1999
WO	WO 99/27848	6/1999
WO	WO 99/48419	9/1999
WO	WO 99/49039	9/1999
WO	WO 99/59657	11/1999
WO	WO 99/63328	12/1999
WO	WO 99/64620	12/1999
WO	WO 00/07013	2/2000
WO	WO 00/12720	3/2000
WO	WO 00/13002	3/2000
WO	WO 00/13003	3/2000
WO	WO 00/18449	4/2000
WO	WO 00/19887	4/2000
WO	WO 00/20626	4/2000
WO	WO 00/32098	6/2000
WO	WO 00/33065	6/2000
WO	WO 00/40144	7/2000
WO	WO 00/49941	8/2000
WO	WO 00/49942	8/2000
WO	WO 00/59373	10/2000
WO	WO 00/72181	11/2000
WO	WO 00/74753	12/2000
WO	WO 01/16579	3/2001
WO	WO 01/36666	5/2001
WO	WO 01/40466	6/2001
WO	WO 01/52727	7/2001
WO	WO 01/52935	7/2001
WO	WO 01/54753	8/2001
WO	WO 01/59425	8/2001
WO	WO 01/74968	10/2001
WO	WO 01/88534	11/2001
WO	WO 01/91634	12/2001
WO	WO 02/05702	1/2002
WO	WO 02/07596	1/2002
WO	WO 00/78210	5/2002
WO	WO 02/056751	7/2002
WO	WO 02/058537	8/2002
WO	WO 02/062210	8/2002
WO	WO 02/074161	9/2002
WO	WO 02/078512	10/2002
WO	WO 02/082989	10/2002

(56) **References Cited**

FOREIGN PATENT DOCUMENTS

WO	WO 02/087681	11/2002
WO	WO 02/089666	11/2002
WO	WO 02/100262	12/2002
WO	WO 02/100266	12/2002
WO	WO 02/100474	12/2002
WO	WO 03/000127	1/2003
WO	WO 03/008013	1/2003
WO	WO 03/008014	1/2003
WO	WO 03/009207	1/2003
WO	WO 03/009208	1/2003
WO	WO 03/022327	3/2003
WO	WO 03/053498	7/2003
WO	WO 03/057027	7/2003
WO	WO 03/063700	8/2003
WO	WO 03/074107	9/2003
WO	WO 03/094714	11/2003
WO	WO 03/101862	12/2003
WO	WO 03/106966	12/2003
WO	WO 2004/008956	1/2004
WO	WO 2004/009161	1/2004
WO	WO 2004/028337	4/2004
WO	WO 2004/042364	5/2004
WO	WO 2004/060455	7/2004
WO	WO 2004/061420	7/2004
WO	WO 2004/110256	12/2004
WO	WO 2004/113912	12/2004
WO	WO 2005/001462	1/2005
WO	WO 2005/011489	2/2005
WO	WO 2005/020797	3/2005
WO	WO 2005/032400	4/2005
WO	WO 2005/041766	5/2005
WO	WO 2005/048834	6/2005
WO	WO 2005/058028	6/2005
WO	WO 2005/065537	7/2005
WO	WO 2005/065538	7/2005
WO	WO 2005/078424	8/2005
WO	WO 2005/084546	9/2005
WO	WO 2005/089103	9/2005
WO	WO 2005/026689	10/2005
WO	WO 2005/101994	11/2005
WO	WO 2005/112619	12/2005
WO	WO 2005/121785	12/2005
WO	WO 2005/124331	12/2005
WO	WO 2006/001929	1/2006
WO	WO 2006/019623	2/2006
WO	WO 2006/020212	2/2006
WO	WO 2006/026222	3/2006
WO	WO 2006/029293	3/2006
WO	WO 2006/023241	5/2006
WO	WO 2006/049854	5/2006
WO	WO 2006/050405	5/2006
WO	WO 2006/060806	6/2006
WO	WO 2006/076412	7/2006
WO	WO 2006/079114	7/2006
WO	WO 2006/083831	8/2006
WO	WO 2006/083885	8/2006
WO	WO 2006/098887	9/2006
WO	WO 2006/102412	9/2006
WO	WO 2006/104843	10/2006
WO	WO 2006/105146	10/2006
WO	WO 2006/108811	10/2006
WO	WO 2006/108858	10/2006
WO	WO 2006/118713	11/2006
WO	WO 2006/124759	11/2006
WO	WO 2006/130268	12/2006
WO	WO 2006/131288	12/2006
WO	WO 2006/132899	12/2006
WO	WO 2006/133851	12/2006
WO	WO 2007/002579	1/2007
WO	WO 2007/005170	1/2007
WO	WO 2007/005219	1/2007
WO	WO 2007/021423	2/2007
WO	WO 2007/021892	2/2007
WO	WO 2007/021894	2/2007
WO	WO 2007/025088	3/2007
WO	WO 2007/028138	3/2007
WO	WO 2007/028271	3/2007
WO	WO 2007/033010	3/2007
WO	WO 2007/037970	4/2007
WO	WO 2007/037989	4/2007
WO	WO 2007/038464	4/2007
WO	WO 2007/053497	5/2007
WO	WO 2007/053832	5/2007
WO	WO 2007/056638	5/2007
WO	WO 2007/058921	5/2007
WO	WO 2007/059061	5/2007
WO	WO 2007/061992	5/2007
WO	WO 2007/062013	5/2007
WO	WO 2007/065285	6/2007
WO	WO 2007/076940	7/2007
WO	WO 2007/079025	7/2007
WO	WO 2007/081608	7/2007
WO	WO 2007/097754	8/2007
WO	WO 2007/101260	9/2007
WO	WO 2007/114943	10/2007
WO	WO 2007/114979	10/2007
WO	WO 2007/120363	10/2007
WO	WO 2007/126444	11/2007
WO	WO 2007/126920	11/2007
WO	WO 2007/127606	11/2007
WO	WO 2007/127879	11/2007
WO	WO 2007/127880	11/2007
WO	WO 2007/130239	11/2007
WO	WO 2007/137286	11/2007
WO	WO 2007/143225	12/2007
WO	WO 2008/003003	1/2008
WO	WO 2008/005780	1/2008
WO	WO 2008/016486	2/2008
WO	WO 2008/016501	2/2008
WO	WO 2008/021913	2/2008
WO	WO 2008/028644	3/2008
WO	WO 2008/036437	3/2008
WO	WO 2008/037485	4/2008
WO	WO 2008/039944	4/2008
WO	WO 2008/039946	4/2008
WO	WO 2008/039949	4/2008
WO	WO 2008/042760	4/2008
WO	WO 2008/048452	4/2008
WO	WO 2007/143225	5/2008
WO	WO 2008/051924	5/2008
WO	WO 2008/052057	5/2008
WO	WO 2008/052199	5/2008
WO	WO 2008/052374	5/2008
WO	WO 2008/054608	5/2008
WO	WO 2008/054676	5/2008
WO	WO 2008/054677	5/2008
WO	WO 2008/055037	5/2008
WO	WO 2008/060827	5/2008
WO	WO 2008/067291	6/2008
WO	WO 2008/067314	6/2008
WO	WO 2008/069931	6/2008
WO	WO 2008/069932	6/2008
WO	WO 2008/073813	6/2008
WO	WO 2008/076868	6/2008
WO	WO 2008/079616	7/2008
WO	WO 2008/079849	7/2008
WO	WO 2008/080591	7/2008
WO	WO 2008/083179	7/2008
WO	WO 2008/083379	7/2008
WO	WO 2008/064053	8/2008
WO	WO 2008/092286	8/2008
WO	WO 2008/101211	8/2008
WO	WO 2008/101217	8/2008
WO	WO 2008/101229	8/2008
WO	WO 2008/103620	8/2008
WO	WO 2008/104397	9/2008
WO	WO 2008/112375	9/2008
WO	WO 2007/079015	10/2008
WO	WO 2008/116329	10/2008
WO	WO 2008/118257	10/2008
WO	WO 2008/124597	10/2008
WO	WO 2008/128210	10/2008
WO	WO 2008/130895	10/2008
WO	WO 2008/130896	10/2008

(56) **References Cited**

FOREIGN PATENT DOCUMENTS

WO	WO 2008/130897	10/2008
WO	WO 2008/130898	10/2008
WO	WO 2008/134146	11/2008
WO	WO 2008/134561	11/2008
WO	WO 2008/134587	11/2008
WO	WO 2008/135128	11/2008
WO	WO 2008/137405	11/2008
WO	WO 2008/138006	11/2008
WO	WO 2008/150280	12/2008
WO	WO 2008/150436	12/2008
WO	WO 2008/150633	12/2008

OTHER PUBLICATIONS

American Heritage Dictionary, 4th Edition. 2000. Houghton Mifflin Company, p. 82.
Assolant-Vinet et al. 1986. New Immoblized Enzyme Membranes for Tailor-Made Biosensors, Anal Letters 19(7&8): 875-885.
Bardeletti et al. 1986. A Reliable L-Lactate Electrode with a New Membrane for Enzyme Immobilization for Amperometric Assay of Lactate. Analyt Chim Acta, 187: 47-54.
Bertrand et al. 1981. Multipurpose Electrode with Different Enzyme Systems Bound to Collagen Films. Anal Chim Acta 126: 23-34.
Boedeker Plastics, Inc. 2009. Polyethylene Specifications Data Sheet, http://www.boedeker.com/polye_p.htm [Aug. 19, 2009 3:36:33 PM].
Coulet et al. 1981. Enzymes immobilized on collagen membranes: A tool for fundamental research and enzyme engineering. J Chromatography 215: 65-72.
Coulet, P.R. 1992. Polymeric membranes and coupled enzymes in the design of biosensors. J Membr Science 68: 217-228.
Freedman et al. 1991. Statistics, Second Edition, W.W. Norton & Company, p. 74.
Gough. May 2001. The implantable glucose sensor: An example of bioengineering design. Introduction to Bioengineering, Chapter 3, pp. 57-66.
Hamilton Syringe Selection Guide. 2006. Syringe Selection. www.hamiltoncompany.com, 20 pages.
Hoel, Paul G. 1976. Elementary Statistics, Fourth Edition. John Wiley & Sons, Inc.. pp. 113-114.
Jaffari et al. 1995. Recent advances in amperometric glucose biosensors for in vivo monitoring, Physiol. Meas. 16: 1-15.
Jobst et al., (1996) Thin-Film Microbiosensors for Glucose-Lactate Monitoring, Anal Chem. 8(18): 3173-3179.
Mazzola et al., Video Diabetes: A Teaching Tool for Children with Insulin-Dependent Diabetes, Proceedings—7th Annual Symposium on Computer Applications in Medical Care; Washington, D.C.; Dialog:, (Oct. 1983), File 8, Acc# 01624462.
Merriam-Webster Online Dictionary. Jan. 11, 2010. Definition of "acceleration". http://www.merriam-webster.com/dictionary/Acceleration.
Merriam-Webster Online Dictionary. Jan. 11, 2010. Definition of "system". http://www.merriam-webster.com/dictionary/System.
Moussy et al. 1993. Performance of subcutaneously implanted needle-type glucose sensors employing a novel trilayer coating, Anal Chem. 85: 2072-2077.
Moussy, Francis (Nov. 2002) Implantable Glucose Sensor: Progress and Problems, Sensors, 1:270-273.
Nintendo Healthcare, Wired, Dec. 1993, 1 page.
Oxford English Dictionary Online. Jan. 11, 2010. Definition of "impending". http://www.askoxford.com/results/?view=dev dict &field-12668446 Impending&branch=.
Peguin et al. 1989. Pyruvate Oxidase and Oxaloacetate Decarbozylase Enzyme Electrodes—Simultaneous Determination of Transaminases with a Two-electrode-based Analyzer, Anal Chim Acta 222: 83-93.
Phillips. 1995. A high capacity transcutaneous energy transmission system. ASAIO Journal 41:M259-M262.
Pickup et al. 1993. Developing glucose sensors for in vivo use. Elsevier Science Publishers Ltd (UK), Tibtech vol. 11: 285-291.
Raya Systems Pioneers Healthy Video Games, PlayRight, Nov. 1993 (pp. 14-15).
Reusch. 2004. Chemical Reactivity. Organometallic Compounds. Virtual Textbook of Organic Chem. pp. 1-16, http://www.cem.msu.edu/~reusch/VirtualText/orgmetal.htm.
Samuels, M.P. 2004. The effects of flight and altitude. Arch Dis Child. 89: 448-455.
San Diego Plastics, Inc. 2009. Polyethylene Data Sheet, http://www.sdplastics.com/polyeth.html.
Schaffar, Bernhard P.H. (Dec. 2001). Thick film biosensors for metabolites in undiluted whole blood and plasma samples, Anal Bioanal Chem. 372: 254-260.
Schmidt et al. 1992. Calibration of a wearable glucose sensor. The International Journal of Artificial Organs 15(1):55-61.
Schmidtke et al. 1998. Accuracy of the one-point in vivo calibration of "wired" glucose oxidase electrodes implanted in jugular veins of rats in periods of rapid rise and decline of the glucose concentration. Anal Chem 70(10):2149-2155.
Smith et al. 1998. An externally powered, multichannel, implantable stimulator-telemeter for control of paralyzed muscle. IEEE Transactions on Biomedical Engineering 45(4):463-475.
Sokolov et al. 1995. Metrological opportunities of the dynamic mode of operating an enzyme amperometric biosensor. Med. Eng. Phys. 17(6):471-476.
Sparacino et al., 2008. Continuous glucose monitoring time series and hypo/hyperglycemia prevention: requirements, methods, open problems, Current Diabetes Reviews, 4:181-192.
Sproule et al. 2002. Fuzzy pharmacology: Theory and applications. Trends in Pharmacological Sciences, 23(9):412-417.
Street et al. 1988. A note on computing robust regression estimates via iteratively reweighted least squares. The American Statistician 42(2):152-154.
Takatsu et al. 1987. Solid State Biosensors Using Thin-Film Electrodes. Sens Actuators 11: 309-317.
Thijssen et al. 1984. A Kalman Filter for Calibration, Evaluation of Unknown Samples and Quality Control in Drifting Systems, Part 1. Theory and Simulations, Anal Chim Acta 156: 87-101.
Thijssen et al. 1985. A Kalman Filter for Calibration, Evaluation of Unknown Samples and Quality Control in Drifting Systems, Part 3. Variance Reduction, Anal Chim Acta. 173: 265-272.
Thijssen et al. 1985. A Kalman Filter for Calibration, Evaluation of Unknown Samples and Quality Control in Drifting Systems, Part 4. Flow Injection Analysis, Anal Chim Acta. 174: 27-40.
Thijssen, P.C. 1984. A Kalman Filder for Calibration, Evaluation of Unknown Samples and Quality Control in Drifting Systems, Part 2. Optimal Designs, Anal Chim Acta. 162: 253-262.
Tilbury et al. 2000. Receiver operating characteristic analysis for intelligent medical systems—A new approach for finding confidence intervals. IEEE Transactions on Biomedical Engineering 47(7):952-963.
Trajanoski et al. 1998. Neural predictive controller for insulin delivery using the subcutaneous route. IEEE Transactions on Biomedical Engineering 45(9):1122-1134.
Turner et al. 1984. Carbon Monoxide: Acceptor Oxidoreductase from Pseudomonas Thermocarboxydovorans Strain C2 and its use in a Carbon Monoxide Sensor. Analytica Chimica Acta, 163: 161-174.
Vadgama. 1988. Diffusion limited enzyme electrodes. NATO ASI Series: Series C, Math and Phys. Sci. 226:359-377.
Ward et al. 2004. A wire-based dual-analyte sensor for Glucose and Lactate: In Vitro and In Vivo Evaluation, Diab Tech Therapeut. 6(3): 389-401.
Wiley Electrical and Electronics Engineering Dictionary. 2004. John Wiley & Sons, Inc. pp. 141, 142, 548, 549.
Yang et al. 1995. Glucose Biosensors with enzyme entrapped in polymer coating, Biomed Instrum Technol. 29(2): 125-133.
Ye et al. 1993. High Current Density 'Wired' Quinoprotein Glucose Dehydrogenase Electrode. Anal. Chem. 65:238-241.
Zavalkoff et al. 2002. Evaluation of conventional blood glucose monitoring as an indicator of integrated glucose values using a continuous subcutaneous sensor. Diabetes Care 25(9):1603-1606.
Zhang et al. 1993. In vitro and in vivo evaluation of oxygen effects on a glucose oxidase based implantable glucose sensor. Analytica Chimica Acta, 281:513-520.

(56) **References Cited**

OTHER PUBLICATIONS

ISR dated Jan. 16, 2002 for PCT/US01/23850 filed Jul. 30, 2001.
IPER dated Jun. 4, 2003 for PCT/US01/23850 filed Jul. 30, 2001.
ISR and WO dated Nov. 29, 2004 for PCT/US04/24263, filed Jul. 27, 2004.
IPRP dated Feb. 6, 2006 for PCT/US04/24263, filed Jul. 27, 2004.
ISR and WO for PCT/US06/034284, filed Sep. 1, 2006.
IPRP for PCT/US06/034284, filed Sep. 1, 2006.
ISR and WO dated Oct. 7, 2008 for PCT/US08/66600, filed Jun. 11, 2008.
IPRP dated Dec. 17, 2009 for PCT/US08/66600, filed Jun. 11, 2008.
ISR and WO dated Jun. 1, 2005 for PCT/US04/41095, filed Dec. 8, 2004.
ISR and WO dated Jan. 9, 2006 for PCT/US04/38724 filed Nov. 17, 2004.
IPRP dated Mar. 5, 2009 for PCT/US04/38724 filed Nov. 17, 2004.
ISR and WO for PCT/US05/006301 filed Feb. 24, 2005.
IPRP for PCT/US05/006301 filed Feb. 24, 2005.
ISR and WO dated Nov. 4, 2005 for PCT/US05/024993 filed Jul. 13, 2005.
IPRP dated Jan. 16, 2007 for PCT/US05/024993 filed Jul. 13, 2005.
ISR and WO dated Jul. 20, 2007 for PCT/US06/24132 filed Jun. 20, 2006.
IPRP dated Dec. 24, 2007 for PCT/US06/24132, filed Jun. 20, 2006.
ISR and WO dated Apr. 14, 2009 for PCT/US2009/034773, filed Feb. 20, 2009.
IPRP dated Aug. 24, 2010 for PCT/US2009/034773, filed Feb. 20, 2009.
ISR and WO dated Aug. 8, 2008 for PCT/US08/058158, filed Mar. 25, 2008.
IPRP dated Sep. 29, 2009 for PCT/US08/058158, filed Mar. 25, 2008.
EPO Communication dated Sep. 7, 2010 in EP App. No. 05723951.9.
EPO Communication dated Jan. 28, 2011 for EP 05723951.9, filed Feb. 24, 2005.
EPO Communication dated Aug. 3, 2010 for EP 10163675.1, Filed Feb. 24, 2005.
EPO Communication dated Mar. 17, 2011 for EP 10163675.1, filed Feb. 24, 2005.
EPO Communication dated Aug. 19, 2009 in European App. No. 05771646.6, filed Jul. 13, 2005.
EPO Communication dated Aug. 17, 2011 in European App. No. 05771646.6, filed Jul. 13, 2005.
EPO Extended Search Report dated Mar. 9, 2010 for EP App. No. 06718980.3, filed Jan. 17, 2006.
Japanese Office Action dated Aug. 31, 2010 for Application No. 2006-522016, filed Jul. 27, 2004.
JIPO Office Action dated Jun. 28, 2011 for JP Application No. 2006-522016, filed Jul. 27, 2004.
Office Action dated Jul. 29, 2010 in U.S. Appl. No. 12/364,786.
Office Action dated Oct. 29, 2009 in U.S. Appl. No. 11/360,819.
Office Action dated Sep. 2, 2010 in U.S. Appl. No. 11/360,819.
Office Action dated Apr. 7, 2010 in U.S. Appl. No. 11/360,819.
Electronic File History of U.S. Appl. No. 12/098,353, filed Apr. 4, 2008 containing Office Action(s) dated Aug. 26, 2010 and May 4, 2011 and Applicant Response(s) filed Nov. 24, 2010 and Jun. 3, 2011 as of Jun. 3, 2011.
Electronic File History of U.S. Appl. No. 12/579,385, filed Oct. 14, 2009 containing Office Action(s) dated Aug. 23, 2010, Feb. 17, 2011 and Jul. 14, 2011 and Applicant(s) Response(s) filed Nov. 16, 2010, Apr. 18, 2011 and Jul. 25, 2011 as of Jul. 25, 2011.
Electronic File History of U.S. Appl. No. 12/536,852, filed Aug. 6, 2009 (now U.S. Pat. No. 7,976,492 issued Jul. 12, 2011) containing Office Action(s) dated Jun. 25, 2010, Oct. 18, 2010, and Feb. 25, 2011 and Applicant(s) Response(s) filed Aug. 3, 2010, Dec. 8, 2010, and May 11, 2011.
Electronic File History of U.S. Appl. No. 12/133,738, filed Jun. 5, 2008 containing Office Action(s) dated Aug. 23, 2010, Sep. 10, 2010 and Feb. 14, 2011 and Applicant(s) Response(s) filed Aug. 31, 2010, Dec. 7, 2010 and May 16, 2011 as of May 18, 2011.
Electronic File History of U.S. Appl. No. 12/133,761, filed Jun. 5, 2008 containing Office Action(s) dated Aug. 23, 2010, Sep. 7, 2010 and Feb. 14, 2011 and Applicant Response(s) filed Aug. 25, 2010, Dec. 6, 2010, Apr. 14, 2011 and May 16, 2011 as of May 19, 2011.
Electronic File History of U.S. Appl. No. 12/133,786, filed Jun. 5, 2008 containing Office Action(s) dated Aug. 23, 2010, Sep. 8, 2010 and Feb. 14, 2011 and Applicant Response(s) filed Aug. 25, 2010, Dec. 7, 2010, Apr. 13, 2011 and May 13, 2011 as of May 19, 2011.
Electronic File History of U.S. Appl. No. 12/390,290, filed Feb. 20, 2009 containing Office Actions dated May 4, 2011 and Sep. 7, 2011 and Applicant(s) Response(s) dated Jun. 15, 2011 as of Nov. 29, 2011.
US 7,530,950, 05/2009, Brister et al. (withdrawn).
Aalders et al. 1991. Development of a wearable glucose sensor; studies in healthy volunteers and in diabetic patients. The International Journal of Artificial Organs 14(2):102-108.
Abe et al. 1992. Characterization of glucose microsensors for intracellular measurements. Alan. Chem. 64(18):2160-2163.
Abel et al. 1984. Experience with an implantable glucose sensor as a prerequisite of an artifical beta cell, Biomed. Biochim. Acta 43(5):577-584.
Abel et al. 2002. Biosensors for in vivo glucose measurement: can we cross the experimental stage. Biosens Bioelectron 17:1059-1070.
Amin et al. 2003. Hypoglycemia prevalence in prepubertal children with type 1 diabetes on standard insulin regimen: Use of continuous glucose monitoring system. Diabetes Care 26(3):662-667.
Armour et al. Dec. 1990. Application of Chronic Intravascular Blood Glucose Sensor in Dogs. Diabetes 39:1519-1526.
Atanasov et al. 1994. Biosensor for continuous glucose monitoring. Biotechnology and Bioengineering 43:262-266.
Atanasov et al. 1997. Implantation of a refillable glucose monitoring-telemetry device. Biosens Bioelectron 12:669-680.
Aussedat et al. 1997. A user-friendly method for calibrating a subcutaneous glucose sensor-based hypoglycaemic alarm. Biosensors & Bioelectronics 12(11):1061-1071.
Bailey et al. 2007. Reduction in hemoglobin A1c with real-time continuous glucose monitoring: results from a 12-week observational study. Diabetes Technology & Therapeutics 9(3):203-210.
Bard et al. 1980. Electrochemical Methods. John Wiley & Sons, pp. 173-175.
Beach et al. 1999. Subminiature implantable potentiostat and modified commercial telemetry device for remote glucose monitoring. IEEE Transactions on Instrumentation and Measurement 48(6):1239-1245.
Bellucci et al. Jan. 1986. Electrochemical behaviour of graphite-epoxy composite materials (GECM) in aqueous salt solutions, Journal of Applied Electrochemistry, 16(1):15-22.
Bessman et al., Progress toward a glucose sensor for the artificial pancreas, Proceedings of a Workshop on Ion-Selective Microelectrodes, Jun. 4-5, 1973, Boston, MA, 189-197.
Biermann et al. 2008. How would patients behave if they were continually informed of their blood glucose levels? A simulation study using a "virtual" patient. Diab. Thechnol. & Therapeut., 10:178-187.
Bindra et al. 1991. Design and In Vitro Studies of a Needle-Type Glucose Senso for Subcutaneous Monitoring. Anal. Chem 63:1692-96.
Bisenberger et al. 1995. A triple-step potential waveform at enzyme multisensors with thick-film gold electrodes for detection of glucose and sucrose. Sensors and Actuators, B 28:181-189.
Bland et al. 1986. Statistical methods for assessing agreement between two methods of clinical measurement. Lancet 1:307-310.
Bland et al. 1990. A note on the use of the intraclass correlation coefficient in the evaluation of agreement between two methods of measurement. Comput. Biol. Med. 20(5):337-340.
Bobbioni-Harsch et al. 1993. Lifespan of subcutaneous glucose sensors and their performances during dynamic glycaemia changes in rats, J. Biomed. Eng. 15:457-463.
Bode et al. 1999. Continuous glucose monitoring used to adjust diabetes therapy improves glycosylated hemoglobin: A pilot study. Diabetes Research and Clinical Practice 46:183-190.
Bode et al. 2000. Using the continuous glucose monitoring system to improve the management of type 1 diabetes. Diabetes Technology & Therapeutics, 2(Suppl 1):S43-48.

(56) **References Cited**

OTHER PUBLICATIONS

Bode, B. W. 2000. Clinical utility of the continuous glucose monitoring system. Diabetes Technol Ther, 2(Suppl 1):S35-41.
Boland et al. 2001. Limitations of conventional methods of self-monitoring of blood glucose. Diabetes Care 24(11):1858-1862.
Bowman, L.; Meindl, J. D. 1986. The packaging of implantable integrated sensors. IEEE Trans Biomed Eng BME33(2):248-255.
Brauker et al. Jun. 27, 1996. Local Inflammatory Response Around Diffusion Chambers Containing Xenografts Transplantation 61(12):1671-1677.
Braunwald, 2008. Biomarkers in heart failure. *N. Engl. J. Med.*, 358: 2148-2159.
Bremer et al. 2001. Benchmark data from the literature for evaluation of new glucose sensing technologies. Diabetes Technology & Therapeutics 3(3):409-418.
Brooks et al. "Development of an on-line glucose sensor for fermentation monitoring," Biosensors, 3:45-56 (1987/88).
Bruckel et al. 1989. In vivo measurement of subcutaneous glucose concentrations with an enzymatic glucose sensor and a wick method. Klin Wochenschr 67:491-495.
Cai et al. 2004. A wireless, remote query glucose biosensor based on a pH-sensitive polymer. Anal Chem 76(4):4038-4043.
Campanella et al. 1993. Biosensor for direct determination of glucose and lactate in undiluted biological fluids. Biosensors & Bioelectronics 8:307-314.
Candas et al (1994). "An adaptive plasma glucose controller basedon on a nonlinear insulin/glucose model." IEEE Transactions on Biomedical Engineering, 41(2): 116-124.
Cass et al. "Ferrocene-mediated enzyme electrodes for amperometric determination of glucose," Anal. Chem., 36:667-71 (1984).
Cassidy et al., Apr. 1993. Novel electrochemical device for the detection of cholesterol or glucose, Analyst, 118:415-418.
Chase et al. 2001. Continuous subcutaneous glucose monitoring in children with type 1 diabetes. Pediatrics 107:222-226.
Chia et al. 2004. Glucose sensors: toward closed loop insulin delivery. Endocrinol Metab Clin North Am 33:175-95.
Choleau et al. 2002. Calibration of a subcutaneous amperometric glucose sensor implanted for 7 days in diabetic patients. Part 2. Superiority of the one-point calibration method. Biosensors and Bioelectronics 17:647-654.
Ciba® Irgacure 2959 Photoinitiator Product Description, Ciba Specialty Chemicals Inc., Basel, Switzerland.
Claremont et al. 1986. Subcutaneous implantation of a ferrocene-mediated glucose sensor in pigs. Diabetologia 29:817-821.
Claremont et al. Jul. 1986. Potentially-impintable, ferrocene-mediated glucose sensor. J. Biomed. Eng. 8:272-274.
Clark et al. 1987. Configurational cyclic voltammetry: increasing the specificity and reliablity of implanted electrodes, IEEE/Ninth Annual Conference of the Engineering in Medicine and Biology Society, pp. 0782-0783.
Clark et al. 1988. Long-term stability of electroenzymatic glucose sensors implanted in mice. Trans Am Soc Artif Intern Organs 34:259-265.
Clark et al., 1981. One-minute electrochemical enzymic assay for cholesterol in biological materials, Clin. Chem. 27(12):1978-1982.
Colangelo et al. 1967. Corrosion rate measurements in vivo, Journal of Biomedical Materials Research, 1:405-414.
Colowick et al. 1976. Methods in Enzymlology, vol. XLIV, Immobilized Enzymes. New York: Academic Press.
Cox et al. 1985. Accuracy of perceiving blood glucose in IDDM. Diabetes Care 8(6):529-536.
Csöregi et al. 1994. Amperometric microbiosensors for detection of hydrogen peroxide and glucose based on peroxidase-modified carbon fibers. Electroanalysis 6:925-933.
Csoregi et al., 1994. Design, characterization, and one-point in vivo calibration of a subcutaneously implanted glucose electrode. Anal Chem. 66(19):3131-3138.
Danielsson et al. 1988. Enzyme thermistors, Methods in Enzymology, 137:181-197.
Dassau et al., In silico evaluation platform for artifical pancreatic β-cell development-a dynamic simulator for closed loop control with hardware-in-the-loop, Diabetes Technology & Therapeutics, 11(3):1-8, 2009.
Davies, et al. 1992. Polymer membranes in clinical sensor applications. I. An overview of membrane function, Biomaterials, 13(14):971-978.
Direct 30/30® meter (Markwell Medical) (Catalog).
Dixon et al. 2002. Characterization in vitro and in vivo of the oxygen dependence of an enzyme/polymer biosensor for monitoring brain glucose. Journal of Neuroscience Methods 119:135-142.
DuPont' Dimension AR® (Catalog), 1998.
Durliat et al. 1976. Spectrophotometric and electrochemical determinations of L(+)-lactate in blood by use of lactate dehydrogenase from yeast, Clin. Chem. 22(11):1802-1805.
Edwards Lifesciences. Accuracy for your and your patients. Marketing materials, 4 pp. 2002.
El Degheidy et al. 1986. Optimization of an implantable coated wire glucose sensor. J. Biomed Eng. 8: 121-129.
El-Khatib et al. 2007. Adaptive closed-loop control provides blood-glucose regulation using dual subcutaneous insulin and glucagon infusion in diabetic swine, Journal of Diabetes Science and Technology, 1(2):181-192.
Ei-Sa'ad et al. 1990. Moisture Absorption by Epoxy Resins: the Reverse Thermal Effect Journal of Materials Science 25:3577-3582.
Ernst et ai. 2002. Reliable glucose monitoring through the use of microsystem technology. Anal. Bioanal. Chem. 373:758-761.
Fabietti et al. 2007. Clinical validation of a new control-oriented model of insulin and glucose dynamcs in subjects with type 1 diabetes, Diabetes Technology & Therapeutics, 9(4):327-338.
Fahy et al., An analysis: hyperglycemic intensive care patients need continuous glocuse monitoring—easier said than done, Journal of Diabetese Science and Technology, 2(2):201-204, Mar. 2008.
Fare et al. 1998. Functional characterization of a conducting polymer-based immunoassay system. Biosensors & Bioelectronics 13(3-4):459-470.
Feldman et al. 2003. A continuous glucose sensor based on wired enzyme technology—results from a 3-day trial in patients with type 1 diabetes. Diabetes Technol Ther 5(5):769-779.
Fischer et al. 1987. Assessment of subcutaneous glucose concentration: validation of the wick technique as a reference for implanted electrochemical sensors in normal and diabetic dogs, Diabetologia 30:940-945.
Fischer et al. 1989. Oxygen Tension at the Subcutaneous Implantation Site of Glucose Sensors. Biomed. Biochem 11/12:965-972.
Fischer et al. 1995. Hypoglycaemia-warning by means of subcutaneous electrochemical glucose sensors: an animal study, Harm. Metab. Rese. 27:53.
Frohnauer et al. 2001. Graphical human insulin time-activity profiles using standardized definitions. Diabetes Technology & Therapeutics 3(3):419-429.
Frost et al. 2002, Implantable chemical sensors for real-time clinical monitoring: Progress and challenges. Current Opinion in Chemical Biology 6:633-641.
Gabbay et al. 2008. Optical coherence tomography-based continuous noninvasive glucose monitoring in patients with diabetes. Diab. Thechnol. & Therapeut., 10:188-193.
Ganesan et al., Gold layer-based dual crosslinking procedure of glucose oxidase with ferrocene monocarboxylic acid provides a stable biosensor, Analytical Biochemistry 343:188-191, 2005.
Ganesh et al., Evaluation of the VIA® blood chemistry monitor for glucose in healthy and diabetic volunteers, Journal of Diabetese Science and Technology, 2(2):182-193, Mar. 2008.
Garg et al. 2004. Improved Glucose Excursions Using an Implantable Real-Time continuous Glucose Sensor in Adults with Type I Diabetes. Diabetes Care 27:734-738.
Gerritsen et al. 1999. Performance of subcutaneously implanted glucose sensors for continuous monitoring. The Netherlands Journal of Medicine 54:167-179.
Gerritsen, M. 2000. Problems associated with subcutaneously implanted glucose sensors. Diabetes Care 23(2):143-145.
Gilligan et al. 1994. Evaluation of a subcutaneous glucose sensor out to 3 months in a dog model. Diabetes Care 17(8):882-887.

(56) **References Cited**

OTHER PUBLICATIONS

Gilligan et al. 2004, Feasibility of continuous long-term glucose monitoring from a subcutaneous glucose sensor in humans. Diabetes Technol Ther 6:378-386.
Godsland et al. 2001. Maximizing the Success Rate of Minimal Model Insulin Sensitivity Measurement in Humans: The Importance of Basal Glucose Levels. The Biochemical Society and the Medical Research Society, 1-9.
Gouda et al., Jul. 4, 2003. Thermal inactiviation of glucose oxidase, The Journal of Biological Chemistry, 278(27):24324-24333.
Gough et al. 2000. Immobilized glucose oxidase in implantable glucose sensor technology. Diabetes Technology & Therapeutics 2(3):377-380.
Gough et al. 2003. Frequency characterization of blood glucose dynamics. Annals of Biomedical Engineering 31:91-97.
Gross et al. 2000. Efficacy and reliability of the continuous glucose monitoring system. Diabetes Technology & Therapeutics, 2(Suppl 1):S19-26.
Gross et al. 2000. Performance evaluation of the MiniMed® continuous glucose monitoring system during patient home use. Diabetes Technology & Therapeutics 2(1):49-56.
Guerci et al., Clinical performance of CGMS in type 1 diabetic patents treated by continuous subcutaneous insulin infusion using insulin analogs, Diabetes Care, 26:582-589, 2003.
Hall et al. 1998. Electrochemical oxidation of hydrogen peroxide at platinum electrodes. Part II: Effect of potential. Electrochimica Acta 43(14-15):2015-2024.
Hall et al. 1998. Electrochemical oxidation of hydrogen peroxide at platinum electrodes. Part I: An adsorption-controlled mechanism. Electrochimica Acta, 43(5-6):579-588.
Hall et al. 1999. Electrochemical oxidation of hydrogen peroxide at platinum electrodes. Part III: Effect of temperature. Electrochimica Acta, 44:2455-2462.
Hall et al. 1999. Electrochemical oxidation of hydrogen peroxide at platinum electrodes. Part IV: Phosphate buffer dependence. Electrochimica Acta, 44:4573-4582.
Hall et al. 2000. Electrochemical oxidation of hydrogen peroxide at platinum electrodes. Part V: Inhibition by chloride. Electrochimica Acta, 45:3573-3579.
Hashiguchi et al. (1994). "Development of a miniaturized glucose monitoring system by combining a needle-type glucose sensor with microdialysis sampling method: Long-term subcutaneous tissue glucose monitoring in ambulatory diabetic patients," *Diabetes Care*, 17(5): 387-396.
Heller, "Electrical wiring of redox enzymes," Acc. Chem. Res., 23:128-134 (1990).
Heller, A. 1992. Electrical Connection of Enzyme Redox Centers to Electrodes. J. Phys. Chem. 96:3579-3587.
Heller, A. 1999. Implanted electrochemical glucose sensors for the management of diabetes. Annu Rev Biomed Eng 1:153-175.
Heller, A. 2003. Plugging metal connectors into enzymes. Nat Biotechnol 21:631-2.
Hicks, 1985. In Situ Monitoring, Clinical Chemistry, 31(12):1931-1935.
Hitchman, M. L. 1978. Measurement of Dissolved Oxygen. In Elving et al. (Eds.). Chemical Analysis, vol. 49, Chap. 3, pp. 34-49, 59-123. New York: John Wiley & Sons.
Hrapovic et al. 2003. Picoamperometric detection of glucose at ultrasmall platinum-based biosensors: preparation and characterization. Anal Chem 75:3308-3315.
Hu, et al. 1993. A needle-type enzyme-based lactate sensor for in vivo monitoring, Analytica Chimica Acta, 281:503-511.
Huang et al. A 0.5mV passive telemetry IC for biomedical applications. Swiss Federal Institute of Technology. 4 pp.
Huang et al. Aug. 1975. Electrochemical Generation of Oxygen. 1: The Effects of Anions and Cations on Hydrogen Chemisorption and Aniodic Oxide Film Formation on Platinum Electrode. 2: The Effects of Anions and Cations on Oxygen Generation on Platinum Electrode, pp. 1-116.
Hunter et al. 2000. Minimally Invasive. Glucose Sensor and Insulin Delivery System. MIT Home Automation and Healthcare Consortium. Progress Report No. 25.
Ishikawa et al. 1998. Initial evaluation of a 290-mm diameter subcutaneous glucose sensor: Glucose monitoring with a biocompatible, flexible-wire, enzyme-based amperometric microsensor in diabetic and nondiabetic humans. Journal of Diabetes and Its Complications, 12:295-301.
Jensen et al. 1997. Fast wave forms for pulsed electrochemical detection of glucose by incorporation of reductive desorption of oxidation products. Analytical Chemistry 69(9)1776-1781.
Jeutter, D. C. 1982. A transcutaneous implanted battery recharging and biotelemeter power switching system. IEEE Trans Biomed Eng 29:314-321.
Johnson (1991). "Reproducible electrodeposition of biomolecules for the fabrication of miniature electroenzymatic biosensors," *Sensors and Actuators B*, 5:85-89.
Johnson et al. 1992. In vivo evaluation of an electroenzymatic glucose sensor implanted in subcutaneous tissue. Biosensors & Bioelectronics, 7:709-714.
Jovanovic, L. 2000. The role of continuous glucose monitoring in gestational diabetes mellitus. Diabetes Technology & Therapeutics, 2 Suppl 1, S67-71.
Kacaniklic May-Jun. 1994. Electroanalysis, 6(5-6):381-390.
Kamath et al. Calibration of a continuous glucose monitor: effect of glucose rate of change, Eighth Annual Diabetes Technology Meeting, Nov. 13-15, 2008, p. A88.
Kang et al. 2003. In vitro and short-term in vivo characteristics of a Kel-F thin film modified glucose sensor. Anal Sci 19:1481-1486.
Kaufman et al. 2001. A pilot study of the continuous glucose monitoring system. Diabetes Care 24(12):2030-2034.
Kaufman. 2000. Role of the continuous glucose monitoring system in pediatric patients. Diabetes Technology & Therapeutics 2(1):S-49-S-52.
Kawagoe et al. 1991. Enzyme-modified organic conducting salt microelectrode, Anal. Chem. 63:2961-2965.
Kerner et al. "The function of a hydrogen peroxide-detecting electroenzymatic glucose electrode is markedly impaired in human sub-cutaneous tissue and plasma," Biosensors & Bioelectronics, 8:473-482 (1993).
Kerner et al. 1988. A potentially implantable enzyme electrode for amperometric measurement of glucose, Horm Metab Res Suppl. 20:8-13.
Kiechle, F.L. 2001. The impact of continuous glucose monitoring on hospital point-of-care testing programs. Diabetes Technol Ther 3:647-649.
Klueh et al. 2003. Use of Vascular Endothelia Cell Growth Factor Gene Transfer to Enhance Implantable Sensor Function in Vivo, Biosensor Function and Vegf-Gene Transfer, pp. 1072-1086.
Kondo et al. 1982. A miniature glucose sensor, implantable in the blood stream. Diabetes Care. 5(3):218-221.
Koschinsky et al. 1988. New approach to technical and clinical evaluation of devices for self-monitoring of blood glucose. Diabetes Care 11(8): 619-619.
Koschinsky et al. 2001. Sensors for glucose monitoring: Technical and clinical aspects. Diabetes Metab. Res. Rev. 17:113-123.
Kost et al. 1985. Glucose-sensitive membranes containing glucose oxidase: activitiy, swelling, and permeability studies, Journal of Biomedical Materials Research 19:1117-1133.
Koudelka et al. 1989. In vivo response of microfabricated glucose sensors to glycemia changes in normal rats. Biomed Biochim Acta 48(11-12):953-956.
Koudelka et al. 1991. In-vivo behaviour of hypodermically implanted microfabricated glucose sensors. Biosensors & Bioelectronics 6:31-36.
Kraver et al. 2001. A mixed-signal sensor interface microinstrument. Sensors and Actuators A 91:266-277.
Kruger et al. 2000. Psychological motivation and patient education: A role for continuous glucose monitoring. Diabetes Technology & Therapeutics, 2(Suppl 1):S93-97.
Kulys et al., 1994. Carbon-paste biosensors array for long-term glucose measurement, Biosensors& Beioelectronics, 9:491-500.

(56) **References Cited**

OTHER PUBLICATIONS

Kunjan et al., Automated blood sampling and glocuse sensing in critical care settings, Journal of Diabetes Science and Technology 2(3):194-200, Mar. 2008.
Kurnik et al. 1999. Application of the mixtures of experts algorithm for signal processing in a noninvasive glucose monitoring system. Sensors and Actuators B, 60:19-26.
Kurtz et al. 2005. Recommendations for blood pressure measurement in humans and experimental animals, Part 2: Blood pressure measurement in experimental animals, A statement for professionals from the subcommittee of professional and public education of the American Heart Association Council on High Blood Pressure Research. Hypertension 45:299-310.
Ladd et al., Structure Determination by X-ray Crystallography, 3rd ed. Plenum, 1996, Ch. 1, pp. xxi-xxiv and 1-58.
Lehmann et al. May 1994. Retrospective valication of a physiological model of glucose-iunsulin interaaction in tyhpe 1 diabetes mellitus, Med. Eng. Phys. 16:193-202.
Lerner et al. 1984. An implantable electrochemical glucose sensor. Ann. N. Y. Acad. Sci. 428:263-278.
Lewandowski et al. 1988. Evaluation of a miniature blood glucose sensor. Trans Am Svc Artif Intern Organs 34:255-258.
Leypoldt et al. 1984. Model of a two-substrate enzyme electrode for glucose. Anal. Chem. 56:2896-2904.
Linke et al. 1994. Amperometric biosensor for in vivo glucose sensing based on glucose oxidase immobilized in a redox hydrogel. Biosensors & Bioelectronics 9:151-158.
Lohn et al., A knowledge-based system for real-time validation of calibrations and measurements, Chemometrics and intelligent Laboratory Systems, 1999 46, 57-66.
Lowe, 1984. Biosensors, Trends in Biotechnology, 2(3):59-65.
Luong et al. 2004. Solubilization of Multiwall Carbon Nanotubes by 3-Aminopropyltriethoxysilane Towards the Fabrication of Electrochemical Biosensors with Promoted Electron Transfer. Electronanalysis 16(1-2):132-139.
Lyandres et al. (2008). Progress toward an in vivo surface-enhanced raman spectroscopy glucose sensor. *Diabetes Technology & Therapeutics*, 10(4): 257-265.
Maiden et al. 1992. Elimination of Electrooxidizable Interferent-Produced Currents in Amperometric Biosensors, Analytical Chemistry, 64:2889-2896.
Makale et al. 2003. Tissue window chamber system for validation of implanted oxygen sensors. Am. J. Physiol. Heart Circ. Physiol. 284:H2288-2294.
Malin et al. 1999. Noninvasive Prediction of Glucose by Near-Infrared Diffuse Reflectance Spectroscopy. Clinical Chemistry 45:9, 1651-1658.
Maran et al. 2002. Continuous subcutaneous glucose monitoring in diabetic patients: A multicenter analysis. Diabetes Care 25(2):347-352.
March, W. F. 2002. Dealing with the delay. Diabetes Technol Them 4(1):49-50.
Marena et al. 1993. The artifical endocrine pancreas in clinical practice and research. Panminerva Medica 35(2):67-74.
Martin, R. F. 2000. General Deming regression for estimating systematic bias and its confidence interval in method-comparison studies. Clinical Chemistry, 46(1):100-104.
Mastrototaro et al. "An electroenzymatic glucose sensor fabricated on a flexible substrate," Sensors and Actuators B, 5:139-44 (1991).
Mastrototaro et al. 2003. Reproducibility of the continuous glucose monitoring system matches previous reports and the intended use of the product. Diabetes Care 26:256; author reply p. 257.
Mastrototaro, J. J. 2000. The MiniMed continuous glucose monitoring system. Diabetes Technol Ther 2(Suppl 1):S13-8.
Matsumoto et al. 1998. A micro-planar amperometeric glucose sensor unsusceptible to interference species. Sensors and Actuators B 49:68-72.
Matthews et al. 1988. An amperometric needle-type glucose sensor testing in rats and man. Diabetic Medicine 5:248-252.
Mazze et al. 2008. Characterizing glucose exposure for individuals with normal glucose tolerance using continuous glucose monitoring and ambulatory glucose profile analysis. Diab. Thechnol. & Therapeut., 10:149-159.
McCartney et al. 2001. Near-infrared fluorescence lifetime assay for serum glucose based on allophycocyanin-labeled concanavalin A. Anal Biochem 292:216-221.
McGrath et al. 1995. The use of differential measurements with a glucose biosensor for interference compensation during glucose determinations by flow injection analysis. Biosens Bioelectron 10:937-943.
McKean, at al. Jul. 7, 1988. A Telemetry Instrumentation System for Chronically Implanted Glucose and Oxygen Sensors. Transactions on Biomedical Engineering 35:526-532.
Memoli et al. 2002. A comparison between different immobilised glucoseoxidase-based electrodes. J Pharm Biomed Anal 29:1045-1052.
Meyerhoff et al. 1992. On line continuous monitoring of subcutaneous tissue glucose in men by combining portable glucosensor with microdialysis. Diabetologia 35:1087-1092.
Moatti-Sirat et al. 1992. Evaluating in vitro and in vivo the interference of ascorbate and acetaminophen on glucose detection by a needle-type glucose sensor, Biosensors & Bioelectronics 7:345-352.
Moatti-Sirat et al. 1992. Towards continuous glucose monitoring: in vivo evaluation of a miniaturized glucose sensor implanted for several days in rat subcutaneous tissue. Diabetologia 35:224-230.
Moatti-Sirat et al., Reduction of acetaminophen interference in glucose sensors by a composite Nafion membrane: demonstration in rats and man, Diabetologia 37(6):610-616, Jun. 1994.
Morff et al. 1990. Microfabrication of reproducible, economical, electroenzymatic glucose sensors, Annual International Conference of the IEEE Engineering in Medicine and Biology Society, 12(2):0483-0484.
Mosbach et al. 1975. Determination of heat changes in the proximity of immobilized enzymes with an enzyme termistor and its use for the assay of metobolites, Biochim. Biophys. Acta. (Enzymology), 403:256-265.
Motonaka et al. 1993. Determination of cholesteral and cholesteral ester with novel enzyme microsensors, Anal. Chem. 65:3258-3261.
Murphy, et al. 1992. Polymer membranes in clinical sensor applications. II. The design and fabrication of permselective hydrogels for electrochemical devices, Biomaterials, 13(14):979-990.
Muslu. 1991. Trickling filter performance. Apllied Biochemistry and Biotechnology 37:211-224.
Nafion® 117 Solution Product Description, Product No. 70160, Sigma-Aldrich Corp., St. Louis, MO.
Ohara et al. 1994. "Wired" enzyme electrodes for amperometric determination of glucose or lactate in 1013 the presence of interfering substances. Anal Chem 66:2451-2457.
Ohara, et al. Dec. 1993. Glucose electrodes based on cross-linked bis(2,2'-bipyridine)chloroosmium(+/2+) complexed poly(1-vinylimidazole) films, Analytical Chemistry, 65:3512-3517.
Okuda et al. 1971. Mutarotase effect on micro determinations of D-glucose and its anomers with β-D- glucose oxidase. Anal Biochem 43:312-315.
Palmisano et al. 2000. Simultaneous monitoring of glucose and lactate by an interference and cross-talk free dual electrode amperometric biosensor based on electropolymerized thin films. Biosensors & Bioelectronics 15:531-539.
Patel et al. 2003. Amperometric glucose sensors based on ferrocene containing polymeric electron transfer systems—a preliminary report. Biosens Bioelectron 18:1073-6.
Peacock et al. 2008. Cardiac troponin and outcome in acute heart failure. N. Engl. J. Med., 358: 2117-2126.
Pfeiffer et al. 1992. On line continuous monitoring of subcutaneous tissue glucose is feasible by combining portable glucosensor with microdialysis. Horm, Metab. Res. 25:121-124.
Pfeiffer, E.F. 1990. The glucose sensor: the missing link in diabetes therapy, Horm Metab Res Suppl. 24:154-164.
Pichert et al. 2000. Issues for the coming age of continuous glucose monitoring Diabetes Educ 26(6):969-980.
Pickup et al. "Implantable glucose sensors: choosing the appropriate sensing strategy," Biosensors, 3:335-346 (1987/88).

(56) **References Cited**

OTHER PUBLICATIONS

Pickup et al. "In vivo molecular sensing in diabetes mellitus: an implantable glucose sensor with direct electron transfer," Diabetologia, 32:213-217 (1989).
Pickup et al. 1989. Potentially-implantable, amperometric glucose sensors with mediated electron transfer: improving the operating stability. Biosensors 4:109-119.
Pinner et al., Cross-linking of cellulose acetate by ionizing radiation, Nature, vol. 184, 1303-1304, Oct. 24, 1959.
Pishko et al. "Amperometric glucose microelectrodes prepared through immobilization of glucose oxidase in redox hydrogels," Anal. Chem., 63:2268-72 (1991).
Pitzer et al. 2001. Detection of hypoglycemia with the GlucoWatch biographer. Diabetes Care 24(5):881-885.
Poitout et al. 1993. A glucose monitoring system for on line estimation in man of blood glucose concentration using a miniaturized glucose sensor implanted in the subcutaneous tissue and a wearable control unit. Diabetologia 36:658-663.
Poitout et al. 1994. Development of a glucose sensor for glucose monitoring in man: the disposable implant concept. Clinical Materials 15:241-246.
Poitout, et al. 1991. In Vitro and in Vivo Evaluation in Dogs of a Miniaturized Glucose Sensor, ASAIO Transactions, 37:M298-M300.
Postlethwaite et al. 1996. Interdigitated array electrode as an alternative to the rotated ring-disk electrode for determination of the reaction products of dioxygen reduction. Analytical Chemistry 68:2951-2958.
Prabhu et al. 1981. Electrochemical studies of hydrogen peroxide at a platinum disc electrode, Electrochimica Acta 26(6):725-729.
Quinn et al. 1995. Kinetics of glucose delivery to subcutaneous tissue in rats measured with 0.3-mm amperometric microsensors. The American Physiological Society E155-E161.
Quinn et al. 1997. Biocompatible, glucose-permeable hydrogel for in situ coating of implantable biosensors. Biomaterials 18:1665-1670.
Rabah et al., 1991. Electrochemical wear of graphite anodes during electrolysis of brine, Carbon, 29(2):165-171.
Reach et al. 1986. A Method for Evaluating in vivo the Functional Characteristics of Glucose Sensors. Biosensors 2:211-220.
Reach et al. 1992. Can continuous glucose monitoring be used for the treatment of diabetes? Analytical Chemistry 64(5):381-386.
Reach, G. 2001. Which threshold to detect hypoglycemia? Value of receiver-operator curve analysis to find a compromise between sensitivity and specificity. Diabetes Care 24(5):803-804.
Reach, Gerard. 2001. Letters to the Editor Re: Diabetes Technology & Therapeutics, 2000;2:49-56. Diabetes Technology & Therapeutics 3(1):129-130.
Rebrin et al. "Automated feedback control of subcutaneous glucose concentration in diabetic dogs," Diabetologia, 32:573-76 (1989).
Rebrin et al. 1992. Subcutaenous glucose monitoring by means of electrochemical sensors: fiction or reality? J. Biomed. Eng. 14:33-40.
Rhodes et al. 1994. Prediction of pocket-portable and implantable glucose enzyme electrode performance from combined species permeability and digital simulation analysis. Analytical Chemistry 66(9):1520-1529.
Rigla et al. 2008. Real-time continuous glucose monitoring together with telemedical assitance improves glycemic control and glucose stability in pump-treated patients. Diab. Thechnol. & Therapeut., 10:194-199.
Rinken et al. 1998. Calibration of glucose biosensors by using pre-steady state kinetic data. Biosensors & Bioelectronics, 13:801-807.
Rivers et al., Central venous oxygen saturation monitoring in the critically ill patient, Current Opinion in Critical Care, 7:204-211, 2001.
Sakakida et al. 1992. Development of Ferrocene-Mediated Needle-Type Glucose Sensor as a Measure of True Subcutaneous Tissue Glucose Concentrations. Artif. Organs Today 2(2):145-158.
Sakakida et al. 1993. Ferrocene-Mediated Needle Type Glucose Sensor Covered with Newly Designed Biocompatible Membran, Sensors and Actuators B 13-14:319-322.
Salardi et al. 2002. The glucose area under the profiles obtained with continuous glucose monitoring system relationships with HbA1c in pediatric type 1 diabetic patients. Diabetes Care 25(10):1840-1844.
Sansen et al. 1985. "Glucose sensor with telemetry system." In Ko, W. H. (Ed.). Implantable Sensors for Closed Loop Prosthetic Systems. Chap. 12, pp. 167-175, Mount Kisco, NY: Future Publishing Co.
Sansen et al. 1990. A smart sensor for the voltammetric measurement of oxygen or glucose concentrations. Sensors and Actuators B 1:298-302.
Schmidt et al. 1993. Glucose concentration in subcutaneous extracellular space. Diabetes Care 16(5):695-700.
Schmidtke et al., Measurement and modeling of the transient difference between blood and subcutaneous glucose concentrations in the rat after injection of insulin. *Proc Natl Acad Sci U S A* 1998, 95, 294-299.
Schoemaker et al. 2003. The SCGM1 system: Subcutaneous continuous glucose monitoring based on microdialysis technique. Diabetes Technology & Therapeutics 5(4):599-608.
Schoonen et al. 1990 Development of a potentially wearable glucose sensor for patients with diabetes mellitus: design and in-vitro evaluation. Biosensors & Bioelectronics 5:37-46.
Service et al. 1970. Mean amplitude of glycemic excursions, a measure of diabetic instability. Diabetes, 19: 644-655.
Service et al. 1987. Measurements of glucose control. Diabetes Care, 10: 225-237.
Service, R. F. 2002. Can sensors make a home in the body? Science 297:962-3.
Sharkawy et al. 1996. Engineering the tissue which encapsulates subcutaneous implants. I. Diffusion properties, J Biomed Mater Res, 37:401-412.
Shaw et al. "In vitro testing of a simply constructed, highly stable glucose sensor suitable for implantation in diabetic patients," Biosensors & Bioelectronics, 6:401-406 (1991).
Shichiri et al. 1982. Wearable artificial endocrine pancrease with needle-type glucose sensor. Lancet 2:1129-1131.
Shichiri et al. 1983. Glycaemic Control in Pancreatectomized Dogs with a Wearable Artificial Endocrine Pancreas. Diabetologia 24:179-184.
Shichiri et al. 1985. Needle-type Glucose Sensor for Wearable Artificial Endocrine Pancreas in Implantable Sensors 197-210.
Shichiri et al. 1986, Telemetry Glucose Monitoring Device with Needle-Type Glucose Sensor: A Useful Tool for Blood Glucose Monitoring in Diabetic Individuals. Diabetes Care, Inc. 9(3);298-301.
Shichiri et al. 1989. Membrane Design for Extending the Long-Life of an Implantable Glucose Sensor. Diab. Nutr. Metab. 2:309-313.
Shults et al. 1994. A telemetry-instrumentation system for monitoring multiple subcutaneously implanted glucose sensors. IEEE Transactions on Biomedical Engineering 41(10):937-942.
Skyler, J. S. 2000. The economic burden of diabetes and the benefits of improved glycemic control: The potential role of a continuous glucose monitoring system. Diabetes Technology & Therapeutics 2 Suppl 1:S7-12.
Slater-Maclean et al. 2008. Accuracy of glycemic measurements in the critically ill. Diab. Thechnol. & Therapeut., 10:169-177.
Sokol et al. 1980, Immobilized-enzyme rate-determination method for glucose analysis, Clin. Chem. 26(1):89-92.
Sriyudthsak et al. 1996. Enzyme-epoxy membrane based glucose analyzing system and medical applications. Biosens Bioelectron 11:735-742.
Steil et al. 2003. Determination of plasma glucose during rapid glucose excursions with a subcutaneous glucose sensor. Diabetes Technology & Therapeutics 5(1):27-31.
Stern et al., 1957. Electrochemical polarization: 1. A theoretical analysis of the shape of polarization curves, Journal of the Electrochemical Society, 104(1):56-63.
Sternberg et al. 1988. Study and Development of Multilayer Needle-type Enzyme-based Glucose Microsensors. Biosensors 4:27-40.
Sumino T. et al. 1998. Preliminary study of continuous glucose monitoring with a microdialysis technique. Proceedings of the IEEE, 20(4)1775-1778.

(56) **References Cited**

OTHER PUBLICATIONS

Takegami et al. 1992. Pervaporation of ethanol water mixtures using novel hydrophobic membranes containing polydimethylsiloxane, Journal of Membrance Science, 75(93-105).
Tanenberg et al. 2000. Continuous glucose monitoring system: A new approach to the diagnosis of diabetic gastroparesis. Diabetes Technology & Therapeutics, 2 Suppl 1:S73-80.
Tatsuma et al. 1991. Oxidase/peroxidase bilayer-modified electrodes as sensors for lactate, pyruvate, cholesteral and uric acid, Analytica Chimica Acta, 242:85-89.
Thome et al. 1995. Can the decrease in subcutaneous glucose concentration precede the decrease in blood glucose level? Proposition for a push-pull kinetics hypothesis, Harm. Metab. Res. 27:53.
Thomé-Duret et al. 1996. Modification of the sensitivity of glucose sensor implanted into subcutaneous tissue. Diabetes Metabolism, 22:174-178.
Thome-Duret et al. 1996. Use of a subcutaneous glucose sensor to detect decreases in glucose concentration prior to observation in blood, Anal. Chem. 68:3822-3826.
Thomé-Duret et al. 1998. Continuous glucose monitoring in the free-moving rat. Metabolism, 47:799-803.
Thompson et al., In Vivo Probes: Problems and Perspectives, Department of Chemistry, University of Toronto, Canada, pp. 255-261, 1986.
Tierney et al. 2000. Effect of acetaminophen on the accuracy of glucose measurements obtained with the GlucoWatch biographer. Diabetes Technol Ther 2:199-207.
Tierney at al. 2000. The GlucoWatch® biographer: A frequent, automatic and noninvasive glucose monitor. Ann. Med. 32:632-641.
Torjman et al., Glucose monitoring in acute care: technologies on the horizon, Journal of Deabetes Science and Technology, 2(2):178-181, Mar. 2008.
Trecroci, D. 2002. A Glimpse into the Future- Continuous Monitoring of Glucose with a Microfiber. Diabetes Interview 42-43.
Tse and Gough. 1987. Time-Dependent Inactivation of Immobilized Glucose Oxidase and Catalase. Biotechnol. Bioeng. 29:705-713.
Turner and Pickup, "Diabetes mellitus: biosensors for research and management," Biosensors, 1:85-115 (1985).
Unger et al. 2004. Glucose control in the hospitalized patient. Emerg Med 36(9):12-18.
Updike et al. 1967. The enzyme electrode. Nature, 214:986-988.
Updike et al. 1979. Continuous glucose monitor based on an immobilized enzyme electrode detector. J Lab Clin Med, 93(4):518-527.
Updike et al. 1982. Implanting the glucose enzyme electrode: Problems, progress, and alternative solutions. Diabetes Care, 5(3):207-212.
Updike et al. 1988. Laboratory Evaluation of New Reusable Blood Glucose Sensor. Diabetes Care, 11:801-807.
Updike et al. 1994. Enzymatic glucose sensor: Improved long-term performance in vitro and in vivo. ASAIO Journal, 40(2):157-163.
Updike et al. 1997. Principles of long-term fully implanted sensors with emphasis on radiotelemetric monitoring of blood glucose form inside a subcutaneous foreign body capsule (FBC). In Fraser, ed., Biosensors in the Body. New York. John Wiley & Sons, pp. 117-137.
Updike et al. 2000. A subcutaneous glucose sensor with improved longevity, dynamic range, and stability of calibration. Diabetes Care 23(2):208-214.
Utah Medical Products Inc., Blood Pressure Tranducers product specifications. 6 pp. 2003-2006, 2003.
Vadgama, P. Nov. 1981. Enzyme electrodes as practical biosensors. Journal of Medical Engineering & Technology 5(6):293-298.
Van den Berghe 2004. Tight blood glucose control with insulin in "real-life" intensive care. Mayo Clin Proc 79(8):977-978.
Velho et al. 1989. In vitro and in vivo stability of electrode potentials in needle-type glucose sensors. Influence of needle material. Diabetes 38:164-171.
Velho et al, 1989. Strategies for calibrating a subcutaneous glucose sensor. Biomed Biochim Acta 48(11/12):957-964.
von Woedtke et al. 1989. In situ calibration of implanted electrochemical glucose sensors. Biomed Biochim. Acta 48(11/12):943-952.
Wagner et al. 1998. Continuous amperometric monitoring of glucose in a brittle diabetic chimpanzee with a miniature subcutaneous electrode. Proc. Natl. Acad. Sci. A, 95:6379-6382.
Wang et al. 1994. Highly Selective Membrane-Free, Mediator-Free Glucose Biosensor. Anal. Chem. 66:3600-3603.
Wang et al. 1997. Improved ruggedness for membrane-based amperometric sensors using a pulsed amperometric method. Anal Chem 69:4482-4489.
Ward et al. 1999. Assessment of chronically implanted subcutaneous glucose sensors in dogs: The effect of surrounding fluid masses. ASAIO Journal, 45:555-561.
Ward et al. 2000. Understanding Spontaneous Output Fluctuations of an Amperometric Glucose Sensor: Effect of Inhalation Anesthesia and e of a Nonenzyme Containing Electrode. ASAIO Journal 540-546.
Ward et al. 2000. Rise in background current over time in a subcutaneous glucose sensor in the rabbit: Relevance to calibration and accuracy. Biosensors & Bioelectronics, 15:53-61.
Ward et al. 2002. A new amperometric glucose microsensor: in vitro and short-term in vivo evaluation. Biosensors & Bioelectronics, 17:181-189.
Wientjes, K. J. C. 2000. Development of a glucose sensor for diabetic patients (Ph.D. Thesis).
Wikipedia 2006. "Intravenous therapy," http://en.wikipedia.org/wiki/Intravenous_therapy, Aug. 15, 2006, 6 pp.
Wilkins et al. 1988. The coated wire electrode glucose sensor, Horm Metab Res Suppi., 20:50-55.
Wilkins et al. 1995. Glucose monitoring: state of the art and future possibilities. Med Eng Phys 18:273-288.
Wilkins et al. 1995. Integrated implantable device for long-term glucose monitoring. Biosens. Bioelectron 10:485-494.
Wilson et al. 1992. Progress toward the development of an implantable sensor for glucose. Clin. Chem. 38(9):1613-1617.
Wilson et al. 2000. Enzyme-based biosensors for in vivo measurements. Chem. Rev., 100:2693-2704.
Wood, W. et al. Mar. 1990. Hermetic Sealing with Epoxy. Mechanical Engineering 1-3.
Woodward. 1982. How Fibroblasts and Giant Cells Encapsulate Implants: Considerations in Design of Glucose Sensor. Diabetes Care 5:278-281.
Worsley et al., Measurement of glucose in blood with a phenyiboronic acid optical sensor, Journal of Diabetes Science and Technology, 2(2):213-220, Mar. 2008.
Wright et al., Bioelectrochemical dehalogenations via direct electrochemistry of poly(ethylene oxide)-modified myoglobin, Electrochemistry Communications 1 (1999) 603-611.
Wu et al. 1999. In situ electrochemical oxygen generation with an immunoisolation device. Annals New York Academy of Sciences, pp. 105-125.
Yamasaki et al. 1989. Direct measurement of whole blood glucose by a needle-type sensor. Clinica Chimica Acta. 93:93-98.
Yamasaki, Yoshimitsu. Sep. 1984. The development of a needle-type glucose sensor for wearable artificial endocrine pancreas. Medical Journal of Osaka University 35(1-2):25-34.
Yang et al (1996). "A glucose biosensor based on an oxygen electrode: In-vitro performances in a model buffer solution and in blood plasma," Biomedical Instrumentation & Technology, 30:55-61.
Yang et al. 1998. Development of needle-type glucose sensor with high selectivity. Science and Actuators B 46:249-256.
Yang, et al. 2004. A Comparison of Physical Properties and Fuel Cell Performance of Nation and Zirconium Phosphate/Nafion Composite Membranes. Journal of Membrane Science 237:145-161.
Zamzow et al. Development and evaluation of a wearable blood glucose monitor. pp. M588-M591, 1990.
Zethelius et al. 2008. Use of multiple biomarkers to improve the prediction of death from cardiovascular causes. N. Engl. J. Med., 358: 2107-2116.
Zhang et al (1993). Electrochemical oxidation of H_2O_2 on Pt and Pt + Ir electrodes in physiological buffer and its applicability to H_2O_2-based biosensors. *J. Electroanal. Chem.*, 345:253-271.

(56) **References Cited**

OTHER PUBLICATIONS

Zhang et al. 1994. Elimination of the acetaminophen interference in an implantable glucose sensor. Analytical Chemistry 66(7):1183-1188.
Zhu et al. (1994). "Fabrication and characterization of glucose sensors based on a microarray H_2O_2 electrode." *Biosensors & Bioelectronics*, 9: 295-300.
Zhu et al. 2002. Planar amperometric glucose sensor based on glucose oxidase immobilized by chitosan film on prussian blue layer. Sensors, 2:127-136.
Office Action dated Sep. 30, 2002 in U.S. Appl. No. 09/636,369.
Office Action dated Jul. 15, 2008 in U.S. Appl. No. 10/633,367.
Office Action dated Jun. 11, 2009 in U.S. Appl. No. 10/633,367.
Office Action dated Jul. 7, 2009 in U.S. Appl. No. 12/102,729.
Office Action dated Dec. 23, 2008 in U.S. Appl. No. 12/102,745.
Office Action dated May 22, 2006 in U.S. Appl. No. 10/896,772.
Office Action dated Dec. 14, 2005 in U.S. Appl. No. 10/896,772.
Office Action dated Jul. 19, 2005 in U.S. Appl. No. 10/896,772.
Office Action dated Jan. 11, 2005 in U.S. Appl. No. 10/896,772.
Office Action dated Dec. 21, 2004 in U.S. Appl. No. 10/632,537.
Office Action dated Oct. 20, 2004 in U.S. Appl. No. 10/632,537.
Office Action dated May 29, 2008 in Reexam U.S. Appl. No. 95/001,039.
Office Action dated Jun. 17, 2008 in U.S. Appl. No. 11/038,340.
Office Action dated Jan. 5, 2009 in U.S. Appl. No. 11/038,340.
Office Action dated May 19, 2009 in U.S. Appl. No. 11/038,340.
Office Action dated Feb. 12, 2007 in U.S. Appl. No. 10/633,404.
Office Action dated Jun. 17, 2008 in Reexam U.S. Appl. No. 95/001,038.
Office Action dated Oct. 5, 2006 in U.S. Appl. No. 10/633,329.
Office Action dated Mar. 26, 2007 in U.S. Appl. No. 10/633,329.
Office Action dated Jul. 30, 2007 in U.S. Appl. No. 10/633,329.
Office Action dated Feb. 4, 2008 in U.S. Appl. No. 10/633,329.
Office Action dated Jun. 12, 2008 in U.S. Appl. No. 10/633,329.
Office Action dated Dec. 18, 2008 in U.S. Appl. No. 10/633,329.
Office Action dated Jun. 11, 2009 in U.S. Appl. No. 10/633,329.
Office Action dated Jun. 23, 2009 in U.S. Appl. No. 10/648,849.
Office Action dated Jun. 24, 2008 in U.S. Appl. No. 11/007,920.
Office Action dated Jan. 27, 2006 in U.S. Appl. No. 11/007,635.
Office Action dated Nov. 28, 2007 in U.S. Appl. No. 10/991,966.
Office Action dated Jul. 22, 2008 in U.S. Appl. No. 10/991,966.
Office Action dated Nov. 27, 2006 in U.S. Appl. No. 10/789,359.
Office Action dated Mar. 20, 2008 in U.S. Appl. No. 10/789,359.
Office Action dated Oct. 3, 2008 in U.S. Appl. No. 10/789,359.
Office Action dated Jan. 15, 2008 in U.S. Appl. No. 11/034,344.
Office Action mailed Jun. 5, 2008 in U.S. Appl. No. 10/838,909.
Office Action mailed Mar. 16, 2009 in U.S. Appl. No. 10/838,909.
Office Action dated Mar. 31, 2008 in U.S. Appl. No. 11/077,759.
Office Action dated Jul. 10, 2008 in U.S. Appl. No. 11/077,759.
Office Action dated May 26, 2009 in U.S. Appl. No. 11/077,759.
Office Action dated Jul. 21, 2009 in U.S. Appl. No. 11/077,739.
Office Action dated Jun. 1, 2007 in U.S. Appl. No. 11/077,740.
Office Action dated Nov. 1, 2007 in U.S. Appl. No. 11/077,740.
Office Action dated Feb. 7, 2008 in U.S. Appl. No. 11/077,740.
Office Action dated Jul. 25, 2008 in U.S. Appl. No. 11/077,740.
Office Action dated Apr. 28, 2009 in U.S. Appl. No. 11/077,740.
Office Action dated Dec. 31, 2007 in U.S. Appl. No. 11/077,765.
Office Action dated May 16, 2008 in U.S. Appl. No. 11/077,765.
Office Action dated Sep. 19, 2008 in U.S. Appl. No. 11/077,765.
Office Action dated Jan. 23, 2009 in U.S. Appl. No. 11/077,765.
Office Action dated May 5, 2008 in U.S. Appl. No. 11/078,232.
Office Action dated Nov. 12, 2008 in U.S. Appl. No. 11/078,232.
Office Action dated Mar. 5, 2009 in U.S. Appl. No. 11/078,232.
Office Action dated Jul. 21, 2009 in U.S. Appl. No. 11/078,232.
Office Action dated Jul. 27, 2007 in U.S. Appl. No. 11/077,714.
Office Action dated Apr. 10, 2007 in U.S. Appl. No. 11/077,714.
Office Action dated Oct. 11, 2006 in U.S. Appl. No. 11/077,714.
Office Action dated Jan. 10, 2008 in U.S. Appl. No. 11/077,714.
Office Action dated Sep. 16, 2008 in U.S. Appl. No. 11/077,714.
Office Action dated Apr. 16, 2009 in U.S. Appl. No. 11/077,714.
Office Action dated Jun. 26, 2008 in U.S. Appl. No. 11/157,365.
Office Action dated Jan. 7, 2009 in U.S. Appl. No. 11/157,365.
Office Action dated Jul. 21, 2009 in U.S. Appl. No. 11/157,365.
Office Action dated Oct. 4, 2006 in U.S. Appl. No. 11/334,876.
Office Action dated Sep. 25, 2007 in U.S. Appl. No. 11/334,876.
Office Action dated May 2, 2008 in U.S. Appl. No. 11/334,876.
Office Action dated Aug. 26, 2008 in U.S. Appl. No. 11/334,876.
Office Action dated Jun. 30, 2008 in U.S. Appl. No. 11/360,252.
Office Action dated Jan. 29, 2009, in U.S. Appl. No. 11/360,252.
Office Action dated Jul. 23, 2009, in U.S. Appl. No. 11/360,252.
Office Action dated Aug. 11, 2008 in U.S. Appl. No. 11/360,819.
Office Action dated Dec. 26, 2008 in U.S. Appl. No. 11/360,819.
Office Action dated Nov. 28, 2008 in U.S. Appl. No. 11/333,837.
Office Action dated Jun. 29, 2009 in U.S. Appl. No. 11/333,837.
U.S. Appl. No. 09/447,227, filed Nov. 22, 1999.
U.S. Appl. No. 11/654,135, filed Jan. 17, 2007.
Ciba® Irgacure® 2959 Photoinitiator, Product Description. Apr. 2, 1998. Ciba Specialty Chemicals Inc., Basel, Switzerland. 3 pages. [corrected cite].
Direct 30/30® Blood Glucose Sensor, (Markwell Medical) Catalog, ©1990, ELCO Diagnostics Company. 1 page. [corrected cite].
DuPont' Dimension AR®. 1998. The chemistry analyzer that makes the most of your time, money and effort. Catalog. Dade International, Chemistry Systems. Newark, DE. 18 pages. . [corrected cite].
Huang et al., Sep. 1997, A 0.5mW Passive Telemetry IC for Biomedical Applications, Proceedings of the 23rd European Solid-State Circuits Conference (ESSCIRC '97), pp. 172-175, Southampton, UK [corrected cite].
Hunter et al. Mar. 31, 2000. Minimally Invasive Glucose Sensor and Insulin Delivery System. MIT Home Automation and Healthcare Consortium. Progress Report No. 2-5. 17 pages. . [corrected cite].
Nafion® 117 Solution Product Description, Product No. 70160, Sigma-Aldrich Corp., St. Louis, MO. Downloaded from https://www.signaaldrich.com/cgi-bin/hsrun/Suite7/Suite/HAHTpage/Suite.HsExternal Prod . . . on Apr. 7, 2005. [corrected cite].

* cited by examiner

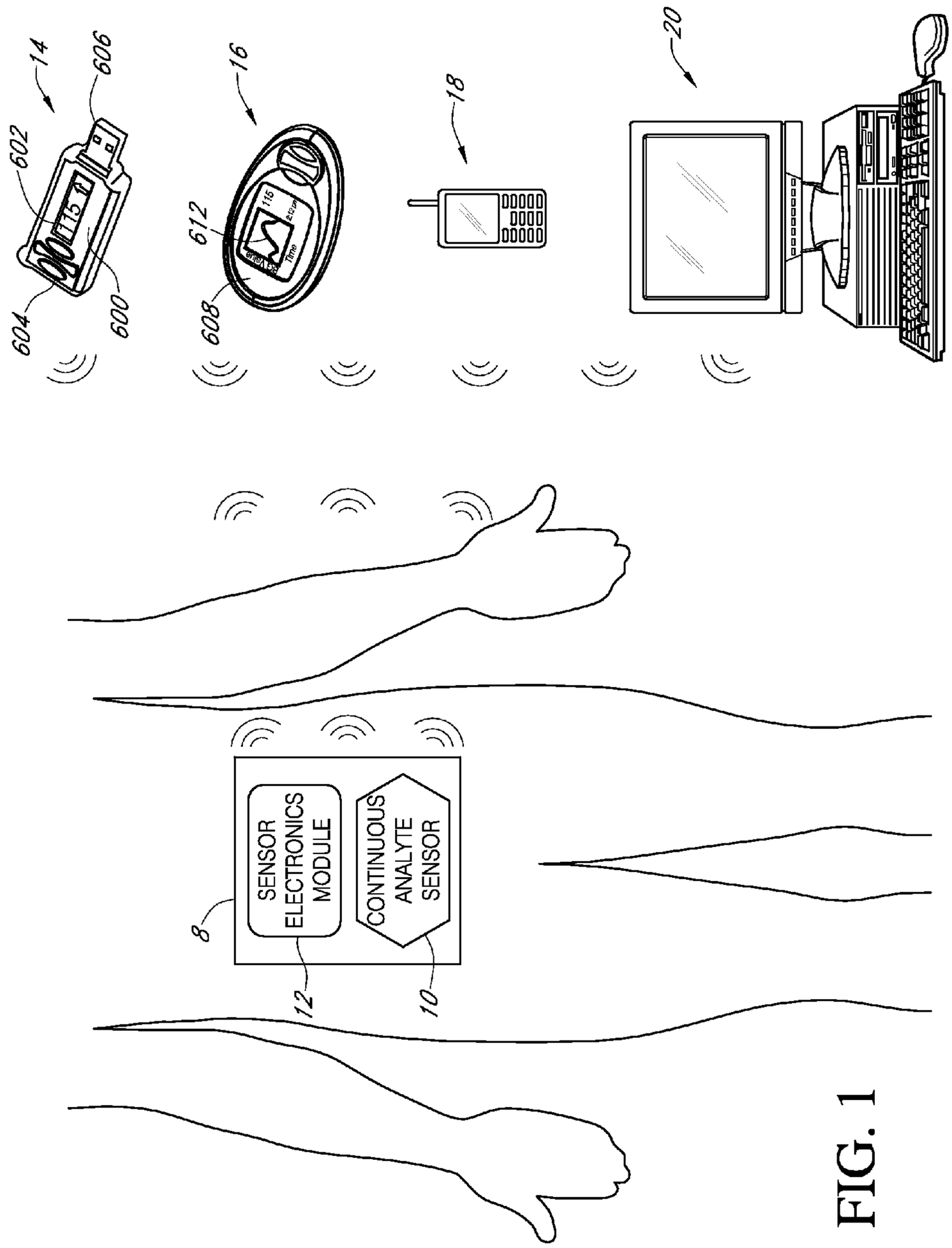
14
606
602
604
600
16
612
608
18
20
SENSOR ELECTRONICS MODULE
CONTINUOUS ANALYTE SENSOR
8
12
10

FIG. 1

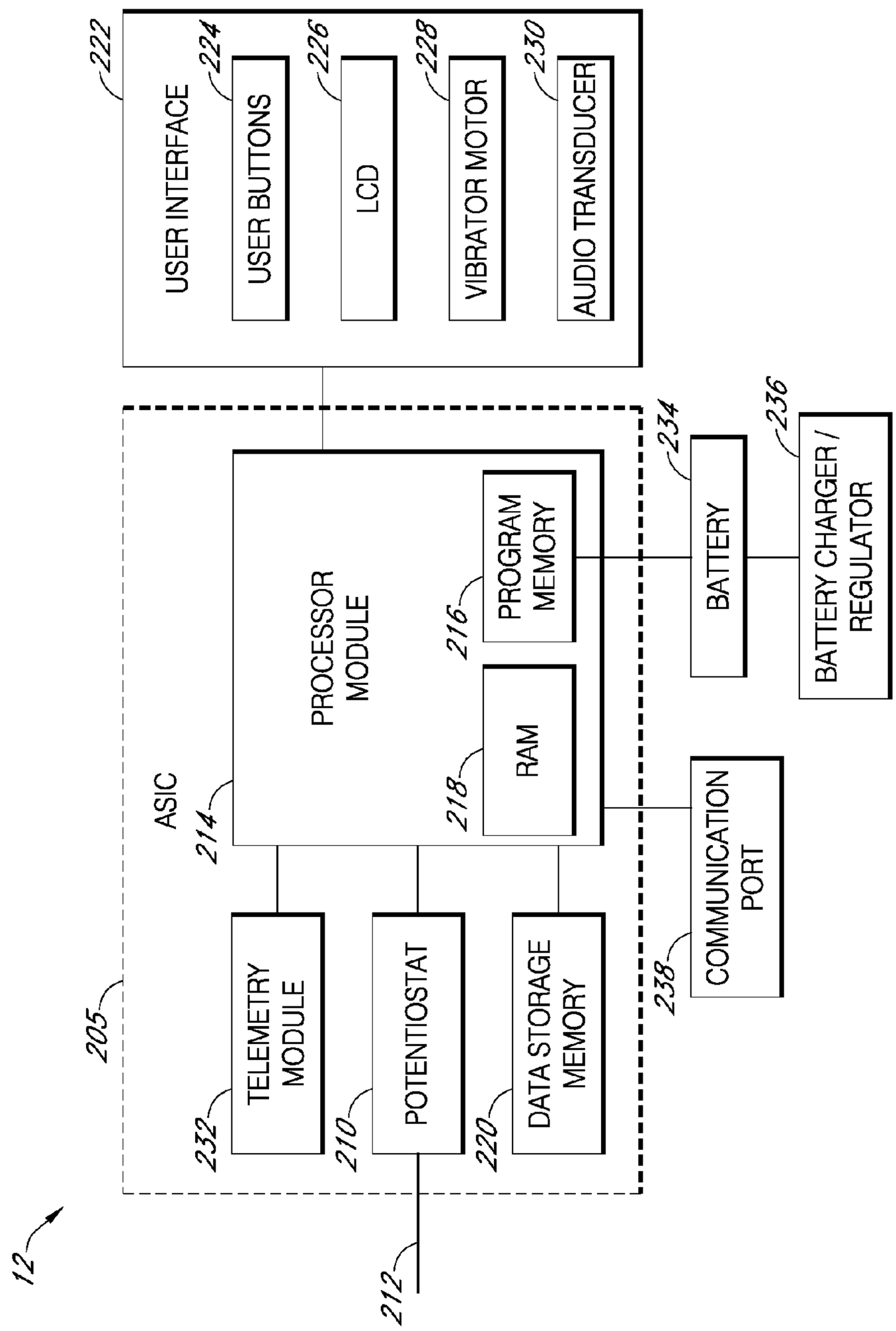
12
205
ASIC
214
USER INTERFACE
222
USER BUTTONS
224
LCD
226
VIBRATOR MOTOR
228
AUDIO TRANSDUCER
230
PROCESSOR MODULE
PROGRAM MEMORY
216
RAM
218
TELEMETRY MODULE
232
POTENTIOSTAT
210
DATA STORAGE MEMORY
220
212
BATTERY
234
BATTERY CHARGER / REGULATOR
236
COMMUNICATION PORT
238

FIG. 2A

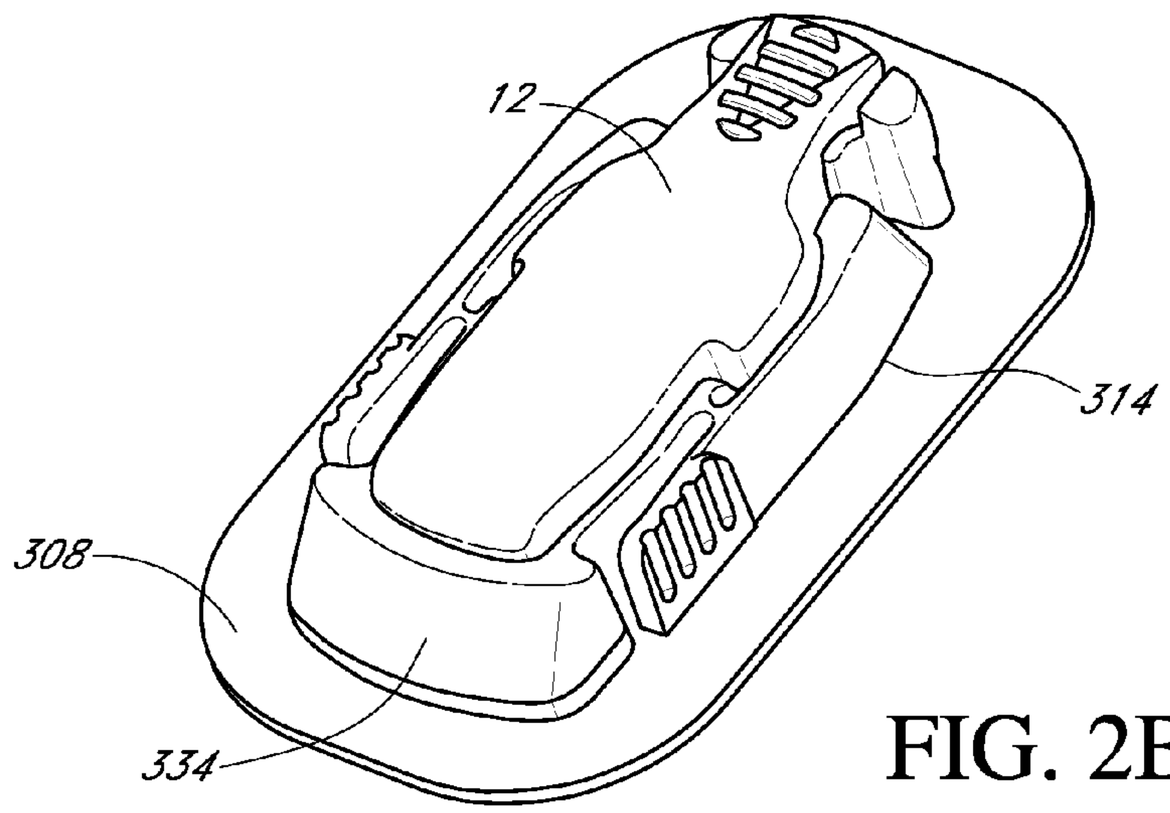

FIG. 2B

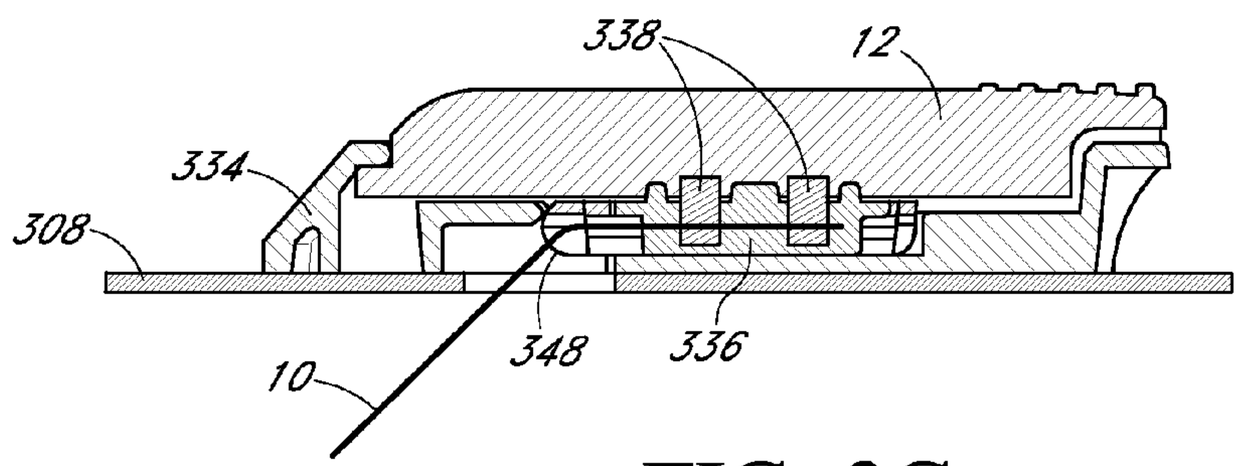

FIG. 2C

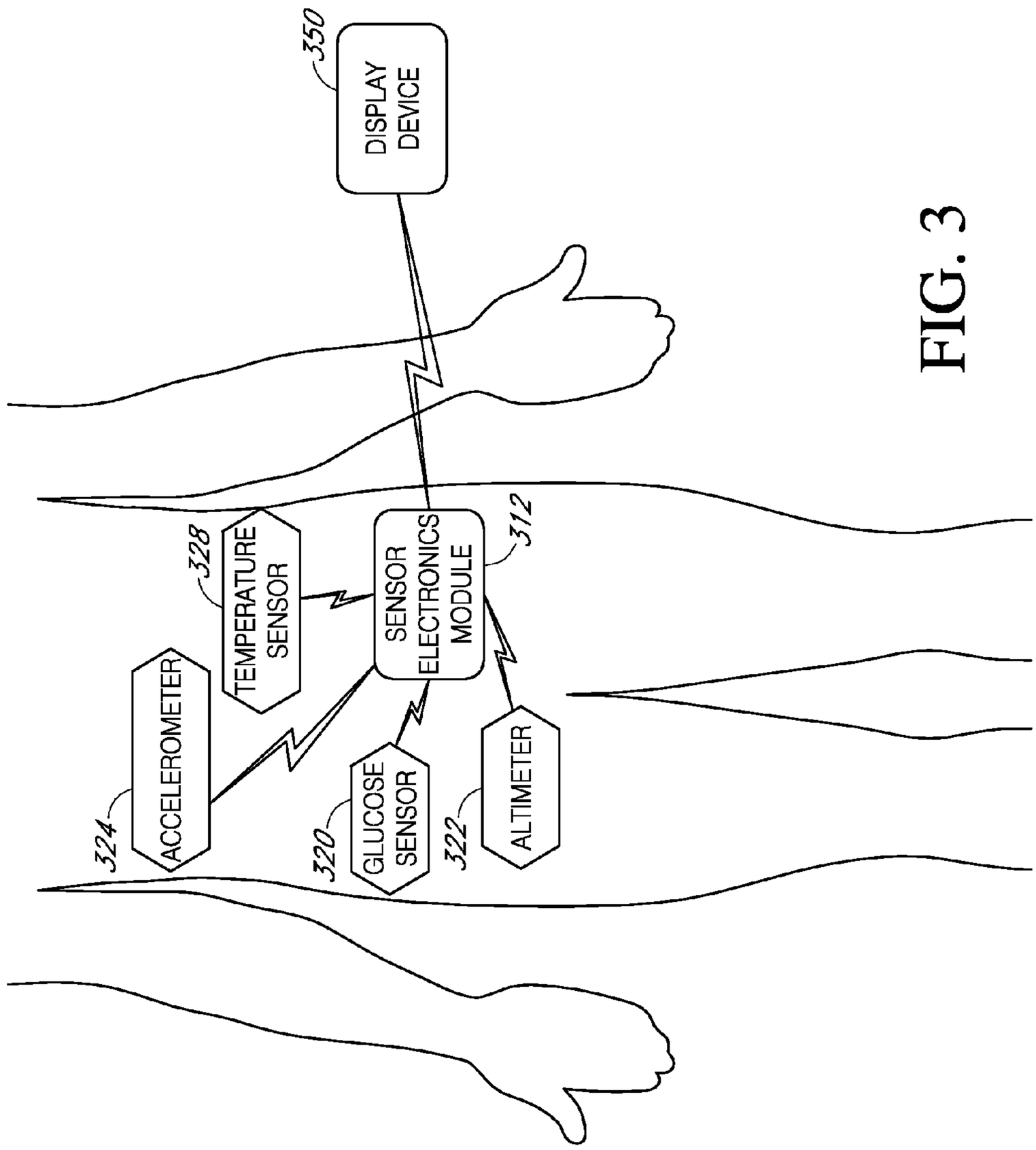
350
DISPLAY DEVICE
328
TEMPERATURE SENSOR
SENSOR ELECTRONICS MODULE
312
324
ACCELEROMETER
320
GLUCOSE SENSOR
322
ALTIMETER

FIG. 3

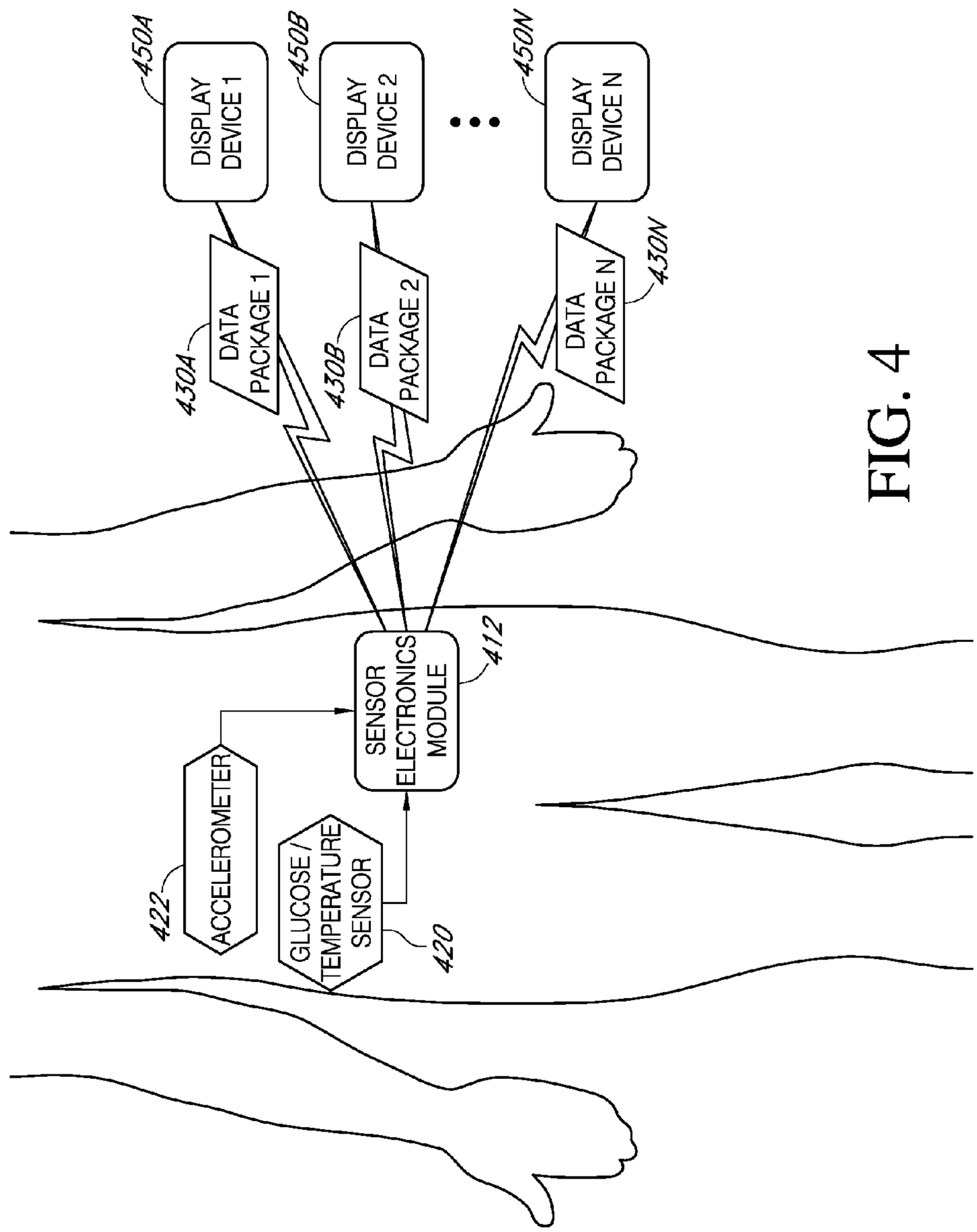
450A
DISPLAY DEVICE 1
450B
DISPLAY DEVICE 2
450N
DISPLAY DEVICE N
430A
DATA PACKAGE 1
430B
DATA PACKAGE 2
430N
DATA PACKAGE N
412
SENSOR ELECTRONICS MODULE
422
ACCELEROMETER
GLUCOSE / TEMPERATURE SENSOR
420

FIG. 4

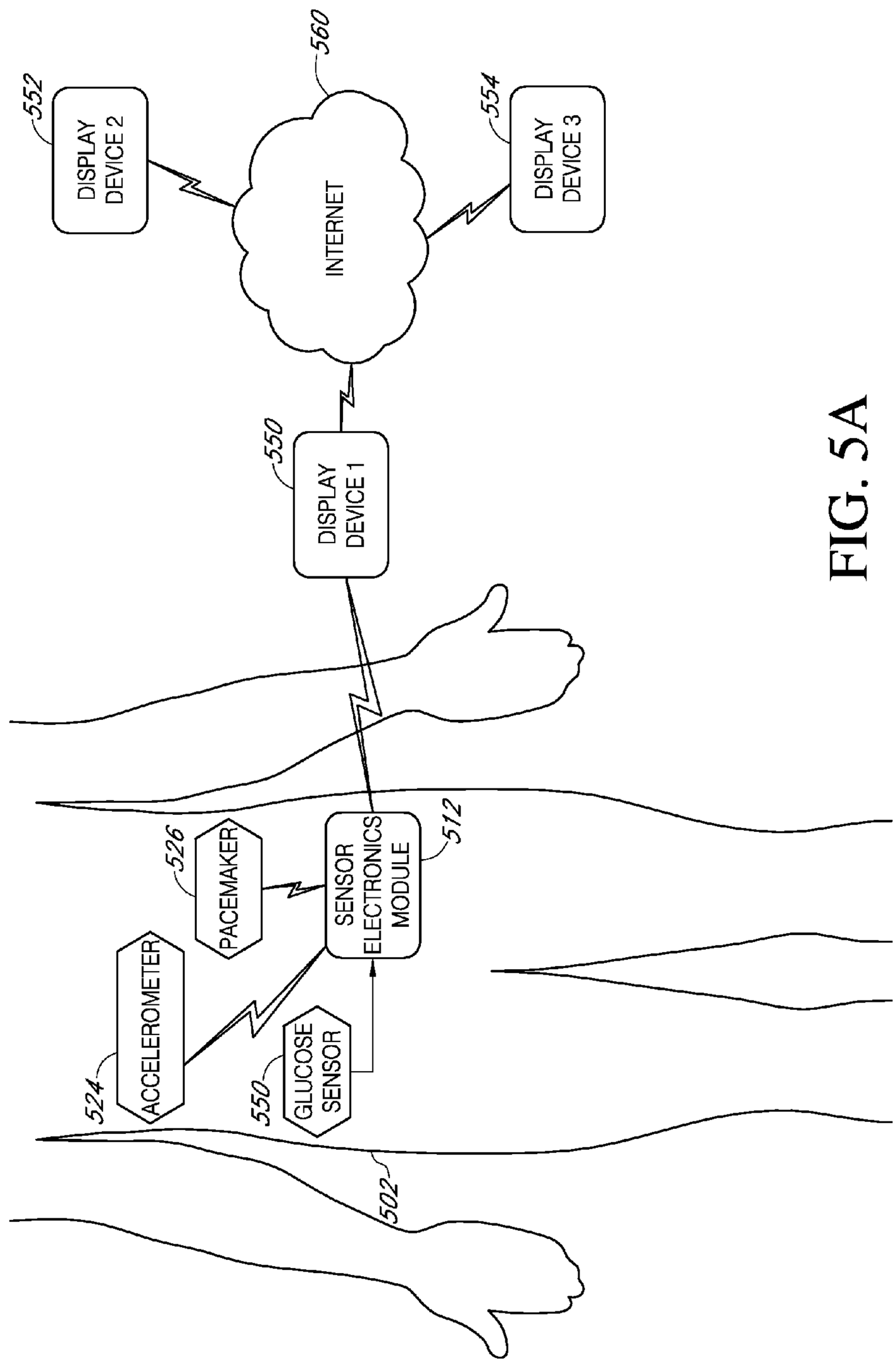
552
DISPLAY DEVICE 2
560
INTERNET
554
DISPLAY DEVICE 3
550
DISPLAY DEVICE 1
526
PACEMAKER
SENSOR ELECTRONICS MODULE
512
524
ACCELEROMETER
550
GLUCOSE SENSOR
502

FIG. 5A

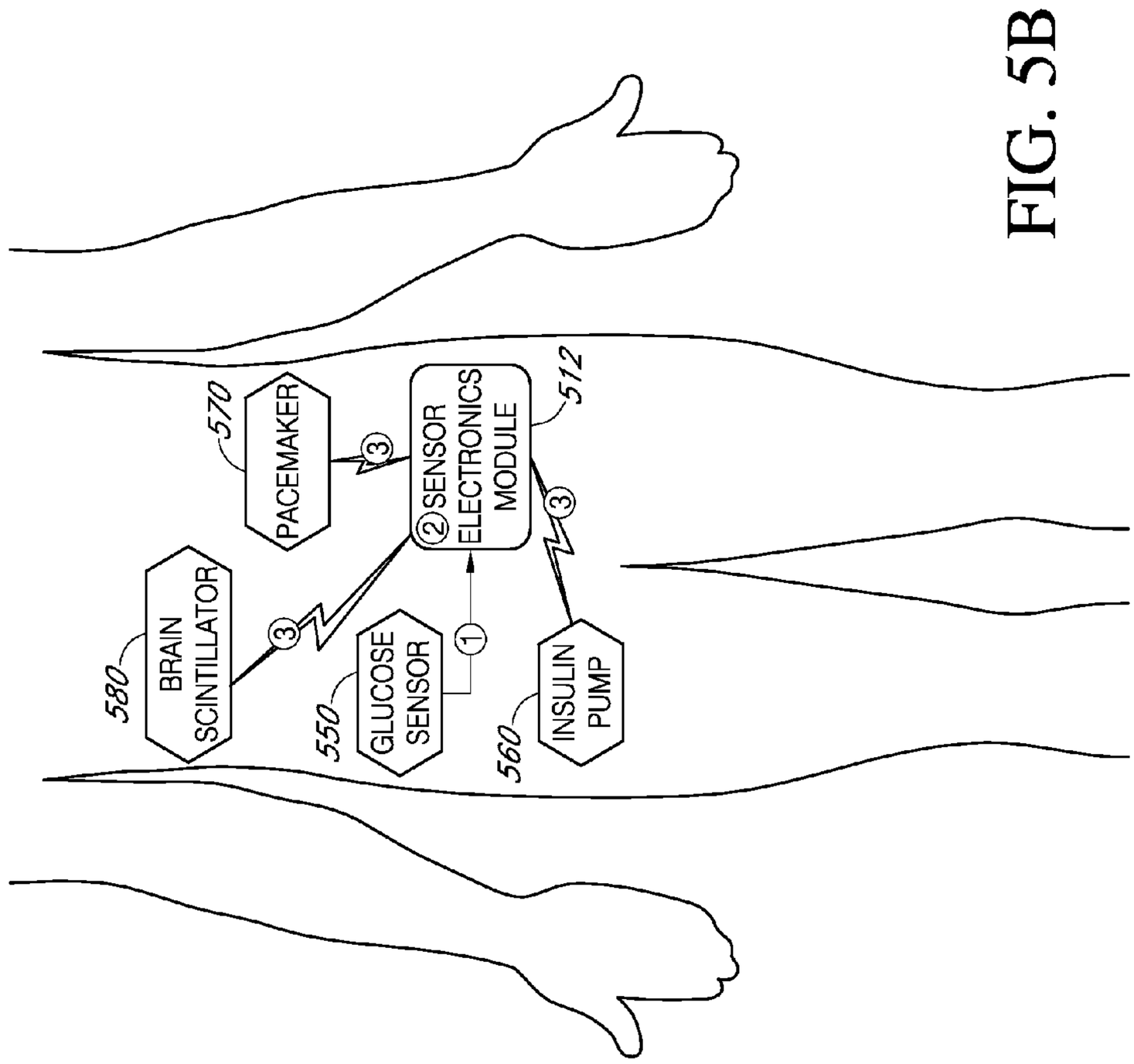
580
BRAIN SCINTILLATOR
570
PACEMAKER
550
GLUCOSE SENSOR
560
INSULIN PUMP
2 SENSOR ELECTRONICS MODULE
512
1
3
3
3

FIG. 5B

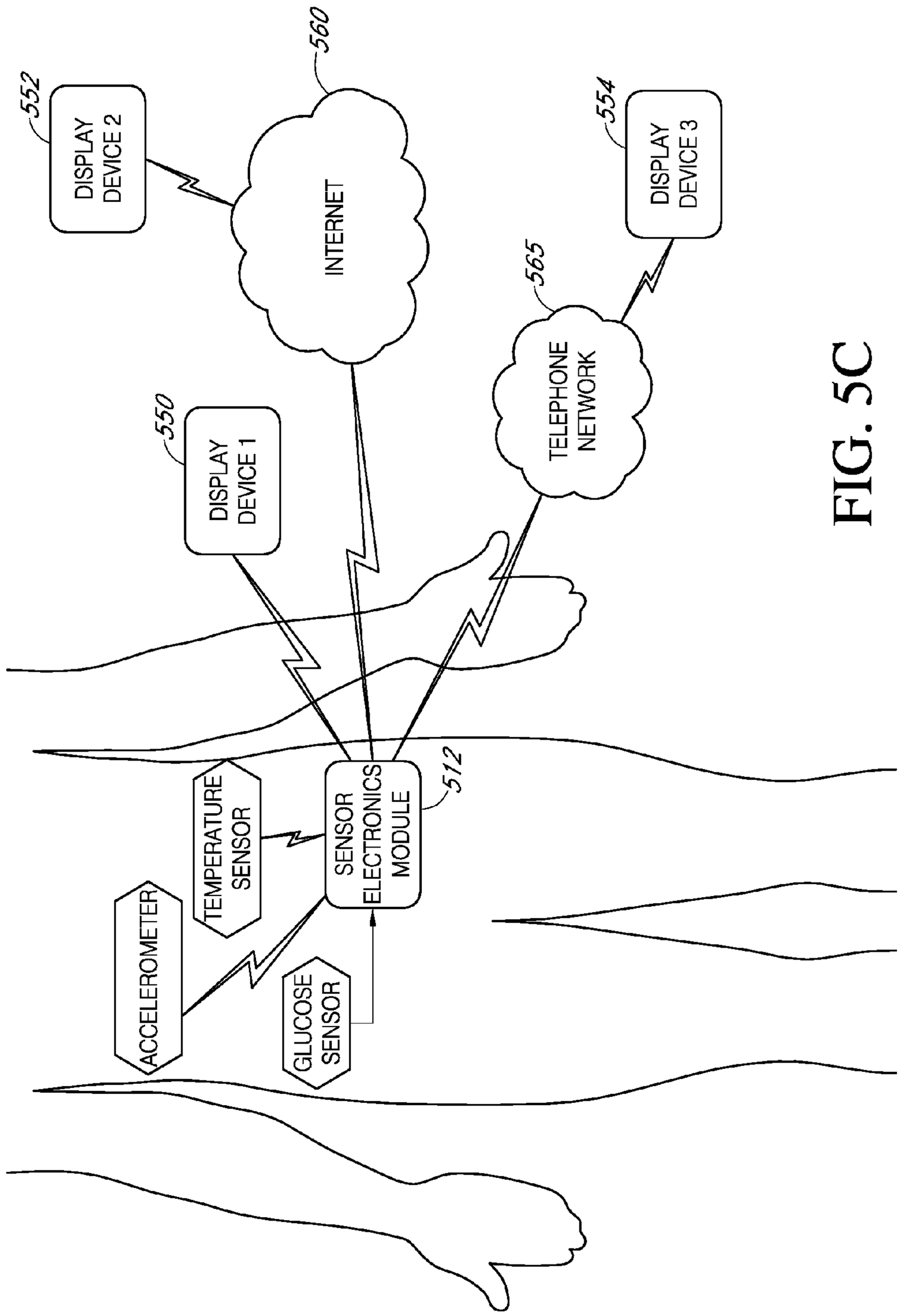
552
DISPLAY DEVICE 2
560
INTERNET
554
DISPLAY DEVICE 3
565
TELEPHONE NETWORK
550
DISPLAY DEVICE 1
ACCELEROMETER
TEMPERATURE SENSOR
SENSOR ELECTRONICS MODULE
512
GLUCOSE SENSOR

FIG. 5C

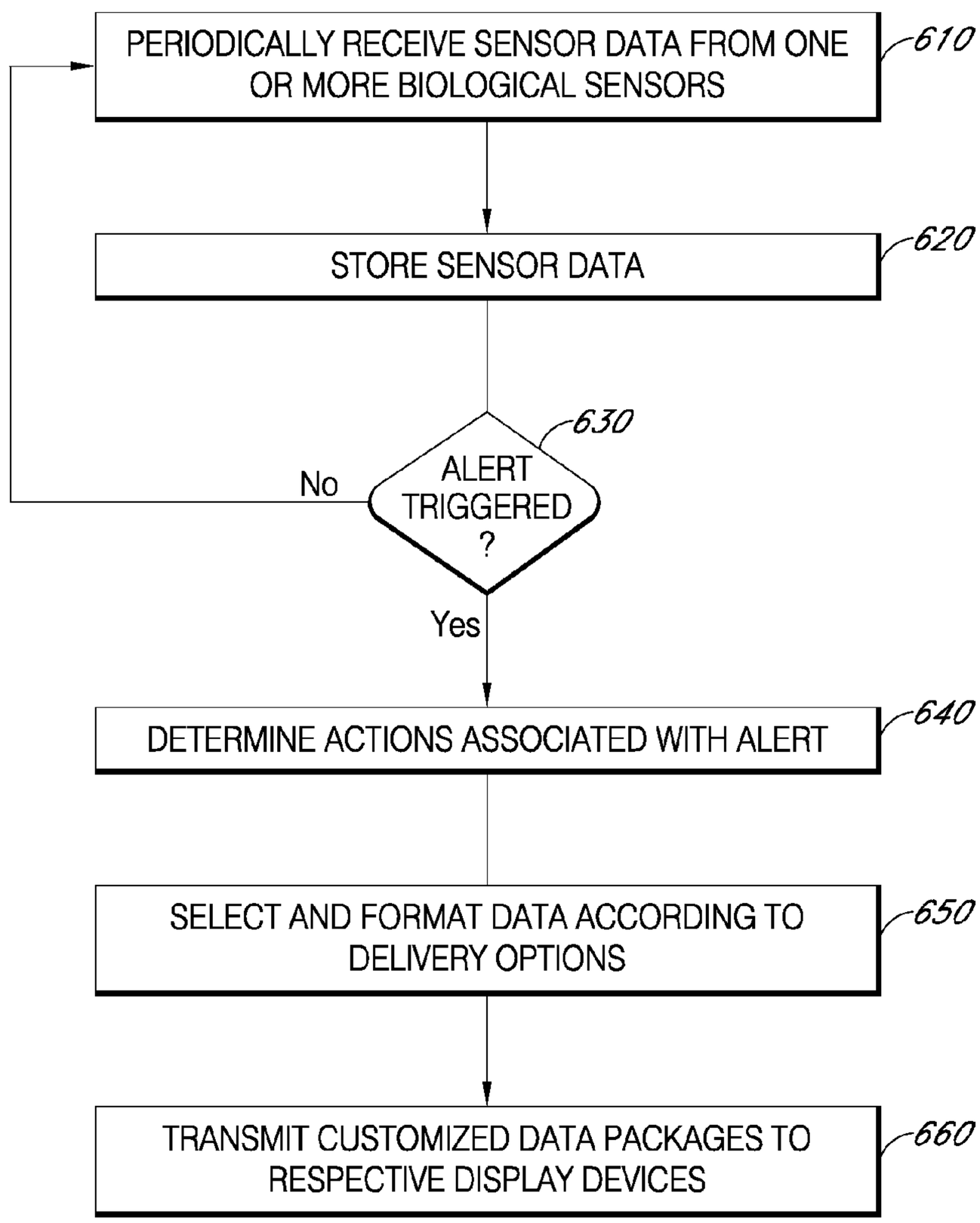
PERIODICALLY RECEIVE SENSOR DATA FROM ONE OR MORE BIOLOGICAL SENSORS
610
STORE SENSOR DATA
620
ALERT TRIGGERED ?
630
No
Yes
DETERMINE ACTIONS ASSOCIATED WITH ALERT
640
SELECT AND FORMAT DATA ACCORDING TO DELIVERY OPTIONS
650
TRANSMIT CUSTOMIZED DATA PACKAGES TO RESPECTIVE DISPLAY DEVICES
660

FIG. 6

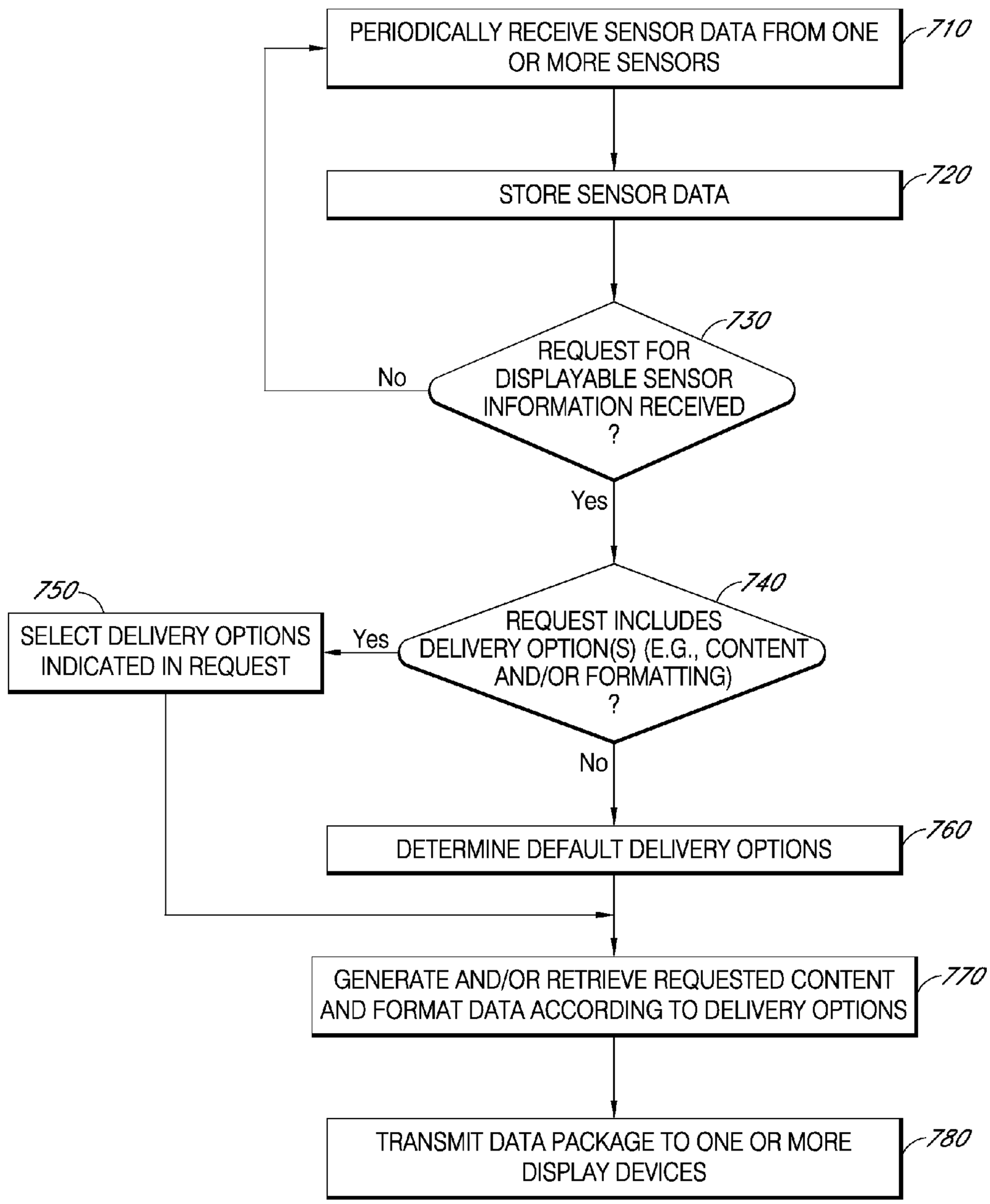
PERIODICALLY RECEIVE SENSOR DATA FROM ONE OR MORE SENSORS
710
STORE SENSOR DATA
720
REQUEST FOR DISPLAYABLE SENSOR INFORMATION RECEIVED ?
730
No
Yes
REQUEST INCLUDES DELIVERY OPTION(S) (E.G., CONTENT AND/OR FORMATTING) ?
740
Yes
SELECT DELIVERY OPTIONS INDICATED IN REQUEST
750
No
DETERMINE DEFAULT DELIVERY OPTIONS
760
GENERATE AND/OR RETRIEVE REQUESTED CONTENT AND FORMAT DATA ACCORDING TO DELIVERY OPTIONS
770
TRANSMIT DATA PACKAGE TO ONE OR MORE DISPLAY DEVICES
780

FIG. 7

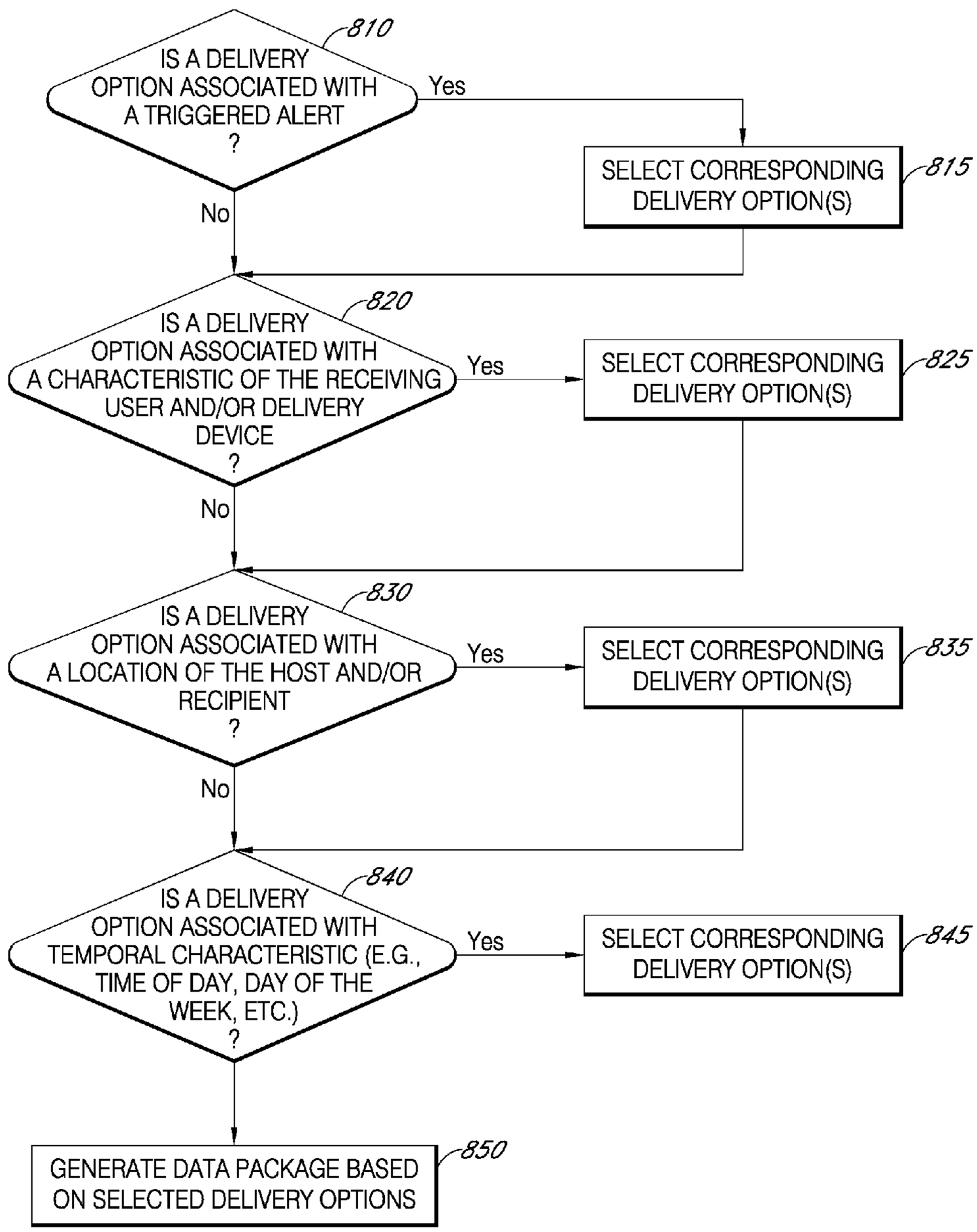
810
IS A DELIVERY OPTION ASSOCIATED WITH A TRIGGERED ALERT ?
Yes
No
SELECT CORRESPONDING DELIVERY OPTION(S)
815
820
IS A DELIVERY OPTION ASSOCIATED WITH A CHARACTERISTIC OF THE RECEIVING USER AND/OR DELIVERY DEVICE ?
Yes
No
SELECT CORRESPONDING DELIVERY OPTION(S)
825
830
IS A DELIVERY OPTION ASSOCIATED WITH A LOCATION OF THE HOST AND/OR RECIPIENT ?
Yes
No
SELECT CORRESPONDING DELIVERY OPTION(S)
835
840
IS A DELIVERY OPTION ASSOCIATED WITH TEMPORAL CHARACTERISTIC (E.G., TIME OF DAY, DAY OF THE WEEK, ETC.) ?
Yes
SELECT CORRESPONDING DELIVERY OPTION(S)
845
GENERATE DATA PACKAGE BASED ON SELECTED DELIVERY OPTIONS
850

FIG. 8

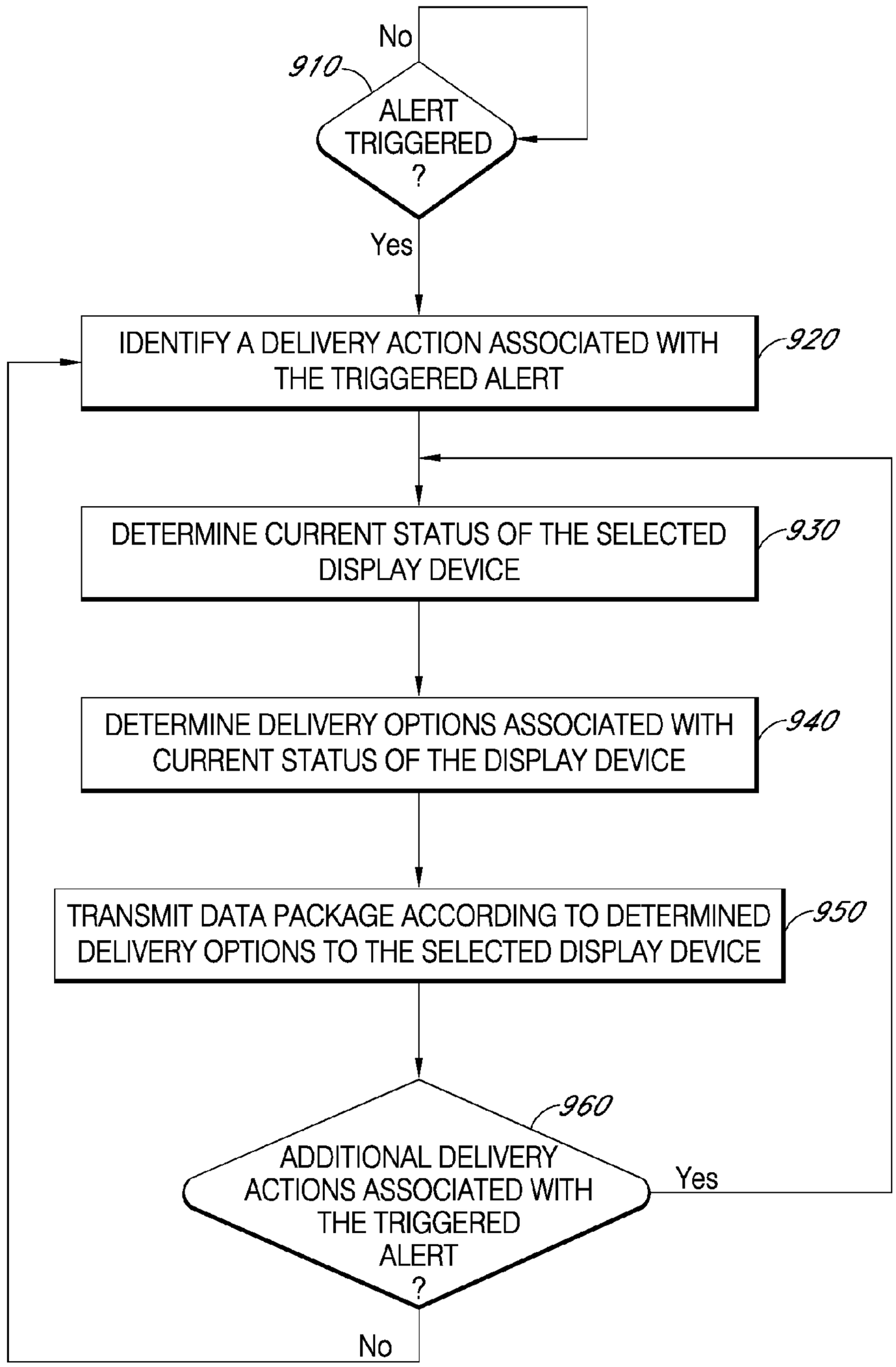
No
910
ALERT TRIGGERED ?
Yes
IDENTIFY A DELIVERY ACTION ASSOCIATED WITH THE TRIGGERED ALERT
920
DETERMINE CURRENT STATUS OF THE SELECTED DISPLAY DEVICE
930
DETERMINE DELIVERY OPTIONS ASSOCIATED WITH CURRENT STATUS OF THE DISPLAY DEVICE
940
TRANSMIT DATA PACKAGE ACCORDING TO DETERMINED DELIVERY OPTIONS TO THE SELECTED DISPLAY DEVICE
950
960
ADDITIONAL DELIVERY ACTIONS ASSOCIATED WITH THE TRIGGERED ALERT ?
Yes
No

FIG. 9

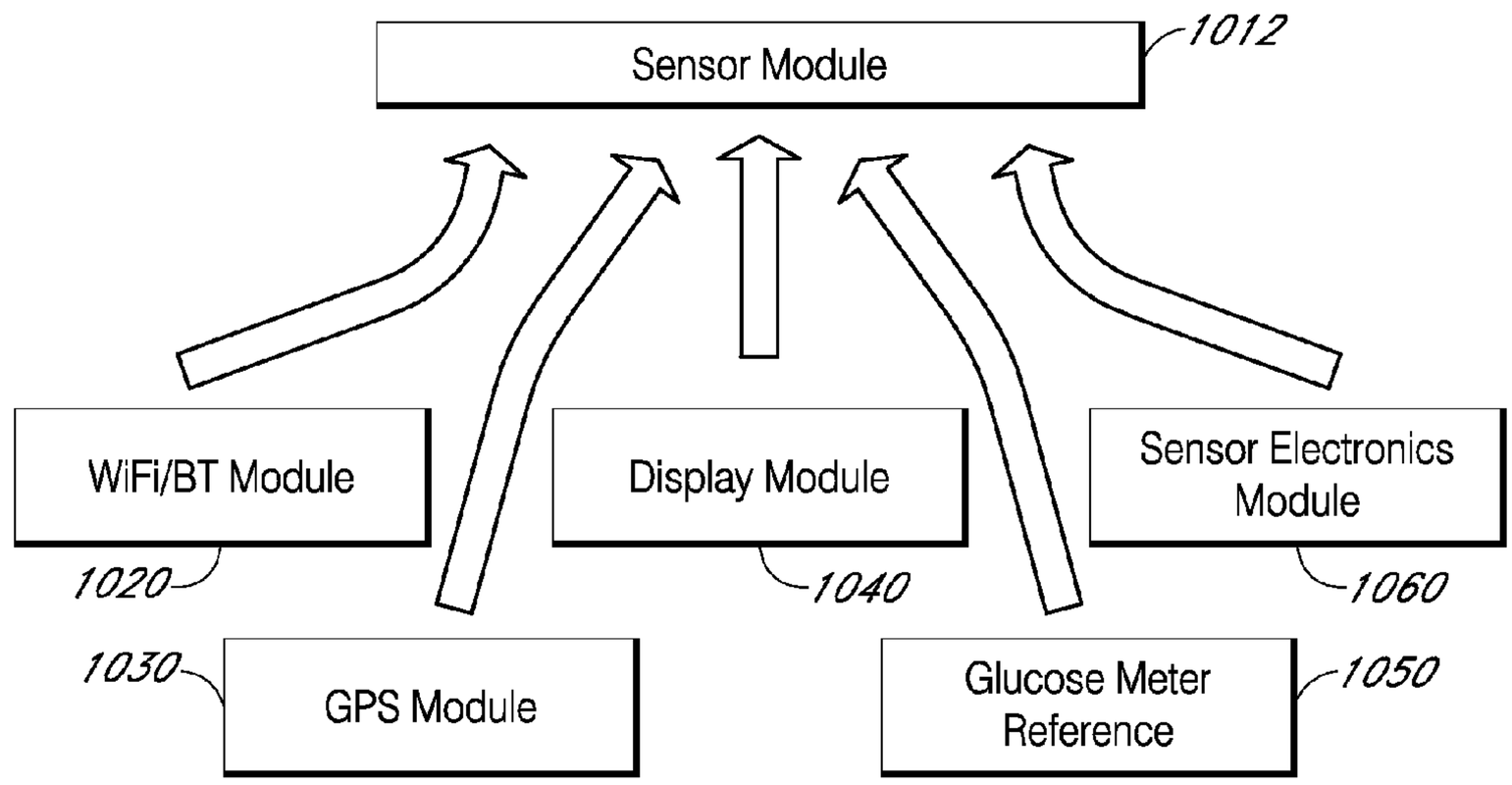

FIG. 10A

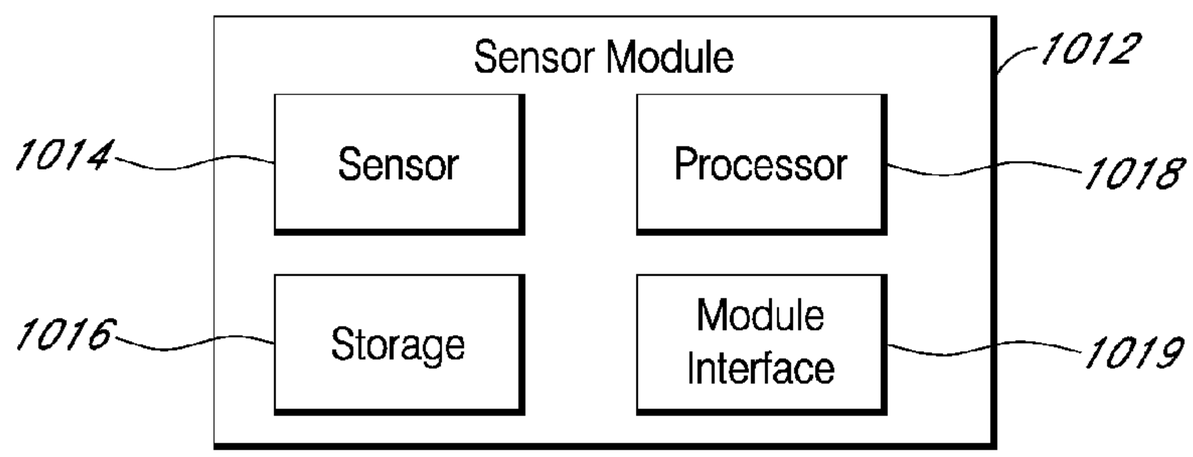

FIG. 10B

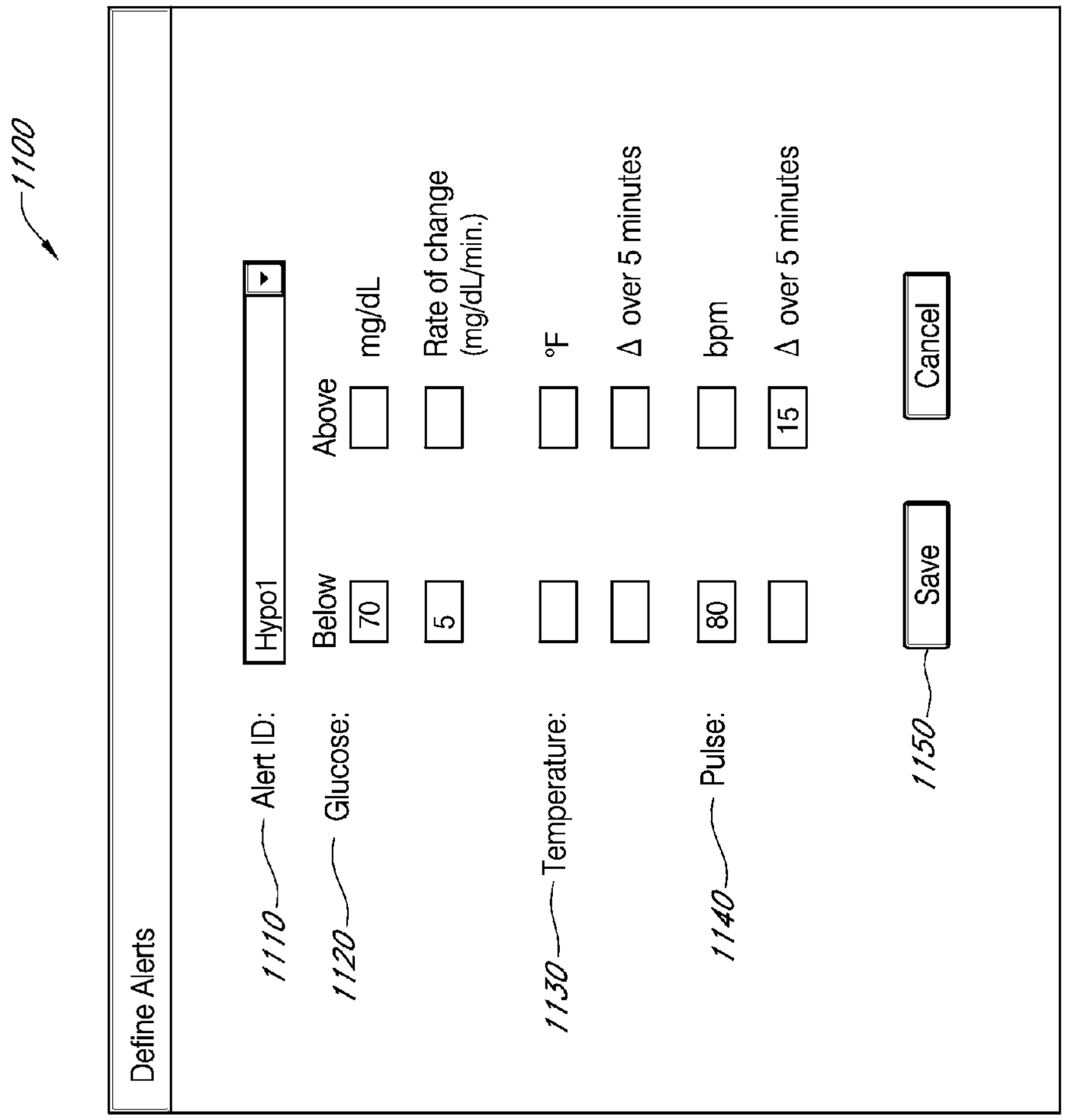
1100
Define Alerts
1110
Alert ID:
Hypo1
1120
Glucose:
Below
Above
70
mg/dL
5
Rate of change
(mg/dL/min.)
1130
Temperature:
°F
Δ over 5 minutes
1140
Pulse:
80
bpm
15
Δ over 5 minutes
1150
Save
Cancel

FIG. 11

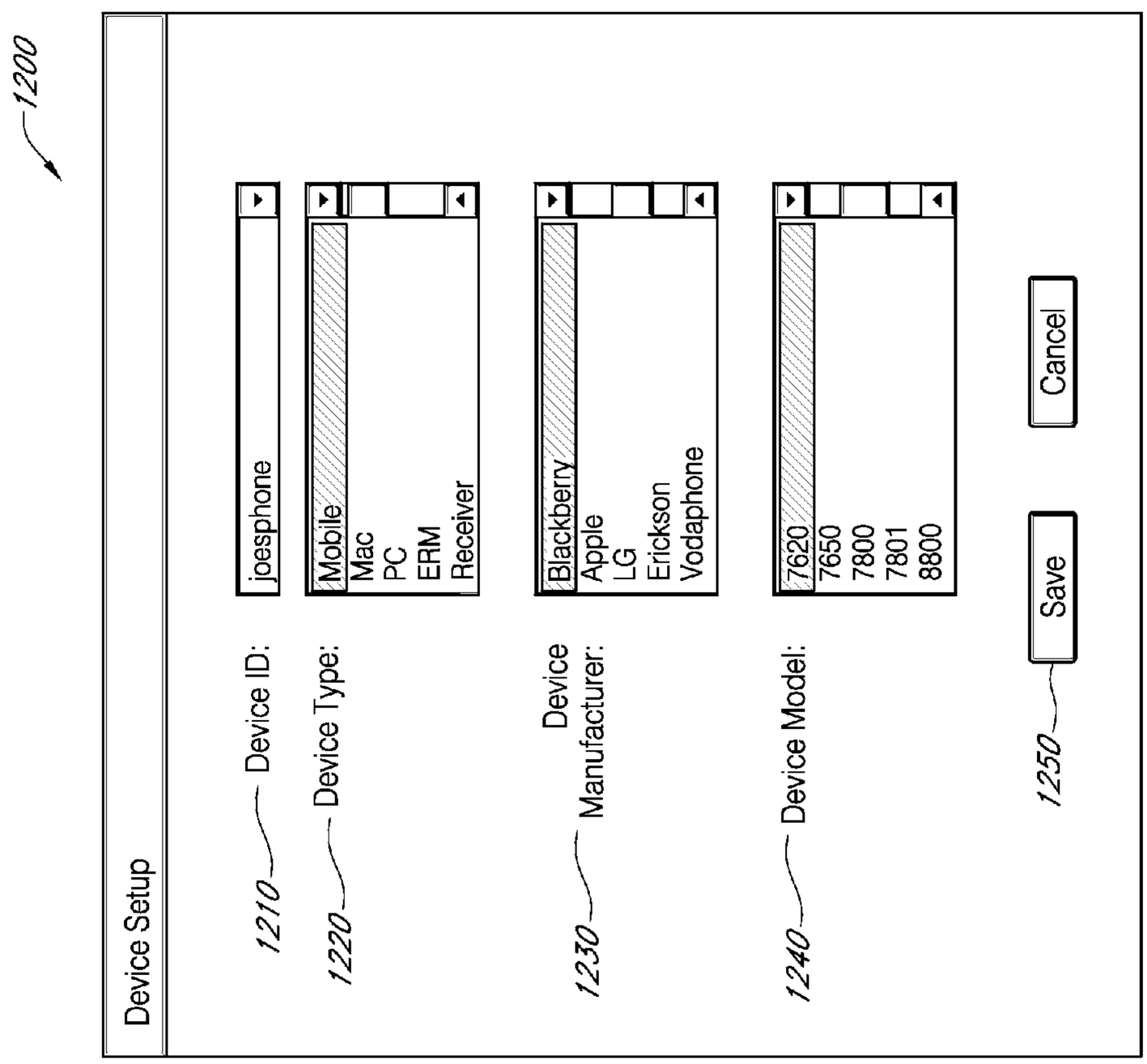
1200
Device Setup
1210
Device ID:
joesphone
1220
Device Type:
Mobile
Mac
PC
ERM
Receiver
1230
Device Manufacturer:
Blackberry
Apple
LG
Erickson
Vodaphone
1240
Device Model:
7620
7650
7800
7801
8800
1250
Save
Cancel

FIG. 12

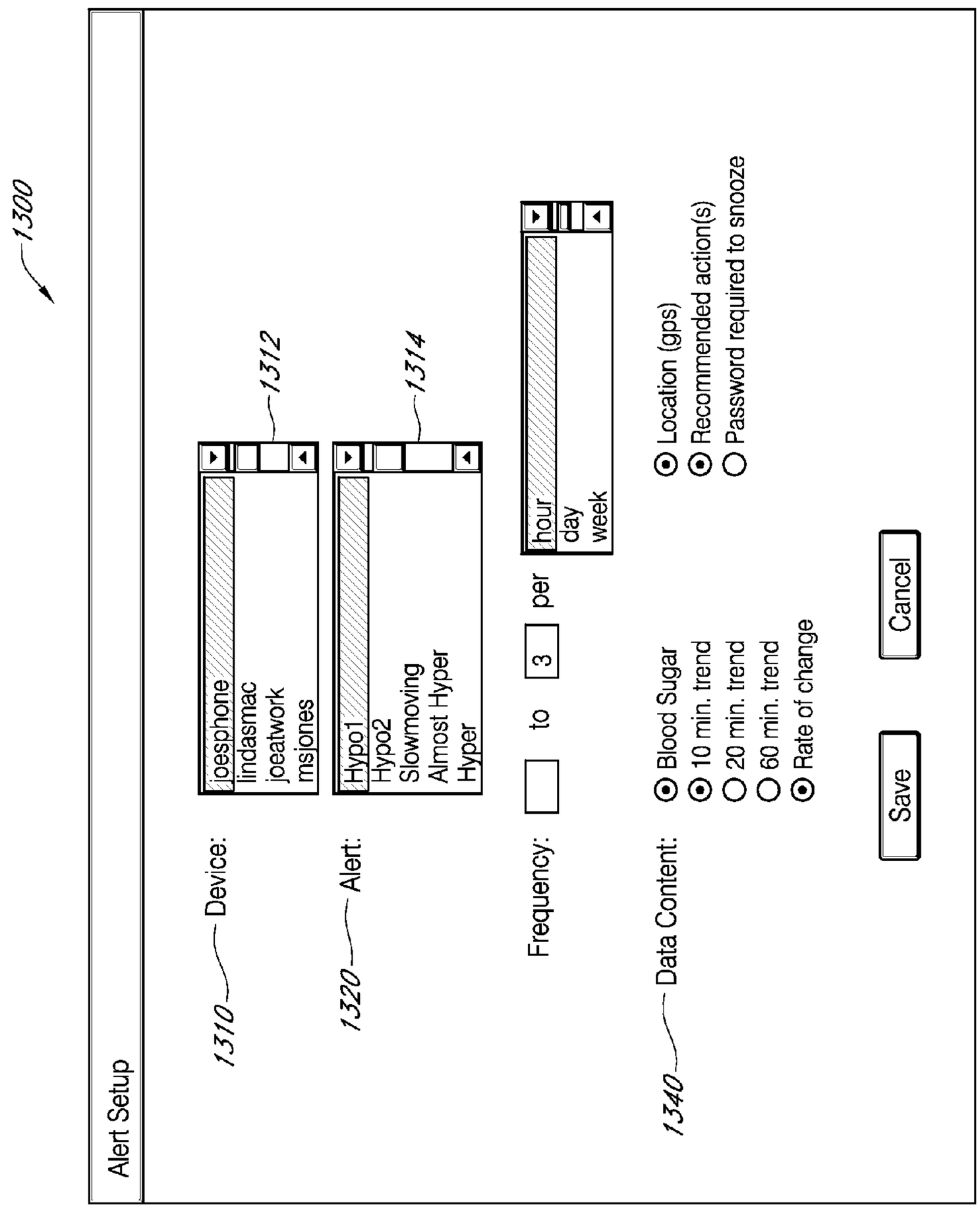
1300
Alert Setup
1310
Device:
joesphone
lindasmac
joeatwork
msjones
1312
1320
Alert:
Hypo1
Hypo2
Slowmoving
Almost Hyper
Hyper
1314
Frequency:
to
3
per
hour
day
week
1340
Data Content:
Blood Sugar
10 min. trend
20 min. trend
60 min. trend
Rate of change
Location (gps)
Recommended action(s)
Password required to snooze
Save
Cancel

FIG. 13

1400

Alert Data Structure

Alert (1410)	Send to (1420)	Device Type (1430)	Frequency (1440)
Near hypoglycemic	joe@msn.com	Mobile	1 per day
Hypoglycemic	joe@msn.com	Mobile	no limit
	linda@email.com	MAC	1 per day
	ftp://admin:pass@123.12.12.42	EMR	1 per hour
	Mobile app: AlertPro, username:joeandlinda	Mobile	no limit
	joe@work.com	PC	no limit
	device: teachersmobile	Receiver	no limit
None	Mobile app: AlertPro, username:joeandlinda	Mobile	up to once per day when in BT range
	ftp://admin:pass@123.12.12.42	EMR	up to once per week
	localdevice://joescomputer/sensor data	PC	up to once per day when in BT range

FIG. 14A

1450

Display Options Data Structure

	Mobile	MAC/PC	EMR	Receiver
Blood Sugar		X		
10 min trend	X	X	X	
1 hour trend	X	X	X	
24 hr trend				
Rate of Change				
location				

1460 1470

FIG. 14B

1500

Device Data Structure

1510

Device ID	Device Address	Device Type	Device Model
Joesphone	joe@msn.com	Mobile	BB8830
lindasmac	linda@email.com	MAC	MAC Desktop
HospitalEMR	ftp://admin:pass@123.12.12.42	EMR	Centricity
lindasphone	Mobile app: AlertPro, username:joeandlinda	Mobile	iPhone
joeatwork	joe@work.com	PC	HP tablet
msjones	device: teachersmobile	Receiver	TeacherReceiver

1512 1514 1516

FIG. 15A

Alert Data Structure

1520

1522 1524 1530

Alert	Device ID	Frequency	Activate alarm	blood sugar	10 min trend	1 hr trend	24 hr trend	rate of change	location
Near hypoglycemic	mobile1	1 per day		X		X			
Hypoglycemic	mobile1	no limit		X					X
	lindasmac	1 per day				X	X		
	HospitalEMR	1 per hour		X	X	X	X	X	X
	Joesphone	no limit		X					X
	joeatwork	no limit		X		X			
	msjones	no limit	X						
None	joesphone	up to once per day when in BT range					X		
	HospitalEMR	up to once per week		X	X	X	X	X	
	joeathome	up to once per day when in BT range		X	X	X	X	X	

FIG. 15B

Multi-Sensor Alert Data Structure

1600

1610 1620 1630

Glucose Level	Pulse	Temperature	Alert	Device ID	Frequency	Activate alarm	blood sugar	10 min trend	1 hr trend	24 hr trend	rate of change	location
80-90	>10% increase in < 20 min.	>99	Near hypoglycemic	mobile1	1 per day		X		X			
<80	>10% increase in < 20 min.	>100	Hypoglycemic	mobile1	no limit		X					X
				lindasmac	1 per day				X	X		
				HospitalEMR	1 per hour		X	X	X	X	X	X
				Joesphone	no limit		X					X
				joeatwork	no limit		X		X			
				msjones	no limit	X						
					up to once							
					per day when							
			None	joesphone	in BT range					X		
					up to once							
				HospitalEMR	per week		X	X	X	X	X	
					up to once							
					per day when							
				joeathome	in BT range		X	X	X	X	X	

FIG. 16

SYSTEMS AND METHODS FOR PROCESSING, TRANSMITTING AND DISPLAYING SENSOR DATA

CROSS-REFERENCE TO RELATED APPLICATIONS

This application claims priority under 35 U.S.C. §119(e) to U.S. Provisional Application Ser. No. 61/030,499, filed on Feb. 21, 2008, which is hereby expressly incorporated by reference in its entirety. This application is related to and incorporates by reference in their entirety commonly owned U.S. application Ser. No. 12/390,205, filed on even date herewith, entitled "SYSTEMS AND METHODS FOR CUSTOMIZING DELIVERY OF SENSOR DATA," and U.S. application Ser. No. 12/390,290, filed on even date herewith, entitled "SYSTEMS AND METHODS FOR BLOOD GLUCOSE MONITORING AND ALERT DELIVERY,".

FIELD OF THE INVENTION

The present invention relates generally to systems and methods for processing, transmitting and displaying data received from an analyte sensor, such as a glucose sensor.

BACKGROUND OF THE INVENTION

Diabetes mellitus is a disorder in which the pancreas cannot create sufficient insulin (Type I or insulin dependent) and/or in which insulin is not effective (Type 2 or non-insulin dependent). In the diabetic state, the victim suffers from high blood sugar, which causes an array of physiological derangements (kidney failure, skin ulcers, or bleeding into the vitreous of the eye) associated with the deterioration of small blood vessels. A hypoglycemic reaction (low blood sugar) may be induced by an inadvertent overdose of insulin, or after a normal dose of insulin or glucose-lowering agent accompanied by extraordinary exercise or insufficient food intake.

Conventionally, a diabetic person carries a self-monitoring blood glucose (SMBG) monitor, which typically requires uncomfortable finger pricking methods. Due to the lack of comfort and convenience, a diabetic will normally only measure his or her glucose level two to four times per day. Unfortunately, these time intervals are spread so far apart that the diabetic will likely find out too late, sometimes incurring dangerous side effects, of a hyperglycemic or hypoglycemic condition. In fact, it is not only unlikely that a diabetic will take a timely SMBG value, but additionally the diabetic will not know if his blood glucose value is going up (higher) or down (lower) based on conventional methods.

Consequently, a variety of non-invasive, transdermal (e.g., transcutaneous) and/or implantable electrochemical sensors are being developed for continuously detecting and/or quantifying blood glucose values. These devices generally transmit raw or minimally processed data for subsequent analysis at a remote device, which can include a display.

SUMMARY OF THE INVENTION

In one embodiment, a system for continuous measurement of an analyte in a host comprises a continuous analyte sensor configured to measure a concentration of an analyte in a host, a sensor electronics module physically connected to the continuous analyte sensor during operation of the continuous analyte sensor, wherein the sensor electronics module is configured to process a data stream associated with an analyte concentration measured by the continuous analyte sensor and

to generate displayable sensor information based on at least some sensor data of the data stream. In one embodiment, the sensor electronics module comprises a storage device configured to store at least some of the displayable sensor information and a telemetry module configured to wirelessly transmit a first portion of the displayable sensor information to a first display device, wherein the first portion of displayable sensor information is formatted for display on the first display device, and to wirelessly transmit a second portion of the displayable sensor information to a second display device, wherein the second portion of displayable sensor information is formatted for display on the second display device.

In one embodiment, a computerized method for customizing displayable sensor information that is transmitted to display devices comprises determining analyte concentration data associated with a host based at least on sensor data from a continuous analyte sensor associated with the host, generating displayable sensor information based on at least some of the analyte concentration data, storing at least some of the displayable sensor information on a storage device, wirelessly transmitting a first portion of the displayable sensor information to a first display device and wirelessly transmitting a second portion of the displayable sensor information to a second display device. In one embodiment the first portion of displayable sensor information is formatted for display on the first display device and the second portion of displayable sensor information is formatted for display on the second display device.

In one embodiment, a computer readable medium stores software code thereon, the software code configured for execution by one or more processors of a sensor electronics module configured for coupling to an analyte sensor that is attached to a host, wherein the software code, if executed by the one or more processors, causes the sensor electronics module to perform a method comprising determining analyte concentration data associated with a host based at least on sensor data from a continuous analyte sensor associated with the host, generating displayable sensor information based on at least some of the analyte concentration data, storing at least some of the displayable sensor information on a storage device, wirelessly transmitting a first portion of the displayable sensor information to a first display device, and wirelessly transmitting a second portion of the displayable sensor information to a second display device. In one embodiment, the first portion of displayable sensor information is formatted for display on the first display device and the second portion of displayable sensor information is formatted for display on the second display device.

BRIEF DESCRIPTION OF THE DRAWINGS

FIG. **1** is a diagram illustrating one embodiment of a continuous analyte sensor system including a sensor electronics module.

FIG. **2**A is a block diagram illustrating one embodiment of the sensor electronics module of FIG. **1**.

FIG. **2**B is a perspective view of a sensor system including a mounting unit and sensor electronics module attached thereto according to one embodiment.

FIG. **2**C is a side view of the sensor system of FIG. **2**B.

FIG. **3** is a diagram illustrating one embodiment of a sensor electronics module in communication with multiple sensors, including a glucose sensor.

FIG. **4** is a diagram illustrating one embodiment of a sensor electronics module in communication with a combined glucose and temperature sensor, as well as an accelerometer.

FIG. **5**A is a diagram illustrating one embodiment of a sensor electronics module directly transmitting data to a first display device and indirectly transmitting data to second and third display devices.

FIG. **5**B is a diagram illustrating one embodiment of the sensor electronics module configured to transmit control signals to biological devices coupled to the host.

FIG. **5**C is a diagram illustrating one embodiment of the sensor electronics module in communication with multiple sensors, wherein the sensor electronics module transmits data packages to multiple display devices via multiple networks, such as the Internet and a telephone network.

FIG. **6** is a flowchart illustrating one embodiment of a method of generating customizable data packages for delivery to respective display devices, such as based on user-defined delivery options.

FIG. **7** is a flowchart illustrating one embodiment of a method of generating customizable data packages for delivery to requesting display devices, such as in response to receiving a request from a display device.

FIG. **8** is a flowchart illustrating what embodiment of a method of selecting delivery options for a data package based on one or more of a plurality of attributes.

FIG. **9** is a flowchart illustrating one embodiment of a method of generating and transmitting a data package that is customized according to a status of the host and/or a status of the receiving display device.

FIGS. **10**A and **10**B are block diagrams illustrating one embodiment of a sensor module that is configured to alternatively couple with each of a plurality of modular devices each having different functionalities.

FIG. **11** illustrates an exemplary user interface for defining alert parameters.

FIG. **12** illustrates an exemplary user interface for defining display device characteristics.

FIG. **13** illustrates an exemplary user interface for establishing delivery options associated with respective alerts and display devices.

FIG. **14**A illustrates a portion of an exemplary alert data structure.

FIG. **14**B illustrates a portion of an exemplary delivery options data structure.

FIG. **15**A illustrates a portion of an exemplary device data structure.

FIG. **15**B illustrates a portion of another exemplary alert data structure.

FIG. **16** illustrates a portion of an exemplary multi-sensor alert data structure.

DETAILED DESCRIPTION OF THE CERTAIN EMBODIMENTS

The following description and examples illustrate some exemplary embodiments of the disclosed invention in detail. Those of skill in the art will recognize that there are numerous variations and modifications of this invention that are encompassed by its scope. Accordingly, the description of a certain exemplary embodiment should not be deemed to limit the scope of the present invention.

Definitions

In order to facilitate an understanding of the systems and methods discussed herein, a number of terms are defined below. The terms defined below, as well as other terms used herein, should be construed to include the provided definitions, the ordinary and customary meaning of the terms, and any other implied meaning for the respective terms. Thus, the definitions below do not limit the meaning of these terms, but only provide exemplary definitions.

The term "analyte" as used herein is a broad term and is to be given its ordinary and customary meaning to a person of ordinary skill in the art (and is not to be limited to a special or customized meaning), and furthermore refers without limitation to a substance or chemical constituent in a biological fluid (for example, blood, interstitial fluid, cerebral spinal fluid, lymph fluid or urine) that can be analyzed. Analytes can include naturally occurring substances, artificial substances, metabolites, and/or reaction products. In some embodiments, the analyte for measurement by the sensor heads, devices, and methods is analyte. However, other analytes are contemplated as well, including but not limited to acarboxyprothrombin; acylcarnitine; adenine phosphoribosyl transferase; adenosine deaminase; albumin; alpha-fetoprotein; amino acid profiles (arginine (Krebs cycle), histidine/urocanic acid, homocysteine, phenylalanine/tyrosine, tryptophan); andrenostenedione; antipyrine; arabinitol enantiomers; arginase; benzoylecgonine (cocaine); biotinidase; biopterin; c-reactive protein; camitine; camosinase; CD4; ceruloplasmin; chenodeoxycholic acid; chloroquine; cholesterol; cholinesterase; conjugated 1-β hydroxy-cholic acid; cortisol; creatine kinase; creatine kinase MM isoenzyme; cyclosporin A; d-penicillamine; de-ethylchloroquine; dehydroepiandrosterone sulfate; DNA (acetylator polymorphism, alcohol dehydrogenase, alpha 1-antitrypsin, cystic fibrosis, Duchenne/Becker muscular dystrophy, analyte-6-phosphate dehydrogenase, hemoglobin A, hemoglobin S, hemoglobin C, hemoglobin D, hemoglobin E, hemoglobin F, D-Punjab, beta-thalassemia, hepatitis B virus, HCMV, HIV-1, HTLV-1, Leber hereditary optic neuropathy, MCAD, RNA, PKU, Plasmodium vivax, sexual differentiation, 21-deoxycortisol); desbutylhalofantrine; dihydropteridine reductase; diptheria/tetanus antitoxin; erythrocyte arginase; erythrocyte protoporphyrin; esterase D; fatty acids/acylglycines; free β-human chorionic gonadotropin; free erythrocyte porphyrin; free thyroxine (FT4); free tri-iodothyronine (FT3); fumarylacetoacetase; galactose/gal-1-phosphate; galactose-1-phosphate uridyltransferase; gentamicin; analyte-6-phosphate dehydrogenase; glutathione; glutathione perioxidase; glycocholic acid; glycosylated hemoglobin; halofantrine; hemoglobin variants; hexosaminidase A; human erythrocyte carbonic anhydrase I; 17-alpha-hydroxyprogesterone; hypoxanthine phosphoribosyl transferase; immunoreactive trypsin; lactate; lead; lipoproteins ((a), B/A-1, β); lysozyme; mefloquine; netilmicin; phenobarbitone; phenytoin; phytanic/pristanic acid; progesterone; prolactin; prolidase; purine nucleoside phosphorylase; quinine; reverse tri-iodothyronine (rT3); selenium; serum pancreatic lipase; sissomicin; somatomedin C; specific antibodies (adenovirus, anti-nuclear antibody, anti-zeta antibody, arbovirus, Aujeszky's disease virus, dengue virus, Dracunculus medinensis, Echinococcus granulosus, Entamoeba histolytica, enterovirus, Giardia duodenalisa, Helicobacter pylori, hepatitis B virus, herpes virus, HIV-1, IgE (atopic disease), influenza virus, Leishmania donovani, leptospira, measles/mumps/rubella, Mycobacterium leprae, Mycoplasma pneumoniae, Myoglobin, Onchocerca volvulus, parainfluenza virus, Plasmodium falciparum, poliovirus, Pseudomonas aeruginosa, respiratory syncytial virus, rickettsia (scrub typhus), Schistosoma mansoni, Toxoplasma gondii, Trepenoma pallidium, Trypanosoma cruzi/rangeli, vesicular stomatis virus, Wuchereria bancrofti, yellow fever virus); specific antigens (hepatitis B virus, HIV-1); succinylacetone; sulfadoxine; theophylline; thyrotropin (TSH); thyroxine (T4); thyroxine-binding globulin; trace elements; transferring; UDP-galactose-4-epimerase; urea; uroporphy-

rinogen I synthase; vitamin A; white blood cells; and zinc protoporphyrin. Salts, sugar, protein, fat, vitamins, and hormones naturally occurring in blood or interstitial fluids can also constitute analytes in certain embodiments. The analyte can be naturally present in the biological fluid, for example, a metabolic product, a hormone, an antigen, an antibody, and the like. Alternatively, the analyte can be introduced into the body, for example, a contrast agent for imaging, a radioisotope, a chemical agent, a fluorocarbon-based synthetic blood, or a drug or pharmaceutical composition, including but not limited to insulin; ethanol; cannabis (marijuana, tetrahydrocannabinol, hashish); inhalants (nitrous oxide, amyl nitrite, butyl nitrite, chlorohydrocarbons, hydrocarbons); cocaine (crack cocaine); stimulants (amphetamines, methamphetamines, Ritalin, Cylert, Preludin, Didrex, PreState, Voranil, Sandrex, Plegine); depressants (barbituates, methaqualone, tranquilizers such as Valium, Librium, Miltown, Serax, Equanil, Tranxene); hallucinogens (phencyclidine, lysergic acid, mescaline, peyote, psilocybin); narcotics (heroin, codeine, morphine, opium, meperidine, Percocet, Percodan, Tussionex, Fentanyl, Darvon, Talwin, Lomotil); designer drugs (analogs of fentanyl, meperidine, amphetamines, methamphetamines, and phencyclidine, for example, Ecstasy); anabolic steroids; and nicotine. The metabolic products of drugs and pharmaceutical compositions are also contemplated analytes. Analytes such as neurochemicals and other chemicals generated within the body can also be analyzed, such as, for example, ascorbic acid, uric acid, dopamine, noradrenaline, 3-methoxytyramine (3MT), 3,4-Dihydroxyphenylacetic acid (DOPAC), Homovanillic acid (HVA), 5-Hydroxytryptamine (5HT), and 5-Hydroxyindoleacetic acid (FHIAA).

The term "A/D Converter" as used herein is a broad term and is to be given its ordinary and customary meaning to a person of ordinary skill in the art (and is not to be limited to a special or customized meaning), and furthermore refers without limitation to hardware and/or software that converts analog electrical signals into corresponding digital signals.

The terms "processor module," "microprocessor" and "processor" as used herein are broad terms and are to be given their ordinary and customary meaning to a person of ordinary skill in the art (and are not to be limited to a special or customized meaning), and furthermore refer without limitation to a computer system, state machine, and the like that performs arithmetic and logic operations using logic circuitry that responds to and processes the basic instructions that drive a computer.

The terms "sensor data", as used herein is a broad term and is to be given its ordinary and customary meaning to a person of ordinary skill in the art (and are not to be limited to a special or customized meaning), and furthermore refers without limitation to any data associated with a sensor, such as a continuous analyte sensor. Sensor data includes a raw data stream, or simply data stream, of analog or digital signal directly related to a measured analyte from an analyte sensor (or other signal received from another sensor), as well as calibrated and/or filtered raw data. In one example, the sensor data comprises digital data in "counts" converted by an A/D converter from an analog signal (e.g., voltage or amps) and includes one or more data points representative of a glucose concentration. Thus, the terms "sensor data point" and "data point" refer generally to a digital representation of sensor data at a particular time. The term broadly encompasses a plurality of time spaced data points from a sensor, such as a from a substantially continuous glucose sensor, which comprises individual measurements taken at time intervals ranging from fractions of a second up to, e.g., 1, 2, or 5 minutes or longer. In another example, the sensor data includes an integrated digital value representative of one or more data points averaged over a time period. Sensor data may include calibrated data, smoothed data, filtered data, transformed data, and/or any other data associated with a sensor.

The term "calibration" as used herein is a broad term and is to be given its ordinary and customary meaning to a person of ordinary skill in the art (and is not to be limited to a special or customized meaning), and furthermore refers without limitation to a process of determining a relationship between a raw data stream and corresponding reference data, which can be used to convert raw data into calibrated data (defined below). In some embodiments, such as continuous analyte sensors, for example, calibration can be updated or recalibrated over time as changes in the relationship between the raw data and reference data occur, for example, due to changes in sensitivity, baseline, transport, metabolism, and the like.

The terms "calibrated data" and "calibrated data stream" as used herein are broad terms and are to be given their ordinary and customary meaning to a person of ordinary skill in the art (and are not to be limited to a special or customized meaning), and furthermore refer without limitation to data that has been transformed from its raw state to another state using a function, for example a conversion function, to provide a meaningful value to a user.

The terms "smoothed data" and "filtered data" as used herein are broad terms and are to be given their ordinary and customary meaning to a person of ordinary skill in the art (and are not to be limited to a special or customized meaning), and furthermore refer without limitation to data that has been modified to make it smoother and more continuous and/or to remove or diminish outlying points, for example, by performing a moving average of the raw data stream. Examples of data filters include FIR (finite impulse response), IIR (infinite impulse response), moving average filters, and the like.

The terms "smoothing" and "filtering" as used herein are broad terms and are to be given their ordinary and customary meaning to a person of ordinary skill in the art (and are not to be limited to a special or customized meaning), and furthermore refer without limitation to a mathematical computation that attenuates or normalizes components of a signal, such as reducing noise errors in a raw data stream. In some embodiments, smoothing refers to modification of a data stream to make it smoother and more continuous or to remove or diminish outlying data points, for example, by performing a moving average of the raw data stream.

The term "noise signal" as used herein is a broad term and is to be given its ordinary and customary meaning to a person of ordinary skill in the art (and is not to be limited to a special or customized meaning), and furthermore refers without limitation to a signal associated with noise on the data stream (e.g., non-analyte related signal). The noise signal can be determined by filtering and/or averaging, for example. In some embodiments, the noise signal is a signal residual, delta residual (difference of residual), absolute delta residual, and/or the like, which are described in more detail elsewhere herein.

The term "algorithm" as used herein is a broad term and is to be given its ordinary and customary meaning to a person of ordinary skill in the art (and is not to be limited to a special or customized meaning), and furthermore refers without limitation to a computational process (associated with computer programming or other written instructions) involved in transforming information from one state to another.

The term "matched data pairs" as used herein is a broad term and is to be given its ordinary and customary meaning to a person of ordinary skill in the art (and is not to be limited to a special or customized meaning), and furthermore refers

without limitation to reference data (for example, one or more reference analyte data points) matched with substantially time corresponding sensor data (for example, one or more sensor data points).

The term "counts" as used herein is a broad term and is to be given its ordinary and customary meaning to a person of ordinary skill in the art (and is not to be limited to a special or customized meaning), and furthermore refers without limitation to a unit of measurement of a digital signal. In one example, a raw data stream measured in counts is directly related to a voltage (e.g., converted by an A/D converter), which is directly related to current from the working electrode. In another example, counter electrode voltage measured in counts is directly related to a voltage.

The term "sensor" as used herein is a broad term and is to be given its ordinary and customary meaning to a person of ordinary skill in the art (and is not to be limited to a special or customized meaning), and furthermore refers without limitation to any device (or portion of a device) that measures a physical quantity and converts it into a signal that can be processed by analog and/or digital circuitry. Thus, the output of a sensor may be an analog and/or digital signal. Examples of sensors include analyte sensors, glucose sensors, temperature sensors, altitude sensors, accelerometers, and heart rate sensors.

The terms "glucose sensor" as used herein is a broad term and is to be given its ordinary and customary meaning to a person of ordinary skill in the art (and are not to be limited to a special or customized meaning), and furthermore refer without limitation to any sensor by which glucose can be quantified (e.g., enzymatic or non-enzymatic). For example, some embodiments of a glucose sensor may utilize a membrane that contains glucose oxidase that catalyzes the conversion of oxygen and glucose to hydrogen peroxide and gluconate, as illustrated by the following chemical reaction:

$$\text{Glucose}+O_2 \rightarrow \text{Gluconate}+H_2O_2$$

Because for each glucose molecule metabolized, there is a proportional change in the co-reactant O_2 and the product H_2O_2, one can use an electrode to monitor the current change in either the co-reactant or the product to determine glucose concentration.

The terms "coupled", "operably connected" and "operably linked" as used herein are broad terms and are to be given their ordinary and customary meaning to a person of ordinary skill in the art (and are not to be limited to a special or customized meaning), and furthermore refer without limitation to one or more components being linked to another component(s), either directly or indirectly, in a manner that allows transmission of signals between the components. For example, modules of a computing device that communicate via a common data bus are coupled to one another. As another example, one or more electrodes of a glucose sensor can be used to detect the amount of glucose in a sample and convert that information into a signal, e.g., an electrical or electromagnetic signal; the signal can then be transmitted to an electronic circuit. In this case, the electrode is "operably linked" to the electronic circuitry, even though the analog signal from the electrode is transmitted and/or transformed by analog and/or digital circuitry before reaching the electronic circuit. These terms are broad enough to include wireless connectivity.

The term "physically connected" as used herein is a broad term and is to be given its ordinary and customary meaning to a person of ordinary skill in the art (and are not to be limited to a special or customized meaning), and furthermore refers without limitation to one or more components that are connected to another component(s) through direct contact and/or a wired connection, including connecting via one or more intermediate physically connecting component(s). For example, a glucose sensor may be physically connected to a sensor electronics module, and thus the processor module located therein, either directly or via one or more electrical connections.

The term "substantially" as used herein is a broad term and is to be given its ordinary and customary meaning to a person of ordinary skill in the art (and is not to be limited to a special or customized meaning), and furthermore refers without limitation to being largely but not necessarily wholly that which is specified.

The term "host" as used herein is a broad term and is to be given its ordinary and customary meaning to a person of ordinary skill in the art (and is not to be limited to a special or customized meaning), and furthermore refers without limitation to mammal, such as a human implanted with a device.

The term "continuous analyte sensor" as used herein is a broad term and is to be given its ordinary and customary meaning to a person of ordinary skill in the art (and is not to be limited to a special or customized meaning), and furthermore refers without limitation to a device, or portion of a device, that continuously or continually measures a concentration of an analyte, for example, at time intervals ranging from fractions of a second up to, for example, 1, 2, or 5 minutes, or longer. In one exemplary embodiment, a glucose sensor comprises a continuous analyte sensor, such as is described in U.S. Pat. No. 7,310,544, which is incorporated herein by reference in its entirety.

The term "continuous analyte sensing" as used herein is a broad term and is to be given its ordinary and customary meaning to a person of ordinary skill in the art (and is not to be limited to a special or customized meaning), and furthermore refers without limitation to the period in which monitoring of an analyte is continuously or continually performed, for example, at time intervals ranging from fractions of a second up to, for example, 1, 2, or 5 minutes, or longer. In one embodiment, a glucose sensor performs continuous analyte sensing in order to monitor a glucose level in a corresponding host.

The terms "reference analyte monitor," "reference analyte meter," and "reference analyte sensor" as used herein are broad terms and are to be given their ordinary and customary meaning to a person of ordinary skill in the art (and are not to be limited to a special or customized meaning), and furthermore refer without limitation to a device that measures a concentration of an analyte and can be used as a reference for a continuous analyte sensor, for example a self-monitoring blood glucose meter (SMBG) can be used as a reference for a continuous glucose sensor for comparison, calibration, and the like.

The term "clinical acceptability", as used herein, is a broad term and is to be given its ordinary and customary meaning to a person of ordinary skill in the art (and is not to be limited to a special or customized meaning), and refers without limitation to determination of the risk of inaccuracies to a patient. Clinical acceptability may consider a deviation between time corresponding glucose measurements (e.g., data from a glucose sensor and data from a reference glucose monitor) and the risk (e.g., to the decision making of a diabetic patient) associated with that deviation based on the glucose value indicated by the sensor and/or reference data. One example of clinical acceptability may be 85% of a given set of measured analyte values within the "A" and "B" region of a standard Clarke Error Grid when the sensor measurements are compared to a standard reference measurement.

The term "quality of calibration" as used herein, is a broad term and is to be given its ordinary and customary meaning to a person of ordinary skill in the art (and is not to be limited to a special or customized meaning), and refers without limitation to the statistical association of matched data pairs in the calibration set used to create the conversion function. For example, an R-value may be calculated for a calibration set to determine its statistical data association, wherein an R-value greater than 0.79 determines a statistically acceptable calibration quality, while an R-value less than 0.79 determines statistically unacceptable calibration quality.

The term "sensor session" as used herein, is a broad term and is to be given its ordinary and customary meaning to a person of ordinary skill in the art (and is not to be limited to a special or customized meaning), and refers without limitation to a period of time a sensor is in use, such as but not limited to a period of time starting at the time the sensor is implanted (e.g., by the host) to removal of the sensor (e.g., removal of the sensor from the host's body and/or removal of the sensor electronics module from the sensor housing).

The terms "noise," "noise event(s)," "noise episode(s)," "signal artifact(s)," "signal artifact event(s)," and "signal artifact episode(s)" as used herein are broad terms and are to be given their ordinary and customary meaning to a person of ordinary skill in the art (and are not to be limited to a special or customized meaning), and furthermore refer without limitation to signal noise that is substantially non-glucose related, such as interfering species, macro- or micro-motion, ischemia, pH changes, temperature changes, pressure, stress, or even unknown sources of mechanical, electrical and/or biochemical noise for example.

The term "measured analyte values" as used herein is a broad term and is to be given its ordinary and customary meaning to a person of ordinary skill in the art (and is not to be limited to a special or customized meaning), and furthermore refers without limitation to an analyte value or set of analyte values for a time period for which analyte data has been measured by an analyte sensor. The term is broad enough to include sensor data from the analyte sensor before or after data processing in the sensor and/or receiver (for example, data smoothing, calibration, and the like).

The term "estimated analyte values" as used herein is a broad term and is to be given its ordinary and customary meaning to a person of ordinary skill in the art (and is not to be limited to a special or customized meaning), and furthermore refers without limitation to an analyte value or set of analyte values, which have been algorithmically extrapolated from measured analyte values. In some embodiments, estimated analyte values are estimated for a time period during which no data exists. However, estimated analyte values can also be estimated during a time period for which measured data exists, but is to be replaced by algorithmically extrapolated (e.g. processed or filtered) data due to noise or a time lag in the measured data, for example.

The term "calibration information" as used herein is a broad term and is to be given its ordinary and customary meaning to a person of ordinary skill in the art (and is not to be limited to a special or customized meaning), and furthermore refers without limitation to any information useful in calibration of a sensor. Calibration information may include reference data received from a reference analyte monitor, including one or more reference data points, one or more matched data pairs formed by matching reference data (e.g., one or more reference glucose data points) with substantially time corresponding sensor data (e.g., one or more continuous sensor data points), a calibration set formed from a set of one or more matched data pairs, a calibration line drawn from the calibration set, in vitro parameters (e.g., sensor sensitivity), and/or a manufacturing code, for example.

The term "alarm" as used herein is a broad term, and is to be given its ordinary and customary meaning to a person of ordinary skill in the art (and is not to be limited to a special or customized meaning), and furthermore refers without limitation to an alert or signal, such as an audible, visual, or tactile signal, triggered in response to one or more alarm conditions. In one embodiment, hyperglycemic and hypoglycemic alarms are triggered when present or predicted clinical danger is assessed based on continuous analyte data.

The term "transformed sensor data" as used herein is a broad term, and is to be given its ordinary and customary meaning to a person of ordinary skill in the art (and is not to be limited to a special or customized meaning), and furthermore refers without limitation to any data that is derived, either fully or in part, from raw sensor data from one or more sensors. For example, raw sensor data over a time period (e.g., 5 minutes) may be processed in order to generated transformed sensor data including one or more trend indicators (e.g., a 5 minute trend). Other examples of transformed data include filtered sensor data (e.g., one or more filtered analyte concentration values), calibrated sensor data (e.g., one or more calibrated analyte concentration values), rate of change information, trend information, rate of acceleration information, sensor diagnostic information, location information, alarm/alert information, calibration information, and/or the like.

The term "sensor information" as used herein is a broad term, and is to be given its ordinary and customary meaning to a person of ordinary skill in the art (and is not to be limited to a special or customized meaning), and furthermore refers without limitation to information associated with measurement, signal processing (including calibration), alarms, data transmission, and/or display associated with a sensor, such as a continuous analyte sensor. The term is broad enough to include raw sensor data (one or more raw analyte concentration values), as well as transformed sensor data. In some embodiments, sensor information includes displayable sensor information.

The term "displayable sensor information" as used herein is a broad term, and is to be given its ordinary and customary meaning to a person of ordinary skill in the art (and is not to be limited to a special or customized meaning), and furthermore refers without limitation to information that is transmitted for display on one or more display devices. As is discussed elsewhere herein, the content of displayable sensor information that is transmitted to a particular display device may be customized for the particular display device. Additionally, formatting of displayable sensor information may be customized for respective display devices. Displayable sensor information may include any sensor data, including raw sensor data, transformed sensor data, and/or any information associated with measurement, signal processing (including calibration), and/or alerts associated with one or more sensors.

The term "data package" as used herein is a broad term, and is to be given its ordinary and customary meaning to a person of ordinary skill in the art (and is not to be limited to a special or customized meaning), and furthermore refers without limitation to a combination of data that is transmitted to one or more display devices, such as in response to triggering of an alert. A data package may include displayable sensor information (e.g., that has been selected and formatted for a particular display device) as well as header information, such as data indicating a delivery address, communication protocol, etc. Depending on the embodiment, a data package may comprises multiple packets of data that are separately transmitted

to a display device (and reassembled at the display device) or a single block of data that is transmitted to the display device. Data packages may be formatted for transmission via any suitable communication protocol, including radio frequency, Bluetooth, universal serial bus, any of the wireless local area network (WLAN) communication standards, including the IEEE 802.11, 802.15, 802.20, 802.22 and other 802 communication protocols, and/or a proprietary communication protocol.

The term "direct wireless communication" as used herein is a broad term, and is to be given its ordinary and customary meaning to a person of ordinary skill in the art (and is not to be limited to a special or customized meaning), and furthermore refers without limitation to a data transmission that goes from one device to another device without any intermediate data processing (e.g., data manipulation). For example, direct wireless communication between a sensor electronics module and a display device occurs when the sensor information transmitted from the sensor electronics module is received by the display device without intermediate processing of the sensor information. The term is broad enough to include wireless communication that is transmitted through a router, a repeater, a telemetry receiver (e.g., configured to re-transmit the sensor information without additional algorithmic processing), and the like. The term is also broad enough to include transformation of data format (e.g., via a Bluetooth receiver) without substantive transformation of the sensor information itself.

The term "prospective algorithm(s)" as used herein is a broad term, and is to be given its ordinary and customary meaning to a person of ordinary skill in the art (and is not to be limited to a special or customized meaning), and furthermore refers without limitation to algorithms that process sensor information in real-time (e.g., continuously and/or periodically as sensor data is received from the continuous analyte sensor) and provide real-time data output (e.g., continuously and/or periodically as sensor data is processed in the sensor electronics module).

The term "retrospective algorithm(s)" as used herein is a broad term, and is to be given its ordinary and customary meaning to a person of ordinary skill in the art (and is not to be limited to a special or customized meaning), and furthermore refers without limitation to algorithms that process sensor information in retrospect, (e.g., analysis of a set of data for a time period previous to the present time period).

As employed herein, the following abbreviations apply: Eq and Eqs (equivalents); mEq (milliequivalents); M (molar); mM (millimolar) μM (micromolar); N (Normal); mol (moles); mmol (millimoles); μmol (micromoles); nmol (nanomoles); g (grams); mg (milligrams); μg (micrograms); Kg (kilograms); L (liters); mL (milliliters); dL (deciliters); μL (microliters); cm (centimeters); mm (millimeters); μm (micrometers); nm (nanometers); h and hr (hours); min. (minutes); s and sec. (seconds); ° C. (degrees Centigrade).

Overview

In some embodiments, a system is provided for continuous measurement of an analyte in a host that includes: a continuous analyte sensor configured to continuously measure a concentration of the analyte in the host and a sensor electronics module physically connected to the continuous analyte sensor during sensor use. In one embodiment, the sensor electronics module includes electronics configured to process a data stream associated with an analyte concentration measured by the continuous analyte sensor in order to generate displayable sensor information that includes raw sensor data, transformed sensor data, and/or any other sensor data, for example. The sensor electronics module may further be configured to generate displayable sensor information that is customized for respective display devices, such that different display devices may receive different displayable sensor information.

Alerts

In one embodiment, one or more alerts are associated with a sensor electronics module. For example, each alert may include one or more alert conditions that indicate when the respective alert has been triggered. For example, a hypoglycemic alert may include alert conditions indicating a minimum glucose level. The alert conditions may also be based on transformed sensor data, such as trending data, and/or sensor data from multiple different sensors (e.g. an alert may be based on sensor data from both a glucose sensor and a temperature sensor). For example, a hypoglycemic alert may include alert conditions indicating a minimum required trend in the host's glucose level that must be present before triggering the alert. The term "trend," as used herein refers generally to data indicating some attribute of data that is acquired over time, e.g., such as calibrated or filtered data from a continuous glucose sensor. A trend may indicate amplitude, rate of change, acceleration, direction, etc., of data, such as sensor data, including transformed or raw sensor data.

In one embodiment, each of the alerts is associated with one or more actions that are to be performed in response to triggering of the alert. Alert actions may include, for example, activating an alarm, such as displaying information on a display of the sensor electronics module or activating an audible or vibratory alarm coupled to the sensor electronics module, and/or transmitting data to one or more display devices external to the sensor electronics module. For any delivery action that is associated with a triggered alert, one or more delivery options define the content and/or format of the data to be transmitted, the device to which the data is to be transmitted, when the data is to be transmitted, and/or a communication protocol for delivery of the data.

In one embodiment, multiple delivery actions (each having respective delivery options) may be associated with a single alert such that displayable sensor information having different content and formatting, for example, is transmitted to respective display devices in response to triggering of a single alert. For example, a mobile telephone may receive a data package including minimal displayable sensor information (that may be formatted specifically for display on the mobile telephone), while a desktop computer may receive a data package including most (or all) of the displayable sensor information that is generated by the sensor electronics module in response to triggering of a common alert. Advantageously, the sensor electronics module is not tied to a single display device, rather it is configured to communicate with a plurality of different display devices directly, systematically, simultaneously (e.g., via broadcasting), regularly, periodically, randomly, on-demand, in response to a query, based on alerts or alarms, and/or the like.

In some embodiments, clinical risk alerts are provided that include alert conditions that combine intelligent and dynamic estimative algorithms that estimate present or predicted danger with greater accuracy, more timeliness in pending danger, avoidance of false alarms, and less annoyance for the patient. In general, clinical risk alerts include dynamic and intelligent estimative algorithms based on analyte value, rate of change, acceleration, clinical risk, statistical probabilities, known physiological constraints, and/or individual physiological patterns, thereby providing more appropriate, clinically safe, and patient-friendly alarms. Co-pending U.S. Patent Publication No. 2007/0208246, which is incorporated herein by reference in its entirety, describes some systems and methods

associated with the clinical risk alerts (or alarms) described herein. In some embodiments, clinical risk alerts can be triggered for a predetermined time period to allow for the user to attend to his/her condition. Additionally, the clinical risk alerts can be de-activated when leaving a clinical risk zone so as not to annoy the patient by repeated clinical alarms (e.g., visual, audible or vibratory), when the patient's condition is improving. In some embodiments, dynamic and intelligent estimation determines a possibility of the patient avoiding clinical risk, based on the analyte concentration, the rate of change, and other aspects of the dynamic and intelligent estimative algorithms. If there is minimal or no possibility of avoiding the clinical risk, a clinical risk alert will be triggered. However, if there is a possibility of avoiding the clinical risk, the system is configured to wait a predetermined amount of time and re-analyze the possibility of avoiding the clinical risk. In some embodiments, when there is a possibility of avoiding the clinical risk, the system is further configured to provide targets, therapy recommendations, or other information that can aid the patient in proactively avoiding the clinical risk.

In some embodiments, the sensor electronics module is configured to search for one or more display devices within communication range of the sensor electronics module and to wirelessly communicate sensor information (e.g., a data package including displayable sensor information, one or more alarm conditions, and/or other alarm information) thereto. Accordingly, the display device is configured to display at least some of the sensor information and/or alarm the host (and/or care taker), wherein the alarm mechanism is located on the display device.

In some embodiments, the sensor electronics module is configured to provide one or a plurality of different alarms via the sensor electronics module and/or via transmission of a data packaging indicating an alarm should be initiated by one or a plurality of display devices (e.g., sequentially and/or simultaneously). In some embodiments, the sensor electronics module determines which of the one or more alarms to trigger based on one or more alerts that are triggered. For example, when an alert triggers that indicates severe hypoglycemia, the sensor electronics module can perform multiple actions, such as activating an alarm on the sensor electronics module, transmitting a data package to a small (key fob) indicating activation of an alarm on the display, and transmitting a data package as a text message to a care provider. As an example, a text message can appear on a small (key fob) display, cell phone, pager device, and/or the like, including displayable sensor information that indicates the host's condition (e.g., "severe hypoglycemia").

In some embodiments, the sensor electronics module is configured to wait a time period for the host to respond to a triggered alert (e.g., by pressing or selecting a snooze and/or off function and/or button on the sensor electronics module and/or a display device), after which additional alerts are triggered (e.g., in an escalating manner) until one or more alerts are responded to. In some embodiments, the sensor electronics module is configured to send control signals (e.g., a stop signal) to a medical device associated with an alarm condition (e.g., hypoglycemia), such as an insulin pump, wherein the stop alert triggers a stop of insulin delivery via the pump.

In some embodiments, the sensor electronics module is configured to directly, systematically, simultaneously (e.g., via broadcasting), regularly, periodically, randomly, on-demand, in response to a query (from the display device), based on alerts or alarms, and/or the like transmit alarm information. In some embodiments, the system further includes a repeater such that the wireless communication distance of the sensor electronics module can be increased, for example, to 10, 20, 30, 50 75, 100, 150, or 200 meters or more, wherein the repeater is configured to repeat a wireless communication from the sensor electronics module to the display device located remotely from the sensor electronics module. A repeater can be useful to families having children with diabetes. For example, to allow a parent to carry, or place in a stationary position, a display device, such as in a large house wherein the parents sleep at a distance from the child.

Display Devices

In some embodiments, the sensor electronics module is configured to search for and/or attempt wireless communication with a display device from a list of display devices. In some embodiments, the sensor electronics module is configured to search for and/or attempt wireless communication with a list of display devices in a predetermined and/or programmable order (e.g., grading and/or escalating), for example, wherein a failed attempt at communication with and/or alarming with a first display device triggers an attempt at communication with and/or alarming with a second display device, and so on. In one exemplary embodiment, the sensor electronics module is configured to search for and attempt to alarm a host or care provider sequentially using a list of display devices, such as: 1) a default display device, 2) a key fob device, 3) a cell phone (via auditory and/or visual methods, such as, text message to the host and/or care provider, voice message to the host and/or care provider, and/or 911).

Depending on the embodiment, one or more display devices that receive data packages from the sensor electronics module are "dummy displays", wherein they display the displayable sensor information received from the sensor electronics module without additional processing (e.g., prospective algorithmic processing necessary for real-time display of sensor information). In some embodiments, the displayable sensor information comprises transformed sensor data that does not require processing by the display device prior to display of the displayable sensor information. Some display devices may comprise software including display instructions (software programming comprising instructions configured to display the displayable sensor information and optionally query the sensor electronics module to obtain the displayable sensor information) configured to enable display of the displayable sensor information thereon. In some embodiments, the display device is programmed with the display instructions at the manufacturer and can include security and/or authentication to avoid plagiarism of the display device. In some embodiments, a display device is configured to display the displayable sensor information via a downloadable program (for example, a downloadable Java Script via the internet), such that any display device that supports downloading of a program (for example, any display device that supports Java applets) therefore can be configured to display displayable sensor information (e.g., mobile phones, PDAs, PCs and the like).

In some embodiments, certain display devices may be in direct wireless communication with the sensor electronics module, however intermediate network hardware, firmware, and/or software can be included within the direct wireless communication. In some embodiments, a repeater (e.g., a Bluetooth repeater) can be used to re-transmit the transmitted displayable sensor information to a location farther away than the immediate range of the telemetry module of the sensor electronics module, wherein the repeater enables direct wireless communication when substantive processing of the displayable sensor information does not occur. In some embodiments, a receiver (e.g., Bluetooth receiver) can be used to

re-transmit the transmitted displayable sensor information, possibly in a different format, such as in a text message onto a TV screen, wherein the receiver enables direct wireless communication when substantive processing of the sensor information does not occur. In one embodiment, the sensor electronics module directly wirelessly transmits displayable sensor information to one or a plurality of display devices, such that the displayable sensor information transmitted from the sensor electronics module is received by the display device without intermediate processing of the displayable sensor information.

In one embodiment, one or more display devices comprise built-in authentication mechanisms, wherein authentication is required for communication between the sensor electronics module and the display device. In some embodiments, to authenticate the data communication between the sensor electronics module and display devices, a challenge-response protocol, such as a password authentication is provided, where the challenge is a request for the password and the valid response is the correct password, such that pairing of the sensor electronics module with the display devices can be accomplished by the user and/or manufacturer via the password. However, any known authentication system or method useful for telemetry devices can be used with the preferred embodiments.

In some embodiments, one or more display devices are configured to query the sensor electronics module for displayable sensor information, wherein the display device acts as a master device requesting sensor information from the sensor electronics module (e.g., a slave device) on-demand, for example, in response to a query. In some embodiments, the sensor electronics module is configured for periodic, systematic, regular, and/or periodic transmission of sensor information to one or more display devices (for example, every 1, 2, 5, or 10 minutes or more). In some embodiments, the sensor electronics module is configured to transmit data packages associated with a triggered alert (e.g., triggered by one or more alert conditions). However, any combination of the above described statuses of data transmission can be implemented with any combination of paired sensor electronics module and display device(s). For example, one or more display devices can be configured for querying the sensor electronics module database and for receiving alarm information triggered by one or more alarm conditions being met. Additionally, the sensor electronics module can be configured for periodic transmission of sensor information to one or more display devices (the same or different display devices as described in the previous example), whereby a system can include display devices that function differently with regard to how they obtain sensor information.

In some embodiments, as described in more detail elsewhere herein, a display device is configured to query the data storage memory in the sensor electronics module for certain types of data content, including direct queries into a database in the sensor electronics module's memory and/or requests for configured or configurable packages of data content therefrom; namely, the data stored in the sensor electronics module is configurable, queryable, predetermined, and/or pre-packaged, based on the display device with which the sensor electronics module is communicating. In some additional or alternative embodiments, the sensor electronics module generates the displayable sensor information based on its knowledge of which display device is to receive a particular transmission. Additionally, some display devices are capable of obtaining calibration information and wirelessly transmitting the calibration information to the sensor electronics module, such as through manual entry of the calibration information, automatic delivery of the calibration information, and/or an integral reference analyte monitor incorporated into the display device. U.S. Patent Publication Nos. 2006/0222566, 2007/0203966, 2007/0208245, and 2005/0154271, all of which are incorporated herein by reference in their entirety, describe systems and methods for providing an integral reference analyte monitor incorporated into a display device and/or other calibration methods that can be implemented with the preferred embodiments.

In general, a plurality of display devices (e.g., a small (key fob) display device, a larger (hand-held) display device, a mobile phone, a reference analyte monitor, a drug delivery device, a medical device and a personal computer) are configured to wirelessly communicate with the sensor electronics module, wherein the one or more display devices are configured to display at least some of the displayable sensor information wirelessly communicated from the sensor electronics module, wherein displayable sensor information includes sensor data, such as raw data and/or transformed sensor data, such as analyte concentration values, rate of change information, trend information, alert information, sensor diagnostic information and/or calibration information, for example.

Small (Key Fob) Display Device

In some embodiments, one the plurality of display devices is a small (e.g., key fob) display device **14** (FIG. **1**) that is configured to display at least some of the sensor information, such as an analyte concentration value and a trend arrow. In general, a key fob device is a small hardware device with a built-in authentication mechanism sized to fit on a key chain. However, any small display device **14** can be configured with the functionality as described herein with reference to the key fob device **14**, including a wrist band, a hang tag, a belt, a necklace, a pendent, a piece of jewelry, an adhesive patch, a pager, an identification (ID) card, and the like, all of which are included by the phrase "small display device" and/or "key fob device" herein.

In general, the key fob device **14** includes electronics configured to receive and display displayable sensor information (and optionally configured to query the sensor electronics module for the displayable sensor information). In one embodiment, the electronics include a RAM and a program storage memory configured at least to display the sensor data received from the sensor electronics module. In some embodiments, the key fob device **14** includes an alarm configured to warn a host of a triggered alert (e.g., audio, visual and/or vibratory). In some embodiments, the key fob device **14** includes a user interface, such as an LCD **602** and one or more buttons **604** that allows a user to view data, such as a numeric value and/or an arrow, to toggle through one or more screens, to select or define one or more user parameters, to respond to (e.g., silence, snooze, turn off) an alert, and/or the like.

In some embodiments, the key fob display device has a memory (e.g., such as in a gig stick or thumb drive) that stores sensor, drug (e.g., insulin) and other medical information, enabling a memory stick-type function that allows data transfer from the sensor electronics module to another device (e.g., a PC) and/or as a data back-up location for the sensor electronics module memory (e.g., data storage memory). In some embodiments, the key fob display device is configured to be automatically readable by a network system upon entry into a hospital or other medical complex.

In some embodiments, the key fob display device includes a physical connector, such as USB port **606**, to enable connection to a port (e.g., USB) on a computer, enabling the key fob to function as a data download device (e.g., from the sensor electronics module to a PC), a telemetry connector

(e.g., Bluetooth adapter/connector for a PC), and/or enables configurable settings on the key fob device (e.g., via software on the PC that allows configurable parameters such as numbers, arrows, trend, alarms, font, etc.) In some embodiments, user parameters associated with the small (key fob) display device can be programmed into (and/or modified) by a display device such as a personal computer, personal digital assistant, or the like. In one embodiment, user parameters include contact information, alert/alarms settings (e.g., thresholds, sounds, volume, and/or the like), calibration information, font size, display preferences, defaults (e.g., screens), and/or the like. Alternatively, the small (key fob) display device can be configured for direct programming of user parameters. In some embodiments, wherein the small (key fob) display device comprises a telemetry module, such as Bluetooth, and a USB connector (or the like), such that the small (key fob) display device additionally functions as telemetry adapter (e.g., Bluetooth adapter) enabling direct wireless communication between the sensor electronics module and the PC, for example, wherein the PC does not include the appropriate telemetry adapter therein.

Large (Hand-Held) Display Device

In some embodiments, one the plurality of display devices is a hand-held display device **16** (FIG. **1**) configured to display sensor information including an analyte concentration and a graphical representation of the analyte concentration over time. In general, the hand-held display device comprises a display **608** sufficiently large to display a graphical representation **612** of the sensor data over a time period, such as a previous 1, 3, 5, 6, 9, 12, 18, or 24-hours of sensor data. In some embodiments, the hand-held device **16** is configured to display a trend graph or other graphical representation, a numeric value, an arrow, and/or to alarm the host. U.S. Patent Publication No. 2005/0203360, which is incorporated herein by reference in its entirety, describes and illustrates some examples of display of data on a hand-held display device. Although FIG. **6** illustrates one embodiment of a hand-held display device, the hand-held device can be any single application device or multi-application device, such as mobile phone, a palm-top computer, a PDA, portable media player (e.g., iPod, MP3 player), a blood glucose meter, an insulin pump, and/or the like.

In some embodiments, a mobile phone (or PDA) is configured to display (as described above) and/or relay sensor information, such as via a voice or text message to the host and/or the host's care provider. In some embodiments, the mobile phone further comprises an alarm configured to warn a host of a triggered alert, such as in response to receiving a data package indicating triggering of the alert. Depending on the embodiment, the data package may include displayable sensor information, such as an on-screen message, text message, and/or pre-generated graphical representation of sensor data and/or transformed sensor data, as well as an indication of an alarm, such as an auditory alarm or a vibratory alarm, that should be activated by the mobile phone.

In some embodiments, one of the display devices is a drug delivery device, such as an insulin pump and/or insulin pen, configured to display sensor information. In some embodiments, the sensor electronics module is configured to wirelessly communicate sensor diagnostic information to the drug delivery device in order to enable to the drug delivery device to consider (include in its calculations/algorithms) a quality, reliability and/or accuracy of sensor information for closed loop and/or semi-closed loop systems, which are described in more detail in U.S. Patent Publication No. 2005/0192557, which is incorporated herein by reference in its entirety. In some alternative embodiments, the sensor electronic module is configured to wirelessly communicate with a drug delivery device that does not include a display, for example, in order to enable a closed loop and/or semi-closed loop system as described above.

In some embodiments, one of the display devices is a drug delivery device is a reference analyte monitor, such as a blood glucose meter, configured to measure a reference analyte value associated with an analyte concentration in a biological sample from the host.

Personal Computer Display Device

In some embodiments, one of the display devices is personal computer (PC) **20** (FIG. **1**) configured to display sensor information. Preferably, the PC **24** has software installed, wherein the software enables display and/or performs data analysis (retrospective processing) of the historic sensor information. In some embodiments, a hardware device can be provided (not shown), wherein the hardware device (e.g., dongle/adapter) is configured to plug into a port on the PC to enable wireless communication between the sensor electronics module and the PC. In some embodiments, the PC **24** is configured to set and/or modify configurable parameters of the sensor electronics module **12** and/or small (key fob device) **14**, as described in more detail elsewhere herein.

Other Display Devices

In some embodiments, one of the display devices is an on-skin display device that is splittable from, releasably attached to, and/or dockable to the sensor housing (mounting unit, sensor pod, or the like). In some embodiments, release of the on-skin display turns the sensor off; in other embodiments, the sensor housing comprises sufficient sensor electronics to maintain sensor operation even when the on-skin display is released from the sensor housing.

In some embodiments, one of the display devices is a secondary device, such as a heart rate monitor, a pedometer, a temperature sensor, a car initialization device (e.g., configured to allow or disallow the car to start and/or drive in response to at least some of the sensor information wirelessly communicated from the sensor electronics module (e.g., glucose value above a predetermined threshold)). In some alternative embodiments, one of the display devices is designed for an alternative function device (e.g., a caller id device), wherein the system is configured to communicate with and/or translate displayable sensor information to a custom protocol of the alternative device such that displayable sensor information can be displayed on the alternative function device (display of caller id device).

Exemplary Configurations

FIG. **1** is a diagram illustrating one embodiment of a continuous analyte sensor system **8** including a sensor electronics module **12**. In the embodiment of FIG. **1**, the system includes a continuous analyte sensor **10** physically connected to a sensor electronics module **12**, which is in direct wireless communication with a plurality of different display devices **14**, **16**, **18**, and/or **20**.

In one embodiment, the sensor electronics module **12** includes electronic circuitry associated with measuring and processing the continuous analyte sensor data, including prospective algorithms associated with processing and calibration of the sensor data. The sensor electronics module **12** may be physically connected to the continuous analyte sensor **10** and can be integral with (non-releasably attached to) or releasably attachable to the continuous analyte sensor **10**. The sensor electronics module **12** may include hardware, firmware, and/or software that enables measurement of levels of the analyte via a glucose sensor, such as an analyte sensor. For example, the sensor electronics module **12** can include a potentiostat, a power source for providing power to the sen-

sor, other components useful for signal processing and data storage, and preferably a telemetry module for transmitting data from the sensor electronics module to one or more display devices. Electronics can be affixed to a printed circuit board (PCB), or the like, and can take a variety of forms. For example, the electronics can take the form of an integrated circuit (IC), such as an Application-Specific Integrated Circuit (ASIC), a microcontroller, and/or a processor. The sensor electronics module **12** includes sensor electronics that are configured to process sensor information ,such as sensor data, and generate transformed sensor data and displayable sensor information. Examples of systems and methods for processing sensor analyte data are described in more detail herein and in U.S. Pat. Nos. 7,310,544 and 6,931,327. and U.S. Patent Publication Nos. 2005/0043598, 2007/0032706, 2007/0016381, 2008/0033254, 2005/0203360, 2005/0154271, 2005/0192557, 2006/0222566, 2007/0203966 and 2007/0208245, all of which are incorporated herein by reference in their entirety.

Referring again to FIG. **1**, a plurality of display devices (**14**, **16**, **18**, and/or **20**) are configured for displaying (and/or alarming) the displayable sensor information that has been transmitted by the sensor electronics module **12** (e.g., in a customized data package that is transmitted to the display devices based on their respective preferences). For example, the display devices are configured to display the displayable sensor information as it is communicated from the sensor electronics module (e.g., in a data package that is transmitted to respective display devices), without any additional prospective processing required for calibration and real-time display of the sensor data.

In the embodiment of FIG. **1**, the plurality of display devices includes a small (key fob) display device **14**, such as a wrist watch, a belt, a necklace, a pendent, a piece of jewelry, an adhesive patch, a pager, a key fob, a plastic card (e.g., credit card), an identification (ID) card, and/or the like, wherein the small display device comprises a relatively small display (e.g., smaller than the large display device) and is configured to display certain types of displayable sensor information (e.g., a numerical value and an arrow, in some embodiments). In some embodiments, one of the plurality of display devices is a large (hand-held) display device **16**, such as a hand-held receiver device, a palm-top computer and/or the like, wherein the large display device comprises a relatively larger display (e.g., larger than the small display device) and is configured to display a graphical representation of the continuous sensor data (e.g., including current and historic data). Other display devices can include other hand-held devices, such as a cell phone or PDA **18**, an insulin delivery device, a blood glucose meter, and/or a desktop or laptop computer **24**.

Because different display devices provide different user interfaces, content of the data packages (e.g., amount, format, and/or type of data to be displayed, alarms, and the like) can be customized (e.g., programmed differently by the manufacture and/or by an end user) for each particular display device. Accordingly, in the embodiment of FIG. **1**, a plurality of different display devices are in direct wireless communication with the sensor electronics module (e.g., such as an on-skin sensor electronics module **12** that is physically connected to the continuous analyte sensor**10**) during a sensor session to enable a plurality of different types and/or levels of display and/or functionality associated with the displayable sensor information, which is described in more detail elsewhere herein.

Continuous Sensor

In some embodiments, a glucose sensor comprises a continuous sensor, for example a subcutaneous, transdermal (e.g., transcutaneous), or intravascular device. In some embodiments, the device can analyze a plurality of intermittent blood samples. The glucose sensor can use any method of glucose-measurement, including enzymatic, chemical, physical, electrochemical, spectrophotometric, polarimetric, calorimetric, iontophoretic, radiometric, immunochemical, and the like.

A glucose sensor can use any known method, including invasive, minimally invasive, and non-invasive sensing techniques (e.g., fluorescent monitoring), to provide a data stream indicative of the concentration of glucose in a host. The data stream is typically a raw data signal, which is converted into a calibrated and/or filtered data stream that is used to provide a useful value of glucose to a user, such as a patient or a caretaker (e.g., a parent, a relative, a guardian, a teacher, a doctor, a nurse, or any other individual that has an interest in the wellbeing of the host).

A glucose sensor can be any device capable of measuring the concentration of glucose. One exemplary embodiment is described below, which utilizes an implantable glucose sensor. However, it should be understood that the devices and methods described herein can be applied to any device capable of detecting a concentration of glucose and providing an output signal that represents the concentration of glucose.

In one embodiment, the analyte sensor is an implantable glucose sensor, such as described with reference to U.S. Pat. No. 6,001,067 and U.S. Patent Publication No. US-2005-0027463-A1. In another embodiment, the analyte sensor is a transcutaneous glucose sensor, such as described with reference to U.S. Patent Publication No. US-2006-0020187-A1. In still other embodiments, the sensor is configured to be implanted in a host vessel or extracorporeally, such as is described in U.S. Patent Publication No. US-2007-0027385-A1, co-pending U.S. patent application Ser. No. 11/543,396 filed Oct. 4, 2006, co-pending U.S. patent application Ser. No. 11/691,426 filed on Mar. 26, 2007, and co-pending U.S. patent application Ser. No. 11/675,063 filed on Feb. 14, 2007. In one alternative embodiment, the continuous glucose sensor comprises a transcutaneous sensor such as described in U.S. Pat. No. 6,565,509 to Say et al., for example. In another alternative embodiment, the continuous glucose sensor comprises a subcutaneous sensor such as described with reference to U.S. Pat. No. 6,579,690 to Bonnecaze et al. or U.S. Pat. No. 6,484,046 to Say et al., for example. In another alternative embodiment, the continuous glucose sensor comprises a refillable subcutaneous sensor such as described with reference to U.S. Pat. No. 6,512,939 to Colvin et al., for example. In another alternative embodiment, the continuous glucose sensor comprises an intravascular sensor such as described with reference to U.S. Pat. No. 6,477,395 to Schulman et al., for example. In another alternative embodiment, the continuous glucose sensor comprises an intravascular sensor such as described with reference to U.S. Pat. No. 6,424,847 to Mastrototaro et al., for example.

Sensor Electronics Module

FIG. **2** is a block diagram illustrating one embodiment of the sensor electronics module **12** (FIG. **1**). In the embodiment of FIG. **2**, the sensor electronics module **12** comprises an application-specific integrated circuit (ASIC) **205** and a user interface **122**. In this embodiment, the ASIC **205** is coupled to a communication port **238** and a battery **234**. Although the illustrated embodiment shows an Application Specific Integrated Circuit (ASIC) **205** that includes much of the electronic circuitry, the ASIC **205** may be replaced with one or

more of any suitable logic device, such as field programmable gate arrays (FPGA), microprocessors, analog circuitry, or other digital and/or analog circuitry.

In this embodiment, a potentiostat **210** is coupled to a glucose sensor via data line **212**, for example, in order to receive sensor data from the glucose sensor. In one embodiment, the potentiostat **210** provides a voltage to the glucose sensor via the data line **22** in order to bias the sensor to enable measurement of a current value indicative of the analyte concentration in the host (also referred to as the analog portion). The potentiostat can have one channel or multiple channels (and a corresponding one or multiple data lines **212**), depending on the number of working electrodes, for example. In some embodiments, the potentiostat **210** includes a resistor (not shown) that translates the current into voltage. In some embodiments, a current to frequency converter is provided that is configured to continuously integrate the measured current, for example, using a charge counting device. In some embodiments, an A/D converter digitizes the analog signal into "counts" for processing. Accordingly, the resulting raw data stream in counts is directly related to the current measured by the potentiostat **210**.

A processor module **214** is the central control unit that controls the processing of the sensor electronics module **12**. In some embodiments, the processor module **214** is formed as part of a custom chip, such as an ASIC, however a computer system other than an ASIC can be used to process data as described herein, for example a microprocessor can be used for some or all of the sensor electronics module processing. The processor module **214** typically provides a program memory **216**, which provides semi-permanent storage of data, for example, storing data such as sensor identifier (ID) and programming to process data streams (for example, filtering, calibration, fail-safe checking, and the like). The processor additionally can be used for the system's cache memory, for example for temporarily storing recent sensor data. In some embodiments, the processor module comprises memory storage components such as ROM, RAM, dynamic-RAM, static-RAM, non-static RAM, EEPROM, rewritable ROMs, flash memory, and the like. In one exemplary embodiment, RAM **218** can be used for the system's cache memory, for example for temporarily storing recent sensor data.

In some embodiments, the processor module **214** comprises a digital filter, for example, an IIR or FIR filter, configured to smooth the raw data stream from the A/D converter. Generally, digital filters are programmed to filter data sampled at a predetermined time interval (also referred to as a sample rate). In some embodiments, such as when the potentiostat **210** is configured to measure the analyte at discrete time intervals, these time intervals determine the sample rate of the digital filter. In some alternative embodiments, wherein the potentiostat **210** is configured to continuously measure the analyte, for example, using a current-to-frequency converter, the processor module **214** can be programmed to request a digital value from the integrator at a predetermined time interval, also referred to as the acquisition time. In these alternative embodiments, the values obtained by the processor module **214** are advantageously averaged over the acquisition time due the continuity of the current measurement. Accordingly, the acquisition time determines the sample rate of the digital filter.

In an advantageous embodiment, the processor module **214** may be further configured to generate data packages for transmission to one or more display devices. Furthermore, the processor module **215** may generate data packets for transmission to these outside sources, e.g., via telemetry. As discussed above, the data packages may be customizable for each display device, for example, and may include any available data, such as displayable sensor information having customized sensor data and/or transformed sensor data, sensor/sensor electronics module ID code, raw data, filtered data, calibrated data, rate of change information, trend information, error detection or correction, and/or the like.

A data storage memory **220** is operably connected to the processor module **214** and is configured to store a variety of sensor information. In some embodiments, the data storage memory stores 1, 3, 4, 5, 6, 7, 8, 9, 10, 11, 12, 13, 14, 15, 20, 30 or more days of continuous analyte sensor data. In some embodiments, the data storage memory **220** stores sensor information such as raw sensor data (one or more raw analyte concentration values), calibrated data, filtered data, transformed sensor data, and/or any other displayable sensor information.

In some embodiments, sensor electronics module **12** is configured to receive and store contact information in the data storage memory (and/or program memory), including a phone number and/or email address for the sensor's host and/or health care providers for the host (e.g., family member (s), nurse(s), doctor(s), or other health care provider(s)), which enables communication with a contact person (e.g., via phone, pager and/or text messaging in response to an alarm (e.g., a hypoglycemic alarm that has not been responded to by the host)). In some embodiments, user parameters can be programmed into (and/or modified in) the data storage memory (and/or program memory) of the sensor electronics module, via a display device such as a personal computer, personal digital assistant, or the like. Preferably, user parameters include contact information, alert/alarms settings (e.g., thresholds, sounds, volume, and/or the like), calibration information, font size, display preferences, defaults (e.g., screens), and/or the like. Alternatively, the sensor electronics module can be configured for direct programming of certain user parameters.

In one embodiment, clinical data of a medical practitioner may be uploaded to the sensor electronics module **12** and stored on the data storage memory **220**, for example. Thus, information regarding the host's condition, treatments, medications, etc., may be stored on the sensor electronics module **12** and may be viewable by the host or other authorized user. In one embodiment, certain of the clinical data may be included in a data package that is transmitted to a display device in response to triggering of an alert. The clinical data may be uploaded to the sensor electronics module **12** via any available communication protocol, such as direct transmission via a wireless Bluetooth, infrared, or RF connection, or via a wired USB connection, for example. Additionally, the clinical data may be uploaded to the sensor electronics module **12** via indirect transmission, such as via one or more networks (e.g., local area, personal area, or wide area networks, or the Internet) or via a repeater device that receives the clinical data from a device of the medical practitioner and retransmits the clinical data to the sensor electronics module.

Although separate data storage and program memories are shown in FIG. **1**, one skilled in the art appreciates a variety of configurations, including one or multiple memories that provide the necessary storage space to support the sensor electronic module **12** data processing and storage requirements. Accordingly, the described location of storage of any particular information and/or or programming is not meant to be limiting, but rather exemplary.

In some embodiments, the sensor electronics module **12** is configured to perform smoothing and/or filtering algorithms on the sensor data (e.g., raw data stream and/or other sensor information), wherein the smoothed and/or filtered data is

stored in the data storage memory as transformed data. Co-pending U.S. Patent Publication Nos. 2005/0043598, 2007/0032706, 2007/0016381 and 2008/0033254 describe some algorithms useful in performing data smoothing and/or filtering herein (including signal artifacts replacement), and are incorporated herein by reference in their entirety.

In some embodiments, the sensor electronics module **12** is configured to calibrate the sensor data, and the data storage memory **220** stores the calibrated sensor data points as transformed sensor data. In some further embodiments, the sensor electronics module **12** is configured to wirelessly receive calibration information from a display device, from which the sensor electronics module is configured to calibrate the sensor data. U.S. Pat. Nos. 7,310,544 and 6,931,327 describe some algorithms useful in sensor calibration herein, and are incorporated herein by reference in their entirety.

In some embodiments, the sensor electronics module **12** is configured to perform additional algorithmic processing on the sensor data (e.g., calibrated and/or filtered data and/or other sensor information) and the data storage memory **220** is configured to store the transformed sensor data and/or sensor diagnostic information associated with the algorithms. U.S. Pat. Nos. 7,310,544 and 6,931,327 describe some algorithms that can be processed by the sensor electronics module, and are incorporated herein by reference in their entirety.

Referring again to FIG. **5**, a user interface **222** can include a variety of interfaces, such as one or more buttons **224**, a liquid crystal display (LCD) **226**, a vibrator **228**, an audio transducer (e.g., speaker) **230**, backlight, and/or the like. A backlight can be provided, for example, to aid the user in reading the LCD in low light conditions. The components that comprise the user interface **222** provide controls to interact with the user (e.g., the host). One or more buttons **224** can allow, for example, toggle, menu selection, option selection, status selection, yes/no response to on-screen questions, a "turn off" function (e.g., for an alarm), a "snooze" function (e.g., for an alarm), a reset, and/or the like. The LCD **226** can be provided, for example, to provide the user with visual data output. The audio transducer **230** (e.g., speaker) provides audible signals in response to triggering of certain alerts, such as present and/or predicted hyper- and hypoglycemic conditions. In some embodiments, audible signals are differentiated by tone, volume, duty cycle, pattern, duration, and/or the like. In some embodiments, the audible signal is configured to be silenced (e.g., snoozed or turned off) by pressing one or more buttons **224** on the sensor electronics module and/or by signaling the sensor electronics module using a button or selection on a display device (e.g., key fob, cell phone, and/or the like).

In some embodiments, the audio transducer **230** is mounted to the circuit board and/or the sensor electronics module housing. In some embodiments, the sound produced by the audio transducer **230** exits the device from a sound port in the sensor electronics module **12**, such as a hole on the sensor electronics module body **12**. Preferably, the hole is waterproofed and/or otherwise protected from moisture by a waterproof material that easily allows sound waves there through. In one preferred embodiment, the hole is protected from moisture by an acoustically transparent venting material (wherein the material allows at least about 60%, 70%, 80%, 90%, 95%, or more of the transmitted sound waves there through), such as a screw-in vent, a press-fit vent, a snap-in vent, an o-ring vent, and adhesive vent, and/or the like. One manufacturer that provides acoustically transparent venting material is W.L. Gore & Associates (Elkton, MD) under the trade name Protective Vents (Acoustic Vents).

The vibrator **228** can include a motor that provides, for example, tactile signals or alerts for reasons such as described with reference to the audio transducer, above. In one embodiment, the vibrator motor **228** provides a signal in response to triggering of one or more alerts, which can be triggered by the processor module **214** that processes algorithms useful in determining whether alert conditions associated with one or more alerts have been met, for example, present and/or predicted hyper- and hypoglycemic conditions. In some embodiments, one or more different alerts are differentiated by intensity, quantity, pattern, duration, and/or the like. In some embodiments, the alarm is configured to be silenced (e.g., snoozed or turned off) by pressing one or more buttons **224** on the sensor electronics module **12** and/or by signaling the sensor electronics module **12** using a button or selection on a display device (e.g., key fob, cell phone, and/or the like).

In some embodiments, the vibrator motor **228** is mounted to the circuit board and/or the sensor electronics module **12** housing. Preferably the diameter of the motor is less than or equal to about 6 mm, 5 mm, 4 mm, 3.5 mm, 3 mm, 2.5 mm, 2 mm or less. Preferably the overall length of the vibrator motor is less than or equal to about 18 mm, 16 mm, 14 mm, 12 mm, 10 mm or less. By providing a low power vibrator motor, the motor can be place in the sensor electronics module **12** without significantly affecting the low profile nature of the on-skin sensor electronics module **12**.

In some embodiments, the vibrator motor **228** may be used to provide a vibratory alarm that creates vibration and/or movement of the sensor within the host. While not wishing to be bound by theory, it is believed that a concentration increase of noise-causing electroactive species, such as electroactive metabolites from cellular metabolism and wound healing, can interfere with sensor function and cause noise observed during host start-up and/or sedentary periods. For example, local lymph pooling, which can occur when a part of the body is compressed or when the body is inactive, can cause, in part, this local build up of interferants (e.g., electroactive metabolites). Similarly, a local accumulation of wound healing metabolic products (e.g., at the site of sensor insertion) likely causes noise on the sensor during the first few hours to days after sensor insertion. Accordingly, it is believed vibration and/or movement of the sensor at the insertion site, after sensor insertion, can reduce or eliminate pooling of local interfering species caused by the wound healing process described above. In some embodiments, the sensor is vibrated and/or moved at predetermined intervals and/or in response to noise artifacts detected on the sensor signal. Co-pending U.S. patent application Ser. No. 2005/0043598, 2007/0032706, 2007/0016381 or 2008/0033254 describe systems and methods for detection of noise artifacts, noise episodes and/or classification of noise, which can be useful with the embodiments described herein.

Although audio and vibratory alarms are exemplified in FIG. **5**, alternative alarming mechanisms can be used in some embodiments. For example, in one alternative embodiment, a tactile alarm is provided including a poking mechanism (not shown) configured to "poke" the patient in response to one or more alarm conditions.

In another alternative embodiment, the sensor electronics module **12** is configured to transmit sound waves into the host's body (e.g., abdomen or other body part) that will be felt by the host, thereby allowing the host to be alerted without calling attention to himself and/or thereby allowing a hearing-impaired visually-impaired, and/or tactilely-impaired host to be alerted. In some embodiments, the sound waves can be transmitted into the host's body using the electrodes of the sensor itself. In some embodiments, one or more transcuta-

neous electrodes (other than the electrodes related to analyte measurement) are provided for transmitting sound waves. In some embodiments, electrodes can be provided in the adhesive patch that holds the sensor/sensor electronics module onto the host's body, which can be used to transmit the sound waves. In some embodiments, different sound waves are used to transmit different alarm conditions to the host. The sound waves could be differentiated by any sound characteristic, such as but not limited to amplitude, frequency and pattern.

In another alternative embodiment, mild electric shock could be used to transmit one or more alarms to the host. Preferably the level of shock would not be overly uncomfortable to the host; however, the intensity of the level of shock can be configured to increase when a host does not respond to (e.g., snooze or turn off) an alert within an amount of time. In some embodiments, the shock can be delivered to the host's body using the electrodes of the sensor itself. In some embodiments, the sensor system can include one or more additional electrodes configured for delivering the shock to the host (alone or in combination with the electrodes related to analyte measurement). In still another example, the one or more electrodes can be disposed on the host's skin, such as in the adhesive patch, for delivering the shock. Alternatively, one or more additional patches, each including an electrode, can be provided, for delivering the shock. The additional patches can be in wired and/or wireless communication with the sensor electronics module.

A telemetry module **232** is operably connected to the processor module **214** and provides the hardware, firmware, and/or software that enable wireless communication between the sensor electronics module **12** and one or more display devices. A variety of wireless communication technologies that can be implemented in the telemetry module **232** include radio frequency (RF), infrared (IR), Bluetooth, spread spectrum communication, frequency hopping communication, ZigBee, IEEE 802.11/802.16, wireless (e.g., cellular) telecommunication, paging network communication, magnetic induction, satellite data communication, GPRS, ANT, and/or the like. In one preferred embodiment, the telemetry module comprises a Bluetooth chip. In some embodiments, Bluetooth technology is implemented in a combination of the telemetry module **232** and the processor module **214**.

A battery **234** is operatively connected to the processor module **214** (and possibly other components of the sensor electronics module **12**) and provides the necessary power for the sensor electronics module **12**. In one embodiment, the battery is a Lithium Manganese Dioxide battery, however any appropriately sized and powered battery can be used (e.g., AAA, Nickel-cadmium, Zinc-carbon, Alkaline, Lithium, Nickel-metal hydride, Lithium-ion, Zinc-air, Zinc-mercury oxide, Silver-zinc, or hermetically-sealed). In some embodiments the battery is rechargeable. In some embodiments, a plurality of batteries can be used to power the system. In yet other embodiments, the receiver can be transcutaneously powered via an inductive coupling, for example.

A battery charger and/or regulator **236** may be configured to receive energy from an internal and/or external charger. In one embodiment, a battery regulator (or balancer) **236** regulates the recharging process by bleeding off excess charge current to allow all cells or batteries in the sensor electronics module to be fully charged without overcharging other cells or batteries. In some embodiments, the battery **234** (or batteries) is configured to be charged via an inductive and/or wireless charging pad. One skilled in the art appreciates a variety of known methods of charging batteries, which can be implemented with the system described herein, including wired (cable/plug) and wireless methods.

One or more communication ports **238**, also referred to as external connector(s), can be provided to allow communication with other devices, for example a PC communication (com) port can be provided to enable communication with systems that are separate from, or integral with, the sensor electronics module. The communication port, for example, may comprise a serial (e.g., universal serial bus or "USB") communication port, allows for communicating with another computer system (e.g., PC, personal digital assistant or "PDA," server, or the like). In one exemplary embodiment, the sensor electronics module **12** is able to transmit historical data to a PC or other computing device for retrospective analysis by a patient and/or physician.

In conventional continuous analyte sensor systems, the on-skin portion of the sensor electronics is generally simplified to minimize complexity and/or size of on-skin electronics, for example, providing only raw, calibrated, and/or filtered data to a secondary display device configured to run calibration and other algorithms required for displaying the sensor data. In contrast, the sensor electronics module **12** executes prospective algorithms used to generate transformed sensor data and/or displayable sensor information, including, for example, algorithms that: evaluate a clinical acceptability of reference and/or sensor data, evaluate calibration data for best calibration based on inclusion criteria, evaluate a quality of the calibration, compare estimated analyte values with time corresponding measured analyte values, analyze a variation of estimated analyte values, evaluate a stability of the sensor and/or sensor data, detect signal artifacts (noise), replace signal artifacts, determine a rate of change and/or trend of the sensor data, perform dynamic and intelligent analyte value estimation, perform diagnostics on the sensor and/or sensor data, set modes of operation, evaluate the data for aberrancies, and/or the like, which are described in more detail in U.S. Pat. Nos. 7,310,544 and 6,931,327. and U.S. Patent Publication Nos. 2005/0043598, 2007/0032706, 2007/0016381, 2008/0033254, 2005/0203360, 2005/0154271, 2005/0192557, 2006/0222566, 2007/0203966 and 2007/0208245, all of which are incorporated herein by reference in their entirety. Furthermore, the sensor electronics module **12** is configured to store the transformed sensor data (e.g., values, trend information) and to communicate the displayable sensor information to a plurality of different display devices. In some embodiments, the display devices are "dummy" devices, namely, they are configured to display the displayable sensor information as received from the sensor electronics module **12**, without any additional sensor data processing.

Exemplary System Configurations

FIG. **3**A is a diagram illustrating one embodiment of a sensor electronics module **312** in communication with multiple sensors, including a glucose sensor **320**, an altimeter **322**, an accelerometer **324**, and a temperature sensor **328**. In this embodiment, each of the sensors **320-328** communicates sensor data wirelessly to the sensor electronics module **312**. In other embodiments, the sensor electronics module **312** comprises one or more of the sensors **320-328**. In other embodiments, the sensors are combined in any other configuration, such as a combined glucose/temperature sensor that transmits sensor data to the sensor electronics module **312** using common communication circuitry. Depending on the embodiment, fewer or additional sensors may communicate with the sensor electronics module **312**. In other embodiments, one or more of the sensors **320-328** is directly coupled to the sensor electronics module **312**, such as via one or more electrical communication wires.

In the embodiment of FIG. **3**A, the sensor electronics module **312** generates and transmits a data package to display

device **350**, which may be any electronic device that is configured to receive, store, retransmit, and/or display displayable sensor data. Advantageously, the sensor electronics module **312** analyzes the sensor data from the multiple sensors and determines which displayable sensor data is to be transmitted to the particular display device **350**, based on one or more of many characteristics of the host, the display device **350**, a user of the display device **350**, and characteristics of the sensor data and/or the transformed sensor data. Thus, the customized displayable sensor information that is transmitted to the display device **350** may be displayed on the display device with minimal processing by the display device **350**.

FIGS. **3**B and **3**C are perspective and side views of a sensor system including a mounting unit **314** and sensor electronics module **12** attached thereto in one embodiment, shown in its functional position, including a mounting unit and a sensor electronics module matingly engaged therein. In some preferred embodiments, the mounting unit **314**, also referred to as a housing or sensor pod, comprises a base **334** adapted for fastening to a host's skin. The base can be formed from a variety of hard or soft materials, and preferably comprises a low profile for minimizing protrusion of the device from the host during use. In some embodiments, the base **334** is formed at least partially from a flexible material, which is believed to provide numerous advantages over conventional transcutaneous sensors, which, unfortunately, can suffer from motion-related artifacts associated with the host's movement when the host is using the device. Preferably, the mounting unit **314** and/or sensor electronics module **12** is/are located over the sensor insertion site to protect the site and/or provide a minimal footprint (utilization of surface area of the host's skin).

In some embodiments, a detachable connection between the mounting unit **314** and sensor electronics module **12** is provided, which enables improved manufacturability, namely, the relatively inexpensive mounting unit **314** can be disposed of when replacing the sensor system after its usable life, while the relatively more expensive sensor electronics module **12** can be reusable with multiple sensor systems. In some preferred embodiments, the sensor electronics module **12** is configured with signal processing (programming), for example, configured to filter, calibrate and/or other algorithms useful for calibration and/or display of sensor information. However, an integral (non-detachable) sensor electronics module can be configured.

In some embodiments, the contacts **338** are mounted on or in a subassembly hereinafter referred to as a contact subassembly **336** configured to fit within the base **334** of the mounting unit **314** and a hinge **348** that allows the contact subassembly **336** to pivot between a first position (for insertion) and a second position (for use) relative to the mounting unit **314**. The term "hinge" as used herein is a broad term and is used in its ordinary sense, including, without limitation, to refer to any of a variety of pivoting, articulating, and/or hinging mechanisms, such as an adhesive hinge, a sliding joint, and the like; the term hinge does not necessarily imply a fulcrum or fixed point about which the articulation occurs. In preferred embodiments, the contacts **338** are formed from a conductive elastomeric material, such as a carbon black elastomer, through which the sensor **10** extends.

In certain embodiments, the mounting unit **314** is provided with an adhesive pad **308**, preferably disposed on the mounting unit's back surface and preferably including a releasable backing layer. Thus, removing the backing layer and pressing the base portion **334** of the mounting unit onto the host's skin adheres the mounting unit **314** to the host's skin. Additionally or alternatively, an adhesive pad can be placed over some or all of the sensor system after sensor insertion is complete to ensure adhesion, and optionally to ensure an airtight seal or watertight seal around the wound exit-site (or sensor insertion site) (not shown). Appropriate adhesive pads can be chosen and designed to stretch, elongate, conform to, and/or aerate the region (e.g., host's skin). The embodiments described with reference to FIGS. **3**B and **3**C are described in more detail with reference to U.S. Pat. No. 7,310,544, which is incorporated herein by reference in its entirety. Preferably, configurations and arrangements that provide water resistant, waterproof, and/or hermetically sealed properties are provided associated with the mounting unit/sensor electronics module embodiments described herein.

FIG. **4** is a diagram illustrating one embodiment of a sensor electronics module **412** in communication with a combined glucose and temperature sensor **420**, as well as an accelerometer **422**. In the embodiment of FIG. **4**, the glucose and temperature sensor **420** senses both a glucose level of the host and a temperature of the host, such as a skin temperature and/or a subcutaneous temperature of the host. In the embodiment of FIG. **4**, the glucose and temperature sensor **420** are coupled to the sensor electronics module **412** via a physical connection, such as one or more electrical lines. In one embodiment, a housing attached to the glucose and temperature sensor **420** attaches directly to the sensor electronics module **412**. In the embodiment of FIG. **4**, an accelerometer **422** is also in wireless communication with the sensor electronics module **412**, such as radio frequency, Bluetooth, or ANT communications, for example.

The sensor electronics module **412** is configured to generate and transmit customized data packages to each of a plurality of display devices, including display devices **450**A, **450**B and **450**N. As discussed further below, the timing, content, and formatting of displayable sensor information that is included in respective data packages may be based on one or more of a plurality of factors. For example, one or more alerts may be established based on default alert conditions or custom alert conditions that are designated by the device manufacturer, the host, or a guardian of the host. An alert is said to be "triggered" when the alert conditions associated with the alert are met by the sensor data and/or transformed sensor data. For example, a near hypoglycemic alert may include an alert condition that requires that the host's current glucose level is below 80 mg/dL. Thus, the particular near hypoglycemic alert would be triggered when the host's current glucose level is below 80 mg/dL, and, in response to triggering of the alert, any actions associated with the particular alert are initiated. In one embodiment, actions associated with an alert may include generation of displayable sensor information, transmission of a data package to one or more display devices, activating one or more alarms (e.g., auditory or vibratory), communicating data to another device, or any other action. For example an action that transmits a customized data package to each of a plurality of display devices may be associated with a near hypoglycemic alert. Thus, when the alert conditions for the near hypoglycemic alert are triggered, the actions initiate compilation and transmission of the indicated data packages to the respective display devices. In one embodiment, the content and formatting of each data package may be customized, such that displayable sensor information included in the respective data packages may include quite different displayable sensor information.

In the embodiment of FIG. **4**, a first data package **430**A is transmitted to a first display device **450**A, while a second data package **430**B is transmitted to a second display device **450**B and a third data package **430**N is transmitted to a third display device **450**N. In this embodiment, each data package **430**A, **430**B, **430**C may be customized for the respective receiving

display devices. For example, the first data package **430**A may include only an indication of a current glucose level of the host, while the second data package **430**B may include historical sensor data as well as one or more trend indicators associated with the host's glucose levels. Additionally, the formatting of the displayable sensor data may be customized for each receiving display device. For example, each of display devices **450**B and **450**N may receive a 20 minute trend indicator in response to triggering a near hypoglycemic alert; however, the formatting of the 20 minute trend indicators that are transmitted to the display devices **450**B and **450**N may be quite different. Thus, the sensor electronics module **412** allows extensive customization of the timing, content, and delivery parameters for delivering data packages to respective display devices.

FIG. **5**A is a diagram illustrating one embodiment of a sensor electronics module **512** directly transmitting data to a first display device **550** and indirectly transmitting sensor data to second and third display devices **552**, **554** via the Internet **560** and the display device **550**. In the embodiment of FIG. **5**A, the sensor electronics module **512** comprises a telemetry module that is configured to communicate with the first display device **550**, which in turn, is configured to communicate with multiple other display devices via the Internet **560**. For example, the sensor electronics module **512** may include a Bluetooth transmitter that transmits data packages, such as in response to triggering of an alert, to the first display device **550**, such as a mobile phone. In this example, the mobile phone may also include wireless Internet capabilities, such as might be provided by Wi-Fi or WiMax circuitry, such that the mobile phone can communicate with other devices in communication with the Internet **560**. Accordingly, the sensor electronics module **512** may transmit data packages to a nearby display device **550**, along with an indication that the display device **550** should transmit the data package (or a portion of the displayable sensor information in the data package) to one or more other display devices (such as display devices that are not in close proximity to the sensor electronics module **512**), via the Internet **560**. In this embodiment, displayable sensor information is transmitted to remote display devices through the use of an intermediate display device **550**. In other embodiments, the sensor electronics module **512** is configured to transmit data packages according to two or more communication protocols, such as Bluetooth and Wi-Fi. In that embodiment, the sensor electronics module **512** may communicate with the display device **550** via Bluetooth and may communicate with the display devices **552**, **554** via the Internet **560** (without the need for the data to be retransmitted by the display device **550**), for example.

In the embodiment of FIG. **5**A, a pacemaker **526** is in communication with the glucose sensor **550**. In this embodiment, the pacemaker **526** may transmit data to the glucose sensor **550** and/or may receive data, such as control signals, from the glucose sensor **550**. In this embodiment, the glucose sensor **550** functions as a repeater, transferring control signals from the sensor electronics module **512** to the pacemaker **526**, such as in response to triggering of an alert based on sensor data from one or more of the glucose sensor **550**, the accelerometer **524**, and/or the pacemaker **526**. In one embodiment, control signals transmitted to the pacemaker **526** may indicate changes in operation of the pacemaker **526**, such as increasing or decreasing a frequency of stimulation applied by the pacemaker **526**. In another embodiment, the pacemaker **526**, or other devices such as an insulin pump or a brain scintillator, may be coupled directly to the sensor electronics module **512**, via a wired and/or wireless communication path. Accordingly, the sensor electronics module **512** may receive sensor data from multiple sensors, process the sensor data in order to generate transformed sensor data, determine if any alert conditions have been satisfied by the sensor data and/or the transformed sensor data, and perform actions associated with any triggered alerts, including transmission of control signals to other devices, such as the pacemaker **526**, and transmission of customized data packages to one or more display devices.

FIG. **5**B is a diagram illustrating one embodiment of the sensor electronics module **512** configured to transmit control signals to biological devices coupled to the host. In the embodiment of FIG. **5**B, the sensor electronics module **512** receives sensor data from a glucose sensor **550**, and possibly other sensors, and transmits control signals to one or more of the insulin pump **560**, the pacemaker **570**, and/or the brain scintillator **580**. Other biological devices that provide medicines and/or stimulations to the host may also be in communication with the sensor electronics module **512**. In the embodiment of FIG. **5**B, an exemplary temporal flow of data is indicated by the circled numerals. In step one of the exemplary process (indicated by the circled "1" in FIG. **5**B), the glucose sensor provides raw sensor data to the sensor electronics module **512**, such as on a periodic or intermittent basis. In step two, the sensor electronics module **512** processes the sensor data, generates any transformed sensor data that is required to determine if any alerts have triggered, and determines if any alerts have triggered based on the received sensor data and/or transformed sensor data. In this embodiment, one possible action associated with a triggered alert is to transmit control signals to one or more other biological devices, such as the insulin pump **560**, the brain scintillator **580**, and/or the pacemaker **570** (e.g., step **3** of FIG. **5**B). For example, a hyperglycemic alert may be associated with an action of transmitting a control signal to the insulin pump **560** indicating that insulin should be pumped to the host, and possibly details of a dosage and/or time for providing the insulin to the host. Similarly, a low heart rate alert, such as based on data received from a heart rate sensor (not shown) may include an action of transmitting a control signal to the pacemaker **570** indicating that the pacemaker should adjust a timing and/or algorithm at which impulses are administered to the host. Accordingly, a sensor electronics module **512** may receive sensor data from one or more sensors, process the sensor data in order to determine if any alerts are triggered, and perform actions associated with triggered alerts that cause control signals to be transmitted to respective biological devices, such as those illustrated in FIG. **5**B.

In the embodiment of FIG. **5**B, biological devices **560**, **570**, **580** are each in communication with the sensor electronics module **512** via a wireless communication link, such as radio frequency, Bluetooth, or ANT communications. In other embodiments, one or more of these biological devices may be directly physically coupled to the sensor electronics module, such as via one or more data lines. In another embodiment, one or more of the biological devices may be integral to a sensor, such as glucose sensor **550**, such that control signals from the sensor electronics module **512** may be transmitted to a integrated sensor/biological device. In yet another embodiment, the sensor electronics module transmits indications of control signals to an external device, such as a display device, which then relays the appropriate control signal to the corresponding biological device. For example, the sensor electronics module **512** may transmit an indication of a control signal to a cellular phone of the host, for example, with an indication that the control signal should be transmitted to a particular biological device, such as the brain scintillator **580**. In one embodiment, the communication protocol used by the sensor

electronics module **512** in communicating with the cellular telephone is different than a communication protocol used by the cellular telephone in communicating with the brain scintillator **580**. Accordingly, the sensor electronics module **512** may communicate with a wider range of biological devices through the use of another device, such as a display device, that receives the control signal indications via a first communication protocol (e.g., Bluetooth) and transmits corresponding control signals to the appropriate biological devices via a second communication protocol (e.g., Radio Frequency), which the sensor electronics module may not be configured to use.

FIG. **5**C is a diagram illustrating one embodiment of the sensor electronics module **512** in communication with multiple sensors, wherein the sensor electronics module **512** transmits data packages to multiple display devices via multiple networks, such as the Internet **560** and a telephone network **565**. In the embodiment of FIG. **5**C, the sensor electronics module **512** is in communication with the Internet **560** as well as a telephone network **565**, which may comprise one or more cellular networks, digital or analog wireless telephone networks, or plain old telephone service (POTS) networks. Thus, in the embodiment of FIG. **5**C, the sensor electronics module **512** may transmit short message service (SMS) messages, for example, to the display device **554**. Additionally, the sensor electronics module **512** may transmit other types of messages, such as voice messages, paging signals, or other data packages, via the telephone network **565**. In this embodiment, the sensor electronics module **512** is also configured to transmit data packages to the other display devices **550**, **552** via the Internet **560**.

FIG. **6** is a flowchart illustrating one embodiment of a method of generating customizable data packages for delivery to respective display devices, such as based on user-defined delivery options. As noted above, the sensor electronics modules discussed herein advantageously allow customization of displayable sensor information, such as combinations of sensor data and/or transformed sensor data, for transmission to respective display devices. Depending on the embodiment, the method of FIG. **6** may include viewer or additional blocks in the blocks may breed performed in a different order than is illustrated.

Beginning in block **610**, the sensor electronics module intermittently receives and/or processes sensor data from one or more sensors, such as a glucose sensor, accelerometer, altimeter, or any other sensor. Each of the sensors that transmit sensor data to the sensor electronics module may have a predetermined or dynamic schedule for transmitting sensor data. For example, a first sensor may transmit sensor data to the sensor electronics module on a consistent periodic basis, such as one sensor data point per minute, 5 minutes, 10 minutes, 30 minutes etc., while a second sensor may transmit sensor data to the sensor electronics module only when the sensor data reaches a certain threshold. For example, an altimeter may only transmit sensor data to the sensor electronics module **512** when an altitude of the altimeter is above a predetermined threshold.

Moving to block **620**, the sensor data received from the one or more sensors is stored, such as in one or more memories and/or storage devices of the sensor electronics module. With reference to the embodiment of FIG. **2**, the sensor data may be stored in the data storage memory **220** and/or the random access memory **218**.

Next, in block **630** the sensor electronics module determines if one or more alerts have been triggered. As noted above, each alert is associated alert conditions that must be met in order for the respective alert to trigger. The alert conditions could be any characteristic of the sensor data, transformed sensor data, a display device, a host, or an operator of a display device, along with other characteristics. For example, two different alerts that are each related to the host reaching a hypoglycemic glucose level may have slightly different alert conditions that must be satisfied in order to trigger the alerts. For example, a first hypoglycemic alert may require that the host's glucose level is below a first threshold and that a temperature of the host is above a certain threshold, while a second hypoglycemic alert may only require that the host's glucose level is below a second threshold (which may be slightly lower than the first threshold). In this embodiment, the first and second hypoglycemic alerts may be associated with actions that are quite different, such as transmission of data packages of various content and formatting to different display devices.

If the sensor electronics module determines that an alert has triggered in block **630**, the method continues to block **640** where one or more actions associated with the triggered alert are initiated. For an action that includes transmission of one or more data packages to a respective one or more display devices, each of the data packages may be associated with one or more delivery options indicating the content (e.g., which displayable sensor information, such as sensor data and/or transformed sensor data, should be included in the data package) and/or formatting requirements for the indicated displayable sensor information, such as whether the displayable sensor information should be in a textual or graphical format. Other actions might include alarms that are associated with the sensor electronics module or a display device, such as activation of a vibrator motor or audio transducer, for example.

In block **650**, the sensor electronics module determines the delivery options associated with the actions of the triggered alert and generates the appropriate displayable sensor information in response to the delivery options. In one embodiment, the sensor electronics module performs algorithmic operations on the sensor data in order to generate transformed sensor data, such as trending data, which is stored in the sensor electronics module for later access. In other embodiments, the sensor electronics module executes algorithms on the sensor data in response to triggering of an alert, such that the transformed sensor data included in the data package is generated after the alert is triggered. Alternatively, the sensor electronics module may generate some transformed sensor data as the sensor data is received and may also generate additional transformed sensor data in response to triggering of an alert. In one embodiment, the displayable sensor information is selected according to parameters of the alert action, and the displayable sensor information is combined into one or more data packages for transmission to the display device indicated in the action.

Next, in block **660**, the generated data package is transmitted to display device indicated in the alert action. If more than one action is associated with a triggered alert, multiple data packages may be generated and transmitted to respective display devices. Accordingly, the sensor electronics module allows customization of alert notifications including various levels of detail that are desired by the host or other interested parties.

FIG. **7** is a flowchart illustrating one embodiment of a method of generating customizable data packages for delivery to requesting display devices, such as in response to receiving a request for certain sensor information from a display device. In one embodiment, a display device may request sensor information from the sensor electronics module, rather than waiting to receive a data package from the

sensor electronics module in response to triggering of an alert. For example, a display device, such as a mobile telephone, may be configured to request certain displayable sensor information up to once a day whenever the mobile device is within Bluetooth range of the sensor electronics module. Thus, the mobile telephone may receive displayable sensor information even when alerts having actions for delivery of displayable sensor information to the mobile telephone are not triggered. Depending on embodiment, the method of FIG. **7** may include fewer or additional blocks and blocks may be performed in a different order than is illustrated.

Beginning in block **710**, the sensor electronics module periodically receives sensor data from one or more sensors. As noted above, the sensor electronics module may be configured to receive data from any type of sensor via any suitable wired and/or wireless communication protocols.

Next, in block **720**, the received sensor data is stored. Depending on embodiment, sensor data may be stored for predetermined time periods and/or predetermined quantities. For example, data from one sensor may be removed from the sensor electronics module after it is more than 30 days old, while data from another sensor may remain in the sensor electronics module until storage space on the sensor electronics module reaches a certain threshold.

Continuing to block **730**, the sensor electronics module determines if a request for displayable sensor information has been received from a display device. If no request for displayable sensor information has been received, the method returns to block **710** where sensor data from the one or more sensors continues to be received. If, however, a request for displayable sensor information has been received from a display device, or from another device, the method continues to block **740**.

In block **740**, the sensor electronics module determines if the request for displayable sensor information includes custom delivery options for the displayable sensor information. For example, the delivery options may include indications of particular sensor data and/or transformed sensor data that are to be included in the displayable sensor information, as well as possibly formatting instructions for the displayable sensor information.

If the request does include delivery options, the delivery options are selected in block **750**. If, however, the request does not include delivered options, the method continues to block **760**, where default delivery options are selected. In one embodiment, the default delivery options comprise a standard set of displayable sensor information with formatting options that are compatible with many/most display devices. In another embodiment, default delivery options may be specific to one or more attributes of the requesting display device, such as a type, make, or model of the display device. In other embodiments, the default delivery options may be based on other attributes, such as a time of day at which the request is received, a status of the requesting display device, or a transmission protocol by which the data package will be transmitted to the requesting display device, for example. In other embodiments, default delivery options may be determined based on any other relevant factors.

In block **770**, the sensor electronics module generates and/or retrieves the requested content, such as sensor data and/or transformed sensor data, and formats the data according to the selected default and/or custom delivery options. If delivery options were received in the request, displayable sensor information is selected and formatted according to the receive delivered options. Alternatively, if no delivery options were received in the request, displayable sensor information is selected and formatted according to one or more default delivery options.

In block **780**, the displayable sensor information is packaged into one or more data packages and transmitted to the requesting display device. In one embodiment, a requesting display device may indicate a different recipient of the requested displayable sensor information. For example, a first display device, e.g., a mobile telephone, may send a request for displayable sensor information to a sensor electronics module indicating that the requested displayable sensor information be transmitted to a notebook computer rather than, or in addition to, transmitting the requested displayable sensor information to the requesting mobile telephone. In one embodiment, the request may include multiple sets of delivery options associated with multiple recipients of displayable sensor information.

FIG. **8** is a flowchart illustrating one embodiment of a method of selecting delivery options for a data package based on one or more of a plurality of attributes. As noted above, delivery options may be associated with one or more of a plurality of attributes associated with a triggered alert, a host, a time of day/week/month, a location of a host, a recipient display device, a display device characteristic (e.g., a type, model, and/or make of display device), and/or any other relevant characteristics. Thus, delivery options, such as what sensor data and transformed sensor data should be included in the displayable sensor information, and how the displayable sensor information should be formatted for delivery, may be based on multiple characteristics.

The method of FIG. **8** illustrates selection of delivery options associated with a few exemplary characteristics. The method of FIG. **8** may be performed, for example as part of an alert action that is initiated in response to triggering of an alert. Thus, in one embodiment the method of FIG. **8** describes an exemplary method of selecting delivery options for transmission of a data package to a particular delivery device in response to triggering of an alert. In other embodiments, delivery options may be selected based on any other characteristic. The relationship of delivery options to the characteristics discussed below, as well as other characteristics, may be stored in any suitable data structure, such as a database, a flat file, a spreadsheet, a text document, or any other file structure. Depending on the embodiment, the method of FIG. **8** may include fewer or additional blocks and blocks may be performed in a different order than is illustrated.

Beginning in block **810**, the sensor electronics module determines if a delivery option is associated with a triggered alert. If a delivery option is associated with a triggered alert, the method continues to block **815** wherein the appropriate delivery options are selected. In certain embodiments, depending on the alert, certain sensor data and/or transformed sensor data may be important to transmit to the corresponding delivery device. For example, key information associated with a first alert may include a series of sensor data points from a glucose monitor, while key information associated with a second alert may include transformed data indicating a 60 minute trend in the glucose level of the host. Thus, each alert may be associated with different displayable sensor information and/or options for formatting the displayable sensor information.

Continuing to block **820**, the sensor electronics module determines if a delivery option is associated with the delivery device and/or one or more users of the delivery device. For sample, if an alert action indicates that a data package should be transmitted to an electronic medical records (EMR) sys-

tem, a sensor electronics module may select certain displayable sensor information for delivery to the EMR. Similarly, if an alert action indicates that a data package should be transmitted to a cell phone, a sensor electronics module may select different (e.g. a much smaller subset) displayable sensor information for delivery to the cell phone. Additionally, the formatting of the displayable sensor information for delivery to an EMR and a cell phone, for example, may be customized by the sensor electronics module based on the type of display device.

In certain embodiments, the sensor electronics module may determine respective users of receiving displayed devices and customize the displayable sensor information transmitted to the respective display devices accordingly. For example, a mother of a diabetic child that wears a sensor electronics module may always be interested in knowing the location of her child when alerts are transmitted to her. Accordingly, if the sensor electronics module determines that the mother is the user of a receiving display device, whether the display device is a cell phone, a notebook computer, or desktop computer, for example, the sensor electronics module may include the child's location in the displayable sensor information that is included in the corresponding data package. If delivery options are associated with the receiving delivery device and/or the user of the delivery device, the method continues to block **825** where the corresponding delivery options are selected.

Moving to block **830**, the sensor electronics module determines if a delivery option is associated with a location of the host and/or the delivery device. In one embodiment, the sensor electronics module includes a global positioning system (GPS) sensor that determines an approximate or precise location of the sensor electronics module. In other embodiments, the sensor electronics module may include other circuitry that determines a location of the sensor electronics module, such as using cell phone communication signals, for example. In one embodiment, the delivery options for a data package may be modified based on the current location of the associated host. For example, if the host is at home, the delivery options may indicate that a minimal set of displayable sensor information is included in the transmitted data package. However, if the host is at an unknown location, the delivery options may indicate that a more comprehensive set of displayable sensor information is included in the transmitted data package. If delivery options are associated with the location of the patient and/or recipient, the method continues to block **835** where those delivery options are selected.

Continuing to block **840**, the sensor electronics module determines if a delivery option is associated with a temporal characteristics, such as a time of day or day of the week, for example. Thus, the delivery options may be adjusted based on the time at which the alert is triggered. For example, if a near hypoglycemic alert is triggered at 7 a.m. and the host typically eats breakfast at about 7:30 a.m., the delivery options may indicate only a minimal set of displayable sensor information for transmission to a display device of the host. However, if the near hypoglycemic alert is triggered at 10 p.m., a more complete set of displayable sensor information may be selected for transmission to the display device of the host. Similarly, a display device, either of the host or another interested party, may receive data packages with displayable sensor information that is customized based on the day of the week on which the corresponding alert was triggered. For example, the content of displayable sensor information may vary depending on whether the alert is triggered on a weekday or a weekend. If delivery options are associated with the one or more temporal characteristics the method continues to block **845** where those temporal characteristics are selected.

Next, in block **850** the sensor electronics module generates a data package according to the selected delivery options (e.g., in blocks **815**, **825**, **835**, **845**) and initiates transmission of the data package to the delivery device indicated in the delivery action. Accordingly, the data package comprises displayable sensor information that is customized based on one or more of multiple parameters, including those parameters discussed with respect to FIG. **8**, elsewhere in this specification, and any other relevant parameters.

In other embodiments, certain delivery options may be included as alert conditions of respective alerts. Thus, if a delivery option is included as an alert condition (e.g., do not deliver data packages during a certain time period), the alert would not trigger unless the alert condition is satisfied.

FIG. **9** is a flowchart illustrating one embodiment of a method of generating and transmitting a data package that is customized according to a status of the host and/or a status of the receiving display device. For example, statuses may include one or more of resting, exercise, do not disturb, illness, menstruation, mealtime, snooze, day, night, hyperglycemia, hypoglycemia, clinical risk, noise, and the like. In one embodiment, different statuses of the host indicate to the sensor electronics changes in how sensor data should be analyzed, such as how transformed sensor data is determined. Depending on the embodiment, statuses of the host may be automatically detected by the sensor electronics module, other sensors or devices associated with the host, and/or display device of the host. For example, an accelerometer that communicates with the sensor electronics module may provide data that is indicative of running motion, such that the sensor electronics module determines that a status of the host is "exercise" or the like. Statuses may also be determined from other sensor data, such as transformed sensor data, from a glucose sensor, for example. Additionally, statuses of the host and/or display devices (or the user of the display device) may be changed according to a status schedule, such as a schedule indicating that the host should be in sleep mode from 10 pm to 7 am each night and that a particular display device is in do not disturb mode from 1 pm to 4 pm Monday through Friday. In other embodiments, the status of a host may be provided by the host (or caretaker of the host) via a user interface of the sensor electronics module or a display device. For example, a display device of the host may include an interface that allows the host to select from a group of statuses, such as by scrolling through a list of status indicators (graphical and/or textual). Any other suitable user interface may also be used for selecting statuses and/or creating new statuses. In one embodiment, a timer may be associated with a status change such that after an indicated time period the status of the host returns to a default status. For example, a host may change their status to "exercise" when entering a gym for a one hour training session and may associate a 60 minute (or slightly longer) timer with the status so that their status is returned to a default status automatically after the workout is complete.

In one embodiment, the status of the host may affect alert conditions associated with one or more alerts, such that certain sensor data and/or certain transformed sensor data might trigger an alert when the host is in a first status, but would not trigger an alert when the host is in a second status. For example, when a person is exercising, his/her glucose levels may increase or decrease in trends that would be abnormal under any other circumstances; by setting the appropriate status, the sensor electronics module is configured to modify its processing associated with the user in a particular status,

e.g., "exercise status" to trigger alerts, analyte estimates, trend information, therapy recommendations, and the like, customized with one or more criteria associated with exercise. Additional disclosure of statuses that are associated with a host of a glucose sensor are discussed in commonly own U.S. patent application Ser. No. 12/258,345, entitled "systems and methods for processes sensory data," filed on Oct. 24, 2008, which is hereby incorporated by reference in its entirety.

In one embodiment, a user (e.g., the host to which the sensor electronics module is coupled) may enter events in real time (or retrospectively) in a display device and the events may be transmitted to the sensor electronics module. In one embodiment, the events are useful when the historical sensor data and/or transformed sensor data is later analyzed. Events may be entered to indicate when a particular action was taken by the host, such as when carbohydrates were consumed, when insulin was taken, when exercise was performed, when any relevant change in the health of the host occurs, and/or any other event that might possible effect the sensor data. These events may include more detailed information regarding the respective event, such as an indication of an insulin dosage associated with an insulin event or an indication of a particular type of exercise performed and a total exercise time that are associated with an exercise event. The events could then be represented textually and/or pictorially in the displayable sensor information that is transmitted to display devices. Accordingly, triggering of an alert that would otherwise raise great concern may not be as worrisome when events surrounding the alert trigger are viewable by the user of the display device.

In some embodiments, the event data may be used to modify when alerts are triggered and/or when/how data packages are transmitted to respective display devices. For example, entry of an event may cause adjustments to algorithms that are used in real-time generation of transformed sensor data. Thus, similar to the use of statuses discussed above, the events associated with the host may be used in the real-time determination of alert triggers and delivery of displayable sensor information, as well as being useful in later analysis of sensor information associated with the host.

In the method of FIG. **9**, statuses are associated with display devices so that the delivery options for transmitting a data package to a display device may be modified according to a current status of the receiving display device. Depending on embodiment, the method of FIG. **9** may include fewer or additional blocks and the blocks may be performed in a different order that is illustrated.

Beginning in block **910**, the sensor electronics module determines if an alert is triggered. As discussed above, alerts may be triggered based on raw sensor data, transformed sensor data (e.g., calibrated and/or filtered data), or any other data from one or more sensors.

Next, in block **920**, the sensor electronics module identifies a delivery action associated with a triggered alert. As discussed above, a delivery action is a specific type of action wherein a data package comprising displayable sensor information is generated and transmitted to an indicated display device. Thus, with identification of a delivery action, a corresponding display device is also identified in block **920**.

Continuing to block **930**, the sensor electronics module determines a current status of a display device indicated in the identified delivery action. In one embodiment, a status of certain display devices may be determined without receiving real-time information from the respective display device. For example, a status schedule indicating statuses of a display device that are associated with various times/dates may be accessed in order to determine a current status of the display device. Similarly, a status rule may indicate that a particular display device is always in night status between 9 p.m. and 9 a.m. Other formats and types of status schedules may also be used.

In one embodiment, the sensor electronics module determines a current status of the display device by requesting status information from the display device. For example, a status request signal may be transmitted to the display device (or to a service provider associated with the display device or another device that maintains updated status information) prior to transmission of the indicated data package. In one embodiment, the status request signal does not cause the display device to perform any functions that are readily detectable by the user of the display device, but only causes the display device to respond to the sensor electronics module with an indication of a current status of the display device. Thus, the sensor electronics module may determine a status of the display device without interrupting the user of the display device in the event that a current status of the display device indicates that the user does not wish to be interrupted with data packages (or at least data packages associated with certain types of alerts). In some embodiments, the display device may transmit an indication of when the current status will change to a different status, such as when a sleep status will change to an awake status. Thus, the sensor electronics module may delay transmission of a data package until the display device is in a status wherein transmission of the data package is appropriate. In other embodiments, a status of a display device may be determined in any other manner.

Moving to block **940**, the sensor electronics module determines delivery options associated with the current status of the display device. For example, certain statuses may include no delivery options, such that the delivery options already associated with the delivery action are used in generating the data package. Other statuses, however may include delivery options that limit or expand the content of the displayable sensor information, adjust the formatting of the displayable sensor information, and/or adjust the method by which the displayable sensor information is transmitted to the display device. Accordingly, the user of the display device may customize the displayable sensor information that is delivered to the display device by adjusting a status of the display device.

Continuing to block **950**, the sensor electronics module initiates transmission of the data package that is generated according to the delivery options associated with the current status of the display device. In some embodiments, certain statuses may cause the sensor electronics module to not generate a data package for transmission to the delivery device in response.

Next, in block **960**, the sensor electronics module determines if additional delivery actions are associated with the triggered alert. For example, certain alerts have multiple associated delivery actions, each indicating delivery options for respective display devices. If the triggered alert is associated with one or more additional delivery actions, the method returns to blocks **920-950** wherein the status of another display device is determined and an appropriate data package, if any, is generated and transmitted.

FIGS. **10**A and **10**B are block diagrams illustrating one embodiment of a sensor module **1012** that is configured to alternatively couple with each of a plurality of modular devices **1020**, **1030**, **1040**, **1050**, **1060**, and/or other devices, each having different functionalities. FIG. **10**A illustrates the sensor module **1012** along with multiple modular devices that may be alternately attached to the sensor module **1000** and FIG. **10**B illustrates exemplary components of a sensor mod-

ule **1012**. As illustrated in FIG. **10**B, the sensor module **1012** comprises fewer components than the sensor electronics module **12** of FIG. **2**, for example. Accordingly, the sensor module **1012** may be a much smaller device that is less bothersome to the host. Advantageously, however, a host may attach modular devices to the sensor module **1004** in order to allow the sensor module **1012** to perform additional functions.

The exemplary sensor module **1012** comprises a sensor **1014**, which may be integral to the sensor module **1012** or may be attached to one or more electrodes (or other connection port) of the sensor module **1012**. The sensor module **1012** also includes a processor **1018**, such as a conventional microprocessor, an ASIC, an FPGA, or any other processing logic, as well as a storage device **1016** that stores sensor data from the sensor **1014** and possibly transformed sensor data that is determined by the processor **1018**. In one embodiment, the storage device **1016** is configured to store only a small portion of the data that data storage memory **220** of the sensor electronic module **12** (FIG. **2**) is configured to store.

Advantageously, the sensor module **1012** comprises a module interface **1019** comprising both a physical and an electrical interface for coupling with modular devices, such as those of FIG. **10**A. For example, the module interface **1019** may be configured such that a modular device may releasably lock into attachment with the sensor module **1012**. Additionally, in certain embodiments the coupling of the modular devices with the module interface **1019** causes one or more electrical contacts of each component to engage in order to communicate data between the sensor module **1012** and the respective modular device.

Modular devices that may be coupled to the sensor module **1012** vary greatly and may include a Wi-Fi/Bluetooth module **1020** that is configured to add additional communication capabilities to the sensor module **1012**. In other embodiments, the module **1020** may be configured to communicate using additional communication protocols. With the module **1020** attached to the sensor module **1012**, the sensor module **1012** may transmit data packages, such as in response to triggered alerts, to one or more display devices using Wi-Fi, ANT and/or Bluetooth communications. Another modular device is a GPS module **1030** that provides location data to the sensor module **1012**. As described above, in certain embodiments location conditions are included in alert conditions for certain alerts and might be included in displayable sensor information that is transmitted to one or more display devices. Thus, the sensor module **1012** may use the location data from the GPS module **1030** in order to determine if such alert conditions have been met.

Modular devices that may be attached to the sensor module **1012** may also include a display device **1040**, which may include any size of display panel, such as an LCD or OLED display, for example. Depending on the embodiment, the display module **1040** may be able to display different types of displayable sensor information formatted using various formatting options. A sensor electronics module **1060** comprising additional processing logic, data storage space, and user interface controls, for example, may also be removably coupled to the sensor module **1012**. Depending on embodiment, the sensor electronics module **1060** may have all, or some subset of, the features discussed herein with respect to other sensor electronics modules. In one embodiment, a glucose meter reference module **1050** may be coupled to the sensor module **1012**. The glucose meter reference module **1050** may be configured to determine a reference glucose level of the host in order to calibrate the sensor data received from the sensor **1014**.

In one embodiment, the sensor module **1012** also includes an alarm device, such as a light or speaker that is activated in response to triggering of certain alerts. Thus, if an alert is triggered, such as based on sensor data and/or GPS location data provided by the GPS module **1030**, the sensor module **1012** may activate a light of the sensor module **1012** in order to alert the host to the triggering of the alarm. Depending on embodiment, different patterns of activation/deactivation of the light and/or speaker may be used to indicate triggering of different alerts.

FIG. **11** illustrates an exemplary user interface **1100** for defining alert conditions. In one embodiment, default alert conditions (e.g., that might be set by a manufacturer of the sensor electronics module) are used in determining whether alerts have been triggered. In other embodiments, a user of the sensor electronics module, such as the host or a guardian of the host, for example, may establish custom alerts having user-defined alert conditions. In the embodiment of FIG. **11**, the user provides an alert ID **1110** and minimum and/or maximum threshold levels for each of one or more sensors data or transformed sensor data. In embodiment of FIG. **11**, alert conditions for three sensors, namely, a glucose sensor, a temperature sensor and a pulse sensor, may be established. In other embodiments, fewer or additional sensors may be included in a similar user interface in order to allow defining alert conditions based on those sensors.

The exemplary user interface **1100** includes a glucose conditions portion **1120**, a temperature conditions portions **1130**, and a pulse conditions portion **1140**, where each of the portions allow the user to set conditions associated with the respective sensor data and/or transformed sensor data. In the embodiment of FIG. **11**, the alert ID provided by the user is "Hypo1", which may be triggered in order to indicate that the host is approaching hypoglycemia. In this embodiment, the user has set a glucose condition requiring that the glucose level is less than 70 mg/dL and that a rate of change of the glucose level (in mg/dL/min) is less than five. Each of these conditions associated with a glucose sensor data must be met in order for the Hypo1 alert to trigger. In the example of FIG. **11**, the user interface **1100** does not include any conditions associated with a temperature sensor. However, in other embodiments alert conditions associated with a current temperature of the host, temperature change trends, and/or any other transformed sensor data associated with a temperature sensor, may be included in an alert condition.

The pulse conditions portion **1140** indicates that the pulse of the host must be below 80 beats per minute and the pulse must have changed at least 15 beats per minute over the last five minutes. Accordingly, based on the conditions indicated in exemplary FIG. **11**, the Hypo1 alert is triggered when the glucose level of the host is 70 or below, the glucose rate of change is five or below, the pulse is 80 or below, and the pulse has changed at least 15 beats per minute over a five minute period. In other embodiments, other conditions associated with other sensors may be established in a similar manner. Once the user is satisfied with the alert conditions, a save button **1150** may be selected in order to store the newly defined alert in a data structure that is accessible to the sensor electronics module.

FIG. **12** illustrates an exemplary user interface **1200** for defining display device characteristics. In certain embodiments, delivery options are determined based on a type, make, model, or other characteristic of a display device. Thus, in certain embodiments, characteristics of display devices that are available to receive data packages from the sensor electronics module may be defined so that the sensor electronics module may determined delivery options for respective dis-

play devices. Additionally, in certain embodiments alert conditions may be based on one or more characteristics of a display device.

In the embodiment of FIG. **12**, a user supplies a device ID **1210**, a device type **1220**, a device manufacturer **1230**, and a device model **1240** via any suitable data entry controls. For example, a device type may be provided via a drop-down list wherein the user can select a type of display device from a series of listed display devices. Similarly, a device manufacturer and device model may be selected by drop-down lists where the options illustrated in the drop-down lists are narrowed as more general information regarding the device is received. For example, once a user selects a device type, the choices of device manufacturers may be narrowed to only those device manufacturers that manufacture the selected device type. In other embodiments, fewer or additional device characteristics may be provided by the user. When the appropriate device characteristics are selected, the user selects a save button **1250** that initiates the storage of the device characteristics in a data structure that is accessible by the sensor electronics module.

FIG. **13** illustrates an exemplary user interface **1300** for establishing delivery options associated with respective alerts and display devices. Using the user interface **1300**, delivery options may be established for respective display devices that are associated with respective alerts, such as customized alerts and/or default alerts. In the embodiment of FIG. **13**, a display device and an alert are selected in the device selection portion **1310** and alert selection portion **1320**, respectively. In this embodiment, the devices that have been set up by a user, such as via a user interface similar to that of FIG. **12**, are listed in a drop-down box **1312**. Similarly, the alerts that have been established by the user, such as via the alert conditions interface **1100** of FIG. **11** and/or other default alerts are displayed for selection in an alert drop-down box **1314**.

In the exemplary user interface **1300**, the user has selected the "joesphone" display device to receive a data package in response to triggering of the Hypo1 alert. The lower portion of the user interface **1300** allows the user to establish delivery options, such as which sensor data and/or transformed sensor data should be included in the displayable sensor information that is transmitted to the selected display device. In this embodiment, the user may select a minimum and/or maximum frequency at which data packages associated with the selected alert should be transmitted to the selected display device. The frequency of sending alerts may change depending on one or more attributes of the sample data, the triggered alert, actions taken by the host in response to the alert, a status of the host or display device, and any other characteristic of the host. For example, a data package associated with a severe hypoglycemia condition may be transmitted frequently (e.g., every 5 minutes), while a data package associated with a near hypoglycemia condition may be transmitted only once each hour (assuming the alert conditions associated with near hypoglycemia are still matched by the sensor data at each one hour interval). Additionally, the frequency of retransmitting data packages associated with an alert may accelerate (or decelerate) over time, such as sending a severe hypoglycemia data package every minute for the first 10 minutes after the alert conditions are matched and thereafter sending a data package every 5 minutes. Depending on the embodiment, (re)transmissions of data packages that are associated with delivery options indicating multiple (re)transmissions of the data packages may be delayed and/or halted in response to triggering of other alerts associated with the host, performing of an action by the host, or actions by the receiving display device. For example, delivery options may indicate that data packages associated with a hyperglycemic condition are stopped in response to the host receiving insulin (either manually or automatically). Additionally, a user of a particular display device may indicate that they do not wish to receive further data packages associated with a triggered alert, such as after receiving a first data package including information regarding the triggered alert.

Additionally, the user may select displayable sensor information that will be transmitted to be selected display device in response to triggering of the selected alert. The data content portion **1340** lists only a few of the content items that may be selected for inclusion in displayable sensor information that is transmitted to the display device. In other embodiments, the format of the selected data content may also be established in a user interface similar to that of FIG. **13**. For example, a user may indicate whether a five-minute trend information should be formatted as a line graph, bar graph, pie graph, or in some other format. Accordingly, the user is provided great flexibility in how the sensor electronics module transmits data to each of multiple display devices.

FIG. **14**A illustrates a portion of an exemplary alert data structure **1400**. Although the data structures discussed herein are illustrated in a particular arrangement in the corresponding drawings, the data structures may include any other type and/or format of data structure, such as a database, a table, a flat file, a spreadsheet file, or any other file that stores data. In the embodiment of FIG. **14**A, the data structure **1400** includes an alert ID column **1410**, a display device address column **1420**, a device type column **1430**, and a frequency column **1440**. In this embodiment, when an alert is triggered, such as the alerts listed in column **1410**, a delivery action is initiated, wherein a generated data package is transmitted to each of the delivery addresses listed in column **1420** that are associated with the triggered alert. In this embodiment, the delivery options associated with respective data packages are determined based on the device type listed in column **1430**. For example, FIG. **14**B illustrates a delivery options data structure **1450** that indicates particular data content to include in the transmitted displayable sensor information based on the device type indicated in column **1430**. For example, the exemplary delivery options data structure **1450** indicates that for a mobile device type, the displayable sensor information includes a 10 minute trend and a one hour trend. In other embodiments, the delivery options data structure also includes formatting options for particular content.

Returning to FIG. **14**A, the frequency column **1440** indicates a maximum (and/or minimum) frequency at which data packages should be transmitted to the corresponding delivery addresses (in column **1420**, for example). Thus, the hypoglycemic alert of FIG. **14** triggers a delivery action to six different delivery addresses, including Joe@MSN.com, Linda@e-mail.com, ftp://admin:pass@123.12.12.42, etc. Thus, when the hypoglycemic alert is triggered, data packages comprising displayable sensor information that is selected based on a type of display to which the data package is to be sent are generated. Accordingly, the data package that is delivered to joe@MSN.com is generated based on the display device characteristics for a mobile device, such as those in column **1460** of FIG. **14**B. Similarly, the delivery options for the data package that is transmitted to Linda@e-mail.com, which column **1430** indicates is associated with a PC, are determined based on the delivery options of column **1470** in FIG. **14**B.

FIGS. **15**A and **15**B illustrate exemplary data structures that may be used to establish alerts, detect when alert conditions are met, and generate customized data packages for different display devices based on one or more of multiple factors. FIG. **15**A illustrates a device data structure **1500** that

stores device characteristics associated with each of one or more device IDs. In one embodiment, the data of FIG. **15**A is provided by a user via a user interface, such as user interface of FIG. **12**. The exemplary data structure **1500** comprises a device ID column **1510** that lists a device ID that is specific to a particular display device, a device address column **1512** that indicates an address to which the data package for the corresponding display device should be delivered, a device type column **1514** that indicates a type of device, and a device model column **1516** that indicates a model of the particular device. In other embodiments, fewer or additional characteristics of the devices may be included in a similar data structure.

FIG. **15**B illustrates an alert data structure **1520** that provides alert actions corresponding with each of a plurality of alerts, as well as delivery options for specific display devices indicated in the alert actions. In particular, the data structure **1520** includes an alert column **1522** that includes an alert ID of the alerts for which alert actions are to be performed. An alert action column **1524** lists an action that should be performed when the corresponding alert is triggered, such as a device ID associated with a delivery action. In this embodiment, the device characteristics may be determined by accessing the data structure of **15**A, for example. The data structure **1520** also includes a plurality of delivery options in columns **1530**. As discussed above, delivery options may include indications of the content of sensor data and/or transformed sensor data that should be included in the displayable sensor information transmitted to a display device, as well as limits on the frequency at which such data packages are transmitted to the display device, and/or formatting options for the displayable sensor information.

FIG. **16** is a multi-sensor alert data structure **1600** storing alert conditions associated with multiple sensors in alert conditions section **1610**. Thus, the data structure of FIG. **16** defines alert conditions in columns **1610** and includes a device ID and column **1620** that may be used to indicate display device and specific delivery options for delivery of data packages in response to triggering of alerts. In one embodiment, delivery options may also be customized based on the type of device to which a data package is transmitted, where device characteristics may be determined using a table such as that of FIG. **15**A.

In other embodiments, various other arrangements of data may be utilized to allow the sensor electronics module to customize displayable sensor data for each of a plurality of display devices in response to triggering of alerts (that may be customized also).

Methods and devices that are suitable for use in conjunction with aspects of the preferred embodiments are disclosed in U.S. Pat. Nos. 4,994,167; 4,757,022; 6,001,067; 6,741,877; 6,702,857; 6,558,321; 6,931,327; 6,862,465; 7,074,307; 7,081,195; 7,108,778; 7,110,803; 7,192,450; 7,226,978; and 7,310,544.

Methods and devices that are suitable for use in conjunction with aspects of the preferred embodiments are disclosed in U.S. Patent Publication No. US-2005-0176136-A1; U.S. Patent Publication No. US-2005-0251083-A1; U.S. Patent Publication No. US-2005-0143635-A1; U.S. Patent Publication No. US-2005-0181012-A1; U.S. Patent Publication No. US-2005-0177036-A1; U.S. Patent Publication No. US-2005-0124873-A1; U.S. Patent Publication No. US-2005-0115832-A1; U.S. Patent Publication No. US-2005-0245799-A1; U.S. Patent Publication No. US-2005-0245795-A1; U.S. Patent Publication No. US-2005-0242479-A1; U.S. Patent Publication No. US-2005-0182451-A1; U.S. Patent Publication No. US-2005-0056552-A1; U.S. Patent Publication No. US-2005-0192557-A1; U.S. Patent Publication No. US-2005-0154271-A1; U.S. Patent Publication No. US-2004-0199059-A1; U.S. Patent Publication No. US-2005-0054909-A1; U.S. Patent Publication No. US-2005-0051427-A1; U.S. Patent Publication No. US-2003-0032874-A1; U.S. Patent Publication No. US-2005-0103625-A1; U.S. Patent Publication No. US-2005-0203360-A1; U.S. Patent Publication No. US-2005-0090607-A1; U.S. Patent Publication No. US-2005-0187720-A1; U.S. Patent Publication No. US-2005-0161346-A1; U.S. Patent Publication No. US-2006-0015020-A1; U.S. Patent Publication No. US-2005-0043598-A1; U.S. Patent Publication No. US-2005-0033132-A1; U.S. Patent Publication No. US-2005-0031689-A1; U.S. Patent Publication No. US-2004-0186362-A1; U.S. Patent Publication No. US-2005-0027463-A1; U.S. Patent Publication No. US-2005-0027181-A1; U.S. Patent Publication No. US-2005-0027180-A1; U.S. Patent Publication No. US-2006-0020187-A1; U.S. Patent Publication No. US-2006-0036142-A1; U.S. Patent Publication No. US-2006-0020192-A1; U.S. Patent Publication No. US-2006-0036143-A1; U.S. Patent Publication No. US-2006-0036140-A1; U.S. Patent Publication No. US-2006-0019327-A1; U.S. Patent Publication No. US-2006-0020186-A1; U.S. Patent Publication No. US-2006-0036139-A1; U.S. Patent Publication No. US-2006-0020191-A1; U.S. Patent Publication No. US-2006-0020188-A1; U.S. Patent Publication No. US-2006-0036141-A1; U.S. Patent Publication No. US-2006-0020190-A1; U.S. Patent Publication No. US-2006-0036145-A1; U.S. Patent Publication No. US-2006-0036144-A1; U.S. Patent Publication No. US-2006-0016700-A1; U.S. Patent Publication No. US-2006-0142651-A1; U.S. Patent Publication No. US-2006-0086624-A1; U.S. Patent Publication No. US-2006-0068208-A1; U.S. Patent Publication No. US-2006-0040402-A1; U.S. Patent Publication No. US-2006-0036142-A1; U.S. Patent Publication No. US-2006-0036141-A1; U.S. Patent Publication No. US-2006-0036143-A1; U.S. Patent Publication No. US-2006-0036140-A1; U.S. Patent Publication No. US-2006-0036139-A1; U.S. Patent Publication No. US-2006-0142651-A1; U.S. Patent Publication No. US-2006-0036145-A1; U.S. Patent Publication No. US-2006-0036144-A1; U.S. Patent Publication No. US-2006-0200022-A1; U.S. Patent Publication No. US-2006-0198864-A1; U.S. Patent Publication No. US-2006-0200019-A1; U.S. Patent Publication No. US-2006-0189856-A1; U.S. Patent Publication No. US-2006-0200020-A1; U.S. Patent Publication No. US-2006-0200970-A1; U.S. Patent Publication No. US-2006-0183984-A1; U.S. Patent Publication No. US-2006-0183985-A1; U.S. Patent Publication No. US-2006-0195029-A1; U.S. Patent Publication No. US-2006-0229512-A1; U.S. Patent Publication No. US-2006-0222566-A1; U.S. Patent Publication No. US-2007-0032706-A1; U.S. Patent Publication No. US-2007-0016381-A1; U.S. Patent Publication No. US-2007-0027370-A1; U.S. Patent Publication No. US-2007-0027384-A1; U.S. Patent Publication No. US-2007-0032717-A1; U.S. Patent Publication No. US-2007-0032718-A1; U.S. Patent Publication No. US-2007-0059196-A1; U.S. Patent Publication No. US-2007-0066873-A1; U.S. Patent Publication No. US-2007-0093704-A1; U.S. Patent Publication No.

US-2007-0197890-A1; U.S. Patent Publication No. US-2007-0173710-A1; U.S. Patent Publication No. US-2007-0163880-A1; U.S. Patent Publication No. US-2007-0203966-A1; U.S. Patent Publication No. US-2007-0213611-A1; U.S. Patent Publication No. US-2007-0232879-A1; U.S. Patent Publication No. US-2007-0235331-A1; U.S. Patent Publication No. US-2008-0021666-A1; and U.S. Patent Publication No. US-2008-0033254-A1.

Methods and devices that are suitable for use in conjunction with aspects of the preferred embodiments are disclosed in U.S. patent application Ser. No. 09/447,227 filed Nov. 22, 1999 and entitled "DEVICE AND METHOD FOR DETERMINING ANALYTE LEVELS"; U.S. patent application Ser. No. 11/654,135 filed Jan. 17, 2007 and entitled "POROUS MEMBRANES FOR USE WITH IMPLANTABLE DEVICES"; U.S. patent application Ser. No. 11/654,140 filed Jan. 17, 2007 and entitled "MEMBRANES FOR AN ANALYTE SENSOR"; U.S. patent application Ser. No. 11/543,396 filed Oct. 4, 2006 and entitled "ANALYTE SENSOR"; U.S. patent application Ser. No. 11/543,490 filed Oct. 4, 2006 and entitled "ANALYTE SENSOR"; U.S. patent application Ser. No. 11/543,404 filed Oct. 4, 2006 and entitled "ANALYTE SENSOR"; U.S. patent application Ser. No. 11/691,426 filed Mar. 26, 2007 and entitled "ANALYTE SENSOR"; U.S. patent application Ser. No. 11/691,432 filed Mar. 26, 2007 and entitled "ANALYTE SENSOR"; U.S. patent application Ser. No. 11/691,424 filed Mar. 26, 2007 and entitled "ANALYTE SENSOR"; and U.S. patent application Ser. No. 11/691,466 filed Mar. 26, 2007 and entitled "ANALYTE SENSOR".

All references cited herein, including but not limited to published and unpublished applications, patents, and literature references, are incorporated herein by reference in their entirety and are hereby made a part of this specification. To the extent publications and patents or patent applications incorporated by reference contradict the disclosure contained in the specification, the specification is intended to supersede and/or take precedence over any such contradictory material.

All numbers expressing quantities of ingredients, reaction conditions, and so forth used in the specification are to be understood as being modified in all instances by the term "about." Accordingly, unless indicated to the contrary, the numerical parameters set forth herein are approximations that may vary depending upon the desired properties sought to be obtained. At the very least, and not as an attempt to limit the application of the doctrine of equivalents to the scope of any claims in any application claiming priority to the present application, each numerical parameter should be construed in light of the number of significant digits and ordinary rounding approaches.

The above description discloses several methods and materials of the present invention. This invention is susceptible to modifications in the methods and materials, as well as alterations in the fabrication methods and equipment. Such modifications will become apparent to those skilled in the art from a consideration of this disclosure or practice of the invention disclosed herein. Consequently, it is not intended that this invention be limited to the specific embodiments disclosed herein, but that it cover all modifications and alternatives coming within the true scope and spirit of the invention.

What is claimed is:

1. A method for transmitting glucose data generated by a continuous glucose sensor to a display device, comprising:

providing a plurality of predefined delivery options stored in memory of a sensor electronics module, each of the plurality of predefined delivery options including a transmission protocol by which to transmit sensor data;

storing glucose sensor data in memory at a sensor electronics module, the glucose sensor data generated by a continuous glucose sensor coupled to the sensor electronics;

receiving, by the sensor electronics module, a request for particular sensor data of the stored sensor data from a display device; and

transmitting, using the sensor electronics module, the requested sensor data to the display device,

wherein the requested sensor data is transmitted according to a first, default delivery option of the plurality of predefined delivery options when no request for particular delivery options is indicated in the request, and

wherein the requested data is transmitted according to a second delivery option of the plurality of predefined delivery options when the request includes an indication of the second delivery option, the second delivery option using a different transmission protocol than the default delivery option.

2. The method of claim **1**, wherein the request for sensor data includes a timeframe of requested sensor data.

3. The method of claim **1**, wherein the first delivery option uses a different data delivery format for transmitting the sensor data than the second delivery option.

4. The method of claim **1**, wherein the plurality of predefined delivery options are defined in a data structure stored in the memory of the sensor electronics module.

5. The method of claim **1**, wherein the plurality of predefined delivery options each define the sensor data to transmit and a data packet format by which the sensor data is to be transmitted.

6. A sensor electronics module for transmitting glucose data generated by a continuous glucose sensor to a display device, comprising:

memory for storing: (i) a plurality of predefined delivery options, each of the plurality of predefined delivery options including a transmission protocol by which to transmit sensor data, and (ii) the glucose sensor data generated by a continuous glucose sensor coupled to the sensor electronics;

a transceiver for receiving a request for particular sensor data of the stored sensor data from a display device and transmitting the requested sensor data to the display device; and

a processor that causes the transceiver to transmit according to a first, default delivery option of the plurality of predefined delivery options when no request for particular delivery options is indicated in the request and transmit according to a second delivery option of the plurality of predefined delivery options when the request includes an indication of the second delivery option, wherein the second delivery option uses a different transmission protocol than the default delivery option.

7. The system of claim **6**, wherein the request for sensor data includes a timeframe of requested sensor data.

8. The system of claim **6**, wherein the first delivery option uses a different data delivery format for transmitting the sensor data than the second delivery option.

9. The system of claim **6**, wherein the plurality of predefined delivery options are defined in a data structure stored in the memory of the sensor electronics module.

10. The system of claim **6**, wherein the plurality of predefined delivery options each define the sensor data to transmit and a data packet format by which the sensor data is to be transmitted.

11. A non-transitory computer-readable medium with instructions stored thereon, that when executed by a processor, perform the steps of:

providing a plurality of predefined delivery options stored in memory of a sensor electronics module, each of the plurality of predefined delivery options including a transmission protocol by which to transmit sensor data;

storing glucose sensor data in memory at a sensor electronics module, the glucose sensor data generated by a continuous glucose sensor coupled to the sensor electronics;

receiving, by the sensor electronics module, a request for particular sensor data of the stored sensor data from a display device; and

transmitting, using the sensor electronics module, the requested sensor data to the display device,

wherein the requested sensor data is transmitted according to a first, default delivery option of the plurality of predefined delivery options when no request for particular delivery options is indicated in the request, and

wherein the requested data is transmitted according to a second delivery option of the plurality of predefined delivery options when the request includes an indication of the second delivery option, the second delivery option using a different transmission protocol than the default delivery option.

12. The computer-readable medium of claim **11**, wherein the request for sensor data includes a timeframe of requested sensor data.

13. The computer-readable medium of claim **11**, wherein the first delivery option uses a different data delivery format for transmitting the sensor data than the second delivery option.

14. The computer-readable medium of claim **11**, wherein the plurality of predefined delivery options are defined in a data structure of the computer-readable medium.

15. The computer-readable medium of claim **11**, wherein the plurality of predefined delivery options each define the sensor data to transmit and a data packet format by which the sensor data is to be transmitted.

* * * * *