US009144360B2

(12) **United States Patent**
Ozick et al.

(10) **Patent No.: US 9,144,360 B2**
(45) **Date of Patent: Sep. 29, 2015**

(54) **AUTONOMOUS COVERAGE ROBOT NAVIGATION SYSTEM**

(75) Inventors: **Daniel N. Ozick**, Newton, MA (US); **Andrea M. Okerholm**, Lexington, MA (US); **Jeffrey W. Mammen**, Westford, MA (US); **Michael J. Halloran**, Waltham, MA (US); **Paul E. Sandin**, Brookline, NH (US); **Chikyung Won**, Tewksbury, MA (US)

(73) Assignee: **iRobot Corporation**, Bedford, MA (US)

(*) Notice: Subject to any disclaimer, the term of this patent is extended or adjusted under 35 U.S.C. 154(b) by 1000 days.

(21) Appl. No.: **11/633,869**

(22) Filed: **Dec. 4, 2006**

(65) **Prior Publication Data**

US 2007/0244610 A1 Oct. 18, 2007

Related U.S. Application Data

(60) Provisional application No. 60/741,442, filed on Dec. 2, 2005.

(51) **Int. Cl.**
G05B 19/04 (2006.01)
G05B 19/18 (2006.01)
(Continued)

(52) **U.S. Cl.**
CPC . ***A47L 11/40*** (2013.01); ***A47L 5/30*** (2013.01); ***A47L 9/009*** (2013.01); ***A47L 9/0466*** (2013.01);
(Continued)

(58) **Field of Classification Search**
CPC A47L 5/30; A47L 11/40; A47L 11/24; A47L 11/4011; A47L 11/4013; A47L 11/4041; A47L 11/4061; A47L 11/4072; A47L 9/009; A47L 9/2805; A47L 9/2852; A47L 9/2857; A47L 9/2873; A47L 9/2889; A47L 9/2894; A47L 2201/022; A47L 2201/02; A47L 9/0466; A47L 2201/00; G05D 1/0255; G05D 1/0274; G05D 2201/0203; G05D 2201/0215; G05D 1/0225; G05D 1/0227; G05D 1/0234; G05D 1/0242; G05D 1/0272; G05D 1/028; G05D 1/0238; G05D 1/2019; B25J 9/0003; H04L 1/16; Y02T 10/7258; Y02B 60/50; H02J 7/0044; H02J 7/045
USPC 700/245, 253; 701/1, 23, 200
See application file for complete search history.

(56) **References Cited**

U.S. PATENT DOCUMENTS

1,755,054 A 4/1930 Darst
1,780,221 A 11/1930 Buchmann
(Continued)

FOREIGN PATENT DOCUMENTS

DE 2128842 C3 12/1980
DE 3317376 C2 12/1987
(Continued)

OTHER PUBLICATIONS

European Search Report dated Nov. 19, 2009 in connection with corresponding EP Application No. 09169766.4.
(Continued)

Primary Examiner — Bao Long T Nguyen
(74) *Attorney, Agent, or Firm* — Fish & Richardson P.C.

(57) **ABSTRACT**

An autonomous mobile robot system for bounded areas including a navigation beacon and an autonomous coverage robot. The navigation beacon has a gateway beacon emitter arranged to transmit a gateway marking emission with the navigation beacon disposed within a gateway between the first bounded area and an adjacent second bounded area. The autonomous coverage robot includes a beacon emission sensor responsive to the beacon emission, and a drive system configured to maneuver the robot about the first bounded area in a cleaning mode in which the robot is redirected in response to detecting the gateway marking emission. The drive system is also configured to maneuver the robot through the gateway into the second bounded area in a migration mode.

28 Claims, 35 Drawing Sheets

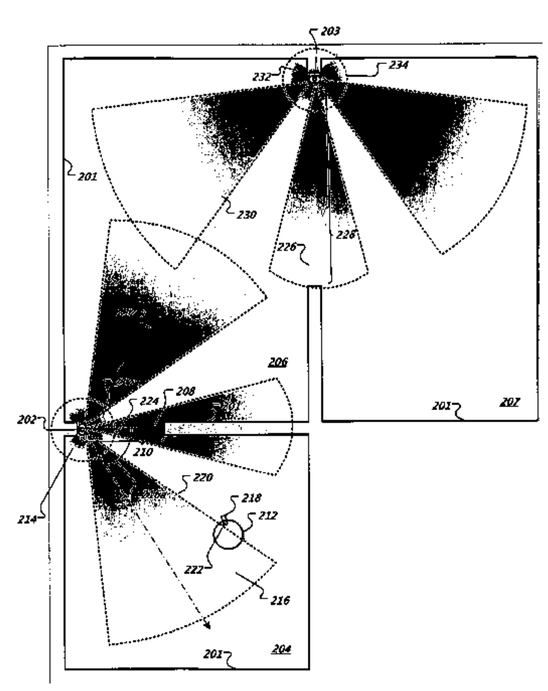

(51) **Int. Cl.**

A47L 11/40	(2006.01)
A47L 5/30	(2006.01)
A47L 9/04	(2006.01)
G05D 1/02	(2006.01)
B25J 9/00	(2006.01)
H04L 1/16	(2006.01)
A47L 11/24	(2006.01)
A47L 9/00	(2006.01)
A47L 9/12	(2006.01)
A47L 9/28	(2006.01)
A47L 9/30	(2006.01)
B60L 11/18	(2006.01)
B60L 15/20	(2006.01)

(52) **U.S. Cl.**

CPC ***A47L 9/12*** (2013.01); ***A47L 9/2857*** (2013.01); ***A47L 9/2894*** (2013.01); ***A47L 9/30*** (2013.01); ***A47L 11/24*** (2013.01); ***A47L 11/4011*** (2013.01); ***A47L 11/4013*** (2013.01); ***A47L 11/4041*** (2013.01); ***A47L 11/4061*** (2013.01); ***A47L 11/4072*** (2013.01); ***B25J 9/0003*** (2013.01); ***B60L 11/1805*** (2013.01); ***B60L 11/1816*** (2013.01); ***B60L 15/2036*** (2013.01); ***G05D 1/028*** (2013.01); ***G05D 1/0225*** (2013.01); ***G05D 1/0227*** (2013.01); ***G05D 1/0234*** (2013.01); ***G05D 1/0242*** (2013.01); ***G05D 1/0272*** (2013.01); *A47L 2201/00* (2013.01); *B60L 2200/40* (2013.01); *B60L 2250/10* (2013.01); *B60L 2250/16* (2013.01); *B60L 2260/32* (2013.01); *G05D 1/0255* (2013.01); *G05D 1/0274* (2013.01); *G05D 2201/0203* (2013.01); *G05D 2201/0215* (2013.01); *H04L 1/16* (2013.01); *Y02B 60/50* (2013.01); *Y02T 10/7258* (2013.01); *Y10S 901/01* (2013.01); *Y10S 901/50* (2013.01)

(56) **References Cited**

U.S. PATENT DOCUMENTS

1,970,302	A	8/1934	Gerhardt
2,136,324	A	11/1938	John
2,302,111	A	11/1942	Dow et al.
2,353,621	A	7/1944	Sav et al.
2,770,825	A	11/1956	Pullen
3,119,369	A	1/1964	Harland et al.
3,166,138	A	1/1965	Dunn
3,333,564	A	8/1967	Waters
3,375,375	A	3/1968	Robert et al.
3,381,652	A	5/1968	Schaefer et al.
3,457,575	A	7/1969	Bienek
3,550,714	A	12/1970	Bellinger
3,569,727	A	3/1971	Aggarwal et al.
3,674,316	A	7/1972	De Brey
3,678,882	A	7/1972	Kinsella
3,744,586	A	7/1973	Leinauer
3,756,667	A	9/1973	Bombardier et al.
3,809,004	A	5/1974	Leonheart
3,816,004	A	6/1974	Bignardi
3,845,831	A	11/1974	James
RE28,268	E	12/1974	Autrand
3,853,086	A	12/1974	Asplund
3,863,285	A	2/1975	Hukuba
3,888,181	A	6/1975	Kups
3,937,174	A	2/1976	Haaga
3,952,361	A	4/1976	Wilkins
3,989,311	A	11/1976	Debrey
3,989,931	A	11/1976	Phillips
4,004,313	A	1/1977	Capra
4,012,681	A	3/1977	Finger et al.
4,070,170	A	1/1978	Leinfelt
4,099,284	A	7/1978	Shinozaki et al.
4,119,900	A	10/1978	Kremnitz
4,175,589	A	11/1979	Nakamura et al.
4,175,892	A	11/1979	De brey
4,196,727	A	4/1980	Verkaart et al.
4,198,727	A	4/1980	Farmer
4,199,838	A	4/1980	Simonsson
4,209,254	A	6/1980	Reymond et al.
D258,901	S	4/1981	Keyworth
4,297,578	A	10/1981	Carter
4,306,329	A	12/1981	Yokoi
4,309,758	A	1/1982	Halsall et al.
4,328,545	A	5/1982	Halsall et al.
4,367,403	A	1/1983	Miller
4,369,543	A	1/1983	Chen et al.
4,401,909	A	8/1983	Gorsek
4,416,033	A	11/1983	Specht
4,445,245	A	5/1984	Lu
4,465,370	A	8/1984	Yuasa et al.
4,477,998	A	10/1984	You
4,481,692	A	11/1984	Kurz
4,482,960	A	11/1984	Pryor
4,492,058	A	1/1985	Goldfarb et al.
4,513,469	A	4/1985	Godfrey et al.
D278,732	S	5/1985	Ohkado
4,518,437	A	5/1985	Sommer
4,534,637	A	8/1985	Suzuki et al.
4,556,313	A	12/1985	Miller et al.
4,575,211	A	3/1986	Matsumura et al.
4,580,311	A	4/1986	Kurz
4,601,082	A	7/1986	Kurz
4,618,213	A	10/1986	Chen
4,620,285	A	10/1986	Perdue
4,624,026	A	11/1986	Olson et al.
4,626,995	A	12/1986	Lofgren et al.
4,628,454	A	12/1986	Ito
4,638,445	A	1/1987	Mattaboni
4,644,156	A	2/1987	Takahashi et al.
4,649,504	A	3/1987	Krouglicof et al.
4,652,917	A	3/1987	Miller
4,654,492	A	3/1987	Koerner et al.
4,654,924	A	4/1987	Getz et al.
4,660,969	A	4/1987	Sorimachi et al.
4,662,854	A	5/1987	Fang
4,674,048	A	6/1987	Okumura
4,679,152	A	7/1987	Perdue
4,680,827	A	7/1987	Hummel
4,696,074	A	9/1987	Cavalli et al.
D292,223	S	10/1987	Trumbull
4,700,301	A	10/1987	Dyke
4,700,427	A	10/1987	Knepper
4,703,820	A	11/1987	Reinaud
4,710,020	A	12/1987	Maddox et al.
4,716,621	A	1/1988	Zoni
4,728,801	A	3/1988	O'Connor
4,733,343	A	3/1988	Yoneda et al.
4,733,430	A	3/1988	Westergren
4,733,431	A	3/1988	Martin
4,735,136	A	4/1988	Lee et al.
4,735,138	A	4/1988	Gawler et al.
4,748,336	A	5/1988	Fujie et al.
4,748,833	A	6/1988	Nagasawa
4,756,049	A	7/1988	Uehara
4,767,213	A	8/1988	Hummel
4,769,700	A	9/1988	Pryor
4,777,416	A	10/1988	George, II et al.
D298,766	S	11/1988	Tanno et al.
4,782,550	A	11/1988	Jacobs
4,796,198	A	1/1989	Boultinghouse et al.
4,806,751	A	2/1989	Abe et al.
4,811,228	A	3/1989	Hyyppa
4,813,906	A	3/1989	Matsuyama et al.
4,815,157	A	3/1989	Tsuchiya
4,817,000	A	3/1989	Eberhardt
4,818,875	A	4/1989	Weiner
4,829,442	A	5/1989	Kadonoff et al.
4,829,626	A	5/1989	Harkonen et al.
4,832,098	A	5/1989	Palinkas et al.
4,851,661	A	7/1989	Everett

(56) **References Cited**

U.S. PATENT DOCUMENTS

4,854,000 A 8/1989 Takimoto
4,854,006 A 8/1989 Nishimura et al.
4,855,915 A 8/1989 Dallaire
4,857,912 A 8/1989 Everett et al.
4,858,132 A 8/1989 Holmquist
4,867,570 A 9/1989 Sorimachi et al.
4,880,474 A 11/1989 Koharagi et al.
4,887,415 A 12/1989 Martin
4,891,762 A 1/1990 Chotiros
4,893,025 A 1/1990 Lee
4,901,394 A 2/1990 Nakamura et al.
4,905,151 A 2/1990 Weiman et al.
4,912,643 A 3/1990 Beirne
4,918,441 A 4/1990 Bohman
4,919,224 A 4/1990 Shyu et al.
4,919,489 A 4/1990 Kopsco
4,920,060 A 4/1990 Parrent et al.
4,920,605 A 5/1990 Takashima
4,933,864 A 6/1990 Evans et al.
4,937,912 A 7/1990 Kurz
4,953,253 A 9/1990 Fukuda et al.
4,954,962 A 9/1990 Evans et al.
4,955,714 A 9/1990 Stotler et al.
4,956,891 A 9/1990 Wulff
4,961,303 A 10/1990 McCarty et al.
4,961,304 A 10/1990 Ovsborn et al.
4,962,453 A 10/1990 Pong et al.
4,971,591 A 11/1990 Raviv et al.
4,973,912 A 11/1990 Kaminski et al.
4,974,283 A 12/1990 Holsten et al.
4,977,618 A 12/1990 Allen
4,977,639 A 12/1990 Takahashi et al.
4,986,663 A 1/1991 Cecchi et al.
5,001,635 A 3/1991 Yasutomi et al.
5,002,145 A 3/1991 Waqkaumi et al.
5,012,886 A 5/1991 Jonas et al.
5,018,240 A 5/1991 Holman
5,020,186 A 6/1991 Lessig et al.
5,022,812 A 6/1991 Coughlan et al.
5,023,788 A 6/1991 Kitazume et al.
5,024,529 A 6/1991 Svetkoff et al.
D318,500 S 7/1991 Malewicki et al.
5,032,775 A 7/1991 Mizuno et al.
5,033,151 A 7/1991 Kraft et al.
5,033,291 A 7/1991 Podoloff et al.
5,040,116 A 8/1991 Evans et al.
5,045,769 A 9/1991 Everett
5,049,802 A 9/1991 Mintus
5,051,906 A 9/1991 Evans et al.
5,062,819 A 11/1991 Mallory
5,070,567 A 12/1991 Holland
5,084,934 A 2/1992 Lessig et al.
5,086,535 A 2/1992 Grossmeyer et al.
5,090,321 A 2/1992 Abouav
5,093,955 A 3/1992 Blehert et al.
5,094,311 A 3/1992 Akeel
5,105,502 A 4/1992 Takashima
5,105,550 A 4/1992 Shenoha
5,109,566 A 5/1992 Kobayashi et al.
5,115,538 A 5/1992 Cochran et al.
5,127,128 A 7/1992 Lee
5,136,675 A 8/1992 Hodson
5,136,750 A 8/1992 Takashima et al.
5,142,985 A 9/1992 Stearns et al.
5,144,471 A 9/1992 Takanashi et al.
5,144,714 A 9/1992 Mori et al.
5,144,715 A 9/1992 Matsuyo et al.
5,152,028 A 10/1992 Hirano
5,152,202 A 10/1992 Strauss
5,155,684 A 10/1992 Burke et al.
5,163,202 A 11/1992 Kawakami et al.
5,163,320 A 11/1992 Goshima et al.
5,164,579 A 11/1992 Pryor et al.
5,165,064 A * 11/1992 Mattaboni 356/141.2
5,170,352 A 12/1992 McTamaney et al.
5,173,881 A 12/1992 Sindle
5,182,833 A 2/1993 Yamaguchi et al.
5,202,742 A 4/1993 Frank et al.
5,204,814 A 4/1993 Noonan et al.
5,206,500 A 4/1993 Decker et al.
5,208,521 A 5/1993 Aoyama
5,216,777 A 6/1993 Moro et al.
5,227,985 A 7/1993 DeMenthon
5,233,682 A 8/1993 Abe et al.
5,239,720 A 8/1993 Wood et al.
5,251,358 A 10/1993 Moro et al.
5,261,139 A 11/1993 Lewis
5,276,618 A 1/1994 Everett
5,276,939 A 1/1994 Uenishi
5,277,064 A 1/1994 Knigga et al.
5,279,672 A 1/1994 Belker, Jr. et al.
5,284,452 A 2/1994 Corona
5,284,522 A 2/1994 Kobayashi et al.
5,293,955 A 3/1994 Lee
D345,707 S 4/1994 Alister
5,303,448 A 4/1994 Hennessey et al.
5,307,273 A 4/1994 Oh et al.
5,309,592 A 5/1994 Hiratsuka
5,310,379 A 5/1994 Hippely et al.
5,315,227 A 5/1994 Pierson et al.
5,319,827 A 6/1994 Yang
5,319,828 A 6/1994 Waldhauser et al.
5,321,614 A 6/1994 Ashworth
5,323,483 A 6/1994 Baeg
5,324,948 A 6/1994 Dudar et al.
5,341,186 A 8/1994 Kato
5,341,540 A 8/1994 Soupert et al.
5,341,549 A 8/1994 Wirtz et al.
5,345,649 A 9/1994 Whitlow
5,353,224 A 10/1994 Lee et al.
5,363,305 A 11/1994 Cox et al.
5,363,935 A 11/1994 Schempf
5,369,347 A 11/1994 Yoo
5,369,838 A 12/1994 Wood et al.
5,386,862 A 2/1995 Glover et al.
5,399,951 A 3/1995 Lavallee et al.
5,400,244 A 3/1995 Watanabe et al.
5,404,612 A 4/1995 Ishikawa
5,410,479 A 4/1995 Coker
5,435,405 A 7/1995 Schempf et al.
5,440,216 A 8/1995 Kim
5,442,358 A 8/1995 Keeler et al.
5,444,965 A 8/1995 Colens
5,446,356 A 8/1995 Kim
5,446,445 A 8/1995 Bloomfield et al.
5,451,135 A 9/1995 Schempf et al.
5,454,129 A 10/1995 Kell
5,455,982 A 10/1995 Armstrong et al.
5,465,525 A 11/1995 Mifune et al.
5,465,619 A 11/1995 Sotack et al.
5,467,273 A 11/1995 Faibish et al.
5,471,560 A 11/1995 Allard et al.
5,491,670 A 2/1996 Weber
5,497,529 A 3/1996 Boesi
5,498,948 A 3/1996 Bruni et al.
5,502,638 A 3/1996 Takenaka
5,505,072 A 4/1996 Oreper
5,507,067 A 4/1996 Hoekstra et al.
5,510,893 A 4/1996 Suzuki
5,511,147 A 4/1996 Abdel
5,515,572 A 5/1996 Hoekstra et al.
5,534,762 A 7/1996 Kim
5,537,017 A 7/1996 Feiten et al.
5,537,711 A 7/1996 Tseng
5,539,953 A 7/1996 Kurz
5,542,146 A 8/1996 Hoekstra et al.
5,542,148 A 8/1996 Young
5,546,631 A 8/1996 Chambon
5,548,511 A 8/1996 Bancroft
5,551,525 A 9/1996 Pack et al.
5,553,349 A 9/1996 Kilstrom et al.
5,555,587 A 9/1996 Guha
5,560,077 A 10/1996 Crotchett
5,568,589 A 10/1996 Hwang

(56) **References Cited**

U.S. PATENT DOCUMENTS

D375,592	S	11/1996	Ljunggren
5,608,306	A	3/1997	Rybeck et al.
5,608,894	A	3/1997	Kawakami et al.
5,608,944	A	3/1997	Gordon
5,610,488	A	3/1997	Miyazawa
5,611,106	A	3/1997	Wulff
5,611,108	A	3/1997	Knowlton et al.
5,613,261	A	3/1997	Kawakami et al.
5,613,269	A	3/1997	Miwa
5,621,291	A	4/1997	Lee
5,622,236	A	4/1997	Azumi et al.
5,634,237	A	6/1997	Paranjpe
5,634,239	A	6/1997	Tuvin et al.
5,636,402	A	6/1997	Kubo et al.
5,642,299	A	6/1997	Hardin et al.
5,646,494	A	7/1997	Han
5,647,554	A	7/1997	Ikegami et al.
5,650,702	A	7/1997	Azumi
5,652,489	A	7/1997	Kawakami
5,682,313	A	10/1997	Edlund et al.
5,682,839	A	11/1997	Grimsley et al.
5,696,675	A	12/1997	Nakamura et al.
5,698,861	A	12/1997	Oh
5,709,007	A	1/1998	Chiang
5,710,506	A	1/1998	Broell et al.
5,714,119	A	2/1998	Kawagoe et al.
5,717,169	A	2/1998	Liang et al.
5,717,484	A	2/1998	Hamaguchi et al.
5,720,077	A	2/1998	Nakamura et al.
5,732,401	A	3/1998	Conway
5,735,959	A	4/1998	Kubo et al.
5,745,235	A	4/1998	Vercammen et al.
5,752,871	A	5/1998	Tsuzuki
5,756,904	A	5/1998	Oreper et al.
5,761,762	A	6/1998	Kubo et al.
5,764,888	A	6/1998	Bolan et al.
5,767,437	A	6/1998	Rogers
5,767,960	A	6/1998	Orman
5,777,596	A	7/1998	Herbert
5,778,486	A	7/1998	Kim
5,781,697	A	7/1998	Jeong
5,781,960	A	7/1998	Kilstrom et al.
5,786,602	A	7/1998	Pryor et al.
5,787,545	A	8/1998	Colens
5,793,900	A	8/1998	Nourbakhsh et al.
5,794,297	A	8/1998	Muta
5,812,267	A	9/1998	Everett, Jr. et al.
5,814,808	A	9/1998	Takada et al.
5,815,880	A	10/1998	Nakanishi
5,815,884	A	10/1998	Imamura et al.
5,819,008	A	10/1998	Asama et al.
5,819,360	A	10/1998	Fujii
5,819,936	A	10/1998	Saveliev et al.
5,820,821	A	10/1998	Kawagoe et al.
5,821,730	A	10/1998	Drapkin
5,825,981	A	10/1998	Matsuda
5,828,770	A	10/1998	Leis et al.
5,831,597	A	11/1998	West et al.
5,839,156	A	11/1998	Park et al.
5,839,532	A	11/1998	Yoshiji et al.
5,841,259	A	11/1998	Kim et al.
5,867,800	A	2/1999	Leif
5,869,910	A	2/1999	Colens
5,896,611	A	4/1999	Haaga
5,903,124	A	5/1999	Kawakami
5,905,209	A	5/1999	Oreper
5,907,886	A	6/1999	Buscher
5,910,700	A	6/1999	Crotzer
5,911,260	A	6/1999	Suzuki
5,916,008	A	6/1999	Wong
5,924,167	A	7/1999	Wright et al.
5,926,909	A	7/1999	McGee
5,933,102	A	8/1999	Miller et al.
5,933,913	A	8/1999	Wright et al.
5,935,179	A	8/1999	Kleiner et al.
5,940,346	A	8/1999	Sadowsky et al.
5,940,927	A	8/1999	Haegermarck et al.
5,940,930	A	8/1999	Oh et al.
5,942,869	A	8/1999	Katou et al.
5,943,730	A	8/1999	Boomgaarden
5,943,733	A	8/1999	Tagliaferri
5,947,225	A	9/1999	Kawakami et al.
5,950,408	A	9/1999	Schaedler
5,959,423	A	9/1999	Nakanishi et al.
5,968,281	A	10/1999	Wright et al.
5,974,348	A	10/1999	Rocks
5,974,365	A	10/1999	Mitchell
5,983,448	A	11/1999	Wright et al.
5,984,880	A	11/1999	Lander et al.
5,987,383	A	11/1999	Keller et al.
5,989,700	A	11/1999	Krivopal
5,991,951	A	11/1999	Kubo et al.
5,995,883	A	11/1999	Nishikado
5,995,884	A *	11/1999	Allen et al. 701/24
5,996,167	A	12/1999	Close
5,998,953	A	12/1999	Nakamura et al.
5,998,971	A	12/1999	Corbridge
6,000,088	A	12/1999	Wright et al.
6,009,358	A	12/1999	Angott et al.
6,021,545	A	2/2000	Delgado et al.
6,023,813	A	2/2000	Thatcher et al.
6,023,814	A	2/2000	Imamura
6,025,687	A	2/2000	Himeda et al.
6,026,539	A	2/2000	Mouw et al.
6,030,464	A	2/2000	Azevedo
6,030,465	A	2/2000	Marcussen et al.
6,032,542	A	3/2000	Warnick et al.
6,036,572	A	3/2000	Sze
6,038,501	A	3/2000	Kawakami
6,040,669	A	3/2000	Hog
6,041,471	A	3/2000	Charky et al.
6,041,472	A	3/2000	Kasen et al.
6,046,800	A	4/2000	Ohtomo et al.
6,049,620	A	4/2000	Dickinson et al.
6,052,821	A	4/2000	Chouly et al.
6,055,042	A	4/2000	Sarangapani
6,055,702	A	5/2000	Imamura et al.
6,061,868	A	5/2000	Moritsch et al.
6,065,182	A	5/2000	Wright et al.
6,073,432	A	6/2000	Schaedler
6,076,025	A	6/2000	Ueno et al.
6,076,026	A	6/2000	Jambhekar et al.
6,076,226	A	6/2000	Reed
6,076,227	A	6/2000	Schallig et al.
6,081,257	A	6/2000	Zeller
6,088,020	A	7/2000	Mor
6,094,775	A	8/2000	Behmer
6,099,091	A	8/2000	Campbell
6,101,670	A	8/2000	Song
6,101,671	A	8/2000	Wright et al.
6,108,031	A	8/2000	King et al.
6,108,067	A	8/2000	Okamoto
6,108,076	A	8/2000	Hanseder
6,108,269	A	8/2000	Kabel
6,108,597	A	8/2000	Kirchner et al.
6,112,143	A	8/2000	Allen et al.
6,112,996	A	9/2000	Matsuo
6,119,057	A	9/2000	Kawagoe
6,122,798	A	9/2000	Kobayashi et al.
6,124,694	A	9/2000	Bancroft et al.
6,125,498	A	10/2000	Roberts et al.
6,131,237	A	10/2000	Kasper et al.
6,138,063	A	10/2000	Himeda
6,142,252	A	11/2000	Kinto et al.
6,146,278	A	11/2000	Kobayashi
6,154,279	A	11/2000	Thayer
6,154,694	A	11/2000	Aoki et al.
6,160,479	A	12/2000	Ahlen et al.
6,167,332	A	12/2000	Kurtzberg et al.
6,167,587	B1	1/2001	Kasper et al.
6,192,548	B1	2/2001	Huffman
6,216,307	B1	4/2001	Kaleta et al.
6,220,865	B1	4/2001	Macri et al.
6,226,830	B1	5/2001	Hendriks et al.

(56) **References Cited**

U.S. PATENT DOCUMENTS

6,230,362 B1 5/2001 Kasper et al.
6,237,741 B1 5/2001 Guidetti
6,240,342 B1 5/2001 Fiegert et al.
6,243,913 B1 6/2001 Frank et al.
6,255,793 B1 7/2001 Peless et al.
6,259,979 B1 7/2001 Holmquist
6,261,379 B1 7/2001 Conrad et al.
6,263,539 B1 7/2001 Baig
6,263,989 B1 7/2001 Won
6,272,936 B1 8/2001 Oreper et al.
6,276,478 B1 8/2001 Hopkins et al.
6,278,918 B1 8/2001 Dickson et al.
6,282,526 B1 8/2001 Ganesh
6,283,034 B1 9/2001 Miles
6,285,778 B1 9/2001 Nakajima et al.
6,285,930 B1 9/2001 Dickson et al.
6,300,737 B1 10/2001 Begvall et al.
6,321,337 B1 11/2001 Reshef et al.
6,321,515 B1 11/2001 Colens
6,323,570 B1 11/2001 Nishimura et al.
6,324,714 B1 12/2001 Walz et al.
6,327,741 B1 12/2001 Reed
6,332,400 B1 12/2001 Meyer
6,339,735 B1 1/2002 Peless et al.
6,362,875 B1 3/2002 Burkley
6,370,453 B2 4/2002 Sommer
6,374,155 B1 4/2002 Wallach et al.
6,374,157 B1 4/2002 Takamura
6,381,802 B2 5/2002 Park
6,385,515 B1 5/2002 Dickson et al.
6,388,013 B1 5/2002 Saraf et al.
6,389,329 B1 5/2002 Colens
6,400,048 B1 6/2002 Nishimura et al.
6,401,294 B2 6/2002 Kasper
6,408,226 B1 6/2002 Byrne et al.
6,412,141 B2 7/2002 Kasper et al.
6,415,203 B1 7/2002 Inoue et al.
6,421,870 B1 7/2002 Basham et al.
6,427,285 B1 8/2002 Legatt et al.
6,430,471 B1 8/2002 Kintou et al.
6,431,296 B1 8/2002 Won
6,437,227 B1 8/2002 Theimer
6,437,465 B1 8/2002 Nishimura et al.
6,438,456 B1 8/2002 Feddema et al.
6,438,793 B1 8/2002 Miner et al.
6,442,476 B1 8/2002 Poropat
6,443,509 B1 9/2002 Levin et al.
6,444,003 B1 9/2002 Sutcliffe
6,446,302 B1 9/2002 Kasper et al.
6,454,036 B1 9/2002 Airey et al.
D464,091 S 10/2002 Christianson
6,457,206 B1 10/2002 Judson
6,459,955 B1 10/2002 Bartsch et al.
6,463,368 B1 10/2002 Feiten et al.
6,465,982 B1 10/2002 Bergvall et al.
6,473,167 B1 10/2002 Odell
6,480,762 B1 11/2002 Uchikubo et al.
6,481,515 B1 11/2002 Kirkpatrick et al.
6,490,539 B1 12/2002 Dickson et al.
6,491,127 B1 12/2002 Holmberg et al.
6,493,612 B1 12/2002 Bisset et al.
6,493,613 B2 12/2002 Peless et al.
6,496,754 B2 12/2002 Song et al.
6,496,755 B2 12/2002 Wallach et al.
6,502,657 B2 1/2003 Kerrebrock et al.
6,504,610 B1 1/2003 Bauer
6,507,773 B2 1/2003 Parker et al.
6,525,509 B1 2/2003 Petersson et al.
D471,243 S 3/2003 Cioffi et al.
6,532,404 B2 * 3/2003 Colens 700/262
6,535,793 B2 3/2003 Allard
6,540,607 B2 4/2003 Mokris et al.
6,548,982 B1 4/2003 Papanikolopoulos et al.
6,553,612 B1 4/2003 Dyson et al.
6,556,722 B1 4/2003 Russell et al.
6,556,892 B2 4/2003 Kuroki et al.
6,557,104 B2 4/2003 Vu et al.
D474,312 S 5/2003 Stephens et al.
6,563,130 B2 5/2003 Dworkowski et al.
6,571,415 B2 6/2003 Gerber et al.
6,571,422 B1 6/2003 Gordon et al.
6,572,711 B2 6/2003 Sclafani et al.
6,574,536 B1 6/2003 Kawagoe et al.
6,580,246 B2 6/2003 Jacobs
6,584,376 B1 6/2003 Van Kommer
6,586,908 B2 7/2003 Petersson et al.
6,587,573 B1 7/2003 Stam et al.
6,590,222 B1 7/2003 Bisset et al.
6,594,551 B2 7/2003 McKinney et al.
6,594,844 B2 7/2003 Jones
D478,884 S 8/2003 Slipy et al.
6,601,265 B1 8/2003 Burlington
6,604,021 B2 8/2003 Imai et al.
6,604,022 B2 8/2003 Parker
6,605,156 B1 8/2003 Clark et al.
6,611,120 B2 8/2003 Song et al.
6,611,734 B2 8/2003 Parker et al.
6,611,738 B2 8/2003 Ruffner
6,615,108 B1 9/2003 Peless et al.
6,615,885 B1 9/2003 Ohm
6,622,465 B2 9/2003 Jerome et al.
6,624,744 B1 9/2003 Wilson et al.
6,625,843 B2 9/2003 Kim et al.
6,629,028 B2 9/2003 Paromtchik et al.
6,639,659 B2 10/2003 Granger
6,658,325 B2 12/2003 Zweig
6,658,354 B2 12/2003 Lin
6,658,692 B2 12/2003 Lenkiewicz et al.
6,658,693 B1 12/2003 Reed, Jr.
6,661,239 B1 12/2003 Ozick
6,662,889 B2 12/2003 De Fazio et al.
6,668,951 B2 12/2003 Won
6,670,817 B2 12/2003 Fournier et al.
6,671,592 B1 12/2003 Bisset et al.
6,687,571 B1 2/2004 Byrne et al.
6,690,134 B1 * 2/2004 Jones et al. 318/567
6,690,993 B2 2/2004 Foulke et al.
6,697,147 B2 2/2004 Ko et al.
6,711,280 B2 3/2004 Stafsudd et al.
6,732,826 B2 5/2004 Song et al.
6,737,591 B1 5/2004 Lapstun et al.
6,741,054 B2 5/2004 Koselka et al.
6,741,364 B2 5/2004 Lange et al.
6,748,297 B2 6/2004 Song et al.
6,756,703 B2 6/2004 Chang
6,760,647 B2 7/2004 Nourbakhsh et al.
6,764,373 B1 7/2004 Osawa et al.
6,769,004 B2 7/2004 Barrett
6,774,596 B1 8/2004 Bisset
6,779,380 B1 8/2004 Nieuwkamp
6,781,338 B2 * 8/2004 Jones et al. 318/567
6,809,490 B2 * 10/2004 Jones et al. 318/568.12
6,810,305 B2 10/2004 Kirkpatrick
6,830,120 B1 12/2004 Yashima et al.
6,832,407 B2 12/2004 Salem et al.
6,836,701 B2 12/2004 McKee
6,841,963 B2 1/2005 Song et al.
6,845,297 B2 1/2005 Allard
6,856,811 B2 2/2005 Burdue et al.
6,859,010 B2 2/2005 Jeon et al.
6,859,682 B2 2/2005 Naka et al.
6,860,206 B1 3/2005 Rudakevych et al.
6,865,447 B2 3/2005 Lau et al.
6,870,792 B2 3/2005 Chiappetta
6,871,115 B2 3/2005 Huang et al.
6,883,201 B2 4/2005 Jones et al.
6,886,651 B1 5/2005 Slocum et al.
6,888,333 B2 5/2005 Laby
6,901,624 B2 6/2005 Mori et al.
6,906,702 B1 6/2005 Tanaka et al.
6,914,403 B2 7/2005 Tsurumi
6,917,854 B2 7/2005 Bayer
6,925,357 B2 8/2005 Wang et al.
6,925,679 B2 8/2005 Wallach et al.

(56) **References Cited**

U.S. PATENT DOCUMENTS

6,929,548	B2	8/2005	Wang	
D510,066	S	9/2005	Hickey et al.	
6,938,298	B2	9/2005	Aasen	
6,940,291	B1	9/2005	Ozik	
6,941,199	B1	9/2005	Bottomley et al.	
6,956,348	B2	10/2005	Landry et al.	
6,957,712	B2	10/2005	Song et al.	
6,960,986	B2	11/2005	Asama et al.	
6,965,209	B2 *	11/2005	Jones et al.	318/567
6,965,211	B2	11/2005	Tsurumi	
6,968,592	B2	11/2005	Takeuchi et al.	
6,971,140	B2	12/2005	Kim	
6,975,246	B1	12/2005	Trudeau	
6,980,229	B1	12/2005	Ebersole	
6,985,556	B2	1/2006	Shanmugavel et al.	
6,993,954	B1	2/2006	George et al.	
6,999,850	B2	2/2006	McDonald	
7,013,527	B2	3/2006	Thomas et al.	
7,024,278	B2 *	4/2006	Chiappetta et al.	700/245
7,024,280	B2	4/2006	Parker et al.	
7,027,893	B2	4/2006	Perry et al.	
7,030,768	B2	4/2006	Wanie	
7,031,805	B2	4/2006	Lee et al.	
7,032,469	B2	4/2006	Bailey	
7,053,578	B2	5/2006	Diehl et al.	
7,054,716	B2	5/2006	McKee	
7,055,210	B2	6/2006	Keppler et al.	
7,057,120	B2	6/2006	Ma et al.	
7,057,643	B2	6/2006	Iida et al.	
7,065,430	B2	6/2006	Naka et al.	
7,066,291	B2	6/2006	Martins et al.	
7,069,124	B1	6/2006	Whittaker et al.	
7,079,923	B2 *	7/2006	Abramson et al.	700/245
7,085,623	B2	8/2006	Siegers	
7,085,624	B2	8/2006	Aldred et al.	
7,113,847	B2	9/2006	Chmura et al.	
7,133,746	B2 *	11/2006	Abramson et al.	700/259
7,142,198	B2	11/2006	Lee	
7,148,458	B2	12/2006	Schell et al.	
7,155,308	B2	12/2006	Jones	
7,167,775	B2 *	1/2007	Abramson et al.	700/245
7,171,285	B2	1/2007	Kim et al.	
7,173,391	B2	2/2007	Jones et al.	
7,174,238	B1	2/2007	Zweig	
7,188,000	B2	3/2007	Chiappetta et al.	
7,193,384	B1	3/2007	Norman et al.	
7,196,487	B2	3/2007	Jones	
7,201,786	B2	4/2007	Wegelin et al.	
7,206,677	B2	4/2007	Hulden	
7,211,980	B1	5/2007	Bruemmer et al.	
7,225,500	B2	6/2007	Diehl et al.	
7,246,405	B2	7/2007	Yan	
7,248,951	B2	7/2007	Huldén	
7,275,280	B2	10/2007	Haegermarck et al.	
7,283,892	B1	10/2007	Boillot et al.	
7,288,912	B2	10/2007	Landry et al.	
7,318,248	B1	1/2008	Yan	
7,320,149	B1	1/2008	Huffman et al.	
7,324,870	B2	1/2008	Lee	
7,328,196	B2	2/2008	Peters, II	
7,332,890	B2 *	2/2008	Cohen et al.	320/109
7,352,153	B2	4/2008	Yan	
7,359,766	B2	4/2008	Jeon et al.	
7,360,277	B2	4/2008	Moshenrose et al.	
7,363,108	B2	4/2008	Noda et al.	
7,388,879	B2	6/2008	Sabe et al.	
7,389,166	B2	6/2008	Harwig et al.	
7,408,157	B2	8/2008	Yan	
7,418,762	B2	9/2008	Arai et al.	
7,430,455	B2	9/2008	Casey et al.	
7,430,462	B2	9/2008	Chiu et al.	
7,441,298	B2	10/2008	Svendsen et al.	
7,444,206	B2	10/2008	Abramson et al.	
7,448,113	B2	11/2008	Jones et al.	
7,459,871	B2	12/2008	Landry et al.	
7,467,026	B2	12/2008	Sakagami et al.	
7,474,941	B2	1/2009	Kim et al.	
7,503,096	B2	3/2009	Lin	
7,515,991	B2	4/2009	Egawa et al.	
7,555,363	B2	6/2009	Augenbraun et al.	
7,557,703	B2	7/2009	Yamada et al.	
7,568,259	B2	8/2009	Yan	
7,571,511	B2	8/2009	Jones et al.	
7,578,020	B2	8/2009	Jaworski et al.	
7,600,521	B2	10/2009	Woo	
7,603,744	B2	10/2009	Reindle	
7,617,557	B2	11/2009	Reindle	
7,620,476	B2	11/2009	Morse et al.	
7,636,982	B2	12/2009	Jones et al.	
7,647,144	B2	1/2010	Haegermarck	
7,650,666	B2	1/2010	Jang	
7,660,650	B2	2/2010	Kawagoe et al.	
7,663,333	B2 *	2/2010	Jones et al.	318/568.12
7,693,605	B2	4/2010	Park	
7,706,917	B1 *	4/2010	Chiappetta et al.	700/245
6,925,357	C1	5/2010	Wang et al.	
7,765,635	B2	8/2010	Park, II	
7,801,645	B2	9/2010	Taylor et al.	
7,805,220	B2	9/2010	Taylor et al.	
7,809,944	B2	10/2010	Kawamoto	
7,849,555	B2	12/2010	Hahm et al.	
7,853,645	B2	12/2010	Brown et al.	
7,920,941	B2	4/2011	Park et al.	
7,937,800	B2	5/2011	Yan	
7,957,836	B2	6/2011	Myeong et al.	
2001/0004719	A1	6/2001	Sommer	
2001/0013929	A1	8/2001	Torsten	
2001/0020200	A1	9/2001	Das et al.	
2001/0025183	A1	9/2001	Shahidi	
2001/0037163	A1	11/2001	Allard	
2001/0043509	A1	11/2001	Green et al.	
2001/0045883	A1	11/2001	Holdaway et al.	
2001/0047231	A1	11/2001	Peless et al.	
2001/0047895	A1	12/2001	De Fazio et al.	
2002/0011367	A1	1/2002	Kolesnik	
2002/0011813	A1	1/2002	Koselka et al.	
2002/0016649	A1	2/2002	Jones	
2002/0021219	A1	2/2002	Edwards	
2002/0027652	A1	3/2002	Paromtchik et al.	
2002/0036779	A1	3/2002	Kiyoi et al.	
2002/0081937	A1	6/2002	Yamada et al.	
2002/0095239	A1	7/2002	Wallach et al.	
2002/0097400	A1	7/2002	Jung et al.	
2002/0104963	A1	8/2002	Mancevski	
2002/0108209	A1	8/2002	Peterson	
2002/0112742	A1	8/2002	Bredo et al.	
2002/0113973	A1	8/2002	Ge	
2002/0116089	A1	8/2002	Kirkpatrick	
2002/0120364	A1	8/2002	Colens	
2002/0124343	A1	9/2002	Reed	
2002/0153185	A1	10/2002	Song et al.	
2002/0156556	A1	10/2002	Ruffner	
2002/0159051	A1	10/2002	Guo	
2002/0166193	A1	11/2002	Kasper	
2002/0169521	A1	11/2002	Goodman et al.	
2002/0173877	A1	11/2002	Zweig	
2002/0189871	A1	12/2002	Won	
2003/0009259	A1	1/2003	Hattori et al.	
2003/0019071	A1	1/2003	Field et al.	
2003/0023356	A1	1/2003	Keable	
2003/0024986	A1	2/2003	Mazz et al.	
2003/0025472	A1	2/2003	Jones et al.	
2003/0028286	A1	2/2003	Glenn et al.	
2003/0030399	A1	2/2003	Jacobs	
2003/0058262	A1	3/2003	Sato et al.	
2003/0060928	A1	3/2003	Abramson et al.	
2003/0067451	A1	4/2003	Tagg et al.	
2003/0097875	A1	5/2003	Lentz et al.	
2003/0120389	A1	6/2003	Abramson et al.	
2003/0124312	A1	7/2003	Autumn	
2003/0126352	A1	7/2003	Barrett	
2003/0137268	A1	7/2003	Papanikolopoulos et al.	
2003/0146384	A1	8/2003	Logsdon et al.	
2003/0192144	A1	10/2003	Song et al.	

(56) **References Cited**

U.S. PATENT DOCUMENTS

2003/0193657	A1	10/2003	Uomori et al.
2003/0216834	A1	11/2003	Allard
2003/0221114	A1	11/2003	Hino et al.
2003/0229421	A1	12/2003	Chmura et al.
2003/0229474	A1	12/2003	Suzuki et al.
2003/0233171	A1	12/2003	Heiligensetzer
2003/0233177	A1	12/2003	Johnson et al.
2003/0233870	A1	12/2003	Mancevski
2003/0233930	A1	12/2003	Ozick
2004/0016077	A1	1/2004	Song et al.
2004/0020000	A1	2/2004	Jones
2004/0030448	A1	2/2004	Solomon
2004/0030449	A1	2/2004	Solomon
2004/0030450	A1	2/2004	Solomon
2004/0030451	A1	2/2004	Solomon
2004/0030570	A1	2/2004	Solomon
2004/0030571	A1	2/2004	Solomon
2004/0031113	A1	2/2004	Wosewick et al.
2004/0049877	A1	3/2004	Jones et al.
2004/0055163	A1	3/2004	McCambridge et al.
2004/0068351	A1	4/2004	Solomon
2004/0068415	A1	4/2004	Solomon
2004/0068416	A1	4/2004	Solomon
2004/0074038	A1	4/2004	Im et al.
2004/0074044	A1	4/2004	Diehl et al.
2004/0076324	A1	4/2004	Burl et al.
2004/0083570	A1	5/2004	Song et al.
2004/0085037	A1	5/2004	Jones et al.
2004/0088079	A1	5/2004	Lavarec et al.
2004/0093122	A1	5/2004	Galibraith
2004/0098167	A1	5/2004	Yi et al.
2004/0111184	A1	6/2004	Chiappetta et al.
2004/0111821	A1	6/2004	Lenkiewicz et al.
2004/0113777	A1	6/2004	Matsuhira et al.
2004/0117064	A1	6/2004	McDonald
2004/0117846	A1	6/2004	Karaoguz et al.
2004/0118998	A1	6/2004	Wingett et al.
2004/0128028	A1	7/2004	Miyamoto et al.
2004/0133316	A1	7/2004	Dean
2004/0134336	A1	7/2004	Solomon
2004/0134337	A1	7/2004	Solomon
2004/0143919	A1	7/2004	Wilder
2004/0148419	A1	7/2004	Chen et al.
2004/0148731	A1	8/2004	Damman et al.
2004/0153212	A1	8/2004	Profio et al.
2004/0156541	A1	8/2004	Jeon et al.
2004/0158357	A1	8/2004	Lee et al.
2004/0181706	A1	9/2004	Chen et al.
2004/0187249	A1	9/2004	Jones et al.
2004/0187457	A1	9/2004	Colens
2004/0196451	A1	10/2004	Aoyama
2004/0200505	A1	10/2004	Taylor et al.
2004/0204792	A1	10/2004	Taylor et al.
2004/0210345	A1	10/2004	Noda et al.
2004/0210347	A1	10/2004	Sawada et al.
2004/0211444	A1	10/2004	Taylor et al.
2004/0221790	A1	11/2004	Sinclair et al.
2004/0236468	A1	11/2004	Taylor et al.
2004/0244138	A1	12/2004	Taylor et al.
2004/0255425	A1	12/2004	Arai et al.
2005/0000543	A1	1/2005	Taylor et al.
2005/0010330	A1	1/2005	Abramson et al.
2005/0010331	A1	1/2005	Taylor et al.
2005/0021181	A1	1/2005	Kim et al.
2005/0067994	A1	3/2005	Jones et al.
2005/0085947	A1	4/2005	Aldred et al.
2005/0137749	A1	6/2005	Jeon et al.
2005/0144751	A1	7/2005	Kegg et al.
2005/0150074	A1	7/2005	Diehl et al.
2005/0150519	A1	7/2005	Keppler et al.
2005/0154795	A1	7/2005	Kuz et al.
2005/0156562	A1	7/2005	Cohen et al.
2005/0165508	A1	7/2005	Kanda et al.
2005/0166354	A1	8/2005	Uehigashi
2005/0166355	A1	8/2005	Tani
2005/0171636	A1	8/2005	Tani
2005/0172445	A1	8/2005	Diehl et al.
2005/0183229	A1	8/2005	Uehigashi
2005/0183230	A1	8/2005	Uehigashi
2005/0187678	A1	8/2005	Myeong et al.
2005/0192707	A1	9/2005	Park et al.
2005/0204717	A1	9/2005	Colens
2005/0209736	A1	9/2005	Kawagoe
2005/0211880	A1	9/2005	Schell et al.
2005/0212929	A1	9/2005	Schell et al.
2005/0213082	A1 *	9/2005	DiBernardo et al. 356/139.03
2005/0213109	A1	9/2005	Schell et al.
2005/0217042	A1	10/2005	Reindle
2005/0218852	A1	10/2005	Landry et al.
2005/0222933	A1	10/2005	Wesby
2005/0229340	A1	10/2005	Sawalski et al.
2005/0229355	A1	10/2005	Crouch et al.
2005/0235451	A1	10/2005	Yan
2005/0251292	A1	11/2005	Casey et al.
2005/0255425	A1	11/2005	Pierson
2005/0258154	A1	11/2005	Blankenship et al.
2005/0273967	A1	12/2005	Taylor et al.
2005/0288819	A1	12/2005	de Guzman
2006/0000050	A1	1/2006	Cipolla et al.
2006/0010638	A1	1/2006	Shimizu et al.
2006/0020369	A1	1/2006	Taylor et al.
2006/0020370	A1	1/2006	Abramson
2006/0021168	A1	2/2006	Nishikawa
2006/0025134	A1	2/2006	Cho et al.
2006/0037170	A1	2/2006	Shimizu
2006/0042042	A1	3/2006	Mertes et al.
2006/0044546	A1	3/2006	Lewin et al.
2006/0060216	A1	3/2006	Woo
2006/0061657	A1	3/2006	Rew et al.
2006/0064828	A1	3/2006	Stein et al.
2006/0087273	A1	4/2006	Ko et al.
2006/0089765	A1	4/2006	Pack et al.
2006/0100741	A1	5/2006	Jung
2006/0119839	A1	6/2006	Bertin et al.
2006/0143295	A1	6/2006	Costa-Requena et al.
2006/0146776	A1	7/2006	Kim
2006/0190133	A1	8/2006	Konandreas et al.
2006/0190146	A1	8/2006	Morse et al.
2006/0196003	A1	9/2006	Song et al.
2006/0220900	A1	10/2006	Ceskutti et al.
2006/0259194	A1 *	11/2006	Chiu 700/245
2006/0259494	A1	11/2006	Watson et al.
2006/0288519	A1	12/2006	Jaworski et al.
2006/0293787	A1	12/2006	Kanda et al.
2007/0006404	A1	1/2007	Cheng et al.
2007/0017061	A1	1/2007	Yan
2007/0028574	A1	2/2007	Yan
2007/0032904	A1	2/2007	Kawagoe et al.
2007/0042716	A1	2/2007	Goodall et al.
2007/0043459	A1	2/2007	Abbott et al.
2007/0061041	A1 *	3/2007	Zweig 700/245
2007/0114975	A1	5/2007	Cohen et al.
2007/0150096	A1	6/2007	Yeh et al.
2007/0157415	A1	7/2007	Lee et al.
2007/0157420	A1	7/2007	Lee et al.
2007/0179670	A1	8/2007	Chiappetta et al.
2007/0226949	A1	10/2007	Hahm et al.
2007/0234492	A1	10/2007	Svendsen et al.
2007/0244610	A1	10/2007	Ozick et al.
2007/0250212	A1	10/2007	Halloran et al.
2007/0266508	A1	11/2007	Jones et al.
2008/0007203	A1	1/2008	Cohen et al.
2008/0039974	A1	2/2008	Sandin et al.
2008/0052846	A1	3/2008	Kapoor et al.
2008/0091304	A1 *	4/2008	Ozick et al. 700/258
2008/0184518	A1	8/2008	Taylor
2008/0276407	A1	11/2008	Schnittman et al.
2008/0281470	A1 *	11/2008	Gilbert et al. 700/259
2008/0282494	A1	11/2008	Won et al.
2008/0294288	A1	11/2008	Yamauchi
2008/0302586	A1	12/2008	Yan
2008/0307590	A1	12/2008	Jones et al.
2009/0007366	A1	1/2009	Svendsen et al.
2009/0038089	A1	2/2009	Landry et al.

(56) **References Cited**

U.S. PATENT DOCUMENTS

2009/0049640	A1	2/2009	Lee et al.
2009/0055022	A1	2/2009	Casey et al.
2009/0102296	A1	4/2009	Greene et al.
2009/0292393	A1	11/2009	Casey et al.
2010/0011529	A1	1/2010	Won et al.
2010/0049365	A1	2/2010	Jones et al.
2010/0063628	A1	3/2010	Landry et al.
2010/0107355	A1	5/2010	Won et al.
2010/0257690	A1	10/2010	Jones et al.
2010/0257691	A1	10/2010	Jones et al.
2010/0263158	A1	10/2010	Jones et al.
2010/0268384	A1	10/2010	Jones et al.
2010/0312429	A1	12/2010	Jones et al.

FOREIGN PATENT DOCUMENTS

DE	3536907	C2	2/1989
DE	3404202	C2	12/1992
DE	199311014	U1	10/1993
DE	4338841	A1	5/1995
DE	4414683	A1	10/1995
DE	19849978		2/2001
DE	10242257	A1	4/2003
DE	102004038074.0		6/2005
DE	10357636		7/2005
DE	102004041021	B3	8/2005
DE	102005046813	A1	4/2007
DK	338988	A	12/1988
EP	0265542	A1	5/1988
EP	0281085	A2	9/1988
EP	0286328	A1	10/1988
EP	0294101	A2	12/1988
EP	0352045	A2	1/1990
EP	0433697	A2	6/1991
EP	0 437 024		7/1991
EP	0554978	A2	8/1993
EP	0615719	A1	9/1994
EP	0930040	A2	7/1999
EP	0861629	B1	9/2001
EP	1228734	A2	8/2002
EP	1 331 537	A1	7/2003
EP	1 331 537	B1	7/2003
EP	1331537	A1	7/2003
EP	1380245		1/2004
EP	1380246	A2	1/2004
EP	1018315	B1	11/2004
EP	1557730		7/2005
EP	1642522	A2	4/2006
EP	1836941	A2	9/2007
ES	2238196	A1	8/2005
FR	722755		3/1932
FR	2601443	A1	1/1988
FR	2 828 589		8/2001
FR	2828589	A1	2/2003
GB	702426		1/1954
GB	2128842	A	5/1984
GB	2213047	A	8/1989
GB	2225221	A	5/1990
GB	2267360	A	12/1993
GB	2 283 838		5/1995
GB	2284957	A	6/1995
GB	2300082	A	10/1996
GB	2344747	A	6/2000
GB	2404330	A	2/2005
GB	2417354	A	2/2006
JP	53021869		2/1978
JP	53-64055		6/1978
JP	53110257	A2	9/1978
JP	57014726	A2	1/1982
JP	57064217		4/1982
JP	59005315		1/1984
JP	59005315	A2	1/1984
JP	59033511	U	3/1984
JP	59094005		5/1984
JP	59099308		6/1984
JP	59112311		6/1984
JP	59120124	A	7/1984
JP	59131668	U	9/1984
JP	59164973		9/1984
JP	59184917	A	10/1984
JP	2283343	A2	11/1984
JP	59212924		12/1984
JP	59226909		12/1984
JP	60089213		5/1985
JP	60211510	A	10/1985
JP	60259895		12/1985
JP	61023221		1/1986
JP	61023221	A2	1/1986
JP	61097712	A	5/1986
JP	61160366		7/1986
JP	62070709		4/1987
JP	62074018	A	4/1987
JP	62-120510		6/1987
JP	62-154008		7/1987
JP	62154008		7/1987
JP	62164431		7/1987
JP	62263507	A	11/1987
JP	62263508	A	11/1987
JP	62189057	U	12/1987
JP	63079623	A	4/1988
JP	63-183032		7/1988
JP	63158032		7/1988
JP	63203483	A	8/1988
JP	63-223913		9/1988
JP	63-241610		10/1988
JP	63241610	A	10/1988
JP	63241610	A2	10/1988
JP	1118752		8/1989
JP	2-6312		1/1990
JP	2006312	U1	1/1990
JP	03-051023		3/1991
JP	3051023	A	3/1991
JP	3051023	A2	3/1991
JP	03-162814		7/1991
JP	4019586		1/1992
JP	4074285	A	3/1992
JP	4084921	A	3/1992
JP	5-023269		2/1993
JP	5042076	A	2/1993
JP	5046246		2/1993
JP	5091604	A2	4/1993
JP	5095879	A	4/1993
JP	5150827	A	6/1993
JP	5150829	A	6/1993
JP	5054620	U	7/1993
JP	5040519	Y2	10/1993
JP	05257527	A	10/1993
JP	5257533	A2	10/1993
JP	05285861	A	11/1993
JP	5302836	A	11/1993
JP	5312514	A	11/1993
JP	5341904	A	12/1993
JP	6003251	U	1/1994
JP	6038912		2/1994
JP	6105781	A	4/1994
JP	6137828	A	5/1994
JP	6154143	A	6/1994
JP	6293095	A	10/1994
JP	06-327598		11/1994
JP	7047046	A	2/1995
JP	7059702	A2	3/1995
JP	07-129239		5/1995
JP	HEI 07171081		7/1995
JP	7222705	A2	8/1995
JP	7270518	A	10/1995
JP	7281742	A2	10/1995
JP	7-295636		11/1995
JP	07-295643		11/1995
JP	7295636	A2	11/1995
JP	7311041	A2	11/1995
JP	7313417	A	12/1995
JP	7319542	A2	12/1995
JP	8-16776		1/1996

(56) **References Cited**

FOREIGN PATENT DOCUMENTS

JP	8000393	A	1/1996
JP	8000393	B2	1/1996
JP	8016241	A2	1/1996
JP	8016776	B2	2/1996
JP	8063229	A2	3/1996
JP	8083125	A2	3/1996
JP	08-089451		4/1996
JP	8084696	A	4/1996
JP	8089449	A	4/1996
JP	2520732	B2	5/1996
JP	8123548	A	5/1996
JP	08-152916		6/1996
JP	8152916	A2	6/1996
JP	8256960	A2	10/1996
JP	8263137	A	10/1996
JP	8286741	A2	11/1996
JP	8286744	A2	11/1996
JP	HEI 08292812		11/1996
JP	8322774	A2	12/1996
JP	8335112	A	12/1996
JP	8339297	A	12/1996
JP	9044240	A	2/1997
JP	9066855	A	3/1997
JP	9145309	A	6/1997
JP	9160644	A2	6/1997
JP	9-179625		7/1997
JP	9179625	A2	7/1997
JP	9179685	A2	7/1997
JP	9185410		7/1997
JP	9192069	A2	7/1997
JP	2555263	Y2	8/1997
JP	9204223	A	8/1997
JP	9204223	A2	8/1997
JP	9206258	A2	8/1997
JP	0 792 726		9/1997
JP	09251318		9/1997
JP	9265319	A	10/1997
JP	9269807	A	10/1997
JP	9269810	A	10/1997
JP	9319431	A1	12/1997
JP	9319431	A2	12/1997
JP	9319432	A	12/1997
JP	9319434	A	12/1997
JP	9325812	A	12/1997
JP	10055215	A	2/1998
JP	10117973	A	5/1998
JP	10117973	A2	5/1998
JP	10118963	A	5/1998
JP	10165738	A	6/1998
JP	10177414	A	6/1998
JP	10214114	A2	8/1998
JP	10228316		8/1998
JP	10240342	A2	9/1998
JP	10260727	A2	9/1998
JP	10295595	A	11/1998
JP	10314088		12/1998
JP	11015941	A	1/1999
JP	11065655	A2	3/1999
JP	11085269	A2	3/1999
JP	11102219	A2	4/1999
JP	11102220	A	4/1999
JP	11162454	A	6/1999
JP	11174145	A	7/1999
JP	11175149	A	7/1999
JP	11-508810		8/1999
JP	11212642	A	8/1999
JP	11212642	A2	8/1999
JP	11213157	A	8/1999
JP	11508810	T2	8/1999
JP	11-510935		9/1999
JP	11510935	T2	9/1999
JP	11295412	A	10/1999
JP	11346964	A2	12/1999
JP	2000047728		2/2000
JP	2000056006	A	2/2000
JP	2000056831	A	2/2000
JP	2000060782	A	2/2000
JP	2000066722	A	3/2000
JP	2000075925	A	3/2000
JP	2000102499	A	4/2000
JP	10240343	A2	5/2000
JP	2000-235416		8/2000
JP	2000275321		10/2000
JP	2000279353	A	10/2000
JP	2000-342496		12/2000
JP	2000-353013		12/2000
JP	2000353014	A	12/2000
JP	2000353014	A2	12/2000
JP	2001022443	A	1/2001
JP	2001067588		3/2001
JP	2001087182		4/2001
JP	2001121455		5/2001
JP	2001125641		5/2001
JP	2001-508572		6/2001
JP	2001508572	A	6/2001
JP	2001-197008		7/2001
JP	2001197008		7/2001
JP	2001197008	A	7/2001
JP	3197758	B2	8/2001
JP	3201903	B2	8/2001
JP	2001216482	A	8/2001
JP	2001-258807		9/2001
JP	2001258807		9/2001
JP	2001265437	A	9/2001
JP	2001-275908		10/2001
JP	2001-287183		10/2001
JP	2001275908	A	10/2001
JP	2001289939		10/2001
JP	2001306170	A	11/2001
JP	2001-525567		12/2001
JP	2002-73170		3/2002
JP	2002-78650		3/2002
JP	2002073170		3/2002
JP	2002073170	A	3/2002
JP	2002078650	A	3/2002
JP	2002085305		3/2002
JP	2002-204768		7/2002
JP	22204768	A2	7/2002
JP	2002204768	A	7/2002
JP	2002204769	A	7/2002
JP	2002247510	A	8/2002
JP	2002-532178		10/2002
JP	3356170		10/2002
JP	2002532180	A	10/2002
JP	2002-323925		11/2002
JP	3375843		11/2002
JP	22323925	A2	11/2002
JP	2002323925		11/2002
JP	2002333920	A	11/2002
JP	2002-355206		12/2002
JP	2002-360471		12/2002
JP	2002-360482		12/2002
JP	2005-366227		12/2002
JP	2002355206		12/2002
JP	2002360471	A	12/2002
JP	2002360482	A	12/2002
JP	2002366227		12/2002
JP	2002369778		12/2002
JP	2002369778	A2	12/2002
JP	2003-10076		1/2003
JP	23028528	A2	1/2003
JP	2003005296	A	1/2003
JP	2003010076	A	1/2003
JP	2003010088	A	1/2003
JP	2003028528	A	1/2003
JP	2003-5296		2/2003
JP	2003-036116		2/2003
JP	2003-38401		2/2003
JP	2003-38402		2/2003
JP	2003-047579		2/2003
JP	2003-505127		2/2003
JP	23036116	A2	2/2003
JP	23052596	A2	2/2003
JP	2003036116		2/2003

(56) **References Cited**

FOREIGN PATENT DOCUMENTS

JP	2003036116	A	2/2003
JP	2003038401	A	2/2003
JP	2003038402	A	2/2003
JP	2003047579		2/2003
JP	2003-061882		3/2003
JP	2003061882	A	3/2003
JP	2003084994		3/2003
JP	2003167628	A	6/2003
JP	2003-180586		7/2003
JP	2003180586	A	7/2003
JP	2003180587	A	7/2003
JP	2003186539	A	7/2003
JP	2003190064	A	7/2003
JP	2003190064	A2	7/2003
JP	2003-228421		8/2003
JP	2003228421		8/2003
JP	2003241836	A	8/2003
JP	2003262520	A	9/2003
JP	2003304992	A	10/2003
JP	2003-310489		11/2003
JP	2003310509	A	11/2003
JP	2003330543	A	11/2003
JP	2004123040	A	4/2004
JP	2004148021	A	5/2004
JP	2004160102	A	6/2004
JP	2004166968	A	6/2004
JP	2004-185586		7/2004
JP	2004198330	A	7/2004
JP	2004219185		8/2004
JP	2004351234	A	12/2004
JP	2005118354	A	5/2005
JP	2005-211360		8/2005
JP	2005211360	A	8/2005
JP	2005224265	A	8/2005
JP	2005-230032		9/2005
JP	2005-242489		9/2005
JP	2005230032	A	9/2005
JP	2005245916	A	9/2005
JP	2005-296511		10/2005
JP	2005346700	A2	12/2005
JP	2005352707	A	12/2005
JP	2006043071	A	2/2006
JP	2006-127448		5/2006
JP	2006155274	A	6/2006
JP	2006164223	A	6/2006
JP	2006227673	A	8/2006
JP	2006247467	A	9/2006
JP	2006260161	A	9/2006
JP	2006293662	A	10/2006
JP	2006296697	A	11/2006
JP	2007034866	A	2/2007
JP	2007213180	A	8/2007
JP	2004-267236		9/2007
JP	2009015611	A	1/2009
JP	2010198552	A	9/2010
WO	9526512	A1	10/1995
WO	WO 95/26512		10/1995
WO	WO9526512	A1	10/1995
WO	9530887	A1	11/1995
WO	9617258	A1	6/1996
WO	9715224	A1	5/1997
WO	WO 97/15224		5/1997
WO	9740734	A1	11/1997
WO	9741451	A1	11/1997
WO	WO 97/40734		11/1997
WO	WO 97/41451		11/1997
WO	WO9740734	A1	11/1997
WO	WO9741451	A1	11/1997
WO	9853456	A1	11/1998
WO	WO 98/53456		11/1998
WO	9905580	A2	2/1999
WO	9916078	A1	4/1999
WO	WO 99/16078		4/1999
WO	WO 99/28800		6/1999
WO	9938056	A1	7/1999
WO	9938237	A1	7/1999
WO	WO 99/38056		7/1999
WO	WO 99/38237		7/1999
WO	WO9938056	A1	7/1999
WO	WO9938237	A1	7/1999
WO	9943250	A1	9/1999
WO	WO 99/43250		9/1999
WO	WO 99/59042		11/1999
WO	WO9959042	A1	11/1999
WO	WO 00/04430		1/2000
WO	WO0004430	A1	1/2000
WO	0038026	A1	6/2000
WO	0038028	A1	6/2000
WO	0038029	A1	6/2000
WO	WO 00/36962		6/2000
WO	WO 00/38026		6/2000
WO	WO 00/38029		6/2000
WO	WO0038026	A1	6/2000
WO	WO0038029	A1	6/2000
WO	0004430	A1	10/2000
WO	0078410	A1	12/2000
WO	WO 00/78410		12/2000
WO	0106904	A1	2/2001
WO	0106905	A1	2/2001
WO	WO 01/06904		2/2001
WO	WO 01/06905		2/2001
WO	WO0106904	A1	2/2001
WO	0180703	A1	11/2001
WO	0191623	A2	12/2001
WO	WO 01/91623		12/2001
WO	0224292	A1	3/2002
WO	0239864	A1	5/2002
WO	0239868	A1	5/2002
WO	WO 02/39864		5/2002
WO	WO 02/39868		5/2002
WO	WO0239868	A1	5/2002
WO	02058527	A1	8/2002
WO	02062194	A1	8/2002
WO	WO 02/058527		8/2002
WO	WO 02/062194		8/2002
WO	02067744	A1	9/2002
WO	02067745	A1	9/2002
WO	02067752	A1	9/2002
WO	02069774	A1	9/2002
WO	02069775	A2	9/2002
WO	02071175	A1	9/2002
WO	02074150	A1	9/2002
WO	02075350	A1	9/2002
WO	02075356	A1	9/2002
WO	02075469	A1	9/2002
WO	02075470	A1	9/2002
WO	WO 02/067744		9/2002
WO	WO 02/067745		9/2002
WO	WO 02/071175		9/2002
WO	WO 02/074150		9/2002
WO	WO 02/075356		9/2002
WO	WO 02/075469		9/2002
WO	WO 02/075470		9/2002
WO	WO02075356	A1	9/2002
WO	WO02075469	A1	9/2002
WO	WO02075470	A1	9/2002
WO	02081074	A1	10/2002
WO	WO 02/081074		10/2002
WO	02101477	A2	12/2002
WO	WO 02/101477		12/2002
WO	WO02101477	A2	12/2002
WO	03015220	A1	2/2003
WO	WO03015220	A1	2/2003
WO	03024292	A2	3/2003
WO	2003/026474		4/2003
WO	WO 03/026474		4/2003
WO	03040546	A1	5/2003
WO	03040845	A1	5/2003
WO	03040846	A1	5/2003
WO	WO 03/040845		5/2003
WO	WO 03/040846		5/2003
WO	03062850	A2	7/2003
WO	03062852	A1	7/2003
WO	2004004533	A1	1/2004

(56) **References Cited**

FOREIGN PATENT DOCUMENTS

WO	2004004534	A1	1/2004
WO	2004006034	A2	1/2004
WO	WO 2004/006034		1/2004
WO	WO2004004533	A1	1/2004
WO	WO2004005956	A1	1/2004
WO	WO2004006034	A2	1/2004
WO	WO2004058028	A2	1/2004
WO	2004025947	A2	3/2004
WO	WO2004/025947		3/2004
WO	2004058028	A2	7/2004
WO	2004059409	A1	7/2004
WO	WO2004/058028		7/2004
WO	WO2004/059409		7/2004
WO	WO2004058028		7/2004
WO	2005006935	A1	1/2005
WO	2005037496	A1	4/2005
WO	2005055795	A1	6/2005
WO	2005055796	A2	6/2005
WO	WO 2005/055795		6/2005
WO	2005076545	A1	8/2005
WO	2005077243	A1	8/2005
WO	2005077244	A1	8/2005
WO	WO 2005/077244		8/2005
WO	WO2005077244	A1	8/2005
WO	2005081074	A1	9/2005
WO	2005083541	A1	9/2005
WO	WO 2005/081074		9/2005
WO	WO2005/083541		9/2005
WO	WO2005082223	A1	9/2005
WO	2005098475	A1	10/2005
WO	2005098476	A1	10/2005
WO	2006046400	A1	5/2006
WO	2006061133	A1	6/2006
WO	2006068403	A1	6/2006
WO	WO2006/061133		6/2006
WO	WO2006068403	A1	6/2006
WO	2006073248	A1	7/2006
WO	2006089307	A2	8/2006
WO	2007028049	A2	3/2007
WO	2007036490	A2	4/2007
WO	2007065033	A2	6/2007
WO	2007137234	A2	11/2007

OTHER PUBLICATIONS

Cameron Morland, *Autonomous Lawn Mower Control*, Jul. 24, 2002.

Doty, Keith L et al, "Sweep Strategies for a Sensory-Driven, Behavior-Based Vacuum Cleaning Agent" AAAI 1993 Fall Symposium Series Instantiating Real-World Agents Research Triangle Park, Raleigh, NC, Oct. 22-24, 1993, pp. 1-6.

Electrolux designed for the well-lived home, website: http://www.electroluxusa.com/node57.as[?currentURL=node142.asp%3F, acessed Mar. 18, 2005, 5 pgs.

eVac Robotic Vacuum S1727 Instruction Manual, Sharper Image Corp, Copyright 2004, 16 pgs.

Everyday Robots, website: http://www.everydayrobots.com/index.php?option=content&task=view&id=9, accessed Apr. 20, 2005, 7 pgs.

Facts on the Trilobite webpage: "http://trilobiteelectroluxse/presskit_en/nodel1335asp?print=yes&pressID=" accessed Dec. 12, 2003 (2 pages).

Friendly Robotics Robotic Vacuum RV400—The Robot Store website: http://www.therobotstore.com/s.nl/sc.9/category,-109/it.A/id.43/.f, accessed Apr. 20, 2005, 5 pgs.

Gat, Erann, Robust Low-computation Sensor-driven Control for Task-Directed Navigation, Proceedings of the 1991 IEEE, International Conference on Robotics and Automation, Sacramento, California, Apr. 1991, pp. 2484-2489.

Hitachi: News release: The home cleaning robot of the autonomous movement type (experimental machine) is developed, website: http://www.i4u.com/japanreleases/hitachirobot.htm., accessed Mar. 18, 2005, 5 pgs.

Kärcher Product Manual Download webpage: "http://ww-wkarchercom/bta/downloadenshtml?ACTION=SELECTTEILENR&ID=rc3000&submitButtonName=Select+Product+Manual" and associated pdf file "5959-915enpdf (47 MB) English/English" accessed Jan. 21, 2004 (16 pages).

Karcher RC 3000 Cleaning Robot—user manual Manufacturer: Alfred-Karcher GmbH & Co, Cleaning Systems, Alfred Karcher-Str 28-40, PO Box 160, D-71349 Winnenden, Germany, Dec. 2002.

Kärcher RoboCleaner RC 3000 Product Details webpages: "http://wwwrobocleanerde/english/screen3html" through " . . . screen6html" accessed Dec. 12, 2003 (4 pages).

Karcher USA, RC3000 Robotic Cleaner, website: http://www.karcher-usa.com/showproducts.php?op=view_prod&param1=143&param2=&param3=, accessed Mar. 18, 2005, 6 pgs.

koolvac Robotic Vacuum Cleaner Owner's Manual, Koolatron, Undated, 26 pgs.

NorthStar Low-Cost, Indoor Localization, Evolution robotics, Powering Intelligent Products, 2 pgs.

Put Your Roomba . . . On "Automatic" Roomba Timer> Timed Cleaning-Floorvac Robotic Vacuum webpages: http://cgi.ebay.com/ws/eBayISAPI.dll?ViewItem&category=43575198387&rd=1, accessed Apr. 20, 2005, 5 pgs.

Put Your Roomba . . . On "Automatic" webpages: "http://www.acomputeredge.com/roomba," accessed Apr. 20, 2005, 5 pgs.

RoboMaid Sweeps Your Floors So You Won't Have to, the Official Site, website: http://www.thereobomaid.com/, acessed Mar. 18, 2005, 2 pgs.

Robot Review Samsung Robot Vacuum (VC-RP30W), website: http://www.onrobo.com/reviews/At_Home/Vacuun_Cleaners/on00vcrp30rosam/index.htm, accessed Mar. 18, 2005, 11 pgs.

Robotic Vacuum Cleaner-Blue, website: http://www.sharperimage.com/us/en/catalog/productview.jhtml?sku=S1727BLU, accessed Mar. 18, 2005, 3 pgs.

Sebastian Thrun, *Learning Occupancy Grid Maps With Forward Sensor Models*, School of Computer Science, Carnegie Mellon University, pp. 1-28.

Schofield, Monica, "Neither Master nor Slave" A Practical Study in the Development and Employment of Cleaning Robots, Emerging Technologies and Factory Automation, 1999 Proceedings EFA'99 1999 7th IEEE International Conference on Barcelona, Spain Oct. 18-21, 1999, pp. 1427-1434.

Wired News: Robot Vacs Are in the House, website: http://www.wired.com/news/print/0,1294,59237,00.html, accessed Mar. 18, 2005, 6 pgs.

Zoombot Remote Controlled Vaccum-RV-500 New Roomba 2, website: http://cgi.ebay.com/ws/eBayISAPI.dll?ViewItem&category=43526&item=4373497618&rd=1, accessed Apr. 20, 2005, 7 pgs.

International Preliminary Report for counterpart application, PCT/US2006/046395 dated Feb. 28, 2008.

European Search Report dated Apr. 3, 2009 in connection with Application No. 09154458.5-2206. 6 pages.

Chamberlin, et al., Robot Locator Beacon System, NASA Goddard SFC, Design Proposal, Feb. 17, 2006.

Cameron Morland, Autonomous Lawnmower Control, Jul. 24, 2002.

Keith L. Doty and Reid R. Harrison, Sweep Strategies for a Sensory Driven Behavior Based Vacuum Cleaning Agent, Oct. 22-24, 1993.

European Search Report dated Oct. 6, 2009 in connection with EP Application No. 09168571.9-2206. 149 pages.

Examination report dated Dec. 22, 2010 for corresponding application EP 10174129.6.

Examination report dated Feb. 8, 2011 for corresponding application EP 10174129.6.

Examination report dated Apr. 5, 2011 from corresponding U.S. Appl. No. 12/959,879.

Examination report dated Feb. 22, 2010 from corresponding U.S. Appl. No. 11/633,883.

Examination report dated Jul. 15, 2011from corresponding U.S. Appl. No. 12/211,938.

Examination report dated Jul. 20, 2011 from corresponding JP application 2008-543548.

Examination report dated Jun. 21, 2011 from corresponding JP application 2011-088402.

(56) **References Cited**

OTHER PUBLICATIONS

Examination report dated Mar. 10, 2011 from corresponding JP application 2010-282185.
Examination report dated Mar. 11, 2010 from corresponding U.S. Appl. No. 11/758,289.
Examination report dated May 2, 2011 from corresponding U.S. Appl. No. 11/773,845.
Examination report dated Nov. 10, 2010 from corresponding U.S. Appl. No. 11/758,289.
Examination report dated Oct. 29, 2010 from corresponding U.S. Appl. No. 11/633,886.
Prassler et al., "A Short History of Cleaning Robots", Autonomous Robots 9, 211-226, 2000.
Hitachi "Feature", http://kadenfan.hitachi.co.jp/robot/feature/feature.html , 1 page Nov. 19, 2008.
Notification of Reasons for Rejection, JP Application No. 2008-543546, Nov. 2, 2011, 4 pages (English translation included, 4 pages).
Andersen et al., "Landmark based navigation strategies", SPIE Conference on Mobile Robots XIII, SPIE vol. 3525, pp. 170-181, Jan. 8, 1999.
Ascii, Mar. 25, 2002, http://ascii.jp/elem/000/000/330/330024/ accessed Nov. 1, 2011.
U.S. Appl. No. 60/605,066 as provided to WIPO in PCT/US2005/030422, corresponding to U.S. National Stage Entry U.S. Appl. No. 11/574,290, U.S. publication 2008/0184518, filed Aug. 27, 2004.
U.S. Appl. No. 60/605,181 as provided to WIPO in PCT/US2005/030422, corresponding to U.S. National Stage Entry U.S. Appl. No. 11/574,290, U.S. publication 2008/0184518, filed Aug. 27, 2004.
Derek Kurth, "Range-Only Robot Localization and SLAM with Radio", http://www.ri.cmu.edu/pub_files/pub4/kurth_derek_2004_1/kurth_derek_2004_1.pdf. 60 pages, May 2004, accessed Jul. 27, 2012.
Electrolux Trilobite, Jan. 12, 2001, http://www.electrolux-ui.com:8080/2002%5C822%5C833102EN.pdf, accessed Jan. 2, 2012, 10 pages.
Florbot GE Plastics, 1989-1990, 2 pages, available at http://www.fuseid.com/, accessed Sep. 27, 2012.
Hitachi 'Feature', http://kadenfan.hitachi.co.jp/robot/feature/feature.html, 1 page, Nov. 19, 2008.
Hitachi, http://www.hitachi.co.jp/New/cnews/hi_030529_hi_030529.pdf_, 8 pages, May 29, 2003.
Home Robot—UBOT; Microbotusa.com, retrieved from the WWW at www.microrobotusa.com, accessed Dec. 2, 2008.
King and Weiman, "Helpmate™ Autonomous Mobile Robots Navigation Systems," SPIE vol. 1388 Mobile Robots, pp. 190-198 (1990).
Li et al. "Robust Statistical Methods for Securing Wireless Localization in Sensor Networks," Information Procesing in Sensor Networks, 2005, Fourth International Symposium on, pp. 91-98, Apr. 2005.
Maschinemarkt Würzburg 105, Nr. 27, pp. 3, 30, Jul. 5, 1999.
Miwako Doi "Using the symbiosis of human and robots from approaching Research and Development Center," Toshiba Corporation, 16 pages, available at http://warp.ndl.go.jp/info:ndljp/pid/258151/www.soumu.go.jp/joho_tsusin/policyreports/chousa/netrobot/pdf/030214_1_33_a.pdf, Feb. 26, 2003.
Paromtchik "Toward Optical Guidance of Mobile Robots," Proceedings of the Fourth World Multiconference on Systemics, Cybermetics and Informatics, Orlando, FL, USA, Jul. 23, 2000, vol. IX, pp. 44-49, available at http://emotion.inrialpes.fr~paromt/infos/papers/paromtchik:asama:sci:2000.ps.gz, accessed Jul. 3, 2012.
Roboking—not just a vacuum cleaner, a robot!, Jan. 21, 2004, infocom.uz/2004/01/21/robokingne-prosto-pyilesos-a-robot/, accessed Oct. 10, 2011, 7 pages.
Sebastian Thrun, "Learning Occupancy Grid Maps With Forward Sensor Models," Autonomous Robots 15, 111-127, Sep. 1, 2003.
SVET Computers—New Technologies—Robot Vacuum Cleaner, Oct. 1999, available at http://www.sk.rs/1999/10/sknt01.html, accessed Nov. 1, 2011.
Written Opinion of the International Searching Authority, PCT/US2004/001504, Aug. 20, 2012, 9 pages.
Andersen et al., "Landmark based navigation strategies," SPIE Conference on Mobile Robots XIII, SPIE vol. 3525, pp. 170-181, Jan. 8, 1999.
Ascii, Mar. 25, 2002, http://ascii.jp/elem/000/000/330/330024/, accessed Nov. 2011, 15 pages (with English translation).
Barker, "Navigation by the Stars—Ben Barker 4th Year Project," Nov. 2004, 20 pages.
Becker et al., "Reliable Navigation Using Landmarks," IEEE International Conference on Robotics and Automation, 0-7803-1965-6, pp. 401-406, 1995.
Benayad-Cherif et al., "Mobile Robot Navigation Sensors," SPIE vol. 1831 Mobile Robots, VII, pp. 378-387, 1992.
Betke et al. "Mobile robot localization using landmarks," Proceedings of the IEEE/RSJ/GI International Conference on Intelligent Robots and Systems '94 Advanced Robotic Systems and the Real World (IROS '94), Accessed via IEEE Xplore, 1994, 8 pages.
Bison et al., "Using a structured beacon for cooperative position estimation," *Robotics and Autonomous Systems*, 29(1):33-40, Oct. 1999.
Blaasvaer et al., "AMOR—An Autonomous Mobile Robot Navigation System," Proceedings of the IEEE International Conference on Systems, Man, and Cybernetics, pp. 2266-2271, 1994.
Borges et al., "Optimal Mobile Robot Pose Estimation Using Geometrical Maps," IEEE Transactions on Robotics and Automation, 18(1): 87-94, Feb. 2002.
Braunstingl et al., "Fuzzy Logic Wall Following of a Mobile Robot Based on the Concept of General Perception," ICAR '95, 7th International Conference on Advanced Robotics, Sant Feliu De Guixols, Spain, pp. 367-376, Sep. 1995.
Bulusu et al., "Self Configuring Localization systems: Design and Experimental Evaluation," *ACM Transactions on Embedded Computing Systems*, 3(1):24-60, 2003.
Caccia et al., "Bottom-Following for Remotely Operated Vehicles," 5th IFAC Conference, Alaborg, Denmark, pp. 245-250, Aug. 2000.
Chae et al., "StarLITE: A new artificial landmark for the navigation of mobile robots," http://www.irc.atr.jp/jk-nrs2005/pdf/Starlite.pdf, 4 pages, 2005.
Chamberlin et al., "Team 1: Robot Locator Beacon System," NASA Goddard SFC, Design Proposal, 15 pages, Feb. 2006.
Champy, "Physical management of IT assets in Data Centers using RFID technologies," RFID 2005 University, Oct. 12-14, 2005 , 19 pages.
Chin, "Joystick Control for Tiny OS Robot," http://www.eecs.berkeley.edu/Programs/ugrad/superb/papers2002/chiri.pdf. 12 pages, Aug. 2002.
Christensen et al. "Theoretical Methods for Planning and Control in Mobile Robotics," 1997 First International Conference on Knowledge-Based Intelligent Electronic Systems, Adelaide, Australia, pp. 81-86, May 1997.
CleanMate 365, Intelligent Automatic Vacuum Cleaner, Model No. QQ-1, User Manual www.metapo.com/support/user_manual.pdf, Dec. 2005, 11 pages.
Clerentin et al., "A localization method based on two omnidirectional perception systems cooperation," *Proc of IEEE International Conference on Robotics & Automation*, San Francisco, CA vol. 2, pp. 1219-1224, Apr. 2000.
Corke, "High Performance Visual serving for robots end-point control," SPIE vol. 2056, Intelligent Robots and Computer Vision, 1993, 10 pages.
Cozman et al., "Robot Localization using a Computer Vision Sextant," IEEE International Midwest Conference on Robotics and Automation, pp. 106-111, 1995.
D'Orazio et al., "Model based Vision System for mobile robot position estimation", *SPIE*, vol. 2058 Mobile Robots VIII, pp. 38-49, 1992.
De Bakker et al., "Smart PSD—array for sheet of light range imaging", *Proc. of SPIE*, vol. 3965, pp. 1-12, May 2000.
Denning Roboscrub image, 1989, 1 page.
Desaulniers et al., "An Efficient Algorithm to find a shortest path for a car-like Robot," *IEEE Transactions on robotics and Automation* , 11(6):819-828, Dec. 1995.

(56) **References Cited**

OTHER PUBLICATIONS

Dorfmüller-Ulhaas, "Optical Tracking From User Motion to 3D Interaction," http://www.cg.tuwien.ac.at/research/publications/2002/Dorfmueller-Ulhaas-thesis, 182 pages, 2002.
Dorsch et al., "Laser Triangulation: Fundamental uncertainty in distance measurement," *Applied Optics*, 33(7):1306-1314, Mar. 1994.
Doty et al., "Sweep Strategies for a Sensory-Driven, Behavior-Based Vacuum Cleaning Agent," AAAI 1993 Fall Symposium Series, Instantiating Real-World Agents, pp. 1-6, Oct. 22-24, 1993.
Dudek et al., "Localizing a Robot with Minimum Travel" *Proceedings of the sixth annual ACM-SIAM symposium on Discrete Algorithms*, 27(2):583-604, Apr. 1998.
Dulimarta et al., "Mobile Robot Localization in Indoor Environment", *Pattern Recognition*, 30(1):99-111, 1997.
Dyson's Robot Vacuum Cleaner—the DC06, May 2004, Retrieved from the Internet: URL<http://www.gizmag.com/go/1282/>. Accessed Nov. 2011, 3 pages.
EBay, "Roomba Timer -> Timed Cleaning—Floorvac Robotic Vacuum," Retrieved from the Internet: URL Cgi.ebay.com/ws/eBayISAPI.dll?viewitem&category=43526&item=4375198387 &rd=1, 5 pages, Apr. 2005.
Electrolux Trilobite, "Time to enjoy life," Retrieved from the Internet: URL<http://www.robocon.co.kr/trilobite/Presentation_Trilobite_Kor_030104.ppt, 26 pages, accessed Dec. 2011.
Electrolux Trilobite, Jan. 12, 2001, http://www.electroluxui.com:8080/2002%5C822%5C833102EN.pdf, accessed Jul. 2, 2012, 10 pages.
Electrolux, "Designed for the well-lived home," Retrieved from the Internet: URL<http://www.electroluxusa.com/node57.as[?currentURL=node142.asp%3F >. Accessed Mar. 2005, 2 pages.
Eren et al., "Accuracy in position estimation of mobile robots based on coded infrared signal transmission," Proceedings: Integrating Intelligent Instrumentation and Control, Instrumentation and Measurement Technology Conference, 1995, IMTC/95. pp. 548-551, 1995.
Eren et al., "Operation of Mobile Robots in a Structured Infrared Environment," Proceedings 'Sensing, Processing, Networking', IEEE Instrumentation and Measurement Technology Conference, 1997 (IMTC/97), Ottawa, Canada vol. 1, pp. 20-25, May 1997.
Euroflex Intelligente Monstre, (English excerpt only), 2006, 15 pages.
Euroflex, Jan. 2006, Retrieved from the Internet: URL<http://www.euroflex.tv/novita_dett.php?id=15, accessed Nov. 2011, 1 page.
eVac Robotic Vacuum S1727 Instruction Manual, Sharper Image Corp, Copyright 2004, 16 pages.
Everyday Robots, "Everyday Robots: Reviews, Discussion and News for Consumers," Aug. 2004, Retrieved from the Internet: URL<www.everydayrobots.com/index.php?option=content &task=view&id=9> (Sep. 2012), 4 pages.
Evolution Robotics, "NorthStar—Low-cost Indoor Localiztion—How it Works," E Evolution Robotics , 2 pages, 2005.
Facchinetti Claudio et al., "Self-Positioning Robot Navigation Using Ceiling Images Sequences," ACCV '95, 5 pages, Dec. 1995.
Facchinetti Claudio et al., "Using and Learning Vision-Based Self-Positioning for Autonomous Robot Navigation," ICARCV '94, vol. 3, pp. 1694-1698, 1994.
Facts on Trilobite, webpage, Retrieved from the Internet: URL<http://trilobiteelectroluxse/presskit_en/model11335asp?print=yes&pressID=>. 2 pages, accessed Dec. 2003.
Fairfield et al., "Mobile Robot Localization with Sparse Landmarks," SPIE vol. 4573, pp. 148-155, 2002.
Favre-Bulle, "Efficient tracking of 3D—Robot Position by Dynamic Triangulation," IEEE Instrumentation and Measurement Technology Conference IMTC 98 Session on Instrumentation and Measurement in Robotics, vol. 1, pp. 446-449, May 1998.
Fayman, "Exploiting Process Integration and Composition in the context of Active Vision," IEEE Transactions on Systems, Man, and Cybernetics—Part C: Application and reviews, vol. 29, No. 1, pp. 73-86, Feb. 1999.
Floorbot GE Plastics—Image, available at http://www.fuseid.com/, 1989-1990, Accessed Sep. 2012, 1 page.
Floorbotics, VR8 Floor Cleaning Robot, Product Description for Manufacturing, URL: <http://www.consensus.sem.au/SoftwareAwards/CSAarchive/CSA2004/CSAart04/FloorBot/F>. Mar. 2004, 11 pages.
Franz et al., "Biomimetric robot navigation", Robotics and Autonomous Systems, vol. 30 pp. 133-153, 2000.
Friendly Robotics, "Friendly Robotics—Friendly Vac, Robotic Vacuum Cleaner," Retrieved from the Internet: URL< www.friendlyrobotics.com/vac.htm > 5 pages, Apr. 2005.
Friendly Robotics, Retrieved from the Internet: URL<http://www.robotsandrelax.com/PDFs/RV400Manual.pdf>. 18 pages, accessed Dec. 2011.
Fuentes et al., "Mobile Robotics 1994," University of Rochester. Computer Science Department, TR 588, 44 pages, Dec. 1994.
Fukuda et al., "Navigation System based on Ceiling Landmark Recognition for Autonomous mobile robot," 1995 IEEE/RSJ International Conference on Intelligent Robots and Systems 95. 'Human Robot Interaction and Cooperative Robots', Pittsburgh, PA, pp. 1466/1471, Aug. 1995.
Gat, "Robust Low-Computation Sensor-driven Control for Task-Directed Navigation," Proc of IEEE International Conference on Robotics and Automation , Sacramento, CA pp. 2484-2489, Apr. 1991.
Gionis, "A hand-held optical surface scanner for environmental Modeling and Virtual Reality," Virtual Reality World, 16 pages, 1996.
Goncalves et al., "A Visual Front-End for Simultaneous Localization and Mapping", Proceedings of the 2005 IEEE International Conference on Robotics and Automation, Barcelona, Spain, pp. 44-49, Apr. 2005.
Gregg et al., "Autonomous Lawn Care Applications," 2006 Florida Conference on Recent Advances in Robotics, Miami, Florida, May 25-26, 2006, Florida International University, 5 pages.
Grumet, "Robots Clean House," Popular Mechanics, Nov. 2003, 3 pages.
Hamamatsu "SI PIN Diode S5980, S5981 S5870—Multi-element photodiodes for surface mounting," Hamatsu Photonics, 2 pages, Apr. 2004.
Hammacher Schlemmer, "Electrolux Trilobite Robotic Vacuum," Retrieved from the Internet: URL< www.hammacher.com/publish/71579.asp?promo=xsells>. 3 pages, Mar. 2005.
Haralick et al. "Pose Estimation from Corresponding Point Data", *IEEE Transactions on Systems, Man, and Cybernetics*, 19(6):1426-1446, Nov. 1989.
Hausler, "About the Scaling Behaviour of Optical Range Sensors," Fringe '97, Proceedings of the 3rd International Workshop on Automatic Processing of Fringe Patterns, Bremen, Germany, pp. 147-155, Sep. 1997.
Hitachi, http://www.hitachi.co.jp/New/cnews/hi_030529_hi_030529.pdf, May 29, 2003, 15 pages (with English translation).
Hitachi: News release: "The home cleaning robot of the autonomous movement type (experimental machine)," Retrieved from the Internet: URL< www.i4u.com./japanreleases/hitachirobot.htm>. 5 pages, Mar. 2005.
Hoag et al., "Navigation and Guidance in interstellar space," ACTA Astronautica, vol. 2, pp. 513-533 , Feb. 1975.
Home Robot—UBOT; Microbotusa.com, retrieved from the WWW at www.microrobotusa.com, accessed Dec. 2, 2008, 2 pages.
Huntsberger et al., "CAMPOUT: A Control Architecture for Tightly Coupled Coordination of Multirobot Systems for Planetary Surface Exploration," *IEEE Transactions on Systems, Man, and Cybernetics—Part A: Systems and Humans*, 33(5):550-559, Sep. 2003.
Iirobotics.com, "Samsung Unveils Its Multifunction Robot Vacuum," Retrieved from the Internet: URL<.www.iirobotics.com/webpages/hotstuff.php?ubre=111>. 3 pages, Mar. 2005.
InMach "Intelligent Machines," Retrieved from the Internet: URL<www.inmach.de/inside.html>. 1 page, Nov. 2008.
Innovation First, "2004 EDU Robot Controller Reference Guide," Retrieved from the Internet: URL<http://www.ifirobotics.com>. 13 pages, Mar. 2004.

(56) **References Cited**

OTHER PUBLICATIONS

IT media, Retrieved from the Internet: URL<http://www.itmedia.co.jp/news/0111/16/robofesta_m.html>. Accessed Nov. 1, 2011, 8 pages (with English translation).
It's eye, Retrieved from the Internet: URL< www.hitachi.co.jp/rd/pdf/topics/hitac2003_10.pdf>. 11 pages, 2003 (with English translation).
Jarosiewicz et al., "Final Report—Lucid," University of Florida, Departmetn of Electrical and Computer Engineering, EEL 5666—Intelligent Machine Design Laboratory, 50 pages, Aug. 1999.
Jensfelt et al., "Active Global Localization for a mobile robot using multiple hypothesis tracking," *IEEE Transactions on Robots and Automation*, 17(5): 748-760, Oct. 2001.
Jeong et al., "An intelligent map-building system for indoor mobile robot using low cost photo sensors,"*SPIE*, vol. 6042, 6 pages, 2005.
Kahney, "Robot Vacs are in the House," Retrieved from the Internet: URL<www.wired.com/news/technology/o,1282,59237,00.html>. 6 pages, Jun. 2003.
Karcher "Karcher RoboCleaner RC 3000," Retrieved from the Internet: URL<www.robocleaner.de/english/screen3.html>. 4 pages, Dec. 2003.
Karcher RC 3000 Cleaning Robot-user manual Manufacturer: Alfred-Karcher GmbH & Co, Cleaning Systems, Alfred Karcher-Str 28-40, PO Box 160, D-71349 Winnenden, Germany, Dec. 2002, 8 pages.
Karcher RC3000 RoboCleaner,—Image, Accessed at <http://www.karcher.de/versions/int/assets/video/2_4_robo_en.swf>. Accessed Sep. 2009, 1 page.
Karcher USA, RC3000 Robotic Cleaner, website: http://www.karcher-usa.com/showproducts.php?op=view prod&param1=143&param2=&param3=, 3 pages, accessed Mar. 2005.
Karcher, "Product Manual Download Karch", available at www.karcher.com, 16 pages, 2004.
Karlsson et al, "Core Technologies for service Robotics," IEEE/RSJ International Conference on Intelligent Robots and Systems (IROS 2004), vol. 3, pp. 2979-2984, Sep. 2004.
Karlsson et al., The vSLAM Algorithm for Robust Localization and Mapping, Proceedings of the 2005 IEEE International Conference on Robotics and Automation, Barcelona, Spain, pp. 24-29, Apr. 2005.
King and Weiman, "HelpmateTM Autonomous Mobile Robots Navigation Systems," SPIE vol. 1388 Mobile Robots, pp. 190-198, 1990.
Kleinberg, The Localization Problem for Mobile Robots, Laboratory for Computer Science, Massachusetts Institute of Technology, 1994 IEEE, pp. 521-531, 1994.
Knights, et al., "Localization and Identification of Visual Landmarks," *Journal of Computing Sciences in Colleges*, 16(4):312-313, May 2001.
Kolodko et al., "Experimental System for Real-Time Motion Estimation," Proceedings of the 2003 IEEE/ASME International Conference on Advanced Intelligent Mechatronics (AIM 2003), pp. 981-986, 2003.
Komoriya et al., "Planning of Landmark Measurement for the Navigation of a Mobile Robot," Proceedings of the 1992 IEEE/RSJ International Cofnerence on Intelligent Robots and Systems, Raleigh, NC pp. 1476-1481, Jul. 1992.
Koolvac Robotic Vacuum Cleaner Owner's Manual, Koolatron, 2004, 13 pages.
Krotkov et al., "Digital Sextant," Downloaded from the internet at: http://www.cs.cmu.edu/~epk/ , 1 page, 1995.
Krupa et al., "Autonomous 3-D Positioning of Surgical Instruments in Robotized Laparoscopic Surgery Using Visual Servoin," *IEEE Transactions on Robotics and Automation*, 19(5):842-853, Oct. 2003.
Kuhl et al., "Self Localization in Environments using Visual Angles," VRCAI '04 Proceedings of the 2004 ACM SIGGRAPH international conference on Virtual Reality continuum and its applications in industry, pp. 472-475, 2004.
Kurs et al, Wireless Power transfer via Strongly Coupled Magnetic Resonances, Downloaded from www.sciencemag.org, Aug. 2007, 5 pages.
Kurth, "Range-Only Robot Localization and SLAM with Radio", http://www.ri.cmu.edu/pub_files/pub4/kurth_derek_2004_1/kurth_derek_2004_1.pdf. 60 pages, May 2004, accessed Jul. 27, 2012.
Kwon et al., "Table Recognition through Range-based Candidate Generation and Vision based Candidate Evaluation," ICAR 2007, The 13th International Conference on Advanced Robotics Aug. 21-24, 2007, Jeju, Korea, pp. 918-923, 2007.
Lambrinos et al., "A mobile robot employing insect strategies for navigation," Retrieved from the Internat: URL<http://www8.cs.umu.se/kurser/TDBD17NT04/dl/Assignment%20Papers/lambrinos-RAS-2000.pdf>. 38 pages, Feb. 1999.
Lang et al., "Visual Measurement of Orientation Using Ceiling Features", 1994 IEEE, pp. 552-555, 1994.
Lapin, "Adaptive position estimation for an automated guided vehicle," *SPIE*, vol. 1831 Mobile Robots VII, pp. 82-94, 1992.
LaValle et al., "Robot Motion Planning in a Changing, Partially Predictable Environment," 1994 IEEE International Symposium on Intelligent Control, Columbus, OH, pp. 261-266, Aug. 1994.
Lee et al., "Development of Indoor Navigation system for Humanoid Robot Using Multi-sensors Integration", ION NTM, San Diego, CA pp. 798-805, Jan. 2007.
Lee et al., "Localization of a Mobile Robot Using the Image of a Moving Object," *IEEE Transaction on Industrial Electronics*, 50(3):612-619, Jun. 2003.
Leonard et al., "Mobile Robot Localization by tracking Geometric Beacons," *IEEE Transaction on Robotics and Automation*, 7(3):376-382, Jun. 1991.
Li et al. "Robust Statistical Methods for Securing Wireless Localization in Sensor Networks," Information Processing in Sensor Networks, 2005, Fourth International Symposium on, pp. 91-98, Apr. 2005.
Li et al., "Making a Local Map of Indoor Environments by Swiveling a Camera and a Sonar," Proceedings of the 1999 IEEE/RSJ International Conference on Intelligent Robots and Systems, pp. 954-959, 1999.
Lin et al., "Mobile Robot Navigation Using Artificial Landmarks," *Journal of robotics System*, 14(2): 93-106, 1997.
Linde, Dissertation—"On Aspects of Indoor Localization," Available at: https://eldorado.tu-dortmund.de/handle/2003/22854, University of Dortmund, 138 pages, Aug. 2006.
Lumelsky et al., "An Algorithm for Maze Searching with Azimuth Input", 1994 IEEE International Conference on Robotics and Automation, San Diego, CA vol. 1, pp. 111-116, 1994.
Luo et al., "Real-time Area-Covering Operations with Obstacle Avoidance for Cleaning Robots," IEEE, pp. 2359-2364, 2002.
Ma, Thesis—"Documentation on Northstar," California Institute of Technology, 14 pages, May 2006.
Madsen et al., "Optimal landmark selection for triangulation of robot position," Journal of Robotics and Autonomous Systems, vol. 13 pp. 277-292, 1998.
Malik et al., "Virtual Prototyping for Conceptual Design of a Tracked Mobile Robot," Electrical and Computer Engineering, Canadian Conference on, IEEE, PI. pp. 2349-2352, May 2006.
Martishevcky, "The Accuracy of point light target coordinate determination by dissectoral tracking system", SPIE vol. 2591, pp. 25-30, Oct. 23, 2005.
Maschinemarkt Würzburg 105, No. 27, pp. 3, 30, Jul. 5, 1999 (with English translation).
Matsumura Camera Online Shop: Retrieved from the Internet: URL<http://www.rakuten.co.jp/matsucame/587179/711512/>. Accessed Nov. 2011, 15 pages (with English translation).
Matsutek Enterprises Co. Ltd, "Automatic Rechargeable Vacuum Cleaner," http://matsutek.manufacturer.globalsources.com/si/6008801427181/pdtl/Home-vacuum/10 . . . , Apr. 2007, 3 pages.
McGillem et al., "Infra-red Lacation System for Navigation and Autonomous Vehicles," 1988 IEEE International Conference on Robotics and Automation, vol. 2, pp. 1236-1238, Apr. 1988.
McGillem,et al. "A Beacon Navigation Method for Autonomous Vehicles," *IEEE Transactions on Vehicular Technology*, 38(3):132-139, Aug. 1989.

(56) **References Cited**

OTHER PUBLICATIONS

McLurkin "Stupid Robot Tricks: A Behavior-based Distributed Algorithm Library for Programming Swarms of Robots," Paper submitted for requirements of BSEE at MIT, May 2004, 127 pages.
McLurkin, "The Ants: A community of Microrobots," Paper submitted for requirements of BSEE at MIT, May 1995, 60 pages.
Michelson, "Autonomous navigation," McGraw-Hill—Access Science, Encyclopedia of Science and Technology Online, 2007, 4 pages.
Miro et al., "Towards Vision Based Navigation in Large Indoor Environments," Proceedings of the IEEE/RSJ International Conference on Intelligent Robots and Systems, Beijing, China, pp. 2096-2102, Oct. 2006.
MobileMag, "Samsung Unveils High-tech Robot Vacuum Cleaner," Retrieved from the Internet: URL<http://www.mobilemag.com/content/100/102/C2261/>. 4 pages, Mar. 2005.
Monteiro et al., "Visual Servoing for Fast Mobile Robot: Adaptive Estimation of Kinematic Parameters," Proceedings of the IECON '93., International Conference on Industrial Electronics, Maui, HI, pp. 1588-1593, Nov. 1993.
Moore et al., "A simple Map-bases Localization strategy using range measurements," *SPIE*, vol. 5804 pp. 612-620, 2005.
Morland,"Autonomous Lawnmower Control", Downloaded from the internet at: http://cns.bu.edu/~cjmorlan/robotics/lawnmower/report.pdf, 10 pages, Jul. 2002.
Munich et al., "ERSP: A Software Platform and Architecture for the Service Robotics Industry," Intelligent Robots and Systems, 2005. (IROS 2005), pp. 460-467, Aug. 2005.
Munich et al., "SIFT-ing Through Features with ViPR", IEEE Robotics & Automation Magazine, pp. 72-77, Sep. 2006.
Nam et al., "Real-Time Dynamic Visual Tracking Using PSD Sensors and extended Trapezoidal Motion Planning", Applied Intelligence 10, pp. 53-70, 1999.
Nitu et al., "Optomechatronic System for Position Detection of a Mobile Mini-Robot," *IEEE Ttransactions on Industrial Electronics*, 52(4):969-973, Aug. 2005.
On Robo, "Robot Reviews Samsung Robot Vacuum (VC-RP3OW)," Retrieved from the Internet: URL <www.onrobo.com/reviews/AT_Home/vacuum_cleaners/on00vcrb30rosam/index.htm>. 2 pages, 2005.
OnRobo "Samsung Unveils Its Multifunction Robot Vacuum," Retrieved from the Internet: URL <www.onrobo.com/enews/0210/samsung_vacuum.shtml>. 3 pages, Mar. 2005.
Pages et al., "A camera-projector system for robot positioning by visual serving," Proceedings of the 2006 Conference on Computer Vision and Pattern Recognition Workshop (CVPRW06), 8 pages, Jun. 2006.
Pages et al., "Optimizing Plane-to-Plane Positioning Tasks by Image-Based Visual Servoing and Structured Light," *IEEE Transactions on Robotics*, 22(5):1000-1010, Oct. 2006.
Pages et al., "Robust decoupled visual servoing based on structured light," 2005 IEEE/RSJ, Int. Conf. on Intelligent Robots and Systems, pp. 2676-2681, 2005.
Park et al., "A Neural Network Based Real-Time Robot Tracking Controller Using Position Sensitive Detectors," IEEE World Congress on Computational Intelligence., 1994 IEEE International Conference on Neutral Networks, Orlando, Florida pp. 2754-2758, Jun./Jul. 1994.
Park et al., "Dynamic Visual Servo Control of Robot Manipulators using Neutral Networks," *The Korean Institute Telematics and Electronics*, 29-B(10):771-779, Oct. 1992.
Paromtchik "Toward Optical Guidance of Mobile Robots," Proceedings of the Fourth World Multiconference on Systemics, Cybermetics and Informatics, Orlando, FL, USA, Jul. 23, 2000, vol. IX, pp. 44-49, available at http://emotion.inrialpes.fr/~paromt/infos/papers/paromtchik:asama:sci:2000.ps.gz, accessed Jul. 3, 2012, 6 pages.
Paromtchik et al., "Optical Guidance System for Multiple mobile Robots," Proceedings 2001 ICRA. IEEE International Conference on Robotics and Automation, vol. 3, pp. 2935-2940, May 2001.
Penna et al., "Models for Map Building and Navigation", IEEE Transactions on Systems. Man. and Cybernetics., 23(5):1276-1301, Sep./Oct. 1993.
Pirjanian et al. "Representation and Execution of Plan Sequences for Multi-Agent Systems," Proceedings of the 2001 IEEE/RSJ International Conference on Intelligent Robots and Systems, Maui, Hawaii, pp. 2117-2123, Oct. 2001.
Pirjanian et al., "A decision-theoretic approach to fuzzy behavior coordination", 1999 IEEE International Symposium on Computational Intelligence in Robotics and Automation, 1999. CIRA '99., Monterey, CA, pp. 101-106, Nov. 1999.
Pirjanian et al., "Distributed Control for a Modular, Reconfigurable Cliff Robot," Proceedings of the 2002 IEEE International Conference on Robotics & Automation, Washington, D.C. pp. 4083-4088, May 2002.
Pirjanian et al., "Improving Task Reliability by Fusion of Redundant Homogeneous Modules Using Voting Schemes," Proceedings of the 1997 IEEE International Conference on Robotics and Automation, Albuquerque, NM, pp. 425-430, Apr. 1997.
Pirjanian et al., "Multi-Robot Target Acquisition using Multiple Objective Behavior Coordination," Proceedings of the 2000 IEEE International Conference on Robotics & Automation, San Francisco, CA, pp. 2696-2702, Apr. 2000.
Pirjanian, "Challenges for Standards for consumer Robotics," IEEE Workshop on Advanced Robotics and its Social impacts, pp. 260-264, Jun. 2005.
Pirjanian, "Reliable Reaction," Proceedings of the 1996 IEEE/SICE/RSJ International Conference on Multisensor Fusion and Integration for Intelligent Systems, pp. 158-165, 1996.
Prassler et al., "A Short History of Cleaning Robots," Autonomous Robots 9, 211-226, 2000, 16 pages.
Put Your Roomba . . . On, Automatic webpages: http://www.acomputeredge.com/roomba, 5 pages, accessed Apr. 2005.
Remazeilles et al., "Image based robot navigation in 3D environments," Proc. of *SPIE*, vol. 6052, pp. 1-14, Dec. 2005.
Rives et al., "Visual servoing based on ellipse features," *SPIE*, vol. 2056 Intelligent Robots and Computer Vision pp. 356-367, 1993.
Roboking—not just a vacuum cleaner, a robot!, Jan. 21, 2004, infocom.uz/2004/01/21/robokingne-prosto-pyilesos-a-robot/, accessed Oct. 10, 2011, 5 pages.
RoboMaid Sweeps Your Floors So You Won't Have to, the Official Site, website: Retrieved from the Internet: URL<http://therobomaid.com>. 2 pages, accessed Mar. 2005.
Robot Buying Guide, "LG announces the first robotic vacuum cleaner for Korea," Retrieved from the Internet: URL<http://robotbg.com/news/2003/04/22/lg_announces_the_first_robotic_vacu>. 1 page, Apr. 2003.
Robotics World, "A Clean Sweep," 5 pages, Jan. 2001.
Ronnback, "On Methods for Assistive Mobile Robots," Retrieved from the Internet: URL<http://www.openthesis.org/documents/methods-assistive-mobile-robots-595019.html>. 218 pages, Jan. 2006.
Roth-Tabak et al., "Environment Model for mobile Robots Indoor Navigation," *SPIE*, vol. 1388 Mobile Robots, pp. 453-463, 1990.
Sahin et al., "Development of a Visual Object Localization Module for Mobile Robots," 1999 Third European Workshop on Advanced Mobile Robots, (Eurobot '99), pp. 65-72, 1999.
Salomon et al., "Low-Cost Optical Indoor Localization system for Mobile Objects without Image Processing," IEEE Conference on Emerging Technologies and Factory Automation, 2006. (ETFA '06), pp. 629-632, Sep. 2006.
Sato, "Range Imaging Based on Moving Pattern Light and Spatio-Temporal Matched Filter," Proceedings International Conference on Image Processing, vol. 1., Lausanne, Switzerland, pp. 33-36, Sep. 1996.
Schenker et al., "Lightweight rovers for Mars science exploration and sample return," Intelligent Robots and Computer Vision XVI, *SPIE* Proc. 3208, pp. 24-36, 1997.
Schofield, "Neither Master nor slave—A Practical Study in the Development and Employment of Cleaning Robots, Emerging Technologies and Factory Automation," 1999 Proceedings ETFA '99 1999 7th IEEE International Conference on Barcelona, Spain, pp. 1427-1434, Oct. 1999.

(56) **References Cited**

OTHER PUBLICATIONS

Shimoga et al., "Touch and Force Reflection for Telepresence Surgery," Engineering in Medicine and Biology Society, 1994. Engineering Advances: New Opportunities for Biomedical Engineers. Proceedings of the 16th Annual International Conference of the IEEE, Baltimore, MD, pp. 1049-1050, 1994.
Sim et al, "Learning Visual Landmarks for Pose Estimation," IEEE International Conference on Robotics and Automation, vol. 3, Detroit, MI, pp. 1972-1978, May 1999.
Sobh et al., "Case Studies in Web-Controlled Devices and Remote Manipulation," Automation Congress, 2002 Proceedings of the 5th Biannual World, pp. 435-440, Dec. 2002.
Special Reports, "Vacuum Cleaner Robot Operated in Conjunction with 3G Celluar Phone," 59(9): 3 pages, Retrieved from the Internet: URL<http://www.toshiba.co.jp/tech/review/2004/09/59_0>. 2004.
Stella et al., "Self-Location for Indoor Navigation of Autonomous Vehicles," Part of the SPIE conference on Enhanced and Synthetic Vision SPIE vol. 3364, pp. 298-302, 1998.
Summet, "Tracking Locations of Moving Hand-held Displays Using Projected Light," Pervasive 2005, LNCS 3468, pp. 37-46, 2005.
Svedman et al., "Structure from Stereo Vision using Unsynchronized Cameras for Simultaneous Localization and Mapping," 2005 IEEE/RSJ International Conference on Intelligent Robots and Systems, pp. 2993-2998, 2005.
SVET Computers—New Technologies—Robot Vacuum Cleaner, Oct. 1999, available at http://www.sk.rs/1999/10/sknt01.html, 1 page, accessed Nov. 1, 2011.
Taipei Times, "Robotic vacuum by Matsuhita about to undergo testing," Retrieved from the Internet: URL<http://www.taipeitimes.com/News/worldbiz/archives/2002/03/26/0000129338>. accessed Mar. 2002, 2 pages.
Takio et al., "Real-Time Position and Pose Tracking Method of Moving Object Using Visual Servo System," 47th IEEE International Symposium on Circuits and Systems, pp. 167-170, 2004.
Tech-on!, Retrieved from the Internet: URL<http://techon.nikkeibp.co.jp/members/01db/200203/1006501/>. 7 pages, accessed Nov. 2011 (with English translation).
Teller, "Pervasive pose awareness for people, Objects and Robots," http://www.ai.mit.edu/lab/dangerous-ideas/Spring2003/teller-pose.pdf, 6 pages, Apr. 2003.
Terada et al., "An Acquisition of the Relation between Vision and Action using Self-Organizing Map and Reinforcement Learning," 1998 Second International Conference on Knowledge-Based Intelligent Electronic Systems, Adelaide, Australia, pp. 429-434, Apr. 1998.
The Sharper Image, eVac Robotic Vacuum—Product Details, www.sharperiamge.com/us/en/templates/products/pipmorework1printable.jhtm1, 1 page, Accessed Mar. 2005.
TheRobotStore.com, "Friendly Robotics Robotic Vacuum RV400—The Robot Store," www.therobotstore.com/s.nl/sc.9/category.-109/it.A/id.43/.f, 1 page, Apr. 2005.
Thrun, Sebastian, "Learning Occupancy Grid Maps With Forward Sensor Models," Autonomous Robots 15, 28 pages, Sep. 1, 2003.
TotalVac.com, RC3000 RoboCleaner website, 2004, Accessed at http://ww.totalvac.com/robot_vacuum.htm (Mar. 2005), 3 pages.
Trebi-Ollennu et al., "Mars Rover Pair Cooperatively Transporting a Long Payload," Proceedings of the 2002 IEEE International Conference on Robotics & Automation, Washington, D.C. pp. 3136-3141, May 2002.
Tribelhorn et al., "Evaluating the Roomba: A low-cost, ubiquitous platform for robotics research and education," *IEEE*, pp. 1393-1399, 2007.
Tse et al., "Design of a Navigation System for a Household Mobile Robot Using Neural Networks," Department of Manufacturing Engg. & Engg. Management, City University of Hong Kong, pp. 2151-2156, 1998.
UAMA (Asia) Industrial Co., Ltd., "RobotFamily," 2005, 1 page.
UBOT, cleaning robot capable of wiping with a wet duster, Retrieved from the Internet: URL<http://us.aving.net/news/view.php?articleId=23031>. 4 pages, accessed Nov. 2011.
Watanabe et al., "Position Estimation of Mobile Robots With Internal and External Sensors Using Uncertainty Evolution Technique," 1990 IEEE International Conference on Robotics and Automation, Cincinnati, OH, pp. 2011-2016, May 1990.
Watts, "Robot, boldly goes where no man can," The Times—pp. 20, Jan. 1985.
Wijk et al., "Triangulation-Based Fusion of Sonar Data with Application in Robot Pose Tracking," *IEEE Transactions on Robotics and Automation*, 16(6):740-752, Dec. 2000.
Wolf et al., "Robust Vision-Based Localization by Combining an Image-Retrieval System with Monte Carol Localization,", *IEEE Transactions on Robotics*, 21(2):208-216, Apr. 2005.
Wolf et al., "Robust Vision-based Localization for Mobile Robots Using an Image Retrieval System Based on Invariant Features," Proceedings of the 2002 IEEE International Conference on Robotics & Automation, Washington, D.C., pp. 359-365, May 2002.
Wong, "EIED Online>> Robot Business", ED Online ID# 13114, 17 pages, Jul. 2006.
Yamamoto et al., "Optical Sensing for Robot Perception and Localization," 2005 IEEE Workshop on Advanced Robotics and its Social Impacts, pp. 14-17, 2005.
Yata et al., "Wall Following Using Angle Information Measured by a Single Ultrasonic Transducer," Proceedings of the 1998 IEEE, International Conference on Robotics & Automation, Leuven, Belgium, pp. 1590-1596, May 1998.
Yujin Robotics,"An intelligent cleaning robot," Retrieved from the Internet: URL<http://us.aving.net/news/view.php?articleId=7257>. 8 pages, accessed Nov. 2011.
Yun et al., "Image-Based Absolute Positioning System for Mobile Robot Navigation," IAPR International Workshops SSPR, Hong Kong, pp. 261-269, Aug. 2006.
Yun et al., "Robust Positioning a Mobile Robot with Active Beacon Sensors," *Lecture Notes in Computer Science*, 2006, vol. 4251, pp. 890-897, 2006.
Yuta et al., "Implementation of an Active Optical Range sensor Using Laser Slit for In-Door Intelligent Mobile Robot," IEE/RSJ International Workshop on Intelligent Robots and Systems (IROS 91) vol. 1, Osaka, Japan, pp. 415-420, Nov. 3-5, 1991.
Zha et al., "Mobile Robot Localization Using Incomplete Maps for Change Detection in a Dynamic Environment," Advanced Intelligent Mechatronics '97. Final Program and Abstracts., IEEE/ASME International Conference, pp. 110, Jun. 1997.
Zhang et al., "A Novel Mobile Robot Localization Based on Vision," *SPIE* vol. 6279, 6 pages, Jan. 2007.
Zoombot Remote Controlled Vaccuum-RV-500 New Roomba 2, website: http://cgi.ebay.com/ws/eBayISAPI.dll?ViewItem&category=43526&item=4373497618&rd=1, accessed Apr. 20, 2005, 7 pages.
Extended European Search Report issued in EP Application No. 14183566.0, dated Jan. 8, 2015, 6 pages.
International Search Report and Written Opinion issued in International Application No. PCT/US2006/046395, dated Jul. 23, 2007, 14 pages.
Extended European Search Report issued in EP Application No. 10181669.2, dated Apr. 26, 2013, 5 pages.
Non-final Office Action issued in U.S. Appl. No. 14/044,346, dated Mar. 16, 2015, 69 pages.

* cited by examiner

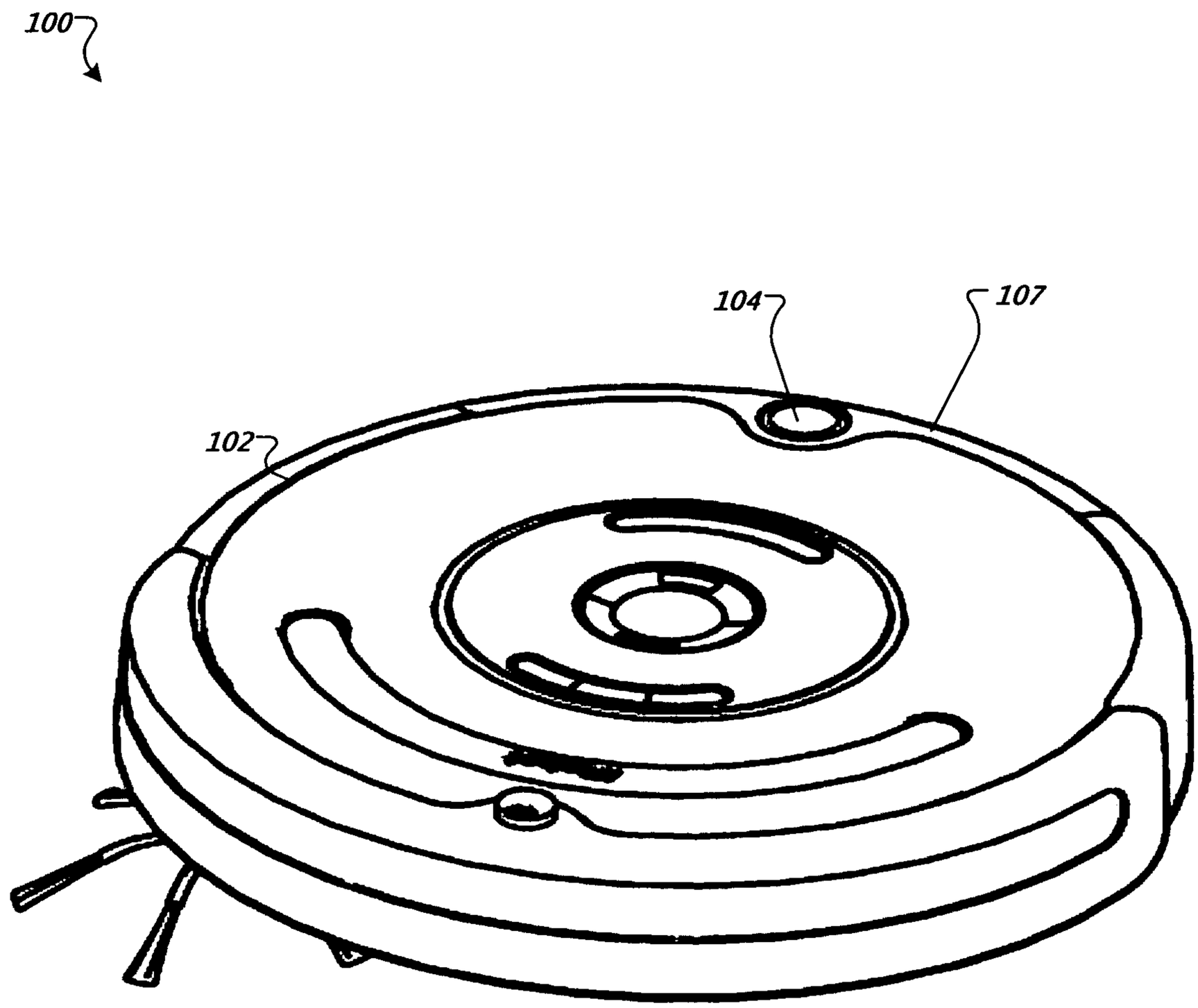

FIG. 1A

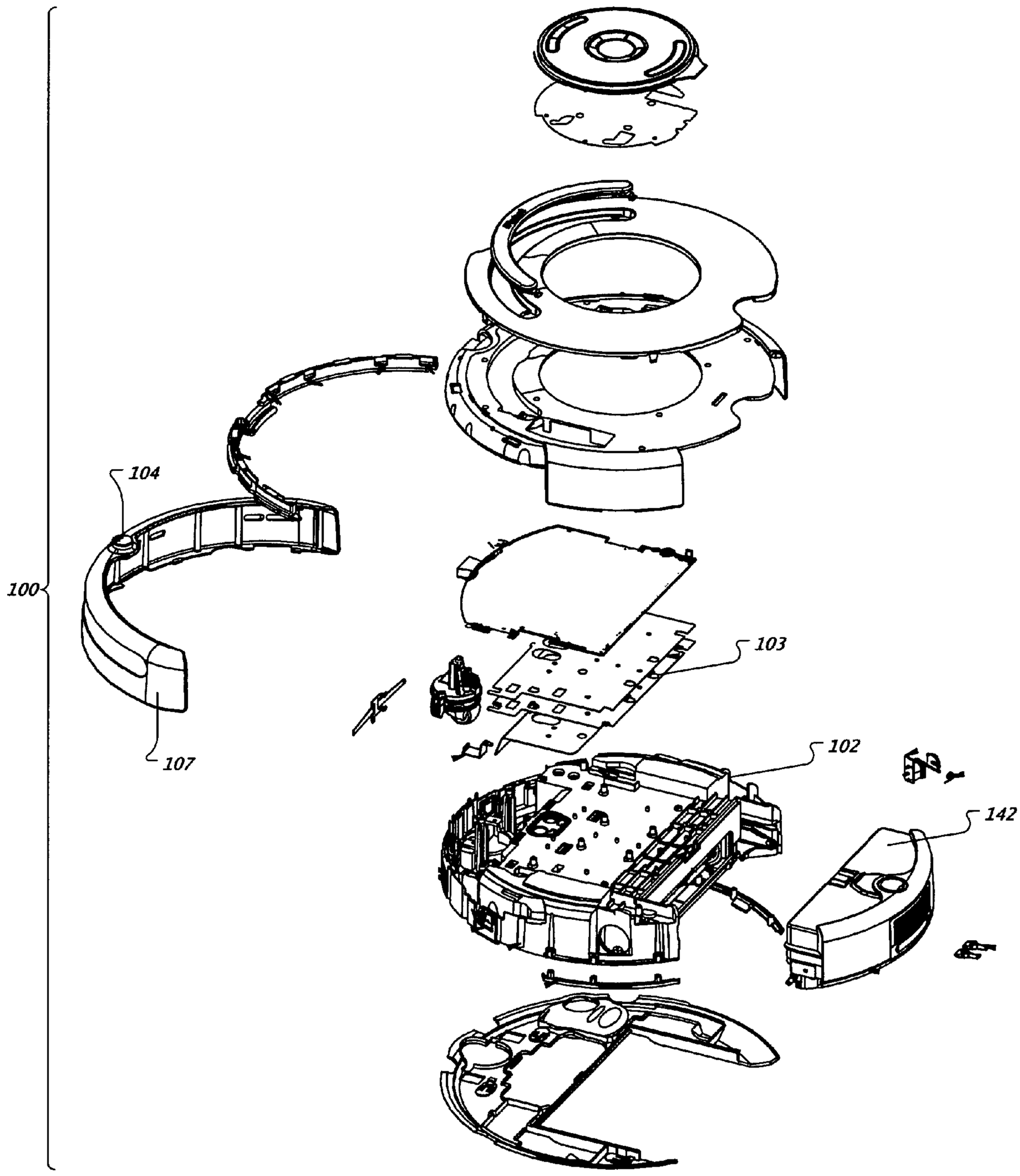

FIG. 1B

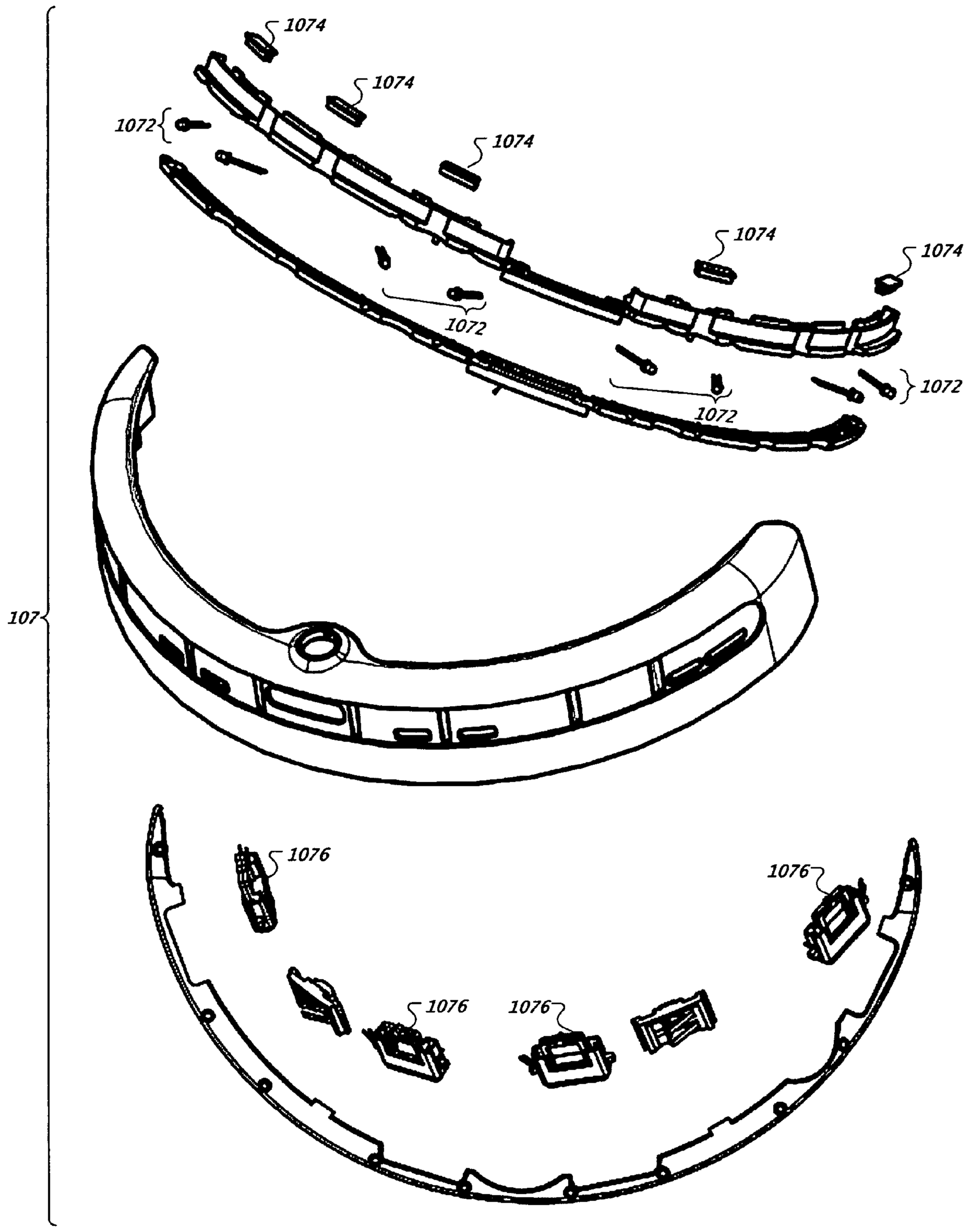
1074
1074
1072
1074
1074
1074
1072
1072
1072
107
1076
1076
1076
1076

FIG. 1C

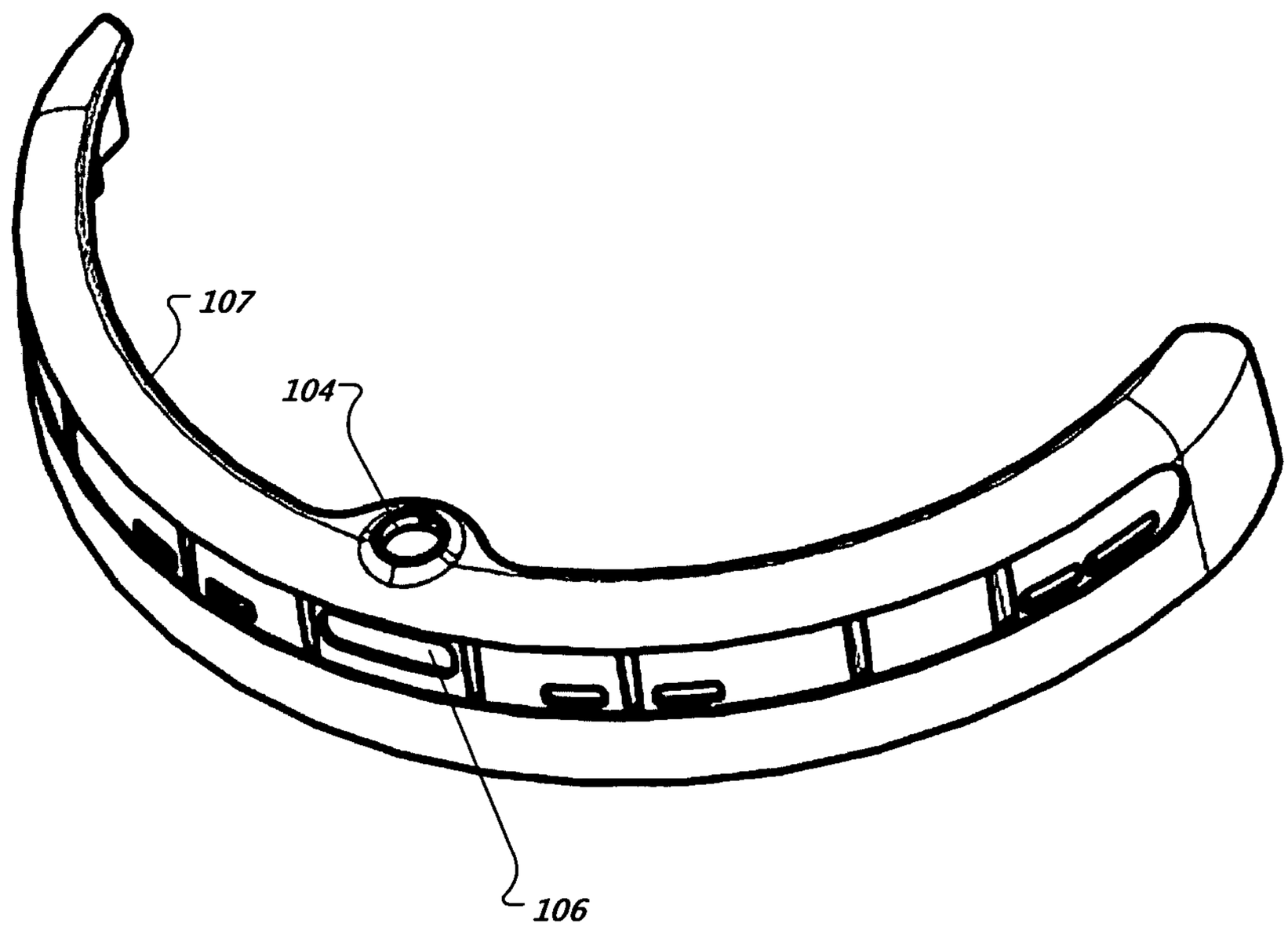

FIG. 2

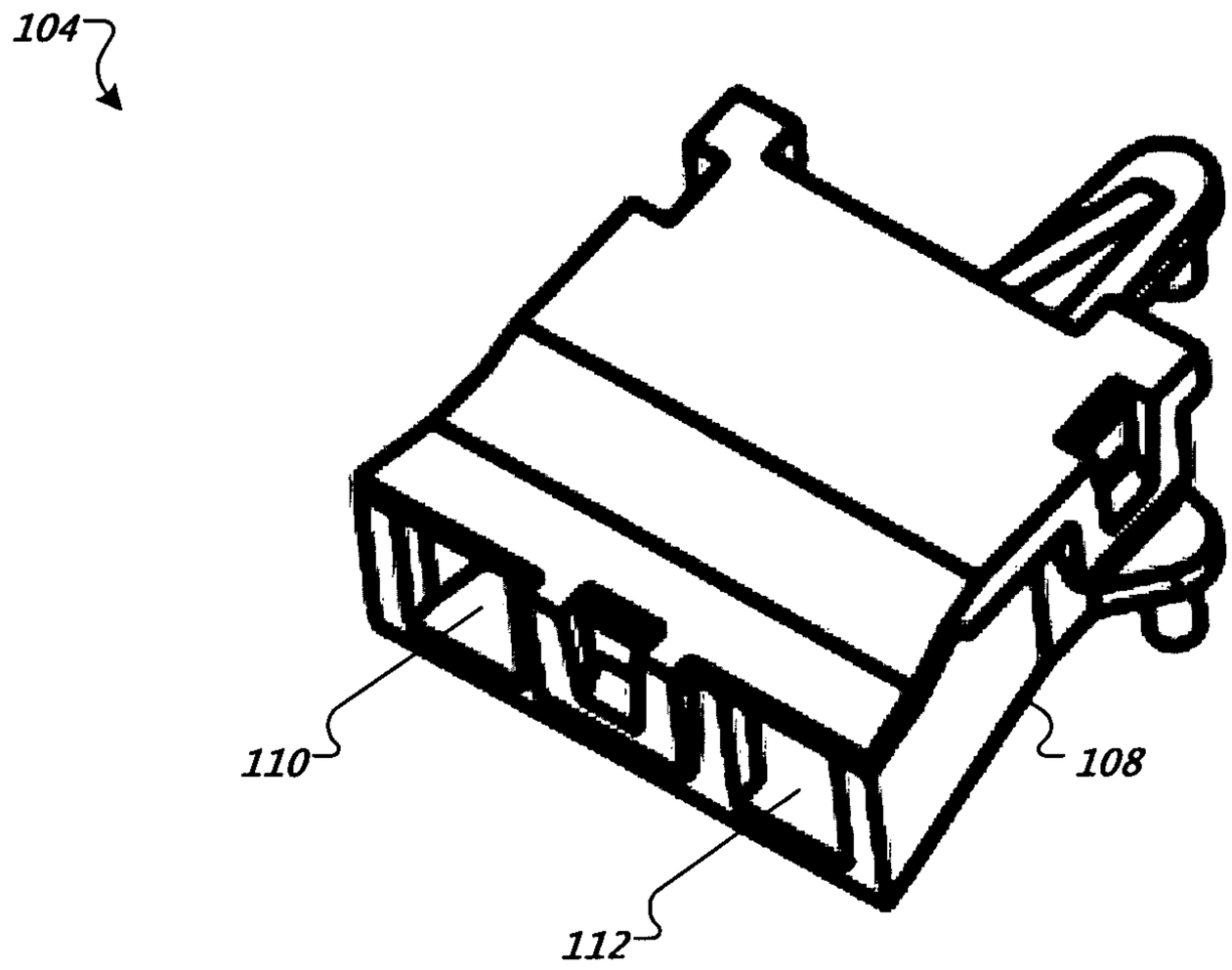

FIG. 3

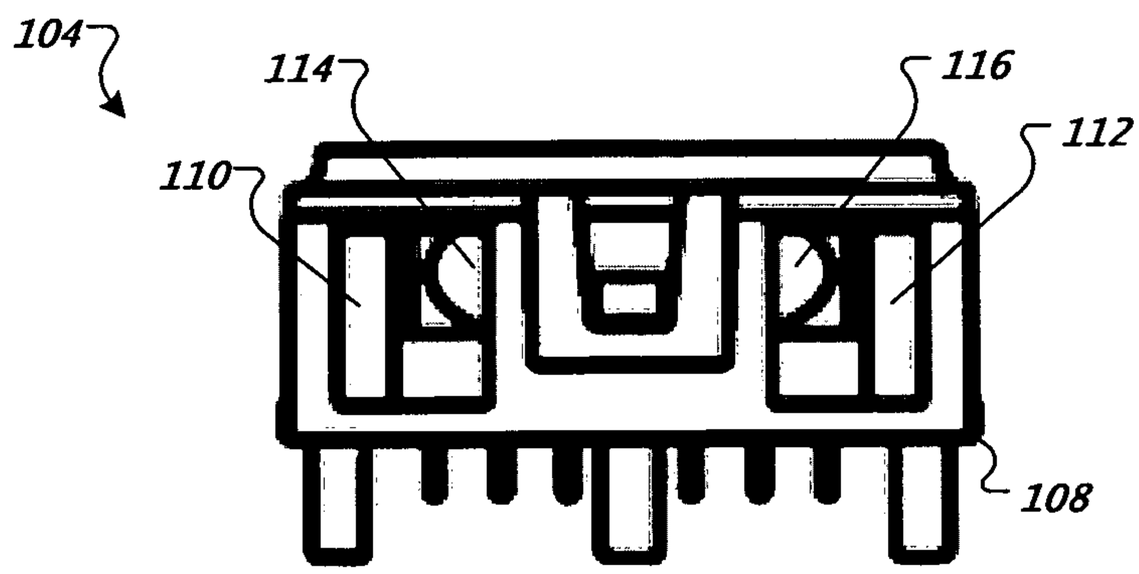

FIG. 4

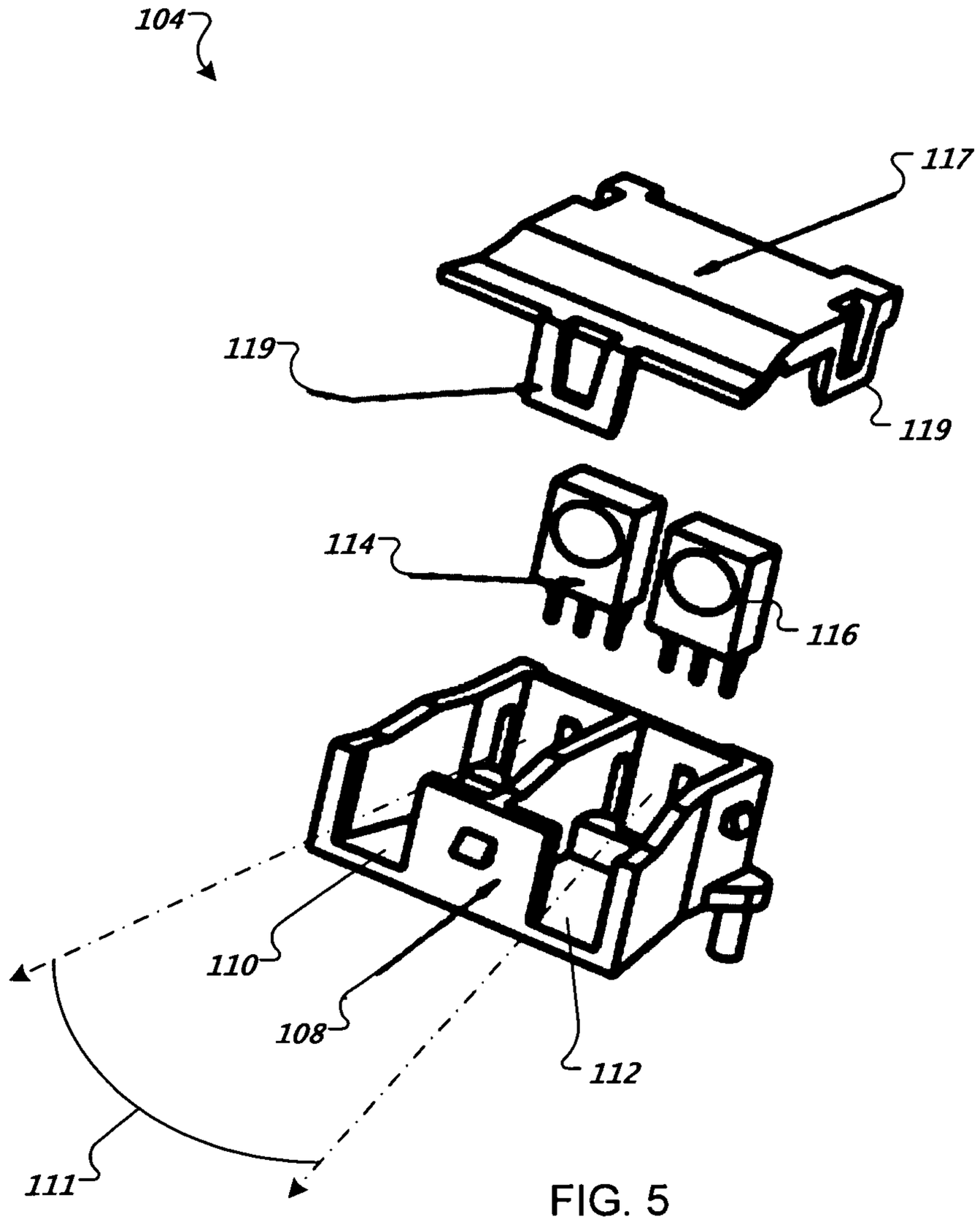

FIG. 5

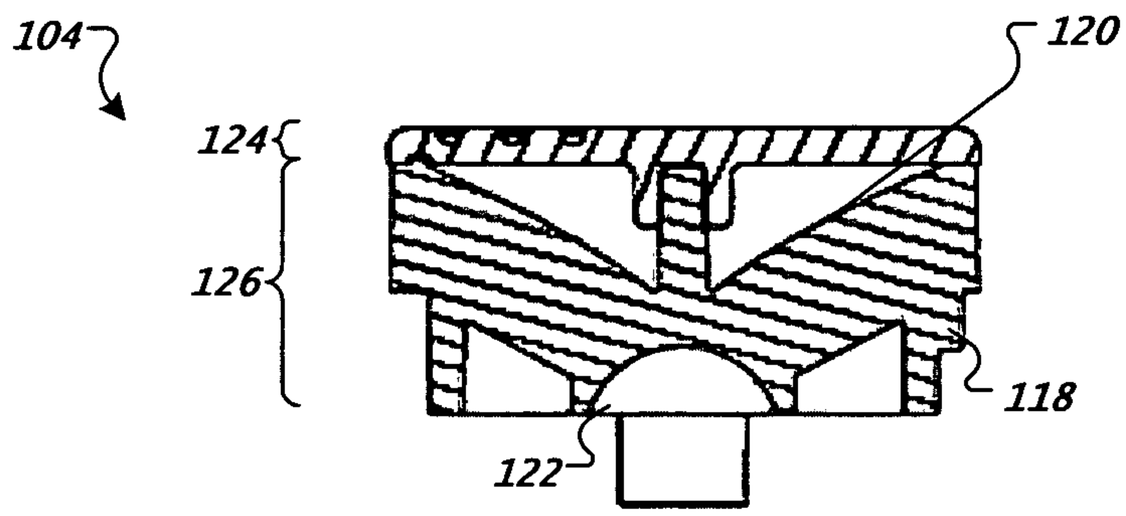

FIG. 6

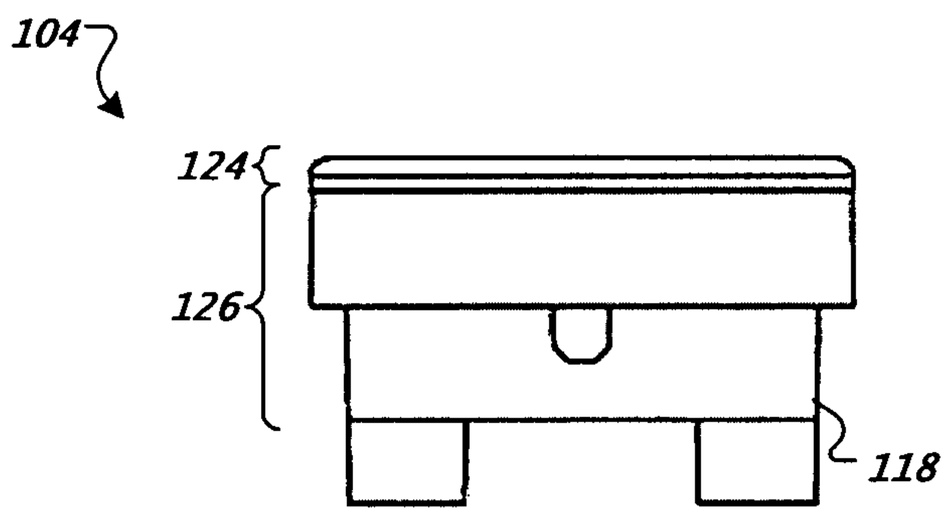

FIG. 7

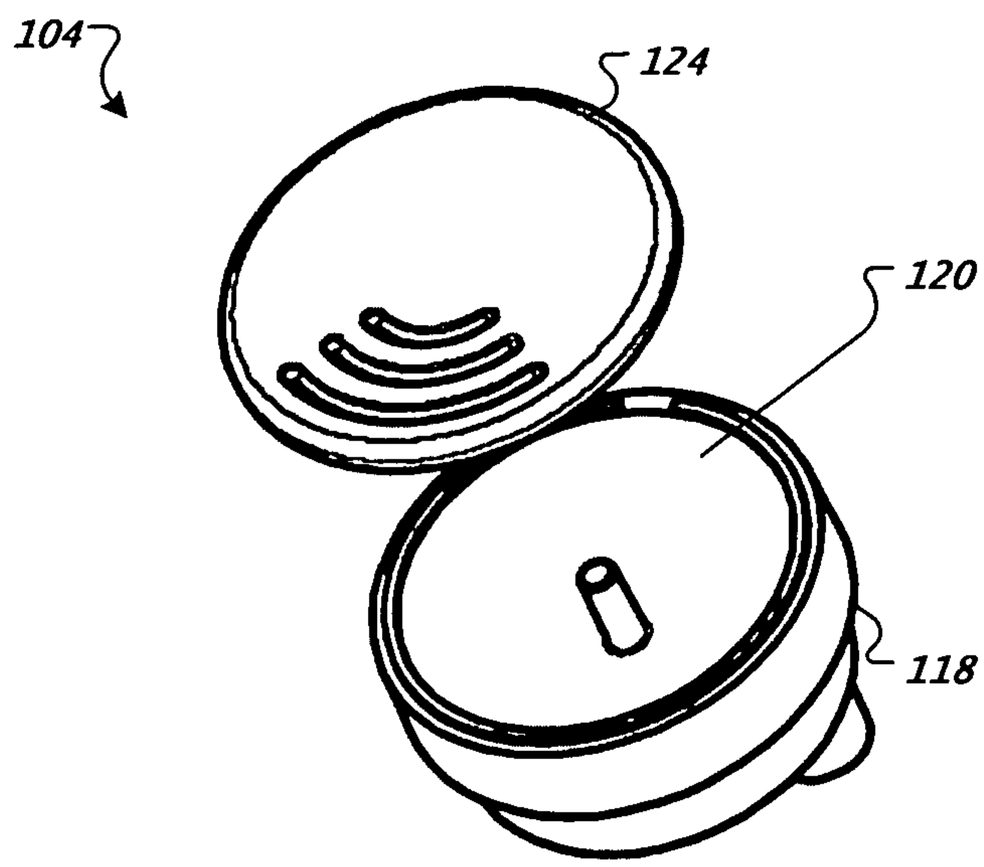

FIG. 8

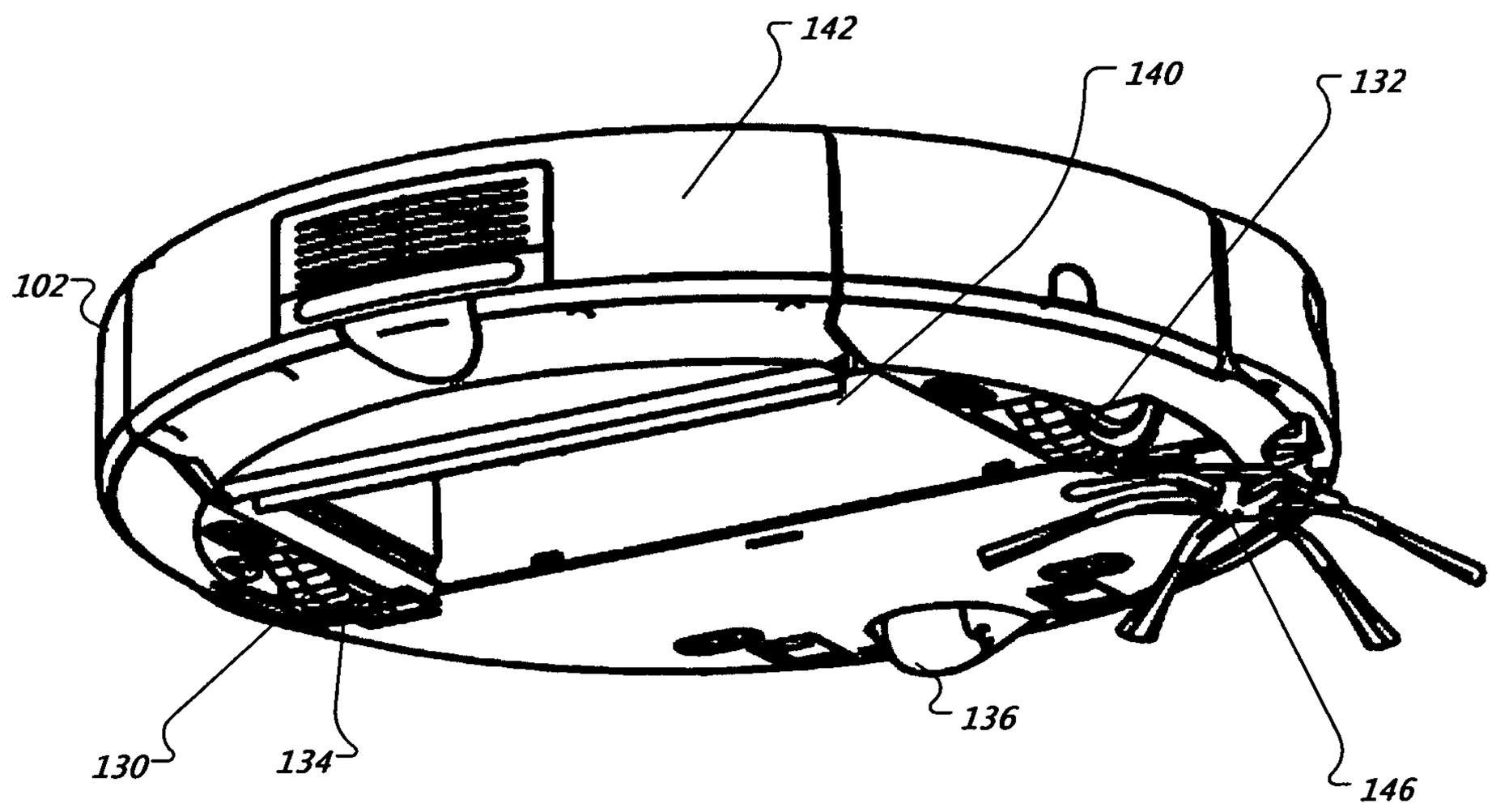

FIG. 9

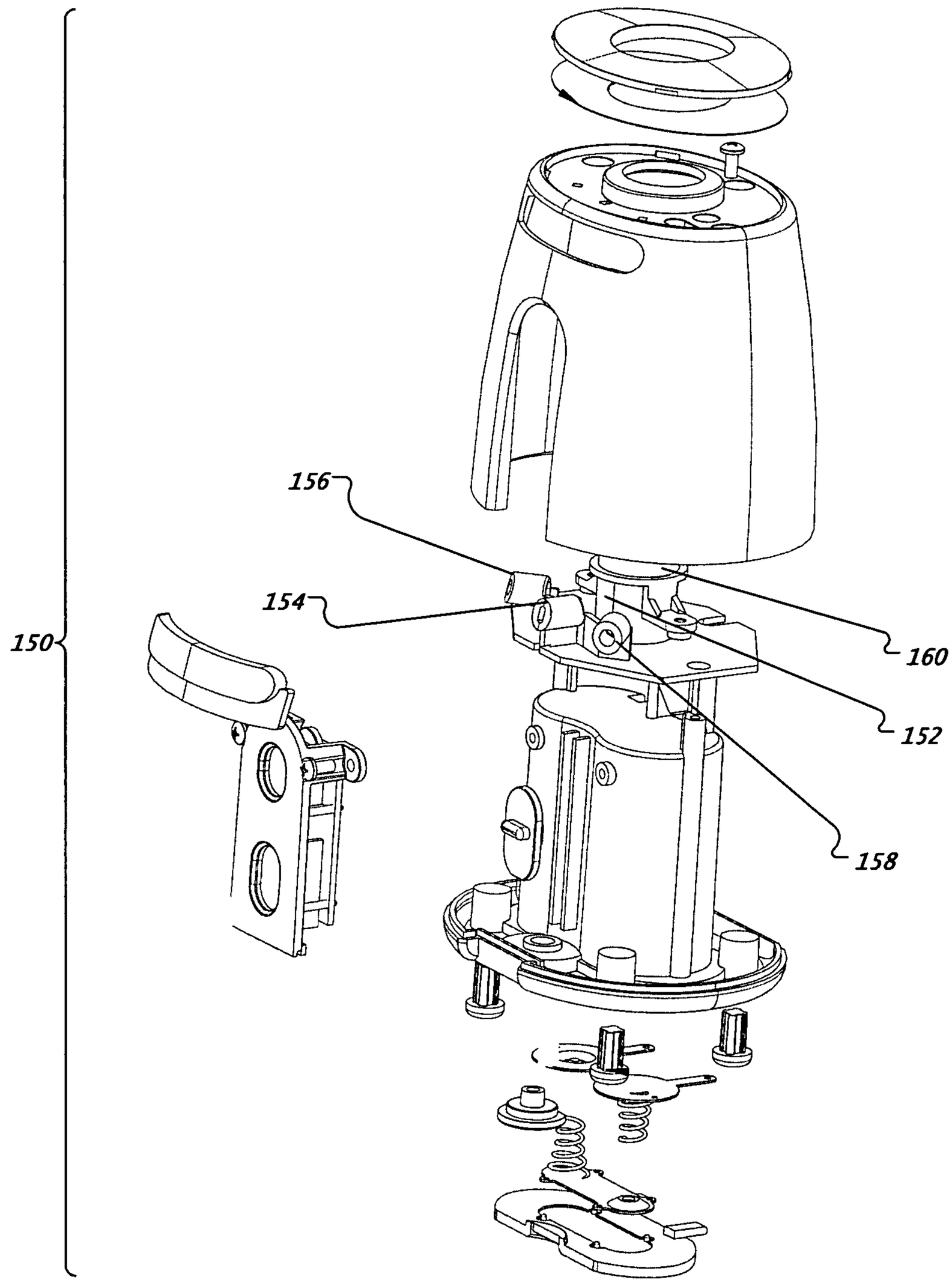

FIG. 10

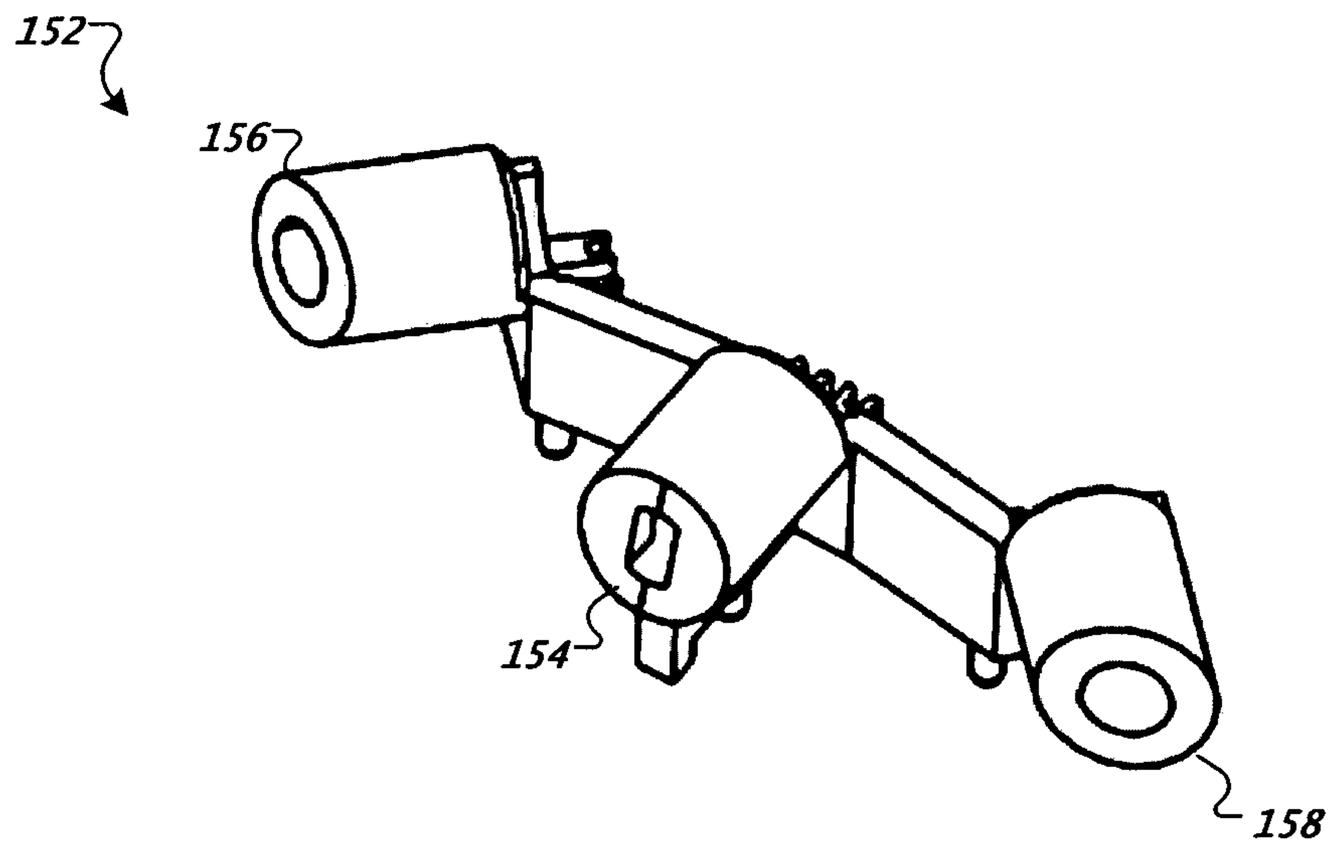

FIG. 11

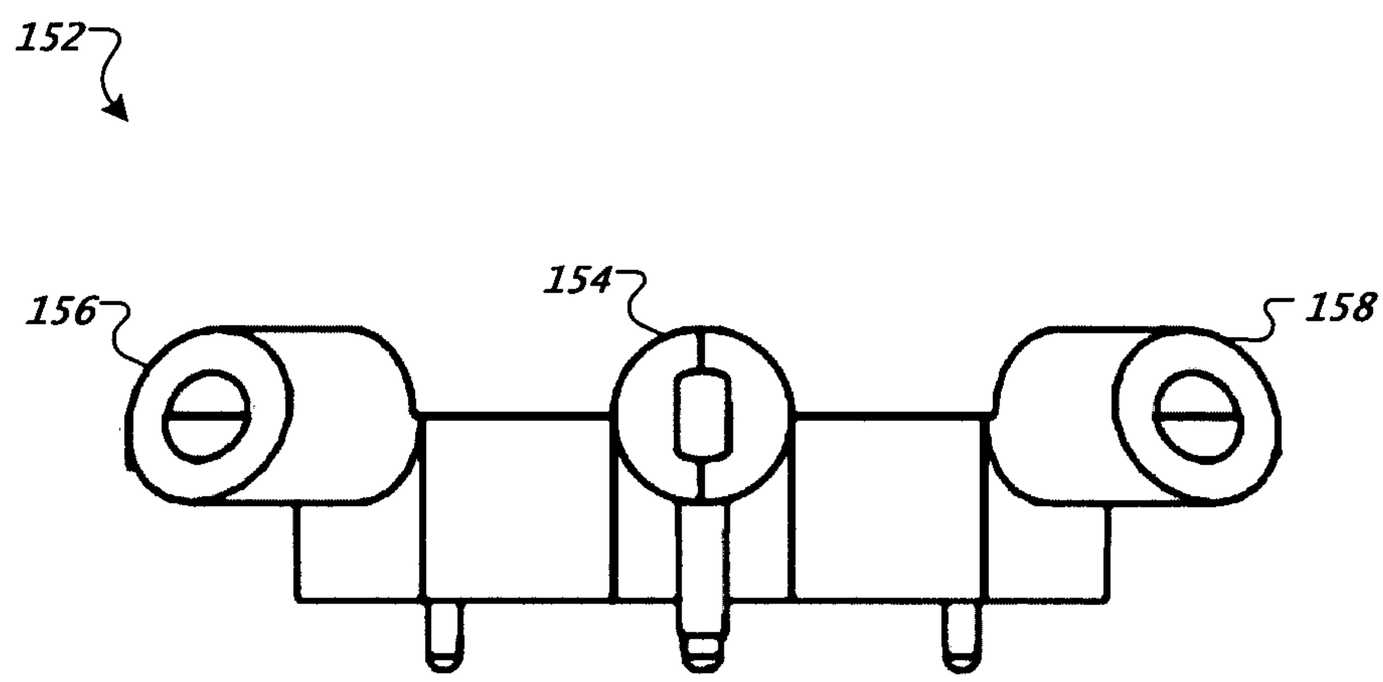

FIG. 12

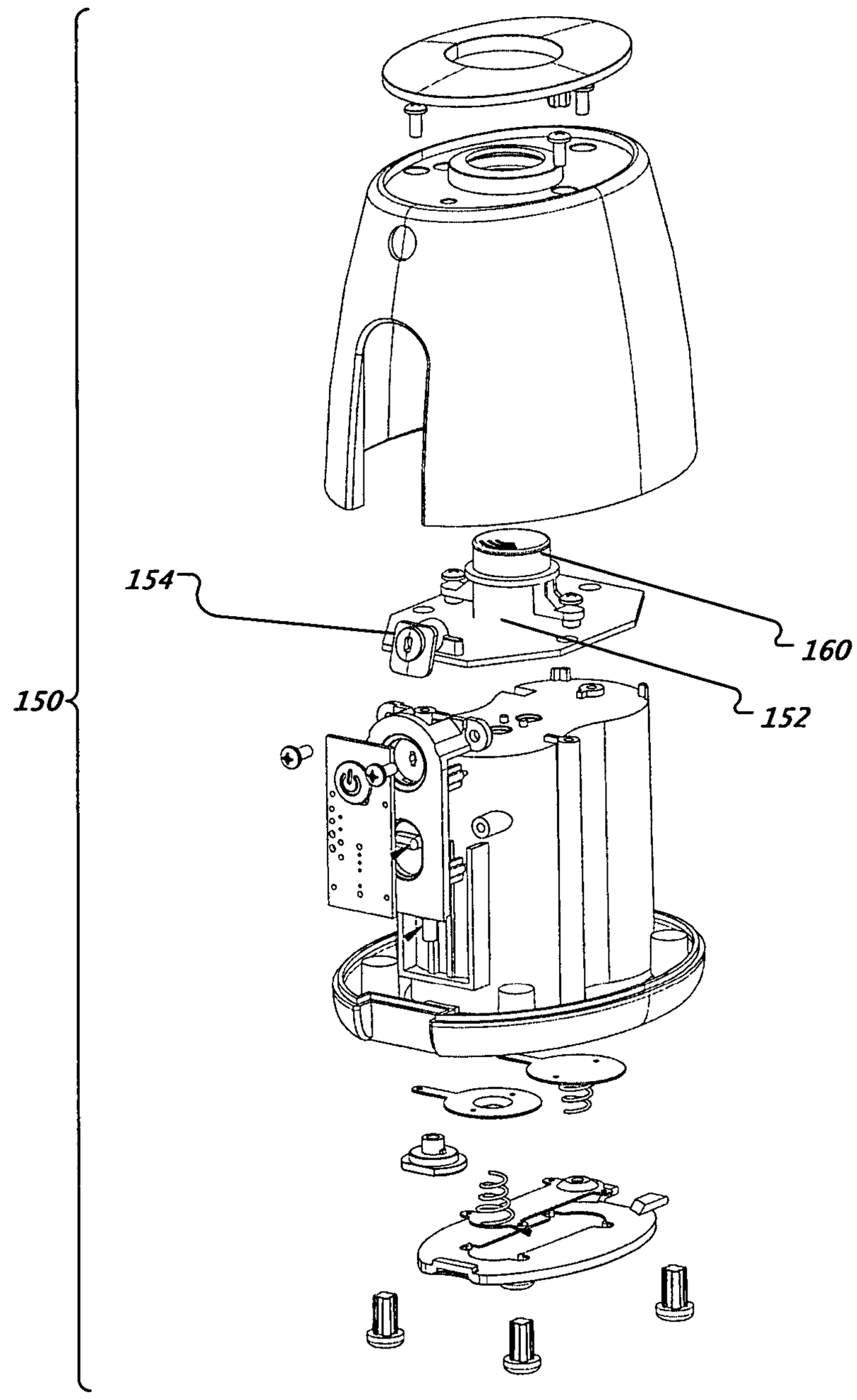

FIG. 13

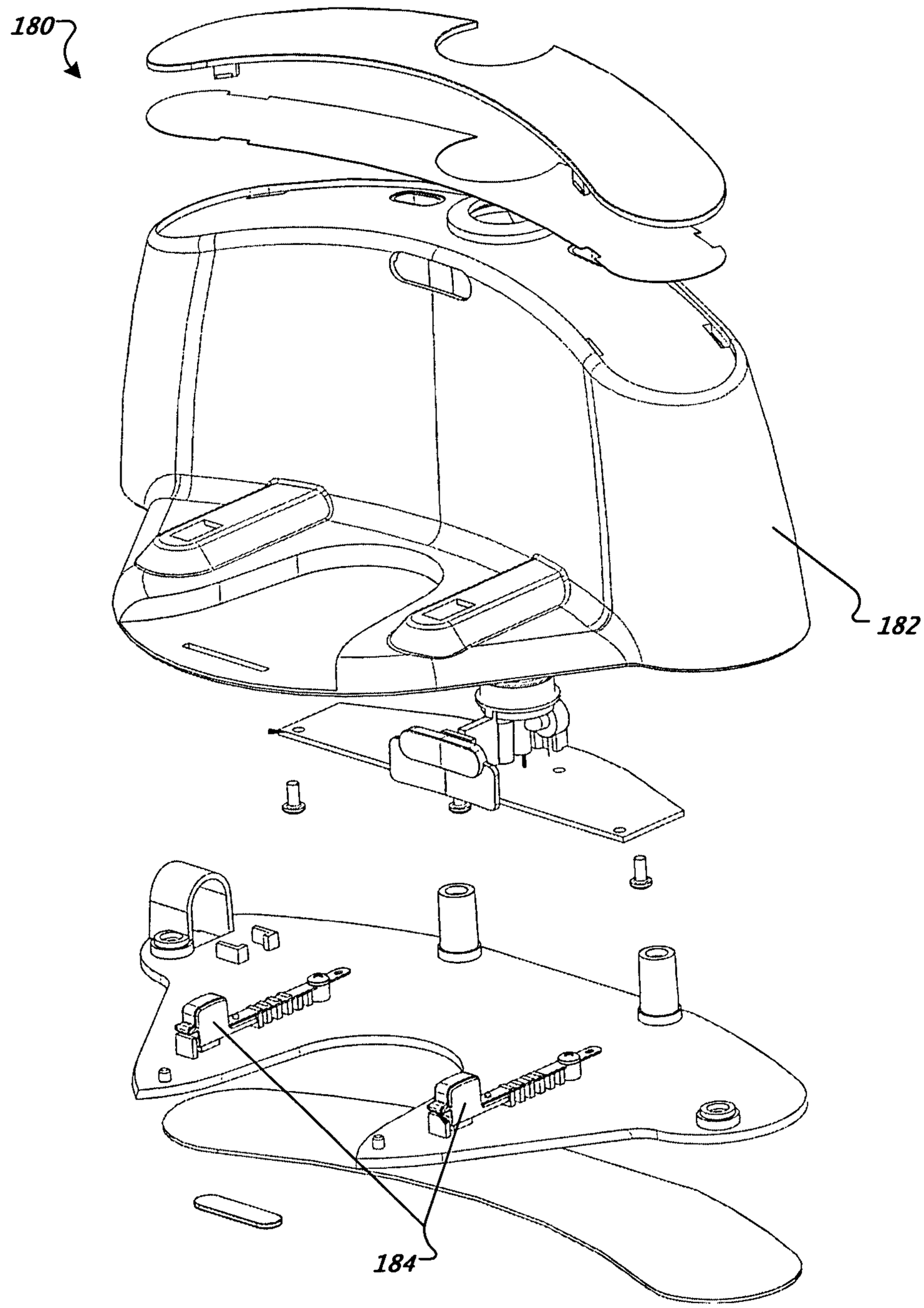

FIG. 14

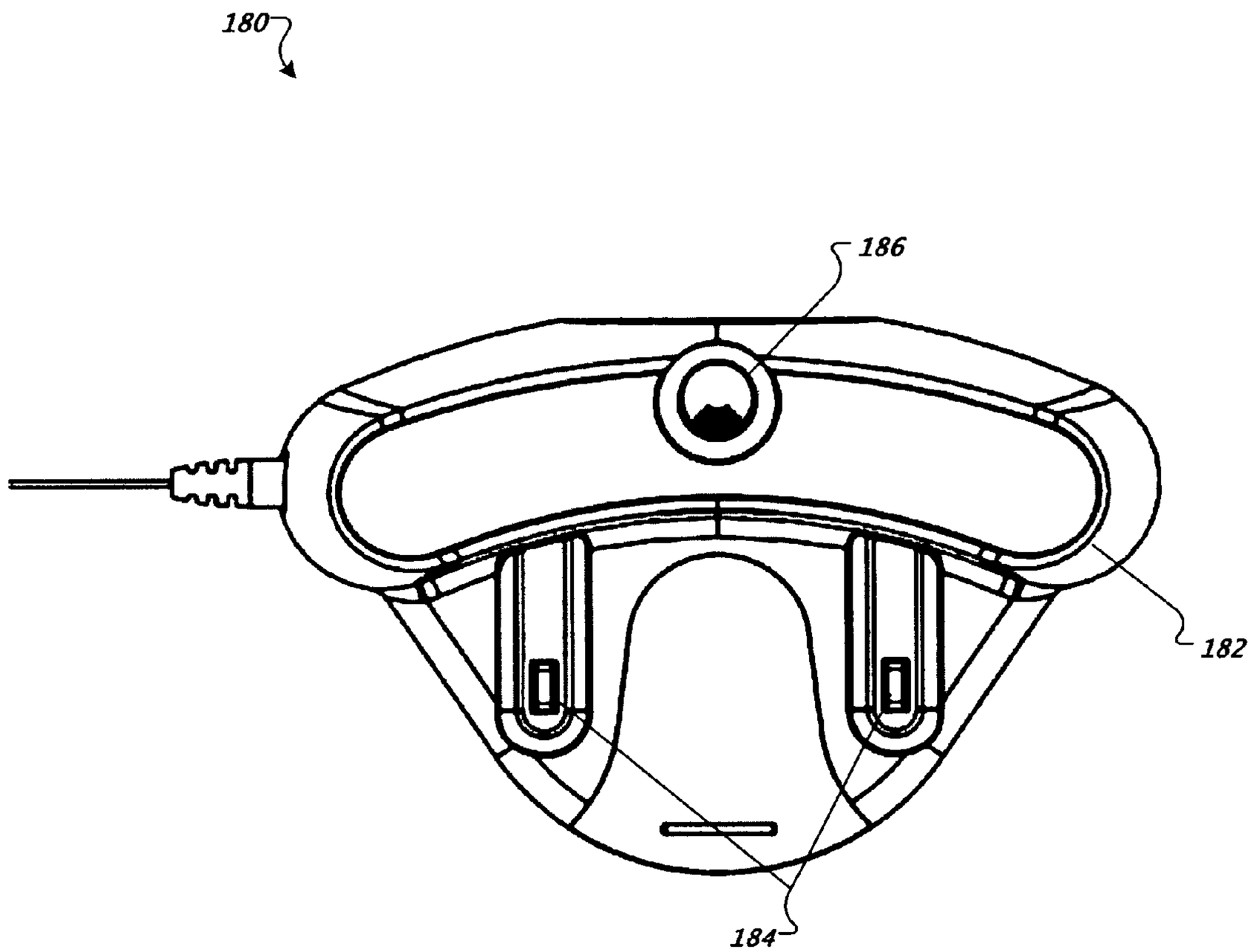

FIG. 15

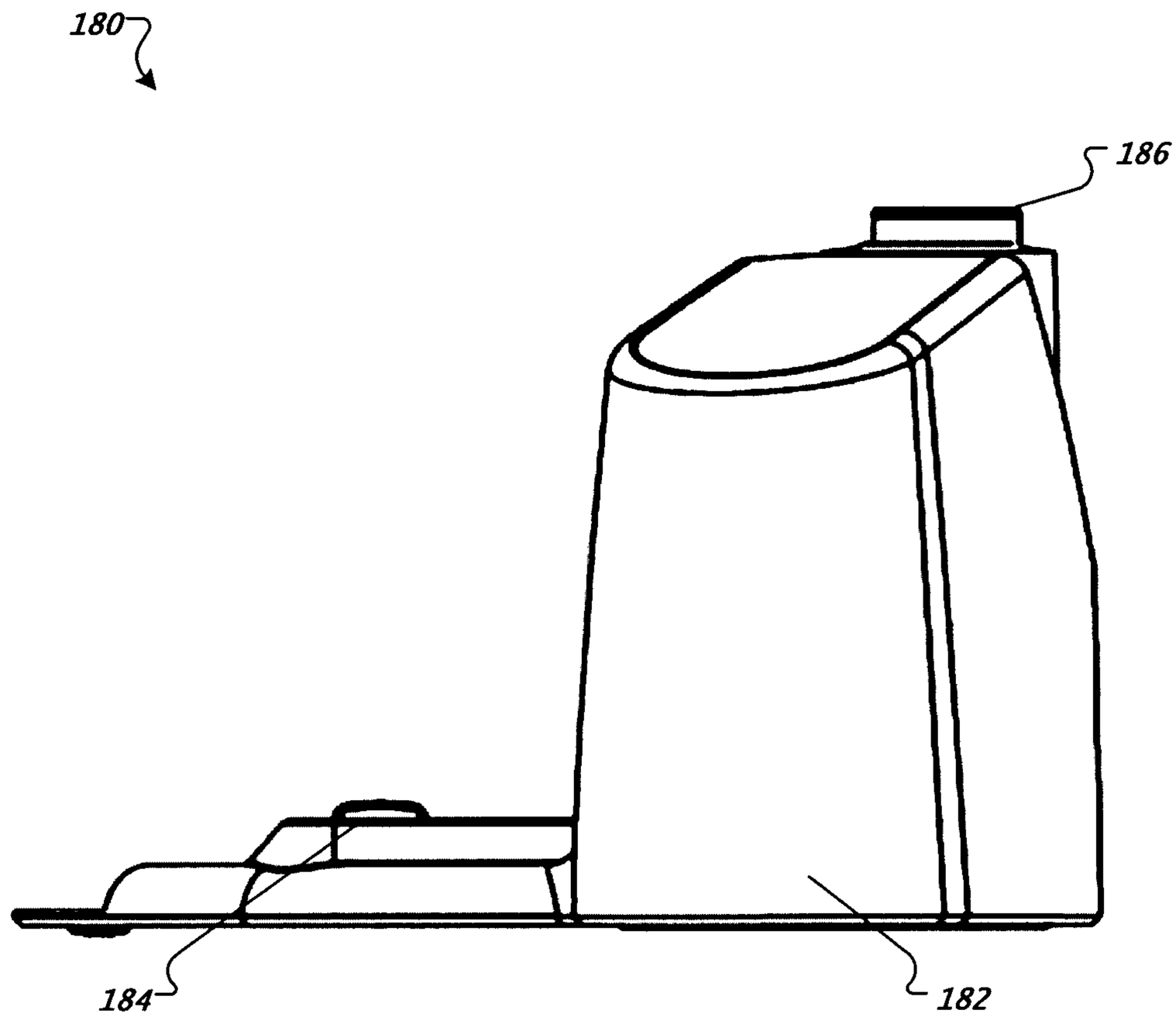

FIG. 16

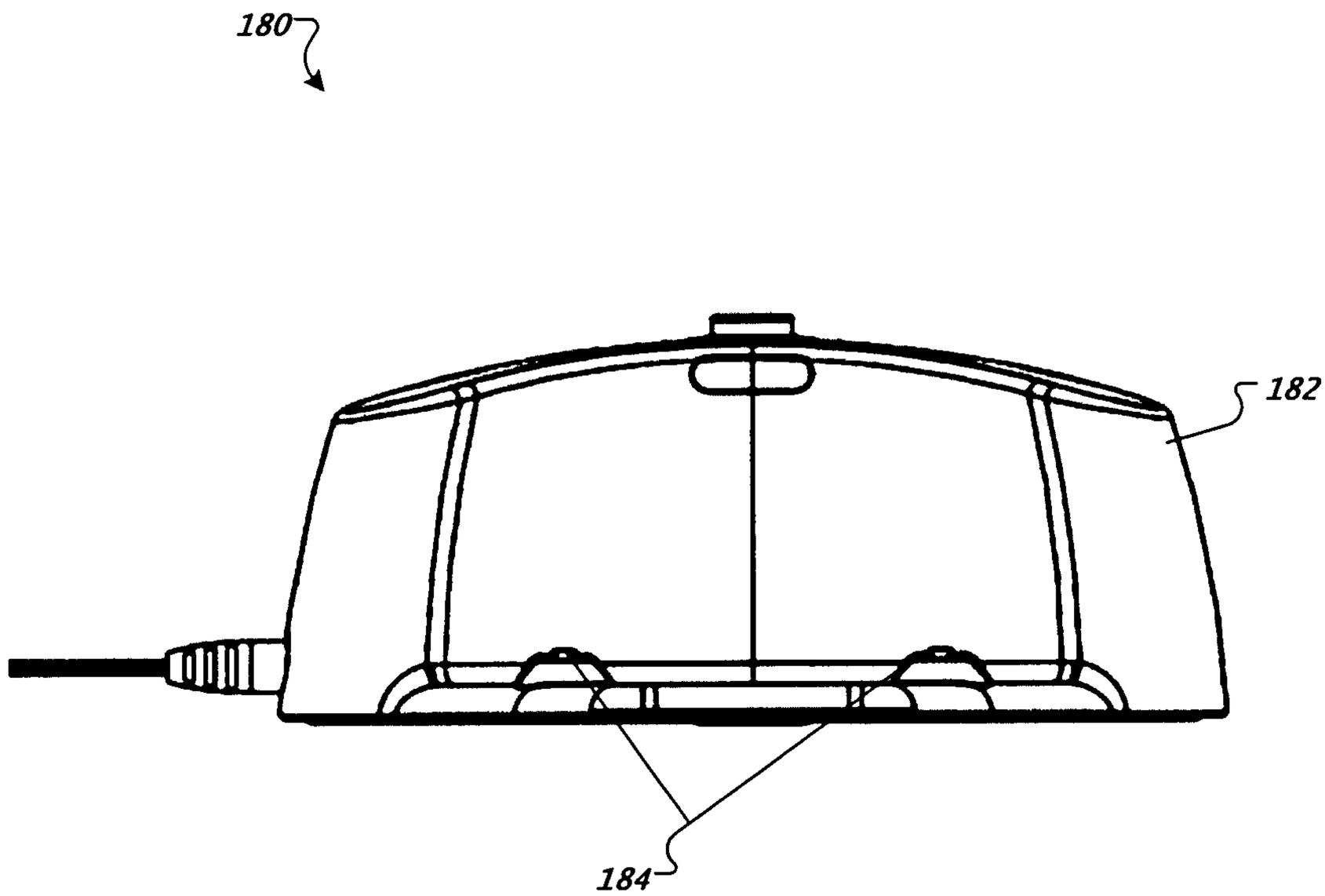

FIG. 17

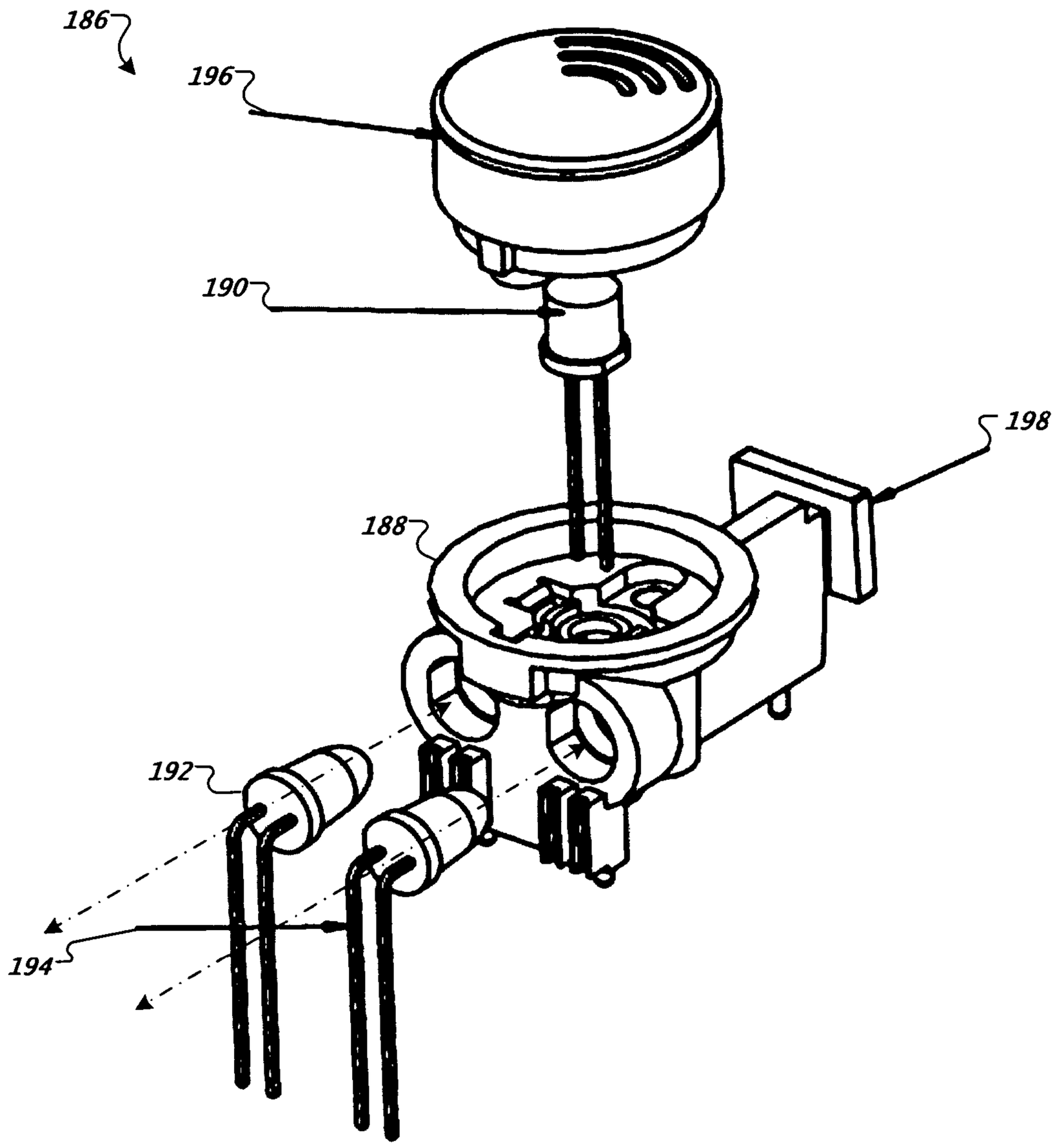

FIG. 18

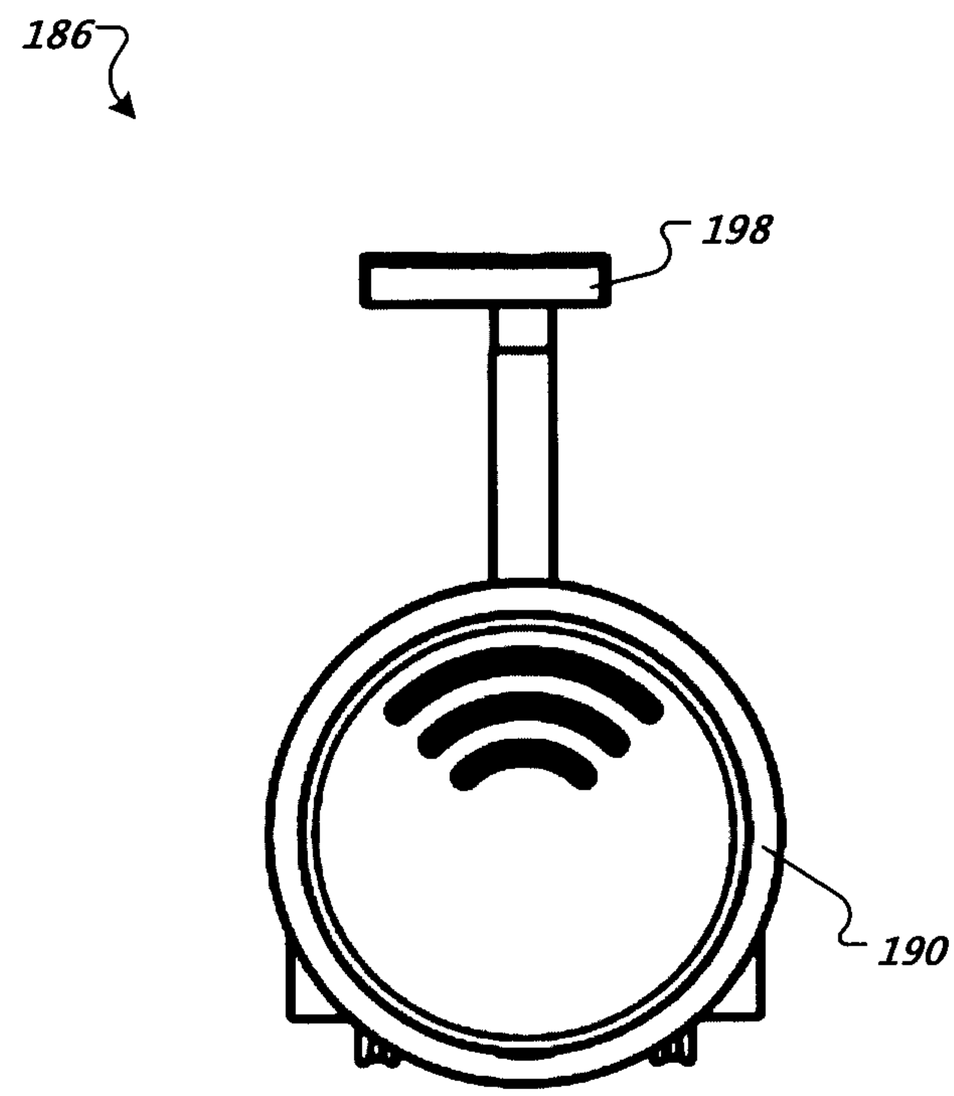

FIG. 19

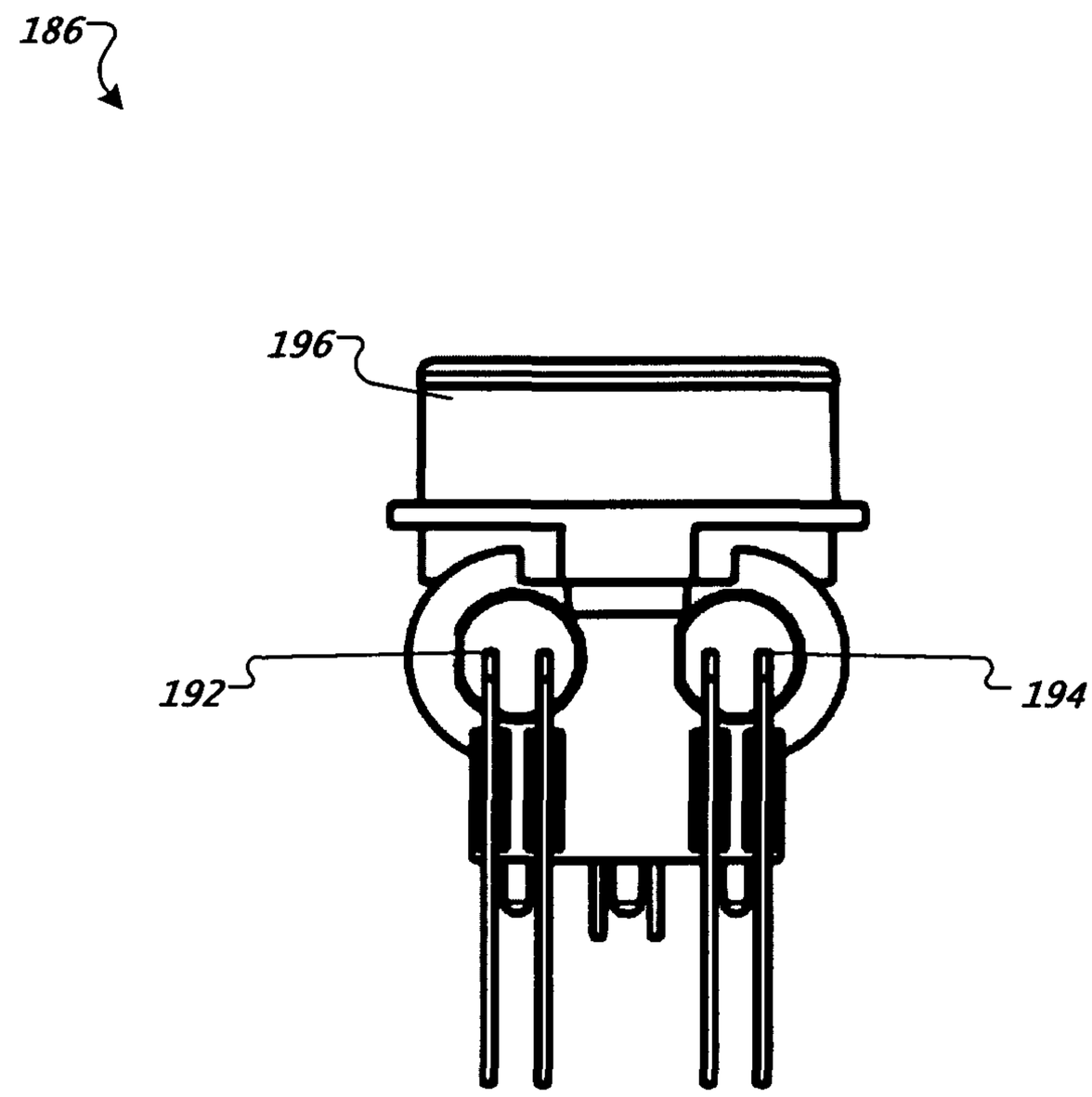

FIG. 20

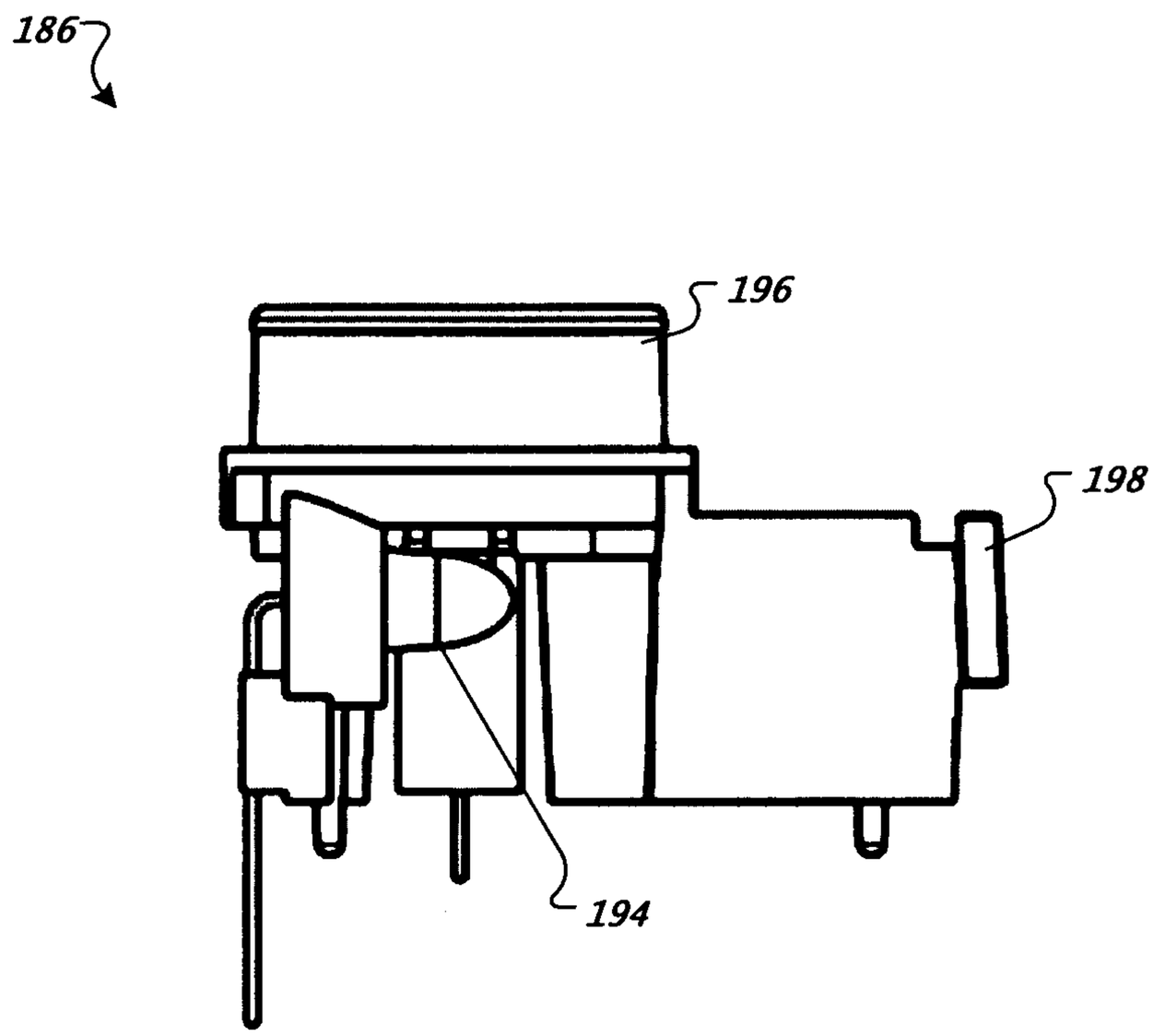

FIG. 21

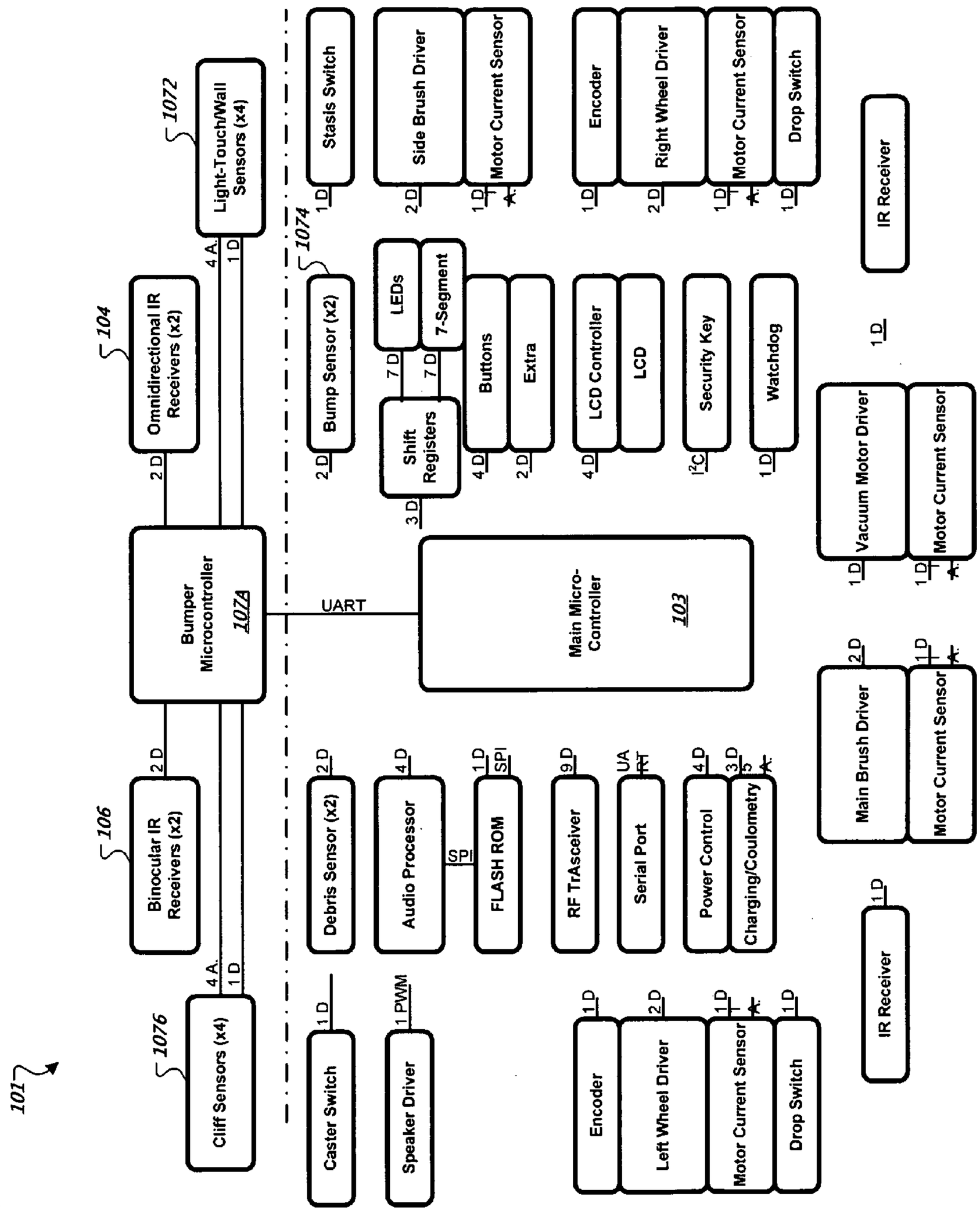
101
1072
Light-Touch/Wall Sensors (x4)
104
Omnidirectional IR Receivers (x2)
106
Binocular IR Receivers (x2)
1076
Cliff Sensors (x4)
Bumper Microcontroller
107A
UART
Main Micro-Controller
103
1074
Stasis Switch
Side Brush Driver
Motor Current Sensor
Encoder
Right Wheel Driver
Motor Current Sensor
Drop Switch
IR Receiver
Bump Sensor (x2)
LEDs
7-Segment
Shift Registers
Buttons
Extra
LCD Controller
LCD
Security Key
Watchdog
Vacuum Motor Driver
Motor Current Sensor
Main Brush Driver
Motor Current Sensor
IR Receiver
Debris Sensor (x2)
Audio Processor
SPI
FLASH ROM
RF TrAsceiver
Serial Port
Power Control
Charging/Coulometry
Caster Switch
Speaker Driver
Encoder
Left Wheel Driver
Motor Current Sensor
Drop Switch

FIG. 22

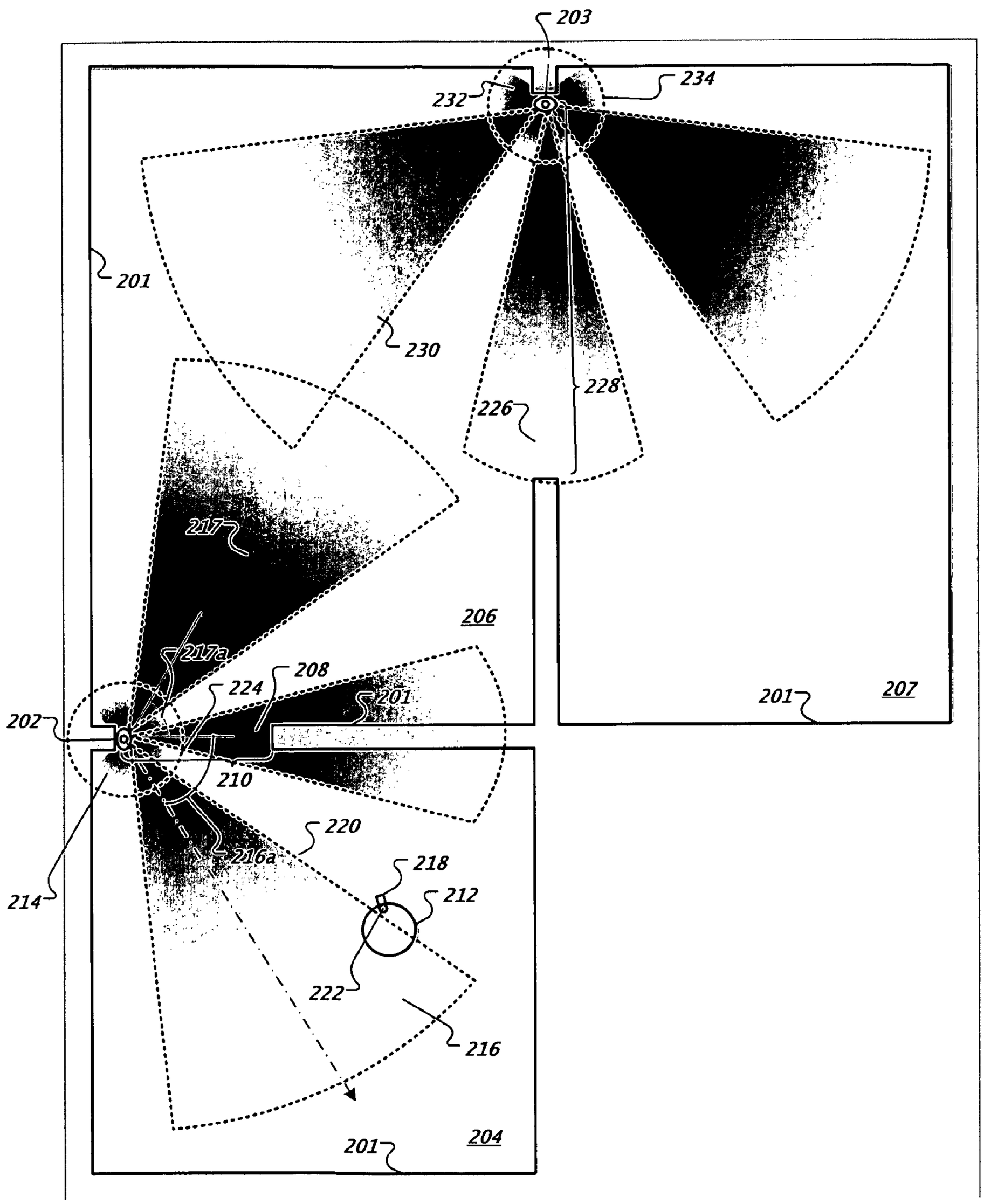
203
232
234
201
230
228
226
217
206
217a
208
224
201
207
201
202
210
220
216a
218
212
214
222
216
204
201

FIG. 23A

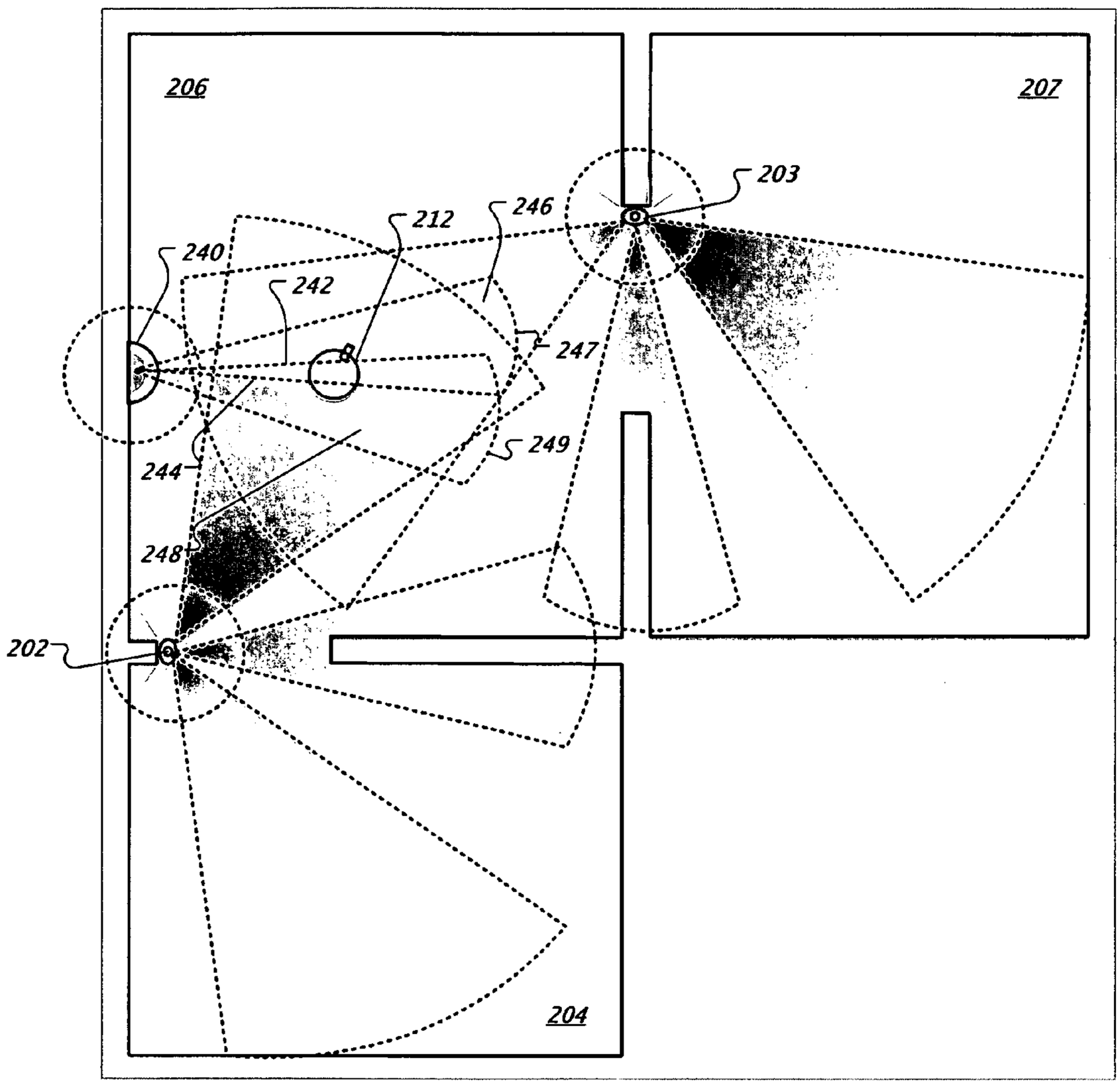

FIG. 23B

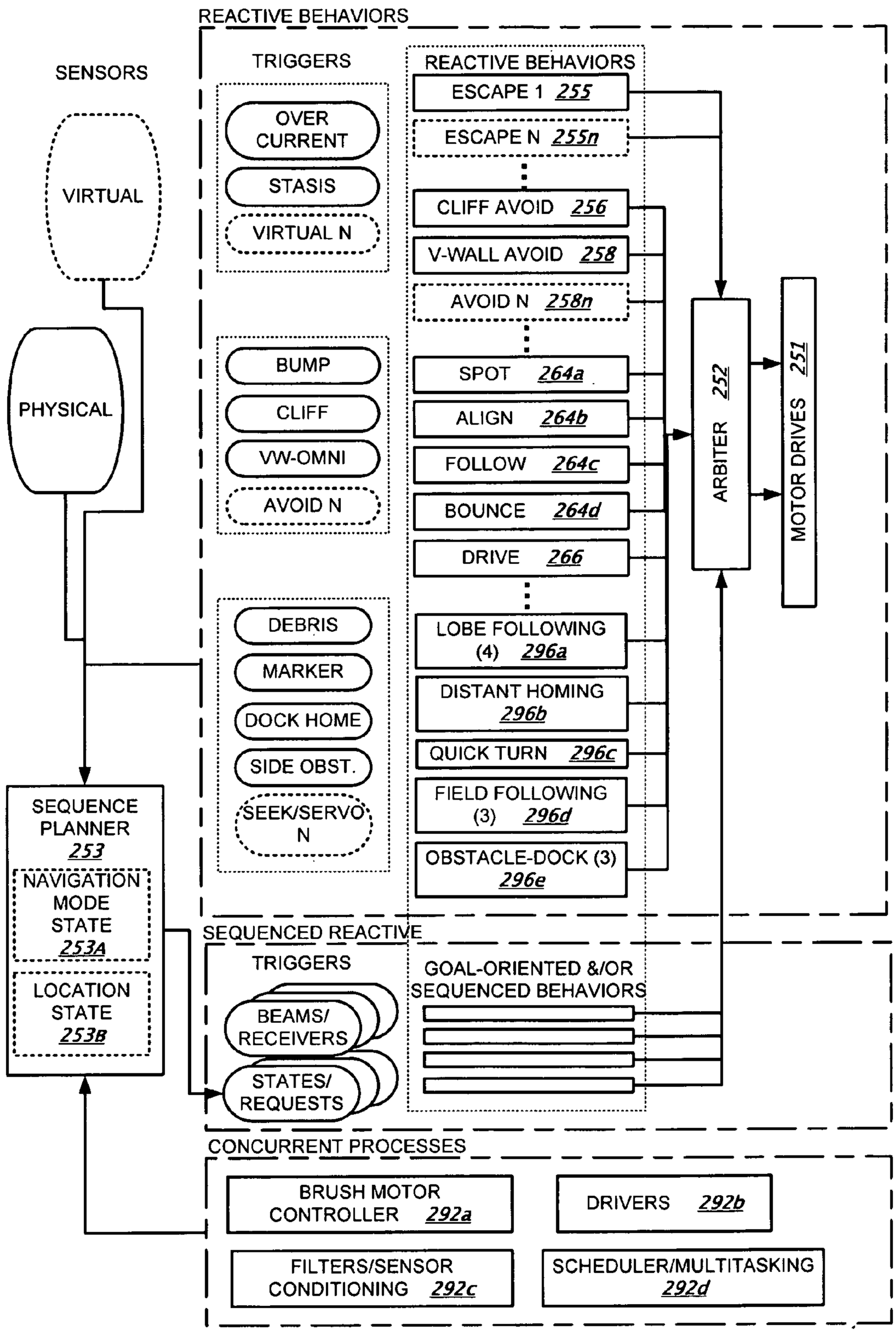
REACTIVE BEHAVIORS
SENSORS
TRIGGERS
REACTIVE BEHAVIORS
VIRTUAL
OVER CURRENT
STASIS
VIRTUAL N
ESCAPE 1 255
ESCAPE N 255n
CLIFF AVOID 256
V-WALL AVOID 258
AVOID N 258n
PHYSICAL
BUMP
CLIFF
VW-OMNI
AVOID N
SPOT 264a
ALIGN 264b
FOLLOW 264c
BOUNCE 264d
DRIVE 266
ARBITER 252
MOTOR DRIVES 251
DEBRIS
MARKER
DOCK HOME
SIDE OBST.
SEEK/SERVO N
LOBE FOLLOWING (4) 296a
DISTANT HOMING 296b
QUICK TURN 296c
FIELD FOLLOWING (3) 296d
OBSTACLE-DOCK (3) 296e
SEQUENCE PLANNER 253
NAVIGATION MODE STATE 253A
LOCATION STATE 253B
SEQUENCED REACTIVE
TRIGGERS
GOAL-ORIENTED &/OR SEQUENCED BEHAVIORS
BEAMS/ RECEIVERS
STATES/ REQUESTS
CONCURRENT PROCESSES
BRUSH MOTOR CONTROLLER 292a
DRIVERS 292b
FILTERS/SENSOR CONDITIONING 292c
SCHEDULER/MULTITASKING 292d

FIG. 24A

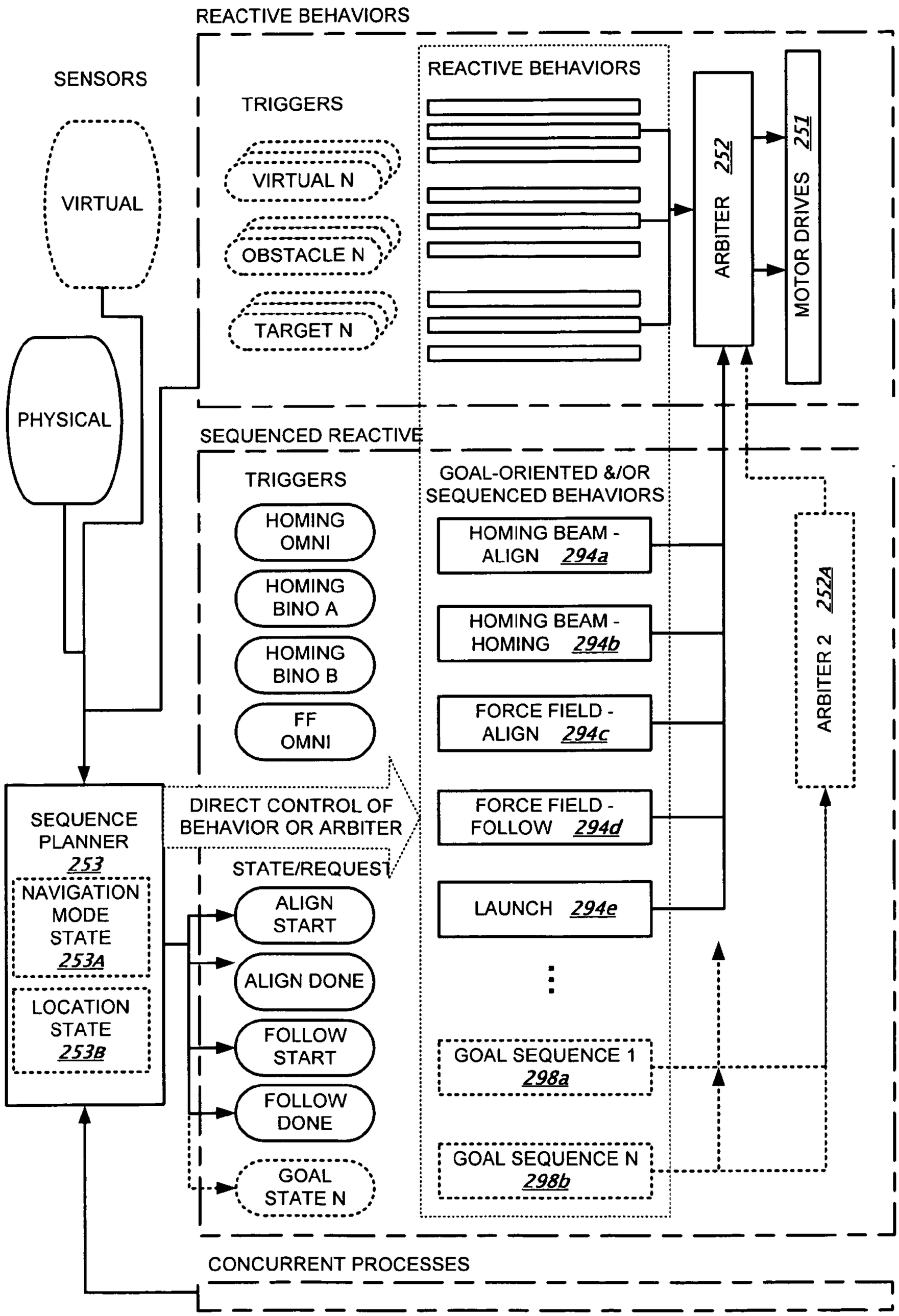
REACTIVE BEHAVIORS
SENSORS
VIRTUAL
PHYSICAL
TRIGGERS
VIRTUAL N
OBSTACLE N
TARGET N
REACTIVE BEHAVIORS
ARBITER 252
MOTOR DRIVES 251
SEQUENCED REACTIVE
TRIGGERS
HOMING OMNI
HOMING BINO A
HOMING BINO B
FF OMNI
GOAL-ORIENTED &/OR SEQUENCED BEHAVIORS
HOMING BEAM - ALIGN 294a
HOMING BEAM - HOMING 294b
FORCE FIELD - ALIGN 294c
FORCE FIELD - FOLLOW 294d
LAUNCH 294e
GOAL SEQUENCE 1 298a
GOAL SEQUENCE N 298b
ARBITER 2 252A
SEQUENCE PLANNER 253
NAVIGATION MODE STATE 253A
LOCATION STATE 253B
DIRECT CONTROL OF BEHAVIOR OR ARBITER
STATE/REQUEST
ALIGN START
ALIGN DONE
FOLLOW START
FOLLOW DONE
GOAL STATE N
CONCURRENT PROCESSES

FIG. 24B

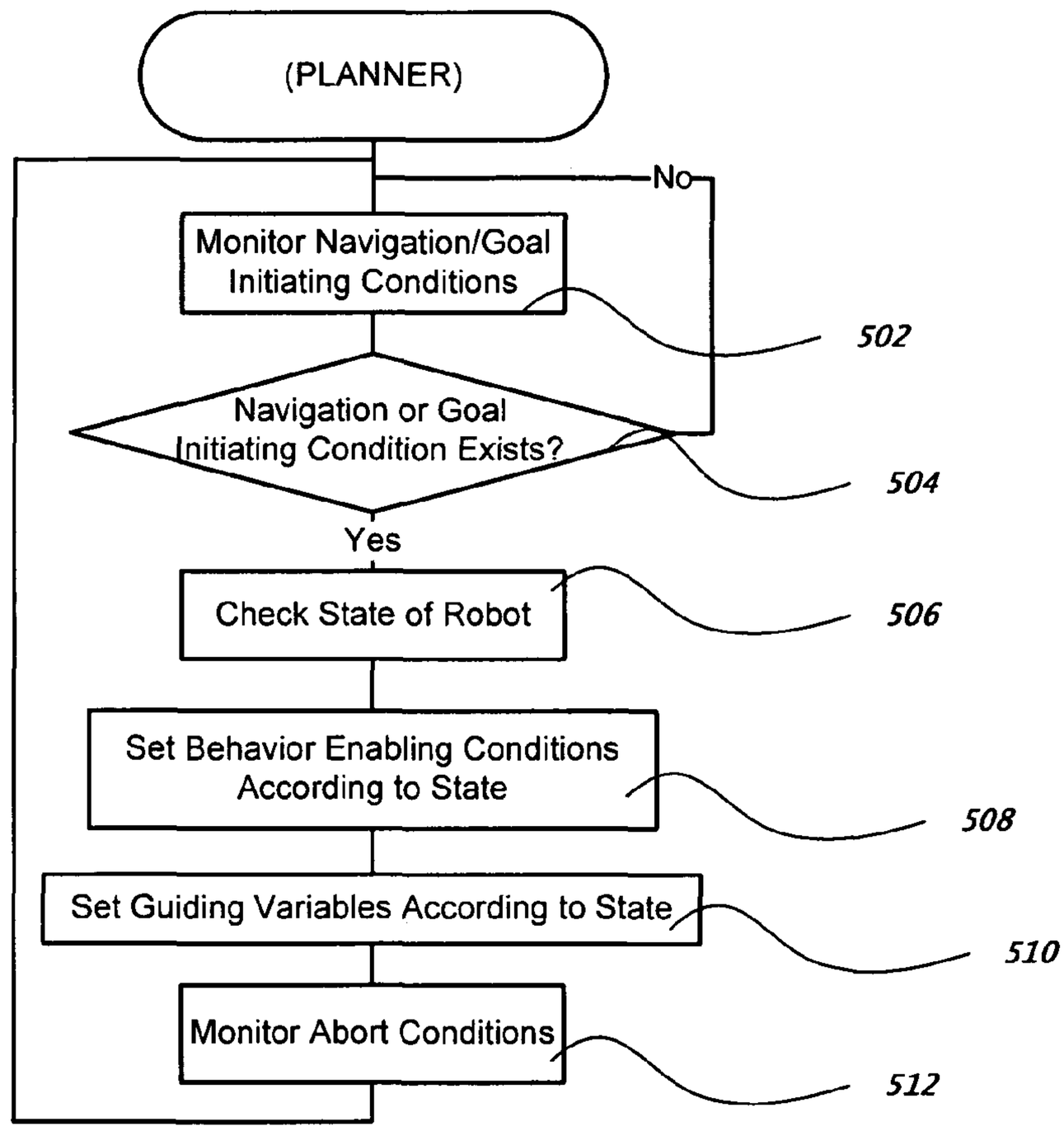

FIG. 25A

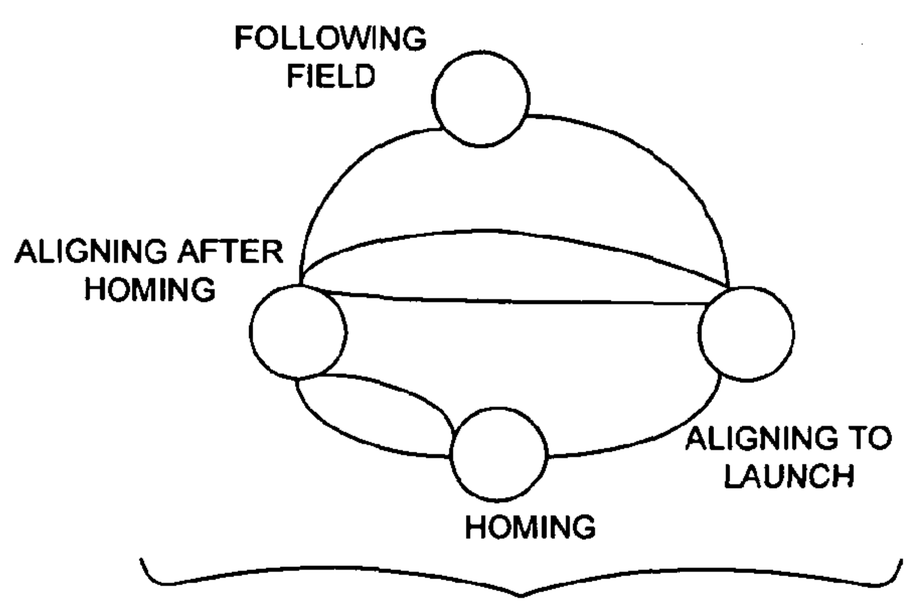

FIG. 25B

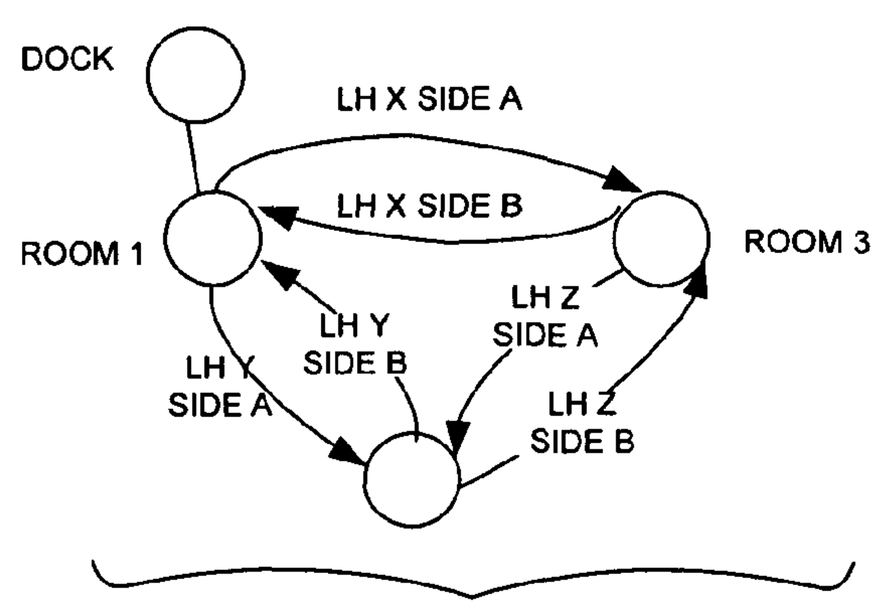

FIG. 25C

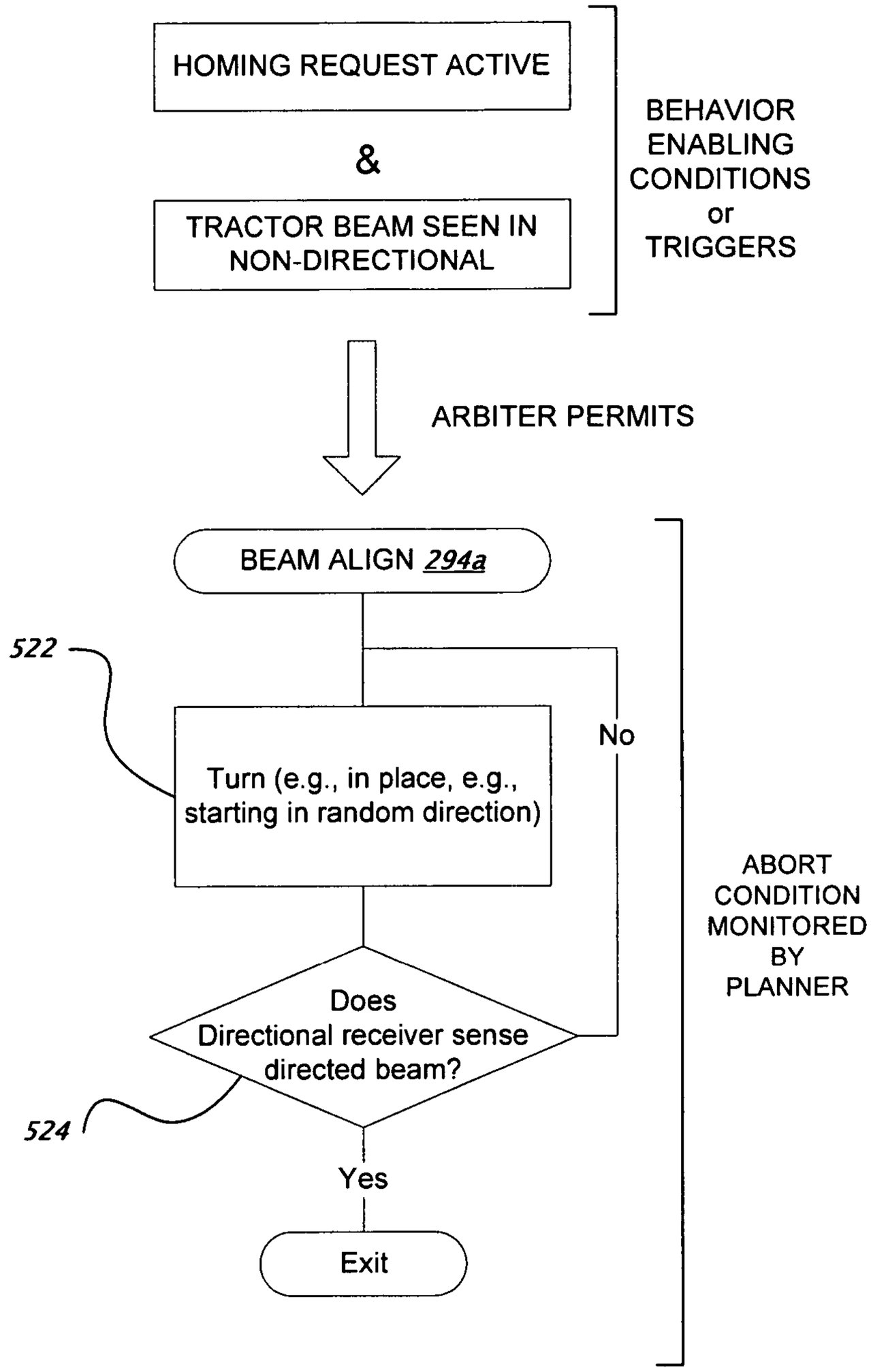
HOMING REQUEST ACTIVE
&
TRACTOR BEAM SEEN IN NON-DIRECTIONAL
BEHAVIOR ENABLING CONDITIONS or TRIGGERS
ARBITER PERMITS
BEAM ALIGN 294a
522
Turn (e.g., in place, e.g., starting in random direction)
No
Does Directional receiver sense directed beam?
524
Yes
Exit
ABORT CONDITION MONITORED BY PLANNER

FIG. 26

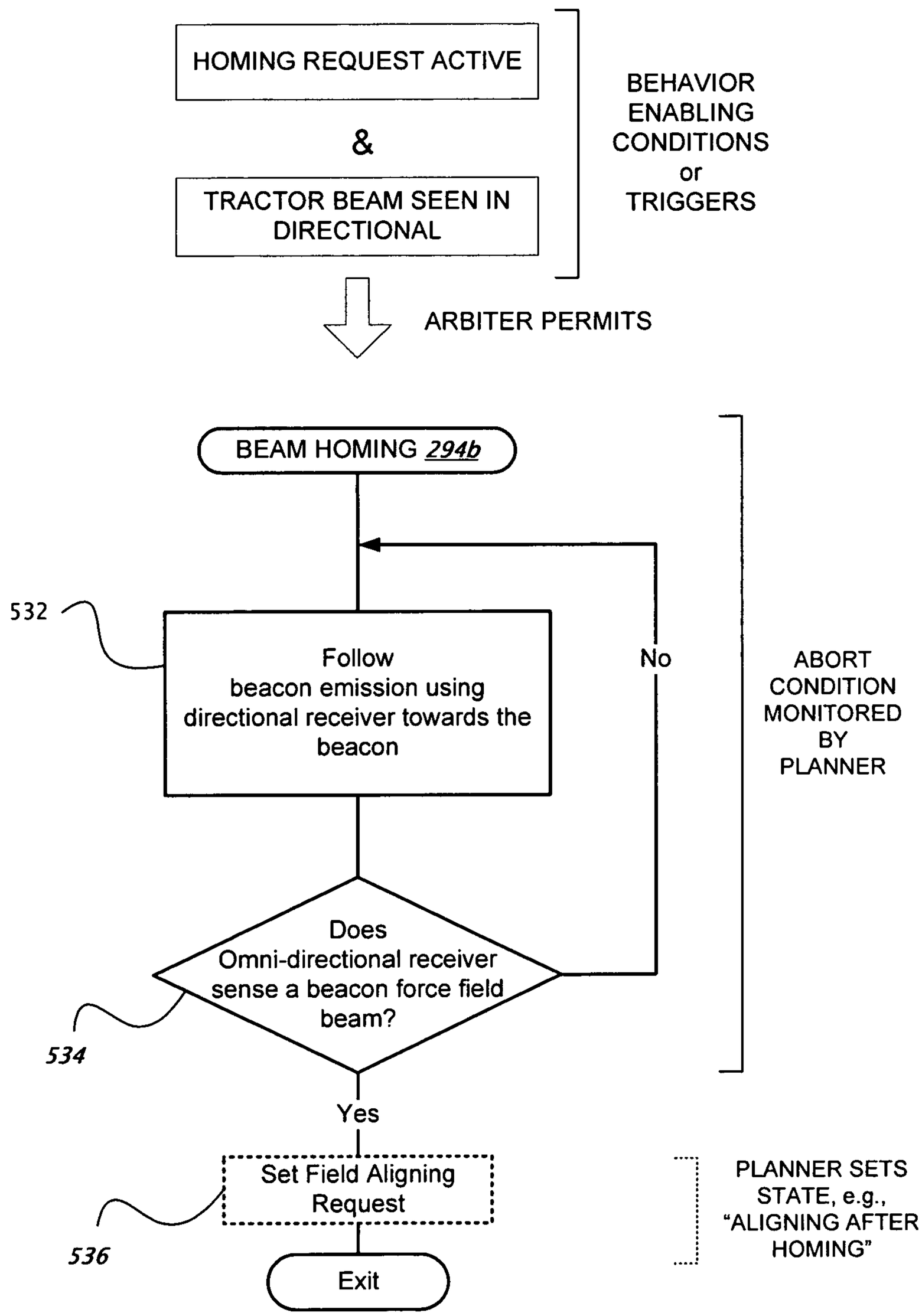
HOMING REQUEST ACTIVE
&
TRACTOR BEAM SEEN IN DIRECTIONAL
BEHAVIOR ENABLING CONDITIONS or TRIGGERS
ARBITER PERMITS
BEAM HOMING 294b
532
Follow beacon emission using directional receiver towards the beacon
No
ABORT CONDITION MONITORED BY PLANNER
Does Omni-directional receiver sense a beacon force field beam?
534
Yes
Set Field Aligning Request
536
Exit
PLANNER SETS STATE, e.g., "ALIGNING AFTER HOMING"

FIG. 27

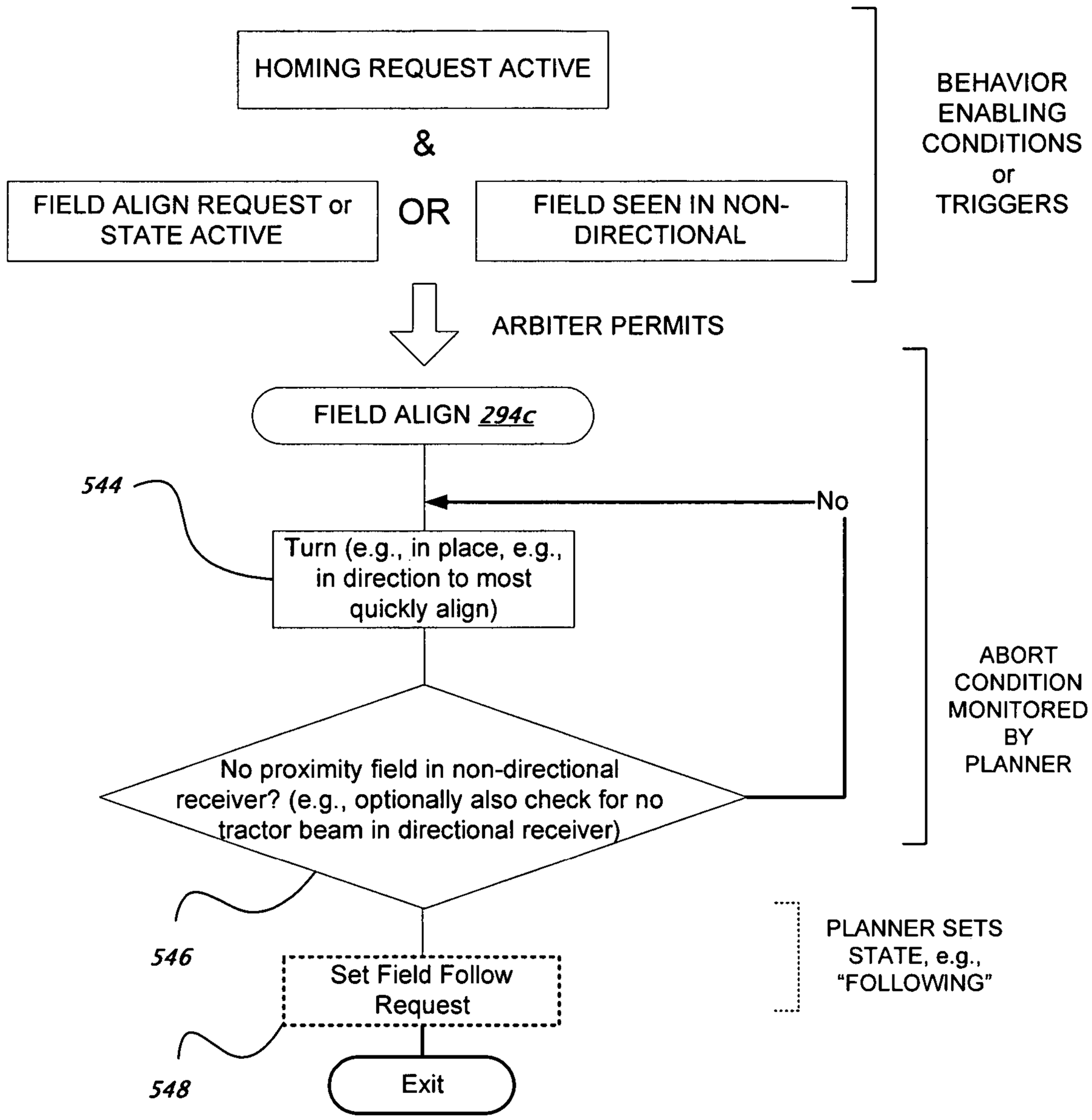
HOMING REQUEST ACTIVE
&
FIELD ALIGN REQUEST or STATE ACTIVE
OR
FIELD SEEN IN NON-DIRECTIONAL
BEHAVIOR ENABLING CONDITIONS or TRIGGERS
ARBITER PERMITS
FIELD ALIGN 294c
544
Turn (e.g., in place, e.g., in direction to most quickly align)
No
No proximity field in non-directional receiver? (e.g., optionally also check for no tractor beam in directional receiver)
ABORT CONDITION MONITORED BY PLANNER
546
Set Field Follow Request
PLANNER SETS STATE, e.g., "FOLLOWING"
548
Exit

FIG. 28

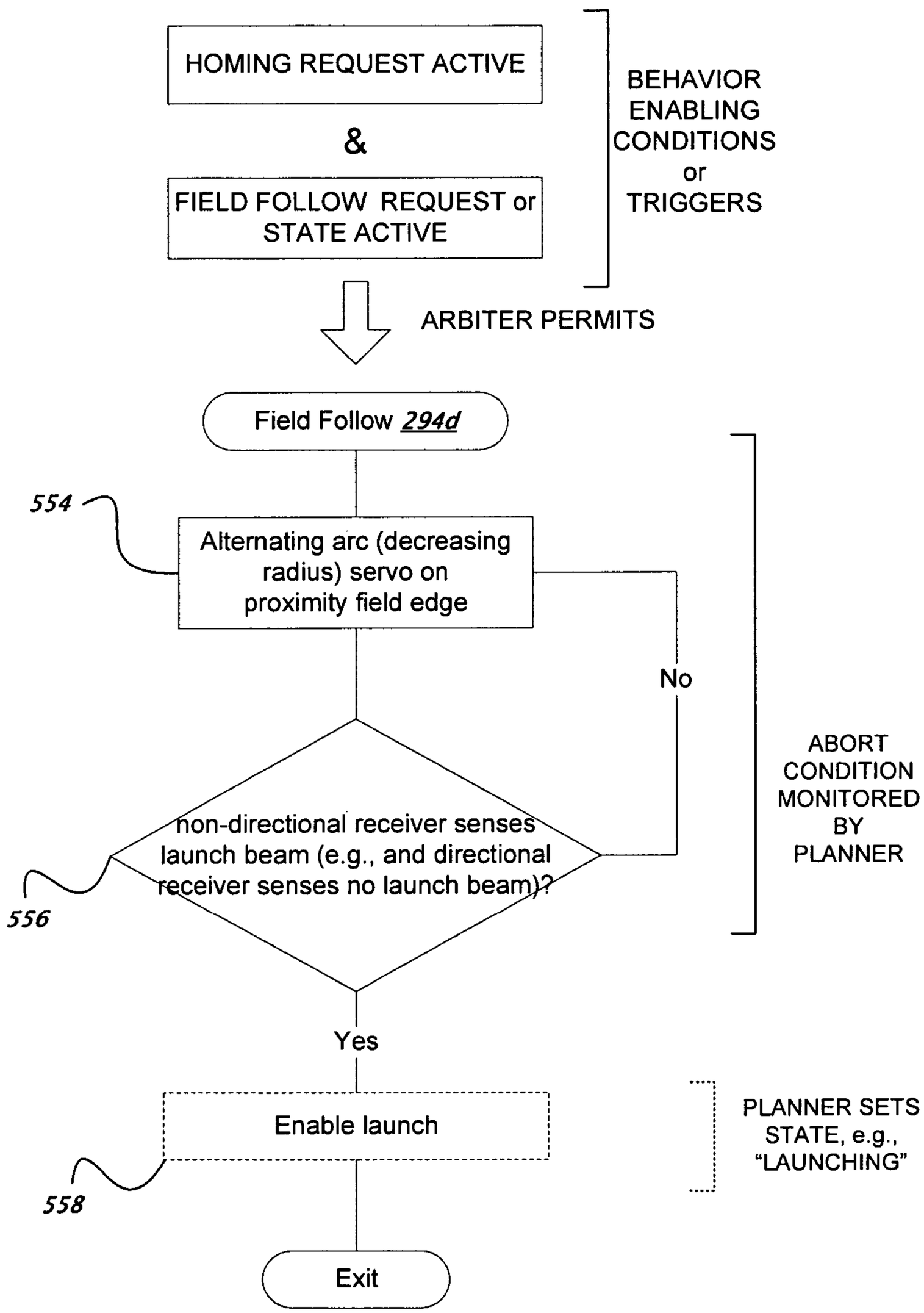
HOMING REQUEST ACTIVE
&
FIELD FOLLOW REQUEST or STATE ACTIVE
BEHAVIOR ENABLING CONDITIONS or TRIGGERS
ARBITER PERMITS
Field Follow 294d
554
Alternating arc (decreasing radius) servo on proximity field edge
No
non-directional receiver senses launch beam (e.g., and directional receiver senses no launch beam)?
556
ABORT CONDITION MONITORED BY PLANNER
Yes
Enable launch
558
PLANNER SETS STATE, e.g., "LAUNCHING"
Exit

FIG. 29

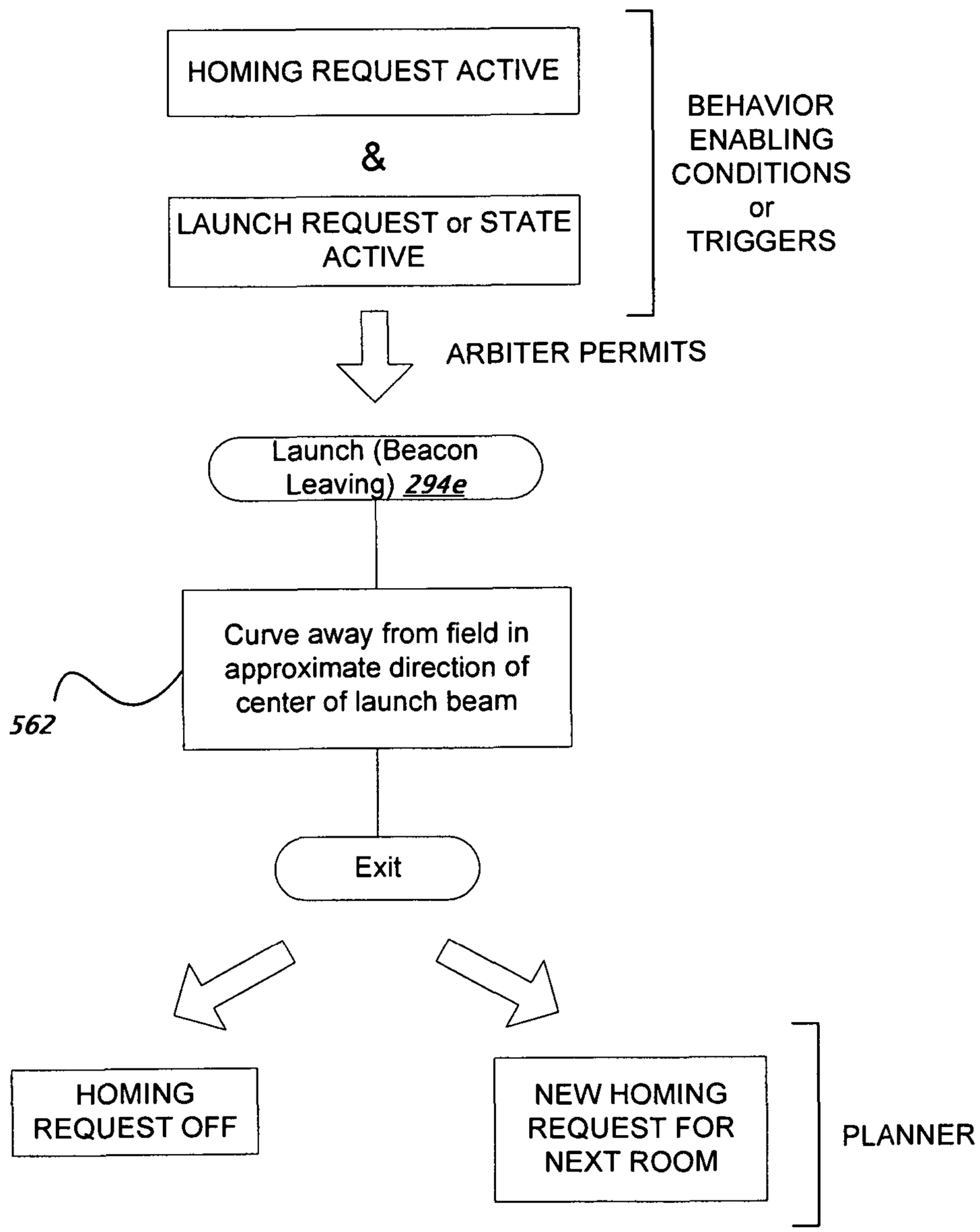
HOMING REQUEST ACTIVE
&
LAUNCH REQUEST or STATE ACTIVE
BEHAVIOR ENABLING CONDITIONS or TRIGGERS
ARBITER PERMITS
Launch (Beacon Leaving) 294e
Curve away from field in approximate direction of center of launch beam
562
Exit
HOMING REQUEST OFF
NEW HOMING REQUEST FOR NEXT ROOM
PLANNER

FIG. 30

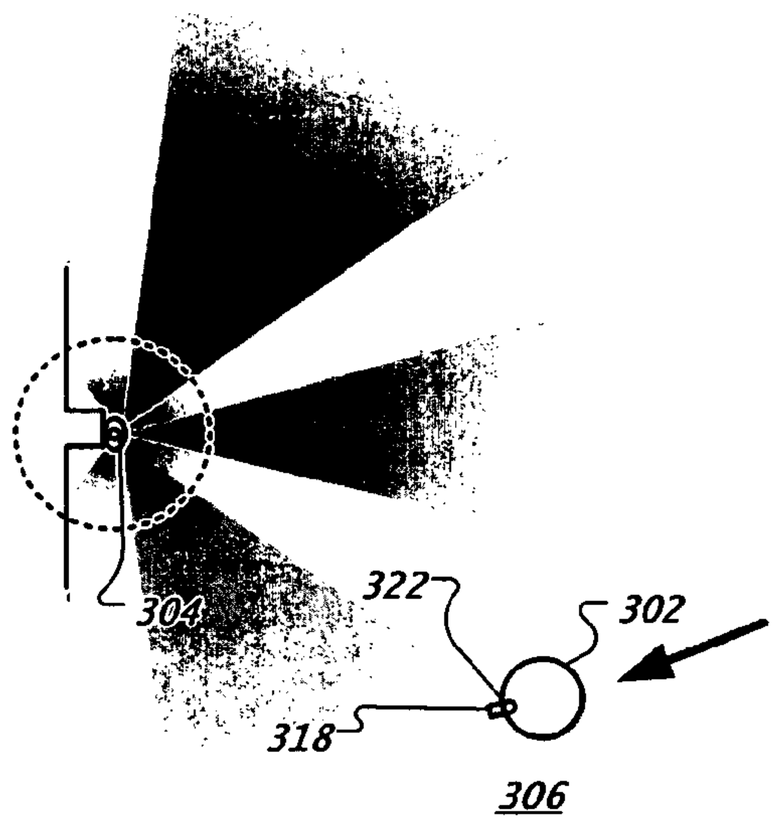

FIG. 31A

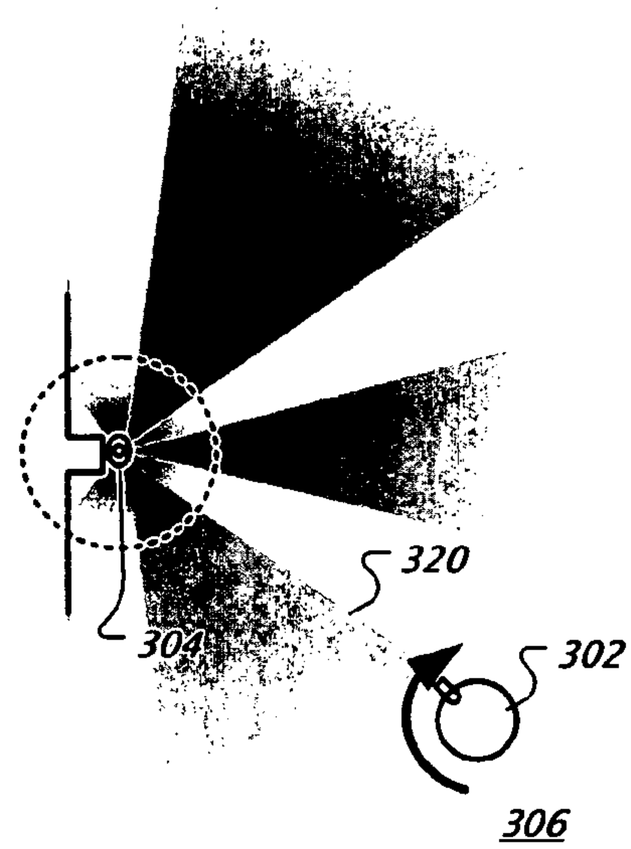

FIG. 31B

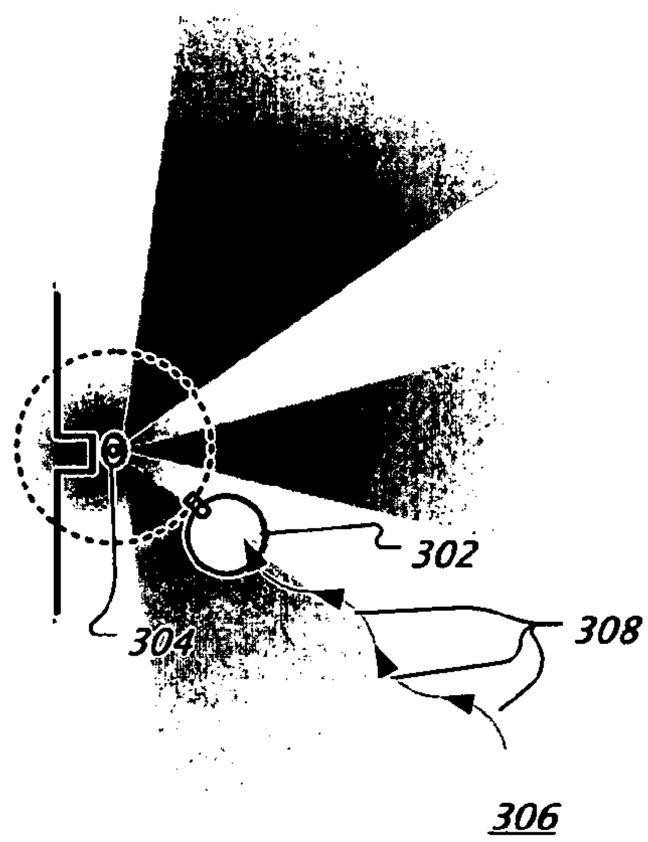

FIG. 31C

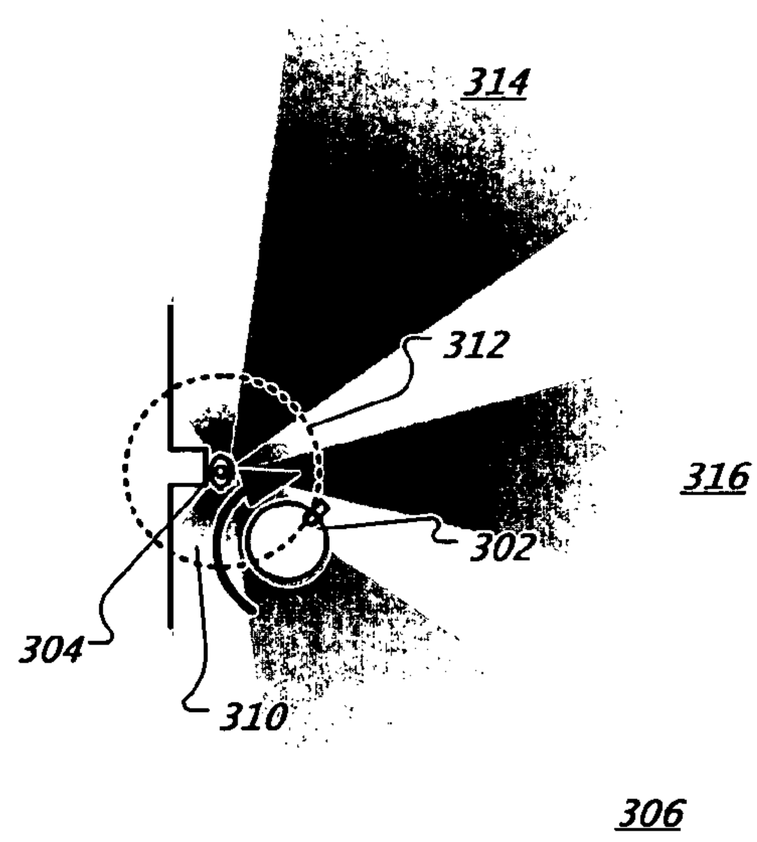

FIG. 31D

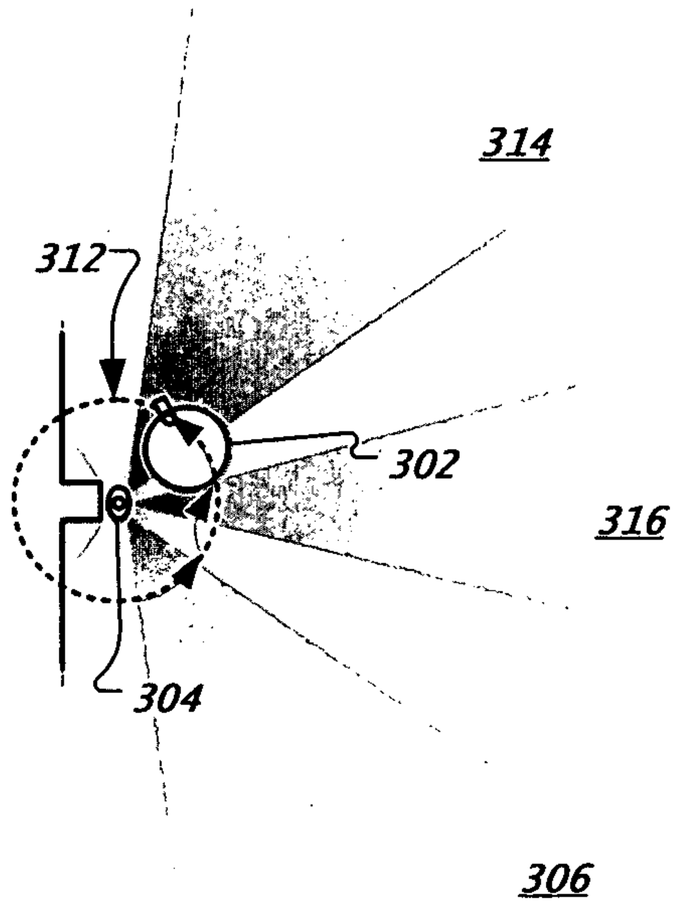

FIG. 31E

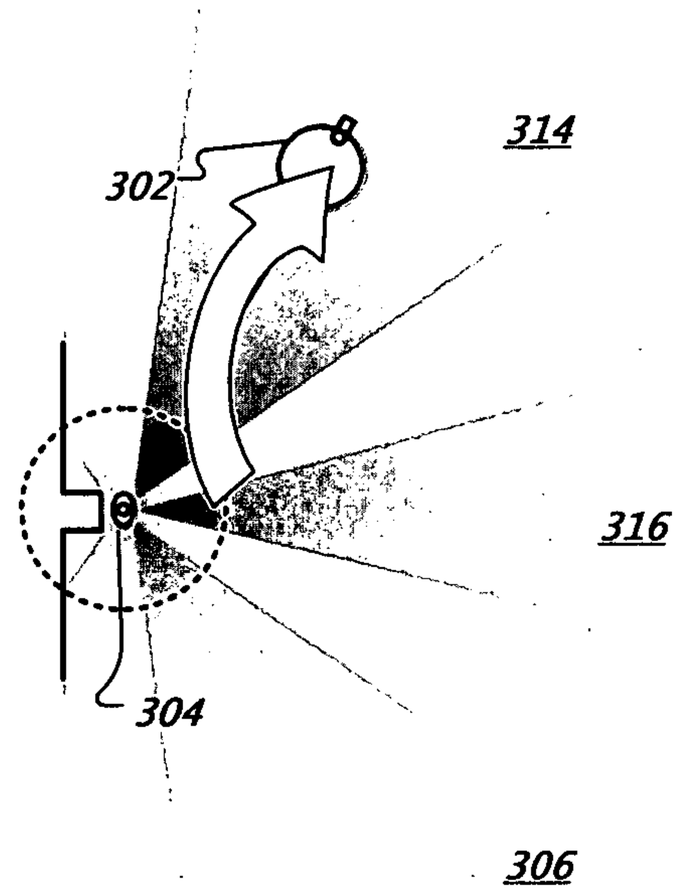

FIG. 31F

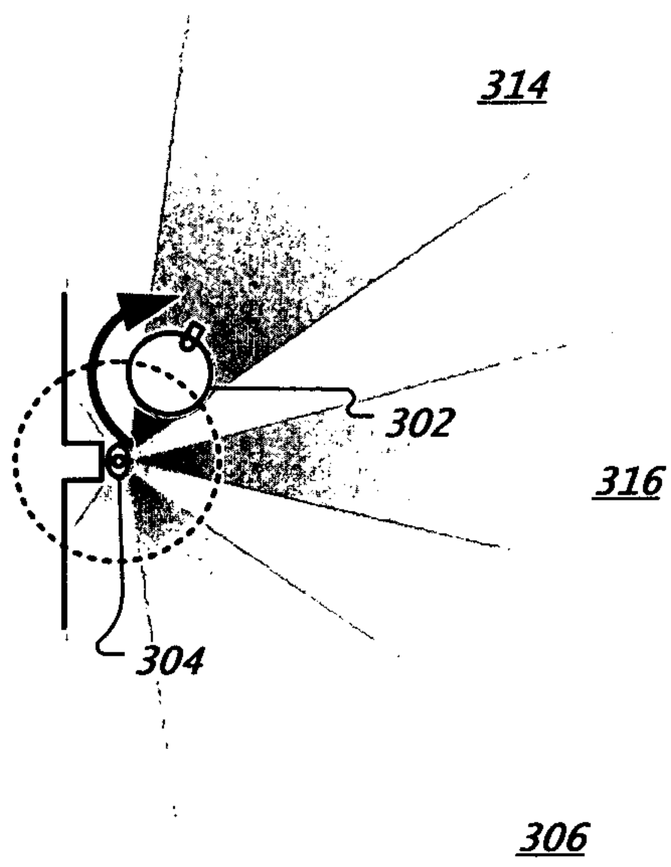

FIG. 31G

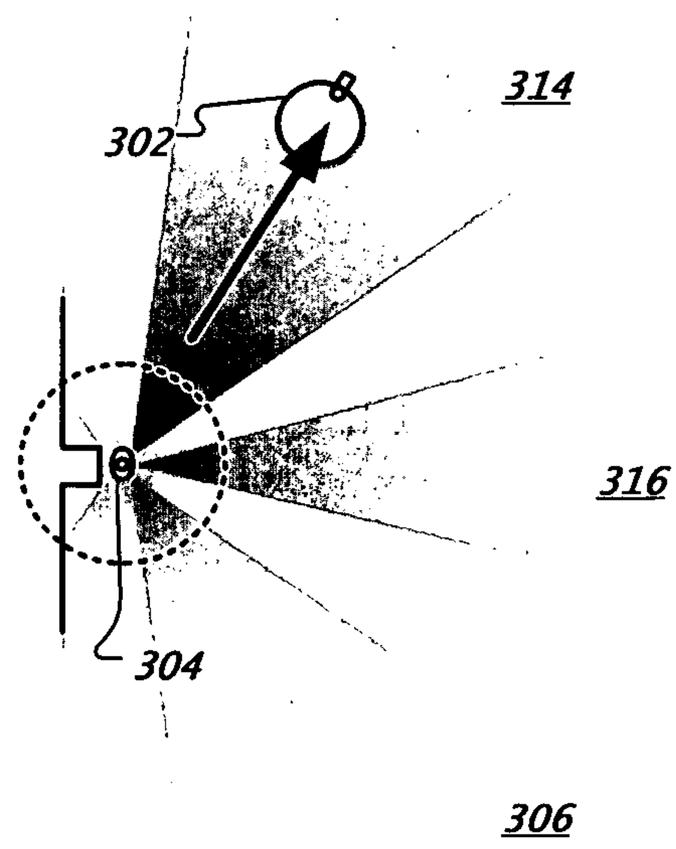

FIG. 31H

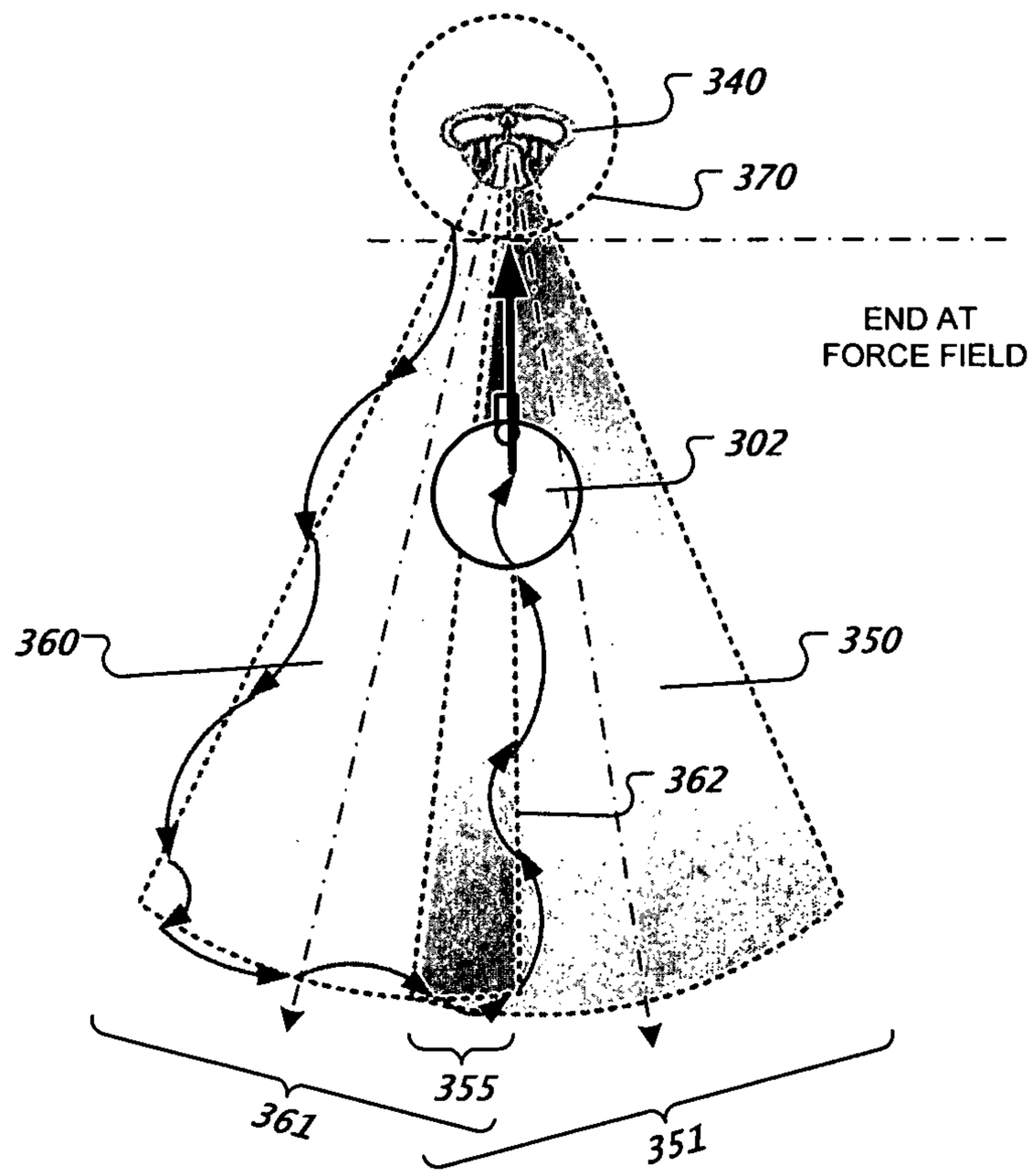

FIG. 32A

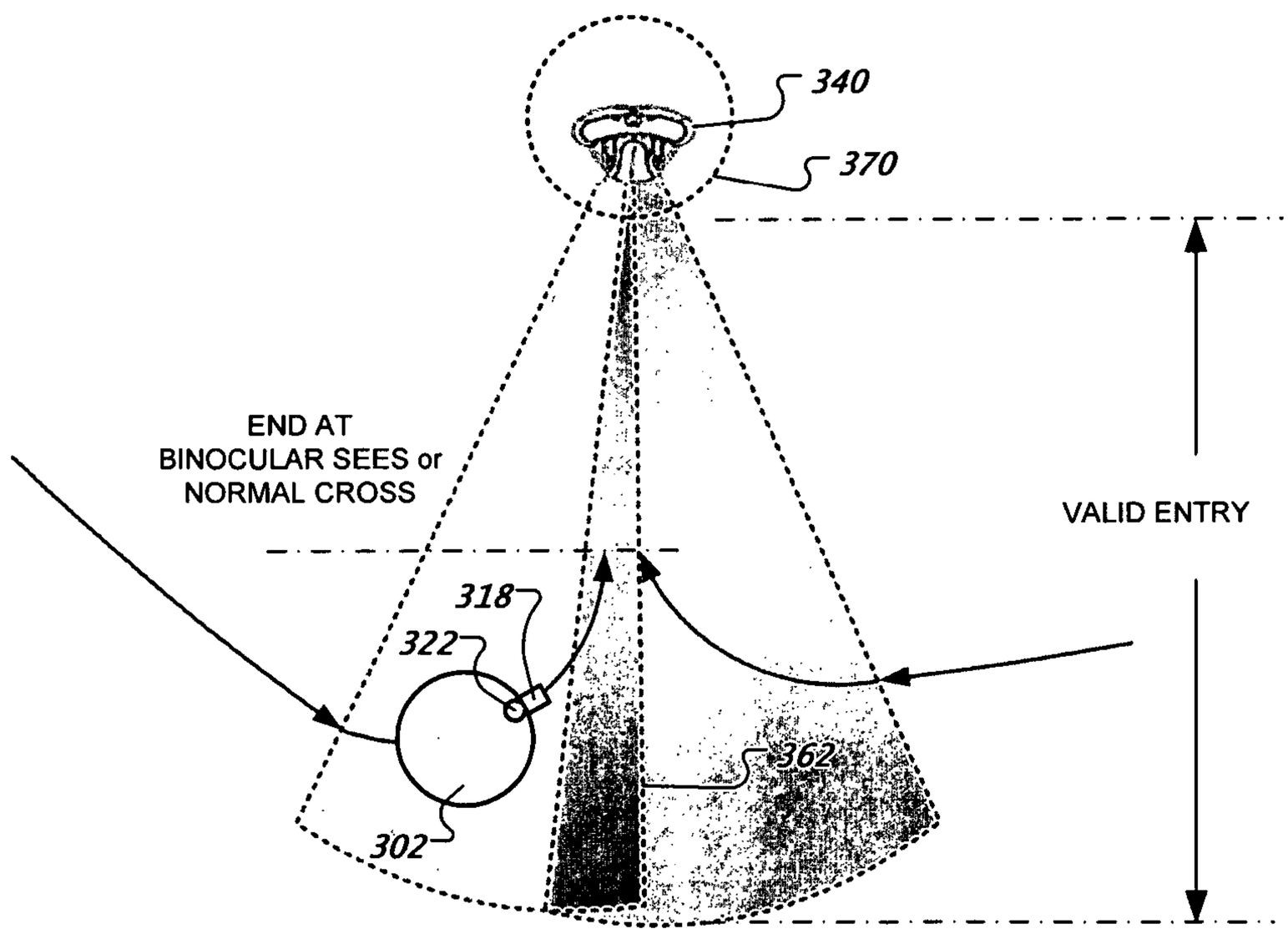

FIG. 32B

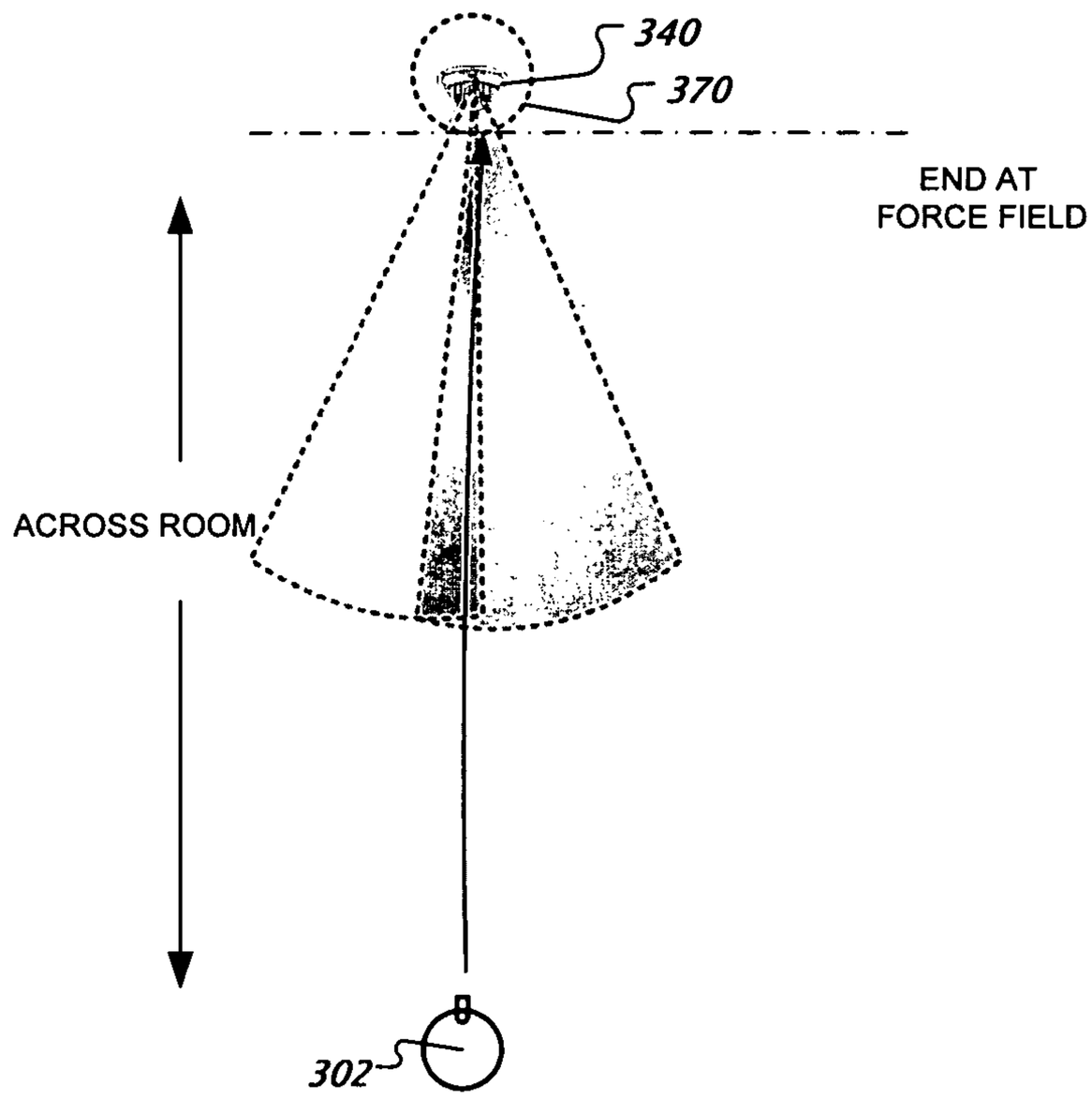

FIG. 32C

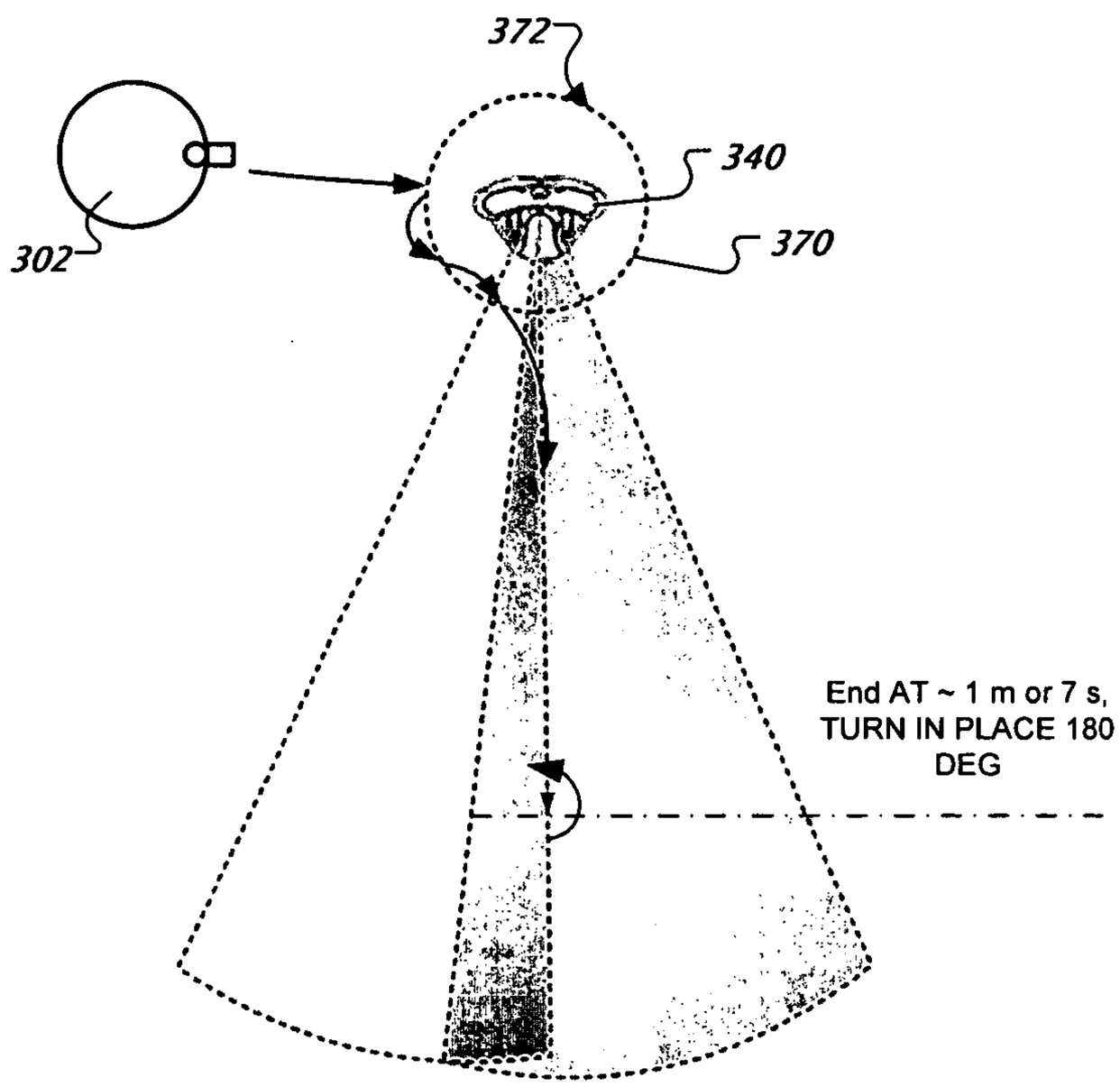

FIG. 32D

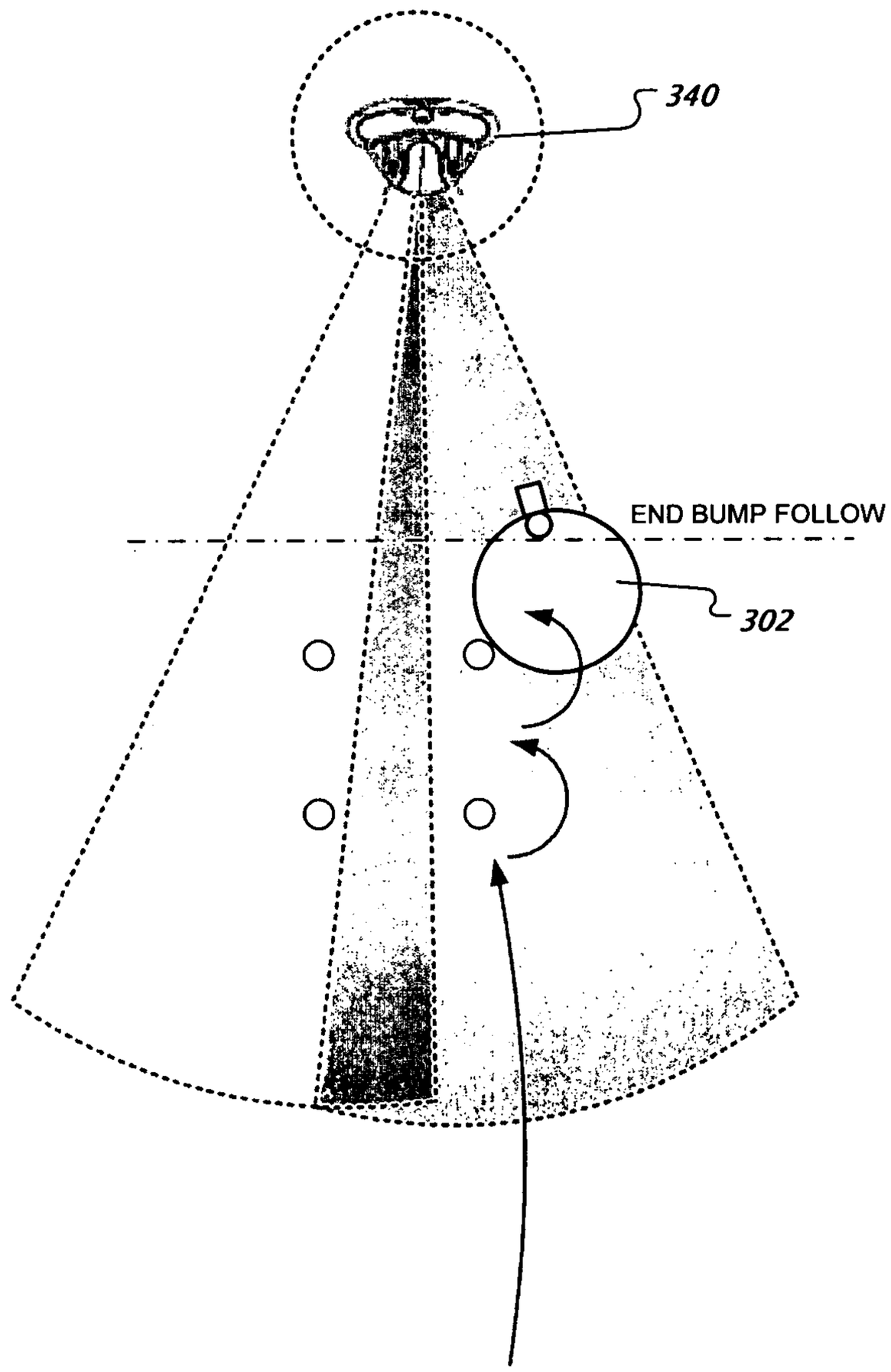

FIG. 32E

AUTONOMOUS COVERAGE ROBOT NAVIGATION SYSTEM

This U.S. patent application claims priority under 35 U.S.C. 119(e) to a U.S. provisional patent application filed on Dec. 2, 2005, entitled "ROBOT NETWORKING, THEMING AND COMMUNICATION SYSTEM" and having assigned Ser. No. 60/741,442, the entire contents of which are hereby incorporated by reference.

TECHNICAL FIELD

This invention relates to robots, and more particularly to autonomous coverage robots and associated navigation systems.

BACKGROUND

Autonomous robots are robots which can perform desired tasks in unstructured environments without continuous human guidance. Many kinds of robots are autonomous to some degree. Different robots can be autonomous in different ways. An autonomous coverage robot traverses a work surface without continuous human guidance to perform one or more tasks. In the field of home, office and/or consumer-oriented robotics, mobile robots that perform household functions such as vacuum cleaning, floor washing, patrolling, lawn cutting and other such tasks have been widely adopted.

SUMMARY

In one aspect, an autonomous coverage robot includes a chassis defining a forward drive direction, a controller carried by the chassis, omni-directional receiver carried by the chassis, and a directional receiver disposed on a forward portion of the chassis and responsive to an emission incident on the forward portion of the chassis from the drive direction. The directional receiver includes a mounting receptacle defining first and second apertures substantially aligned with the drive direction, and first and second component receivers housed in the receptacle and positioned to be responsive to the emission received through the first and second apertures, respectively. The component receivers are each configured to generate a respective signal in response to the emission. The controller is configured to determine a direction of the emission in relation to the drive direction based on the signals generated by the component receivers.

The directional receiver is installed onto a front portion of the chassis and housed within the mounting receptacle. The mounting structure stabilizes and supports the directional receiver which is used for docking and navigation throughout a room. The directional receiver includes two detectors which are highly directional in the sense that they are able to detect peaks of an overlapping signal from far away and servo in on the source of the beam using those peaks. In one example, the first and second component receivers of the directional receiver are positioned to form an angle of between about 1 and 15 degrees there between. In addition, the first and second component receivers may be collimated to focus at a point between about 3 and 5 meters from the robot or on any point within each bounded area.

The controller maneuvers the robot to detect an emission with the omni-directional receiver, and in response to the detection, orients the chassis to align the robot drive direction with the determined emission direction based on the signals generated by the component receivers of the directional receiver. The controller, in response to a detected emission with the directional receiver, orients the chassis to align the robot drive direction with the determined emission direction based on the signals generated by the component receivers of the directional receiver. The receivers may be configured to receive transmissions of infrared light.

In one implementation, the omni-directional receiver includes a housing having an upper portion and defining an inner cavity, a conical, and an emission receiver. The upper portion allows a transmission of an emission into the inner cavity. The conical reflector is disposed on an upper surface of the cavity to reflect emissions incident on the upper portion of the housing down into the cavity. The emission receiver is disposed in the cavity below the conical reflector.

In one example, the robot includes a floor cleaning assembly carried by the chassis, a cleaning bin carried by the chassis and arranged to collect debris removed from a floor by the cleaning assembly, and a bin sensor. The bin sensor is configured to generate a signal indicative of the cleaning bin reaching a threshold filling that causes the controller to initiate a docking sequence.

In another aspect, an autonomous mobile robot system for bounded areas includes a navigation beacon and an autonomous coverage robot. The navigation beacon has a gateway beacon emitter arranged to transmit a gateway marking emission with the navigation beacon disposed within a gateway between the first bounded area and an adjacent second bounded area. The autonomous coverage robot includes a beacon emission sensor responsive to the beacon emission, and a drive system configured to maneuver the robot about the first bounded area in a cleaning mode in which the robot is redirected in response to detecting the gateway marking emission. The drive system is also configured to maneuver the robot through the gateway into the second bounded area in a migration mode.

The beacon may be configured to emit an infrared signal for the gateway marking emission, or any other type of signal, which is readily stopped by a wall so as not to "bleed over" into adjacent rooms and uniquely identify the current room or locality in which the robot is located.

In one implementation, the robot remains in the first bounded area upon the robot redirection in response to detecting the gateway marking emission in the cleaning mode. The gateway marking emission may be infrared light and the beacon emission sensor is configured to detect transmissions of infrared light.

In another implementation, the drive system is configured to maneuver the robot about the first bounded area in the cleaning mode for a preset time interval, and to automatically initiate the migration mode at expiration of the time interval. The drive system is configured to maneuver the robot across the gateway emission in the migration mode.

In yet another implementation, the drive system is configured to maneuver the robot about the first bounded area in the cleaning mode until a preset number of encounters of the gateway marking emission have been detected, and then to automatically initiate the migration mode. The coverage robot's dwell time in one room or selective rooms can also be set by a timer or schedule, a number of collisions or interactions with a proximity beam of a particular beacon, a character or number of dirt or debris detections, remaining battery life, and maintenance or remote control overrides.

In one example, the robot includes a floor cleaning system that removes debris from the floor as the robot is maneuvered.

In some examples, the robot includes a transmitter that signals the beacon to disrupt transmission of the gateway emission in the migration mode.

In another example, the navigation beacon includes a vectoring beacon emitter arranged to transmit a directed vectoring emission into the first bounded area with the beacon disposed within the gateway. The robot drive system is configured to direct the robot toward the beacon upon encountering the vectoring emission in the migration mode. The navigation beacon transmits the directed vectoring emission, which may be infrared light, at an angle adjacent the cross-gateway direction of between about 45 and 90 degrees. The robot, while in the migration mode, discerns a position of the navigation beacon in response to detection of the directed vectoring emission and aligns a drive direction defined by the robot in relation to an emission path defined by the directed vectoring emission. The robot advances along the emission path to reach and traverse the gateway. The navigation beacon may also transmit a proximity emission laterally about the beacon, where the robot avoids cleaning and migration within the proximity emission.

In some examples, the robot wirelessly communicates with the navigation beacon to deactivate the directed vectoring emission while in the cleaning mode and activate the directed vectoring emission while in the migration mode. In other examples, the robot remotely activates the directed vectoring emission of the navigation beacon and deactivates the gateway emission upon initiating the migration mode. Furthermore, the robot remotely deactivates the directed vectoring emission of the navigation beacon and activates the gateway emission upon terminating the migration mode. The robot remotely activates and deactivates the emissions of the navigation beacon with a radiofrequency communication. The navigation beacon may also be configured to communicate schedule information with the robot.

The system may also include a base station located in one of the bounded areas. The base station includes a base defining a docking direction from which the robot may properly dock, and a robot charger housed in the base. An omni-directional beam emitter may be mounted on the base and configured to project a proximity beam laterally around the docking station. Two navigational field emitters are housed in the base and arranged to emit respective, laterally bounded and overlapping fields of emissions of signal beams, respectively. One of the emitted fields defines a lateral field edge aligned with the docking direction and overlapped by the other of the fields. The two navigational field emitters of the base station are positioned to form an angle therebetween of between about 45 and 90 degrees. The fields of emissions of the two navigational field emitters of the base station may be infrared light.

In another aspect, a method of navigating an autonomous coverage robot between bounded areas includes positioning a navigation beacon in a gateway between adjoining first and second bounded areas. The beacon configured to transmit a gateway marking emission across the gateway. In some example, the navigation beacon may also transmit a proximity emission laterally about the beacon, where the robot avoids cleaning and migration within the proximity emission. The method also includes placing the coverage robot within the first bounded area. The robot autonomously traverses the first bounded area in a cleaning mode and upon encountering the gateway marking emission in the gateway, the robot remains in the first bounded area, thereby avoiding the robot migration into the second area. Upon termination of the cleaning mode in the first area, the robot autonomously initiates a migration mode to move through the gateway, past the beacon, into the second bounded area.

In some examples, the robot remotely deactivates the gateway marking emission of the navigation beacon upon initiating the migration mode and activates the gateway marking emission upon terminating the migration mode. The gateway marking emission may be infrared light. In other examples, the robot is non-responsive to the gateway emission while in the migration mode.

In one example, upon termination of the migration mode in the second area, the robot autonomously initiates the cleaning mode in the second bounded area.

In one example, the navigation beacon is configured to transmit a directed vectoring emission into the first bounded area with the beacon disposed within the gateway. The robot drives toward the beacon upon detecting the vectoring emission in the migration mode. Detecting the directed vectoring emission in the migration mode includes the robot sensing the directed vectoring emission with a directional receiver on the robot, where the directional receiver is aligned with a robot drive direction, and the robot aligning the robot drive direction with a path defined by the directed vectoring emission. The robot may also sense the directed vectoring emission with an omni-directional receiver on the robot before maneuvering to detect the directed vectoring emission by the directional receiver on the robot. The robot moves past the beacon by moving towards the beacon along the emission path, sensing a beacon perimeter emitted by the beacon, and moving along the beam perimeter through the gateway and into the second area.

In another aspect, a method of navigating an autonomous coverage robot between bounded areas includes positioning a navigation beacon in a gateway between adjoining first and second bounded areas. The beacon is configured to transmit a directed emission into the first bounded area and a gateway emission in a cross-gateway direction. The method also includes placing the coverage robot within the first bounded area. The robot autonomously traverses the first bounded area in a cleaning mode and upon encountering the gateway emission, the robot remains in the first bounded area, thereby avoiding the robot migration into the second area. Upon termination of the cleaning mode in the first area, the robot autonomously initiates a migration mode to move through the gateway into the second bounded area by detecting the directed emission and, in response to the directed emission, moves past the beacon through the gateway and into the second area.

The navigation beacon includes a base positionable in the gateway, the base defining a cross-gateway direction. A gateway beam emitter is housed in the base and arranged to emit a beam in the cross-gateway direction. First and second directional beam emitters are housed in the base and arranged to emit respective focused beams into each of the adjoining areas when the base is positioned in the gateway. An omni-directional beam emitter is disposed on the base and configured to project a proximity beam laterally around the beacon. The first and second directional focused beams form angles adjacent the cross-gateway direction of between about 45 and 90 degrees.

Another example of the navigation beacon includes a beam emitter emitting a beam along the line of a "virtual wall" and a circular proximity beam (and/or RF zone) to prevent the robot collisions when detected by the robot. A first beam emitter may be positioned in the gateway to emit a beam across the gateway. A second beam emitter may be positioned in the gateway to emit a beam angled into a first room and modulated to signify the first room. A third beam emitter may be positioned in the gateway to emit a beam angled into a second adjoining room and modulated to signify the second room.

The navigation beacon can also act as a virtual temporary confinement wall or gateway, where the robot stays within the virtual gateway(s) for, e.g., a predetermined number of virtual gateway interactions or time span, then crosses the virtual gateway and resets its time or incident counter to dwell in the next "room" which could be partially or wholly defined by virtual gateways.

Multiple beacons may be employed to define the boundaries of each bounded area. The directed vectoring and gateway emissions may be infrared light. Each transmitted emission is differentiated by time division multiplexing with a fixed period random offset. Each beacon is encoded differently (e.g. left and right beams) and can be set by a DIP switch or other such device located on the beacon. The beacon encoding can be set or changed by the robot (e.g. via RF commands issued by the robot) as the robot encounters successive beacons or two beacons with the same encoding. The beacon may be set to be virtual walls or threshold markers (or both). As the robot encounters each beacon, the robot counts the beacons and identifies them by their modulation. The first one encountered is number one, and is believed to be nearest a base. The second one is number two, farther yet. The third one is number three, farther yet. The left and right side beams or directed beams of the beacons are encoded differently. As a result, the robot can record which side is thought to be nearer to the base. When the robot is ready to return to the base (e.g. timed out, low battery remaining, bin full, schedule finished, maintenance needed, general event triggered, or under any other circumstances), the robot looks for the lowest numbered beacon with an away-side beam and heads in that direction. The directionality of the beam also allows the robot to maneuver past the beacon appropriately. For example, on the way out from the base station, the robot passes directed beam A and directed beam B, sequentially, of a beacon, either one or both on the left side of the robot. To return to the base station the robot should wait/hunt/clean until it detects directed beam B of the beacon. The robot then approaches the beacon by following beam B until it detects a proximity beam of the beacon. The robot turns left and proceeds in a curved path along an edge of the proximity beam while hunting/cleaning until the robot detects beam A. The robot follows beam A out away from the beacon and then hunts/cleans for the base station. This is merely one example of how to navigate using the directionality of the room-identifying left and right beacons.

In some examples, upon termination of the migration mode in the second area, the robot autonomously initiates a docking mode to maneuver towards a base station in the second area and docking with the station. The base station includes a base defining a docking direction from which the robot may properly dock, a robot charger housed in the base, an omni-directional beam emitter mounted on the base and configured to project a proximity beam latently around the base station, and two navigational field emitters housed in the base and arranged to emit respective, laterally bounded and overlapping fields of emissions of signal beams, respectively. One of the emitted fields defines a lateral field edge aligned with the docking direction and overlapped by the other of the fields. The robot maneuvers towards the base station by detecting and advancing along the lateral field edge of the overlapping fields aligned with the docking direction until docked with the station. The two navigational field emitters, which may be infrared emitters, are positioned to form an angle therebetween of between about 45 and 90 degrees. The robot detects the emissions of the base station with an omni-directional receiver on the robot and maneuvers to detect an outer lateral field edge of at least one field emission. The robot advances along the outer lateral field edge of the one field emission to the aligned lateral field edge of the overlapping fields. Upon detecting the aligned lateral field edge, the robot advances along the aligned lateral field edge until docked with the station.

DESCRIPTION OF DRAWINGS

FIG. **1**A is a perspective view showing an example of an autonomous coverage robot.

FIG. **1**B is an exploded views of an autonomous coverage robot.

FIG. **1**C is an exploded views of a bumper of an autonomous coverage robot.

FIG. **2** illustrates the positions of omni-directional receiver and directional receiver on the bumper of an autonomous coverage robot.

FIG. **3** is a perspective view of a directional receiver.

FIG. **4** is a front view of a directional receiver.

FIG. **5** is an exploded view of the directional receiver.

Like reference symbols in the various drawings indicate like elements.

FIGS. **6-8** show perspective, side, and cut-away views of the omni-directional receiver.

FIG. **9** shows a below-perspective view autonomous coverage robot.

FIG. **10** shows an exploded view of an example navigation beacon.

FIGS. **11** and **12** show perspective and front views of an example beacon emitter assembly.

FIG. **13** shows an example of a simplified navigation beacon that may be used with an autonomous mobile robot navigation system.

FIGS. **14-17** show various views of an example base station that may be included in the autonomous mobile robot system.

FIGS. **18-21** show perspective, top, rear, and side views of an example emitter assembly used in base station.

FIG. **22** shows a block diagram of representative electronic structure of an autonomous coverage robot.

FIG. **23**A shows a first example of applying of a method of navigating an autonomous coverage robot between bounded areas using navigation beacons with the addition of a base station; and FIG. **23**B shows a second example in which the robot encounters more than one beam at the same time.

FIGS. **24**A and **24**B are block diagrams illustrating a software architecture for navigating an autonomous coverage robot.

FIGS. **25**A-C show schematic views of a robot moving from one area to another using a navigation beacon.

FIG. **26** shows a schematic view of a beam align behavior of a robot.

FIG. **27** shows a schematic view of a directed beam homing behavior of a robot.

FIG. **28** shows a schematic view of a field align behavior of a robot.

FIG. **29** shows a schematic view of a field following behavior of a robot.

FIG. **30** shows a schematic view of a leaving beacon behavior of a robot.

FIGS. **31**A-H show schematic views of a robot moving from one area to another using a navigation beacon.

FIGS. **32**A-E show schematic views of a robot docking with a base station.

Like reference symbols in the various drawings indicate like elements.

DETAILED DESCRIPTION

FIGS. **1**A and **1**B show above-perspective and exploded views of an autonomous coverage robot **100**. The robot **100** has a chassis **102**, a controller **103**, an omni-directional receiver **104**, and a directional receiver **106**. Chassis **102** has a forward drive direction and carries controller **103** and the receivers **104** and **106** on a bumper **107**. Receivers **104** and **106** provide navigation information to controller **103**. Using input from receivers **104** and **106**, controller **103** generates commands to be carried out by the robot **100**. As a result, the robot **100** is capable of cleaning floors in an autonomous fashion.

FIG. **2** illustrates the positions of omni-directional receiver **104** and directional receiver **106** on the bumper **107** of the robot **100**. Bumper **107** may also have other sensors, as shown in FIG. **1**C, to aid the robot **100** as it navigates about its surroundings. Proximity sensors **1072** may be used to determine when an obstacle is close to the robot **100**. Contact sensors **1074** may be used to determine when the robot **100** has physically encountered an object. Cliff sensors **1076** may be used to sense when the robot **100** has encountered the edge of the floor, such as when it encounters a set of stairs.

Omni directional sensors **104** may be used to sense when the robot **100** is in close proximity to a navigation beacon. For example, the omni-directional sensor **104** may relay a signal to a control system that indicates the strength of an emission, where a stronger signal indicates closer proximity to a navigation beacon.

Proximity sensors **1072** may be used to detect when an obstacle is nearby. The proximity sensors **1072** may, for example, be infrared or ultrasonic sensors that provide a signal when an object is within a given range of the robot **100**.

Contact or bump sensors **1074** may be used to detect if the robot **100** physically encounters an obstacle. Such sensors **1074** may use a physical property such as capacitance or physical displacement within the robot **100** to determine when it has encountered an obstacle.

Cliff sensors **1076** may be used to sense when the robot **100** has encountered the edge of the floor, such as when it encounters a set of stairs. The robot **100** may have behaviors that cause it to take an action, such as changing its direction of travel, when an edge is detected.

In some implementations, cliff sensors **1074** may be installed within a mounting apparatus that stabilizes and protects the sensor and which positions the sensor to point towards the window installed onto the bottom of the mounting apparatus. Together the sensor, the mounting apparatus and the window comprise a cliff sensor unit. There may, for instance, be four cliff sensor units installed within the bumper.

Reliability of a cliff sensor may be increased by reducing dust buildup.

In some implementations, a window may be installed on the bottom of the mounting apparatus which includes a shield mounted within a slanted molding composed of a material which prevents dust build up, such as an antistatic material. The shield component and the molding may be welded together. To further facilitate the reduction in dust and dirt buildup, the shield may be mounted on a slant to allow dirt to more easily slide off.

In some implementations, a secondary cliff sensor may be present behind existing cliff sensors to detect floor edges in the event that a wheel drop sensor on the caster wheel fail.

Controller **103** may be configured to propel the robot **100** according to a heading setting and a speed setting. Signals received from proximity and contact sensors may be used by the control system to issue commands that deal with obstacles. Signals from the proximity and contact sensors may cause the control system to change the commanded speed or heading of the robot **100**. For instance, a signal from a proximity sensor due to a nearby wall may result in the control system issuing a command to slow down. In another instance, a collision signal from the contact sensors due to an encounter with a chair may cause the control system to issue a command to change heading. In other instances, the speed setting of the mobile the robot may not be reduced in response to the contact sensor; and/or the heading setting of the mobile the robot may not be altered in response to the proximity sensor, but instead the two sensors may operate independently.

Controller **103** may include a first independent behavioral routine configured to adjust the speed setting of the mobile the robot; and a second independent behavioral routine configured to alter the heading setting of the mobile the robot, in which the first and second independent behavioral routines are configured to execute concurrently and mutually independently. The first independent behavioral routine may be configured to poll the proximity sensor, and the second independent behavioral routine may be configured to poll the kinetic bump sensor.

FIG. **3**-**5** show perspective, front, and exploded views of the directional receiver **104**. The directional receiver **104** is positioned on the front of the chassis **102**. Emissions may be received along the drive direction by the directional receiver **104** which generates and sends corresponding signals to controller **103**. The directional receiver **104** includes a mounting receptacle **108** with a first aperture **110** and a second aperture **112** that are aligned with the drive direction of the chassis **102**. Associated with the apertures **110**, **112** are a first component receiver **114** and a second component receiver **116**.

The component receivers **114**, **116** are positioned relative to the apertures **110**, **112** such that emissions which originate along the driving direction and fall on the directional receiver **104** may pass through the apertures **110**, **112** and onto their respective component receivers **114**, **116**. Emissions falling on the component receivers **114**, **116** result in a corresponding signals being generated which may be used by controller **103** to determine the direction of the emission relative to the robot's drive direction. A cover **117** attached to the top of the mounting receptacle **108** to prevent emissions that do not originate along the driving direction from falling on the component receivers **114**, **116**. In some implementations, locking tabs **119** or some other fastening method may be used to secure the cover **117** to the mounting receptacle **108**.

In some implementations, the component receivers **114**, **116** of the directional receiver **104** can detect a homing beam with an overlap of substantially between 10% and 30%. In one example, the first and second component receivers **114**, **116** may be positioned such that emissions falling squarely on each would form an angle in the range of 1 to 15 degrees. In another example, the first and second component receivers **114**, **116** may be aligned so emissions aligned with them cross at a point 3 to 5 meters in front of the robot. In one example, each component receiver **114**, **116** receives emissions within a sweep angle of between about 28 to 33 degrees with a center of the sweep at about 14 degrees from a direction normal to the directional receiver **104** and a sweep overlap of about 10 degrees with the other component receiver **114**, **116**.

In some cases, the controller **103** may maneuver the robot **100** to detect an emission with the omni-directional receiver **104**. The direction of the emission may be determined using the component receivers **114**, **116**. In response to the detec-

tion, the controller **103** may orient the chassis **102** to align the robot drive direction with the determined emission direction.

In other cases, controller **103** may orient the chassis **102** to align the robot drive direction with the determined emission direction based on the signals generated by the component receivers **114**, **116** in response to emissions detected with the directional receiver **106**.

FIGS. **6-8** show perspective, side, and cut-away views of the omni-directional receiver **104**. The omni-directional receiver **104** may include a housing **118**, a conical reflector **120** and an emission receiver **122**. The housing **118** has an upper portion **124** and an inner cavity **126**. The upper portion **124** may allow a transmission of an emission into inner cavity **126**. Conical reflector **120** is located on an upper surface of the cavity **126** to reflect emissions falling on the upper portion **124** of the housing **118** into the inner cavity **126**. Emission receiver **122** is located in inner cavity **126** below conical reflector **120**.

In some implementations, the receivers **114**, **116**, and **122** may be configured to receive transmissions of infrared light (IR). In such cases, a guide **128** (e.g. a light pipe) may guide emissions reflected off the conical reflector **120** and channels them to emission receiver **122**.

FIG. **9** shows a below-perspective view of the autonomous coverage robot **100**. A drive system **130** includes a first drive wheel **132** and a second drive wheel **134** which support chassis **102**. A castor **136** may provide additional support to chassis **102**. Motors may be mechanically coupled to the drive wheels to propel the robot **100**, providing forward, reverse, and turning capabilities.

The robot **100** may have a floor cleaning system that removes dirt and debris from the floor as it maneuvers about. The floor cleaning system may include a floor cleaning assembly **140**, a cleaning bin **142** and a bin sensor (not shown). The floor cleaning assemblies **140** and **146** and cleaning bin **142** may be carried by the chassis **102**. Cleaning bin **142** may be arranged to collect debris removed from a floor being cleaned by cleaning assembly **140**. The bin sensor may be configured to generate a signal that indicates whether the cleaning bin has been filled to a threshold. When the threshold has been reached, controller **103** may initiate a docking sequence with a base station (described below). Cleaning bin **142** may be accessed to empty its contents either manually or, in some implementations, the robot **100** may automatically empty cleaning, bin **142** when docked.

In addition to providing a framework for the other elements that make up the robot **100**, the chassis **102** may have a ridge on its front which is higher than all other points on the chassis **102**. Such a ridge may be stop the robot **100** if it encounters an overhead obstacle, such as a couch, and prevent it from becoming wedged underneath. To enable the robot **100** to more easily free itself in the event it becomes wedged, controller **103** may normally command the drive system **130** to operate at less than maximum torque, for instance at 50% of capacity. If the robot **100** becomes wedged, for instance, sensed by increased current flowing to the drive motors, controller **103** may command increased torque to free the robot **100**.

Another example of an anti-wedging system includes a spring loaded wheel system having a potentiometer to measure how much the robot **100** is pushed down by a potential wedging obstacle. Another example includes an infrared sensor disposed on a lower surface of the robot **100**, where the infrared sensor is used to measure a distance that the robot **100** is pushed down.

FIG. **10** shows an exploded view of an example navigation beacon **150**. Navigation beacon **150** may be used in conjunction with existing walls or other obstacles to create a bounded area. Bounding an area may be done, for example, to restrict a robot from entering or leaving an area. The navigation beacon **150**, along with the robot **100** described above, form an example of an autonomous mobile robot system.

Navigation beacon **150** has a beacon emitter assembly **152**, which includes a gateway beacon emitter **154** and an omni-directional emitter **160**. Gateway beacon emitter **154** may be arranged to transmit a gateway marking emission. For instance, beacon **150** may be located within a gateway that separates a first and second adjacent areas and emit the gateway marking emission to form a boundary. Omni-directional receiver **104** and directional receiver **106** on the robot **100** may detect the gateway marking emissions and thereby function as beacon emission sensors. For example, beacon **150** and the robot **100** may use infrared light (IR) emitters and sensors to create and detect the gateway marking emissions.

In one example, the robot **100** controls the state of the navigation beams through commands transmitted over a packet radio network. The address that the beacons respond to on this network is a combination of a robot address and a node address. After installing batteries in the beacon **150**, the beacon **150** periodically tries to contact any robot to see if it should wake up and operate its emitters. A robot **100** may respond by transmitting a radio packet containing an invitation to join its network and a temporary address to use. While operating with a temporary address, the beacon **150** transmits an infrared code in a fence beam from emitter **154** and force field beam from omni-directional emitter **160** indicating that it is not bound, i.e. its radio address is temporary. When a robot **100** sees a beam with the bound code, it iteratively transmits a radio packet to every recently assigned temporary address to send a new code in its beam called a wink. If the robot **100** sees a wink code, it transmits a radio packet containing a new node address to be used from now on as well as a time indicating the number of hours the address is valid for use. Having bound to a robot **100** successfully, the beacon **150** will henceforth only wake up in the presence of that robot **100**. The technique of confirming radio communications using infrared light signals is designed to prevent a robot **100** that is not on the same floor as the beacon **150** from controlling it permanently.

Drive system **130** may be configured to maneuver the robot **100** about the first area while in a cleaning mode. In the cleaning mode, the robot **100** may be redirected in response to detecting the gateway marking emission. In addition, the drive system **130** may also be configured to maneuver the robot **100** through the gateway into the second bounded area while in a migration mode.

While in the cleaning mode, the robot **100** may remain in the first bounded area by changing its drive direction when it detects the gateway marking emission. The gateway marking emission thus acts as a virtual barrier which may prevent the robot **100** from leaving the first bounded area.

In some instances, the drive system **130** may be configured to maneuver the robot **100** about the first bounded area in the cleaning mode for a preset time interval. When the preset time interval elapses, the drive system **130** may be automatically put in migration mode. While in migration mode, drive system **130** may be configured to maneuver the robot **100** across the gateway emission. In other instances, the drive system may configured to maneuver the robot about the first bounded area in the cleaning mode until it encounters of the gateway marking emission a preset number of times. Once the gateway marking emission has been encountered the preset number of times, the migration mode may be automatically initiated.

The robot **100** may include a transmitter for communicating with beacon **150**. The transmitter may be used to signals beacon **150** to halt or pause transmission of the gateway emission in the migration mode. By signaling beacon **150** to turn on its various emitters only when needed, the system may implement a power-saving function. Such a function may serve to extend battery life in beacon **150**.

FIGS. **11** and **12** show perspective and front views of beacon emitter assembly **152**. Beacon emitter assembly **152** includes a first directed vectoring beacon emitter **156** and a second directed vectoring beacon emitter **158**. Directed vectoring beam emitters may be used to create an emission field with a characteristic edge and spread pattern that may be used to define a navigation route. Navigation beacon **150** may be located within a gateway between two bounded areas with vectoring beacon emitter **156** arranged to transmit a directed vectoring emission into the first bounded area. The angle between the directed vectoring emission and the gateway may be, for example, in the range of 45-90 degrees. In some instances, the directed vectoring emission may consist of infrared light.

While in migration mode, drive system **130** may be configured to direct the robot **100** toward beacon **150** when it encounters the directed vectoring emission emanating from vectoring beacon emitter **156**. The robot **100** may then determine the position of the beacon **150** based on the detected direction of the directed vectoring emission relative to directional receiver **106**. Once position is determined, the robot **100** may align itself in a drive direction relative to the directed vectoring emission. For example, the robot **100** may advance forward along the path of the directed vectoring emission to reach and traverse the gateway in which beacon **150** is located.

The robot **100** may be able to remotely activate and deactivate the beacon emissions. For example, the robot **100** may use wireless communication, such as radiofrequency (RF) communication, to pass activation and deactivation signals. The robot **100** may remotely activate the directed vectoring emission of the beacon **150** and deactivate the gateway emission upon initiating the migration mode. The robot **100** may remotely deactivate the directed vectoring emission of beacon **150** and activate the gateway emission upon terminating the migration mode.

In some instances, the beacon **150** may be configured to communicate schedule information with the robot **100**. For example, beacon **150** may be able to transmit times for which the robot **100** should enter cleaning mode, when it should enter migration mode, etc. Schedule information may include details such as starting or ending times and dates.

Navigation beacon **150** may also transmit a proximity emission laterally about itself. The robot **100** may avoid cleaning and migration within the proximity emission by executing a pre-configured behavior such as changing its course when the proximity emission is detected. The proximity emission may be thought of as a "force field" through which the robot **100** is not permitted to pass.

Navigation beacon **150** may have a switch to select between a confinement mode, a navigation mode, and an off mode. Navigation beacon **150** may have a range select switch like a virtual wall. There may be a light to indicate when the navigation beacon is operating. The navigation beacon **150** may turn on an operational indicator light it is enabled or only when commanded to do so by the robot **100**. There may also be a low battery warning, and there may be a separate low battery light.

In order to reduce power consumption and thus increase battery life, different operational modes may exist for the navigation beacon. When the robot **100** is not operating, navigation beacon **150** may be in a low power mode in which emitters are off and the navigation beacon periodically monitors the communication link to determine if a wakeup is necessary. When the robot **100** is operating, it may send a signal to a single or multiple navigation beacons to turn on their respective emitters. There may be different commands to turn on the various emitters. In addition, the navigation beacon may return to low power mode after an elapsed time.

In the event multiple navigation beacon are used with the robot **100**, each navigation beacon may have a unique identifier, such as a 16-bit (or larger) identification number contained in memory. This identifier may be generated in the factory or by the navigation beacon itself. If the identifier is generated in the factory it may be stored in non-volatile memory in the beacon. The robot **100** may use the unique identifier to generate an internal map which may be used to navigate from one bounded region to another by navigating from one navigation beacon to another. In some implementations, the identifier for navigation beacon **150** may be used to generate signals encoded in its emissions that may be detected by the robot **100**. In the event that navigation beacon **150** is unable to transmit the entire identification number, a unique code maybe generated as a derivation of the ID or by negotiation between the navigation beacons that are present and/or the robot **100**.

The robot and navigation beacons may communicate via point to point or via broadcast transmissions. In the point to point scheme, the robot would have to learn the identifiers of all of the navigation beacons. Then it could send transmissions with a data field indicating the destination navigation beacon. That navigation beacon and only that navigation beacon would respond accordingly. This has the advantage that only specific navigation beacons would respond, keeping other navigation beacons off and thus increasing their battery life. User interaction may be used to train the robot to know the navigation beacons.

An alternate concept is for the robot to broadcast to all navigation beacons a command to enable them. This scheme works without user interaction. In order to mitigate this effect of increased battery consumption and reduced battery life on these navigation beacons, an alleviating technique is to reduce the power of the robot transmission.

FIG. **13** shows an example of a simplified navigation beacon **152** that may be used with an autonomous mobile robot navigation system. In this example, the beacon has a beacon emitter assembly **152** including a gateway emitter **154** and an omni-directional emitter **160**, but does not have vectoring emitters. Such a beacon may be used to define boundaries of a region but not necessarily support migration functionality.

FIGS. **14-17** show various views of an example base station **180** that may be included in the autonomous mobile robot system. Base station **180** may be located in a bounded area served by the system. Base station **180** has a base **182** with a defined docking direction and a robot charger **184**. The robot **100** may approach base **182** from the docking direction to dock with the base **182**. The robot charger **184** is housed in the base **182** and may be used to charge the robot **100** when it is properly docked.

The robot charger **184** may begins operating when triggered by a detection circuit after the robot **100** is docked to base **182**. Battery conditions may be used to govern whether a deeply discharge mode, a pre-charge trickle mode, or a post charge trickle mode is used to charge the battery.

FIGS. **18-21** show perspective, top, rear, and side views of an example emitter assembly **186** used in base station **180**.

Emitter assembly **186** has a lower housing **188** which holds an omni-directional beam emitter **190** and two navigational field emitters **192** and **194**.

The omni-directional emitter **190** may be mounted on housing **188** and be configured to project a proximity beam laterally around the docking station through the use of an upper housing **196**. Upper housing **196** may be configured such that emissions from omni-directional emitter **190** form a desired pattern outside base **182**, such as a circle.

Navigational field emitters **192** and **194** may be attached to lower housing **188** and arranged to emit respective, laterally bounded and overlapping fields of emissions of signal beams. One of the emitted fields may define a lateral field edge aligned with the docking direction and be overlapped by the other emitted fields. The two navigational field emitters of the base station may be positioned such that their angle of overlap may be about 6 degrees and each emitter's aperture angle may be 20-30 degrees. A projection **198** on lower housing **188** may be used to shape the emissions from emitters **192**, **194** to achieve the above pattern. In one example, the navigational field emitters **192** projects a beam at about 12 degrees from a direction normal to the emitter assembly **186**, where the beam sweeps about 40 degrees starting from about −5 degrees to about 35. The other navigational field emitters **194**, with the L-shaped baffle or mask **198** terminating near the middle of the LED, projects a beam at about 12 degrees from a direction normal to the emitter assembly **186**, where the beam sweeps from straight out to about −35 degrees. In some implementations, the emission fields may consist of infrared light (IR). In such cases, field emitters **190**, **192**, and **194** may consist of infrared light emitting diodes (LEDs).

FIG. **22** shows a schematic view of electronics **101** of the robot **100**. The electronics **101** include the controller **103** which communicates with a bumper micro-controller **107**A that controls the omni-directional receiver **104**, directional receiver **106**, wall proximity sensors **1072**, and bumper switch **1074**. The controller **103** monitors all other sensor inputs, including the cliff sensors **1076**.

FIGS. **23**A-B show an example of applying of a method of navigating an autonomous coverage robot between bounded areas using navigation beacons. The method may be applied to a system such as the example the robot navigation system described above. While the following description relates a particular software architecture and set of algorithms to the navigation beacons disclosed as a physical infrastructure, the very same embodiments of a robot, control and software architecture, and/or many particular algorithms can be used with a different physical infrastructure.

Accordingly, because the manner and methods by which the robot handles sequences of goals and navigation are relatively independent of the actual physical form of the infrastructure, for discussions involving such manner and methods, "navigation beacon" includes active and passive landmarks of other physical kinds (e.g., bar codes, retro-reflective tags, illuminated or IR spots projected on the ceiling or walls, directional RF or visible light, and other features identifiable in the environment), and "beam" includes directed vectors of other physical kinds (including inferred directional vectors calculated or kept in memory that may be followed, as well as line-of-sight directions to distant observed objects). In the example shown, walls **201**, a first navigation beacon **202** and a second navigation beacon **203** (also discussed herein as "lighthouses") define a first bounded area **204**, a second bounded area **206**, and a third bounded area **207** (which are typically rooms of a home). Navigation beacon **202** may be configured to transmit a gateway marking emission **208** (also noted herein as a "virtual gateway" or "gateway beam") across a gateway **210** (typically a doorway, but openings of a few feet to 10 or 12 feet are possible, as well as arbitrary segmenting of a room without any particular openings). The gateway marking emission **208** may be an IR signal, for example, which can be sensed by a coverage robot **212**.

The robot **212** may be placed within a bounded area **204**. The robot **212** may autonomously traverse the bounded area **204** in a cleaning mode. If the robot **212** encounters gateway marking emission **208** in gateway **210**, the robot **212** remains in the bounded area **204** without moving into an adjacent bounded area **206**. Upon termination of the cleaning or coverage mode in the first area, the robot **212** may autonomously (i.e., in response to an internal trigger condition as discussed herein, e.g., time expired, distance covered, percent covered) enter a migration mode in which the robot continues cleaning but monitors for the gateway **210**, locates a gateway **210**, moves to and through gateway **210**, (past beacon **202**), into the adjacent bounded area **206**.

In some implementations, the robot **212** may autonomously enter the cleaning mode after the migration to bounded area **206** has been completed. While in the migration mode, the robot **202** may be non-responsive to gateway emission **208** (although the robot may record having crossed the gateway emission **208**). In some cases, the robot **212** may remotely (i.e., by direct or relayed RF communications or line-of-sight or reflected optical signaling) deactivate gateway marking emission **208** upon entering migration mode. The robot **212** may also activate gateway marking emission **208** after exiting the migration mode.

Furthermore, navigation beacon **202** may transmit a proximity emission or field **214** laterally around (surrounding) itself, establishing an exclusion zone or "force field". The robot **212** may detect this proximity field and use the detection to attempt to avoid maneuvering within the exclusion zone around a beacon **202** while in the cleaning or migrating modes. The primary purpose of the exclusion zone is to prevent the robot **202** from striking the beacon **202** itself and moving it.

Navigation beacon **202** may be configured to transmit a first directed vectoring emission **216** (also discussed herein as a "directed emission," "directed beam," "launch beam" or "tractor beam") into bounded area **204** and a second directed vectoring emission **217** into bounded area **206**, with beacon **202** positioned within gateway **210**. For example, the robot **212** may drive toward beacon **202** upon detecting directed emission **216** while in the migration mode.

While in the migration mode, the robot **212** may detect the directed emission **216** by sensing the directed emission **216** with a directional receiver **218** (also discussed herein as a "binocular sensor," e.g., including twin detectors in collimated tubes) located on the front of the robot **212** (i.e. the side of the robot **212** that is aligned with the forward the robot drive direction). Alternatively, the robot **212** may sense the directed emission **216** with an omni-directional receiver **222** prior to detection by directional receiver **218**. The term "omni-directional receiver" as discussed herein includes non-directional and multi-directional receivers, e.g., receivers including two or more sensors (at compass points, etc.) directed about the periphery of the robot. The robot **212** may use the signal detected by omni-directional receiver **222** to then maneuver (turn in place or turn going in forward or reverse directions) to sense directed emission **216** with directional receiver **218**. The robot **212** may align its direction of travel with a path defined by an edge **220** of directed emission

216. Directional and omni-directional receivers **218** and **222** may have construction and function similar to that described above.

In some cases, the robot **212** may move towards the beacon **202** along the emission path (i.e., servoing using the two beam detectors **114** and **116** of the binocular sensor **106**) until it senses a beacon perimeter **224** (i.e. the edge of proximity field emission **214**). The robot **212** may move along beam perimeter **224** through the gateway **210** and into bounded area **206**. The angle between the gateway emission **208** and directed emission **216** may, in some instances, be between about 45 and 90 degrees, and optionally is about 60 degrees. The gateway emission **208** is sized according to the robot diameter, and diverges to be approximately the width of the robot at the proximity field edge or range of detection (e.g., to prevent the robot crossing at that point). This may be a span of 10 degrees or more, but is determined by the robot diameter. The angle between the center of the gateway emission **208** and the center of each directed emission **216** is, in two different examples, about 45 degrees or about 60 degrees, and each directed emission **216** beam is a diverging beam made diffuse by the slot mask near the emitter, and is, in two different examples, about 20-30 degrees (e.g., 25 degrees) or about 30-50 degrees (e.g., 40 degrees). In some instances, the directed emissions **216** and **217** may consist of infrared light.

The robot **212** may remotely activate and/or deactivate emissions coming from beacon **202**, such as directed emission **216** or gateway emission **208**. Various methods may be used to transmit signals between the robot **212** and the navigation beacons **202** and **203**.

In particular, it is effective to use the same inexpensive, common IR-LED emitters for each of the emitters of each of the beacons **202**, **203**, and in addition for a recharging or other dock **240** for the robot **212**. The same sensors on the robot **212** can detect all of the emitters; and different sensors on the robot **212** (e.g., the multi-directional as well as the collimated directional sensors) can detect the same emitters for different purposes (as discussed herein, e.g., following, homing, stopping). In order to differentiate between the different emitters, each emitter may be encoded (e.g., modulated with a different serial code). This also helps avoid confusion with household and other remote controls as well as IR components of sunlight and other ambient sources. However, as shown in FIG. **23**, the robot **212** can encounter situations in which it is traveling through the emission paths of several different emitters.

In this situation, especially when using optical multi-directional receivers or a common optical omni-directional receiver (but also in other instances, e.g., RF) the sensor or software structure is configured to be capable of discerning one emitter from another when several signals are simultaneously received. If different frequencies are available, then these may be employed. One strategy is for the emitters to take turns, being synchronized by their communications with the robot or each other. However, this is complex and introduces a failure mode when synchronization breaks down. It is advantageous for each beacon **202**, **203** and dock **240** to self-control, and stagger their own signals in time, with intervals between each emission. For instance, each transmitted emission may be differentiated by time division multiplexing (i.e., multiplexing as the beam origins are taken together as a system, including within a beacon having more than one beam or among several beacons) with a fixed period random offset (e.g., which may be different for each beam source). The interval or random offset may be changed from time to time (e.g., at random intervals) or by communication with the robot (e.g., by RF communication when the robot detects an interference condition). At manufacture, or upon changing offset, e.g., the offset may be selected from a set of offsets unlikely to harmonically interfere, or that do not share common factors. In this manner, the robot may encounter several emission paths at once yet discern the identity of each. In other instances, each transmitted emission may be differentiated by different wavelengths of light, infrared modulations, and wavelength filters/windows on the emitters and receivers.

The robot **212** may use RF communication to signal to beacon **202** to remotely activate directed emission **216** and deactivate gateway emission **208** upon initiating the migration mode. In another example, the robot **212** may remotely deactivate the directed vectoring emission **216** and activate gateway emission **208** upon exiting the migration mode.

In some instances, the robot **212** may activate a gateway emission **226** separating bounded areas **206** and **207** and initiate the cleaning mode. Similarly to that described above, the robot **212** may be prevented from leaving bounded area **206** when it encounters gateway emissions **208** and **226**. When finished cleaning in bounded area **206**, the robot **212** may initiate the migration mode and navigate through gateway **228** by following directed emission **230** to a perimeter **234** of a proximity emission **232** and enter bounded area **207**. Once in bounded area **207**, the robot **212** may re-enter the cleaning or working mode. After, for instance, a set time period or preset number of encounters with gateway emission **208**, the robot **212** may migrate from bounded area **204** to bounded area **206**.

Alternatively, a virtual wall emitter (gateway) may be set to independently deactivate itself on a schedule to permit the robot to cross the gateway, e.g., acting as a virtual wall for a first interval (to confine in a first or current room), then deactivating temporarily or intermittently, then acting as a virtual wall for a second interval (to confine in a second or successive room). This technique may also be interactive, e.g., the robot may use RF communication with one or more beacons to deactivate a virtual wall or bypass/cross a virtual wall.

It should be noted that in all instances herein, the robot's behavior system is arranged such that obstacle events, including cliff detection events, have a higher priority than any room-to-room navigation or cleaning. Accordingly, for example, when the robot encounters a cliff detection in the middle of a navigation or other set of sequenced behaviors, the robot may nonetheless avoid the cliff (aborting the current part of the sequence and resetting the state of the sequence).

FIG. **23** shows a set of rooms similar to FIG. **22**, but arranged (with the addition of a base station) to illustrate the situation in which the robot encounters multiple beams from two beacon emitters and also from a dock **240**. Using the strategies avoiding beam confusion noted above, the robot **212** may nonetheless navigate from room to room or the robot **212** may autonomously initiate a docking mode to maneuver towards the base station **240** in bounded area **206** and dock with the station upon termination of the migration mode in the second area.

The base station **240** may include a base, a robot charger, an omni-directional beam emitter and two navigational field emitters and be similar to the base station **180** described above. The robot **212** may maneuver towards base station **240** by detecting and advancing along one of the lateral field edges **242** or **244** of the overlapping fields **246**, **248** aligned with the docking direction until docked with the station **240**.

The robot **212** may detect the emissions of base station **240** with omni-directional receiver **222** on the robot and maneuver to detect an outer lateral field edge (e.g. **247**) of at least one field emission **246** or **248**. The robot **212** may then advance along outer lateral field edge **247** or **249** to the aligned lateral

field edge **242** or **244** of the overlapping fields. Upon detecting the aligned lateral field edge **242** or **244**, the robot **212** advances along the aligned lateral field edge **242** or **244** until docked with base station **240**.

FIG. **24**A is a block diagram showing a behavioral software architecture within a controller **250**, in which goal-oriented or sequenced behaviors are depicted in simplified form. FIG. **24**B shows the same software architecture, but provides more detail on the goal-oriented or sequenced behaviors while simplifying some of the elements of FIG. **24**A.

While embodiments of the robot discussed herein may use behavioral based control only in part or not at all, behavior based control is effective at controlling the robot to be robust (i.e. not getting stuck or failing) as well as safe. Accordingly, FIGS. **24**A and **24**B depict a software architecture that permits improved control of a mobile robot. Rather than being a purely reactive architecture, FIGS. **24**A and **24**B introduce an element of planning that is partially reactive (and therefore more robust)—goal oriented, sequenced reactive behaviors.

In the reactive yet sequenced behaviors, the implied success of a related behavior in a sequence is an enabling condition (among others) for each behavior beyond the initiating behavior in the sequence (some sequences may have more than one initiating behavior or branches). The implied success is kept as a state signifying an enabling condition of a successive behavior, in the form of a flag, state machine, or the like. The state may be set or changed by a behavior itself upon completion, by an arbiter process, or by a planning process.

Referring to FIG. **24**A, the robot **302** employs a control and software architecture that has a number of behaviors that are executed by an arbiter **252** in controller **250**. A behavior is entered into the arbiter **252** in response to a sensor event, or a sequence state event from the planner **253**. In one embodiment, all behaviors have a fixed relative priority with respect to one another. The arbiter **252** (in this case) recognizes enabling conditions, which behaviors have a full set of enabling conditions, and selects the behavior having the highest priority among those that have fulfilled enabling conditions. The diagram shown in FIGS. **24**A and **24**B does not necessarily reflect the (fixed) priority hierarchy of the robot **302**. In order of decreasing priority, the behaviors are generally categorized as escape and/or avoidance behaviors (such as avoiding a cliff or escaping a corner), working behaviors (e.g., wall following, bouncing, or driving in a straight line), and for the purposes of this application, sequenced reactive behaviors. The behaviors may include: different escape behaviors **255**, **255***a*, **255***n* (including escaping corners, anti-canyoning, stuck situations, "ballistic" temporary fire-and-forget movement that suppress some avoid behaviors, e.g., as disclosed in U.S. Pat. No. 6,809,490, the entire contents of the which are hereby incorporated by reference) cliff avoiding **256**, virtual wall avoiding **258** (a virtual wall may be a beacon with a gateway beam), other avoidance **258***n* as a class (e.g., avoiding people via a pyrometer, in general the class of detecting and moving away from something that is a hazard to the robot **302** or to which the robot **302** may be a hazard), spot coverage **264***a* (covering in a confined pattern such as a spiral or boustrophedon patch), align **264***b* (turning in place, using side proximity sensors to align with a forward obstacle encountered while obstacle following, e.g., an inside corner), following **264***c* (representing either or both of substantially parallel or bump following along an obstacle using a side proximity sensor or bumper that extends to the side of the robot), responding to a bump in order to "bounce" **264***d* (a behavior that occurs after the robot bumps an object), and drive **266**. Movement of the robot **302**, if any, occurs while a behavior is arbitrated. If more than one behavior is in the arbiter **252**, the behavior with a higher priority is executed, as long as any corresponding required conditions are met. For example, the cliff avoiding behavior **256** will not be executed unless a cliff has been detected by a cliff detection sensor, but execution of the cliff avoiding behavior **256** always takes precedence over the execution of other behaviors that also have satisfied enabling conditions.

The reactive behaviors have, as their enabling conditions or triggers, various sensors and detections of phenomena, but, in general, not (arbitrary) states of a sequence. As shown in FIG. **24**A, these include sensors for obstacle avoidance and detection, such as forward proximity detection (multiple), forward bump detection (multiple), cliff sensors (multiple), detection of a virtual wall signal (which may instead be considered a coverage trigger). Sensors of these types are be monitored and conditioned by filters, conditioning **292***c*, and their drivers **292***b*, which can generate the enabling conditions as well as record data that helps the behavior act predictably and on all available information (e.g., conversion to one-bit "true/false" signals, recording of likely angle of impact or incidence based on strength or time differences from a group of sensors, or historical, averaging, frequency, or variance information).

Actual physical sensors may be represented in the architecture by "virtual" sensors synthesized from the conditioning and drivers. Additional "virtual" sensors that are synthesized from detectable or interpreted physical properties, proprioceptive or interpreted upon the robot **302**, such as over-current of a motor, stasis or stuck condition of the robot **302** (by monitoring a lack of odometry reading from a wheel encoder or counter), battery charge state via coulometry, and other virtual sensors "virtual N."

In addition, reactive behaviors can act according to enabling conditions that represent detected phenomena to be sought or followed. A beam or wireless (RF, acoustic) signal can be detected without direction; or in some cases with direction. A remote beam or marker (bar code, retro-reflective, distinctive, fiducial, or natural recognized by vision landmark) giving a direction can permit homing or relative movement; without direction the robot **302** can nonetheless move to servo on the presence, absence, and/or relative strength of a detected signal. The reflection of a beam from the robot **302**, edge, or line can be similarly detected, and following behaviors (such as obstacle following by the robot **302**) conducted by servoing on such signal. A debris or artifact signal can be collected by monitoring debris or objects collected by or traversed by the robot, and that signal can be an enabling condition for a reactive behavior controlling a spot coverage pattern. A general class of "seek/servo N" signals are thus also reactive behavior enabling conditions or triggers.

The robot **302** maintains concurrent processes, "parallel" processes that are not generally considered reactive behaviors. A scheduler **292***d* may be necessary to allocate processor time to most other processes, e.g., including the arbiter and behaviors, in a co-operative or other multitasking manner. If more threading is available, less processes may be managed by the scheduler **292***d*. As noted, filters and conditioning **292***c* and drivers **292***b*, can interpret and translate raw signals. These processes are not considered reactive behaviors, and exercise no direct control over the motor drives or other actuators. In addition, in the present embodiment, brush motor controller(s) **292***a* control the main and side brushes, although these may alternatively be controlled by dedicated brush behaviors and a brush control arbiter.

With reference to FIG. **24**B (the same representation as FIG. **24**A, with other areas of the drawing emphasized/deemphasized for clarity), a special concurrent process is a sequence planner **253**. The sequence planner **253** is capable of monitoring and/or maintaining state in order to control sequenced reactive behaviors, e.g., setting enabling conditions (that will be caught by the arbiter **252**), and/or resetting states in the case of abort conditions (e.g., time-outs, escape or avoidance behavior execution), and/or monitoring or supervising finite state machines that themselves transition between states. It should be noted that enabling condition states or flags or supervised state machines that request a transition between sequential reactive behaviors can be set by a behavior itself, by the arbiter, or by the sequence planner **253**, depending on efficiencies and circumstances. It should also be noted that the sequence planner **253** may optionally be capable of directly controlling the arbiter **252** (or second arbiter **252**A) to prefer (e.g., re-prioritize) a behavior or directly control a sequenced reactive behavior without setting an enabling condition, state variable or state machine.

While maintaining state is recognized to potentially reduce the robustness of competent reactive control architecture, sequences of intended actions may require the maintenance of some state. As discussed herein, if sequenced reactive behaviors are controlled to execute using request states which may be robustly reset or erased without primary function failure, the reduction in robustness can be reduced.

One exemplary sequenced reactive behavior set is employed by the robot **302** to transition between rooms or navigate to a distal room. As depicted in FIG. **24**B, a homing beam align behavior **294***a* includes an enabling condition that an align start (e.g., a homing request) enabling condition be activated, and that the beam to be homed upon is detected by a multi-directional sensor. As will be discussed below, the homing request enabling condition can be set and maintained in different ways. A homing beam homing behavior **294***b* is to execute once alignment is successful. However, because alignment may happen serendipitously (the robot may already be aligned when the homing request is activated), the homing beam homing condition also has as an enabling condition the homing request (flag or state), as well as a detection using a directional sensor (binoculars) that substantially necessarily directed at the beam identified as one to be homed upon (or, e.g., filtered to be equivalent to such a detection). Accordingly, two sequenced reactive behaviors are each separate entry points to the sequence, and share a common reactive sequence request enabling condition. When a sensor-based enabling condition fails, these behaviors are aborted (internally or by the planner **253**) and the sequence request remains active (or may be reset). In this case, the sequence may be restarted the next time either sensor-based enabling condition occurs. Optionally, a random component (such as a random distance or time return to random coverage, while disabling the sequence request or homing request enabling condition) is permitted to occur following an abort of a sequential reactive behavior in order to decrease the likelihood of systematic failure or looping.

After the homing beam homing behavior **294***b* has completed, the sequence is in a state where an assumption is made regarding the state that the robot is located appropriately to align with the field to permit begin field following about a beacon to transition to a new chamber. A (new) align start enabling condition (e.g., field align state or request) may be set by the completing sequenced reactive behavior or by the planner, via condition flag or state machine. In order to accommodate the possibility that the field may be the first detectable signal encountered upon initiation of the homing request, the detection of the proximity field by the multi-directional receiver is an equivalent (OR) condition to the field align request, if the homing request is active when the field is encountered, this combination also should initiate field align behavior **294***c*. If there are no abort conditions, the field align behavior **294***c* executes. After the field align behavior **294***c* has completed, the sequence (of sequenced reactive behaviors) is in a state where a next assumption is made regarding the state—that the robot is oriented appropriately to begin field following. A (new) follow start enabling condition (e.g., field follow state or request) may be set by the completing sequenced reactive behavior or by the planner, via condition flag or state machine. Similarly, the launch behavior **294***e* may have as a primary enabling condition a state-based request rather than a sensor detection. Each of these behaviors **294***a*, **294***b*, **294***c*, **294***d*, **294***e* is detailed herein below.

In two of these cases, optionally, a state to enter the entire sequence (homing request) is maintained and an additional state to begin a next part of the sequence (field follow request; launch request) is set and both conditions are necessary to start the next sequenced reactive behavior. This would permit restarting the sequence immediately after an abort (by maintaining the entire sequence request state). Alternatively, the entire sequence entry request is reset and the only the next sequenced reactive behavior entry condition is set (field align request or field follow request). This would cause the entire sequence to be otherwise restarted (e.g., by a new or continued occurrence of conditions that would cause the planner to set the sequence request) after an abort, which could improve general robustness (although not necessarily goal-specific robustness) by erasing essentially all states.

In two cases, no sensor-based condition is an enabling condition for the next sequenced reactive behavior in the sequence, but an enabling condition is a sequence-based or a state-based request—e.g., field follow request, launch request. Accordingly, a sequence may include sequenced reactive behaviors that include only sequence states or progress as enabling conditions for the next sequenced reactive behavior (such as the field follow behavior, or launch behavior), as well as sequenced reactive behaviors that include both sensor-based conditions and sequence states, progress or requests as enabling conditions (such as the beam align or tractor homing behaviors).

In one case, a state to enter the entire sequence (homing request) is maintained and either a sensor-based condition or a sequence-based request is an enabling condition for a next sequenced reactive behavior (field align) in the sequence—e.g., a homing request AND (field align request OR field detection) is interpreted by the arbiter to permit field aligning if no reactive behaviors have higher priority. Accordingly, a sequence may include sequenced reactive behaviors that include either a combination of sequence state/requests, or both sensor-based conditions and sequence request/states, as enabling conditions for a next sequenced reactive behavior.

It should be noted that entry and mid-sequence branching is possible by enabling different behaviors depending on different combinations of sensor-based conditions and sequence states. For example, just as two possible entry points into the sequence are permitted by detecting different sensor events (multi-directional or directional) at the same time as a common entry point enabling condition (homing request), branches in the sequence to different next sequenced reactive behaviors are permitted by detecting different sensor events at the same time as a common mid-sequence enabling condition (e.g., candidate behaviors each enabled by a unique combination of sensor event and sequence state). Optionally, if different sequences each are maintained with different states,

different mid-sequence state combinations permit nesting of sequences (candidate behaviors each enabled by a unique combination).

Sequence planner **253** optionally maintains a navigation mode state switch or finite state machine **243***a*, and/or such states or requests are maintained separately (e.g., follow start, follow done).

As shown in FIG. **24**B, the planner **253** may control different goal-oriented sequences 1-N, each having more than one sequenced reactive behavior therein. The behaviors therein can have as initial conditions a goal state, entry request, or other state, that the arbiter **252** identifies as requiring rendering a candidate behavior available for execution. Initial behaviors of a sequence may require a sequence request; subsequent behaviors may require either a next sequenced reactive behavior request (or, in addition, the sequence request as well).

The sequenced behaviors are "reactive" despite being dependent upon sequence state at least because they may be subject to the same arbiter **252** as the reactive behaviors, and/or react to sequence states as enabling conditions in the same manner as reactive behaviors react to real-time sensor events, and/or are prioritized lower than at least escape and avoidance behaviors. In addition, the states may be wholly reset to restart a reactive process. Even when a sequence or next sequenced reactive behavior's enabling conditions are satisfied, a reactive behavior that also has enabling conditions satisfied and preserves continuous autonomous operation will be executed instead. Reactive docking behaviors, which generally permit the robot to return and recharge for continued autonomous operation, may be prioritized higher than, in particular, navigation-related sequenced reactive behaviors. Reactive coverage behaviors may be prioritized below navigation sequenced reactive behaviors, in particular. Some portions of the docking behaviors noted herein are alternatively arranged as sequenced reactive behaviors; or other sequences are possible. Beacon-based navigation as discussed herein is an example of one implementation of combining sequenced reactive behaviors with non-sequenced reactive behaviors.

As shown in FIG. **24**B, a second arbiter **252***a* may supervise a sequence of sequenced reactive behaviors (e.g., in combination with the sequence planner **253**); or a master arbiter (not shown) may supervise a first arbiter (e.g., **252**) of reactive behaviors and a subsequent arbiters (e.g., **252***a*) of different sequenced reactive behaviors.

As shown in FIG. **24**B, for a navigation application in particular, the sequence planner **253** may include, monitor, or maintain location state in the form of a topological state map or its equivalent with respect to the environment in which the robot operates. Using beacons, this may be a topological map having nodes and links, in which the nodes may be rooms (links thereby being gateways or beacons) or gateways (links thereby being sides of the gateway). A primary use of the location state is to provide a homing beam or homing fiducial identity to the arbiter or to the sequenced reactive behaviors. If provided to the arbiter, the arbiter may recognize a sensor-based enabling condition (e.g., beam detection) for a behavior only when the beam has the correct identity (encoding) for the location state. Alternatively, the behavior itself examines the identity or encoding of a received enabling condition (e.g., beam detection). An abort condition can result if beacons have been rearranged or the like, and this abort condition can cause blacklisting of a beacon or fiducial or a reset of the map (new mapping needed). In either case, the robot **302** continues to provide coverage and all other remaining reactive behaviors in the local area. The location state is used by the planner **253** to successively execute sequences of sequenced reactive behaviors in order to traverse a distance to or from a remote or distal room (for returning from the dock for charging; for directly proceeding to a remote or distal chamber from the dock); and permits the same sequenced reactive behaviors to be used for navigation in different directions (so long as the location state is maintained) by providing the identities of the guiding fiducials or beams in the correct order for a navigation direction, depending on the direction to be traveled on the topological map.

One candidate routine maintained/executed by the planner **253** is shown in FIG. **25**A. The elements of this routine are not necessarily in order (e.g., different states may be checked out of the depicted order). The planner routine monitors (**502**) a goal-oriented or sequence initiating condition. As discussed, this may be a variable that keeps track of a time, distance, cleanliness measure, history of obstacle interactions, or other criterion that, when satisfied, indicates that a planned sequence (such as navigation from room to room) is to be carried out. The condition may be a state, flag or state of a finite state machine. If such a condition exists (**504**), the planner checks (**506**) the state of the robot along the called for sequence, if the planner maintains such a sequence state. For example, the planner **253** may maintain or monitor the current state of a state map or finite state machine defining states of the beacon crossing sequence, as shown in FIG. **25**B (in which "aligning to launch", "homing", "aligning after homing", and "following field" states are available); alternatively a state map or finite state machine may be instantiated. The planner **253** may additionally or in the alternative set (**508**) behavior enabling conditions for entry into a sequence, such as a homing request as discussed herein, or an entire sequence entry behavior enabling condition and/or next sequenced reactive behavior enabling condition. The planner **253** may additionally set (**510**) guiding variables for the behavior or arbiter to recognize (e.g., such as the identity of a beam to be followed or fiducial to be homed upon or bearing to proceed in), according to, e.g., the state of a map identifying such (e.g., as shown in FIG. **25**C, according to the state of a map defining which beam A or B—"green" or "red"—of lighthouses/beacons X, Y, Z connects to which rooms 1, 2, 3 and a dock, and according to the next goal room defined by the planner **253**). The planner **253** may additionally monitor abort conditions (512, e.g., time out, interruption by a reactive avoidance or escape behavior) of sequenced reactive behaviors in progress, and set or reset the state of a sequence and/or the state of a map upon such an abort (although behaviors may also set or reset these internally before aborting).

After the robot **302** has detected a specified cleaning period has elapsed or the robot **302** has detected a specified number of bumps or the robot has detected a specified condition requiring a set of sequenced behaviors, the sequence planner **253** executing on the controller **250** will decide to exit the cleaning mode and enter the migration mode. The robot may also enter the migration mode right from the dock, in order to proceed to a distal or remote room in order to begin cleaning there. The migration mode executes the task of moving from one room to an adjacent room. As discussed above, the migration mode is advantageously not a monolithic process, but is a succession of sequenced reactive behaviors started by an initial behavior—that has an enabling condition of a migration mode request (also discussed herein as a "homing request"). The planner **253** will raise a "new room"/homing request enabling condition, state, or flag. The remaining enabling condition is a sensor detection of a guiding tractor beam (optionally, limited to one beam identified according to the location state **253***b* as originating with the lighthouse/beacon to be homed upon), which, when the beam is detected

(substantially immediately if the robot is in the beam, or after the robot encounters the beam as it continues the coverage behaviors having satisfied enabling conditions), triggers the homing beam-align behavior **294***a* to be selected by the arbiter **252** for execution. The robot **302** performs the task of migrating from one bounded area to an adjacent bounded area by executing the homing beam-align behavior **294***a* while at the same time possibly executing the cliff avoiding **256** (on any occasion when any cliff detector fails to see the floor—i.e., the enabling condition of the higher priority & reactive avoidance behavior is also satisfied) and drive **266** behaviors (e.g., if an abort condition resets the sequence). When multiple behaviors are trigged by sensor inputs or the planner **253**, the arbiter **252** will arbitrate the behaviors in order of priority. That is, the arbiter may also arbitrate among different sequences of reactive behaviors, or the planner may only start one sequence. The beacon crossing sequence **262** has five sequenced reactive behaviors, beginning with the homing beam-align behavior **294***a*, which are executed or sequentially based on controller inputs as discussed herein. If the robot **302** experiences a signal input (such as a bump sensor input) that requires execution of a behavior having a higher priority, the robot **302** will execute the behavior of higher priority and afterwards, upon the presence of the necessary enabling conditions, may reinitiate a previous sequence of reactive sequenced behaviors.

FIGS. **31**A-G are overhead views showing a behavior based autonomous coverage robot **302** as it uses a navigation beacon **304** to migrate from one area to another. FIGS. **26-30** are diagrams illustrating the beacon crossing sequenced reactive behaviors **262**, including beam aligning **294***a*, beam homing **294***b*, field following **294***c*, field aligning **294***d*, and leaving beacon **294***e* behaviors.

The beacon crossing sequence **262** commences by entering the beam homing **294***b* or beam aligning behaviors **294***a*, depending on a robot position within the first bounded area in relation to the beacon **304**. Generally, the robot **302** will initiate a maneuver to detect with its omni-directional receiver **104** the first directed beam **306** from the navigational beacon **304** into a first area (e.g. turning 360 degrees or driving in a circle).

FIG. **26** depicts the beam align behavior **294***a*. As shown, the arbiter **252** will not permit the beam align behavior **294***a* as a candidate (i.e., to be prioritized with other behaviors with satisfied enabling conditions) at least until a homing request state or request is present, as well as the directional or tractor beam **306** is received by the multi or omni-directional sensor **322** of the robot **302**, as behavior enabling conditions or triggers. To permit execution, no higher priority behaviors (e.g., reactive behaviors) have satisfied enabling conditions. This tractor or directed beam **306** may be limited to one expected at the present location of the robot **302** on the state map (e.g., by responding only to a beam having an identity or encoding corresponding to the current map state). Once these are satisfied, the arbiter **252** permits the beam align behavior **294***a* to execute. If either condition is no longer satisfied, the behavior may abort. As noted in FIG. **26**, abort conditions (e.g., including missing behavior enabling conditions; time-out; or displacement by a higher priority behavior) may be monitored by the planner **253**, which may also keep states reflecting the progress of the sequence as well as the location of the robot **302**. The beam align behavior **294***a* turns or pivots the robot **302** essentially in place (**522**), starting in a random direction. A likely beam direction may also be maintained as a state, e.g., based on past beam detections monitored by, e.g., a concurrent process, and if so, the turning direction may be the one expected to be shorter. Once the directional receiver **318** senses the directed beam **306** (**524**), the behavior ends. There is no need to set a state as a request for the beam homing behavior **294***b* likely to follow, as the robot **302** will, so long as the homing request is active, continue to attempt to align and home when the correct beam is encountered and either is a valid entry point for the sequence. Later stages of the sequence are mid-sequence, and may use such states. Accordingly, the beam align behavior **294***a* is an example of choosing not to set a state in order to maintain a higher level of reactive control and likely robustness.

FIG. **31**A shows the robot **302** during readiness for and execution of the beam align behavior **294***a*, as it encounters a first directed beam **306** emitted by a navigation beacon **304**, when a homing request from the planner **293** is active. Upon detecting the first directed beam **306**, the robot **302** commences the beam aligning behavior **294***a*. During beam aligning **294***a*, the drive system **130** maneuvers (e.g., by turning in place, e.g., starting in a random direction) the robot **302** to detect the first directed beam emission **306** with the directional receiver **318**, which is to be aligned with a robot drive direction. By using the signals from the two component receivers **114**, **116** of the directional receiver **318**, the robot **302** aligns the drive direction with the directed emission **306** of the beacon **304**. FIG. **31**B shows the robot **302** as it detects beam **306** with the omni-directional receiver **322** and turns to face beacon **304**.

After the robot **302** has aligned the drive direction with the directed emission **306** of the beacon **304** by using the directional receiver **106**, the robot may commence the beam homing behavior **294***b*.

FIG. **27** depicts the tractor or directed beam homing behavior **294***b*. As shown, the arbiter **252** will not permit execution (of the highest priority candidate) until at least a homing request state or request is active, and the directional or tractor beam **306** is received by the directional sensor **318** of the robot **322** as behavior enabling conditions or triggers. This tractor or directed beam **306** may again be limited to one expected at the present location of the robot **302** on the state map. Once these are satisfied, the arbiter **252** may permit the beam homing behavior **294***b* to execute. If either condition is no longer satisfied, the behavior **294***b* may abort. As noted in FIG. **27**, abort conditions and resulting states may be supervised by the planner **253**. The tractor or directed beam homing behavior **294***b* follows the directed beam emission (**532**). One exemplary way of following is using alternating curves. Each parallel sensor **114** and **116** of the directional binocular sensor **318** is conditioned to return a one bit true-false value reflecting beam presence, based on signal strength (e.g., independently thresholded, or thresholded with respect to one another). As the robot **302** turns toward and away from the beam **306**, beam detections of true-false, true-true, and false-true are possible (conditioning may also limit the possibilities to true-false and false-true). A "bang-bang" servoing may be used to change turning direction as the robot **302** moves forward. Each turn is an arc with decreasing radius, i.e., part of an inward spiral. Alternatively, analog values may be maintained and more complex feedback control employed. The following (**532**) may alternatively employ the frequency and variance tracking discussed herein with respect to docking to determine that the robot is proceeding in the correct direction and move forward in a straight line. Once the non-directional/omni-directional receiver **322** senses the directed beam **306** (**534**), the behavior is ready to end. A state is to be set to continue the sequence of sequenced reactive behaviors—i.e., a field aligning request. The behavior **294***b* may set this state itself (**536**), e.g., as a flag in memory; or the planner **253** may

monitor that the behavior **294***a* is complete and set such a flag or state in a finite state map or machine.

The behavioral sequence, as discussed, permits the robot **302**, after initiating the beacon crossing sequence **262**, to skip the beam aligning behavior **294***a* if the directional receiver **318** already detects the directed beam emission **306** and is already aligned with the directed beam emission **306**. Abort conditions may prevent these and permit later restarts. As discussed herein, a combination of reactive behavior based control and sequenced reactive behavior control is advantageous. However, some embodiments discussed herein do not necessarily exclude other reactive or non reactive techniques. While executing the beam homing behavior **294***b*, the robot **302** moves towards the navigational beacon **304** while maintaining its alignment with (e.g., servoing upon) the directed beam **306** in response to the signals of the directional receiver **318**. FIG. **31**C shows the robot **302** approaching the navigation beacon **304**. As the robot **302** follows the edge **320** of the beam **306**, the robot **302** adjusts its course as shown by arrows **308**. As shown in FIG. **31**C, the robot **302** stops moving towards the beacon **304** when it encounters a proximity field emission (or "force field") **310** projected laterally from beacon **304** in all directions.

As an alternative behavior that would be suitable as part of the sequenced reactive behaviors, if the directional receiver **318** is selected to be more sensitive (e.g., by collimation and confinement) at remote distances than the omni-directional receiver **322**, the directional receiver **318** may receive the force field emission **310** even though the omni-directional sensor **322** does not. In this case, the directional sensor **318** may be used to alternatively home on the force field emission **310**. In this case, an alternative behavior is provided in the sequence, identical to the tractor homing behavior **294***b* except that the sensor-based enabling condition is that the force field **310** is seen in the directional sensor **318**; and the homing is on this emission **310**. As an example of behavioral robustness, this behavior may be arbitrarily added to the sequence of reactive behaviors without changing any other behavior or disrupting any other process, with a priority above or below the existing tractor homing behavior **294***a* depending on empirical evidence that one or the other tended to be more reliable.

Upon detecting the proximity field **310**, the robot **302** executes the field aligning behavior **294***c*. FIG. **28** depicts the field align behavior **294***c*. As shown, the arbiter **252** will not permit execution (of the highest priority candidate) until at least a homing request state or request is active, and either a field align request is active, or the proximity field **310** is seen in the non-directional sensor **322** (this latter permitting the behavior sequence to advance to field aligning **294***c* when the robot **302** fortuitously "stumbles" into the proximity field **310** before encountering the directed beam **306**). The field may again be limited to one expected at the present location of the robot **302** on the state map. Once these are satisfied, the arbiter **252** may permit the field align behavior **294***c* to execute, abort conditions supervised as previously noted by the planner **253**. The field align behavior **294***c* turns or pivots the robot essentially in place (**544**). A likely beam direction may be determined according to the beam identity (e.g., facing the dock **340**, following a left beam **350** to the dock **340** likely means the robot **302** should turn clockwise, following a right beam **360** counterclockwise) or other state or information. The robot **302** may turn in the direction expected to be shorter or randomly. Once the omni or non-directional receiver **322** senses the directed beam **306** (**546**), the behavior **294***c* ends. Optionally, the behavior **294***c* does not end until an additional condition is satisfied—that the directional beam **306** is not present in the directional receiver **318** (which increases the likelihood that the robot **302** is rotated transversely to the dock **340**). A field follow request is to be set to continue the sequence of sequenced reactive behaviors, as discussed, by the behavior itself (**548**), by the planner **253**, or otherwise.

Accordingly, as shown in FIG. **31**D, the robot **302** can detect the proximity field **310** with the directional receiver **318**, as when the robot **302** is facing the beacon **304**, the robot **302** will initiate a pivot maneuver (e.g., turn in place for differential drive robots having drive wheels on the center diameter or holonomic drives or highly steerable robots, turn substantially in place for other configurations) altering the robot drive direction to the right or left toward the other directed beam **314**, based on the beam encoding of the first directed beam **306**. The robot **302** stops the pivot maneuver when it no longer detects the proximity beam **310** with the directional receiver **106**.

The robot **302** may encounter the proximity field **310** before encountering the directed beam **306**. In this case, the robot **302** does not execute the beam aligning or beam homing behavior, **294***a* and **294***b*, respectively. Instead, the robot **302** recognizes the encoding of the proximity field **310** and executes the field aligning behavior **294***d*.

When the robot **302** no longer detects the proximity field beam **310** with the directional receiver **218**, the robot **302** executes the field following behavior **294***c*.

FIG. **29** depicts the field following behavior **294***d*. As shown, the arbiter **252** will not permit execution (of the highest priority candidate) until at least a homing request state or request is active, and a field follow request is active. As noted, this may be limited to simply the field follow request if the sequence is to be more readily abandoned to preserve robustness. The field is optionally limited to an expected one. Once these are satisfied, the arbiter **252** may permit the field follow behavior **294***d* to execute subject to abort conditions. The field follow behavior **294***c* follows the edge **312** of the proximity field emission **310** (**554**) using alternating, decreasing radius curves as previously discussed. The non-directional sensor **322** may be conditioned to return a one bit true-false value reflecting beam presence, based on signal strength. Once the non-directional/omni-directional receiver **322** senses the next directed beam **314** (**534**), i.e., the launch beam (this detection limited to the expected beam of the beacon **304** followed and/or according to the location state of the robot **304**), the behavior is ready to end. Optionally, the behavior **294***d* further checks and proceeds until the directional receiver **318** does not sense the launch beam **314** (which tends to exclude those cases in which the omni-directional detector **322** detects a launch beam **314** too early via a reflection from a highly reflective surface, such as a nearby white door or wall corner). A state is to be set to continue the sequence of sequenced reactive behaviors—i.e., a launch request. The behavior **294***c* may set this state itself (**558**), or the planner **253** may control this.

As shown in FIG. **31**E, during the field following behavior **294***d*, the robot **302** maneuvers in an resultant arc around the beacon **304** while following an edge **312** of the proximity beam **310** via omni-directional receiver **322**. The robot **302** follows the edge **312** of the force field **310** by monitoring the received signal strength of the force field emission **310** on the robot's emission sensors **318** and **322**. One example of the arc maneuver entails the robot **302** "zigzagging" back and forth (e.g., "bang-bang" servoing or following using a one-bit true-false detection and forward motion in initially arced, steadily decreasing turn radius, e.g., spiraling in) along the edge **312** of the proximity beam **310**, where the robot **302** detects

entering and exiting the field of emission of the proximity beam **310** with the omni-directional receiver **322**. In another example, the robot **302** follows the edge **312** of the force field by using a PID control system based on the time in the force field **310** or the time out of the force field **310**. The PID control system controls the arc of the robot **302**. The robot **302** executes the maneuver at a reduced speed (e.g., less than 50% of coverage speed) for both drive wheels **132** and **134**, so that both drive wheels **132** and **134** are being driven in a forward direction. This facilitates easier traversing of transitions and thresholds. The robot **302** passes through the area normally covered by a gateway beam **316**. The robot **302** continues to follow the edge **312** of the proximity beam **310** until the omni-directional receiver **322** detects that the robot **302** has entered the second directional beam **314** and the directional receiver **318** no longer detects the second directed beam **314**, as shown in FIG. **31**E. As noted, satisfying both criteria helps prevent the robot **302** from detecting reflected beam emissions off of adjacent objects, such as a white door.

FIG. **29** depicts the launch behavior **294***e*. As shown, the arbiter **252** will not permit execution (of the highest priority candidate) until the launch request is active, and may also require the homing request. The launch behavior **294***e* assumes a last position with the omni-directional detector **322** in the launch beam **314** and a bearing substantially transverse to the launch beam **314**, and curves away from the field **314**/beacon **304** in the approximate direction of the launch beam **314** (e.g., facing the dock **340**, if the robot **302** has traversed left to right, curving clockwise, and if the robot **202** has traversed the opposite direction, curving counterclockwise). Optionally, the robot **302** may try to stay within the launch beam **314** by servoing to return to the launch beam **314** when the launch beam **314** is not detected in the omni-directional sensor **322**. After a predetermined time (e.g., 5 s) or distance (e.g., 1 m) or obstacle encounter, the behavior is ready to end. At this point, the planner **253** may terminate the homing request (and, e.g., updating the location state of the topological map as well as clearing or resetting a navigation mode state if one is kept), and the reactive behaviors will begin the robot's coverage work in the subsequent chamber (or, if the battery is to be charged, this may initiate another homing request in the direction of the dock according to the location state of the map). The planner **253** may also immediately initiate another homing request; or reset variables of the current homing request according to the location state of the map such that the robot **302** will proceed from room to room to room, e.g., moving directly to or from a distal or remote room.

That is, as shown in FIG. **31**F, upon completing the field following behavior **294***c*, the robot **302** may execute the leaving beacon behavior **294***e*, as shown in FIG. **30**, which entails the robot **302** moving away from the beacon **304**. Alternatively, this can be performed as a pivot and launch, and/or guided by the launch beam **314** and omni-directional receiver **322**, e.g., FIG. **31**G shows the robot **302** turning away from navigation beacon **304** to face a second area as the robot **302** passes the edge of directed beam **314**. If the robot **302** detects the second directed beam emission **314** with the omni-directional receiver **322**, the robot **302** maneuvers away from the beacon **304**. If the robot **302** does not detect the second directed beam emission **314** with the omni-directional receiver **322**, the robot **302** moves in a forward direction as shown in FIG. **31**H without turning in order to avoid arcing back into the gateway. Another example of the leave beacon behavior **294***e* includes the robot **302** aligning itself in a particular direction using odometry (or a next beacon in a sequence, e.g., when the planner **253** includes a distal or remote room traversal sequence that restarts the sequence of behaviors at beam align with a next beacon's beam or field according to the map) and moving in that direction without guidance from any of the beams emitted from the current beacon **304**. FIG. **31**G shows the robot **302** moving away from navigation beacon **304** as it finishes migrating.

While migrating, the robot **302** stores in memory the beam encodings of the first and second directed beams **306** and **314**, respectively, at each navigational beacon **304** encountered while away from a base station **340**. To return to the base station **340**, the robot **302** conducts coverage behaviors while the homing request is on, resulting in discovering the appropriate directed beams **306** and **314**, respectively, and corresponding encodings, to follow a sequence of encountered beams back to the base station **340**. In one example, the robot **302** can wirelessly communicate (e.g. radiofrequency) with the navigational beacons **304** to independently activate each previously encountered beam **306**, **314**, and **316** one at a time to find (traversing a room using random bounce and/or obstacle following to place itself in a beam path) and follow each beam back to the base station **340**.

In another example (not shown), navigation beacons may emit at least one, two, or three beam signals: fence/gate beam (referred to herein as "yellow", but in reality having a first modulation of a first frequency in the IR band), right-hand navigation beam (referred to as "red", but in reality having either or both of different modulation or a different frequency in the IR band from the "yellow" beam), and left-hand navigation beam (referred to as "green", but in reality having either or both of a different modulation or a different frequency in the IR band from the "yellow" and "red" beams).

If multiple navigation beacons are provided, each would have different modulation of its beams, but the emitters of the fence/gate beam, right hand beam, or left hand beam would preferably be consistent among the navigation beacons.

Regardless of its assignment as fence, gate, or trail marker, as one example, a navigation beacon also may emit a geometrically determined force field ("blue", again in actuality either or both of a different modulation or frequency in the IR band, although a force field could also be radio frequency RF rather than visible or IR light) in a circular region around their base. This may identify its presence to a robot, and allow a robot to follow a path around the Navigation beacon (through a gate or past a trail marker), for example.

An IR-based beacon system can be designed to use a geometric solution, similar in certain respects to a non-limiting example such as a shaded floor lamp which lights up only a small area around itself, in order to provide a well-defined force field via IR, for example.

A fence navigation beacon may emit a yellow beam directly out the front of the navigation beacon (0 degrees) and a single navigation beam (red or green) at about a 60-degree angle to the right or left of the yellow beam, for example. A gate navigation beacon may emit a yellow beam to the front, a red beam at −60 degrees, and a green beam at about +60 degrees, as another non-limiting example; also, for example, a trail marker Navigation beacon may emit a red beam at about −60 degrees and a green beam at about +60 degrees.

Navigation beacon "beams" in some non-limiting examples may not be narrowly focused (thus not requiring a special lens); they may fan out to light as much of the room as may be practicable without mutual interference. As an alternative, for example, a standard home base LED not requiring other optics may also be used.

Referring to FIGS. **24**A-B and **32**A-E, the docking behavior priorities (from highest to lowest) include docking retry docking bump follow **264***c*, docking bounce **264***d*, docking

quick turn **296***c*, docking distant homing **296***b*, docking lobe following **296***a*, and docking field following **296***d*. The robot **302** must generally approach the dock **340** from a forward direction with less than 4 degrees of skew in order to dock properly.

The default docking behavior, docking lobe following **296***a*, as shown in FIG. **32**A, is executed when no other docking behavior has a higher priority. When the robot **302** detects the left (red) beam **350** only, it follows the edge of the red beam **350** in a clockwise direction. When the robot **302** detects the right (green) beam **360** or the overlap area of the red and green beams **350** and **360**, respectively, it follows the edge of the green beam **360** in a counterclockwise direction. This results in the robot **302** appearing to follow the outside of the nearest docking beam **350** or **360** around to the front of the dock **340** at zero degrees and then following a normal (zero degree) edge **362** right onto the docking contacts. When the robot **302** detects the force field **370** during this behavior it slows down in order to follow more accurately.

The robot **302** keeps track of the signals detected by the omni-directional receiver **322** over a window of 30 seconds. When the robot **302** detects that the frequency and variance of line crossing events (crossing the normal (zero degree) edge **362**) is above about 1 Hz and below a variance of about 2.5 seconds it determines that the robot **302** is following the normal (zero degree) edge **362** and will simply drive straight by executing a smooth homing behavior, instead of continuing to follow the edge **362** (with the inevitable right-left oscillation) under the lobe following behavior **296***a*.

Referring to FIG. **32**B, the quick turn behavior **296***c* is activated when the robot **302** has encountered a docking beam **350** or **360** while driving straight, spiraling, bump following, or wall following, is not in the force field **370**, and has not detected the dock **340** with its directional receivers **318** in the last several seconds. When the robot **302** detects the red beam **350**, it arcs clockwise toward the dock **340**. When the robot **302** detects the green beam **360** or the overlap area of the red and green beams **350** and **360**, it arcs counterclockwise toward the dock **340**. When the robot **302** detects the other beam **350** or **360**, detects the dock **340** with its directional receivers **318**, or has arced more than 360 degrees, this behavior **296***c* aborts. Typically it is then followed by the lobe following behavior **296***a*.

Referring to FIG. **32**C, the distant homing behavior **296***b* is activated when the robot **302** has not detected the force field **370** in its omni-directional receiver **322** in the last several seconds, and detects the dock **340** with the directional receiver **318**. If the robot **340** detects the red or green beams **350** and **360**, respectively, it will drive toward them. If the robot **340** only detects the force field **370** it will drive toward the force field **370**. This allows the robot **302** to approach the dock **340** from a distance at any angle. When the robot **302** detects the force field **370** with its omni-directional receiver **322** this behavior **296***b* aborts. During a front approach this is typically followed by the lobe following behavior **296***a*. During a side approach this is typically followed by the field following behavior **296***d*.

Referring to FIG. **32**D, the field following behavior **296***b* activates when the robot **302** detects the force field **370** with its omni-directional receiver **322**, has not detected the red or green beam, **350** and **360** respectively, with its omni-directional receiver **322** in the last second, and does not see the red or green beam **350** and **360**, respectively, with its directional receivers **318**. The robot **302** follows the edge **372** of the force field **370** with its omni-directional receiver **322** in a random direction (cw or ccw) until it detects the red or green beam, **350** and **360** respectively, a bump, a cliff, or has traveled more than 1 meter. When the robot **302** detects the red or green beam, **350** and **360** respectively, it engages in reverse lobe following **296***a* for a distance of about 1 meter or until a bump is detected in order to travel away from the dock **340** along the normal (zero degree) edge **362** and straighten out. Then the robot **302** turns 180 degrees or until it faces the dock **340**. Then the behavior **296***b* aborts. Typically the lobe following behavior **296***a* activates next to finish docking.

Referring to FIG. **32**E, the robot **302** can dock successfully even when there are obstacles completely or partially occluding the docking beams **350** and **360** or the robot's physical access to the dock **340** from some, but not all, approach angles by executing an obstacle dock behavior **296***e*. When the robot **302** is seeking the dock **340** and has detected a docking beam **350** or **360** in its omni-directional receiver **322** in the last several seconds, and then also detects a bump, it activates the docking bounce behavior **264***c*. With about a 66% probability, the obstacle dock behavior **296***e* initiates a bump follow behavior **264***c* and with about a 33% probability, the docking bounce behavior **264***d* which has the robot **302** simply back up, turn a random angle between 10 and 170 degrees for side impacts or 75 and 255 degrees for front impacts, and then aborts the behavior **264***d*. The bump follow behavior **264***c* follows an edge of the obstacle with the robot's bumper until one of the following conditions occurs: a) the robot **302** detects the dock **340** with the directional receiver **318** and does not detect it with is omni-directional receiver **322**, with about a 66% probability; b) the robot **302** detects a crossing of the normal (zero degree) edge **362** from right to left and is bump following **264***c* in a clockwise direction, or the robot **302** detects a crossing of the normal (zero degree) edge **362** from left to right and is bump following **264***c* in a counterclockwise direction, with about a 66% probability; c) the robot **362** detects the force field **370** with its omni-directional receiver **322**; d) 30 seconds has passed since the onset of the bump follow behavior **264***c*; or e) no docking beam **350** or **360** has been detected by the omni-directional receiver **322** for more than about 5 seconds.

Another possible implementation of bump follow **264***c* includes the robot **302** keeping track of the projected location of the dock **340** and turning preferentially toward the estimated dock location during bump follow **264***c*. Each time the robot **302** crosses the normal (zero degree) edge **362** while facing the dock **340** and detecting the dock **340** by its directional receiver **318**, the robot **302** uses odometry to project the location of the dock **340** about 5 feet out along a direction of travel. The robot **302** can use odometry throughout the docking maneuver to estimate the orientation of itself to the projected location of the dock **340**.

The combination of short bouts of bump following and normal docking methods allow the robot **302** to dock in the face of a large variety of obstacles including but not limited to walls, chairs, and boxes, as well as reflections of the IR docking beams.

"ROBOT OBSTACLE DETECTION SYSTEM", U.S. Pat. No. 6,594,844, disclosing proximity sensors such as cliff sensors and wall following sensors; "AUTONOMOUS FLOOR-CLEANING ROBOT", U.S. Pat. No. 6,883,201, disclosing a general structure of an iRobot Roomba coverage/cleaning robot and main and edge cleaning heads in detail; "METHOD AND SYSTEM FOR MULTI-MODE COVERAGE FOR AN AUTONOMOUS ROBOT", U.S. Pat. No. 6,809,490, disclosing motion control and coverage behaviors, including escape behaviors, selected by an arbiter according to the principles of behavior based robotics; and "METHOD AND SYSTEM FOR ROBOT LOCALIZATION AND CONFINEMENT", U.S. Pat. No. 6,781,338,

disclosing virtual walls, i.e., robot confinement using wall-simulating directed beams, are each incorporated by reference herein in their entireties.

Other robot details and features combinable with those described herein may be found in the following U.S. patent applications filed concurrently herewith, entitled "COVERAGE ROBOT MOBILITY" having assigned Ser. No. 11/633,885; "MODULAR ROBOT" having assigned Ser. No. 11/633 886; and "ROBOT SYSTEM" having assigned Ser. No. 11/633 883, the entire contents of the aforementioned applications are hereby incorporated by reference.

A number of implementations have been described. Nevertheless, it will be understood that various modifications may be made without departing from the spirit and scope of the following claims. Accordingly, other implementations are within the scope of the following claims.

What is claimed is:

1. An autonomous mobile robot system for bounded areas, the system comprising:

a navigation beacon with a gateway beacon emitter arranged to emit a gateway beam across a gateway between a first bounded area and an adjacent second bounded area with the beacon placed in the gateway on a floor surface, wherein the navigation beacon is configured to emit a marker indicating a proximity zone about the beacon that extends into the bounded areas, and wherein the navigation beacon further comprises a beacon emitter arranged to transmit an emission into the first bounded area indicating the direction of the beacon, with the beacon disposed within the gateway;

an autonomous coverage robot comprising:

a beacon emission sensor responsive to the gateway beam, the emission indicating the direction of the beacon, and the marker indicating the proximity zone, and configured to detect an encoded signal included in at least one of the gateway beam and the marker indicating the proximity zone, the encoded signal comprising a unique identifier associating the beacon with the first bounded area;

a drive system configured to maneuver the robot about the first bounded area in:

a cleaning mode, in which the robot is redirected back into the first bounded area in response to detecting any one of the marker indicating the proximity zone and the gateway beam, and

a migration mode, in which the robot is configured to maneuver toward the beacon upon encountering the emission indicating the direction of the beacon and through the gateway into the second bounded area while avoiding collision with the beacon by detection of the marker indicating the proximity zone; and

a base station located in one of the bounded areas, the base station comprising:

a base defining a docking direction from which the robot may properly dock; and

a robot charger housed in the base.

2. The system of claim **1** wherein the robot remains in the first bounded area upon the robot redirection in response to detecting the gateway beam in the cleaning mode.

3. The system of claim **1** wherein the drive system is configured to maneuver the robot about the first bounded area in the cleaning mode for a preset time interval, and to automatically initiate the migration mode at expiration of the time interval.

4. The system of claim **3** wherein the drive system is configured to maneuver the robot across the gateway beam in the migration mode.

5. The system of claim **1** wherein the drive system is configured to maneuver the robot about the first bounded area in the cleaning mode until a preset number of encounters of the gateway beam have been detected, and then to automatically initiate the migration mode.

6. The system of claim **1** wherein the robot further comprises a transmitter that signals the beacon to disrupt signaling of the gateway beam in the migration mode.

7. The system of claim **1**

wherein the robot in the migration mode discerns a position of the navigation beacon in response to detection of the emission indicating the direction of the beacon and aligns a drive direction defined by the robot in relation to an emission path defined by the emission indicating the direction of the beacon.

8. The system of claim **7** wherein the robot advances along the emission path to reach and traverse the gateway.

9. The system of claim **1** wherein the robot wirelessly communicates with the navigation beacon to deactivate the emission indicating the direction of the beacon while in the cleaning mode and activate the emission indicating the direction of the beacon while in the migration mode.

10. The system of claim **9** wherein the navigation beacon is configured to communicate schedule information with the robot.

11. The system of claim **1** wherein the navigation beacon transmits the emission indicating the direction of the beacon at an angle of between about 45-90 degrees to the cross-gateway direction.

12. The system of claim **1** wherein the robot remotely activates the emission indicating the direction of the beacon of the navigation beacon and deactivates the gateway beam upon initiating the migration mode, and the robot remotely deactivates the emission indicating the direction of the beacon of the navigation beacon and activates the gateway beam upon terminating the migration mode.

13. The system of claim **1** wherein the navigation beacon transmits a proximity emission laterally about the beacon, wherein the robot avoids cleaning and migration within the proximity emission.

14. The system of claim **1** wherein the base station further comprises:

an omni-directional beam emitter mounted on the base and configured to project a proximity beam laterally around the base station; and

two navigational field emitters housed in the base and arranged to emit respective, laterally bounded and overlapping fields of emissions of signal beams, respectively;

wherein one of the emitted fields defines a lateral field edge aligned with the docking direction and overlapped by the other of the fields.

15. The system of claim **1** wherein the two navigational field emitters of the base station are positioned to form an angle of overlap of about 6 degrees and each emitter's aperture angle is between about 20 and 30 degrees.

16. The system of claim **1** wherein the robot includes a floor cleaning system that removes debris from the floor as the robot is maneuvered.

17. The system of claim **1** wherein the gateway beam comprises a line-of-sight direction to a distant observed object.

18. The system of claim **1** wherein the navigation beacon comprises an adjustable switch, and wherein the switch con-

trols the system such that the robot enters any one of a cleaning mode, a migration mode, and an off mode when the switch is actuated.

19. An autonomous mobile robot system for bounded areas, the system comprising:

a navigation beacon with a gateway beacon emitter arranged to emit a gateway beam across a gateway between a first bounded area and an adjacent second bounded area with the beacon placed in the gateway on a floor surface, wherein the navigation beacon is configured to emit a marker indicating a proximity zone about the beacon that extends into the bounded areas;

an autonomous coverage robot comprising:

a beacon emission sensor responsive to the gateway beam and the marker indicating the proximity zone, and configured to detect an encoded signal included in at least one of the gateway beam and the marker indicating the proximity zone, the encoded signal associating the beacon with the first bounded area;

a drive system configured to maneuver the robot about the first bounded area in:

a cleaning mode, in which the robot is redirected back into the first bounded area in response to detecting any one of the marker indicating the proximity zone and the gateway beam, and

a migration mode, in which the robot is configured to maneuver toward the beacon and through the gateway into the second bounded area while avoiding collision with the beacon by detection of the marker indicating the proximity zone;

wherein the drive system comprises an internal map and the drive system is configured to navigate from a first bounded area to second bounded area using the internal map.

20. The system of claim **19** wherein the drive system is configured to cross the gateway beam from a first bounded area to a second bounded area in the migration mode.

21. The system of claim **19** wherein the drive system is configured to generate the internal map based at least in part on the encoded signal associating the beacon with the first bounded area.

22. An autonomous mobile robot system for bounded areas, the system comprising:

a navigation beacon with a gateway beacon emitter arranged to emit a gateway beam across a gateway between a first bounded area and an adjacent second bounded area with the beacon placed in the gateway on a floor surface, wherein the navigation beacon is configured to emit a marker indicating a proximity zone about the beacon that extends into the bounded areas;

an autonomous coverage robot comprising:

a beacon emission sensor responsive to the gateway beam and the marker indicating the proximity zone, and configured to detect an encoded signal included in at least one of the gateway beam and the marker indicating the proximity zone, the encoded signal associating the beacon with the first bounded area;

a drive system configured to maneuver the robot about the first bounded area in:

a cleaning mode, in which the robot is redirected back into the first bounded area in response to detecting any one of the marker indicating the proximity zone and the gateway beam, and

a migration mode, in which the robot is configured to maneuver toward the beacon and through the gateway into the second bounded area while avoiding collision with the beacon by detection of the marker indicating the proximity zone;

wherein the drive system is configured to maneuver the robot in a confined boustrophedon pattern.

23. The system of claim **22** wherein the drive system is further configured to maneuver the robot in a cliff avoiding behavior and to give precedence to the cliff avoiding behavior over the migration mode.

24. The system of claim **22** wherein the gateway beam comprises a directed vector.

25. An autonomous mobile robot system for bounded areas, the system comprising:

a navigation beacon with a gateway beacon emitter arranged to emit a gateway beam across a gateway between a first bounded area and an adjacent second bounded area with the beacon placed in the gateway, wherein the navigation beacon is configured to emit a marker indicating a proximity zone about the beacon that extends into the bounded areas, and wherein the navigation beacon further comprises a vectoring beacon emitter arranged to transmit a directed vectoring emission into the first bounded area with the beacon disposed within the gateway; and

an autonomous coverage robot comprising:

a beacon emission sensor responsive to the gateway beam, the vectoring emission and the marker indicating the proximity zone; and

a drive system configured to maneuver the robot about the first bounded area in:

a cleaning mode, in which the robot is redirected back into the first bounded area in response to detecting any one of the marker indicating the proximity zone and the gateway beam, and

a migration mode, in which the robot is configured to maneuver toward the beacon upon encountering the vectoring emission and through the gateway into the second bounded area while avoiding collision with the beacon by detection of the marker indicating the proximity zone;

wherein the robot is configured to remotely activate the directed vectoring emission of the navigation beacon and deactivate the gateway beam upon initiating the migration mode, and to remotely deactivate the directed vectoring emission of the navigation beacon and activate the gateway beam upon terminating the migration mode.

26. The system of claim **25** wherein the navigation beacon is further configured to emit an area identifier signal uniquely marking the first bounded area, the identifier signal being confined to the first bounded area.

27. The system of claim **26** wherein the gateway beam comprises the area identifier signal.

28. The system of claim **26** wherein the beacon emission sensor is responsive to the identifier signal, and wherein the autonomous coverage robot is configured to identify the first bounded area based on the area identifier signal.

* * * * *