US009144401B2

(12) **United States Patent**
Freeman et al.

(10) **Patent No.: US 9,144,401 B2**
(45) **Date of Patent: Sep. 29, 2015**

(54) **LOW PAIN PENETRATING MEMBER**

(75) Inventors: **Dominique M. Freeman**, La Honda, CA (US); **Don Alden**, Sunnyvale, CA (US); **Michael Wittig**, Palo Alto, CA (US); **Dirk Boecker**, Palo Alto, CA (US)

(73) Assignee: **SANOFI-AVENTIS DEUTSCHLAND GMBH**, Frankfurt am Main (DE)

(*) Notice: Subject to any disclaimer, the term of this patent is extended or adjusted under 35 U.S.C. 154(b) by 993 days.

(21) Appl. No.: **11/302,423**

(22) Filed: **Dec. 12, 2005**

(65) **Prior Publication Data**

US 2006/0161194 A1 Jul. 20, 2006

(51) **Int. Cl.**

A61B 17/34	(2006.01)
A61B 5/157	(2006.01)
A61B 5/15	(2006.01)
A61B 5/00	(2006.01)

(52) **U.S. Cl.**
CPC ***A61B 5/157*** (2013.01); ***A61B 5/1411*** (2013.01); ***A61B 5/411*** (2013.01)

(58) **Field of Classification Search**
CPC A61B 5/1411; A61B 5/157; A61B 5/411
USPC 606/181, 167, 185, 159, 183, 184, 186, 606/188, 189, 182, 223; 600/583, 548; 604/264, 272, 115
See application file for complete search history.

(56) **References Cited**

U.S. PATENT DOCUMENTS

2,061 A		4/1841	Osdel	606/182
55,620 A		6/1866	Capewell	606/181
1,135,465 A		4/1915	Pollock	606/181
1,733,847 A		10/1929	Wilmot	292/332
2,258,857 A		10/1941	McCann	601/81
2,628,319 A		2/1953	Vang	310/15
2,714,890 A		8/1955	Alfred	606/169
2,763,935 A		9/1956	Whaley	33/511
2,801,633 A		8/1957	Ehrlich	606/181
2,880,876 A		4/1959	Dujardin	210/523
3,046,987 A		7/1962	Ehrlich	128/314
3,030,959 A		9/1962	Grunert	128/329
3,063,451 A	*	11/1962	Kowalk	600/576
3,086,288 A		4/1963	Balamuth	30/277.4
3,090,384 A	*	5/1963	Baldwin et al.	604/272
3,208,452 A		9/1965	Stern	606/182

(Continued)

FOREIGN PATENT DOCUMENTS

CN	1946340 A	4/2007	
DE	2206674	8/1972	C07D 39/10

(Continued)

OTHER PUBLICATIONS

U.S. Appl. No. 68/752,233, filed Apr. 5, 2005, Argauer H.

(Continued)

Primary Examiner — Tuan V Nguyen
Assistant Examiner — Tin Nguyen
(74) *Attorney, Agent, or Firm* — Mintz Levin Cohn Ferris Glovsky and Popeo, P.C.; Paul Davis

(57) **ABSTRACT**

Reducing the volume or drag on skin or sharpness of the penetrating member entering the wound during the cutting process will reduce the pain associated with lancing, and result in less power desired for retraction of the penetrating member from the skin. A variety of other penetrating member configuration as shown in the application.

21 Claims, 20 Drawing Sheets

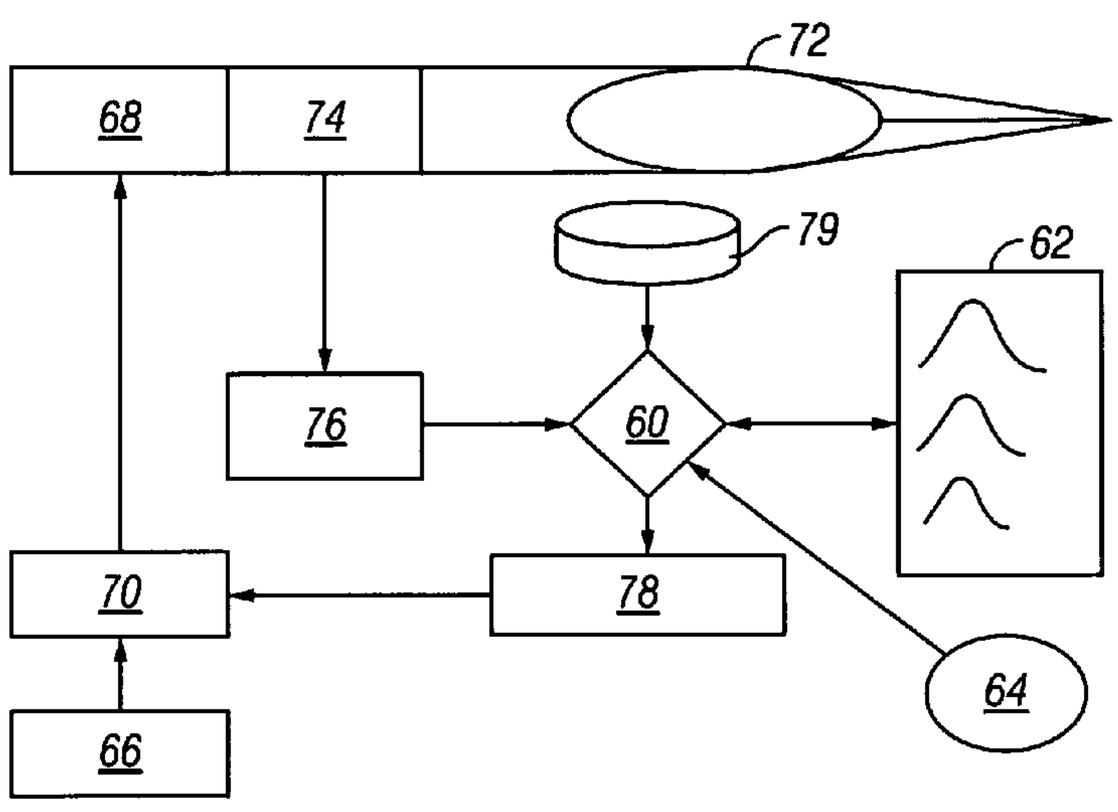

(56) **References Cited**

U.S. PATENT DOCUMENTS

3,358,689 A 12/1967 Higgins 128/329
3,412,729 A 11/1968 Smith, Jr. 128/2.05
3,424,154 A 1/1969 Kinsley 604/70
3,448,307 A 6/1969 Rudolph 310/23
3,494,358 A 2/1970 Grossenbacher 128/218
3,607,097 A 9/1971 Auphan et al. 422/66
3,620,209 A 11/1971 Kravitz 601/79
3,626,929 A 12/1971 Sanz ..... 128/2 R
3,628,026 A 12/1971 Cronin 250/214.1
3,665,672 A 5/1972 Speelman 53/435
3,673,475 A 6/1972 Britton 318/122
3,712,293 A 1/1973 Mielke, Jr. ..... 128/2 G
3,734,812 A 5/1973 Yazawa 428/107
3,742,954 A 7/1973 Strickland 128/302
3,780,960 A 12/1973 Tokuno 242/555.2
3,832,776 A 9/1974 Sawyer 30/272
3,836,148 A 9/1974 Manning 273/368
3,851,543 A 12/1974 Krom 74/493
3,853,010 A 12/1974 Christen 73/864.24
3,924,818 A 12/1975 Pfeifle 242/364.7
3,938,526 A 2/1976 Anderson 128/303.1
3,953,172 A 4/1976 Shapiro 23/230
3,971,365 A 7/1976 Smith 128/2.17
4,057,394 A 11/1977 Genshaw 23/230
4,077,406 A 3/1978 Sandhage 604/61
4,109,655 A 8/1978 Chaconac 128/253
4,139,011 A 2/1979 Benoit 606/182
4,154,228 A 5/1979 Feldstein 606/169
4,168,130 A 9/1979 Barth 404/99
4,184,486 A 1/1980 Papa 600/373
4,190,420 A 2/1980 Covington 422/63
4,191,193 A 3/1980 Seo 600/488
4,193,690 A 3/1980 Levenson 356/301
4,203,446 A 5/1980 Hofert 606/182
4,207,870 A 6/1980 Eldridge 128/766
4,223,674 A 9/1980 Fluent 604/504
4,224,125 A 9/1980 Nakamura ..... 204/195 B
4,224,949 A 9/1980 Scott 128/734
4,230,118 A 10/1980 Holman et al. 128/314
4,240,439 A 12/1980 Abe 600/412
4,254,083 A 3/1981 Columbus 422/55
4,258,001 A 3/1981 Pierce 422/56
4,259,653 A 3/1981 McGonigal 310/15
4,299,230 A 11/1981 Kubota 600/300
4,301,412 A 11/1981 Hill 324/442
4,321,397 A 3/1982 Nix 548/366
4,338,174 A 7/1982 Tamura 204/195
4,340,669 A 7/1982 Bauer 435/14
4,350,762 A 9/1982 De Luca 435/10
4,353,984 A 10/1982 Yamada 435/14
4,356,826 A 11/1982 Kubota 600/300
4,360,016 A 11/1982 Sarrine 128/763
4,388,922 A 6/1983 Telang 604/319
4,391,905 A 7/1983 Bauer 435/14
4,391,906 A 7/1983 Bauer 435/14
4,392,933 A 7/1983 Nakamura 204/403.14
4,394,512 A 7/1983 Batz 548/365
4,397,556 A 8/1983 Muller 356/301
4,407,008 A 9/1983 Schmidt 356/301
4,411,266 A 10/1983 Cosman 128/303.18
4,414,975 A 11/1983 Ryder 128/314
4,418,037 A 11/1983 Katsuyama 422/56
4,420,564 A 12/1983 Tsuji 435/288
4,425,039 A 1/1984 Grant 356/35.5
4,426,451 A 1/1984 Columbus 436/518
4,426,884 A 1/1984 Polchaninoff 73/172
4,440,301 A 4/1984 Intengan 206/456
4,442,836 A 4/1984 Meinecke 128/314
4,442,972 A 4/1984 Sahay ..... 236/1 EA
4,449,529 A 5/1984 Burns 606/182
4,462,405 A 7/1984 Ehrlich 606/182
4,469,110 A 9/1984 Slama 128/770
4,490,139 A * 12/1984 Huizenga et al. 604/57
4,517,978 A 5/1985 Levin 128/314
4,518,384 A 5/1985 Tarello 604/61
4,523,994 A 6/1985 Shono 549/352
4,525,164 A 6/1985 Loeb et al.
4,535,769 A 8/1985 Burns 128/314
4,535,773 A 8/1985 Yoon 606/185
4,537,197 A 8/1985 Hulka 128/633
4,539,988 A 9/1985 Shirley 128/314
4,545,382 A 10/1985 Higgins 128/635
4,553,541 A 11/1985 Burns 128/314
4,561,445 A 12/1985 Berke 128/642
4,577,630 A 3/1986 Nitzsche 128/314
4,580,564 A 4/1986 Anderson 502/8
4,580,565 A 4/1986 Cornell 128/314
4,586,819 A 5/1986 Tochigi 356/301
4,586,926 A * 5/1986 Osborne 604/272
4,590,411 A 5/1986 Kelly 318/687
4,595,479 A 6/1986 Kimura 204/294
4,600,014 A 7/1986 Beraha 128/754
4,603,209 A 7/1986 Tsien 549/352
4,608,997 A 9/1986 Conway 128/763
4,615,340 A 10/1986 Cronenberg 128/635
4,616,649 A 10/1986 Burns 128/314
4,619,754 A 10/1986 Niki 204/290
4,622,974 A 11/1986 Coleman 128/634
4,624,253 A 11/1986 Burns 128/314
4,627,445 A 12/1986 Garcia 600/583
4,637,393 A 1/1987 Ray 128/305
4,637,403 A 1/1987 Garcia 600/583
4,643,189 A 2/1987 Mintz 128/314
4,648,408 A 3/1987 Hutcheson 128/770
4,648,714 A 3/1987 Benner 356/301
4,653,511 A 3/1987 Goch 128/763
4,653,513 A 3/1987 Dombrowski 600/578
4,655,225 A 4/1987 Dahne 600/316
4,661,768 A 4/1987 Carusillo 324/678
4,666,438 A 5/1987 Raulerson 604/272
4,676,244 A 6/1987 Enstrom 128/314
4,677,979 A 7/1987 Burns 128/314
4,678,277 A 7/1987 Delhaye 356/301
4,682,892 A 7/1987 Chawla 356/353
4,695,273 A 9/1987 Brown
4,702,594 A 10/1987 Grant 356/35.5
4,711,245 A 12/1987 Higgins 128/635
4,712,460 A 12/1987 Allen 83/208
4,712,548 A 12/1987 Enstrom 128/314
4,714,462 A 12/1987 DiDomenico 604/67
4,715,374 A 12/1987 Maggio 128/314
4,731,330 A 3/1988 Hill 436/16
4,731,726 A 3/1988 Allen, III 600/300
4,734,360 A 3/1988 Phillips 435/25
4,735,203 A 4/1988 Ryder 128/314
4,737,458 A 4/1988 Batz 435/28
4,750,489 A 6/1988 Berkman 606/166
4,753,776 A 6/1988 Hillman 422/101
4,756,884 A 7/1988 Hillman 422/73
4,757,022 A 7/1988 Shults 204/403.05
4,758,323 A 7/1988 Davis 204/403
4,774,192 A 9/1988 Teriniello 436/350
4,784,486 A 11/1988 Van Wagenen 356/301
4,787,398 A 11/1988 Garcia 600/583
4,790,979 A 12/1988 Teriniello 422/56
4,794,926 A 1/1989 Munsch et al. 606/183
4,797,283 A 1/1989 Allen 424/443
4,814,142 A 3/1989 Gleisner 422/56
4,814,661 A 3/1989 Ratzlaff 310/328
4,817,603 A 4/1989 Turner 606/182
4,818,493 A 4/1989 Coville 422/102
4,820,010 A 4/1989 Scifres 385/43
4,820,399 A 4/1989 Senda 204/403
4,823,806 A 4/1989 Bajada 600/557
4,824,639 A 4/1989 Hildenbrand 422/56
RE32,922 E 5/1989 Levin 128/314
4,825,711 A 5/1989 Jensen 73/865.8
4,827,763 A 5/1989 Bourland 73/172
4,829,011 A 5/1989 Gibbons 436/512
4,830,959 A 5/1989 McNeill 435/53
4,836,904 A 6/1989 Armstron 204/294
4,840,893 A 6/1989 Hill 435/6
4,844,095 A 7/1989 Chiodo 128/314
4,845,392 A 7/1989 Mumbower 310/14

(56) **References Cited**

U.S. PATENT DOCUMENTS

4,850,973	A	7/1989	Jordan	604/157
4,857,274	A	8/1989	Simon	422/72
4,868,129	A	9/1989	Gibbons	436/179
4,869,249	A	9/1989	Crossman	128/314
4,869,265	A	9/1989	McEwen	128/774
4,873,993	A	10/1989	Meserol	128/780
4,877,026	A	10/1989	de Laforcade	128/305
4,882,013	A	11/1989	Turner	204/1
4,883,055	A	11/1989	Merrick	128/633
4,883,068	A	11/1989	Dechow	128/760
4,886,499	A	12/1989	Cirelli	604/131
4,889,529	A	12/1989	Haindl	604/274
4,892,097	A	1/1990	Ranalletta	606/182
4,895,147	A	1/1990	Bodicky	606/182
4,895,156	A	1/1990	Schulze	600/342
4,897,173	A	1/1990	Nankai	204/403
4,900,424	A	2/1990	Birch	204/409
4,900,666	A	2/1990	Phillips	435/25
4,911,794	A	3/1990	Parce	204/1 T
4,920,977	A	5/1990	Haynes	128/770
4,924,879	A	5/1990	O'brien	600/583
4,935,346	A	6/1990	Phillips	435/14
4,938,218	A	7/1990	Goodman	128/633
4,940,468	A	7/1990	Petillo	606/170
4,944,304	A	7/1990	Nishina	128/667
4,945,045	A	7/1990	Forrest	435/25
4,946,795	A	8/1990	Gibbons	436/179
4,948,727	A	8/1990	Cass	435/18
4,948,961	A	8/1990	Hillman	250/252.1
4,952,373	A	8/1990	Sugarman	422/99
4,952,515	A	8/1990	Gleisner	436/169
4,953,552	A	9/1990	DeMarzo	128/635
4,953,976	A	9/1990	Adler-Golden	356/301
4,963,498	A	10/1990	Hillman	436/69
4,966,581	A	10/1990	Landau	604/72
4,966,646	A	10/1990	Zdeblick	156/633
4,966,671	A	10/1990	Nylander	204/153.14
4,975,581	A	12/1990	Robinson	250/339
4,976,724	A	12/1990	Nieto	606/182
4,977,910	A	12/1990	Miyahara	134/7
4,983,178	A	1/1991	Schnell	606/181
4,984,085	A	1/1991	Landowski	358/213
4,990,154	A	2/1991	Brown	606/182
4,995,402	A	2/1991	Smith	600/584
4,999,582	A	3/1991	Parks	324/438
5,001,054	A	3/1991	Wagner	435/14
5,001,873	A	3/1991	Rufin	451/39
5,004,923	A	4/1991	Hillman	250/341
5,010,772	A	4/1991	Bourland	73/862.04
5,010,774	A	4/1991	Kikuo	73/862.04
5,014,718	A	5/1991	Mitchen	128/771
5,019,974	A	5/1991	Beckers	364/413.02
5,026,388	A	6/1991	Ingalz	606/182
D318,331	S	7/1991	Phillips	D24/169
5,028,142	A	7/1991	Ostoich et al.	366/273
5,029,583	A	7/1991	Meserol	600/316
5,035,704	A	7/1991	Lambert	606/182
5,039,617	A	8/1991	McDonald	436/69
5,043,143	A	8/1991	Shaw	422/65
5,046,496	A	9/1991	Betts	600/352
5,047,044	A *	9/1991	Smith et al.	606/182
5,049,487	A	9/1991	Phillips	435/4
5,049,673	A	9/1991	Tsien	549/352
5,054,487	A	10/1991	Clarke	128/633
5,054,499	A	10/1991	Swierczek	128/770
5,057,082	A	10/1991	Burchette, Jr.	604/164
5,057,277	A	10/1991	Mauze	422/56
5,059,394	A	10/1991	Phillips	422/68.1
5,059,789	A	10/1991	Salcudean	250/206.1
5,060,174	A	10/1991	Gross	702/139
5,062,898	A	11/1991	McDermott	134/7
5,064,411	A *	11/1991	Gordon, III	604/48
5,070,874	A	12/1991	Barnes	128/633
5,070,886	A	12/1991	Mitchen	128/771
5,073,500	A	12/1991	Saito et al.	436/53
5,074,872	A	12/1991	Brown	606/182
5,077,017	A	12/1991	Gorin	422/100
5,077,199	A	12/1991	Basagni	435/14
5,080,865	A	1/1992	Leiner	422/68.1
5,086,229	A	2/1992	Rosenthal	250/341
5,089,112	A	2/1992	Skotheim	204/403
5,092,842	A	3/1992	Bechtold	604/135
5,094,943	A	3/1992	Siedel	435/25
5,096,669	A	3/1992	Lauks	204/403.02
5,097,810	A	3/1992	Fishman	600/556
5,100,427	A	3/1992	Crossman	606/182
5,100,428	A	3/1992	Mumford	606/182
5,104,380	A	4/1992	Holman	604/117
5,104,382	A	4/1992	Brinkerhoff et al.	604/164.12
5,104,619	A	4/1992	de Castro	422/56
5,104,813	A	4/1992	Besemer	436/179
5,107,764	A	4/1992	Gasparrini	101/425
5,108,564	A	4/1992	Szuminsky	204/153.12
5,108,889	A	4/1992	Smith	435/4
5,116,759	A	5/1992	Klainer	435/288
5,120,420	A	6/1992	Nankai	204/403
5,122,244	A	6/1992	Hoenes	204/153
5,126,034	A	6/1992	Carter	204/403
5,128,015	A	7/1992	Szuminsky	204/403
5,128,171	A	7/1992	Gleisner	427/2
5,132,801	A	7/1992	Yamano	358/213
5,133,730	A	7/1992	Biro	606/182
5,135,719	A	8/1992	Hillman	422/101
5,139,685	A	8/1992	de Castro	210/767
5,140,161	A	8/1992	Hillman	250/341
5,141,868	A	8/1992	Shanks	435/288
5,144,139	A	9/1992	Hillman	250/341
5,145,565	A	9/1992	Kater	600/341
5,146,091	A	9/1992	Knudson	250/341.6
5,152,296	A	10/1992	Simons	128/670
5,152,775	A	10/1992	Ruppert	606/182
5,153,671	A	10/1992	Miles	356/301
5,156,611	A	10/1992	Haynes	606/181
5,162,525	A	11/1992	Masilamani	549/352
5,163,442	A	11/1992	Ono	128/760
5,164,598	A	11/1992	Hillman	250/341
5,167,619	A	12/1992	Wuchinich	604/22
5,170,364	A	12/1992	Gross	702/139
5,174,726	A	12/1992	Findlay	417/205
D332,490	S	1/1993	Brown	D24/146
5,178,142	A	1/1993	Harjunmaa	128/633
5,179,005	A	1/1993	Phillips	435/14
5,181,910	A	1/1993	Scanlon	604/67
5,181,914	A	1/1993	Zook	604/307
5,183,042	A	2/1993	Harjunmaa	128/633
5,185,256	A	2/1993	Nankai	435/174
5,187,100	A	2/1993	Matzinger	436/16
5,188,118	A	2/1993	Terwilliger	600/566
5,189,751	A	3/1993	Giuliani	15/22.1
5,192,415	A	3/1993	Yoshioka	204/403
5,194,391	A	3/1993	Mauze	436/166
5,196,025	A	3/1993	Ranalletta	606/182
5,201,324	A	4/1993	Swierczek	128/770
5,205,920	A	4/1993	Oyama	204/403
5,208,163	A	5/1993	Charlton et al.	436/63
5,209,028	A	5/1993	McDermott	51/426
5,211,652	A	5/1993	Derbyshire	606/182
5,212,879	A	5/1993	Biro	29/437
5,215,587	A	6/1993	McConnellogue	118/699
5,216,597	A	6/1993	Beckers	364/413.02
5,217,476	A *	6/1993	Wishinsky	606/167
5,217,480	A	6/1993	Haber	606/182
5,218,966	A	6/1993	Yamasawa	600/499
5,222,504	A	6/1993	Solomon	600/557
5,228,972	A	7/1993	Osaka	204/415
5,229,282	A	7/1993	Yoshioka	435/177
5,230,866	A	7/1993	Shartle	422/103
5,231,993	A	8/1993	Haber et al.	128/770
5,241,969	A	9/1993	Carson	600/566
5,247,932	A	9/1993	Chung	128/633
5,249,583	A	10/1993	Mallaby	600/567
5,250,066	A	10/1993	Lambert	606/181
5,251,126	A	10/1993	Kahn	364/413.11
5,253,656	A	10/1993	Rincoe	128/782

(56) **References Cited**

U.S. PATENT DOCUMENTS

5,256,998	A	10/1993	Becker	335/229
5,264,103	A	11/1993	Yoshioka	204/403
5,264,105	A	11/1993	Gregg	204/403
5,264,106	A	11/1993	McAleer	204/403
5,266,179	A	11/1993	Nankai	204/401
5,266,359	A	11/1993	Spielvogel	427/388.4
D342,573	S	12/1993	Cerola	D24/147
5,267,974	A	12/1993	Lambert	604/195
5,272,087	A	12/1993	El Murr	435/291
5,277,181	A	1/1994	Mendelson	128/633
5,279,294	A	1/1994	Anderson	600/322
5,279,791	A	1/1994	Aldrich	422/58
5,282,822	A	2/1994	Macors	606/182
5,286,362	A	2/1994	Hoenes	204/403
5,286,364	A	2/1994	Yacynych	204/418
5,288,636	A	2/1994	Pollman	435/288
5,294,261	A	3/1994	McDermott	134/7
5,296,378	A	3/1994	Sakata	436/63
5,300,779	A	4/1994	Hillman	250/341
5,304,192	A	4/1994	Crouse	606/181
5,304,193	A	4/1994	Zhadanov	606/182
5,304,347	A	4/1994	Mann	422/67
5,304,468	A	4/1994	Phillips	435/14
5,306,623	A	4/1994	Kiser	435/14
5,307,263	A	4/1994	Brown	600/301
5,312,590	A	5/1994	Gunasingham	422/56
5,314,441	A	5/1994	Cusack	606/182
5,314,442	A	5/1994	Morita	606/182
5,315,793	A	5/1994	Peterson	451/2
5,316,012	A	5/1994	Siegal	128/744
5,318,583	A	6/1994	Rabenau	606/182
5,318,584	A	6/1994	Lange	606/182
5,320,607	A *	6/1994	Ishibashi	604/115
5,320,808	A	6/1994	Holen	422/64
5,324,302	A	6/1994	Crouse	606/181
5,324,303	A	6/1994	Strong	606/181
5,330,634	A	7/1994	Wong	205/777.5
5,332,479	A	7/1994	Uenoyama	204/153.12
5,341,206	A	8/1994	Pittaro	356/301
5,342,382	A	8/1994	Brinkerhoff	606/184
5,344,703	A	9/1994	Kovar	428/312.6
5,350,392	A	9/1994	Purcell	606/182
5,352,351	A	10/1994	White	204/406
5,354,287	A	10/1994	Wacks	604/232
5,354,447	A	10/1994	Uenoyama	204/403
5,356,420	A	10/1994	Czernecki	606/182
5,360,410	A	11/1994	Wacks	604/232
5,365,699	A	11/1994	Armstrong	451/7
5,366,469	A	11/1994	Steg	606/182
5,366,470	A	11/1994	Ramel	606/183
5,366,609	A	11/1994	White	204/403
5,368,047	A	11/1994	Suzuki	600/578
5,370,509	A	12/1994	Golding	417/423.1
5,371,687	A	12/1994	Holmes	364/514
5,372,135	A	12/1994	Mendelson	600/322
5,375,397	A	12/1994	Ferrand	54/66
5,378,628	A	1/1995	Graetzel	435/288
5,382,346	A	1/1995	Uenoyama	204/403
5,383,885	A	1/1995	Bland	606/182
5,389,534	A	2/1995	von Gentezkow	435/180
5,390,450	A	2/1995	Goenka	451/39
5,393,903	A	2/1995	Graetzel	556/137
5,395,339	A	3/1995	Talonn	604/111
5,395,387	A	3/1995	Burns	606/181
5,397,334	A	3/1995	Schenk	606/182
5,401,376	A	3/1995	Foos	204/415
5,402,798	A	4/1995	Swierczek	128/770
5,405,283	A	4/1995	Goenka	451/39
5,405,510	A	4/1995	Betts	205/782
5,405,511	A	4/1995	White	204/153.1
5,407,545	A	4/1995	Hirose	204/153.12
5,407,554	A	4/1995	Saurer	204/403
5,407,818	A	4/1995	von Gentezkow	435/180
5,409,583	A	4/1995	Yoshioka	204/153.12
5,409,664	A	4/1995	Allen	422/56
5,410,059	A	4/1995	Fraser	546/10
5,410,474	A	4/1995	Fox	600/300
5,415,169	A	5/1995	Siczek	600/427
5,418,142	A	5/1995	Kiser	435/14
5,423,847	A	6/1995	Strong et al.	606/182
5,424,545	A	6/1995	Block	350/343
5,426,032	A	6/1995	Phillips	435/14
5,436,161	A	7/1995	Bergstrom	435/291
5,437,999	A	8/1995	Diebold	435/288
5,438,271	A	8/1995	White	324/444
5,443,701	A	8/1995	Willner	204/153
5,445,920	A	8/1995	Saito	430/311
D362,719	S	9/1995	Kaplan	D24/147
5,453,360	A	9/1995	Yu	435/28
5,454,828	A	10/1995	Schraga	606/181
5,456,875	A	10/1995	Lambert	264/328.1
5,459,325	A	10/1995	Hueton	250/458.1
5,460,182	A	10/1995	Goodman	600/342
5,462,533	A	10/1995	Daugherty	604/164
5,464,418	A	11/1995	Schraga	606/182
5,465,722	A	11/1995	Fort	600/447
5,471,102	A	11/1995	Becker	310/50
5,472,427	A	12/1995	Rammler	604/164.01
5,474,084	A	12/1995	Cunniff	600/557
5,476,474	A	12/1995	Davis	606/182
5,480,387	A	1/1996	Gabriel	604/134
5,487,748	A	1/1996	Marshall	606/182
D367,109	S	2/1996	Ryner	D24/224
5,490,505	A	2/1996	Diab	600/323
5,496,274	A	3/1996	Graves	604/86
5,496,453	A	3/1996	Uenoyama	205/777.5
5,498,542	A	3/1996	Corey	435/283.1
5,501,836	A	3/1996	Myerson	42/57
5,501,893	A	3/1996	Laermer	428/161
5,507,288	A	4/1996	Bocker	128/633
5,507,629	A	4/1996	Jarvik	417/423.3
5,508,171	A	4/1996	Walling	205/777.5
5,509,410	A	4/1996	Hill	128/637
5,510,266	A	4/1996	Bonner et al.	436/43
5,512,159	A	4/1996	Yoshioka	204/403
5,514,152	A	5/1996	Smith	606/182
5,515,170	A	5/1996	Matzinger	356/423
5,518,006	A	5/1996	Mawhirt	128/770
D371,198	S	6/1996	Savage	D24/169
5,524,636	A	6/1996	Sarvazyan	128/774
5,525,511	A	6/1996	D'Costa	435/287.9
5,525,518	A	6/1996	Lundsgaard	436/68
5,526,120	A	6/1996	Jina	356/446
5,527,333	A	6/1996	Nikkels	606/182
5,527,334	A	6/1996	Kanner	606/182
5,529,074	A	6/1996	Greenfield	600/557
5,540,676	A	7/1996	Freiberg	606/3
5,540,709	A	7/1996	Ramel	606/183
5,543,326	A	8/1996	Heller	435/287.9
5,545,174	A	8/1996	Schenk	606/182
5,545,291	A	8/1996	Smith	438/107
5,547,702	A	8/1996	Gleisner	427/2.13
D373,419	S	9/1996	Muramatsu	D24/165
5,554,153	A	9/1996	Costello	606/9
5,554,166	A	9/1996	Lange	606/182
5,558,834	A	9/1996	Chu	422/55
5,562,384	A	10/1996	Alvite	414/226.01
5,562,696	A	10/1996	Nobles	606/185
5,563,031	A	10/1996	Yu	435/4
5,563,042	A	10/1996	Phillips	435/14
5,569,286	A	10/1996	Peckham	606/181
5,569,287	A	10/1996	Tezuka	606/182
5,571,132	A	11/1996	Mawhirt	606/182
5,575,284	A	11/1996	Athan	600/323
5,575,403	A	11/1996	Charlton	221/31
5,575,895	A	11/1996	Ikeda	204/403
5,582,697	A	12/1996	Ikeda	204/403
5,584,846	A	12/1996	Mawhirt	606/181
5,591,139	A	1/1997	Lin	604/264
5,593,852	A	1/1997	Heller	435/14
5,599,501	A	2/1997	Carey	422/64
5,603,699	A *	2/1997	Shine	604/110
5,605,837	A	2/1997	Karimi	436/14
D378,612	S	3/1997	Clark	D24/169

(56) **References Cited**

U.S. PATENT DOCUMENTS

5,608,006	A	3/1997	Myerson	525/54.1
5,609,749	A	3/1997	Yamauchi	205/777.5
5,611,809	A	3/1997	Marshall	606/181
5,611,810	A	3/1997	Arnold	606/185
5,613,978	A	3/1997	Harding	606/181
5,616,135	A	4/1997	Thorne	604/192
5,617,851	A	4/1997	Lipkovker	600/573
5,618,297	A	4/1997	Hart	606/185
5,620,579	A	4/1997	Genshaw et al.	204/402
5,620,863	A	4/1997	Tomasco	435/14
5,624,458	A	4/1997	Lipscher	606/181
5,624,459	A	4/1997	Kortenbach	606/185
5,624,537	A	4/1997	Turner	204/403
D379,516	S	5/1997	Rutter	D24/146
5,628,764	A	5/1997	Schraga	606/182
5,628,765	A	5/1997	Morita	606/182
5,628,890	A	5/1997	Carter	204/403
5,628,961	A	5/1997	Davis	422/63
5,630,828	A	5/1997	Mawhirt	606/187
5,630,986	A	5/1997	Charlton	422/64
5,632,410	A	5/1997	Moulton	221/79
5,640,954	A	6/1997	Pfeiffer	128/635
D381,591	S	7/1997	Rice	D10/81
5,643,306	A	7/1997	Schraga	606/182
5,643,308	A	7/1997	Markman	606/187
5,645,555	A	7/1997	Davis	606/182
5,647,851	A	7/1997	Pokras	604/131
5,650,062	A	7/1997	Ikeda	205/778
5,653,863	A	8/1997	Genshaw	205/777.5
5,657,760	A	8/1997	Ying	128/660.03
5,658,444	A	8/1997	Black	204/415
5,660,791	A	8/1997	Brenneman	422/58
D383,550	S	9/1997	Larson	D24/225
5,662,127	A	9/1997	De Vaughn	128/765
5,662,672	A	9/1997	Pambianchi	606/181
5,666,966	A	9/1997	Horie	128/760
5,676,143	A	10/1997	Simonsen	128/633
5,678,306	A	10/1997	Bozeman	29/888.025
5,680,858	A	10/1997	Hansen et al.	128/635
5,680,872	A	10/1997	Sesekura	128/760
5,682,233	A	10/1997	Brinda	356/246
5,682,884	A	11/1997	Hill	128/637
5,683,562	A	11/1997	Schaffar	204/403
5,691,898	A	11/1997	Rosenberg	700/85
5,692,514	A	12/1997	Bowman	600/504
5,695,947	A	12/1997	Guo	435/11
5,700,695	A	12/1997	Yassinzadeh	436/180
5,705,045	A	1/1998	Park	204/403
5,707,384	A	1/1998	Kim	606/181
5,708,247	A	1/1998	McAleer	204/403
5,709,668	A	1/1998	Wacks	604/232
5,709,699	A	1/1998	Warner	606/181
5,710,011	A	1/1998	Forrow	435/25
5,714,123	A	2/1998	Sohrab	422/99
5,714,390	A	2/1998	Hallowitz	436/526
5,719,034	A	2/1998	Kiser	435/14
5,720,862	A	2/1998	Hamamoto	204/403
5,720,924	A	2/1998	Eikmeier	422/102
D392,391	S	3/1998	Douglas	D24/225
D392,740	S	3/1998	Yung	D24/169
5,723,284	A	3/1998	Ye	435/4
5,727,548	A	3/1998	Hill	128/637
5,729,905	A	3/1998	Mathiasmeier	33/3 R
5,730,753	A	3/1998	Morita	606/181
5,733,085	A	3/1998	Shida	411/442
5,733,300	A	3/1998	Pambianchi	606/181
D393,716	S	4/1998	Brenneman	D24/147
D393,717	S	4/1998	Brenneman	D24/147
5,735,868	A	4/1998	Lee	606/189
5,736,103	A	4/1998	Pugh	422/68.1
5,738,244	A	4/1998	Charlton	221/26
5,741,228	A	4/1998	Lambrecht	604/93
5,741,634	A	4/1998	Nozoe	435/4
RE35,803	E	5/1998	Lange	606/182
5,746,217	A	5/1998	Erickson	128/760
5,746,761	A	5/1998	Turchin	606/181
5,746,898	A	5/1998	Preidel	204/403
5,753,429	A	5/1998	Pugh	435/4
5,753,452	A	5/1998	Smith	435/14
5,755,228	A	5/1998	Wilson	600/459
5,755,733	A	5/1998	Morita	606/182
5,758,643	A	6/1998	Wong	600/309
5,759,364	A	6/1998	Charlton	204/403
5,762,770	A	6/1998	Pritchard	204/403
5,770,086	A	6/1998	Indriksons	210/643
5,770,369	A	6/1998	Meade	435/6
5,772,586	A	6/1998	Heinonen	600/300
5,772,677	A	6/1998	Mawhirt	606/181
5,773,270	A	6/1998	D'Orazio	435/177
5,776,157	A	7/1998	Thorne	606/182
5,776,719	A	7/1998	Douglas	435/28
5,779,365	A	7/1998	Takaki	374/161
5,780,304	A	7/1998	Matzinger	436/169
5,782,770	A	7/1998	Mooradian	600/476
5,782,852	A *	7/1998	Foggia et al.	606/182
5,788,651	A	8/1998	Weilandt	600/567
5,788,652	A	8/1998	Rahn	600/577
5,789,255	A	8/1998	Yu	536/95
5,794,219	A	8/1998	Brown	705/37
5,795,725	A	8/1998	Buechler	435/7.1
5,795,774	A	8/1998	Matsumoto	435/287.9
5,797,940	A	8/1998	Mawhirt	606/167
5,797,942	A	8/1998	Schraga	606/182
5,798,030	A	8/1998	Raguse	204/403
5,798,031	A	8/1998	Charlton	204/403
5,800,781	A	9/1998	Gavin	422/73
5,801,057	A	9/1998	Smart	436/68
5,807,375	A	9/1998	Gross	604/890.1
5,810,199	A	9/1998	Charlton et al.	221/31
D399,566	S	10/1998	Sohrab	D24/169
5,820,551	A	10/1998	Hill	600/347
5,822,715	A	10/1998	Worthington	702/19
5,823,973	A	10/1998	Racchini	600/573
5,824,491	A	10/1998	Priest	435/28
5,827,181	A	10/1998	Dias	600/322
5,828,943	A	10/1998	Brown	434/258
5,829,589	A	11/1998	Nguyen	206/366
5,830,219	A	11/1998	Bird	606/130
5,832,448	A	11/1998	Brown	705/2
5,840,020	A	11/1998	Heinonen	600/309
5,840,171	A	11/1998	Birch	205/335
5,843,691	A	12/1998	Douglas	435/14
5,843,692	A	12/1998	Phillips	435/14
5,846,216	A	12/1998	Gonzales	604/2
5,846,486	A	12/1998	Pugh	422/56
5,846,490	A	12/1998	Yokota	422/66
5,849,174	A	12/1998	Sanghera	205/775
5,853,373	A	12/1998	Griffith	600/554
5,854,074	A	12/1998	Charlton	436/46
D403,975	S	1/1999	Douglas	D10/81
5,855,377	A	1/1999	Murphy	279/50
5,855,801	A	1/1999	Lin	216/2
5,856,174	A	1/1999	Lipshutz	435/286.5
5,856,195	A	1/1999	Charlton	436/50
5,857,967	A	1/1999	Frid	600/301
5,857,983	A	1/1999	Douglas	600/538
5,858,804	A	1/1999	Zanzucchi	506/9
5,860,922	A	1/1999	Gordon et al.	600/431
5,863,800	A	1/1999	Eikmeier	436/48
5,866,353	A	2/1999	Berneth	435/26
5,868,135	A	2/1999	Kaufman	128/630
5,868,772	A	2/1999	LeVaughn	606/181
5,869,972	A	2/1999	Birch	324/439
5,871,494	A	2/1999	Simons	606/181
5,872,713	A	2/1999	Douglas	702/85
5,873,856	A	2/1999	Hjertman et al.	
5,873,887	A	2/1999	King	606/182
5,876,351	A	3/1999	Rohde	600/523
5,876,957	A	3/1999	Douglas	435/28
5,879,163	A	3/1999	Brown	434/236
5,879,310	A	3/1999	Sopp	600/578
5,879,311	A	3/1999	Duchon	600/583
5,879,373	A	3/1999	Roeper	606/344
5,880,829	A	3/1999	Kauhaniemi	356/246

(56) **References Cited**

U.S. PATENT DOCUMENTS

5,882,494	A	3/1999	van Antwerp	204/403
5,885,211	A	3/1999	Eppstein	600/309
5,886,056	A	3/1999	Hershkowitz	518/703
5,887,133	A	3/1999	Brown	395/200.3
5,890,128	A	3/1999	Diaz	705/2
RE36,191	E	4/1999	Solomon	395/308
5,891,053	A	4/1999	Sesekura	600/583
5,892,569	A	4/1999	Van de Velde	351/221
5,893,848	A	4/1999	Negus	606/41
5,893,870	A	4/1999	Talen	606/201
5,897,493	A	4/1999	Brown	600/300
5,897,569	A	4/1999	Kellogg	606/169
5,899,855	A	5/1999	Brown	600/301
5,899,915	A	5/1999	Saadat	606/170
5,900,130	A	5/1999	Benvegnu	204/453
5,902,731	A	5/1999	Ouyang	435/26
5,906,921	A	5/1999	Ikeda	435/25
D411,619	S	6/1999	Duchon	D24/146
5,908,416	A	6/1999	Costello	606/9
5,911,937	A	6/1999	Hekal	264/255
5,912,134	A	6/1999	Shartle	435/7.24
5,913,310	A	6/1999	Brown	128/897
5,916,156	A	6/1999	Hildenbrand	600/347
5,916,229	A	6/1999	Evans	606/171
5,916,230	A	6/1999	Brenneman	606/172
5,918,603	A	7/1999	Brown	128/897
5,919,711	A	7/1999	Boyd	436/178
5,921,963	A	7/1999	Erez	604/192
5,922,188	A	7/1999	Ikeda	204/777.5
5,922,530	A	7/1999	Yu	435/4
5,922,591	A	7/1999	Anderson	435/287.2
RE36,268	E	8/1999	Szuminsky	205/777.5
5,931,794	A	8/1999	Pitesky	600/556
5,933,136	A	8/1999	Brown	345/327
5,935,075	A	8/1999	Casscells et al.	600/474
5,938,635	A *	8/1999	Kuhle	604/506
5,938,679	A	8/1999	Freeman	606/181
5,940,153	A	8/1999	Castaneda	349/58
5,942,102	A	8/1999	Hodges	205/775
5,942,189	A	8/1999	Wolfbeis	422/82.08
5,947,957	A	9/1999	Morris	606/13
5,951,300	A	9/1999	Brown	434/236
5,951,492	A	9/1999	Douglas	600/583
5,951,493	A	9/1999	Douglas	600/583
5,951,530	A *	9/1999	Steengaard et al.	604/272
5,951,582	A	9/1999	Thorne	606/182
5,951,836	A	9/1999	McAleer	204/403
5,954,738	A	9/1999	LeVaughn	606/181
5,956,501	A	9/1999	Brown	395/500.32
5,957,846	A	9/1999	Chiang	600/447
5,957,862	A *	9/1999	Lu et al.	600/548
5,958,199	A	9/1999	Miyamoto	204/403
5,959,098	A	9/1999	Goldberg	536/25.3
5,960,403	A	9/1999	Brown	705/2
5,961,451	A	10/1999	Reber	600/322
5,964,718	A	10/1999	Duchon	600/583
5,965,380	A	10/1999	Heller	435/14
5,968,063	A	10/1999	Chu	606/185
5,968,760	A	10/1999	Phillips	435/14
5,968,836	A	10/1999	Matzinger	436/169
5,971,941	A	10/1999	Simons	606/573
5,972,199	A	10/1999	Heller	205/777.5
5,972,294	A	10/1999	Smith	422/58
5,972,715	A	10/1999	Celentano	436/164
5,974,124	A	10/1999	Schlueter	379/106.02
5,976,085	A	11/1999	Kimball	600/309
5,983,193	A	11/1999	Heinonen	705/2
5,985,116	A	11/1999	Ikeda	204/403
5,985,559	A	11/1999	Brown	435/6
5,986,754	A	11/1999	Harding	356/246
5,993,400	A	11/1999	Rincoe	600/595
5,993,434	A	11/1999	Dev	604/501
D417,504	S	12/1999	Love	D24/169
5,997,476	A	12/1999	Brown	600/300
5,997,509	A	12/1999	Rosengart et al.	
5,997,561	A	12/1999	Boecker	606/182
5,997,817	A	12/1999	Crismore	422/58
5,997,818	A	12/1999	Hackner	422/681
6,001,067	A	12/1999	Shults	600/584
6,007,497	A	12/1999	Huitema	600/567
D418,602	S	1/2000	Prokop	D24/169
6,014,577	A	1/2000	Henning	600/345
6,015,392	A	1/2000	Douglas	600/583
6,018,289	A	1/2000	Sekura	340/309.4
6,020,110	A	2/2000	Williams	430/315
6,022,324	A	2/2000	Skinner	600/566
6,022,366	A	2/2000	Schraga	606/181
6,022,748	A	2/2000	Charych	436/527
6,023,629	A	2/2000	Tamada	600/347
6,023,686	A	2/2000	Brown	705/37
6,027,459	A	2/2000	Shain	600/573
6,030,399	A	2/2000	Ignotz	606/167
6,030,827	A	2/2000	Davis	435/287
6,030,967	A	2/2000	Marui	514/215
6,032,059	A	2/2000	Henning	600/345
6,032,119	A	2/2000	Brown	705/2
6,033,421	A	3/2000	Theiss	606/186
6,033,866	A	3/2000	Guo	435/14
6,036,924	A	3/2000	Simons	422/100
6,037,178	A	3/2000	Leiner	436/50
6,041,253	A	3/2000	Kost	604/20
6,045,567	A	4/2000	Taylor	606/181
6,046,055	A	4/2000	Wolfbeis	436/172
6,048,352	A	4/2000	Douglas	606/181
D424,696	S	5/2000	Ray	D24/169
6,056,701	A	5/2000	Duchon	600/583
6,059,815	A	5/2000	Lee	606/209
6,060,327	A	5/2000	Keen	436/518
6,061,128	A	5/2000	Zweig	356/243.4
6,063,039	A	5/2000	Cunningham	600/573
6,066,103	A	5/2000	Duchon	600/583
6,066,243	A	5/2000	Anderson	422/82.01
6,066,296	A	5/2000	Brady	422/63
6,067,463	A	5/2000	Jeng	600/336
6,068,615	A	5/2000	Brown	604/207
D426,638	S	6/2000	Ray	D24/169
6,070,761	A	6/2000	Bloom	222/81
6,071,249	A	6/2000	Cunningham	600/578
6,071,250	A	6/2000	Douglas	600/583
6,071,251	A	6/2000	Cunningham	600/584
6,071,294	A	6/2000	Simons	606/181
6,071,391	A	6/2000	Gotoh	204/403
6,074,360	A	6/2000	Haar et al.	604/57
6,077,408	A	6/2000	Miyamoto	204/403
6,080,106	A	6/2000	Lloyd	600/300
6,080,172	A	6/2000	Fujiwara	606/166
D428,150	S	7/2000	Ruf	D24/146
6,083,196	A	7/2000	Trautman	604/46
6,083,710	A	7/2000	Heller	435/14
6,084,660	A	7/2000	Shartle	356/39
6,085,576	A	7/2000	Sunshine	73/29.01
6,086,544	A	7/2000	Hibner	600/568
6,086,545	A	7/2000	Roe	600/570
6,086,562	A	7/2000	Jacobsen	604/156
6,090,078	A	7/2000	Erskine	604/198
6,091,975	A	7/2000	Daddona	600/345
6,093,146	A	7/2000	Filangeri	600/300
6,093,156	A	7/2000	Cunningham et al.	600/573
D428,993	S	8/2000	Lubs	D24/165
6,099,484	A	8/2000	Douglas	600/583
6,099,802	A	8/2000	Pugh	422/58
6,100,107	A	8/2000	Lei	438/50
6,101,478	A	8/2000	Brown	705/2
6,102,933	A	8/2000	Lee	606/209
6,103,033	A	8/2000	Say	156/73.1
6,103,509	A	8/2000	Sode	435/190
6,104,940	A	8/2000	Watanabe	600/345
6,106,751	A	8/2000	Talbot	264/81
6,107,083	A	8/2000	Collins	435/288
6,113,578	A	9/2000	Brown	604/207
6,117,155	A	9/2000	Lee	606/189
6,117,630	A	9/2000	Reber	435/4
6,118,126	A	9/2000	Zanzucchi	250/458.1
6,119,033	A	9/2000	Spigelman	600/426

(56) **References Cited**

U.S. PATENT DOCUMENTS

6,120,462	A	9/2000	Hibner	600/566
6,120,676	A	9/2000	Heller	205/777.5
6,121,009	A	9/2000	Heller	435/14
6,122,536	A	9/2000	Sun	600/341
6,126,804	A	10/2000	Andresen	204/601
6,126,899	A	10/2000	Woudenberg	422/50
6,129,823	A	10/2000	Hughes	204/403.01
6,132,449	A	10/2000	Lum	606/181
6,133,837	A	10/2000	Riley	340/573.1
6,134,461	A	10/2000	Say	600/345
6,136,013	A	10/2000	Marshall	606/167
6,139,562	A	10/2000	Mauze	606/171
6,143,164	A	11/2000	Heller	600/583
6,144,837	A	11/2000	Quy	434/307 R
6,144,976	A	11/2000	Silva et al.	708/100
6,149,203	A	11/2000	Hanlon	283/72
6,151,586	A	11/2000	Brown	705/14
6,152,875	A	11/2000	Hakamata	600/319
6,152,942	A	11/2000	Brenneman	606/181
6,153,069	A	11/2000	Pottgen	204/403
RE36,991	E	12/2000	Yamamoto	204/403
6,155,267	A	12/2000	Nelson	128/899
6,155,992	A	12/2000	Henning et al.	600/583
6,156,051	A	12/2000	Schraga	606/181
6,157,442	A	12/2000	Raskas	356/39
6,159,147	A	12/2000	Lichter	600/300
6,159,424	A	12/2000	Kauhaniemi	422/63
6,161,095	A	12/2000	Brown	705/2
6,162,397	A	12/2000	Jurik	422/56
6,162,611	A	12/2000	Heller	435/14
6,167,362	A	12/2000	Brown	703/11
6,167,386	A	12/2000	Brown	705/37
6,168,563	B1	1/2001	Brown	600/301
6,168,957	B1	1/2001	Matzinger	436/518
6,171,325	B1	1/2001	Mauze	606/171
6,172,743	B1	1/2001	Kley et al.	356/39
6,175,752	B1	1/2001	Say	600/345
6,176,847	B1	1/2001	Humphreys	604/246
6,176,865	B1	1/2001	Mauze	606/171
6,177,000	B1	1/2001	Peterson	205/777.5
6,177,931	B1	1/2001	Alexander	725/52
6,183,489	B1	2/2001	Douglas	606/181
6,186,145	B1	2/2001	Brown	128/897
6,190,612	B1	2/2001	Berger	422/82.07
6,191,852	B1	2/2001	Paffhausen	356/244
6,192,891	B1	2/2001	Gravel	128/920
6,193,673	B1	2/2001	Viola	600/568
6,193,873	B1	2/2001	Ohara	205/792
6,194,900	B1	2/2001	Freeman	324/321
6,197,040	B1	3/2001	LeVaughn	606/182
6,197,257	B1	3/2001	Raskas	422/82.05
6,200,289	B1	3/2001	Hochman et al.	
6,200,773	B1	3/2001	Ouyang	435/26
6,203,504	B1	3/2001	Latterell	600/576
6,206,841	B1	3/2001	Cunningham et al.	600/584
6,210,133	B1	4/2001	Aboul-Hosn	417/423.1
6,210,272	B1	4/2001	Brown	463/1
6,210,369	B1	4/2001	Wilmot	604/157
6,210,420	B1	4/2001	Mauze	606/182
6,210,421	B1	4/2001	Bocker	606/182
6,212,417	B1	4/2001	Ikeda	204/403.14
6,214,626	B1	4/2001	Meller	436/165
6,214,804	B1	4/2001	Felgner	514/44
6,218,571	B1	4/2001	Zheng	562/61
6,219,574	B1	4/2001	Cormier	604/20
6,221,023	B1	4/2001	Matsuba	600/486
6,221,238	B1	4/2001	Grundig	205/777.5
6,224,617	B1	5/2001	Saadat et al.	606/170
6,225,078	B1	5/2001	Ikeda	435/25
6,228,100	B1	5/2001	Schraga	606/183
6,230,051	B1	5/2001	Cormier	604/20
6,230,501	B1	5/2001	Bailey	62/51.1
6,231,531	B1	5/2001	Lum	601/46
6,233,471	B1	5/2001	Berner	600/345
6,233,539	B1	5/2001	Brown	703/11
6,234,772	B1	5/2001	Wampler	417/423.12
6,240,393	B1	5/2001	Brown	705/1
D444,235	S	6/2001	Roberts	D24/169
6,241,862	B1	6/2001	McAleer	204/403
6,242,207	B1	6/2001	Douglas	435/25
6,245,060	B1	6/2001	Loomis	606/9
6,245,215	B1	6/2001	Douglas	205/775
6,246,992	B1	6/2001	Brown	705/2
6,248,065	B1	6/2001	Brown	600/300
6,251,083	B1	6/2001	Yum	600/584
6,251,121	B1	6/2001	Saadat	606/180
6,251,260	B1	6/2001	Heller	205/777.5
6,251,344	B1	6/2001	Goldstein	422/123
D444,557	S	7/2001	Levaughn	D24/146
6,254,831	B1	7/2001	Barnard	422/82.08
6,256,533	B1	7/2001	Vuzhakov	604/21
6,258,111	B1	7/2001	Ross	606/171
6,258,229	B1	7/2001	Winarta	204/403
6,258,254	B1	7/2001	Miyamoto	205/777.5
6,261,241	B1	7/2001	Burbank	600/564
6,261,245	B1	7/2001	Kawai	600/576
6,261,519	B1	7/2001	Harding	422/58
6,264,635	B1	7/2001	Wampler	604/151
6,268,161	B1	7/2001	Han	435/14
6,268,162	B1	7/2001	Phillips	435/14
6,269,314	B1	7/2001	Iitawaki	702/23
6,270,455	B1	8/2001	Brown	600/300
6,270,637	B1	8/2001	Crismore	204/403
6,272,359	B1	8/2001	Kivela	455/567
6,272,364	B1	8/2001	Kurnik	600/345
6,275,717	B1	8/2001	Gross	600/345
6,280,254	B1	8/2001	Wu	439/630
6,281,006	B1	8/2001	Heller	435/287.9
6,283,926	B1	9/2001	Cunningham	600/573
6,283,982	B1	9/2001	Levaughn	606/172
6,284,478	B1	9/2001	Heller	435/14
6,285,448	B1	9/2001	Kuenstner	356/39
6,285,454	B1	9/2001	Douglas	356/446
6,289,254	B1	9/2001	Shimizu	700/96
6,290,683	B1	9/2001	Erez	604/273
6,294,897	B1	9/2001	Champlin	320/153
6,295,506	B1	9/2001	Heinonen	702/104
6,299,578	B1	10/2001	Kurnik	600/309
6,299,596	B1	10/2001	Ding	604/96.01
6,299,757	B1	10/2001	Feldman	205/775
6,302,844	B1	10/2001	Walker	600/300
6,302,855	B1	10/2001	Lav	600/584
6,305,804	B1	10/2001	Rice	351/221
6,306,104	B1	10/2001	Cunningham	600/573
6,306,152	B1	10/2001	Verdonk	606/182
6,306,347	B1	10/2001	Mason	422/58
6,309,351	B1	10/2001	Kurnik	600/309
6,309,370	B1	10/2001	Haim et al.	
6,309,535	B1	10/2001	Williams	205/777.5
6,312,612	B1	11/2001	Sherman	216/2
6,315,738	B1	11/2001	Nishikawa	600/583
6,318,970	B1	11/2001	Backhouse	417/92
6,319,210	B1	11/2001	Douglas	600/583
6,322,574	B1	11/2001	Lloyd	606/181
6,322,808	B1	11/2001	Trautman	424/448
6,322,963	B1	11/2001	Bauer	435/4
6,329,161	B1	12/2001	Heller	435/14
6,330,426	B2	12/2001	Brown	434/307 R
6,331,163	B1	12/2001	Kaplan	600/486
6,332,871	B1	12/2001	Douglas	600/583
6,334,363	B1	1/2002	Testud	73/862
6,334,778	B1	1/2002	Brown	434/258
6,334,856	B1	1/2002	Allen	604/191
6,335,203	B1	1/2002	Patel	436/169
6,336,900	B1	1/2002	Alleckson	600/485
6,338,790	B1	1/2002	Feldman	205/777.5
6,346,120	B1	2/2002	Yamazaki	623/3.13
6,349,229	B1	2/2002	Watanabe	600/345
6,350,273	B1	2/2002	Minagawa	606/186
6,350,451	B1	2/2002	Horn	424/184.1
6,352,514	B1	3/2002	Douglas	600/583
6,352,523	B1	3/2002	Brown	604/207
6,353,753	B1	3/2002	Flock	600/473
6,358,196	B1	3/2002	Rayman	

(56) **References Cited**

U.S. PATENT DOCUMENTS

6,364,889	B1	4/2002	Kheiri et al.	606/181
6,364,890	B1	4/2002	Lum	606/181
6,368,273	B1	4/2002	Brown	600/300
6,375,469	B1	4/2002	Brown	434/236
6,375,626	B1	4/2002	Allen et al.	600/584
6,379,301	B1	4/2002	Worthington	600/309
6,379,317	B1	4/2002	Kintzig	600/573
6,379,324	B1	4/2002	Gartstein	604/22
6,379,969	B1	4/2002	Mauze	600/584
6,381,577	B1	4/2002	Brown	705/2
D456,910	S	5/2002	Clark	D24/225
6,387,709	B1	5/2002	Mason	436/164
6,391,005	B1	5/2002	Lum	604/117
6,395,227	B1	5/2002	Kiser	422/56
6,398,522	B2	6/2002	Skill	417/410.3
6,398,562	B1	6/2002	Butler	439/91
6,399,394	B1	6/2002	Dahm	436/180
6,402,701	B1	6/2002	Kaplan	600/567
6,402,704	B1	6/2002	Mcmorrow	600/576
6,409,740	B1	6/2002	Kuhr	606/182
6,413,410	B1	7/2002	Hodges	205/775
6,413,411	B1	7/2002	Pottgen	205/777.5
6,415,821	B2	7/2002	Kamholz	137/827
6,419,661	B1	7/2002	Kuhr et al.	
6,420,128	B1	7/2002	Ouyang	435/14
6,421,633	B1	7/2002	Heinonen	703/11
6,423,014	B1	7/2002	Churchill	600/587
6,428,664	B1	8/2002	Bhullar	204/403.03
6,436,055	B1	8/2002	Roe	600/584
6,436,256	B1	8/2002	Williams	204/403.06
6,436,721	B1	8/2002	Kuo	436/514
6,440,645	B1	8/2002	Yon-Hin	430/322
6,444,115	B1	9/2002	Hodges	205/792
6,447,119	B1	9/2002	Stewart et al.	351/212
6,447,265	B1	9/2002	Antaki	417/354
6,451,040	B1	9/2002	Purcell	606/181
6,453,810	B1	9/2002	Rossmeisl	101/123
6,458,258	B2	10/2002	Taniike	204/403
6,461,496	B1	10/2002	Feldman	205/777.5
6,462,162	B2	10/2002	van Antwerp	528/77
6,464,649	B1	10/2002	Duchon	600/583
6,471,903	B2	10/2002	Sherman	264/328.1
6,472,220	B1	10/2002	Simons	436/63
6,475,360	B1	11/2002	Hodges	204/403.14
6,475,372	B1	11/2002	Ohara	205/777.5
6,475,436	B1	11/2002	Schabbach	422/64
6,475,750	B1	11/2002	Han	435/14
6,477,394	B2	11/2002	Rice	600/318
6,477,424	B1	11/2002	Thompson	607/60
6,484,046	B1	11/2002	Say	600/345
6,485,439	B1	11/2002	Roe	600/578
6,485,461	B1	11/2002	Mason	604/132
6,485,923	B1	11/2002	Yani	435/14
6,488,827	B1	12/2002	Shartle	204/403
6,488,872	B1	12/2002	Beebe et al.	264/31
6,488,891	B2	12/2002	Mason	422/58
6,489,133	B2	12/2002	Phillips	435/14
6,491,709	B2	12/2002	Sharma	606/181
6,491,870	B2	12/2002	Patel	422/58
6,494,830	B1	12/2002	Wessel	600/300
6,497,845	B1	12/2002	Sacherer	422/104
6,501,404	B2	12/2002	Walker	341/143
6,501,976	B1	12/2002	Sohrab	600/347
6,503,209	B2	1/2003	Hakky et al.	
6,503,210	B1	1/2003	Hirao	600/576
6,503,231	B1	1/2003	Prausnitz	604/272
6,503,290	B1	1/2003	Jarosinski	75/252
6,503,381	B1	1/2003	Gotoh	204/403.14
6,506,165	B1	1/2003	Sweeney	600/562
6,506,168	B1	1/2003	Fathallah	600/578
6,506,575	B1	1/2003	Knappe	435/25
6,508,785	B1	1/2003	Eppstein	604/113
6,512,986	B1	1/2003	Harmon	702/84
6,514,270	B1	2/2003	Schraga	606/182
6,514,460	B1	2/2003	Fendrock	422/55
6,519,241	B1	2/2003	Theimer	370/338
6,520,326	B2	2/2003	McIvor	206/305
6,521,110	B1	2/2003	Hodges	204/403.14
6,521,182	B1	2/2003	Shartle	422/58
6,527,521	B2	3/2003	Noda	417/355
6,527,716	B1	3/2003	Epstein	600/309
6,527,778	B2	3/2003	Athanasiou	606/80
6,529,377	B1	3/2003	Nelson	361/699
6,530,892	B1	3/2003	Kelly	600/583
6,530,937	B1	3/2003	Schraga	606/182
6,531,322	B1	3/2003	Jurik	436/95
6,533,949	B1	3/2003	Yeshurun	216/11
6,537,207	B1	3/2003	Rice	600/121
6,537,242	B1	3/2003	Palmer	604/22
6,537,264	B1 *	3/2003	Cormier et al.	604/506
6,537,292	B1	3/2003	Lee	606/182
6,540,672	B1	4/2003	Simonsen	600/300
6,540,675	B2	4/2003	Aceti	600/309
6,540,762	B1	4/2003	Bertling	606/182
6,540,891	B1	4/2003	Stewart	204/403.14
6,541,266	B2	4/2003	Modzelewski	436/95
6,547,954	B2	4/2003	Ikeda	205/777.5
6,549,796	B2	4/2003	Sohrab	600/345
6,551,494	B1	4/2003	Heller	205/777.5
6,553,244	B2	4/2003	Lesho	600/347
6,554,381	B2	4/2003	Locher	347/7
6,555,061	B1	4/2003	Leong	422/58
D475,136	S	5/2003	Taniguchi	D24/165
6,558,320	B1	5/2003	Causey	600/300
6,558,361	B1	5/2003	Yeshurun	604/272
6,558,402	B1 *	5/2003	Chelak et al.	606/182
6,558,528	B1	5/2003	Matzinger	205/777.5
6,560,471	B1	5/2003	Heller	600/347
6,561,978	B1	5/2003	Conn	600/309
6,561,989	B2	5/2003	Whitson	600/573
6,562,210	B1	5/2003	Bhullar	204/403.3
6,565,509	B1	5/2003	Iketaki et al.	600/365
6,565,808	B2	5/2003	Hudak	422/58
6,569,157	B1	5/2003	Shain	606/12
6,571,651	B1	6/2003	Hodges	73/864.72
6,572,566	B2	6/2003	Effenhauser	600/584
6,572,822	B2	6/2003	Jurik	422/56
6,574,490	B2	6/2003	Abbink	600/316
6,575,905	B2	6/2003	Knobbe	600/365
6,576,101	B1	6/2003	Heller	204/403.14
6,576,117	B1	6/2003	Iketaki	205/777.5
6,576,416	B2	6/2003	Haviland	435/4
6,579,690	B1	6/2003	Bonnecaze	435/14
6,582,573	B2	6/2003	Douglas	204/403.1
6,584,338	B1	6/2003	Van Muiswinkel	600/419
D477,670	S	7/2003	Jurik	D24/225
6,586,199	B2	7/2003	Ouyang	435/26
6,587,705	B1	7/2003	Kim	600/347
6,589,260	B1	7/2003	Schmelzeisen-Redeker	606/181
6,589,261	B1	7/2003	Abulhaj	606/181
6,591,124	B2	7/2003	Sherman et al.	600/345
6,591,125	B1	7/2003	Buse	600/347
6,592,744	B1	7/2003	Hodges	205/775
6,592,745	B1	7/2003	Feldman	205/777.5
6,595,919	B2	7/2003	Berner	600/365
6,599,281	B1	7/2003	Struys et al.	
6,599,407	B2	7/2003	Taniike	204/403.1
6,599,693	B1	7/2003	Webb	435/4
6,599,769	B2	7/2003	Kondo	438/28
6,601,534	B2	8/2003	Hebrank	119/6.8
6,602,205	B1	8/2003	Erickson	600/573
6,602,268	B2	8/2003	Kuhr	606/181
6,602,678	B2	8/2003	Kwon	435/14
6,604,050	B2	8/2003	Trippel	702/19
6,607,362	B2	8/2003	Lum	417/53
6,607,494	B1	8/2003	Fowler	600/570
6,607,658	B1	8/2003	Heller	205/777.5
6,612,111	B1	9/2003	Hodges	60/593
6,616,616	B2	9/2003	Fritz	600/583
6,616,819	B1	9/2003	Liamos	204/403.02
6,618,934	B1	9/2003	Feldman	29/830
6,620,112	B2	9/2003	Klitmose	600/583
6,620,310	B1	9/2003	Ohara	205/792
6,623,501	B2	9/2003	Heller	606/181

(56) **References Cited**

U.S. PATENT DOCUMENTS

6,626,851	B2	9/2003	Hirao	600/576
6,632,349	B1	10/2003	Hodges	205/792
6,635,222	B2	10/2003	Kent	422/22
6,638,415	B1	10/2003	Hodges	205/775
6,638,772	B1	10/2003	Douglas	436/518
6,641,533	B2	11/2003	Causey	600/300
6,645,142	B2	11/2003	Braig	600/300
6,645,219	B2	11/2003	Roe	606/182
6,645,368	B1	11/2003	Beatty	205/792
6,649,416	B1	11/2003	Kauer	436/164
6,650,915	B2	11/2003	Routt	600/319
6,652,720	B1	11/2003	Mansouri	204/403.11
6,652,734	B1	11/2003	Hodges	205/777.5
6,652,814	B1	11/2003	House	422/104
D484,600	S	12/2003	Kaar	D24/169
6,656,428	B1	12/2003	Clark et al.	422/404
6,656,697	B1	12/2003	Ouyang	435/7.9
6,656,702	B1	12/2003	Yugawa	435/26
6,659,966	B2	12/2003	Essenpreis	600/583
6,660,018	B2	12/2003	Lum	606/181
6,662,439	B1	12/2003	Bhullar	29/825
6,669,669	B2	12/2003	Flaherty	604/132
6,671,527	B2	12/2003	Peterson	600/316
D484,980	S	1/2004	Hartwein	D24/165
6,673,617	B2	1/2004	Patel	436/8
6,676,995	B2	1/2004	Dick	427/286
6,679,841	B2	1/2004	Bojan	600/309
6,679,852	B1	1/2004	Forster et al.	600/583
6,682,933	B2	1/2004	Patel	436/8
6,689,411	B2	2/2004	Dick	427/2.13
6,706,000	B2	3/2004	Perez	600/583
6,706,049	B2	3/2004	Moerman	606/181
6,706,159	B2	3/2004	Moerman	204/403.03
6,706,232	B2	3/2004	Hasegawa	264/403.09
6,709,692	B2	3/2004	Sudor	427/2.1
6,713,660	B1	3/2004	Roe	604/361
6,716,577	B1	4/2004	Yu	435/6
6,719,887	B2	4/2004	Hasegawa	204/403.09
6,719,923	B2	4/2004	Stiene	252/511
6,721,586	B2	4/2004	Kiser	600/345
6,723,046	B2	4/2004	Lichtenstein	600/300
6,723,111	B2	4/2004	Abulhaj	606/181
6,723,371	B2	4/2004	Chih-hui	472/2.13
6,723,500	B2	4/2004	Yu	435/4
6,726,818	B2	4/2004	Cui et al.	204/403.01
6,729,546	B2	5/2004	Roustaei	235/462.45
6,730,494	B1	5/2004	Toranto	435/28
6,731,966	B1	5/2004	Spigelman	600/407
6,733,493	B2	5/2004	Gruzdev	606/9
6,736,777	B2	5/2004	Kim	600/365
6,738,654	B2	5/2004	Sohrab	600/345
6,740,215	B1	5/2004	Nakaminami et al.	204/403.14
6,743,211	B1	6/2004	Prausnitz et al.	604/239
6,743,597	B1	6/2004	Guo	435/14
6,743,635	B2	6/2004	Neel	436/95
6,746,872	B2	6/2004	Zheng	436/16
6,749,618	B2	6/2004	Levaughn	606/182
6,749,740	B2	6/2004	Liamos	205/792
6,749,792	B2	6/2004	Olsen	264/328.1
6,749,887	B1	6/2004	Dick	427/2.13
6,751,491	B2	6/2004	Lew	600/345
6,752,817	B2	6/2004	Flora	606/181
6,753,187	B2	6/2004	Cizdziel	436/169
6,759,190	B2	7/2004	Lin	435/4
6,764,496	B2	7/2004	Schraga	606/182
6,764,581	B1	7/2004	Forrow	204/403
6,767,441	B1	7/2004	Cai	204/403.03
6,773,671	B1	8/2004	Lewis	422/58
6,776,888	B2	8/2004	Yamamoto	204/403.06
6,780,645	B2	8/2004	Hayter	436/8
6,780,647	B2	8/2004	Fujiwara	436/169
6,783,502	B2	8/2004	Orloff	600/583
6,783,537	B1	8/2004	Kuhr	606/182
6,784,274	B2	8/2004	van Antwerp	528/77
6,786,874	B2	9/2004	Grace	600/573
6,787,013	B2	9/2004	Chang	204/412
6,787,109	B2	9/2004	Haar	422/82.05
6,790,327	B2	9/2004	Ikeda	204/403.1
6,790,599	B1	9/2004	Madou	430/320
6,792,791	B2	9/2004	Sato	73/1.02
6,793,632	B2	9/2004	Sohrab	600/573
6,793,633	B2	9/2004	Douglas	600/583
6,793,802	B2	9/2004	Lee	205/777.5
6,797,150	B2	9/2004	Kermani	205/777.5
6,800,488	B2	10/2004	Khan	436/166
6,801,041	B2	10/2004	Karinka	324/444
6,801,804	B2	10/2004	Miller	604/20
6,802,199	B2	10/2004	Hilgers	72/370.1
6,802,811	B1	10/2004	Slepian	600/309
6,802,957	B2	10/2004	Jung	205/777.5
6,805,780	B1	10/2004	Ryu	204/403.01
6,808,499	B1	10/2004	Churchill	600/587
6,808,908	B2	10/2004	Yao	435/181
6,808,937	B2	10/2004	Ligler	436/518
6,809,807	B1	10/2004	Erickson	356/213
6,811,406	B2	11/2004	Grube	439/66
6,811,557	B2	11/2004	Schraga	606/182
6,811,659	B2	11/2004	Vachon	204/224
6,811,753	B2	11/2004	Hirao	422/101
6,811,792	B2	11/2004	Roser	424/423
6,812,031	B1	11/2004	Carlsson	436/52
6,814,843	B1	11/2004	Bhullar	204/403.01
6,814,844	B2	11/2004	Bhullar	204/403.1
6,814,845	B2	11/2004	Wilson	204/486
6,815,186	B2	11/2004	Clark	435/183
6,816,742	B2	11/2004	Kim	600/345
6,818,180	B2	11/2004	Douglas	422/58
6,821,483	B2	11/2004	Phillips	422/58
6,823,750	B2	11/2004	Hodges	73/864.72
6,825,047	B1	11/2004	Woudenberg	436/518
6,827,250	B2	12/2004	Uhland	228/110.1
6,827,829	B2	12/2004	Kawanaka	204/403.02
6,829,507	B1	12/2004	Lidman	607/19
6,830,551	B1	12/2004	Uchigaki	600/584
6,830,668	B2	12/2004	Musho	204/400
6,830,669	B2	12/2004	Miyazaki	204/409
6,830,934	B1	12/2004	Hardling	436/166
6,833,540	B2	12/2004	MacKenzie	250/214
6,835,184	B1	12/2004	Sage	604/46
6,835,553	B2	12/2004	Han	435/14
6,835,570	B2	12/2004	Patel	436/8
6,837,858	B2	1/2005	Cunningham	600/573
6,837,976	B2	1/2005	Cai	204/403.14
6,837,988	B2	1/2005	Leong	205/792
6,840,912	B2	1/2005	Kloepfer	600/583
6,841,052	B2	1/2005	Musho	204/401
6,843,254	B2	1/2005	Tapper	128/898
6,843,902	B1	1/2005	Penner	205/76
6,844,149	B2	1/2005	Goldman	435/4
6,847,451	B2	1/2005	Pugh	356/436
6,849,052	B2	2/2005	Uchigaki	600/584
6,849,168	B2	2/2005	Crumly	204/416
6,849,216	B2	2/2005	Rappin	264/134
6,849,456	B2	2/2005	Patel	436/8
6,850,790	B2	2/2005	Berner	600/347
6,852,119	B1	2/2005	Abulhaj	606/182
6,852,212	B2	2/2005	Maxwell	205/775
6,852,500	B1	2/2005	Hoss	435/14
6,853,854	B1	2/2005	Proniewiez	600/319
6,855,243	B2	2/2005	Khan	205/777.5
6,856,125	B2	2/2005	Kermani	324/71.1
6,856,928	B2	2/2005	Harmon	702/84
6,858,015	B2	2/2005	List	600/583
6,858,401	B2	2/2005	Phillips	435/14
6,859,738	B2	2/2005	Bush	702/25
6,862,466	B2	3/2005	Ackerman	600/347
6,862,534	B2	3/2005	Sterling	702/23
6,863,800	B2	3/2005	Karinka	205/777.5
6,863,801	B2	3/2005	Hodges	205/792
6,865,408	B1	3/2005	Abbink	600/310
6,866,641	B2	3/2005	Marshall	600/583
6,866,675	B2	3/2005	Perez	606/181
6,866,758	B2	3/2005	Bhullar	204/403.2
6,866,822	B1	3/2005	House	422/82.05

(56) **References Cited**

U.S. PATENT DOCUMENTS

6,869,418	B2	3/2005	Marano-Ford	604/192
6,872,200	B2	3/2005	Mann	604/890.1
6,872,297	B2	3/2005	Mansouri	205/775
6,872,298	B2	3/2005	Kermani	205/777.5
6,872,299	B2	3/2005	Kermani	205/777.5
6,872,358	B2	3/2005	Hagen	422/61
6,875,208	B2	4/2005	Santini	604/890.1
6,875,327	B1	4/2005	Miyazaki	204/403.14
6,875,613	B2	4/2005	Shartle	436/63
6,878,120	B2	4/2005	Roe	600/583
6,878,251	B2	4/2005	Hodges	204/403.14
6,878,255	B1	4/2005	Wang	204/452
6,878,262	B2	4/2005	Taniike	205/777.5
6,880,968	B1	4/2005	Haar	374/131
6,881,203	B2	4/2005	Delmore	604/272
6,881,322	B2	4/2005	Tokunaga	205/775
6,881,378	B1	4/2005	Zimmer	422/58
6,881,541	B2	4/2005	Petersen	435/6
6,881,550	B2	4/2005	Phillips	435/14
6,881,551	B2	4/2005	Heller	435/14
6,881,578	B2	4/2005	Otake	436/44
6,882,940	B2	4/2005	Potts	702/23
6,884,592	B2	4/2005	Matzinger	435/7.1
6,885,196	B2	4/2005	Taniike	324/444
6,885,883	B2	4/2005	Parris	600/347
6,887,202	B2	5/2005	Currie	600/309
6,887,239	B2	5/2005	Elstrom	606/41
6,887,253	B2	5/2005	Schraga	606/181
6,887,426	B2	5/2005	Phillips	422/56
6,887,709	B2	5/2005	Leong	436/8
6,889,069	B2	5/2005	Routt	600/319
6,890,319	B1	5/2005	Crocker	604/131
6,890,421	B2	5/2005	Ohara	205/777.5
6,890,484	B2	5/2005	Bautista	422/58
6,891,936	B2	5/2005	Kai	379/106.02
6,892,085	B2	5/2005	McIvor	600/347
6,893,396	B2	5/2005	Schulze	600/300
6,893,545	B2	5/2005	Gotoh	204/403.5
6,893,552	B1	5/2005	Wang	205/777.5
6,895,263	B2	5/2005	Shin	600/316
6,895,264	B2	5/2005	Rice	600/319
6,895,265	B2	5/2005	Silver	600/345
6,896,793	B2	5/2005	Erdosy	205/775
6,897,788	B2	5/2005	Khair	340/870.16
6,902,905	B2	6/2005	Burson	435/14
6,904,301	B2	6/2005	Raskas	600/310
6,905,733	B2	6/2005	Russel	427/393.5
6,908,008	B2	6/2005	Pugh	221/135
6,908,535	B2	6/2005	Rankin	204/406
6,908,591	B2	6/2005	MacPhee	422/22
6,908,593	B1	6/2005	Shartle	422/58
6,911,130	B2	6/2005	Brenneman	204/400
6,911,131	B2	6/2005	Miyazaki	204/403.14
6,911,621	B2	6/2005	Bhullar	219/121.69
6,911,937	B1	6/2005	Sparrow	342/188
6,913,210	B2	7/2005	Baasch	239/407
6,913,668	B2	7/2005	Matzinger	156/256
6,916,410	B2	7/2005	Katsuki	204/403
6,918,901	B1	7/2005	Theeuwes	604/500
6,918,918	B1	7/2005	Schraga	606/182
6,922,576	B2	7/2005	Raskas	600/316
6,922,578	B2	7/2005	Eppstein	600/347
6,923,764	B2	8/2005	Aceti	600/309
6,923,894	B2	8/2005	Huang	204/403.06
6,923,936	B2	8/2005	Swanson	422/22
6,924,093	B2	8/2005	Haviland	435/4
6,925,317	B1	8/2005	Samuels	600/344
6,925,393	B1	8/2005	Kalatz	702/27
6,929,631	B1	8/2005	Brugger	604/502
6,929,649	B2	8/2005	Pugh	606/182
6,929,650	B2	8/2005	Fukuzawa	606/182
6,931,327	B2	8/2005	Goode	702/22
6,931,328	B2	8/2005	Braig	702/23
RE38,803	E	9/2005	Rodgers, Jr.	
6,939,310	B2	9/2005	Matzinger	600/573
6,939,312	B2	9/2005	Hodges	600/583
6,939,450	B2	9/2005	Karinka	204/409
6,939,685	B2	9/2005	Ouyang	435/26
6,940,591	B2	9/2005	Sopp	356/244
6,942,518	B2	9/2005	Liamos	439/495
6,942,769	B2	9/2005	Cheng	204/400
6,942,770	B2	9/2005	Cai	204/403.04
6,944,486	B2	9/2005	Braig	600/310
6,945,943	B2	9/2005	Pugh	600/584
6,946,067	B2	9/2005	Hodges	205/792
6,946,098	B2	9/2005	Miekka	422/22
6,946,299	B2	9/2005	Neel	436/95
6,949,111	B2	9/2005	Schraga	606/182
6,949,221	B2	9/2005	Kiser	422/56
6,951,631	B1	10/2005	Catt	422/56
6,951,728	B2	10/2005	Qian	435/14
6,952,603	B2	10/2005	Gerber	600/310
6,952,604	B2	10/2005	DeNuzzio	600/345
6,953,693	B2	10/2005	Neel	436/149
6,954,662	B2	10/2005	Freger	600/316
6,958,072	B2	10/2005	Schraga	606/182
6,958,129	B2	10/2005	Galen	422/57
6,958,809	B2	10/2005	Sterling	356/39
6,959,211	B2	10/2005	Rule	600/310
6,959,247	B2	10/2005	Neel	702/19
6,960,287	B2	11/2005	Charlton	205/775
6,960,289	B2	11/2005	Hodges	205/778
6,960,323	B2	11/2005	Guo	422/60
6,964,871	B2	11/2005	Bell	436/95
6,965,791	B1	11/2005	Hitchcock	600/345
6,966,880	B2	11/2005	Boecker	600/583
6,966,977	B2	11/2005	Hasegawa	204/403.07
6,967,105	B2	11/2005	Nomura	436/169
6,968,375	B1	11/2005	Brown	709/224
6,969,359	B2	11/2005	Duchon	600/583
6,969,450	B2	11/2005	Taniike	204/403.01
6,969,451	B2	11/2005	Shin	204/412
6,973,706	B2	12/2005	Say	29/595
6,975,893	B2	12/2005	Say	600/347
6,977,032	B2	12/2005	Hasegawa	204/403.05
6,977,722	B2	12/2005	Wohlstadter et al.	356/246
6,979,544	B2	12/2005	Keen	435/6
6,979,571	B2	12/2005	Modzelewski	436/164
6,982,027	B2	1/2006	Yagi	204/403.06
6,982,431	B2	1/2006	Modlin	250/573
6,983,176	B2	1/2006	Gardner	600/310
6,983,177	B2	1/2006	Rule	600/310
6,984,307	B2	1/2006	Zweig	205/777.5
6,986,777	B2	1/2006	Kim	606/182
6,986,869	B2	1/2006	Tuohy	422/56
6,988,996	B2	1/2006	Roe	600/584
6,989,243	B2	1/2006	Yani	435/14
6,989,891	B2	1/2006	Braig	356/39
6,990,365	B1	1/2006	Parker	600/328
6,990,366	B2	1/2006	Say	600/345
6,990,367	B2	1/2006	Kiser	600/345
6,990,849	B2	1/2006	Bohm	73/53.01
6,991,918	B2	1/2006	Keith	435/31
6,991,940	B2	1/2006	Carroll	436/514
6,994,825	B2	2/2006	Haviland	422/58
6,997,317	B2	2/2006	Catelli	206/438
6,997,343	B2	2/2006	May	221/232
6,997,344	B2	2/2006	Brown	221/258
6,997,936	B2	2/2006	Marshall	606/181
6,998,247	B2	2/2006	Monfre	435/14
6,998,248	B2	2/2006	Yani	435/14
6,999,810	B2	2/2006	Berner	600/345
7,001,343	B2	2/2006	Erickson	600/573
7,001,344	B2	2/2006	Freeman	600/583
7,003,337	B2	2/2006	Harjunmaa	600/316
7,003,340	B2	2/2006	Say	600/345
7,003,341	B2	2/2006	Say	600/345
7,004,928	B2	2/2006	Aceti	604/191
7,005,048	B1	2/2006	Watanabe	204/403.04
7,005,273	B2	2/2006	Heller	435/25
7,005,459	B2	2/2006	Hekal	523/102
7,005,857	B2	2/2006	Stiene	324/449
7,006,857	B2	2/2006	Braig	600/310
7,006,858	B2	2/2006	Silver	600/345

(56) **References Cited**

U.S. PATENT DOCUMENTS

7,008,384	B2	3/2006	Tapper	600/573
7,010,432	B2	3/2006	Kermani	702/19
7,011,630	B2	3/2006	Desai	600/309
7,011,954	B2	3/2006	Ouyang	435/7.9
7,014,615	B2	3/2006	Erickson	600/573
7,015,262	B2	3/2006	Leong	523/205
7,016,713	B2	3/2006	Gardner	600/310
7,018,568	B2	3/2006	Tierney	252/511
7,018,848	B2	3/2006	Douglas	436/524
7,022,217	B2	4/2006	Hodges	205/777.5
7,022,218	B2	4/2006	Taniike	205/777.5
7,022,286	B2	4/2006	Lemke	422/67
7,024,236	B2	4/2006	Ford	600/345
7,024,248	B2	4/2006	Penner	607/60
7,024,399	B2	4/2006	Sumner	706/45
7,025,425	B2	4/2006	Kovatchev	300/365
7,025,774	B2	4/2006	Freeman	606/181
7,027,848	B2	4/2006	Robinson	600/310
7,029,444	B2	4/2006	Shin	600/365
7,033,322	B2	4/2006	Silver	600/486
7,033,371	B2	4/2006	Alden	606/181
7,039,560	B2	5/2006	Kawatahara	702/187
7,041,057	B1	5/2006	Faupel	600/365
7,041,063	B2	5/2006	Abreu	600/549
7,041,068	B2	5/2006	Freeman	600/583
7,041,210	B2	5/2006	Hodges	205/792
7,041,254	B2	5/2006	Haviland	422/58
7,041,468	B2	5/2006	Drucker	435/14
7,043,287	B1	5/2006	Khalil	600/310
7,043,821	B2	5/2006	Hodges	29/594
7,044,911	B2	5/2006	Drinan	600/300
7,045,046	B2	5/2006	Chambers	204/400
7,045,054	B1	5/2006	Buck	205/778
7,045,097	B2	5/2006	Kovacs	422/82.08
7,045,310	B2	5/2006	Buck	435/7.93
7,045,361	B2	5/2006	Heiss	436/172
7,047,070	B2	5/2006	Wilkinson	604/20
7,047,795	B2	5/2006	Sato	73/64.56
7,049,087	B2	5/2006	Jenny	435/13
7,049,130	B2	5/2006	Carroll	435/287.2
7,050,843	B2	5/2006	Shartle	600/345
7,051,495	B2	5/2006	Lang	53/475
7,052,268	B2	5/2006	Powell	425/542
7,052,591	B2	5/2006	Gao	204/490
7,052,652	B2	5/2006	Zanzucchi	422/82.05
7,052,864	B2	5/2006	Durkop	435/25
7,054,682	B2	5/2006	Young	604/20
7,054,759	B2	5/2006	Fukunaga	702/23
D522,656	S	6/2006	Orr	D24/169
D523,555	S	6/2006	Loerwald	D24/146
7,056,425	B2	6/2006	Hasegawa	204/403.04
7,056,495	B2	6/2006	Roser	424/45
7,058,437	B2	6/2006	Buse	600/347
7,059,352	B2	6/2006	Bohm	137/828
7,060,059	B2	6/2006	Keith	604/504
7,060,168	B2	6/2006	Taniike	204/403.04
7,060,192	B2	6/2006	Yuzhakov	216/11
7,061,593	B2	6/2006	Braig	356/39
7,063,234	B2	6/2006	Giraud	221/271
7,063,774	B2	6/2006	Bhullar	204/403.02
7,063,775	B2	6/2006	Yamaoka	204/403.06
7,063,776	B2	6/2006	Huang	204/403.14
7,066,884	B2	6/2006	Custer	600/309
7,066,885	B2	6/2006	Erickson	600/309
7,070,564	B2	7/2006	Matzinger	600/300
7,070,680	B2	7/2006	Bae	204/403.04
7,073,246	B2	7/2006	Bhullar	29/595
7,074,307	B2	7/2006	Simpson	204/403.04
7,074,308	B2	7/2006	Mao	204/403.14
7,077,328	B2	7/2006	Krishnaswamy	235/472.01
7,077,828	B2	7/2006	Kuhr	604/207
7,078,480	B2	7/2006	Nagel	530/322
7,079,252	B1	7/2006	Debreezeny	356/451
7,081,188	B1	7/2006	Cho	204/403.04
7,083,712	B2	8/2006	Morita	205/775
7,086,277	B2	8/2006	Tess	73/53.01
7,087,149	B1	8/2006	Muguruma	205/778
7,090,764	B2	8/2006	Iyengar	205/775
7,096,053	B2	8/2006	Loeb	600/317
7,096,124	B2	8/2006	Sterling	702/23
7,097,631	B2	8/2006	Trautman	604/46
7,098,038	B2	8/2006	Fukuoka	436/164
7,103,578	B2	9/2006	Beck	705/75
7,105,066	B2	9/2006	Schraga	606/182
7,107,253	B1	9/2006	Sumner	706/45
7,108,680	B2	9/2006	Rohr	604/151
7,108,778	B2	9/2006	Simpson	205/778
7,109,271	B2	9/2006	Liu	525/283
7,110,112	B2	9/2006	Uchida	356/364
7,110,803	B2	9/2006	Shults	600/347
7,112,265	B1	9/2006	McAleer	204/403.09
7,112,451	B2	9/2006	Takahashi	436/514
7,113,172	B2	9/2006	Hohl	345/168
7,115,362	B2	10/2006	Douglas	435/4
7,118,351	B2	10/2006	Effenhauser	417/208
7,118,667	B2	10/2006	Lee	205/777.5
7,118,668	B1	10/2006	Edelbrock	205/777.5
7,118,916	B2	10/2006	Matzinger	436/34
7,118,919	B2	10/2006	Yatscoff	436/56
7,120,483	B2	10/2006	Russell	600/345
7,122,102	B2	10/2006	Wogoman	204/400
7,122,110	B2	10/2006	Deng	205/777.5
7,122,111	B2	10/2006	Tokunaga	205/792
7,125,481	B2	10/2006	Musho	205/775
7,129,038	B2	10/2006	Gopalan	435/4
RE39,390	E	11/2006	Hasegawa	204/403.09
D531,725	S	11/2006	Loerwald	D24/146
7,131,342	B2	11/2006	Hodges	73/864.72
7,131,984	B2	11/2006	Sato	606/182
7,132,041	B2	11/2006	Deng	205/777.5
7,133,710	B2	11/2006	Acosta	600/316
7,134,550	B2	11/2006	Groth	206/366
7,134,999	B2	11/2006	Brauker	600/309
7,135,100	B1	11/2006	Lau	204/403.14
7,137,957	B2	11/2006	Erickson	600/573
7,138,041	B2	11/2006	Su	204/403.04
7,138,089	B2	11/2006	Aitken	422/82.01
7,141,034	B2	11/2006	Eppstein	604/22
7,141,058	B2	11/2006	Briggs	606/181
7,144,404	B2	12/2006	Whitson	606/181
7,144,485	B2	12/2006	Hsu	204/403.02
7,144,495	B2	12/2006	Teodorezyk	205/792
7,144,496	B2	12/2006	Meserol	205/792
7,144,709	B2	12/2006	Ouyang	435/7.9
7,147,825	B2	12/2006	Matsuda	422/58
7,150,755	B2	12/2006	Levaughn	606/181
7,150,975	B2	12/2006	Tamada	435/14
7,150,995	B2	12/2006	Xie	436/67
7,153,696	B2	12/2006	Fukuoka	436/164
7,155,371	B2	12/2006	Kawatahara	702/187
7,156,117	B2	1/2007	Bohm	137/14
7,156,810	B2	1/2007	Cho	600/365
7,157,723	B2	1/2007	Colvin	250/458.1
7,160,251	B2	1/2007	Neel	600/365
7,160,313	B2	1/2007	Galloway	606/167
7,160,678	B1	1/2007	Kayyem	435/6
7,162,289	B2	1/2007	Shah	600/345
7,163,616	B2	1/2007	Vreeke	205/777.5
7,166,074	B2	1/2007	Reghabi	600/365
7,166,208	B2	1/2007	Zweig	205/777.5
7,167,734	B2	1/2007	Khalil	600/310
7,167,735	B2	1/2007	Uchida	600/310
7,167,818	B2	1/2007	Brown	703/11
7,169,116	B2	1/2007	Day	600/583
7,169,117	B2	1/2007	Allen	600/584
7,169,289	B2	1/2007	Schulein	205/777.5
7,169,600	B2	1/2007	Hoss	435/287.1
7,172,728	B2	2/2007	Otake	422/58
7,174,199	B2	2/2007	Berner	600/347
7,175,641	B1	2/2007	Schraga	606/181
7,175,642	B2	2/2007	Briggs	606/181
7,179,233	B2	2/2007	Chang	600/584
7,182,910	B2	2/2007	Allen	422/50
7,183,068	B2	2/2007	Burson	435/14

(56) **References Cited**

U.S. PATENT DOCUMENTS

7,183,102	B2	2/2007	Monfre et al.	200/51.09
7,188,034	B2	3/2007	Staib	702/22
7,189,576	B2	3/2007	Fukuoka	436/170
7,190,988	B2	3/2007	Say	600/345
7,192,405	B2	3/2007	DeNuzzio	600/583
7,192,450	B2	3/2007	Brauker	623/23.76
7,195,704	B2	3/2007	Kermani	205/777.5
7,198,606	B2	4/2007	Boecker	600/583
7,199,594	B2	4/2007	Kermani	324/663
7,202,854	B2	4/2007	Hohl	345/168
7,206,620	B2	4/2007	Erickson	600/310
7,206,623	B2	4/2007	Blank	600/344
D542,681	S	5/2007	Young	D10/80
7,211,052	B2	5/2007	Roe	600/584
7,211,096	B2	5/2007	Kuhr	606/182
7,212,925	B2	5/2007	Genshaw	702/23
7,213,720	B2	5/2007	Giraud	220/839
7,215,982	B2	5/2007	Oshima	600/310
7,215,983	B2	5/2007	Cho	600/316
7,223,248	B2	5/2007	Erickson	600/584
7,225,008	B1	5/2007	Ward	600/345
D543,878	S	6/2007	Castillo	D10/81
D545,438	S	6/2007	Huang	D24/186
7,225,535	B2	6/2007	Feldman	29/831
7,226,414	B2	6/2007	Ballerstadt	600/365
7,226,461	B2	6/2007	Boecker	606/181
7,226,978	B2	6/2007	Tapsak	525/296
7,227,156	B2	6/2007	Colvin	250/458.1
7,228,159	B2	6/2007	Petersson	600/316
7,228,162	B2	6/2007	Ward	600/345
7,228,163	B2	6/2007	Ackerman	600/347
7,229,458	B2	6/2007	Freeman	606/181
7,232,451	B2	6/2007	Boecker	606/181
7,232,510	B2	6/2007	Miyazaki	204/403.1
7,233,816	B2	6/2007	Blank	600/310
7,235,056	B2	6/2007	Duchon	600/583
7,235,170	B2	6/2007	Watanabe	205/777.5
7,235,378	B2	6/2007	Yonehara	435/14
7,236,812	B1	6/2007	Ballerstadt	600/316
7,236,814	B2	6/2007	Shioi	600/344
D545,705	S	7/2007	Voege	D10/81
D546,216	S	7/2007	Bolognesi	D10/81
D546,218	S	7/2007	Grasso	D10/81
2,747,138	A1	7/2007	Reghabi	600/365
7,238,192	B2	7/2007	List	606/182
7,238,534	B1	7/2007	Zimmer	436/169
7,241,265	B2	7/2007	Cummings	600/300
7,244,264	B2	7/2007	Roe	606/181
7,244,265	B2	7/2007	Freeman	606/181
7,244,266	B2	7/2007	Garthe	606/181
7,247,144	B2	7/2007	Douglas	600/583
7,250,037	B2	7/2007	Shermer	604/134
7,250,056	B2	7/2007	Hamamoto	606/181
7,250,095	B2	7/2007	Black	204/403.14
7,250,105	B1	7/2007	Davies	205/777.5
7,251,513	B2	7/2007	Kondoh	600/310
7,251,514	B2	7/2007	Cho	600/316
7,251,515	B2	7/2007	Cho	600/316
7,251,516	B2	7/2007	Walker	600/316
7,251,517	B2	7/2007	Cho	600/316
7,251,518	B2	7/2007	Herrmann	600/322
7,252,804	B2	8/2007	Miyashita	422/104
7,254,426	B2	8/2007	Cho	600/316
7,254,427	B2	8/2007	Cho	600/316
7,254,428	B2	8/2007	Cho	600/316
7,254,429	B2	8/2007	Schurman	600/316
7,254,430	B2	8/2007	Cho	600/316
7,254,432	B2	8/2007	Fine	600/335
7,258,673	B2	8/2007	Racchini	600/583
7,258,693	B2	8/2007	Freeman	606/181
7,262,061	B2	8/2007	Petrich	436/169
7,264,139	B2	9/2007	Brickwood	221/270
7,264,627	B2	9/2007	Perez	606/181
7,266,400	B2	9/2007	Fine	600/316
7,267,665	B2	9/2007	Steil	604/131
7,267,750	B2	9/2007	Watanabe	204/403.04
7,270,247	B2	9/2007	Charlton	221/59
7,271,912	B2	9/2007	Sterling	356/436
7,273,484	B2	9/2007	Thoes	606/181
7,276,027	B2	10/2007	Haar	600/309
7,276,029	B2	10/2007	Goode	600/365
7,276,146	B2	10/2007	Wilsey	205/792
7,276,147	B2	10/2007	Wilsey	205/792
7,276,380	B2	10/2007	Fukuyama	436/164
7,277,740	B2	10/2007	Rohleder	600/316
7,278,983	B2	10/2007	Ireland	604/66
7,279,130	B2	10/2007	Brown	422/64
7,282,058	B2	10/2007	Levin	606/181
7,287,318	B2	10/2007	Bhullar	29/825
7,288,073	B2	10/2007	Effenhauser	600/584
7,288,102	B2	10/2007	Griffin	606/182
7,288,174	B2	10/2007	Cui	204/403.14
7,289,836	B2	10/2007	Colvin	600/316
7,291,117	B2	11/2007	Boecker	600/583
7,291,159	B2	11/2007	Schmelzeisen-Redeker	606/181
7,291,256	B2	11/2007	Teodorezyk	205/777.5
7,291,497	B2	11/2007	Holmes	435/287.2
7,294,246	B2	11/2007	Gundel	204/403.14
7,295,867	B2	11/2007	Berner	600/345
7,297,122	B2	11/2007	Boecker	600/583
7,297,151	B2	11/2007	Boecker	606/181
7,297,152	B2	11/2007	Fukuzawa	606/181
7,297,241	B2	11/2007	Kontschieder	204/403.01
7,297,248	B2	11/2007	Bae	205/777.5
7,297,627	B2	11/2007	Shah	438/622
7,299,079	B2	11/2007	Rebec	600/316
7,299,080	B2	11/2007	Acosta	600/316
7,299,081	B2	11/2007	Mace	600/345
7,299,082	B2	11/2007	Feldman	600/347
7,300,402	B2	11/2007	Iliff	600/300
7,301,629	B2	11/2007	Bambot	356/337
7,303,573	B2	12/2007	D'Agostino	606/181
7,303,726	B2	12/2007	McAllister	422/68.1
7,303,922	B2	12/2007	Jeng	436/164
7,305,896	B2	12/2007	Howell	73/864.02
7,306,560	B2	12/2007	Iliff	600/300
7,308,164	B1	12/2007	Banks	385/12
7,308,292	B2	12/2007	Colvin	600/310
7,310,542	B2	12/2007	Jeon	600/344
7,310,543	B2	12/2007	Smart	600/345
7,310,544	B2	12/2007	Brister	600/345
7,311,718	B2	12/2007	Schraga	606/181
7,311,812	B2	12/2007	Forrow	204/403.06
7,312,042	B1	12/2007	Petyt	435/7.1
7,313,425	B2	12/2007	Finarov	600/310
7,314,453	B2	1/2008	Kuo	600/584
7,315,752	B2	1/2008	Kraemer	600/316
7,316,700	B2	1/2008	Alden	606/181
7,316,766	B2	1/2008	Chen	204/403.01
7,316,929	B2	1/2008	Purcell	436/8
7,317,938	B2	1/2008	Lorenz	600/316
7,317,939	B2	1/2008	Fine	600/322
7,322,942	B2	1/2008	Roe	600/583
7,322,996	B2	1/2008	Taylor	606/181
7,322,997	B2	1/2008	Shi	606/181
7,322,998	B2	1/2008	Kuhr	606/182
7,323,098	B2	1/2008	Miyashita	205/777.5
7,323,141	B2	1/2008	Kirchhevel	422/68.1
7,323,315	B2	1/2008	Marfurt	435/7.25
7,324,012	B2	1/2008	Mann	340/870.07
7,328,052	B2	2/2008	Samsoondar	600/310
7,331,931	B2	2/2008	Freeman	600/583
7,335,292	B2	2/2008	Hodges	205/775
7,335,294	B2	2/2008	Heller	205/792
7,337,918	B2	3/2008	Fowler	221/65
7,338,639	B2	3/2008	Burke	422/82.1
7,343,188	B2	3/2008	Sohrab	600/345
7,344,499	B1	3/2008	Prausnitz	600/309
7,344,500	B2	3/2008	Talbot	600/365
7,344,507	B2	3/2008	Briggs	600/583
7,344,626	B2	3/2008	Harding	204/403.01
7,347,925	B2	3/2008	Hsieh	205/777.5
7,347,926	B2	3/2008	Morita	205/792
7,347,973	B2	3/2008	Douglas	422/61

(56) **References Cited**

U.S. PATENT DOCUMENTS

RE40,198	E	4/2008	Buck	205/777.5
7,351,213	B2	4/2008	Wong	600/584
7,351,323	B2	4/2008	Iketaki	205/777.5
7,351,375	B2	4/2008	Noda	422/82.01
7,351,770	B2	4/2008	Liu	525/283
7,357,808	B2	4/2008	Kennedy	606/181
7,357,851	B2	4/2008	Reid	204/403.04
7,361,182	B2	4/2008	Fukuda	606/181
7,361,307	B2	4/2008	Schartle	422/82.01
7,371,247	B2	5/2008	Boecker	606/181
7,372,277	B2	5/2008	Diamond	324/444
7,374,544	B2	5/2008	Freeman	600/583
7,374,546	B2	5/2008	Roe	600/583
7,378,007	B2	5/2008	Moerman	204/403.03
7,378,270	B2	5/2008	Azarnia	435/287.2
7,402,616	B2	7/2008	Rodgers	523/160
7,404,815	B2	7/2008	Kollias	604/501
7,410,468	B2	8/2008	Freeman	600/583
7,429,630	B2	9/2008	Liu	525/283
7,431,814	B2	10/2008	Hodges	204/403.02
7,431,820	B2	10/2008	Hodges	205/777.5
7,438,694	B2	10/2008	Boozer	600/583
D579,652	S	11/2008	Lim	D3/201
D579,653	S	11/2008	Lim	D3/201
7,458,956	B1	12/2008	Adams	
7,462,265	B2	12/2008	Leach	204/403.14
7,465,380	B2	12/2008	Rodgers	204/403.14
7,468,125	B2	12/2008	Kraft	205/792
D585,314	S	1/2009	Schvetz	D10/78
7,473,264	B2	1/2009	Allen	606/181
7,474,390	B2	1/2009	Robinson	356/42
7,474,391	B2	1/2009	Baskeyfield	356/42
7,481,776	B2	1/2009	Boecker	600/583
7,481,818	B2	1/2009	Allen	606/181
D586,465	S	2/2009	Faulkner	D24/146
D586,466	S	2/2009	Smith	D24/186
D586,678	S	2/2009	Schvetz	D10/81
D586,916	S	2/2009	Faulkner	D24/146
7,485,128	B2	2/2009	Boecker	606/181
7,491,178	B2	2/2009	Boecker	600/583
7,498,132	B2	3/2009	Yu	435/6
7,501,052	B2	3/2009	Iyengar	205/777.5
7,501,093	B2	3/2009	Demelo	422/58
7,521,019	B2	4/2009	Polak	422/82.06
7,524,293	B2	4/2009	Freeman	600/583
7,537,571	B2	5/2009	Freeman	600/583
7,547,287	B2	6/2009	Boecker	600/583
7,548,772	B2	6/2009	Shartle	600/345
7,553,511	B2	6/2009	Hleong	427/2.28
7,563,232	B2	7/2009	Freeman	600/583
D598,126	S	8/2009	Alvarez-Icaza	D24/225
7,572,356	B2	8/2009	Rodgers	204/403.05
7,575,558	B2	8/2009	Boecker	600/573
D600,349	S	9/2009	Bell	D24/169
D600,812	S	9/2009	Lei	D24/169
D600,813	S	9/2009	Bell	D24/169
D601,255	S	9/2009	Schvetz	D24/169
D601,258	S	9/2009	Bell	D24/169
7,582,063	B2	9/2009	Wurster	600/584
7,582,099	B2	9/2009	Freeman	606/181
7,586,590	B2	9/2009	Baskeyfield	356/42
7,588,670	B2	9/2009	Rodgers	204/403.14
7,589,828	B2	9/2009	Robinson	356/42
7,592,151	B2	9/2009	Liu	435/14
7,593,097	B2	9/2009	Robinson	356/42
7,604,592	B2	10/2009	Freeman	600/309
7,604,722	B2	10/2009	Hodges	204/403.02
7,608,175	B2	10/2009	Hodges	204/403.02
7,618,522	B2	11/2009	Davies	204/403.14
7,645,263	B2	1/2010	Angel et al.	
7,648,468	B2	1/2010	Boecker	600/583
7,648,469	B2	1/2010	Boecker	600/583
7,653,492	B2	1/2010	Davies	702/22
7,654,127	B2	2/2010	Krulevitch	73/1.16
7,655,119	B2	2/2010	Davies	204/403.14
7,665,303	B2	2/2010	Bohm	60/643
7,666,287	B2	2/2010	Zhao	204/600
D611,151	S	3/2010	Lei	D24/169
D611,372	S	3/2010	Salter	D10/81
D611,489	S	3/2010	Bell	D14/486
D611,853	S	3/2010	Salter	D10/81
D612,274	S	3/2010	Heidemann	D10/78
D612,275	S	3/2010	Salter	D10/81
D612,279	S	3/2010	Heidemann	D10/103
7,674,232	B2	3/2010	Boecker	600/583
7,682,318	B2	3/2010	Alden	600/583
7,713,214	B2	5/2010	Freeman et al.	600/583
7,749,174	B2	7/2010	Alden et al.	
7,833,172	B2	11/2010	Hein et al.	600/583
7,879,058	B2	2/2011	Ikeda	606/182
7,901,365	B2	3/2011	Freeman et al.	600/583
7,976,778	B2	7/2011	Drucker et al.	
8,079,960	B2	12/2011	Briggs et al.	600/583
8,162,968	B2	4/2012	Boozer et al.	606/182
8,197,421	B2	6/2012	Freeman et al.	
8,206,319	B2	6/2012	Freeman et al.	600/583
8,231,548	B2	7/2012	Hoenes	600/583
8,251,922	B2	8/2012	List et al.	600/584
8,282,576	B2	10/2012	Marsot et al.	
8,388,639	B2	3/2013	Nicholls et al.	
8,491,500	B2	7/2013	Briggs et al.	
2001/0011157	A1	8/2001	Latterell	600/576
2001/0016682	A1	8/2001	Berner	600/345
2001/0017269	A1	8/2001	Heller	205/777.5
2001/0018353	A1	8/2001	Ishigaki	455/566
2001/0023349	A1	9/2001	Van Tassel et al.	606/53
2001/0027328	A1	10/2001	Lum	606/186
2001/0031931	A1	10/2001	Cunningham	600/573
2001/0037072	A1	11/2001	Virtanen	
2001/0037355	A1	11/2001	Britt	709/201
2001/0042004	A1	11/2001	Taub	705/11
2001/0045355	A1	11/2001	Gephart	204/400
2001/0054319	A1	12/2001	Heller	73/849
2002/0002326	A1	1/2002	Causey	600/300
2002/0002344	A1	1/2002	Douglas	600/583
2002/0004196	A1	1/2002	Whitson	600/573
2002/0016568	A1	2/2002	Lebel	604/131
2002/0016606	A1	2/2002	Moerman	606/181
2002/0016923	A1	2/2002	Knaus	713/200
2002/0019606	A1	2/2002	Lebel	604/66
2002/0019747	A1	2/2002	Ware	705/2
2002/0019748	A1	2/2002	Brown	705/2
2002/0020646	A1	2/2002	Groth et al.	
2002/0025469	A1	2/2002	Heller	429/43
2002/0029058	A1	3/2002	Levaughn	606/181
2002/0040208	A1	4/2002	Flaherty	604/288.01
2002/0040230	A1	4/2002	Kuhr	606/181
2002/0042090	A1	4/2002	Heller	435/14
2002/0042594	A1*	4/2002	Lum et al.	604/117
2002/0044890	A1	4/2002	Black	422/56
2002/0052618	A1	5/2002	Haar	606/181
2002/0053523	A1	5/2002	Liamos	205/787
2002/0057993	A1	5/2002	Maisey	422/82.01
2002/0058902	A1*	5/2002	Kollias et al.	604/20
2002/0076349	A1	6/2002	Aitken	422/58
2002/0078091	A1	6/2002	Vu	707/513
2002/0081559	A1	6/2002	Brown	434/307 R
2002/0081588	A1	6/2002	De Lumley-Woodyear	435/6
2002/0082543	A1	6/2002	Park	604/21
2002/0084196	A1	7/2002	Liamos	205/792
2002/0087056	A1	7/2002	Aceti	
2002/0092612	A1	7/2002	Davies	156/292
2002/0099308	A1	7/2002	Bojan	600/573
2002/0103499	A1	8/2002	Perez	606/182
2002/0111634	A1	8/2002	Stoianovici et al.	
2002/0120216	A1	8/2002	Fritz	600/583
2002/0120261	A1	8/2002	Morris	606/41
2002/0123335	A1	9/2002	Luna	455/419
2002/0130042	A1	9/2002	Moerman	204/403.01
2002/0133377	A1	9/2002	Brown	705/3
2002/0136667	A1	9/2002	Subramanian	422/100
2002/0136863	A1	9/2002	Subramanian	428/156
2002/0137998	A1	9/2002	Smart	600/347
2002/0138040	A1	9/2002	Flora	604/116

(56) **References Cited**

U.S. PATENT DOCUMENTS

2002/0141032	A1	10/2002	Guarr et al.	359/265
2002/0148739	A2	10/2002	Liamos	205/787
2002/0156355	A1	10/2002	Gough	600/345
2002/0160520	A1	10/2002	Orloff	436/72
2002/0161289	A1	10/2002	Hopkins	600/322
2002/0168290	A1	11/2002	Yuzhakov	422/56
2002/0169393	A1	11/2002	Cunningham	600/573
2002/0169394	A1	11/2002	Eppstein	600/573
2002/0176984	A1	11/2002	Smart	428/336
2002/0177761	A1	11/2002	Orloff	600/309
2002/0177763	A1	11/2002	Burns	600/345
2002/0188224	A1	12/2002	Roe	600/584
2003/0014010	A1	1/2003	Carpenter	604/117
2003/0018282	A1	1/2003	Effenhauser	600/583
2003/0018300	A1	1/2003	Duchon	604/164.01
2003/0028125	A1	2/2003	Yuzhakov	
2003/0028126	A1	2/2003	List	600/583
2003/0032077	A1	2/2003	Itoh	435/14
2003/0038047	A1	2/2003	Sleva	206/370
2003/0050537	A1	3/2003	Wessel	600/300
2003/0050573	A1	3/2003	Kuhr	600/567
2003/0050656	A1	3/2003	Schraga	606/182
2003/0057391	A1	3/2003	Krulevitch	251/11
2003/0060730	A1	3/2003	Perez	600/576
2003/0069509	A1	4/2003	Matzinger et al.	600/504
2003/0069753	A1	4/2003	Brown	705/2
2003/0072647	A1	4/2003	Lum	415/1
2003/0073089	A1	4/2003	Mauze	435/6
2003/0073229	A1	4/2003	Greenstein	435/287.2
2003/0073931	A1	4/2003	Boecker	600/573
2003/0083685	A1	5/2003	Freeman	606/181
2003/0083686	A1 *	5/2003	Freeman et al.	606/181
2003/0088160	A1	5/2003	Halleck	600/300
2003/0088191	A1	5/2003	Freeman et al.	600/583
2003/0089730	A1	5/2003	May	221/232
2003/0092982	A1	5/2003	Eppstein	
2003/0093010	A1	5/2003	Essenpreis	600/583
2003/0100040	A1	5/2003	Bonnecaze	435/14
2003/0106810	A1	6/2003	Douglas	205/777.5
2003/0109777	A1	6/2003	Kloepfer	600/367
2003/0109860	A1	6/2003	Black	606/10
2003/0111357	A1	6/2003	Black	205/775
2003/0113827	A1	6/2003	Burkoth	435/14
2003/0116447	A1	6/2003	Sturridge	205/777.5
2003/0120297	A1	6/2003	Beyerlein	606/185
2003/0135333	A1	7/2003	Aceti	702/31
2003/0136189	A1	7/2003	Lauman	73/304 C
2003/0139653	A1	7/2003	Manser	600/300
2003/0143113	A2	7/2003	Yuzhakov	422/56
2003/0144608	A1	7/2003	Kojima	600/583
2003/0144609	A1	7/2003	Kennedy	600/583
2003/0146110	A1	8/2003	Karinka	205/777.5
2003/0149348	A1	8/2003	Raskas	600/310
2003/0149377	A1	8/2003	Erickson	600/573
2003/0150745	A1	8/2003	Teodorczyk et al.	205/775
2003/0153900	A1	8/2003	Aceti	604/890.1
2003/0159944	A1	8/2003	Pottgen	205/777.5
2003/0163351	A1	8/2003	Brown	705/2
2003/0178322	A1	9/2003	Iyengar	205/775
2003/0191376	A1	10/2003	Samuels	600/309
2003/0191415	A1	10/2003	Moerman	600/584
2003/0195435	A1	10/2003	Williams	600/583
2003/0195540	A1	10/2003	Moerman	606/181
2003/0199744	A1	10/2003	Buse	600/347
2003/0199789	A1	10/2003	Boecker	600/575
2003/0199790	A1	10/2003	Boecker	600/576
2003/0199791	A1	10/2003	Boecker	600/576
2003/0199891	A1	10/2003	Argauer	606/181
2003/0199893	A1	10/2003	Boecker	606/181
2003/0199894	A1	10/2003	Boecker	606/181
2003/0199895	A1	10/2003	Boecker	606/181
2003/0199896	A1	10/2003	Boecker	606/181
2003/0199897	A1	10/2003	Boecker	606/181
2003/0199898	A1	10/2003	Boecker	606/181
2003/0199899	A1	10/2003	Boecker	606/181
2003/0199900	A1	10/2003	Boecker	606/181
2003/0199901	A1	10/2003	Boecker	606/181
2003/0199902	A1	10/2003	Boecker	606/181
2003/0199903	A1	10/2003	Boecker	606/181
2003/0199904	A1	10/2003	Boecker	606/181
2003/0199905	A1	10/2003	Boecker	606/181
2003/0199906	A1	10/2003	Boecker	606/181
2003/0199907	A1	10/2003	Boecker	606/181
2003/0199908	A1	10/2003	Boecker	606/181
2003/0199909	A1	10/2003	Boecker	606/181
2003/0199910	A1	10/2003	Boecker	606/181
2003/0199911	A1	10/2003	Boecker	606/181
2003/0199912	A1	10/2003	Pugh	606/182
2003/0201194	A1	10/2003	Heller	205/777.5
2003/0203352	A1	10/2003	Haviland	435/4
2003/0206828	A1	11/2003	Bell	422/44
2003/0208140	A1	11/2003	Pugh	600/584
2003/0210811	A1	11/2003	Dubowsky	382/309
2003/0211619	A1	11/2003	Olson et al.	436/44
2003/0212344	A1	11/2003	Yuzhakov	600/583
2003/0212345	A1	11/2003	McAllister	600/584
2003/0212346	A1	11/2003	McAllister	600/584
2003/0212347	A1	11/2003	Sohrab	600/584
2003/0212379	A1	11/2003	Bylund	604/504
2003/0212423	A1	11/2003	Pugh	606/181
2003/0212424	A1	11/2003	Briggs	606/181
2003/0212579	A1	11/2003	Brown	705/2
2003/0216767	A1	11/2003	List	606/181
2003/0217918	A1	11/2003	Davies	204/403.14
2003/0220552	A1	11/2003	Reghabi	600/365
2003/0220663	A1	11/2003	Fletcher	606/182
2003/0223906	A1	12/2003	McAllister	422/58
2003/0225317	A1	12/2003	Schell	600/300
2003/0225429	A1	12/2003	Garthe	606/182
2003/0225430	A1	12/2003	Schraga	606/182
2003/0228637	A1	12/2003	Wang	435/7.9
2003/0229514	A2	12/2003	Brown	705/2
2003/0232370	A1	12/2003	Trifiro	435/6
2003/0233055	A1	12/2003	Erickson	600/573
2003/0233112	A1	12/2003	Alden et al.	606/181
2003/0233113	A1	12/2003	Alden et al.	606/182
2004/0006285	A1	1/2004	Douglas	600/583
2004/0007585	A1	1/2004	Griffith	221/232
2004/0009100	A1	1/2004	Simons	422/102
2004/0010279	A1	1/2004	Freeman	606/182
2004/0015064	A1	1/2004	Parsons	600/347
2004/0019250	A1	1/2004	Catelli	600/1
2004/0019259	A1	1/2004	Brown	600/300
2004/0026243	A1	2/2004	Davies	204/403.14
2004/0026244	A1	2/2004	Hodges	204/409
2004/0030353	A1	2/2004	Schmelzeisen-Redeker	606/201
2004/0031682	A1	2/2004	Wilsey	204/403.1
2004/0034318	A1	2/2004	Fritz	604/19
2004/0038045	A1	2/2004	Smart	428/446
2004/0039303	A1	2/2004	Wurster	600/584
2004/0039342	A1	2/2004	Eppstein	604/200
2004/0039407	A1	2/2004	Schraga	606/181
2004/0039408	A1	2/2004	Abulhaj	606/181
2004/0049219	A1	3/2004	Briggs	606/181
2004/0049220	A1	3/2004	Boecker	606/181
2004/0050694	A1	3/2004	Yang	204/403.02
2004/0054267	A1	3/2004	Feldman	600/316
2004/0055898	A1	3/2004	Heller et al.	205/777.5
2004/0059256	A1	3/2004	Perez	600/583
2004/0060818	A1	4/2004	Feldman	204/403.01
2004/0061841	A1	4/2004	Black	355/30
2004/0064068	A1	4/2004	DeNuzzio	600/583
2004/0065669	A1	4/2004	Giraud et al.	
2004/0068093	A1	4/2004	Merrigan et al.	
2004/0068283	A1	4/2004	Fukuzawa et al.	606/181
2004/0069657	A1	4/2004	Hodges	205/787
2004/0087990	A1	5/2004	Boecker	606/181
2004/0092842	A1	5/2004	Boecker	600/575
2004/0092994	A1	5/2004	Briggs	606/181
2004/0092995	A1	5/2004	Boecker	606/181
2004/0096991	A1	5/2004	Zhang	436/518
2004/0098009	A1	5/2004	Boecker	606/181
2004/0098010	A1	5/2004	Davison	606/181
2004/0102803	A1	5/2004	Boecker	606/183

(56) **References Cited**

U.S. PATENT DOCUMENTS

2004/0106855	A1	6/2004	Brown	600/301
2004/0106858	A1	6/2004	Say	600/345
2004/0106859	A1	6/2004	Say	600/345
2004/0106860	A1	6/2004	Say	600/345
2004/0106904	A1	6/2004	Gonnelli	604/173
2004/0106941	A1	6/2004	Roe	606/181
2004/0107116	A1	6/2004	Brown	705/2
2004/0115754	A1	6/2004	Chang	435/14
2004/0115831	A1	6/2004	Meathrel	436/514
2004/0116780	A1	6/2004	Brown	600/300
2004/0116829	A1	6/2004	Raney	600/573
2004/0117207	A1	6/2004	Brown	705/2
2004/0117208	A1	6/2004	Brown	705/2
2004/0117209	A1	6/2004	Brown	705/2
2004/0117210	A1	6/2004	Brown	705/2
2004/0122339	A1	6/2004	Roe	
2004/0127818	A1	7/2004	Roe	600/583
2004/0127819	A1	7/2004	Roe	600/583
2004/0127928	A1	7/2004	Whitson	606/181
2004/0127929	A1	7/2004	Roe	606/181
2004/0132167	A1	7/2004	Rule	435/287.1
2004/0133125	A1	7/2004	Miyashita	600/573
2004/0133127	A1	7/2004	Roe	600/583
2004/0137640	A1	7/2004	Hirao	436/514
2004/0138541	A1	7/2004	Ward	600/345
2004/0138588	A1	7/2004	Saikley	600/583
2004/0138688	A1	7/2004	Giraud	606/181
2004/0146958	A1	7/2004	Bae	435/14
2004/0154932	A1	8/2004	Deng	205/777.5
2004/0157017	A1	8/2004	Mauze	428/35.7
2004/0157149	A1	8/2004	Hofmann	430/131
2004/0157319	A1	8/2004	Keen	435/287.2
2004/0157338	A1	8/2004	Burke	436/147
2004/0157339	A1	8/2004	Burke	436/149
2004/0158137	A1	8/2004	Eppstein	600/347
2004/0158271	A1	8/2004	Hamamoto	606/181
2004/0161737	A1	8/2004	Yang	435/5
2004/0162473	A1	8/2004	Sohrab	600/345
2004/0162474	A1	8/2004	Kiser	600/345
2004/0162506	A1	8/2004	Duchon	600/583
2004/0162573	A1	8/2004	Keheiri	606/182
2004/0167383	A1	8/2004	Kim	600/365
2004/0171057	A1	9/2004	Yang	435/6
2004/0171968	A1	9/2004	Katsuki	600/583
2004/0172000	A1	9/2004	Roe	604/361
2004/0173472	A1	9/2004	Jung	205/777.5
2004/0173488	A1	9/2004	Griffin	206/363
2004/0176705	A1	9/2004	Stevens	600/584
2004/0176732	A1	9/2004	Frazier	604/345
2004/0178066	A1	9/2004	Miyazaki	204/403.01
2004/0178067	A1	9/2004	Miyazaki	204/403.1
2004/0178216	A1	9/2004	Brickwood	221/268
2004/0180379	A1	9/2004	van Duyne	435/7.1
2004/0182703	A1	9/2004	Bell	204/403.11
2004/0185568	A1	9/2004	Matsumoto	436/8
2004/0186359	A1	9/2004	Beaudoin	600/310
2004/0186394	A1	9/2004	Roe	600/598
2004/0186500	A1	9/2004	Koilke	606/181
2004/0193201	A1	9/2004	Kim	606/181
2004/0193377	A1	9/2004	Brown	702/19
2004/0194302	A1	10/2004	Bhullar	29/847
2004/0197231	A1	10/2004	Katsuki	422/68.1
2004/0197821	A1	10/2004	Bauer	437/7.1
2004/0199062	A1	10/2004	Petersson	600/316
2004/0199409	A1	10/2004	Brown	705/3
2004/0200720	A1	10/2004	Musho	204/403.01
2004/0200721	A1	10/2004	Bhullar	204/403.01
2004/0202576	A1	10/2004	Aceti	422/82.05
2004/0204662	A1	10/2004	Perez	600/583
2004/0206625	A1	10/2004	Bhullar	204/403.1
2004/0206636	A1	10/2004	Hodges	205/792
2004/0206658	A1	10/2004	Hammerstedt	206/524.1
2004/0209307	A1	10/2004	Valkirs	435/7.1
2004/0209350	A1	10/2004	Sakata	435/287.1
2004/0209354	A1	10/2004	Mathies	435/287.2
2004/0210279	A1	10/2004	Gruzdev	607/89
2004/0211666	A1	10/2004	Pamidi	204/403.01
2004/0214253	A1	10/2004	Paek	435/7.92
2004/0215224	A1	10/2004	Sakata	606/181
2004/0215225	A1	10/2004	Nakayama	606/182
2004/0216516	A1	11/2004	Sato	73/64.56
2004/0217019	A1	11/2004	Cai	205/792
2004/0219500	A1	11/2004	Brown	434/307 R
2004/0219535	A1	11/2004	Bell	435/6
2004/0220456	A1	11/2004	Eppstein	600/309
2004/0220495	A1	11/2004	Cahir	600/562
2004/0220564	A1	11/2004	Ho	606/47
2004/0220603	A1	11/2004	Rutynowski	606/181
2004/0222092	A1	11/2004	Musho	204/401
2004/0224369	A1	11/2004	Cai	435/7.7
2004/0225230	A1	11/2004	Liamos	600/583
2004/0225311	A1	11/2004	Levaughn	606/181
2004/0225312	A1	11/2004	Orloff	606/182
2004/0230216	A1	11/2004	Levaughn	606/181
2004/0231983	A1	11/2004	Shen	204/403.01
2004/0231984	A1	11/2004	Lauks	204/416
2004/0232009	A1	11/2004	Okuda	205/789
2004/0236250	A1	11/2004	Hodges	600/583
2004/0236251	A1	11/2004	Roe	600/583
2004/0236268	A1	11/2004	Mitragotri	604/20
2004/0236362	A1	11/2004	Shraga	606/181
2004/0238357	A1	12/2004	Bhullar	204/400
2004/0238358	A1	12/2004	Forrow	204/403.01
2004/0238359	A1	12/2004	Ikeda	204/403.1
2004/0241746	A1	12/2004	Adlassnig	435/7.1
2004/0242977	A1	12/2004	Dosmann	600/315
2004/0243164	A1	12/2004	D'Agostino	606/181
2004/0243165	A1	12/2004	Koike	606/181
2004/0245101	A1	12/2004	Willner	204/403
2004/0248282	A1	12/2004	Sobha	435/287.2
2004/0248312	A1	12/2004	Vreeke	436/95
2004/0249254	A1	12/2004	Racchini	600/347
2004/0249310	A1	12/2004	Shartle	600/583
2004/0249311	A1	12/2004	Haar	600/584
2004/0249405	A1	12/2004	Watanabe	606/181
2004/0249406	A1	12/2004	Griffin	606/182
2004/0251131	A1	12/2004	Ueno	204/403
2004/0253634	A1	12/2004	Wang	435/7.1
2004/0254434	A1	12/2004	Goodnow	600/365
2004/0254599	A1	12/2004	Lipoma	606/181
2004/0256228	A1	12/2004	Huang	204/434
2004/0256248	A1	12/2004	Burke	205/792
2004/0256685	A1	12/2004	Chou	257/414
2004/0258564	A1	12/2004	Charlton	422/58
2004/0260204	A1	12/2004	Boecker	600/584
2004/0260324	A1	12/2004	Fukuzawa	606/181
2004/0260325	A1	12/2004	Kuhr	606/181
2004/0260326	A1	12/2004	Lipoma	606/182
2004/0260511	A1	12/2004	Burke	702/182
2004/0267105	A1	12/2004	Monfre	600/344
2004/0267121	A1	12/2004	Sarvazyan et al.	
2004/0267160	A9	12/2004	Perez	600/583
2004/0267229	A1	12/2004	Moerman	604/500
2004/0267299	A1	12/2004	Kuriger	606/181
2004/0267300	A1	12/2004	Mace	606/182
2005/0000806	A1	1/2005	Hsieh	203/403.1
2005/0000807	A1	1/2005	Wang	204/403.81
2005/0000808	A1	1/2005	Cui	203/403.14
2005/0003470	A1	1/2005	Nelson	435/14
2005/0004437	A1	1/2005	Kaufmann	600/300
2005/0004494	A1	1/2005	Perez	600/583
2005/0008537	A1	1/2005	Mosolu	422/56
2005/0008851	A1	1/2005	Ezoe	428/336
2005/0009191	A1	1/2005	Swenson	436/43
2005/0010090	A1	1/2005	Acosta	600/316
2005/0010093	A1	1/2005	Ford	600/345
2005/0010134	A1	1/2005	Douglas	600/573
2005/0010137	A1	1/2005	Hodges	600/583
2005/0010198	A1	1/2005	Marchitto	606/9
2005/0011759	A1	1/2005	Moerman	204/403.03
2005/0013731	A1	1/2005	Burke	422/56
2005/0014997	A1	1/2005	Ruchti	600/310
2005/0015020	A1	1/2005	Levaughn	600/583
2005/0016844	A1	1/2005	Burke	204/403.1

(56) **References Cited**

U.S. PATENT DOCUMENTS

2005/0019212	A1	1/2005	Bhullar	422/56
2005/0019219	A1	1/2005	Oshiman	422/82.12
2005/0019805	A1	1/2005	Groll	435/6
2005/0019945	A1	1/2005	Groll	436/169
2005/0019953	A1	1/2005	Groll	436/514
2005/0021066	A1	1/2005	Kuhr	606/181
2005/0027181	A1	2/2005	Goode, Jr.	600/365
2005/0027211	A1	2/2005	Kuhr	600/583
2005/0027562	A1	2/2005	Brown	705/2
2005/0033340	A1	2/2005	Lipoma	606/181
2005/0033341	A1	2/2005	Vreeke	606/181
2005/0034983	A1	2/2005	Chambers	204/403.01
2005/0036020	A1	2/2005	Li	347/100
2005/0036146	A1	2/2005	Braig	356/246
2005/0036906	A1	2/2005	Nakahara et al.	422/58
2005/0036909	A1	2/2005	Erickson	422/61
2005/0037482	A1	2/2005	Braig	435/287
2005/0038329	A1	2/2005	Morris	600/319
2005/0038330	A1	2/2005	Jansen	600/345
2005/0038463	A1	2/2005	Davar	606/181
2005/0038464	A1	2/2005	Schraga	606/182
2005/0038465	A1	2/2005	Schraga	606/182
2005/0038674	A1	2/2005	Braig	705/2
2005/0042766	A1	2/2005	Ohman	436/174
2005/0043894	A1	2/2005	Fernandez	702/19
2005/0043965	A1	2/2005	Heller	705/2
2005/0045476	A1	3/2005	Neel	204/403.2
2005/0049472	A1	3/2005	Manda	600/345
2005/0049473	A1	3/2005	Desai	600/347
2005/0050859	A1	3/2005	Coppeta	53/471
2005/0054082	A1	3/2005	Pachl	435/287.2
2005/0054908	A1	3/2005	Blank	600/316
2005/0059872	A1	3/2005	Shartle	600/347
2005/0059895	A1	3/2005	Brown	600/481
2005/0060194	A1	3/2005	Brown	705/2
2005/0061668	A1	3/2005	Brenneman	204/403.01
2005/0064528	A1	3/2005	Kwon	435/14
2005/0067280	A1	3/2005	Reid	204/403.14
2005/0067737	A1	3/2005	Rappin	264/272.19
2005/0070771	A1	3/2005	Rule	600/316
2005/0070819	A1	3/2005	Poux	600/576
2005/0070945	A1	3/2005	Schraga	606/182
2005/0072670	A1	4/2005	Hasegawa	204/403.01
2005/0077176	A1	4/2005	Hodges	204/403.01
2005/0077584	A1	4/2005	Uhland	257/414
2005/0079542	A1	4/2005	Cullen	435/7.1
2005/0080652	A1	4/2005	Brown	705/2
2005/0085839	A1	4/2005	Allen	606/181
2005/0085840	A1	4/2005	Yi	606/182
2005/0086083	A1	4/2005	Brown	705/2
2005/0090754	A1	4/2005	Wolf	600/509
2005/0090850	A1	4/2005	Toes	606/182
2005/0096520	A1	5/2005	Maekawa	600/365
2005/0096565	A1	5/2005	Chang	600/584
2005/0096586	A1	5/2005	Trautman	604/46
2005/0096587	A1	5/2005	Santini	604/66
2005/0096686	A1	5/2005	Allen	606/181
2005/0098431	A1	5/2005	Hodges	204/403.01
2005/0098432	A1	5/2005	Grundel	204/403.2
2005/0098433	A1	5/2005	Grundel	204/403.2
2005/0098434	A1	5/2005	Grundel	204/403.02
2005/0100880	A1	5/2005	Chang	435/4
2005/0101841	A9	5/2005	Kaylor	600/300
2005/0101979	A1	5/2005	Alden	606/181
2005/0101980	A1	5/2005	Alden	606/181
2005/0101981	A1	5/2005	Alden	606/181
2005/0103624	A1	5/2005	Bhullar	204/403.01
2005/0106713	A1	5/2005	Phan	435/287.2
2005/0109637	A1	5/2005	Iyengar	205/775
2005/0112712	A1	5/2005	Ouyang	435/14
2005/0112782	A1	5/2005	Buechler	436/518
2005/0113658	A1	5/2005	Jacobson	600/342
2005/0113717	A1	5/2005	Matzinger	600/573
2005/0114062	A1	5/2005	Davies	702/104
2005/0114154	A1	5/2005	Wolkowiez	705/1
2005/0114444	A1	5/2005	Brown	709/203
2005/0118056	A1	6/2005	Swanson	423/23
2005/0118062	A1	6/2005	Otake	422/68.1
2005/0119681	A1	6/2005	Marshall	606/181
2005/0123443	A1	6/2005	Fujiwara	422/58
2005/0123680	A1	6/2005	Kang	427/248.1
2005/0124869	A1	6/2005	Hefti	600/316
2005/0125017	A1	6/2005	Kudrna	606/181
2005/0125018	A1	6/2005	Galloway	606/181
2005/0125019	A1	6/2005	Kudrna	606/182
2005/0126929	A1	6/2005	Mansouri	205/778
2005/0130248	A1	6/2005	Willner	435/14
2005/0130249	A1	6/2005	Parris	435/14
2005/0130292	A1	6/2005	Ahn	435/287.1
2005/0131286	A1	6/2005	Parker	600/328
2005/0131440	A1	6/2005	Starnes	
2005/0131441	A1	6/2005	Iio	606/182
2005/0133368	A1	6/2005	Davies	204/403.01
2005/0136471	A1	6/2005	Bhullar	435/6
2005/0136501	A1	6/2005	Kuriger	435/14
2005/0136529	A1	6/2005	Yang	435/287
2005/0136550	A1	6/2005	Yang	436/514
2005/0137536	A1	6/2005	Gonnelli	604/173
2005/0140659	A1	6/2005	Hohl	345/169
2005/0143675	A1	6/2005	Neel	600/583
2005/0143713	A1	6/2005	Delmore	604/506
2005/0143771	A1	6/2005	Stout	606/181
2005/0145490	A1	7/2005	Shinno	204/403
2005/0145491	A1	7/2005	Amano	204/403
2005/0145520	A1	7/2005	Ilo	206/365
2005/0149088	A1	7/2005	Fukuda	606/181
2005/0149089	A1	7/2005	Trissel	606/181
2005/0149090	A1	7/2005	Morita et al.	606/181
2005/0150762	A1	7/2005	Butters	204/403
2005/0150763	A1	7/2005	Butters	204/403
2005/0154277	A1	7/2005	Ting	600/407
2005/0154374	A1	7/2005	Hunter	604/890
2005/0154410	A1	7/2005	Conway	606/181
2005/0154616	A1	7/2005	Iliff	705/3
2005/0158850	A1	7/2005	Kubo	435/287.2
2005/0159656	A1	7/2005	Hockersmith	600/315
2005/0159768	A1	7/2005	Boehm	606/182
2005/0163176	A1	7/2005	You et al.	372/36
2005/0164299	A1	7/2005	Stewart	435/7.1
2005/0164322	A1	7/2005	Heller	435/14
2005/0164329	A1	7/2005	Wallace-Davis	435/25
2005/0165285	A1	7/2005	Iliff	600/300
2005/0165393	A1	7/2005	Eppstein	606/41
2005/0165622	A1	7/2005	Neel	705/2
2005/0169810	A1	8/2005	Hagen	422/102
2005/0169961	A1	8/2005	Hunter	424/423
2005/0170448	A1	8/2005	Burson	435/14
2005/0171567	A1	8/2005	DeHart	606/181
2005/0172021	A1	8/2005	Brown	709/224
2005/0172022	A1	8/2005	Brown	709/224
2005/0173245	A1	8/2005	Feldman	204/403.01
2005/0173246	A1	8/2005	Hodges	204/403.11
2005/0175509	A1	8/2005	Nakaminami	422/82.03
2005/0176084	A1	8/2005	Burkoth	435/14
2005/0176133	A1	8/2005	Miyashita	435/287.1
2005/0176153	A1	8/2005	O'hara	436/70
2005/0177071	A1	8/2005	Nakayama	600/583
2005/0177201	A1	8/2005	Freeman	607/46
2005/0177398	A1	8/2005	Watanabe	705/3
2005/0178218	A1	8/2005	Montagu	73/864.34
2005/0181010	A1	8/2005	Hunter	424/423
2005/0181497	A1	8/2005	Salto	435/287.1
2005/0182307	A1	8/2005	Currie	600/300
2005/0187439	A1	8/2005	Blank	600/310
2005/0187442	A1	8/2005	Cho et al.	
2005/0187444	A1	8/2005	Hubner	600/322
2005/0192488	A1	9/2005	Bryenton	600/301
2005/0196821	A1	9/2005	Monfre	435/14
2005/0197666	A1	9/2005	Raney	606/181
2005/0201897	A1	9/2005	Zimmer	422/82.05
2005/0202567	A1	9/2005	Zanzucchi	436/95
2005/0203358	A1	9/2005	Monfre	600/331
2005/0203364	A1	9/2005	Monfre	600/365
2005/0204939	A1	9/2005	Krejci	101/129

(56) **References Cited**

U.S. PATENT DOCUMENTS

2005/0205136	A1	9/2005	Freeman	137/554
2005/0205422	A1	9/2005	Moser	204/403.06
2005/0205816	A1	9/2005	Hayenga	251/61.1
2005/0209515	A1	9/2005	Hockersmith	600/316
2005/0209564	A1	9/2005	Bonner	604/173
2005/0209625	A1	9/2005	Chan	606/181
2005/0211571	A1	9/2005	Schulein	205/777.5
2005/0211572	A1	9/2005	Buck	205/778
2005/0214881	A1	9/2005	Azarnia	435/7.92
2005/0214892	A1	9/2005	Kovatchev	435/25
2005/0215871	A1	9/2005	Feldman	600/309
2005/0215872	A1	9/2005	Berner	600/347
2005/0215923	A1	9/2005	Wiegel	600/573
2005/0215925	A1	9/2005	Chan	600/583
2005/0216046	A1	9/2005	Yeoh	606/181
2005/0218024	A1	10/2005	Lang	206/438
2005/0221276	A1	10/2005	Rozakis	435/4
2005/0221470	A1	10/2005	Matsumoto	435/287.1
2005/0222599	A1	10/2005	Czernecki	606/182
2005/0227372	A1	10/2005	Khan	436/514
2005/0228242	A1	10/2005	Kawamura	600/300
2005/0228883	A1	10/2005	Brown	709/224
2005/0230252	A1	10/2005	Tsai	204/450
2005/0230253	A1	10/2005	Marquant	204/451
2005/0232813	A1	10/2005	Karmali	422/58
2005/0232815	A1	10/2005	Ruhl	422/66
2005/0234368	A1	10/2005	Wong	600/583
2005/0234486	A1	10/2005	Allen	606/181
2005/0234487	A1	10/2005	Shi	600/181
2005/0234488	A1	10/2005	Allen	606/181
2005/0234489	A1	10/2005	Allen	606/181
2005/0234490	A1	10/2005	Allen	606/181
2005/0234491	A1	10/2005	Allen	606/181
2005/0234492	A1	10/2005	Tsai	606/181
2005/0234494	A1	10/2005	Conway	606/181
2005/0234495	A1	10/2005	Schraga	606/181
2005/0235060	A1	10/2005	Brown	709/224
2005/0239154	A1	10/2005	Feldman	435/14
2005/0239156	A1	10/2005	Drucker	435/14
2005/0239194	A1	10/2005	Takahashi	435/287.2
2005/0240090	A1	10/2005	Ruchti	600/316
2005/0240119	A1	10/2005	Draudt	600/583
2005/0240207	A1	10/2005	Marshall	606/181
2005/0240778	A1	10/2005	Saito	713/186
2005/0245798	A1	11/2005	Yamaguchi	600/345
2005/0245843	A1	11/2005	Day	600/583
2005/0245844	A1	11/2005	Mace	600/583
2005/0245845	A1	11/2005	Roe	600/583
2005/0245954	A1	11/2005	Roe	606/181
2005/0245955	A1	11/2005	Schraga	606/181
2005/0256534	A1	11/2005	Alden	606/182
2005/0258035	A1	11/2005	Harding	204/403.01
2005/0258036	A1	11/2005	Harding	204/403.01
2005/0258050	A1	11/2005	Harding	205/775
2005/0265094	A1	12/2005	Harding	365/203
2005/0276133	A1	12/2005	Harding	365/203
2005/0278945	A1	12/2005	Feldman	29/830
2005/0279631	A1	12/2005	Celentano	204/403.01
2005/0279647	A1	12/2005	Beaty	205/792
2005/0283094	A1	12/2005	Thym	600/583
2005/0284110	A1	12/2005	Lang	53/473
2005/0284757	A1	12/2005	Allen	204/400
2005/0287620	A1	12/2005	Heller	435/14
2005/0288637	A1	12/2005	Kuhr	604/204
2005/0288698	A1	12/2005	Matsumoto	606/181
2005/0288699	A1	12/2005	Schraga	606/181
2006/0000549	A1	1/2006	Lang	156/320
2006/0003398	A1	1/2006	Heller	435/14
2006/0004270	A1	1/2006	Bedard	600/316
2006/0004271	A1	1/2006	Peyser	600/362
2006/0004272	A1	1/2006	Shah	600/365
2006/0006574	A1	1/2006	Lang	264/165
2006/0008389	A1	1/2006	Sacherer	422/102
2006/0015129	A1	1/2006	Shahrokni	606/181
2006/0016698	A1	1/2006	Lee	205/777.5
2006/0020228	A1	1/2006	Fowler	600/583
2006/0024774	A1	2/2006	Zocchi	435/14
2006/0025662	A1	2/2006	Buse	600/347
2006/0029979	A1	2/2006	Bai	435/7.1
2006/0029991	A1	2/2006	Hagino	435/14
2006/0030028	A1	2/2006	Nakaminami	435/287.2
2006/0030050	A1	2/2006	Milne	436/67
2006/0030761	A1	2/2006	Raskas	600/316
2006/0030788	A1	2/2006	Wong	600/583
2006/0034728	A1	2/2006	Kloepfer	422/68.1
2006/0037859	A1	2/2006	Hodges	204/400
2006/0040333	A1	2/2006	Zocchi	435/14
2006/0047220	A1	3/2006	Sakata	600/583
2006/0047294	A1	3/2006	Mori	606/181
2006/0052723	A1	3/2006	Roe	600/583
2006/0052724	A1	3/2006	Roe	600/583
2006/0052809	A1	3/2006	Karbowniczek	606/181
2006/0052810	A1	3/2006	Freeman	606/181
2006/0058827	A1	3/2006	Sakata	606/181
2006/0058828	A1	3/2006	Shi	606/181
2006/0062852	A1	3/2006	Holmes	424/484
2006/0063988	A1	3/2006	Schurman	600/316
2006/0064035	A1	3/2006	Wang	600/583
2006/0079739	A1	4/2006	Chen Wang	600/300
2006/0079810	A1	4/2006	Patel	600/583
2006/0079811	A1	4/2006	Roe	600/583
2006/0079920	A1	4/2006	Schraga	606/181
2006/0081469	A1	4/2006	Lee	204/403.02
2006/0085020	A1	4/2006	Freeman	606/181
2006/0085137	A1	4/2006	Bartkowiak	702/19
2006/0086624	A1	4/2006	Tapsak	205/775
2006/0088945	A1	4/2006	Douglas	436/518
2006/0089566	A1	4/2006	DeHart	600/573
2006/0091006	A1	5/2006	Wang	204/403.02
2006/0094944	A1	5/2006	Chuang	600/347
2006/0094947	A1	5/2006	Kovatchev	600/365
2006/0094985	A1	5/2006	Aceti	600/575
2006/0094986	A1	5/2006	Neel	600/583
2006/0095061	A1	5/2006	Trautman	606/185
2006/0096859	A1	5/2006	Lau	204/403.14
2006/0099107	A1	5/2006	Yamamoto	422/57
2006/0099703	A1	5/2006	Choi	435/287.1
2006/0100542	A9	5/2006	Wong	600/583
2006/0100543	A1	5/2006	Raney	600/583
2006/0100654	A1	5/2006	Fukuda	606/181
2006/0100655	A1	5/2006	Leong	606/181
2006/0100656	A1	5/2006	Olsen	606/181
2006/0106373	A1	5/2006	Cahir	606/9
2006/0108236	A1	5/2006	Kasielke	205/792
2006/0113187	A1	6/2006	Deng	204/403.01
2006/0115857	A1	6/2006	Keen	435/7.1
2006/0116562	A1	6/2006	Acosta	600/316
2006/0116704	A1	6/2006	Ashby	606/167
2006/0116705	A1	6/2006	Schraga	606/181
2006/0119362	A1	6/2006	Kermani	324/324
2006/0121547	A1	6/2006	McIntire	435/14
2006/0121625	A1	6/2006	Clemens	436/514
2006/0121759	A1	6/2006	Kasai	439/188
2006/0122099	A1	6/2006	Aoki	514/3
2006/0122536	A1	6/2006	Haar	600/581
2006/0129065	A1	6/2006	Matsumoto	600/583
2006/0129172	A1	6/2006	Crossman	606/181
2006/0129173	A1	6/2006	Wilkinson	606/181
2006/0134713	A1	6/2006	Rylatt	435/7.92
2006/0140457	A1	6/2006	Simshauser	382/124
2006/0144704	A1	7/2006	Ghesquiere	204/403.01
2006/0151323	A1	7/2006	Cho	204/403.04
2006/0155215	A1	7/2006	Cha	600/583
2006/0155316	A1	7/2006	Perez	606/181
2006/0155317	A1	7/2006	List	606/181
2006/0156796	A1	7/2006	Burke	73/61.44
2006/0157362	A1	7/2006	Schraga	206/363
2006/0160100	A1	7/2006	Gao	435/6
2006/0161078	A1	7/2006	Schraga	600/583
2006/0161194	A1	7/2006	Freeman	606/185
2006/0163061	A1	7/2006	Hodges	204/401
2006/0166302	A1	7/2006	Clarke	435/25
2006/0167382	A1	7/2006	Deshmukh	600/583
2006/1051342		7/2006	Yaguchi	206/306

(56) **References Cited**

U.S. PATENT DOCUMENTS

2006/0169599	A1	8/2006	Feldman	205/792
2006/0173254	A1	8/2006	Acosta	600/316
2006/0173255	A1	8/2006	Acosta	600/316
2006/0173379	A1	8/2006	Rasch-Menges	600/583
2006/0173380	A1	8/2006	Hoenes	600/583
2006/0173478	A1	8/2006	Schraga	606/181
2006/0175216	A1	8/2006	Freeman	206/363
2006/0178573	A1	8/2006	Kermani	600/347
2006/0178599	A1	8/2006	Faupel	600/578
2006/0178600	A1	8/2006	Kennedy	600/584
2006/0178686	A1	8/2006	Schraga	606/181
2006/0178687	A1	8/2006	Freeman	606/181
2006/0178688	A1	8/2006	Freeman	606/181
2006/0178689	A1	8/2006	Freeman	606/181
2006/0178690	A1	8/2006	Freeman	606/181
2006/0183871	A1	8/2006	Ward	525/464
2006/0183983	A1	8/2006	Acosta	600/316
2006/0184065	A1	8/2006	Deshmukh	600/583
2006/0184101	A1	8/2006	Srinivasan	604/68
2006/0188395	A1	8/2006	Taniike	422/57
2006/0189895	A1	8/2006	Neel	600/584
2006/0191787	A1	8/2006	Wang	204/400
2006/0195023	A1	8/2006	Acosta	600/316
2006/0195047	A1	8/2006	Freeman	600/583
2006/0195128	A1	8/2006	Alden	606/181
2006/0195129	A1	8/2006	Freeman	606/181
2006/0195130	A1	8/2006	Freeman	606/181
2006/0195131	A1	8/2006	Freeman	606/181
2006/0195132	A1	8/2006	Freeman	606/181
2006/0195133	A1	8/2006	Freeman	606/181
2006/0196031	A1	9/2006	Hoenes	29/432
2006/0196795	A1	9/2006	Windus-Smith	206/438
2006/0200044	A1	9/2006	Freeman	600/583
2006/0200045	A1	9/2006	Roe	600/583
2006/0200046	A1	9/2006	Windus-Smith	600/583
2006/0200181	A1	9/2006	Fukuzawa	606/181
2006/0200981	A1	9/2006	Bhullar	29/847
2006/0200982	A1	9/2006	Bhullar	29/847
2006/0201804	A1	9/2006	Chambers	204/400
2006/0204399	A1	9/2006	Freeman	422/58
2006/0205029	A1	9/2006	Heller	435/25
2006/0205060	A1	9/2006	Kim	435/287.2
2006/0206135	A1	9/2006	Uehata	606/181
2006/0211127	A1	9/2006	Iwaki	436/169
2006/0211927	A1	9/2006	Acosta	600/316
2006/0211931	A1	9/2006	Blank	600/344
2006/0219551	A1	10/2006	Edelbrock	204/403.14
2006/0222566	A1	10/2006	Brauker et al.	422/68.1
2006/0222567	A1	10/2006	Kloepfer	422/68.1
2006/0224171	A1	10/2006	Sakata	606/181
2006/0224172	A1	10/2006	Levaughn	606/181
2006/0229532	A1	10/2006	Wong	600/583
2006/0229533	A1	10/2006	Hoenes	600/584
2006/0229651	A1	10/2006	Marshall	606/181
2006/0229652	A1	10/2006	Lio et al.	606/182
2006/0231396	A1	10/2006	Yamaoka	204/403.14
2006/0231418	A1	10/2006	Harding	205/775
2006/0231421	A1	10/2006	Diamond	205/777.5
2006/0231423	A1	10/2006	Harding	205/792
2006/0231425	A1	10/2006	Harding	205/792
2006/0231442	A1	10/2006	Windus-Smith	206/438
2006/0232278	A1	10/2006	Diamond	324/444
2006/0232528	A1	10/2006	Harding	345/87
2006/0233666	A1	10/2006	Vu	422/68.1
2006/0234263	A1	10/2006	Light, II	C12Q 1/68
2006/0234369	A1	10/2006	Sih	435/287.1
2006/0235284	A1	10/2006	Lee	600/345
2006/0235454	A1	10/2006	LeVaughn	606/181
2006/0241517	A1	10/2006	Fowler	600/583
2006/0241666	A1	10/2006	Briggs	606/181
2006/0241667	A1	10/2006	Freeman	606/181
2006/0241668	A1	10/2006	Schraga	606/181
2006/0241669	A1	10/2006	Stout	606/182
2006/0247154	A1	11/2006	Palmieri	514/8
2006/0247554	A1	11/2006	Roe	600/583
2006/0247555	A1	11/2006	Harttig	600/584
2006/0247670	A1	11/2006	LeVaughn	606/181
2006/0247671	A1	11/2006	Levaughn	606/182
2006/0254932	A1	11/2006	Hodges	205/775
2006/0259057	A1	11/2006	Kim	606/181
2006/0259058	A1	11/2006	Schiff	606/181
2006/0259060	A1	11/2006	Whitson	606/182
2006/0264718	A1	11/2006	Ruchti	600/310
2006/0264996	A1	11/2006	Levaughn	606/181
2006/0264997	A1	11/2006	Colonna	606/181
2006/0266644	A1	11/2006	Pugh	204/400
2006/0266765	A1	11/2006	Pugh	222/1
2006/0271083	A1	11/2006	Boecker	606/181
2006/0271084	A1	11/2006	Schraga	606/182
2006/0276724	A1	12/2006	Freeman	600/583
2006/0277048	A1	12/2006	Kintzig	704/275
2006/0278545	A1	12/2006	Henning	206/363
2006/0279431	A1	12/2006	Bakarania	340/870.02
2006/0281187	A1	12/2006	Emery	436/169
2006/0282109	A1	12/2006	Jansen	606/181
2006/0286620	A1	12/2006	Werner	435/14
2006/0287664	A1	12/2006	Grage	606/181
2006/0293577	A1	12/2006	Morrison	600/365
2007/0004989	A1	1/2007	Dhillon	600/583
2007/0004990	A1	1/2007	Kistner	600/583
2007/0007183	A1	1/2007	Schulat	209/573
2007/0009381	A1	1/2007	Schulat	422/58
2007/0010839	A1	1/2007	Galloway	606/167
2007/0010841	A1	1/2007	Teo	606/181
2007/0015978	A1	1/2007	Kanayama	600/310
2007/0016079	A1	1/2007	Freeman	600/476
2007/0016103	A1	1/2007	Calasso	600/583
2007/0016104	A1	1/2007	Jansen	600/583
2007/0016239	A1	1/2007	Sato	606/181
2007/0017805	A1	1/2007	Hodges	204/400
2007/0027370	A1	2/2007	Brauker	600/309
2007/0027427	A1	2/2007	Trautman	604/46
2007/0032812	A1	2/2007	Loerwald	606/181
2007/0032813	A1	2/2007	Flynn	606/181
2007/0038149	A1	2/2007	Calasso	600/583
2007/0038235	A1	2/2007	Freeman	606/181
2007/0043305	A1	2/2007	Boecker	600/583
2007/0043386	A1	2/2007	Freeman	606/181
2007/0049901	A1	3/2007	Wu	604/506
2007/0049959	A1	3/2007	Feaster	606/181
2007/0055174	A1	3/2007	Freeman	600/583
2007/0055297	A1	3/2007	Fukuzawa	606/181
2007/0055298	A1	3/2007	Uehata	606/181
2007/0060842	A1	3/2007	Alvarez-Icaza	600/583
2007/0060843	A1	3/2007	Alvarez-Icaza	600/583
2007/0060844	A1	3/2007	Alvarez-Icaza	600/583
2007/0060845	A1	3/2007	Perez	600/583
2007/0061393	A1	3/2007	Chen	205/777.5
2007/0062250	A1	3/2007	Krulevitch	73/1.16
2007/0062251	A1	3/2007	Anex	73/1.36
2007/0062315	A1	3/2007	Hodges	73/864.72
2007/0064516	A1	3/2007	Briggs	365/230.05
2007/0066939	A1	3/2007	Krulevitch	604/152
2007/0066940	A1	3/2007	Karunaratne	604/152
2007/0068807	A1	3/2007	Feldman	204/403.01
2007/0073188	A1	3/2007	Freeman	600/583
2007/0073189	A1	3/2007	Freeman	600/583
2007/0074977	A1	4/2007	Guo	205/792
2007/0078358	A1	4/2007	Escutia	600/573
2007/0078360	A1	4/2007	Matsumoto	600/583
2007/0078474	A1	4/2007	Kim	606/181
2007/0080093	A1	4/2007	Boozer	206/569
2007/0083130	A1	4/2007	Thomson	600/583
2007/0083131	A1	4/2007	Escutia	600/583
2007/0083222	A1	4/2007	Schraga	606/181
2007/0083335	A1	4/2007	Moerman	702/19
2007/0084749	A1	4/2007	Demelo	206/569
2007/0088377	A1	4/2007	LeVaughn	606/181
2007/0092923	A1	4/2007	Chang	435/14
2007/0093728	A1	4/2007	Douglas	600/583
2007/0093752	A1	4/2007	Zhao	604/131
2007/0093753	A1	4/2007	Krulevitch	604/131
2007/0093863	A1	4/2007	Pugh	606/181
2007/0093864	A1	4/2007	Pugh	606/181

(56) **References Cited**

U.S. PATENT DOCUMENTS

2007/0095178	A1	5/2007	Schraga	83/13
2007/0100255	A1	5/2007	Boecker	600/583
2007/0100256	A1	5/2007	Sansom	600/583
2007/0100364	A1	5/2007	Sansom	606/181
2007/0102312	A1	5/2007	Cha	206/363
2007/0106178	A1	5/2007	Roe	600/583
2007/0108048	A1	5/2007	Wang	204/403.01
2007/0112281	A1	5/2007	Olson	600/583
2007/0112367	A1	5/2007	Olson	606/181
2007/0118051	A1	5/2007	Korner et al.	600/583
2007/0119710	A1	5/2007	Goldberger	204/403.01
2007/0123801	A1	5/2007	Goldberger	600/583
2007/0123802	A1	5/2007	Freeman	600/583
2007/0123803	A1	5/2007	Fujiwara et al.	600/583
2007/0129618	A1	6/2007	Goldberger	600/345
2007/0129650	A1	6/2007	Freeman	600/583
2007/0131565	A1	6/2007	Fujiwara	205/777.5
2007/0135828	A1	6/2007	Rutynowski	606/181
2007/0142747	A1	6/2007	Boecker	600/583
2007/0142748	A1	6/2007	Freeman	600/583
2007/0142776	A9	6/2007	Kovelman	604/136
2007/0142854	A1	6/2007	Schraga	606/181
2007/0144235	A1	6/2007	Werner	73/1.82
2007/0149875	A1	6/2007	Ouyang	600/347
2007/0149897	A1	6/2007	Ghesquiere	600/583
2007/0161960	A1	7/2007	Chen	604/187
2007/0162064	A1	7/2007	Starnes	606/181
2007/0162065	A1	7/2007	Li	606/182
2007/0167869	A1	7/2007	Roe	600/583
2007/0167870	A1	7/2007	Freeman	600/583
2007/0167871	A1	7/2007	Freeman	600/583
2007/0167872	A1	7/2007	Freeman	600/583
2007/0167873	A1	7/2007	Freeman	600/583
2007/0167874	A1	7/2007	Freeman	600/583
2007/0167875	A1	7/2007	Freeman .	600/583
2007/0173739	A1	7/2007	Chan	600/583
2007/0173740	A1	7/2007	Chan	600/583
2007/0173741	A1	7/2007	Boecker et al.	600/583
2007/0173742	A1	7/2007	Freeman	600/583
2007/0173743	A1	7/2007	Freeman	600/583
2007/0173874	A1	7/2007	Uschold	606/181
2007/0173875	A1	7/2007	Uschold	606/181
2007/0173876	A1	7/2007	Aylett	606/181
2007/0176120	A1	8/2007	Schwind	250/492.1
2007/0179356	A1	8/2007	Wessel	600/300
2007/0179404	A1	8/2007	Escutia	600/583
2007/0179405	A1	8/2007	Emery	600/583
2007/0179406	A1	8/2007	DeNuzzio	600/583
2007/0182051	A1	8/2007	Harttig	264/138
2007/0185412	A1	8/2007	Boecker	600/583
2007/0185515	A1	8/2007	Stout	606/181
2007/0185516	A1	8/2007	Schosnig	606/181
2007/0191702	A1	8/2007	Yodfat	600/365
2007/0191737	A1	8/2007	Freeman	600/583
2007/0191738	A1	8/2007	Raney	600/583
2007/0191739	A1	8/2007	Roe	600/583
2007/0193019	A1	8/2007	Feldman	29/592.1
2007/0193882	A1	8/2007	Dai	204/403.02
2007/0196240	A1	8/2007	Boozer	422/102
2007/0196242	A1	8/2007	Boozer	422/102
2007/0203514	A1	8/2007	Flaherty	606/181
2007/0203903	A1	8/2007	Attaran Rezaei	707/5
2007/0205103	A1	9/2007	Hodges	204/403.01
2007/0207498	A1	9/2007	Palmieri	435/7.1
2007/0213601	A1	9/2007	Freeman	600/300
2007/0213637	A1	9/2007	Boozer	600/583
2007/0213682	A1	9/2007	Haar	604/500
2007/0213756	A1	9/2007	Freeman	606/181
2007/0218543	A1	9/2007	Flaherty	435/287.1
2007/0219346	A1	9/2007	Trifiro	530/308
2007/0219432	A1	9/2007	Thompson	600/300
2007/0219436	A1	9/2007	Takase	600/310
2007/0219462	A1	9/2007	Briggs	600/583
2007/0219463	A1	9/2007	Briggs	600/583
2007/0219572	A1	9/2007	Deck	606/181
2007/0219573	A1	9/2007	Freeman	606/183
2007/0219574	A1	9/2007	Freeman	606/185
2007/0225741	A1	9/2007	Ikeda	606/182
2007/0225742	A1	9/2007	Abe	606/182
2007/0227907	A1	10/2007	Shah	205/777.5
2007/0227911	A1	10/2007	Wang	205/792
2007/0227912	A1	10/2007	Chatelier	205/792
2007/0229085	A1	10/2007	Kawai	324/450
2007/0232872	A1	10/2007	Prough	600/316
2007/0232956	A1	10/2007	Harman	600/573
2007/0233013	A1	10/2007	Schoenberg	604/192
2007/0233166	A1	10/2007	Stout	606/182
2007/0233167	A1	10/2007	Weiss	606/182
2007/0233395	A1	10/2007	Neel	702/9
2007/0235329	A1	10/2007	Harding	204/403.01
2007/0235347	A1	10/2007	Chatelier	205/792
2007/0239068	A1	10/2007	Rasch-Menges	600/573
2007/0239188	A1	10/2007	Boozer	606/181
2007/0239189	A1	10/2007	Freeman	606/181
2007/0239190	A1	10/2007	Alden	606/181
2007/0240984	A1	10/2007	Popovich	204/403.01
2007/0240986	A1	10/2007	Reymond	204/412
2007/0244380	A1	10/2007	Say	600/347
2007/0244412	A1	10/2007	Lav	600/584
2007/0244498	A1	10/2007	Steg	606/181
2007/0244499	A1	10/2007	Briggs	606/182
2007/0249921	A1	10/2007	Groll	600/347
2007/0249962	A1	10/2007	Alden	600/583
2007/0249963	A1	10/2007	Alden	600/583
2007/0250099	A1	10/2007	Flora	606/181
2007/0251836	A1	11/2007	Hsu	205/792
2007/0254359	A1	11/2007	Rezania	435/325
2007/0255141	A1	11/2007	Esenaliev	600/475
2007/0255178	A1	11/2007	Alvarez-Icaza	600/583
2007/0255179	A1	11/2007	Alvarez-Icaza	600/583
2007/0255180	A1	11/2007	Alvarez-Icaza	600/583
2007/0255181	A1	11/2007	Alvarez-Icaza	600/583
2007/0255300	A1	11/2007	Vanhiel	606/181
2007/0255301	A1	11/2007	Freeman	606/181
2007/0255302	A1	11/2007	Koeppel	606/182
2007/0260271	A1	11/2007	Freeman	606/181
2007/0260272	A1	11/2007	Weiss	606/181
2007/0264721	A1	11/2007	Buck	436/150
2007/0265511	A1	11/2007	Renouf	600/319
2007/0265532	A1	11/2007	Maynard	600/477
2007/0265654	A1	11/2007	Iio	606/185
2007/0273901	A1	11/2007	Baskeyfield	358/1.9
2007/0273903	A1	11/2007	Baskeyfield	358/1.9
2007/0273904	A1	11/2007	Robinson	358/1.9
2007/0273928	A1	11/2007	Robinson	358/1.9
2007/0276197	A1	11/2007	Harmon	600/300
2007/0276211	A1	11/2007	Mir	600/345
2007/0276290	A1	11/2007	Boecker	600/583
2007/0276425	A1	11/2007	Kim	606/186
2007/0276621	A1	11/2007	Davies	702/104
2007/0278097	A1	12/2007	Bhullar	204/403.01
2007/0282186	A1	12/2007	Gilmore	600/365
2007/0282362	A1	12/2007	Berg	606/181
2007/0288047	A1	12/2007	Thoes	606/182
2007/0293743	A1	12/2007	Monfre	600/316
2007/0293744	A1	12/2007	Monfre	600/316
2007/0293790	A1	12/2007	Bainczyk	600/583
2007/0293882	A1	12/2007	Harttig	606/181
2007/0293883	A1	12/2007	Horie	606/181
2007/0295616	A1	12/2007	Harding	205/777.5
2008/0004651	A1	1/2008	Nicholls	606/182
2008/0007141	A1	1/2008	Deck	310/328
2008/0009767	A1	1/2008	Effenhauser	600/583
2008/0009768	A1	1/2008	Sohrab	600/583
2008/0009892	A1	1/2008	Freeman	606/181
2008/0009893	A1	1/2008	LeVaughn	606/181
2008/0015425	A1	1/2008	Douglas	600/347
2008/0015623	A1	1/2008	Deck	606/181
2008/0017522	A1	1/2008	Heller	205/777.5
2008/0019870	A1	1/2008	Newman	422/68.1
2008/0021291	A1	1/2008	Zocchi	600/300
2008/0021293	A1	1/2008	Schurman	600/316
2008/0021295	A1	1/2008	Wang	600/347
2008/0021296	A1	1/2008	Creaven	600/365

(56) **References Cited**

U.S. PATENT DOCUMENTS

2008/0021346	A1	1/2008	Haar	600/583
2008/0021490	A1	1/2008	Briggs	606/181
2008/0021491	A1	1/2008	Freeman	606/181
2008/0021492	A1	1/2008	Freeman	606/181
2008/0021493	A1	1/2008	Levaughn	606/181
2008/0021494	A1	1/2008	Schmelzeisen-Redeker	606/181
2008/0027385	A1	1/2008	Freeman	604/117
2008/0031778	A1	2/2008	Kramer	422/68.1
2008/0033268	A1	2/2008	Stafford	600/345
2008/0033318	A1	2/2008	Mace	600/583
2008/0033319	A1	2/2008	Kloepfer	600/583
2008/0033468	A1	2/2008	Lathrop	606/181
2008/0033469	A1	2/2008	Winheim	606/181
2008/0034834	A1	2/2008	Schell	73/1.02
2008/0034835	A1	2/2008	Schell	73/1.02
2008/0039885	A1	2/2008	Purcell	606/182
2008/0039886	A1	2/2008	Shi	606/182
2008/0039887	A1	2/2008	Conway	606/182
2008/0040919	A1	2/2008	Griss	29/777
2008/0045825	A1	2/2008	Melker	600/365
2008/0045992	A1	2/2008	Schraga	606/182
2008/0047764	A1	2/2008	Lee	G08C 21/00
2008/0053201	A1	3/2008	Roesicke	73/61.41
2008/0057484	A1	3/2008	Miyata	434/739
2008/0058624	A1	3/2008	Smart	600/345
2008/0058626	A1	3/2008	Miyata	600/365
2008/0058631	A1	3/2008	Draudt	600/385
2008/0058847	A1	3/2008	Abe	606/181
2008/0058848	A1	3/2008	Griffin	606/182
2008/0058849	A1	3/2008	Conway	606/183
2008/0060424	A1	3/2008	Babic	73/61.41
2008/0064986	A1	3/2008	Kraemer	600/583
2008/0064987	A1	3/2008	Escutia	600/583
2008/0065130	A1	3/2008	Patel	606/181
2008/0065131	A1	3/2008	List	606/181
2008/0065132	A1	3/2008	Trissel	606/182
2008/0065133	A1	3/2008	Kennedy	606/182
2008/0065134	A1	3/2008	Conway	606/182
2008/0073224	A1	3/2008	Diamond	205/775
2008/0077048	A1	3/2008	Escutia	600/583
2008/0077167	A1	3/2008	Flynn	606/172
2008/0077168	A1	3/2008	Nicholls	606/182
2008/0081969	A1	4/2008	Feldman	600/322
2008/0081976	A1	4/2008	Hodges	600/345
2008/0082023	A1	4/2008	Deck	600/583
2008/0082116	A1	4/2008	Lathrop	606/181
2008/0082117	A1	4/2008	Ruf	606/182
2008/0086042	A1	4/2008	Brister	600/347
2008/0086044	A1	4/2008	Brister	600/365
2008/0086273	A1	4/2008	Shults	702/19
2008/0093227	A1	4/2008	Diamond	205/775
2008/0093228	A1	4/2008	Diamond	205/782
2008/0093230	A1	4/2008	Diamond	205/792
2008/0094804	A1	4/2008	Reynolds	361/727
2008/0097171	A1	4/2008	Smart	600/309
2008/0097241	A1	4/2008	Maltezos	600/576
2008/0097503	A1	4/2008	Creaven	606/182
2008/0098802	A1	5/2008	Burke	73/61.61
2008/0103396	A1	5/2008	Johnson	600/477
2008/0103415	A1	5/2008	Roe	600/583
2008/0103517	A1	5/2008	Takemoto	606/182
2008/0105024	A1	5/2008	Creaven	73/1.02
2008/0105568	A1	5/2008	Wu	205/780.5
2008/0108130	A1	5/2008	Nakaminami	435/287.1
2008/0108942	A1	5/2008	Brister	604/118
2008/0109024	A1	5/2008	Berkovitch	606/181
2008/0109025	A1	5/2008	Yang	606/182
2008/0109259	A1	5/2008	Thompson	705/3
2008/0114227	A1	5/2008	Haar	600/347
2008/0114228	A1	5/2008	McCluskey	600/365
2008/0118400	A1	5/2008	Neel	422/68.1
2008/0119703	A1	5/2008	Brister	600/347
2008/0119704	A1	5/2008	Brister	600/347
2008/0119706	A1	5/2008	Brister	600/365
2008/0119761	A1	5/2008	Boecker	600/583
2008/0119883	A1	5/2008	Conway	606/181
2008/0119884	A1	5/2008	Flora	606/182
2008/0121533	A1	5/2008	Hodges	205/775
2008/0125800	A1	5/2008	List	606/181
2008/0125801	A1	5/2008	List	606/181
2008/0134806	A1	6/2008	Capriccio	73/863.21
2008/0134810	A1	6/2008	Neel	73/866
2008/0135559	A1	6/2008	Byrd	220/506
2008/0140105	A1	6/2008	Zhong	606/182
2008/0144022	A1	6/2008	Schulat	356/213
2008/0146899	A1	6/2008	Ruchti	600/316
2008/0146966	A1	6/2008	LeVaughn	600/583
2008/0147108	A1	6/2008	Kennedy	606/182
2008/0149268	A1	6/2008	Zhao	156/299
2008/0149599	A1	6/2008	Bohm	216/94
2008/0152507	A1	6/2008	Bohm	417/44.1
2008/0154187	A1	6/2008	Krulevitch	604/48
2008/0154513	A1	6/2008	Kovatchev	702/19
2008/0159913	A1	7/2008	Jung	422/57
2008/0161664	A1	7/2008	Mastrototaro	600/347
2008/0161724	A1	7/2008	Roe	600/583
2008/0161725	A1	7/2008	Wong	600/583
2008/0166269	A1	7/2008	Jansen	422/63
2008/0167578	A1	7/2008	Bryer	600/583
2008/0167673	A1	7/2008	Zhong	606/181
2008/0188771	A1	8/2008	Boecker	600/583
2008/0194987	A1	8/2008	Boecker	600/583
2008/0194989	A1	8/2008	Briggs	600/583
2008/0208026	A1	8/2008	Noujaim	600/365
2008/0208079	A1	8/2008	Hein	600/583
2008/0210574	A1	9/2008	Boecker	205/777.5
2008/0214909	A1	9/2008	Fuerst	600/309
2008/0214917	A1	9/2008	Boecker	600/347
2008/0214919	A1	9/2008	Harmon	600/365
2008/0214956	A1	9/2008	Briggs	600/575
2008/0228212	A1	9/2008	List	606/182
2008/0249435	A1	10/2008	Haar	600/583
2008/0249554	A1	10/2008	Freeman	606/181
2008/0255598	A1	10/2008	LeVaughn et al.	606/183
2008/0262387	A1	10/2008	List	600/583
2008/0262388	A1	10/2008	List	600/583
2008/0267822	A1	10/2008	List	422/68.1
2008/0269723	A1	10/2008	Mastrototaro	604/890.1
2008/0269791	A1	10/2008	Hoenes	606/181
2008/0275365	A1	11/2008	Guthrie	600/584
2008/0275384	A1	11/2008	Mastrototaro	604/66
2008/0277291	A1	11/2008	Heller	205/777.5
2008/0277292	A1	11/2008	Heller	205/777.5
2008/0277293	A1	11/2008	Heller	205/777.5
2008/0277294	A1	11/2008	Heller	205/777.5
2008/0286149	A1	11/2008	Roe	422/58
2008/0294068	A1	11/2008	Briggs	600/583
2008/0300614	A1	12/2008	Freeman	606/181
2008/0318193	A1	12/2008	Alvarez-Icaza	434/262
2008/0319284	A1	12/2008	Alvarez-Icaza	600/309
2008/0319291	A1	12/2008	Freeman	600/347
2009/0005664	A1	1/2009	Freeman	600/347
2009/0020438	A1	1/2009	Hodges	205/782
2009/0024009	A1	1/2009	Freeman	600/309
2009/0026075	A1	1/2009	Harding	204/403.14
2009/0026091	A1	1/2009	Harding	205/777.5
2009/0027040	A1	1/2009	Kermani	324/123
2009/0029479	A1	1/2009	Docherty	436/149
2009/0030441	A1	1/2009	Kudrna et al.	600/583
2009/0043177	A1	2/2009	Milledge	600/309
2009/0043183	A1	2/2009	Kermani	600/365
2009/0048536	A1	2/2009	Freeman	600/583
2009/0054813	A1	2/2009	Freeman	600/584
2009/0057146	A1	3/2009	Teodorezyk	204/403.01
2009/0069716	A1	3/2009	Freeman	600/583
2009/0076415	A1	3/2009	Moerman	
2009/0084687	A1	4/2009	Chatelier	205/792
2009/0099477	A1	4/2009	Hoenes et al.	
2009/0105572	A1	4/2009	Malecha	600/365
2009/0105573	A1	4/2009	Malecha	600/365
2009/0112123	A1	4/2009	Freeman	600/583
2009/0112155	A1	4/2009	Zhao	604/67
2009/0112180	A1	4/2009	Krulevitch	604/506
2009/0112185	A1	4/2009	Krulevitch	604/523

(56) **References Cited**

U.S. PATENT DOCUMENTS

2009/0118752	A1	5/2009	Perez et al.	
2009/0124932	A1	5/2009	Freeman	606/181
2009/0131829	A1	5/2009	Freeman	600/583
2009/0131830	A1	5/2009	Freeman	600/583
2009/0131964	A1	5/2009	Freeman	606/181
2009/0131965	A1	5/2009	Freeman	606/181
2009/0137930	A1	5/2009	Freeman	600/583
2009/0138032	A1	5/2009	Freeman	606/181
2009/0139300	A1	6/2009	Pugh	73/1.36
2009/0177117	A1	7/2009	Amano et al.	600/583
2009/0184004	A1	7/2009	Chatelier	205/777.5
2009/0187351	A1	7/2009	Orr	702/19
2009/0192410	A1	7/2009	Freeman	600/583
2009/0192411	A1	7/2009	Freeman	600/583
2009/0196580	A1	8/2009	Freeman	386/124
2009/0204025	A1	8/2009	Marsot	600/573
2009/0216100	A1	8/2009	Ebner	600/347
2009/0237262	A1	9/2009	Smith	340/634
2009/0240127	A1	9/2009	Ray	600/365
2009/0247838	A1	10/2009	Cummings	600/309
2009/0247982	A1	10/2009	Krulevitch	604/500
2009/0259146	A1	10/2009	Freeman	600/583
2009/0270765	A1	10/2009	Ghesquiere et al.	
2009/0280551	A1	11/2009	Cardosi	435/190
2009/0281457	A1	11/2009	Faulkner	600/583
2009/0281458	A1	11/2009	Faulkner	600/583
2009/0281459	A1	11/2009	Faulkner	600/583
2009/0301899	A1	12/2009	Hodges	205/777.5
2009/0302872	A1	12/2009	Haggett	324/715
2009/0302873	A1	12/2009	Haggett	324/724
2009/0322630	A1	12/2009	Friman	343/720
2009/0325307	A1	12/2009	Haggett	436/150
2010/0016700	A1	1/2010	Sieh	600/365
2010/0018878	A1	1/2010	Davies	205/782
2010/0030110	A1	2/2010	Choi	600/583
2010/0041084	A1	2/2010	Stephens	435/14
2010/0094170	A1	4/2010	Wilson et al.	
2010/0094324	A1	4/2010	Huang et al.	
2010/0113981	A1	5/2010	Oki et al.	600/587
2010/0198107	A1	8/2010	Groll et al.	600/583
2010/0256525	A1	10/2010	List et al.	600/583
2010/0274273	A1	10/2010	Schraga et al.	
2010/0292611	A1	11/2010	Lum et al.	
2010/0324452	A1	12/2010	Freeman et al.	600/583
2010/0324582	A1	12/2010	Nicholls et al.	
2011/0077478	A1	3/2011	Freeman et al.	
2011/0077553	A1	3/2011	Alroy	600/573
2011/0098541	A1	4/2011	Freeman et al.	600/309
2011/0178429	A1	7/2011	Jacobs	
2011/0184448	A1	7/2011	Brown et al.	
2012/0296233	A9	2/2012	Freeman	600/583
2012/0149999	A1	6/2012	Freeman et al.	600/309
2012/0232425	A1	9/2012	Freeman et al.	600/583
2012/0271197	A1	10/2012	Castle et al.	600/583
2013/0261500	A1	10/2013	Jacobs	

FOREIGN PATENT DOCUMENTS

DE	3538313	A1	4/1986	B08B 5/02
DE	4212315	A1	10/1993	A61B 5/14
DE	4320347		12/1994	C07D 239/82
DE	4344452		6/1995	C07D 471/04
DE	4420232		12/1995	A61B 17/34
DE	29800611	U	7/1998	A61B 17/32
DE	19819407		11/1999	G01N 33/48
DE	20009475		10/2000	A61B 5/15
DE	29824204		10/2000	G01N 33/48
DE	10053974		12/2000	
DE	10032042		1/2002	
DE	10057832		2/2002	
DE	10057832	C1	2/2002	
DE	10142232		3/2003	
DE	10208575	C1	8/2003	
DE	10208575	C1	8/2003	
DE	10245721		12/2003	
DE	10361560	A1	7/2005	
EP	0112498	A2	7/1984	A47L 1/00
EP	137975	A2	4/1985	A61B 5/14
EP	0160768		11/1985	A61B 5/00
EP	0199484	A2	10/1986	
EP	0254246		1/1988	G01N 21/03
EP	0289 269		11/1988	
EP	0317847	A1	5/1989	A61B 5/14
EP	0320109		6/1989	
EP	0 364 208	A1	4/1990	
EP	0170375		5/1990	
EP	0136362		12/1990	G01N 27/327
EP	0449525		10/1991	A61B 5/14
EP	0453283		10/1991	
EP	0263948		2/1992	
EP	0449147	A2	8/1992	A61M 5/32
EP	0530994		3/1993	C07D 239/80
EP	0374355		6/1993	
EP	0351891		9/1993	
EP	0593096		4/1994	G01N 27/327
EP	0630609	A2	12/1994	A61B 5/14
EP	0415388		5/1995	
EP	0654659		5/1995	G01N 3/52
EP	0505494		7/1995	
EP	0662367	A1	7/1995	B24C 1/00
EP	0359831		8/1995	
EP	0471986		10/1995	
EP	0368474		12/1995	
EP	0461601		12/1995	
EP	0429076		1/1996	C12M 1/140
EP	0552223		7/1996	G01N 33/48
EP	0735363		10/1996	
EP	0505504		3/1997	
EP	0777123		6/1997	G01N 33/487
EP	0406304		8/1997	
EP	0537761		8/1997	
EP	0795601		9/1997	
EP	0562370		11/1997	G01N 27/327
EP	0415393		12/1997	
EP	0823239		2/1998	A61N 1/36
EP	0560336		5/1998	
EP	0878 708		11/1998	G01N 27/327
EP	0 898 936	A2	3/1999	
EP	0505475		3/1999	
EP	0901018		3/1999	G01N 33/48
EP	0470649		6/1999	
EP	0 951 939		10/1999	
EP	0 951 939	A2	10/1999	
EP	0847447		11/1999	
EP	0964059		12/1999	
EP	0964060		12/1999	C12Q 1/00
EP	0969097		1/2000	
EP	0 985 376		5/2000	
EP	1021950		7/2000	
EP	0894869		2/2001	
EP	1074832		2/2001	G01N 27/327
EP	1093854		4/2001	
EP	1 101 443		5/2001	
EP	1101443		5/2001	
EP	1114995		7/2001	G01N 33/487
EP	0736607		8/2001	G01N 27/327
EP	0874984		11/2001	
EP	1157660		11/2001	A61B 5/15
EP	0730037		12/2001	
EP	0636879		1/2002	
EP	01174083		1/2002	A61B 5/15
EP	0851224		3/2002	G01N 27/327
EP	0759553		5/2002	
EP	0856586		5/2002	
EP	0817809		7/2002	C08G 77/26
EP	0872728		7/2002	
EP	0795748		8/2002	G01N 27/327
EP	0685737		9/2002	G01N 27/327
EP	0958495		11/2002	
EP	0937249		12/2002	
EP	1337182		8/2003	
EP	0880692		1/2004	G01N 27/327
EP	01374770		1/2004	A61B 5/15

(56) **References Cited**

FOREIGN PATENT DOCUMENTS

EP	1404232		4/2004	
EP	1404233		4/2004	
EP	1246688		5/2004	B01D 71/10
EP	1486766		12/2004	G01N 1/00
EP	1502614		2/2005	A61M 5/172
EP	1643908		4/2006	
EP	1790288		5/2007	A61B 5/151
EP	1790288	A1	5/2007	
EP	1881322	A1	1/2008	G01N 33/487
EP	1921992		5/2008	
EP	2039294		3/2009	A61B 5/151
EP	2039294	A1	3/2009	
EP	2130493	A1	12/2009	A61B 5/15
FI	WO 2007/010087	A2	1/2007	A61B 5/151
FR	2 555 432	A	5/1985	
FR	2622457		11/1987	A61M 5/20
GB	1558111		12/1979	A61B 5/05
GB	2168815		6/1986	
GB	233936	A	6/1999	
GB	2335860	A	10/1999	
GB	2335990	A	10/1999	
GB	WO 2005045414	A1	5/2005	C12Q 1/00
IL	WO 2010109461	A1	9/2010	A61B 5/151
JP	HEI 4 194660		7/1992	G01N 27/28
JP	1996010208		12/1992	
JP	1014906		1/1998	A61B 5/14
JP	2000-116768		4/2000	A61M 1/02
JP	WO 2007/088905	A1	8/2007	A61B 5/1473
NL	WO 2008/085052	A2	7/2008	A61B 5/15
WO	WO 80/01389		7/1980	
WO	WO 85/04089		9/1985	
WO	WO 86/07632		12/1985	
WO	WO86/05966		10/1986	A61B 5/00
WO	WO 91/09139		6/1991	
WO	WO92/03099		3/1992	A61B 17/32
WO	WO92/06971		4/1992	C07D 401/06
WO	WO92/07263		4/1992	C12Q 1/00
WO	WO92/07468		5/1992	A01N 43/90
WO	WO93/00044		1/1993	A61B 17/32
WO	WO 93/06979		4/1993	
WO	WO93/09723		5/1993	A61B 17/32
WO	WO 93/25898		12/1993	G01N 27/327
WO	WO 94/27140		11/1994	G01N 27/327
WO	WO 94/29703		12/1994	
WO	WO 94/29704		12/1994	
WO	WO 94/29731		12/1994	
WO	WO 95/00662		1/1995	
WO	WO 95/06240		3/1995	
WO	WO 95/10223		4/1995	
WO	WO95/12583		5/1995	C07D 239/80
WO	WO 95/22597		8/1995	
WO	WO96/14799		5/1996	A61B 17/32
WO	WO 96/30431		10/1996	
WO	WO96/17148		11/1996	A61B 5/15
WO	WO 97/02359		1/1997	G01N 27/327
WO	WO 97/02487		1/1997	
WO	WO 97/11883		4/1997	B65B 1/00
WO	WO 97/11883	A1	4/1997	
WO	WO 97/18464		5/1997	
WO	WO97/28741		8/1997	A61B 5/15
WO	WO 97/30344		8/1997	
WO	WO 97/42882		11/1997	
WO	WO 97/42888		11/1997	A61B 5/00
WO	WO 97/45720		12/1997	
WO	WO 98/03431		1/1998	
WO	WO98/14436		4/1998	C07B 59/00
WO	WO 98/19159		5/1998	
WO	WO98/19609		5/1998	A61B 17/32
WO	WO 98/20332		5/1998	
WO	WO 98/20348		5/1998	
WO	WO98/20867		5/1998	A61K 31/00
WO	WO 98/24366		6/1998	
WO	WO 98/24373		6/1998	A61B 17/00
WO	WO 98/35225		8/1998	
WO	WO98/45276		10/1998	C07D 239/80
WO	WO 99/03584		1/1999	
WO	WO 99/05966		2/1999	
WO	WO99/07295		2/1999	
WO	WO 99/07431	A1	2/1999	A61M 25/06
WO	WO 99/13100		3/1999	
WO	WO 99/17854		4/1999	G06F 3/28
WO	WO 99/18532		4/1999	G06F 19/00
WO	WO 99/19507		4/1999	
WO	WO 99/19717		4/1999	
WO	WO 99/27483		6/1999	G06F 19/00
WO	WO 99/27852		6/1999	
WO	WO 99/62576		12/1999	A61M 5/168
WO	WO 99/64580		12/1999	C12N 15/00
WO	WO 00/06024		2/2000	A61B 5/16
WO	WO 00/09184		2/2000	
WO	WO 00/11578		3/2000	G06F 17/40
WO	WO 00/15103		3/2000	A61B 5/00
WO	WO 00/17799		3/2000	G06F 17/60
WO	WO 00/17800		3/2000	G06F 17/60
WO	WO 00/18293		4/2000	A61B 5/00
WO	WO 00/19346		4/2000	G06F 17/60
WO	WO 00/20626		4/2000	C12Q 1/00
WO	WO00/29577		5/2000	C07K 14/705
WO	WO 00/30186		5/2000	H01L 41/09
WO	WO 00/32097		6/2000	A61B 5/00
WO	WO 00/32098		6/2000	A61B 5/00
WO	WO 00/33236		6/2000	G06F 159/00
WO	WO 00/39914		7/2000	
WO	WO 00/42422		7/2000	
WO	WO 00/44084		7/2000	
WO	WO00/046854		8/2000	G02F 1/1333
WO	WO 00/50771		8/2000	
WO	WO00/55915		9/2000	H01L 21/98
WO	WO 00/60340		10/2000	
WO	WO 00/64022		10/2000	
WO	WO 00/67245		11/2000	
WO	WO 00/67268		11/2000	
WO	WO 00/72452		11/2000	G06F 17/60
WO	WO 01/00090		1/2001	
WO	WO 01/15807		3/2001	
WO	WO 01/16578	A1	3/2001	G01N 21/35
WO	WO 01/75433		3/2001	G01N 33/00
WO	WO 01/23885		4/2001	
WO	WO 01/25775		4/2001	G01N 27/30
WO	WO 01/26813		4/2001	
WO	WO01/29037		4/2001	A61K 31/44
WO	WO 01/33216		5/2001	G01N 33/487
WO	WO 01/34029		5/2001	
WO	WO 01/36955		5/2001	G01N 27/327
WO	WO 01/37174		5/2001	G06F 17/60
WO	WO 01/45014	A1	6/2001	G06F 17/60
WO	WO 01/40788		7/2001	G01N 27/327
WO	WO 01/57510		8/2001	G01N 27/30
WO	WO 01/63271		8/2001	G01N 27/327
WO	WO 01/64105		9/2001	
WO	WO 01/66010		9/2001	
WO	WO 01/69505		9/2001	G06F 17/60
WO	WO 01/72220	A	10/2001	
WO	WO 01/72225		10/2001	
WO	WO 01/73124		10/2001	
WO	WO 01/73395		10/2001	
WO	WO 01/89691		11/2001	
WO	WO 01/91634	A2	12/2001	A61B 5/00
WO	WO 01/95806		12/2001	A61B 5/15
WO	WO 02/00101		1/2002	
WO	WO 02/02796		1/2002	
WO	WO 02/08750		1/2002	
WO	WO 02/08753		1/2002	
WO	WO 02/08950		1/2002	
WO	WO 02/18940		3/2002	
WO	WO 02/21317		3/2002	G06F 17/00
WO	WO 02/25551		3/2002	G06F 17/60
WO	WO 02/32559		4/2002	B01D 71/10
WO	WO 02/41227		5/2002	G06F 17/60
WO	WO 02/41779		5/2002	
WO	WO 02/44948		6/2002	
WO	WO 02/49507		6/2002	A61B 10/00
WO	WO/0249507		6/2002	A61B 10/00
WO	WO 02/056769		7/2002	A61B 5/00

(56) **References Cited**

FOREIGN PATENT DOCUMENTS

WO	WO 02/059734		8/2002	
WO	WO 02/069791		9/2002	
WO	WO 02/077638		10/2002	
WO	WO 02/100251		12/2002	
WO	WO 02/100252		12/2002	
WO	WO 02/100253		12/2002	
WO	WO 02/100254		12/2002	
WO	WO 02/100460		12/2002	
WO	WO 02/100461		12/2002	
WO	WO 02/101343		12/2002	
WO	WO 02/101359		12/2002	
WO	WO 03/000321		1/2003	
WO	WO 03/023389		3/2003	
WO	WO 03/042691		5/2003	
WO	WO 03039369	A	5/2003	..... A61B 10/00
WO	WO 03/045557		6/2003	
WO	WO 03/046542		6/2003	
WO	WO 03/049609		6/2003	
WO	WO 03/050534		6/2003	
WO	WO 03/066128		8/2003	
WO	WO 03/070099		8/2003	
WO	WO 03/071940		9/2003	
WO	WO 03/082091		10/2003	..... A61B 5/00
WO	WO 03/082091	A2	10/2003	
WO	WO 03/088824		10/2003	..... A61B 5/15
WO	WO 03/088834		10/2003	..... A61B 5/00
WO	WO 03/088835		10/2003	..... A61B 5/15
WO	WO 03/088851	A1	10/2003	
WO	WO/03088834		10/2003	
WO	WO 2003/094752		11/2003	
WO	WO 03/101297		12/2003	
WO	WO 2004/008130		1/2004	
WO	WO 2004/022133		3/2004	
WO	WO 2004/026130		4/2004	
WO	WO 2004/040285	A2	5/2004	
WO	WO 2004/040287	A1	5/2004	
WO	WO 2004/040948		5/2004	
WO	WO 2004/041082		5/2004	
WO	WO 2004/045375		6/2004	..... A61B 5/15
WO	WO 2004/054455		7/2004	
WO	WO 2004/060174		7/2004	
WO	WO 2004/060446		7/2004	
WO	WO 2004/091693		10/2004	
WO	WO 2004/098405		11/2004	
WO	WO 2004/003147		12/2004	
WO	WO 2004/107964		12/2004	
WO	WO 2004/107975		12/2004	
WO	WO 2004/112602		12/2004	
WO	WO 2004/112612		12/2004	..... A61B 5/15
WO	WO 2004/112612	A1	12/2004	
WO	WO 2005/001418		1/2005	
WO	WO 2005/006939		1/2005	
WO	WO 2005/011774		2/2005	
WO	WO 2005/013824		2/2005	..... A61B 5/15
WO	WO 2005/016125		2/2005	
WO	WO 2005/018425		3/2005	
WO	WO 2005/018430		3/2005	
WO	WO 2005/018454		3/2005	
WO	WO 2005/018709		3/2005	
WO	WO 2005/018710		3/2005	
WO	WO 2005/018711		3/2005	..... A61B 17/32
WO	WO 2005/022143		3/2005	
WO	WO 2005/023088		3/2005	
WO	WO 2005/033659		4/2005	
WO	WO 2005/034720		4/2005	
WO	WO 2005/034721		4/2005	
WO	WO 2005/034741		4/2005	..... A61B 5/00
WO	WO 2005/034778		4/2005	..... A61M 17/32
WO	WO 2005/035017		4/2005	
WO	WO 2005/035018		4/2005	..... A61B 17/34
WO	WO 2005/037095		4/2005	
WO	WO 2005/046477		5/2005	
WO	WO 2005/065399		7/2005	
WO	WO 2005/065414		7/2005	
WO	WO 2005/065415		7/2005	
WO	WO 2005065545	A2	7/2005	
WO	WO 2005/072604		8/2005	..... A61B 5/00
WO	WO 2005/084557		9/2005	..... A61B 17/14
WO	WO2005/0845646	A2	9/2005	..... A61B 5/15
WO	WO 2005/104948		11/2005	..... A61B 5/15
WO	WO 2005/104948	A1	11/2005	
WO	WO 2005/114185		12/2005	..... G01N 21/64
WO	WO 2005/116622		12/2005	
WO	WO 2005/119234		12/2005	
WO	WO 2005/120197		12/2005	..... A61B 17/14
WO	WO 2005/120199		12/2005	..... A61B 5/00
WO	WO 2005/120365		12/2005	..... A61B 17/32
WO	WO 2005/120365	A1	12/2005	
WO	WO 2005/121759		12/2005	
WO	WO 2006/001797		1/2006	..... A61B 17/14
WO	WO 2006/001973		1/2006	..... A61B 5/15
WO	WO 2006/011062		2/2006	
WO	WO 2006/013045		2/2006	..... A61B 5/15
WO	WO 2006/015615		2/2006	..... C12Q 1/00
WO	WO 2006/027702	A2	3/2006	
WO	WO 2006/031920		3/2006	..... A61B 5/00
WO	WO 2006/032391		3/2006	..... A61B 5/15
WO	WO 2006/072004		7/2006	
WO	WO 2006/105146		10/2006	..... A61B 5/05
WO	WO 2006/116441		11/2006	..... A61B 5/151
WO	WO 2007/025635		3/2007	..... A61B 5/15
WO	WO 2007/044834		4/2007	..... A61B 5/00
WO	WO 2007/054335		5/2007	..... A61B 5/15
WO	WO 2007/070719		6/2007	..... A61B 5/00
WO	WO 2007/084367		7/2007	..... A61B 5/00
WO	WO 2007/106470		9/2007	..... G01N 1/00
WO	WO 2007/119900		10/2007	..... A61B 5/157
WO	WO 2008/112268		9/2008	..... A61B 17/32
WO	WO 2008/112279		9/2008	..... A61B 5/155

OTHER PUBLICATIONS

Wolfbeis et al. (Sol-gel based glucose biosensors employing optical oxygen transducers, and a method for compensating for variable oxygen background, Biosensors & Bioelectronics 15 (2000) pp. 69-76).

Machine translation of DE 10053974 pp. 1-4, provided by epo.org.

A. Bott, W. Heineman, Chronocoulometry, Current Separations, 2004, 20, pp. 121.

G. Jarzabek, Z. Borkowska, On the Real Surface Area of Smooth Solid Electrodes, 1997, Electrochimica Acta, vol. 42, No. 19, pp. 2915-2918.

* cited by examiner

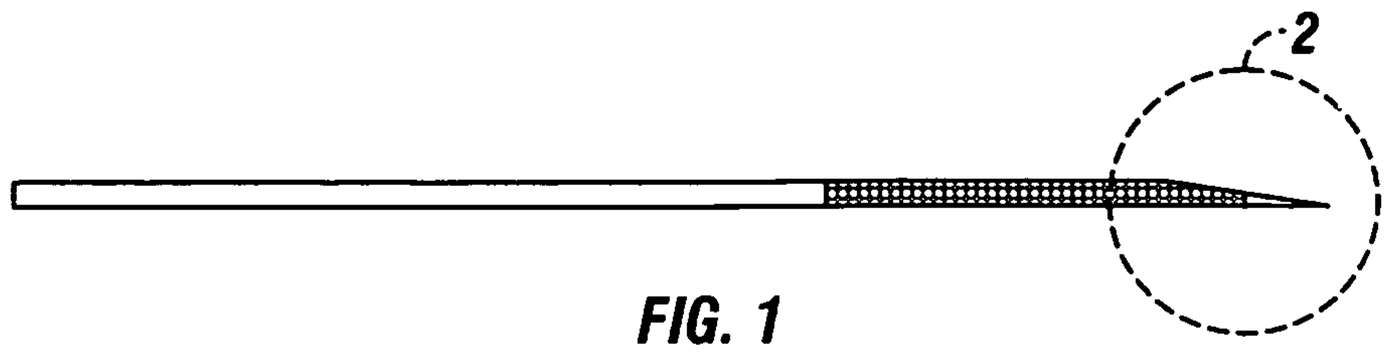

FIG. 1

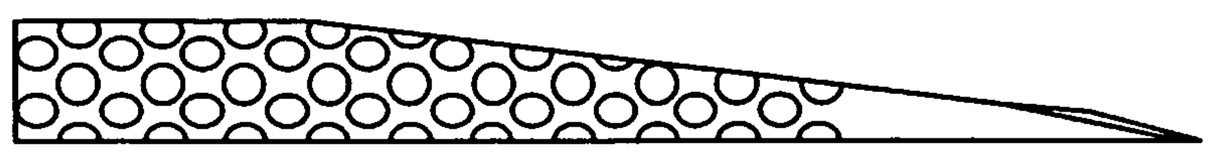

FIG. 2

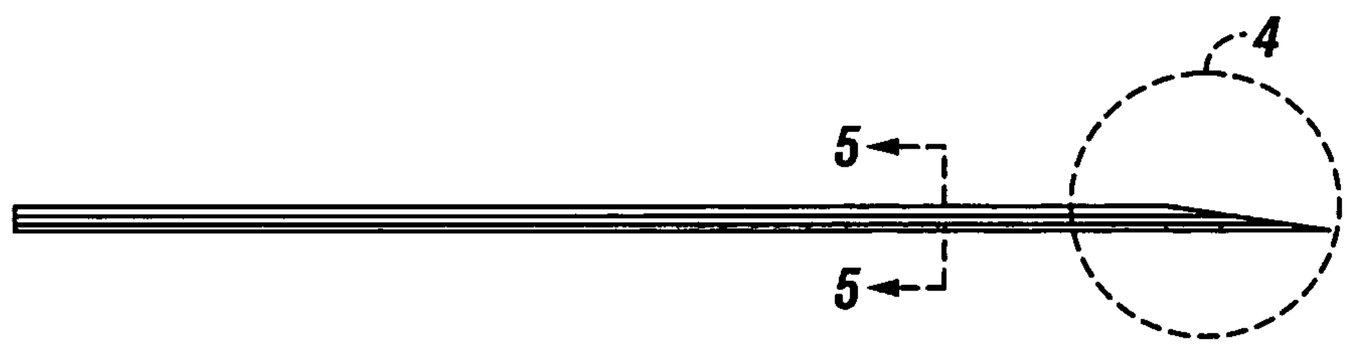

FIG. 3

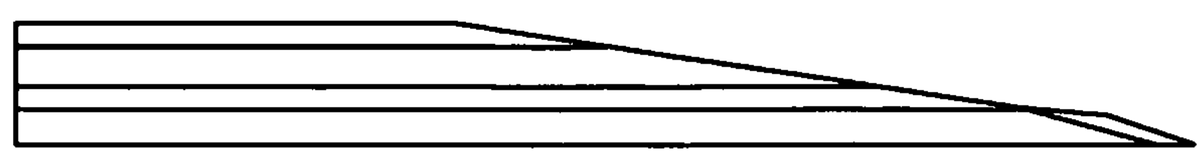

FIG. 4

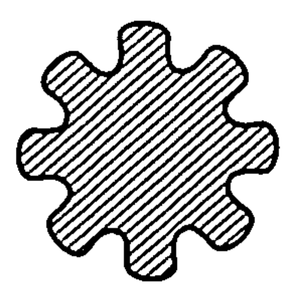

FIG. 5

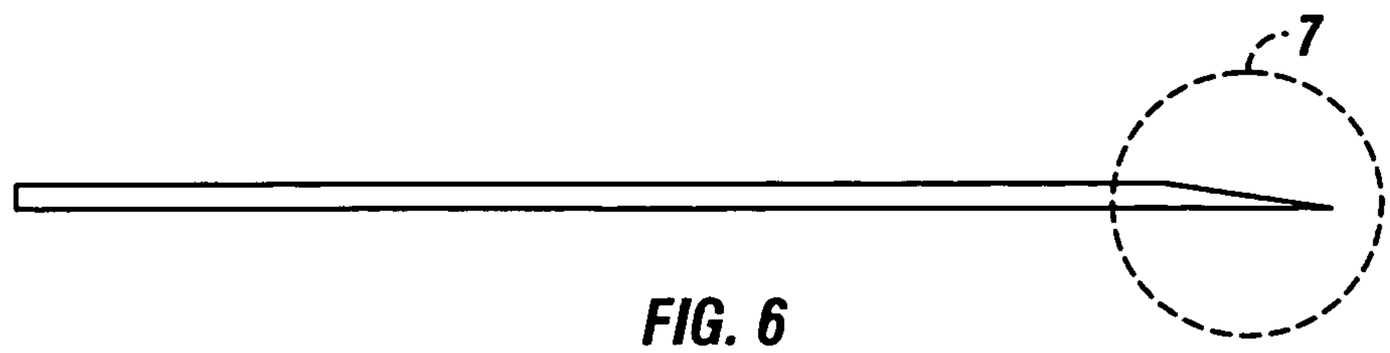

FIG. 6

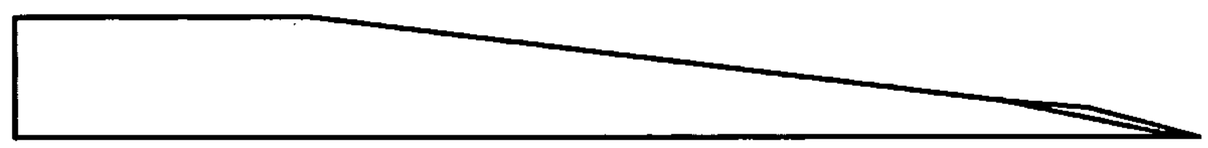

FIG. 7

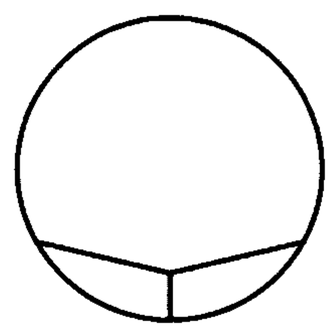

FIG. 8

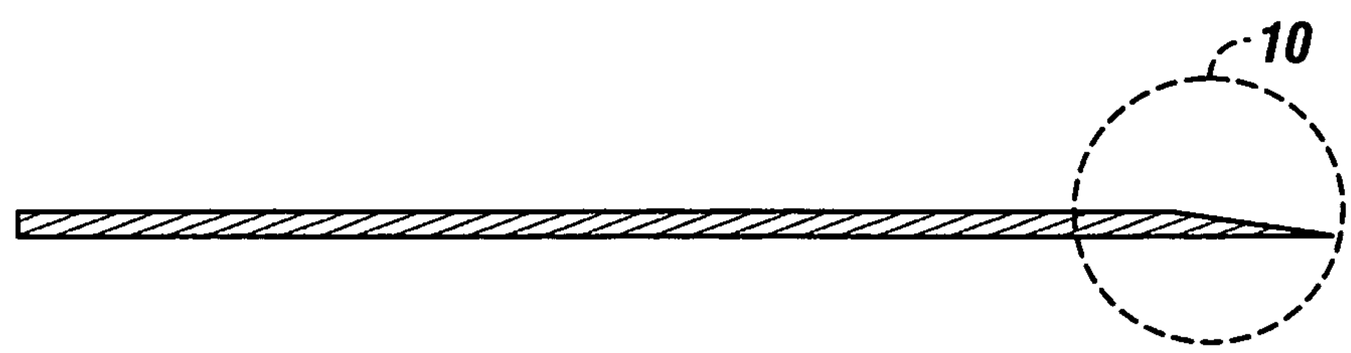

FIG. 9

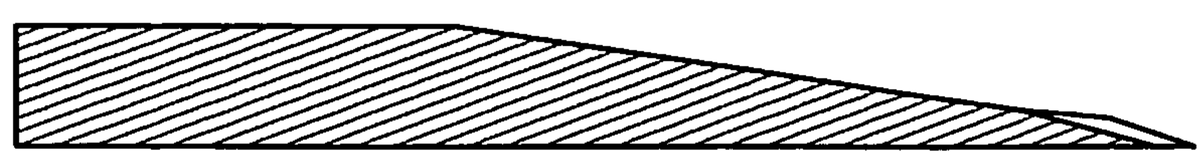

FIG. 10

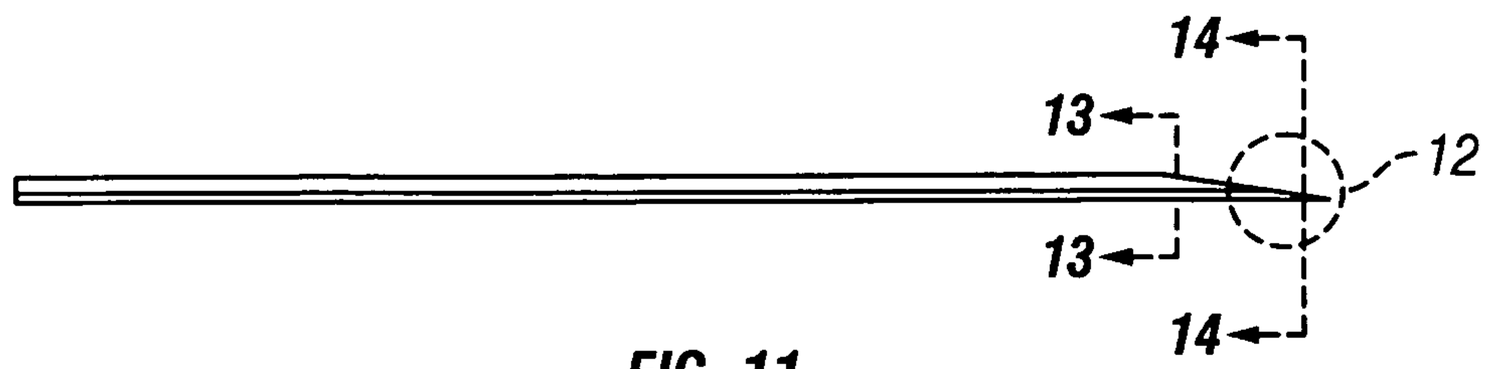

FIG. 11

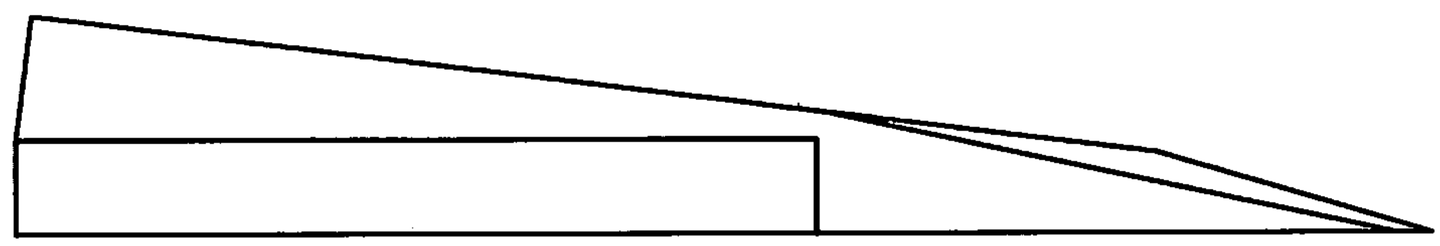

FIG. 12

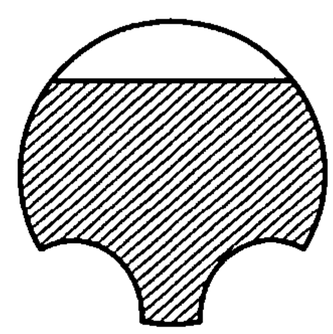

FIG. 13

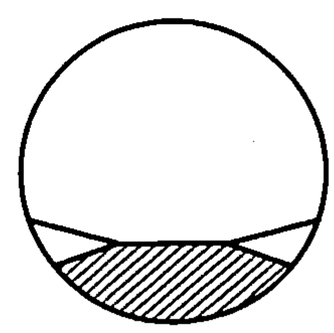

FIG. 14

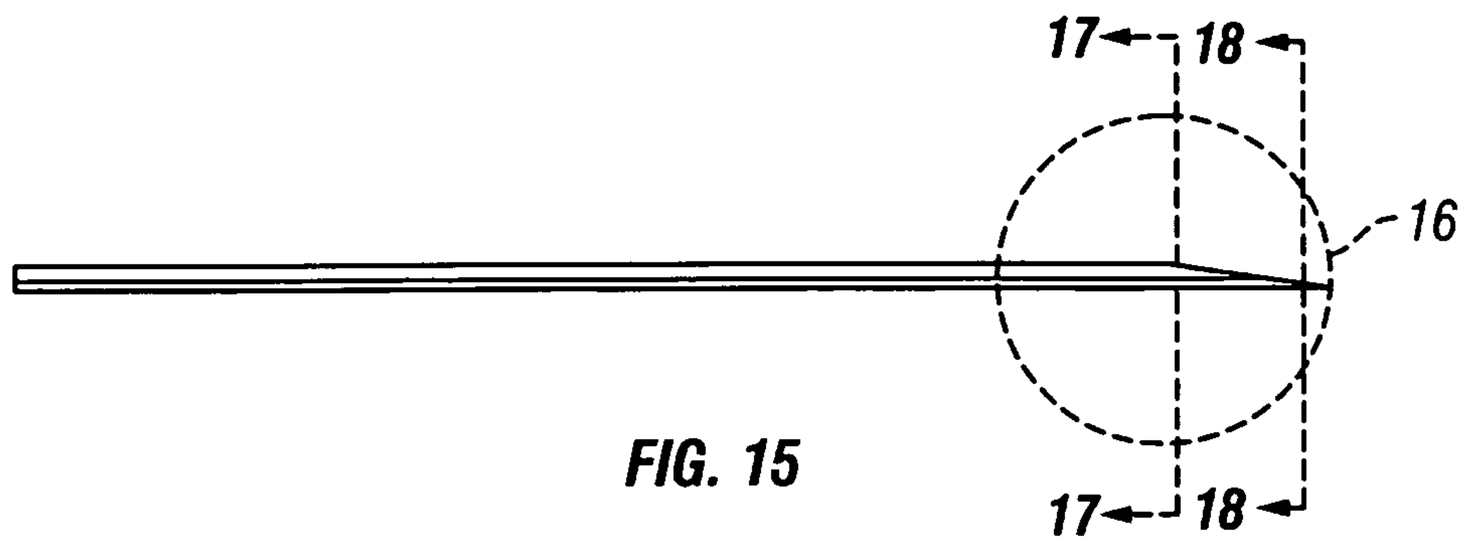

FIG. 15

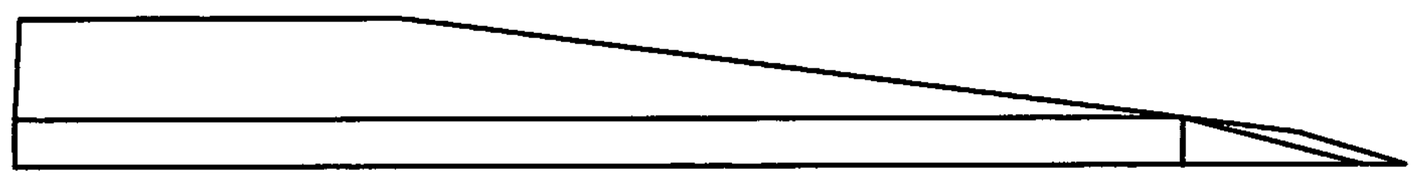

FIG. 16

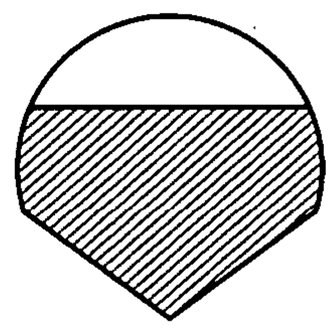

FIG. 17

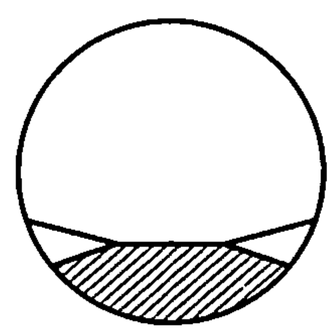

FIG. 18

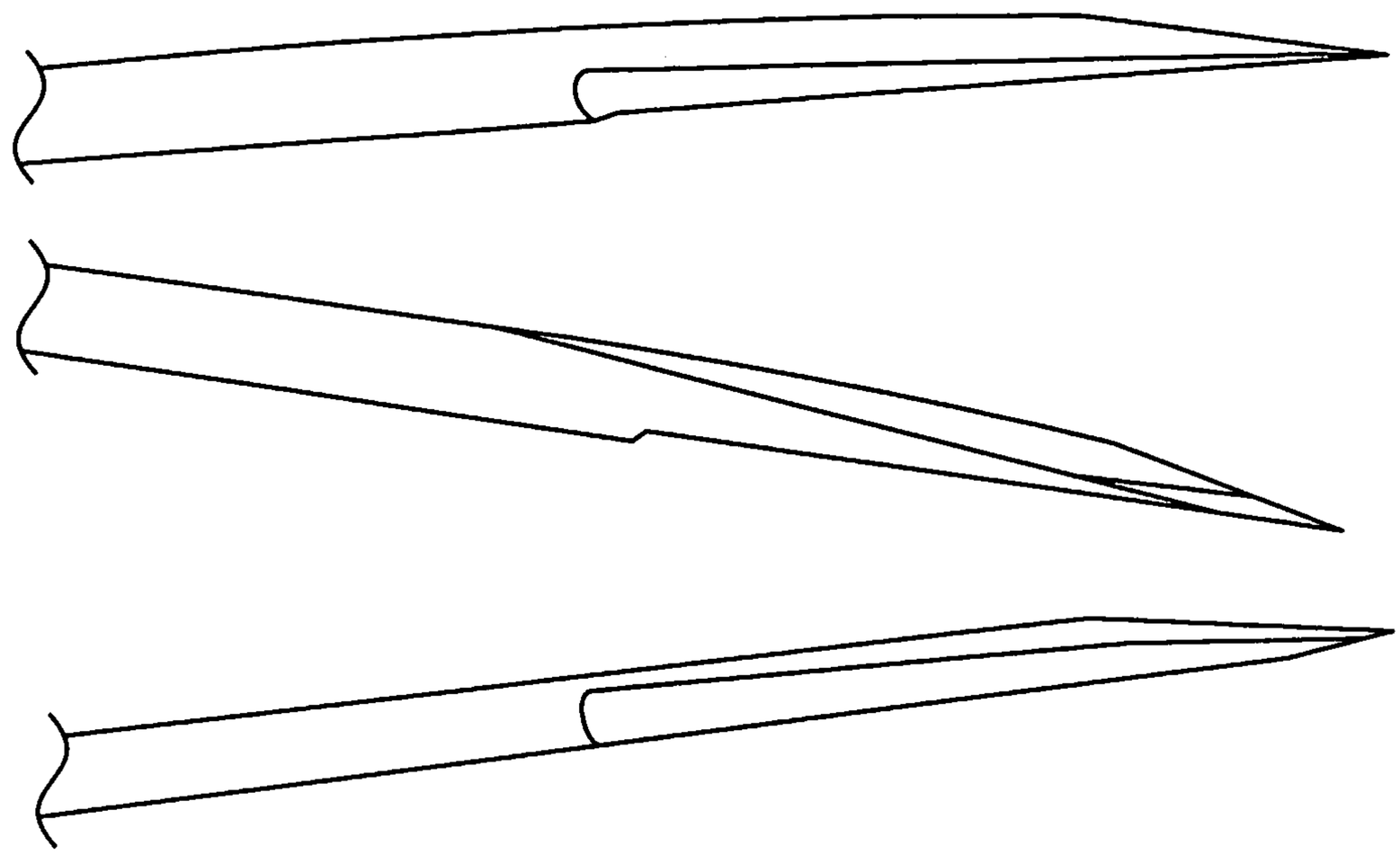

FIG. 19

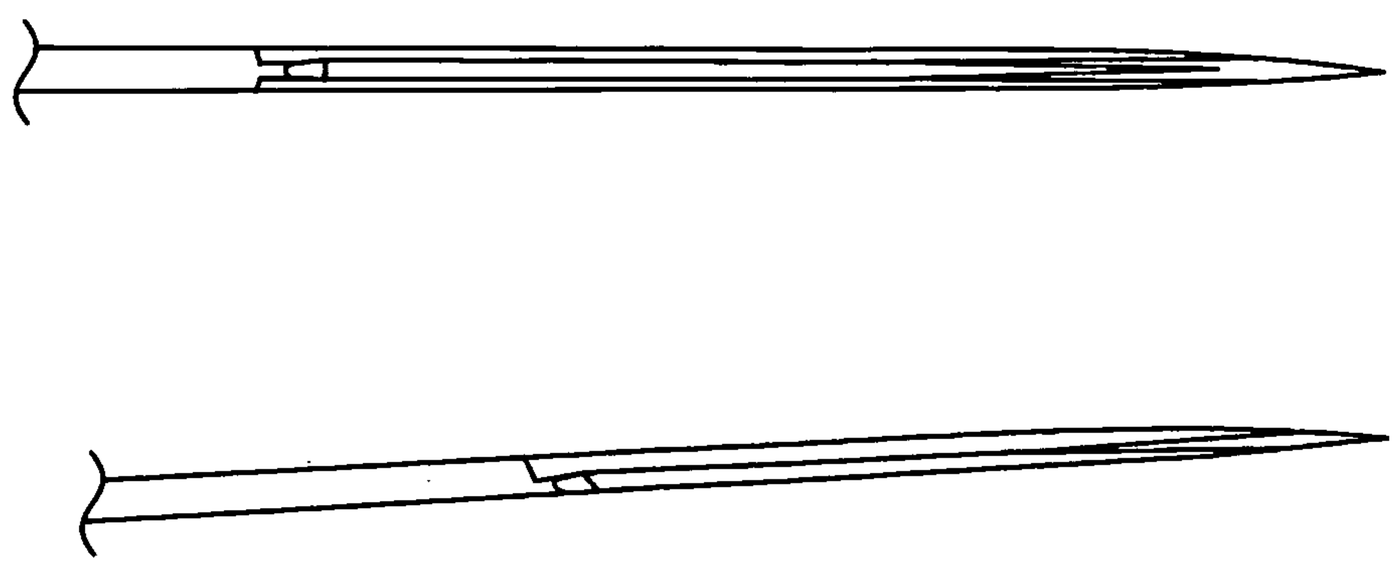

FIG. 20

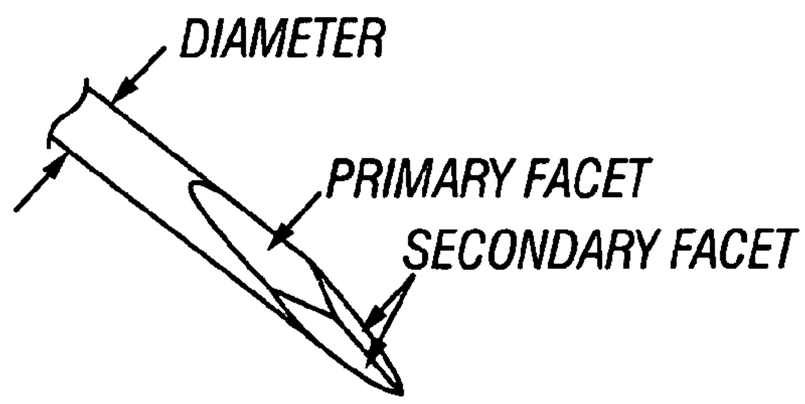

FIG. 21

DIAMETER μm	1100	1040	800	660	350	220	200	200	200	200	200	290
BLOOD μL	73	22.4	47.9	8.6	13.8	30.8	7.4	5.4	6.1	4.5	7.6	2.4
PAIN	4.5	4.5	6.3	6.3	6.1	5.6	4.4	4.6	4.1	3.95	4.5	4.5

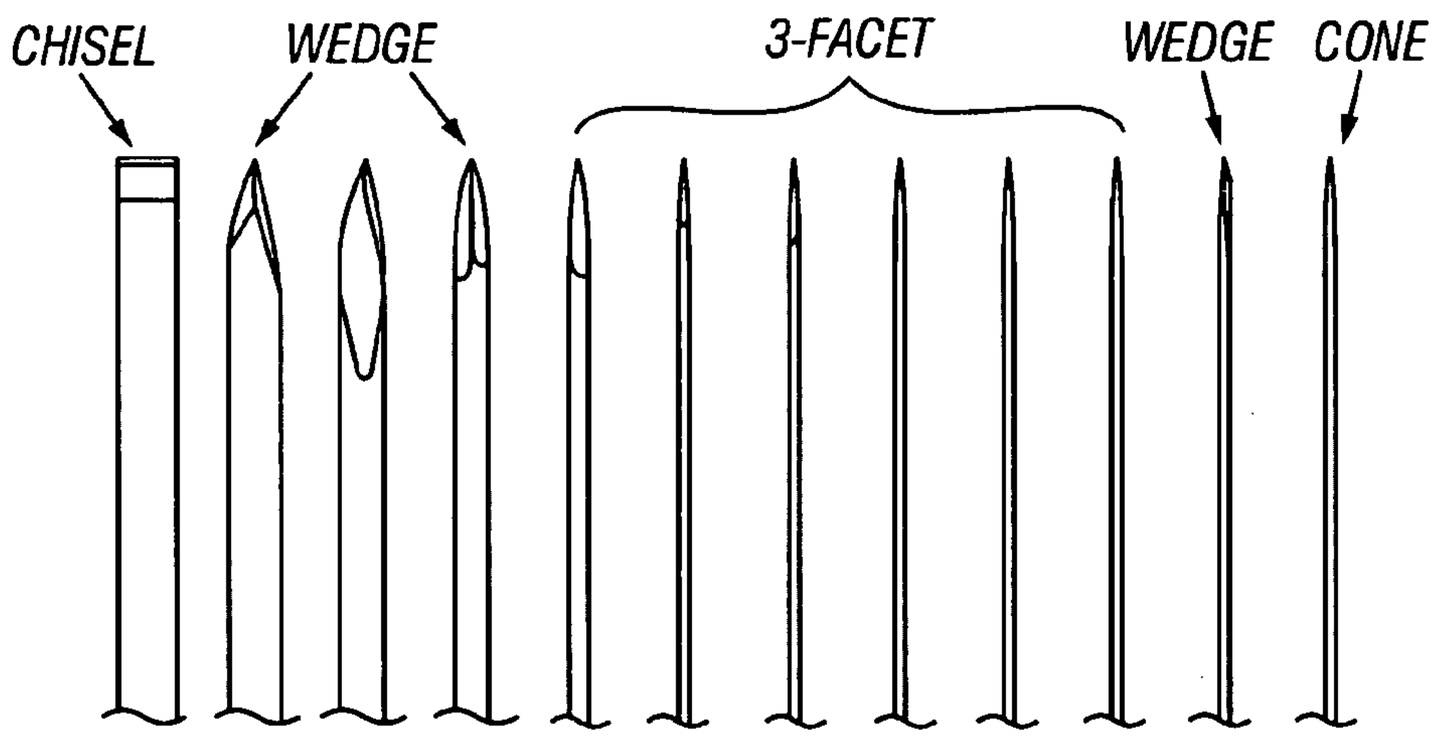

FIG. 22

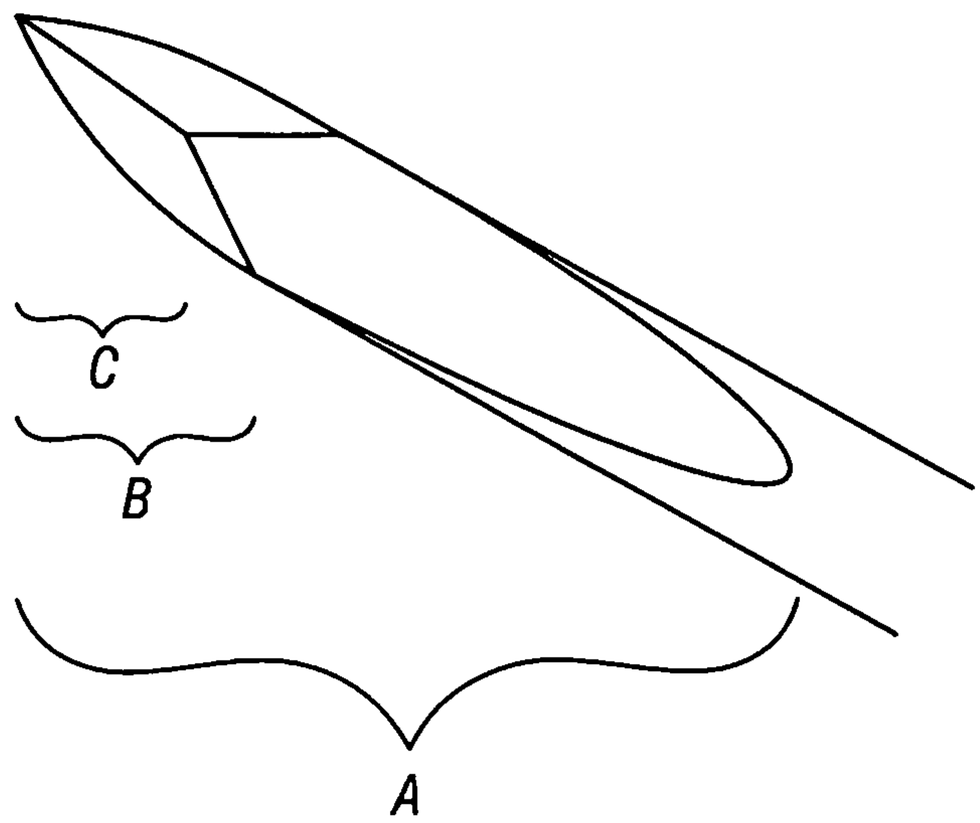

FIG. 23A

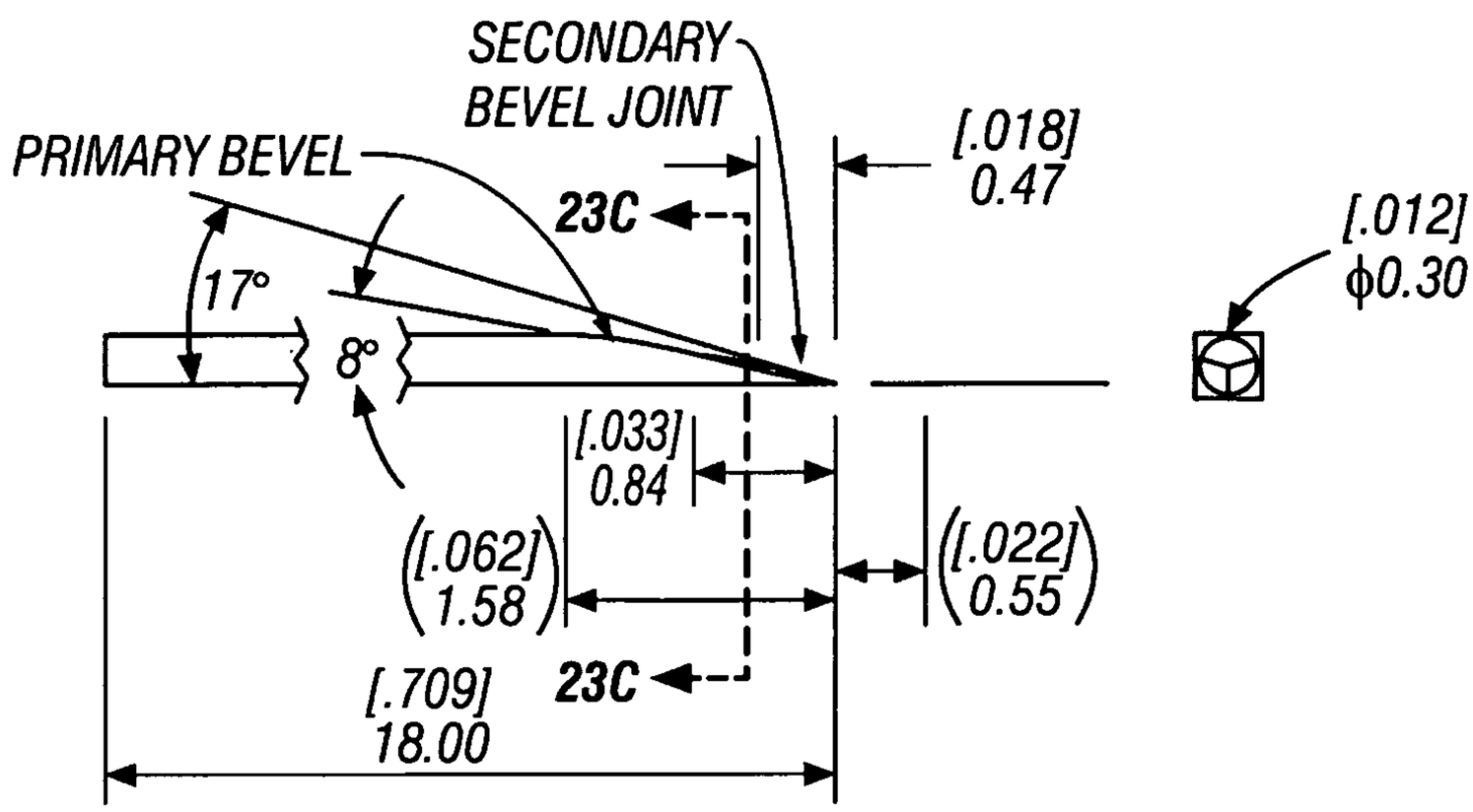

FIG. 23B

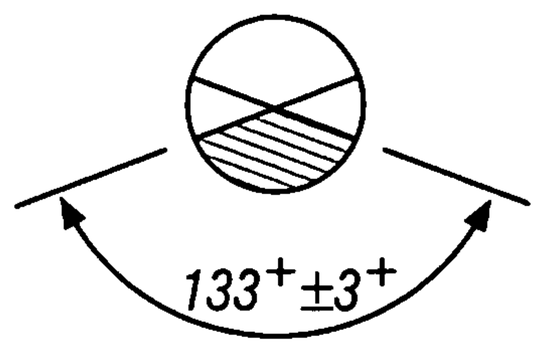

FIG. 23C

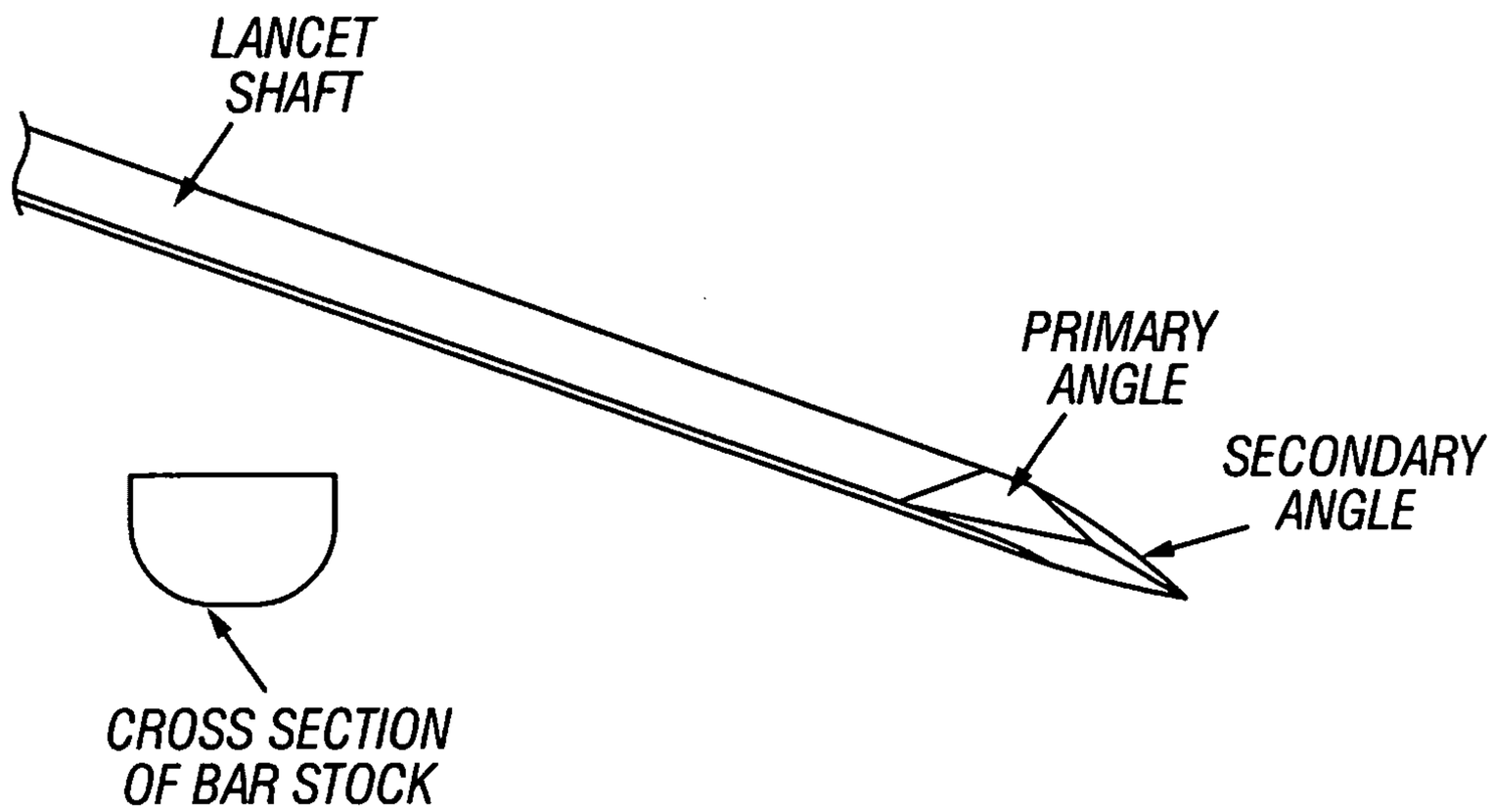
LANCET
SHAFT
PRIMARY
ANGLE
SECONDARY
ANGLE
CROSS SECTION
OF BAR STOCK

FIG. 24

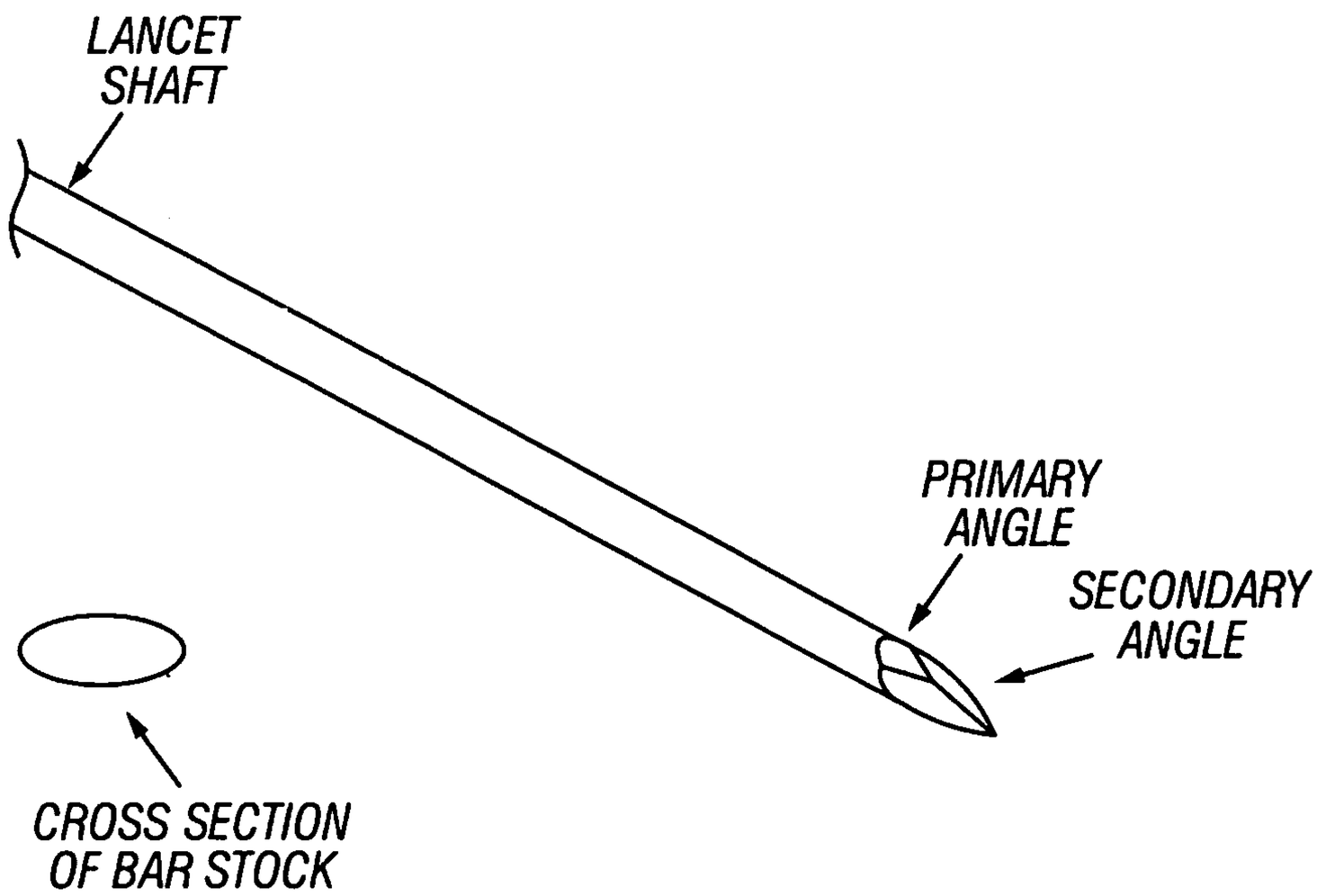
LANCET
SHAFT
PRIMARY
ANGLE
SECONDARY
ANGLE
CROSS SECTION
OF BAR STOCK

FIG. 25

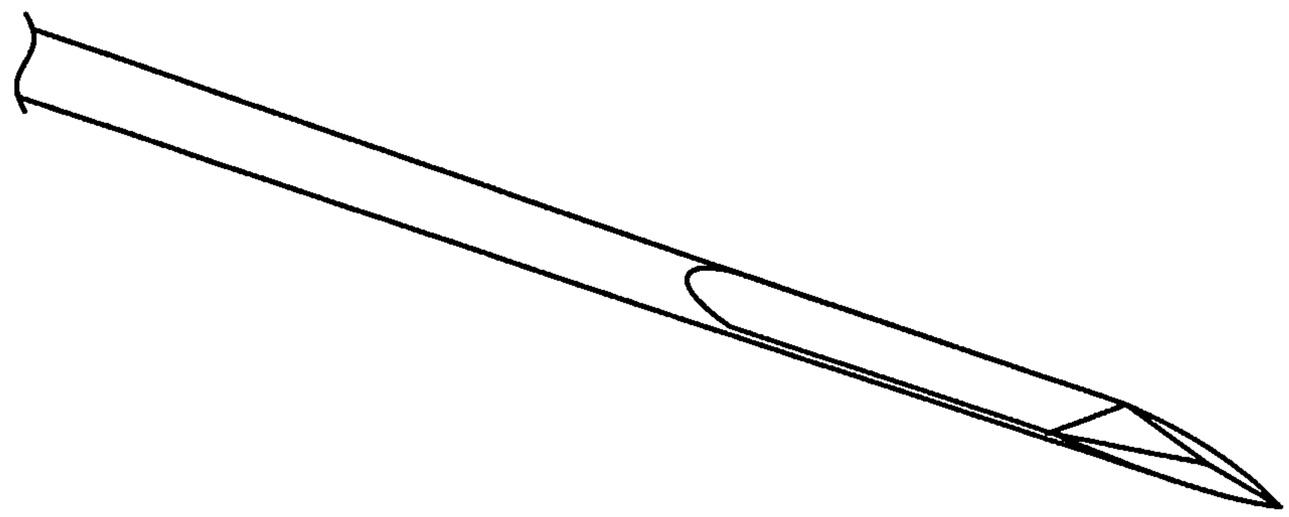

FIG. 26

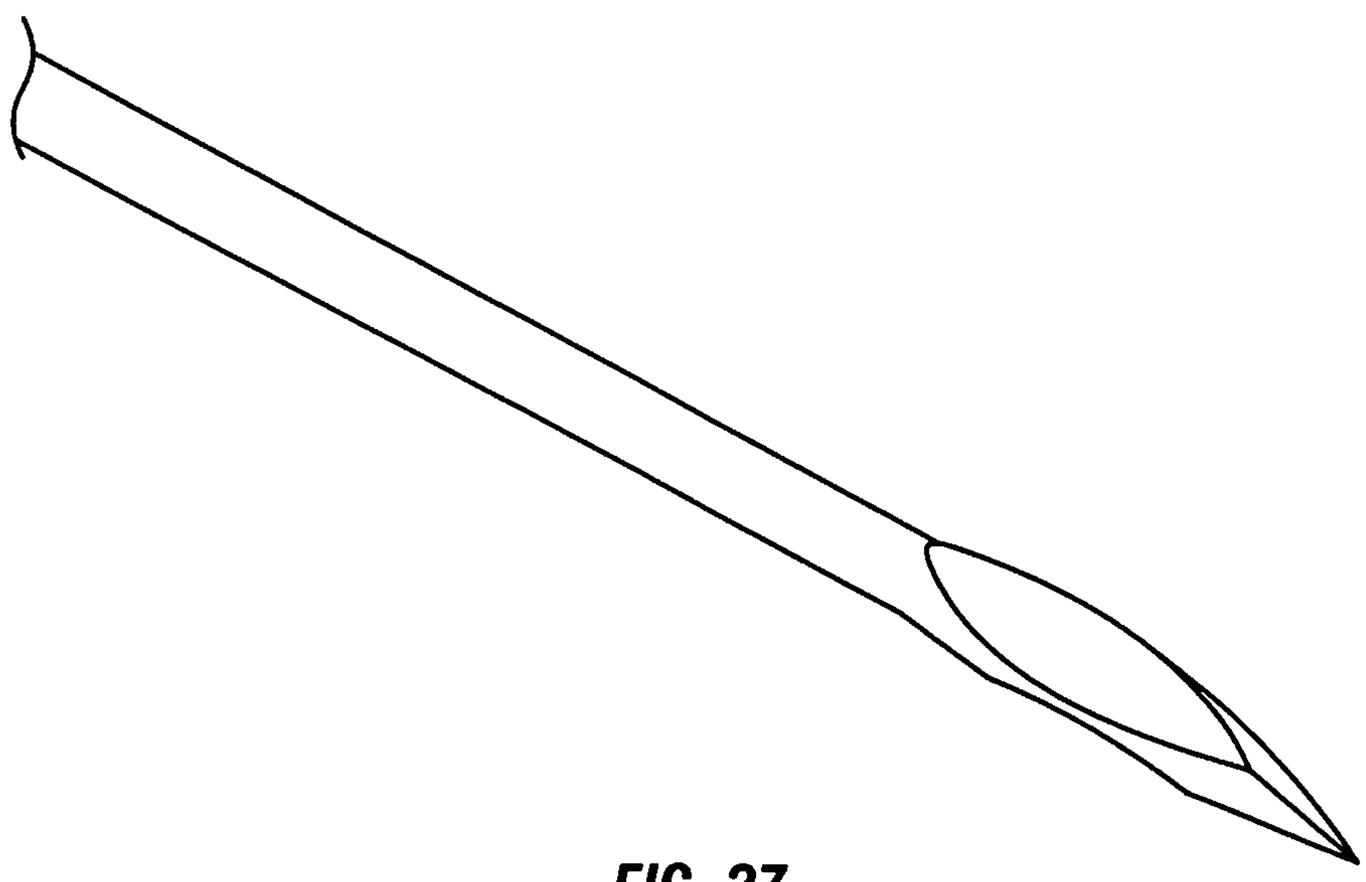

FIG. 27

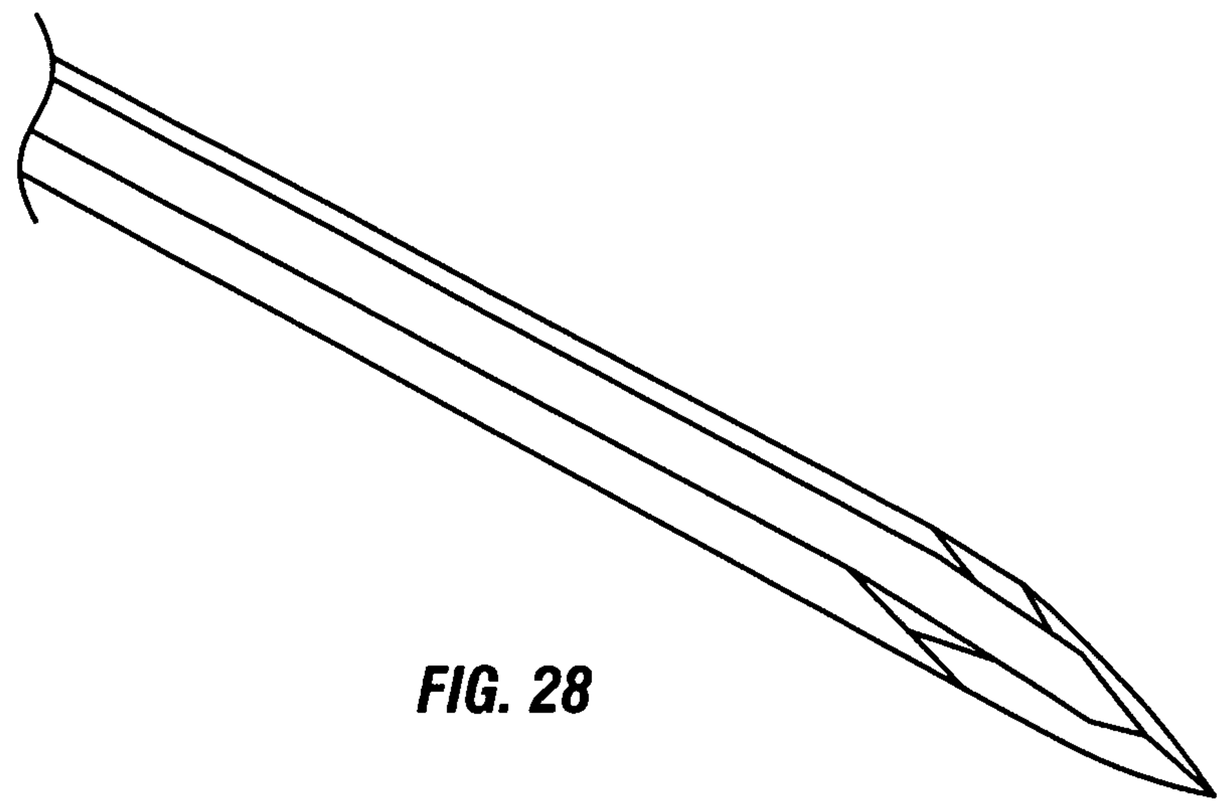

FIG. 28

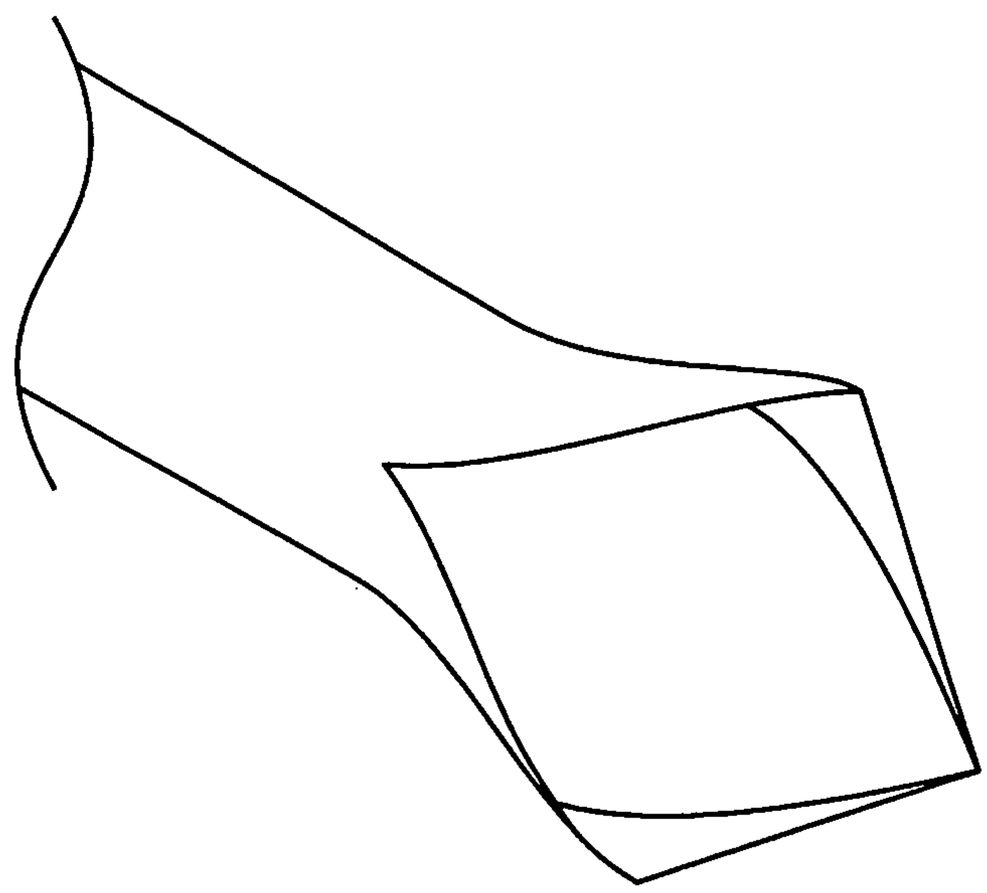

FIG. 29

LANCET TYPE	PRIMARY ANGLE (°)	BEVEL JOINT ANGLE (°)	SIDE FACET ANGLE (°)	LANCET LENGTH (mm)	LANCET DIAMETER (mm)	BEVEL JOINT LENGTH (C) (mm)	SIDE FACET LENGTH (B) (mm)	PRIMARY FACET LENGTH (A) (mm)
BD UF II	8.5416	16.6356	117.5551	14.8500	0.3036	0.4078	0.9261	1.58
BD UF III	9.42	19.03	113.85	14.7	0.202	0.22	0.54	1.22
HART (BD ANALOGUE DEVELOPED AT AGILENT	6.4973	20.2989	110.7214	14.7059	0.3043	0.4985	0.8957	1.52
B I	6.8559	15.4851	115.3145	14.7000	0.3145	0.2188	0.6322	2.24
B II	11.4	20.9	106	N/A	0.232	0.234	0.441	0.94
B III (KEEP ANGLES, GRIND ON 0.200 DIAMETER	7	16	133	N/A	0.200	0.27	0.53	1.27
B IV (KEEP LENGTHS THE SAME, RESULTING ANGLE?)	8	16	128	N/A	0.200	0.22	0.54	1.22

FIG. 30

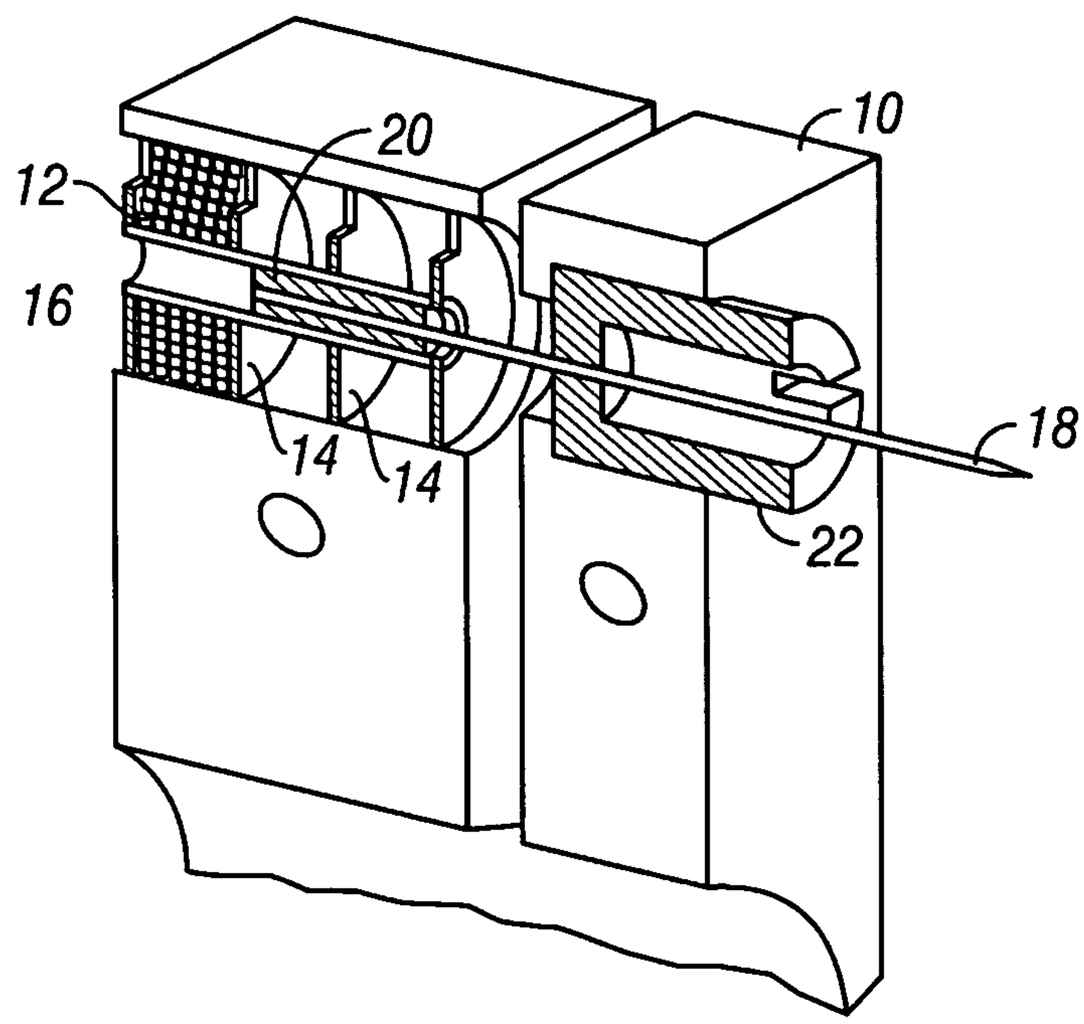

FIG. 31

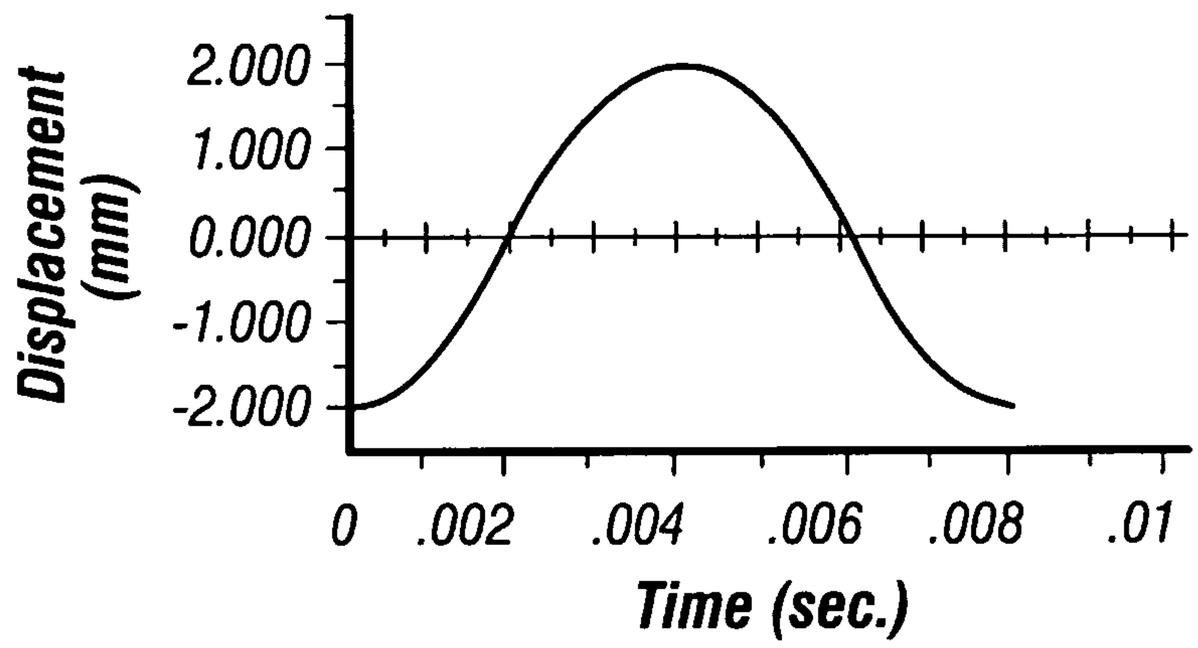

FIG. 32A

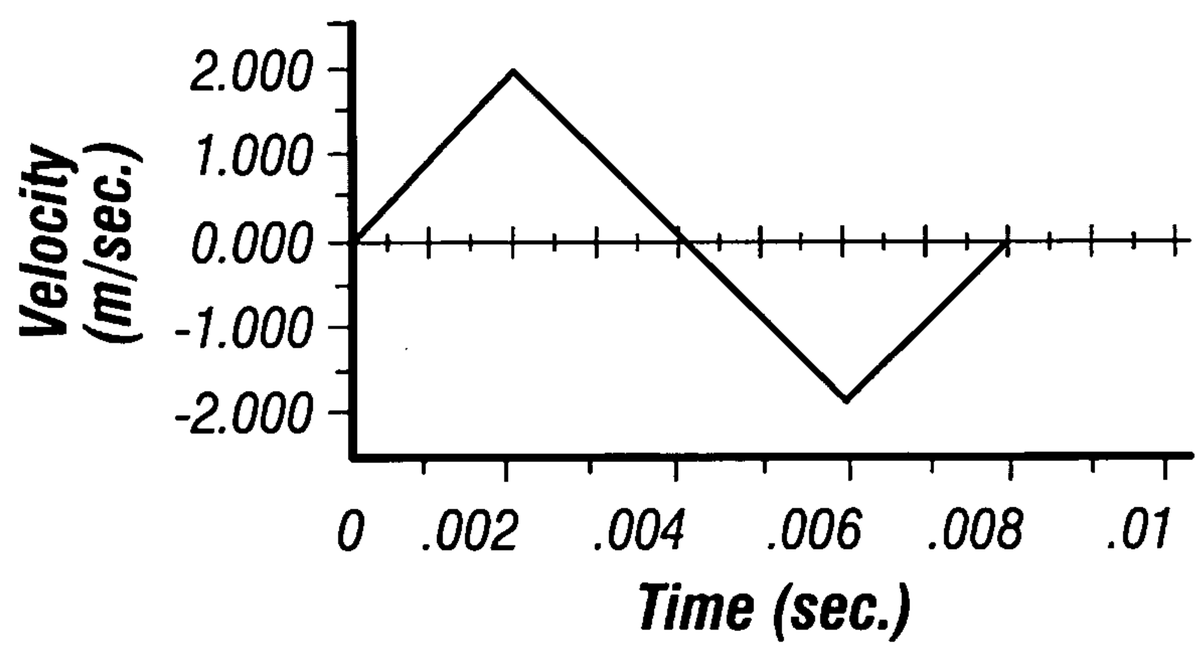

FIG. 32B

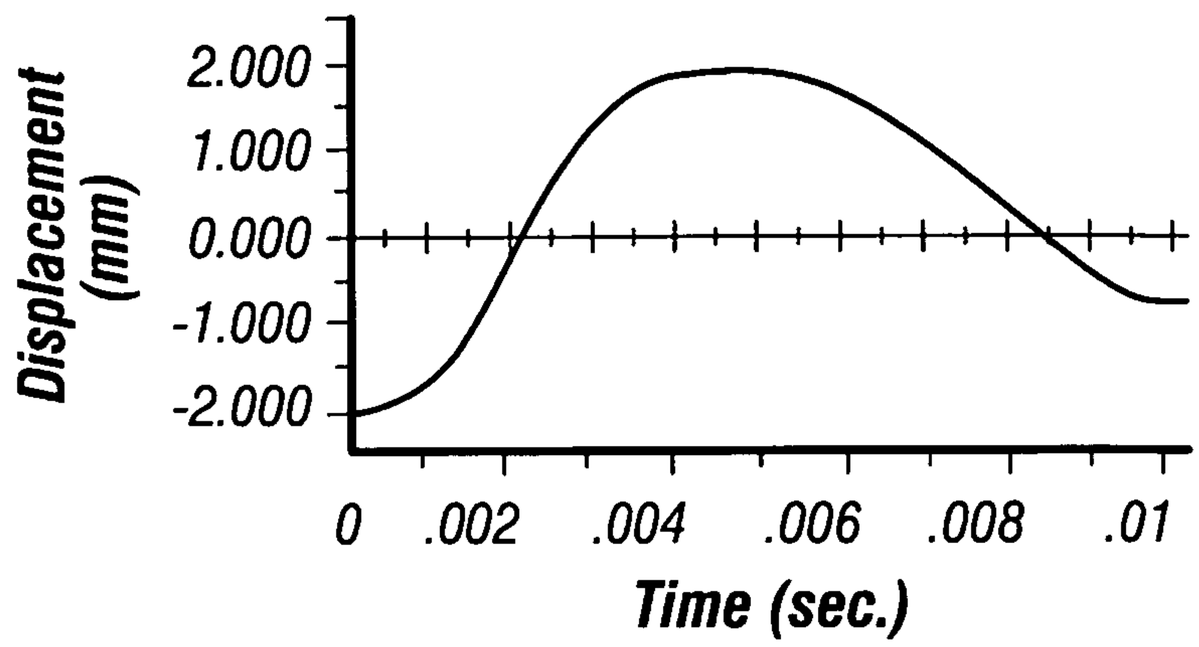

FIG. 32C

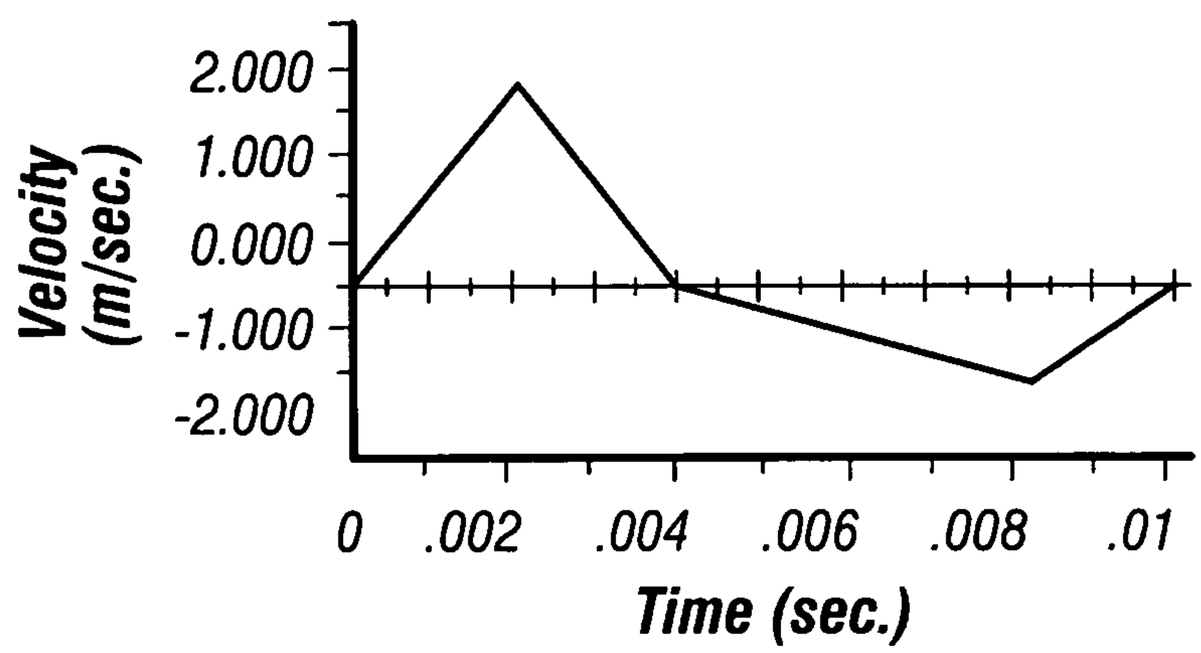

FIG. 32D

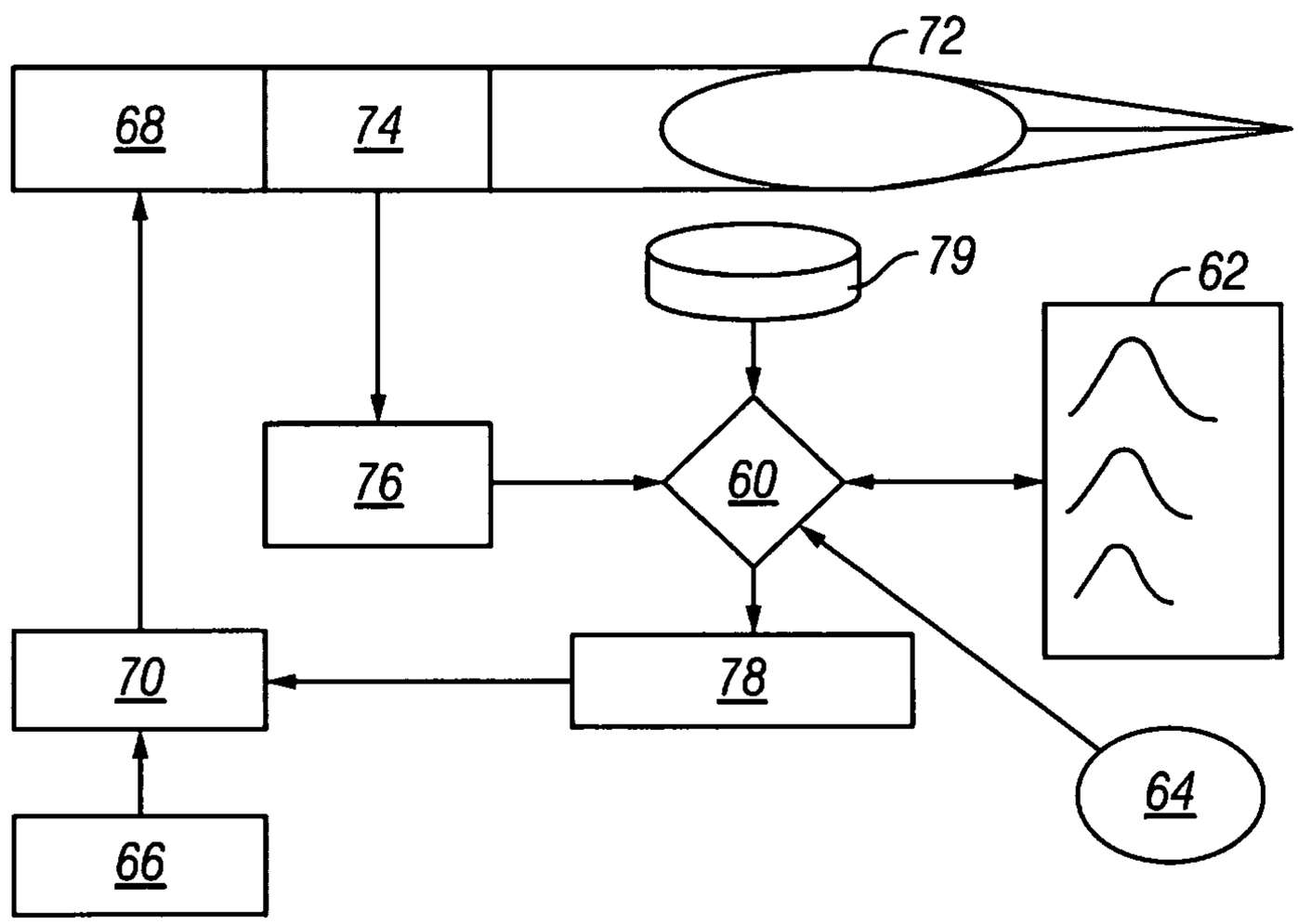

FIG. 33

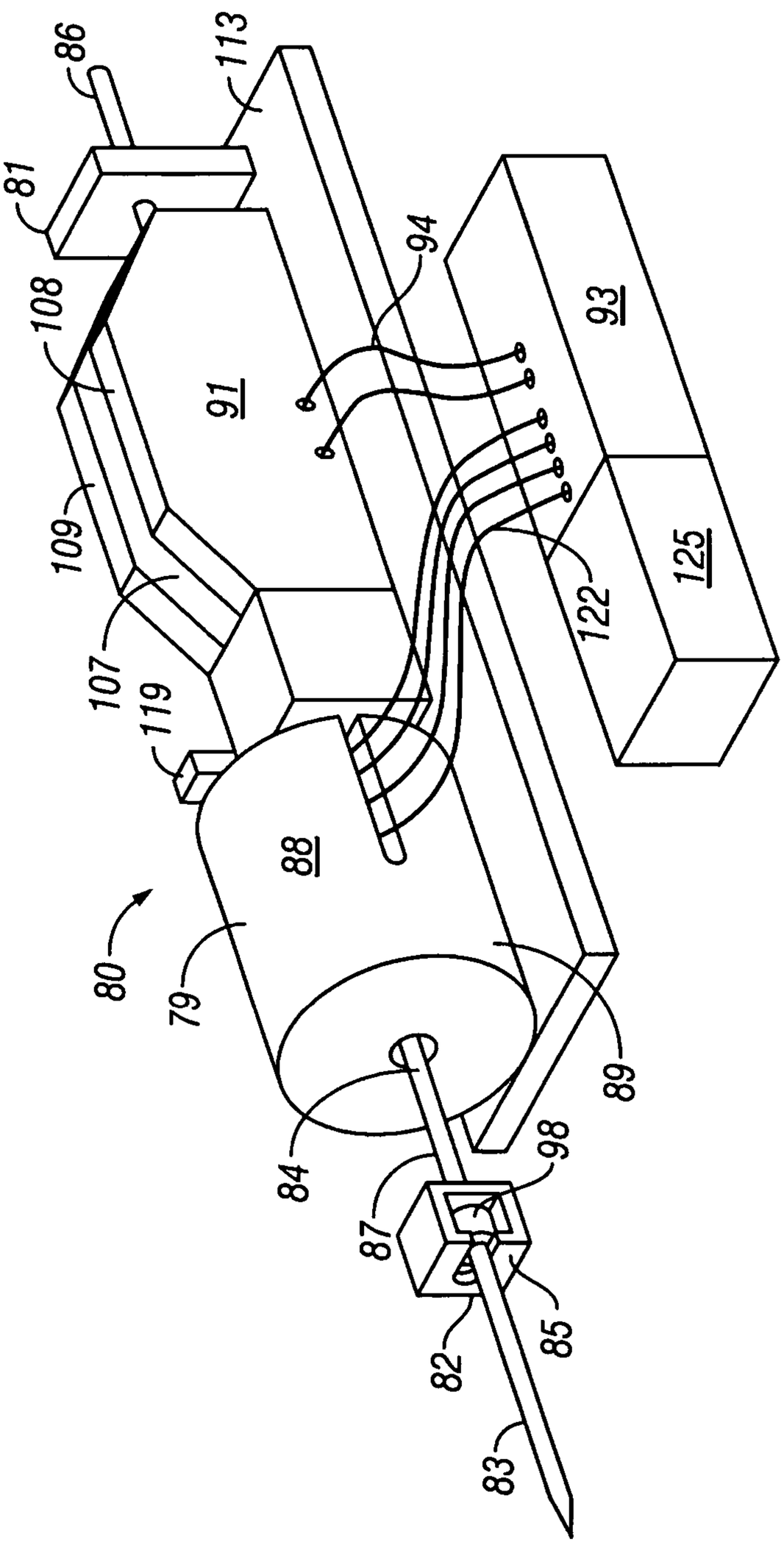
86
113
81
108
91
94
93
109
107
119
122
125
88
80
79
89
98
84
87
82
85
83

FIG. 34

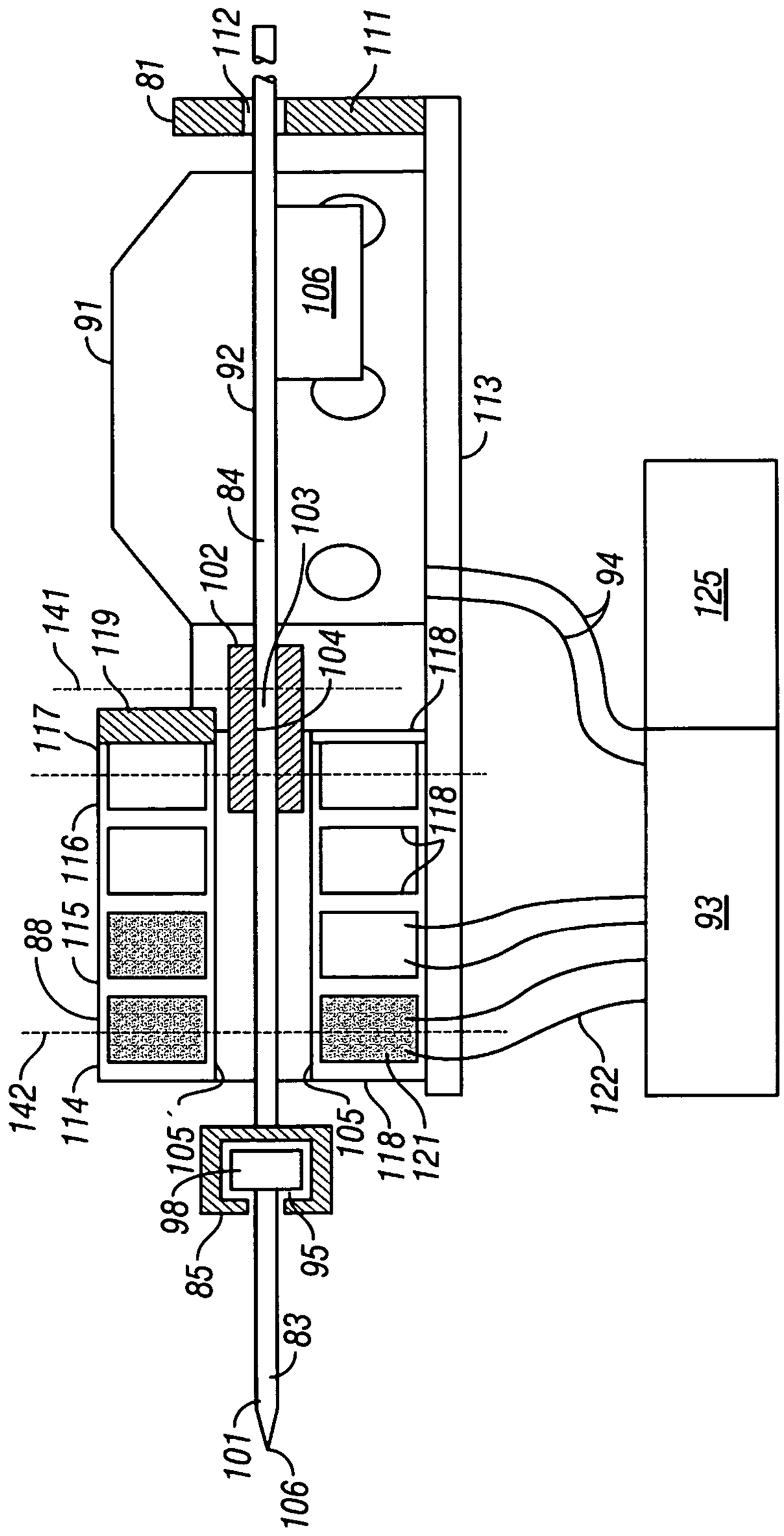
81
112
111
91
92
106
113
84
103
102
94
125
141
119
104
118
117
118
116
115
88
93
142
114
105
105
118
121
122
98
85
95
83
101
106

FIG. 35

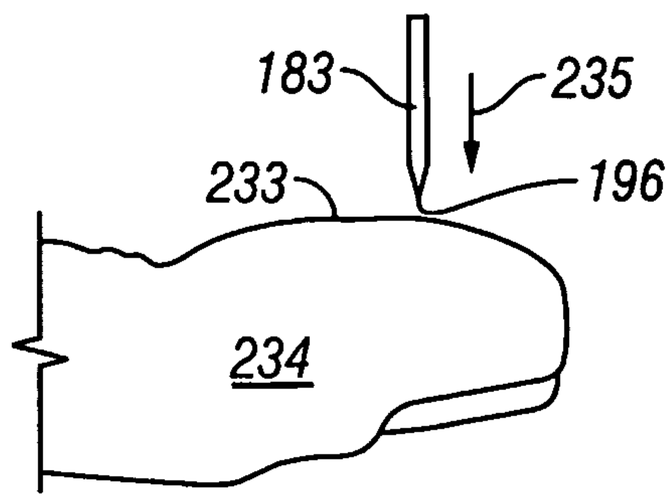

FIG. 36A

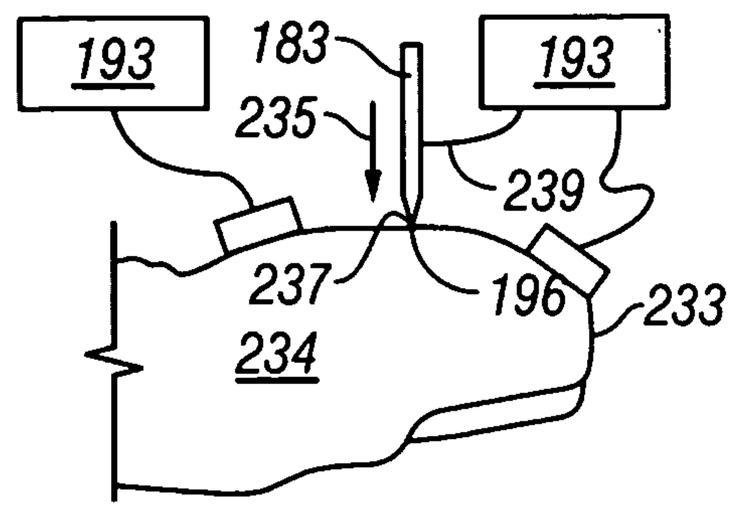

FIG. 36B

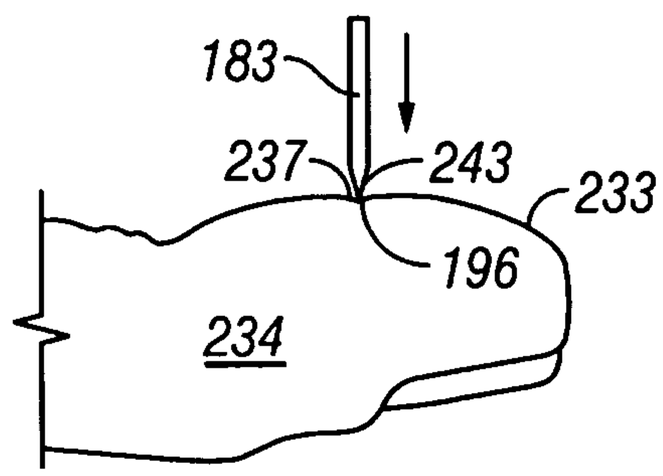

FIG. 36C

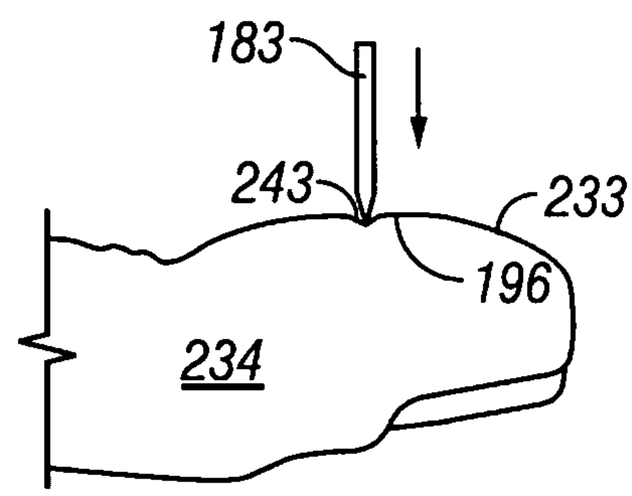

FIG. 36D

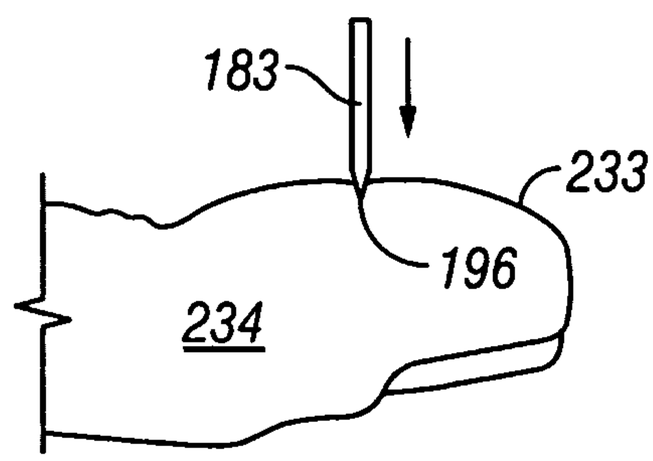

FIG. 36E

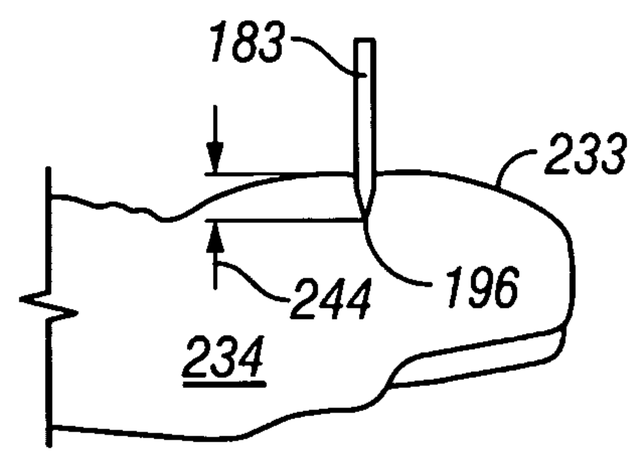

FIG. 36F

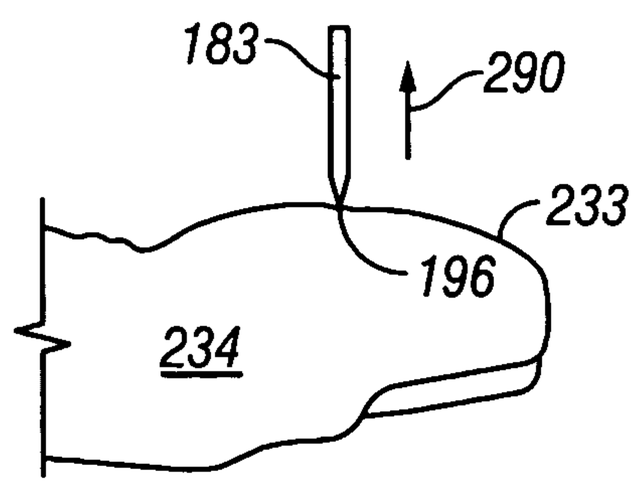

FIG. 36G

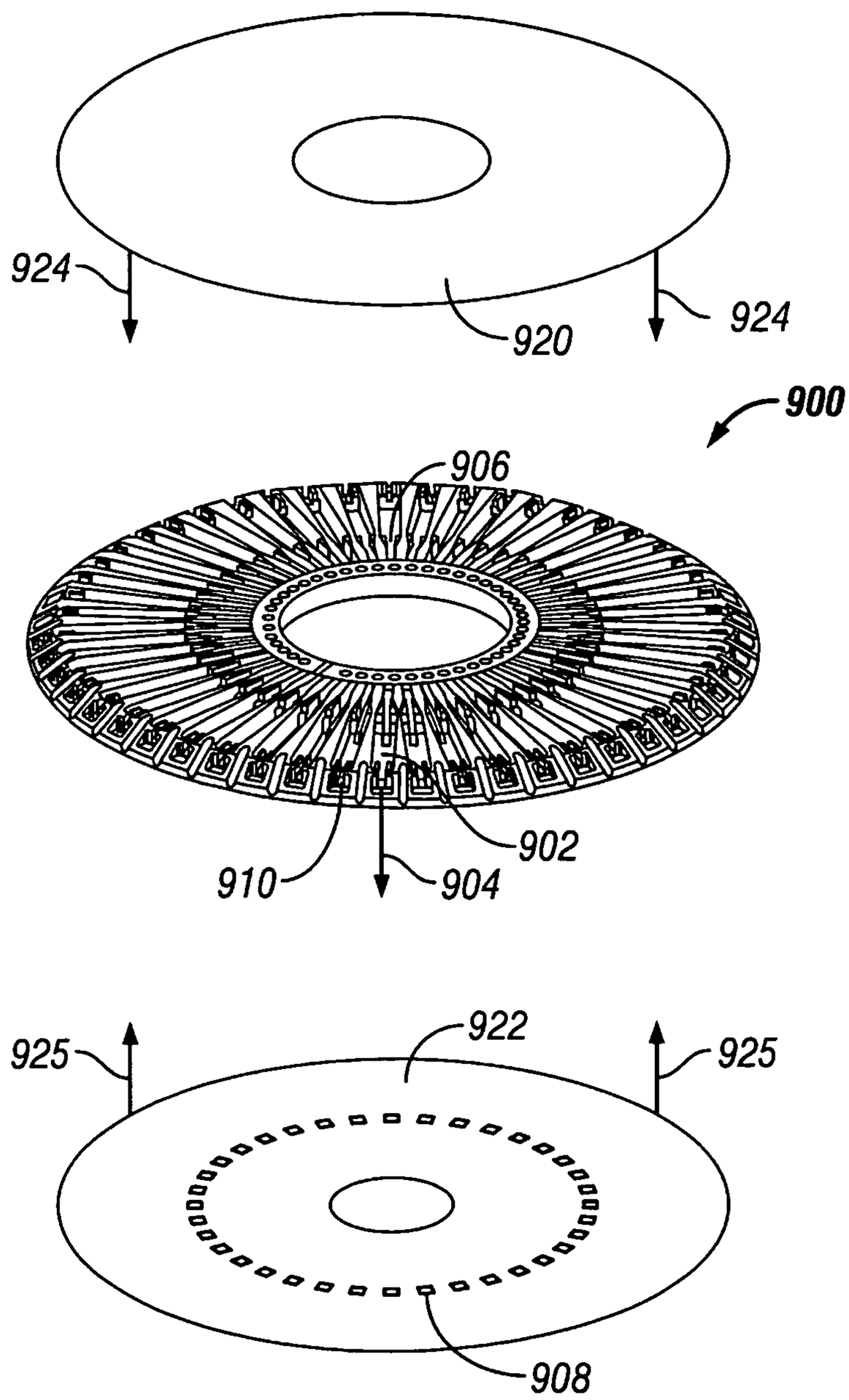

FIG. 37

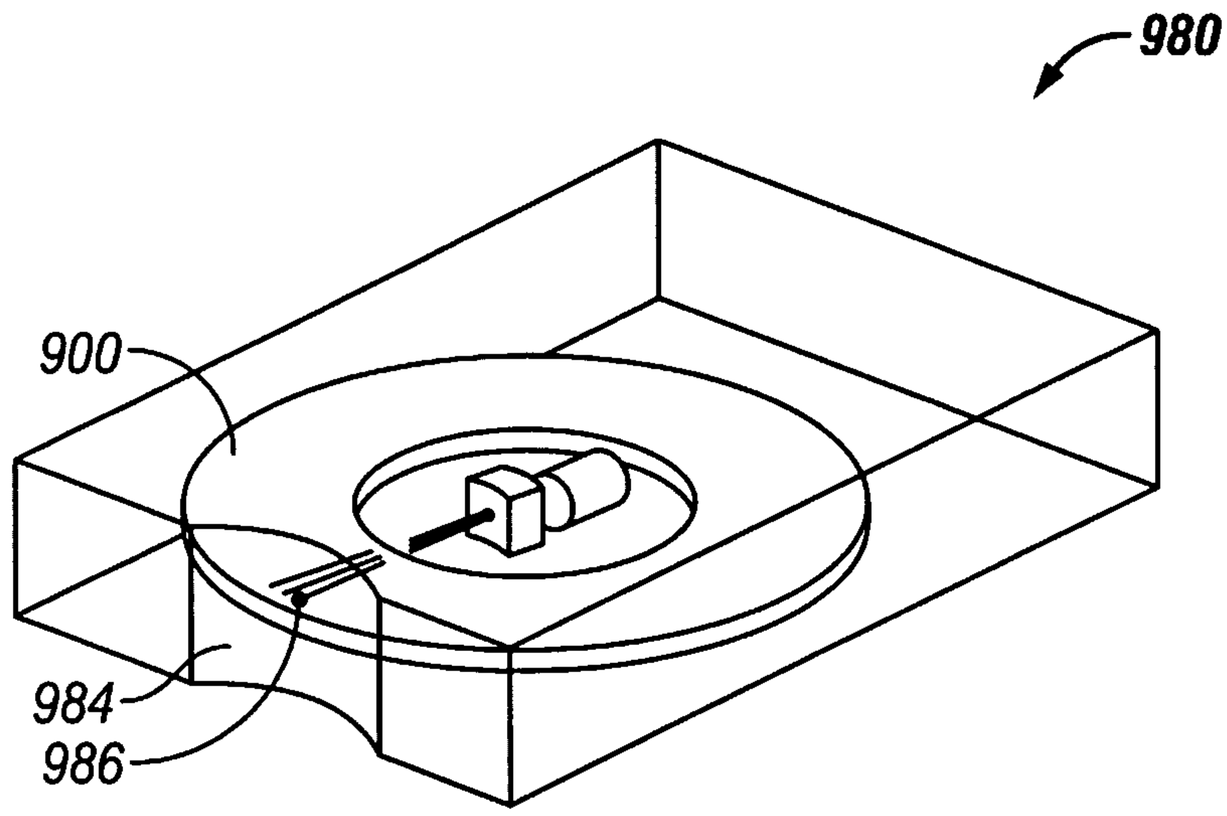
980
900
984
986

FIG. 38

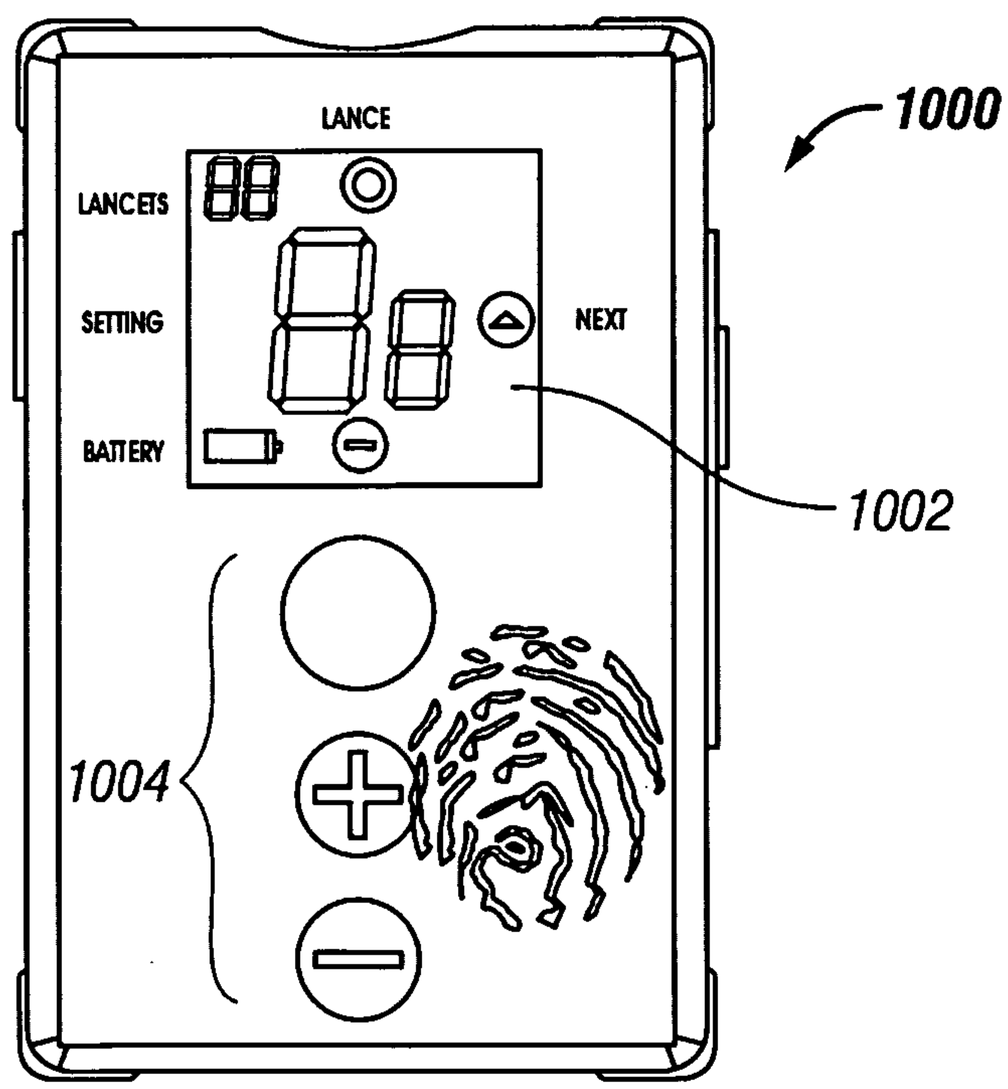
1000
LANCE
LANCETS
SETTING
NEXT
BATTERY
1002
1004

FIG. 39

LOW PAIN PENETRATING MEMBER

CROSS-REFERENCE RELATED APPLICATIONS

This application claims priority under 35 U.S.C. 120, to PCT Application No. PCT/US2004/018705, filed Jun. 14, 2004 (designates the United States), which claims priority under 35 U.S.C. 119, to U.S. Provisional Patent Application No. 60/477,813, filed Jun. 11, 2003. All applications listed above are incorporated herein by reference for all purpose.

BACKGROUND OF THE INVENTION

Lancing devices are known in the medical health-care products industry for piercing the skin to produce blood for analysis. Typically, a drop of blood for this type of analysis is obtained by making a small incision in the fingertip, creating a small wound, which generates a small blood droplet on the surface of the skin.

Early methods of lancing included piercing or slicing the skin with a needle or razor. Current methods utilize lancing devices that contain a multitude of spring, cam and mass actuators to drive the lancet. These include cantilever springs, diaphragms, coil springs, as well as gravity plumbs used to drive the lancet. The device may be held against the skin and mechanically triggered to ballistically launch the lancet. Unfortunately, the pain associated with each lancing event using known technology discourages patients from testing. In addition to vibratory stimulation of the skin as the driver impacts the end of a launcher stop, known spring based devices have the possibility of firing lancets that harmonically oscillate against the patient tissue, causing multiple strikes due to recoil. This recoil and multiple strikes of the lancet is one major impediment to patient compliance with a structured glucose monitoring regime. Known lancets also have a configuration which may contribute in part to the pain associated with lancing for body fluid generation.

Additionally, known lancets have geometries that may contribute to the pain associated with lancing. Most known lancets fail to balance between reducing pain but creating a wound generating sufficient blood or other body fluid flow. Accordingly, there is a need for improved penetrating members for addressing these deficiencies.

SUMMARY OF THE INVENTION

The present invention provides solutions for at least some of the drawbacks discussed above. Specifically, some embodiments of the present invention provide an improved penetrating member configuration for penetration into tissue. Some embodiments of these penetrating members may be used with intelligent control of the velocity profile that will increase the likelihood of spontaneous blood generation. At least some of these and other objectives described herein will be met by embodiments of the present invention.

In one aspect of the present invention, the invention relates to minimizing the pain of skin lancing based on reducing the volume of penetrating member material interacting with the skin during the cutting process. This may be achieved through surface modification or geometry changes such that cutting efficiency is increased.

Reducing the volume or drag on skin or sharpness of the penetrating member entering the wound during the cutting process will reduce the pain associated with lancing, and result in less power desired for retraction of the penetrating member from the skin.

A further understanding of the nature and advantages of the invention will become apparent by reference to the remaining portions of the specification and drawings.

The system may further comprise means for coupling the force generator with one of the penetrating members.

The system may further comprise a penetrating member sensor positioned to monitor a penetrating member coupled to the force generator, the penetrating member sensor configured to provide information relative to a depth of penetration of a penetrating member through a skin surface.

The depth of penetration may be about 100 to 2500 microns.

The depth of penetration may be about 500 to 750 microns.

The depth of penetration may be, in this nonlimiting example, no more than about 1000 microns beyond a stratum corneum thickness of a skin surface.

The depth of penetration may be no more than about 500 microns beyond a stratum corneum thickness of a skin surface.

The depth of penetration may be no more than about 300 microns beyond a stratum corneum thickness of a skin surface.

The depth of penetration may be less than a sum of a stratum corneum thickness of a skin surface and 400 microns.

The penetrating member sensor may be further configured to control velocity of a penetrating member.

The active penetrating member may move along a substantially linear path into the tissue.

The active penetrating member may move along an at least partially curved path into the tissue.

The driver may be a voice coil drive force generator.

The driver may be a rotary voice coil drive force generator.

The penetrating member sensor may be coupled to a processor with control instructions for the penetrating member driver.

The processor may include a memory for storage and retrieval of a set of penetrating member profiles utilized with the penetrating member driver.

The processor may be utilized to monitor position and speed of a penetrating member as the penetrating member moves in a first direction.

The processor may be utilized to adjust an application of force to a penetrating member to achieve a desired speed of the penetrating member.

The processor may be utilized to adjust an application of force to a penetrating member when the penetrating member contacts a target tissue so that the penetrating member penetrates the target tissue within a desired range of speed.

The processor may be utilized to monitor position and speed of a penetrating member as the penetrating member moves in the first direction toward a target tissue, wherein the application of a launching force to the penetrating member is controlled based on position and speed of the penetrating member.

The processor may be utilized to control a withdraw force to the penetrating member so that the penetrating member moves in a second direction away from the target tissue.

In the first direction, the penetrating member may move toward the target tissue at a speed that is different than a speed at which the penetrating member moves away from the target tissue.

In the first direction the penetrating member may move toward the target tissue at a speed that is greater than a speed at which the penetrating member moves away from the target tissue.

The speed of a penetrating member in the first direction may be the range of about 2.0 to 10.0 m/sec.

The average velocity of the penetrating member during a tissue penetration stroke in the first direction may be about 100 to about 1000 times greater than the average velocity of the penetrating member during a withdrawal stroke in a second direction.

A further understanding of the nature and advantages of the invention will become apparent by reference to the remaining portions of the specification and drawings.

BRIEF DESCRIPTION OF THE DRAWINGS

FIG. **1** is a side view of one embodiment of the invention, which includes dimples impressed across the contact area of the penetrating member.

FIG. **2** is a detail side view of the tip of the penetrating member.

FIG. **3** is a side view of one embodiment of the invention, which includes a splined cross-section.

FIG. **4** is a detail side view of the tip of the penetrating member shown in FIG. **3**.

FIG. **5** is a cross-sectional view of the shaft of the penetrating member shown in FIG. **3**.

FIG. **6** is a side view of a standard lancet design.

FIG. **7** is a detail side view of a standard lancet design.

FIG. **8** is a front view of the lancet design of FIG. **6**.

FIG. **9** is a sectional side view of the lancet design of FIG. **8**.

FIG. **10** is a detail side view of the lancet design of FIG. **9**, showing the addition of a layer of coating to the lancet.

FIG. **11** is a side view of one embodiment of the invention, which includes a cross-section with cutouts on the bottom portion of the penetrating member to reduce the area in contact with the penetrated matter.

FIG. **12** is a detail side view of the penetrating member of FIG. **11**.

FIG. **13** is a cross-sectional view of section D-D of the penetrating member of FIG. **11**.

FIG. **14** is a cross-sectional view of section C-C of the penetrating member of FIG. **11**.

FIG. **15** is a side view of one embodiment of the invention which includes a cross-section ground on either side of the bottom portion of the penetrating member to reduce the area in contact with the penetrated matter.

FIG. **16** is a detail side view of the penetrating member of FIG. **15**.

FIG. **17** is a cross-sectional view of section D-D of the penetrating member of FIG. **15**.

FIG. **18** is a cross-sectional view of section C-C of the penetrating member of FIG. **15**.

FIG. **19** shows a further embodiment of FIG. **15** for reducing the volume of metal inside skin during the lancing event.

FIG. **20** shows yet another embodiment of the present invention.

FIG. **21** shows the general elements of a penetrating member tip.

FIG. **22** shows various embodiments of a penetrating member tip.

FIG. **23** shows the portions and measurements of one embodiment of the present invention.

FIGS. **24-29** are perspective views of various embodiments of the present invention.

FIG. **30** is a table showing specific measurements of various penetrating members.

FIG. **31** illustrates an embodiment of a controllable force driver in the form of a cylindrical electric penetrating member driver using a coiled solenoid-type configuration.

FIG. **32**A illustrates a displacement over time profile of a penetrating member driven by a harmonic spring/mass system.

FIG. **32**B illustrates the velocity over time profile of a penetrating member driver by a harmonic spring/mass system.

FIG. **32**C illustrates a displacement over time profile of an embodiment of a controllable force driver.

FIG. **32**D illustrates a velocity over time profile of an embodiment of a controllable force driver.

FIG. **33** is a diagrammatic view illustrating a controlled feed-hack loop.

FIG. **34** is a perspective view of a tissue penetration device having features of the invention.

FIG. **35** is an elevation view in partial longitudinal section of the tissue penetration device of FIG. **4**.

FIGS. **36**A-**36**G shows a method of penetrating tissue.

FIG. **37** shows one embodiment of disc for use with the present invention.

FIG. **38** shows one view of the disc in a penetrating member device.

FIG. **39** shows another embodiment of a device that may use a disc as described in FIG. **37**.

DESCRIPTION OF THE SPECIFIC EMBODIMENTS

The present invention provides a solution for body fluid sampling. Specifically, some embodiments of the present invention provides a method for improving spontaneous blood generation. The invention may be designed for use with a high density penetrating member cartridge. It may use penetrating members of smaller size, such as but not limited to diameter or length, than those of lancets known in the art. The cutting surfaces of the penetrating member may be configured for improved cutting. At least some of these and other objectives described herein will be met by embodiments of the present invention.

It is to be understood that both the foregoing general description and the following detailed description are exemplary and explanatory only and are not restrictive of the invention, as claimed. It may be noted that, as used in the specification and the appended claims, the singular forms “a”, “an” and “the” include plural referents unless the context clearly dictates otherwise. Thus, for example, reference to “a material” may include mixtures of materials, reference to “a chamber” may include multiple chambers, and the like. References cited herein are hereby incorporated by reference in their entirety, except to the extent that they conflict with teachings explicitly set forth in this specification.

In this specification and in the claims which follow, reference will be made to a number of terms which shall be defined to have the following meanings:

“Optional” or “optionally” means that the subsequently described circumstance may or may not occur, so that the description includes instances where the circumstance occurs and instances where it does not. For example, if a device optionally contains a feature for analyzing a blood sample, this means that the analysis feature may or may not be present, and, thus, the description includes structures wherein a device possesses the analysis feature and structures wherein the analysis feature is not present.

FIG. **1** is a side view of one embodiment of the invention, which includes dimples impressed across the contact area of the penetrating member.

FIG. **2** is a detail side view of the tip of the penetrating member shown in Figure

FIG. **3** is a side view of one embodiment of the invention, which includes a splined cross-section.

FIG. **4** is a detail side view of the tip of the penetrating member shown in FIG. **3**.

FIG. **5** is a cross-sectional view of the shaft of the penetrating member shown in FIG. **3**.

FIG. **6** is a side view of a standard lancet design.

FIG. **7** is a detail side view of a standard lancet design.

FIG. **8** is a front view of the lancet design of FIG. **6**.

FIG. **9** is a sectional side view of the lancet design of FIG. **8**.

FIG. **10** is a detail side view of the lancet design of FIG. **9**, showing the addition of a layer of coating to the lancet.

FIG. **11** is a side view of one embodiment of the invention, which includes a cross-section with cutouts on the bottom portion of the penetrating member to reduce the area in contact with the penetrated matter.

FIG. **12** is a detail side view of the penetrating member of FIG. **11**.

FIG. **13** is a cross-sectional view of section D-D of the penetrating member of FIG. **11**.

FIG. **14** is a cross-sectional view of section C-C of the penetrating member of FIG. **11**.

FIG. **15** is a side view of one embodiment of the invention which includes a cross-section ground on either side of the bottom portion of the penetrating member to reduce the area in contact with the penetrated matter.

FIG. **16** is a detail side view of the penetrating member of FIG. **15**.

FIG. **17** is a cross-sectional view of section D-D of the penetrating member of FIG. **15**.

FIG. **18** is a cross-sectional view of section C-C of the penetrating member of FIG. **15**.

FIG. **19** A further embodiment of FIG. **15** for reducing the volume of metal inside skin during the lancing event. Shaving the material from the "back" of the penetrating member while maintaining the cutting geometry and relation ship of the angles of the secondary facets.

FIG. **20** Reducing the volume of metal entering the skin during the lancing event by shaving material off the back and sides of the penetrating member while maintaining the geometry of the cutting tip (similar to FIGS. **15** and **19** but easier to grind for manufacturing purposes).

FIGS. **1**, **3**, **12**, and **15** show embodiments that provide geometries designed to reduce the area of contact of the penetrating member with the penetrated material. As a non-limiting example, FIGS. **1**, **3**, and **12** show embodiments that rely on the skin's inability to conform to concave surfaces when stretched. FIG. **15** shows an embodiment, which simply reduces the surface area of the penetrating member: the shortest distance between two points, a line, is constructed in place of curved section. The apex of the lower portion of the penetrating member remains intact to provide a high section moment of inertia to the penetrating member, thereby maintaining penetrating member stiffness and tip stability. Maintaining penetrating member stiffness is important for minimizing lateral deflection of the tip, which is a primary contributor to lancing pain.

The embodiment of the invention shown in FIG. **10** includes a penetrating member coated with polytetrafluoroethylene. The polytetrafluoroethylene coating serves to reduce the frictional force desired to drive the penetrating member during entry. Although polytetrafluoroethylene does not noticeably improve the performance of very high speed projectiles, such as those designed to penetrate armor, it is believed effective at reducing friction on projectiles on low speeds. The polytetrafluoroethylene coating also isolates the penetrated matter from the material of the penetrating member. This is advantageous for avoiding a possible contact allergic reaction to the material of the penetrating member. For example, 303 stainless steel contains 9% nickel by weight, and may induce a nickel allergy in a human coming into contact with it. This type of allergy can also appear after repeated contact with such a material, and once it appears it is normally a chronic, lifelong condition. Polytetrafluoroethylene, however, is one of the most non-reactive materials known, and does not appear to cause such a condition.

In order to understand the factors controlling skin lancing, a detailed understanding of the cutting efficiency and profile of the penetrating member is desired. Creation of the wound channel and geometry of the cut are factors controlling blood yield and wound healing. Substantial effort has been put into understanding the penetrating member geometry and dimensions with relation to pain and blood yield.

FIG. **21** shows a penetrating member geometry. A variety of controllable factors are known to result in painless, efficient blood droplet yield from the skin surface. These factors include the depth of penetrating member penetration to the vascular plexus; the manner in which the skin is stabilized prior to penetrating member impact and the geometry of the lancing device. Blood volume, success rate, pain, and wound formation may be related to the diameter, depth and facet geometry of the penetrating member tip. The preferred geometry for cutting is a three-facet design shown and this geometry is common in the industry. Manufacture of these types of penetrating members is generally by taking a rod of a given diameter (usually 250-760 mm diameter) and grinding 8 degrees to the plane of the primary axis to create the primary facet. The secondary facets are then created by rotating the shaft of the penetrating member 15 degrees, and then rolling over 12 degrees to the plane of the primary facet. Other possible geometries desire altering the penetrating member's production parameters such as shaft diameter, angles, and translation distance. The features of the penetrating member tip affect lancing pain, cutting efficiency, wound healing and blood volume. Cutting efficiency is governed by the angle of the secondary facets.

Referring now to FIGS. **22** and **23**, the facets lengths, angles and diameter of common industry standard penetrating members have been measured and are shown. Lancing pain and blood yield are integrally related to these mechanical parameters. A common precept is that the smaller the diameter of the penetrating member, the less lancing pain is perceived. For a given amount of blood however, the thin penetrating member must then go deeper to cut more vessels to get the same amount of blood (this is discussed in detail in the anatomy section). Consequently, a larger diameter penetrating member with a shallow penetration will cut the desired amount of blood vessels (capillaries) with less pain. Reducing the volume of metal entering the finger, which is not associated with the cutting diameter, may help reduce pain and reduce the amount of "drag" or force desired to remove the penetrating member from the finger. The ideas presented FIGS. **1-20** are various embodiments directed at reducing the volume or friction of the penetrating member shaft in the skin.

FIG. **22** shows facet geometry of penetrating members commonly used for glucose spot monitoring.

FIG. **23**A shows a drawing of relationship of facets and angles. In one embodiment as shown more clearly in FIG. **23**B, the facet B has a length of about 0.84 mm and the bevel joint length C is about 0.47 mm.

In order to understand the factors controlling skin lancing, a detailed understanding of the cutting efficiency and profile of the lancet is desired. Creation of the wound channel and

geometry of the cut are factors controlling blood yield and wound healing. Substantial effort has been put into understanding the lancet geometry and dimensions with relation to pain and blood yield.

A variety of controllable factors are known to result in painless, efficient blood droplet yield from the skin surface. These factors include the depth of lancet penetration to the vascular plexus; the manner in which the skin is stabilized prior to lancet impact and the geometry of the lancing device. Blood volume, success rate, pain, and wound formation may be related to the diameter, depth and facet geometry of the lancet tip.

The preferred geometry for cutting is a three-facet design shown and this geometry is common in the industry. Manufacture of these types of lancets is generally by taking a rod of a given diameter (usually 250-760 mm diameter) and grinding 8 degrees to the plane of the primary axis to create the primary facet. The secondary facets are then created by rotating the shaft of the lancet 15 degrees, and then rolling over 12 degrees to the plane of the primary facet. Other possible geometries require altering the lancet's production parameters such as shaft diameter, angles, and translation distance. The features of the lancet tip affect lancing pain, cutting efficiency, wound healing and blood volume. The wound geometry from this style of lancet is shown on page **38**.

Proprietary to PTI is the relationship of the facet lengths and angles, and the fact that there is no molded chuck on the shaft of the lancet. These "bare" lancets are not found in the industry today. The advantage of the PTI proprietary lancet is that wound healing is quicker and more efficient due to the optimized geometry. All lancets used in patient testing are quantified and checked for precision manufacturing and the presence of burrs or spurs, which affect performance and pain of lancing. All lancet specifications are entered in the PTI database. For reference, A is the primary facet length (currently not measured, but calculated in the measurement process), B is the side facet length and C is the bevel joint length. The angles are derived as shown in the engineering drawing below.

Cutting efficiency is governed by the angle of the secondary facets. The importance of the lancet tip geometry and length of C is reflected in the complex relationship during cutting of the stratum corneum. Measurement of a simple inflection point in power or velocity on traversing the stratum corneum for determination of stratum corneum thickness is not possible since the situation is complicated by the entry of the lancet tip with respect to the distance along the C, B and A lengths.

The facets lengths, angles and diameter of common industry standard lancets have been measured and are shown in the Table below. As discussed above, lancing pain and blood yield are integrally related to these mechanical parameters. A common precept is that the smaller the diameter of the lancet, the less lancing pain is perceived. For a given amount of blood however, the thin lancet must then go deeper to cut more vessels to get the same amount of blood (this is discussed in detail in the anatomy section). Consequently, a larger diameter lancet with a shallow penetration will cut the desired amount of blood vessels (capillaries) with less pain. This is confirmed in histological cross sections of glabrous skin at the level of the papillary dermis and deeper, by measuring the distribution of blood vessels versus nerve branches cut for a given lancet footprint.

Pelikan Lancet

In one embodiment, decreasing shaft diameter affects primarily the value of A, and somewhat the value of B. PTI laboratory experiments and histological sections have confirmed that a shallow penetration with a wide lancet (efficient cut) translates to low pain. In one embodiment, the B manufactured lancet of 313 mm is the lancet used in patient testing. The choice was primarily based on the fact that the B lancet can penetrate shallow depths (~600 to 800 mm) to get 1 microL of blood, whereas the Hart and BD II were unable to perform at shallower depths (0.5-1.0 mm) due to poor cutting efficiency. Shallow depth settings resulted in these lancets bouncing out of the skin, presumably due to the angle of the secondary facets and the long bevel joint length.

The recently released BD UF III is a 200 mm diameter lancet of different angle and facet length geometry than the BD UF II. This is due to the fact that the grinding process described above results in modified angle relationships due to the reduced diameter of the shaft. To illustrate this a theoretical experiment would be to keep the B angle ratios constant and grind these on 200 mm bar stock to form the B III. There is a large effect on the facet lengths if the cutting angles are kept constant. The expectation is a quite different performance than the BD UF III, presumably again outperforming the BD UF III on small penetration depths. Similarly, the same thought experiment can be carried out if 200 mm bar stock is ground keeping the ABC lengths the same as the BD UF III, using the B grind protocol, the resulting angles are significantly different from the BD UF III. For comparison, the B II small diameter lancet has completely different angle and length perspective than other B produced lancets or industry standard offerings. Knowledge of tip geometry and facet lengths has a direct implication on the cutting efficiency and therefore performance of the lancet. It may very well be that there is an optimal lancet diameter and geometry for a given penetration depth an/or skin type.

FIG. **24** shows an embodiment with 1½ bar. A three-facet penetrating member design ground from half-round bar stock. The primary angle is represented in pink, the secondary angles in blue and as indicated by the arrows. The volume is reduced by virtue of the fact that the bar stock is not fully round.

FIG. **25** shows a three-facet penetrating member design ground from oval bar stock. The primary angle is represented in pink, the secondary angles in blue. Volume reduced by using oval stock rather than round.

FIG. **26** shows a sewing needle—volume reduced by removing material behind the primary facet to beyond the maximum point of penetration.

FIG. **27** shows a three spoon—volume reduction by shaving beyond the facets.

FIG. **28** shows a C shape or half hypodermic patent needle. Volume reduction is achieved by removing all material except that needed for cutting and stability.

FIG. **29** shows a 'smashed end' embodiment, easy to manufacture, reduced volume.

FIG. **30** shows a table of some different dimensions, including those of various embodiments of the present invention.

It should be understood that any of the above penetrating members may be adapted for use with a penetrating member driver as described U.S. patent application Ser. No. 10/127,395, filed Apr. 19, 2002 (now U.S. Pat. No. 7,025,774, issued Apr. 11, 2006) and U.S. patent application Ser. No. 10/323,622, filed Dec. 18, 2002 (now U.S. Pat. No. 7,708,701, issued May 4, 2010). It should also be understood that these devices may also be used as bare penetrating member without an additional molded part coupled to the penetrating member. Other embodiments may, however, be designed for use with a molded or other attachment coupled to the penetrating member to facilitate handling.

While the invention has been described and illustrated with reference to certain particular embodiments thereof, those skilled in the art will appreciate that various adaptations, changes, modifications, substitutions, deletions, or additions of procedures and protocols may be made without departing from the spirit and scope of the invention. For example, with any of the above embodiments, the location of the penetrating member drive device may be varied, relative to the penetrating members or the cartridge. With any of the above embodiments, the penetrating member tips may be uncovered during actuation (i.e. penetrating members do not pierce the penetrating member enclosure or protective foil during launch). With any of the above embodiments, the penetrating members may be a bare penetrating member during launch. With any of the above embodiments, the penetrating members may be bare penetrating members prior to launch as this may allow for significantly tighter densities of penetrating members. In some embodiments, the penetrating members may be bent, curved, textured, shaped, or otherwise treated at a proximal end or area to facilitate handling by an actuator. The penetrating member may be configured to have a notch or groove to facilitate coupling to a gripper. The notch or groove may be formed along an elongate portion of the penetrating member. With any of the above embodiments, the cavity may be on the bottom or the top of the cartridge, with the gripper on the other side. In some embodiments, analyte detecting members may be printed on the top, bottom, or side of the cavities. The front end of the cartridge maybe in contact with a user during lancing. The same driver may be used for advancing and retraction of the penetrating member. The penetrating member may have a diameters and length suitable for obtaining the blood volumes described herein. The penetrating member driver may also be in substantially the same plane as the cartridge. The driver may use a through hole or other opening to engage a proximal end of a penetrating member to actuate the penetrating member along a path into and out of the tissue.

The present invention may be used with a variety of different penetrating member drivers. It is contemplated that these penetrating member drivers may be spring based, solenoid based, magnetic driver based, nanomuscle based, or based on any other mechanism useful in moving a penetrating member along a path into tissue. It should be noted that the present invention is not limited by the type of driver used with the penetrating member feed mechanism. One suitable penetrating member driver for use with the present invention is shown in FIG. **1**. This is an embodiment of a solenoid type electromagnetic driver that is capable of driving an iron core or slug mounted to the penetrating member assembly using a direct current (DC) power supply. The electromagnetic driver includes a driver coil pack that is divided into three separate coils along the path of the penetrating member, two end coils and a middle coil. Direct current is alternated to the coils to advance and retract the penetrating member. Although the driver coil pack is shown with three coils, any suitable number of coils may be used, for example, 4, 5, 6, 7 or more coils may be used.

Referring to the embodiment of FIG. **31**, the stationary iron housing **10** may contain the driver coil pack with a first coil **12** flanked by iron spacers **14** which concentrate the magnetic flux at the inner diameter creating magnetic poles. The inner insulating housing **16** isolates the penetrating member **18** and iron core **20** from the coils and provides a smooth, low friction guide surface. The penetrating member guide **22** further centers the penetrating member **18** and iron core **20**. The penetrating member **18** is protracted and retracted by alternating the current between the first coil **12**, the middle coil, and the third coil to attract the iron core **20**. Reversing the coil sequence and attracting the core and penetrating member back into the housing retracts the penetrating member. The penetrating member guide **22** also serves as a stop for the iron core **20** mounted to the penetrating member **18**.

As discussed above, tissue penetration devices which employ spring or cam driving methods have a symmetrical or nearly symmetrical actuation displacement and velocity profiles on the advancement and retraction of the penetrating member as shown in FIGS. **2** and **3**. In most of the available lancet devices, once the launch is initiated, the stored energy determines the velocity profile until the energy is dissipated. Controlling impact, retraction velocity, and dwell time of the penetrating member within the tissue can be useful in order to achieve a high success rate while accommodating variations in skin properties and minimize pain. Advantages can be achieved by taking into account of the fact that tissue dwell time is related to the amount of skin deformation as the penetrating member tries to puncture the surface of the skin and variance in skin deformation from patient to patient based on skin hydration.

In this embodiment, the ability to control velocity and depth of penetration may be achieved by use of a controllable force driver where feedback is an integral part of driver control. Such drivers can control either metal or polymeric penetrating members or any other type of tissue penetration element. The dynamic control of such a driver is illustrated in FIG. **2**C which illustrates an embodiment of a controlled displacement profile and FIG. **32**D which illustrates an embodiment of a the controlled velocity profile. These are compared to FIGS. **32**A and **32**B, which illustrate embodiments of displacement and velocity profiles, respectively, of a harmonic spring/mass powered driver. Reduced pain can be achieved by using impact velocities of greater than about 2 m/s entry of a tissue penetrating element, such as a lancet, into tissue. Other suitable embodiments of the penetrating member driver are described in commonly assigned, copending U.S. patent application Ser. No. 10/127,395, filed Apr. 19, 2002 and previously incorporated herein.

FIG. **33** illustrates the operation of a feedback loop using a processor **60**. The processor **60** stores profiles **62** in non-volatile memory. A user inputs information **64** about the desired circumstances or parameters for a lancing event. The processor **60** selects a driver profile **62** from a set of alternative driver profiles that have been preprogrammed in the processor **60** based on typical or desired tissue penetration device performance determined through testing at the factory or as programmed in by the operator. The processor **60** may customize by either scaling or modifying the profile based on additional user input information **64**. Once the processor has chosen and customized the profile, the processor **60** is ready to modulate the power from the power supply **66** to the penetrating member driver **68** through an amplifier **70**. The processor **60** may measure the location of the penetrating member **72** using a position sensing mechanism **74** through an analog to digital converter **76** linear encoder or other such transducer. Examples of position sensing mechanisms have been described in the embodiments above and may be found in the specification for commonly assigned, copending U.S. patent application Ser. No. 10/127,395, filed Apr. 19, 2002 and previously incorporated herein. The processor **60** calculates the movement of the penetrating member by, comparing the actual profile of the penetrating member to the predetermined profile. The processor **60** modulates the power to the penetrating member driver **68** through a signal generator **78**, which may control the amplifier **70** so that the actual velocity profile of the penetrating member does not exceed the prede-

termined profile by more than a preset error limit. The error limit is the accuracy in the control of the penetrating member.

After the lancing event, the processor **60** can allow the user to rank the results of the lancing event. The processor **60** stores these results and constructs a database **80** for the individual user. Using the database **79**, the processor **60** calculates the profile traits such as degree of painlessness, success rate, and blood volume for various profiles **62** depending on user input information **64** to optimize the profile to the individual user for subsequent lancing cycles. These profile traits depend on the characteristic phases of penetrating member advancement and retraction. The processor **60** uses these calculations to optimize profiles **62** for each user. In addition to user input information **64**, an internal clock allows storage in the database **79** of information such as the time of day to generate a time stamp for the lancing event and the time between lancing events to anticipate the user's diurnal needs. The database stores information and statistics for each user and each profile that particular user uses.

In addition to varying the profiles, the processor **60** can be used to calculate the appropriate penetrating member diameter and geometry suitable to realize the blood volume required by the user. For example, if the user requires about 1-5 microliter volume of blood, the processor **60** may select a 200 micron diameter penetrating member to achieve these results. For each class of lancet, both diameter and lancet tip geometry, is stored in the processor **60** to correspond with upper and lower limits of attainable blood volume based on the predetermined displacement and velocity profiles.

The lancing device is capable of prompting the user for information at the beginning and the end of the lancing event to more adequately suit the user. The goal is to either change to a different profile or modify an existing profile. Once the profile is set, the force driving the penetrating member is varied during advancement and retraction to follow the profile. The method of lancing using the lancing device comprises selecting a profile, lancing according to the selected profile, determining lancing profile traits for each characteristic phase of the lancing cycle, and optimizing profile traits for subsequent lancing events.

FIG. **34** illustrates an embodiment of a tissue penetration device, more specifically, a lancing device **80** that includes a controllable driver **179** coupled to a tissue penetration element. The lancing device **80** has a proximal end **81** and a distal end **82**. At the distal end **82** is the tissue penetration element in the form of a penetrating member **83**, which is coupled to an elongate coupler shaft **84** by a drive coupler **85**. The elongate coupler shaft **84** has a proximal end **86** and a distal end **87**. A driver coil pack **88** is disposed about the elongate coupler shaft **84** proximal of the penetrating member **83**. A position sensor **91** is disposed about a proximal portion **92** of the elongate coupler shaft **84** and an electrical conductor **94** electrically couples a processor **93** to the position sensor **91**. The elongate coupler shaft **84** driven by the driver coil pack **88** controlled by the position sensor **91** and processor **93** form the controllable driver, specifically, a controllable electromagnetic driver.

Referring to FIG. **35**, the lancing device **80** can be seen in more detail, in partial longitudinal section. The penetrating member **83** has a proximal end **95** and a distal end **96** with a sharpened point at the distal end **96** of the penetrating member **83** and a drive head **98** disposed at the proximal end **95** of the penetrating member **83**. A penetrating member shaft **201** is disposed between the drive head **98** and the sharpened point **97**. The penetrating member shaft **201** may be comprised of stainless steel, or any other suitable material or alloy and have a transverse dimension of about 0.1 to about 0.4 mm. The penetrating member shaft may have a length of about 3 mm to about 50 mm, specifically, about 15 mm to about 20 mm. The drive head **98** of the penetrating member **83** is an enlarged portion having a transverse dimension greater than a transverse dimension of the penetrating member shaft **201** distal of the drive head **98**. This configuration allows the drive head **98** to be mechanically captured by the drive coupler **85**. The drive head **98** may have a transverse dimension of about 0.5 to about 2 mm.

A magnetic member **102** is secured to the elongate coupler shaft **84** proximal of the drive coupler **85** on a distal portion **203** of the elongate coupler shaft **84**. The magnetic member **102** is a substantially cylindrical piece of magnetic material having an axial lumen **204** extending the length of the magnetic member **102**. The magnetic member **102** has an outer transverse dimension that allows the magnetic member **102** to slide easily within an axial lumen **105** of a low friction, possibly lubricious, polymer guide tube **105'** disposed within the driver coil pack **88**. The magnetic member **102** may have an outer transverse dimension of about 1.0 to about 5.0 mm, specifically, about 2.3 to about 2.5 mm. The magnetic member **102** may have a length of about 3.0 to about 5.0 mm, specifically, about 4.7 to about 4.9 mm. The magnetic member **102** can be made from a variety of magnetic materials including ferrous metals such as ferrous steel, iron, ferrite, or the like. The magnetic member **102** may be secured to the distal portion **203** of the elongate coupler shaft **84** by a variety of, methods including adhesive or epoxy bonding, welding, crimping or any other suitable method.

Proximal of the magnetic member **102**, an optical encoder flag **206** is secured to the elongate coupler shaft **84**. The optical encoder flag **206** is configured to move within a slot **107** in the position sensor **91**. The slot **107** of the position sensor **91** is formed between a first body portion **108** and a second body portion **109** of the position sensor **91**. The slot **107** may have separation width of about 1.5 to about 2.0 mm. The optical encoder flag **206** can have a length of about 14 to about 18 mm, a width of about 3 to about 5 mm and a thickness of about 0.04 to about 0.06 mm.

The optical encoder flag **206** interacts with various optical beams generated by LEDs disposed on or in the position sensor body portions **108** and **109** in a predetermined manner. The interaction of the optical beams generated by the LEDs of the position sensor **91** generates a signal that indicates the longitudinal position of the optical flag **206** relative to the position sensor **91** with a substantially high degree of resolution. The resolution of the position sensor **91** may be about 200 to about 400 cycles per inch, specifically, about 350 to about 370 cycles per inch. The position sensor **91** may have a speed response time (position/time resolution) of 0 to about 120,000 Hz, where one dark and light stripe of the flag constitutes one Hertz, or cycle per second. The position of the optical encoder flag **206** relative to the magnetic member **102**, driver coil pack **88** and position sensor **91** is such that the optical encoder **91** can provide precise positional information about the penetrating member **83** over the entire length of the penetrating member's power stroke.

An optical encoder that is suitable for the position sensor **91** is a linear optical incremental encoder, model HEDS 9200, manufactured by Agilent Technologies. The model HEDS 9200 may have a length of about 20 to about 30 mm, a width of about 8 to about 12 mm, and a height of about 9 to about 11 mm. Although the position sensor **91** illustrated is a linear optical incremental encoder, other suitable position sensor embodiments could be used, provided they posses the requisite positional resolution and time response. The HEDS 9200 is a two channel device where the channels are 90 degrees out

of phase with each other. This results in a resolution of four times the basic cycle of the flag. These quadrature outputs make it possible for the processor to determine the direction of penetrating member travel. Other suitable position sensors include capacitive encoders, analog reflective sensors, such as the reflective position sensor discussed above, and the like.

A coupler shaft guide **111** is disposed towards the proximal end **81** of the lancing device **80**. The guide **111** has a guide lumen **112** disposed in the guide **111** to slidingly accept the proximal portion **92** of the elongate coupler shaft **84**. The guide **111** keeps the elongate coupler shaft **84** centered horizontally and vertically in the slot **102** of the optical encoder **91**.

Referring now to FIGS. **36**A-**36**G, in one embodiment, the processor determines that the skin has been contacted when the end tip of the penetrating member has moved a predetermined distance with respect to its initial position. If the distance from the tip **961** of the penetrating member **183** to the target tissue **233** is known prior to initiation of penetrating member **183** movement, the initial position of the penetrating member **183** is fixed and known, and the movement and position of the penetrating member **183** can be accurately measured during a lancing cycle, then the position and time of penetrating member contact can be determined. This method requires an accurate measurement of the distance between the penetrating member tip **196** and the patient's skin **233** when the penetrating member **183** is in the zero time or initial position. This can be accomplished in a number of ways. One way is to control all of the mechanical parameters that influence the distance from the penetrating member tip **196** to the patient's tissue or a surface of the lancing device **180** that will contact the patient's skin **233**. This could include the start position of the magnetic member **202**, magnetic path tolerance, magnetic member **202** dimensions, driver coil pack **188** location within the lancing device **180** as a whole, length of the elongate coupling shaft **184**, placement of the magnetic member **202** on the elongate coupling shaft **184**, length of the penetrating member **183** etc. If all these parameters, as well as others can be suitably controlled in manufacturing with a tolerance stack-up that is acceptable, then the distance from the penetrating member tip **196** to the target tissue **233** can be determined at the time of manufacture of the lancing device **180**. The distance could then be programmed into the memory of the processor **193**. If an adjustable feature is added to the lancing device **180**, such as an adjustable length elongate coupling shaft **184**, this can accommodate variations in all of the parameters noted above, except length of the penetrating member **183**. An electronic alternative to this mechanical approach would be to calibrate a stored memory contact point into the memory of the processor **193** during manufacture based on the mechanical parameters described above.

In another embodiment, moving the penetrating member tip **196** to the target tissue **233** very slowly and gently touching the skin **233** prior to actuation can accomplish the distance from the penetrating member tip **196** to the tissue **233**. The position sensor can accurately measure the distance from the initialization point to the point of contact, where the resistance to advancement of the penetrating member **183** stops the penetrating member movement. The penetrating member **183** is then retracted to the initialization point having measured the distance to the target tissue **233** without creating any discomfort to the user.

Referring now to FIG. **37**, a still further embodiment of a cartridge according to the present invention will be described. FIG. **37** shows one embodiment of a cartridge **900** which may be removably inserted into an apparatus for driving penetrating members to pierce skin or tissue. The cartridge **900** has a plurality of penetrating members **902** that may be individually or otherwise selectively actuated so that the penetrating members **902** may extend outward from the cartridge, as indicated by arrow **904**, to penetrate tissue. In the present embodiment, the cartridge **900** may be based on a flat disc with a number of penetrating members such as, but in no way limited to, (25, 50, 75, 100, . . .) arranged radially on the disc or cartridge **800**. It should be understood that although the cartridge **900** is shown as a disc or a disc-shaped housing, other shapes or configurations of the cartridge may also work without departing from the spirit of the present invention of placing a plurality of penetrating members to be engaged, singly or in some combination, by a penetrating member driver.

Each penetrating member **902** may be contained in a cavity **906** in the cartridge **900** with the penetrating member's sharpened end facing radially outward and may be in the same plane as that of the cartridge. The cavity **906** may be molded, pressed, forged, or otherwise formed in the cartridge. Although not limited in this manner, the ends of the cavities **906** may be divided into individual fingers (such as one for each cavity) on the outer periphery of the disc. The particular shape of each cavity **906** may be designed to suit the size or shape of the penetrating member therein or the amount of space desired for placement of the analyte detecting members **808**. For example and not limitation, the cavity **906** may have a V-shaped cross-section, a U-shaped cross-section, C-shaped cross-section, a multi-level cross section or the other cross-sections. The opening **810** through which a penetrating member **902** may exit to penetrate tissue may also have a variety of shapes, such as but not limited to, a circular opening, a square or rectangular opening, a U-shaped opening, a narrow opening that only allows the penetrating member to pass, an opening with more clearance on the sides, a slit, a configuration as shown in FIG. **75**, or the other shapes.

In this embodiment, after actuation, the penetrating member **902** is returned into the cartridge and may be held within the cartridge **900** in a manner so that it is not able to be used again. By way of example and not limitation, a used penetrating member may be returned into the cartridge and held by the launcher in position until the next lancing event. At the time of the next lancing, the launcher may disengage the used penetrating member with the cartridge **900** turned or indexed to the next clean penetrating member such that the cavity holding the used penetrating member is position so that it is not accessible to the user (i.e. turn away from a penetrating member exit opening). In some embodiments, the tip of a used penetrating member may be driven into a protective stop that hold the penetrating member in place after use. The cartridge **900** is replaceable with a new cartridge **900** once all the penetrating members have been used or at such other time or condition as deemed desirable by the user.

Referring still to the embodiment in FIG. **37**, the cartridge **900** may provide sterile environments for penetrating members via seals, foils, covers, polymeric, or similar materials used to seal the cavities and provide enclosed areas for the penetrating members to rest in. In the present embodiment, a foil or seal layer **920** is applied to one surface of the cartridge **900**. The seal layer **920** may be made of a variety of materials such as a metallic foil or other seal materials and may be of a tensile strength and other quality that may provide a sealed, sterile environment until the seal layer **920** is penetrate by a suitable or penetrating device providing a preselected or selected amount of force to open the sealed, sterile environment. Each cavity **906** may be individually sealed with a layer **920** in a manner such that the opening of one cavity does not

interfere with the sterility in an adjacent or other cavity in the cartridge **900**. As seen in the embodiment of FIG. **37**, the seal layer **920** may be a planar material that is adhered to a top surface of the cartridge **900**.

Depending on the orientation the cartridge **900** in the penetrating member driver apparatus, the seal layer **920** may be on the top surface, side surface, bottom surface, or other positioned surface. For ease of illustration and discussion of the embodiment of FIG. **37**, the layer **920** is placed on a top surface of the cartridge **800**. The cavities **906** holding the penetrating members **902** are sealed on by the foil layer **920** and thus create the sterile environments for the penetrating members. The foil layer **920** may seal a plurality of cavities **906** or only a select number of cavities as desired.

In a still further feature of FIG. **37**, the cartridge **900** may optionally include a plurality of analyte detecting members **908** on a substrate **922** which may be attached to a bottom surface of the cartridge **900**. The substrate may be made of a material such as, but not limited to, a polymer, a foil, or other material suitable for attaching to a cartridge and holding the analyte detecting members **908**. As seen in FIG. **37**, the substrate **922** may hold a plurality of analyte detecting members, such as but not limited to, about 10-50, 50-100, or other combinations of analyte detecting members. This facilitates the assembly and integration of analyte detecting members **908** with cartridge **900**. These analyte detecting members **908** may enable an integrated body fluid sampling system where the penetrating members **902** create a wound tract ill a target tissue, which expresses body fluid that flows into the cartridge for analyte detection by at least one of the analyte detecting members **908**. The substrate **922** may contain any number of analyte detecting members **908** suitable for detecting analytes in cartridge having a plurality of cavities **906**. In one embodiment, many analyte detecting members **908** may be printed onto a single substrate **922** which is then adhered to the cartridge to facilitate manufacturing and simplify assembly. The analyte detecting members **908** may be electrochemical in nature. The analyte detecting members **908** may further contain enzymes, dyes, or other detectors which react when exposed to the desired analyte. Additionally, the analyte detecting members **908** may comprise of clear optical windows that allow light to pass into the body fluid for analyte analysis. The number, location, and type of analyte detecting member **908** may be varied as desired, based in part on the design of the cartridge, number of analytes to be measured, the need for analyte detecting member calibration, and the sensitivity of the analyte detecting members. If the cartridge **900** uses an analyte detecting member arrangement where the analyte detecting members are on a substrate attached to the bottom of the cartridge, there may be through holes (as shown in FIG. **76**), wicking elements, capillary tube or other devices on the cartridge **900** to allow body fluid to flow from the cartridge to the analyte detecting members **908** for analysis. In other configurations, the analyte detecting members **908** may be printed, formed, or otherwise located directly in the cavities housing the penetrating members **902** or areas on the cartridge surface that receive blood after lancing.

The use of the seal layer **920** and substrate or analyte detecting member layer **822** may facilitate the manufacture of these cartridges **10**. For example, a single seal layer **920** may be adhered, attached, or otherwise coupled to the cartridge **900** as indicated by arrows **924** to seal many of the cavities **906** at one time. A sheet **922** of analyte detecting members may also be adhered, attached, or otherwise coupled to the cartridge **900** as indicated by arrows **925** to provide many analyte detecting members on the cartridge at one time. During manufacturing of one embodiment of the present invention, the cartridge **900** may be loaded with penetrating members **902**, sealed with layer **920** and a temporary layer (not shown) on the bottom where substrate **922** would later go, to provide a sealed environment for the penetrating members. This assembly with the temporary bottom layer is then taken to be sterilized. After sterilization, the assembly is taken to a clean room (or it may already be in a clear room or equivalent environment) where the temporary bottom layer is removed and the substrate **922** with analyte detecting members is coupled to the cartridge as shown in FIG. **37**. This process allows for the sterile assembly of the cartridge with the penetrating members **902** using processes and/or temperatures that may degrade the accuracy or functionality of the analyte detecting members on substrate **922**. As a nonlimiting example, the entire cartridge **900** may then be placed in a further sealed container such as a pouch, bag, plastic molded container, etc. . . . to facilitate contact, improve ruggedness, and/or allow for easier handling.

In some embodiments, more than one seal layer **920** may be used to seal the cavities **906**. As examples of some embodiments, multiple layers may be placed over each cavity **906**, half or some selected portion of the cavities may be sealed with one layer with the other half or selected portion of the cavities sealed with another sheet or layer, different shaped cavities may use different seal layer, or the like. The seal layer **920** may have different physical properties, such as those covering the penetrating members **902** near the end of the cartridge may have a different color such as red to indicate to the user (if visually inspectable) that the user is down to say 10, 5, or other number of penetrating members before the cartridge should be changed out.

Referring now to FIG. **38**, one embodiment of an apparatus **980** using a radial cartridge **900** with a penetrating member driver **982** is shown. A contoured surface **884** is located near a penetrating member exit port **986**, allowing for a patient to place their finger in position for lancing. Although not shown, the apparatus **980** may include a human readable or other type of visual display to relay status to the user. The display may also show measured analyte levels or other measurement or feedback to the user without the need to plug apparatus **980** or a separate test strip into a separate analyte reader device. The apparatus **980** may include a processor or other logic for actuating the penetrating member or for measuring the analyte levels. The cartridge **900** may be loaded into the apparatus **980** by opening a top housing of the apparatus which may be hinged or removably coupled to a bottom housing. The cartridge **900** may also drawn into the apparatus **980** using a loading mechanism similar in spirit to that found on a compact disc player or the like. In such an embodiment, the apparatus may have a slot (similar to a CD player in an automobile) that allows for the insertion of the cartridge **900** into the apparatus **980** which is then automatically loaded into position or otherwise seated in the apparatus for operation therein. The loading mechanism may be mechanically powered or electrically powered. In some embodiments, the loading mechanism may use a loading tray in addition to the slot. The slot may be placed higher on the housing so that the cartridge **900** will have enough clearance to be loaded into the device and then dropped down over the penetrating member driver **982**. The cartridge **900** may have an indicator mark or indexing device that allows the cartridge to be properly aligned by the loading mechanism or an aligning mechanism once the cartridge **900** is placed into the apparatus **980**. The cartridge **900** may rest on a radial platform that rotates about the penetrating member driver **982**, thus providing a method for advancing the cartridge to bring unused penetrating members to engagement with the penetrating member driver. The

cartridge **800** on its underside or other surface, may shaped or contoured such as with notches, grooves, tractor holes, optical markers, or the like to facilitate handling and/or indexing of the cartridge. These shapes or surfaces may also be varied so as to indicate that the cartridge is almost out of unused penetrating members, that there are only five penetrating members left, or some other cartridge status indicator as desired.

A suitable method and apparatus for loading penetrating members has been described previously in commonly assigned, copending U.S. patent application Ser. Nos. 60/393,706, filed Jul. 1, 2002 and 60/393,707, filed Jul. 1, 2002, and are included here by reference for all purposes. Suitable devices for engaging the penetrating members and for removing protective materials associated with the penetrating member cavity are described in commonly assigned, copending U.S. patent application Ser. Nos. 60/422,988, filed Nov. 1, 2002, and 60/424,429, filed Nov. 6, 2002, and are included here by reference for all purposes. For example in the embodiment of FIG. **37**, the foil or seal layer **920** may cover the cavity by extending across the cavity along a top surface **990** and down along the angled surface **892** to provide a sealed, sterile environment for the penetrating member and sensors therein. A piercing element described in U.S. patent application Ser. No. 60/424,429, filed Nov. 6, 2002, has a piercing element and then a shaped portion behind the element which pushes the foil to the sides of the cavity or other position so that the penetrating member **902** may be actuated and body fluid may flow into the cavity.

Referring now to FIG. **39**, one embodiment of a device that may use a disc **900** is shown. This embodiment of device **1000** include a display **1002** that shows lancing performance and setting such as penetration depth setting the like. Various buttons **1004** may also be placed on the housing to adjust settings and/or to activate lancing.

It should be understood that device **1000** may include a processor for implementing any of the control methodologies set forth herein. The processor may control the penetrating member driver and/or active braking device such a pads, stops, dampers, dashpots and other mechanism to control penetrating member speed. The characteristic phases of penetrating member advancement and retraction can be plotted on a graph of force versus time illustrating the force exerted by the penetrating member driver on the penetrating member to achieve the desired displacement and velocity profile. The characteristic phases are the penetrating member introduction phase A-C where the penetrating member is longitudinally advanced into the skin, the penetrating member rest phase D where the penetrating member terminates its longitudinal movement reaching its maximum depth and becoming relatively stationary, and the penetrating member retraction phase E-G where the penetrating member is longitudinally retracted out of the skin. The duration of the penetrating member retraction phase E-G is longer than the duration of the penetrating member introduction phase A-C, which in turn is longer than the duration of the penetrating member rest phase D.

The introduction phase further comprises a penetrating member launch phase prior to A when the penetrating member is longitudinally moving through air toward the skin, a tissue contact phase at the beginning of A when the distal end of the penetrating member makes initial contact with the skin, a tissue deformation phase A when the skin bends depending on its elastic properties which are related to hydration and thickness, a tissue lancing phase which comprises when the penetrating member hits the inflection point on the skin and begins to cut the skin B and the penetrating member continues cutting the skin C. The penetrating member rest phase D is the limit of the penetration of the penetrating member into the skin. Pain is reduced by minimizing the duration of the penetrating member introduction phase A-C so that there is a fast incision to a certain penetration depth regardless of the duration of the deformation phase A and inflection point cutting B which will vary from user to user. Success rate is increased by measuring the exact depth of penetration from inflection point B to the limit of penetration in the penetrating member rest phase D. This measurement allows the penetrating member to always, or at least reliably, hit the capillary beds, which are a known distance underneath the surface of the skin.

The penetrating member retraction phase further comprises a primary retraction phase E when the skin pushes the penetrating member out of the wound tract, a secondary retraction phase F when the penetrating member starts to become dislodged and pulls in the opposite direction of the skin, and penetrating member exit phase G when the penetrating member becomes free of the skin. Primary retraction is the result of exerting a decreasing force to pull the penetrating member out of the skin as the penetrating member pulls away from the finger. Secondary retraction is the result of exerting a force in the opposite direction to dislodge the penetrating member. Control is necessary to keep the wound tract open as blood flows up the wound tract. Blood volume is increased by using a uniform velocity to retract the penetrating member during the penetrating member retraction phase E-G regardless of the force required for the primary retraction phase E or secondary retraction phase F, either of which may vary from user to user depending on the properties of the user's skin.

Displacement versus time profile of a penetrating member for a controlled penetrating member retraction can be plotted. Velocity vs. time profile of the penetrating member for the controlled retraction can also be plotted. The penetrating member driver controls penetrating member displacement and velocity at several steps in the lancing cycle, including when the penetrating member cuts the blood vessels to allow blood to pool **2130**, and as the penetrating member retracts, regulating the retraction rate to allow the blood to flood the wound tract while keeping the wound flap from sealing the channel **2132** to permit blood to exit the wound.

The tenting process and retrograde motion of the penetrating member during the lancing cycle can be illustrated graphically which shows both a velocity versus time graph and a position versus time graph of a penetrating member tip during a lancing cycle that includes elastic and inelastic tenting. From point 0 to point A, the penetrating member is being accelerated from the initialization position or zero position. From point A to point B, the penetrating member is in ballistic or coasting mode, with no additional power being delivered. At point B, the penetrating member tip contacts the tissue and begins to tent the skin until it reaches a displacement C. As the penetrating member tip approaches maximum displacement, braking force is applied to the penetrating member until the penetrating member comes to a stop at point D. The penetrating member then recoils in a retrograde direction during the settling phase of the lancing cycle indicated between D and E. Note that the magnitude of inelastic tenting indicated in FIG. **148** is exaggerated for purposes of illustration.

The amount of inelastic tenting indicated by Z tends to be fairly consistent and small compared to the magnitude of the elastic tenting. Generally, the amount of inelastic tenting Z can be about 120 to about 140 microns. As the magnitude of the inelastic tenting has a fairly constant value and is small compared to the magnitude of the elastic tenting for most patients and skin types, the value for the total amount of tenting for the penetration stroke of the penetrating member is

effectively equal to the rearward displacement of the penetrating member during the settling phase as measured by the processor **193** plus a predetermined value for the inelastic recoil, such as 130 microns. Inelastic recoil for some embodiments can be about 100 to about 200 microns. The ability to measure the magnitude of skin tenting for a patient is important to controlling the depth of penetration of the penetrating member tip as the skin is generally known to vary in elasticity and other parameters due to age, time of day, level of hydration, gender and pathological state.

This value for total tenting for the lancing cycle can then be used to determine the various characteristics of the patient's skin. Once a body of tenting data is obtained for a given patient, this data can be analyzed in order to predict the total penetrating member displacement, from the point of skin contact, necessary for a successful lancing procedure. This enables the tissue penetration device to achieve a high success rate and minimize pain for the user. A rolling average table can be used to collect and store the tenting data for a patient with a pointer to the last entry in the table. When a new entry is input, it can replace the entry at the pointer and the pointer advances to the next value. When an average is desired, all the values are added and the sum divided by the total number of entries by the processor **193**. Similar techniques involving exponential decay (multiply by 0.95, add 0.05 times current value, etc.) are also possible.

With regard to tenting of skin generally, some typical values relating to penetration depth are now discussed. A cross sectional view of the layers of the skin can be shown. In order to reliably obtain a useable ample of blood from the skin, it is desirable to have the penetrating member tip reach the venuolar plexus of the skin. The stratum corneum is typically about 0.1 to about 0.6 mm thick and the distance from the top of the dermis to the venuole plexus can be from about 0.3 to about 1.4 mm. Elastic tenting can have a magnitude of up to about 2 mm or so, specifically, about 0.2 to about 2.0 mm, with an average magnitude of about 1 mm. This means that the amount of penetrating member displacement necessary to overcome the tenting can have a magnitude greater than the thickness of skin necessary to penetrate in order to reach the venuolar plexus. The total penetrating member displacement from point of initial skin contact may have an average value of about 1.7 to about 2.1 mm. In some embodiments, penetration depth and maximum penetration depth may be about 0.5 mm to about 5 mm, specifically, about 1 mm to about 3 mm. In some embodiments, a maximum penetration depth of about 0.5 to about 3 mm is useful.

In some embodiments, the penetrating member is withdrawn with less force and a lower speed than the force and speed during the penetration portion of the operation cycle. Withdrawal speed of the penetrating member in some embodiments can be about 0.004 to about 0.5 m/s, specifically, about 0.006 to about 0.01 m/s. In other embodiments, useful withdrawal velocities can be about 0.001 to about 0.02 meters per second, specifically, about 0.001 to about 0.01 meters per second. For embodiments that use a relatively slow withdrawal velocity compared to the penetration velocity, the withdrawal velocity may up to about 0.02 meters per second. For such embodiments, a ratio of the average penetration velocity relative to the average withdrawal velocity can be about 100 to about 1000. In embodiments where a relatively slow withdrawal velocity is not important, a withdrawal velocity of about 2 to about 10 meters per second may be used.

Another example of an embodiment of a velocity profile for a penetrating member can be seen shown, which illustrates a penetrating member profile with a fast entry velocity and a slow withdrawal velocity. A lancing profile showing velocity of the penetrating member versus position. The lancing profile starts at zero time and position and shows acceleration of the penetrating member towards the tissue from the electromagnetic force generated from the electromagnetic driver. At point A, the power is shut off and the penetrating member begins to coast until it reaches the skin indicated by B at which point, the velocity begins to decrease. At point C, the penetrating member has reached maximum displacement and settles momentarily, typically for a time of about 8 milliseconds.

A retrograde withdrawal force is then imposed on the penetrating member by the controllable driver, which is controlled by the processor to maintain a withdrawal velocity of no more than about 0.006 to about 0.01 meters/second. The same cycle is illustrated in the velocity versus time plot where the penetrating member is accelerated from the start point to point A. The penetrating member coasts from A to B where the penetrating member tip contacts tissue **233**. The penetrating member tip then penetrates the tissue and slows with braking force eventually applied as the maximum penetration depth is approached. The penetrating member is stopped and settling between C and D. At D, the withdrawal phase begins and the penetrating member is slowly withdrawn until it returns to the initialization point shown by E. Note that retrograde recoil from elastic and inelastic tenting was not shown in the lancing profiles for purpose of illustration and clarity.

In another embodiment, the withdrawal phase may use a dual speed profile, with the slow 0.006 to 0.01 meter per second speed used until the penetrating member is withdrawn past the contact point with the tissue, then a faster speed of 0.01 to 1 meters per second may be used to shorten the complete cycle.

While the invention has been described and illustrated with reference to certain particular embodiments thereof, those skilled in the art will appreciate that various adaptations, changes, modifications, substitutions, deletions, or additions of procedures and protocols may be made without departing from the spirit and scope of the invention. For example, with any of the above embodiments, the location of the penetrating member drive device may be varied, relative to the penetrating members or the cartridge. With any of the above embodiments, the penetrating member tips may be uncovered during actuation (i.e. penetrating members do not pierce the penetrating member enclosure or protective foil during launch). With any of the above embodiments, the penetrating members may be a bare penetrating member during launch. With any of the above embodiments, the penetrating members may be bare penetrating members prior to launch as this may allow for significantly tighter densities of penetrating members. In some embodiments, the penetrating members may be bent, curved, textured, shaped, or otherwise treated at a proximal end or area to facilitate handling by an actuator. The penetrating member may be configured to have a notch or groove to facilitate coupling to a gripper. The notch or groove may be formed along an elongate portion of the penetrating member. With any of the above embodiments, the cavity may be on the bottom or the top of the cartridge, with the gripper on the other side. In some embodiments, analyte detecting members may be printed on the top, bottom, or side of the cavities. The front end of the cartridge maybe in contact with a user during lancing. The same driver may be used for advancing and retraction of the penetrating member. The penetrating member may have a diameters and length suitable for obtaining the blood volumes described herein. The penetrating member driver may also be in substantially the same plane as the

cartridge. The driver may use a through hole or other opening to engage a proximal end of a penetrating member to actuate the penetrating member along a path into and out of the tissue. The present penetrating member may be used with multiple penetrating member cartridges or single penetrating member cartridges. They may be used with penetrating member cartridges which are oval, square, rectangular, triangular, hexagonal, polygonal, or other shaped or combinations of shapes. The penetrating members may be used in a bandolier configuration or held in a tape containing a plurality of penetrating members between two tapes. The penetrating members may be used electric drive devices or conventional spring-based launchers.

While the invention has been described and illustrated with reference to certain particular embodiments thereof, those skilled in the art will appreciate that various adaptations, changes, modifications, substitutions, deletions, or additions of procedures and protocols may be made without departing from the spirit and scope of the invention. For example, with any of the above embodiments, the location of the penetrating member drive device may be varied, relative to the penetrating members or the cartridge. With any of the above embodiments, the penetrating member tips may be uncovered during actuation (i.e. penetrating members do not pierce the penetrating member enclosure or protective foil during launch). With any of the above embodiments, the penetrating members may be a bare penetrating member during launch. With any of the above embodiments, the penetrating members may be bare penetrating members prior to launch as this may allow for significantly tighter densities of penetrating members. In some embodiments, the penetrating members may be bent, curved, textured, shaped, or otherwise treated at a proximal end or area to facilitate handling by an actuator. The penetrating member may be configured to have a notch or groove to facilitate coupling to a gripper. The notch or groove may be formed along an elongate portion of the penetrating member. With any of the above embodiments, the cavity may be on the bottom or the top of the cartridge, with the gripper on the other side. In some embodiments, analyte detecting members may be printed on the top, bottom, or side of the cavities. The front end of the cartridge maybe in contact with a user during lancing. The same driver may be used for advancing and retraction of the penetrating member. The penetrating member may have a diameters and length suitable for obtaining the blood volumes described herein. The penetrating member driver may also be in substantially the same plane as the cartridge. The driver may use a through hole or other opening to engage a proximal end of a penetrating member to actuate the penetrating member along a path into and out of the tissue.

Any of the features described in this application or any reference disclosed herein may be adapted for use with any embodiment of the present invention. For example, the devices of the present invention may also be combined for use with injection penetrating members or needles as described in commonly assigned, copending U.S. patent application Ser. No. 10/127,395 filed Apr. 19, 2002. An analyte detecting member to detect the presence of foil may also be included in the lancing apparatus. For example, if a cavity has been used before, the foil or sterility barrier will be punched. The analyte detecting member can detect if the cavity is fresh or not based on the status of the harrier. It should be understood that in optional embodiments, the sterility barrier may be designed to pierce a sterility barrier of thickness that does not dull a tip of the penetrating member. The lancing apparatus may also use improved drive mechanisms. For example, a solenoid force generator may be improved to try to increase the amount of force the solenoid can generate for a given current. A solenoid for use with the present invention may have five coils and in the present embodiment the slug is roughly the size of two coils. One change is to increase the thickness of the outer metal shell or windings surround the coils. By increasing the thickness, the flux will also be increased. The slug may be split; two smaller slugs may also be used and offset by ½ of a coil pitch. This allows more slugs to be approaching a coil where it could be accelerated. This creates more events where a slug is approaching a coil, creating a more efficient system.

In another optional alternative embodiment, a gripper in the inner end of the protective cavity may hold the penetrating member during shipment and after use, eliminating the feature of using the foil, protective end, or other part to retain the used penetrating member. Some other advantages of the disclosed embodiments and features of additional embodiments include: same mechanism for transferring the used penetrating members to a storage area; a high number of penetrating members such as 25, 50, 75, 100, 500, or more penetrating members may be put on a disk or cartridge; molded body about a lancet becomes unnecessary; manufacturing of multiple penetrating member devices is simplified through the use of cartridges; handling is possible of bare rods metal wires, without any additional structural features, to actuate them into tissue; maintaining extreme (better than 50 micron-lateral- and better than 20 micron vertical) precision in guiding; and storage system for new and used penetrating members, with individual cavities/slots is provided. The housing of the lancing device may also be sized to be ergonomically pleasing. In one embodiment, the device has a width of about 56 mm, a length of about 105 mm and a thickness of about 15 mm. Additionally, some embodiments of the present invention may be used with non-electrical force generators or drive mechanism. For example, the punch device and methods for releasing the penetrating members from sterile enclosures could be adapted for use with spring based launchers. The gripper using a frictional coupling may also be adapted for use with other drive technologies.

Still further optional features may be included with the present invention. For example, with any of the above embodiments, the location of the penetrating member drive device may be varied, relative to the penetrating members or the cartridge. With any of the above embodiments, the penetrating member tips may be uncovered during actuation (i.e. penetrating members do not pierce the penetrating member enclosure or protective foil during launch). The penetrating members may be a bare penetrating member during launch. In some embodiments, the penetrating member may be a patent needle. The same driver may be used for advancing and retraction of the penetrating member. Different analyte detecting members detecting different ranges of glucose concentration, different analytes, or the like may be combined for use with each penetrating member. Non-potentiometric measurement techniques may also be used for analyte detection. For example, direct electron transfer of glucose oxidase molecules adsorbed onto carbon nanotube powder microelectrode may be used to measure glucose levels. In some embodiments, the analyte detecting members may formed to flush with the cartridge so that a "well" is not formed. In some other embodiments, the analyte detecting members may formed to be substantially flush (within 200 microns or 100 microns) with the cartridge surfaces. In all methods, nanoscopic wire growth can be carried out via chemical vapor deposition (CVD). In all of the embodiments of the invention, preferred nanoscopic wires may be nanotubes. Any method useful for depositing a glucose oxidase or other analyte detection material on a nanowire or nanotube may be used with the

present invention. Additionally, for some embodiments, any of the cartridge shown above may be configured without any of the penetrating members, so that the cartridge is simply an analyte detecting device. Still further, the indexing of the cartridge may be such that adjacent cavities may not necessarily be used serially or sequentially. As a nonlimiting example, every second cavity may be used sequentially, which means that the cartridge will go through two rotations before every or substantially all of the cavities are used. As another nonlimiting example, a cavity that is 3 cavities away, 4 cavities away, or N cavities away may be the next one used. This may allow for greater separation between cavities containing penetrating members that were just used and a fresh penetrating member to be used next. For any of the embodiments herein, they may be configured to provide the various velocity profiles described.

This application cross-references commonly assigned copending U.S. patent application Ser. No. 10/323,622 filed Dec. 18, 2002. This application is also related to commonly assigned copending U.S. patent application Ser. No. 10/335,142 filed Dec. 31, 2002. This application is also a continuation-in-part of commonly assigned, copending U.S. patent application Ser. No. 10/425,815 filed May 30, 2003. This application is related to copending U.S. patent application Ser. No. 10/127,395 filed Apr. 19, 2002. This application is also a continuation-in-part of commonly assigned, copending U.S. patent application Ser. No. 10/237,261 filed Sep. 5, 2002. This application is further a continuation-in-part of commonly assigned, copending U.S. patent application Ser. No. 10/420,535 filed Apr. 21, 2003. This application is further a continuation-in-part of commonly assigned, copending U.S. patent application Ser. No. 10/335,142 filed Dec. 31, 2002. This application is further a continuation-in-part of commonly assigned, copending U.S. patent application Ser. No. 10/423,851 filed Apr. 24, 2003. All applications listed above are incorporated herein by reference for all purposes.

The publications discussed or cited herein are provided solely for their disclosure prior to the filing date of the present application. Nothing herein is to be construed as an admission that the present invention is not entitled to antedate such publication by virtue of prior invention. Further, the dates of publication provided may be different from the actual publication dates which may need to be independently confirmed. All publications mentioned herein are incorporated herein by reference to disclose and describe the structures and/or methods in connection with which the publications are cited.

Expected variations or differences in the results are contemplated in accordance with the objects and practices of the present invention. It is intended, therefore, that the invention be defined by the scope of the claims which follow and that such claims be interpreted as broadly as is reasonable.

What is claimed is:

1. A device comprising:

a housing;

a penetrating member for piercing tissue and positioned in the housing and configured to be advanced from the housing and retracted back into an interior of the housing, the penetrating member including a rod of a given diameter and geometry, and a piercing distal end with a primary facet and two side facets and a ratio of a primary facet length to a side facet length is less than 2.24:0.63, the penetrating member including a splined cross-section or dimples impressed across a contact area of the penetrating member, the primary facet having an angle cut that is different from angle cuts of the two side facets, the two side facets having the same angle cut;

a drive force generator configured to be coupled to the penetrating member for advancing the penetrating member along a path into a tissue site, create a penetration and a subsequent flow of a blood sample into a receiving channel of the housing; and

a processor with a memory for storage and retrieval of a set of penetrating member profiles utilized with the penetrating member driver, wherein each penetrating member profile from the set of penetrating member profiles includes the given diameter and geometry that correspond with upper and lower limits of attainable blood volume based on predetermined displacement and velocity profiles.

2. The device of claim **1** wherein the primary facet length of the penetrating member is less than about 1.0 mm.

3. The device of claim **1** wherein the primary facet length of the penetrating member is more than about 2.0 mm.

4. The device of claim **1** wherein the ratio of the primary facet length to the side facet length is less than 2:1, and wherein the primary facet length of the penetrating member is less than about 1.0 mm.

5. The device of claim **1** wherein the primary facet length of the penetrating member is more than about 1.60 mm.

6. The device of claim **1** wherein the primary facet length of the penetrating member is more than about 1.70 mm.

7. The device of claim **1** wherein the primary facet length of the penetrating member is more than about 1.80 mm.

8. The device of claim **1** wherein the primary facet length of the penetrating member is more than about 1.90 mm.

9. The device of claim **1** wherein the primary facet length of the penetrating member is more than about 2.00 mm.

10. The device of claim **1** wherein the primary facet length of the penetrating member is more than about 2.10 mm.

11. The device of claim **1** wherein the primary facet length of the penetrating member is more than about 2.20 mm.

12. The device of claim **1** wherein the penetrating member has a primary facet angle less than about 7.0 degrees.

13. The device of claim **1** wherein the penetrating member has a primary facet angle less than about 7.5 degrees.

14. The device of claim **1** wherein the penetrating member has a bevel joint length less than about 0.24 mm.

15. The device of claim **1** wherein the penetrating member has a bevel joint angle less than about 16 degrees.

16. The device of claim **1** wherein the penetrating member has a bevel joint angle less than about 15.5 degrees.

17. The device of claim **1** wherein the penetrating member has a cutting efficiency sufficient to bring at least 1 micro liter of blood to a skin surface after penetrating about 600 to 800 microns into the skin.

18. The device of claim **1** wherein the penetrating member has a cutting efficiency sufficient to bring at least 1 micro liter of blood to a skin surface after penetrating about 0.5 to 1.0 mm into the skin.

19. The device of claim **1** wherein the penetrating member comprises a shaft having a bar stock with a half-round cross section to reduce volume of the penetrating member.

20. The device of claim **1** wherein a portion of the penetrating member has a first cross-sectional volume and a second cross-sectional volume greater than the first for mechanical coupling with a driver to drive the penetrating member.

21. The device of claim **1** wherein a front end portion of the penetrating member has a smashed end configuration to reduce volume of the penetrating member inside the tissue.

* * * * *