US009185786B2

(12) **United States Patent**
Smith

(10) **Patent No.: US 9,185,786 B2**
(45) **Date of Patent: *Nov. 10, 2015**

(54) **LASER-DRIVEN LIGHT SOURCE**

(71) Applicant: **Energetiq Technology, Inc.**, Woburn, MA (US)

(72) Inventor: **Donald K. Smith**, Boston, MA (US)

(73) Assignee: **Energetiq Technology, Inc.**, Woburn, MA (US)

(*) Notice: Subject to any disclaimer, the term of this patent is extended or adjusted under 35 U.S.C. 154(b) by 0 days.

This patent is subject to a terminal disclaimer.

(21) Appl. No.: **14/448,258**

(22) Filed: **Jul. 31, 2014**

(65) **Prior Publication Data**

US 2015/0289353 A1 Oct. 8, 2015

Related U.S. Application Data

(63) Continuation of application No. 13/964,938, filed on Aug. 12, 2013, now Pat. No. 9,048,000, which is a continuation of application No. 13/024,027, filed on Feb. 9, 2011, now Pat. No. 8,525,138, which is a

(Continued)

(51) **Int. Cl.**
G01J 1/00 (2006.01)
H05G 2/00 (2006.01)

(52) **U.S. Cl.**
CPC ***H05G 2/008*** (2013.01); ***H05G 2/003*** (2013.01); *H05G 2/005* (2013.01)

(58) **Field of Classification Search**
CPC H05H 1/00; H05H 1/0025; H05H 1/24
USPC ..... 250/504 R; 33/504 R
See application file for complete search history.

(56) **References Cited**

U.S. PATENT DOCUMENTS

3,619,588	A	11/1971	Chambers	
3,826,996	A	7/1974	Jaegle et al.	
3,900,803	A	8/1975	Silfvast et al.	
4,088,966	A	5/1978	Samis	
4,152,625	A	5/1979	Conrad	
4,179,566	A *	12/1979	Nadelson	546/116
4,498,029	A	2/1985	Yoshizawa et al.	

(Continued)

FOREIGN PATENT DOCUMENTS

FR	2554302 A1	5/1985
JP	61 193358	8/1986

(Continued)

OTHER PUBLICATIONS

Beck, "Simple Pulse Generator for Pulsing Xenon Arcs with High Repetition Rate," *Rev. Sci. Instrum.*, vol. 45, No. 2, Feb. 1974, pp. 318-319.

(Continued)

Primary Examiner — Nicole Ippolito
Assistant Examiner — Jason McCormack
(74) *Attorney, Agent, or Firm* — Proskauer Rose LLP

(57) **ABSTRACT**

An apparatus for producing light includes a chamber and an ignition source that ionizes a gas within the chamber. The apparatus also includes at least one laser that provides energy to the ionized gas within the chamber to produce a high brightness light. The laser can provide a substantially continuous amount of energy to the ionized gas to generate a substantially continuous high brightness light.

25 Claims, 39 Drawing Sheets

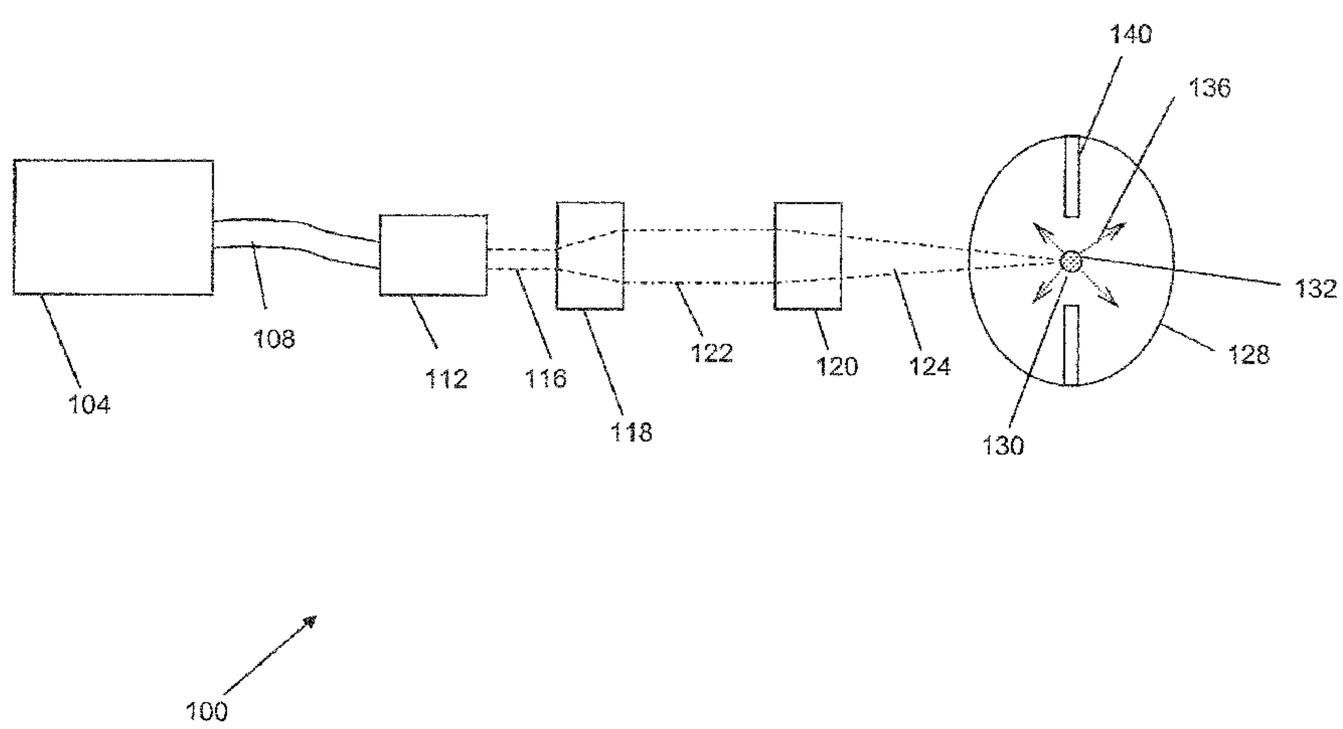

Related U.S. Application Data

continuation-in-part of application No. 12/166,918, filed on Jul. 2, 2008, now Pat. No. 7,989,786, which is a continuation-in-part of application No. 11/695,348, filed on Apr. 2, 2007, now Pat. No. 7,786,455, which is a continuation-in-part of application No. 11/395,523, filed on Mar. 31, 2006, now Pat. No. 7,435,982.

(60) Provisional application No. 61/302,797, filed on Feb. 9, 2010.

(56) **References Cited**

U.S. PATENT DOCUMENTS

4,646,215	A	2/1987	Levin et al.	
RE32,626	E	3/1988	Yoshizawa et al.	
4,780,608	A *	10/1988	Cross et al.	250/281
4,789,788	A	12/1988	Cox	
4,868,458	A	9/1989	Davenport et al.	
4,901,330	A	2/1990	Wolfram et al.	
5,801,495	A	9/1998	Smolka et al.	
6,184,517	B1	2/2001	Sawada et al.	
6,288,780	B1	9/2001	Fairley et al.	
6,417,625	B1	7/2002	Brooks et al.	
6,541,924	B1	4/2003	Kane et al.	
6,788,404	B2	9/2004	Lange	
6,956,329	B2	10/2005	Brooks et al.	
7,050,149	B2	5/2006	Owa et al.	
7,164,144	B2	1/2007	Partlo et al.	
7,427,167	B2	9/2008	Holder et al.	
7,429,818	B2	9/2008	Chang et al.	
7,435,982	B2 *	10/2008	Smith	250/504 R
7,652,430	B1	1/2010	Delgado	
7,786,455	B2 *	8/2010	Smith	250/493.1
7,989,786	B2 *	8/2011	Smith et al.	250/503.1
8,525,138	B2 *	9/2013	Smith et al.	250/503.1
2002/0021508	A1	2/2002	Ishihara	
2002/0044624	A1 *	4/2002	Davis et al.	377/36
2002/0044629	A1 *	4/2002	Hertz et al.	378/119
2002/0080834	A1	6/2002	Kusunose	
2002/0172235	A1	11/2002	Chang et al.	
2003/0052609	A1	3/2003	Eastlund et al.	
2003/0068012	A1 *	4/2003	Ahmad et al.	378/119
2003/0147499	A1	8/2003	Kondo	
2003/0168982	A1	9/2003	Kim	
2003/0231496	A1	12/2003	Sato et al.	
2004/0016894	A1 *	1/2004	Wester	250/504 R
2004/0026512	A1	2/2004	Otsubo	
2004/0129896	A1	7/2004	Schmidt et al.	
2004/0183038	A1	9/2004	Hiramoto et al.	
2004/0238762	A1 *	12/2004	Mizoguchi et al.	250/504 R
2004/0264512	A1	12/2004	Hartlove et al.	
2005/0167618	A1	8/2005	Hoshino et al.	
2005/0199829	A1	9/2005	Partlo et al.	
2005/0205811	A1	9/2005	Partlo et al.	
2005/0225739	A1	10/2005	Hiura	
2005/0243390	A1	11/2005	Tejnil	
2006/0039435	A1	2/2006	Cheymol et al.	
2006/0131515	A1	6/2006	Partlo et al.	
2006/0152128	A1 *	7/2006	Manning	313/113
2006/0186356	A1	8/2006	Imai et al.	
2006/0192152	A1	8/2006	Ershov et al.	
2006/0219957	A1	10/2006	Ershov et al.	
2007/0228288	A1	10/2007	Smith	
2007/0228300	A1	10/2007	Smith	
2007/0285921	A1	12/2007	Zulim et al.	
2009/0032740	A1	2/2009	Smith et al.	

FOREIGN PATENT DOCUMENTS

JP	1-296560	11/1989
JP	04-144053	5/1992
JP	05-82087	4/1993
JP	08-299951	11/1996
JP	09-288995	11/1997
JP	2003-317675	11/2003
JP	2006-10675	1/2006
JP	2006-080255	3/2006
WO	2004097520	11/2004
WO	2010/093903	8/2010

OTHER PUBLICATIONS

Bussiahn, R., et. al., "Experimental and theoretical investigations of a low-pressure He—Xe discharge for lighting purpose," Journal of Applied Physics, vol. 95, No. 9, May 1, 2004, pp. 4627-4634.

Carlhoff et al., "Continuous Optical Discharges at Very High Pressure," *Physica* 103C, 1981, pp. 439-447.

Cremers et al., "Evaluation of the Continuous Optical Discharge for Spectrochemical Analysis," *Spectrochimica Acta*, vol. 40B, No. 4, 1985, pp. 665-679.

Fiedorowicz et al., "X-Ray Emission form Laser-Irradiated Gas Puff Targets," *Appl. Phys. Lett.* 62 (22), May 31, 1993, pp. 2778-2780.

Franzen, "CW Gas Breakdown in Argon Using 10.6-μm Laser Radiation," *Appl. Phys. Lett.*, vol. 21, No. 2, Jul. 15, 1972, pp. 62-64.

Generalov et al., "Continuous Optical Discharge," *ZhETF Pis*. Red. 11, No. 9, May 5, 1970, pp. 302-304.

Generalov et al., "Experimental Investigation of a Continuous Optical Discharge," *Soviet Physics JETP*, vol. 34, No. 4, Apr. 1972, pp. 763-769.

Hamamatsu Product Information, "Super-Quiet Xenon Lamp Super-Quiet Mercury-Xenon Lamp," Nov. 2005. pp. 1-16.

Hecht, "Refraction", *Optics* (*Third Edition*), 1998, Chapter 4, pp. 100-101.

Jeng et al., "Theoretical Investigation of Laser-Sustained Argon Plasmas," *J. Appl. Phys*. 60 (7), Oct. 1, 1986, pp. 2272-2279.

Keefer et al., "Experimental Study of a Stationary Laser-Sustained Air Plasma," *Journal of Applied Physics*, vol. 46, No. 3, Mar. 1975, pp. 1080-1083.

Keefer, "Laser-Sustained Plasmas," *Laser-Induced Plasmas and Applications*, published by Marcel Dekker, edited by Radziemski et al., 1989, pp. 169-206.

Kozlov et al., "Radiative Losses by Argon Plasma and the Emissive Model of a Continuous Optical Discharge," *Sov. Phys. JETP*, vol. 39, No. 3, Sep. 1974, pp. 463-468.

Kozlov et al., "Sustained Optical Discharges in Molecular Gases," *Sov. Phys. Tech. Phys*. 49(11), Nov. 1979, pp. 1283-1287.

Moody, "Maintenance of a Gas Breakdown in Argon Using 10.6-μ cw Radiation," *Journal of Applied Physics*, vol. 46, No. 6, Jun. 1975, pp. 2475-2482.

Nakr, "Radiometric Characterization of Ultrahigh Radiance Xenon Short-acr Dichage Lamps", *Applied Optics*, vol. 47, No. 2, Jan. 9, 2008, pp. 224-229.

Raĭzer, "Optical Discharges," *Sov. Phys. Usp*. 23(11), Nov. 1980, pp. 789-806.

Wilbers et al., "The Continuum Emission of an Arc Plasma," *J. Quant. Spectrosc. Radiat. Transfer*, vol. 45, No. 1, 1991, pp. 1-10.

Wilbers et al., "The VUV Emissivity of a High-Pressure Cascade Argon Arc from 125 to 200 nm," *J. Quant. Spectrosc. Radiat. Transfer*, vol. 46, 1991, pp. 299-308.

Redacted Expert Declaration of Caroline Ross, Ph.D., 46 pages (with Appendix), filed Mar. 10, 2015 in Civil Action No. 1:15-cv-10240-LTS (D. Mass.).

Second Declaration of Donald K. Smith, Ph.D. in Support of Energetiq's Reply Brief in Support of its Motion for Preliminary Injunction, pp. 1-30, filed Mar. 17, 2015 as Document 68 in Civil Action No. 1:15-cv-10240-LTS (D. Mass).

I.M. Beterov et al., Resonance radiation plasma (photoresonance plasma), Soy. Phys. Usp. 31 (6), pp. 535-554 (1988).

Petition for Inter Partes Review of U.S. Pat. No. 8,309,943 and accompanying Exhibits 1001-1016, filed on May 29, 2015, 446 pages (submitted in 3 parts, part 1 (170 pages), part 2 (251 pages), and part 3 (25 pages)).

Petition for Inter Partes Review of U.S. Pat. No. 7,786,455 and accompanying Exhibits 1001-1015, filed on May 29, 2015, 393 pages (submitted in 2 parts, part 1 (290 pages) and part 2 (103 pages)).

(56) **References Cited**

OTHER PUBLICATIONS

Petition for Inter Partes Review of U.S. Pat. No. 7,435,982 and accompanying Exhibits 1101-1114, filed on May 29, 2015, 364 pages (submitted in 2 parts, part 1 (250 pages) and part 2 (114 pages)).
Petition for Inter Partes Review of U.S. Pat. No. 7,435,982 and accompanying Exhibits 1001-1014, filed on May 29, 2015, 348 pp. (submitted in 2 parts, part 1 (240 pages) and part 2 (108 pages)).
Petition for Inter Partes Review of U.S. Pat. No. 8,969,841 and accompanying Exhibits 1001-1025, filed on Jun. 12, 2015, 743 pages (submitted in 6 parts, part 1 (325 pages), part 2 (111 pages), part 3 (71 pages), part 4 (101 pages), part 5 (71 pages), and part 6 (64 pages)).
Petition for Inter Partes Review of U.S. Pat. No. 8,525,138 and accompanying Exhibits 1001-1025, filed on Jun. 12, 2015, 720 pages (submitted in 4 parts, part 1 (285 pages), part 2 (71 pages, part 3 (301 pages), and part 4 (63 pages)).
Petition for Inter Partes Review of U.S. Pat. No. 9,048,000 and accompanying Exhibits 1001-1028, filed on Jun. 12, 2015, 691 pages (submitted in 4 parts, part 1 (390 pages), part 2 (61 pages), part 3 (121 pages), and part 4 (119 pages)).
Petition for Inter Partes Review of U.S. Pat. No. 7,435,982 and accompanying Exhibits 1201-1218, filed on Jun. 12, 2015, 511 pages (submitted in 3 parts, part 1 (330 pages), part 2 (151 pages), and part 3 (30 pages)).

* cited by examiner

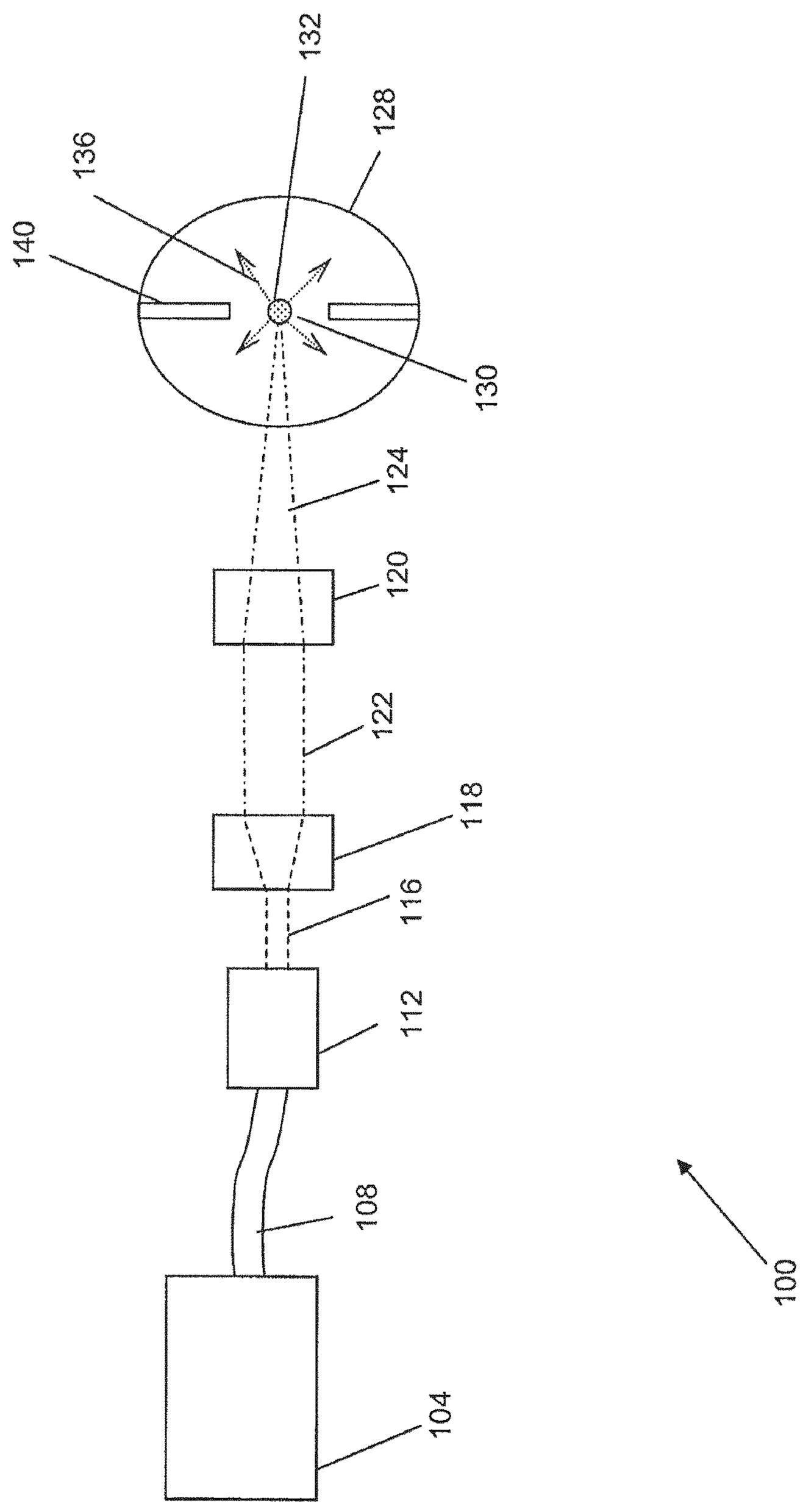

FIG. 1

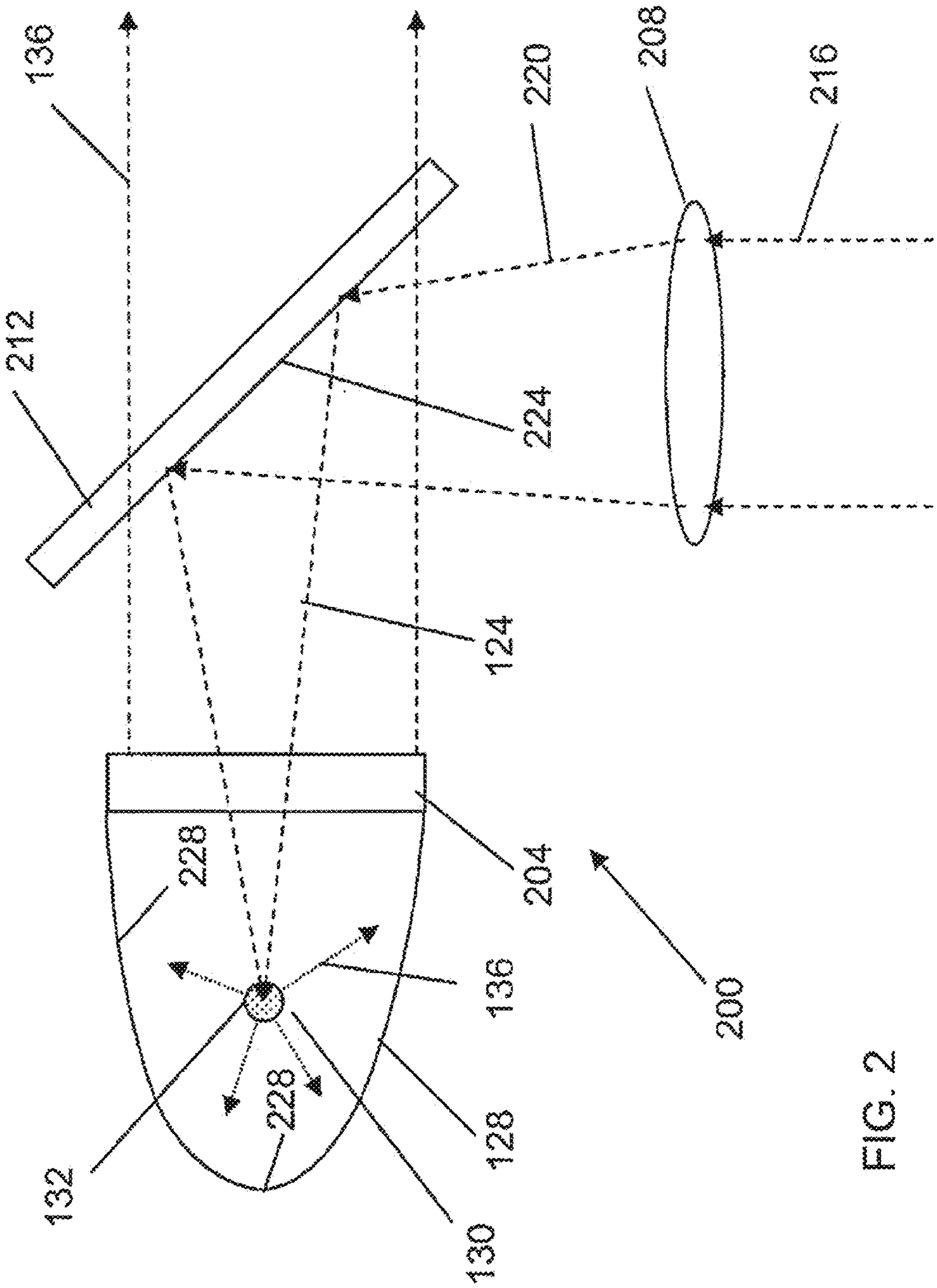

FIG. 2

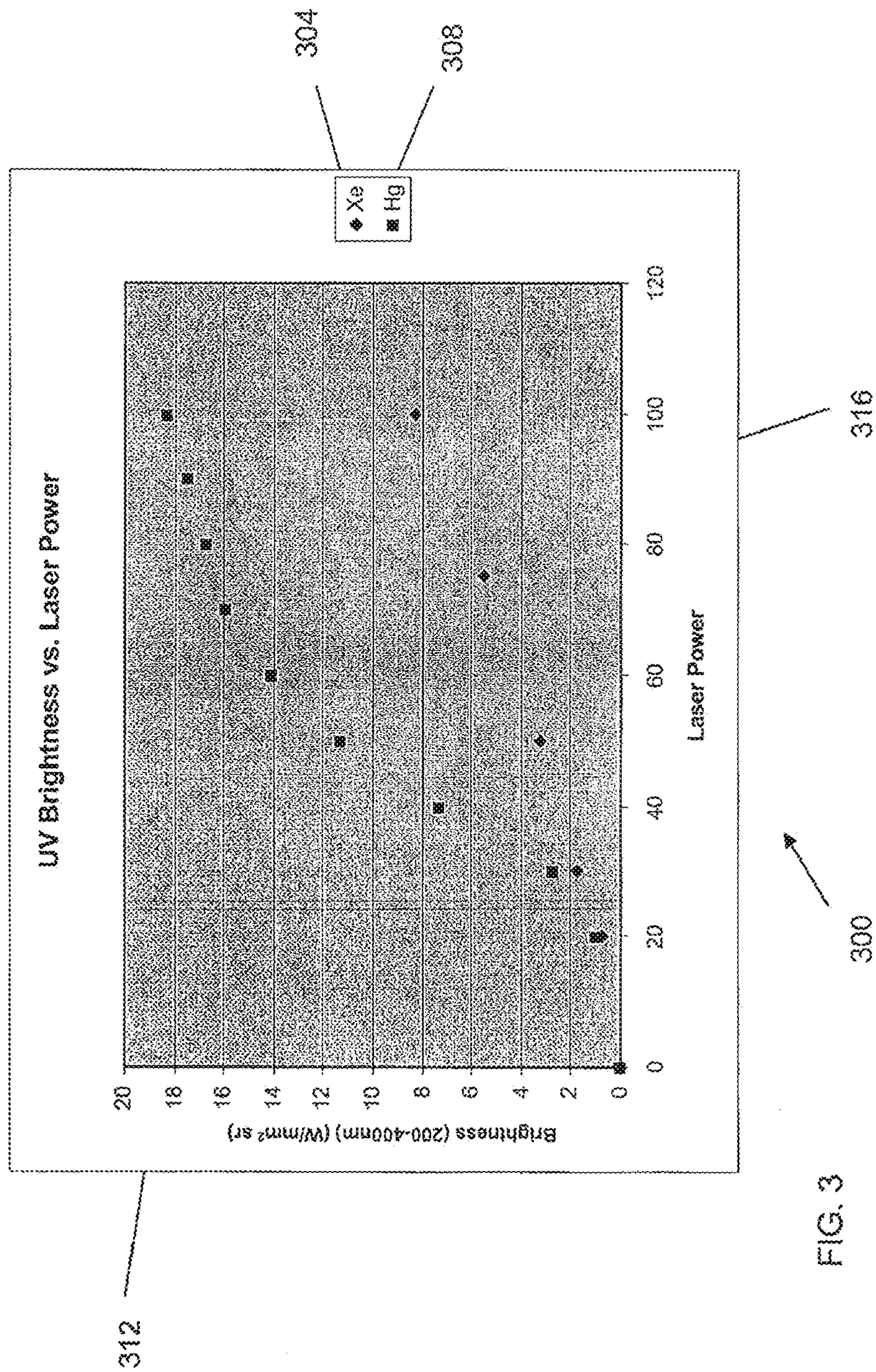
UV Brightness vs. Laser Power
Brightness (200-400nm) (W/mm² sr)
20
18
16
14
12
10
8
6
4
2
0
0
20
40
60
80
100
120
Laser Power
Xe
Hg
304
308
312
316
300

FIG. 3

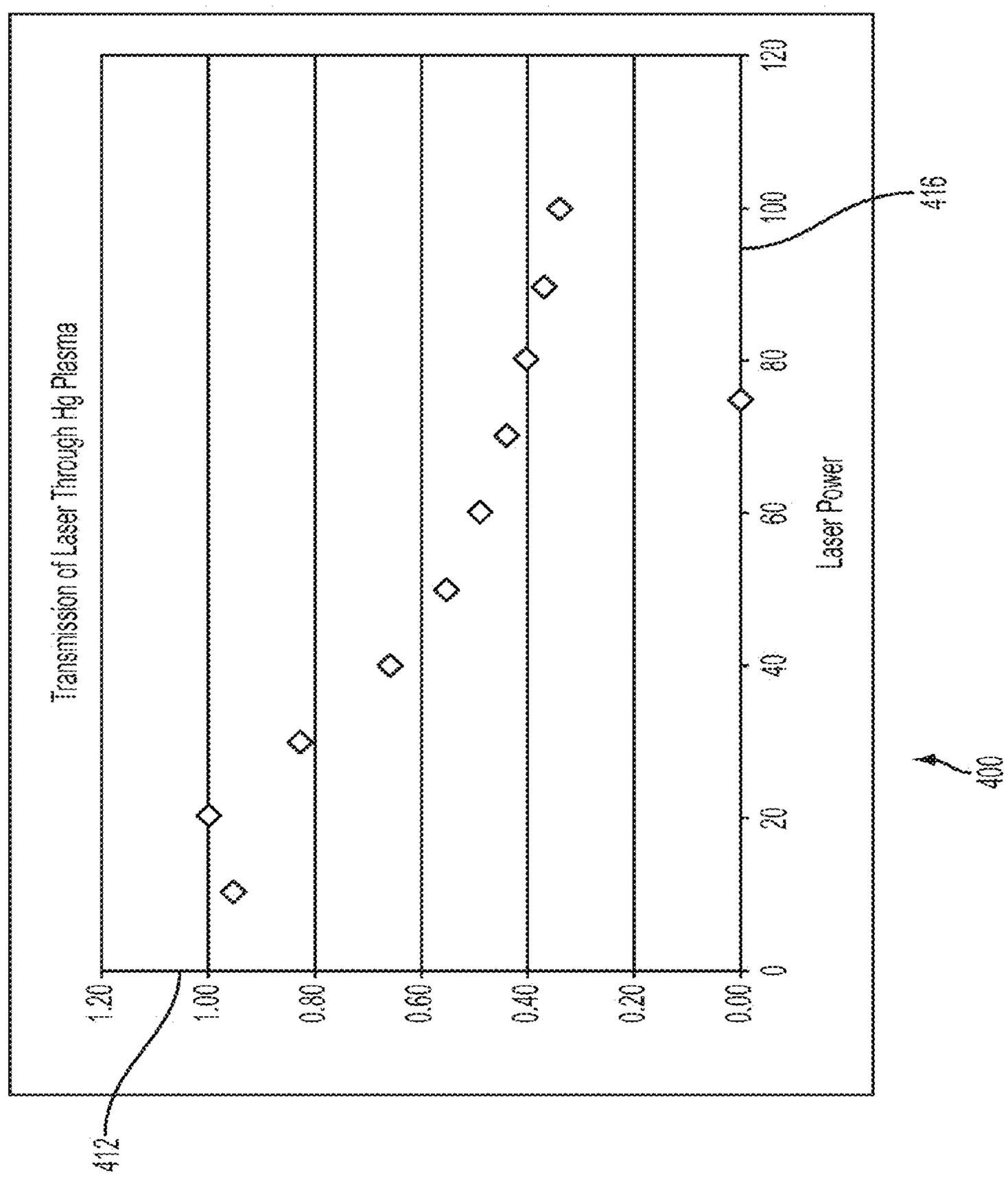
Transmission of Laser Through Hg Plasma
1.20
1.00
0.80
0.60
0.40
0.20
0.00
0
20
40
60
80
100
120
Laser Power
412
416
400

FIG. 4

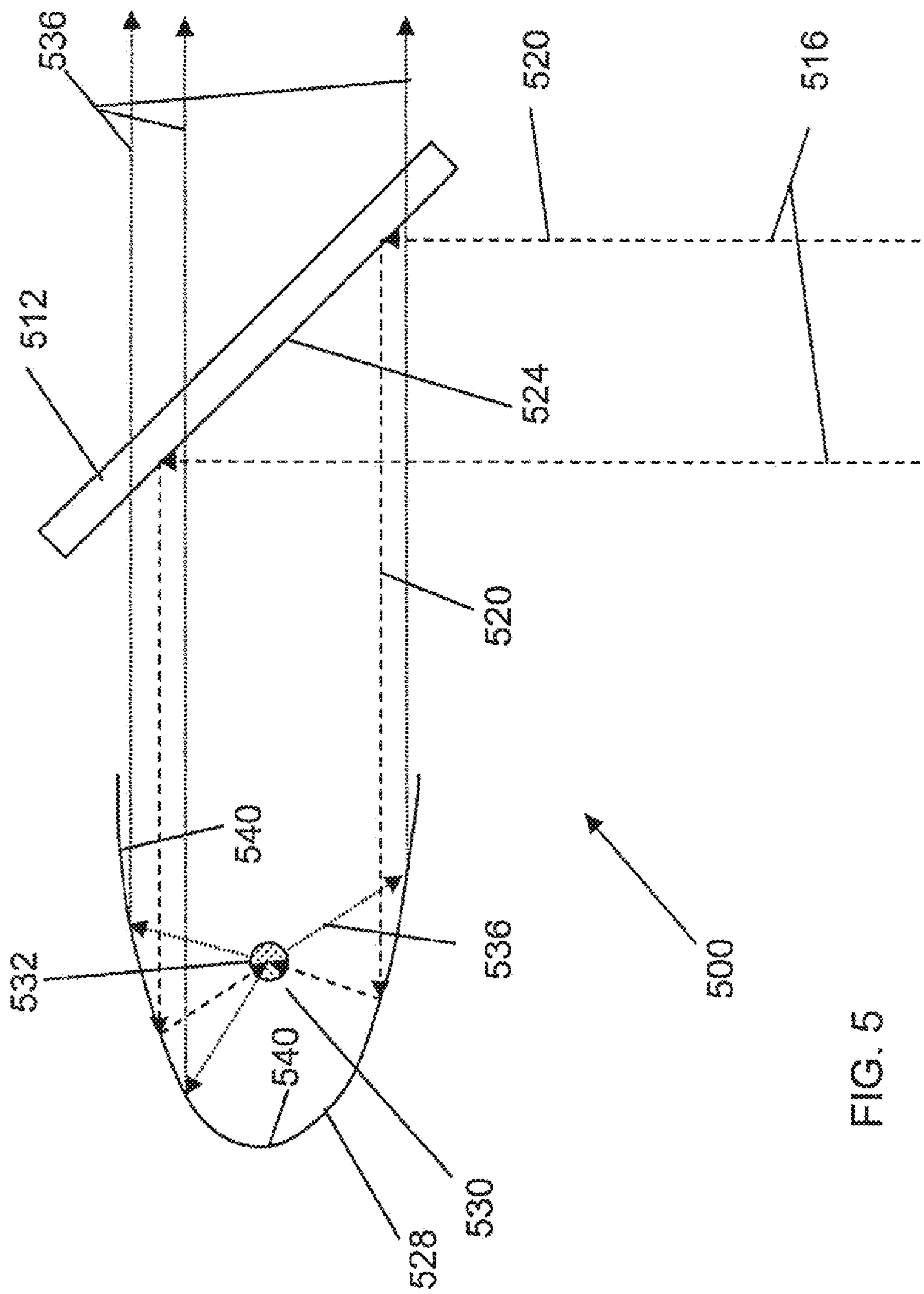

FIG. 5

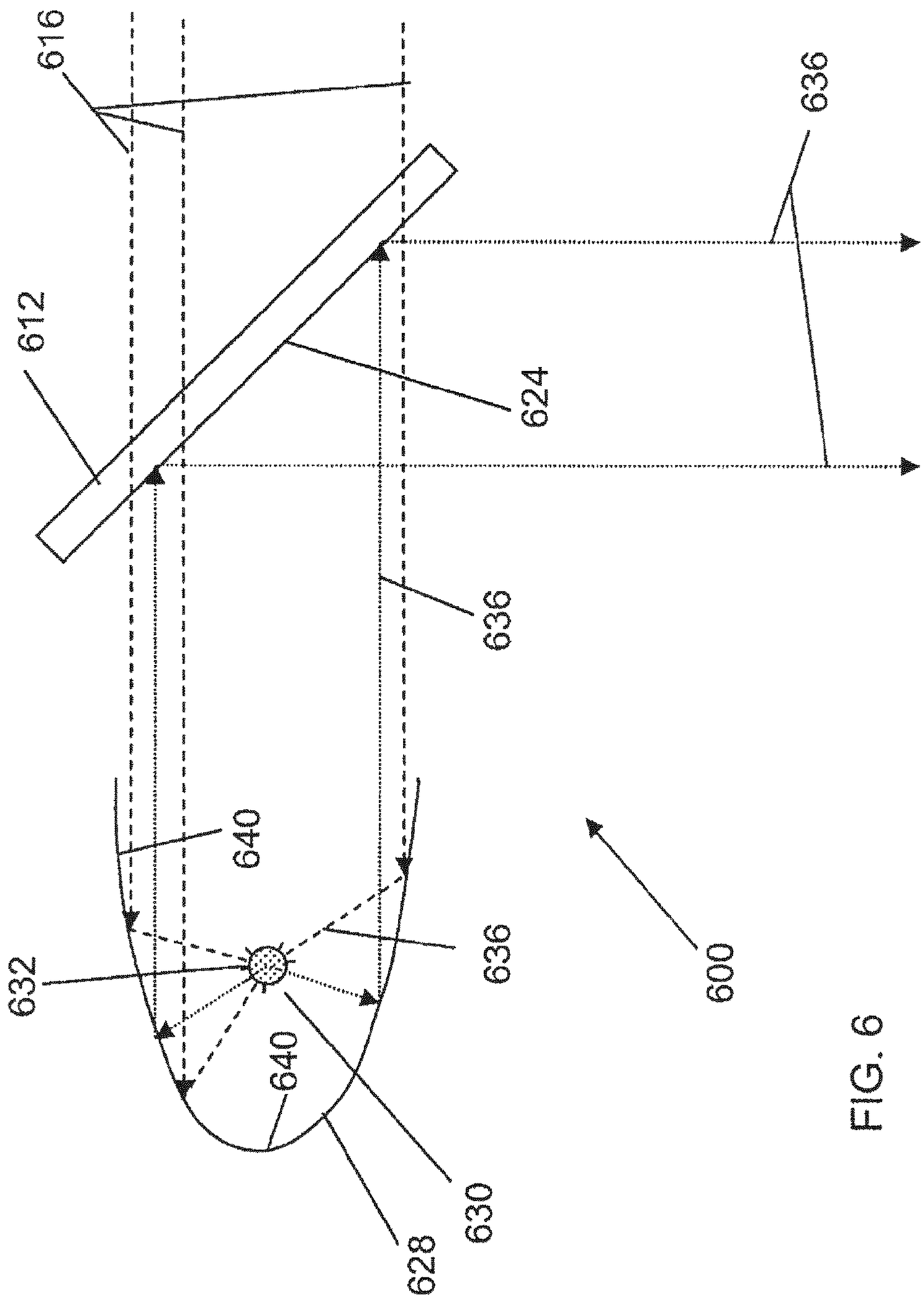

FIG. 6

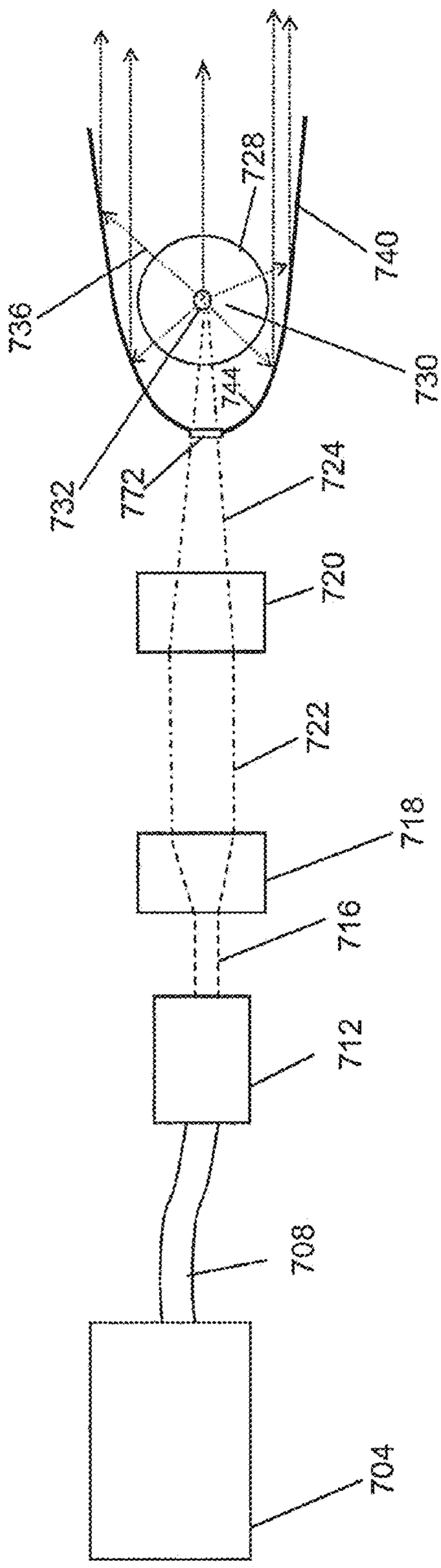

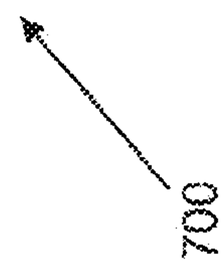

FIG. 7

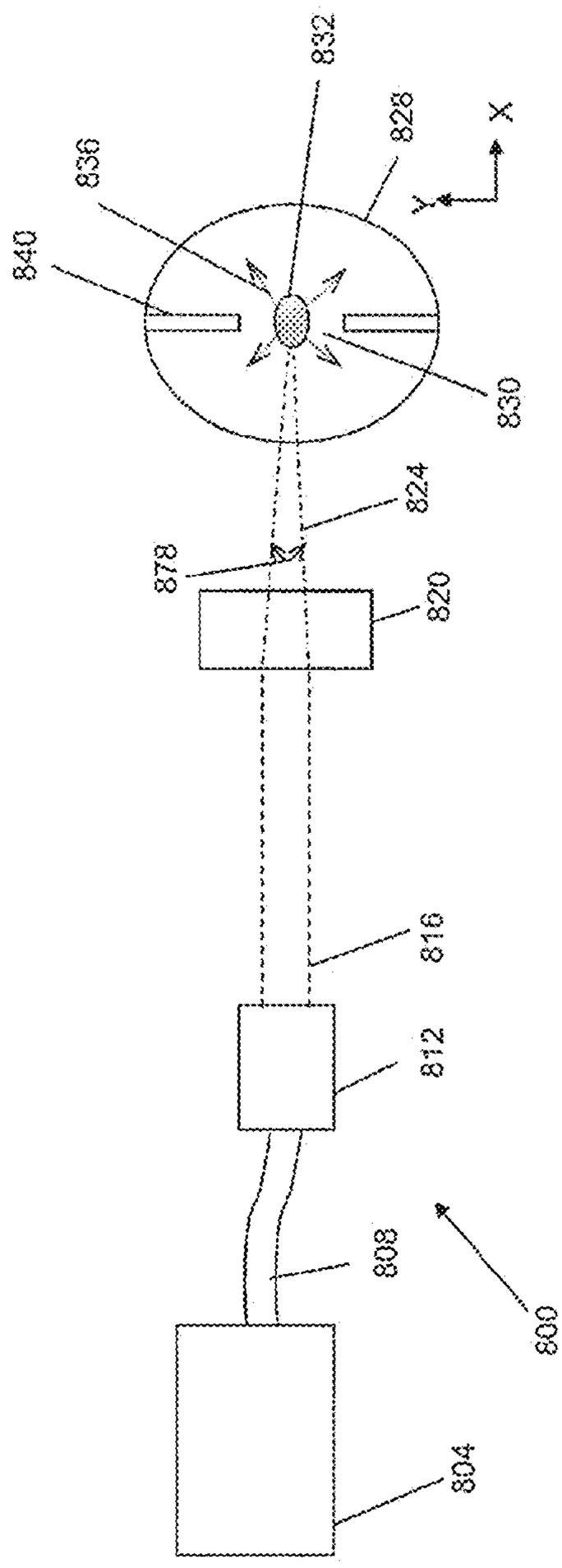
832
828
X
Y
836
840
830
824
878
820
816
812
808
800
804

FIG. 8A

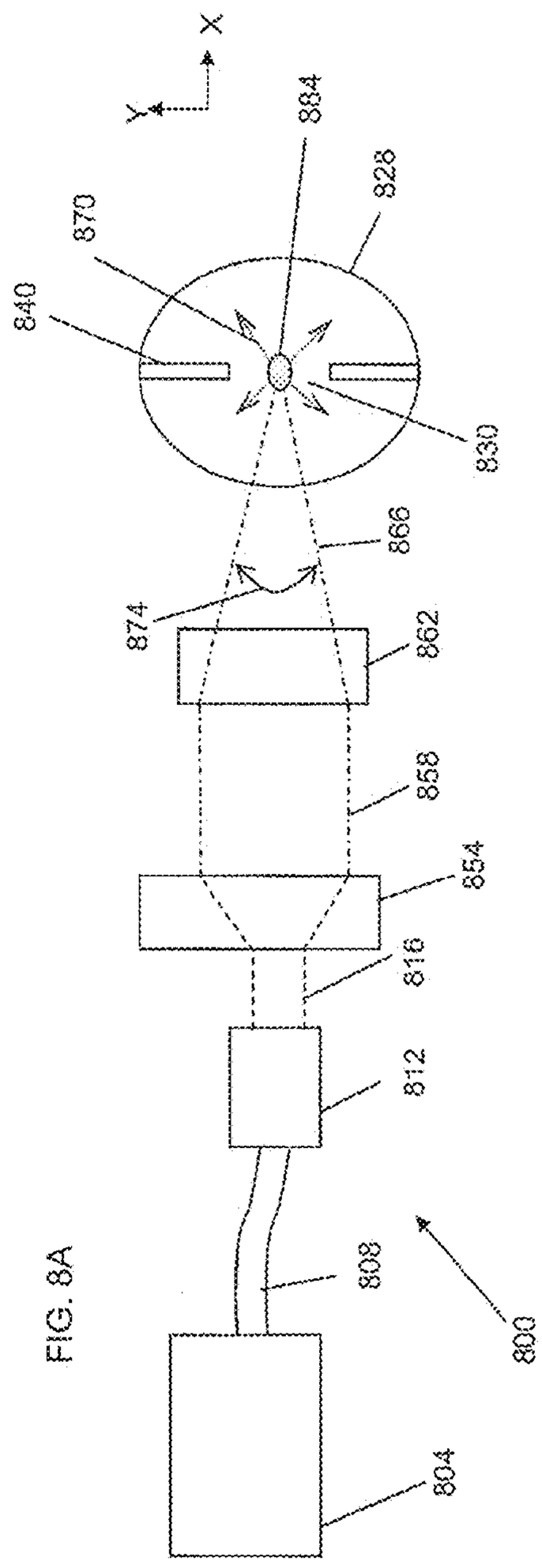
X
Y
884
828
870
840
830
866
874
862
858
854
816
812
808
800
804

FIG. 8B

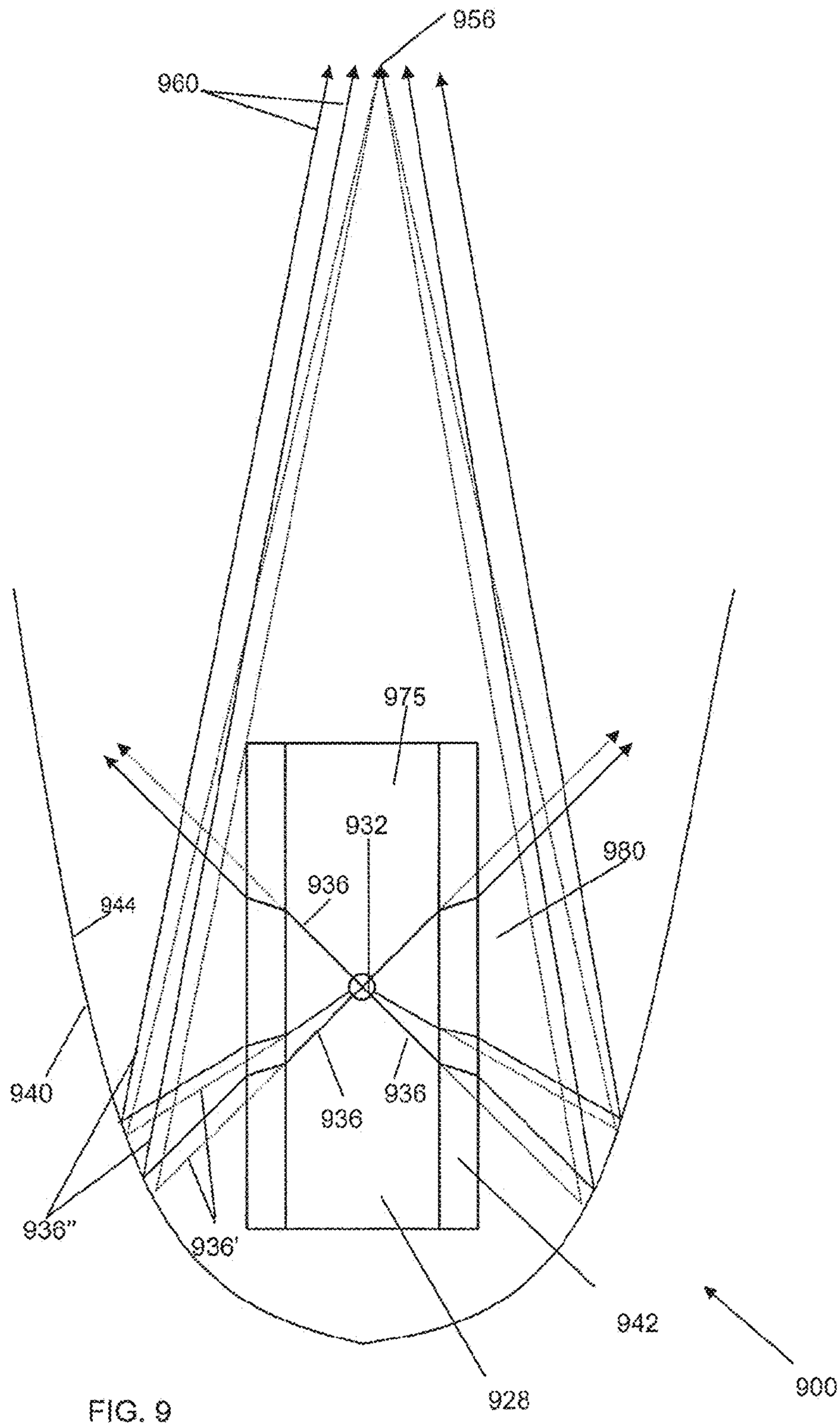

FIG. 9

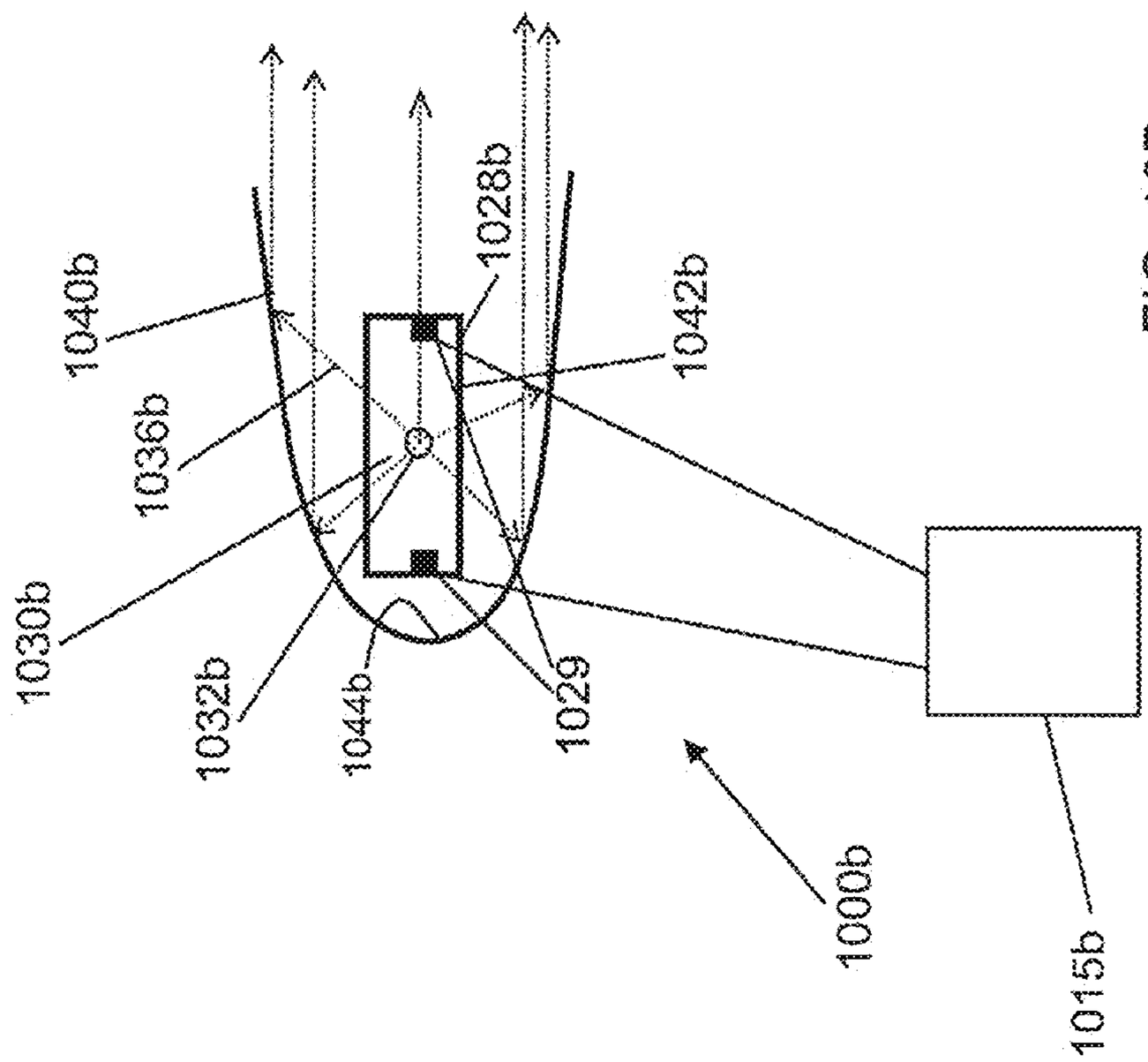

FIG. 10B

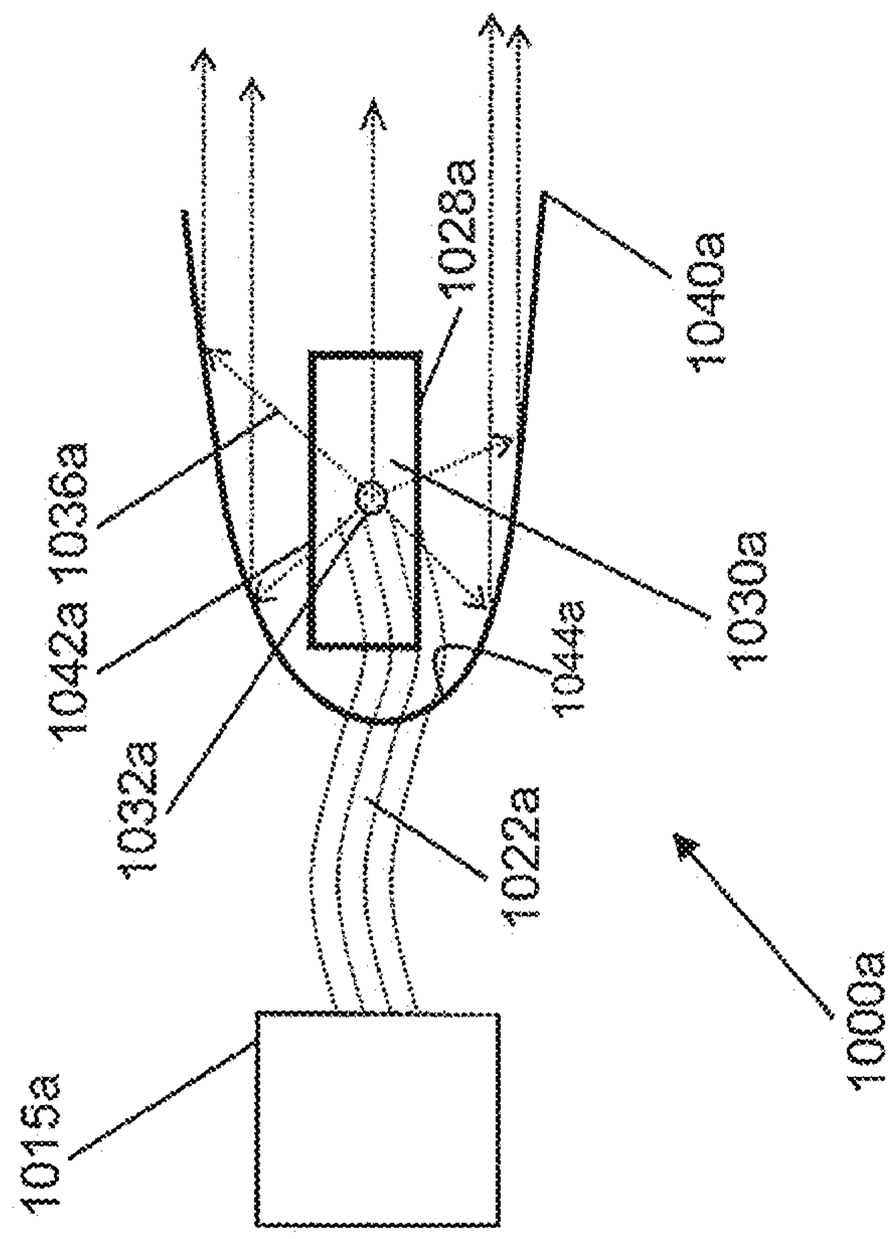

FIG. 10A

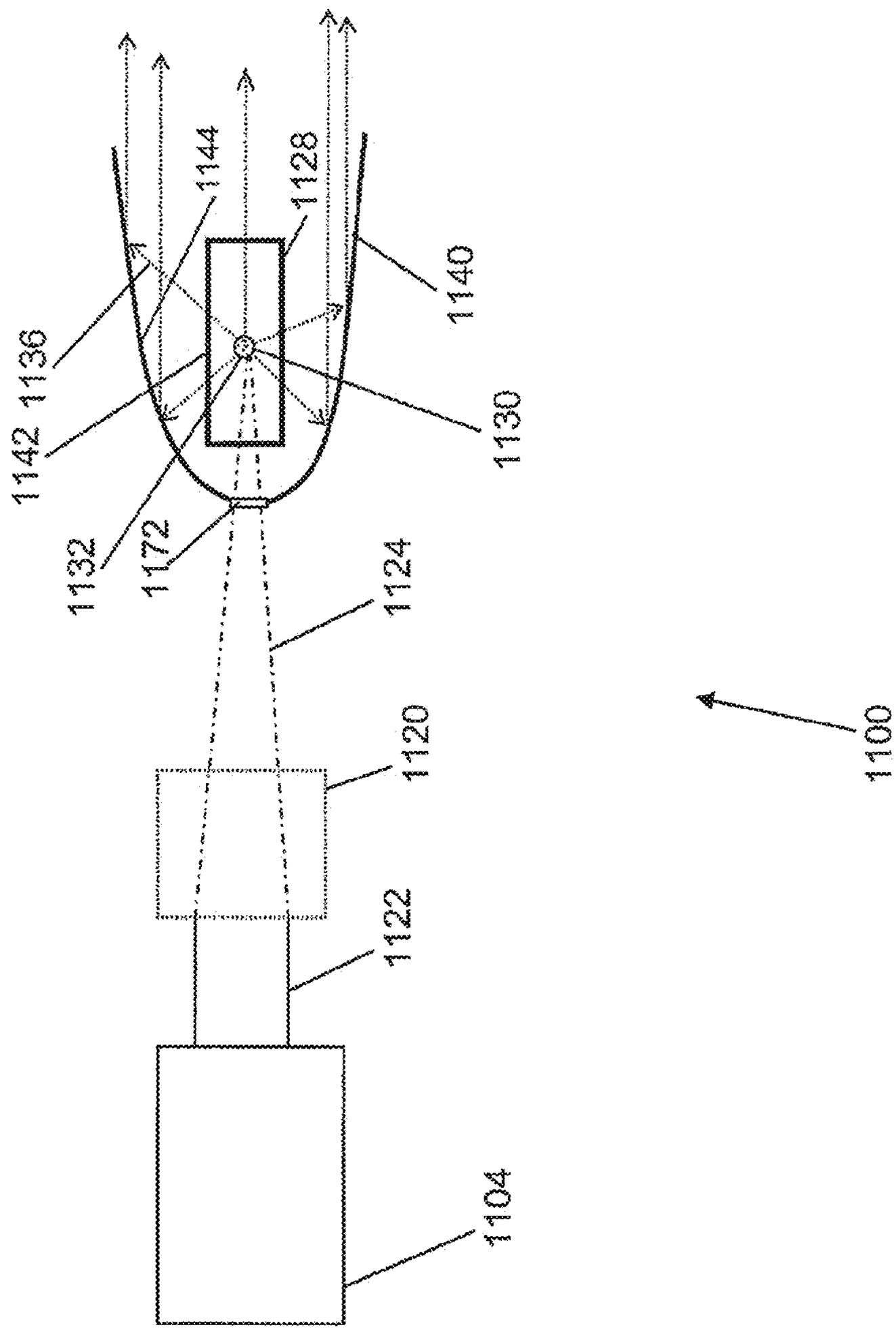
1144
1128
1136
1140
1142
1130
1132
1172
1124
1120
1100
1122
1104

FIG. 11

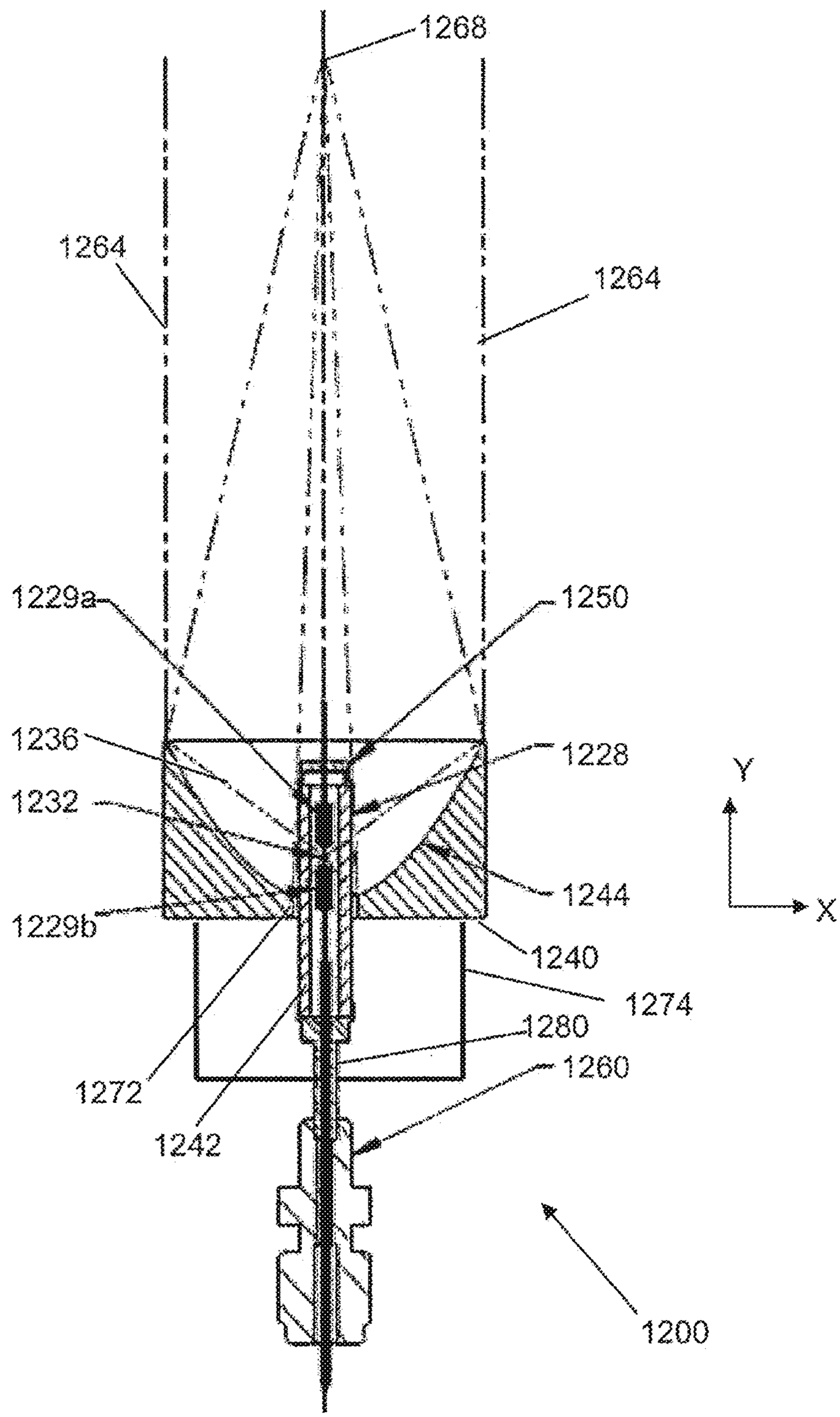
1268
1264
1264
1229a
1250
1236
1228
1232
Y
X
1244
1229b
1240
1274
1280
1260
1272
1242
1200

FIG. 12

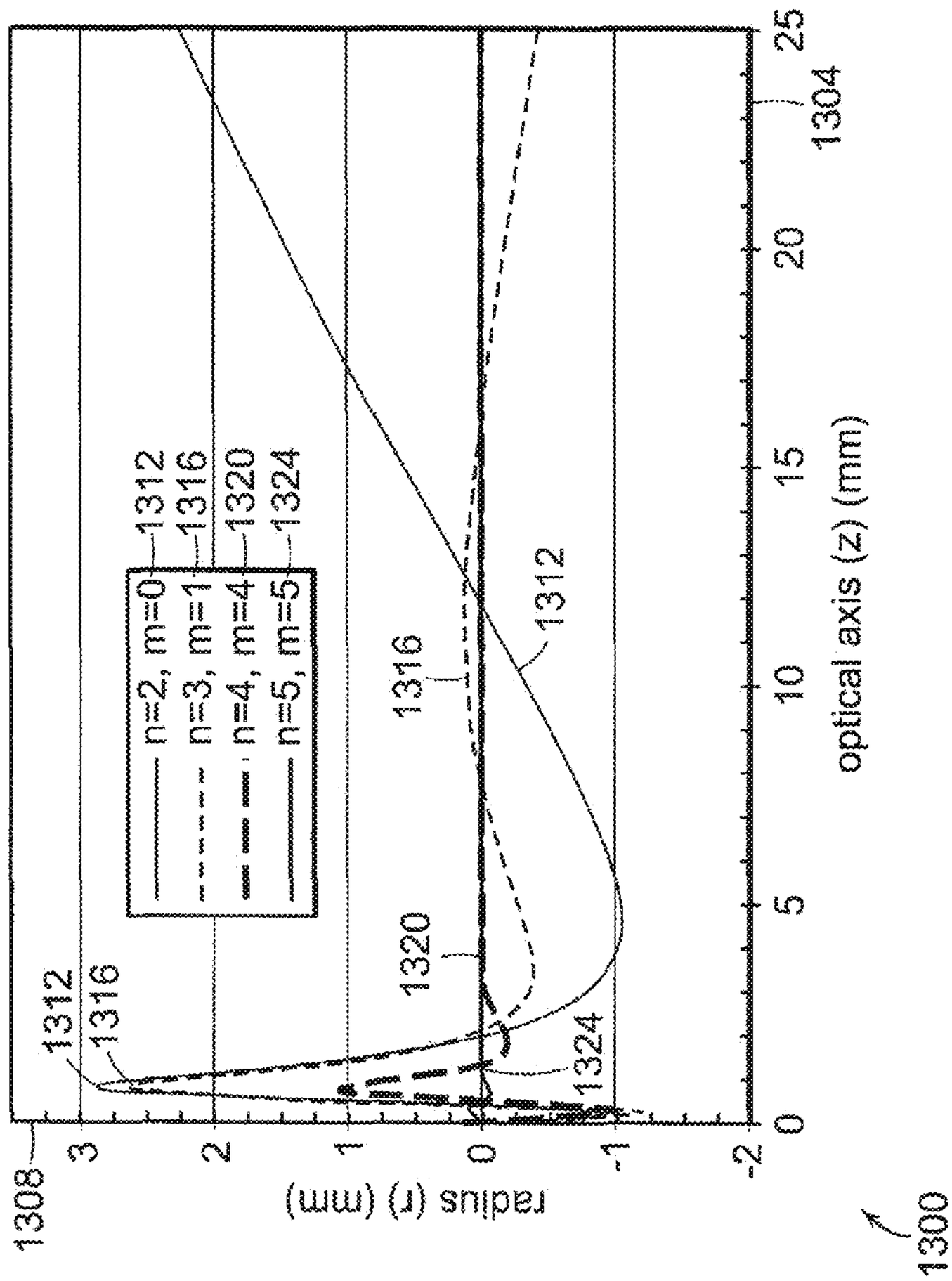
1308
radius (r) (mm)
3
2
1
0
-1
-2
0
5
10
15
20
25
optical axis (z) (mm)
1304
n=2, m=0
n=3, m=1
n=4, m=4
n=5, m=5
1312
1316
1320
1324
1300

FIG. 13

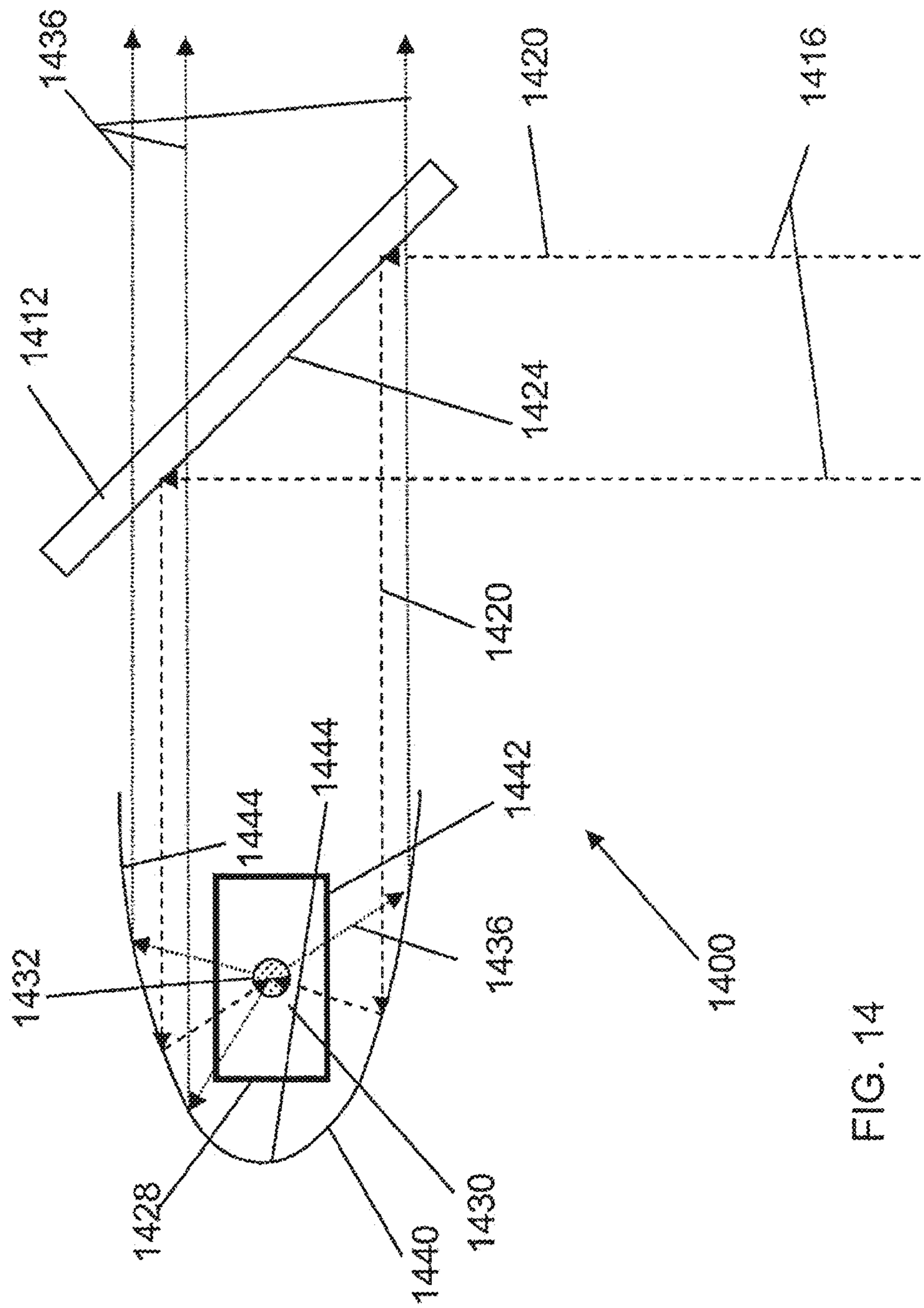
1436
1420
1416
1412
1424
1420
1444
1444
1442
1432
1436
1400
1428
1430
1440

FIG. 14

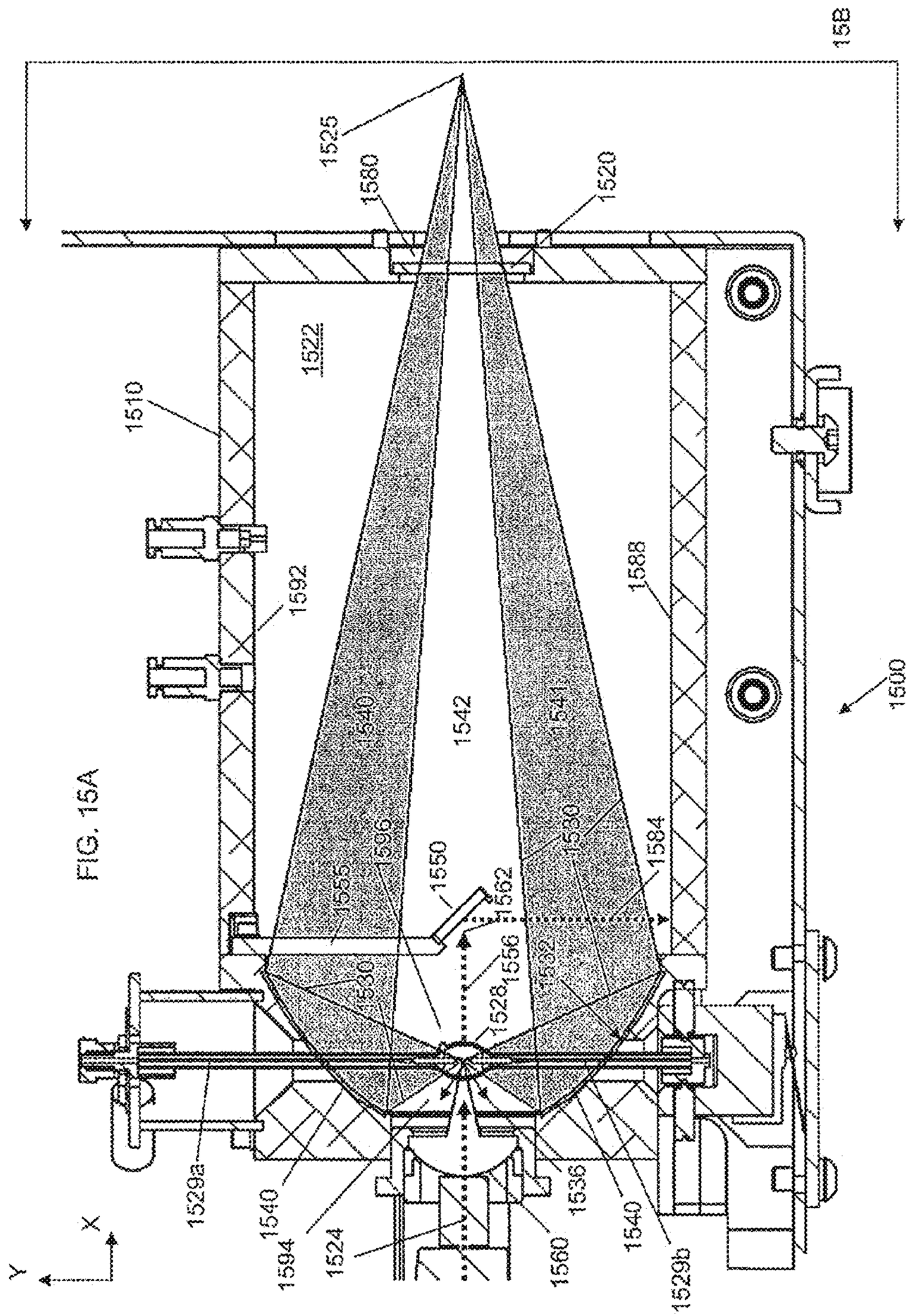
15B
1525
1580
1520
1522
1510
1592
1588
1600
1542
1540
1541
1530
1584
1550
1562
1555
1596
1556
1532
1528
1529a
1540
1594
1524
1560
1536
1540
1529b
X
Y

FIG. 15A

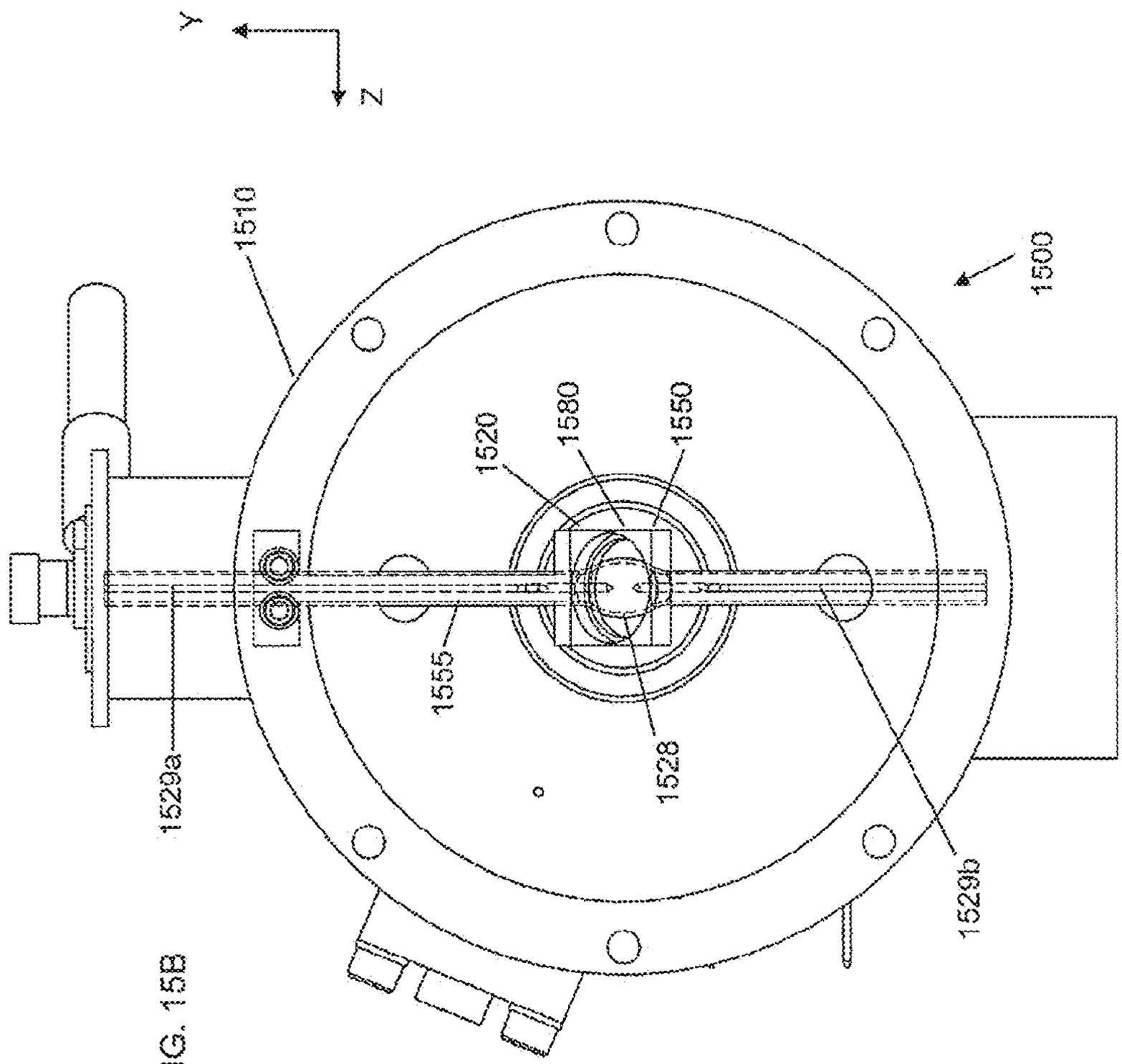

FIG. 15B

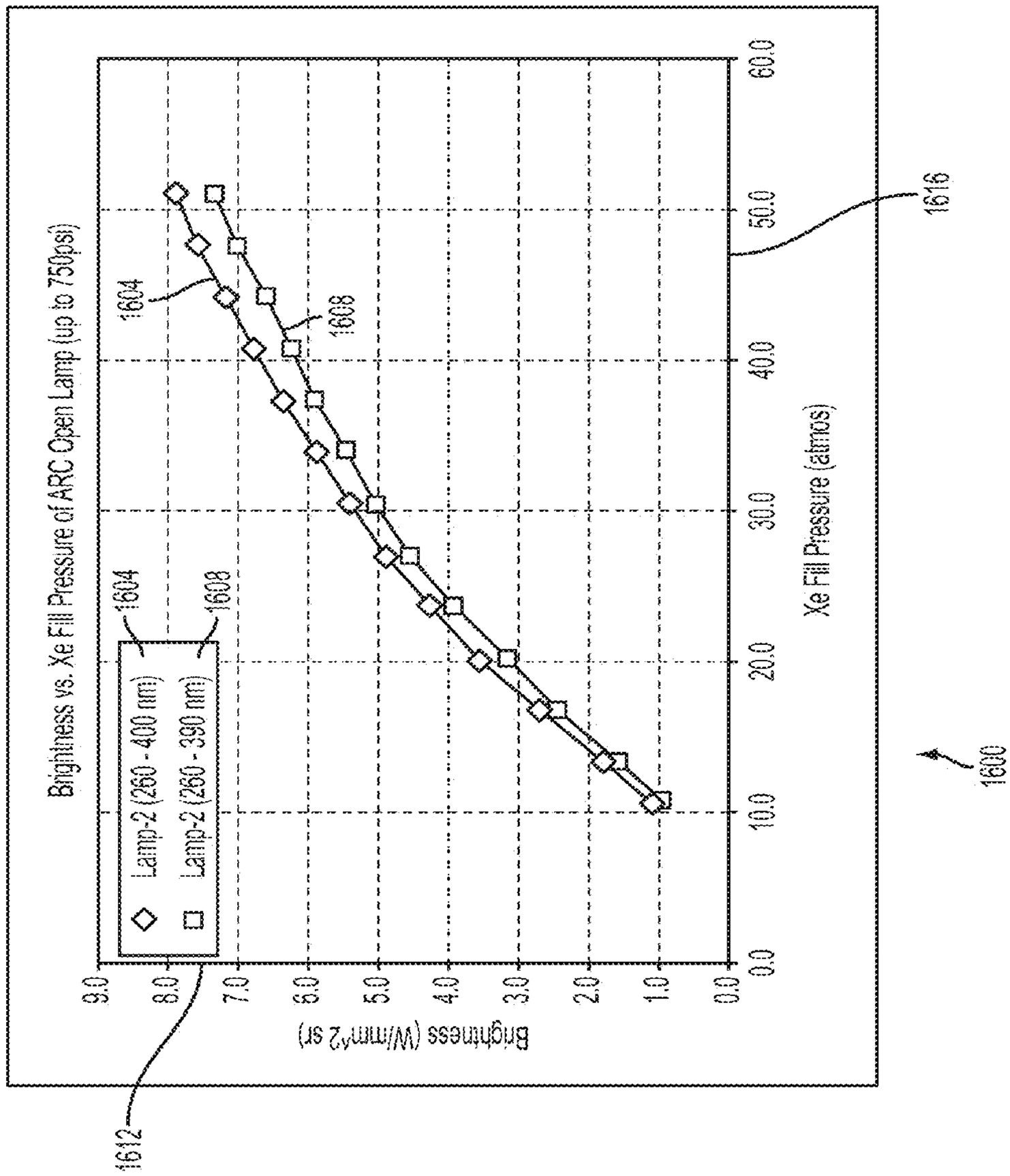
Brightness vs. Xe Fill Pressure of ARC Open Lamp (up to 750psi)
Lamp-2 (260 - 400 nm)
Lamp-2 (260 - 390 nm)
1604
1608
1604
1608
1612
1616
1600
Brightness (W/mm^2 sr)
9.0
8.0
7.0
6.0
5.0
4.0
3.0
2.0
1.0
0.0
0.0
10.0
20.0
30.0
40.0
50.0
60.0
Xe Fill Pressure (atmos)

FIG. 16

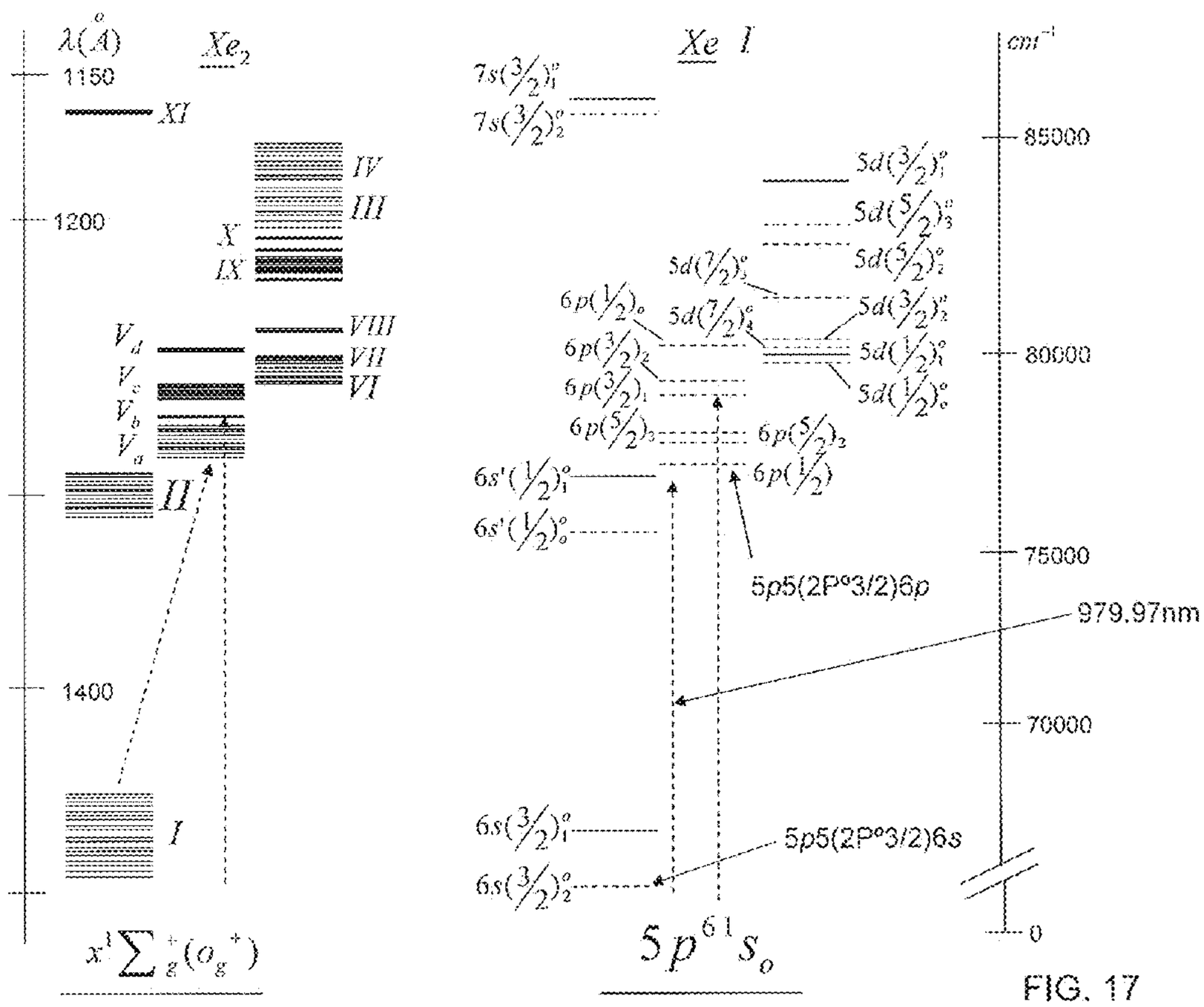
λ(A)
Xe2
1150
XI
1200
IV
III
X
IX
VIII
VII
VI
Vd
Vc
Vb
Va
II
1400
I
Xe I
cm-1
85000
80000
75000
70000
0
5p5(2P°3/2)6p
979.97nm
5p5(2P°3/2)6s
5p61s0

FIG. 17

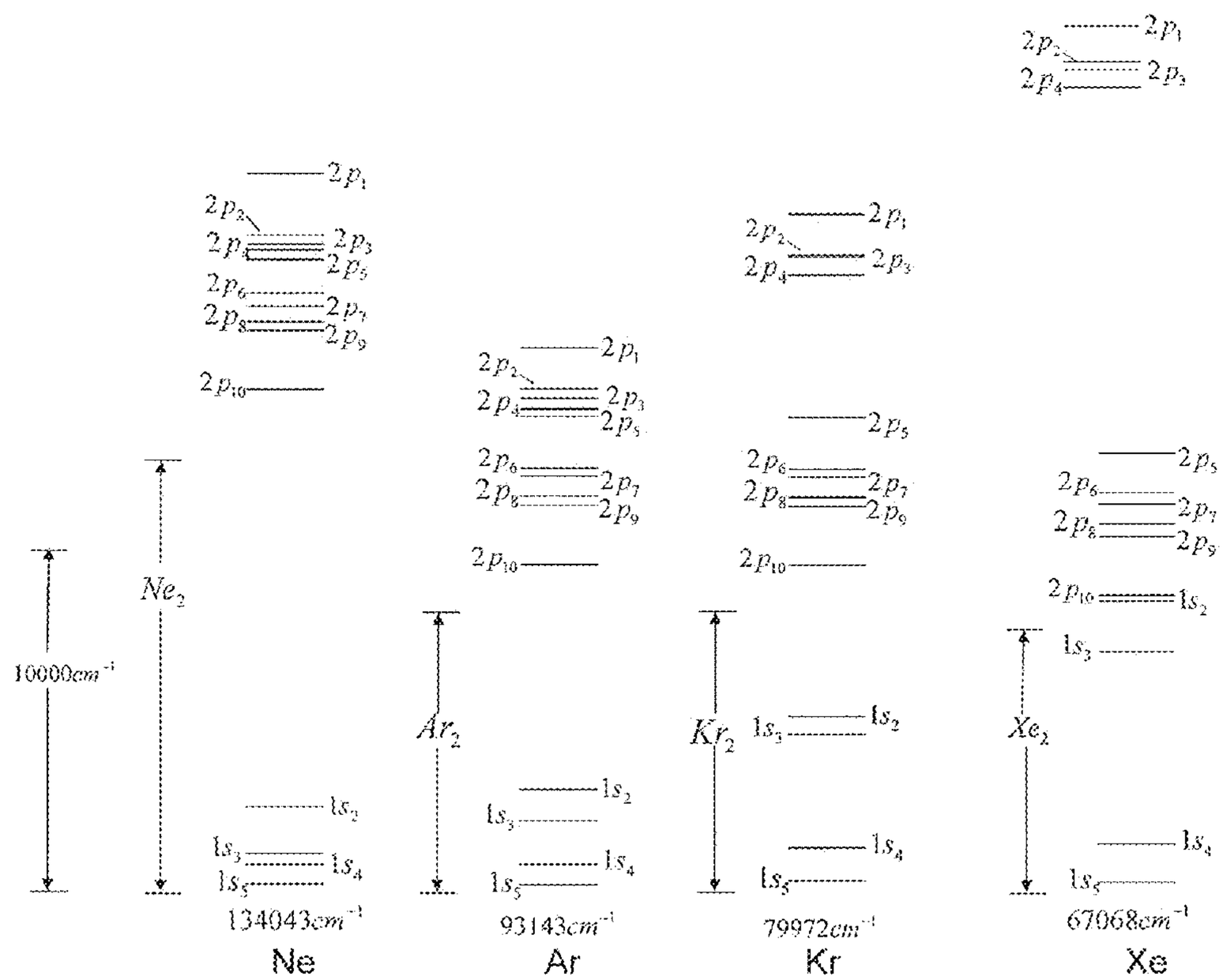
$2p_1$
$2p_2$
$2p_3$
$2p_4$
$2p_5$
$2p_6$
$2p_7$
$2p_8$
$2p_9$
$2p_{10}$
$1s_2$
$1s_3$
$1s_4$
$1s_5$
Ne_2
Ar_2
Kr_2
Xe_2
$10000cm^{-1}$
$134043cm^{-1}$
$93143cm^{-1}$
$79972cm^{-1}$
$67068cm^{-1}$
Ne
Ar
Kr
Xe

FIG. 18

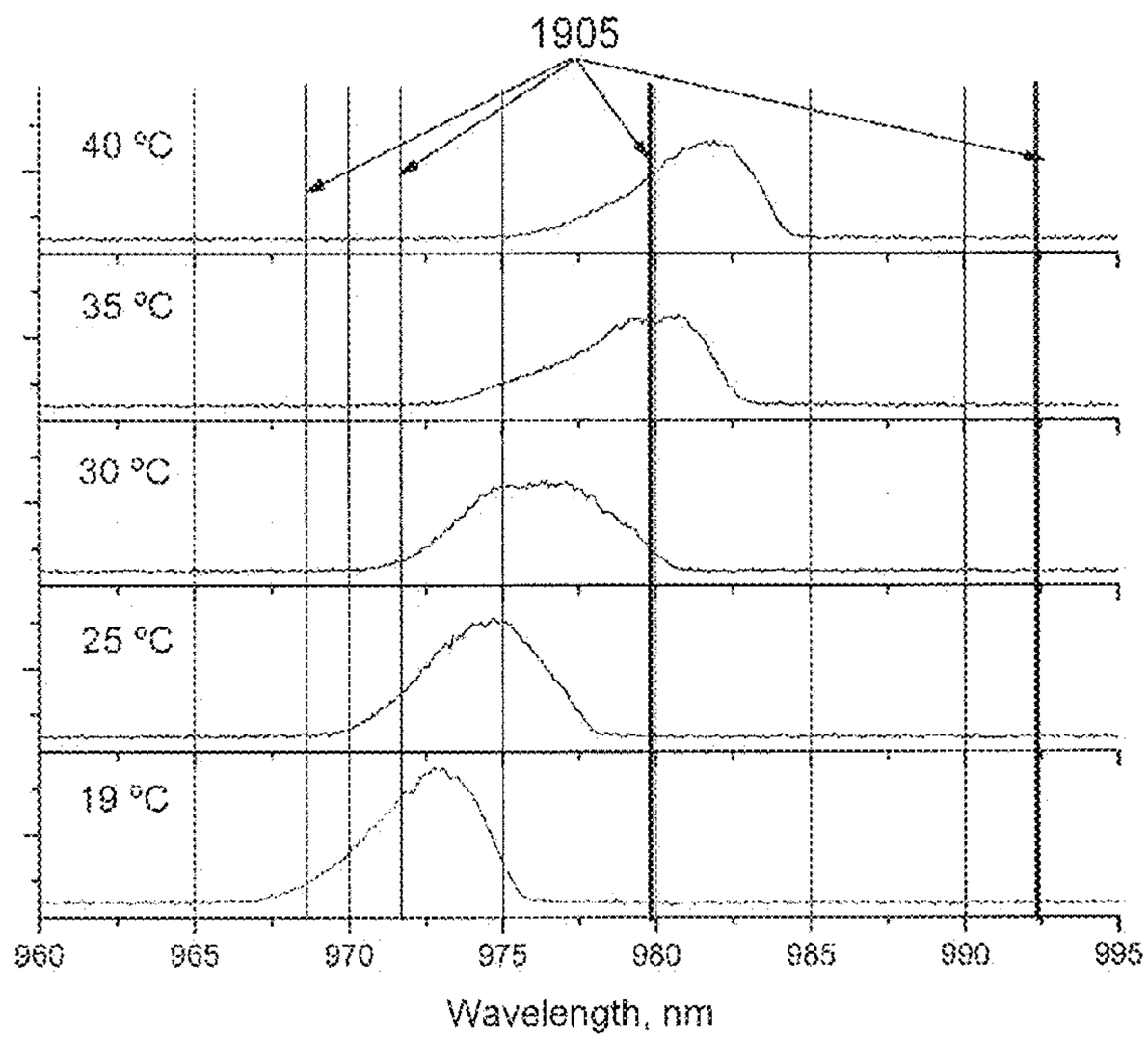
1905
40 °C
35 °C
30 °C
25 °C
19 °C
960
965
970
975
980
985
990
995
Wavelength, nm

FIG. 19

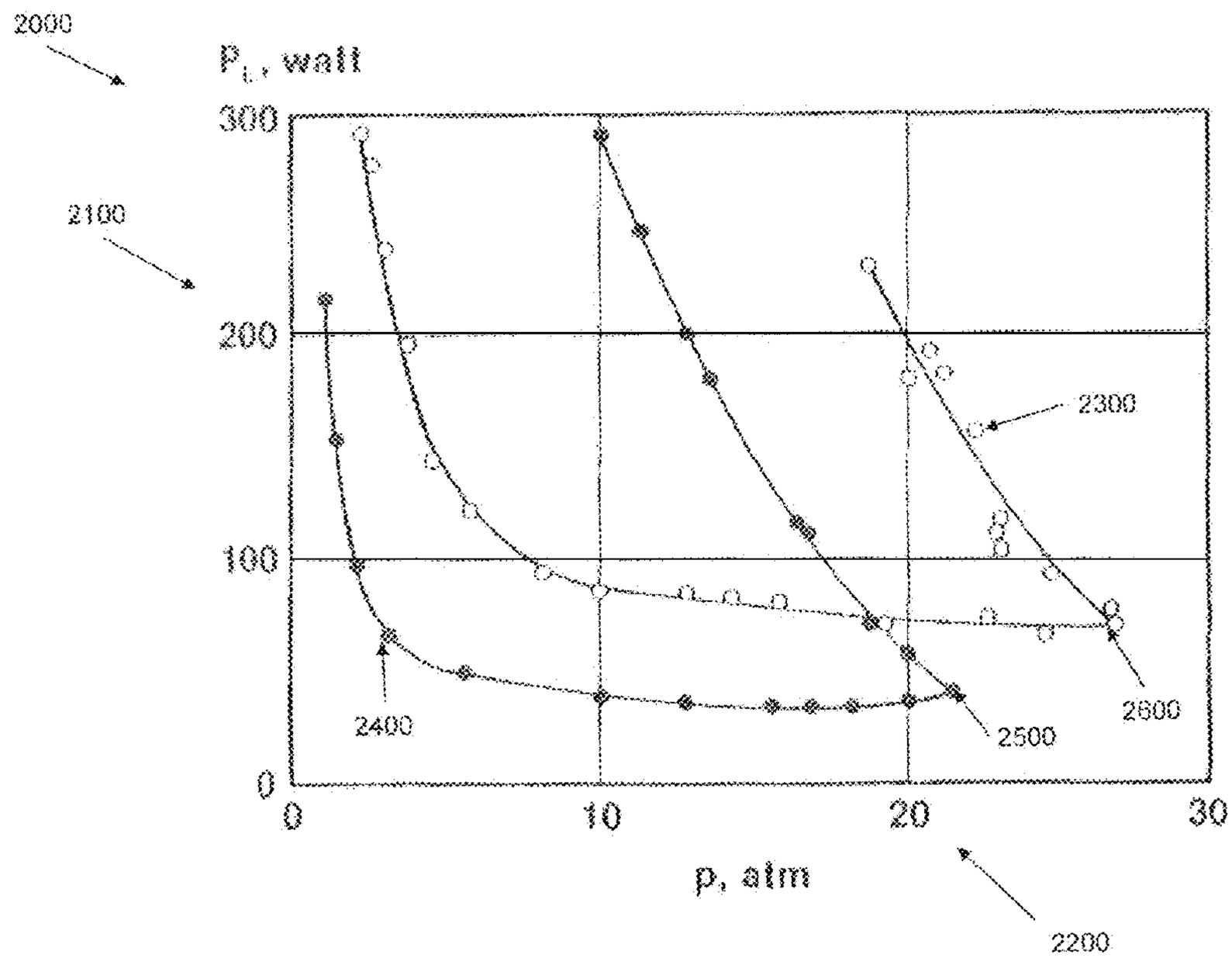
2000
P_L, watt
300
200
100
0
2100
2300
2400
2500
2600
0
10
20
30
p, atm
2200

FIG. 20

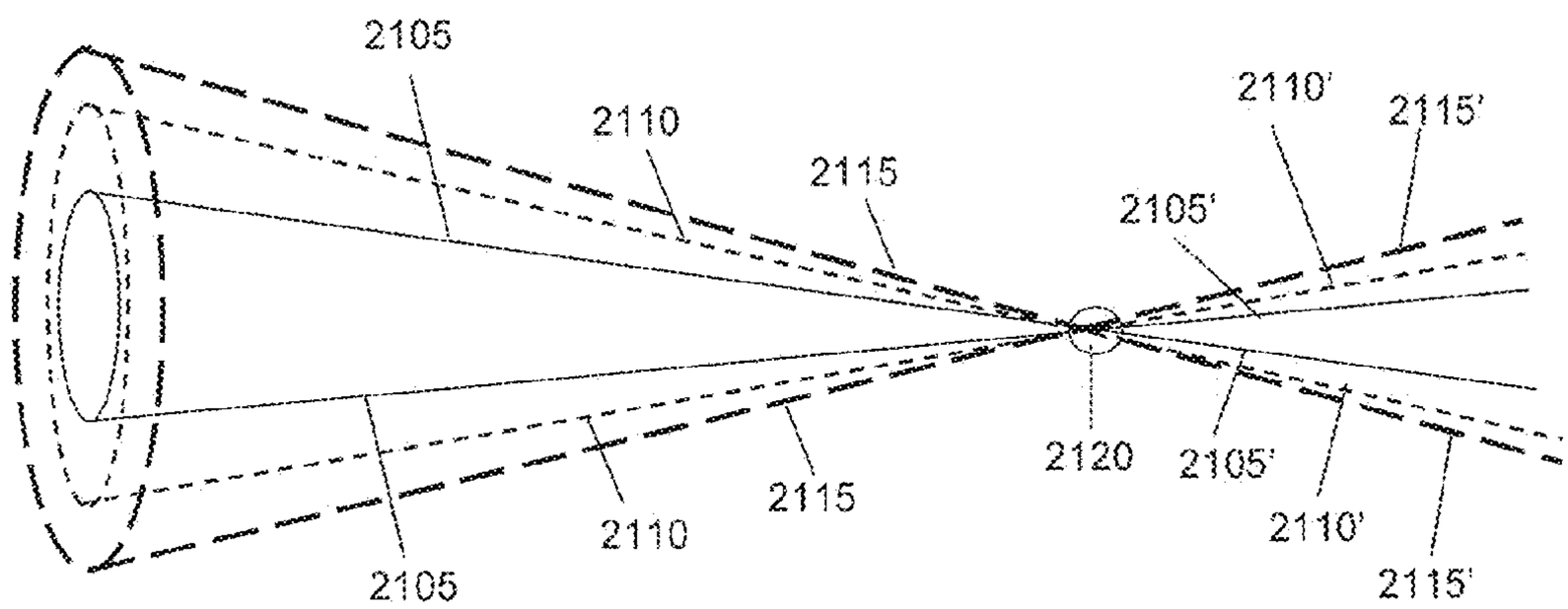
2105
2110
2115
2110'
2115'
2105'
2120
2105'
2110'
2115'
2115
2110
2105

FIG. 21

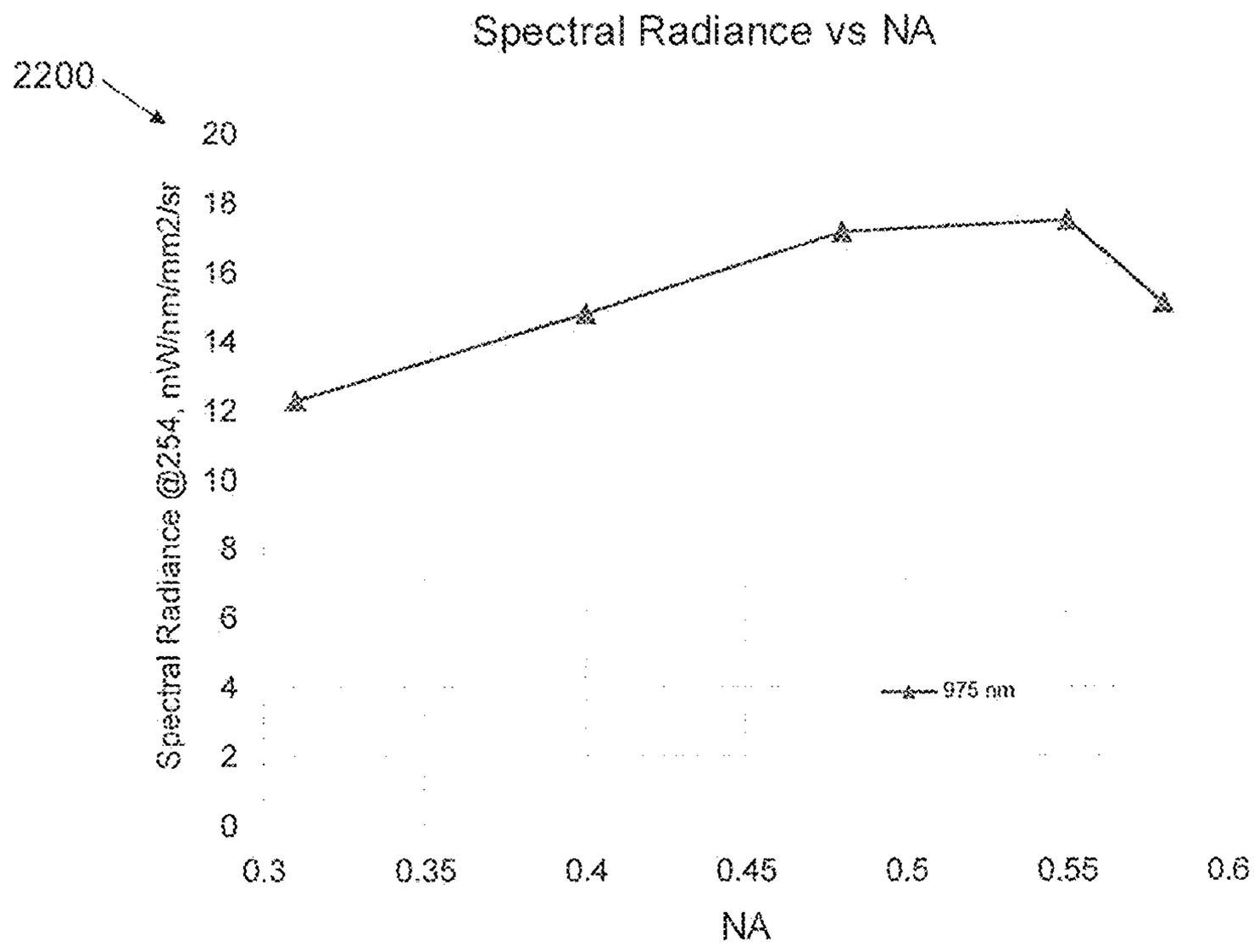
Spectral Radiance vs NA
2200
Spectral Radiance @254, mW/nm/mm2/sr
20
18
16
14
12
10
8
6
4
2
0
975 nm
0.3
0.35
0.4
0.45
0.5
0.55
0.6
NA

FIG. 22

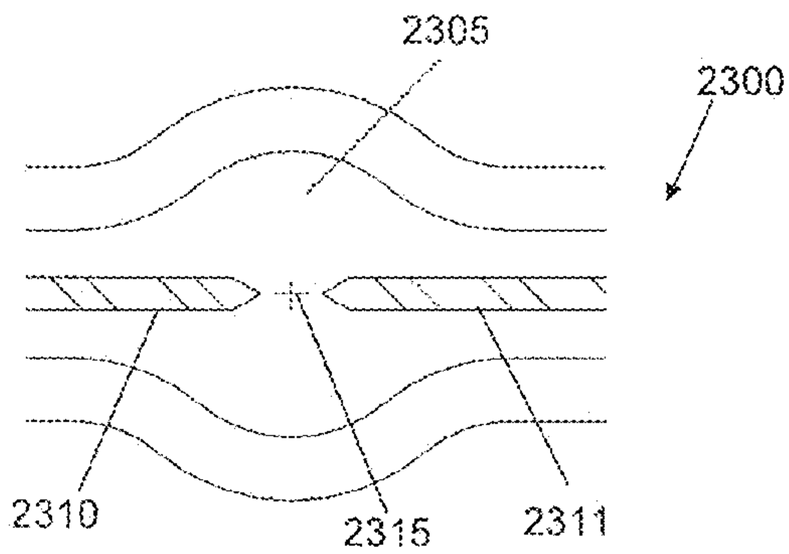

FIG. 23A

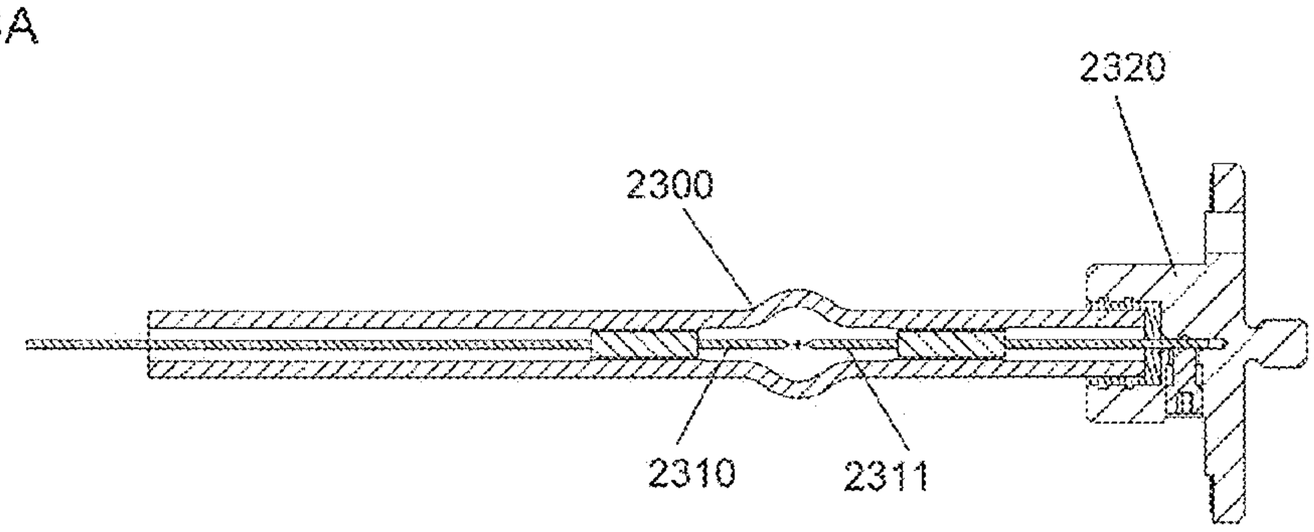

FIG. 23B

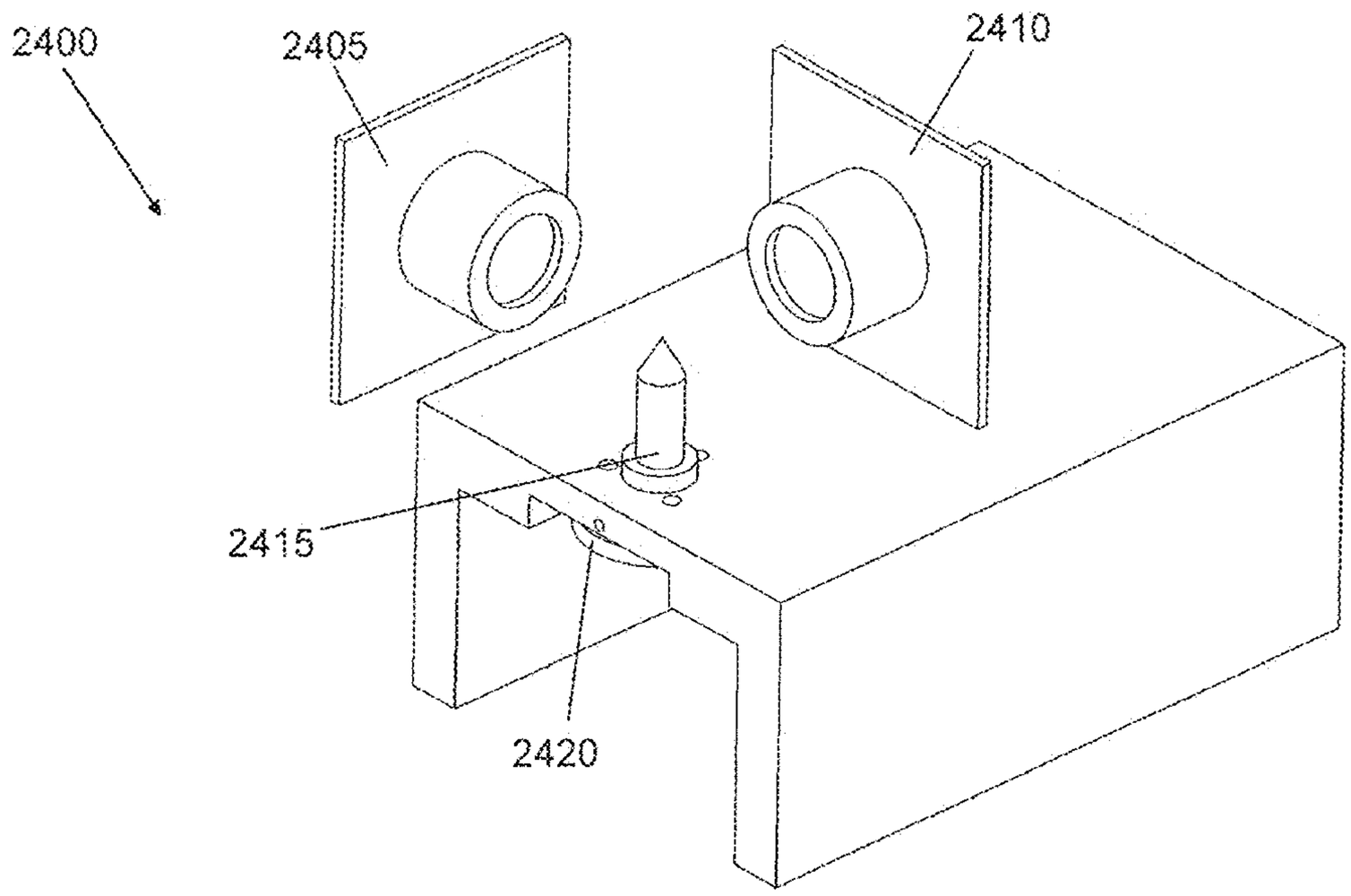

FIG. 24

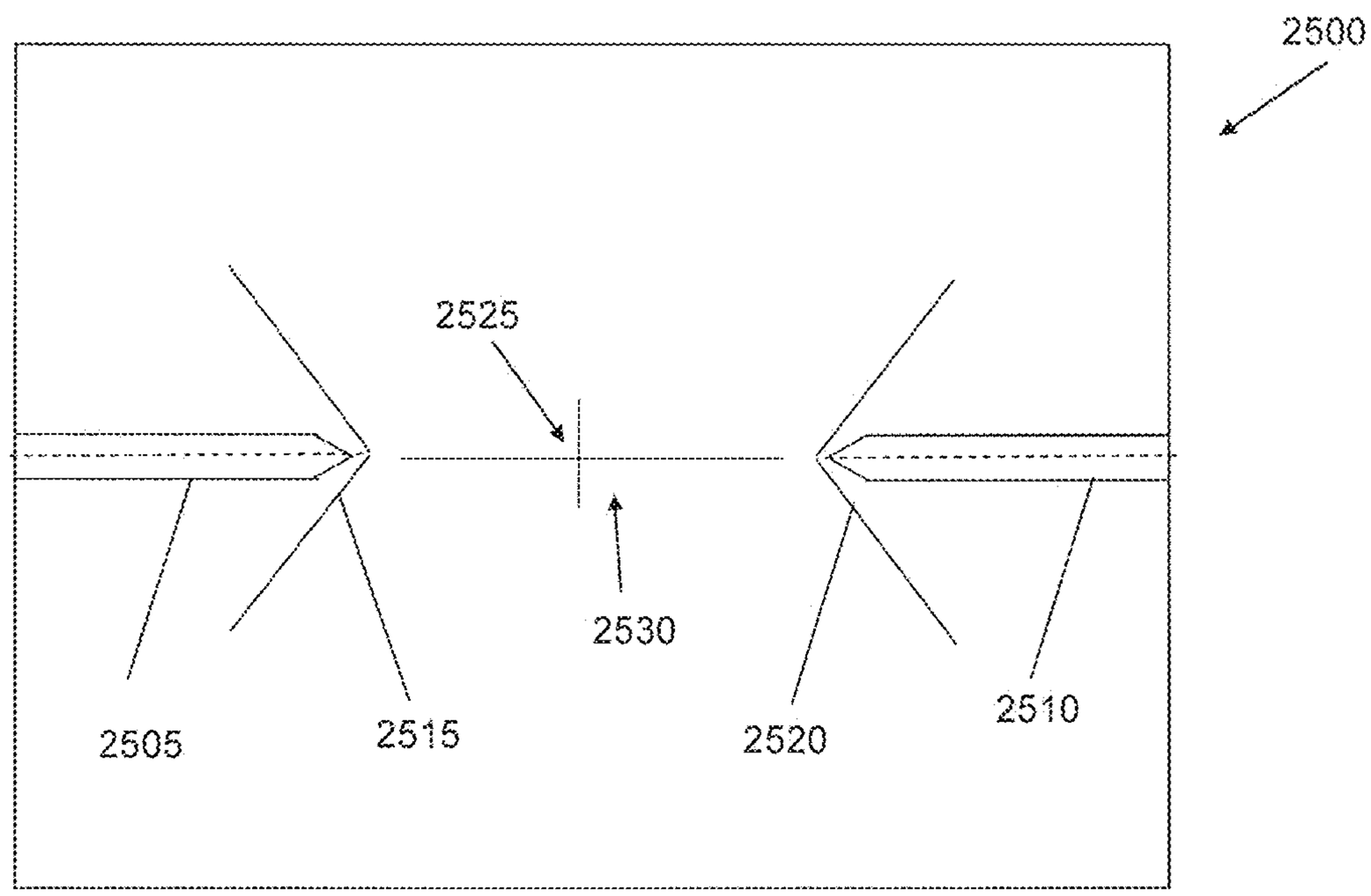

FIG. 25

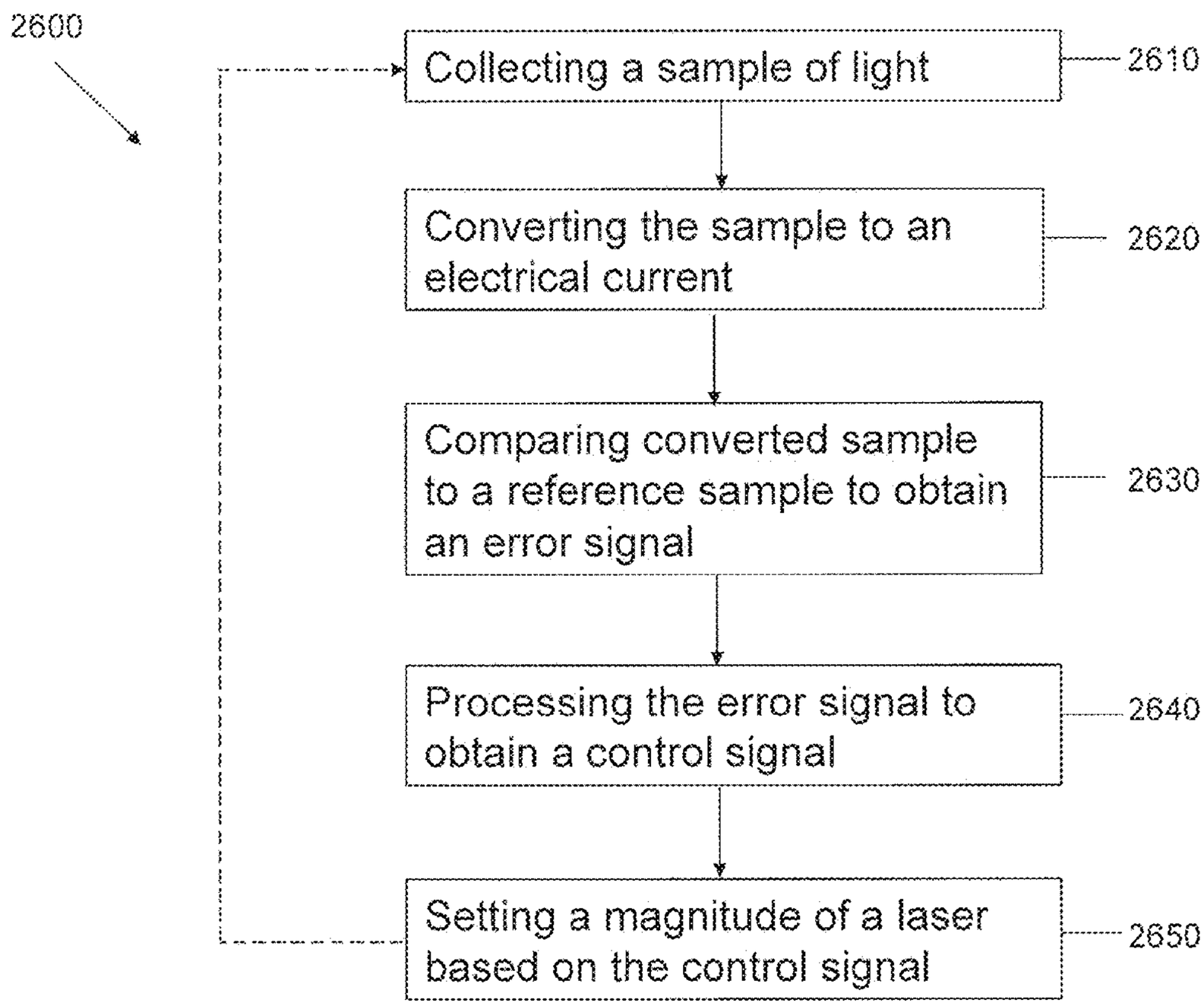
2600
Collecting a sample of light
2610
Converting the sample to an electrical current
2620
Comparing converted sample to a reference sample to obtain an error signal
2630
Processing the error signal to obtain a control signal
2640
Setting a magnitude of a laser based on the control signal
2650

FIG. 26

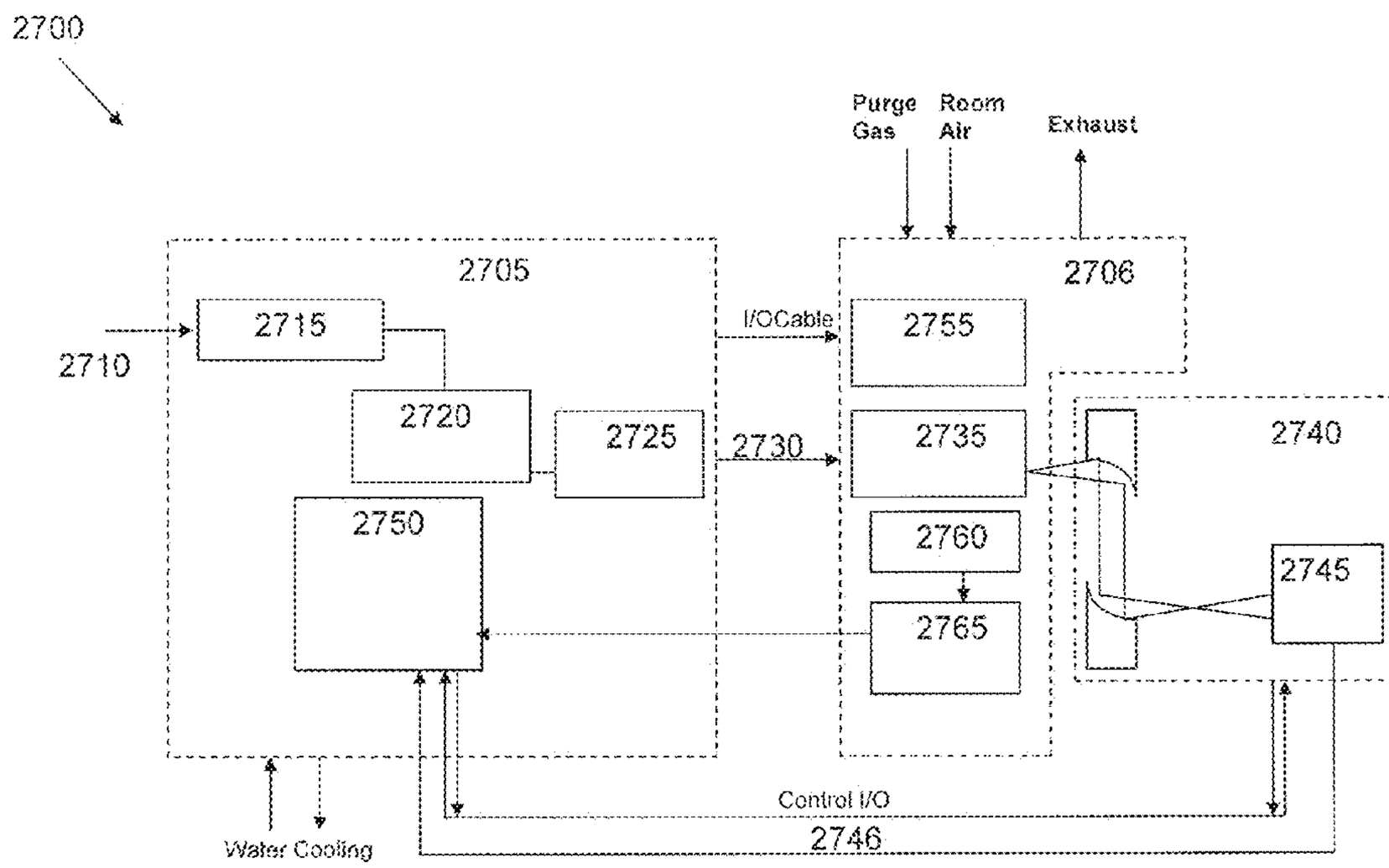
2700
Purge Gas
Room Air
Exhaust
2705
2706
2715
2710
2720
2725
2730
I/OCable
2755
2735
2740
2750
2760
2745
2765
Control I/O
2746
Water Cooling

FIG. 27

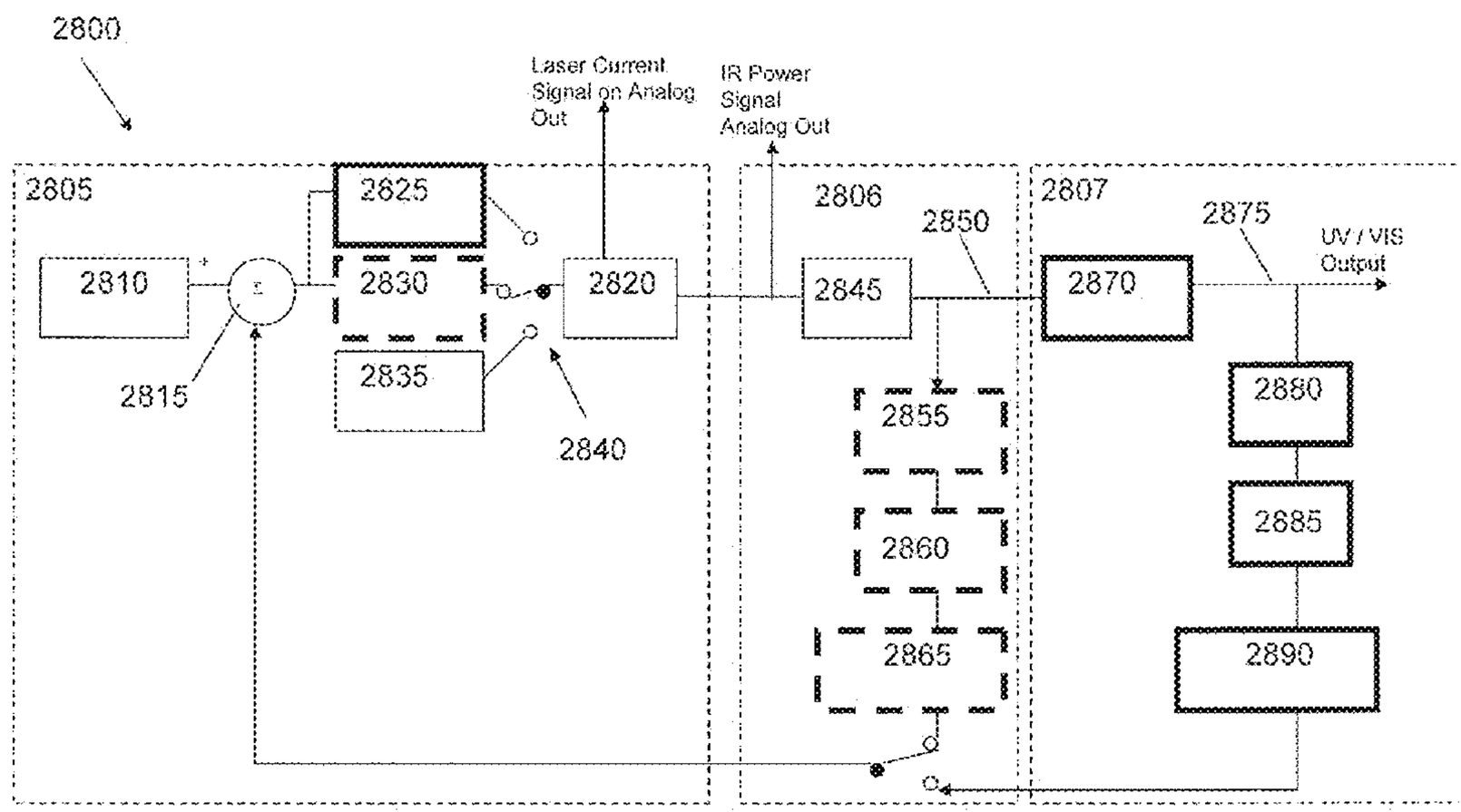
2800
Laser Current Signal on Analog Out
IR Power Signal Analog Out
2805
2625
2810
2830
2820
2815
2835
2840
2806
2850
2845
2855
2860
2865
2807
2875
UV / VIS Output
2870
2880
2885
2890

FIG. 28

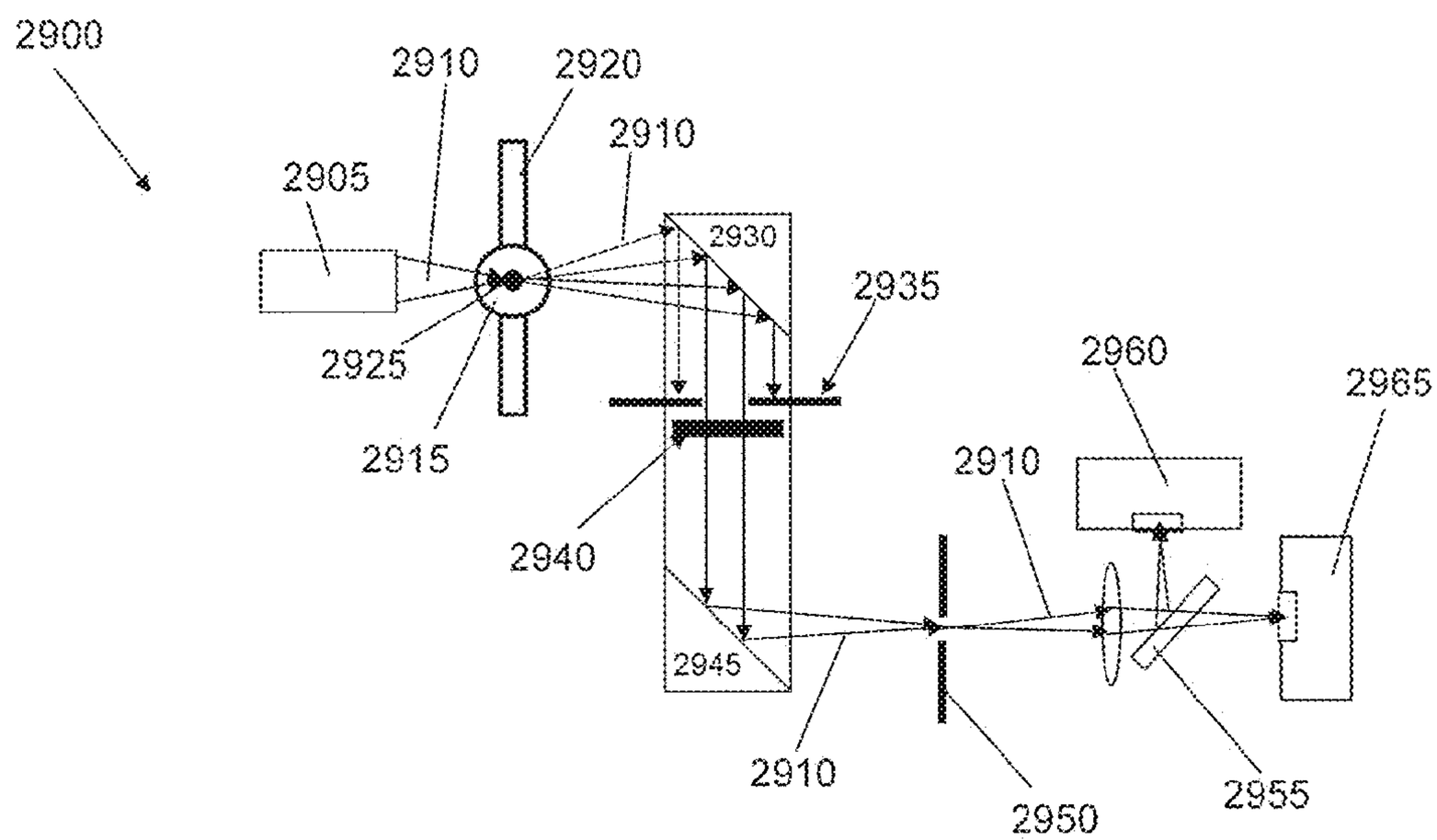
2900
2910
2920
2910
2905
2930
2935
2925
2960
2965
2915
2910
2940
2945
2910
2950
2955

FIG. 29

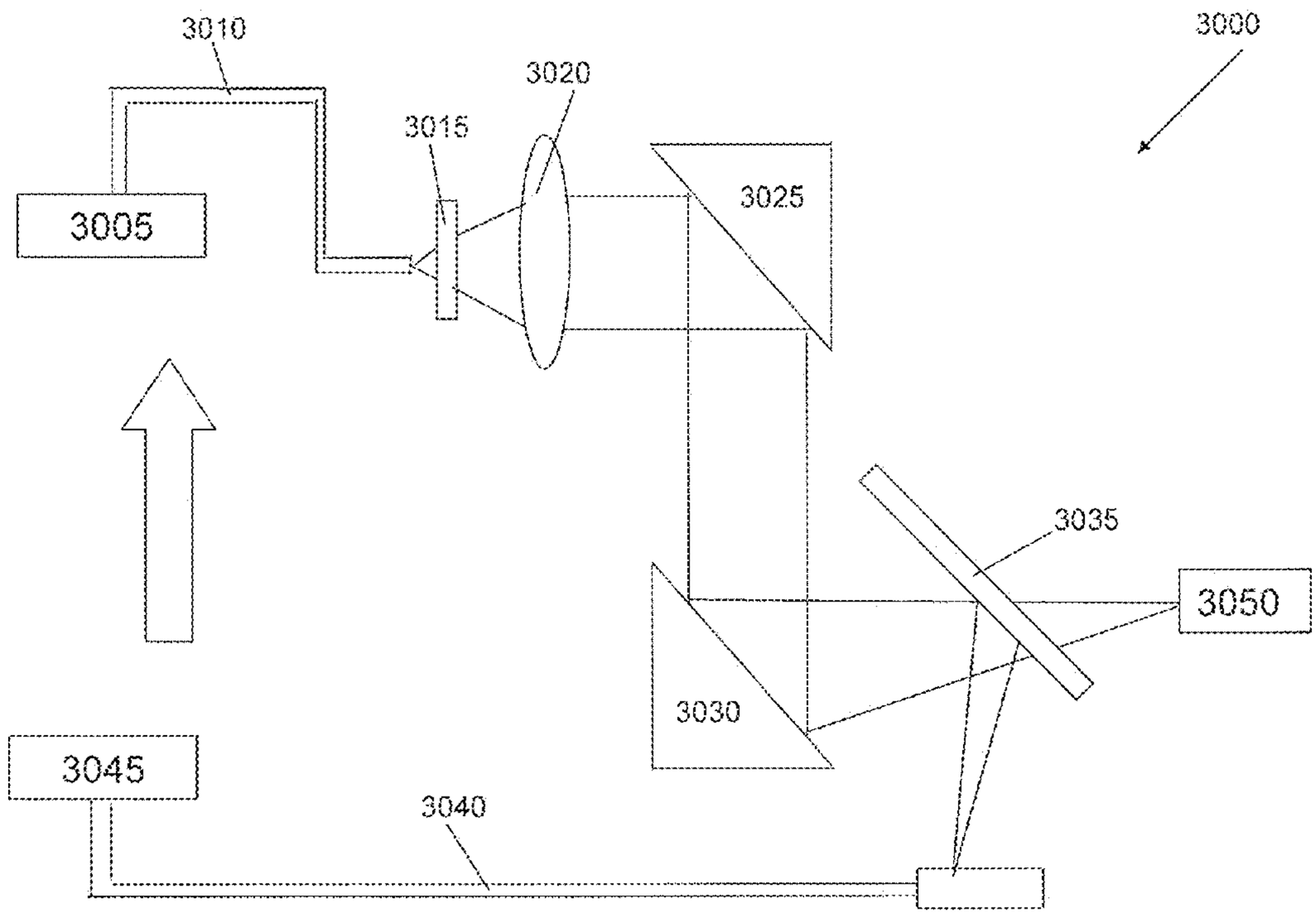

FIG. 30

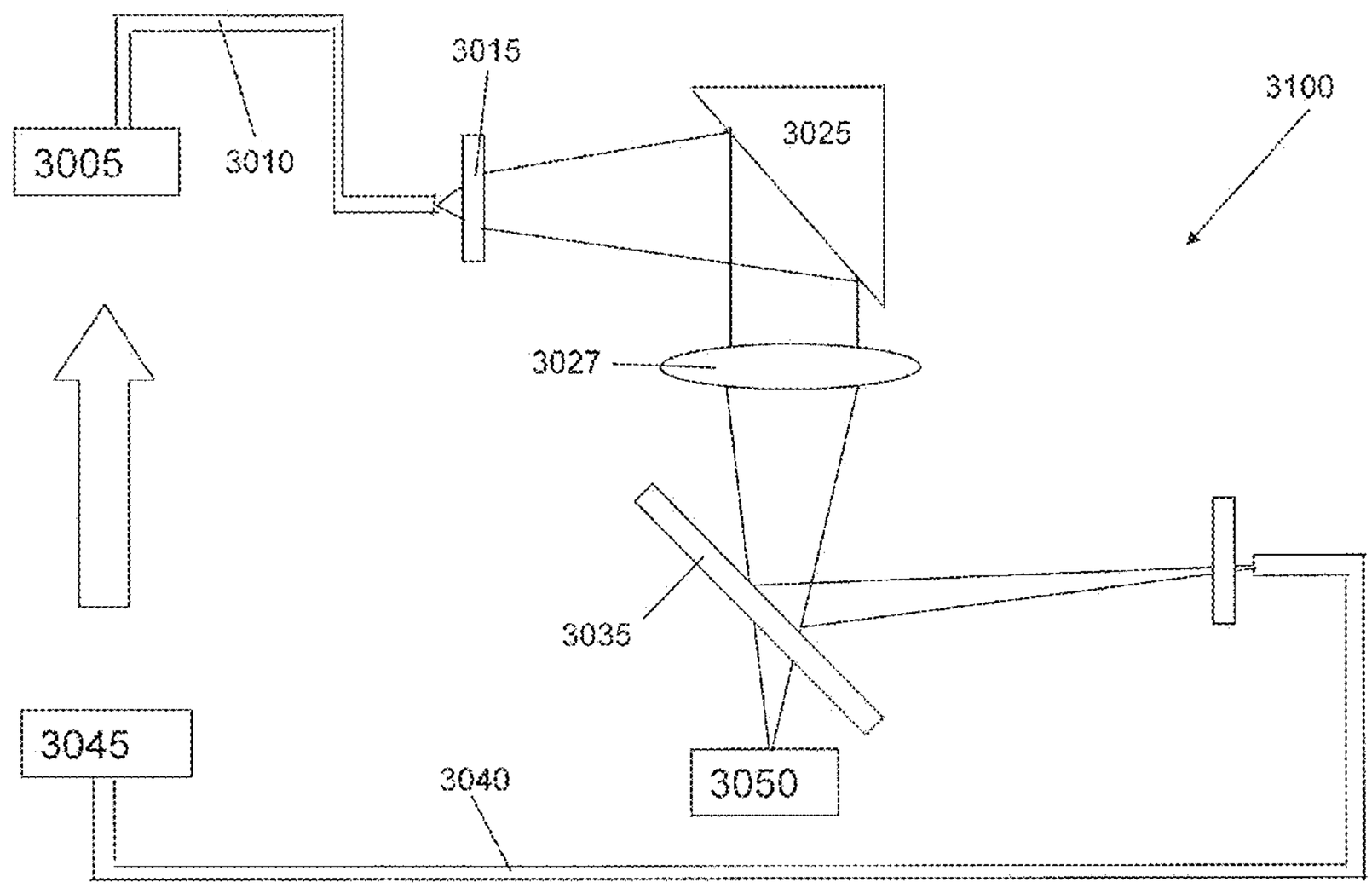

FIG. 31

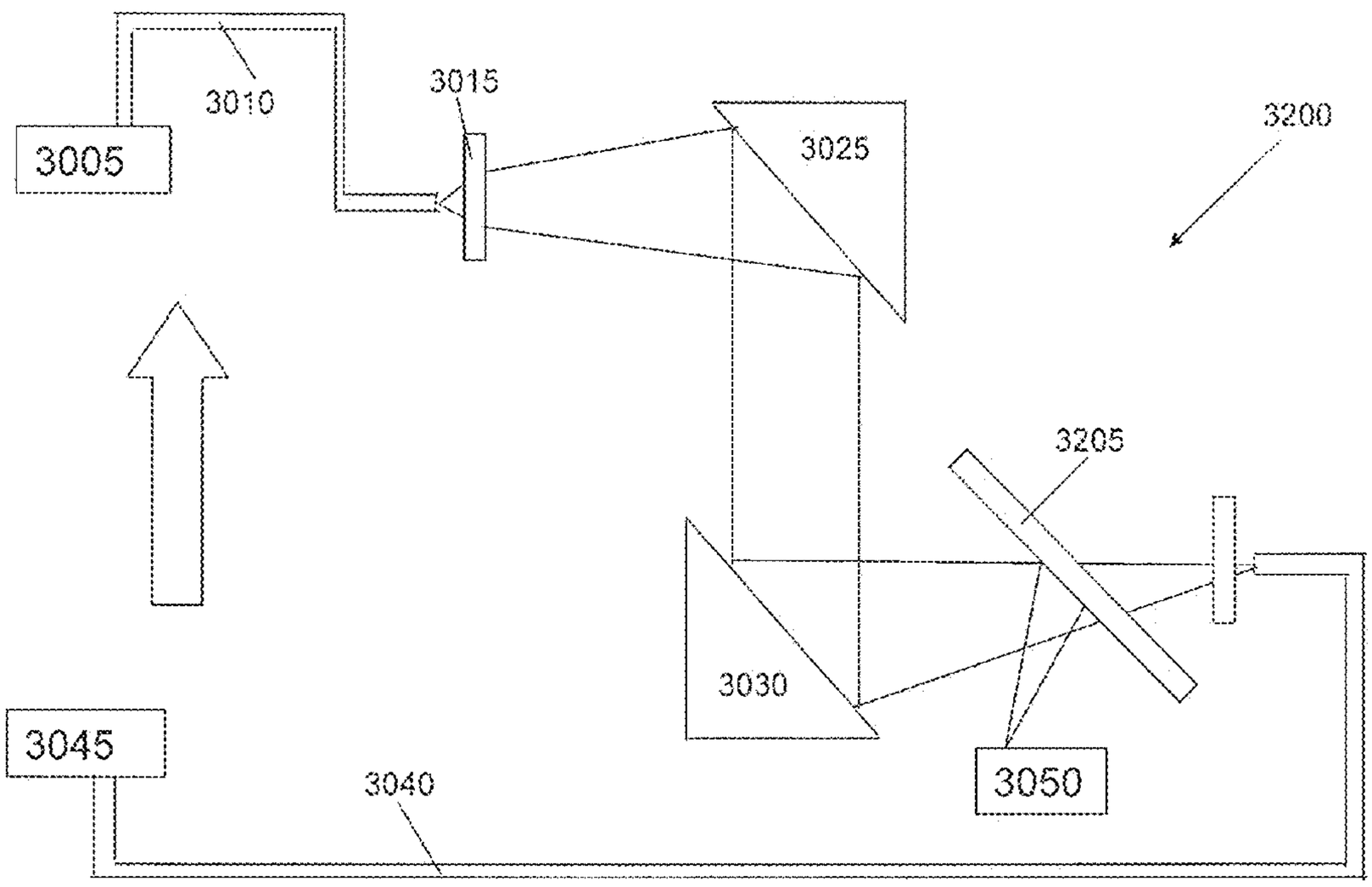

FIG. 32

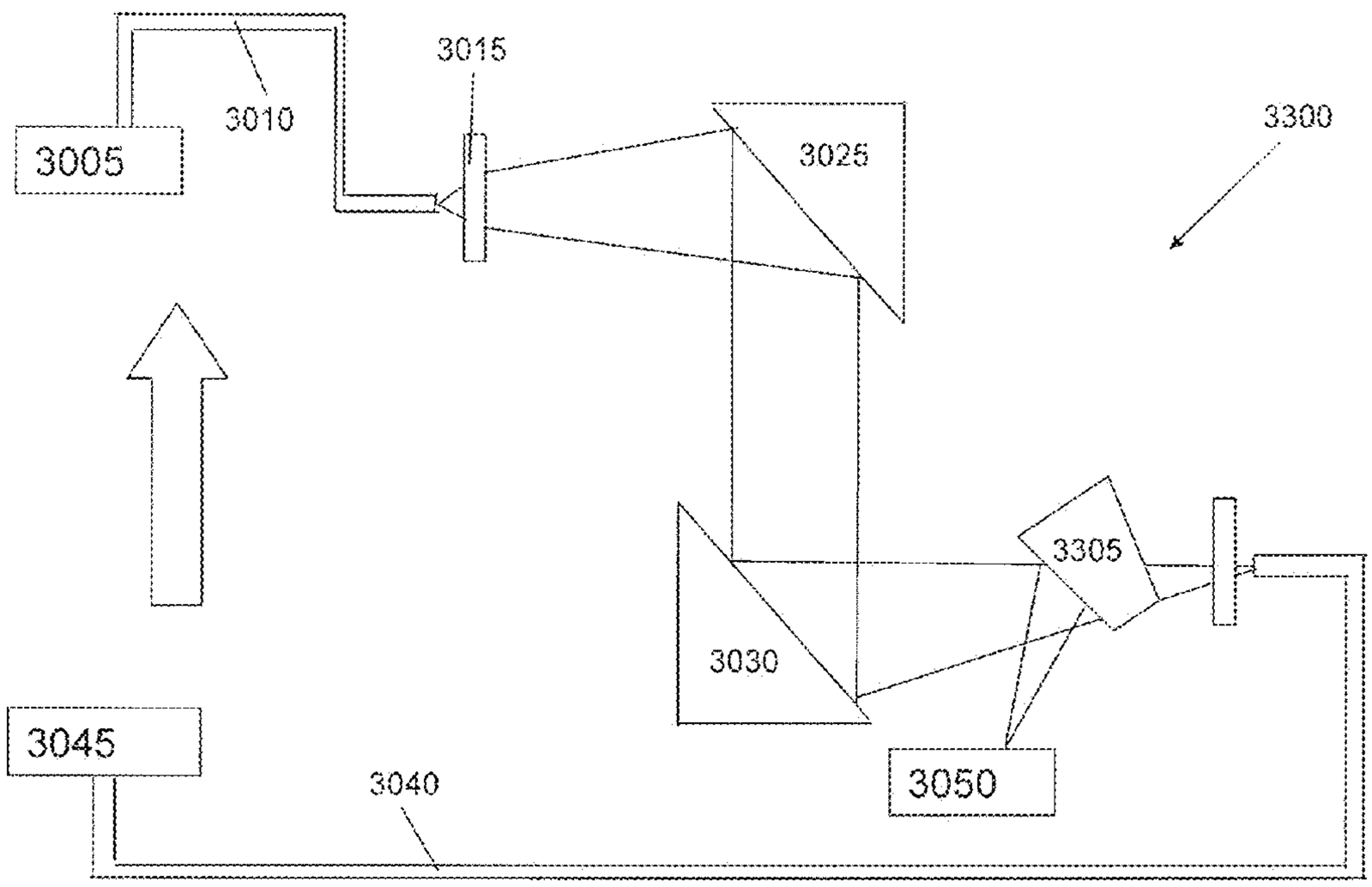

FIG. 33

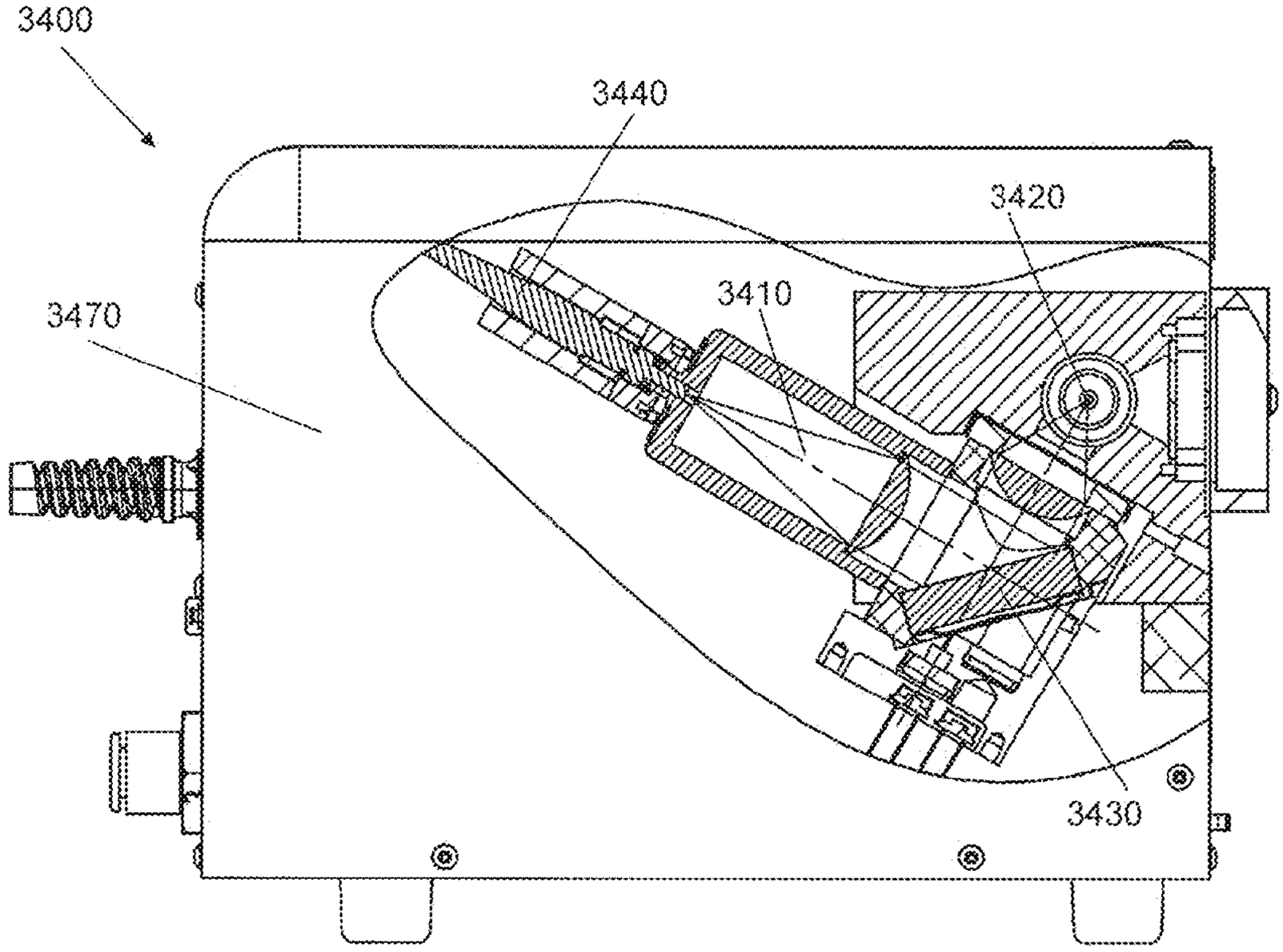

FIG. 34

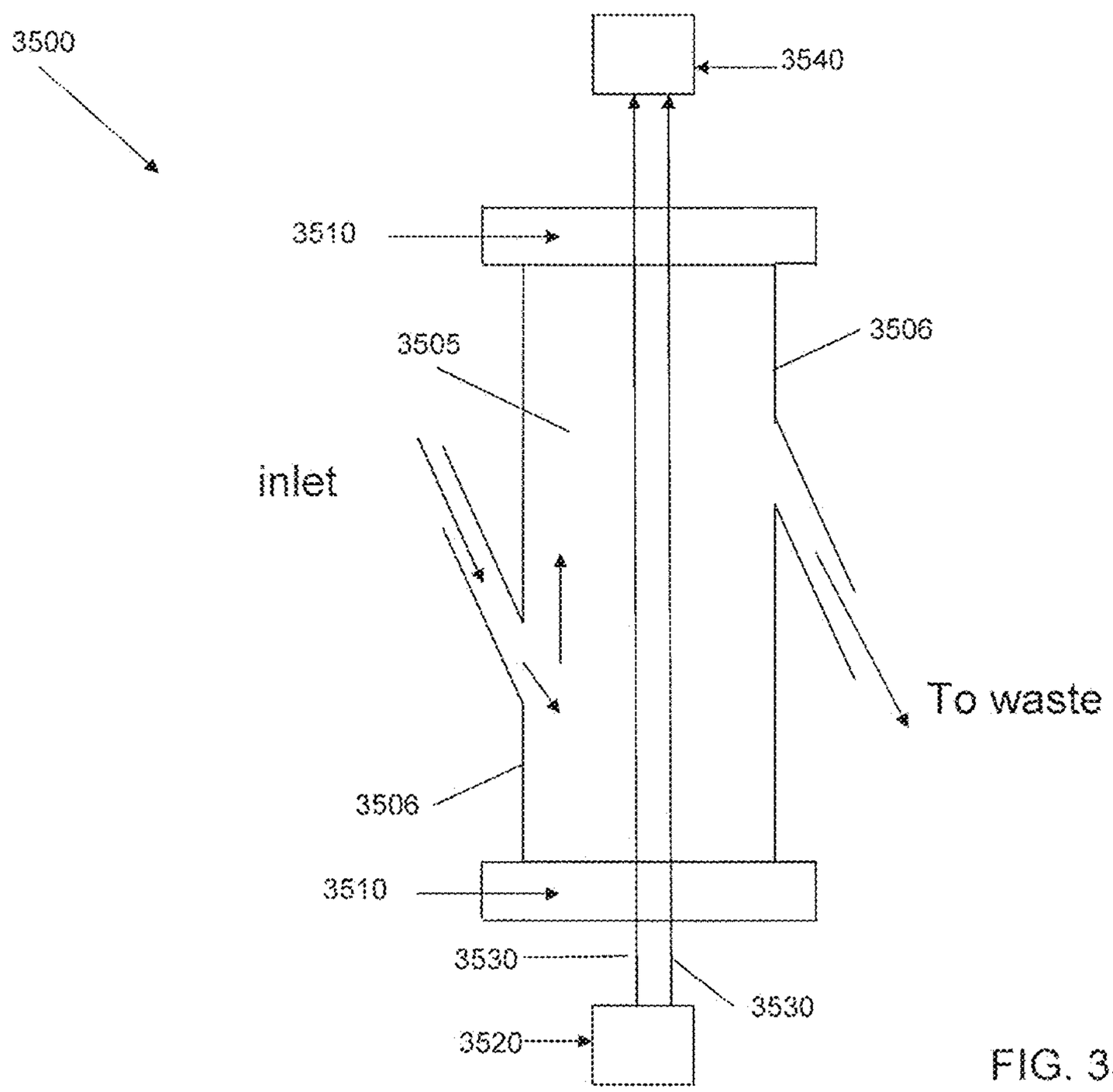
3500
3540
3510
3505
3506
inlet
To waste
3506
3510
3530
3530
3520

FIG. 35

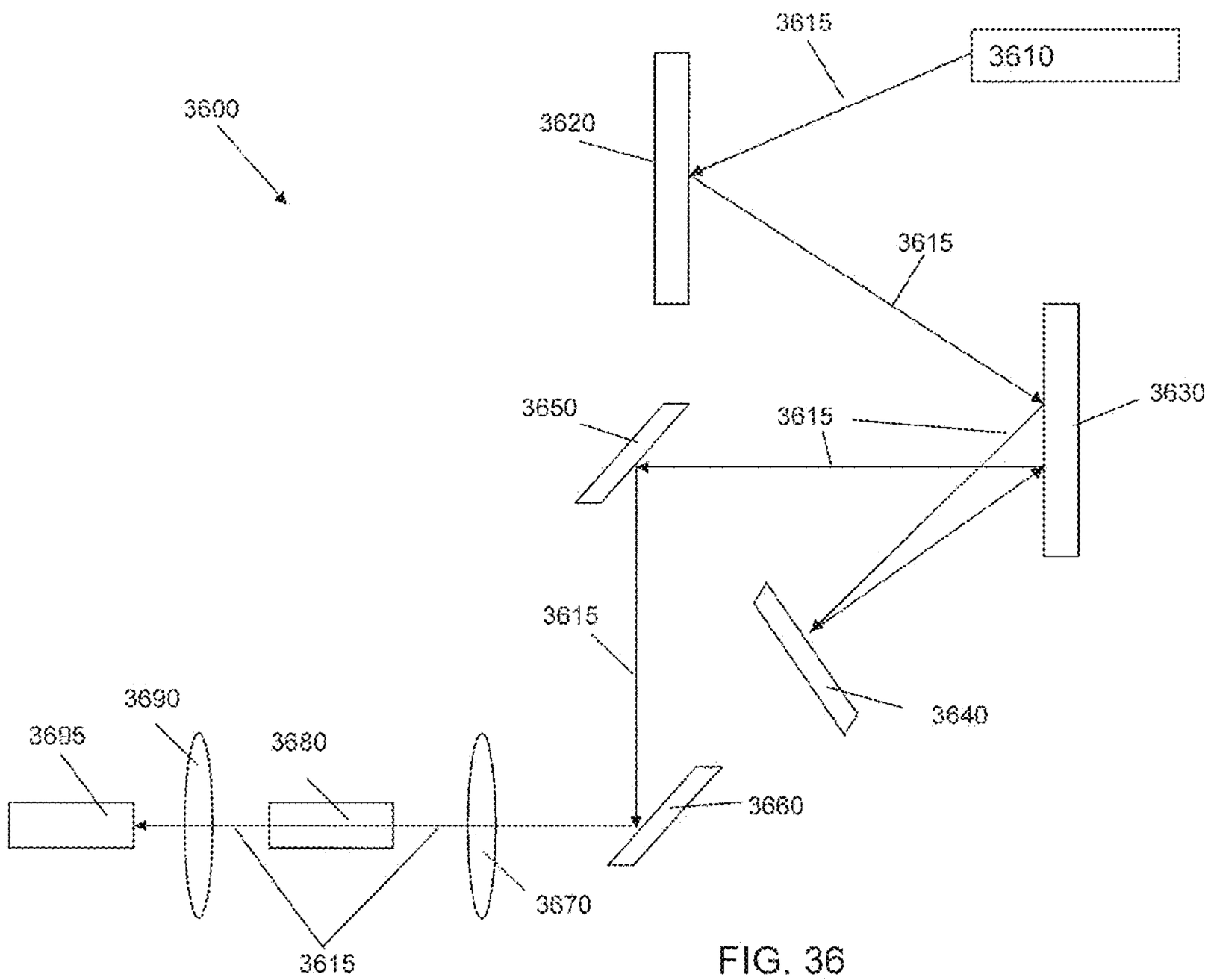
3600
3615
3610
3620
3615
3630
3650
3615
3615
3640
3690
3695
3680
3660
3670
3615

FIG. 36

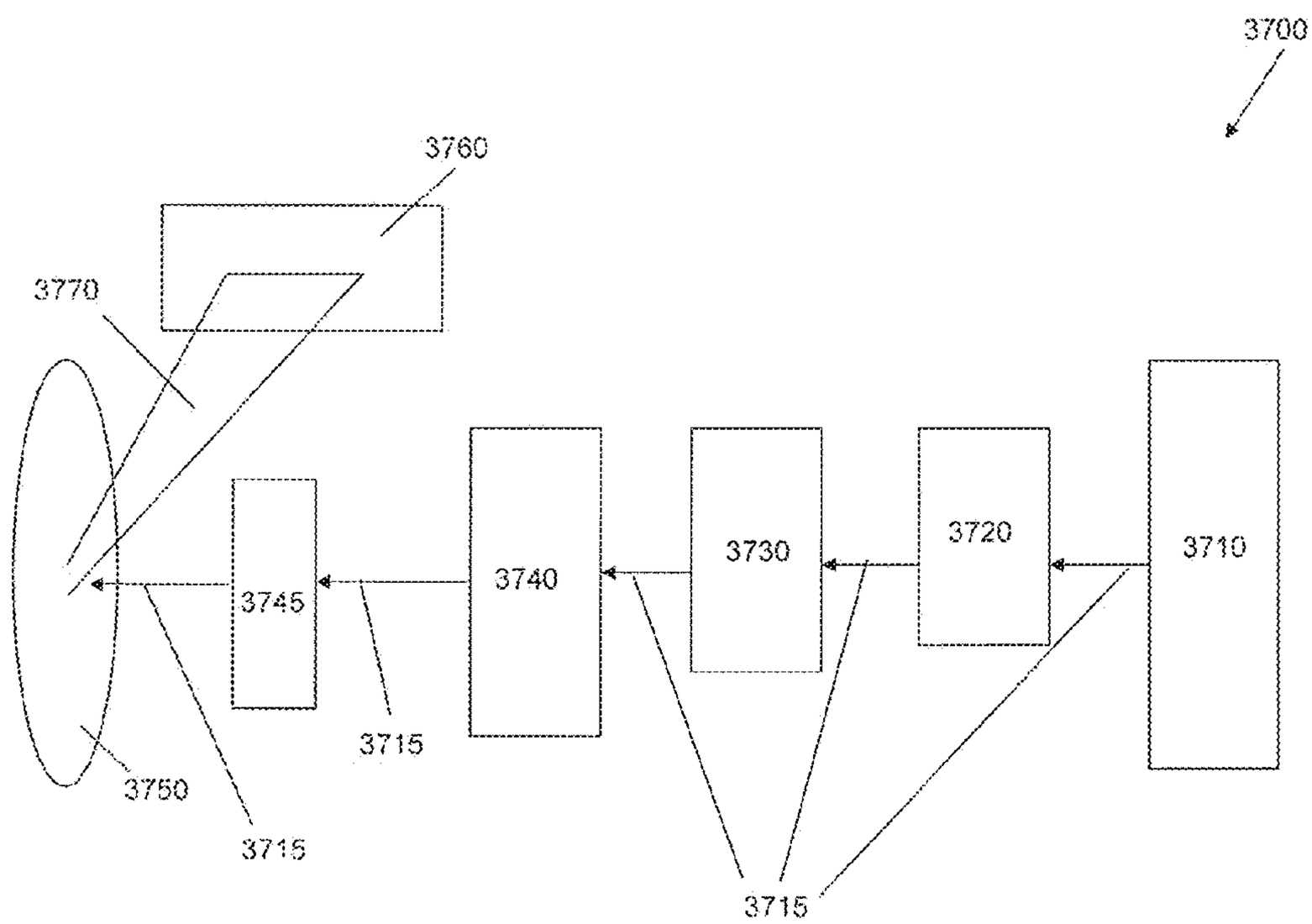

FIG. 37

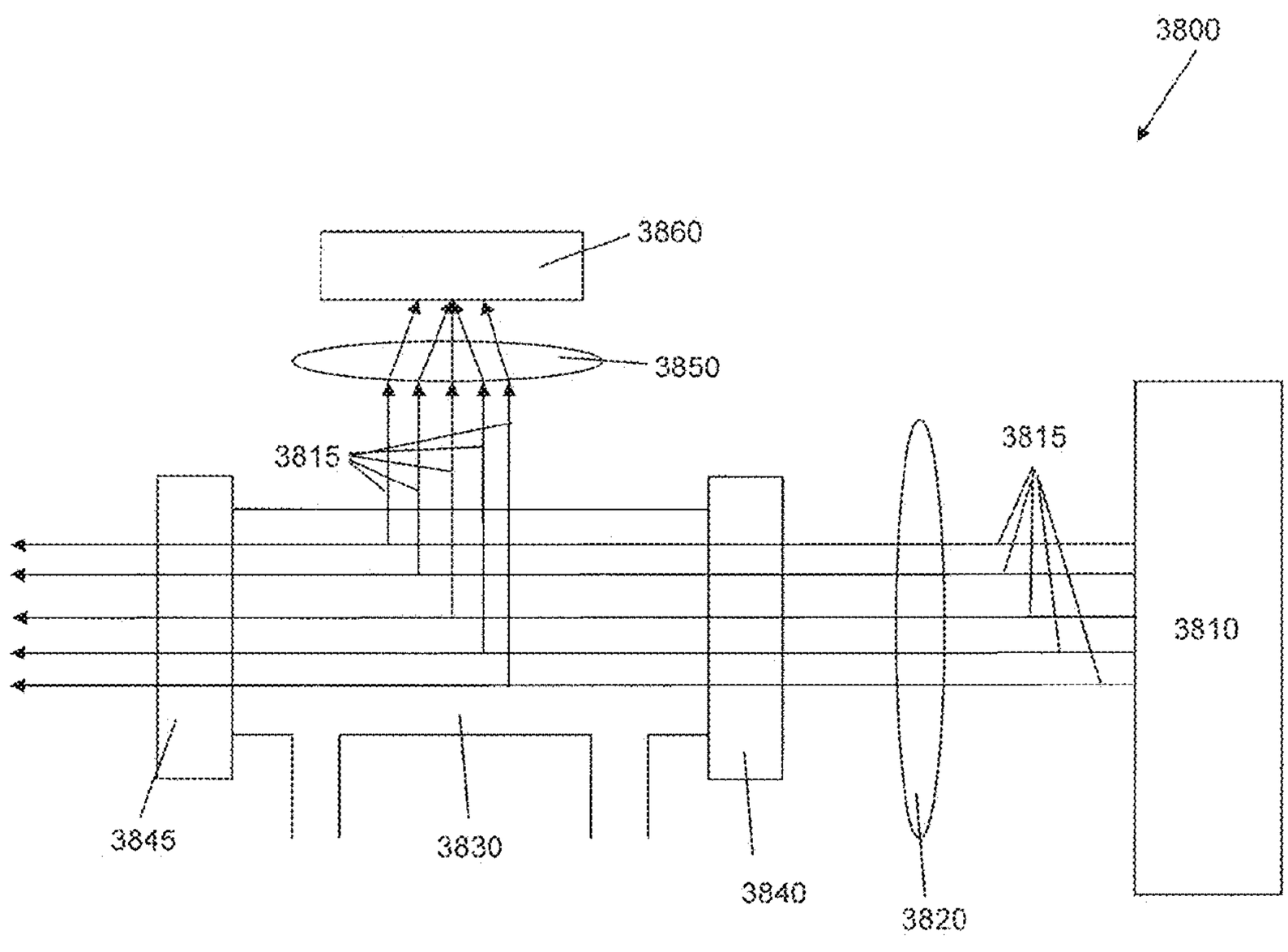

FIG. 38

LASER-DRIVEN LIGHT SOURCE

RELATED APPLICATIONS

This application is a continuation of U.S. Ser. No. 13/964,938, filed on Aug. 12, 2013, which is a continuation of U.S. Ser. No. 13/024,027, filed on Feb. 9, 2011, now U.S. Pat. No. 8,525,138, which is a continuation-in-part of U.S. Ser. No. 12/166,918, filed on Jul. 2, 2008, now U.S. Pat. No. 7,989,786, which is a continuation-in-part of U.S. Ser. No. 11/695,348, filed on Apr. 2, 2007, now U.S. Pat. No. 7,786,455, which is a continuation-in-part of U.S. Ser. No. 11/395,523, filed on Mar. 31, 2006, now U.S. Pat. No. 7,435,982, the entire disclosures of each of which are hereby incorporated by reference herein. This application claims the benefit of, and priority to U.S. Provisional Patent Application No. 61/302,797, filed on Feb. 9, 2010, the entire disclosure of which is incorporated by reference herein.

FIELD OF THE INVENTION

The invention relates to methods and apparatus for providing a laser-driven light source.

BACKGROUND OF THE INVENTION

High brightness light sources can be used in a variety of applications. For example, a high brightness light source can be used for inspection, testing or measuring properties associated with semiconductor wafers or materials used in the fabrication of wafers (e.g., reticles and photomasks). The electromagnetic energy produced by high brightness light sources can, alternatively, be used as a source of illumination in a lithography system used in the fabrication of wafers, a microscopy system, or a photoresist curing system. The parameters (e.g., wavelength, power level and brightness) of the light vary depending upon the application.

The state of the art in, for example, wafer inspection systems involves the use of xenon or mercury arc lamps to produce light. The arc lamps include an anode and cathode that are used to excite xenon or mercury gas located in a chamber of the lamp. An electrical discharge is generated between the anode and cathode to provide power to the excited (e.g., ionized) gas to sustain the light emitted by the ionized gas during operation of the light source. During operation, the anode and cathode become very hot due to electrical discharge delivered to the ionized gas located between the anode and cathode. As a result, the anode and/or cathode are prone to wear and may emit particles that can contaminate the light source or result in failure of the light source. Also, these arc lamps do not provide sufficient brightness for some applications, especially in the ultraviolet spectrum. Further, the position of the arc can be unstable in these lamps.

Accordingly, a need therefore exists for improved high brightness light sources. A need also exists for improved high brightness light sources that do not rely on an electrical discharge to maintain a plasma that generates a high brightness light.

The properties of light produced by many light sources (e.g., arc lamps, microwave lamps) are affected when the light passes through a wall of, for example, a chamber that includes the location from which the light is emitted.

Accordingly, a need therefore exists for an improved light source whose emitted light is not significantly affected when the light passes through a wall of a chamber that includes the location from which the light is emitted.

SUMMARY OF THE INVENTION

The present invention features a light source for generating a high brightness light.

The invention, in one aspect, features a light source having a chamber. The light source also includes an ignition source for ionizing a gas within the chamber. The light source also includes at least one laser for providing energy to the ionized gas within the chamber to produce a high brightness light.

In some embodiments, the at least one laser is a plurality of lasers directed at a region from which the high brightness light originates. In some embodiments, the light source also includes at least one optical element for modifying a property of the laser energy provided to the ionized gas. The optical element can be, for example, a lens (e.g., an aplanatic lens, an achromatic lens, a single element lens, and a fresnel lens) or mirror (e.g., a coated mirror, a dielectric coated mirror, a narrow band mirror, and an ultraviolet transparent infrared reflecting mirror). In some embodiments, the optical element is one or more fiber optic elements for directing the laser energy to the gas.

The chamber can include an ultraviolet transparent region. The chamber or a window in the chamber can include a material selected from the group consisting of quartz, Suprasil® quartz (Heraeus Quartz America, LLC, Buford, Ga.), sapphire, MgF_2, diamond, and CaF_2. In some embodiments, the chamber is a sealed chamber. In some embodiments, the chamber is capable of being actively pumped. In some embodiments, the chamber includes a dielectric material (e.g., quartz). The chamber can be, for example, a glass bulb. In some embodiments, the chamber is an ultraviolet transparent dielectric chamber.

The gas can be one or more of a noble gas, Xe, Ar, Ne, Kr, He, D_2, H_2, O_2, F_2, a metal halide, a halogen, Hg, Cd, Zn, Sn, Ga, Fe, Li, Na, an excimer forming gas, air, a vapor, a metal oxide, an aerosol, a flowing media, or a recycled media. The gas can be produced by a pulsed laser beam that impacts a target (e.g., a solid or liquid) in the chamber. The target can be a pool or film of metal. In some embodiments, the target is capable of moving. For example, the target may be a liquid that is directed to a region from which the high brightness light originates.

In some embodiments, the at least one laser is multiple diode lasers coupled into a fiber optic element. In some embodiments, the at least one laser includes a pulse or continuous wave laser. In some embodiments, the at least one laser is an IR laser, a diode laser, a fiber laser, an ytterbium laser, a CO_2 laser, a YAG laser, or a gas discharge laser. In some embodiments, the at least one laser emits at least one wavelength of electromagnetic energy that is strongly absorbed by the ionized medium.

The ignition source can be or can include electrodes, an ultraviolet ignition source, a capacitive ignition source, an inductive ignition source, an RF ignition source, a microwave ignition source, a flash lamp, a pulsed laser, or a pulsed lamp. The ignition source can be a continuous wave (CW) or pulsed laser impinging on a solid or liquid target in the chamber. The ignition source can be external or internal to the chamber.

The light source can include at least one optical element for modifying a property of electromagnetic radiation emitted by the ionized gas. The optical element can be, for example, one or more mirrors or lenses. In some embodiments, the optical element is configured to deliver the electromagnetic radiation

emitted by the ionized gas to a tool (e.g., a wafer inspection tool, a microscope, a metrology tool, a lithography tool, or an endoscopic tool).

The invention, in another aspect, relates to a method for producing light. The method involves ionizing with an ignition source a gas within a chamber. The method also involves providing laser energy to the ionized gas in the chamber to produce a high brightness light.

In some embodiments, the method also involves directing the laser energy through at least one optical element for modifying a property of the laser energy provided to the ionized gas. In some embodiments, the method also involves actively pumping the chamber. The ionizable medium can be a moving target. In some embodiments, the method also involves directing the high brightness light through at least one optical element to modify a property of the light. In some embodiments, the method also involves delivering the high brightness light emitted by the ionized medium to a tool (e.g., a wafer inspection tool, a microscope, a metrology tool, a lithography tool, or an endoscopic tool).

In another aspect, the invention features a light source. The lights source includes a chamber and an ignition source for ionizing an ionizable medium within the chamber. The light source also includes at least one laser for providing substantially continuous energy to the ionized medium within the chamber to produce a high brightness light.

In some embodiments, the at least one laser is a continuous wave laser or a high pulse rate laser. In some embodiments, the at least one laser is a high pulse rate laser that provides pulses of energy to the ionized medium so the high brightness light is substantially continuous. In some embodiments, the magnitude of the high brightness light does not vary by more than about 90% during operation. In some embodiments, the at least one laser provides energy substantially continuously to minimize cooling of the ionized medium when energy is not provided to the ionized medium.

In some embodiments, the light source can include at least one optical element (e.g., a lens or mirror) for modifying a property of the laser energy provided to the ionized medium. The optical element can be, for example, an aplanatic lens, an achromatic lens, a single element lens, a fresnel lens, a coated mirror, a dielectric coated mirror, a narrow band mirror, or an ultraviolet transparent infrared reflecting mirror. In some embodiments, the optical element is one or more fiber optic elements for directing the laser energy to the ionizable medium.

In some embodiments, the chamber includes an ultraviolet transparent region. In some embodiments, the chamber or a window in the chamber includes a quartz material, suprasil quartz material, sapphire material, MgF_2 material, diamond material, or CaF_2 material. In some embodiments, the chamber is a sealed chamber. The chamber can be capable of being actively pumped. In some embodiments, the chamber includes a dielectric material (e.g., quartz). In some embodiments, the chamber is a glass bulb. In some embodiments, the chamber is an ultraviolet transparent dielectric chamber.

The ionizable medium can be a solid, liquid or gas. The ionizable medium can include one or more of a noble gas, Xe, Ar, Ne, Kr, He, D_2, H_2, O_2, F_2, a metal halide, a halogen, Hg, Cd, Zn, Sn, Ga, Fe, Li, Na, an excimer forming gas, air, a vapor, a metal oxide, an aerosol, a flowing media, a recycled media, or an evaporating target. In some embodiments, the ionizable medium is a target in the chamber and the ignition source is a pulsed laser that provides a pulsed laser beam that strikes the target. The target can be a pool or film of metal. In some embodiments, the target is capable of moving.

In some embodiments, the at least one laser is multiple diode lasers coupled into a fiber optic element. The at least one laser can emit at least one wavelength of electromagnetic energy that is strongly absorbed by the ionized medium.

The ignition source can be or can include electrodes, an ultraviolet ignition source, a capacitive ignition source, an inductive ignition source, an RF ignition source, a microwave ignition source, a flash lamp, a pulsed laser, or a pulsed lamp. The ignition source can be external or internal to the chamber.

In some embodiments, the light source includes at least one optical element (e.g., a mirror or lens) for modifying a property of electromagnetic radiation emitted by the ionized medium. The optical element can be configured to deliver the electromagnetic radiation emitted by the ionized medium to a tool (e.g., a wafer inspection tool, a microscope, a metrology tool, a lithography tool, or an endoscopic tool).

The invention, in another aspect relates to a method for producing light. The method involves ionizing with an ignition source an ionizable medium within a chamber. The method also involves providing substantially continuous laser energy to the ionized medium in the chamber to produce a high brightness light.

In some embodiments, the method also involves directing the laser energy through at least one optical element for modifying a property of the laser energy provided to the ionizable medium. The method also can involve actively pumping the chamber. In some embodiments, the ionizable medium is a moving target. The ionizable medium can include a solid, liquid or gas. In some embodiments, the method also involves directing the high brightness light through at least one optical element to modify a property of the light. In some embodiments, the method also involves delivering the high brightness light emitted by the ionized medium to a tool.

The invention, in another aspect, features a light source having a chamber. The light source includes a first ignition means for ionizing an ionizable medium within the chamber. The light source also includes a means for providing substantially continuous laser energy to the ionized medium within the chamber.

The invention, in another aspect, features a light source having a chamber that includes a reflective surface. The light source also includes an ignition source for ionizing a gas within the chamber. The light source also includes a reflector that at least substantially reflects a first set of predefined wavelengths of electromagnetic energy directed toward the reflector and at least substantially allows a second set of predefined wavelengths of electromagnetic energy to pass through the reflector. The light source also includes at least one laser (e.g., a continuous-wave fiber laser) external to the chamber for providing electromagnetic energy to the ionized gas within the chamber to produce a plasma that generates a high brightness light. A continuous-wave laser emits radiation continuously or substantially continuously rather than in short bursts, as in a pulsed laser.

In some embodiments, at least one laser directs a first set of wavelengths of electromagnetic energy through the reflector toward the reflective surface (e.g., inner surface) of the chamber and the reflective surface directs at least a portion of the first set of wavelengths of electromagnetic energy toward the plasma. In some embodiments, at least a portion of the high brightness light is directed toward the reflective surface of the chamber, is reflected toward the reflector, and is reflected by the reflector toward a tool. In some embodiments, at least one laser directs a first set of wavelengths of electromagnetic energy toward the reflector, the reflector reflects at least a portion of the first wavelengths of electromagnetic energy

towards the reflective surface of the chamber, and the reflective surface directs a portion of the first set of wavelengths of electromagnetic energy toward the plasma.

In some embodiments, at least a portion of the high brightness light is directed toward the reflective surface of the chamber, is reflected toward the reflector, and passes through the reflector toward an output of the light source. In some embodiments, the light source comprises a microscope, ultraviolet microscope, wafer inspection system, reticle inspection system or lithography system spaced relative to the output of the light source to receive the high brightness light. In some embodiments, a portion of the high brightness light is directed toward the reflective surface of the chamber, is reflected toward the reflector, and electromagnetic energy comprising the second set of predefined wavelengths of electromagnetic energy passes through the reflector.

The chamber of the light source can include a window. In some embodiments, the chamber is a sealed chamber. In some embodiments, the reflective surface of the chamber comprises a curved shape, parabolic shape, elliptical shape, spherical shape or aspherical shape. In some embodiments, the chamber has a reflective inner surface. In some embodiments, a coating or film is located on the outside of the chamber to produce the reflective surface. In some embodiments, a coating or film is located on the inside of the chamber to produce the reflective surface. In some embodiments, the reflective surface is a structure or optical element that is distinct from the inner surface of the chamber.

The light source can include an optical element disposed along a path the electromagnetic energy from the laser travels. In some embodiments, the optical element is adapted to provide electromagnetic energy from the laser to the plasma over a large solid angle. In some embodiments, the reflective surface of the chamber is adapted to provide electromagnetic energy from the laser to the plasma over a large solid angle. In some embodiments, the reflective surface of the chamber is adapted to collect the high brightness light generated by the plasma over a large solid angle. In some embodiments, one or more of the reflective surface, reflector and the window include (e.g., are coated or include) a material to filter predefined wavelengths (e.g., infrared wavelengths of electromagnetic energy) of electromagnetic energy.

The invention, in another aspect, features a light source that includes a chamber that has a reflective surface. The light source also includes an ignition source for ionizing a gas within the chamber. The light source also includes at least one laser external to the chamber for providing electromagnetic energy to the ionized gas within the chamber to produce a plasma that generates a high brightness light. The light source also includes a reflector positioned along a path that the electromagnetic energy travels from the at least one laser to the reflective surface of the chamber.

In some embodiments, the reflector is adapted to at least substantially reflect a first set of predefined wavelengths of electromagnetic energy directed toward the reflector and at least substantially allow a second set of predefined wavelengths of electromagnetic energy to pass through the reflector.

The invention, in another aspect, relates to a method for producing light. The method involves ionizing with an ignition source a gas within a chamber that has a reflective surface. The method also involves providing laser energy to the ionized gas in the chamber to produce a plasma that generates a high brightness light.

In some embodiments, the method involves directing the laser energy comprising a first set of wavelengths of electromagnetic energy through a reflector toward the reflective surface of the chamber, the reflective surface reflecting at least a portion of the first set of wavelengths of electromagnetic energy toward the plasma. In some embodiments, the method involves directing at least a portion of the high brightness light toward the reflective surface of the chamber which is reflected toward the reflector and is reflected by the reflector toward a tool.

In some embodiments, the method involves directing the laser energy comprising a first set of wavelengths of electromagnetic energy toward the reflector, the reflector reflects at least a portion of the first wavelengths of electromagnetic energy toward the reflective surface of the chamber, the reflective surface directs a portion of the first set of wavelengths of electromagnetic energy toward the plasma. In some embodiments, the method involves directing a portion of the high brightness light toward the reflective surface of the chamber which is reflected toward the reflector and, electromagnetic energy comprising the second set of predefined wavelengths of electromagnetic energy passes through the reflector.

The method can involve directing the laser energy through an optical element that modifies a property of the laser energy to direct the laser energy toward the plasma over a large solid angle. In some embodiments, the method involves directing the laser energy through an optical element that modifies a property of the laser energy to direct the laser energy toward the plasma over a solid angle of approximately 0.012 steradians. In some embodiments, the method involves directing the laser energy through an optical element that modifies a property of the laser energy to direct the laser energy toward the plasma over a solid angle of approximately 0.048 steradians. In some embodiments, the method involves directing the laser energy through an optical element that modifies a property of the laser energy to direct the laser energy toward the plasma over a solid angle of greater than about 2π (about 6.28) steradians. In some embodiments, the reflective surface of the chamber is adapted to provide the laser energy to the plasma over a large solid angle. In some embodiments, the reflective surface of the chamber is adapted to collect the high brightness light generated by the plasma over a large solid angle.

The invention, in another aspect, relates to a method for producing light. The method involves ionizing with an ignition source a gas within a chamber that has a reflective surface. The method also involves directing electromagnetic energy from a laser toward a reflector that at least substantially reflects a first set of wavelengths of electromagnetic energy toward the ionized gas in the chamber to produce a plasma that generates a high brightness light.

In some embodiments, the electromagnetic energy from the laser first is reflected by the reflector toward the reflective surface of the chamber. In some embodiments, the electromagnetic energy directed toward the reflective surface of the chamber is reflected toward the plasma. In some embodiments, a portion of the high brightness light is directed toward the reflective surface of the chamber, reflected toward the reflector and passes through the reflector.

In some embodiments, the electromagnetic energy from the laser first passes through the reflector and travels toward the reflective surface of the chamber. In some embodiments, the electromagnetic energy directed toward the reflective surface of the chamber is reflected toward the plasma. In some embodiments, a portion of the high brightness light is directed toward the reflective surface of the chamber, reflected toward the reflector and reflected by the reflector.

The invention, in another aspect, features a light source that includes a chamber having a reflective surface. The light

source also includes a means for ionizing a gas within the chamber. The light source also includes a means for at least substantially reflecting a first set of predefined wavelengths of electromagnetic energy directed toward the reflector and at least substantially allowing a second set of predefined wavelengths of electromagnetic energy to pass through the reflector. The light source also includes a means for providing electromagnetic energy to the ionized gas within the chamber to produce a plasma that generates a high brightness light.

The invention, in another aspect, features a light source that includes a sealed chamber. The light source also includes an ignition source for ionizing a gas within the chamber. The light source also includes at least one laser external to the sealed chamber for providing electromagnetic energy to the ionized gas within the chamber to produce a plasma that generates a high brightness light. The light source also includes a curved reflective surface disposed external to the sealed chamber to receive at leas a portion of the high brightness light emitted by the sealed chamber and reflect the high brightness light toward an output of the light source.

In some embodiments, the light source includes an optical element disposed along a path the electromagnetic energy from the laser travels. In some embodiments, the sealed chamber includes a support element that locates the sealed chamber relative to the curved reflective surface. In some embodiments, the sealed chamber is a quartz bulb. In some embodiments, the light source includes a second curved reflective surface disposed internal or external to the sealed chamber to receive at least a portion of the laser electromagnetic energy and focus the electromagnetic energy on the plasma that generates the high brightness light.

The invention, in another aspect, features a light source that includes a sealed chamber and an ignition source for ionizing a gas within the chamber. The light source also includes at least one laser external to the sealed chamber for providing electromagnetic energy. The light source also includes a curved reflective surface to receive and reflect at least a portion of the electromagnetic energy toward the ionized gas within the chamber to produce a plasma that generates a high brightness light, the curved reflective surface also receives at least a portion of the high brightness light emitted by the plasma and reflects the high brightness light toward an output of the light source.

In some embodiments, the curved reflective surface focuses the electromagnetic energy on a region in the chamber where the plasma is located. In some embodiments, the curved reflective surface is located within the chamber. In some embodiments, the curved reflective surface is located external to the chamber. In some embodiments, the high brightness light is ultraviolet light, includes ultraviolet light or is substantially ultraviolet light.

The invention, in another aspect, features a light source that includes a chamber. The light source also includes an energy source for providing energy to a gas within the chamber to produce a plasma that generates a light emitted through the walls of the chamber. The light source also includes a reflector that reflects the light emitted through the walls of the chamber. The reflector includes a reflective surface with a shape configured to compensate for the refractive index of the walls of the chamber. The shape can include a modified parabolic, elliptical, spherical, or aspherical shape.

In some embodiments, the energy source is at least one laser external to the chamber. In some embodiments, the energy source is also an ignition source within the chamber. The energy source can be a microwave energy source, an AC arc source, a DC arc source, a laser, or an RF energy source. The energy source can be a pulse laser, a continuous-wave fiber laser, or a diode laser.

In some embodiments, the chamber is a sealed chamber. The chamber can include a cylindrical tube. In some embodiments, the cylindrical tube is tapered. The chamber can include one or more seals at one or both ends of the cylindrical tube. The chamber can include sapphire, quartz, fused quartz, Suprasil quartz, fused silica, Suprasil fused silica, MgF_2, diamond, single crystal quartz, or CaF_2. The chamber can include a dielectric material. The chamber can include an ultraviolet transparent dielectric material. The chamber can protrude through an opening in the reflector.

In some embodiments, the light source also includes an ignition source for ionizing the gas within the chamber. The ignition source can include electrodes, an ultraviolet ignition source, a capacitive ignition source, an inductive ignition source, a flash lamp, a pulsed laser, or a pulsed lamp. The ignition source can include electrodes located on opposite sides of the plasma.

In some embodiments, the light source also includes a support element that locates the chamber relative to the reflector. The support element can include a fitting to allow at least one of pressure control or filling of the chamber.

In some embodiments, the light source includes at least one optical element. The optical element can modify a property of the light emitted through the walls of the chamber and reflected by the reflector. The optical element can be a mirror or a lens. The optical element can be configured to deliver the light emitted through the walls of the chamber and reflected by the reflector to a tool (e.g. a wafer inspection tool, a microscope, an ultraviolet microscope, a reticle inspection system, a metrology tool, a lithography tool, or an endoscopic tool).

The invention, in another aspect, features a method for producing light. The method involves emitting a light through the walls of a chamber. The method also involves using a reflective surface of a reflector to reflect the light, wherein the reflective surface has a shape configured to compensate for the refractive index of the walls of the chamber.

In some embodiments, the method also involves flowing gas into the chamber. In some embodiments, the method also involves igniting the gas in the chamber to produce an ionized gas. In some embodiments, the method also involves directing energy to the ionized gas to produce a plasma that generates a light (e.g. a high brightness light). In some embodiments, the method also involves directing laser energy into the chamber from at least one laser external to the chamber. In some embodiments, the method also involves directing the laser energy through an optical element that modifies a property of the laser energy. In some embodiments, the method also involves directing the reflected light through an optical element to modify a property of the reflected light. In some embodiments, the method also involves directing the reflected light to a tool. In some embodiments, the method also involves controlling the pressure of the chamber.

In some embodiments, the method also involves expressing the shape as a mathematical equation. In some embodiments, the method also involves selecting parameters of the equation to reduce error due to the refractive index of the walls of the chamber below a specified value. In some embodiments, the method also involves configuring the shape to compensate for the refractive index of the walls of the chamber. In some embodiments, the method also involves producing a collimated or focused beam of reflected light with the reflective surface. In some embodiments, the method also involves modifying a parabolic, elliptical, spherical, or

aspherical shape to compensate for the refractive index of the walls of the chamber to produce a focused, reflected high brightness light.

The invention, in another aspect, features a light source including a chamber. The light source also includes a laser source for providing electromagnetic energy to a gas within the chamber to produce a plasma that generates a light emitted through the walls of the chamber. The light source also includes a reflector that reflects the electromagnetic energy through the walls of the chamber and the light emitted through the walls of the chamber, the reflector includes a reflective surface with a shape configured to compensate for the refractive index of the walls of the chamber.

The invention, in another aspect, features a light source having a chamber. The light source also includes means for providing energy to a gas within the chamber to produce a plasma that generates a light emitted through the walls of the chamber. The light source also includes means for reflecting the light emitted through the walls of the chamber, the reflecting means including a reflective surface with a shape configured to compensate for the refractive index of the walls of the chamber.

The invention, in another aspect, features a light source having a chamber. The light source also includes an ignition source for ionizing a medium (e.g., a gas) within the chamber. The light source also includes a laser for providing energy to the ionized medium within the chamber to produce a light. The light source also includes a blocker suspended along a path the energy travels to block at least a portion of the energy.

In some embodiments, the blocker deflects energy provided to the ionized medium that is not absorbed by the ionized medium away from an output of the light source. In some embodiments, the blocker is a mirror.

In some embodiments, the blocker absorbs the energy provided to the ionized medium that is not absorbed by the ionized medium. The blocker can include graphite.

In some embodiments, the blocker reflects energy provided to the ionized medium that is not absorbed by the ionized medium. In some embodiments, the reflected energy is reflected toward the ionized medium in the chamber. In some embodiments, the blocker is a coating on a portion of the chamber.

In some embodiments, the light source includes a coolant channel disposed in the blocker. In some embodiments, the light source includes a coolant supply (e.g., for supplying coolant, for example, water) coupled to the coolant channel. In some embodiments, light source includes a gas source that blows a gas (e.g., nitrogen or air) on the blocker to cool the blocker.

In some embodiments, the light source includes an arm connecting the blocker to a housing of the light source.

In some embodiments, the energy provided by the laser enters the chamber on a first side of the chamber and the blocker is suspended on a second side of the chamber opposite the first side.

The invention, in another aspect, relates to a method for producing light. The method involves ionizing with an ignition source a medium within a chamber. The method also involves providing laser energy to the ionized medium in the chamber to produce a light. The method also involves blocking energy provided to the ionized medium that is not absorbed by the ionized medium with a blocker suspended along a path the energy travels.

In some embodiments, blocking the energy involves deflecting the energy away from an output of the light source. In some embodiments, the blocker includes a mirror. In some embodiments, blocking the energy includes absorbing the energy. In some embodiments, blocking the energy includes reflecting the energy. In some embodiments, reflecting the energy includes reflecting the energy towards the ionized medium in the chamber.

In some embodiments, the method also involves cooling the blocker. In some embodiments, cooling the blocker includes flowing a coolant through a channel in or coupled to the blocker. In some embodiments, the method involves blowing a gas on the blocker to cooler the blocker.

The invention, in another aspect, relates to a method for producing light. The method involves ionizing with an ignition source a gas within a chamber. The method also involves providing laser energy to the ionized gas in the chamber at a pressure of greater than 10 atmospheres to produce a high brightness light.

In some embodiments, the gas within the chamber is at a pressure of greater than 30 atmospheres. In some embodiments, the gas within the chamber is at a pressure of greater than 50 atmospheres. In some embodiments, the high brightness light is emitted from a plasma having a volume of about 0.01 mm^3.

The invention, in anther aspect, relates to a light source having a chamber with a gas disposed therein, and ignition source and at least one laser. The ignition source excites the gas. The excited gas has at least one strong absorption line at an infrared wavelength. The at least one laser provides energy to the excited gas at a wavelength near a strong absorption line of the excited gas within the chamber to produce a high brightness light.

In some embodiments, the gas comprises a noble gas. The gas can comprise xenon. In some embodiments, the excited gas comprises atoms at a lowest excited state. The gas can be absorptive near the wavelength of the at least one laser. The strong absorption line of the excited gas can be about 980 nm or about 882 nm. In some embodiments, the excited gas is in a metastable state.

The invention, in another aspect, relates to a method for producing light. An ignition source excites a gas within a chamber. A laser is tuned to a first wavelength to provide energy to the excited gas in the chamber to produce a high brightness light. The excited gas absorbs energy near the first wavelength. The laser is tuned to a second wavelength to provide energy to the excited gas in the chamber to maintain the high brightness light. The excited gas absorbs energy near the second wavelength.

In some embodiments, the laser is tuned to the first and second wavelengths by adjusting the operating temperature of the laser. In some embodiments, the laser is a diode laser and the laser is tuned approximately 0.4 nm per degree Celsius of temperature adjustment. The operating temperature of the laser can be adjusted by varying a current of a thermoelectric cooling device.

The gas within the chamber can have atoms with electrons in at least one excited atomic state. The gas within chamber can be a noble gas, and in some embodiments, the gas within the chamber is xenon.

In some embodiments, the first wavelength is approximately 980 nm. The second wavelength can be approximately 975 nm. The second wavelength can be approximately 1 nm to approximately 10 nm displaced from the first wavelength. The invention, in another aspect, relates to a light source. The light source includes a chamber having one or more walls and a gas disposed within the chamber. The light source also includes at least one laser for providing a converging beam of energy focused on the gas within the chamber to produce a plasma that generates a light emitted through the walls of the chamber, such that a numerical aperture of the converging

beam of energy is between about 0.1 to about 0.8. In some embodiments, the numerical aperture is about 0.4 to about 0.6. The numeral aperture can be about 0.5.

The light source can also include an optical element within a path of the beam. The optical element can be capable of increasing the numerical aperture of the beam. In some embodiments, the optical element is a lens or a mirror. The lens can be an aspheric lens. In some embodiments, a spectral radiance of the plasma increases with an increase in numerical aperture of the beam.

The invention, in another aspect, relates to a method of pre-aligning a bulb for a light source. The bulb, having two electrodes, is coupled to a mounting base. The bulb and mounting base structure are inserting into a camera assembly. The camera assembly includes at least one camera and a display screen. At least one image of the bulb from the at least one camera is displays on the display screen. A position of the bulb within the mounted base is adjusted such that a region of the bulb between the two electrodes aligns with a positioning grid on the display screen.

In some embodiments, a lamp for a light source is pre-aligned using the method described herein.

In some embodiments, the method also includes toggling between the at least two cameras to align the bulb. The camera assembly can include two cameras. Images from the two cameras can be displayed in different colors. In some embodiments, the two cameras are positioned to capture images of the bulb from two orthogonal directions.

The position of the bulb can be adjusted vertically and horizontally. The position of the bulb can be adjusted by a manipulator. The manipulator can be positioned above the bulb and can be capable of moving the bulb vertically and horizontally.

The method can also include securing the bulb to a base after the region of the bulb between the two electrodes aligns with the positioning grid on the display screen. In some embodiments, the positioning grid is pre-determined such that when the center area of the bulb between the two electrodes aligns with the positioning grid on the display screen, the region is aligned relative to a focal point of a laser when the bulb and mounting base are inserted into a light source.

The invention, in another aspect, relates to a method for decreasing noise within a light source. The light source includes a laser. A sample of light emitted from the light source is collected. The sample of light is converted to an electrical signal. The electrical is compared to a reference signal to obtain an error signal. The error signal is processed to obtain a control signal. A magnitude of a laser of the light source is set based on the control signal to decrease noise within the light source. These steps can be repeated until a desired amount of noise is reached.

In some embodiments, the sample of light emitted from the light source is collected from a beam splitter. The beam splitter can be a glass beam splitter or a bifurcated fiber bundle.

In some embodiments, the error signal is the difference between the reference sample and the converted sample. The error signal can be processed by a control amplifier. The control amplifier is capable of outputting a control signal proportional to at least one of a time integral, a time derivative, or a magnitude of the error signal.

The sample can be collected using a photodiode. In some embodiments, the sample is collected using a photodiode within a casing of the light source. In some embodiments, the sample is collected using a photodiode external to a casing of the light source. In some embodiments, two samples are collected. One sample can be collected using a first photodiode within a casing of the light source and another sample can be collected using a second photodiode external to the casing of the light source.

The invention, in another aspect, relates to a light source. The light source includes a chamber having one or more walls and a gas disposed within the chamber. The light source also includes at least one laser for providing energy to the gas within the chamber to produce a plasma that generates a light emitted through the walls of the chamber. A dichroic mirror is positioned within a path of the at least one laser such that the laser energy is directed toward the plasma. The dichroic mirror selectively reflects at least one wavelength of light such that the light generated by the plasma is not substantially reflected toward the at least one laser.

The invention, in another aspect, relates to a light source. The light source has a chamber with a gas disposed therein and an ignition source for exciting the gas. The light source also has at least one laser for providing energy to the excited gas within the chamber to produce a high brightness light having a first spectrum. An optical element is disposed within the path of the high brightness light to modify the first spectrum of the high brightness light to a second spectrum.

The optical element can be a prism, a weak lens, a strong lens, or a dichroic filter. In some embodiments, the second spectrum has a greater proportion of intensity of light in the ultraviolet range than the first spectrum. In some embodiments, the first spectrum has a greater proportion of intensity of light in the visible range than the second spectrum.

The invention, in another aspect, relates to a method for decreasing noise of a light source within a predetermined frequency band. The light source includes a laser diode. A current of the laser diode is modulated at a frequency greater than the predetermined frequency band causing the laser to rapidly switch between different sets of modes to decrease noise of the light source within the predetermined frequency band.

The foregoing and other objects, aspects, features, and advantages of the invention will become more apparent from the following description and from the claims.

BRIEF DESCRIPTION OF THE DRAWINGS

The foregoing and other objects, feature and advantages of the invention, as well as the invention itself, will be more fully understood from the following illustrative description, when read together with the accompanying drawings which are not necessarily to scale.

FIG. **1** is a schematic block diagram of a light source, according to an illustrative embodiment of the invention.

FIG. **2** is a schematic block diagram of a portion of a light source, according to an illustrative embodiment of the invention.

FIG. **3** is a graphical representation of UV brightness as a function of the laser power provided to a plasma, using a light source according to the invention.

FIG. **4** is a graphical representation of the transmission of laser energy through a plasma generated from mercury, using a light source according to the invention.

FIG. **5** is a schematic block diagram of a light source, according to an illustrative embodiment of the invention.

FIG. **6** is a schematic block diagram of a light source, according to an illustrative embodiment of the invention.

FIG. **7** is a schematic block diagram of a light source, according to an illustrative embodiment of the invention.

FIG. **8**A is a schematic block diagram of a light source in which electromagnetic energy from a laser is provided to a plasma over a first solid angle, according to an illustrative embodiment of the invention.

FIG. **8**B is a schematic block diagram of the light source of FIG. **8**A in which the electromagnetic energy from the laser is provided to the plasma over a larger solid angle, according to an illustrative embodiment of the invention.

FIG. **9** is a schematic diagram of a light source in which the reflective surface does not compensate for the refractive index of the chamber containing a plasma.

FIG. **10**A is a schematic diagram of a light source with a chamber and a reflector that reflects light produced in the chamber according, to an illustrative embodiment of the invention.

FIG. **10**B is a schematic diagram of a light source with a chamber and a reflector that reflects light produced in the chamber according, to an illustrative embodiment of the invention.

FIG. **11** is a schematic diagram of a light source including a chamber and a reflector that reflects light produced in the chamber, according to an illustrative embodiment of the invention.

FIG. **12** is a cross-sectional view of a light source, according to an illustrative embodiment of the invention.

FIG. **13** is a graphical representation of the radii by which light rays reflected off of the reflective surface miss the remote focus point for different mathematical fit orders for a mathematical equation that expresses the shape of the reflective surface.

FIG. **14** is a schematic block diagram of a light source, according to an illustrative embodiment of the invention.

FIG. **15**A is a cross-sectional view of a light source, according to an illustrative embodiment of the invention.

FIG. **15**B is an end face view of the light source of FIG. **15**A.

FIG. **16** is a graphical representation of brightness as a function of the pressure in a chamber of a light source, using a light source according to the invention.

FIG. **17** is an energy level diagram of atomic and molecular xenon.

FIG. **18** is a graphical representation of transition energies of first absorptions and energy levels of rare gas atoms.

FIG. **19** is a graph depicting laser output wavelength versus temperature for a tuning mechanism, according to an illustrative embodiment of the invention.

FIG. **20** is a graph depicting power versus pressure for xenon and argon.

FIG. **21** is a schematic illustration of converging laser beam numerical apertures, according to an illustrative embodiment of the invention.

FIG. **22** is a graph of spectral radiance versus numerical aperture, according to an illustrative embodiment of the invention.

FIG. **23**A is a side view of a chamber within a bulb assembly, according to an illustrative embodiment of the invention.

FIG. **23**B is a side view of a bulb assemble with a mounting base, according to an illustrative embodiment of the invention.

FIG. **24** is a schematic illustration of a camera assembly, according to an illustrative embodiment of the invention.

FIG. **25** is a schematic illustration of a display screen with an alignment feature, according to an illustrative embodiment of the invention.

FIG. **26** is a flow chart of a method of pre-aligning a bulb for a light source, according to an illustrative embodiment of the invention.

FIG. **27** is a schematic illustration of a feedback loop, according to an illustrative embodiment of the invention.

FIG. **28** is a schematic illustration of a control system block diagram of a feedback loop, according to an illustrative embodiment of the invention.

FIG. **29** is a schematic illustration of an optical setup for a laser-drive light source noise measurement system, according to an illustrative embodiment of the invention.

FIG. **30** is a schematic illustration of a weak lens feedback method, according to an illustrative embodiment of the invention.

FIG. **31** is a schematic illustration of a strong lens feedback method, according to an illustrative embodiment of the invention.

FIG. **32** is a schematic illustration of a filter feedback method, according to an illustrative embodiment of the invention.

FIG. **33** is a schematic illustration of a prism feedback method, according to an illustrative embodiment of the invention.

FIG. **34** is a schematic illustration of a selectively reflective mirror, according to an illustrative embodiment of the invention.

FIG. **35** is a schematic illustration of a laser-driven light source in an absorption cell, according to an illustrative embodiment of the invention.

FIG. **36** is a schematic illustration of a laser-driven light source in a ultra-violet ("UV") light detector, according to an illustrative embodiment of the invention.

FIG. **37** is a schematic illustration of a laser-driven light source in a diode array detector, according to an illustrative embodiment of the invention.

FIG. **38** is a schematic illustration of a laser-driven light source in a fluorescence detector, according to an illustrative embodiment of the invention.

DETAILED DESCRIPTION OF ILLUSTRATIVE EMBODIMENTS

FIG. **1** is a schematic block diagram of a light source **100** for generating light that embodies the invention. The light source **100** includes a chamber **128** that contains an ionizable medium (not shown). The light source **100** provides energy to a region **130** of the chamber **128** having the ionizable medium which creates a plasma **132**. The plasma **132** generates and emits a high brightness light **136** that originates from the plasma **132**. The light source **100** also includes at least one laser source **104** that generates a laser beam that is provided to the plasma **132** located in the chamber **128** to initiate and/or sustain the high brightness light **136**.

In some embodiments, it is desirable for at least one wavelength of electromagnetic energy generated by the laser source **104** to be strongly absorbed by the ionizable medium in order to maximize the efficiency of the transfer of energy from the laser source **104** to the ionizable medium.

In some embodiments, it is desirable for the plasma **132** to be small in size in order to achieve a high brightness light source. Brightness is the power radiated by a source of light per unit surface area into a unit solid angle. The brightness of the light produced by a light source determines the ability of a system (e.g., a metrology tool) or an operator to see or measure things (e.g., features on the surface of a wafer) with adequate resolution. It is also desirable for the laser source **104** to drive and/or sustain the plasma with a high power laser beam.

Generating a plasma **132** that is small in size and providing the plasma **132** with a high power laser beam leads simulta-

neously to a high brightness light **136**. The light source **100** produces a high brightness light **136** because most of the power introduced by the laser source **104** is then radiated from a small volume, high temperature plasma **132**. The plasma **132** temperature will rise due to heating by the laser beam until balanced by radiation and other processes. The high temperatures that are achieved in the laser sustained plasma **132** yield increased radiation at shorter wavelengths of electromagnetic energy, for example, ultraviolet energy. In one experiment, temperatures between about 10,000 K and about 20,000 K have been observed. The radiation of the plasma **132**, in a general sense, is distributed over the electromagnetic spectrum according to Planck's radiation law. The wavelength of maximum radiation is inversely proportional to the temperature of a black body according to Wien's displacement law. While the laser sustained plasma is not a black body, it behaves similarly and as such, the highest brightness in the ultraviolet range at around 300 nm wavelength is expected for laser sustained plasmas having a temperature of between about 10,000 K and about 15,000 K. Most conventional arc lamps are, however, unable to operate at these temperatures.

It is therefore desirable in some embodiments of the invention to maintain the temperature of the plasma **132** during operation of the light source **100** to ensure that a sufficiently bright light **136** is generated and that the light emitted is substantially continuous during operation.

In this embodiment, the laser source **104** is a diode laser that outputs a laser beam via a fiberoptic element **108**. The fiber optic element **108** provides the laser beam to a collimator **112** that aids in conditioning the output of the diode laser by aiding in making laser beam rays **116** substantially parallel to each other. The collimator **112** then directs the laser beam **116** to a beam expander **118**. The beam expander **118** expands the size of the laser beam **116** to produce laser beam **122**. The beam expander **118** also directs the laser beam **122** to an optical lens **120**. The optical lens **120** is configured to focus the laser beam **122** to produce a smaller diameter laser beam **124** that is directed to the region **130** of the chamber **128** where the plasma **132** exists (or where it is desirable for the plasma **132** to be generated and sustained).

In this embodiment, the light source **100** also includes an ignition source **140** depicted as two electrodes (e.g., an anode and cathode located in the chamber **128**). The ignition source **140** generates an electrical discharge in the chamber **128** (e.g., the region **130** of the chamber **128**) to ignite the ionizable medium. The laser then provides laser energy to the ionized medium to sustain or create the plasma **132** which generates the high brightness light **136**. The light **136** generated by the light source **100** is then directed out of the chamber to, for example, a wafer inspection system (not shown).

Alternative laser sources are contemplated according to illustrative embodiments of the invention. In some embodiments, neither the collimator **112**, the beam expander **118**, or the lens **120** may be required. In some embodiments, additional or alternative optical elements can be used. The laser source can be, for example, an infrared (IR) laser source, a diode laser source, a fiber laser source, an ytterbium laser source, a CO_2 laser source, a YAG laser source, or a gas discharge laser source. In some embodiments, the laser source **104** is a pulse laser source (e.g., a high pulse rate laser source) or a continuous wave laser source. Fiber lasers use laser diodes to pump a special doped fiber which then lases to produce the output (i.e., a laser beam). In some embodiments, multiple lasers (e.g., diode lasers) are coupled to one or more fiber optic elements (e.g., the fiber optic element **108**). Diode lasers take light from one (or usually many) diodes and direct the light down a fiber to the output. In some embodiments, fiber laser sources and direct semiconductor laser sources are desirable for use as the laser source **104** because they are relatively low in cost, have a small form factor or package size, and are relatively high in efficiency.

Efficient, cost effective, high power lasers (e.g., fiber lasers and direct diode lasers) are recently available in the NIR (near infrared) wavelength range from about 700 nm to about 2000 nm. Energy in this wavelength range is more easily transmitted through certain materials (e.g., glass, quartz and sapphire) that are more commonly used to manufacture bulbs, windows and chambers. It is therefore more practical now to produce light sources that operate using lasers in the 700 nm to 2000 nm range than has previously been possible.

In some embodiments, the laser source **104** is a high pulse rate laser source that provides substantially continuous laser energy to the light source **100** sufficient to produce the high brightness light **136**. In some embodiments, the emitted high brightness light **136** is substantially continuous where, for example, magnitude (e.g. brightness or power) of the high brightness light does not vary by more than about 90% during operation. In some embodiments, the ratio of the peak power of the laser energy delivered to the plasma to the average power of the laser energy delivered to the plasma is approximately 2-3. In some embodiments, the substantially continuous energy provided to the plasma **132** is sufficient to minimize cooling of the ionized medium to maintain a desirable brightness of the emitted light **136**.

In this embodiment, the light source **100** includes a plurality of optical elements (e.g., a beam expander **118**, a lens **120**, and fiber optic element **108**) to modify properties (e.g., diameter and orientation) of the laser beam delivered to the chamber **132**. Various properties of the laser beam can be modified with one or more optical elements (e.g., mirrors or lenses). For example, one or more optical elements can be used to modify the portions of, or the entire laser beam diameter, direction, divergence, convergence, numerical aperture and orientation. In some embodiments, optical elements modify the wavelength of the laser beam and/or filter out certain wavelengths of electromagnetic energy in the laser beam.

Lenses that can be used in various embodiments of the invention include, aplanatic lenses, achromatic lenses, single element lenses, and fresnel lenses. Mirrors that can be used in various embodiments of the invention include, coated mirrors, dielectric coated mirrors, narrow band mirrors, and ultraviolet transparent infrared reflecting mirrors. By way of example, ultraviolet transparent infrared reflecting mirrors are used in some embodiments of the invention where it is desirable to filter out infrared energy from a laser beam while permitting ultraviolet energy to pass through the mirror to be delivered to a tool (e.g., a wafer inspection tool, a microscope, a lithography tool or an endoscopic tool).

In this embodiment, the chamber **128** is a sealed chamber initially containing the ionizable medium (e.g., a solid, liquid or gas). In some embodiments, the chamber **128** is instead capable of being actively pumped where one or more gases are introduced into the chamber **128** through a gas inlet (not shown), and gas is capable of exiting the chamber **128** through a gas outlet (not shown). The chamber can be fabricated from or include one or more of, for example, a dielectric material, a quartz material, Suprasil quartz, sapphire, MgF_2, diamond or CaF_2. The type of material may be selected based on, for example, the type of ionizable medium used and/or the wavelengths of light **136** that are desired to be generated and output from the chamber **128**. In some embodiments, a region of the chamber **128** is transparent to, for example, ultraviolet energy. Chambers **128** fabricated using quartz will generally

allow wavelengths of electromagnetic energy of as long as about 2 microns to pass through walls of the chamber. Sapphire chamber walls generally allow electromagnetic energy of as long as about 4 microns to pass through the walls.

In some embodiments, it is desirable for the chamber **128** to be a sealed chamber capable of sustaining high pressures and temperatures. For example, in one embodiment, the ionizable medium is mercury vapor. To contain the mercury vapor during operation, the chamber **128** is a sealed quartz bulb capable of sustaining pressures between about 10 to about 200 atmospheres and operating at about 900 degrees centigrade. The quartz bulb also allows for transmission of the ultraviolet light **136** generated by the plasma **132** of the light source **100** through the chamber **128** walls.

Various ionizable media can be used in alternative embodiments of the invention. For example, the ionizable medium can be one or more of a noble gas, Xe, Ar, Ne, Kr, He, D_2, H_2, O_2, F_2, a metal halide, a halogen, Hg, Cd, Zn, Sn, Ga, Fe, Li, Na, an excimer forming gas, air, a vapor, a metal oxide, an aerosol, a flowing media, or a recycled media. In some embodiments, a solid or liquid target (not shown) in the chamber **128** is used to generate an ionizable gas in the chamber **128**. The laser source **104** (or an alternative laser source) can be used to provide energy to the target to generate the ionizable gas. The target can be, for example, a pool or film of metal. In some embodiments, the target is a solid or liquid that moves in the chamber (e.g., in the form of droplets of a liquid that travel through the region **130** of the chamber **128**). In some embodiments, a first ionizable gas is first introduced into the chamber **128** to ignite the plasma **132** and then a separate second ionizable gas is introduced to sustain the plasma **132**. In this embodiment, the first ionizable gas is a gas that is more easily ignited using the ignition source **140** and the second ionizable gas is a gas that produces a particular wavelength of electromagnetic energy.

In this embodiment, the ignition source **140** is a pair of electrodes located in the chamber **128**. In some embodiments, the electrodes are located on the same side of the chamber **128**. A single electrode can be used with, for example, an RF ignition source or a microwave ignition source. In some embodiments, the electrodes available in a conventional arc lamp bulb are the ignition source (e.g., a model USH-200DP quartz bulb manufactured by Ushio (with offices in Cypress, Calif.)). In some embodiments, the electrodes are smaller and/or spaced further apart than the electrodes used in a conventional arc lamp bulb because the electrodes are not required for sustaining the high brightness plasma in the chamber **128**.

Various types and configurations of ignition sources are also contemplated, however, that are within the scope of the present invention. In some embodiments, the ignition source **140** is external to the chamber **128** or partially internal and partially external to the chamber **128**. Alternative types of ignition sources **140** that can be used in the light source **100** include ultraviolet ignition sources, capacitive discharge ignition sources, inductive ignition sources, RF ignition sources, a microwave ignition sources, flash lamps, pulsed lasers, and pulsed lamps. In one embodiment, no ignition source **140** is required and instead the laser source **104** is used to ignite the ionizable medium and to generate the plasma **132** and to sustain the plasma and the high brightness light **136** emitted by the plasma **132**.

In some embodiments, it is desirable to maintain the temperature of the chamber **128** and the contents of the chamber **128** during operation of the light source **100** to ensure that the pressure of gas or vapor within the chamber **128** is maintained at a desired level. In some embodiments, the ignition source **140** can be operated during operation of the light source **100**, where the ignition source **140** provides energy to the plasma **132** in addition to the energy provided by the laser source **104**. In this manner, the ignition source **140** is used to maintain (or maintain at an adequate level) the temperature of the chamber **128** and the contents of the chamber **128**.

In some embodiments, the light source **100** includes at least one optical element (e.g., at least one mirror or lens) for modifying a property of the electromagnetic energy (e.g., the high brightness light **136**) emitted by the plasma **132** (e.g., an ionized gas), similarly as described elsewhere herein.

FIG. **2** is a schematic block diagram of a portion of a light source **200** incorporating principles of the present invention. The light source **200** includes a chamber **128** containing an ionizable gas and has a window **204** that maintains a pressure within the chamber **128** while also allowing electromagnetic energy to enter the chamber **128** and exit the chamber **128**. In this embodiment, the chamber **128** has an ignition source (not shown) that ignites the ionizable gas (e.g., mercury or xenon) to produce a plasma **132**.

A laser source **104** (not shown) provides a laser beam **216** that is directed through a lens **208** to produce laser beam **220**. The lens **208** focuses the laser beam **220** on to a surface **224** of a thin film reflector **212** that reflects the laser beam **220** to produce laser beam **124**. The reflector **212** directs the laser beam **124** on region **130** where the plasma **132** is located. The laser beam **124** provides energy to the plasma **132** to sustain and/or generate a high brightness light **136** that is emitted from the plasma **132** in the region **130** of the chamber **128**.

In this embodiment, the chamber **128** has a paraboloid shape and an inner surface **228** that is reflective. The paraboloid shape and the reflective surface cooperate to reflect a substantial amount of the high brightness light **136** toward and out of the window **204**. In this embodiment, the reflector **212** is transparent to the emitted light **136** (e.g., at least one or more wavelengths of ultraviolet light). In this manner, the emitted light **136** is transmitted out of the chamber **128** and directed to, for example, a metrology tool (not shown). In one embodiment, the emitted light **136** is first directed towards or through additional optical elements before it is directed to a tool.

By way of illustration, an experiment was conducted to generate ultraviolet light using a light source, according to an illustrative embodiment of the invention. A model L6724 quartz bulb manufactured by Hamamatsu (with offices in Bridgewater, N.J.) was used as the chamber of the light source (e.g., the chamber **128** of the light source **100** of FIG. **1**) for experiments using xenon as the ionizable medium in the chamber. A model USH-200DP quartz bulb manufactured by Ushio (with offices in Cypress, Calif.) was used as the chamber of the light source for experiments using mercury as the ionizable medium in the chamber. FIG. **3** illustrates a plot **300** of the UV brightness of a high brightness light produced by a plasma located in the chamber as a function of the laser power (in watts) provided to the plasma. The laser source used in the experiment was a 1.09 micron, 100 watt CW laser. The Y-Axis **312** of the plot **300** is the UV brightness (between about 200 and about 400 nm) in watts/mm^2 steradian (sr). The X-Axis **316** of the plot **300** is the laser beam power in watts provided to the plasma. Curve **304** is the UV brightness of the high brightness light produced by a plasma that was generated using xenon as the ionizable medium in the chamber. The plasma in the experiment using xenon was between about 1 mm and about 2 mm in length and about 0.1 mm in diameter. The length of the plasma was controlled by adjusting the angle of convergence of the laser beam. A larger angle (i.e., larger numerical aperture) leads to a shorter plasma because

the converging beam reaches an intensity capable of sustaining the plasma when it is closer to the focal point. Curve **308** is the UV brightness of the high brightness light produced by a plasma that was generated using mercury as the ionizable medium in the chamber. The plasma in the experiment using mercury was about 1 mm in length and about 0.1 mm in diameter.

By way of illustration, another experiment was conducted to generate ultraviolet using a light source according to an illustrative embodiment of the invention. A model USH-200DP quartz bulb manufactured by Ushio (with offices in Cypress, Calif.) was used as the chamber of the light source for experiments using mercury as the ionizable medium in the chamber (e.g., the chamber **128** of the light source **100** of FIG. **1**). The laser source used in the experiment was a 1.09 micron, 100 watt ytterbium doped fiber laser from SPI Lasers PLC (with offices in Los Gatos, Calif.). FIG. **4** illustrates a plot **400** of the transmission of laser energy through a plasma located in the chamber generated from mercury versus the amount of power provided to the plasma in watts. The Y-Axis **412** of the plot **400** is the transmission coefficient in non-dimensional units. The X-Axis **416** of the plot **400** is the laser beam power in watts provided to the plasma. The curve in the plot **400** illustrates absorption lengths of 1 mm were achieved using the laser source. The transmission value of 0.34 observed at 100 watts corresponds to a 1/e absorption length of about 1 mm.

FIG. **5** is a schematic block diagram of a portion of a light source **500** incorporating principles of the present invention. The light source **500** includes a chamber **528** that has a reflective surface **540**. The reflective surface **540** can have, for example, a parabolic shape, elliptical shape, curved shape, spherical shape or aspherical shape. In this embodiment, the light source **500** has an ignition source (not shown) that ignites an ionizable gas (e.g., mercury or xenon) in a region **530** within the chamber **528** to produce a plasma **532**.

In some embodiments, the reflective surface **540** can be a reflective inner or outer surface. In some embodiments, a coating or film is located on the inside or outside of the chamber to produce the reflective surface **540**.

A laser source (not shown) provides a laser beam **516** that is directed toward a surface **524** of a reflector **512**. The reflector **512** reflects the laser beam **520** toward the reflective surface **540** of the chamber **528**. The reflective surface **540** reflects the laser beam **520** and directs the laser beam toward the plasma **532**. The laser beam **516** provides energy to the plasma **532** to sustain and/or generate a high brightness light **536** that is emitted from the plasma **532** in the region **530** of the chamber **528**. The high brightness light **536** emitted by the plasma **532** is directed toward the reflective surface **540** of the chamber **528**. At least a portion of the high brightness light **536** is reflected by the reflective surface **540** of the chamber **528** and directed toward the reflector **512**. The reflector **512** is substantially transparent to the high brightness light **536** (e.g., at least one or more wavelengths of ultraviolet light). In this manner, the high brightness light **536** passes through the reflector **512** and is directed to, for example, a metrology tool (not shown). In some embodiments, the high brightness light **536** is first directed towards or through a window or additional optical elements before it is directed to a tool.

In some embodiments, the light source **500** includes a separate, sealed chamber (e.g., the sealed chamber **728** of FIG. **7**) located in the concave region of the chamber **528**. The sealed chamber contains the ionizable gas that is used to create the plasma **532**. In alternative embodiments, the sealed chamber contains the chamber **528**. In some embodiments, the sealed chamber also contains the reflector **512**.

FIG. **6** is a schematic block diagram of a portion of a light source **600** incorporating principles of the present invention. The light source **600** includes a chamber **628** that has a reflective surface **640**. The reflective surface **640** can have, for example, a parabolic shape, elliptical shape, curved shape, spherical shape or aspherical shape. In this embodiment, the light source **600** has an ignition source (not shown) that ignites an ionizable gas (e.g., mercury or xenon) in a region **630** within the chamber **628** to produce a plasma **632**.

A laser source (not shown) provides a laser beam **616** that is directed toward a reflector **612**. The reflector **612** is substantially transparent to the laser beam **616**. The laser beam **616** passes through the reflector **612** and is directed toward the reflective surface **640** of the chamber **628**. The reflective surface **640** reflects the laser beam **616** and directs it toward the plasma **632** in the region **630** of the chamber **628**. The laser beam **616** provides energy to the plasma **632** to sustain and/or generate a high brightness light **636** that is emitted from the plasma **632** in the region **630** of the chamber **628**. The high brightness light **636** emitted by the plasma **632** is directed toward the reflective surface **640** of the chamber **628**. At least a portion of the high brightness light **636** is reflected by the reflective surface **640** of the chamber **628** and directed toward a surface **624** of the reflector **612**. The reflector **612** reflects the high brightness light **636** (e.g., at least one or more wavelengths of ultraviolet light). In this manner, the high brightness light **636** (e.g., visible and/or ultraviolet light) is directed to, for example, a metrology tool (not shown). In some embodiments, the high brightness light **636** is first directed towards or through a window or additional optical elements before it is directed to a tool. In some embodiments, the high brightness light **636** includes ultraviolet light. Ultraviolet light is electromagnetic energy with a wavelength shorter than that of visible light, for instance between about 50 nm and 400 nm.

In some embodiments, the light source **600** includes a separate, sealed chamber (e.g., the sealed chamber **728** of FIG. **7**) located in the concave region of the chamber **628**. The sealed chamber contains the ionizable gas that is used to create the plasma **632**. In alternative embodiments, the sealed chamber contains the chamber **628**. In some embodiments, the sealed chamber also contains the reflector **612**.

FIG. **7** is a schematic block diagram of a light source **700** for generating light that embodies the invention. The light source **700** includes a sealed chamber **728** (e.g., a sealed quartz bulb) that contains an ionizable medium (not shown). The light source **700** provides energy to a region **730** of the chamber **728** having the ionizable medium which creates a plasma **732**. The plasma **732** generates and emits a high brightness light **736** that originates from the plasma **732**. The light source **700** also includes at least one laser source **704** that generates a laser beam that is provided to the plasma **732** located in the chamber **728** to initiate and/or sustain the high brightness light **736**.

In this embodiment, the laser source **704** is a diode laser that outputs a laser beam via a fiberoptic element **708**. The fiber optic element **708** provides the laser beam to a collimator **712** that aids in conditioning the output of the diode laser by aiding in making laser beam rays **716** substantially parallel to each other. The collimator **712** then directs the laser beam **716** to a beam expander **718**. The beam expander **718** expands the size of the laser beam **716** to produce laser beam **722**. The beam expander **718** also directs the laser beam **722** to an optical lens **720**. The optical lens **720** is configured to focus the laser beam **722** to produce a smaller diameter laser beam **724**. The laser beam **724** passes through an aperture or window **772** located in the base **724** of a curved reflective surface

740 and is directed toward the chamber 728. The chamber 728 is substantially transparent to the laser beam 724. The laser beam 724 passes through the chamber 728 and toward the region 730 of the chamber 728 where the plasma 732 exists (or where it is desirable for the plasma 732 to be generated by the laser 724 and sustained).

In this embodiment, the ionizable medium is ignited by the laser beam 724. In alternative embodiments, the light source 700 includes an ignition source (e.g., a pair of electrodes or a source of ultraviolet energy) that, for example, generates an electrical discharge in the chamber 728 (e.g., the region 730 of the chamber 728) to ignite the ionizable medium. The laser source 704 then provides laser energy to the ionized medium to sustain the plasma 732 which generates the high brightness light 736. The chamber 728 is substantially transparent to the high brightness light 736 (or to predefined wavelengths of electromagnetic radiation in the high brightness light 736). The light 736 (e.g., visible and/or ultraviolet light) generated by the light source 700 is then directed out of the chamber 728 toward an inner surface 744 of the reflective surface 740.

In this embodiment, the light source 700 includes a plurality of optical elements (e.g., a beam expander 718, a lens 720, and fiber optic element 708) to modify properties (e.g., diameter and orientation) of the laser beam delivered to the chamber 732. Various properties of the laser beam can be modified with one or more optical elements (e.g., mirrors or lenses). For example, one or more optical elements can be used to modify the portions of, or the entire laser beam diameter, direction, divergence, convergence, and orientation. In some embodiments, optical elements modify the wavelength of the laser beam and/or filter out certain wavelengths of electromagnetic energy in the laser beam.

Lenses that can be used in various embodiments of the invention include, aplanatic lenses, achromatic lenses, single element lenses, and fresnel lenses. Mirrors that can be used in various embodiments of the invention include, coated mirrors, dielectric coated mirrors, narrow band mirrors, and ultraviolet transparent infrared reflecting mirrors. By way of example, ultraviolet transparent infrared reflecting mirrors are used in some embodiments of the invention where it is desirable to filter out infrared energy from a laser beam while permitting ultraviolet energy to pass through the mirror to be delivered to a tool (e.g., a wafer inspection tool, a microscope, a lithography tool or an endoscopic tool).

FIGS. 8A and 8B are schematic block diagrams of a light source 800 for generating light that embodies the invention. The light source 800 includes a chamber 828 that contains an ionizable medium (not shown). The light source 800 provides energy to a region 830 of the chamber 828 having the ionizable medium which creates a plasma. The plasma generates and emits a high brightness light that originates from the plasma. The light source 800 also includes at least one laser source 804 that generates a laser beam that is provided to the plasma located in the chamber 828 to initiate and/or sustain the high brightness light.

In some embodiments, it is desirable for the plasma to be small in size in order to achieve a high brightness light source. Brightness is the power radiated by a source of light per unit surface area into a unit solid angle. The brightness of the light produced by a light source determines the ability of a system (e.g., a metrology tool) or an operator to see or measure things (e.g., features on the surface of a wafer) with adequate resolution. It is also desirable for the laser source 804 to drive and/or sustain the plasma with a high power laser beam.

Generating a plasma that is small in size and providing the plasma with a high power laser beam leads simultaneously to a high brightness light. The light source 800 produces a high brightness light because most of the power introduced by the laser source 804 is then radiated from a small volume, high temperature plasma. The plasma temperature will rise due to heating by the laser beam until balanced by radiation and other processes. The high temperatures that are achieved in the laser sustained plasma yield increased radiation at shorter wavelengths of electromagnetic energy, for example, ultraviolet energy. In one experiment, temperatures between about 10,000 K and about 20,000 K have been observed. The radiation of the plasma, in a general sense, is distributed over the electromagnetic spectrum according to Planck's radiation law. The wavelength of maximum radiation is inversely proportional to the temperature of a black body according to Wien's displacement law. While the laser sustained plasma is not a black body, it behaves similarly and as such, the highest brightness in the ultraviolet range at around 300 nm wavelength is expected for laser sustained plasmas having a temperature of between about 10,000 K and about 15,000 K. Conventional arc lamps are, however, unable to operate at these temperatures.

It is desirable in some embodiments of the invention to deliver the laser energy to the plasma in the chamber 828 over a large solid angle in order to achieve a plasma that is small in size. Various methods and optical elements can be used to deliver the laser energy over a large solid angle. In this embodiment of the invention, parameters of a beam expander and optical lens are varied to modify the size of the solid angle over which the laser energy is delivered to the plasma in the chamber 828.

Referring to FIG. 8A, the laser source 804 is a diode laser that outputs a laser beam via a fiberoptic element 808. The fiber optic element 808 provides the laser beam to a collimator 812 that aids in conditioning the output of the diode laser by aiding in making laser beam rays 816 substantially parallel to each other. The collimator 812 directs the laser beam 816 to an optical lens 820. The optical lens 820 is configured to focus the laser beam 816 to produce a smaller diameter laser beam 824 having a solid angle 878. The laser beam 824 is directed to the region 830 of the chamber 828 where the plasma 832 exists.

In this embodiment, the light source 800 also includes an ignition source 840 depicted as two electrodes (e.g., an anode and cathode located in the chamber 828). The ignition source 840 generates an electrical discharge in the chamber 828 (e.g., the region 830 of the chamber 828) to ignite the ionizable medium. The laser then provides laser energy to the ionized medium to sustain or create the plasma 832 which generates the high brightness light 836. The light 836 generated by the light source 800 is then directed out of the chamber to, for example, a wafer inspection system (not shown).

FIG. 8B illustrates an embodiment of the invention in which the laser energy is delivered to the plasma in the chamber 828 over a solid angle 874. This embodiment of the invention includes a beam expander 854. The beam expander 854 expands the size of the laser beam 816 to produce laser beam 858. The beam expander 854 directs the laser beam 858 to an optical lens 862. The combination of the beam expander 854 and the optical lens 862 produces a laser beam 866 that has a solid angle 874 that is larger than the solid angle 878 of the laser beam 824 of FIG. 8A. The larger solid angle 874 of FIG. 8B creates a smaller size plasma 884 than the size of the plasma in FIG. 8A. In this embodiment, the size of the plasma 884 in FIG. 8B along the X-axis and Y-axis is smaller than the size of the plasma 832 in FIG. 8A. In this manner, the light source 800 generates a brighter light 870 in FIG. 8B as compared with the light 836 in FIG. 8A.

An experiment was conducted in which a beam expander and optical lens were selected to allow operation of the light source as shown in FIGS. **8**A and **8**B. A Hamamatsu L2273 xenon bulb (with offices in Bridgewater, N.J.) was used as the sealed chamber **828**. The plasma was formed in the Hamamatsu L2273 xenon bulb using an SPI continuous-wave (CW) 100 W, 1090 nm fiber laser (sold by SPI Lasers PLC, with offices in Los Gatos, Calif.)). A continuous-wave laser emits radiation continuously or substantially continuously rather than in short bursts, as in a pulsed laser. The fiber laser **804** contains laser diodes which are used to pump a special doped fiber (within the fiber laser **804**, but not shown). The special doped fiber then lases to produce the output of the fiber laser **804**. The output of the fiber laser **804** then travels through the fiberoptic element **808** to the collimeter **812**. The collimeter **812** then outputs the laser beam **816**. The initial laser beam diameter (along the Y-Axis), corresponding to beam **816** in FIG. **8**A, was 5 mm. The laser beam **816** was a Gaussian beam with a 5 mm diameter measured to the

$$\frac{1}{e^2}$$

intensity level. The lens used in the experiment, corresponding to lens **820**, was 30 mm in diameter and had a focal length of 40 mm. This produced a solid angle of illumination of the plasma **832** of approximately 0.012 steradians. The length (along the X-Axis) of the plasma **832** produced in this arrangement was measured to be approximately 2 mm. The diameter of the plasma **832** (along the Y-Axis), was approximately 0.05 mm. The plasma **832** generated a high brightness ultraviolet light **836**.

Referring to FIG. **8**B, a **2**X beam expander was used as the beam expander **854**. The beam expander **854** expanded beam **816** from 5 mm in diameter (along the Y-Axis) to 10 mm in diameter, corresponding to beam **858**. Lens **862** in FIG. **8**B was the same as lens **820** in FIG. **8**A. The combination of the beam expander **854** and the optical lens **862** produced a laser beam **866** having a solid angle **874** of illumination of approximately 0.048 steradians. In this experiment, the length of the plasma (along the X-Axis) was measured to be approximately 1 mm and the diameter measured along the Y-Axis remained 0.05 mm. This reduction of plasma length by a factor of 2, due to a change in solid angle of a factor of 4, is expected if the intensity required to sustain the plasma at its boundary is a constant. A decrease in plasma length (along the X-Axis) by a factor of 2 (decrease from 2 mm in FIG. **8**A to 1 mm in FIG. **8**B) resulted in an approximate doubling of the brightness of the radiation emitted by the plasma for a specified laser beam input power because the power absorbed by the plasma is about the same, while the radiating area of the plasma was approximately halved (due to the decrease in length along the X-Axis). This experiment illustrated the ability to make the plasma smaller by increasing the solid angle of the illumination from the laser.

In general, larger solid angles of illumination can be achieved by increasing the laser beam diameter and/or decreasing the focal length of the objective lens. If reflective optics are used for illumination of the plasma, them the solid angle of illumination can become much larger than the experiment described above. For example, in some embodiments, the solid angle of illumination can be greater than about 2π (about 6.28) steradians when the plasma is surrounded by a deep, curved reflecting surface (e.g., a paraboloid or ellipsoid). Based on the concept that a constant intensity of light is required to maintain the plasma at its surface, in one embodiment (using the same bulb and laser power described in the experiment above) we calculated that a solid angle of 5 steradians would produce a plasma with its length equal to its diameter, producing a roughly spherical plasma.

FIG. **9** is a schematic diagram of a light source **900** for generating light. The light source **900** includes a sealed chamber **928** (e.g., a sealed quartz bulb, sealed sapphire tube) that contains an ionizable medium (not shown). The light source **900** also includes an energy source (not shown). The energy source provides energy to a region of the chamber **928** to produce a plasma **932**. The plasma **932** generates and emits a light **936** that originates from the plasma **932**. The light **936** generated by the light source **900** is directed through the walls **942** of the chamber **928** toward the reflective surface **944** of the reflector **940**. The reflective surface **944** reflects the light generated by the light source **900**.

The walls **942** of the chamber **928** allow electromagnetic energy (e.g., light) to pass through the walls **942**. The refractive index of the walls is a measure for how much the speed of the electromagnetic energy is reduced inside the walls **942**. Properties (e.g., the direction of propagation) of the light ray **936** generated by the plasma **932** that is emitted through the walls **942** of the chamber **928** are modified due to the refractive index of the walls **942**. If the walls **942** have a refractive index equal to that of the medium **975** internal to the chamber **928** (typically near 1.0), the light ray **936** passes through the walls **942** as light ray **936'**. If, however, the walls have a refractive index greater than that of the internal medium **975**, the light ray **936** passes through the walls as light ray **936"**.

The direction of the light represented by light ray **936** is altered as the light ray **936** enters the wall **942** having an index of refraction greater than the medium **975**. The light ray **936** is refracted such that the light ray **936** bends toward the normal to the wall **942**. The light source **900** has a medium **980** external to the chamber **928**. In this embodiment, the medium **980** has an index of refraction equal to the index of refraction of the medium **975** internal to the chamber **928**. As the light ray **936** passes out of the wall **942** into the medium **980** external to the chamber **928**, the light ray **936** is refracted such that the light ray (as light ray **936"**) bends away from the normal to the wall **942** when it exits the wall **942**. The light ray **936"** has been shifted to follow a route parallel to the route the light ray **936'** would have followed had the refractive index of the wall **942** been equal to the refractive indices of the internal medium **975** and external medium **980**.

This refractive shift of direction and the resulting position of the light ray **936** (and **936'** and **936"**) is described by Snell's Law of Refraction:

$$n_1 \sin \theta_1 = n_2 \sin \theta_2 \qquad \text{EQN. 1}$$

where, according to Snell's Law, n_1 is the index of refraction of the medium from which the light is coming, n_2 is the index of refraction of the medium into which the light is passing, θ_1 is the angle of incidence (relative to the normal) of the light approaching the boundary between the medium from which the light is coming and the medium into which the light is passing, and θ_2 is the angle of incidence (relative to the normal) of the light departing from the boundary between the medium from which the light is coming and the medium into which the light is passing (Hecht, Eugene, *Optics*, M. A., Addison-Wesley, 1998, p. 99-100, QC355.2.H42).

If the internal medium **975** does not have an index of refraction equal to that of the external medium **980**, the light ray **936** refracts to follow a route according to Snell's Law. The route the light ray **936** follows will diverge from the route

that light ray **936'** follows when the internal medium **975**, wall **942**, and external medium **980** do not have equal indices of refraction.

If the refractive index of the walls **942** of the chamber **928** is equal to the internal medium **975** and external medium **980**, the reflective surface **944** reflects light ray **936'** and produces a focused beam of light **956**. If, however, the refractive index of the walls **942** is greater than the internal medium **975** and external medium **980**, the reflective surface **944** reflects light ray **936"** and does not produce a focused beam (the light ray **936"** is dispersed producing light **960**). Accordingly, it is therefore desirable to have a light source that includes a chamber and a reflective surface with a shape configured to compensate for the effect of the refractive index of the walls of the chamber.

In alternative embodiments, the reflective surface **940** is configured to produce a collimated beam of light when the refractive index of the walls **942** of the chamber **928** is equal to that of the internal medium **975** and external medium **980**. However, if the refractive index of the walls **942** of the chamber **928** is greater than that of the internal medium **975** and external medium **980**, the reflective surface **940** would produce a non-collimated beam of light (the reflected light would be dispersed, similarly as described above).

In other embodiments, aspects of the invention are used to compensate for the effect of the refractive index of the walls **942** of the chamber **928** for laser energy directed in to the chamber **928**. Laser energy is directed toward the reflective surface **944** of the reflector **940**. The reflective surface **944** reflects the laser energy through the walls **942** of the chamber **928** toward the plasma **932** in the chamber **928** (similarly as described herein with respect to, for example, FIGS. **5** and **6**). If the walls **942** of the chamber **928** have a refractive index greater than that of the internal **975** and external **980** media, the direction of the laser energy is altered as the energy enters the walls **942**. In these embodiments, if the reflective surface **944** of the reflector **942** has a shape configured to compensate for the effect of the refractive index of the walls of the chamber, the laser energy entering the chamber **928** will not diverge. Rather, the laser energy entering the chamber **928** will be properly directed to the location of the plasma **932** in the chamber **928**, similarly as described herein. In this manner, principles of the invention can be applied to electromagnetic energy (e.g., laser energy) that is directed in to the chamber **928** and electromagnetic energy (e.g., light) produced by the plasma **932** that is directed out of the chamber **928**.

FIG. **10**A is a schematic block diagram of a light source **1000***a* for generating light. The light source **1000***a* includes a sealed chamber **1028***a* (e.g., a sealed quartz tube or sealed sapphire tube) that contains an ionizable medium (not shown). The light source **1000***a* also includes an energy source **1015***a*. In various embodiments, the energy source **1015***a* is a microwave energy source, AC arc source, DC arc source, or RF energy source. The energy source **1015***a* provides energy **1022***a* to a region **1030***a* of the chamber **1028***a* having the ionizable medium. The energy **1022***a* creates a plasma **1032***a*. The plasma **1032***a* generates and emits a light **1036***a* that originates from the plasma **1032***a*. The light source **1000***a* also includes a reflector **1040***a* that has a reflective surface **1044***a*. The reflective surface **1044***a* of the reflector **1040***a* has a shape that is configured to compensate for the refractive index of the walls **1042***a* of the chamber **1028***a*.

The walls **1042***a* of the chamber **1028***a* are substantially transparent to the light **1036***a* (or to predefined wavelengths of electromagnetic radiation in the light **1036***a*). The light **1036***a* (e.g., visible and/or ultraviolet light) generated by the light source **1000***a* is directed through the walls **1042***a* of the chamber **1028***a* toward the inner reflective surface **1044***a* of the reflector **1040***a*.

If the refractive index of the walls **1042***a* is not equal to that of the media internal and external (not shown) to the chamber **1028***a*, the position and direction of the light ray **1036***a* is changed by passing through the walls **1042***a* of the chamber **1028***a* unless the reflective surface **1044***a* has a shape that compensates for the refractive index of the walls **1042***a* of the chamber **1028***a*. The light **1036***a* would disperse after reflecting off the surface **1044***a* of the reflector **1040***a*. However, because the shape of the reflective surface **1044***a* of the reflector **1040***a* is configured to compensate for the refractive index of the walls **1042***a* of the chamber **1028***a*, the light **1036***a* does not disperse after reflecting off the surface **1044***a* of the reflector **1040***a*. In this embodiment, the light **1036***a* reflects off the surface **1044***a* of the reflector **1040***a* to produce a collimated beam of light.

FIG. **10**B is a schematic block diagram of a light source **1000***b* for generating light. The light source **1000***b* includes a sealed chamber **1028***b* (e.g., a sealed quartz tube or sealed sapphire tube) that contains an ionizable medium (not shown). The light source **1000***b* also includes an energy source **1015***b*. The energy source **1015***b* is electrically connected to electrodes **1029** located in the chamber **1028***b*. The energy source **1015***b* provides energy to the electrodes **1029** to generate an electrical discharge in the chamber **1028***b* (e.g., the region **1030***b* of the chamber **1028***b*) to ignite the ionizable medium and produce and sustain a plasma **1032***b*. The plasma **1032***b* generates and emits a light **1036***b* that originates from the plasma **1032***b*. The light source **1000***b* also includes a reflector **1040***b* that has a reflective surface **1044***b*. The reflective surface **1044***b* of the reflector **1040***b* has a shape that is configured to compensate for the refractive index of the walls **1042***b* of the chamber **1028***b*.

The walls **1042***b* of the chamber **1028***b* are substantially transparent to the light **1036***b* (or to predefined wavelengths of electromagnetic radiation in the light **1036***b*). The light **1036***b* (e.g., visible and/or ultraviolet light) generated by the light source **1000***b* is directed through the walls **1042***b* of the chamber **1028***b* toward the inner reflective surface **1044***b* of the reflector **1040***b*.

If the refractive index of the walls **1042***b* is not equal to that of media internal and external (not shown) to the chamber **1028***b*, the direction and position of the light ray **1036***b* is changed by passing through the walls **1042***b* of the chamber **1028***b* unless the reflective surface **1044***b* has a shape that compensates for the refractive index of the walls **1042***b* of the chamber **1028***b*. The light **1036***b* would disperse after reflecting off the surface **1044***b* of the reflector **1040***b*. However, because the shape of the reflective surface **1044***b* of the reflector **1040***b* is configured to compensate for the refractive index of the walls **1042***b* of the chamber **1028***b*, the light **1036***b* does not disperse after reflecting off the surface **1044***b* of the reflector **1040***b*. In this embodiment, the light **1036***b* reflects off the surface **1044***b* of the reflector **1040***b* to produce a collimated beam of light.

FIG. **11** is a schematic block diagram of a light source **1100** for generating light that embodies the invention. The light source **1100** includes a sealed chamber **1128** (e.g., a sealed, cylindrical sapphire bulb) that contains an ionizable medium (not shown). The light source **1100** provides energy to a region **1130** of the chamber **1128** having the ionizable medium which creates a plasma **1132**. The plasma **1132** generates and emits a light **1136** (e.g., a high brightness light) that originates from the plasma **1132**. The light source **1100** also includes at least one laser source **1104** that generates a laser

beam that is provided to the plasma **1132** located in the chamber **1128** to initiate and/or sustain the high brightness light **1136**.

In this embodiment, the laser source **1104** is a diode laser that outputs a laser beam **1120**. The optical lens **1120** is configured to focus the laser beam **1122** to produce a smaller diameter laser beam **1124**. The laser beam **1124** passes through an aperture or window **1172** located in the base **1124** of a curved reflective surface **1140** and is directed toward the chamber **1128**. The chamber **1128** is substantially transparent to the laser beam **1124**. The laser beam **1124** passes through the chamber **1128** and toward the region **1130** of the chamber **1128** where the plasma **1132** exists (or where it is desirable for the plasma **1132** to be generated by the laser **1124** and sustained).

In this embodiment, the ionizable medium is ignited by the laser beam **1124**. In alternative embodiments, the light source **1100** includes an ignition source (e.g., a pair of electrodes or a source of ultraviolet energy) that, for example, generates an electrical discharge in the chamber **1128** (e.g., in the region **1130** of the chamber **1128**) to ignite the ionizable medium. The laser source **1104** then provides laser energy to the ionized medium to sustain the plasma **1132** which generates the light **1136**. The chamber **1128** is substantially transparent to the light **1136** (or to predefined wavelengths of electromagnetic radiation in the light **1136**). The light **1136** (e.g., visible and/or ultraviolet light) generated by the light source **1100** is then directed out of the chamber **1128** toward an inner surface **1144** of the reflective surface **1140**.

The reflective surface **1144** of the reflector **1140** has a shape that compensates for the refractive index of the walls **1142** of the chamber **1128**. If the refractive index of the walls **1142** is not equal to that of the media internal and external (not shown) to the chamber **1128**, the speed of the light **1136** would be changed by passing through the walls **1142** of the chamber **1128** if the reflective surface **1144** does not have a shape that compensates for the refractive index of the walls **1142** of the chamber **1128** (similarly as described above with respect to FIG. **9**).

FIG. **12** is a cross-sectional view of a light source **1200** incorporating principles of the present invention. The light source **1200** includes a sealed cylindrical chamber **1228** that contains an ionizable medium. The light source **1200** also includes a reflector **1240**. The chamber **1228** protrudes through an opening **1272** in the reflector **1240**. The light source **1200** includes a support element **1274** (e.g. a bracket or attachment mechanism) attached to the reflector **1240**. The support element **1274** is also attached to a back end **1280** of the chamber **1228** and locates the chamber **1228** relative to the reflector **1240**. The light source **1200** includes electrodes **1229***a* and **1229***b* (collectively **1229**) located in the chamber **1228** that ignite the ionizable medium to produce a plasma **1232**. The electrodes **1229***a* and **1229***b* are spaced apart from each other along the Y-Axis with the plasma **1232** located between opposing ends of the electrodes **1229**.

The light source **1200** also includes an energy source that provides energy to the plasma **1232** to sustain and/or generate a light **1236** (e.g., a high brightness light) that is emitted from the plasma **1232**. The light **1236** is emitted through the walls **1242** of the chamber **1228** and directed toward a reflective surface **1244** of a reflector **1240**. The reflective surface **1244** reflects the light **1236**.

In some embodiments, the electrodes **1229** also are the energy source that provides energy to the plasma **1232** sustain and/or generate the light **1236**. In some embodiments, the energy source is a laser external to the chamber **1228** which provides laser energy to sustain and/or generate the light **1236** generated by the plasma **1232**, similarly as described herein with respect to other embodiments of the invention. For example, in one embodiment, the light source **1200** includes a laser source (e.g., the laser source **104** of FIG. **1**) and associated laser delivery components and optical components that provides laser energy to the plasma **1232** to and/or generate the light **1236**.

If the refractive index of the walls **1242** of the chamber is equal to that of the media internal and external (not shown) to the chamber **1228**, and the reflective surface **1244** of the reflector **1240** is a parabolic shape, the light **1236** reflected off the surface **1244** produces a collimated beam of light **1264**. If the refractive index of the walls **1242** of the chamber is equal to that of the media internal and external to the chamber **1228**, and the reflective surface **1244** of the reflector **1240** is an ellipsoidal shape, the light **1236** reflected off the surface **1244** produces a focused beam of light **1268**.

If the refractive index of the walls **1242** of the chamber **1228** is greater than that of the media internal and external to the chamber **1228**, the direction and position of the light ray **1236** is changed by passing through the walls **1242** of the chamber **1228** unless the reflective surface **1244** of the reflector **1240** has a shape that compensates for the refractive index of the walls **1242** of the chamber **1228**. The light ray **1236** would disperse after reflecting off the surface **1244** of the reflector **1240**. However, because the shape of the reflective surface **1244** of the reflector **1240** is configured to compensate for the refractive index of the walls **1242** of the chamber **1228**, the light **1236** does not disperse after reflecting off the surface **1244** of the reflector **1240**.

In this embodiment, the refractive index of the walls **1242** of the chamber **1228** is greater than that of the internal and external media and the reflective surface **1242** has a modified parabolic shape to compensate for the refractive index of the walls **1242**. The modified parabolic shape allows for the reflected light **1236** to produce the collimated beam of light **1264**. If a parabolic shape was used, the reflected light **1236** would not be collimated, rather the reflected light would be dispersed. A modified parabolic shape means that the shape is not a pure parabolic shape. Rather, the shape has been modified sufficiently to compensate for the aberrations that would otherwise be introduced into the reflected light **1236**. In some embodiments, the shape of the reflective surface **1242** is produced to reduce the error (e.g., dispersing of the reflected light **1236**) below a specified value.

In some embodiments, the shape of the reflective surface **1242** is expressed as a mathematical equation. In some embodiments, by expressing the shape of the reflective surface **1242** as a mathematical equation, it is easier to reproduce the shape during manufacturing. In some embodiments, parameters of the mathematical equation are selected to reduce error due to the refractive index of the walls **1242** of the chamber **1228** below a specified value.

The light source **1200** includes a seal assembly **1250** at the top of the chamber **1228**. The light source **1200** also includes a fitting **1260** at the bottom end of the chamber **1228**. The seal assembly **1250** seals the chamber **1228** containing the ionizable medium. In some embodiments, the seal assembly **1250** is brazed to the top end of the chamber **1228**. The seal assembly **1250** can include a plurality of metals united at high temperatures. The seal assembly **1250** can be, for example, a valve stem seal assembly, a face seal assembly, an anchor seal assembly, or a shaft seal assembly. In some embodiments the seal assembly **1250** is mechanically fastened to the top end of the chamber **1228**. In some embodiments, there are two seal assemblies **1250**, located at the two ends of the chamber **1228**.

The fitting **1260** allows for filling the chamber with, for example, the ionizable medium or other fluids and gases (e.g., an inert gas to facilitate ignition). The fitting **1260** also allows for controlling the pressure in the chamber **1228**. For example, a source of pressurized gas (not shown) and/or a relief valve (not shown) can be coupled to the fitting to allow for controlling pressure in the chamber **1228**. The fitting **1260** can be a valve that allows the ionizable medium to flow into the chamber **1228** through a gas inlet (not shown).

FIG. **13** is a graphical representation of a plot **1300** of the blur or dispersal produced by a reflective surface (e.g., the reflective surface **1244** of FIG. **12**) for a reflective surface having various shapes that are expressed as a mathematical expression having the form of EQN. 2. The blur or dispersal is the radius by which light rays reflected off of the reflective surface miss the desired remote focus point for the reflected light (e.g., the reflected light **1268** of FIG. **12** in the situation where the shape of the reflective surface **144** is a modified elliptical shape).

$$r(z) = \sqrt{\frac{a_1 z + a_2 z^2 + a_3 z^3 + \ldots + a_n z^n}{1 + b_1 z + b_2 z^2 + \ldots + b_m z^m}} \qquad \text{EQN. 2}$$

The X-axis **1304** of the plot **1300** is the position along the optical axis (in millimeter units) where a particular ray of light reflects from the reflective surface (e.g. the reflective surface **1244**) of FIG. **12**). The Y-Axis **1308** of the plot **1300** is the radius (i.e., blur or dispersal) in millimeter units. The cylindrical chamber has an outer diameter (along the X-axis) of 7.11 mm and an inner diameter of 4.06 mm. Curve **1312** shows the radius by which light rays reflected off of the location along the optical axis of the reflective surface miss the desired remote focus point for the reflected light, in which the reflective surface is expressed as a mathematical equation (EQN. 2) in which n=2 and m=0. Curve **1316** shows the radius by which light rays reflected off of the location along the optical axis of the reflective surface miss the desired remote focus point for the reflected light, in which the reflective surface is expressed as a mathematical equation (EQN. 2) in which n=3 and m=1. Curve **1320** shows the radius by which light rays reflected off of the location along the optical axis of the reflective surface miss the desired remote focus point for the reflected light, in which the reflective surface is expressed as a mathematical equation (EQN. 2) in which n=4 and m=4. Curve **1324** shows the radius by which light rays reflected off of the location along the optical axis of the reflective surface miss the desired remote focus point for the reflected light, in which the reflective surface is expressed as a mathematical equation (EQN. 2) in which n=5 and m=5.

In this embodiment, a ray tracing program was used to select (e.g., optimize) the parameters of the mathematical equation so the shape of the reflective surface compensates for the refractive index of the walls of the chamber containing the ionizable medium. Referring to FIG. **13** and EQN 2, the parameters are the order and coefficients of the mathematical equation. In this embodiment, a ray tracing program was used to determine the paths of the light rays emitted through the walls of a chamber in which the walls had a refractive index greater than that of the media internal and external to the chamber, and reflected off a reflective surface with a shape described according to EQN. 2 with selected order and coefficients. In this embodiment, the ray tracing program graphs the radii by which light rays originating at points along the optical path of the reflective surface miss the desired remote focus point.

In this embodiment, the order and coefficients of the rational polynomial (EQN. 2) are adjusted until the radii by which light rays miss the remote focus point are within a threshold level of error. In other embodiments, the order and/or coefficients are adjusted until the full width at half maximum (FWHM) of the light rays emitted by the plasma converge within a specified radius of the remote focus point. In one embodiment, the specified radius is 25 μm.

In other embodiments, the ray tracing program graphs the radii by which light rays originating at points along the optical path of the reflective surface miss a target collimated area at a specified distance from the vertex of the reflective surface. The parameters of the mathematical equation expressing the shape of the reflective surface are adjusted until the radii by which light rays miss the target collimated area are within a threshold level of error. In other embodiments, the order and/or coefficients are adjusted until the full width at half maximum (FWHM) of the light rays emitted by the plasma is located within a specified radii of a target collimated area at a specified distance from the vertex of the reflective surface.

In alternative embodiments of the invention, alternative forms of mathematical equations can be used to describe or express the shape of the reflective surface of the reflector (e.g., reflective surface **1244** of reflector **1240** of FIG. **12**). The principles of the present invention are equally applicable to light sources that have different chamber shapes and/or reflective surface shapes. For example, in some embodiments, the reflective surface of the reflector has a shape that is a modified parabolic, elliptical, spherical or aspherical shape that is used to compensate for the refractive index of the walls of the chamber.

FIG. **14** is a schematic block diagram of a portion of a light source **1400**, according to an illustrative embodiment of the invention. The light source **1400** includes a sealed chamber **1428** that includes an ionizable medium. The light source **1400** also includes a first reflector **1440** that has a reflective surface **1444**. The reflective surface **1444** can have, for example, a parabolic shape, elliptical shape, curved shape, spherical shape or aspherical shape. In this embodiment, the light source **1400** has an ignition source (not shown) that ignites an ionizable gas (e.g., mercury or xenon) in a region **1430** within the chamber **1428** to produce a plasma **1432**.

In some embodiments, the reflective surface **1444** can be a reflective inner or outer surface. In some embodiments, a coating or film is located on the inside or outside of the chamber to produce the reflective surface **1444**.

A laser source (not shown) provides a laser beam **1416** that is directed toward a surface **1424** of a second reflector **1412**. The second reflector **1412** reflects the laser beam **1420** toward the reflective surface **1444** of the first reflector **1440**. The reflective surface **1444** reflects the laser beam **1420** and directs the laser beam toward the plasma **1432**. The refractive index of the walls **1442** of the chamber **1430** affects the laser beam **1416** as it passes through the walls **1442** in to the chamber **1430** similarly as light passing through the walls **1442** of the chamber **1430** is affected as described previously herein. If the shape of the reflective surface **1444** is not selected to compensate for the refractive index, the laser energy disperses or fails to focus after entering the chamber **1430** and is not focused on the plasma **1432**. Accordingly, in this embodiment, the reflective surface **1444** of the reflector has a shape that is selected to compensate for the refractive index of the walls **1442** of the chamber **1430** (similarly as described previously herein with respect to, for example, FIGS. **12** and **13**).

The laser beam **1416** provides energy to the plasma **1432** to sustain and/or generate a high brightness light **1436** that is

emitted from the plasma **1432** in the region **1430** of the chamber **1428**. The high brightness light **1436** emitted by the plasma **1432** is directed toward the reflective surface **1444** of the first reflector **1440**. At least a portion of the high brightness light **1436** is reflected by the reflective surface **1444** of the first reflector **1440** and directed toward the second reflector **1412**. Because the reflective surface **1444** of the reflector has a shape that is selected to compensate for the refractive index of the walls **1442** of the chamber **1430**, the light **1436** reflected by the reflective surface **1444** produces the desired collimated beam of light **1436** that is directed towards the second reflector **1412**.

The second reflector **1412** is substantially transparent to the high brightness light **1436** (e.g., at least one or more wavelengths of ultraviolet light). In this manner, the high brightness light **1436** passes through the second reflector **1412** and is directed to, for example, a metrology tool (not shown). In some embodiments, the light **1436** is directed to a tool used for photoresist exposure, conducting ellipsometry (e.g., UV or visible), thin film measurements.

In some embodiments, the high brightness light **1436** is first directed towards or through a window or additional optical elements before it is directed to a tool.

FIG. **15**A is a cross-sectional view of a light source **1500** incorporating principles of the present invention. FIG. **15**B is a sectional view (in the Y-Z plane) of the light source **1500** of FIG. **15**A. The light source **1500** includes a housing **1510** that houses various elements of the light source **1500**. The housing **1510** includes a sealed chamber **1522** and has an output **1580** which includes an optical element **1520** (e.g., a quartz disk-shaped element) through which light can exit the housing **1510**. The light source **1500** includes a sealed chamber **1528** that contains an ionizable medium (not shown). The light source **1500** also includes a reflector **1540**. The light source **1500** also includes a blocker **1550**. The light source **1500** includes electrodes **1529***a* and **1529***b* (collectively **1529**) located in part in the chamber **1528** that ignite the ionizable medium to produce a plasma (not shown). The electrodes **1529***a* and **1529***b* are spaced apart from each other (along the Y-Axis) with the plasma located between opposing ends of the electrodes **1529**.

In some embodiments, the electrodes **1529** also are the energy source that provides energy to the plasma to sustain and/or generate the light. In this embodiment, the energy source is a laser (not shown) external to the chamber **1528** which provides laser energy **1524** (e.g., infrared light) to sustain and/or generate the light **1530** (e.g., a high brightness light including ultraviolet and/or visible wavelengths) generated by the plasma, similarly as described herein with respect to other embodiments of the invention. The laser energy **1524** enters the chamber **1528** on a first side **1594** of the chamber **1528**. In some embodiments, the light source **1500** also includes associated laser delivery components and optical components that provide laser energy to the plasma to sustain and/or generate the light **1530**. In this embodiment, the light source **1500** includes an optical element **1560** to delivery the laser energy **1524** from the laser to the plasma to sustain and/or generate the light **1530** that is emitted from the plasma.

The light **1530** is emitted through the walls of the chamber **1528**. Some of the light **1530** emitted through the walls of the chamber **1528** propagates toward a reflective surface **1532** of the reflector **1540**. The reflective surface **1532** reflects the light through the optical element **1520** in the housing **1510** to a focal point **1525** of the reflector **1540**. Some of the light **1536** propagates toward the optical element **1560**. The optical element **1560** absorbs the light **1536**, and the light **1536** is not reflected through the optical element **1520**. As a result, the light reflected to the focal point **1525** is the light **1530** emitted from the plasma that is reflected by the reflector **1540** along paths shown as the regions **1540** and **1541**. Consequently, the light source **1500** includes dark region **1542** due to the light that is radiated toward the optical element **1560** and therefore not reflected to the focal point **1525** of the reflectors **1540**.

Some of the laser energy delivered to the plasma is not absorbed by the plasma. The laser energy that is not absorbed (laser energy **1556**) continues to propagate along the positive X-Axis direction towards the end of the housing **1510**. The blocker **1550** is suspended on a second side **1596** of the chamber **1528**. The blocker **1550** is suspended along a path **1562** the laser energy **1556** travels. The blocker **1550** is coupled to an arm **1555** that suspends the blocker **1550** in the chamber **1522** of the light source **1500**. The blocker **1550** blocks the laser energy **1556** to prevent it from propagating toward the end of the housing and through an output **1580** of the light source **1500**.

In this embodiment, the blocker **1550** is a mirror that deflects the laser energy **1556** that is not absorbed by the plasma away from the opening **1520** and towards the walls of the housing **1510** (illustrated as laser energy **1584**). The blocker **1550** reflects the laser energy **1556** toward a wall **1588** of the housing **1510**. The housing **1510** absorbs part of the reflected laser energy **1584** and reflects part of the laser energy **1584** toward the opposite wall **1592** of the housing **1510**. A portion of the laser energy **1584** is absorbed each time it impacts a wall (e.g., wall **1588** or **1592**) of the housing **1510**. Repetitive impact of the laser energy **1584** with the walls of the housing **1510** causes the laser energy **1584** to be substantially (or entirely) absorbed by the walls of the housing **1510**. The blocker **1550** prevents laser energy (e.g., infrared wavelengths of electromagnetic energy) from exiting the housing **1510** through the opening **1580** by deflecting the laser energy **1556** using the blocker **1550**. As a result, only the light produced by the plasma (e.g., ultraviolet and/or visible wavelengths) exits the housing **1510** through the opening **1580**.

The blocker **1550** is suspended in the housing **1510** in a location where the blocker **1550** would not deflect light **1530** reflected by the reflector **1540** through the opening **1580** to the focal point **1525**. The blocker **1550** does not deflect the light **1530** because the blocker **1550** is located in the dark region **1542**. In addition, the arm **1555** coupled to the blocker **1550** also does not deflect the light **1530** because the arm is positioned in the housing **1510** in a location that is aligned with the electrode **1529***a* along the positive X-Axis direction relative to the electrode **1529***a*. In this manner, the blocker **1550** and arm **1555** are positioned to minimize their blocking of the light **1530**.

The dark region **1542** tapers as the region **1542** approaches the opening **1580**. To prevent the blocker **1550** from deflecting light reflected by the reflector **1540**, the laser energy blocker **1550** is positioned at a location along the X-Axis where the cross-sectional area (in the Y-Z plane) of the blocker **1550** is equal to or less than the cross sectional area (in the Y-Z plane) of the dark region **1542**. As a result, the smaller the cross-sectional area (in the Y-Z plane) of the blocker **1550**, the closer along the X-Axis the blocker **1550** can be placed to the opening **1580**.

In some embodiments, the laser energy blocker **1550** is made of any material that reflects the laser energy **1556**. In some embodiments, the blocker **1550** is configured to reflect the laser energy **1556** back toward the ionized medium in the chamber **1528**. In some embodiments, the blocker **1550** is a coating on a portion of the chamber **1528**. In some embodiments, the blocker is a coating on the optical element **1520** at the opening **1580**.

In some embodiments, the laser energy blocker **1550** is made of a material that absorbs, rather than reflects, the laser energy **1556** (e.g., graphite). In some embodiments in which the blocker absorbs the laser energy **1556**, the blocker **1550** heats up because it absorbs the laser energy **1556**.

In some embodiments, the blocker **1550** is cooled. The blocker **1550** can include one or more coolant channels in the blocker **1550**. The light source can also include a coolant supply coupled to the coolant channel which provides coolant to the coolant channel to cool the blocker **1550**. In some embodiments, the light source **1500** includes a gas source (e.g., a pressurized gas canister or gas blower) to blow gas (e.g., air, nitrogen, or any other gas) on the blocker **1550** to cool the blocker **1550**. In some embodiments, the light source **1500** includes one or more tubes (e.g., copper tubes) that wind around the laser energy blocker **1550**. The light source **1500** flows a coolant (e.g., water) through the tubes to cool the blocker **1550**.

By way of illustration, an experiment was conducted to generate ultraviolet light using a light source, according to an illustrative embodiment of the invention. A specially constructed quartz bulb with a volume of 1 cm^3 was used as the chamber of the light source (e.g., the chamber **128** of the light source **100** of FIG. **1**) for experiments using xenon as the ionizable medium in the chamber. The bulb was constructed so that the chamber formed within the quartz bulb was in communication with a pressure controlled source of xenon gas. FIG. **16** is a graphical representation of brightness as a function of the pressure in a chamber of a light source, using a light source according to the invention. FIG. **16** illustrates a plot **1600** of the brightness of a high brightness light produced by a plasma located in the chamber as a function of the pressure in the chamber.

The laser source used in the experiment was a 1.09 micron, 200 watt CW laser and it was focused with a numerical aperture of 0.25. The resulting plasma shape was typically an ellipsoid of 0.17 mm diameter and 0.22 mm length. The Y-Axis **1612** of the plot **1600** is the brightness in watts/mm^2 steradian (sr). The X-Axis **1616** of the plot **1600** is the fill pressure of Xenon in the chamber. Curve **1604** is the brightness of the high brightness light (between about 260 and about 400 nm) produced by a plasma that was generated. Curve **1608** is the brightness of the high brightness light (between about 260 and about 390 nm) produced by the plasma. For both curves (**1604** and **1608**), the brightness of the light increased with increasing fill temperatures. Curve **1604** shows a brightness of about 1 watts/mm^2 sr at about 11 atmospheres which increased to about 8 watts/mm^2 sr at about 51 atmospheres. Curve **1608** shows a brightness of about 1 watts/mm^2 sr at about 11 atmospheres which increased to about 7.4 watts/mm^2 sr at about 51 atmospheres. An advantage of operating the light source with increasing pressures is that a higher brightness light can be produced with higher chamber fill pressures.

To start a laser-driven light source ("LDLS"), the absorption of the laser light by the gas within the chamber (e.g., chamber **128** of FIG. **1**) is strong enough to provide sufficient energy to the gas to form a dense plasma. However, during operation, the same absorption that was used to start the LDLS can be too strong to maintain the brightness of the light because the light can be prematurely absorbed before the light is near the laser focus. These criteria often come into conflict and can create an imbalance in the absorption needed to start a LDLS and the absorption needed to maintain or operate the LDLS. When starting a LDLS, the plasma density is generally low and hence, other things being equal, the absorption is weak. This can cause most of the laser light to leave the plasma region without being absorbed. Such a situation can lead to an inability to sustain the plasma by the laser alone. One solution to this problem is to tune the laser to a wavelength near a strong absorption line of the excited working gas within the chamber (e.g., chamber **128** of FIG. **1**). However, after ignition this same strong absorption can become a liability because the laser energy can be absorbed too easily before the laser power reaches the core of the plasma near the laser focus. This latter condition can lead to a low brightness light source radiating from a large volume. One solution to this problem is to tune the laser wavelength away from the strong absorption line until a condition is reached where the maximum radiance is achieved. The optimum operating state can be a balance between small plasma size and sufficiently high power absorption. This scenario leads to a light source and a method of operation where the laser is first tuned to a wavelength nearer the absorption line and then tuned to another wavelength further away from the strong absorption line for optimum operation.

A light source can use an excited gas that has at least one strong absorption line at an infrared wavelength to produce a high brightness light. For example, referring to FIG. **1**, the light source **100** includes a chamber **128** that has a gas disposed therein. The gas can comprise a noble gas, for example, xenon, argon, krypton, or neon. An ignition source **140** can be used to excite the gas within the chamber **128**. The ignition source **140** can be, for example, two electrodes. The excited gas has electrons at an energy level that is higher than the energy of the gas at its ground state, or lowest energy level. The excited gas can be in a metastable state, for example, at an energy that is higher than the ground state energy of the gas but that lasts for an extended period of time (e.g., about 30 seconds to about one minute). The specific energy level of the excited state can depend on the type of gas that is within the chamber **128**. The excited gas has at least one strong absorption line at an infrared wavelength, for example at about 980 nm, 895 nm, **882**, nm, or 823 nm. The light source **100** also includes at least one laser **104** for providing energy to the excited gas at a wavelength near a strong absorption line of the excited gas within the chamber **128** to produce a high brightness light **136**. The gas within the chamber **128** can be absorptive near the wavelength of the laser **104**.

Operation of the light source to balance the conflicting criteria for starting and maintaining the high brightness light can comprise tuning a laser (e.g., laser **104** of FIG. **1**) to a first wavelength to produce a high brightness light and then tuning the laser to a second wavelength to maintain the high brightness light. The first wavelength can be at an energy level that is capable of forming and sustaining a dense plasma, thus creating a high brightness light, and the second wavelength can be at an energy level such that the laser energy is not substantially absorbed by the plasma prior to the laser reaching its focus point.

For example, a gas within a chamber (e.g., chamber **128** of FIG. **1**) can be excited with an ignition source. In some embodiments, a drive laser at a power below 1000 W can be used to ignite the plasma. In other embodiments, a drive laser at a power above or below 1000 W can be used to ignite the plasma. To ignite the plasma and/or the excited gas within the chamber, a LDLS can be operated near the critical point of the gas within the chamber. The critical point is the pressure above which a gas does not have separate liquid and gaseous phases. For example, the critical point of xenon is at a temperature of about 290 Kelvin and at a pressure of about 5.84 MPa (about 847 psi). In some embodiments, other gases are used, for example neon, argon or krypton can be used. In other

embodiments, combinations of gases can be used, for example, a mixture of neon and xenon.

After the gas within the chamber is ignited, a laser (e.g., laser **104** of FIG. **1**) can be tuned to a first wavelength to provide energy to the excited gas in the chamber to produce a high brightness light. The excited gas within the chamber absorbs energy near the first wavelength. After the high brightness light is initiated, the laser can be tuned to a second wavelength to provide energy to the excited gas within the chamber to maintain the high brightness light. The second wavelength can either be less than or greater than the first wavelength. The excited gas within the chamber absorbs energy near the second wavelength.

The gas within the chamber can be, for example, a noble gas and can have atoms with electrons in at least one excited atomic state. Noble gases such as xenon, argon, krypton or neon can be transparent in the visible and near infrared range of the spectrum, but this is not the case when the gas is at high temperature or in the presence of excited molecular states, such as excimers. Any condition of the gas which results in population of high energy electronic states, such as the lowest excited state (e.g., the excited state closest in energy to the ground state) in xenon, will also result in the appearance of strong absorption lines due to transitions between the relatively high energy state and any of the several higher level states which lie at a level of order 1 eV above it.

FIG. **17** shows a simplified diagram of the relevant energy levels in xenon. Each of the horizontal bars represents an energy level which can be occupied by an electron in the xenon atom or molecule (dimer). When an electron moves between two levels, a photon can be emitted or absorbed, e.g. a 980 nm photon. The groups of close together horizontal bars on the "Molecular Levels," or left, side of the diagram show that the close association of xenon atoms in the molecule leads to broadening of the energy levels of the atom into bands. Transitions between these bands then allow for a broadened range of absorption, which explains the enhanced absorption even at wavelengths some distance (e.g., several nanometers) away from the exact atomic transition of 980.0 nm.

Still referring to FIG. **17**, an example of such an absorption line is the one at about 980 nm and about 882 nm in xenon which is a transition from the metastable atomic 5p5(2P°3/2) 6s level to the 5p5(2P°3/2)6p level. The molecules have a corresponding set of transitions yielding a broadened 980 nm or 882 nm line. Such lines are also observed in emission due to the reverse transition.

Other examples of suitable absorption lines in xenon are, for example, 881.69 nm, 823.1 nm, and 895.2 nm. Table 1 shows emission and absorption measurements and average temperature of the cathode spot of a xenon arc in the stationary mode. As shown, xenon in the plasma form has multiple absorbance lines in the IR spectrum. As shown by the high percentage of energy that can be absorbed at multiple wavelengths, 881.69 nm, 823.1 nm, and 895.2 nm, as well as 980 nm, are good wavelengths that can be used within a LDLS to initiate a high brightness light.

TABLE 1

(as measured by Lothar Klein (April 1968/Vol. 7, No. 4/APPLIED OPTICS 677)).

	λ(Å)	$N_{\lambda 0}$ (W cm^{-1} sr^{-1} μ^{-1})	Absorption (%)	$\overline{T}$(° K)
Xe_I	8232	5,900	89	10,020
cont	8500	1,615	23	10,750

TABLE 1-continued

(as measured by Lothar Klein (April 1968/Vol. 7, No. 4/APPLIED OPTICS 677)).

	λ(Å)	$N_{\lambda 0}$ (W cm^{-1} sr^{-1} μ^{-1})	Absorption (%)	$\overline{T}$(° K)
Xe_I	8819 (peak)	4,390	97	9,160
	(wing)	4,960	90	10,500
Xe_I	9800	3,400	89	9,820
Xe_I	9923	3,340	90	9,840
Xe_I	10528	892	28.5	9,950
Xe_I	11742	906	42.5	9,400
Xe_I	12623	640	37	9,920
cont	13100	213	17	8,870
Xe_I	14733	575	55	10,060
Xe_I	15418	317	37	9,840

FIG. **18** shows simplified spectral diagrams of the relevant energy levels in neon, argon, krypton and xenon. Each horizontal bar represents an energy level which can be occupied by an electron in the neon, argon, krypton, or xenon atom or molecule (dimer). The transition between these energy levels in the noble gases, allow for a broadened range of absorption. Therefore, these noble gases can be used in a LDLS to start and maintain a high brightness light in accordance with the systems and methods described herein.

Tuning the laser several nanometer, as can be needed to adjust the wavelength of the laser from a first wavelength to initiate a high brightness light to a second wavelength to sustain the high brightness light, can be accomplished by adjusting the operating temperature of the laser. FIG. **19** shows a graph of laser output wavelength versus temperature for xenon, which can be used as a tuning mechanism for a laser of a LDLS. The laser bandwidth is approximately 5 nm and the xenon absorption lines **1905** are shown, for example, at about 980 nm. For example, the wavelength of a typical diode laser operating near the 980 nm absorption line of xenon can be tuned approximately 0.4 nm per degree Celsius of temperature change. The specific temperature or range of temperatures depends on the particular laser. The effect is that thermal expansion of the laser material causes the length of the laser cavity to increase with temperature, thereby shifting the resonant wavelength of the cavity to a longer wavelength. The temperature of the laser can be set by a thermoelectric cooling device (e.g., a Peltier cooling device) and quickly tuned by varying the current to the thermoelectric cooler ("TEC"). Electronic fan speed control of a cooling fan is another option for laser temperature control. Also, electric heating of the laser can be used to control the temperature. Temperature of the laser can be monitored by a sensor and controlled by a feedback circuit driving the cooling and/or heating means.

The second wavelength that the laser of the LDLS is tuned to can be approximately 1 nm to approximately 10 nm displaced from the first wavelength. In some embodiments, the second wavelength is less than the first wavelength and in some embodiments the second wavelength is greater than the first wavelength. For example, to start a LDLS, the laser can be tuned to a wavelength of about 980 nm using xenon gas within the chamber of the light source. After a high brightness light is initiated, the laser can be tuned to a wavelength of about 975 nm to maintain the high brightness light. In some embodiments, the second wavelength is about 985 nm.

Several different methods can be used to start and maintain the light source. In some embodiments, a high voltage pulse is applied to the ignition electrodes in the lamp. A DC current of about 1 to about 5 Amps can initially flow through the

resulting plasma from an ignition power supply. The current can decay exponentially with a time constant of about 2 milliseconds. During this time the resulting plasma is illuminated by a focused laser beam at a wavelength of, for example, about 980 nm where the laser temperature is about 35 (see, e.g., FIG. **19**, which shows that when the laser temperature is at about 35° C. the laser will emit energy at a wavelength of about 980 nm). The laser plasma is then sustained after the DC current decays to zero. A plasma light sensor can be used to determine that the plasma is sustained by the laser and then the laser is cooled to a temperature about 25° C. and the resulting wavelength of about 975 nm, or a desired predetermined operating wavelength, which can be determined by active feedback on the properties of the laser driven light source, such as radiance (e.g., brightness) (see, e.g., FIG. **19**, which shows that when the laser temperature is at about 25° C. the laser will emit energy at a wavelength of about 975 nm). This method can rely on direct electron heating by the laser, and therefore, can require sufficient electron density to couple the laser power. This method can be used for a LDLS that operates at about 60 W.

In some embodiments, a different starting scheme can be used, which is suitable for low laser powers, for example, laser powers between about 10 W and about 50 W. For example, a laser wavelength can be deliberately tuned to rely on direct absorption of the laser power by the neutral gas, which is absorptive at or near the laser wavelength. However, since laser photon energy is low (approximately 1.26 eV for 980 nm), compared to atomic excited states (e.g., the lowest xenon excited state is about 8.31 eV), this method cannot not rely on absorption from the ground state. In addition, multi-photon effects can require high power and usually a pulsed laser.

Since the starting scheme cannot rely on absorption from the ground state, the starting scheme can instead rely on absorption from an excited state. However, this requires that at least one excited state of the gas within a chamber of a LDLS be populated with electrons. Some excited states have long life times, for example, the lifetime of metastable xenon is approximately 40 seconds. Due to the long lifetime, the metastable states tend to be preferentially populated. When choosing absorption lines of a gas near the laser wavelength, it can be preferred to choose those with lower level on a metastable state. In addition, at high pressures (e.g., pressures greater than about 0.1 bar), pressure and molecular effects broaden the absorption lines.

A certain level of DC arc current can be required to start the LDLS, but less DC arc current can be required for a laser at higher power and operating closer to an absorption line of the gas within the chamber of the light source. A peak DC current can be varied by changing the resistance of a current limiting resistor after a booster capacitor. Threshold current is the laser driving current above which the plasma can be started when well aligned. Laser output power is proportional to laser current. Higher laser driving current can also make the laser center wavelength closer to an atomic line, for example, closer to 980 nm.

FIG. **20** is a graph **2000** of power **2100** versus pressure **2200** for argon **2300** and xenon **2400**. See Keefer, "Laser-Sustained Plasmas," *Laser-Induced Plasmas and Applications*, published by Marcel Dekker, edited by Radziemski et al., 1989, pp. 169-206, at page **191**. The graph **2000** shows the minimum power (about 30 W, with minimum power occurring below 20 atm.) required to sustain plasmas in argon and xenon as well as the maximum pressure that can be obtained. In addition, at points **2500** and **2600**, the prior art laser sustained plasma can not be operated at any higher pressure when the laser sustained plasma is operated according to the prior art. For instance, the highest pressure that can be achieved for xenon **2400** is about 21 atm and the highest pressure that can be achieved for argon **2300** is about 27 atm. At these pressures, the prior art laser sustain plasma requires about 50 W of power to sustain a xenon plasma and about 70 W of power to sustain an argon plasma. Operating at higher pressure is beneficial because plasmas for the purpose of light generation can be obtained with higher brightness while lower powers are required when operated according to the present invention.

To obtain lower powers the LDLS can be operated at a wavelength of about 980 nm. When the LDLS is operated at 980 nm, a higher maximum pressure is observed than the maximum pressures shown in FIG. **20**. In addition, a maximum pressure, similar to that shown in FIG. **20**, has not been achieved when a LDLS is operated at 980 nm. Therefore, when the LDLS is operated at the 980 nm wavelength, the LDLS can be operated at substantially higher pressures than prior art laser sustained plasmas. For example, the LDLS can be operated at pressures greater than about 30 atm. When the LDLS is operated at these high pressures and at a wavelength of about 980 nm, the power needed to sustain the plasma drops dramatically. For example, when the LDLS is operated at a pressure greater than about 30 atm, the power need to sustain the plasma can be as low as about 10 W.

FIG. **21** shows different sized laser beams **2105**, **2110**, **2115** focused on a small plasma **2120**. Each laser beam **2105**, **2110**, **2115** has a different numerical aperture ("NA"), which is a measure of the half angle of a cone of light. The NA is defined to be the sine of the half angle of the cone of light. For example, laser beam **2105** has a smaller NA than laser beam **2110**, which has a smaller NA than laser beam **2115**. As shown in FIG. **21**, a laser beam with a larger NA, for example, laser beam **2115**, can have an intensity that converges more quickly on plasma **2120** (e.g., it can converge more quickly to the laser focal point) than a laser beam with a smaller NA, for example, laser beam **2105**. In addition, laser beams with a larger NA can rapidly decrease in intensity as the laser beam leaves the focus point and thus will have less of an effect on the high brightness light than a laser beam with a smaller NA. For example, laser beam **2105'** corresponds to laser beam **2105**, laser beam **2110'** corresponds to laser beam **2110**, and laser beam **2115'** corresponds to laser beam **2115**. As shown by FIG. **21**, the intensity of laser beam **2115** decreases more rapidly (**2115'**) after the focus point than laser beam **2105** due to the larger NA of beam **2115**, which also results in less interference of the laser beam with the high brightness light.

Referring to FIG. **1**, a light source **100** can utilize the NA property of a beam of light to produce a high brightness light. The light source **100** can include a chamber **128** having one or more walls. A gas can be disposed within the chamber **128**. At least one laser **104** can provide a converging beam of energy focused on the gas within the chamber **128** to produce a plasma that generates a light emitted through the walls of the chamber **128**. The NA of the converging beam of energy can be between about 0.1 or about 0.8, or between about 0.4 to about 0.6, or about 0.5.

In some embodiments, the laser **104** is a diode laser. A diode laser can include optical elements and can emit a converging beam of energy without any other optical elements present in the optical system. In some embodiments, an optical element is positioned within a path of the laser beam, for example, referring to FIG. **1**, an optical element can be positioned between the laser **104** and the region **130** where the laser beam energy is provided. The optical element can increase the NA of the beam of energy from the laser. The

optical element can be, for example, a lens or a mirror. The lens can be, for example, an aspheric lens. In FIG. **1**, the combination of beam expander **118** and lens **120** serves to increase the NA of the beam. For example, a NA of 0.5 can be achieved when the illuminated diameter of lens **120** is equal to its focal length multiplied by 1.15. These conditions correspond to a beam half angle of 30 degrees.

A laser beam having a large numerical aperture can be beneficial because a laser beam with a large NA can converge to obtain a high intensity in a small focal zone while having an intensity which rapidly decreases outside the small focal zone. This high intensity can sustain the plasma. In some embodiments, it is beneficial to have the plasma be in a sphere. A laser beam with a large NA can help to maintain the plasma in a spherical shape because of the convergence and focus of the laser beam on the plasma. In addition, a laser beam with a large NA can increase the spectral radiance or brightness of the emitted light because a high intensity light is emitted from a small, spherical plasma. In some embodiments it is beneficial to have the plasma be in any other geometric shape, including but not limited to an oval. In some embodiments, an aspheric lens for laser focus is used to achieve high NA and small plasma spot size.

FIG. **22** is a graph **2200** showing spectral radiance on the y-axis and NA on the x-axis. As shown on FIG. **22**, spectral radiance of the plasma increases with an increase in numerical aperture of the beam. For example, for a laser tuned to approximately 975 nm, as NA increases up to 0.55, the spectral radiance also increases. For example, when the NA is about 0.4, the spectral radiance is about 15 mW/nm/mm2/sr. When the NA is increased to about 0.5, the spectral radiance increases to about 17 mW/nm/mm2/sr. Therefore, when the NA was increased by about 0.1, the spectral radiance increased by about 2 mW/nm/mm2/sr. A laser beam having an NA of about 0.5 can produce a higher brightness light than a laser beam having a smaller NA.

FIG. **23**A shows a bulb **2300** having a chamber **2305** that can be used in a LDLS. To assure reliable ignition of a LDLS, a high degree of alignment can be achieved between the focus of the laser and a point **2315** within the bulb **2300** which lies on a line between the tips of the electrodes **2310**, **2311** used for ignition and is approximately equidistant from the tips of the electrodes **2310**, **2311**. This line is important because the initial arc used for ignition of the laser plasma follows close to this line. In addition to this requirement, there can also be a need for simple replacement of a bulb at the point of use of the LDLS without complex alignment procedures. In the case of prior art aligned bulbs, the purpose of pre-alignment is to provide alignment of the light source zone with an optical system. That goal can be met in the LDLS by alignment of the laser beam, not the bulb, which assures alignment of the light emitting zone during operation and which alignment remains fixed independent of the replacement of a bulb. Therefore the purpose achieved by pre-aligning the bulb in the LDLS is primarily that of LDLS ignition, not optical alignment of the light emitting zone. In some embodiments, the lamps or bulbs can be pre-aligned. In one embodiment, the electrodes are positioned within a tolerance of about 0.01 to about 0.8 mm, and more specifically that the electrodes are within a tolerance of about 0.1 to about 0.4 mm. In some embodiments, the center of the plasma should be within about 0.001 to 0.02 mm of the center of the gap between the electrodes. With these tight tolerances, it can be beneficial to have the lamps/bulbs pre-aligned so that the end user does not have to align the lamps/bulbs upon replacement.

A bulb for a light source can be pre-aligned so that an operator of the light source does not have to align the bulb prior to use. The bulb **2300** having two electrode **2310**, **2311** can be coupled to a mounting base **2320**, as shown in FIG. **23**B. The bulb **2300** can be coupled to the mounting base **2320** by a dog-point set screw, a nail, a screw, or a magnet.

The bulb and mounting based structure can be inserted into a camera assembly, for example, camera assembly **2400** of FIG. **24**. The camera assembly includes at least one camera, for example, cameras **2405**, **2410** and a display screen (not shown). The camera assembly **2400** can include more than two cameras. In some embodiments, a master pin **2415** is placed in an alignment base **2420**. The alignment base **2420** and master pin **2415** can be placed into the camera assembly **2400** for use as a bulb centering target. After the camera assembly **2400** is initially set up with the alignment base **2420** and master pin **2415**, the bulb **2300** and mounting base **2320** of FIG. **23**B can be inserted into the camera assembly **2400** in place of the alignment base **2420** and master pin **2415**.

The two cameras **2405**, **2410** can be arranged to look at the bulb from two orthogonal directions to allow a high accuracy (25 to 50 microns) when the bulb is positioned correctly with respect to the mounting base. The mounting base can be made of metal or any other suitable material.

FIG. **25** shows a display screen **2500** that can be displayed from at least one of the cameras (e.g., cameras **2405**, **2410** of FIG. **24**) when a bulb (e.g., bulb **2300** of FIG. **23**B) is mounted in the camera assembly (e.g., camera assembly **2400** of FIG. **24**). The display screen can show two electrodes **2505**, **2510** that are within a bulb. The arrows **2515**, **2520** can be used to help position the electrodes **2505**, **2510** and thus the bulb in a mounting base. The center point **2525** can be positioned equidistant from the tips of the electrodes **2505**, **2510** when the tip of the electrodes **2505**, **2510** is aligned with the arrows **2515**, **2520**, respectively. The arrows **2515**, **2520** and the center grid **2530** can comprise a positioning grid with which the electrodes are aligned. If the bulb assembly is not positioned correctly within the mounting base (and thus the electrodes do not align properly in the display screen **2500**), the position of the bulb within the mounting base can be adjusted such that a region of the bulb between the two electrode (e.g., center point **2525**) aligns with a positioning grid on the display screen **2500**. The position of the bulb can be adjusted either vertically or horizontally within the mounting base to align the electrodes **2505**, **2510** with the positioning grid. The position of the bulb can be adjusted by a manipulator that is positioned above the bulb when the bulb is in the camera assembly. The manipulator can be capable of moving the bulb vertically and horizontally. For example, the manipulator can be a robotized arm that can clamp to the bulb. The robotized arm can be moved, for example, by a computer program.

In some embodiments, the method of pre-aligning the bulb includes toggling between the two cameras (e.g., cameras **2405**, **2410** of FIG. **24**) to align the bulb. The display screen **2500** and a predetermined grid can change based on what camera is being displayed. In some embodiments, the images from the cameras are displayed side-by-side on the display screen. In some embodiments, the images from the two cameras are displayed in different colors, for example, one camera can display an image in red while another camera can display an image in green.

The positioning grid on the display screen can be predetermined such that when the center area **2525** of the bulb between the two electrodes **2505**, **2510** aligns with the positioning grid on the display screen, the region **2525** is aligned relative to a focal point of a laser when the bulb and mounting base are inserted into a light source. When the bulb has been aligned, the bulb can be secured to the mounting base. In

some embodiments, cement is cured to fix the bulb position permanently in the base. In some embodiments any other type of securing or fastening agent/material can be used to secure the bulb position permanently in the base. This pre-aligned bulb can be used by inserting the pre-aligned bulb into a light source. The user does not have to align the bulb in any way. The user can simply insert the pre-aligned bulb into a LDLS without having to make any adjustments for alignment.

The mounting base can guarantee the alignment of the bulb when the bulb is placed into the LDLS. In one embodiment the base has one or more alignment features to guarantee the alignment of the bulb when it is placed into the LDLS. In another embodiment, the base has one or more mating features, for example, apertures, grooves, channels, or protuberances, to guarantee the alignment of the bulb when it is placed into the LDLS.

A feedback loop can be installed in the LDLS to decrease the amount of noise within the LDLS. Noise can occur due to gas convection within the bulb or outside the bulb. Noise can also occur due to mode changes within the laser, and especially within laser diodes or due to mechanical vibration generated within or outside the LDLS. One solution to decrease the amount of noise is to install a feedback loop. Another solution to decrease the amount of noise is to tilt the laser to 90 degrees from a horizontal plane of the plasma. Another solution is to precisely stabilize the temperature of the laser, for example by sensing the laser temperature and using a feedback control system to maintain a constant temperature. Such a temperature stabilization system can utilize a thermoelectric cooler controlled by the feedback system. In some embodiments, the amount of noise increases as the laser is tilted closer to horizontal.

FIG. **26** shows a flow chart **2600** for a method of decreasing noise within a light source. A sample of light that is emitted from the light source can be collected (step **2610**). The sample of light that is collected from the light source can be collected from a beam splitter. The beam splitter can be a glass beam splitter or a bifurcated fiber bundle. The sample of light can be collected using a photodiode. The photodiode can be within a casing of the light source or the photodiode can be external to the casing of the light source. In some embodiments, two samples of light are collected. One sample can be collected by a first photodiode within the casing of the light source and one sample can be collected by a second photodiode external to the casing of the light source. The sample of light can be converted to an electrical signal (step **2620**). The electrical signal can be compared to a reference signal to obtain an error signal (step **2630**). The error signal can be the difference between the reference signal and the electrical signal. The error signal can be processed to obtain a control signal (step **2640**). In some embodiments, the error signal is processed by a control amplifier. The control amplifier can be capable of outputting a control signal proportional to at least one of a time integral, a time derivative, or a magnitude of the error signal. A magnitude of a laser of the light source can be set based on the control signal to decrease noise within the light source (step **2650**). Steps **2610-2650** can be repeated until a desired amount of noise is reached. Once the desired amount of noise is reached, steps **2610-2650** can continue to be repeated to maintain the amount of noise within the system. Steps **2610-2650** can be carried out by analog or digital electronics in a manner whereby the steps are not discrete, but rather form a continuous process.

FIG. **27** shows a schematic illustration of a functional block diagram **2700** of an embodiment of a feedback loop. The circuit can consist of one or more modules **2705**, **2706**. In one embodiment, the circuit consists of two modules, for example, a lamp controller module **2705** and a lamp house module **2706**. In one embodiment, universal AC **2710** is put into an AC to DC converter **2715**. In one embodiment the AC power input is about 200 W. The AC to DC converter **2715** converts AC power to DC power. In some embodiments, the DC power is provided to a Laser Drive **2720**. The laser drive **2720** can then operate the laser **2725**, for example an IPG diode laser. In some embodiments, the laser **2725** is operated at about 975 nm and in other embodiments the laser is **2725** operated at about 980 nm. The laser **2725** can be coupled to a fiber **2730**, for example a fiber optic cable, which transmits the laser beam to a bulb **2735**. In some embodiments the bulb **2735** is a quartz bulb that is greater than 180 nm.

In some embodiments, output light from the LDLS is stabilized so that the noise over a bandwidth of greater than 1 KHz is substantially reduced and long term drift is prevented. In some embodiments, a sample of the output beam is obtained by a beam splitter, or other means, so that the sample of light is taken effectively from the same aperture and the same NA or solid angle as the output light is taken from.

As an example, a glass beam splitter can be placed in the beam. A few percent of the output power can be deflected from the beam, but it retains all the angular and spatial character of the actual output beam. Then, this sample is converted to electrical current by a detector and compared to a preset or programmable reference level. A signal representing the difference between the reference and actual detector current, e.g., an error signal, can then be processed by a control amplifier having, for example, the capability to produce an output control signal proportional to any or all of the time integral, the time derivative, and the magnitude of the error signal. The output of this control amplifier then sets the magnitude of the current flowing in the laser diode. The variation in laser output produced in this way can cancel out any fluctuation or drift in the output beam power.

In some embodiments, one or more modules are connected to a tool **2740**. The tool **2740** can be any device that can utilize a LDLS, for example, a high pressure/performance liquid chromatography machine ("HPLC"). In some embodiments, the tool **2740** contains a photodiode **2745** that converts the light emitted from the LDLS into either current or voltage. In some embodiments, the photodiode **2745** sends a signal **2746** to a control board **2750** that contains a closed loop control. This signal **2746** can then be compared with a reference signal and the resulting error signal can be used to adjust the LDLS so that the light monitored by the photodiode **2745** remains at a constant value over time.

In some embodiments, water is used to cool the lamp control module **2705**. In some embodiments, purge gas and/or room air are used to cool the lamp house module **2706**. In some embodiments, other coolants are used to cool the lamp control module **2705** or the lamp house module **2706**. In some embodiments the laser module is cooled by a thermoelectric cooler.

The lamp house module **2706** can also include an igniter module **2755** that can be used to excite a gas within a chamber of the light source. The lamp house module **2706** can include a photodiode **2760** and a photodiode conditioning circuit **2765**. The photodiode **2760** can provide a current signal proportional to the intensity of the high brightness light. Photodiode conditioning circuit **2765** can provide a robust, buffered electrical signal suitable for transmitting the photodiode signal to remotely located electronic control circuits. The photodiode signal can be used to establish that the lamp is ignited and operating properly and it can be used in an internal feedback loop as described herein.

FIG. **28** shows a control system block diagram **2800** that employs two feedback loops. For example, one feedback loop can use an external photodiode (see the bolded boxes of FIG. **28**) and another feedback loop can use an internal photodiode (see the bolded, dashed boxes of FIG. **28**). In some embodiments, the external diode feedback loop results in a 0.3% pk-pk noise level. In some embodiments, the external photodiode feedback loop is a closed loop control ("CLC") system with feedback from a sample of the output beam, sampled with the same aperture and NA as the output beam.

The control system block diagram **2800** employing two feedback loops includes three modules, a lamp controller module **2805**, a lamp house module **2806**, and a fixture module **2807**. Within the lamp controller module **2805** an internal reference **2810** is provided to a comparison tool **2815**. The comparison tool can be a summing junction. The lamp controller module **2805** also includes a power supply **2820** to the laser that can obtain a signal from an external feedback PI controller **2825**, an internal feedback PI controller **2830** or a fixed set point **2835** depending on the circuit **2840**. For example, as shown in FIG. **28**, the power supply **2820** is receiving a signal from the internal feedback PI controller **2830**.

The power supply **2820** sends power to a bulb **2845** within the lamp house module **2806**. Light **2850** is emitted from the bulb **2845**. A portion of the light **2850** can be used for the internal feedback loop. The internal feedback loop within the lamp house module **2806** includes optics **2855**, a detector **2860**, and a pre-amplified calibration, noise and power feedback **2865**. The internal feedback loop can be send a signal to the comparison tool **2815** to be compared to the internal reference **2810** to obtain an error signal.

The light **2850** emitted from the bulb **2845** can be sent to optics **2870**. The light **2875** emitted from the optics **2870** can be the high brightness light that is used in a variety of applications, for example, an HPLC device. A portion of the light **2870** can be used for the external feedback loop. The internal feedback loop within the fixture module **2807** includes optics **2880**, a detector **2885**, and a pre-amplified calibration, noise and power feedback **2890**. The external feedback loop can send a signal to the comparison tool **2815** to be compared to the internal reference **2810** or the internal feedback loop signal to obtain an error signal.

In some embodiments, the feedback system can correct the laser drive current to maintain a constant intensity of light as measured in a sample of the output beam sampled from the same spatial region of the emitting area and from the same solid angle used in the application. In some embodiments, a beam splitter is used to obtain such a sample and deliver the sample of light to a photodetector, which generates the feedback signal.

FIG. **29** shows an optical system **2900** of a light source with a noise measurement system and feedback loop. The optical system includes a collimator and focusing lens **2905** that focuses a beam of light **2910** from a laser (not shown) on a chamber **2915** of a bulb **2920**. The light **2910** is emitted from the plasma **2925** within the chamber **2915** toward an off axis parabolic mirror ("OAP") **2930**. The light continues though an iris **2935**, for example a 10 mm iris, and an optical filter **2940** to a second OAP **2945**. The light **2910** passes through an aperture **2950**, for example a 200 μm aperture. A beam sampler **2955** can be used to deflect a portion of the light **2910** to a feedback detector photodiode **2960** to be used as a sample in the feedback loop. The remaining light **2910** continues to an output beam detector photodiode **2965**. The optical system **2900** simulates an application of the light source and allows measurement of the noise level achieved in the light reaching the output beam detector photodiode **2965**, which light and noise level are representative of the light entering a users optical system, such as an HPLC detector.

The use of a feedback loop or closed loop control ("CLC") can decrease the amount of noise within a light source. Table 2 shows noise measurement data with and without a CLC circuit. Averaged for many scans, the Pk-Pk/Mean in a 20 second period is 0.74% without using a CLC system, and 0.47% with a CLC system. Even for a 200 second period the noise is 0.93% without CLC, and 0.46% with a CLC.

TABLE 2

Pk-Pk/Mean noise for LDLS with or without CLC

Pk-Pk/Mean (%)	LDLS without CLC	LDLS with CLC
200 ms	0.39	0.33
2 s	0.61	0.44
20 s	0.74	0.47
200 s	0.93	0.46

As shown in FIG. **29** the plasma **2925** is imaged by the second OAP **2945** reflector onto a 200 μm aperture at the front end of a lens tube. A quartz lens (1" diameter, 25 mm focusing length, Edmund Optics, NT48-293) is mounted in the same lens tube and forming a 1:1 image of the aperture **2950** to a noise measurement photodiode **2965** (Thorlabs DET25K) through a beam sampler **2955** (fused silica, 0.5° Wedged, Thorlabs, BSF10-A1). The beam reflected by the beam sampler **2955** is focused to a second photodiode **2960** (Thorlabs DET25K) which is the detector for a closed-loop control system. There is no aperture in front of the photodiodes so the photodiodes were under-filled by the image of the 200 μm aperture.

In some embodiments, the LDLS noise is caused by the laser mode hopping. The output spectrum of a semiconductor laser employed for a LDLS has a discrete set of frequencies i.e., modes. Small fluctuation of the current running through the laser diode or laser temperature can cause the laser diode to switch to the different set of modes. The instantaneous switching between modes is called mode hopping. The mode hopping can cause rapid changes in the laser output spectrum and output power. As the plasma emission intensity depends on these parameters, the mode hopping also causes changes of the LDLS radiance and therefore can compromise the LDLS stability. This effect is undesirable as high stability is required for LDLS used for absorption detectors in chromatography applications.

To eliminate the negative impact of the mode hopping on the LDLS stability, the current of the semiconductor laser can be modulated at a frequency of a few tens of kHz. The amplitude of modulation is about 10-20% of the total laser current. The modulation of the current can cause intentional switching of the laser diode between different sets of modes. If this switching occurred slowly it can be observed and measured as noise by instruments having a certain bandwidth, or a predetermined frequency band. However, a rapid modulation of the laser current, at a frequency greater than the predetermined frequency band, and corresponding rapid mode hopping, can have effects which are averaged out when measured within the predetermined frequency band. As an example of an application requiring low noise, the measurement in the chromatography application is relatively slow and takes about 0.1-2.0 seconds and therefore the frequency band of interest when measuring noise in that case is primarily about 0.5 Hz to 10 Hz and secondarily about 0.1 Hz to 100 Hz to allow for

digital sampling of the data. The frequency of the modulation imposed on the laser current can then be a frequency higher than about 100 Hz and preferably about 10 kHz to 100 kHz. Multiple oscillations of the laser current can occur during the period of the measurement. The contribution of different modes averaged during the period of the measurement leads to effective reduction of noise in chromatographic measurements.

Some applications, for which the LDLS can be used, for example a spectrometer, have light detectors that are sensitive in a specific wavelength range. A LDLS can output a high brightness light that is about 20 times as bright in the most sensitive wavelength range of the detector as previous light sources. This dramatic increase in spectral radiance can saturate the detector of the application, which can result in the application not being able to take advantage of light outside the detector's most sensitive wavelength range, even though the LDLS can have its greatest practical advantage outside the detector's most sensitive range, e.g., in the deep ultraviolet range. In other words, the high radiance in a less useful part of the wavelength spectrum can result in an inability to use the high radiance in the useful part of the spectrum.

One solution to this problem is to use a light source that has a chamber with a gas disposed therein, an ignition source of exciting the gas and at least one laser for providing energy to the excited gas within the chamber to produce a high brightness light. The high brightness light has a first spectrum. The light source also includes an optical element disposed within the path of the high brightness light to modify the first spectrum of the high brightness light to a second spectrum. The optical element can be, for example, a prism, a weak lens, a strong lens, or a dichroic filter. The second spectrum can have a relatively greater intensity of light in the ultraviolet range than the first spectrum. The first spectrum can have a relatively greater intensity of light in the visible range than the second spectrum. The optical element can increase the intensity of the light at certain wavelengths relative to the intensity of light at certain other wavelengths.

FIG. **30** shows a schematic illustration of a weak lens method **3000** for modifying a spectrum of a high brightness light. High brightness light from a LDLS **3005** is sent via a delivery fiber **3010** to a filter **3015**. A weak lens **3020**, which can focus certain, pre-determined wavelengths because the refractive index of the lens material is dependent on wavelength modifies the spectrum of the high brightness light. The lens can be made of glass or fused quartz or other materials whose refractive index is wavelength dependent. The spectrum is modified because the chromatic aberration of the weak lens causes some wavelengths of the light to focus at the aperture of the application **3050**, while other wavelengths fail to focus there and are lost from the system. The high brightness light with a modified spectrum then goes to two OAPs **3025**, **3030** and then to a beam splitter **3035**. The beam splitter **3035** can send a portion of the high brightness light with the modified spectrum to a feedback fiber **3040**. This sample of the light can be sent to a photodiode and PID controller **3045**. The PID controller **3045** can control the current to the LDLS **3005** to maintain a constant output of high brightness light. The remainder of the high brightness light can be sent to an application **3050**, for example a spectrometer. The light sent to the application can have a modified spectrum from the original high brightness light emitted from the LDLS **3005** due to the light passing through the weak lens **3020**.

FIG. **31** shows a schematic illustration of a strong lens method **3100** for modifying a spectrum of a high brightness light. Similar to the weak lens method of FIG. **30**, high brightness light from a LDLS **3005** is sent via a delivery fiber **3010** to a filter **3015**. The high brightness light then goes to an OAP **3025**. A strong lens **3027** exhibiting chromatic aberration, as for the weak lens above, is positioned between the OAP **3025** and a beam splitter **3035**. The strong lens **3027** can focus certain, pre-determined wavelengths to modify the spectrum of the high brightness light. After the high brightness light is modified, the light can be sent to an application **3050**, for example a spectrometer. The light sent to the application can have a modified spectrum from the original high brightness light emitted from the LDLS **3005** due to the light passing through the strong lens **3020**. The beam splitter **3035** can send a portion of the high brightness light with the modified spectrum to a feedback fiber **3040**. This sample of the light can be sent to a photodiode and PID controller **3045**. The PID controller **3045** can control the current to the LDLS **3005** to adjust the current to maintain a constant output of high brightness light.

FIG. **32** shows a schematic illustration of a filter method **3200** for modifying a spectrum of a high brightness light. High brightness light from a LDLS **3005** is sent via a delivery fiber **3010** to a filter **3015**. The high brightness light then goes to two OAPs **3025**, **3030**. A reflective filter **3205** is positioned between OAP **3030** and application **3050**. The reflective filter **3205** can filter certain, pre-determined wavelengths to modify the spectrum of the high brightness lights. The light sent to the application **3050** can have a modified spectrum from the original high brightness light emitted from the LDLS **3005** due to the light passing through the reflective filter **3205**. For example, the reflective filter can use many layers of materials having differing refractive indexes and be designated so that shorter wavelengths are efficiently reflected whereas longer wavelengths are at least partially transmitted or absorbed by the filter. A transmissive filter can also be applied.

FIG. **33** shows a schematic illustration of a prism method **3300** for modifying a spectrum of a high brightness light. High brightness light from a LDLS **3005** is sent via a delivery fiber **3010** to a filter **3015**. The high brightness light then goes to two OAPs **3025**, **3030**. A prism **3305**, for example a 20° quartz prism, is positioned between the output OAP **3030** and the application **3050**. The prism disperses the light according to wavelength and produces an elongated focus spot that contains a short wavelength enhanced spectrum at one end and a long wavelength enhanced spectrum at the other end. The light sent to the application **3050** can have a modified spectrum from the original high brightness light emitted from the LDLS **3005** due to the light passing through the prison **3305**. For example, if the position of the elongated focus spot is adjusted so that the aperture leading into the application **3050** receives light from one end of the elongated focus spot the spectrum of light in the application will be primarily short wavelength light and long wavelengths will be suppressed.

In some embodiments, it is desirable to minimize the laser power in the light source output to reduce the amount of safety procedures that are required to operate the LDLS. FIG. **34** is a schematic illustration of a laser-driven light source **3400**. To minimize the laser power in the light source output, the laser beam **3410** is positioned to contact a mirror **3430**. The mirror **3430** re-directs the laser beam at a 90° angle to the plasma **3420**. Light output from the laser-driven light source **3400** is emitted from the system horizontally. In some embodiments, an absorbing structure or coating is placed on the inside of the enclosure **3470** where the residual laser beams (e.g., laser beams that are unabsorbed by the plasma) will strike after transiting the bulb.

In some embodiments the mirror **3430** selectively reflects the laser wavelength. The mirror **3430** can be used to deliver

the laser beam **3410** to the plasma **3420** as well as reduce the back reflection of light from the plasma to the laser and/or the laser delivery fiber **3440**. For example, the mirror can be a dichroic mirror positioned within the path of the laser such that the laser energy is directed toward the plasma. The dichroic mirror can selectively reflect at least one wavelength of light such that the light generated by the plasma is not substantially reflected toward the at least one laser. The dichroic mirror can comprise glass with multiple layers of dielectric optical coatings. The optical coating can reflect energy at one wavelength and transmit energy at a different wavelength. Therefore, the dichroic mirror can reflect the wavelength energy of the laser to the plasma **3420**. The high brightness light that is produced by the plasma can have a different wavelength than the laser energy. The high brightness light can pass through the mirror **3430** instead of being reflected back to the laser.

In some embodiments, the mirror **3430** helps keep the fiber end and/or the connector from being damaged. In other embodiments, the mirror is used to change the direction of the laser beam **3410**.

A LDLS has numerous applications. For example, a LDLS can be used to replace D2 lamps, xenon arc lamps, and mercury arc lamps. In addition, a LDLS can be used for HPLC, UV/VIS spectroscopy/spectrophotometry, and endoscopy. Furthermore, a LDLS can be used in a microscope illuminator for protein absorption at 280 nm and DNA at 260 nm. A LDLS can also be used for general illumination in a microscope and for fluorescence excitation in a fluorescence based instrument or microscope. A LDLS can also be used in a confocal microscope.

A LDLS can also be used for circular dichroism ("CD") spectroscopy. A LDLS can provide brighter light at shorter wavelengths with lower input power, as compared to high wattage xenon arc lamps currently used. In addition, a LDLS can be used in atomic absorption spectroscopy to provide a brighter light source than arc lamps currently used. In addition, a LDLS can be used spectrometers or spectrographs to provide lower noise than arc lamps currently used.

In some embodiments, a LDLS can be used with an absorption cell. A system using a LDLS with an absorption cell has the advantage that a very small cell can be used while still maintaining a high rate of photon flux through the cell due to the very high radiance, high brightness, of the LDLS. Thus, smaller volumes of material are needed to carry out an analysis in the cell, and for a given time resolution, lower flow rates are required. FIG. **35** is a schematic illustration of an absorption cell **3500**. An absorption cell has a vessel **3505** with transparent walls **3506**. The vessel **3505** can hold a gas or a liquid. The absorptivity or absorption spectrum of the gas or liquid can be measured. The absorption cell **3500** can contain one or more optical windows, **3510**. In some embodiments the optical windows **3510** can let in light from a light source **3520**. In some embodiments the light source **3520** is a LDLS. One of the windows **3510** can be illuminated by light **3530** from the LDLS which is delivered to the window **3510** by an optical system (not shown). The optical system can include a combination of lenses, mirrors, gratings and other optical elements. The system can be a focusing mirror to focus the LDLS light into the absorption cell **3500** while avoiding the chromatic aberration which can occur if a lens is used. The light **3530** can be detected by a detector **3540**. The absorption cell **3500** can be used as the sample cell **3680** in FIG. **36**

In some embodiments, a LDLS can be used with a UV detector. FIG. **36** is a schematic illustration of a UV detector **3600**. The UV detector **3600** contains a light source **3610**. In some embodiments the light source **3610** is a LDLS. Light **3615** from the light source **3610** follows the path of the arrows in FIG. **36**. For example, the light **3615** emitted from the light source **3610**, contacts a first curved mirror **3620** and then a second curved mirror **3630**. The light **3615** then contacts a diffraction grating **3640** and returns to the second curved mirror **3630**. The light **3615** then contacts a first plane mirror **3650** and then a second plane mirror **3660**. The light **3615** passes through a first lens **3670**. In some embodiments, the first lens **3670** is a quartz lens. The light **3615** then enters a sample cell **3680** and passes through a second lens **3690**. In some embodiments, the second lens **3690** is a quartz lens. The light **3615** then enters a photo cell **3695**.

In some embodiments, a LDLS can be used with a diode array detector. FIG. **37** is a schematic illustration of a diode array detector **3700**, according to an illustrative embodiment of the invention. In some embodiments, the diode array detector contains a light source **3710**. In some embodiments, the light source **3710** is a LDLS. In some embodiments the light **3715** from the light source **3710** passes through an achromatic lens system **3720** and then a shutter **3730**. The light **3715** then enters a flow cell **3740** and then entrance aperture **3745**. The light **3715** exits the entrance aperture **3745** and contacts a holographic grating **3750**. The holographic grating **3750** directs the light **3770** into a photo diode array **3760**.

In some embodiments, a LDLS can be used with a fluorescence detector. FIG. **38** is a schematic illustration of a fluorescence detector **3800**, according to an illustrative embodiment of the invention. In some embodiments the fluorescence detector contains a light source **3810**. In one embodiment the light source **3810** is a LDLS. The light **3815** from the light source **3810**, passes through a first lens **3820**. In some embodiments, the first lens **3820** is a quartz lens. The light **3815** then passes through a first window **3840** and enters chamber **3830**. Some of the light **3815** exits the chamber **3830** through a second window **3845**. In some embodiments the first and second windows **3840**, **3845** are made of quartz. Some of the light **3815** exits through a transparent wall of the chamber **3830** and contacts a second lens **3850**. The lens **3850** focuses the light **3815**. The light **3815** then enters photo cell **3860**.

Variations, modifications, and other implementations of what is described herein will occur to those of ordinary skill in the art without departing from the spirit and the scope of the invention as claimed. Accordingly, the invention is to be defined not by the preceding illustrative description but instead by the spirit and scope of the following claims.

What is claimed is:

1. A plasma-based light source, comprising:

a pressurized chamber configured to contain an ionized gas at a pressure greater than 10 atmospheres during operation;

a substantially continuous laser for providing a beam of laser energy within a wavelength range of up to about 2000 nm to the ionized gas within the chamber to maintain a plasma, the beam configured to maintain the plasma in an elongated form having a plasma length that is greater than that of a plasma diameter; and

a tool optically coupled to the chamber for collecting light generated by the plasma, the generated light having wavelengths of at least than 50 nm.

2. The light source of claim **1**, wherein the plasma a length is at least 10 times that of the plasma diameter.

3. The light source of claim **1**, wherein the plasma length is at least 20 times that of the plasma diameter.

4. The light source of claim **1**, wherein the plasma length is at least 40 times that of the plasma diameter.

5. The light source of claim 1, wherein the light generated by the plasma is collected along an axis defined by the laser beam.

6. The light source of claim 1, wherein the laser comprises a continuous wave (CW) laser.

7. The light source of claim 1, wherein the gas is ignited to generate the ionized gas without an ignition electrode and laser energy from a laser source is used to ionize or excite the gas.

8. A plasma-based light source, comprising:

a pressurized chamber configured to contain an ionized gas at a pressure greater than 10 atmospheres during operation;

a substantially continuous laser for generating a beam of laser energy within a wavelength range of up to about 2000 nm;

an optical system coupled to the laser configured to maintain a plasma in an elongated form having a plasma length that is greater than that of a plasma diameter; and

a tool optically coupled to the chamber for collecting light generated by the plasma, the generated light having wavelengths of at least 50 nm.

9. The light source of claim 8, wherein the optical system is configured to sustain the plasma such that the plasma length is at least 10 times that of the plasma diameter.

10. The light source of claim 8, wherein the optical system is configured to sustain the plasma such that the plasma length is at least 20 times that of the plasma diameter.

11. The light source of claim 8, wherein the optical system is configured to sustain the plasma such that the plasma length is at least 40 times that of the plasma diameter.

12. The light source of claim 8, wherein the light generated by the plasma is collected along an axis defined by the laser beam.

13. The light source of claim 8, wherein the laser source comprises a continuous wave (CW) laser.

14. The light source of claim 8, wherein the gas is ignited to generate the ionized gas without an ignition electrode and laser energy from a laser source is used to ionize or excite the gas.

15. A method for producing light, comprising:

ionizing a gas within a pressurized chamber having a pressure greater than 10 atmospheres during operation; and

providing a beam of substantially continuous laser energy within a wavelength range of up to about 2000 nm to the ionized gas within the chamber to maintain a plasma within the chamber,

wherein the laser beam is configured to maintain the plasma in an elongated form having a plasma length that is greater than that of a plasma diameter, the produced light having wavelengths of at least than 50 nm.

16. The method of claim 15, wherein the plasma length is at least 10 times that of the plasma diameter.

17. The method of claim 15, wherein the plasma length is at least 20 times that of the plasma diameter.

18. The method of claim 15, wherein the plasma length is at least 40 times that of the plasma diameter.

19. The method of claim 15, wherein the light generated by the plasma is collected along an axis defined by the laser beam.

20. The method of claim 15, wherein the laser comprises a continuous wave (CW) laser.

21. The method of claim 15, further comprising an optical system configured to maintain the plasma in the elongated form.

22. The plasma-based light source of claim 1 wherein the pressure is greater than 30 atmospheres during operation.

23. The plasma-based light source of claim 8 wherein the pressure is greater than 30 atmospheres during operation.

24. The method of claim 15 wherein the pressure is greater than 30 atmospheres during operation.

25. The method of claim 15 wherein the plasma length is not more than about 2 mm.

* * * * *