US009186098B2

(12) **United States Patent**
Lee et al.

(10) **Patent No.: US 9,186,098 B2**
(45) **Date of Patent: Nov. 17, 2015**

(54) **MEDICAL DEVICE INSERTERS AND PROCESSES OF INSERTING AND USING MEDICAL DEVICES**

(75) Inventors: **Daniel H. Lee**, Burlingame, CA (US); **Michael Love**, Pleasanton, CA (US); **Louis G Pace**, San Carlos, CA (US); **Philip Yee**, San Francisco, CA (US)

(73) Assignee: **ABBOTT DIABETES CARE INC.**, Alameda, CA (US)

(*) Notice: Subject to any disclaimer, the term of this patent is extended or adjusted under 35 U.S.C. 154(b) by 122 days.

(21) Appl. No.: **13/071,497**

(22) Filed: **Mar. 24, 2011**

(65) **Prior Publication Data**

US 2012/0010642 A1 Jan. 12, 2012

Related U.S. Application Data

(60) Provisional application No. 61/317,243, filed on Mar. 24, 2010, provisional application No. 61/345,562, filed on May 17, 2010, provisional application No. 61/361,374, filed on Jul. 2, 2010, provisional application No. 61/411,262, filed on Nov. 8, 2010.

(51) **Int. Cl.**

A61B 5/15	(2006.01)
A61B 5/145	(2006.01)
A61M 5/158	(2006.01)

(Continued)

(52) **U.S. Cl.**

CPC ***A61B 5/1411*** (2013.01); ***A61B 5/14503*** (2013.01); ***A61B 5/14532*** (2013.01); ***A61B 5/14542*** (2013.01); ***A61B 5/14546*** (2013.01); ***A61B 5/150022*** (2013.01); ***A61B 5/15107*** (2013.01); ***A61B 5/15186*** (2013.01); ***A61B 5/150282*** (2013.01); ***A61B 5/150396*** (2013.01); ***A61B 5/150419*** (2013.01); ***A61B 5/150427*** (2013.01); ***A61B 5/150511*** (2013.01); ***A61B 5/6865*** (2013.01); ***A61M 5/158*** (2013.01); *A61B 5/0002* (2013.01); *A61B 5/01* (2013.01);

(Continued)

(58) **Field of Classification Search**

CPC .. A61B 5/14503; A61B 5/1411; A61M 5/158
USPC 600/309, 341, 583; 604/57, 59; 606/181–183

See application file for complete search history.

(56) **References Cited**

U.S. PATENT DOCUMENTS

3,123,790	A	3/1964	Tyler
3,260,656	A	7/1966	Ross, Jr.

(Continued)

FOREIGN PATENT DOCUMENTS

CN	1202872	5/2005
DE	4401400	7/1995

(Continued)

OTHER PUBLICATIONS

Aussedat, B., et al., "A User-Friendly Method for Calibrating a Subcutaneous Glucose Sensor-Based Hypoglycemic Alarm", *Biosensors & Bioelectronics*, vol. 12, No. 11, 1997, pp. 1061-1071.

(Continued)

Primary Examiner — Thomas McEvoy
(74) *Attorney, Agent, or Firm* — One LLP

(57) **ABSTRACT**

An apparatus for insertion of a medical device in the skin of a subject is provided, as well as methods of inserting medical devices.

18 Claims, 69 Drawing Sheets

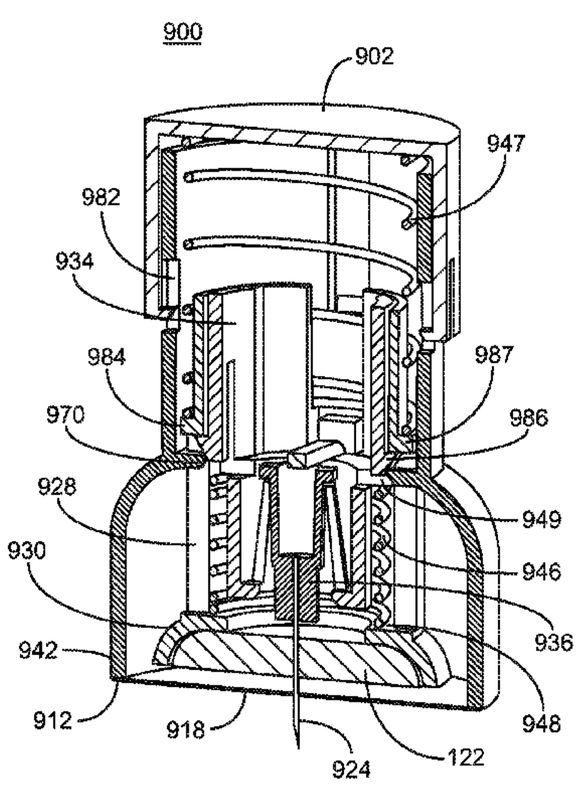

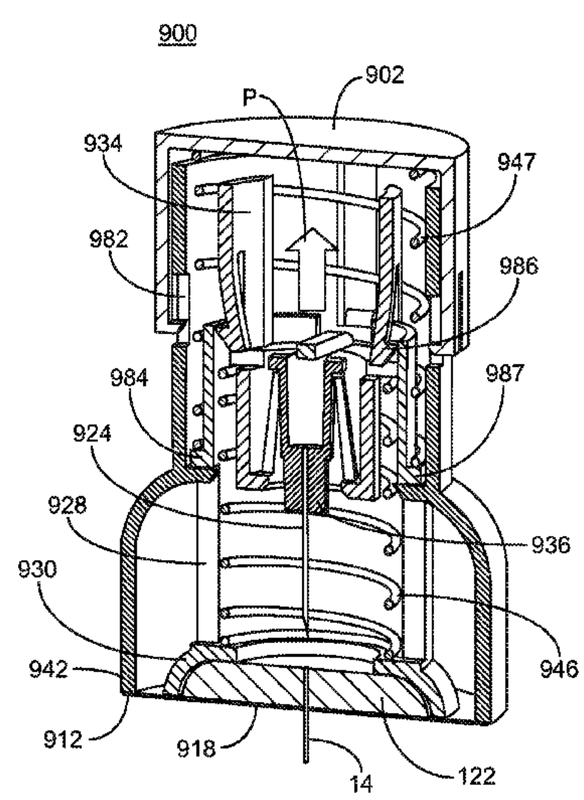

(51) **Int. Cl.**

A61B 5/151	(2006.01)
A61B 5/00	(2006.01)
A61B 5/01	(2006.01)

(52) **U.S. Cl.**

CPC *A61B5/15016* (2013.01); *A61B 5/150732* (2013.01); *A61M 2005/1585* (2013.01)

(56) **References Cited**

U.S. PATENT DOCUMENTS

3,522,807 A 8/1970 Millenbach
3,581,062 A 5/1971 Aston
3,653,841 A 4/1972 Klein
3,670,727 A 6/1972 Reiterman
3,719,564 A 3/1973 Lilly et al.
3,776,832 A 12/1973 Oswin et al.
3,837,339 A 9/1974 Aisenberg et al.
3,926,760 A 12/1975 Allen et al.
3,949,388 A 4/1976 Fuller
3,972,320 A 8/1976 Kalman
3,979,274 A 9/1976 Newman
4,008,717 A 2/1977 Kowarski
4,016,866 A 4/1977 Lawton
4,036,749 A 7/1977 Anderson
4,055,175 A 10/1977 Clemens et al.
4,059,406 A 11/1977 Fleet
4,076,596 A 2/1978 Connery et al.
4,098,574 A 7/1978 Dappen
4,100,048 A 7/1978 Pompei et al.
4,120,292 A 10/1978 LeBlanc, Jr. et al.
4,129,128 A 12/1978 McFarlane
4,151,845 A 5/1979 Clemens
4,168,205 A 9/1979 Danninger et al.
4,172,770 A 10/1979 Semersky et al.
4,178,916 A 12/1979 McNamara
4,206,755 A 6/1980 Klein
4,224,125 A 9/1980 Nakamura et al.
4,240,438 A 12/1980 Updike et al.
4,245,634 A 1/1981 Albisser et al.
4,247,297 A 1/1981 Berti et al.
4,294,258 A 10/1981 Bernard
4,327,725 A 5/1982 Cortese et al.
4,340,458 A 7/1982 Lerner et al.
4,344,438 A 8/1982 Schultz
4,349,728 A 9/1982 Phillips et al.
4,352,960 A 10/1982 Dormer et al.
4,356,074 A 10/1982 Johnson
4,365,637 A 12/1982 Johnson
4,366,033 A 12/1982 Richter et al.
4,373,527 A 2/1983 Fischell
4,375,399 A 3/1983 Havas et al.
4,384,586 A 5/1983 Christiansen
4,390,621 A 6/1983 Bauer
4,401,122 A 8/1983 Clark, Jr.
4,404,066 A 9/1983 Johnson
4,418,148 A 11/1983 Oberhardt
4,425,920 A 1/1984 Bourland et al.
4,427,770 A 1/1984 Chen et al.
4,431,004 A 2/1984 Bessman et al.
4,436,094 A 3/1984 Cerami
4,440,175 A 4/1984 Wilkins
4,450,842 A 5/1984 Zick et al.
4,458,686 A 7/1984 Clark, Jr.
4,461,691 A 7/1984 Frank
4,469,110 A 9/1984 Slama
4,477,314 A 10/1984 Richter et al.
4,478,976 A 10/1984 Goertz et al.
4,484,987 A 11/1984 Gough
4,494,950 A 1/1985 Fischell
4,509,531 A 4/1985 Ward
4,522,690 A 6/1985 Venkatasetty
4,524,114 A 6/1985 Samuels et al.
4,526,661 A 7/1985 Steckhan et al.
4,527,240 A 7/1985 Kvitash
4,534,356 A 8/1985 Papadakis
4,538,616 A 9/1985 Rogoff
4,543,955 A 10/1985 Schroeppel
4,545,382 A 10/1985 Higgins et al.
4,552,840 A 11/1985 Riffer
4,560,534 A 12/1985 Kung et al.
4,571,292 A 2/1986 Liu et al.
4,573,994 A 3/1986 Fischell et al.
4,581,336 A 4/1986 Malloy et al.
4,595,011 A 6/1986 Phillips
4,619,754 A 10/1986 Niki et al.
4,619,793 A 10/1986 Lee
4,627,445 A 12/1986 Garcia et al.
4,627,842 A 12/1986 Katz
4,627,908 A 12/1986 Miller
4,633,878 A 1/1987 Bombardieri
4,637,403 A 1/1987 Garcia et al.
4,650,547 A 3/1987 Gough
4,654,197 A 3/1987 Lilja et al.
4,655,880 A 4/1987 Liu
4,655,885 A 4/1987 Hill et al.
4,671,288 A 6/1987 Gough
4,679,562 A 7/1987 Luksha
4,680,268 A 7/1987 Clark, Jr.
4,682,602 A 7/1987 Prohaska
4,684,537 A 8/1987 Graetzel et al.
4,685,463 A 8/1987 Williams
4,685,466 A 8/1987 Rau
4,698,057 A 10/1987 Joishy
4,703,756 A 11/1987 Gough et al.
4,711,245 A 12/1987 Higgins et al.
4,711,247 A 12/1987 Fishman
4,717,673 A 1/1988 Wrighton et al.
4,721,601 A 1/1988 Wrighton et al.
4,721,677 A 1/1988 Clark, Jr.
4,726,378 A 2/1988 Kaplan
4,726,716 A 2/1988 McGuire
4,729,672 A 3/1988 Takagi
4,731,726 A 3/1988 Allen, III
4,749,985 A 6/1988 Corsberg
4,755,173 A 7/1988 Konopka
4,757,022 A 7/1988 Shults et al.
4,758,323 A 7/1988 Davis et al.
4,759,371 A 7/1988 Franetzki
4,759,828 A 7/1988 Young et al.
4,764,416 A 8/1988 Ueyama et al.
4,776,944 A 10/1988 Janata et al.
4,777,953 A 10/1988 Ash et al.
4,779,618 A 10/1988 Mund et al.
4,781,683 A 11/1988 Wozniak et al.
4,781,798 A 11/1988 Gough
4,784,736 A 11/1988 Lonsdale et al.
4,795,707 A 1/1989 Niiyama et al.
4,796,634 A 1/1989 Huntsman et al.
4,805,624 A 2/1989 Yao et al.
4,813,424 A 3/1989 Wilkins
4,815,469 A 3/1989 Cohen et al.
4,820,399 A 4/1989 Senda et al.
4,822,337 A 4/1989 Newhouse et al.
4,830,959 A 5/1989 McNeil et al.
4,832,797 A 5/1989 Vadgama et al.
RE32,947 E 6/1989 Dormer et al.
4,840,893 A 6/1989 Hill et al.
4,848,351 A 7/1989 Finch
4,854,322 A 8/1989 Ash et al.
4,871,351 A 10/1989 Feingold
4,871,440 A 10/1989 Nagata et al.
4,874,500 A 10/1989 Madou et al.
4,890,620 A 1/1990 Gough
4,894,137 A 1/1990 Takizawa et al.
4,895,147 A 1/1990 Bodicky et al.
4,897,162 A 1/1990 Lewandowski et al.
4,897,173 A 1/1990 Nankai et al.
4,909,908 A 3/1990 Ross et al.
4,911,794 A 3/1990 Parce et al.
4,917,800 A 4/1990 Lonsdale et al.
4,919,141 A 4/1990 Zier et al.
4,919,767 A 4/1990 Vadgama et al.
4,921,199 A 5/1990 Villaveces
4,923,586 A 5/1990 Katayama et al.

(56) **References Cited**

U.S. PATENT DOCUMENTS

4,925,268 A 5/1990 Iyer et al.
4,927,516 A 5/1990 Yamaguchi et al.
4,934,369 A 6/1990 Maxwell
4,935,105 A 6/1990 Churchouse
4,935,345 A 6/1990 Guilbeau et al.
4,938,860 A 7/1990 Wogoman
4,944,299 A 7/1990 Silvian
4,950,378 A 8/1990 Nagata
4,953,552 A 9/1990 DeMarzo
4,954,129 A 9/1990 Giuliani et al.
4,969,468 A 11/1990 Byers et al.
4,970,145 A 11/1990 Bennetto et al.
4,974,929 A 12/1990 Curry
4,986,271 A 1/1991 Wilkins
4,988,341 A 1/1991 Columbus et al.
4,994,167 A 2/1991 Shults et al.
4,995,402 A 2/1991 Smith et al.
5,000,180 A 3/1991 Kuypers et al.
5,001,054 A 3/1991 Wagner
5,013,161 A 5/1991 Zaragoza et al.
5,019,974 A 5/1991 Beckers
5,035,860 A 7/1991 Kleingeld et al.
5,036,860 A 8/1991 Leigh et al.
5,047,044 A 9/1991 Smith et al.
5,050,612 A 9/1991 Matsumura
5,055,171 A 10/1991 Peck
5,058,592 A 10/1991 Whisler
5,070,535 A 12/1991 Hochmair et al.
5,082,550 A 1/1992 Rishpon et al.
5,082,786 A 1/1992 Nakamoto
5,089,112 A 2/1992 Skotheim et al.
5,095,904 A 3/1992 Seligman et al.
5,101,814 A 4/1992 Palti
5,106,365 A 4/1992 Hernandez
5,108,564 A 4/1992 Szuminsky et al.
5,108,889 A 4/1992 Smith et al.
5,109,850 A 5/1992 Blanco et al.
5,120,420 A 6/1992 Nankai et al.
5,122,925 A 6/1992 Inpyn
5,126,034 A 6/1992 Carter et al.
5,133,856 A 7/1992 Yamaguchi et al.
5,135,003 A 8/1992 Souma
5,140,985 A 8/1992 Schroeder et al.
5,141,868 A 8/1992 Shanks et al.
5,161,532 A 11/1992 Joseph
5,165,407 A 11/1992 Wilson et al.
5,174,291 A 12/1992 Schoonen et al.
5,190,041 A 3/1993 Palti
5,192,416 A 3/1993 Wang et al.
5,198,367 A 3/1993 Aizawa et al.
5,202,261 A 4/1993 Musho et al.
5,205,920 A 4/1993 Oyama et al.
5,208,154 A 5/1993 Weaver et al.
5,209,229 A 5/1993 Gilli
5,217,595 A 6/1993 Smith et al.
5,229,282 A 7/1993 Yoshioka et al.
5,234,835 A 8/1993 Nestor et al.
5,238,729 A 8/1993 Debe
5,246,867 A 9/1993 Lakowicz et al.
5,250,439 A 10/1993 Musho et al.
5,262,035 A 11/1993 Gregg et al.
5,262,305 A 11/1993 Heller et al.
5,264,103 A 11/1993 Yoshioka et al.
5,264,104 A 11/1993 Gregg et al.
5,264,105 A 11/1993 Gregg et al.
5,264,106 A 11/1993 McAleer et al.
5,271,815 A 12/1993 Wong
5,279,294 A 1/1994 Anderson et al.
5,284,156 A 2/1994 Schramm et al.
5,285,792 A 2/1994 Sjoquist et al.
5,286,362 A 2/1994 Hoenes et al.
5,286,364 A 2/1994 Yacynych et al.
5,288,636 A 2/1994 Pollmann et al.
5,293,546 A 3/1994 Tadros et al.
5,293,877 A 3/1994 O'Hara et al.
5,299,571 A 4/1994 Mastrototaro
5,320,098 A 6/1994 Davidson
5,320,725 A 6/1994 Gregg et al.
5,322,063 A 6/1994 Allen et al.
5,337,747 A 8/1994 Neftel
5,340,722 A 8/1994 Wolfbeis et al.
5,342,789 A 8/1994 Chick et al.
5,352,348 A 10/1994 Young et al.
5,356,786 A 10/1994 Heller et al.
5,360,404 A 11/1994 Novacek et al.
5,368,028 A 11/1994 Palti
5,372,133 A 12/1994 Hogen Esch
5,372,427 A 12/1994 Padovani et al.
5,376,251 A 12/1994 Kaneko et al.
5,378,628 A 1/1995 Gratzel et al.
5,379,238 A 1/1995 Stark
5,387,327 A 2/1995 Khan
5,390,671 A * 2/1995 Lord et al. 600/347
5,391,250 A 2/1995 Cheney, II et al.
5,395,504 A 3/1995 Saurer et al.
5,400,782 A 3/1995 Beaubiah
5,408,999 A 4/1995 Singh et al.
5,411,647 A 5/1995 Johnson et al.
5,425,361 A 6/1995 Fenzlein et al.
5,431,160 A 7/1995 Wilkins
5,431,921 A 7/1995 Thombre
5,437,999 A 8/1995 Diebold et al.
5,462,645 A 10/1995 Albery et al.
5,469,846 A 11/1995 Khan
5,472,317 A 12/1995 Field et al.
5,489,414 A 2/1996 Schreiber et al.
5,491,474 A 2/1996 Suni et al.
5,494,562 A 2/1996 Maley et al.
5,496,453 A 3/1996 Uenoyama et al.
5,497,772 A 3/1996 Schulman et al.
5,507,288 A 4/1996 Bocker et al.
5,509,410 A 4/1996 Hill et al.
5,514,718 A 5/1996 Lewis et al.
5,531,878 A 7/1996 Vadgama et al.
5,545,191 A 8/1996 Mann et al.
5,549,568 A 8/1996 Sheilds
5,551,427 A 9/1996 Altman
5,560,357 A 10/1996 Faupel et al.
5,562,713 A 10/1996 Silvian
5,565,085 A 10/1996 Ikeda et al.
5,567,302 A 10/1996 Song et al.
5,568,806 A 10/1996 Cheney, II et al.
5,569,186 A 10/1996 Lord et al.
5,575,563 A 11/1996 Chiu et al.
5,582,184 A 12/1996 Erickson et al.
5,582,697 A 12/1996 Ikeda et al.
5,582,698 A 12/1996 Flaherty et al.
5,584,813 A 12/1996 Livingston et al.
5,586,553 A 12/1996 Halili et al.
5,589,326 A 12/1996 Deng et al.
5,593,852 A 1/1997 Heller et al.
5,596,150 A 1/1997 Arndt et al.
5,601,435 A 2/1997 Quy
5,609,575 A 3/1997 Larson et al.
5,613,978 A 3/1997 Harding
5,617,851 A 4/1997 Lipkovker
5,628,310 A 5/1997 Rao et al.
5,628,890 A 5/1997 Carter et al.
5,632,557 A 5/1997 Simons
5,640,954 A 6/1997 Pfeiffer et al.
5,651,869 A 7/1997 Yoshioka et al.
5,653,239 A 8/1997 Pompei et al.
5,660,163 A 8/1997 Schulman et al.
5,665,071 A 9/1997 Wyrick
5,665,222 A 9/1997 Heller et al.
5,670,031 A 9/1997 Hintsche et al.
5,680,858 A 10/1997 Hansen et al.
5,682,233 A 10/1997 Brinda
5,695,623 A 12/1997 Michel et al.
5,708,247 A 1/1998 McAleer et al.
5,711,001 A 1/1998 Bussan et al.
5,711,297 A 1/1998 Iliff
5,711,861 A 1/1998 Ward et al.
5,711,862 A 1/1998 Sakoda et al.

(56) **References Cited**

U.S. PATENT DOCUMENTS

5,733,044 A 3/1998 Rose et al.
5,735,285 A 4/1998 Albert et al.
5,741,211 A 4/1998 Renirie et al.
5,749,656 A 5/1998 Boehm et al.
5,766,131 A 6/1998 Kondo et al.
5,771,001 A 6/1998 Cobb
5,772,586 A 6/1998 Heinonen et al.
5,779,665 A 7/1998 Mastrototaro et al.
5,791,344 A 8/1998 Schulman et al.
5,800,420 A 9/1998 Gross et al.
5,807,375 A 9/1998 Gross et al.
5,814,020 A 9/1998 Gross
5,820,551 A 10/1998 Hill et al.
5,820,622 A 10/1998 Gross et al.
5,822,715 A 10/1998 Worthington et al.
5,827,184 A 10/1998 Netherly et al.
5,840,020 A 11/1998 Heinonen et al.
5,842,983 A 12/1998 Abel et al.
5,851,197 A 12/1998 Marano et al.
5,858,001 A 1/1999 Tsals et al.
5,865,804 A 2/1999 Bachynsky
5,885,211 A 3/1999 Eppstein et al.
5,899,855 A 5/1999 Brown
5,924,979 A 7/1999 Sedlow et al.
5,925,021 A 7/1999 Castellano et al.
5,931,814 A 8/1999 Alex et al.
5,931,868 A 8/1999 Gross et al.
5,948,006 A 9/1999 Mann
5,951,521 A 9/1999 Mastrototaro et al.
5,954,643 A 9/1999 VanAntwerp et al.
5,954,685 A 9/1999 Tierney
5,957,854 A 9/1999 Besson et al.
5,961,451 A 10/1999 Reber et al.
5,964,993 A 10/1999 Blubaugh, Jr. et al.
5,965,380 A 10/1999 Heller et al.
5,971,922 A 10/1999 Arita et al.
5,972,199 A 10/1999 Heller et al.
5,987,353 A 11/1999 Khatchatrian et al.
5,993,411 A 11/1999 Choi
5,995,860 A 11/1999 Sun et al.
5,997,501 A 12/1999 Gross et al.
6,001,067 A 12/1999 Shults et al.
6,004,278 A 12/1999 Botich et al.
6,017,335 A 1/2000 Burnham
6,022,368 A 2/2000 Gavronsky et al.
6,024,699 A 2/2000 Surwit et al.
6,026,321 A 2/2000 Miyata et al.
6,027,459 A 2/2000 Shain et al.
6,049,727 A 4/2000 Crothall
6,056,718 A 5/2000 Funderburk et al.
6,068,399 A 5/2000 Tseng
6,083,710 A 7/2000 Heller et al.
6,088,608 A 7/2000 Schulman et al.
6,091,975 A 7/2000 Daddona et al.
6,091,976 A 7/2000 Pfeiffer et al.
6,093,172 A 7/2000 Funderburk et al.
6,103,033 A 8/2000 Say et al.
6,117,290 A 9/2000 Say et al.
6,119,028 A 9/2000 Schulman et al.
6,120,676 A 9/2000 Heller et al.
6,121,009 A 9/2000 Heller et al.
6,121,611 A 9/2000 Lindsay et al.
6,122,351 A 9/2000 Schlueter, Jr. et al.
6,134,461 A 10/2000 Say et al.
6,143,164 A 11/2000 Heller et al.
6,159,147 A 12/2000 Lichter et al.
6,162,611 A 12/2000 Heller et al.
6,175,752 B1 1/2001 Say et al.
6,186,982 B1 2/2001 Gross et al.
6,200,265 B1 3/2001 Walsh et al.
6,212,416 B1 4/2001 Ward et al.
6,219,574 B1 4/2001 Cormier et al.
6,248,067 B1 6/2001 Causey, III et al.
6,254,536 B1 7/2001 DeVito
6,254,586 B1 7/2001 Mann et al.
6,275,717 B1 8/2001 Gross et al.
6,283,761 B1 9/2001 Joao
6,283,982 B1 9/2001 Levaughn et al.
6,284,478 B1 9/2001 Heller et al.
6,293,925 B1 9/2001 Safabash et al.
6,295,506 B1 9/2001 Heinonen et al.
6,306,104 B1 10/2001 Cunningham et al.
6,309,884 B1 10/2001 Cooper et al.
6,329,161 B1 12/2001 Heller et al.
6,331,244 B1 12/2001 Lewis et al.
6,338,790 B1 1/2002 Feldman et al.
6,348,640 B1 2/2002 Navot et al.
6,359,444 B1 3/2002 Grimes
6,360,888 B1 3/2002 McIvor et al.
6,366,794 B1 4/2002 Moussy et al.
6,368,141 B1 4/2002 VanAntwerp et al.
6,368,274 B1 4/2002 Van Antwerp et al.
6,377,828 B1 4/2002 Chaiken et al.
6,379,301 B1 4/2002 Worthington et al.
6,409,740 B1 6/2002 Kuhr et al.
6,413,393 B1 7/2002 Van Antwerp et al.
6,418,332 B1 7/2002 Mastrototaro et al.
6,424,847 B1 7/2002 Mastrototaro et al.
6,427,088 B1 7/2002 Bowman, IV et al.
6,437,679 B1 8/2002 Roques
6,440,068 B1 8/2002 Brown et al.
6,445,374 B2 9/2002 Albert et al.
6,478,736 B1 11/2002 Mault
6,482,176 B1 11/2002 Wich
6,484,045 B1 11/2002 Holker et al.
6,484,046 B1 11/2002 Say et al.
6,514,718 B2 2/2003 Heller et al.
6,520,326 B2 2/2003 McIvor et al.
6,522,927 B1 2/2003 Bishay et al.
6,551,494 B1 4/2003 Heller et al.
6,554,795 B2 4/2003 Lam et al.
6,554,798 B1 4/2003 Mann et al.
6,558,320 B1 5/2003 Causey, III et al.
6,558,321 B1 5/2003 Burd et al.
6,560,471 B1 5/2003 Heller et al.
6,561,978 B1 5/2003 Conn et al.
6,562,001 B2 5/2003 Lebel et al.
6,564,105 B2 5/2003 Starkweather et al.
6,565,509 B1 5/2003 Say et al.
6,571,128 B2 5/2003 Lebel et al.
6,572,566 B2 6/2003 Effenhauser
6,576,101 B1 6/2003 Heller et al.
6,577,899 B2 6/2003 Lebel et al.
6,579,690 B1 6/2003 Bonnecaze et al.
6,585,644 B2 7/2003 Lebel et al.
6,589,229 B1 7/2003 Connelly et al.
6,591,125 B1 7/2003 Buse et al.
6,595,919 B2 7/2003 Berner et al.
6,605,200 B1 8/2003 Mao et al.
6,605,201 B1 8/2003 Mao et al.
6,607,509 B2 8/2003 Bobroff et al.
6,610,012 B2 8/2003 Mault
6,633,772 B2 10/2003 Ford et al.
6,635,014 B2 10/2003 Starkweather et al.
6,648,821 B2 11/2003 Lebel et al.
6,654,625 B1 11/2003 Say et al.
6,659,948 B2 12/2003 Lebel et al.
6,666,849 B1 12/2003 Marshall et al.
6,668,196 B1 12/2003 Villegas et al.
6,676,290 B1 1/2004 Lu
6,687,546 B2 2/2004 Lebel et al.
6,689,056 B1 2/2004 Kilcoyne et al.
6,694,191 B2 2/2004 Starkweather et al.
6,695,860 B1 2/2004 Ward et al.
6,702,857 B2 3/2004 Brauker et al.
6,733,446 B2 5/2004 Lebel et al.
6,740,075 B2 5/2004 Lebel et al.
6,741,877 B1 5/2004 Shults et al.
6,746,582 B2 6/2004 Heller et al.
6,758,810 B2 7/2004 Lebel et al.
6,770,030 B1 8/2004 Schaupp et al.
6,790,178 B1 9/2004 Mault et al.
6,809,653 B1 10/2004 Mann et al.
6,810,290 B2 10/2004 Lebel et al.

(56) **References Cited**

U.S. PATENT DOCUMENTS

6,811,533 B2 11/2004 Lebel et al.
6,811,534 B2 11/2004 Bowman, IV et al.
6,813,519 B2 11/2004 Lebel et al.
6,830,551 B1 12/2004 Uchigaki et al.
6,837,858 B2 1/2005 Cunningham et al.
6,837,885 B2 1/2005 Koblish et al.
6,837,988 B2 1/2005 Leong et al.
6,849,052 B2 2/2005 Uchigaki et al.
6,854,882 B2 2/2005 Chen
6,862,465 B2 3/2005 Shults et al.
6,873,268 B2 3/2005 Lebel et al.
6,881,551 B2 4/2005 Heller et al.
6,892,085 B2 5/2005 McIvor et al.
6,895,265 B2 5/2005 Silver
6,931,327 B2 8/2005 Goode, Jr. et al.
6,932,894 B2 8/2005 Mao et al.
6,936,006 B2 8/2005 Sabra
6,942,518 B2 9/2005 Liamos et al.
6,950,708 B2 9/2005 Bowman IV et al.
6,958,705 B2 10/2005 Lebel et al.
6,959,211 B2 10/2005 Rule et al.
6,968,294 B2 11/2005 Gutta et al.
6,971,274 B2 12/2005 Olin
6,971,999 B2 12/2005 Py et al.
6,974,437 B2 12/2005 Lebel et al.
6,990,366 B2 1/2006 Say et al.
6,997,907 B2 2/2006 Safabash et al.
6,998,247 B2 2/2006 Monfre et al.
7,003,336 B2 2/2006 Holker et al.
7,003,340 B2 2/2006 Say et al.
7,003,341 B2 2/2006 Say et al.
7,024,245 B2 4/2006 Lebel et al.
7,025,743 B2 4/2006 Mann et al.
7,041,068 B2 5/2006 Freeman et al.
7,041,468 B2 5/2006 Drucker et al.
7,052,483 B2 5/2006 Wojcik
7,056,302 B2 6/2006 Douglas
7,074,307 B2 7/2006 Simpson et al.
7,081,195 B2 7/2006 Simpson et al.
7,097,637 B2 8/2006 Triplett et al.
7,098,803 B2 8/2006 Mann et al.
7,108,778 B2 9/2006 Simpson et al.
7,110,803 B2 9/2006 Shults et al.
7,113,821 B1 9/2006 Sun et al.
7,134,999 B2 11/2006 Brauker et al.
7,136,689 B2 11/2006 Shults et al.
7,171,274 B2 1/2007 Starkweather et al.
7,190,988 B2 3/2007 Say et al.
7,192,450 B2 3/2007 Brauker et al.
7,198,606 B2 4/2007 Boecker et al.
7,207,974 B2 4/2007 Safabash et al.
7,226,978 B2 6/2007 Tapsak et al.
7,276,029 B2 10/2007 Goode, Jr. et al.
7,278,983 B2 10/2007 Ireland et al.
7,297,151 B2 11/2007 Boecker et al.
7,299,082 B2 11/2007 Feldman et al.
7,310,544 B2 12/2007 Brister et al.
7,318,816 B2 1/2008 Bobroff et al.
7,324,012 B2 1/2008 Mann et al.
7,329,239 B2 2/2008 Safabash et al.
7,335,294 B2 2/2008 Heller et al.
7,340,287 B2 3/2008 Mason et al.
7,340,309 B2 3/2008 Miazga et al.
7,354,420 B2 4/2008 Steil et al.
7,364,592 B2 4/2008 Carr-Brendel et al.
7,366,556 B2 4/2008 Brister et al.
7,379,765 B2 5/2008 Petisce et al.
7,381,184 B2 6/2008 Funderburk et al.
7,402,153 B2 7/2008 Steil et al.
7,416,541 B2 8/2008 Yuzhakov et al.
7,424,318 B2 9/2008 Brister et al.
7,455,663 B2 11/2008 Bikovsky
7,460,898 B2 12/2008 Brister et al.
7,467,003 B2 12/2008 Brister et al.
7,471,972 B2 12/2008 Rhodes et al.
7,494,465 B2 2/2009 Brister et al.
7,497,827 B2 3/2009 Brister et al.
7,519,408 B2 4/2009 Rasdal et al.
7,583,990 B2 9/2009 Goode, Jr. et al.
7,591,801 B2 9/2009 Brauker et al.
7,599,726 B2 10/2009 Goode, Jr. et al.
7,604,592 B2 10/2009 Freeman et al.
7,613,491 B2 11/2009 Boock et al.
7,615,007 B2 11/2009 Shults et al.
7,632,228 B2 12/2009 Brauker et al.
7,637,868 B2 12/2009 Saint et al.
7,640,048 B2 12/2009 Dobbles et al.
7,651,596 B2 1/2010 Petisce et al.
7,654,956 B2 2/2010 Brister et al.
7,657,297 B2 2/2010 Simpson et al.
7,666,149 B2 2/2010 Simons et al.
7,682,338 B2 3/2010 Griffin
7,697,967 B2 4/2010 Stafford
7,711,402 B2 5/2010 Shults et al.
7,713,574 B2 5/2010 Brister et al.
7,715,893 B2 5/2010 Kamath et al.
7,727,147 B1 6/2010 Osorio et al.
7,731,657 B2 6/2010 Stafford
7,736,344 B2 6/2010 Moberg et al.
7,763,042 B2 7/2010 Iio et al.
7,822,454 B1 10/2010 Alden et al.
2001/0056262 A1 12/2001 Cabiri et al.
2002/0013538 A1 1/2002 Teller
2002/0019022 A1 2/2002 Dunn et al.
2002/0019606 A1 2/2002 Lebel et al.
2002/0022855 A1 2/2002 Bobroff et al.
2002/0023852 A1 2/2002 McIvor et al.
2002/0042090 A1 4/2002 Heller et al.
2002/0055711 A1 5/2002 Lavi et al.
2002/0057993 A1 5/2002 Maisey et al.
2002/0066764 A1 6/2002 Perry et al.
2002/0076966 A1 6/2002 Carron et al.
2002/0082487 A1 6/2002 Kollias et al.
2002/0103499 A1 8/2002 Perez et al.
2002/0106709 A1 8/2002 Potts et al.
2002/0119711 A1 8/2002 VanAntwerp et al.
2002/0128594 A1 9/2002 Das et al.
2002/0130042 A1 9/2002 Moerman et al.
2002/0154050 A1 10/2002 Krupp et al.
2002/0161288 A1 10/2002 Shin et al.
2002/0165462 A1 11/2002 Westbrook et al.
2002/0169369 A1 11/2002 Ward et al.
2002/0198444 A1 12/2002 Uchigaki et al.
2003/0023317 A1 1/2003 Brauker et al.
2003/0023461 A1 1/2003 Quintanilla et al.
2003/0032867 A1 2/2003 Crothall et al.
2003/0032874 A1 2/2003 Rhodes et al.
2003/0042137 A1 3/2003 Mao et al.
2003/0060753 A1 3/2003 Starkweather et al.
2003/0065308 A1 4/2003 Lebel et al.
2003/0069510 A1 4/2003 Semler
2003/0078481 A1 4/2003 McIvor et al.
2003/0078560 A1 4/2003 Miller et al.
2003/0083686 A1 5/2003 Freeman et al.
2003/0097092 A1 5/2003 Flaherty
2003/0100040 A1 5/2003 Bonnecaze et al.
2003/0109775 A1 6/2003 O'Neil et al.
2003/0134347 A1 7/2003 Heller et al.
2003/0135333 A1 7/2003 Aceti et al.
2003/0144581 A1 7/2003 Conn et al.
2003/0144608 A1 7/2003 Kojima et al.
2003/0155656 A1 8/2003 Chiu et al.
2003/0168338 A1 9/2003 Gao et al.
2003/0176933 A1 9/2003 Lebel et al.
2003/0187338 A1 10/2003 Say et al.
2003/0199790 A1 10/2003 Boecker et al.
2003/0199910 A1 10/2003 Boecker et al.
2003/0212379 A1 11/2003 Bylund et al.
2003/0217966 A1 11/2003 Tapsak et al.
2003/0225361 A1 12/2003 Sabra
2004/0002682 A1 1/2004 Kovelman et al.
2004/0010207 A1 1/2004 Flaherty et al.
2004/0011671 A1 1/2004 Shults et al.
2004/0040840 A1 3/2004 Mao et al.

(56) **References Cited**

U.S. PATENT DOCUMENTS

2004/0045879 A1 3/2004 Shults et al.
2004/0054263 A1 3/2004 Moerman et al.
2004/0064068 A1 4/2004 DeNuzzio et al.
2004/0064133 A1 4/2004 Miller et al.
2004/0096959 A1 5/2004 Stiene et al.
2004/0106858 A1 6/2004 Say et al.
2004/0106859 A1 6/2004 Say et al.
2004/0116847 A1 6/2004 Wall
2004/0116865 A1* 6/2004 Bengtsson 604/171
2004/0116866 A1 6/2004 Gorman et al.
2004/0122353 A1 6/2004 Shahmirian et al.
2004/0122489 A1 6/2004 Mazar et al.
2004/0133164 A1 7/2004 Funderburk et al.
2004/0135684 A1 7/2004 Steinthal et al.
2004/0138544 A1 7/2004 Ward et al.
2004/0138588 A1 7/2004 Saikley et al.
2004/0138688 A1 7/2004 Giraud
2004/0147996 A1 7/2004 Miazga et al.
2004/0152622 A1 8/2004 Keith et al.
2004/0158207 A1 8/2004 Hunn et al.
2004/0167801 A1 8/2004 Say et al.
2004/0171910 A1 9/2004 Moore-Steele
2004/0171921 A1 9/2004 Say et al.
2004/0176672 A1 9/2004 Silver et al.
2004/0186362 A1 9/2004 Brauker et al.
2004/0186365 A1 9/2004 Jin et al.
2004/0193090 A1 9/2004 Lebel et al.
2004/0199059 A1 10/2004 Brauker et al.
2004/0204687 A1 10/2004 Mogensen et al.
2004/0210122 A1 10/2004 Sleburg
2004/0223985 A1 11/2004 Dunfiled et al.
2004/0225338 A1 11/2004 Lebel et al.
2004/0236200 A1 11/2004 Say et al.
2004/0236251 A1 11/2004 Roe et al.
2004/0254433 A1 12/2004 Bandis et al.
2004/0254434 A1 12/2004 Goodnow et al.
2004/0267300 A1 12/2004 Mace
2005/0003470 A1 1/2005 Nelson et al.
2005/0004494 A1 1/2005 Perez et al.
2005/0006122 A1 1/2005 Burnette
2005/0010269 A1 1/2005 Lebel et al.
2005/0027177 A1 2/2005 Shin et al.
2005/0027180 A1 2/2005 Goode, Jr. et al.
2005/0031689 A1 2/2005 Shults et al.
2005/0043598 A1 2/2005 Goode, Jr. et al.
2005/0070819 A1 3/2005 Poux et al.
2005/0085872 A1 4/2005 Yanagihara et al.
2005/0090607 A1 4/2005 Tapsak et al.
2005/0090850 A1 4/2005 Thoes et al.
2005/0106713 A1 5/2005 Phan et al.
2005/0112169 A1 5/2005 Brauker et al.
2005/0114068 A1 5/2005 Chey et al.
2005/0121322 A1 6/2005 Say et al.
2005/0131346 A1 6/2005 Douglas
2005/0143635 A1 6/2005 Kamath et al.
2005/0154410 A1 7/2005 Conway et al.
2005/0165404 A1 7/2005 Miller
2005/0173245 A1 8/2005 Feldman et al.
2005/0176136 A1 8/2005 Burd et al.
2005/0182306 A1 8/2005 Sloan
2005/0187720 A1 8/2005 Goode, Jr. et al.
2005/0192557 A1 9/2005 Brauker et al.
2005/0195930 A1 9/2005 Spital et al.
2005/0197554 A1 9/2005 Polcha
2005/0199494 A1 9/2005 Say et al.
2005/0203360 A1 9/2005 Brauker et al.
2005/0222518 A1 10/2005 Dib
2005/0222599 A1 10/2005 Czernecki et al.
2005/0236277 A9 10/2005 Imran et al.
2005/0239154 A1 10/2005 Feldman et al.
2005/0239156 A1 10/2005 Drucker et al.
2005/0241957 A1 11/2005 Mao et al.
2005/0245795 A1 11/2005 Goode, Jr. et al.
2005/0245799 A1 11/2005 Brauker et al.
2005/0245844 A1 11/2005 Mace et al.
2005/0277164 A1 12/2005 Drucker et al.
2005/0283114 A1 12/2005 Bresina et al.
2005/0287620 A1 12/2005 Heller et al.
2006/0001538 A1 1/2006 Kraft et al.
2006/0004303 A1 1/2006 Weidenhaupt et al.
2006/0009727 A1 1/2006 O'Mahony et al.
2006/0010098 A1 1/2006 Goodnow et al.
2006/0015020 A1 1/2006 Neale et al.
2006/0015024 A1 1/2006 Brister et al.
2006/0016700 A1 1/2006 Brister et al.
2006/0019327 A1 1/2006 Brister et al.
2006/0020186 A1 1/2006 Brister et al.
2006/0020187 A1 1/2006 Brister et al.
2006/0020188 A1 1/2006 Kamath et al.
2006/0020189 A1 1/2006 Brister et al.
2006/0020190 A1 1/2006 Kamath et al.
2006/0020191 A1 1/2006 Brister et al.
2006/0020192 A1 1/2006 Brister et al.
2006/0036139 A1 2/2006 Brister et al.
2006/0036140 A1 2/2006 Brister et al.
2006/0036141 A1 2/2006 Kamath et al.
2006/0036142 A1 2/2006 Brister et al.
2006/0036143 A1 2/2006 Brister et al.
2006/0036144 A1 2/2006 Brister et al.
2006/0036145 A1 2/2006 Brister et al.
2006/0047220 A1* 3/2006 Sakata et al. 600/583
2006/0081469 A1 4/2006 Lee
2006/0129173 A1 6/2006 Wilkinson
2006/0155210 A1 7/2006 Beckman et al.
2006/0155317 A1 7/2006 List
2006/0166629 A1 7/2006 Reggiardo
2006/0173444 A1 8/2006 Choy et al.
2006/0189863 A1 8/2006 Peyser et al.
2006/0189939 A1 8/2006 Gonnelli et al.
2006/0195029 A1 8/2006 Shults et al.
2006/0200181 A1 9/2006 Fukuzawa et al.
2006/0200970 A1 9/2006 Brister et al.
2006/0222566 A1 10/2006 Brauker et al.
2006/0224171 A1 10/2006 Sakata et al.
2006/0226985 A1 10/2006 Goodnow et al.
2006/0247508 A1 11/2006 Fennell
2006/0253086 A1 11/2006 Moberg et al.
2006/0258929 A1 11/2006 Goode, Jr. et al.
2006/0264888 A1 11/2006 Moberg et al.
2006/0276724 A1 12/2006 Freeman et al.
2006/0282042 A1 12/2006 Walters et al.
2006/0287591 A1 12/2006 Ocvirk et al.
2007/0016381 A1 1/2007 Kamath et al.
2007/0027381 A1 2/2007 Stafford
2007/0038044 A1 2/2007 Dobbles et al.
2007/0060814 A1 3/2007 Stafford
2007/0073129 A1 3/2007 Shah et al.
2007/0078320 A1 4/2007 Stafford
2007/0078321 A1 4/2007 Mazza et al.
2007/0078322 A1 4/2007 Stafford
2007/0088377 A1 4/2007 Levaughn et al.
2007/0106135 A1 5/2007 Sloan et al.
2007/0110124 A1 5/2007 Shiraki et al.
2007/0123819 A1 5/2007 Mernoe et al.
2007/0149875 A1 6/2007 Ouyang et al.
2007/0156094 A1 7/2007 Safabash et al.
2007/0163880 A1 7/2007 Woo et al.
2007/0173706 A1 7/2007 Neinast et al.
2007/0173741 A1 7/2007 Deshmukh et al.
2007/0191701 A1 8/2007 Feldman et al.
2007/0203407 A1 8/2007 Hoss et al.
2007/0203966 A1 8/2007 Brauker et al.
2007/0213611 A1 9/2007 Simpson et al.
2007/0235331 A1 10/2007 Simpson et al.
2007/0244368 A1 10/2007 Bayloff et al.
2007/0244398 A1 10/2007 Lo et al.
2007/0249922 A1 10/2007 Peyser et al.
2007/0255302 A1 11/2007 Koeppel et al.
2008/0004512 A1 1/2008 Funderburk et al.
2008/0004573 A1 1/2008 Kaufmann et al.
2008/0009692 A1 1/2008 Stafford
2008/0009805 A1* 1/2008 Ethelfeld 604/180
2008/0017522 A1 1/2008 Heller et al.
2008/0021666 A1 1/2008 Goode, Jr. et al.

(56) **References Cited**

U.S. PATENT DOCUMENTS

2008/0027474 A1 1/2008 Curry et al.
2008/0029391 A1 2/2008 Mao et al.
2008/0033254 A1 2/2008 Kamath et al.
2008/0033268 A1 2/2008 Stafford
2008/0033318 A1 2/2008 Mace et al.
2008/0039702 A1 2/2008 Hayter et al.
2008/0045824 A1 2/2008 Tapsak et al.
2008/0064937 A1 3/2008 McGarraugh et al.
2008/0064941 A1 3/2008 Funderburk et al.
2008/0064944 A1 3/2008 VanAntwerp et al.
2008/0065646 A1 3/2008 Zhang et al.
2008/0071156 A1 3/2008 Brister et al.
2008/0083617 A1 4/2008 Simpson et al.
2008/0086042 A1 4/2008 Brister et al.
2008/0086044 A1 4/2008 Brister et al.
2008/0086273 A1 4/2008 Shults et al.
2008/0097246 A1 4/2008 Stafford
2008/0108942 A1 5/2008 Brister et al.
2008/0112848 A1 5/2008 Huffstodt et al.
2008/0114280 A1 5/2008 Stafford
2008/0119707 A1 5/2008 Stafford
2008/0133702 A1 6/2008 Sharma et al.
2008/0154205 A1 6/2008 Wojcik
2008/0161664 A1 7/2008 Mastrototaro et al.
2008/0167578 A1 7/2008 Bryer et al.
2008/0183061 A1 7/2008 Goode, Jr. et al.
2008/0183399 A1 7/2008 Goode, Jr. et al.
2008/0188731 A1 8/2008 Brister et al.
2008/0189051 A1 8/2008 Goode, Jr. et al.
2008/0194935 A1 8/2008 Brister et al.
2008/0194936 A1 8/2008 Goode, Jr. et al.
2008/0194937 A1 8/2008 Goode, Jr. et al.
2008/0194938 A1 8/2008 Brister et al.
2008/0195049 A1 8/2008 Thalmann et al.
2008/0195232 A1 8/2008 Carr-Brendel et al.
2008/0195967 A1 8/2008 Goode, Jr. et al.
2008/0197024 A1 8/2008 Simpson et al.
2008/0200788 A1 8/2008 Brister et al.
2008/0200789 A1 8/2008 Brister et al.
2008/0200791 A1 8/2008 Simpson et al.
2008/0200897 A1 8/2008 Hoss et al.
2008/0208025 A1 8/2008 Shults et al.
2008/0214481 A1 9/2008 Challoner et al.
2008/0214915 A1 9/2008 Brister et al.
2008/0214918 A1 9/2008 Brister et al.
2008/0228051 A1 9/2008 Shults et al.
2008/0228054 A1 9/2008 Shults et al.
2008/0242961 A1 10/2008 Brister et al.
2008/0262469 A1 10/2008 Brister et al.
2008/0269673 A1 10/2008 Butoi et al.
2008/0275313 A1 11/2008 Brister et al.
2008/0283396 A1 11/2008 Wang et al.
2008/0287764 A1 11/2008 Rasdal et al.
2008/0287765 A1 11/2008 Rasdal et al.
2008/0287766 A1 11/2008 Rasdal et al.
2008/0294096 A1 11/2008 Uber et al.
2008/0296155 A1 12/2008 Shults et al.
2008/0300476 A1 12/2008 Stafford
2008/0306368 A1 12/2008 Goode, Jr. et al.
2008/0306434 A1 12/2008 Dobbles et al.
2008/0306435 A1 12/2008 Kamath et al.
2008/0306444 A1 12/2008 Brister et al.
2009/0005659 A1 1/2009 Kollias et al.
2009/0012377 A1 1/2009 Jennewine et al.
2009/0012379 A1 1/2009 Goode, Jr. et al.
2009/0018424 A1 1/2009 Kamath et al.
2009/0030294 A1 1/2009 Petisce et al.
2009/0036758 A1 2/2009 Brauker et al.
2009/0036763 A1 2/2009 Brauker et al.
2009/0036915 A1 2/2009 Karbowniczek et al.
2009/0043181 A1 2/2009 Brauker et al.
2009/0043182 A1 2/2009 Brauker et al.
2009/0043525 A1 2/2009 Brauker et al.
2009/0043541 A1 2/2009 Brauker et al.
2009/0043542 A1 2/2009 Brauker et al.
2009/0045055 A1 2/2009 Rhodes et al.
2009/0054866 A1 2/2009 Teisen-Simony et al.
2009/0062633 A1 3/2009 Brauker et al.
2009/0062635 A1 3/2009 Brauker et al.
2009/0069658 A1 3/2009 Say et al.
2009/0069750 A1 3/2009 Schraga
2009/0076356 A1 3/2009 Simpson et al.
2009/0076359 A1 3/2009 Peyser
2009/0076360 A1 3/2009 Brister et al.
2009/0076361 A1 3/2009 Kamath et al.
2009/0082693 A1 3/2009 Stafford
2009/0088614 A1 4/2009 Taub
2009/0088787 A1 4/2009 Koike et al.
2009/0099436 A1 4/2009 Brister et al.
2009/0102678 A1 4/2009 Mazza et al.
2009/0105569 A1 4/2009 Stafford
2009/0124877 A1 5/2009 Goode, Jr. et al.
2009/0124878 A1 5/2009 Goode et al.
2009/0124879 A1 5/2009 Brister et al.
2009/0124964 A1 5/2009 Leach et al.
2009/0124979 A1* 5/2009 Raymond et al. 604/195
2009/0131768 A1 5/2009 Simpson et al.
2009/0131769 A1 5/2009 Leach et al.
2009/0131776 A1 5/2009 Simpson et al.
2009/0131777 A1 5/2009 Simpson et al.
2009/0131860 A1 5/2009 Nielsen
2009/0137886 A1 5/2009 Shariati et al.
2009/0137887 A1 5/2009 Shariati et al.
2009/0143659 A1 6/2009 Li et al.
2009/0143660 A1 6/2009 Brister et al.
2009/0156919 A1 6/2009 Brister et al.
2009/0156924 A1 6/2009 Shariati et al.
2009/0163790 A1 6/2009 Brister et al.
2009/0163791 A1 6/2009 Brister et al.
2009/0171182 A1 7/2009 Stafford
2009/0178459 A1 7/2009 Li et al.
2009/0182217 A1 7/2009 Li et al.
2009/0192366 A1 7/2009 Mensinger et al.
2009/0192380 A1 7/2009 Shariati et al.
2009/0192722 A1 7/2009 Shariati et al.
2009/0192724 A1 7/2009 Brauker et al.
2009/0192745 A1 7/2009 Kamath et al.
2009/0192751 A1 7/2009 Kamath et al.
2009/0198215 A1 8/2009 Chong et al.
2009/0203981 A1 8/2009 Brauker et al.
2009/0204341 A1 8/2009 Brauker et al.
2009/0212766 A1 8/2009 Olson et al.
2009/0216103 A1 8/2009 Brister et al.
2009/0240120 A1 9/2009 Mensinger et al.
2009/0240128 A1 9/2009 Mensinger et al.
2009/0240193 A1 9/2009 Mensinger et al.
2009/0242399 A1 10/2009 Kamath et al.
2009/0242425 A1 10/2009 Kamath et al.
2009/0247855 A1 10/2009 Boock et al.
2009/0247856 A1 10/2009 Boock et al.
2009/0259118 A1 10/2009 Feldman et al.
2009/0259201 A1 10/2009 Hwang et al.
2009/0259202 A1 10/2009 Leeflang et al.
2009/0270765 A1 10/2009 Ghesquire et al.
2009/0287073 A1 11/2009 Boock et al.
2009/0287074 A1 11/2009 Shults et al.
2009/0292184 A1 11/2009 Funderburk et al.
2009/0292185 A1 11/2009 Funderburk et al.
2009/0299155 A1 12/2009 Yang et al.
2009/0299156 A1 12/2009 Simpson et al.
2009/0299162 A1 12/2009 Brauker et al.
2009/0299167 A1 12/2009 Seymour
2009/0299276 A1 12/2009 Brauker et al.
2010/0004597 A1 1/2010 Gyrn et al.
2010/0010324 A1 1/2010 Brauker et al.
2010/0010331 A1 1/2010 Brauker et al.
2010/0010332 A1 1/2010 Brauker et al.
2010/0016687 A1 1/2010 Brauker et al.
2010/0016698 A1 1/2010 Rasdal et al.
2010/0022855 A1 1/2010 Brauker et al.
2010/0022863 A1 1/2010 Mogensen et al.
2010/0030038 A1 2/2010 Brauker et al.
2010/0030053 A1 2/2010 Goode, Jr. et al.
2010/0030484 A1 2/2010 Brauker et al.

(56) **References Cited**

U.S. PATENT DOCUMENTS

2010/0030485 A1 2/2010 Brauker et al.
2010/0036215 A1 2/2010 Goode, Jr. et al.
2010/0036216 A1 2/2010 Goode, Jr. et al.
2010/0036222 A1 2/2010 Goode, Jr. et al.
2010/0036223 A1 2/2010 Goode, Jr. et al.
2010/0036225 A1 2/2010 Goode, Jr. et al.
2010/0036281 A1 2/2010 Doi
2010/0041971 A1 2/2010 Goode, Jr. et al.
2010/0045465 A1 2/2010 Brauker et al.
2010/0049014 A1 2/2010 Funderburk et al.
2010/0049024 A1 2/2010 Saint et al.
2010/0063373 A1 3/2010 Kamath et al.
2010/0069728 A1 3/2010 Funderburk et al.
2010/0076283 A1 3/2010 Simpson et al.
2010/0081908 A1 4/2010 Dobbles et al.
2010/0081910 A1 4/2010 Brister et al.
2010/0087724 A1 4/2010 Brauker et al.
2010/0096259 A1 4/2010 Zhang et al.
2010/0099970 A1 4/2010 Shults et al.
2010/0099971 A1 4/2010 Shults et al.
2010/0100113 A1 4/2010 Iio et al.
2010/0106088 A1 4/2010 Yodfat et al.
2010/0113897 A1 5/2010 Brenneman et al.
2010/0119693 A1 5/2010 Tapsak et al.
2010/0121169 A1 5/2010 Petisce et al.
2010/0168677 A1 7/2010 Gabriel et al.
2010/0174157 A1 7/2010 Brister et al.
2010/0174158 A1 7/2010 Kamath et al.
2010/0174163 A1 7/2010 Brister et al.
2010/0174164 A1 7/2010 Brister et al.
2010/0174165 A1 7/2010 Brister et al.
2010/0174166 A1 7/2010 Brister et al.
2010/0174167 A1 7/2010 Kamath et al.
2010/0174168 A1 7/2010 Goode et al.
2010/0179401 A1 7/2010 Rasdal et al.
2010/0179402 A1 7/2010 Goode et al.
2010/0179404 A1 7/2010 Kamath et al.
2010/0179408 A1 7/2010 Kamath et al.
2010/0179409 A1 7/2010 Kamath et al.
2010/0185065 A1 7/2010 Goode et al.
2010/0185069 A1 7/2010 Brister et al.
2010/0185070 A1 7/2010 Brister et al.
2010/0185071 A1 7/2010 Simpson et al.
2010/0185072 A1 7/2010 Goode et al.
2010/0185075 A1 7/2010 Brister et al.
2010/0191082 A1 7/2010 Brister et al.
2010/0198033 A1 8/2010 Krulevitch et al.
2010/0198034 A1 8/2010 Thomas et al.
2010/0198035 A1 8/2010 Kamath et al.
2010/0198036 A1 8/2010 Kamath et al.
2010/0204653 A1 8/2010 Gyrn et al.
2010/0212583 A1 8/2010 Brister et al.
2010/0214104 A1 8/2010 Goode et al.
2010/0217105 A1 8/2010 Yodfat et al.
2010/0217557 A1 8/2010 Kamath et al.
2010/0223013 A1 9/2010 Kamath et al.
2010/0223022 A1 9/2010 Kamath et al.
2010/0223023 A1 9/2010 Kamath et al.
2010/0228109 A1 9/2010 Kamath et al.
2010/0228497 A1 9/2010 Kamath et al.
2010/0240975 A1 9/2010 Goode et al.
2010/0240976 A1 9/2010 Goode et al.
2010/0261987 A1 10/2010 Kamath et al.
2010/0262201 A1 10/2010 He et al.
2010/0274107 A1 10/2010 Boock et al.
2010/0280341 A1 11/2010 Boock et al.
2010/0286496 A1 11/2010 Simpson et al.
2010/0298684 A1 11/2010 Leach et al.
2010/0324392 A1 12/2010 Yee et al.
2010/0324403 A1 12/2010 Brister et al.
2010/0331642 A1 12/2010 Bruce et al.
2010/0331644 A1 12/2010 Neale et al.
2010/0331647 A1 12/2010 Shah et al.
2010/0331648 A1 12/2010 Kamath et al.
2010/0331653 A1 12/2010 Stafford
2010/0331656 A1 12/2010 Mensinger et al.
2010/0331657 A1 12/2010 Mensinger et al.
2011/0004085 A1 1/2011 Mensinger et al.
2011/0009727 A1 1/2011 Mensinger et al.
2011/0021889 A1 1/2011 Hoss et al.
2011/0024043 A1 2/2011 Boock et al.
2011/0024307 A1 2/2011 Simpson et al.
2011/0027127 A1 2/2011 Simpson et al.
2011/0027453 A1 2/2011 Boock et al.
2011/0027458 A1 2/2011 Boock et al.
2011/0028815 A1 2/2011 Simpson et al.
2011/0028816 A1 2/2011 Simpson et al.
2011/0040256 A1 2/2011 Bobroff et al.
2011/0040263 A1 2/2011 Hordum et al.
2011/0046456 A1 2/2011 Hordum et al.
2011/0046467 A1 2/2011 Simpson et al.
2011/0054275 A1 3/2011 Stafford
2011/0060196 A1 3/2011 Stafford
2011/0073475 A1 3/2011 Kastanos et al.
2011/0077490 A1 3/2011 Simpson et al.
2011/0082484 A1 4/2011 Saravia et al.
2011/0106126 A1 5/2011 Love et al.
2011/0118579 A1 5/2011 Goode et al.
2011/0118580 A1 5/2011 Goode et al.
2011/0124992 A1 5/2011 Brauker et al.
2011/0124997 A1 5/2011 Goode et al.
2011/0125410 A1 5/2011 Goode et al.
2011/0130970 A1 6/2011 Goode et al.
2011/0130971 A1 6/2011 Goode et al.
2011/0130998 A1 6/2011 Goode et al.
2011/0137257 A1 6/2011 Gyrn et al.
2011/0144465 A1 6/2011 Shults et al.
2011/0178378 A1 7/2011 Brister et al.
2011/0178461 A1 7/2011 Chong et al.
2011/0184258 A1 7/2011 Stafford
2011/0190603 A1 8/2011 Stafford
2011/0190614 A1 8/2011 Brister et al.
2011/0191044 A1 8/2011 Stafford
2011/0201910 A1 8/2011 Rasdal et al.
2011/0201911 A1 8/2011 Johnson et al.
2011/0218414 A1 9/2011 Kamath et al.
2011/0231107 A1 9/2011 Brauker et al.
2011/0231140 A1 9/2011 Goode et al.
2011/0231141 A1 9/2011 Goode et al.
2011/0231142 A1 9/2011 Goode et al.
2011/0253533 A1 10/2011 Shults et al.
2011/0257521 A1 10/2011 Fraden
2011/0257895 A1 10/2011 Brauker et al.
2011/0263958 A1 10/2011 Brauker et al.
2011/0270062 A1 11/2011 Goode et al.
2011/0270158 A1 11/2011 Brauker et al.
2011/0275919 A1 11/2011 Petisce et al.
2011/0288574 A1 11/2011 Curry et al.
2011/0290645 A1 12/2011 Brister et al.
2011/0313543 A1 12/2011 Brauker et al.
2011/0319729 A1 12/2011 Donnay et al.
2011/0319733 A1 12/2011 Stafford
2011/0319739 A1 12/2011 Kamath et al.
2011/0320130 A1 12/2011 Valdes et al.
2012/0035445 A1 2/2012 Boock et al.
2012/0040101 A1 2/2012 Tapsak et al.
2012/0046534 A1 2/2012 Simpson et al.
2012/0078071 A1 3/2012 Bohm et al.
2012/0108934 A1 5/2012 Valdes et al.
2012/0108983 A1 5/2012 Banet et al.
2012/0123385 A1 5/2012 Edwards et al.
2012/0143135 A1 6/2012 Cole et al.
2012/0184909 A1 7/2012 Gyrn et al.
2012/0296327 A1 11/2012 Hutchins et al.
2013/0047981 A1 2/2013 Bacon

FOREIGN PATENT DOCUMENTS

EP 0320109 6/1989
EP 0353328 2/1990
EP 0390390 10/1990
EP 0396788 11/1990
EP 0286118 1/1995
EP 1048264 11/2000

(56) **References Cited**

FOREIGN PATENT DOCUMENTS

EP	1177802	2/2002
EP	0987982	1/2007
EP	2060284	5/2009
EP	2201969	6/2010
EP	2327362	6/2011
EP	2335587	6/2011
JP	11-506629	6/1999
JP	2004-520103	7/2004
JP	2004-520898	7/2004
WO	WO-91/15993	10/1991
WO	WO-92/13271	8/1992
WO	WO-94/20602	9/1994
WO	WO-96/39977	5/1996
WO	WO-96/25089	8/1996
WO	WO-98/35053	8/1998
WO	WO-98/56293	12/1998
WO	WO-99/33504	7/1999
WO	WO-99/56613	11/1999
WO	WO-00/49940	8/2000
WO	WO-00/59370	10/2000
WO	WO-00/78992	12/2000
WO	WO-01/52935	7/2001
WO	WO-01/54753	8/2001
WO	WO-02/16905	2/2002
WO	WO-02/50534	6/2002
WO	WO-02/058537	8/2002
WO	WO-03/028784	4/2003
WO	WO-03/076893	9/2003
WO	WO-03/082091	10/2003
WO	WO-2004/028337	4/2004
WO	WO-2004/060436	7/2004
WO	WO-2004/061420	7/2004
WO	WO-2004/098684	11/2004
WO	WO-2004/112602	12/2004
WO	WO-2005/084534	9/2005
WO	WO-2005/089103	9/2005
WO	WO-2006/024671	3/2006
WO	WO-2006/042811	4/2006
WO	WO-2006/108809	10/2006
WO	WO-2007/089738	8/2007
WO	WO-2007/140783	12/2007
WO	WO2008065646	6/2008
WO	WO2008133702	11/2008
WO	WO-2009/062675	5/2009
WO	WO-2009/068661	6/2009
WO	WO2010112521	10/2010
WO	WO-2011/002815	1/2011

OTHER PUBLICATIONS

Bennion, N., et al., "Alternate Site Glucose Testing: A Crossover Design", *Diabetes Technology & Therapeutics*, vol. 4 No. 1, 2002, pp. 25-33.

Claremont, D. J., et al., "Biosensors for Continuous In Vivo Glucose Monitoring", *Proceedings of the Annual International Conference of the IEEE Engineering in Medicine and Biology Society*, vol. 10, 1988.

Clark Jr., L. C., et al., "Electrode Systems for Continuous Monitoring in Cardiovascular Surgery", *Annals New York Academy of Sciences*, 1962, pp. 29-45.

Clark Jr., L. C., et al., "Long-term Stability of Electroenzymatic Glucose Sensors Implanted in Mice", *American Society of Artificial Internal Organs Transactions*, vol. XXXIV, 1988, pp. 259-265.

Csoregi, E., et al., "Design and Optimization of a Selective Subcutaneously Implantable Glucose Electrode Based on 'Wired' Glucose Oxidase", *Analytical Chemistry*, vol. 67, No. 7, 1995, pp. 1240-1244.

Csoregi, E., et al., "Design, Characterization, and One-Point in Vivo Calibration of a Subcutaneously Implanted Glucose Electrode", *Analytical Chemistry*, vol. 66 No. 19, 1994, pp. 3131-3138.

Feldman, B., et al., "A Continuous Glucose Sensor Based on Wired Enzyme™ Technology—Results from a 3-Day Trial in Patients with Type 1 Diabetes", *Diabetes Technology & Therapeutics*, vol. 5, No. 5, 2003, pp. 769-779.

Feldman, B., et al., "Correlation of Glucose Concentrations in Interstitial Fluid and Venous Blood During Periods of Rapid Glucose Change", *Abbott Diabetes Care, Inc. Freestyle Navigator Continous Glucose Monitor Pamphlet*, 2004.

Isermann, R., "Supervision, Fault-Detection and Fault-Diagnosis Methods—An Introduction", *Control Engineering Practice*, vol. 5, No. 5, 1997, pp. 639-652.

Isermann, R., et al., "Trends in the Application of Model-Based Fault Detection and Diagnosis of Technical Processes", *Control Engineering Practice*, vol. 5, No. 5, 1997, pp. 709-719.

Johnson, P. C., "Peripheral Circulation", *John Wiley & Sons*, 1978, pp. 198.

Jungheim, K., et al., "How Rapid Does Glucose Concentration Change in Daily Life of Patients with Type 1 Diabetes?", 2002, pp. 250.

Jungheim, K., et al., "Risky Delay of Hypoglycemia Detection by Glucose Monitoring at the Arm", *Diabetes Care*, vol. 24, No. 7, 2001, pp. 1303-1304.

Koudelka, M., et al., "In-Vivo Behaviour of Hypodermically Implanted Microfabricated Glucose Sensors", *Biosensors & Bioelectronics*, vol. 6, 1991, pp. 31-36.

Lager, W., et al., "Implantable Electrocatalytic Glucose Sensor", *Hormone Metabolic Research*, vol. 26, 1994, pp. 526-530.

Moatti-Sirat, D., et al., "Evaluating In Vitro and In Vivo the Interference of Ascorbate and Acetaminophen on Glucose Detection by a Needle-Type Glucose Sensor", *Biosensors & Bioelectronics*, vol. 7, 1992, pp. 345-352.

Moatti-Sirat, D., et al., "Reduction of Acetaminophen Interference in Glucose Sensors by a Composite Nafion Membrane: Demonstration in Rats and Man", *Diabetologia*, vol. 37, 1994, pp. 610-616.

Olievier, C. N., et al., "In Vivo Measurement of Carbon Dioxide Tension with a Miniature Electrodes", *Pflugers Archiv: European Journal of Physiology*, vol. 373, 1978, pp. 269-272.

Pickup, J., "Developing Glucose Sensors for In Vivo Use", *Tibtech*, vol. 11, 1993, pp. 285-291.

Pickup, J., et al., "Implantable Glucose Sensors: Choosing the Appropriate Sensing Strategy",*Biosensors*, vol. 3, 1987/88, pp. 335-346.

Pickup, J., et al., "Potentially-Implantable, Amperometric Glucose Sensors with Mediated Electron Transfer: Improving the Operating Stability", *Biosensors*, vol. 4, 1989, pp. 109-119.

Poitout, V., et al., "A Glucose Monitoring System for on Line Estimation in Man of Blood Glucose Concentration Using a Miniaturized Glucose Sensor Implanted in the Subcutaneous Tissue and a Wearable Control Unit", *Diabetolgia*, vol. 36, 1993, pp. 658-663.

Poitout, V., et al., "Calibration in Dogs of a Subcutaneous Miniaturized Glucose Sensor Using a Glucose Meter for Blood Glucose Determination", *Biosensors & Bioelectronics*, vol. 7, 1992, pp. 587-592.

Quinn, C. P., et al., "Kinetics of Glucose Delivery to Subcutaneous Tissue in Rats Measured with 0.3-mm Amperometric Microsensors", *The American Physiological Society*, 1995, E155-E161.

Roe, J. N., et al., "Bloodless Glucose Measurements", *Critical Review in Therapeutic Drug Carrier Systems*, vol. 15, Issue 3, 1998, pp. 199-241.

Salehi, C., et al., "A Telemetry-Instrumentation System for Long-Term Implantable Glucose and Oxygen Sensors", *Analytical Letters*, vol. 29, No. 13, 1996, pp. 2289-2308.

Scheller, F., et al., "Enzyme Electrodes and Their Application", *Philosophical Transactions of the Royal Society of London B*, vol. 316, 1987, pp. 85-94.

Schmidt, F. J., et al., "Calibration of a Wearable Glucose Sensor", *The International Journal of Artificial Organs*, vol. 15, No. 1, 1992, pp. 55-61.

Schmidtke, D. W., et al., "Measurement and Modeling of the Transient Difference Between Blood and Subcutaneous Glucose Concentrations in the Rat After Injection of Insulin", *Proceedings of the National Academy of Sciences*, vol. 95, 1998, pp. 294-299.

Shaw, G. W., et al., "In Vitro Testing of a Simply Constructed, Highly Stable Glucose Sensor Suitable for Implantation in Diabetic Patients", *Biosensors & Bioelectronics*, vol. 6, 1991, pp. 401-406.

Shichiri, M., et al., "Membrane Design for Extending the Long-Life of an Implantable Glucose Sensor", *Diabetes Nutrition and Metabolism*, vol. 2, 1989, pp. 309-313.

(56) **References Cited**

OTHER PUBLICATIONS

Shichiri, M., et al., "Needle-type Glucose Sensor for Wearable Artificial Endocrine Pancreas", *Implantable Sensors for Closed-Loop Prosthetic Systems*, Chapter 15, 1985, pp. 197-210.
Thompson, M., et al., "In Vivo Probes: Problems and Perspectives", *Clinical Biochemistry*, vol. 19, 1986, pp. 255-261.
Velho, G., et al., "In Vitro and In Vivo Stability of Electrode Potentials in Needle-Type Glucose Sensors", *Diabetes*, vol. 38, No. 2, 1989, pp. 164-171.
Von Woedtke, T., et al., "In Situ Calibration of Implanted Electrochemical Glucose Sensors", *Biomedica Biochimica Acta*, vol. 48, 1989, pp. 943-952.
PCT Application No. PCT/US2011/029881, International Search Report and Written Opinion of the International Searching Authority mailed May 20, 2011.
PCT Application No. PCT/US2011/029883, International Search Report and Written Opinion of the International Searching Authority mailed Jun. 2, 2011.
PCT Application No. PCT/US2011/029884, International Search Report and Written Opinion of the International Searching Authority mailed Jun. 1, 2011.
U.S. Appl. No. 90/008,172, Request for Reexamination of U.S. Pat. No. 6,990,366, filed Aug. 16, 2006.
U.S. Appl. No. 90/008,457, Notice of Intent to Issue Reexamination Certificate mailed Mar. 13, 2008.
U.S. Appl. No. 90/008,457, Order Granting Request for Reexamination mailed Feb. 23, 2007.
U.S. Appl. No. 90/009,104 & 90/009,328, Notice of Intent to Issue Reexamination Certificate mailed Nov. 20, 2009.
U.S. Appl. No. 90/009,104 & 90/009,328, Office Action mailed Aug. 4, 2009.
U.S. Appl. No. 90/009,104 & 90/009,328, Office Action mailed Sep. 30, 2009.
U.S. Appl. No. 90/009,104, Office Action mailed Oct. 16, 2008.
U.S. Appl. No. 90/009,104, Order Granting Request for Reexamination mailed Jun. 5, 2008.
U.S. Appl. No. 90/009,104, Request for Reexamination of U.S. Patent No. 6,990,366 filed Apr. 8, 2008.
U.S. Appl. No. 90/009,328, Order Granting Request for Reexamination mailed Dec. 9, 2008.
U.S. Appl. No. 90/009,328, Request for Reexamination of U.S. Patent No. 6,990,366 filed Nov. 10, 2008.
U.S. Appl. No. 90/010,791, Notice of Intent to Issue Reexamination Certificate mailed May 17, 2011.
U.S. Appl. No. 90/010,791, Office Action mailed Dec. 17, 2010.
U.S. Appl. No. 90/010,791, Office Action mailed May 28, 2010.
U.S. Appl. No. 90/010,791, Order Granting Request for Reexamination mailed Feb. 22, 2010.
U.S. Appl. No. 90/010,791, Request for Reexamination of U.S. Patent No. 6,990,366 filed Dec. 22, 2009.
U.S. Appl. No. 90/011,730, Office Action mailed Jan. 11, 2012.
U.S. Appl. No. 90/011,730, Order Granting Request for Reexamination of U.S. Patent No. 6,990,366 mailed Aug. 24, 2011.
U.S. Appl. No. 90/011,730, Request for Reexamination of U.S. Patent No. 6,990,366 filed Jun. 3, 2011.
Alcock & Turner, "Continuous analyte monitoring to aid clinical practice," IEEE Engineering in Medicine & BioloXY Magazine, 13:319-25 (1994).
Armour et al., "Application of Chronic Intravascular Blood Glucose Sensor in Dogs," Diabetes, vol. 39, pp. 1519-1526, Dec. 1990.
Bindra, D.S. et al., "Design and in Vitro Studies of a Needle-Type Glucose Sensor for Subcutaneous Monitoring", Anal. Chem., 63(17):1692-1696 (Sep. 1, 1991).
Bobbioni-Harsch, E. et al., "Lifespan of subcutaneous glucose sensors and their performances during dynamic glycaemia changes in rats," J. Biomed. Eng. 15:457-463 (1993).
Cass, A.E.G. et al., "Ferrocene-Mediated Enzyme Electrode for Amperometric Determination of Glucose", Anal. Chem., 56(4):667-671 (Apr. 1984).
Gregg, B. A. et al., "Cross-Linked Redox Gels Containing Glucose Oxidase for Amperometric Biosensor Applications," Analytical Chemistry, 62(3):258-263 (Feb. 1, 1990).
Harrison, D.J. et al., "Characterization of Perfluorosulfonic Acid Polymer Coated Enzyme Electrodes and a Miniaturized Integrated Potentiostat for Glucose Analysis in Whole Blood", Anal. Chem., 60 (19):2002-2007 (Oct. 1, 1988).
Heller, A., "Electrical Connection of Enzyme Redox Centers to Electrodes," J. Phys. Chem., 96 (9):3579-3587 (1992).
Heller, A., "Electrical Wiring of Redox Enzymes," Acc. Chem. Res., 23(5):129-134 (1990).
International Search Report and Written Opinion from PCT/US2010/022860 mailed Mar. 23, 2010.
International Search Report and Written Opinion from PCT/US2010/047381 mailed Oct. 15, 2010.
International Search Report and Written Opinion from PCT/US2010/050772 mailed Dec. 3, 2010.
International Search Report and Written Opinion from PCT/US2010/050888 mailed Nov. 29, 2010.
International Search Report and Written Opinion from PCT/US2010/051861 mailed Nov. 30, 2010.
Johnson, K., et al. In vivo evaluation of an electroenzymatic glucose sensor implanted in subcutaneous tissue. Biosensors and Bioelectronics. 1992, vol. 7, pp. 709-714.
Maidan, R. et al., "Elimination of Electroaxidizable Interferant-Produced Currents in Amperometric Biosensors," Analytical Chemistry, 64(23):2889-2896 (Dec. 1, 1992).
Mastrototaro, J.J. et al., "An Electroenzymatic Glucose Sensor Fabricated on a Flexible Substrate", Sensors and Biosensors B Chemical, B5:139-144 (1991).
McKean, B. et al. "A Telemetry-Instrumentation System for Chronically Implanted Glucose and Oxygen Sensors," IEEE Transactions on Biomedical Engineering, vol. 35, No. 7, (Jul. 1988), pp. 526-532.
Moatti-Sirat, D. et al., "Towards continuous glucose monitoring: in vivo evaluation of a miniaturized glucose sensor implanted for several days in rat subcutaneous tissue," Diabetolocia, 35(3) (1 page—Abstract only) (Mar. 1992).
Ohara, T. J. et al., "Glucose Electrodes Based on Cross-Linked [Os(bpy).sub.2 Cl].sup. +/2+ Complexed Poly(I-vinylimadazole) Films," Analytical Chemistry, 65(23):3512-3516 (Dec. 1, 1993).
Opinion of the Court, Supreme Court of the United States, No. 04-1350, KSR International co., *Petitioner* v. *Teleflex Inc. et al.*, Apr. 30, 2007.
Pickup, J. C. et al., "In vivo molecular sensing in diabetes mellitus: an implantable glucose sensor with direct electron transfer," Diabetologia, 32(3):213-217 (1989).
Pishko, M. V. et al., "Amperometric Glucose Microelectrodes Prepared Through Immobilization of Glucose Oxidase in Redox Hydrogels", Anal. Chem., 63(20):2268-2272 (Oct. 15, 1991).
Poitout , V. et al., "In vitro and in vivo evaluation in dogs of a miniaturized glucose sensor," ASAIO Transactions, 37(3) (1 page—Abstract only) (Jul.-Sep. 1991).
Reach, G. et al., "Can Continuous Glucose Monitoring Be Used for the Treatment of Diabetes?" Analytical Chemistry, 64(6):381-386 (Mar. 15, 1992).
Rebrin, K. et al., "Automated Feedback Control of Subcutaneous Glucose Concentration in Diabetic Dogs", Diabetologia, 32(8):573-576 (Aug. 1989).
Request for Reexamination U.S. Appl. No. 90/008,457 of U.S. Patent No. 6,990,366. filed Jan. 23, 2007.
Sakakida, M. et al., "Ferrocene-mediate needle-type glucose sensor covered with newly designed biocompatible membrane," Sensors and Actuators B, 13-14:319-322 (1993).
Sakakida, M., et al. Development of ferrocene-mediated needle-type glucose sensor as a measure of true subcutaneous tissue glucose concentrations. Artif Organs Today. 1992, vol. 2, No. 2, pp. 145-458.
Shichiri, M. et al., "Glycaemic Control in Pancrearetomized Dogs with a Wearable Artificial Endocrine Pancreas", Diabetologia, 24(3):179-184 (Mar. 1983).
Shichiri, M. et al., "Telemetry Glucose Monitoring Device with Needle-type Glucose Sensor: A Useful Tool for Blood Glucose Monitoring in Diabetic Individuals," Diabetes Care, vol. 9, No. 3 (May-Jun. 1986), pp. 298-301.

(56) **References Cited**

OTHER PUBLICATIONS

Shichiri, M., et al. In vivo characteristics of needle-type glucose sensor—Measurement of subcutaneous glucose concentrations in human volunteers. Horm Metab Res Suppl. 1988, vol. 20, pp. 17-20.
Shichiri, M., et al. Wearable artificial endocrine pancreas with needle-type glucose sensor. The Lancet. Nov. 20, 1982, vol. 2, No. 8308, pp. 1129-1131.
Shults, M. "A Telemetry-Instrumentation System for Monitoring Multiple Subcutaneously Implanted Glucose Sensors," IEEE Transactions on Biomedical Engineering, vol. 41, No. 10 (Oct. 1994), pp. 937-942.
Sternberg, R. et al., "Study and Development of Multilayer Needle-type Enzyme-based Glucose Microsensors," Biosensors, 4:27-40 (1988).
Turner, A.P.F. et al., "Diabetes Mellitus: Biosensors for Research and Management", Biosensors, 1:85-115 (1985).
Updike, S. et al., "Principles of Long-term Fully Implanted Sensors with Emphasis on Radiotelemetric Monitoring of Blood Glucase from Inside a Subcataneous Foreign Body Capsule (FBC)" in "Biosensors in the Body: Continuous in vivo Monitoring" (John Wiley & Sons, Ltd., 1997) Chapter 4, pp. 117-137.
Velho, G. et al., "Strategies for calibrating a subcutaneous glucose sensor," Biomed. Biochim. Acta, 48 (11/12):957-964 (1989).
Wilson, G. S. et al., "Progress toward the Development of an Implantable Sensor for Glucose," Clinical Chemistry, 38(9):1613-1617 (1992).
Ye, L. et al., "High Current Density "Wired" Quinoprotein Glucose Dehydrogenase Electroade," Anal. Chem., 65(3):238-241 (Feb. 1, 1993).
PCT Application No. PCT/US2011/029884, International Preliminary Report on Patentability and Written Opinion of the International Searching Authority mailed Oct. 4, 2012.
Gunasingham, et al., "Electrochemically Modulated Optrode for Glucose", *Biosensors & Bioelectronics*, vol. 7, 1992, pp. 353-359.
Ikeda, T., et al., "Artificul Pancreas—Investigation of the Stability of Glucose Sensors Using a Telemetry System" (English langauge tranlsation of abstract), *Jpn. J. Artif. Organs*, vol. 19, No. 2, 1990, 889-892.
Minimed Technologies, "Tape Tips and Other Infusion Site Information", 1995.
European Patent Application No. EP 10739015.5, Extended European Search Report mailed May 10, 2013.
PCT Application No. PCT/US2010/022860, International Preliminary Report on Patentability and Written Opinion of the International Searching Authority mailed Aug. 18, 2011.
PCT Application No. PCT/US2010/047381, International Preliminary Report on Patentability and Written Opinion of the International Searching Authority mailed Mar. 15, 2012.
PCT Application No. PCT/US2010/050772, International Preliminary Report on Patentability and Written Opinion of the International Searching Authority mailed Apr. 12, 2012.
PCT Application No. PCT/US2010/050888, International Preliminary Report on Patentability and Written Opinion of the International Searching Authority mailed Apr. 12, 2012.
PCT Application No. PCT/US2010/051861, International Preliminary Report on Patentability and Written Opinion of the International Searching Authority mailed Apr. 19, 2012.
PCT Application No. PCT/US2011/029881, International Preliminary Report on Patentability and Written Opinion of the International Searching Authority mailed Oct. 4, 2012.
PCT Application No. PCT/US2011/029883, International Preliminary Report on Patentability and Written Opinion of the International Searching Authority mailed Oct. 4, 2012.
PCT Application No. PCT/US2012/062551, International Search Report and Written Opinion of the International Searching Authority mailed Jan. 2, 2013.
U.S. Appl. No. 12/873,133, Office Action mailed Feb. 25, 2013.
U.S. Appl. No. 12/900,363, Office Action mailed Jun. 21, 2013.
U.S. Appl. No. 12/900,363, Office Action mailed Mar. 11, 2013.
U.S. Appl. No. 13/071,487, Advisory Action mailed Aug. 6, 2013.
U.S. Appl. No. 13/071,487, Office Action mailed Feb. 5, 2013.
U.S. Appl. No. 13/436,816, Office Action mailed Apr. 18, 2013.
U.S. Appl. No. 90/011,730, Notice of Intent to Issue Reexam Certificate for U.S. Patent No. 6,990,366 mailed Apr. 5, 2012.
U.S. Appl. No. 95/002,113, Order Denying Request for Reexamination of U.S. Patent No. 6,990,366 mailed Nov. 13, 2012.
U.S. Appl. Application No. 95/002,113, Petition for Review of the Order Denying Request Reexamination of U.S. Patent No. 6,990,366 mailed Dec. 13, 2012.
U.S. Appl. No. 95/002,113, Request for Reexamination of U.S. Patent No. 6,990,366 filed Aug. 30, 2012.
U.S. Appl. No. 95/002,162, Order Denying Request for Reexamination of U.S. Patent No. 8,175,673 mailed Nov. 13, 2012.
U.S. Appl. No. 95/002,162, Petition for Review of the Order Denying Request Reexamination of U.S. Patent No. 8,175,673 mailed Dec. 13, 2012.
U.S. Appl. No. 95/002,162, Request for Reexamination of U.S. Patent No. 8,175,673 filed Sep. 7, 2012.
U.S. Appl. No. 12/900,363, Advisory Action mailed Sep. 10, 2013.
U.S. Appl. No. 13/071,461, Office Action mailed Nov. 21, 2013.
U.S. Appl. No. 13/407,750, Office Action mailed Dec. 19, 2013.
U.S. Appl. No. 13/436,816, Office Action mailed Jan. 7, 2014.
Australian Patent Application No. 2011230596, Examination Report mailed Feb. 28, 2014.
Australian Patent Application No. 2011269796, Examination Report mailed Apr. 3, 2014.
Chinese Patent Application No. 201180002616.7, Original Language and English Translation of Office Action mailed Apr. 24, 2014.
Chinese Patent Application No. 201180002617.1, Original Language and English Translation of Office Action mailed Jul. 3, 2014.
European Patent Application No. EP 11760268.0, Extended European Search Report mailed Apr. 14, 2014.
U.S. Appl. No. 12/698,129, Office Action mailed Aug. 4, 2014.
U.S. Appl. No. 13/071,461, Advisory Action mailed Sep. 26, 2014.
U.S. Appl. No. 13/071,461, Office Action mailed Jun. 20, 2014.
U.S. Appl. No. 13/071,487, Office Action mailed May 30, 2013.
U.S. Appl. No. 13/071,487, Office Action mailed Nov. 5, 2014.
U.S. Appl. No. 13/436,768, Office Action mailed Nov. 6, 2014.
U.S. Appl. No. 13/436,777, Office Action mailed Jul. 2, 2014.
U.S. Appl. No. 13/436,789, Office Action mailed Jun. 25, 2014.
U.S. Appl. No. 13/436,793, Office Action mailed Jun. 25, 2014.
U.S. Appl. No. 13/436,816, Advisory Action mailed Mar. 18, 2014.
U.S. Appl. No. 13/436,816, Notice of Allowance mailed Apr. 4, 2014.

* cited by examiner

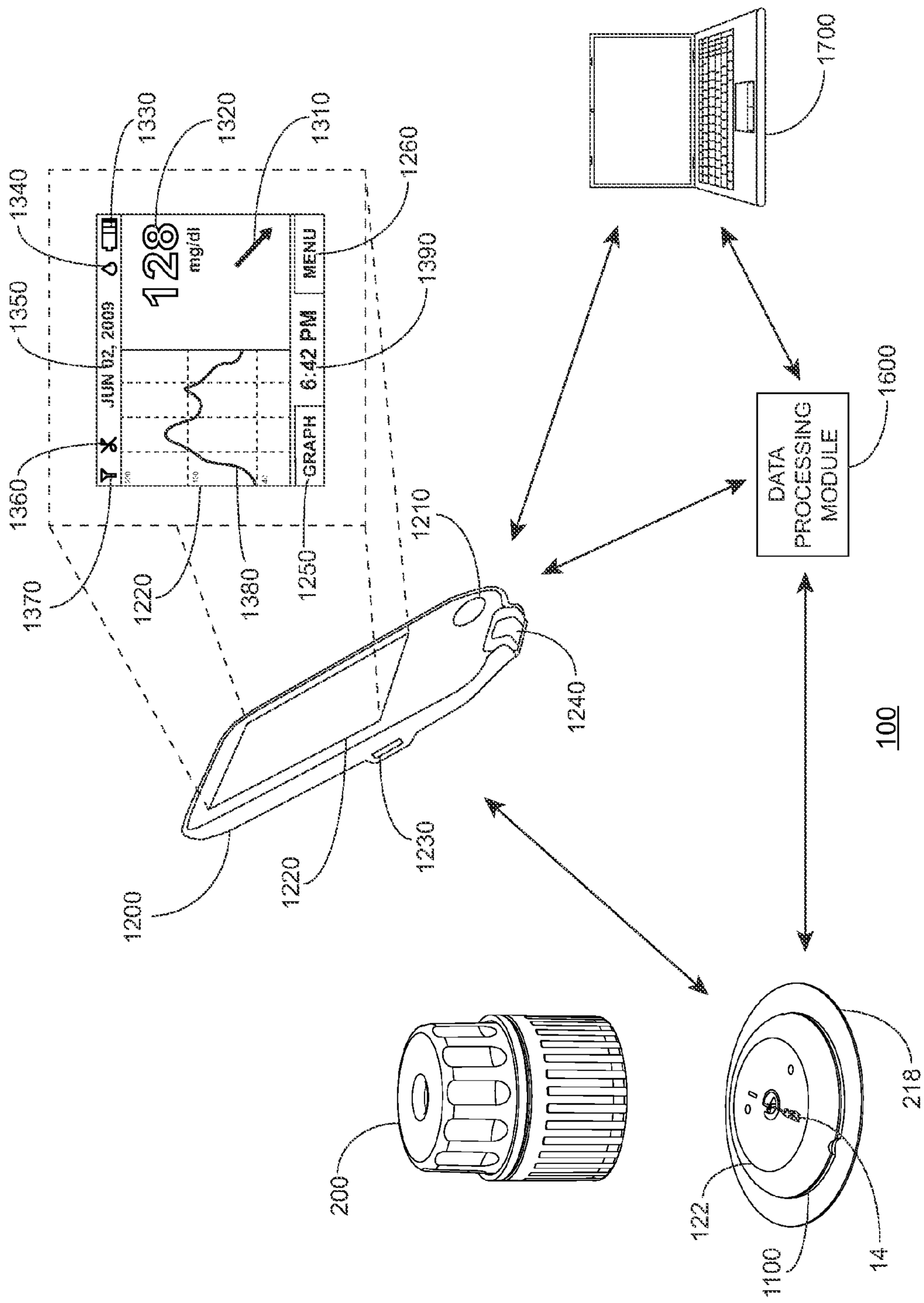
1700
1330
1320
1310
1260
1340
128
mg/dl
MENU
1390
1350
JUN 02, 2009
6:42 PM
GRAPH
1360
1370
1220
1380
1250
1210
DATA PROCESSING MODULE
1600
1240
100
1200
1220
1230
200
218
122
1100
14

FIG. 1

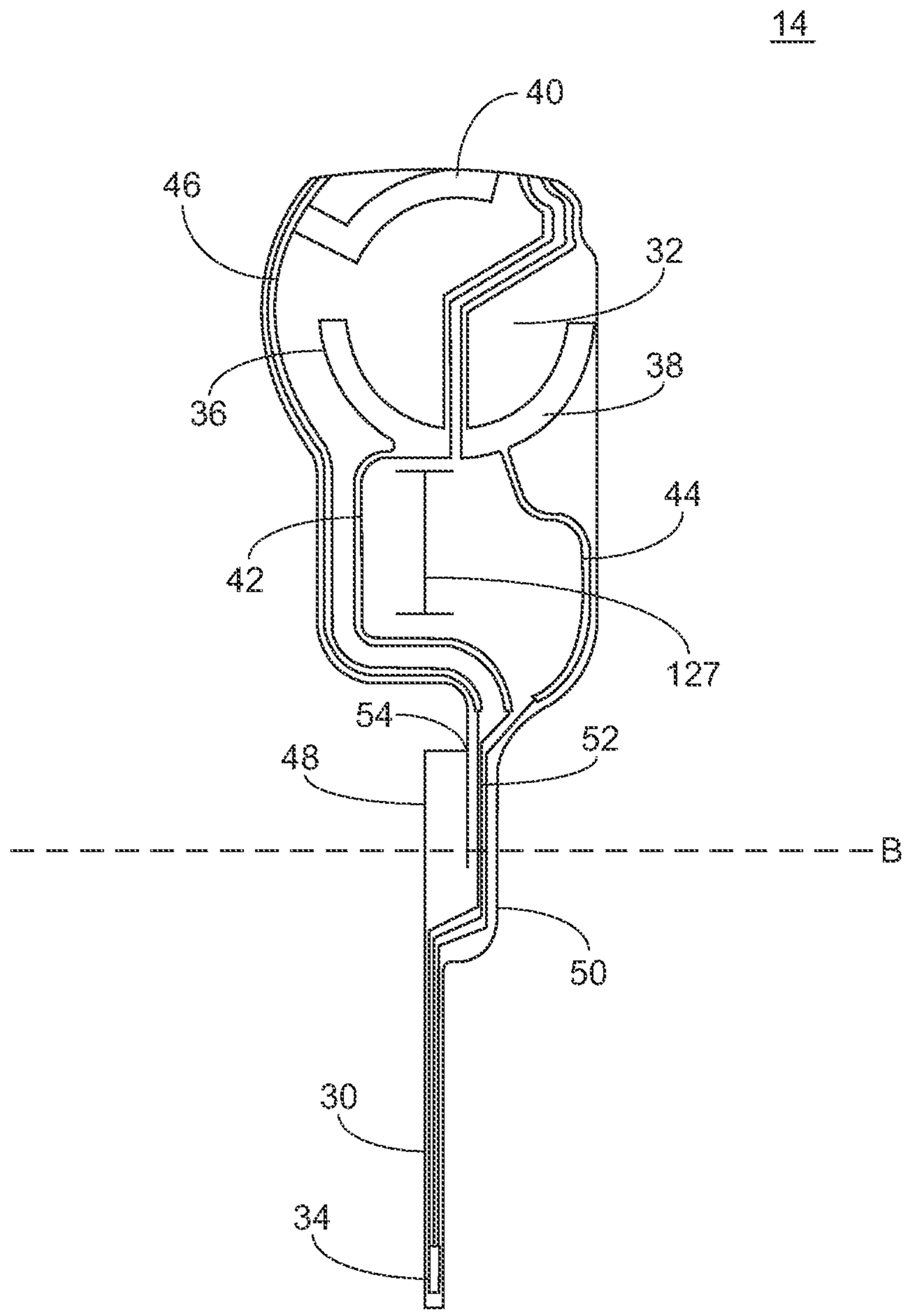

FIG. 2

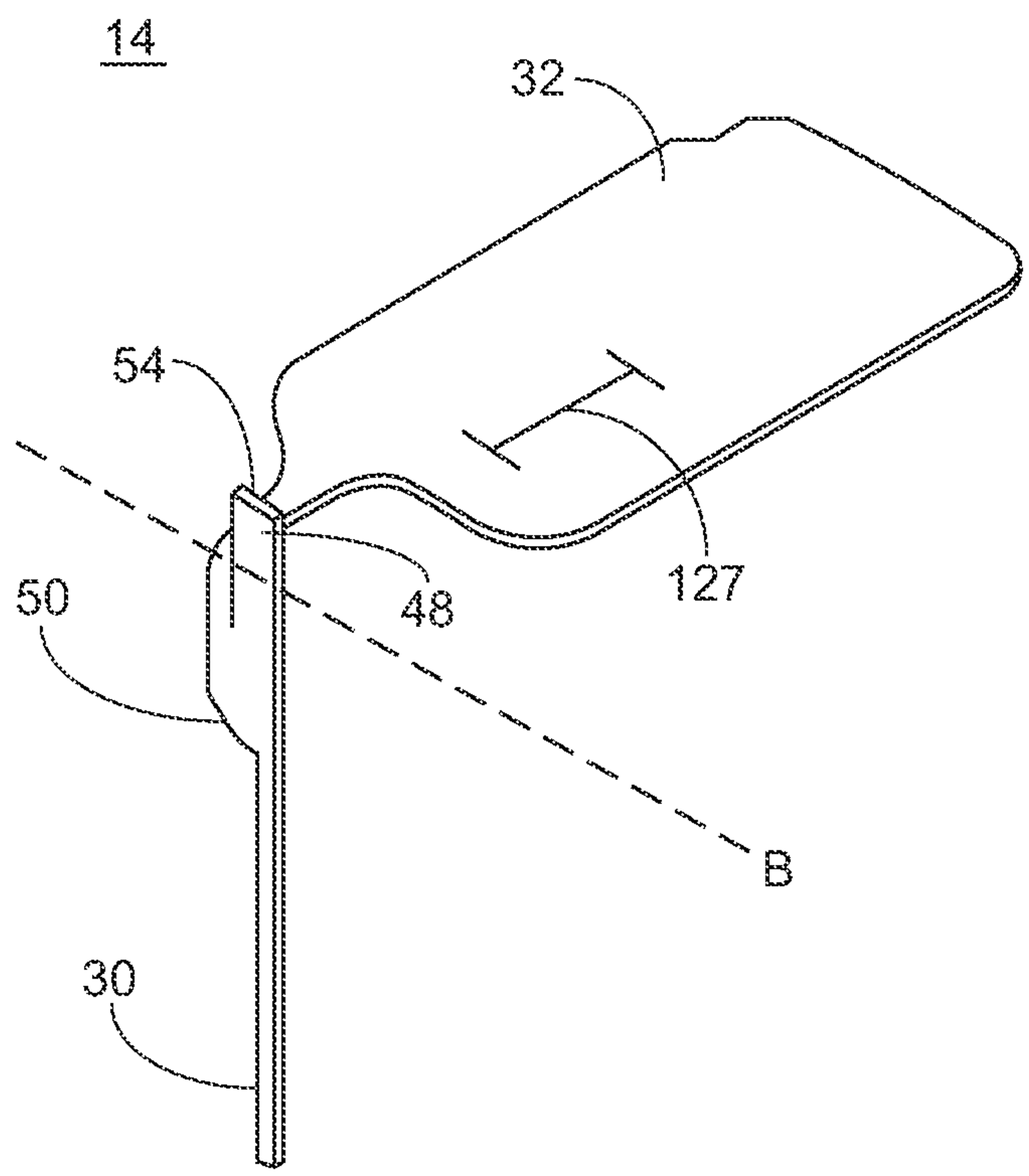

FIG. 3

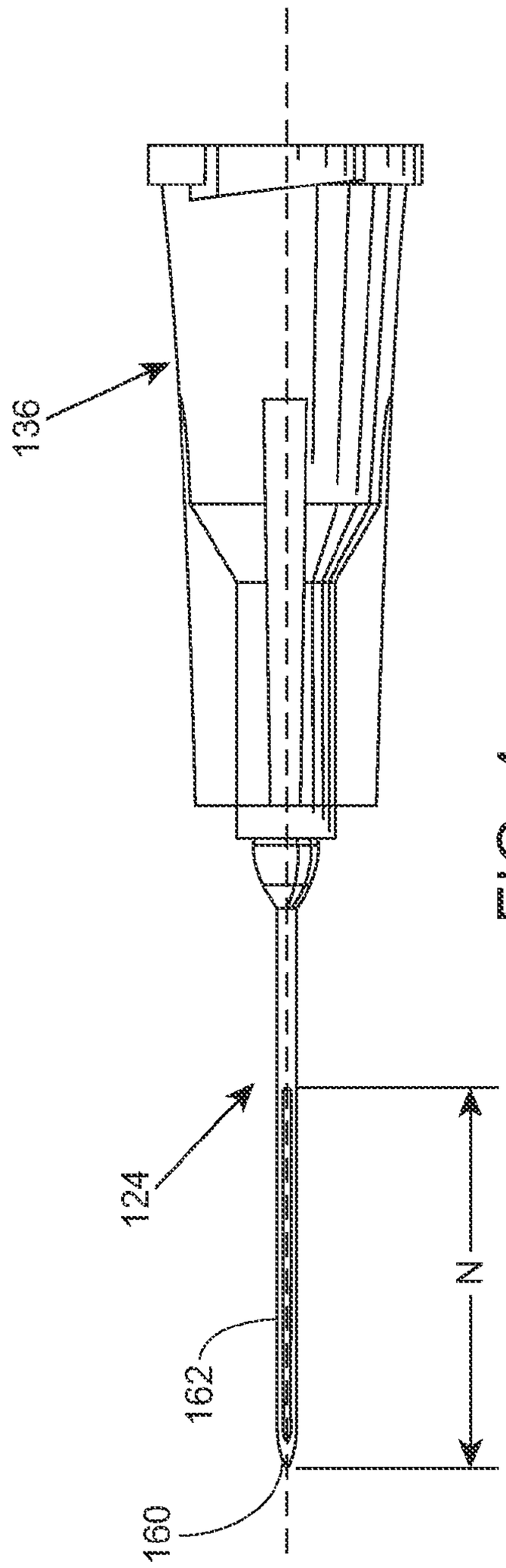

FIG. 4

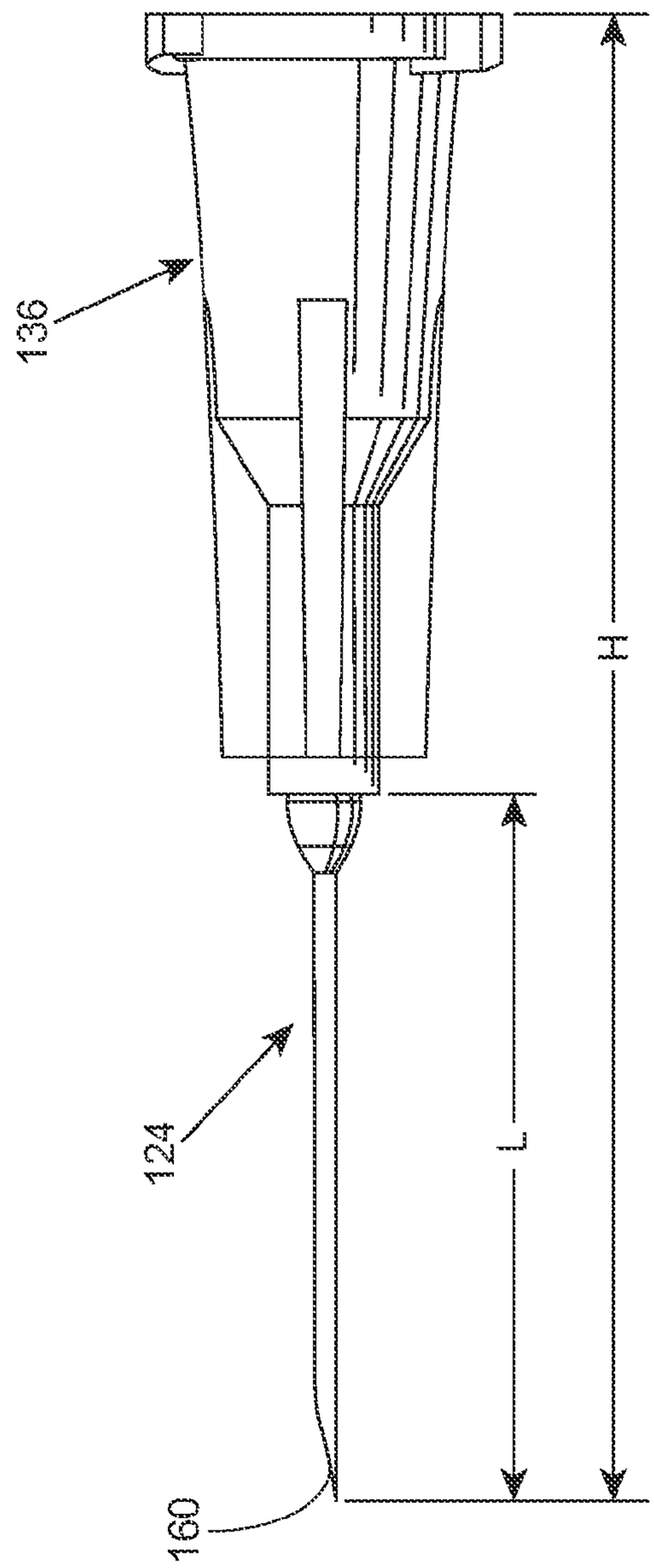

FIG. 5

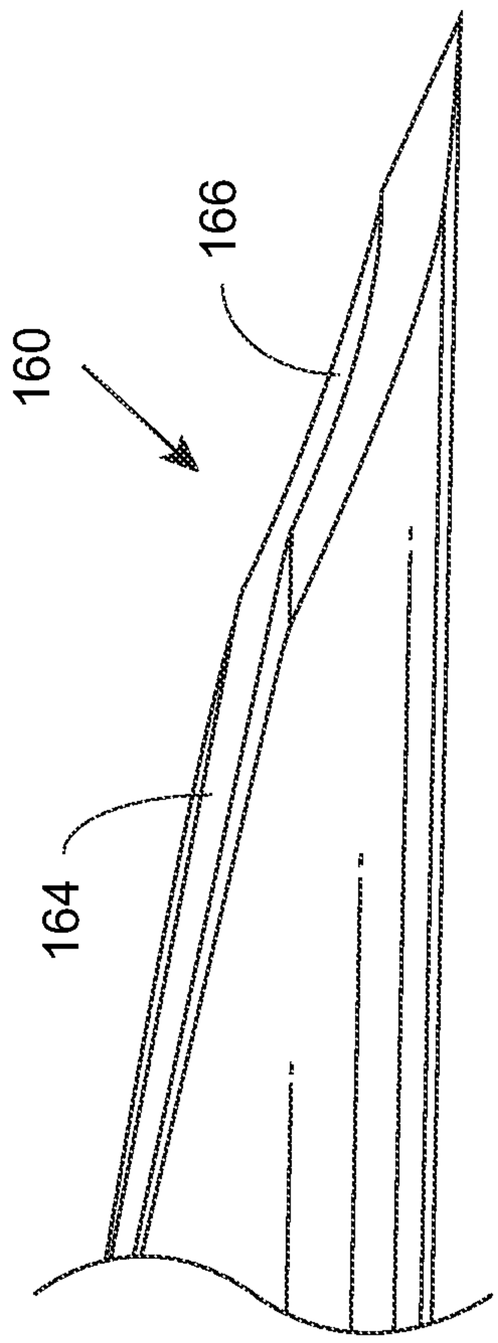

FIG. 7

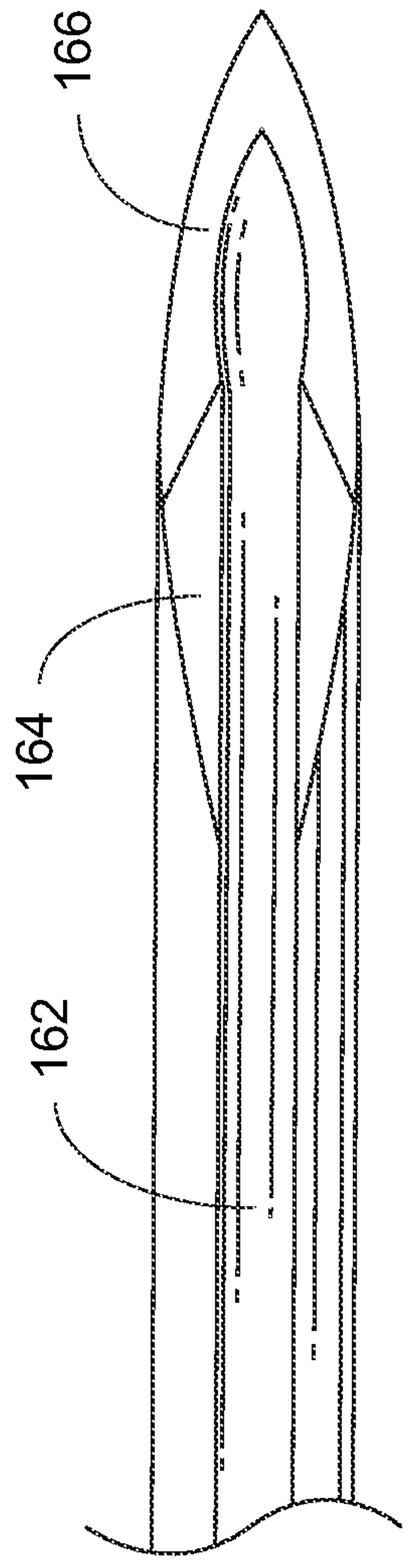

FIG. 8

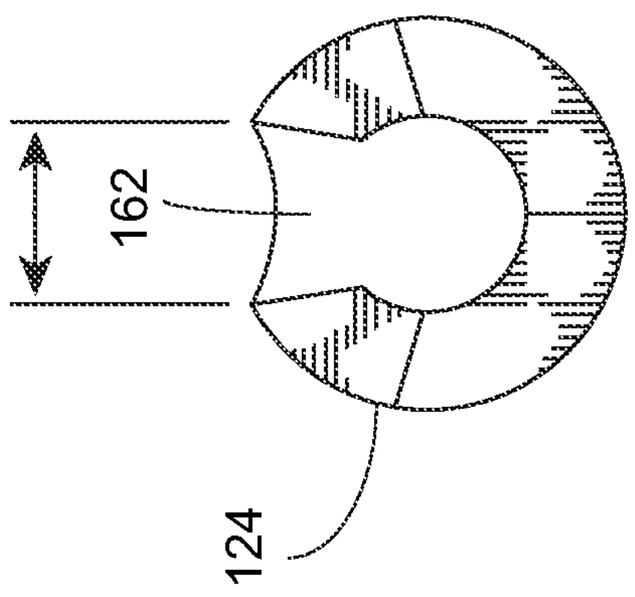

FIG. 6

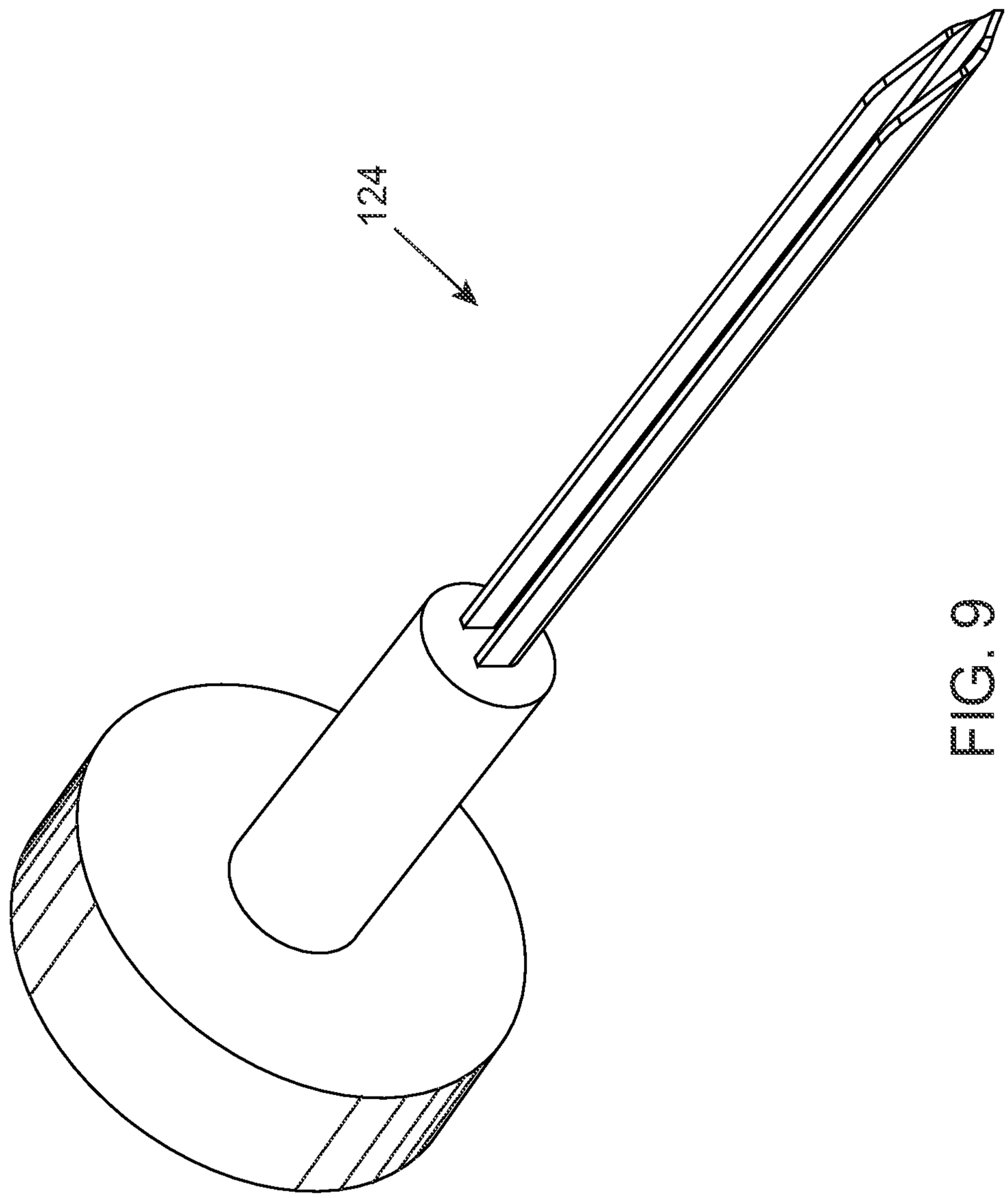

FIG. 9

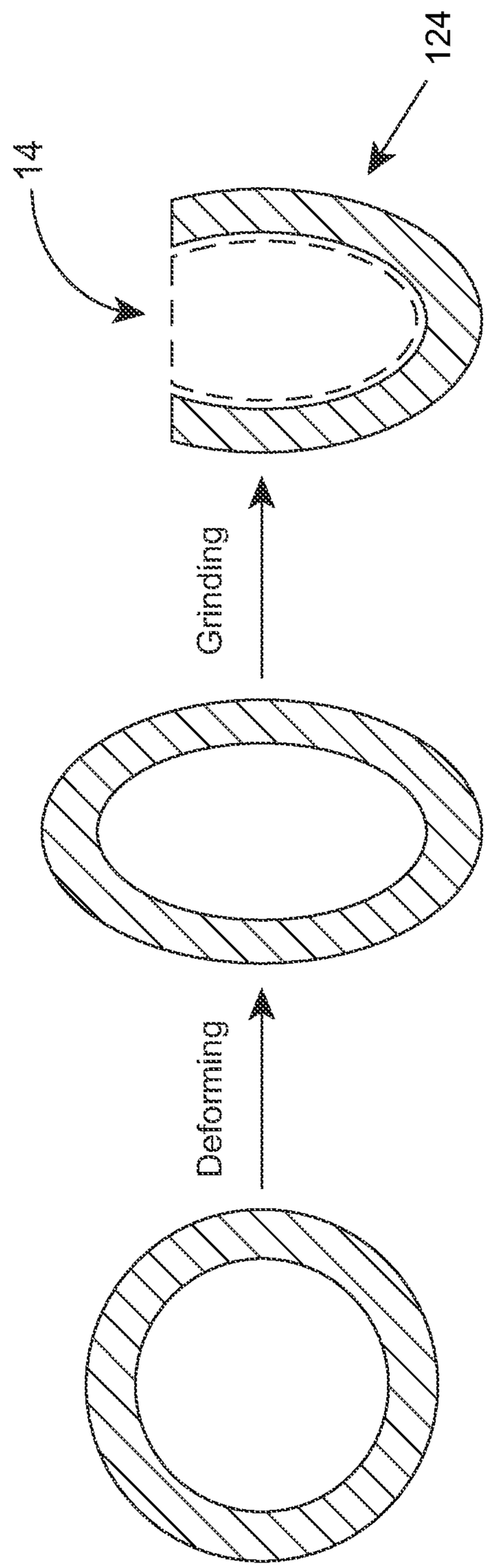

FIG. 10

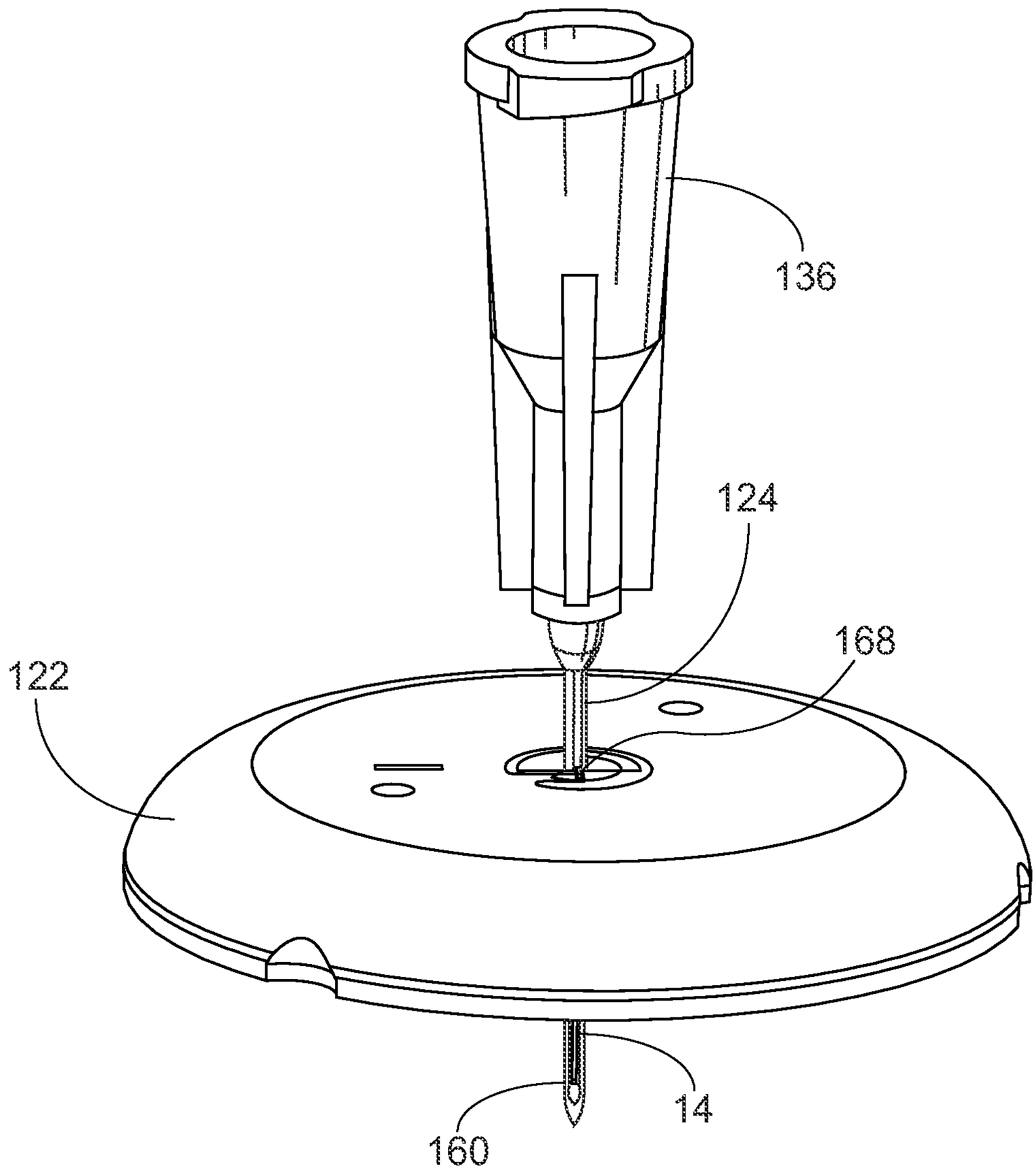

FIG. 11

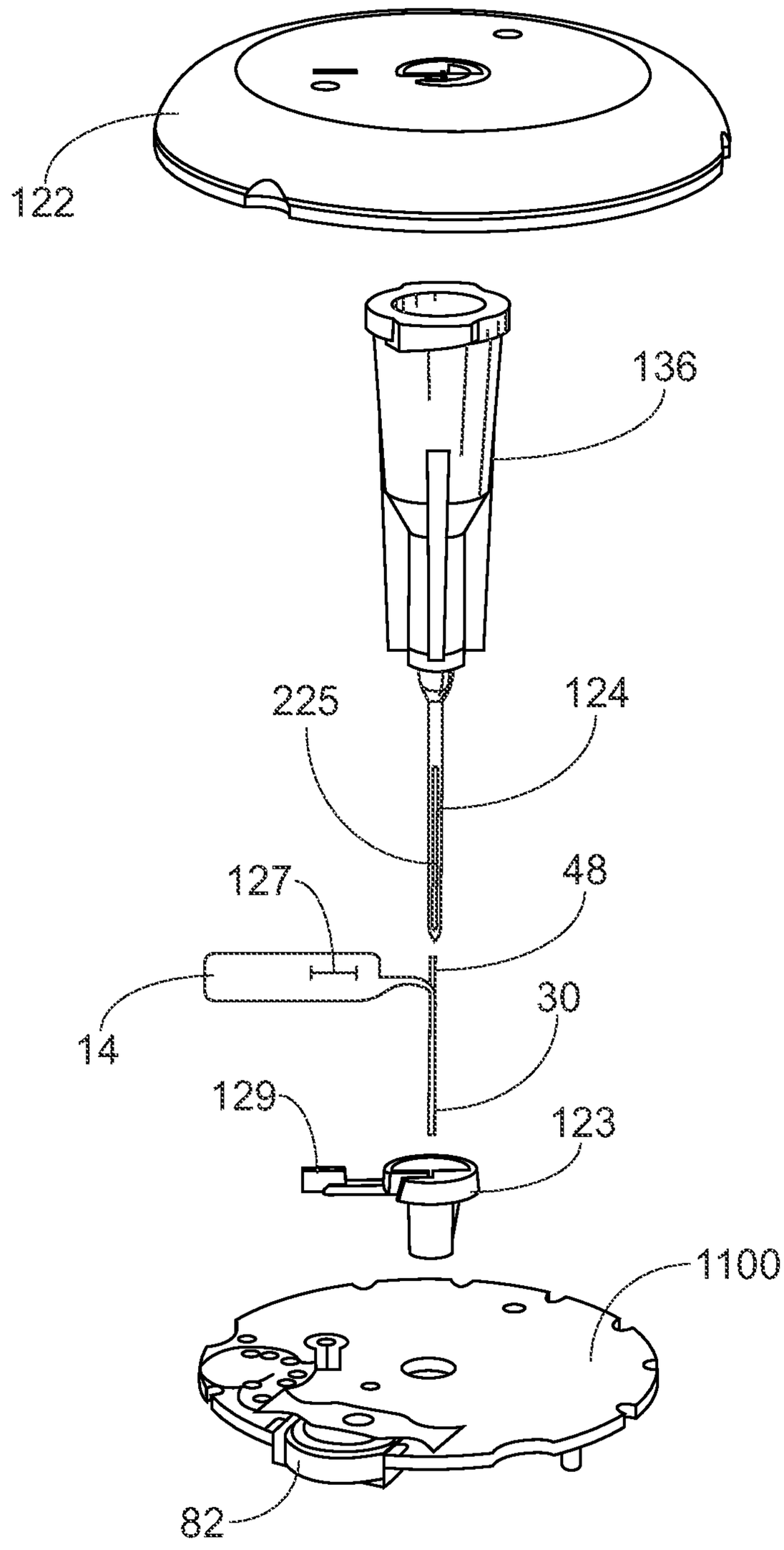

FIG. 12

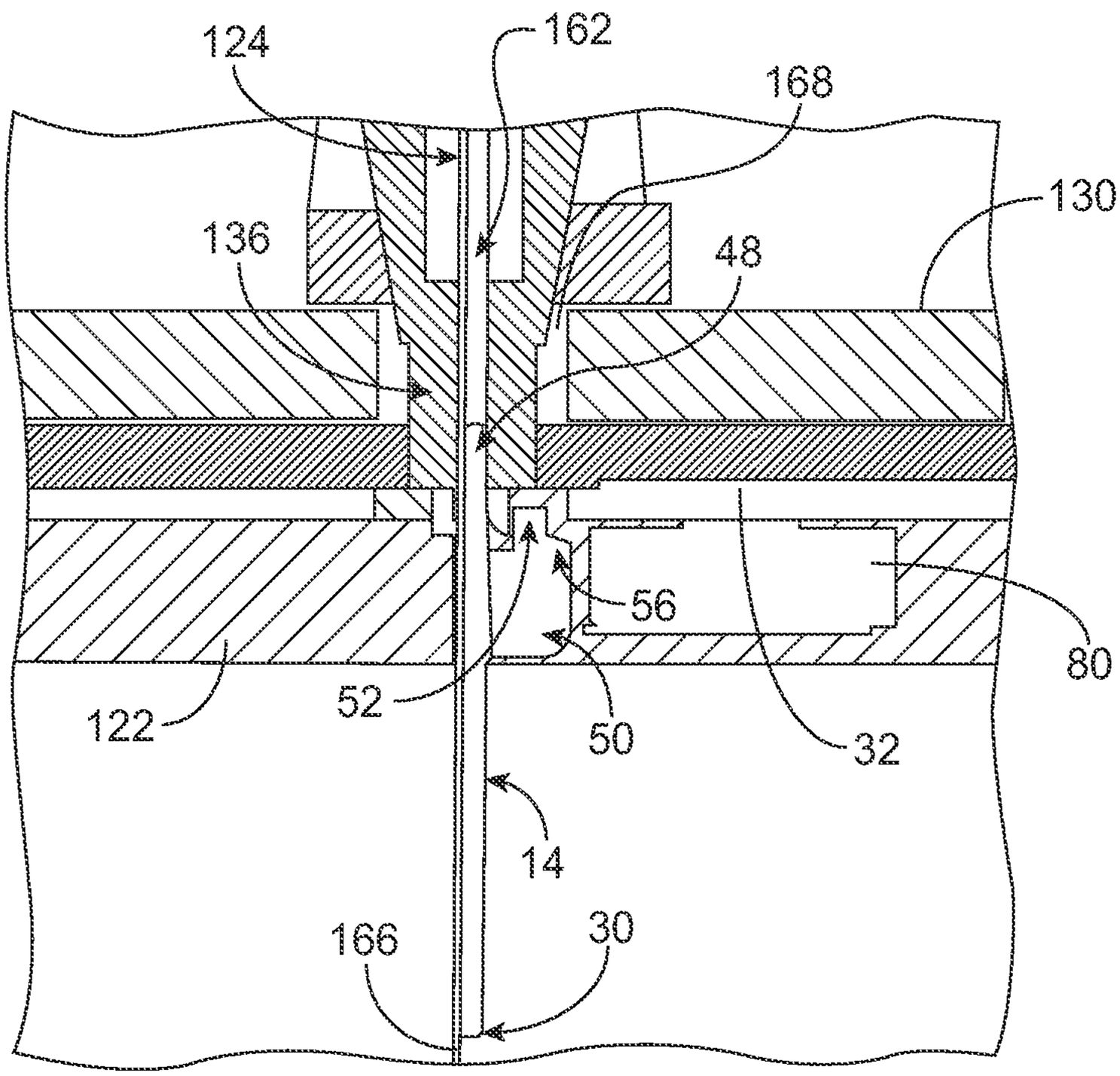

FIG. 13

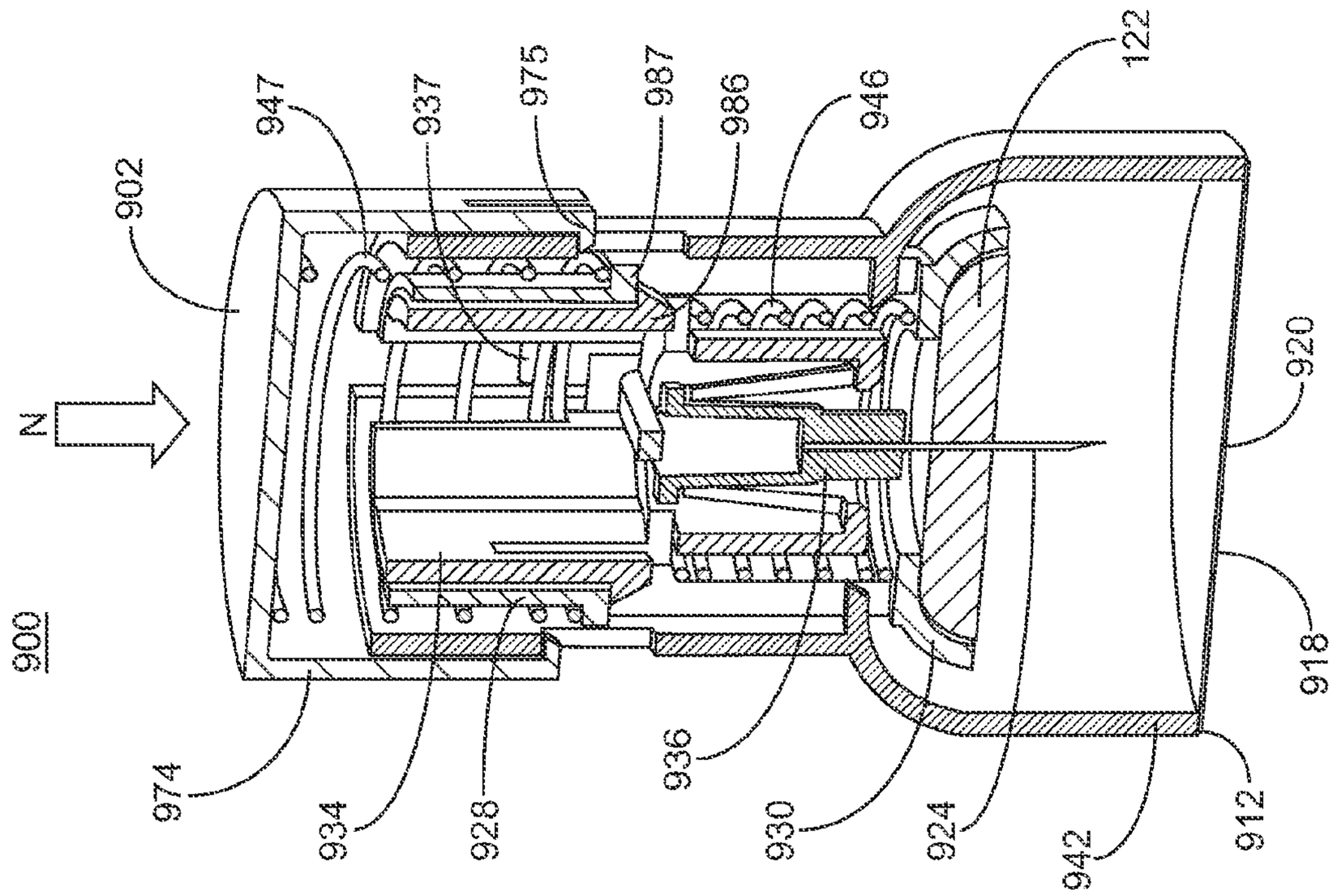
900
N
902
947
937
975
987
986
946
122
920
918
912
942
924
930
936
928
934
974

FIG. 15

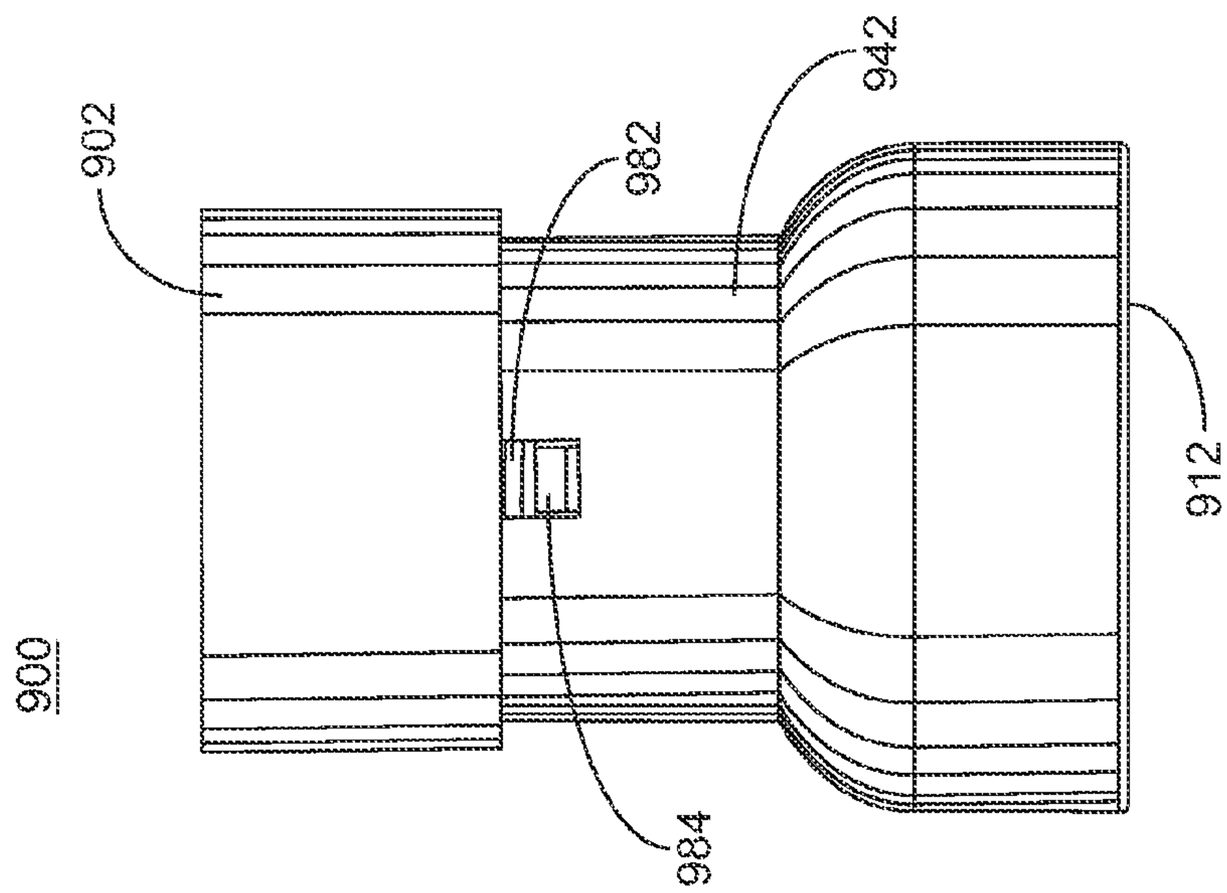
900
902
982
942
912
984

FIG. 14

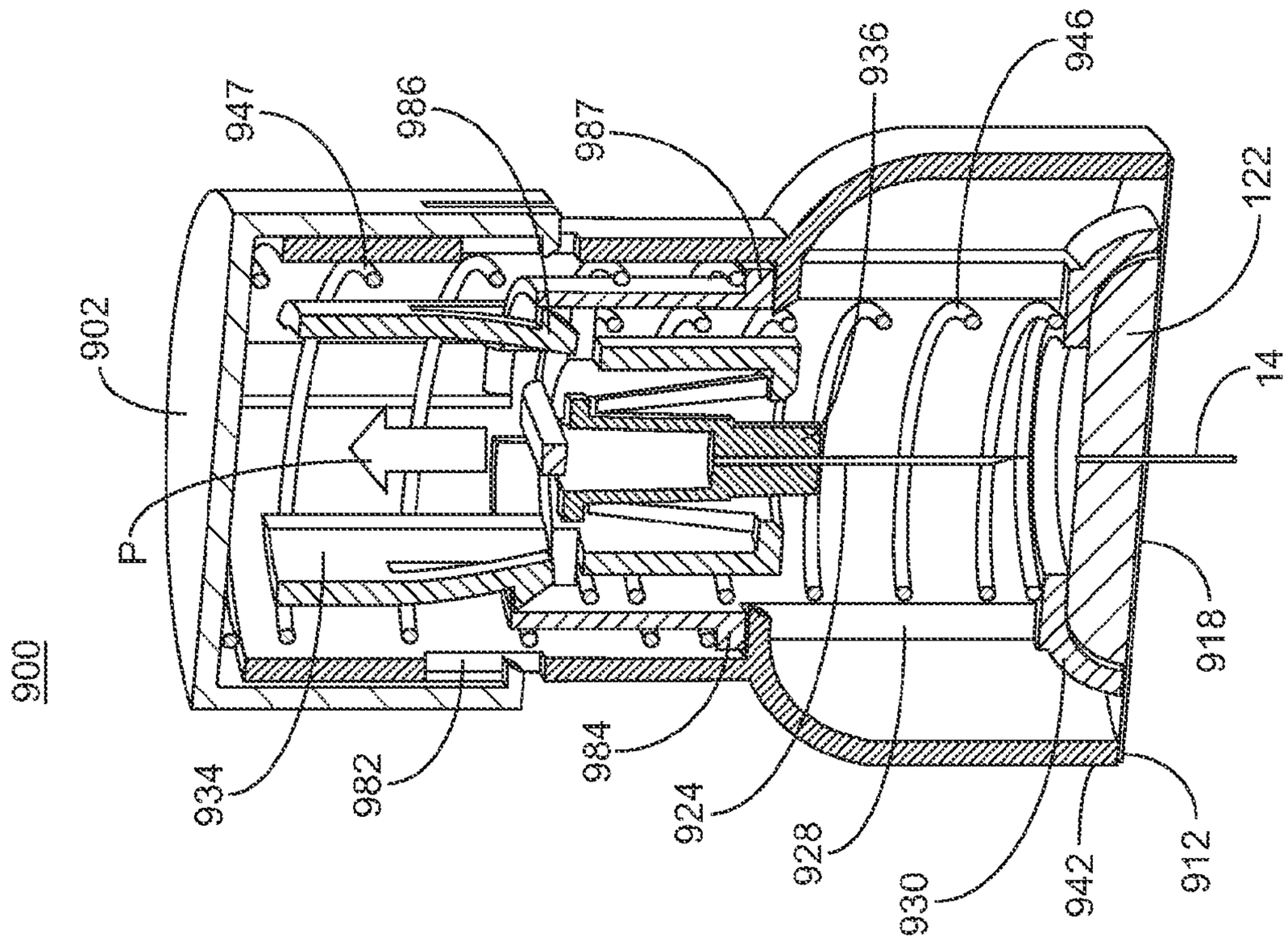
900
902
P
947
986
987
936
946
122
14
918
934
982
984
924
928
930
942
912

FIG. 17

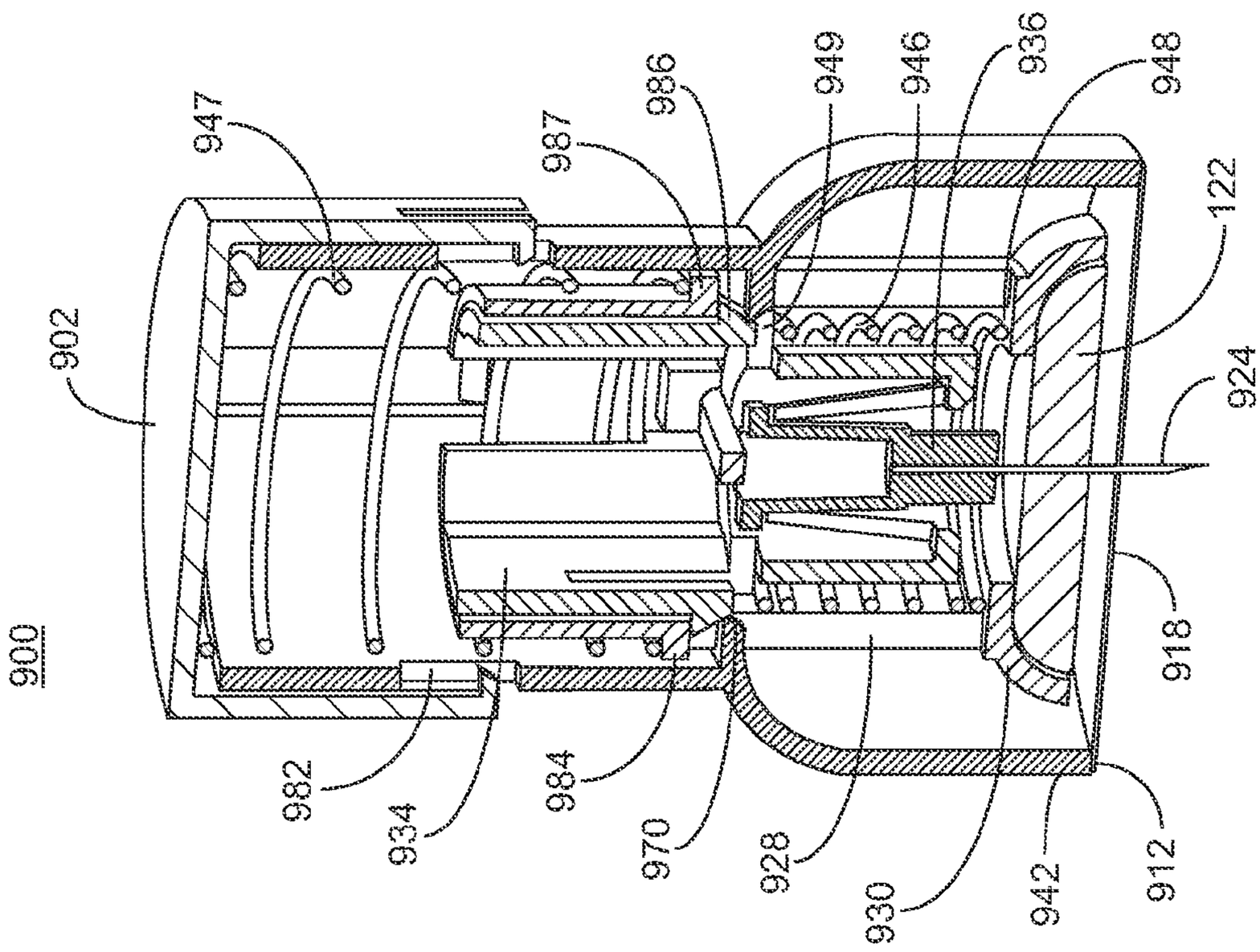
900
902
947
987
986
949
946
936
948
122
924
918
982
934
984
970
928
930
942
912

FIG. 16

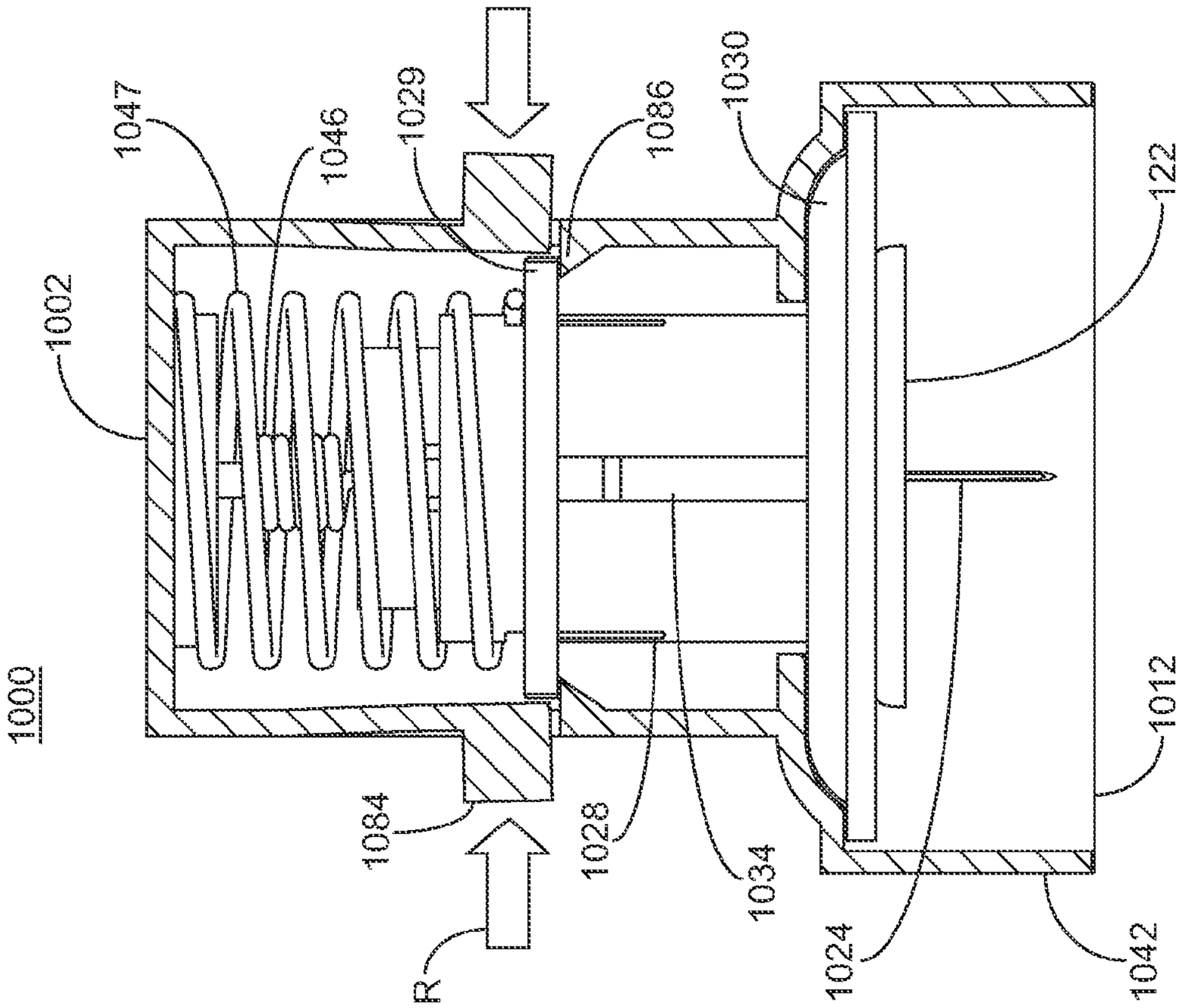
1000
1002
1047
1046
1029
1086
1030
122
1012
1042
1024
1034
1028
1084
R

FIG. 19

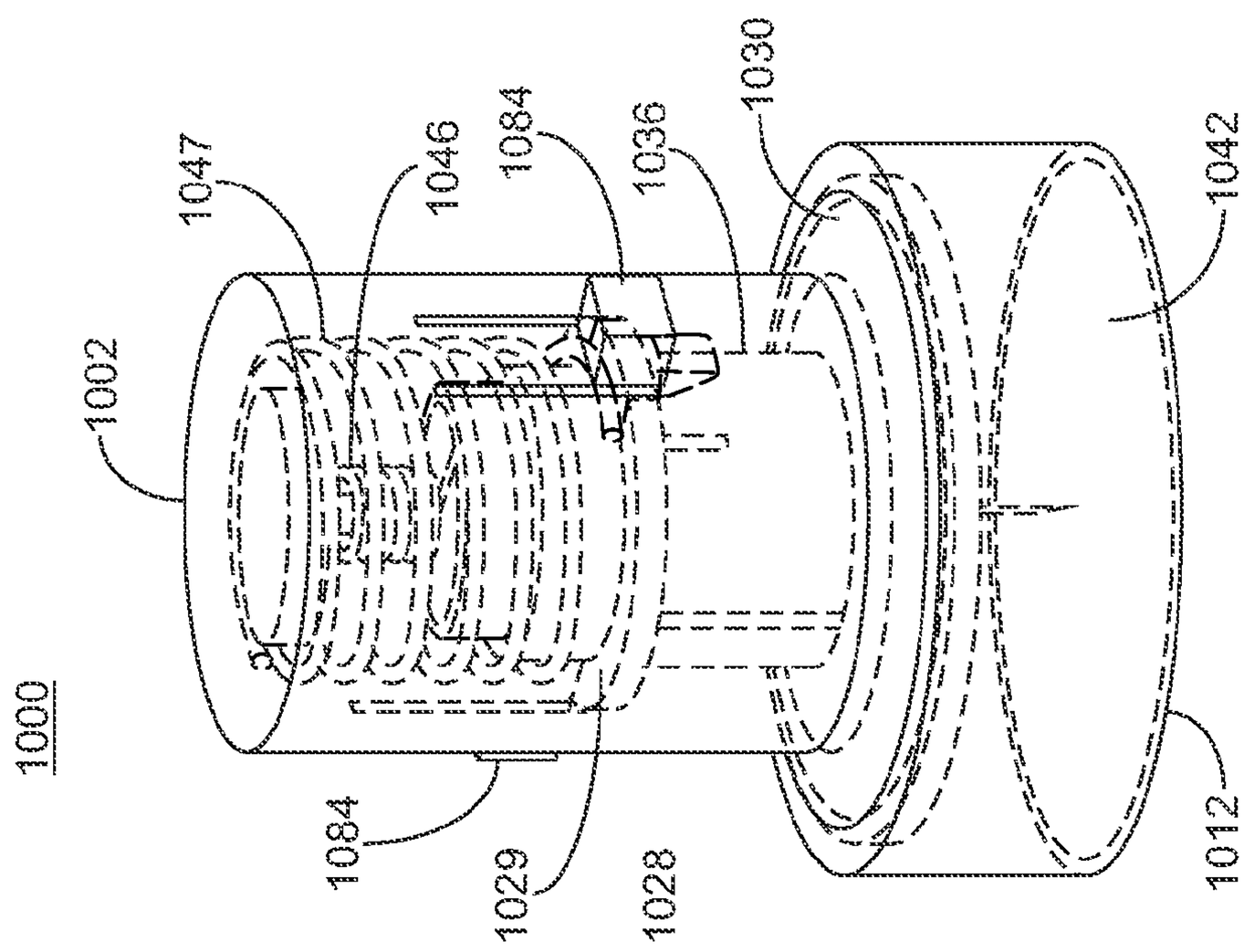
1000
1002
1047
1046
1084
1036
1030
1042
1012
1029
1028
1084

FIG. 18

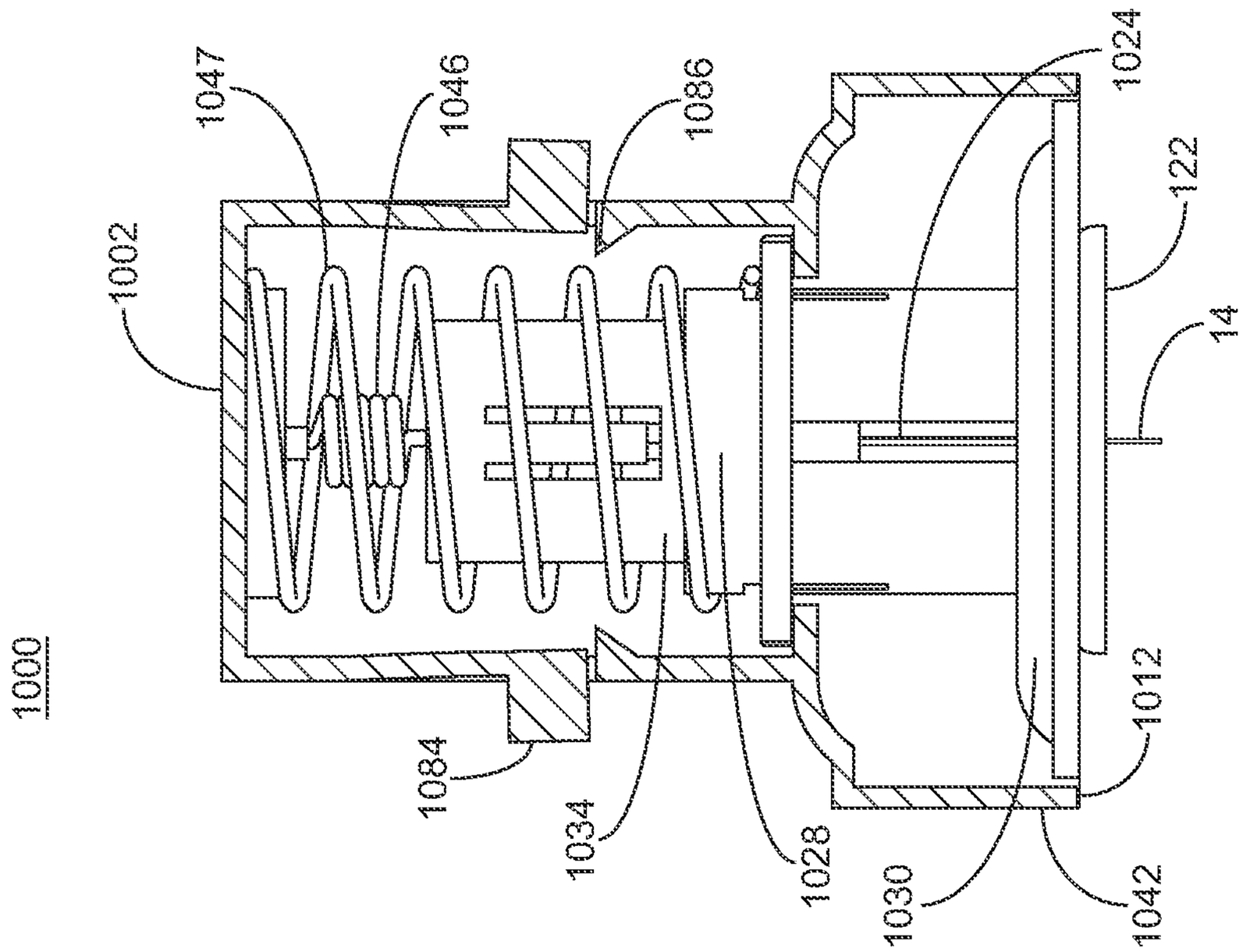
1000
1002
1047
1046
1086
1024
122
14
1012
1042
1030
1028
1034
1084

FIG. 21

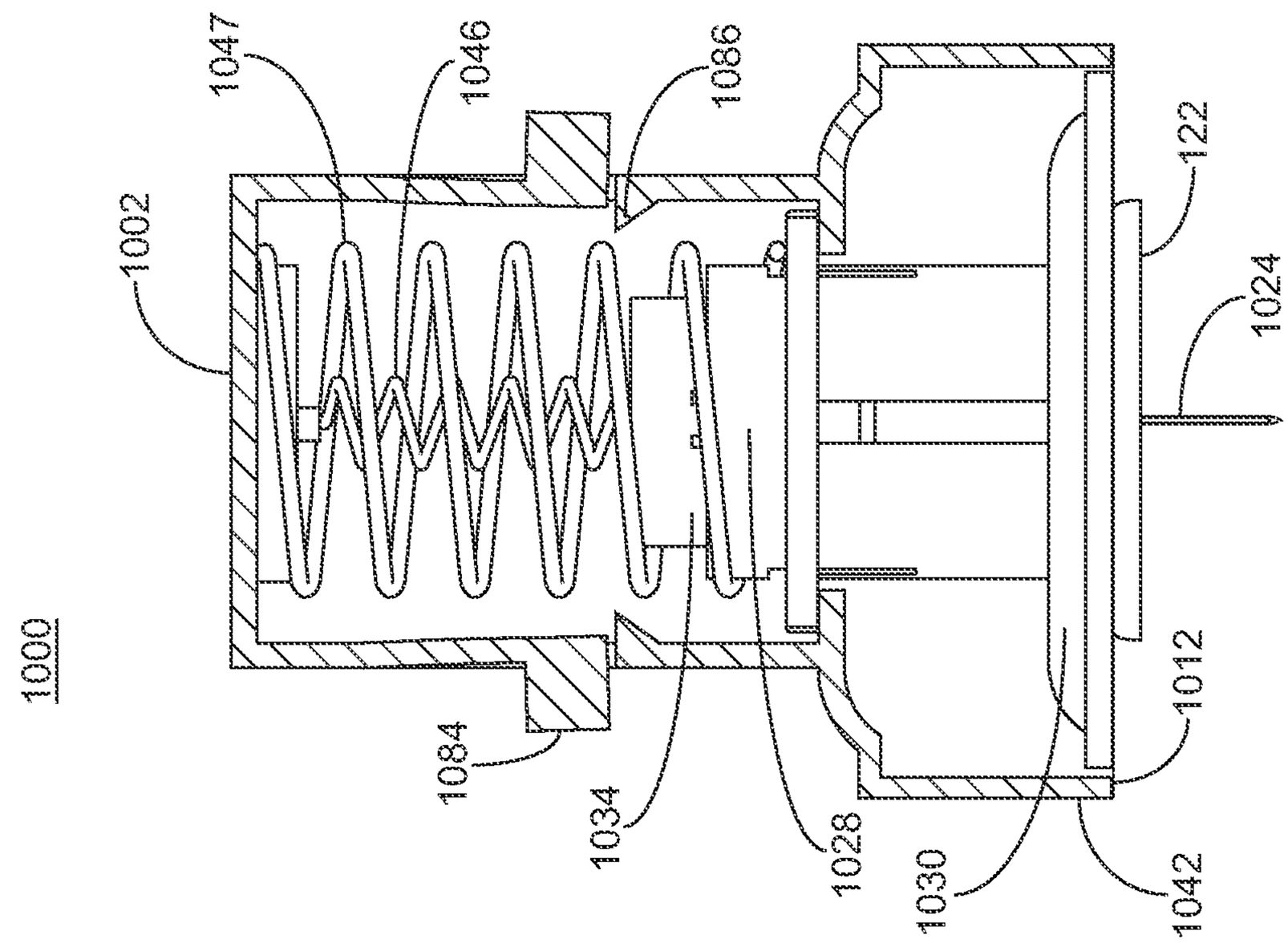
1000
1002
1047
1046
1086
122
1024
1012
1042
1030
1028
1034
1084

FIG. 20

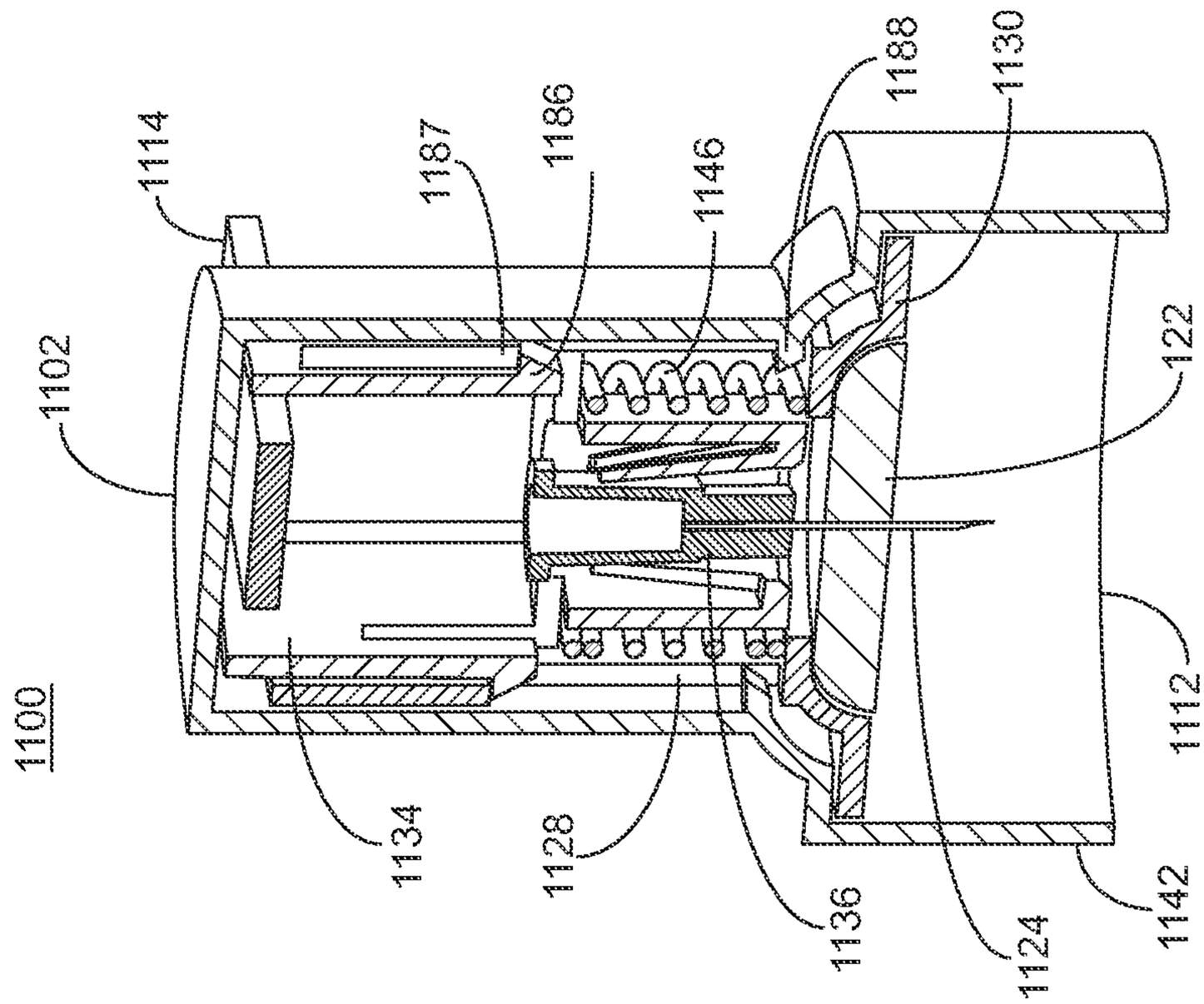
1100
1102
1114
1187
1186
1146
1188
1130
122
1112
1142
1124
1136
1128
1134

FIG. 23

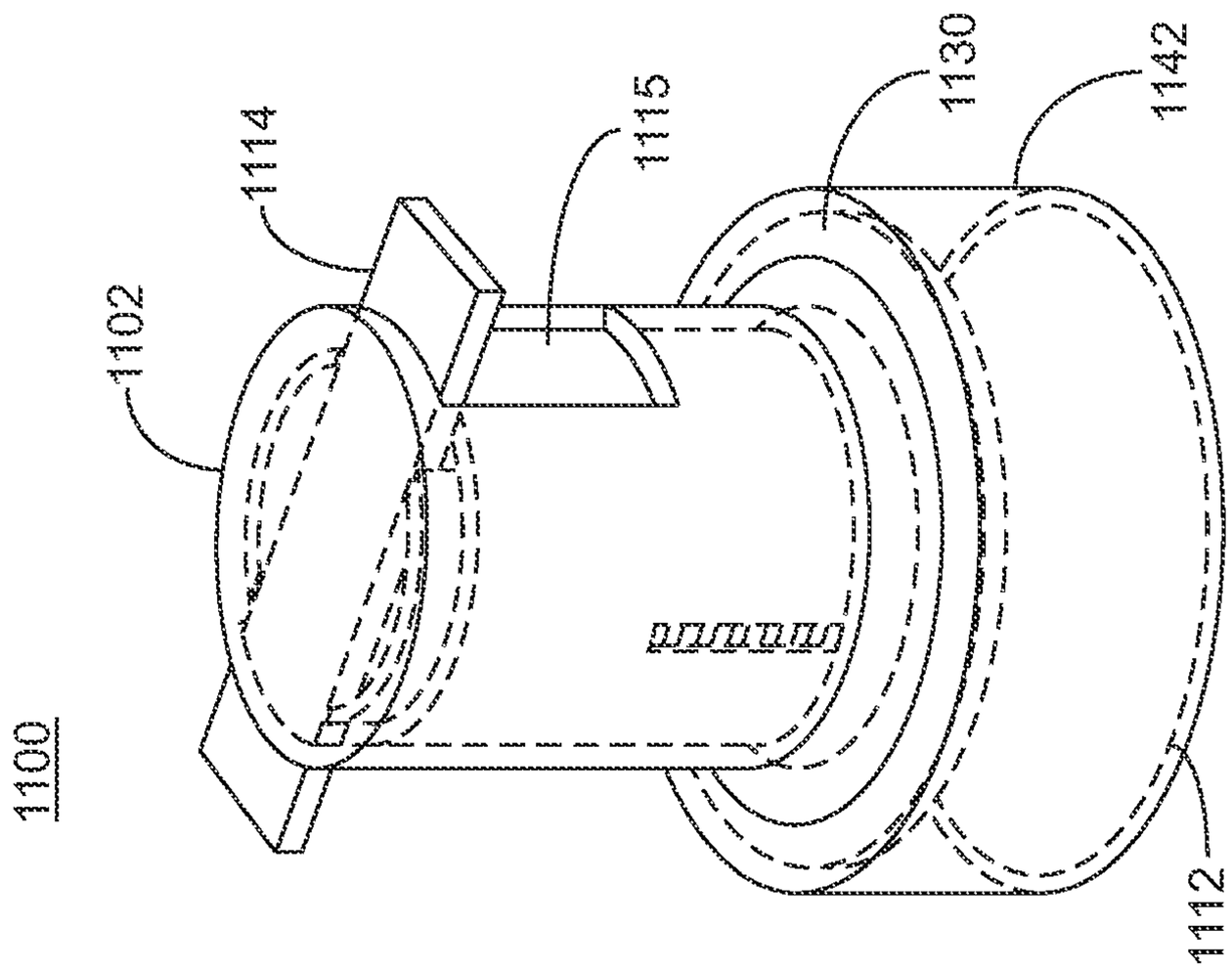
1100
1102
1114
1115
1130
1142
1112

FIG. 22

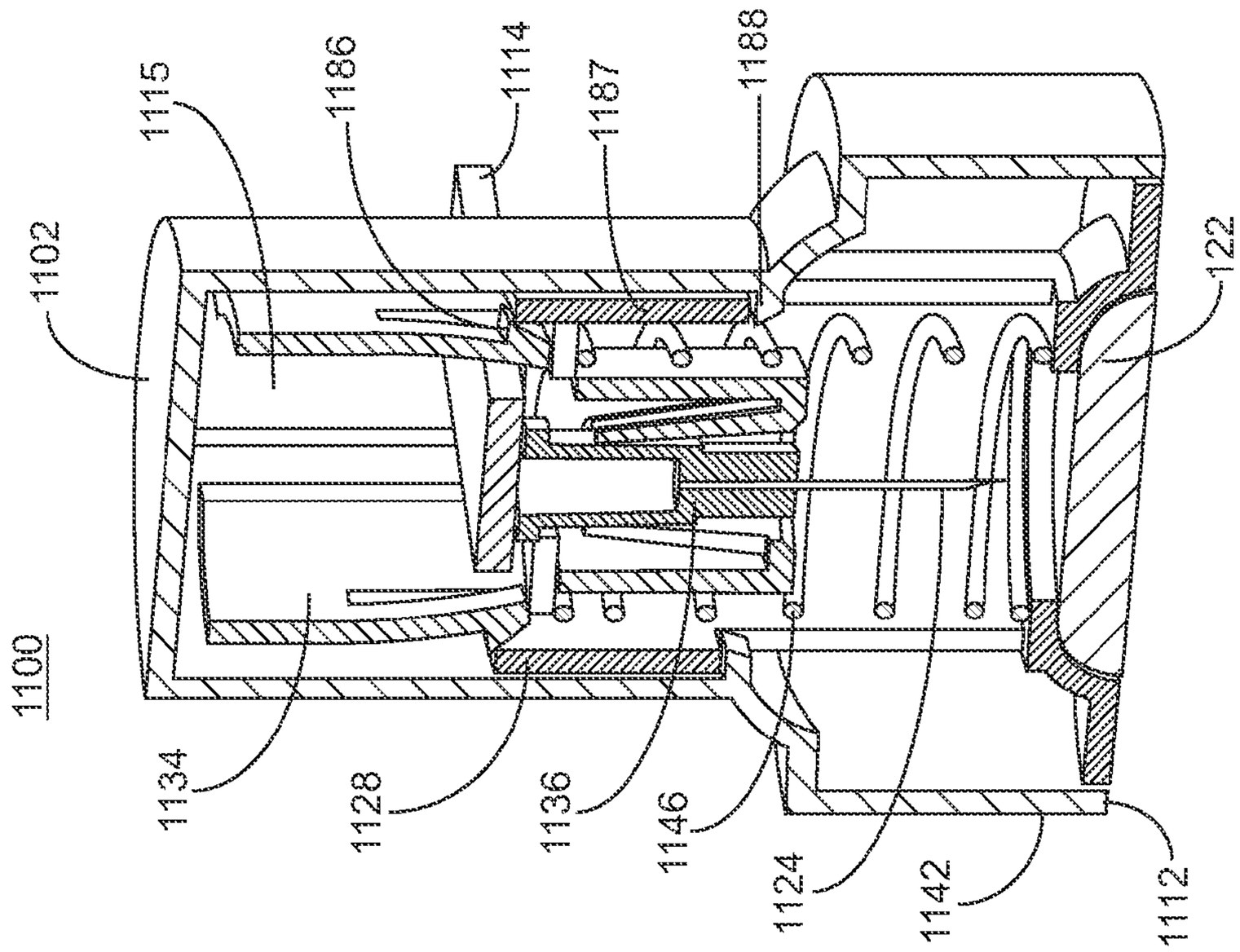
1100
1102
1115
1186
1114
1187
1188
122
1134
1128
1136
1146
1124
1142
1112

FIG. 25

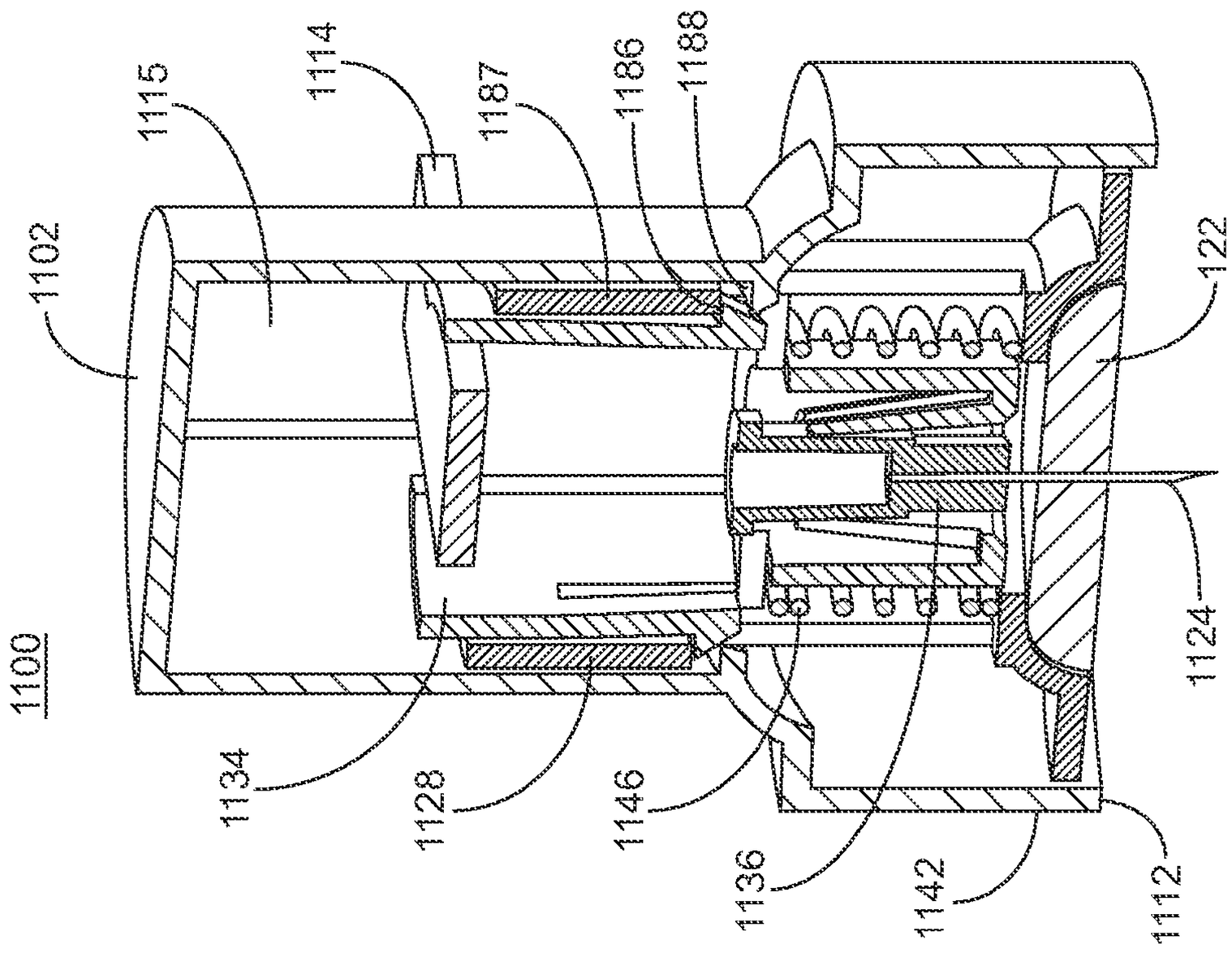
1100
1102
1115
1114
1187
1186
1188
122
1124
1134
1128
1146
1136
1142
1112

FIG. 24

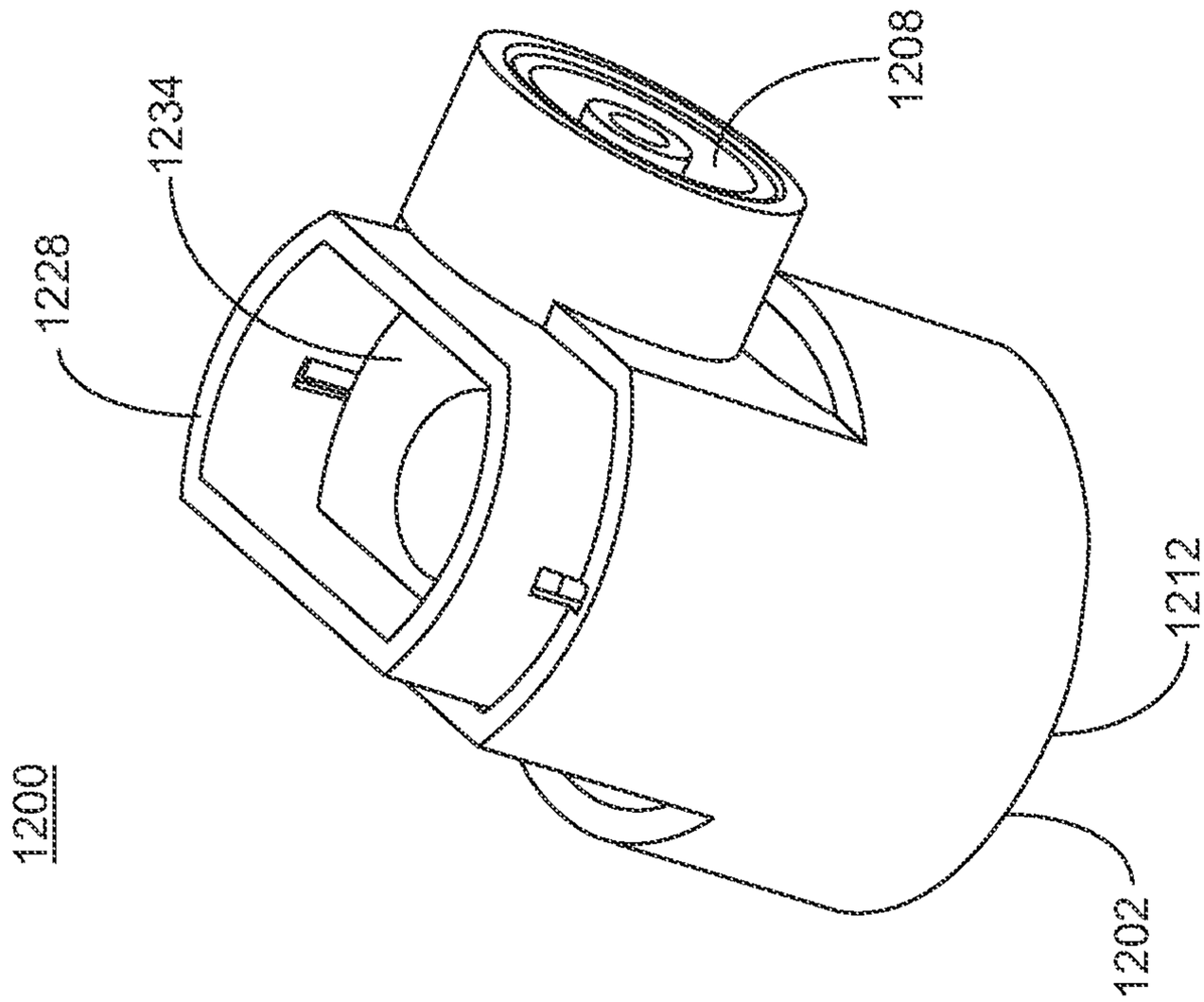
1200
1228
1234
1208
1212
1202

FIG. 27

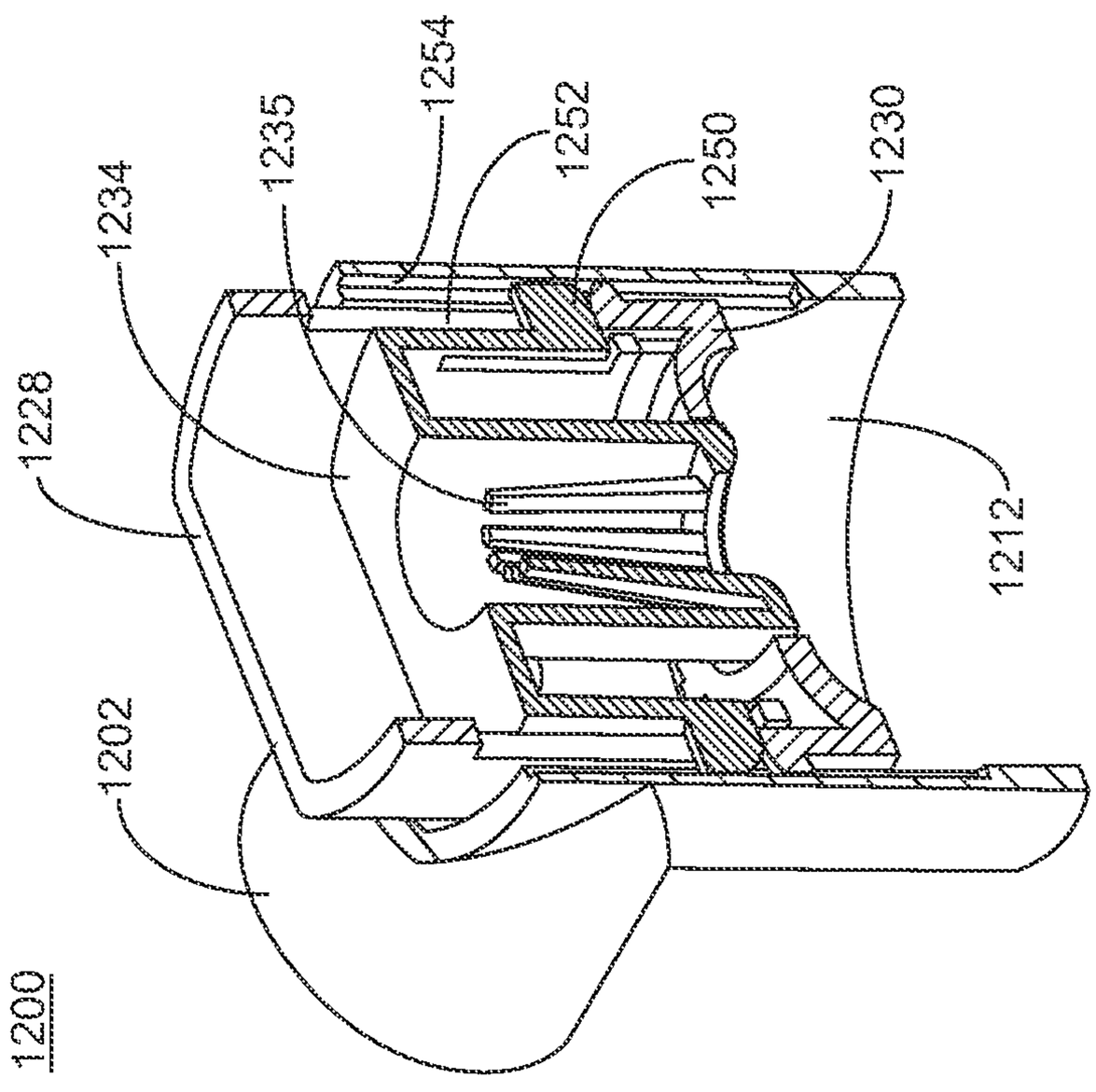
1200
1228
1234
1235
1254
1252
1250
1230
1212
1202

FIG. 26

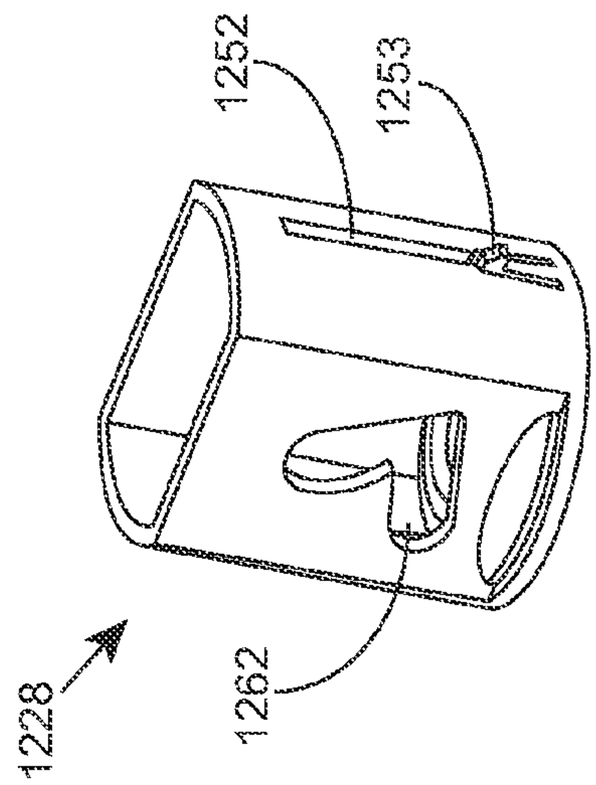

FIG. 29

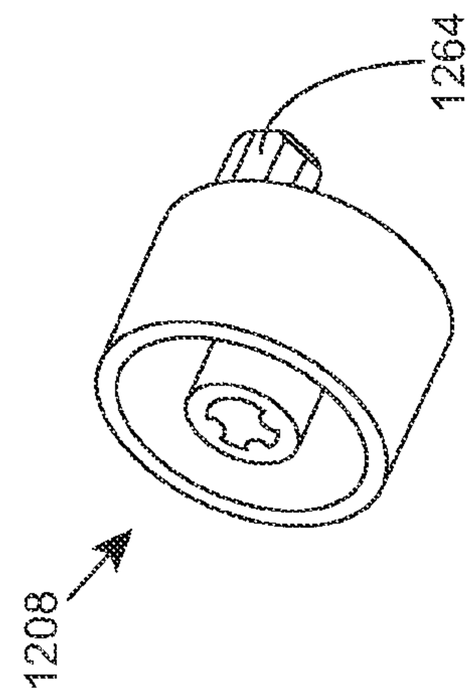

FIG. 31

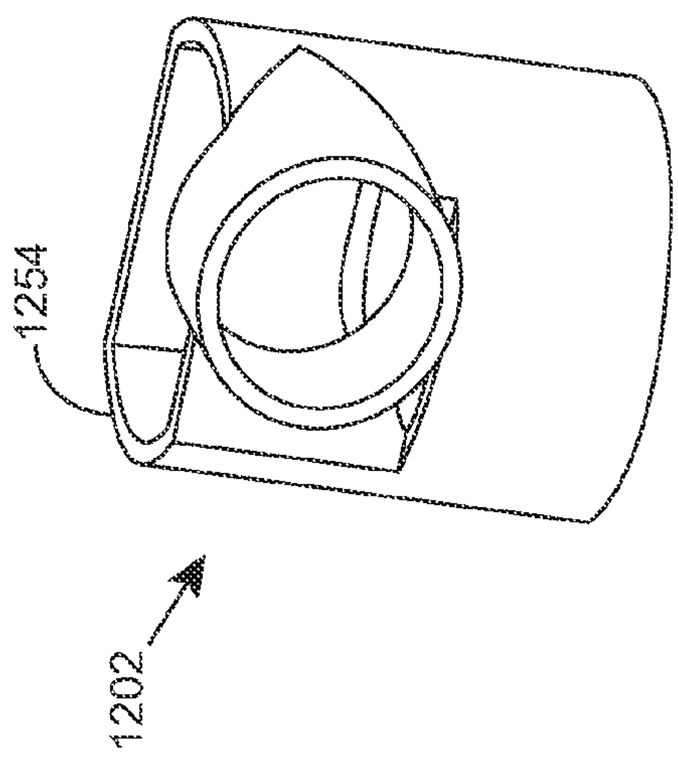

FIG. 28

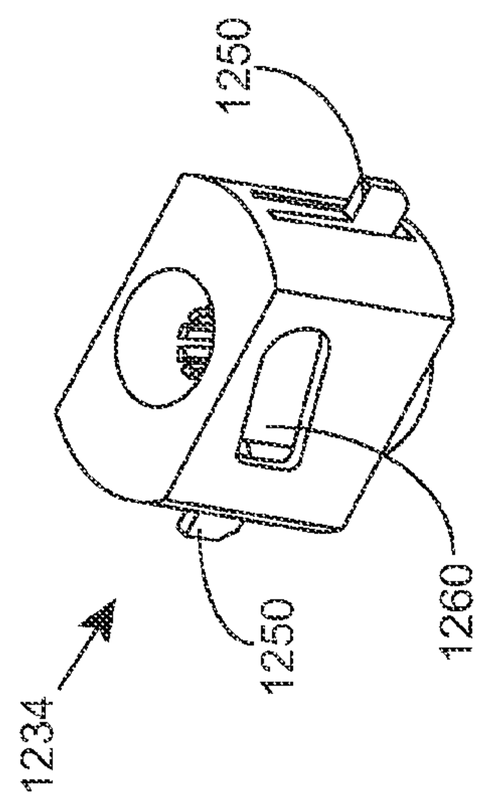

FIG. 30

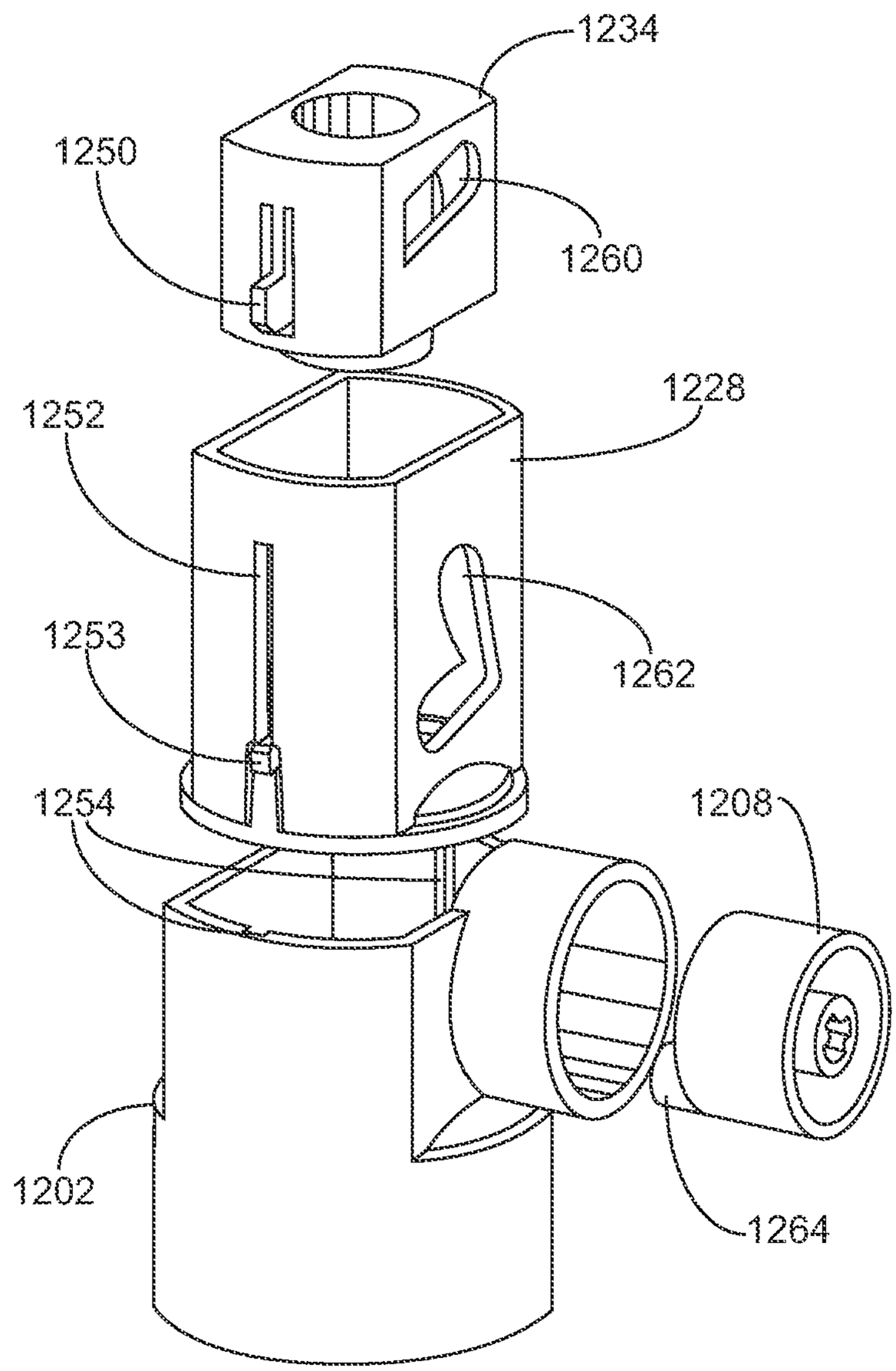

FIG. 32

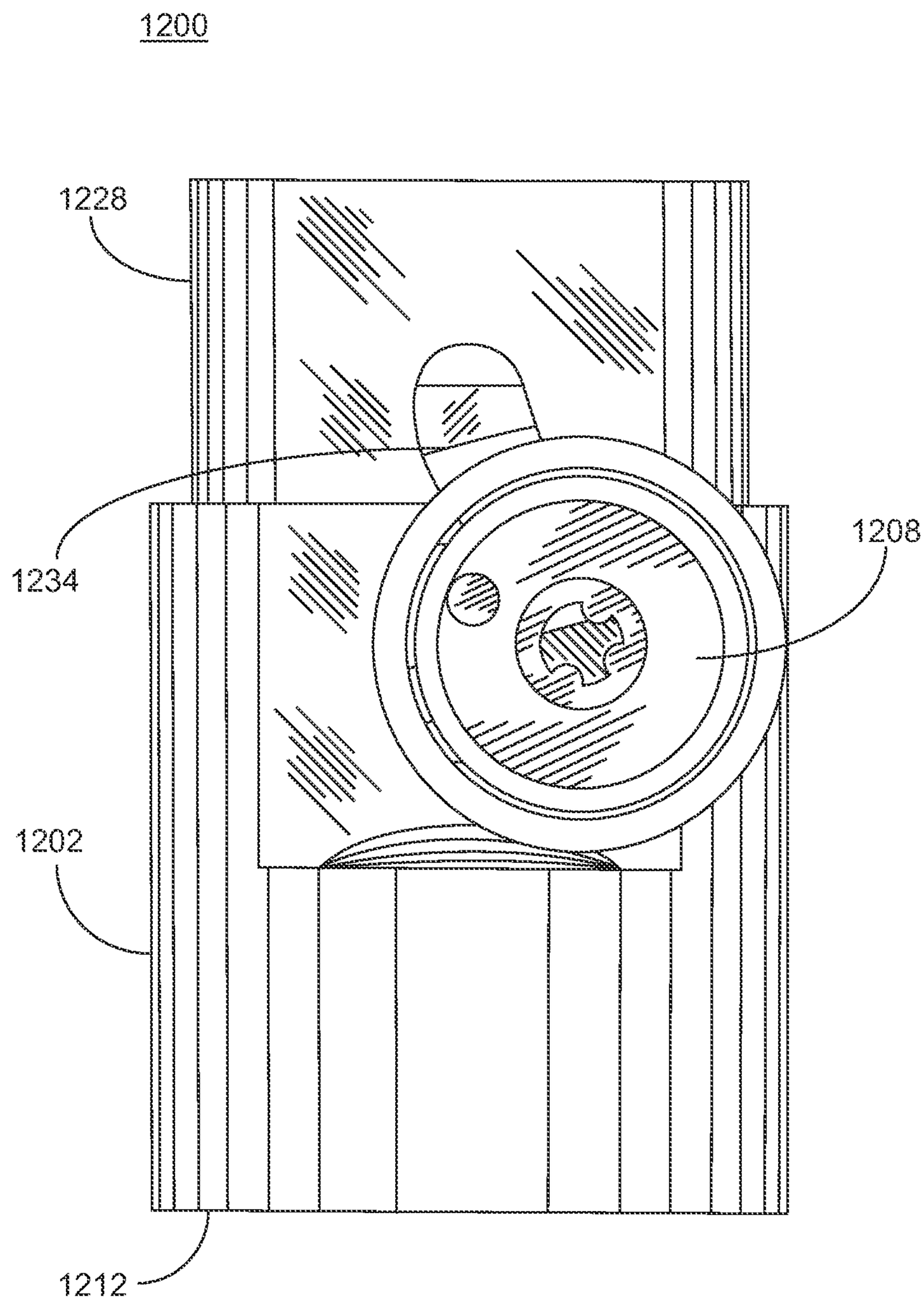

FIG. 33

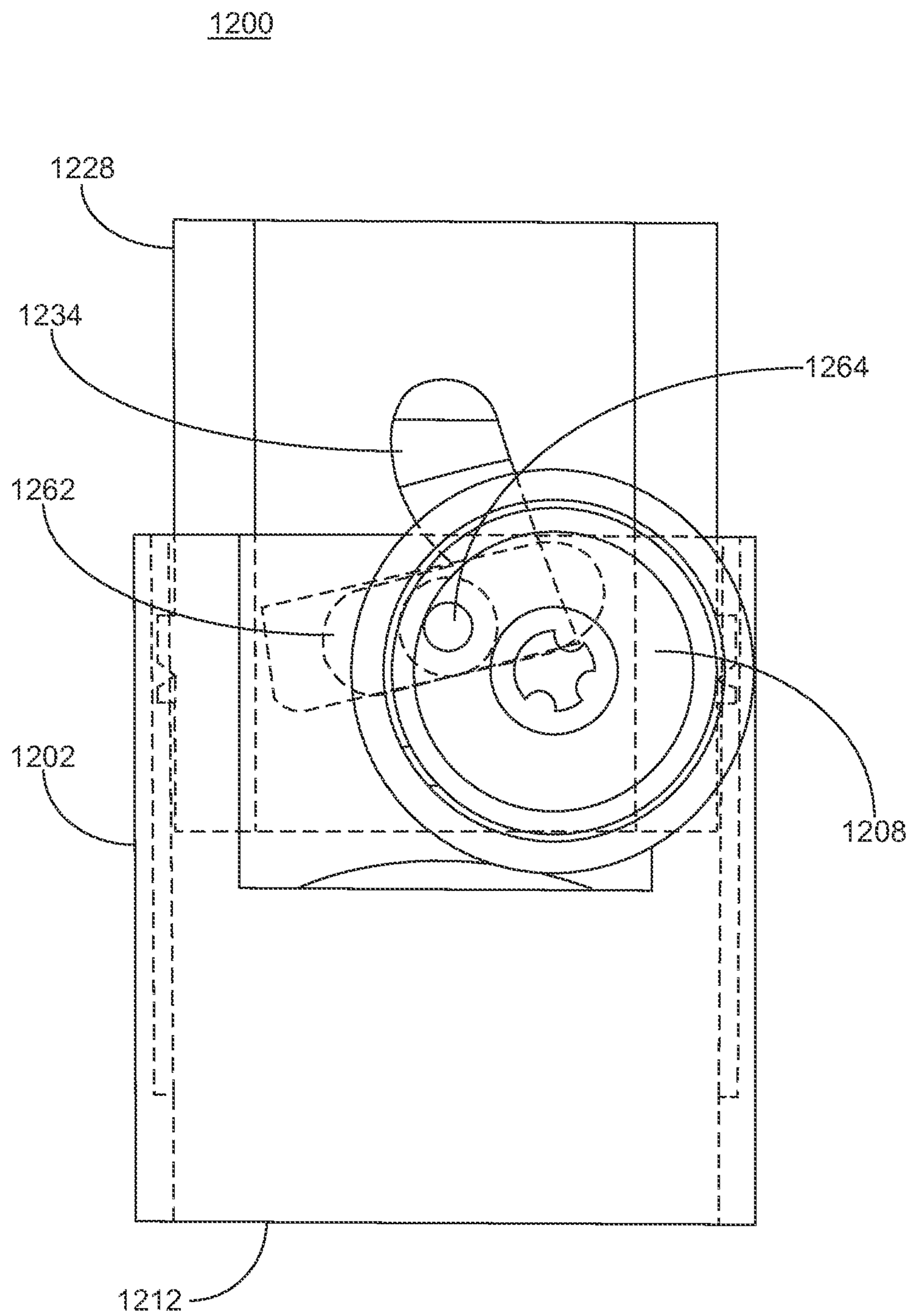

FIG. 34

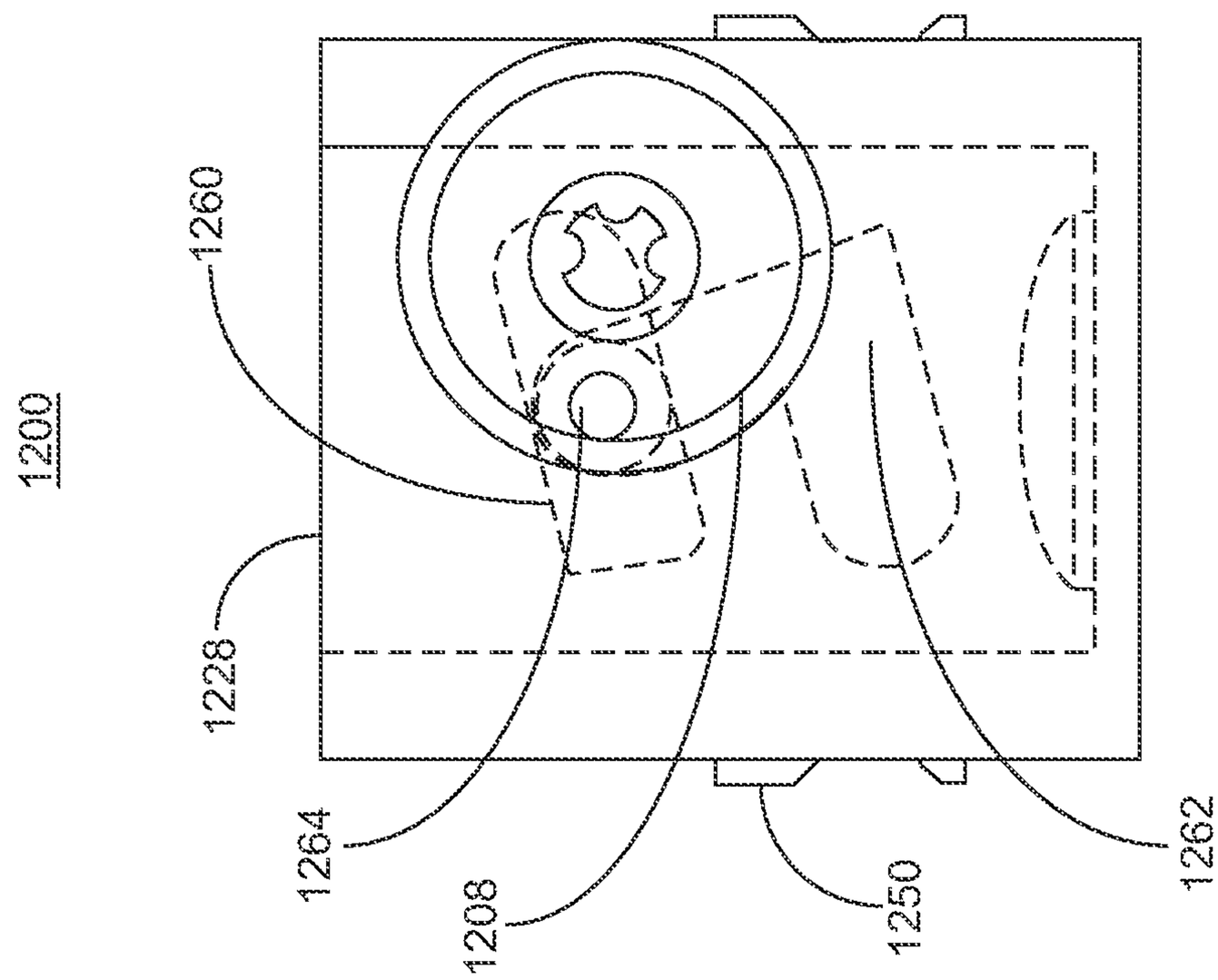
1200
1260
1228
1264
1208
1250
1262

FIG. 36

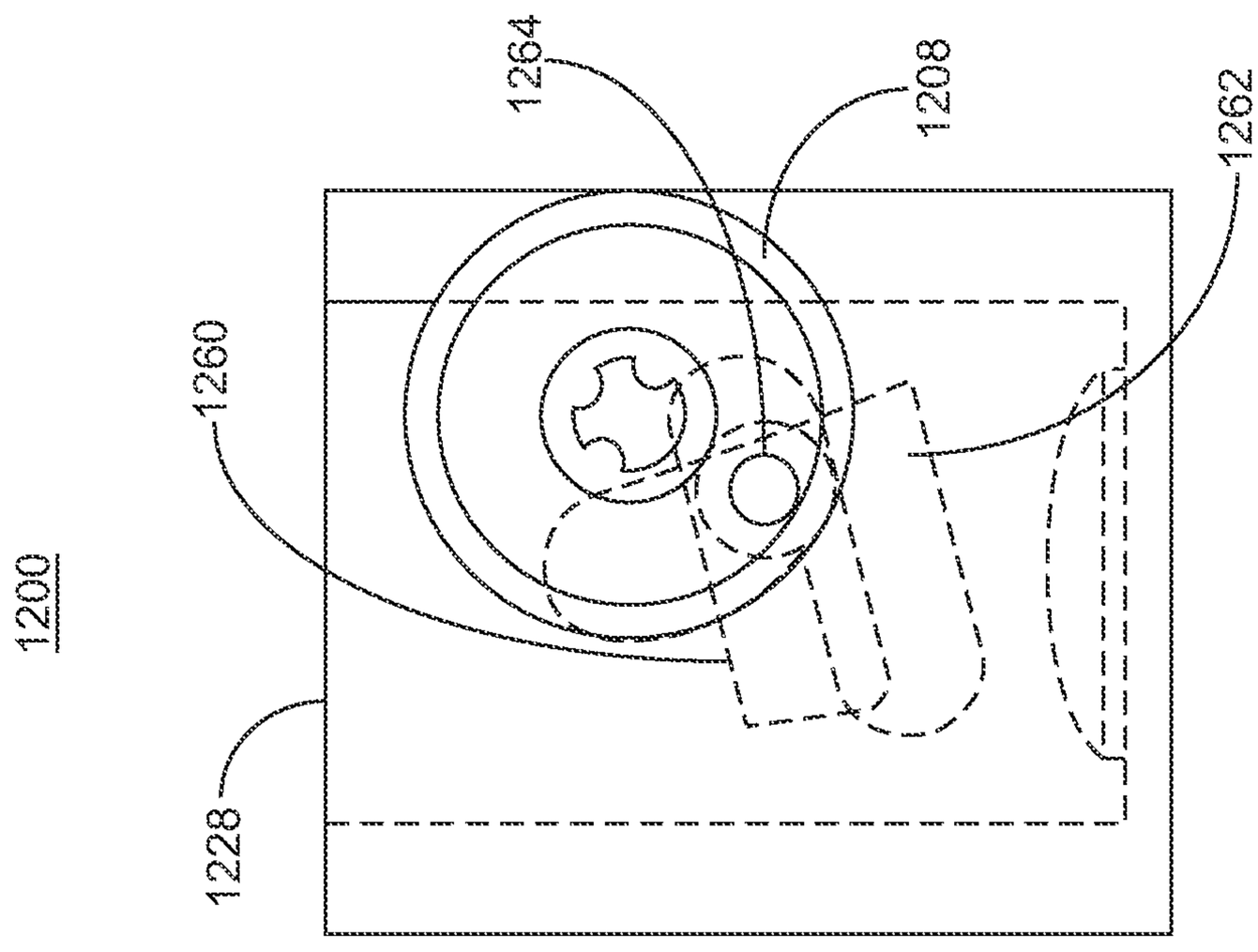
1200
1260
1228
1264
1208
1262

FIG. 35

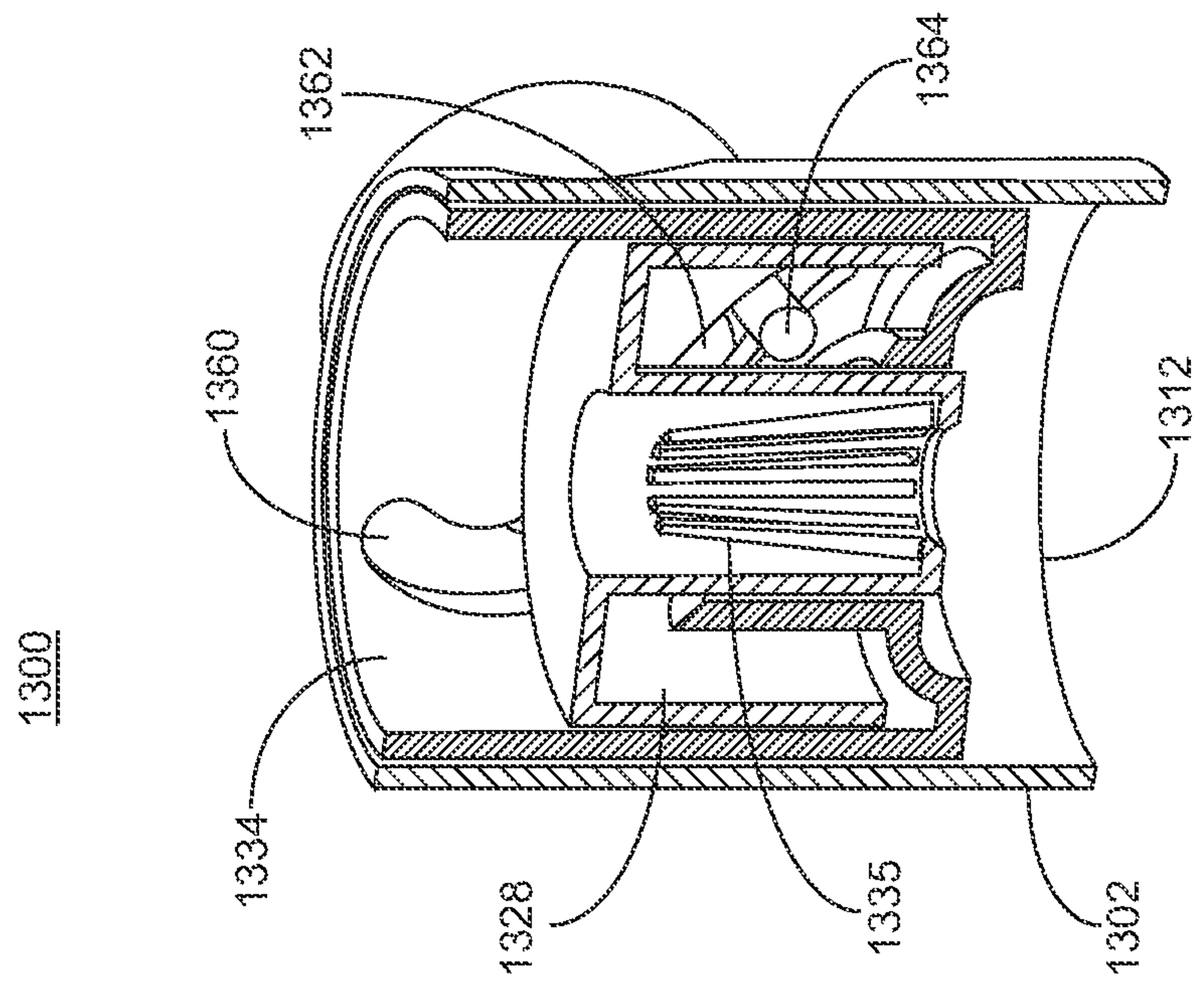
1300
1362
1364
1360
1312
1334
1328
1335
1302

FIG. 38

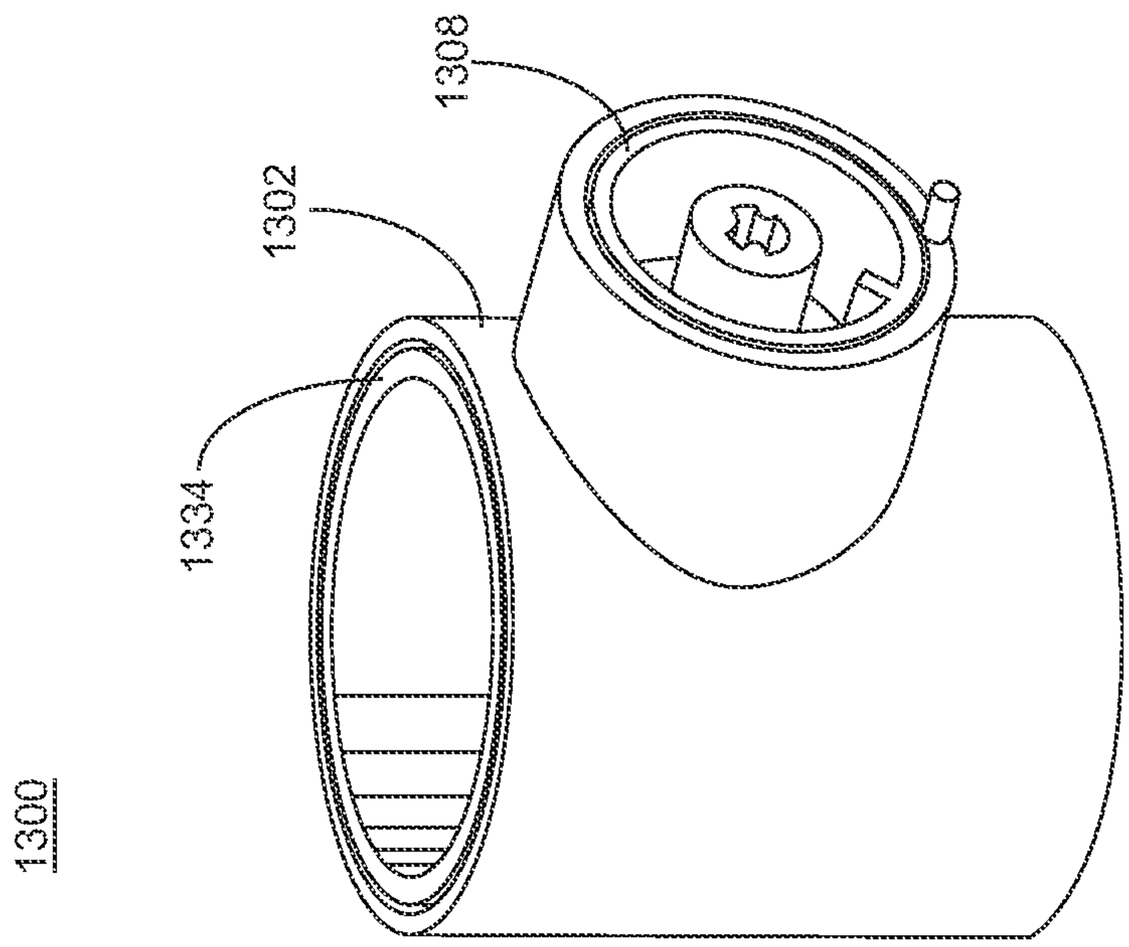
1300
1302
1308
1334

FIG. 37

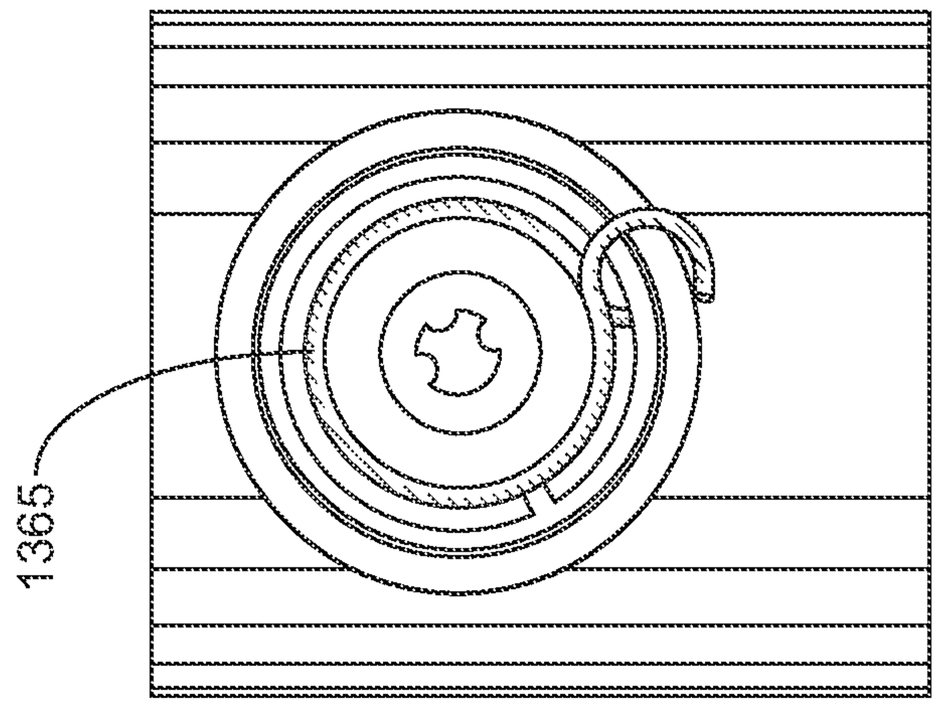

FIG. 40

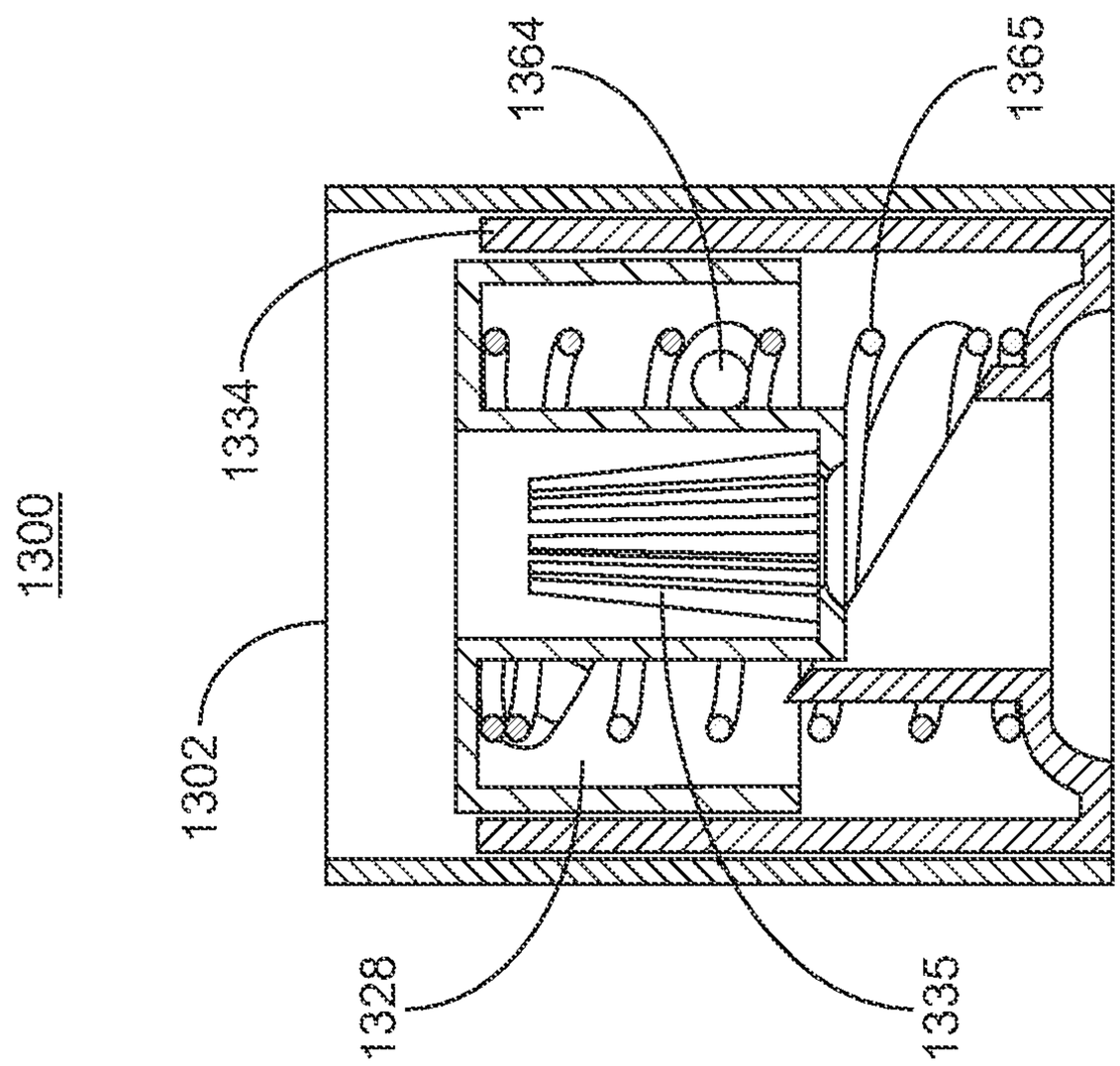

FIG. 39

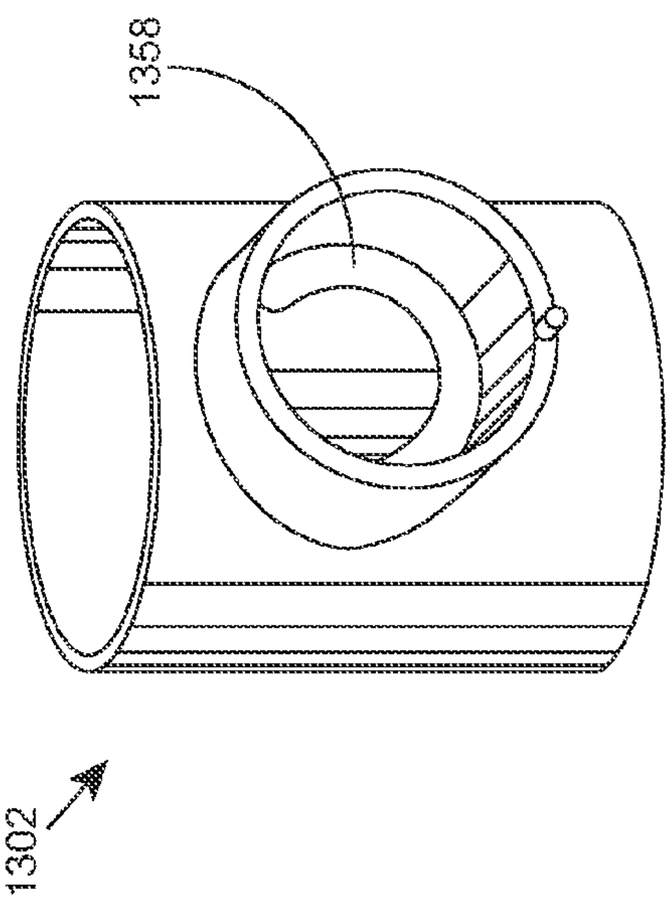

FIG. 41

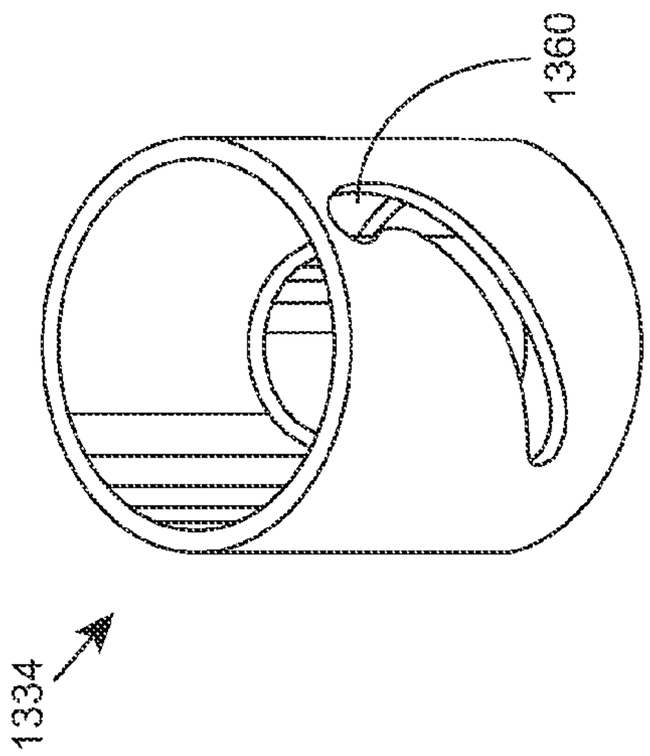

FIG. 42

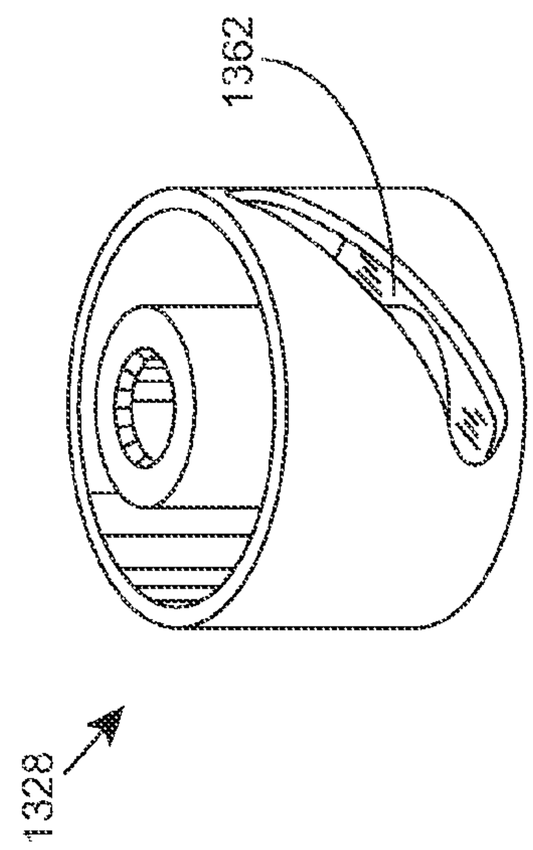

FIG. 43

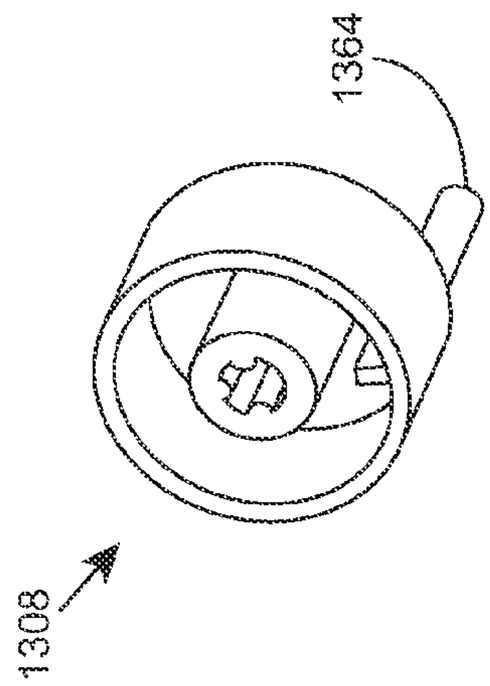

FIG. 44

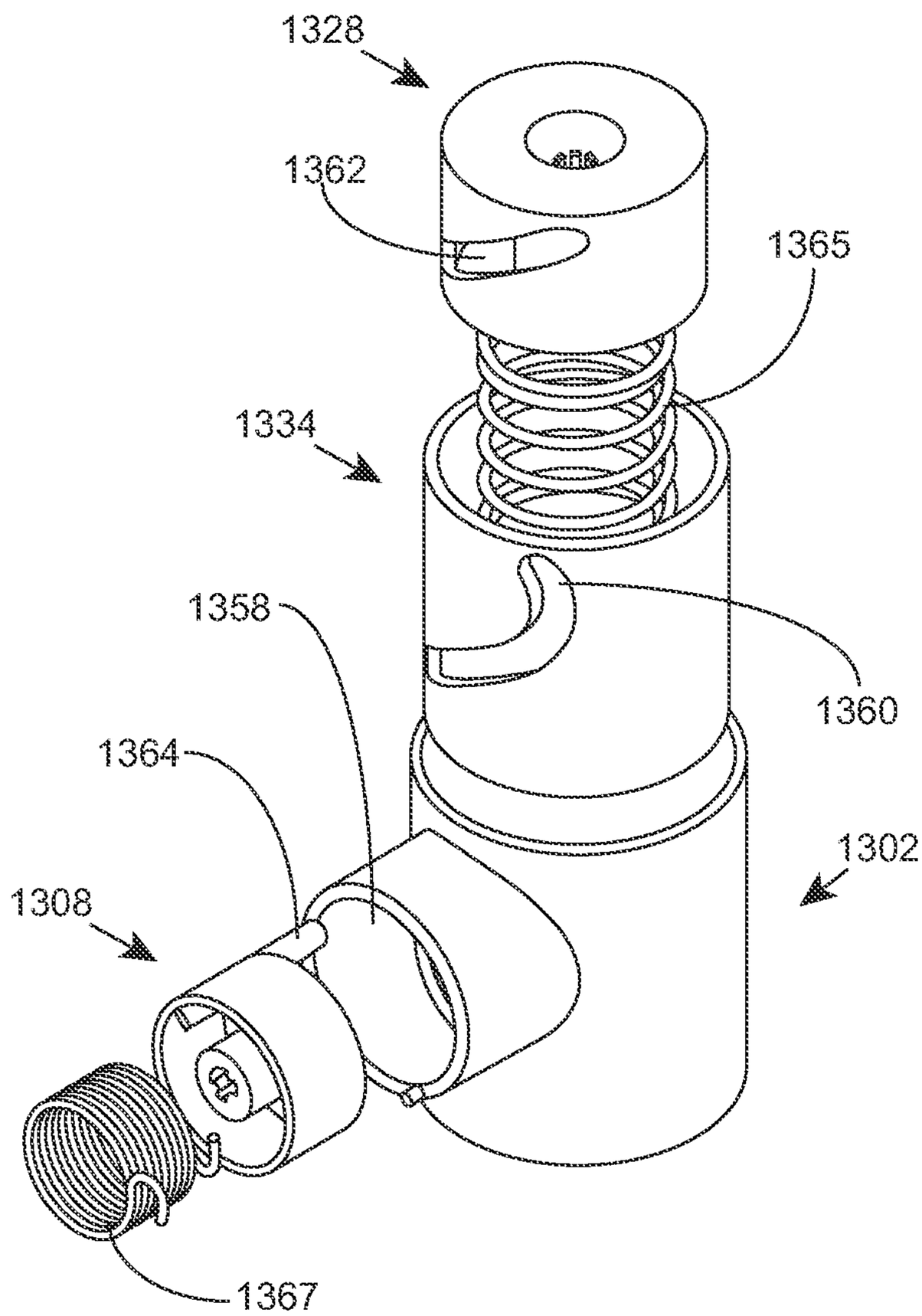

FIG. 45

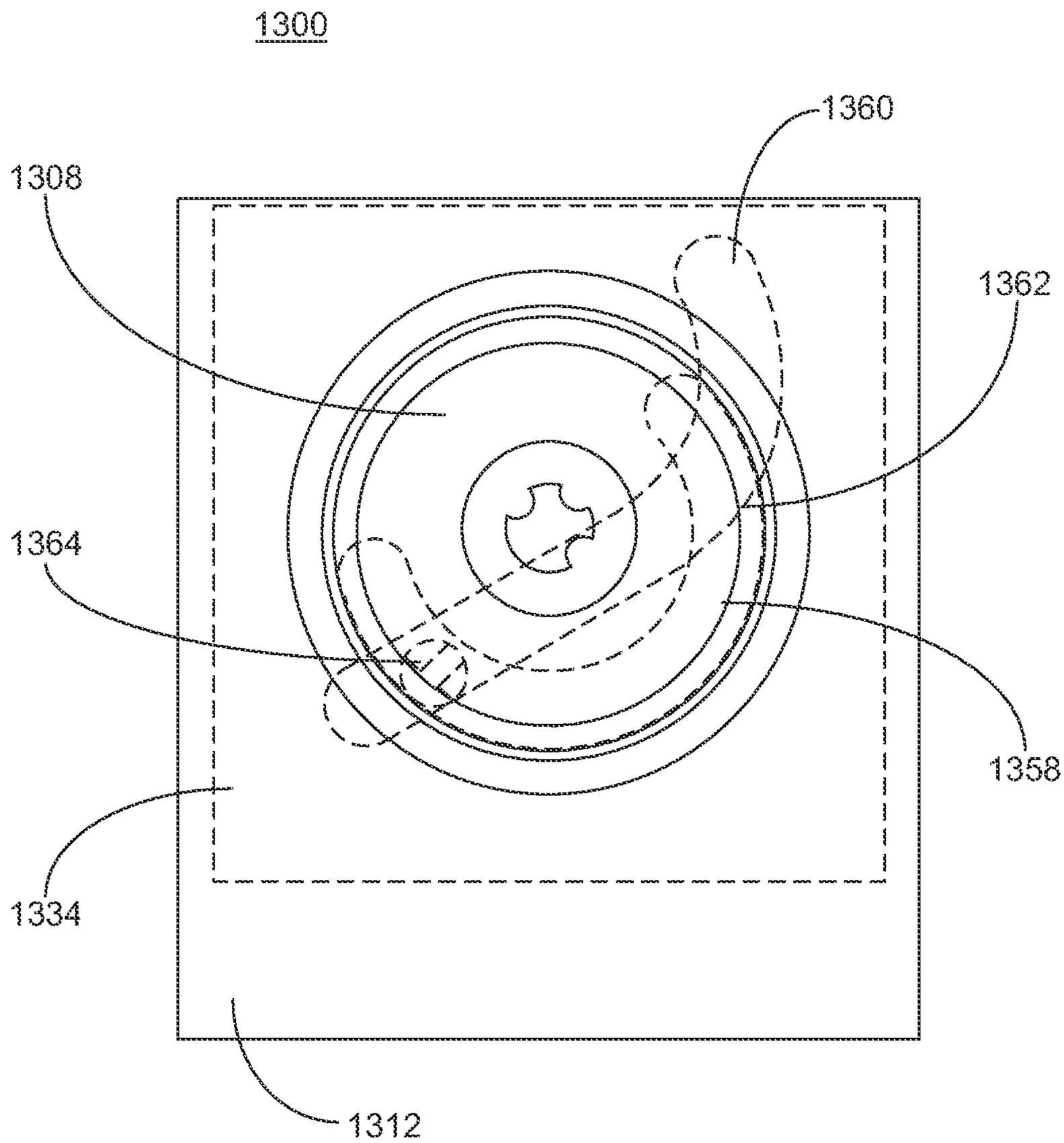

FIG. 46

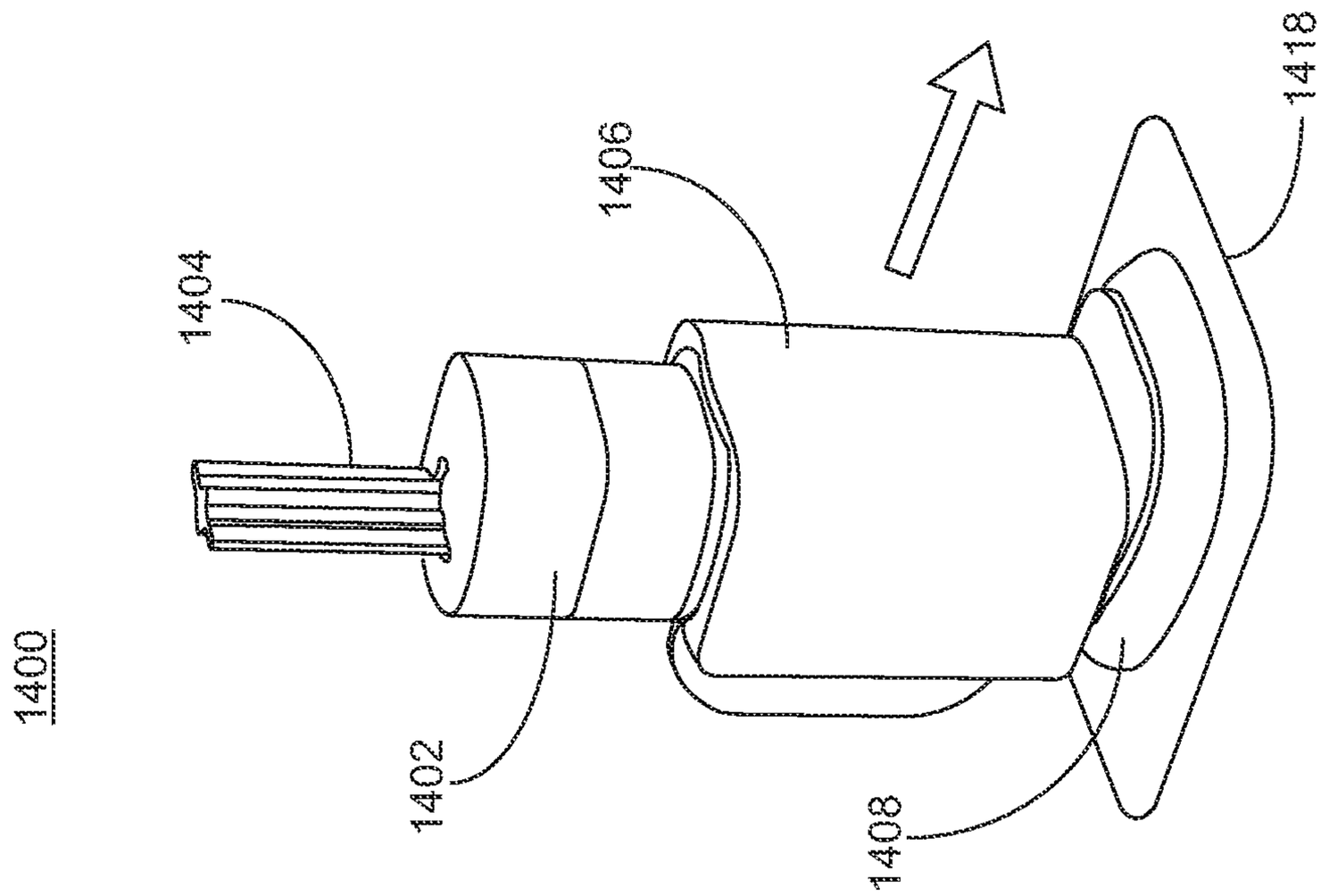
1400
1404
1406
1418
1402
1408

FIG. 48

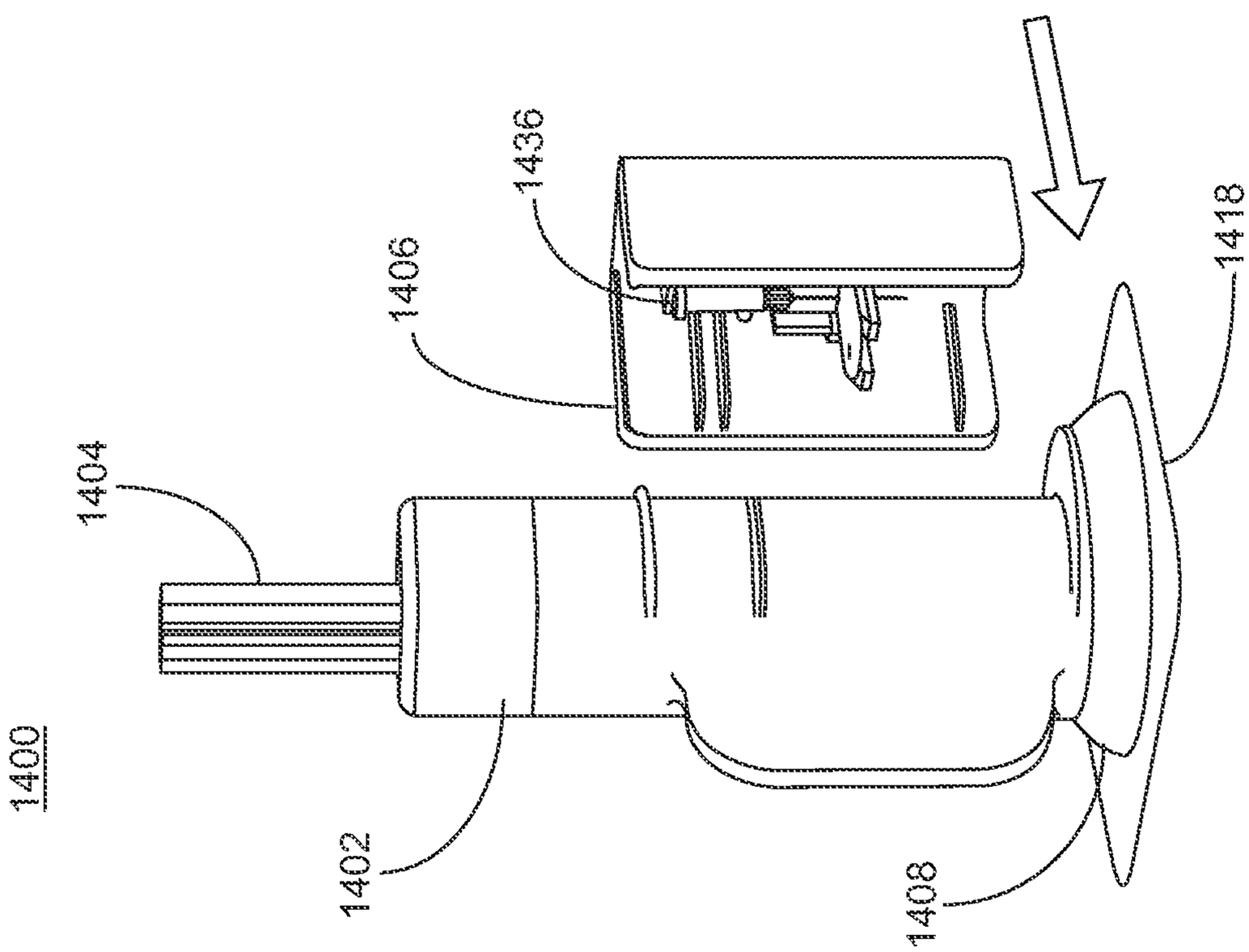
1400
1404
1436
1406
1418
1402
1408

FIG. 47

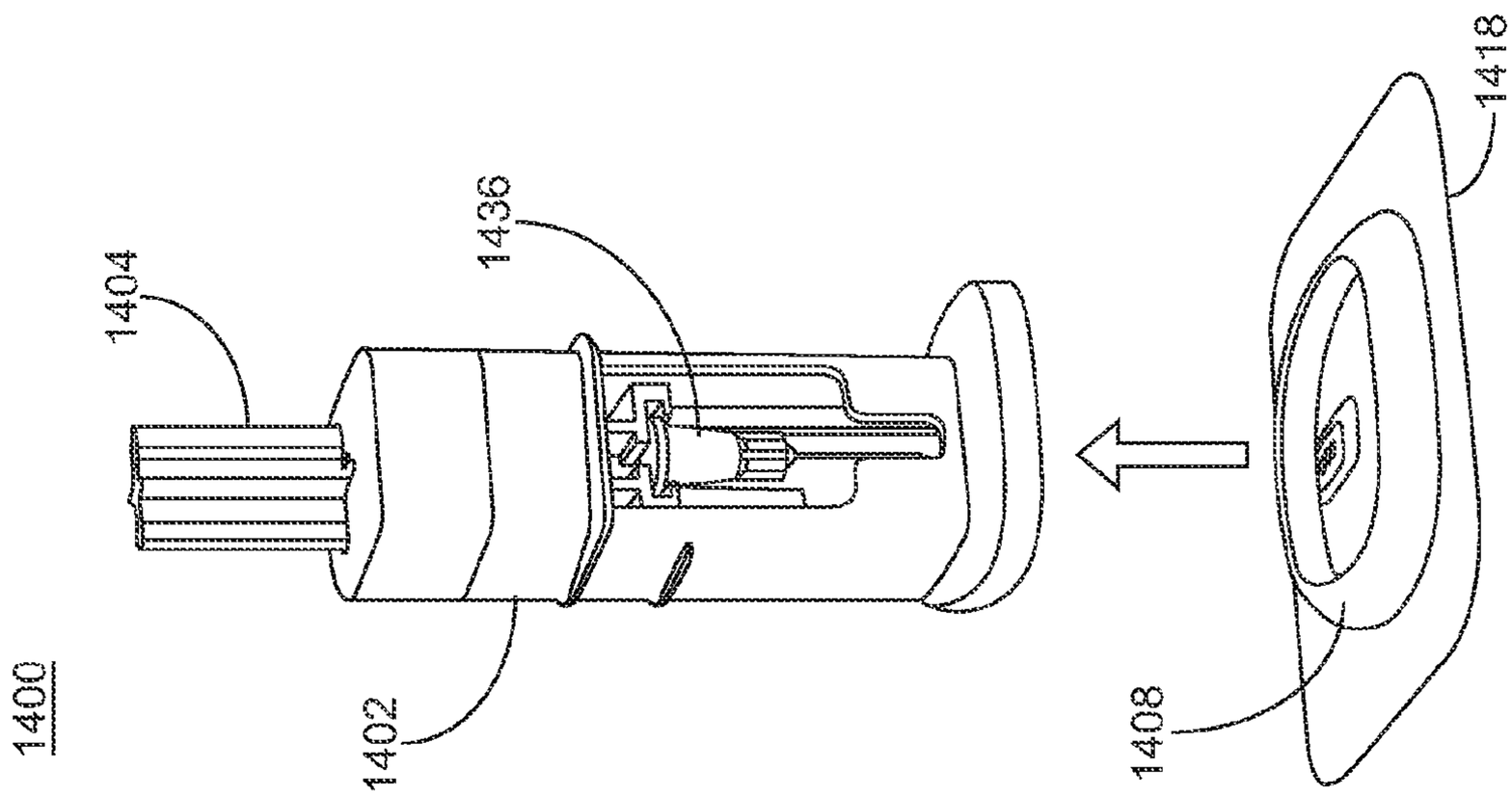

FIG. 50

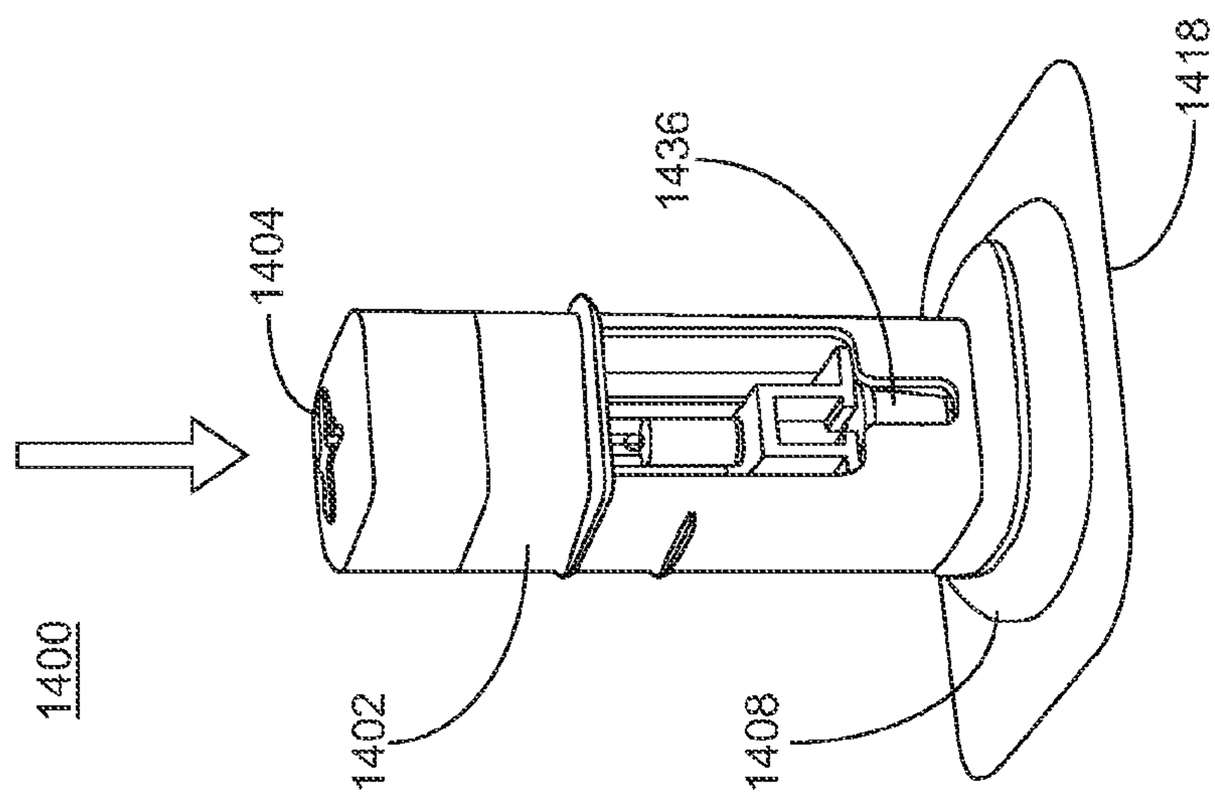

FIG. 49

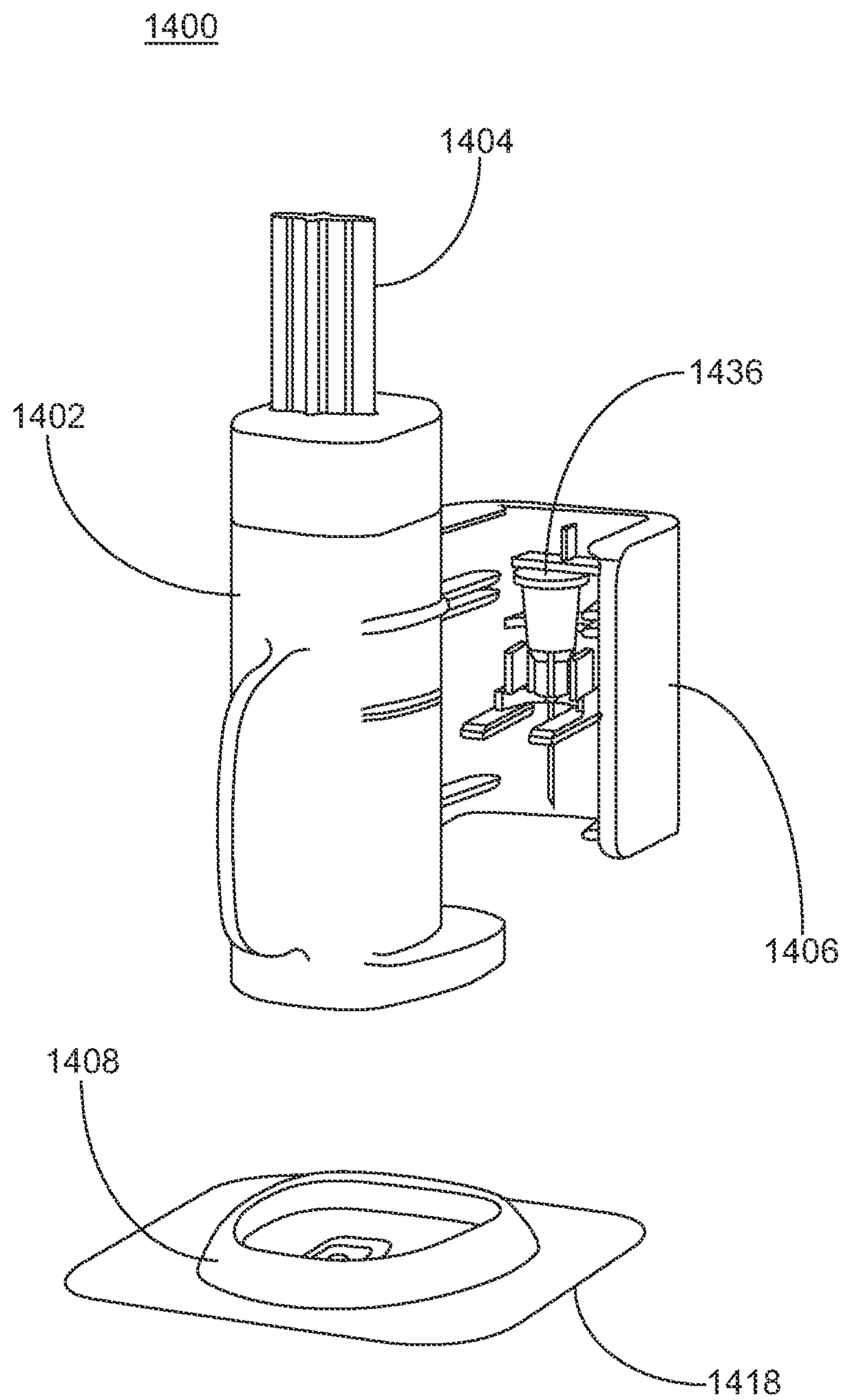

FIG. 51

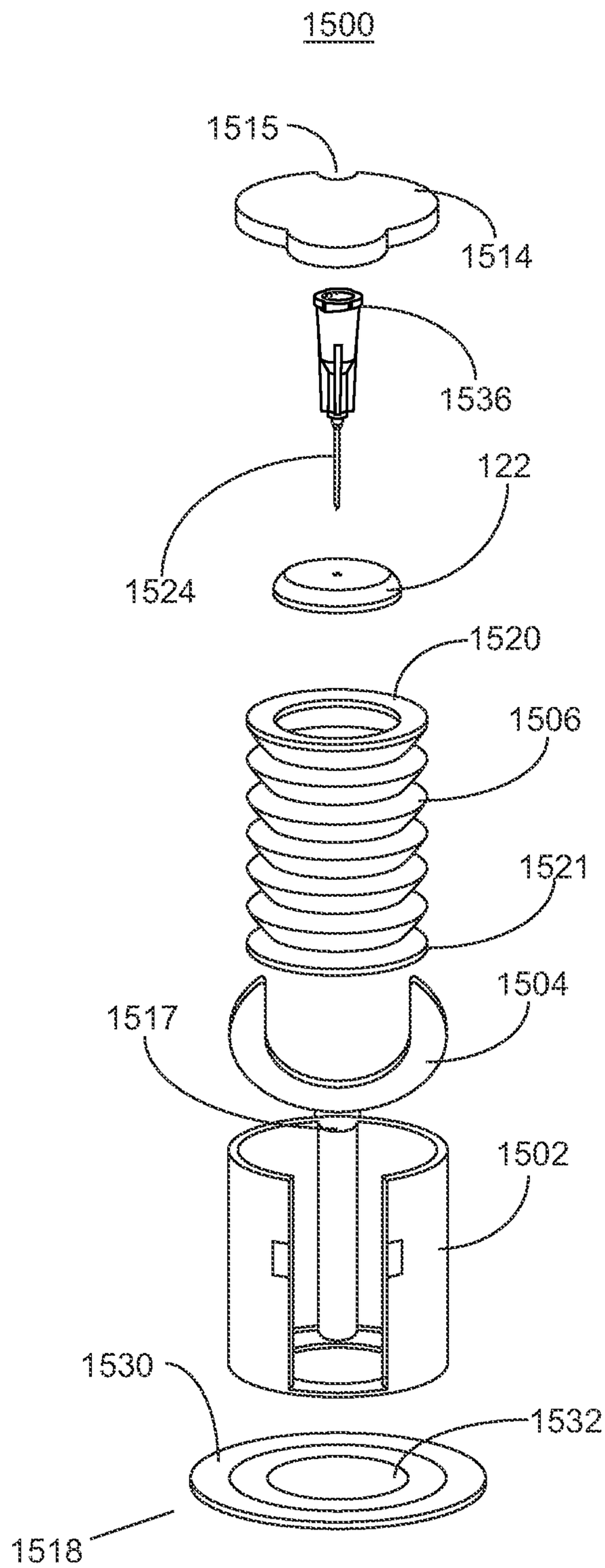
1500
1515
1514
1536
122
1524
1520
1506
1521
1504
1517
1502
1530
1532
1518

FIG. 52

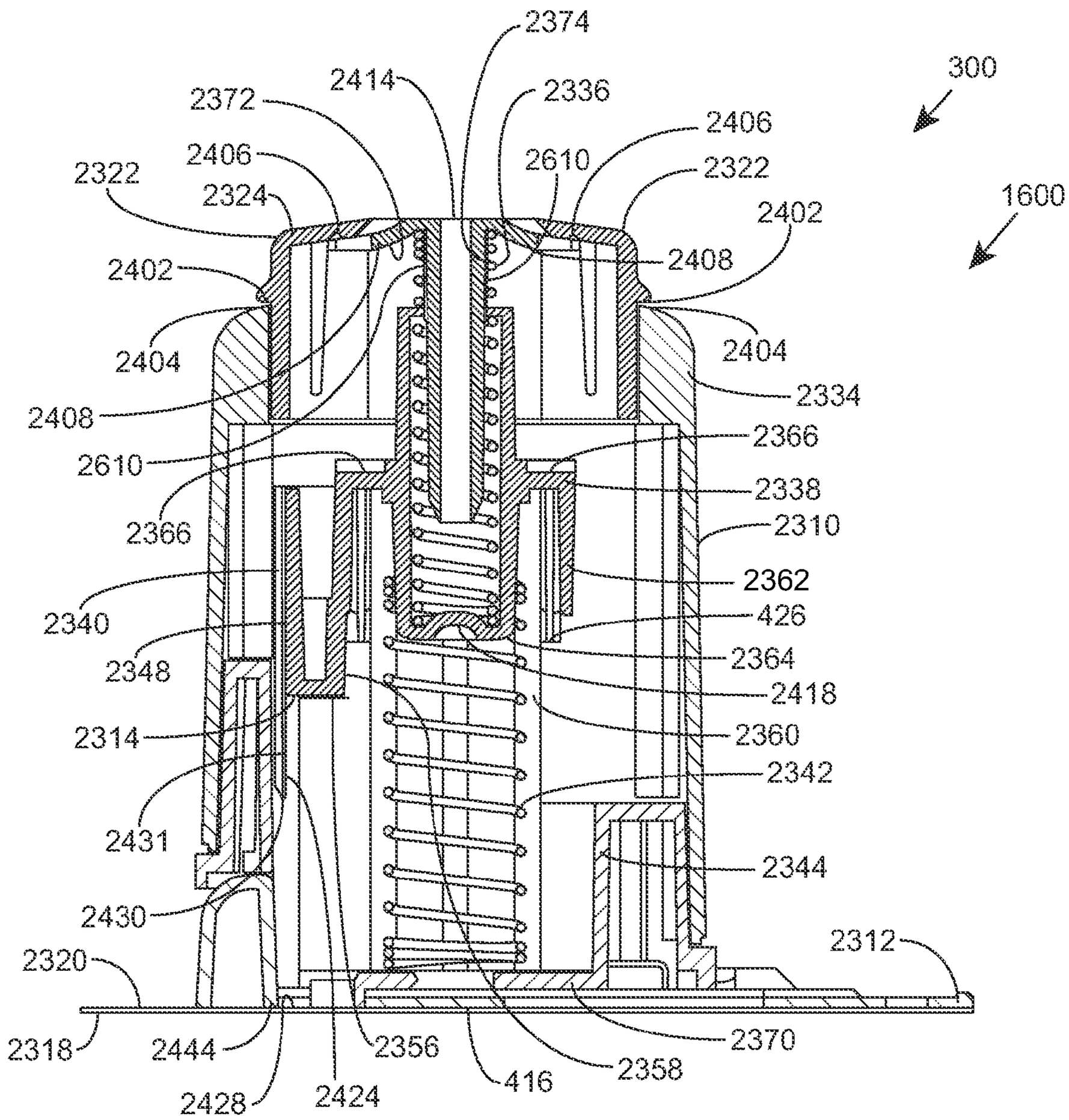
2374
300
2414
2336
2372
2406
2406
2610
2322
2322
2324
1600
2402
2408
2402
2404
2404
2334
2408
2366
2610
2338
2366
2310
2362
2340
426
2348
2364
2418
2314
2360
2342
2431
2344
2430
2312
2320
2318
2444
2356
2370
2358
416
2428
2424

FIG. 53

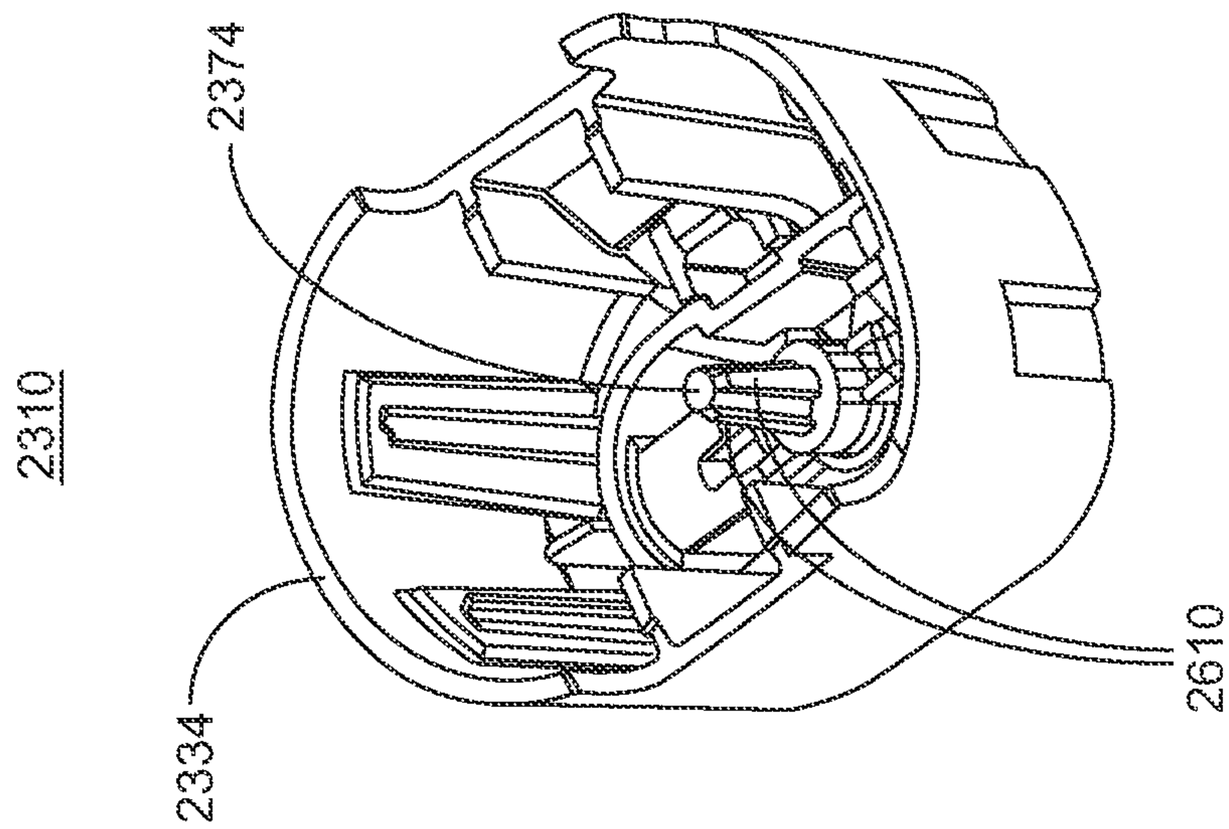

FIG. 55

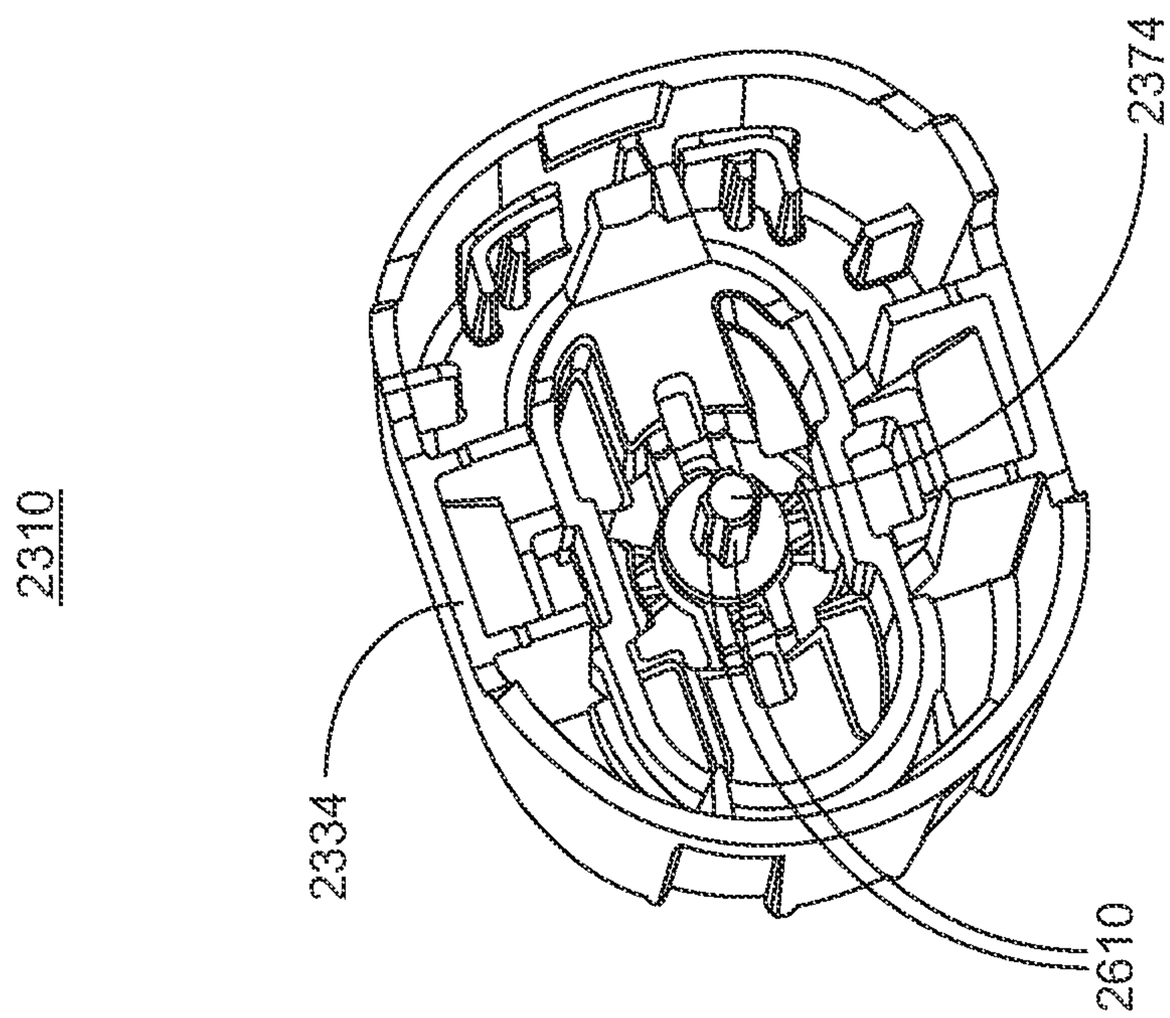

FIG. 54

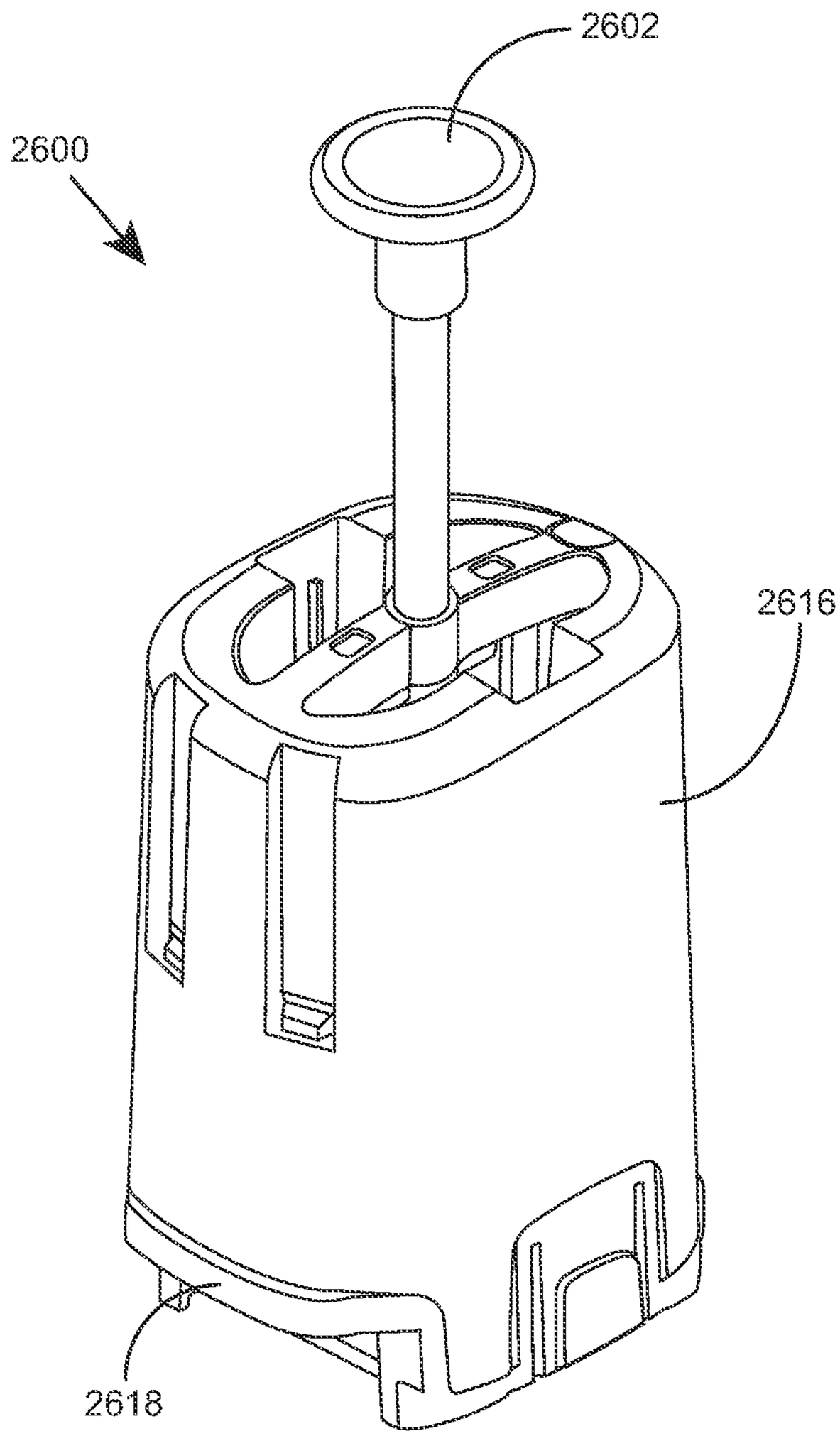

FIG. 56

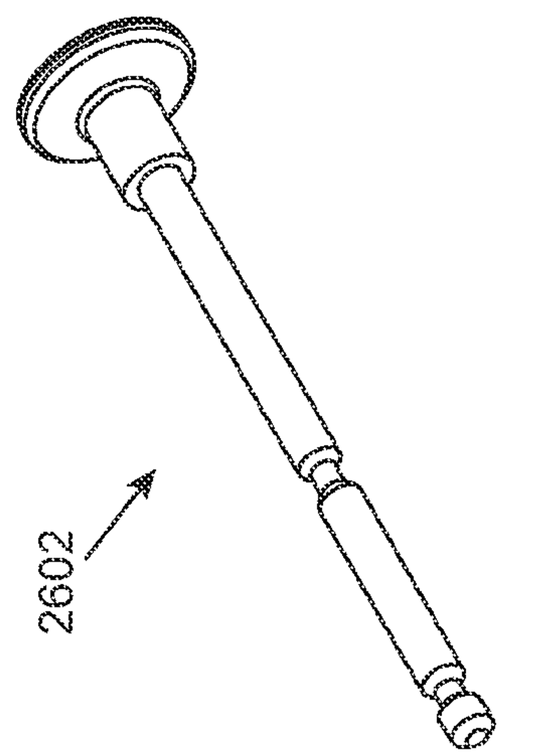

FIG. 57

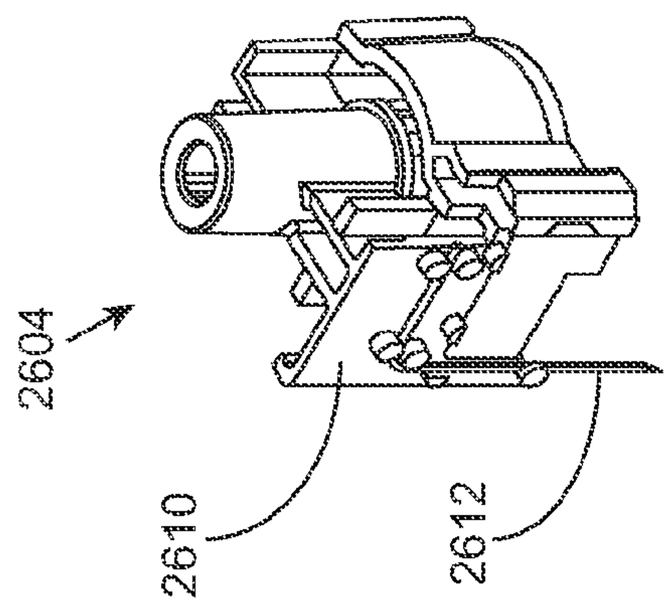

FIG. 58

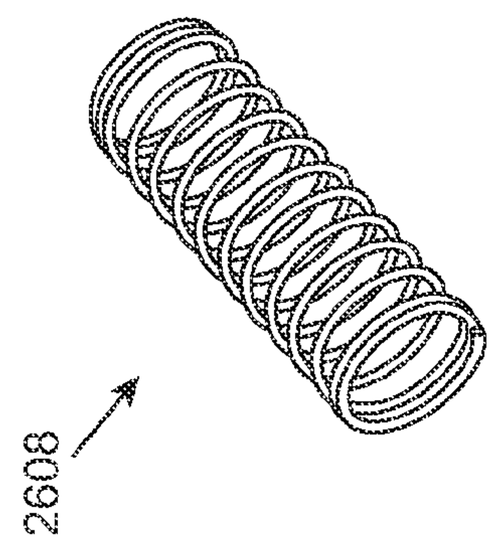

FIG. 59

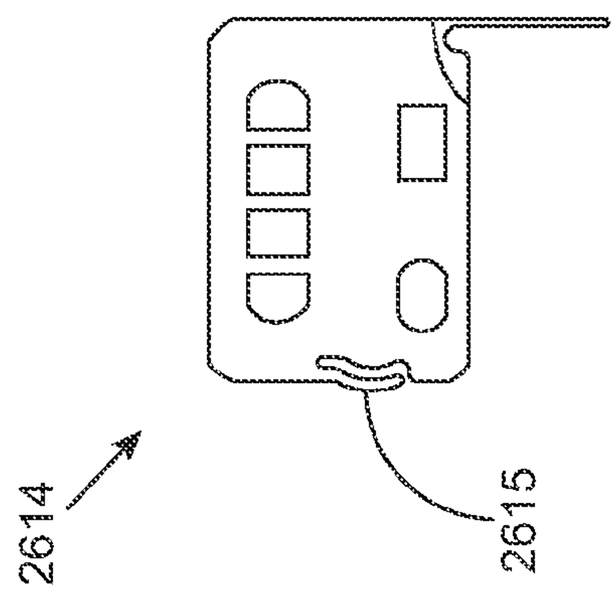

FIG. 60

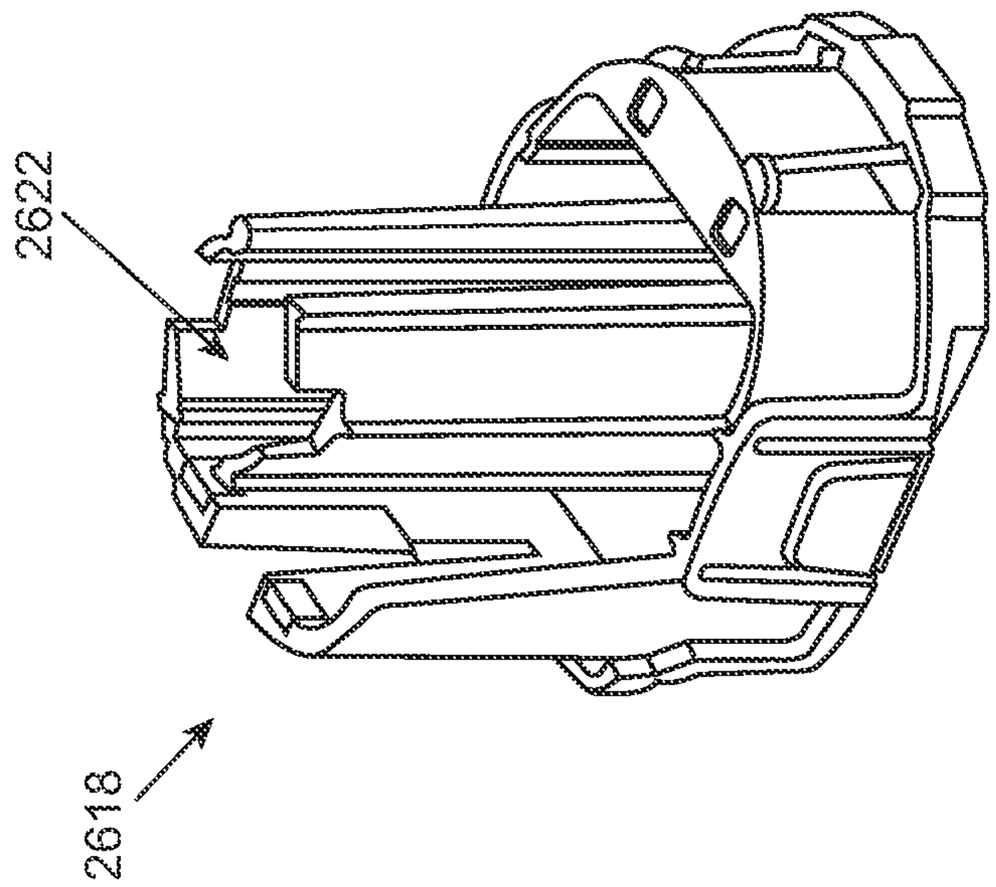

FIG. 62

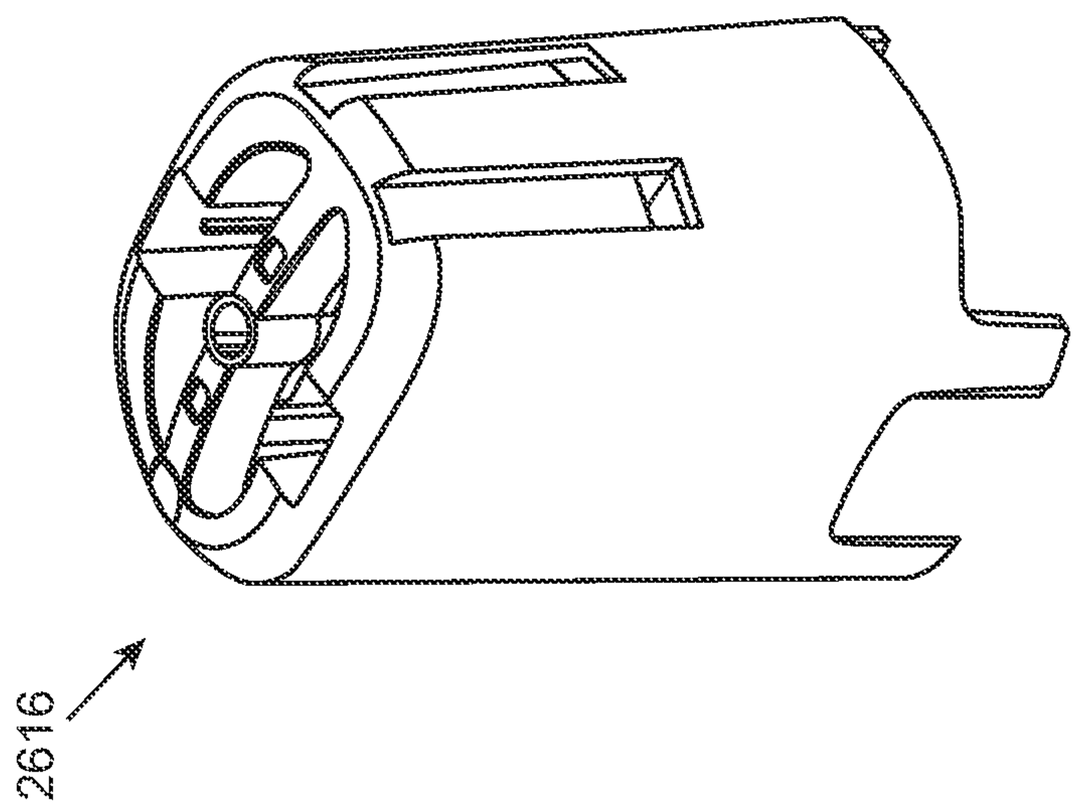

FIG. 61

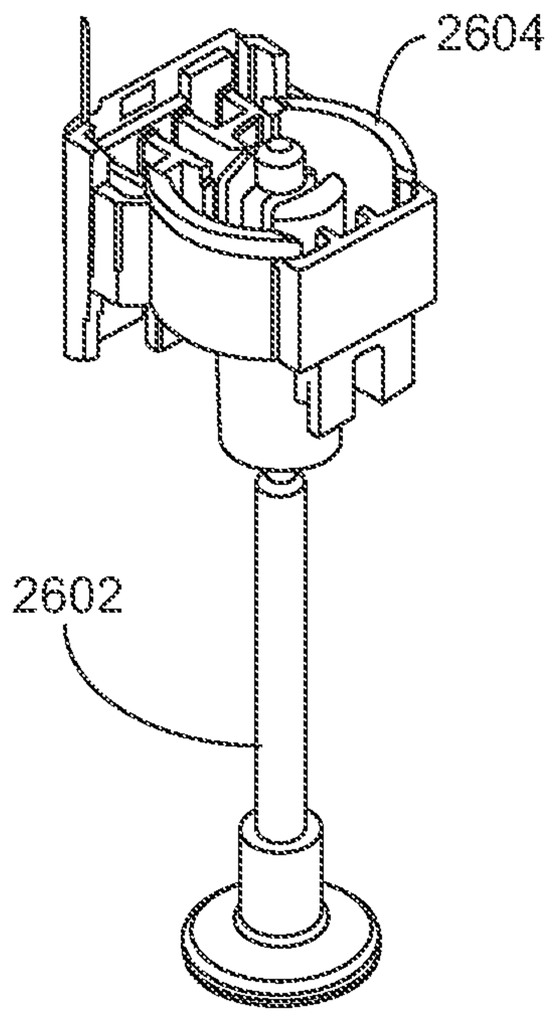

FIG. 63

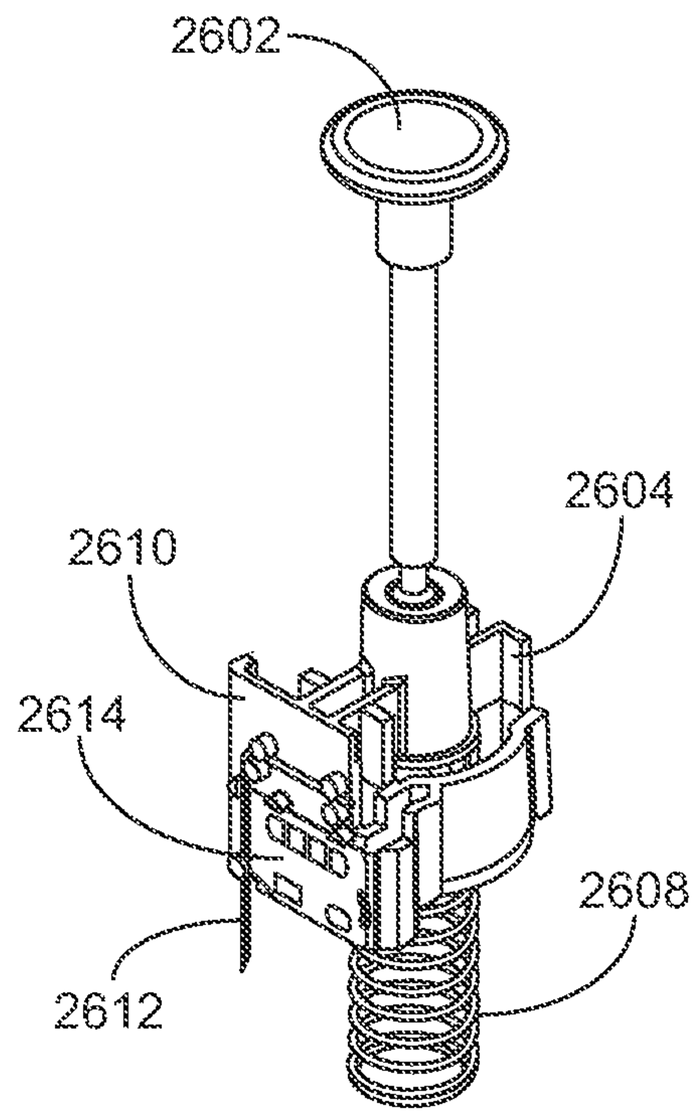

FIG. 64

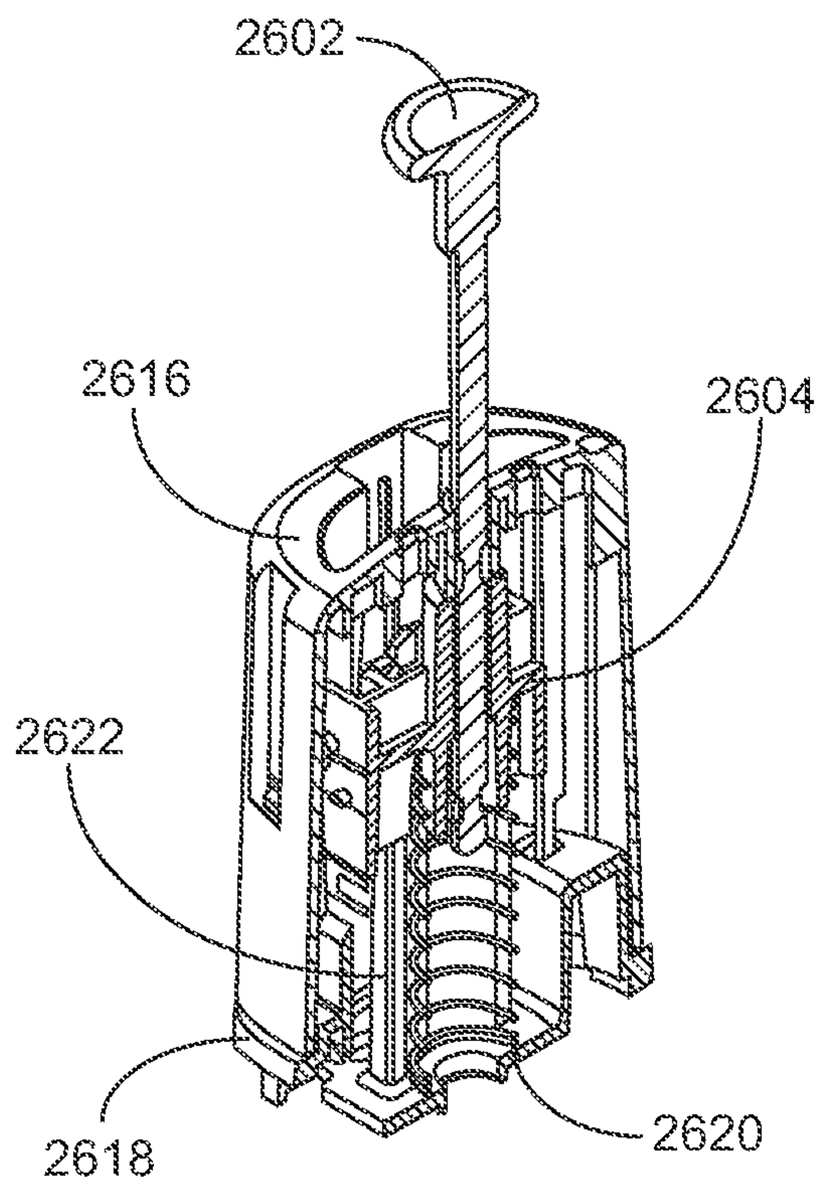

FIG. 65

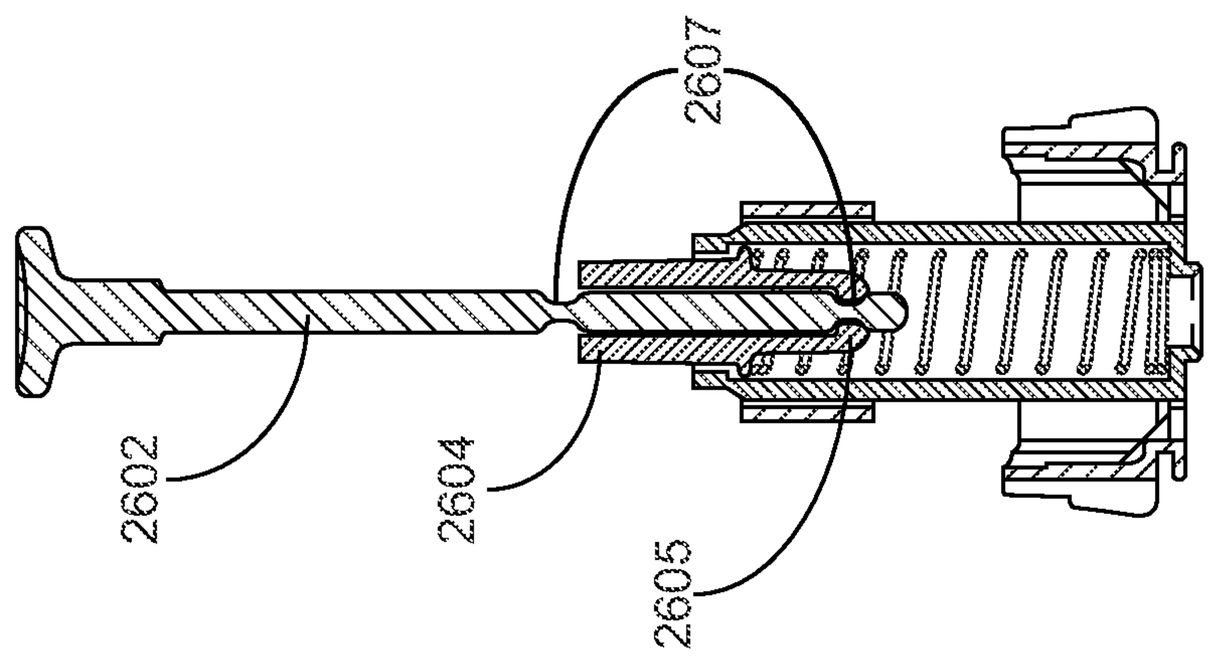

FIG. 67

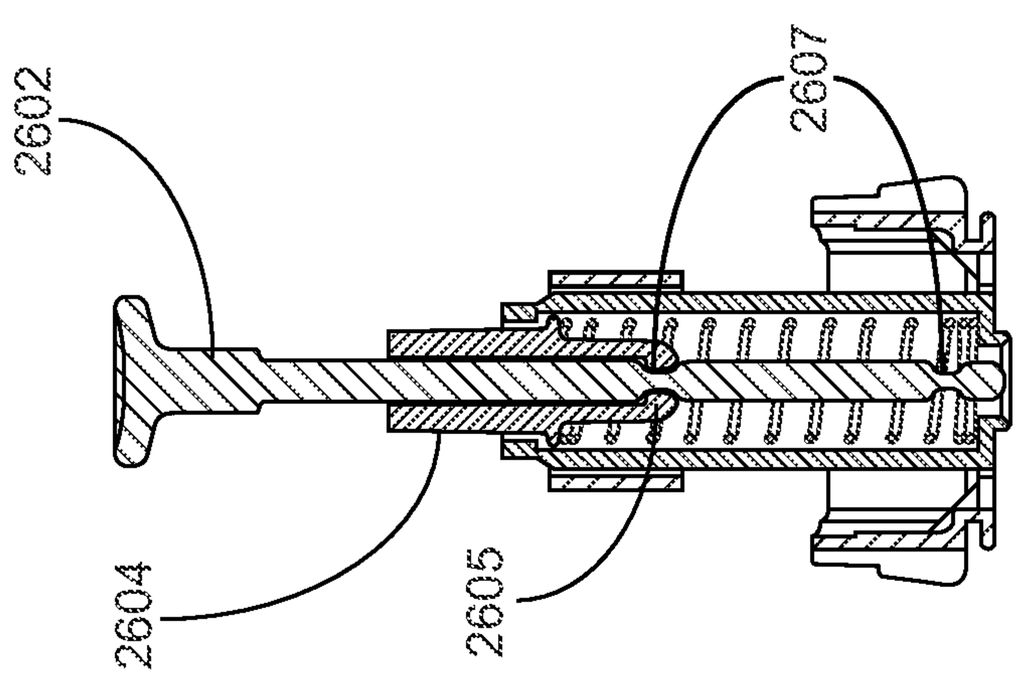

FIG. 66

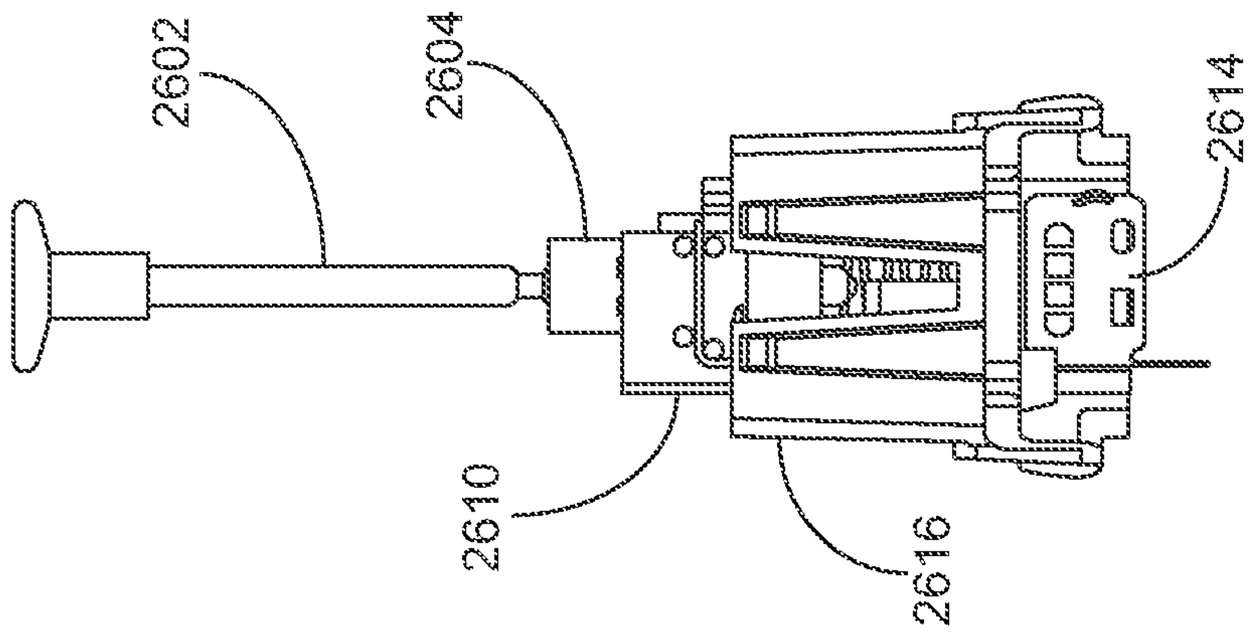

FIG. 70

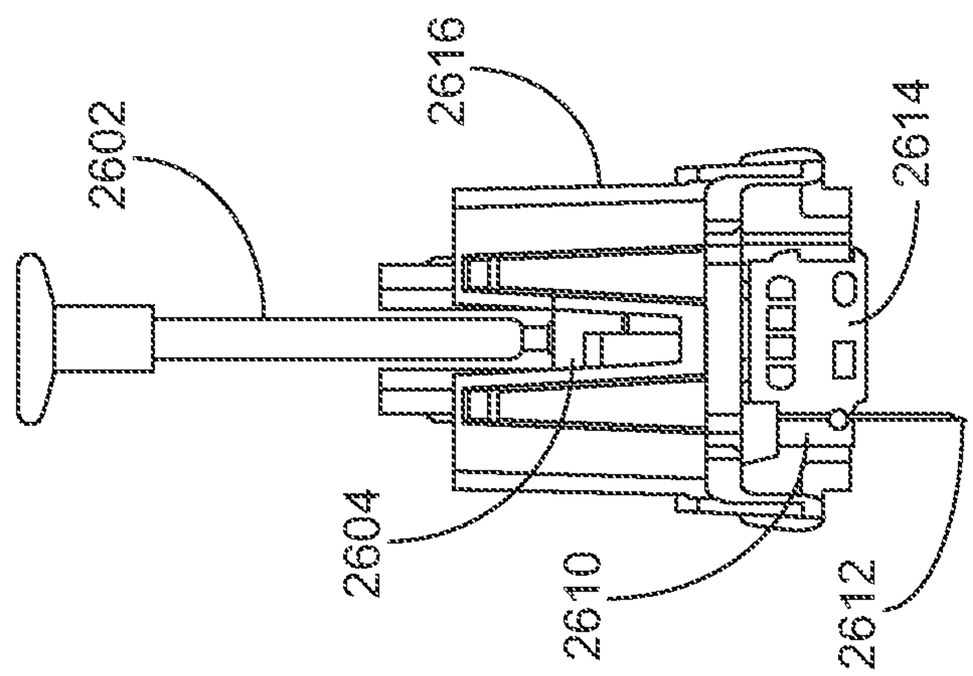

FIG. 69

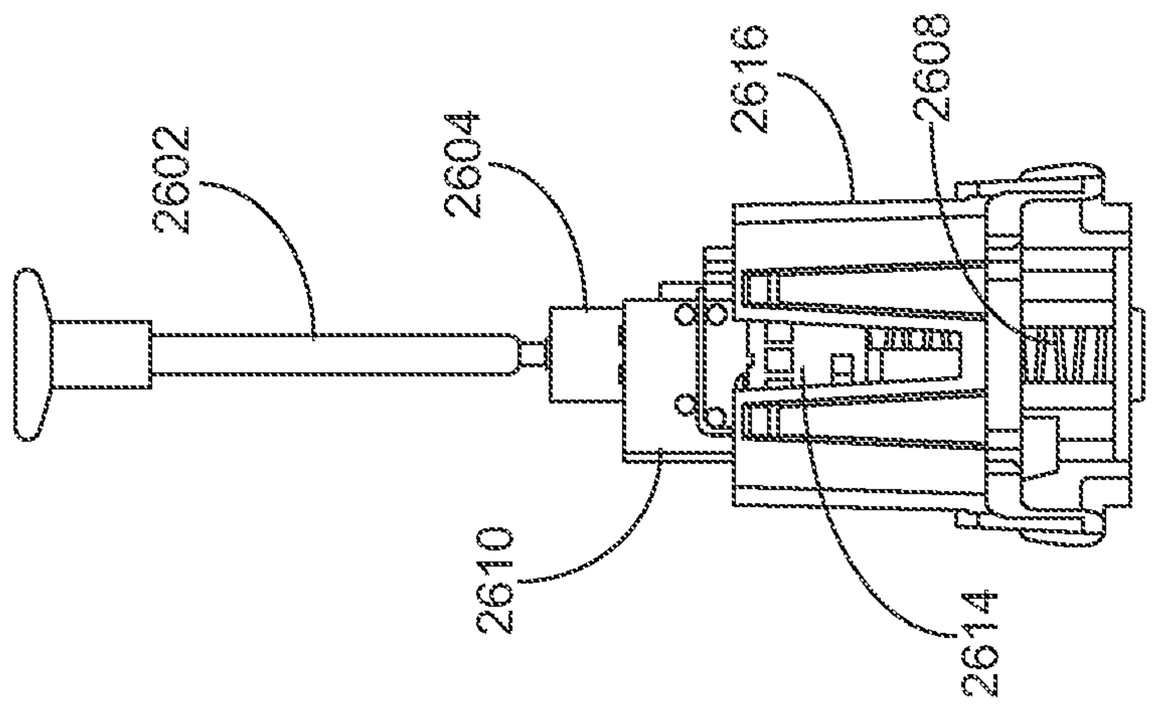

FIG. 68

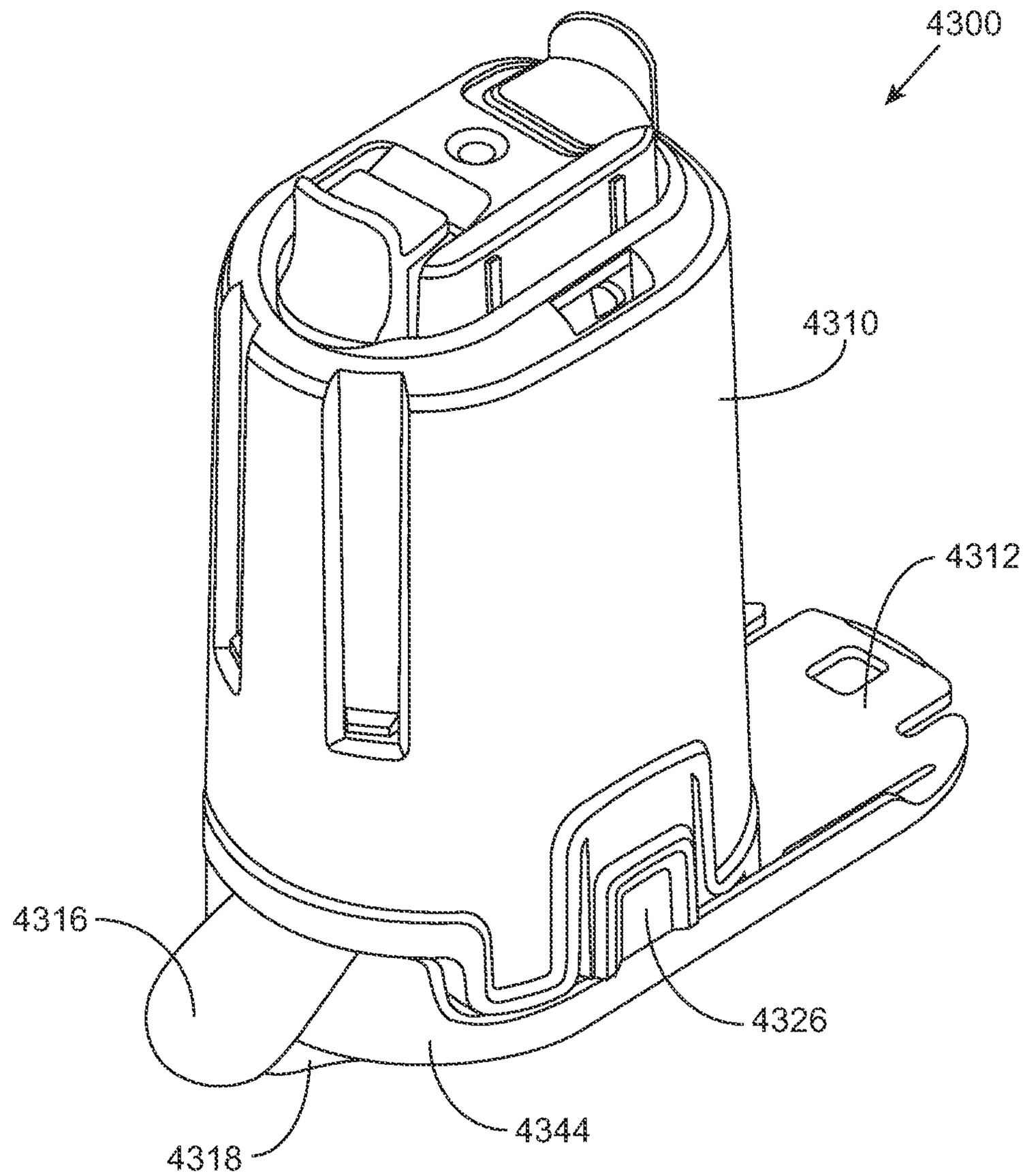

FIG. 71

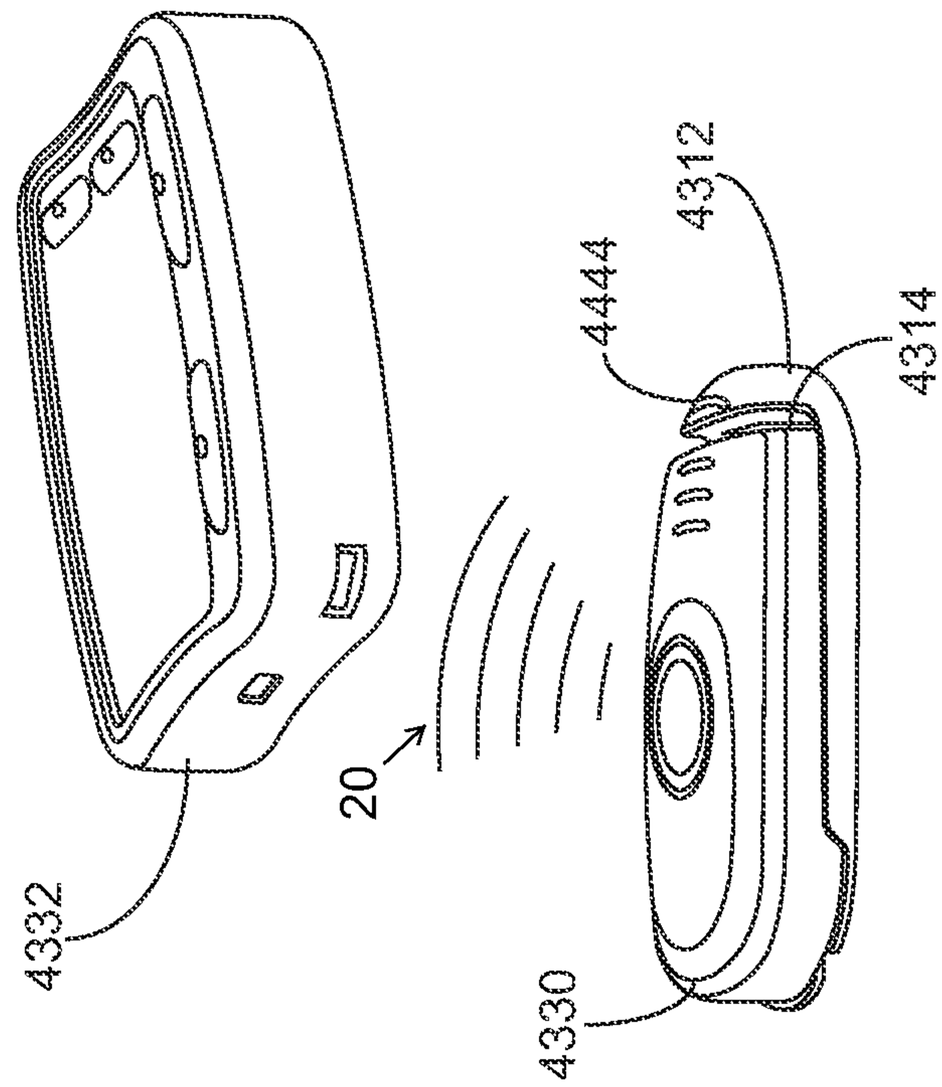
4332
20
4444
4312
4314
4330

FIG. 73

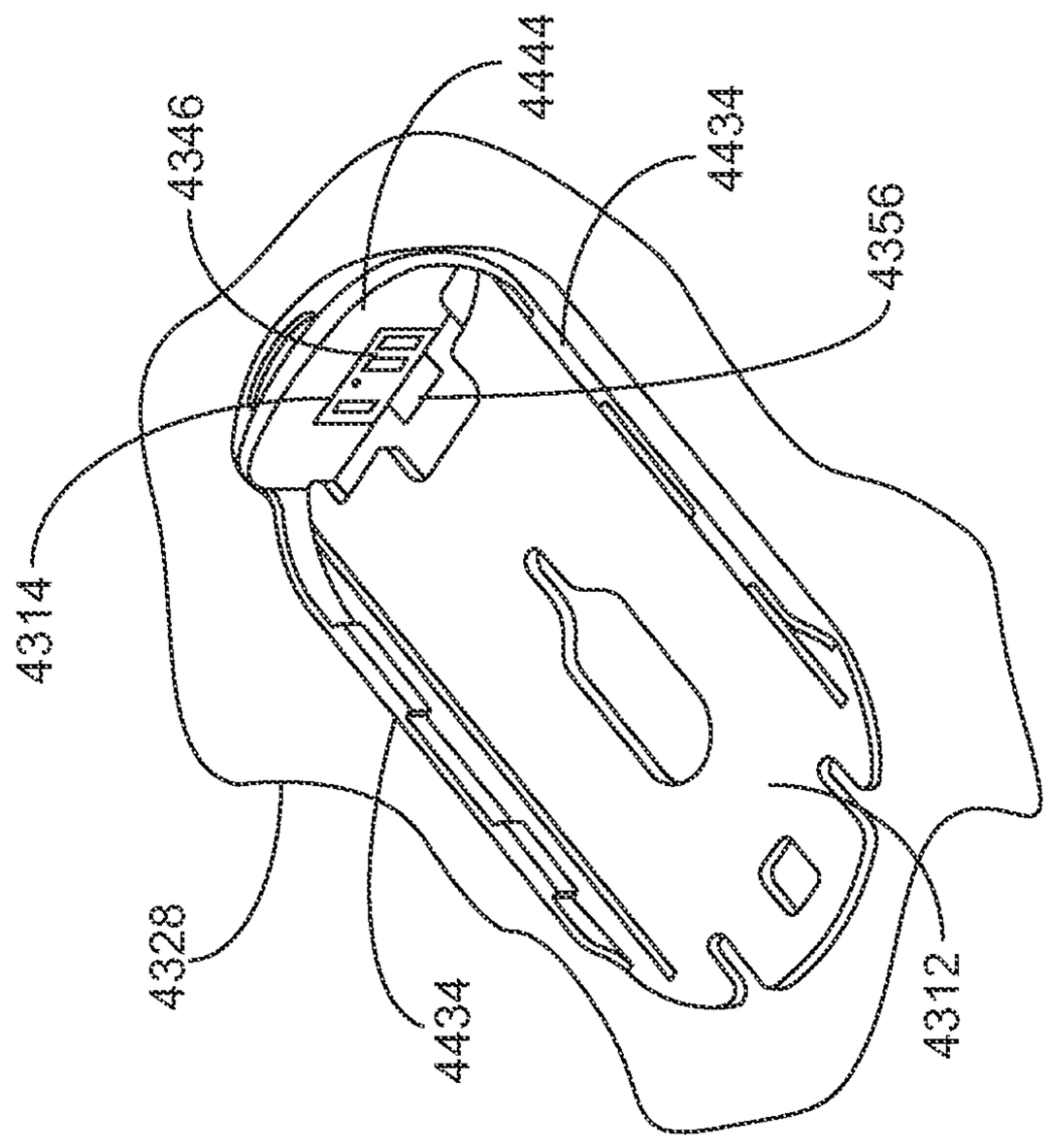
4346
4444
4434
4356
4314
4328
4434
4312

FIG. 72

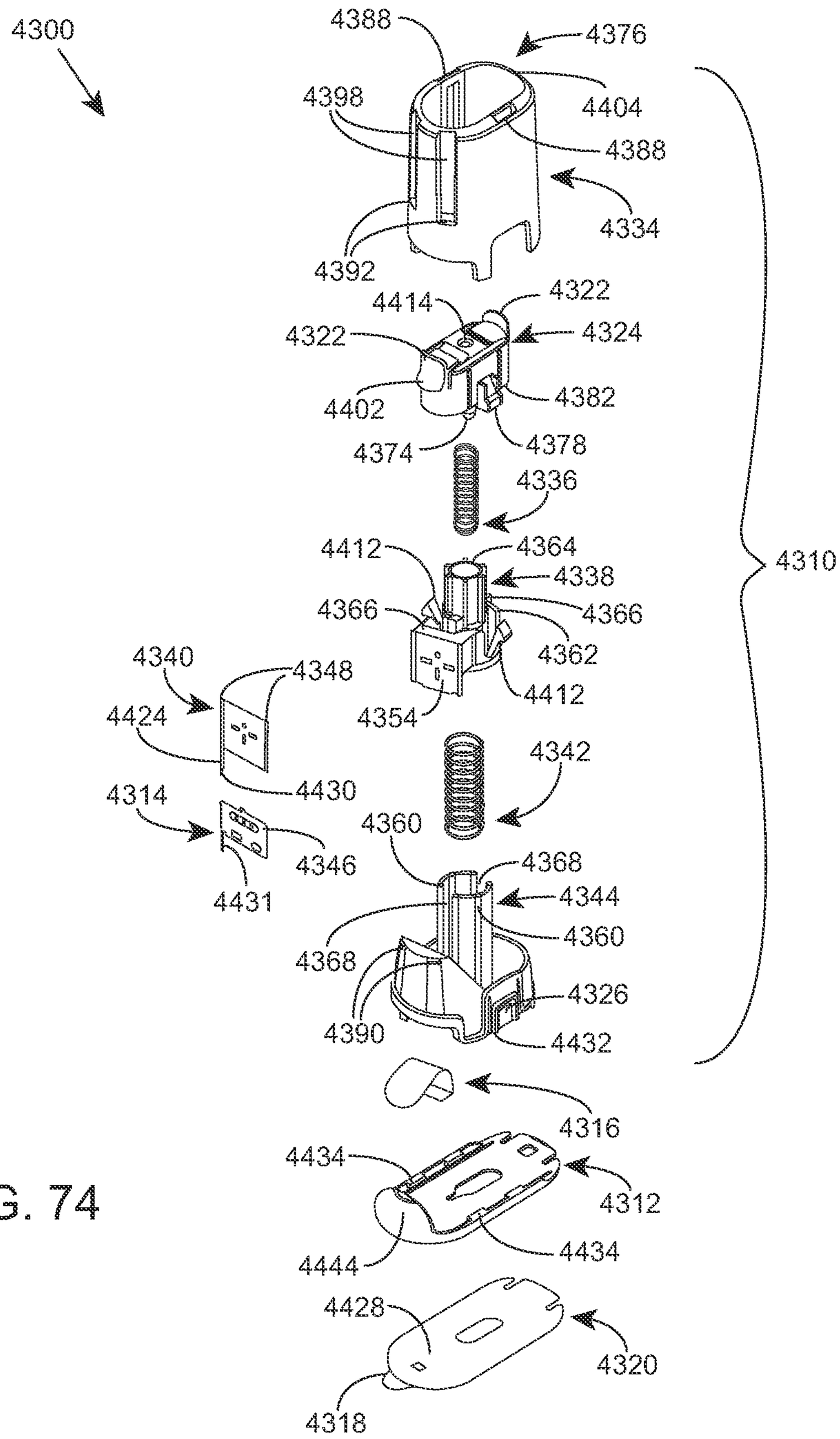
4300
4388
4376
4398
4404
4388
4334
4392
4414
4322
4322
4324
4402
4382
4374
4378
4336
4412
4364
4338
4366
4366
4362
4340
4348
4412
4354
4424
4342
4430
4314
4360
4346
4368
4431
4344
4360
4368
4326
4390
4432
4310
4316
4434
4312
4444
4434
4428
4320
4318

FIG. 74

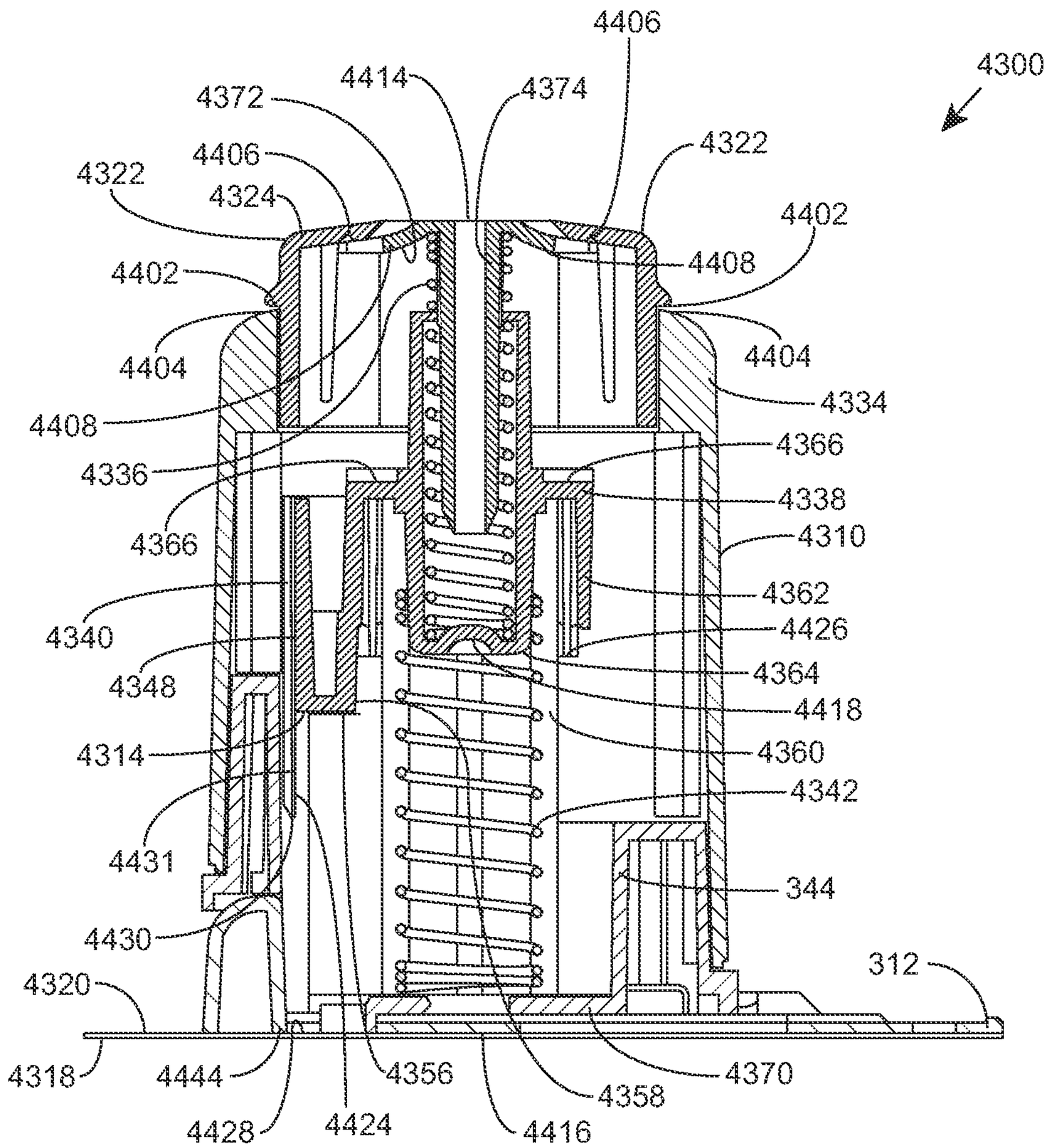
4406
4300
4414
4374
4372
4322
4406
4322
4324
4402
4402
4408
4404
4404
4334
4408
4366
4336
4338
4366
4310
4362
4340
4426
4348
4364
4418
4314
4360
4342
4431
344
4430
312
4320
4318
4444
4356
4358
4370
4428
4424
4416

FIG. 75

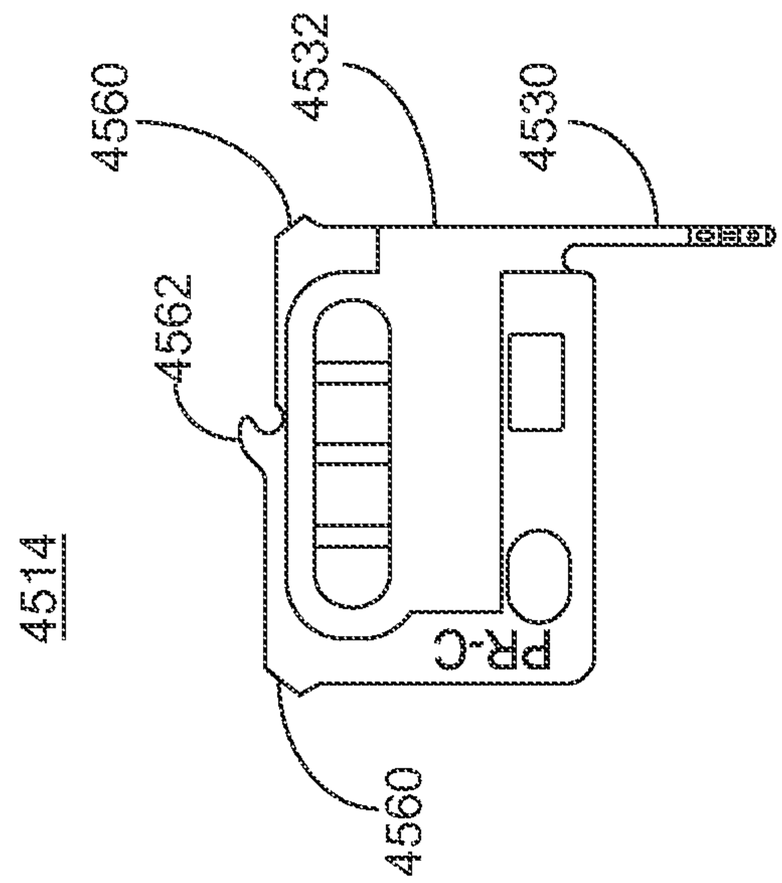
4560
4532
4530
4562
4514
PR-C
4560

FIG. 77

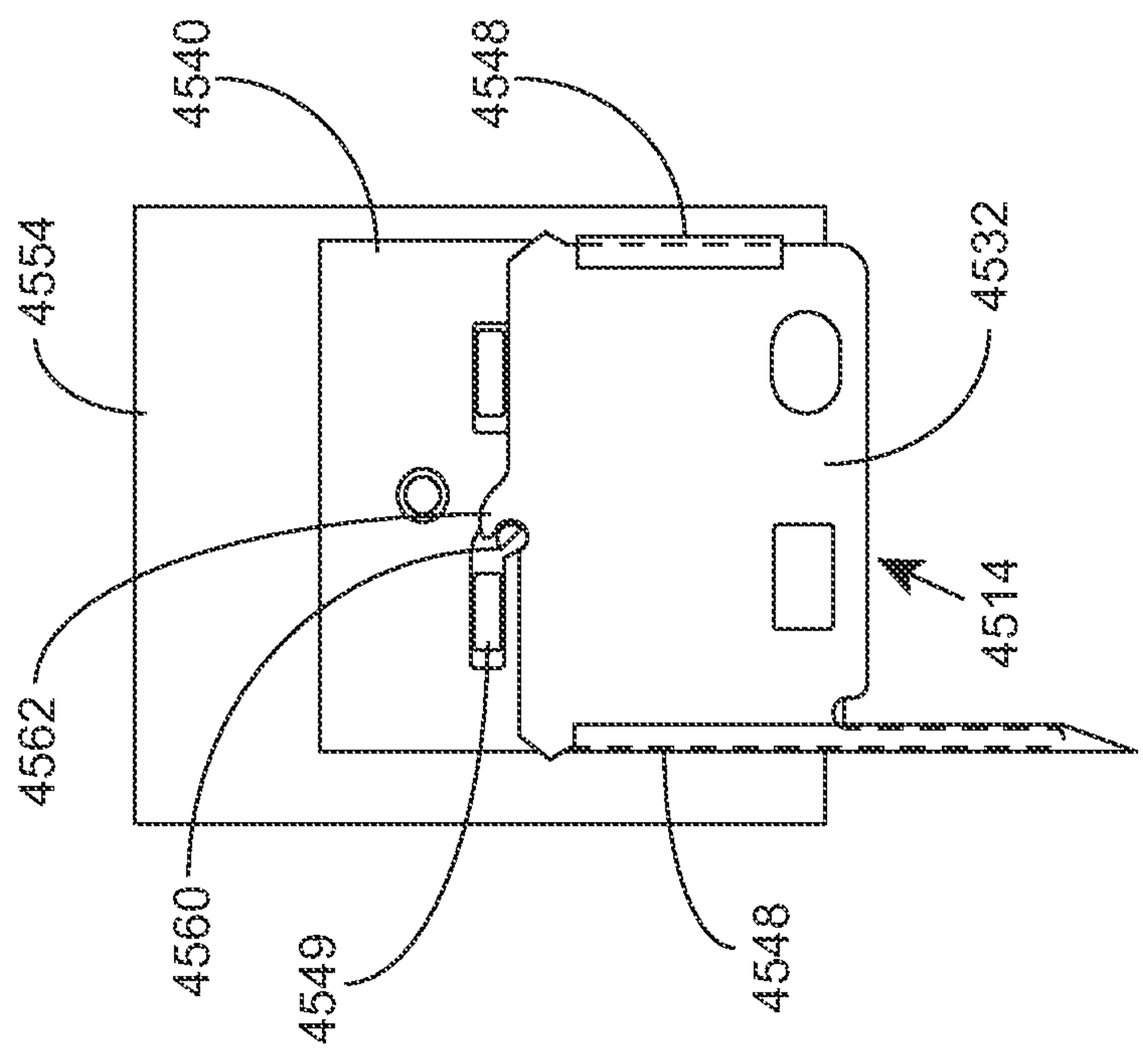
4540
4548
4554
4532
4562
4514
4560
4549
4548

FIG. 76

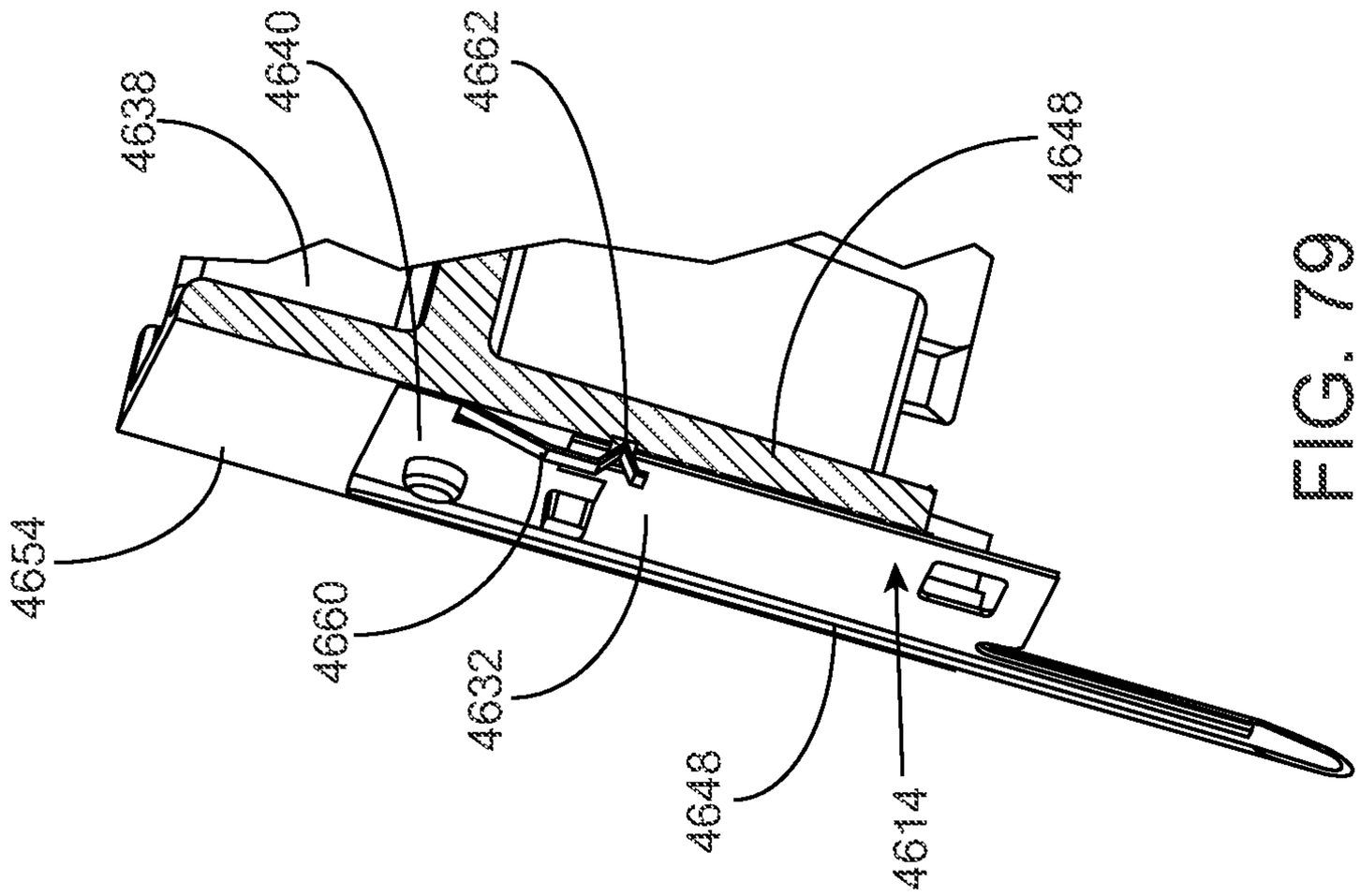
4638
4640
4662
4648
4654
4660
4632
4648
4614

FIG. 79

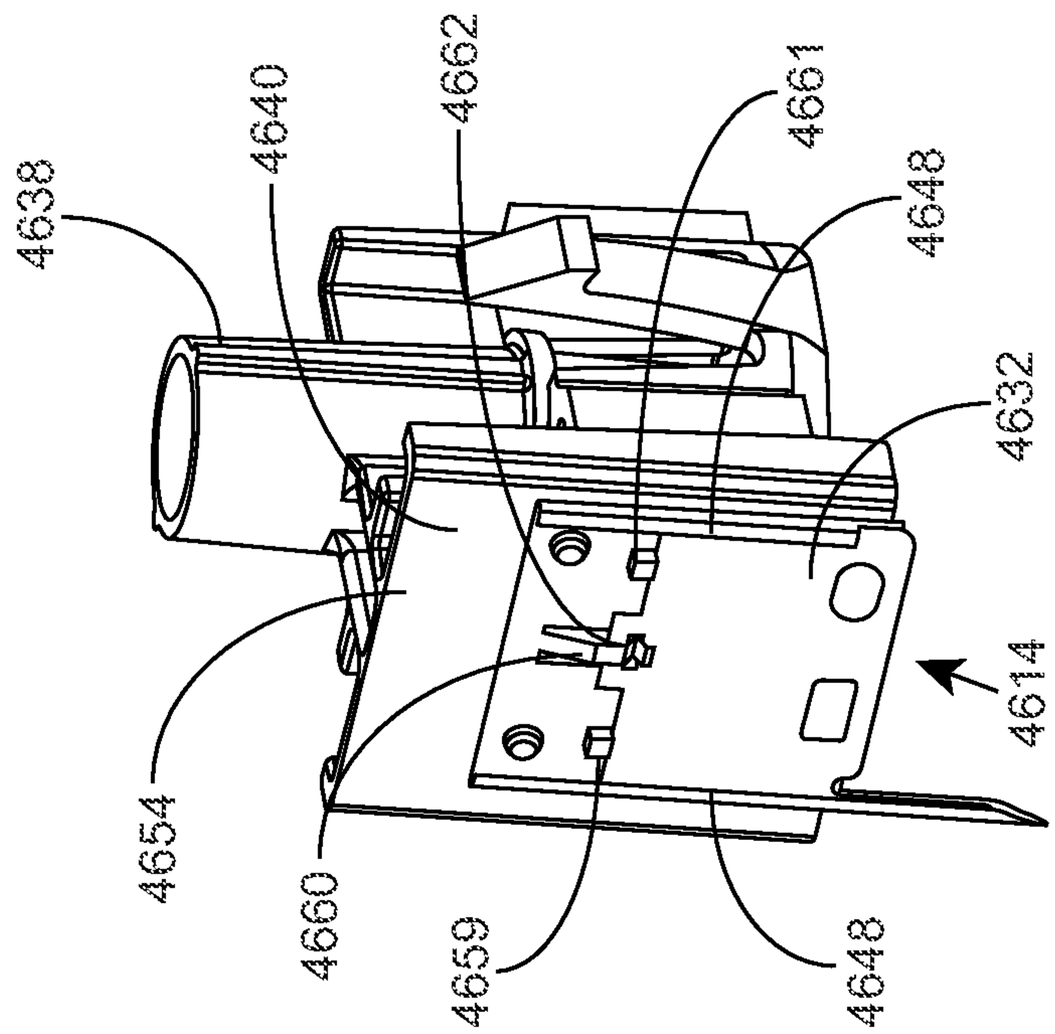
4638
4640
4662
4661
4648
4632
4614
4654
4660
4659
4648

FIG. 78

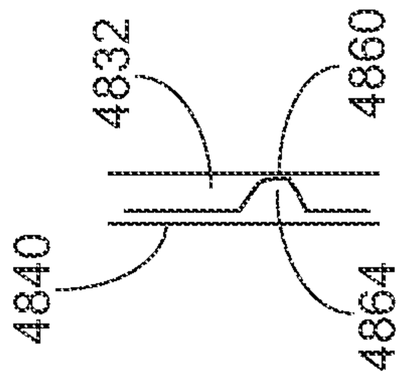

FIG. 82

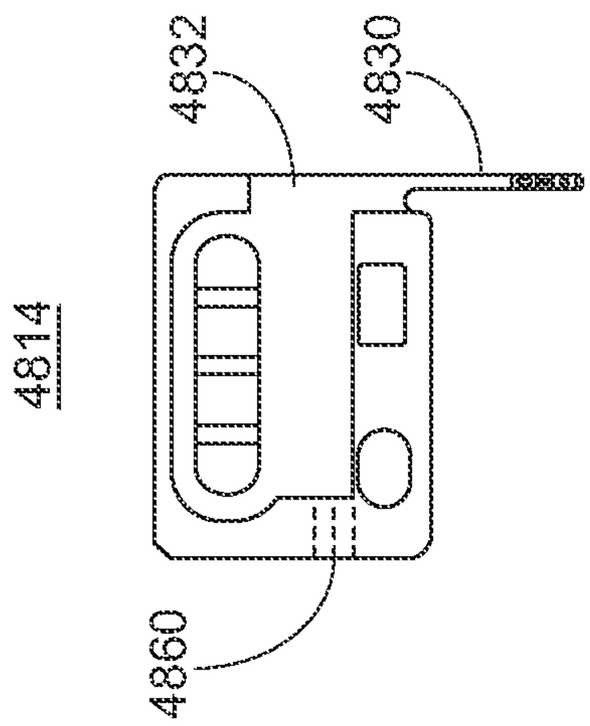

FIG. 81

FIG. 80

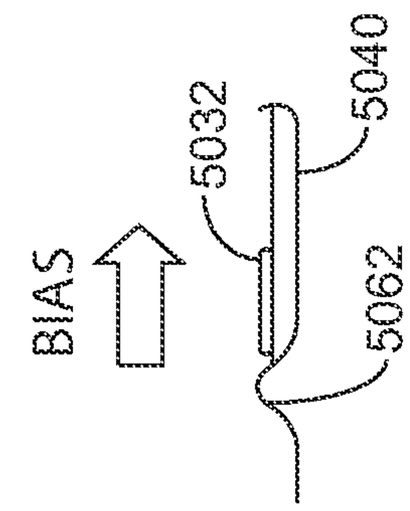

FIG. 86

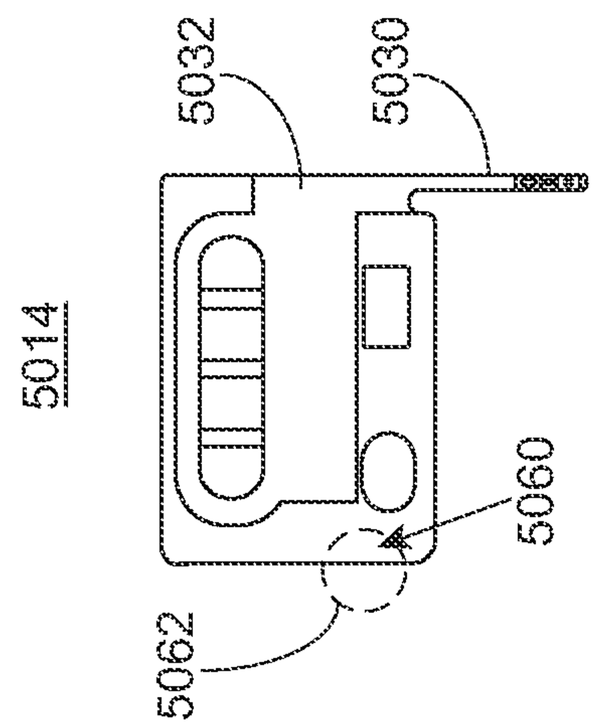

FIG. 85

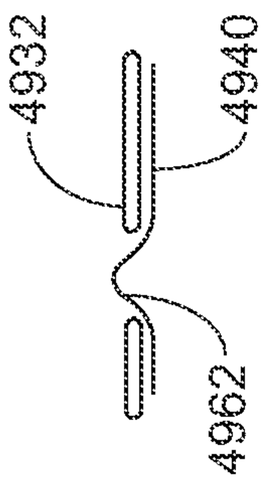

FIG. 84

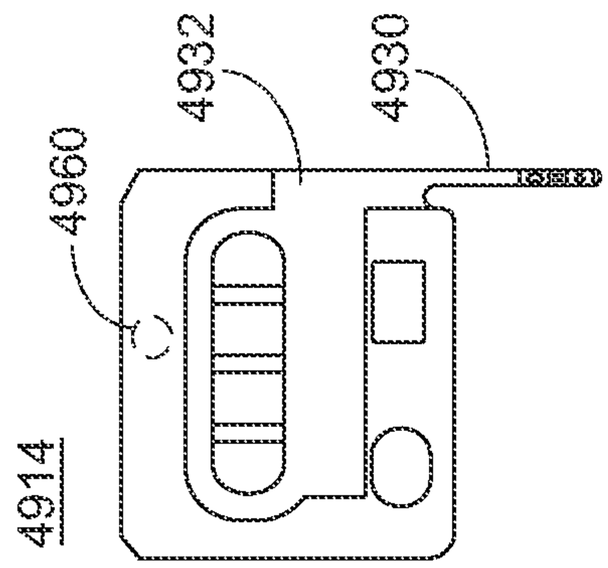

FIG. 83

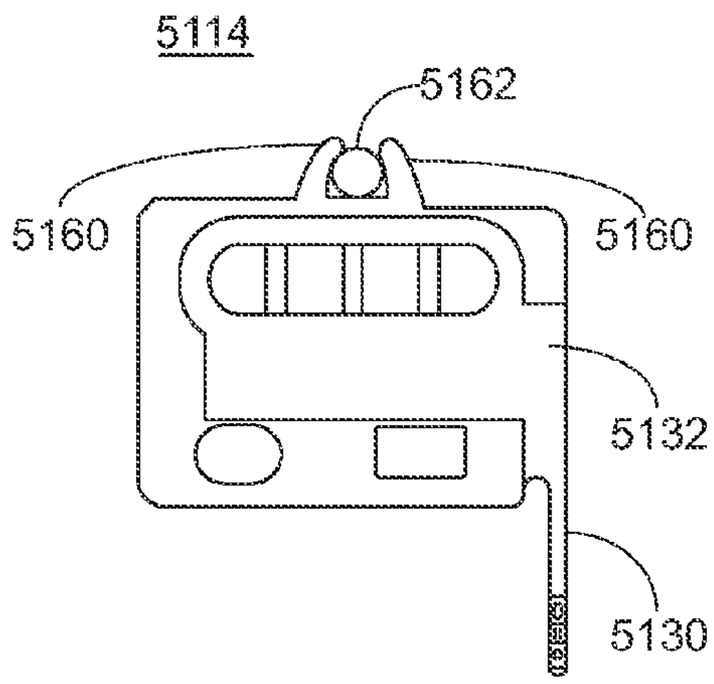

FIG. 87

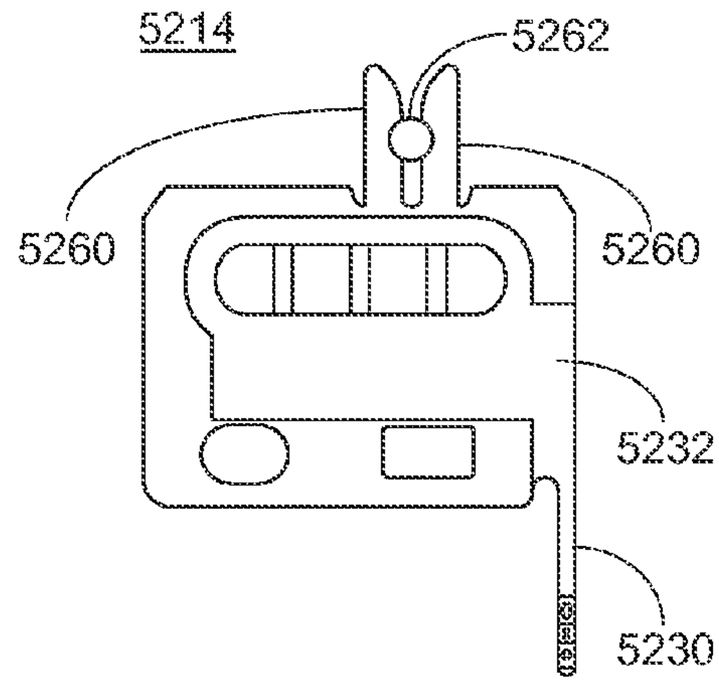

FIG. 88

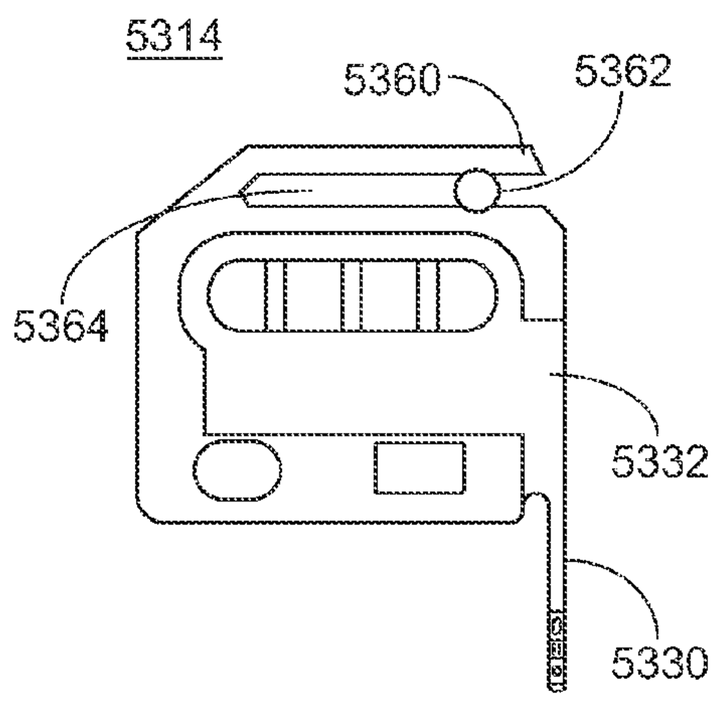

FIG. 89

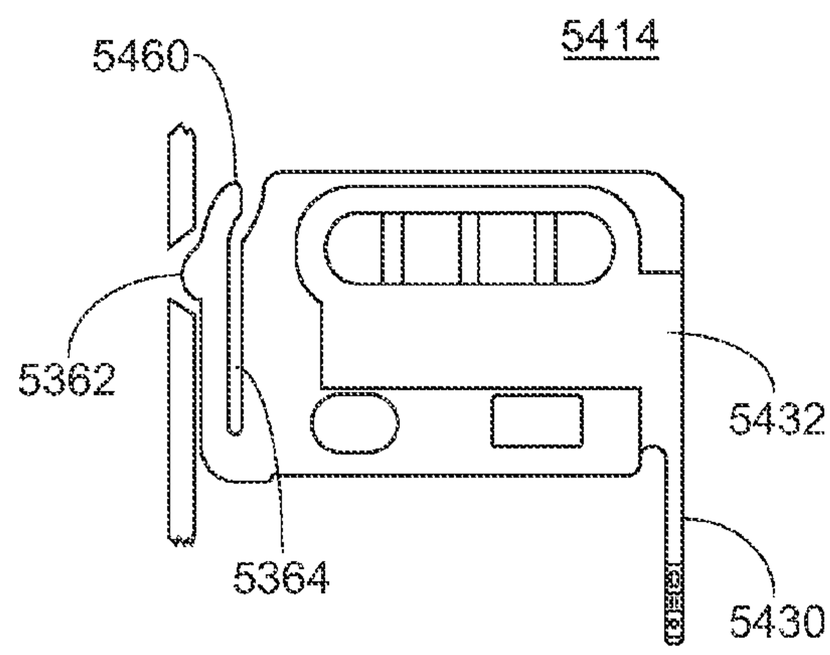

FIG. 90

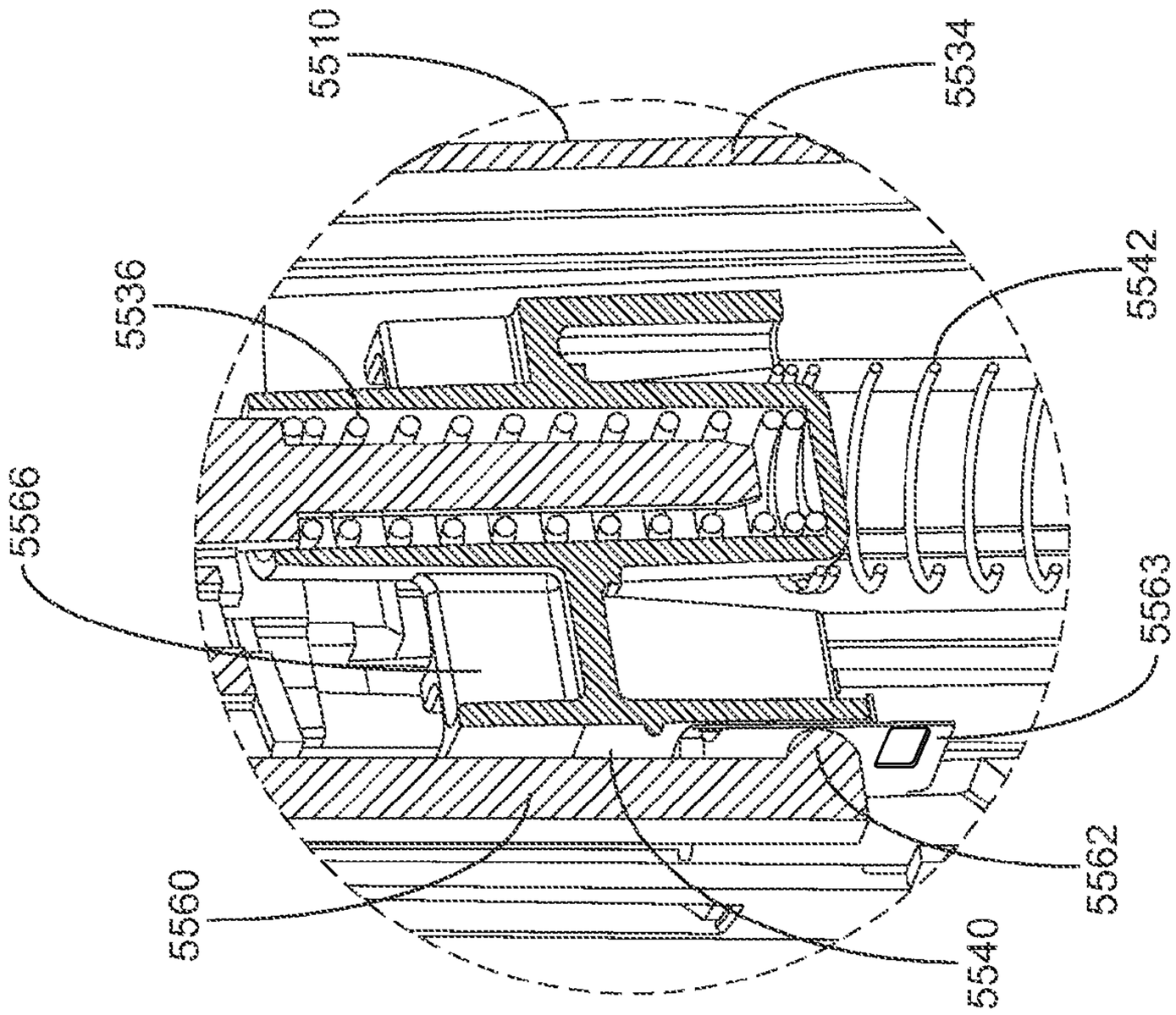
5510
5534
5536
5542
5566
5563
5562
5560
5540

FIG. 92

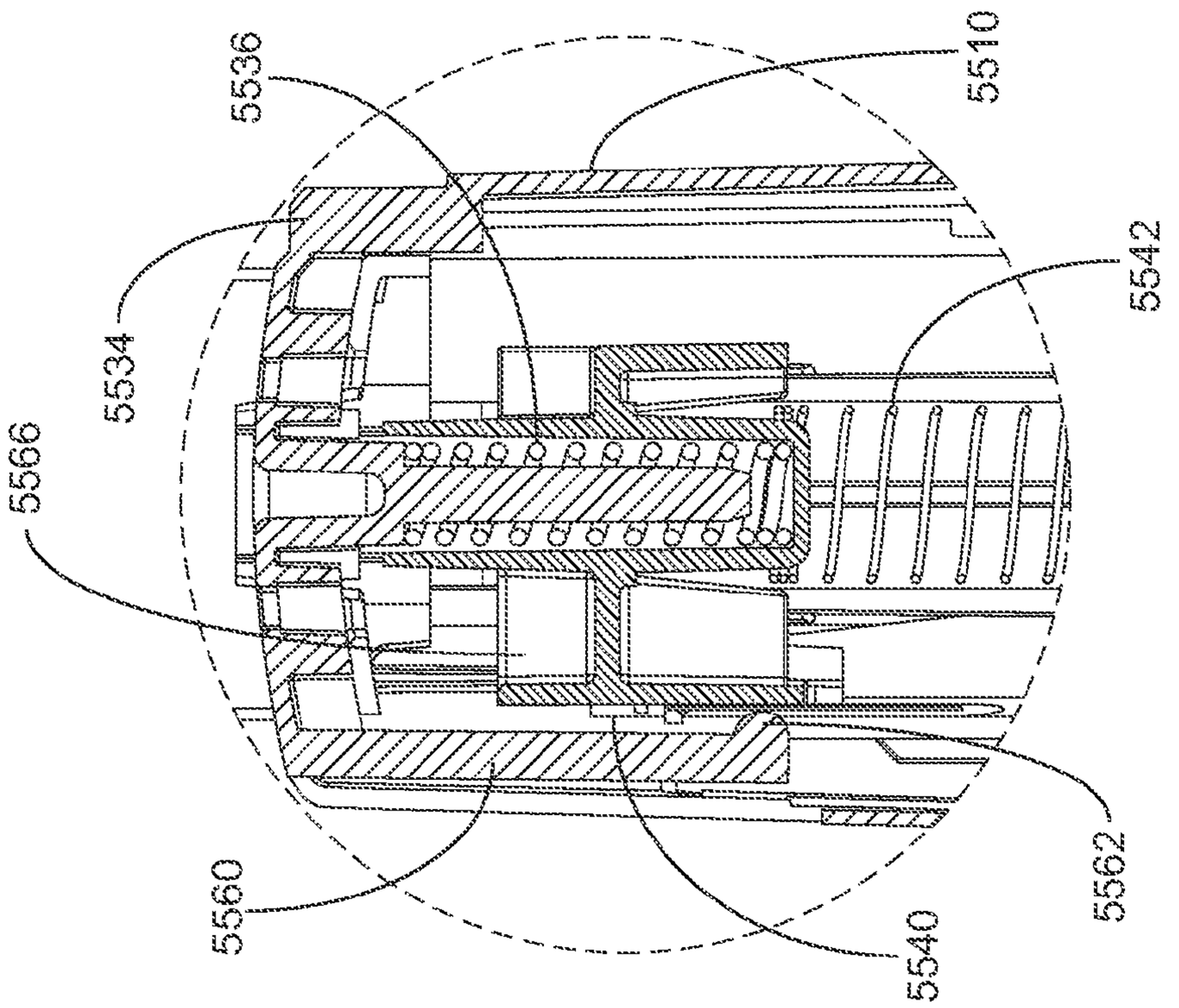
5536
5510
5534
5542
5566
5562
5560
5540

FIG. 91

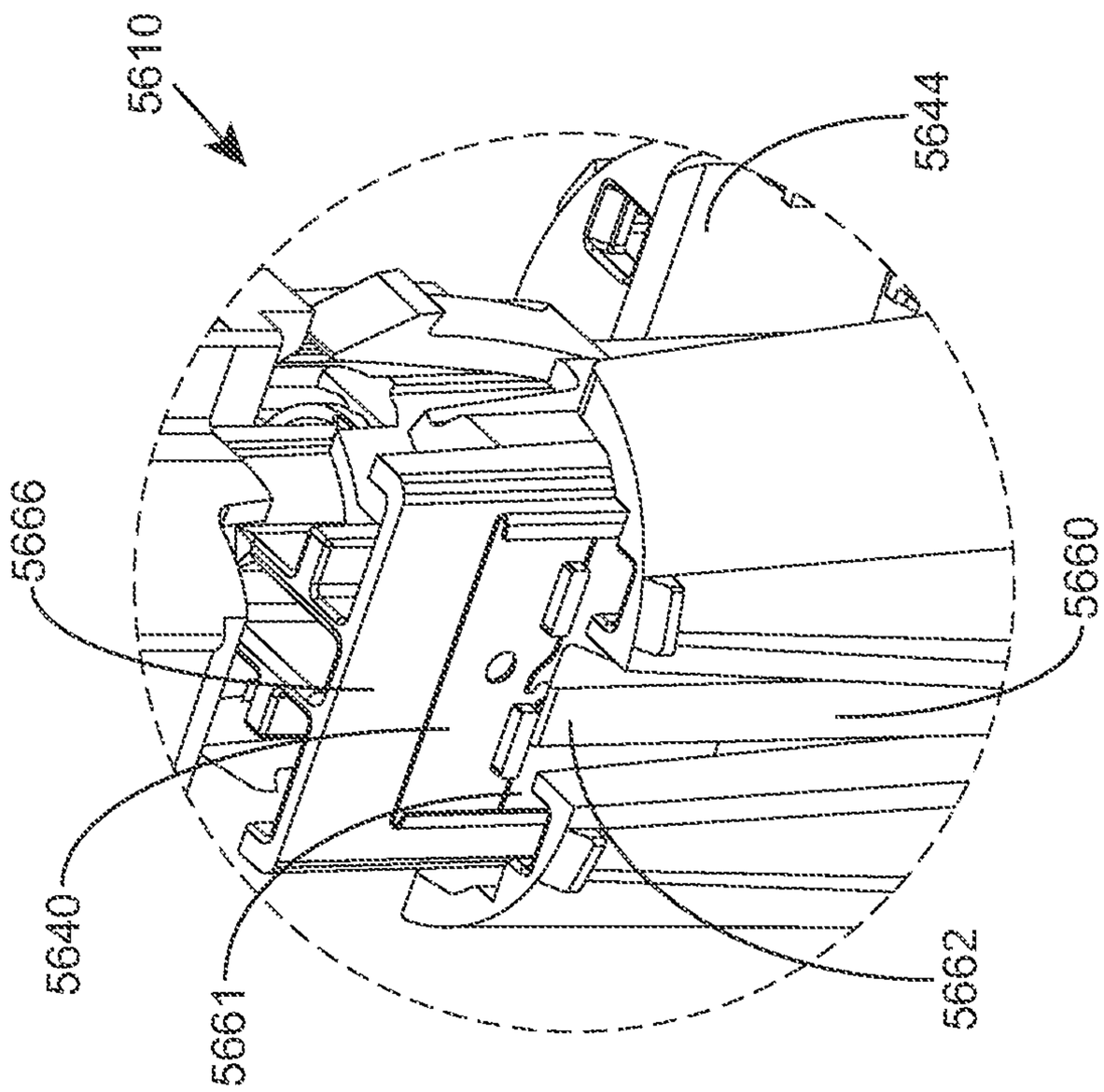
5610
5644
5666
5660
5640
5661
5662

FIG. 94

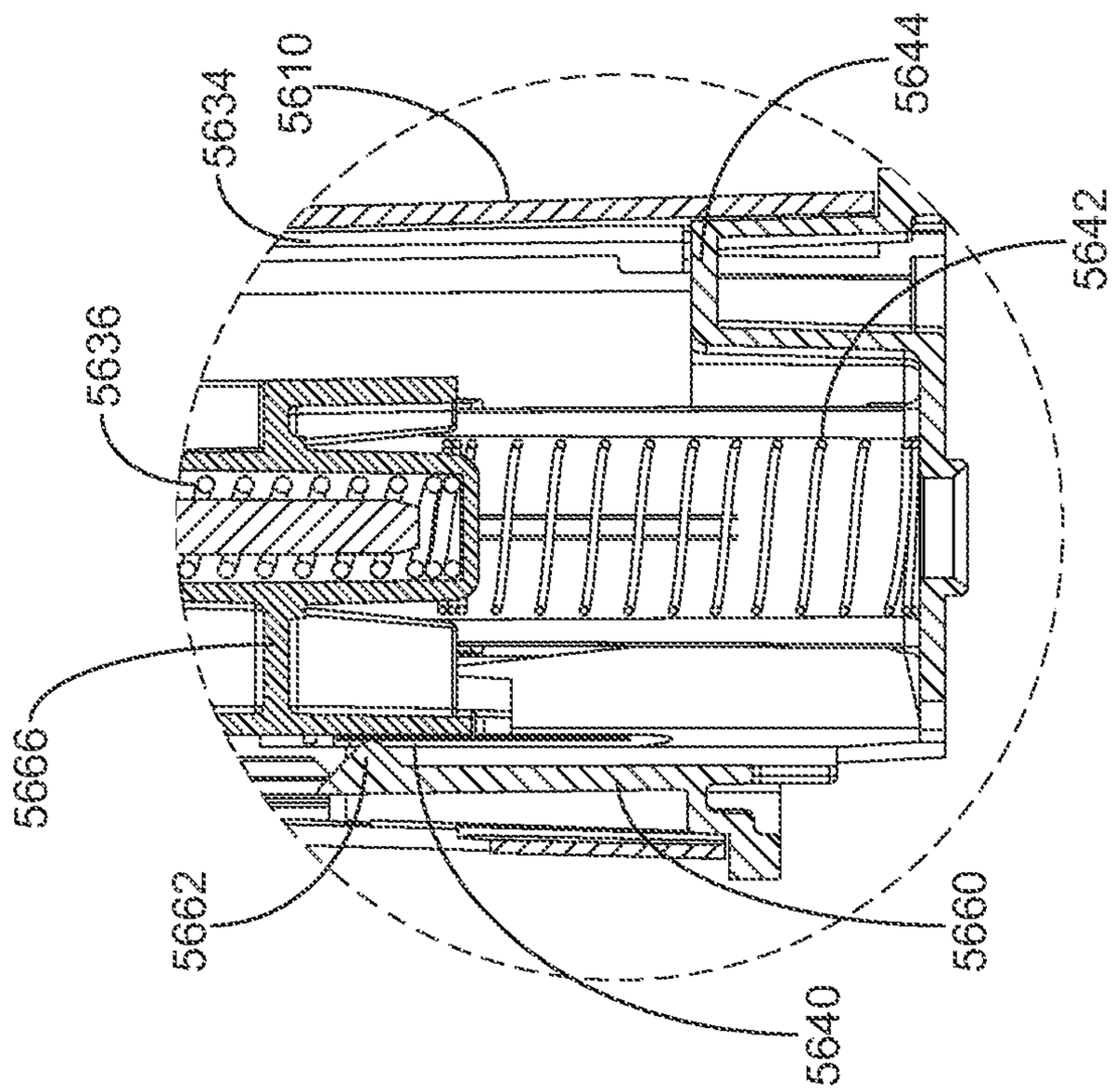
5634
5610
5644
5642
5636
5666
5662
5660
5640

FIG. 93

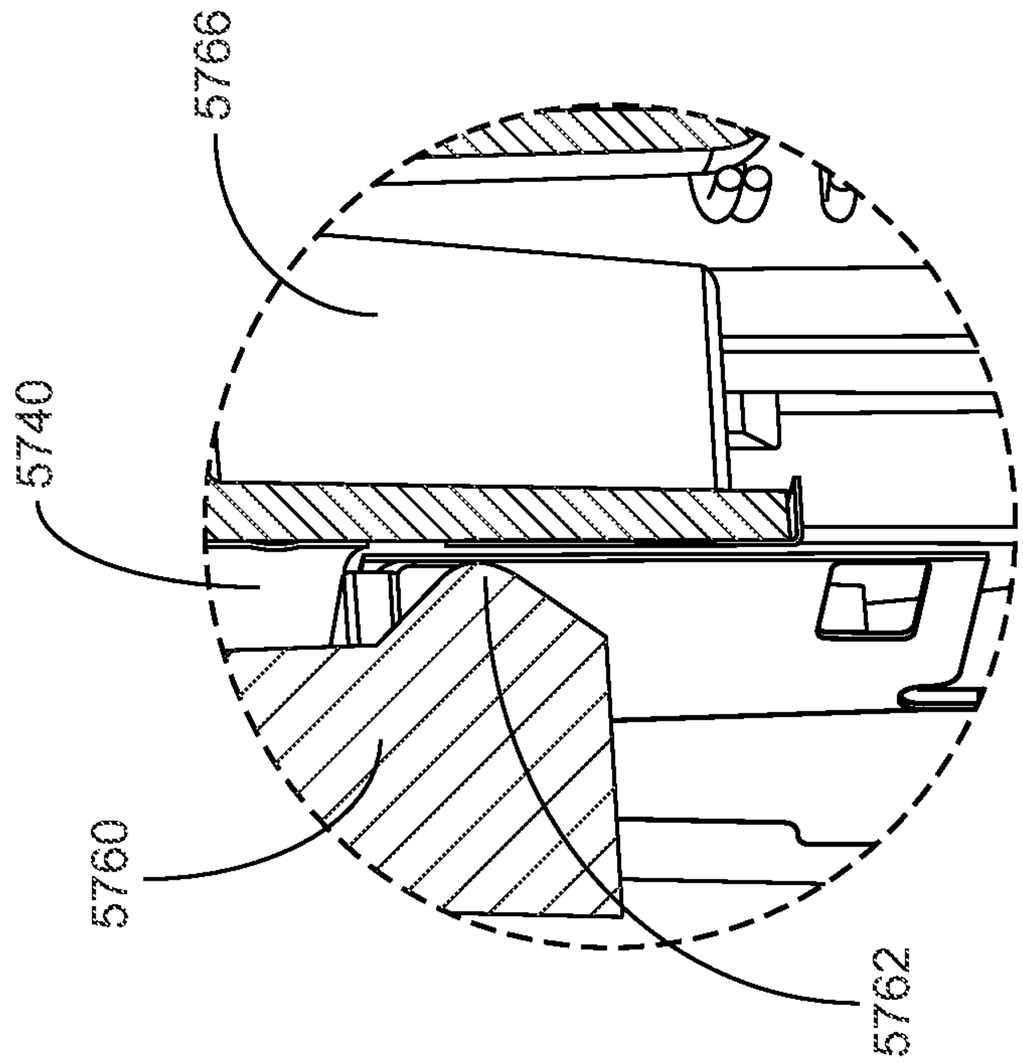

FIG. 96

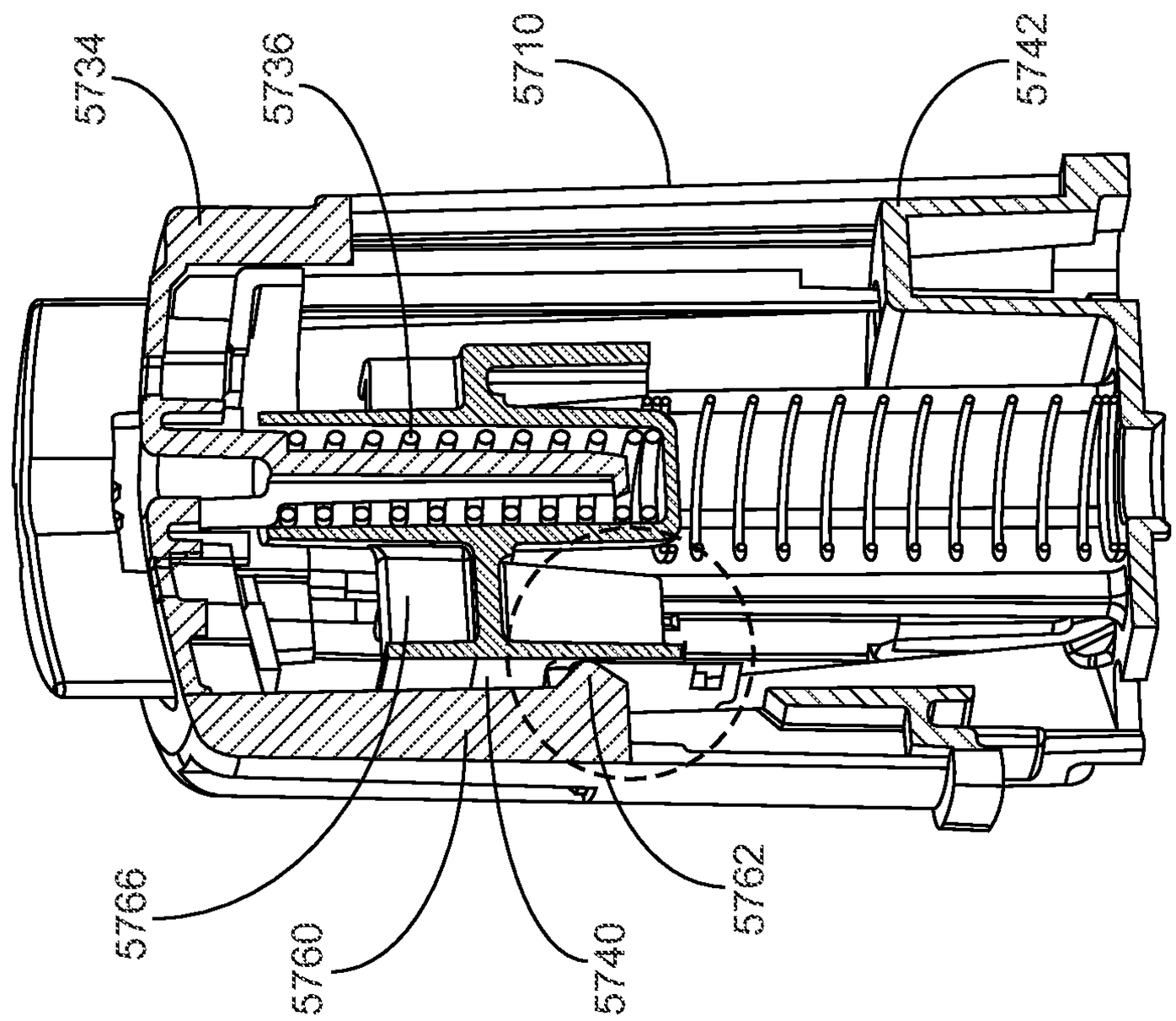

FIG. 95

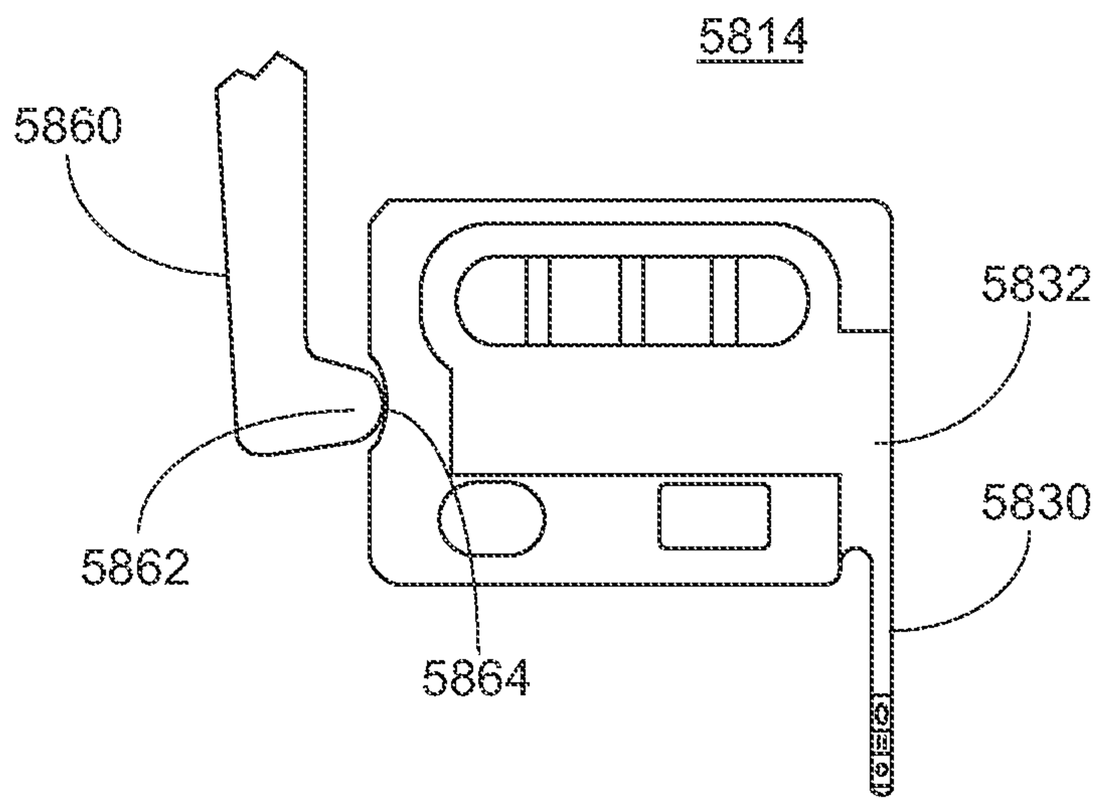
5814
5860
5832
5830
5862
5864

FIG. 97

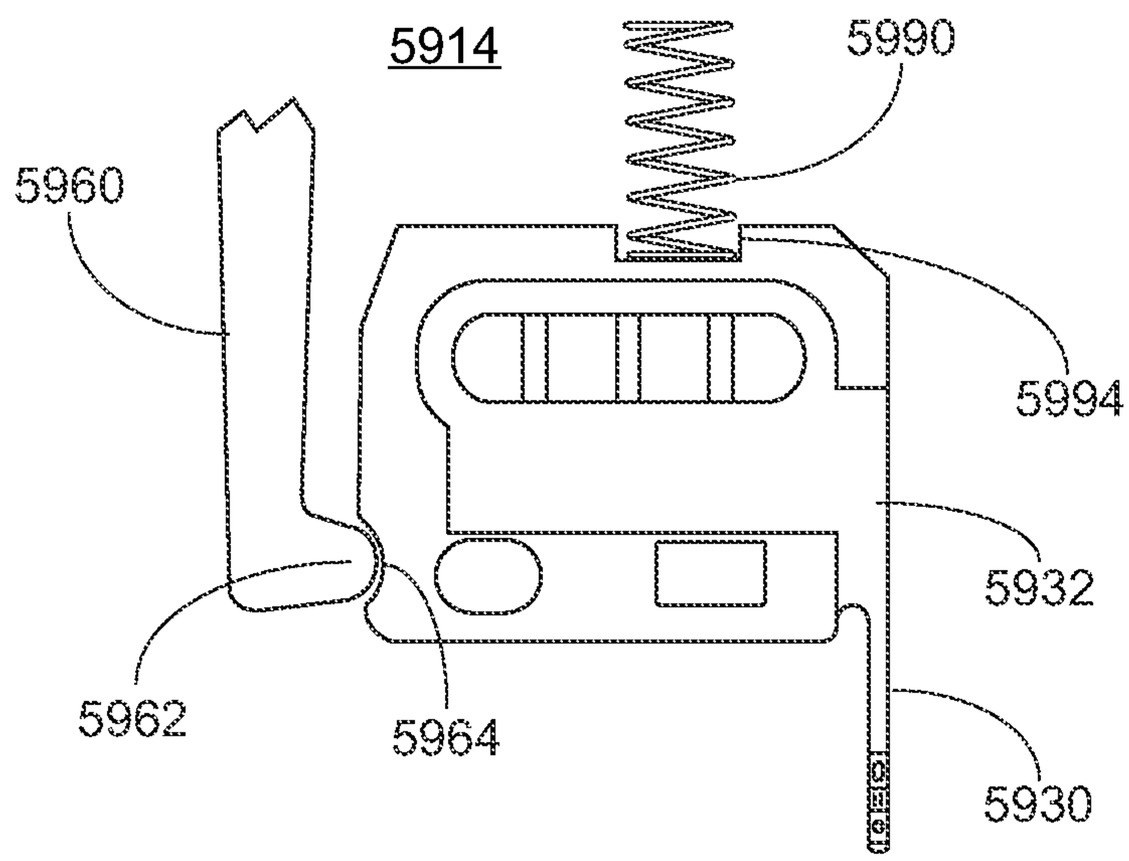
5914
5990
5960
5994
5932
5962
5964
5930

FIG. 98

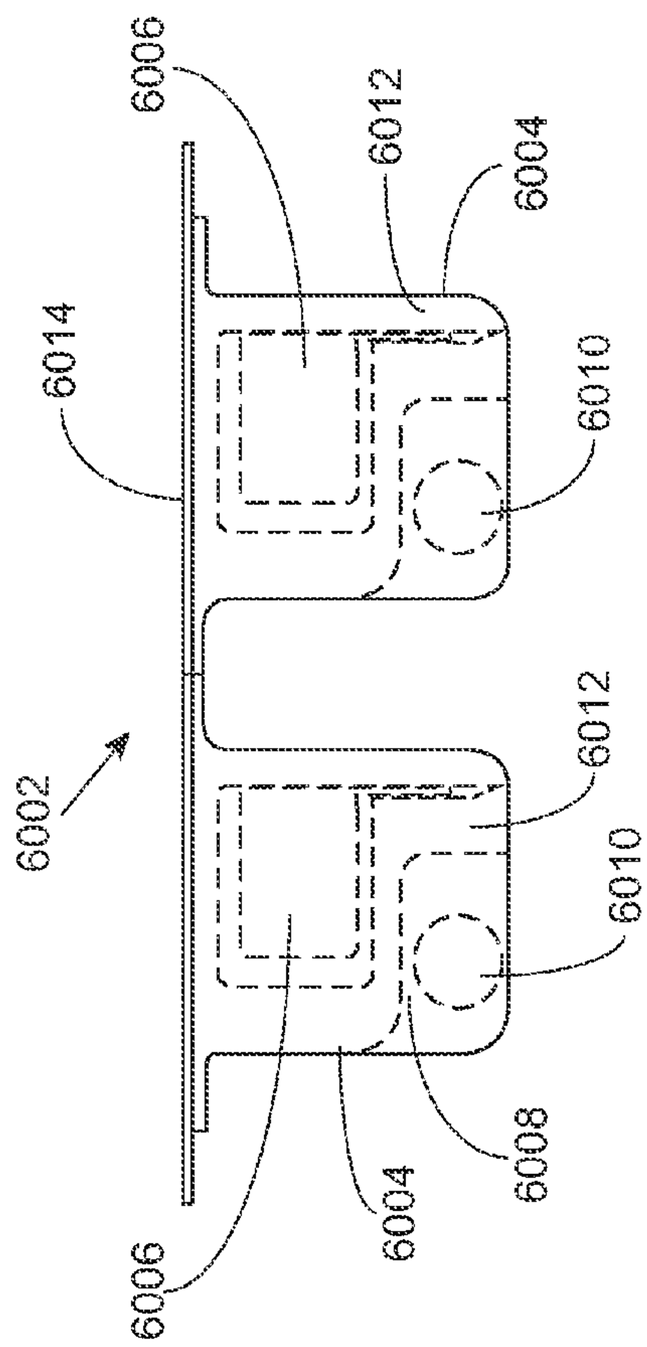

FIG. 99

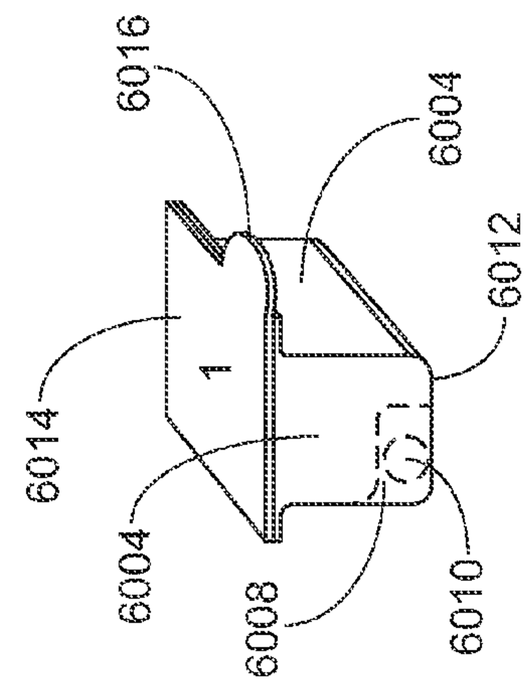

FIG. 101

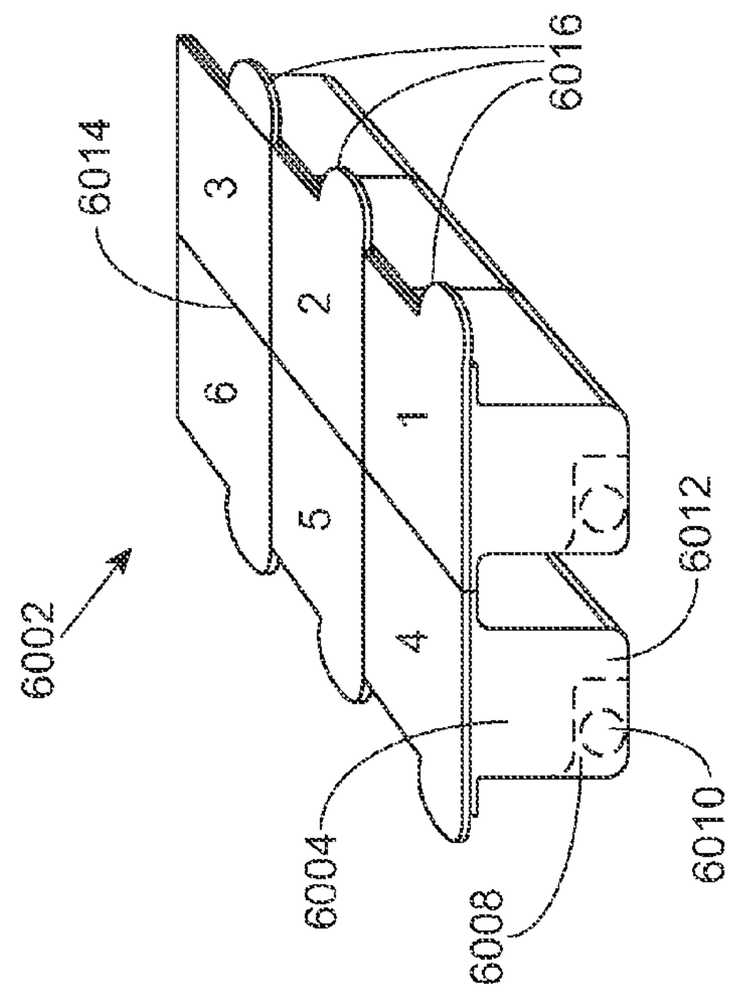

FIG. 100

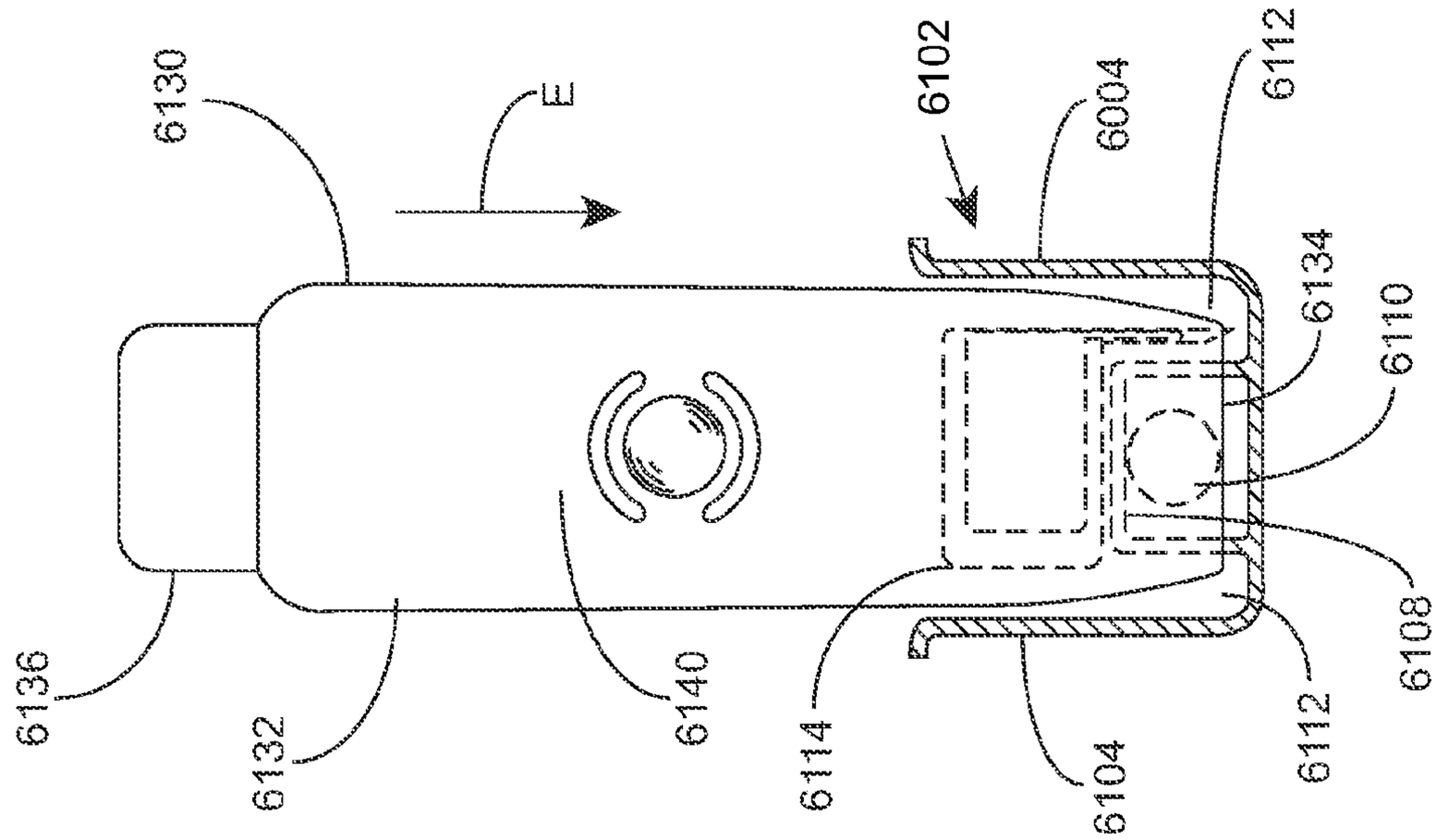

FIG. 103

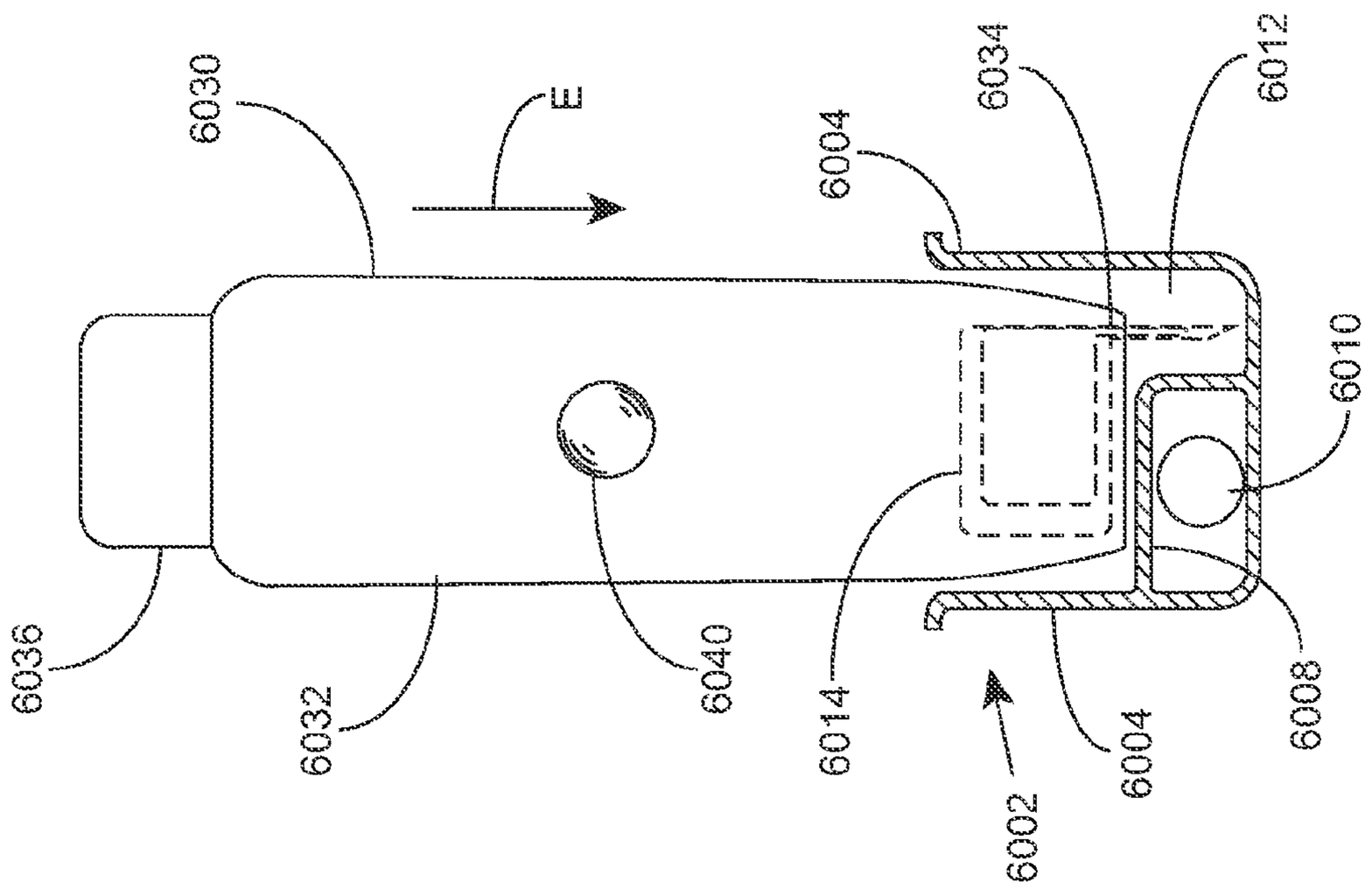

FIG. 102

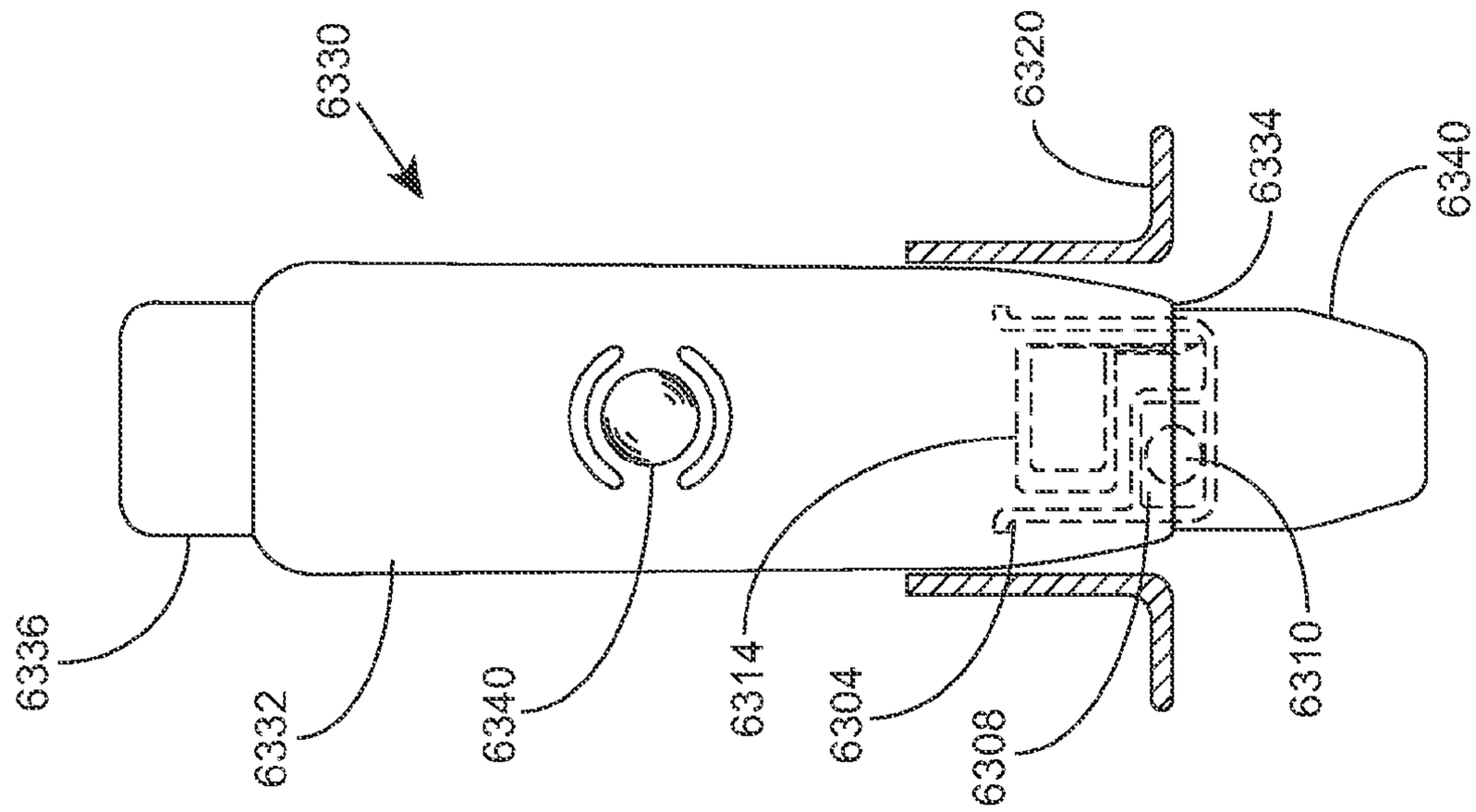

FIG. 1055

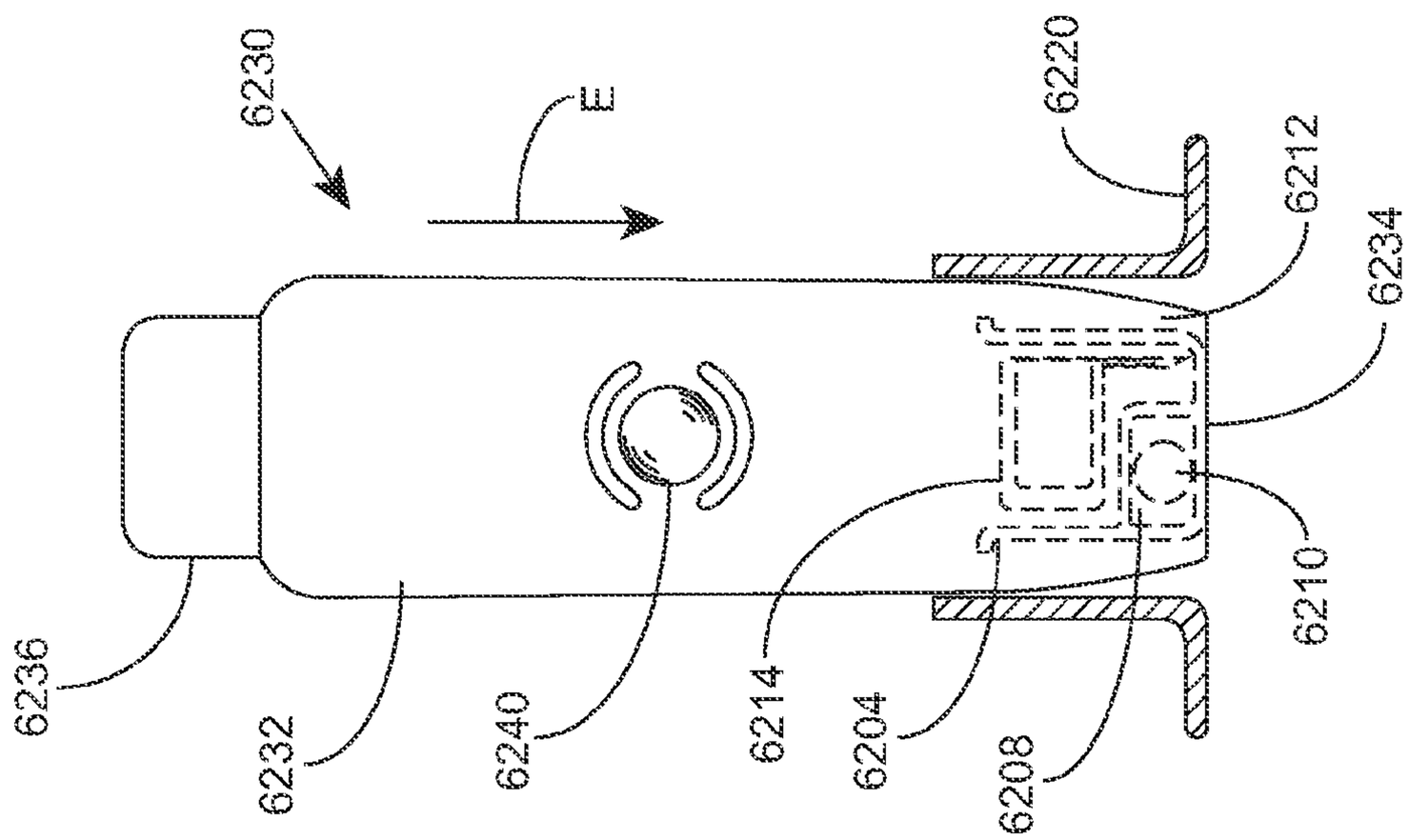

FIG. 1054

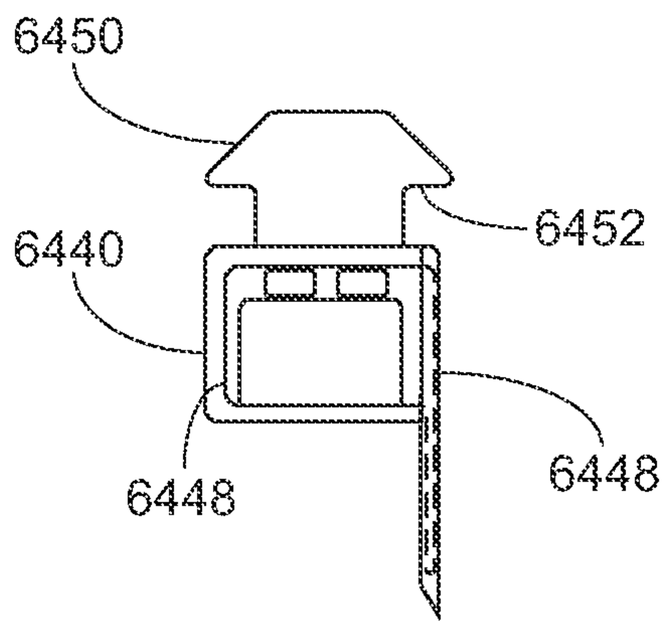

FIG. 106

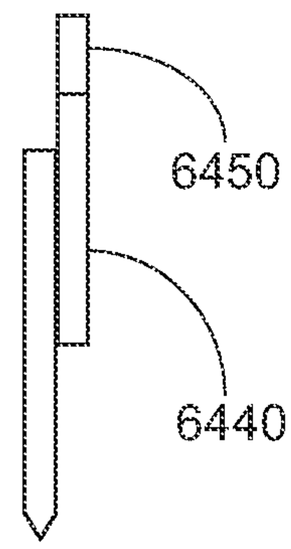

FIG. 107

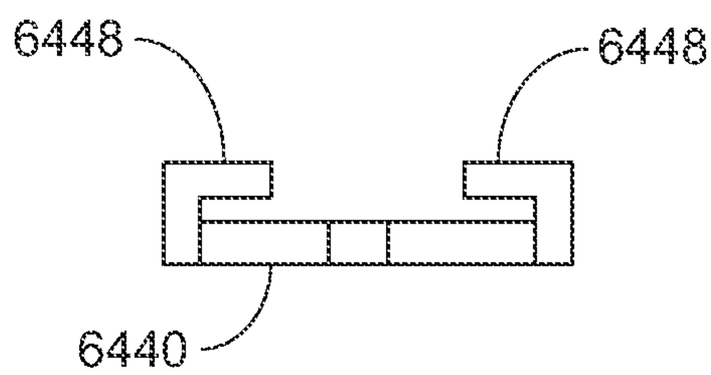

FIG. 108

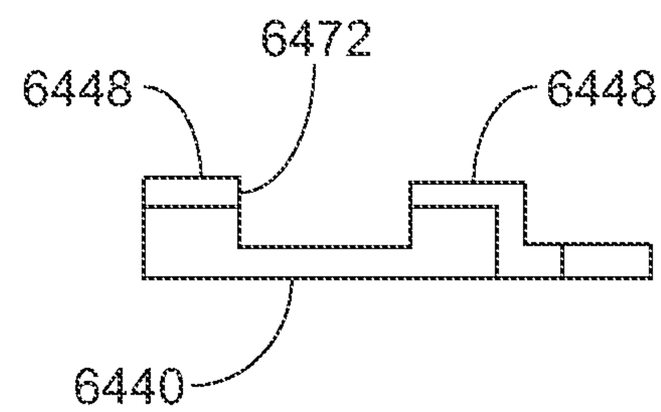

FIG. 109

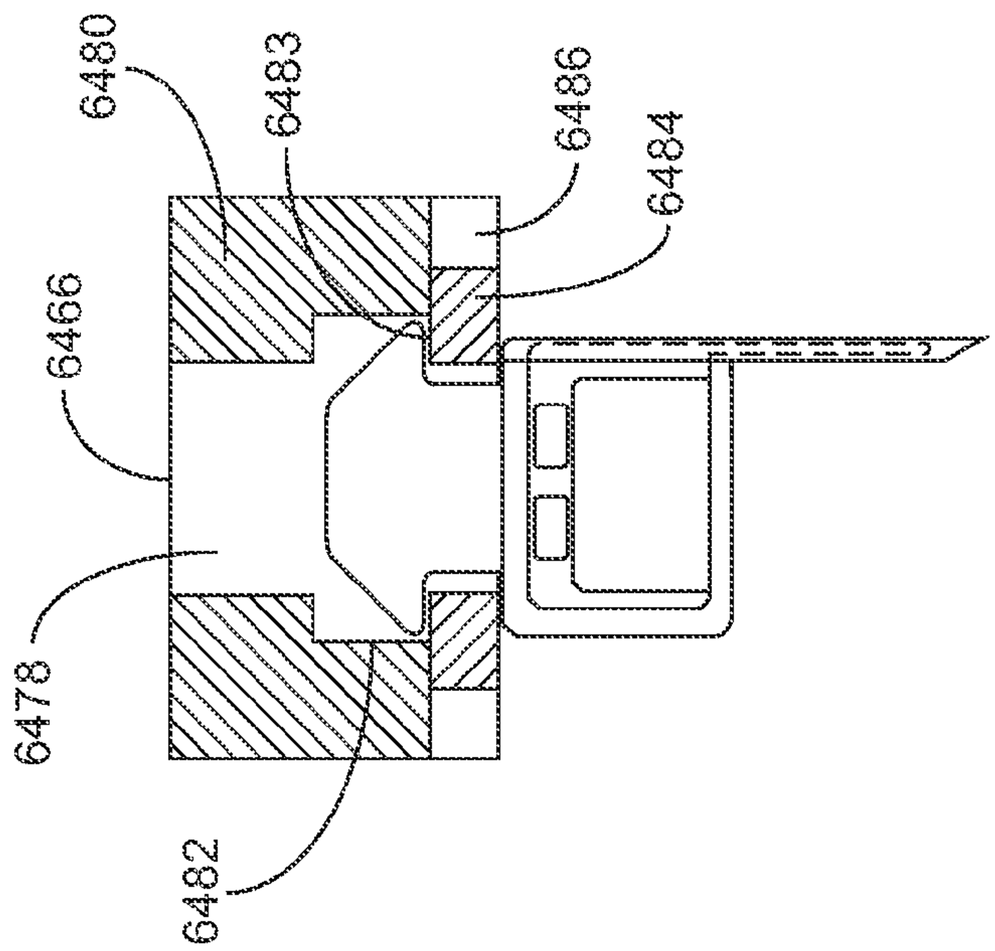

FIG. 112

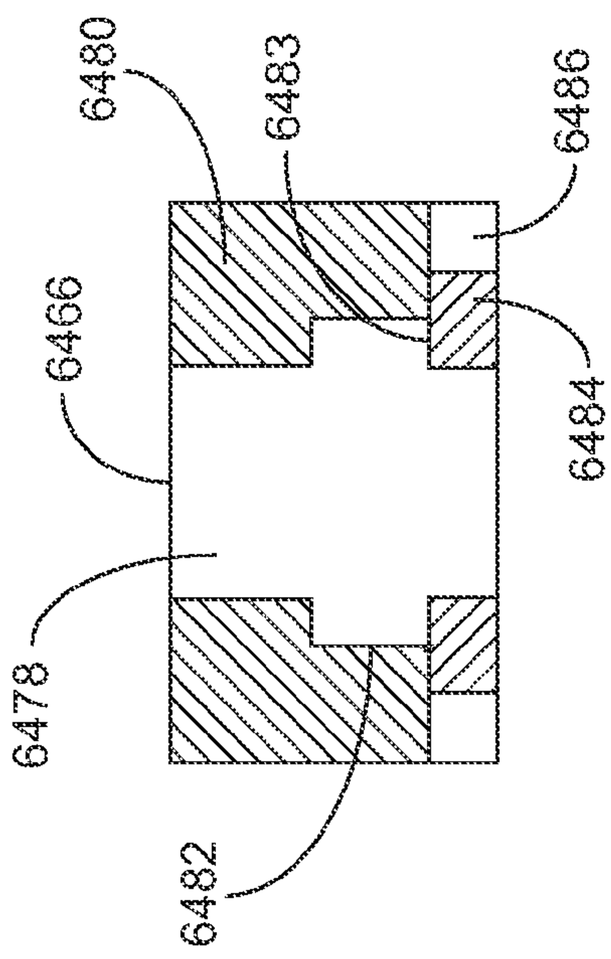

FIG. 110

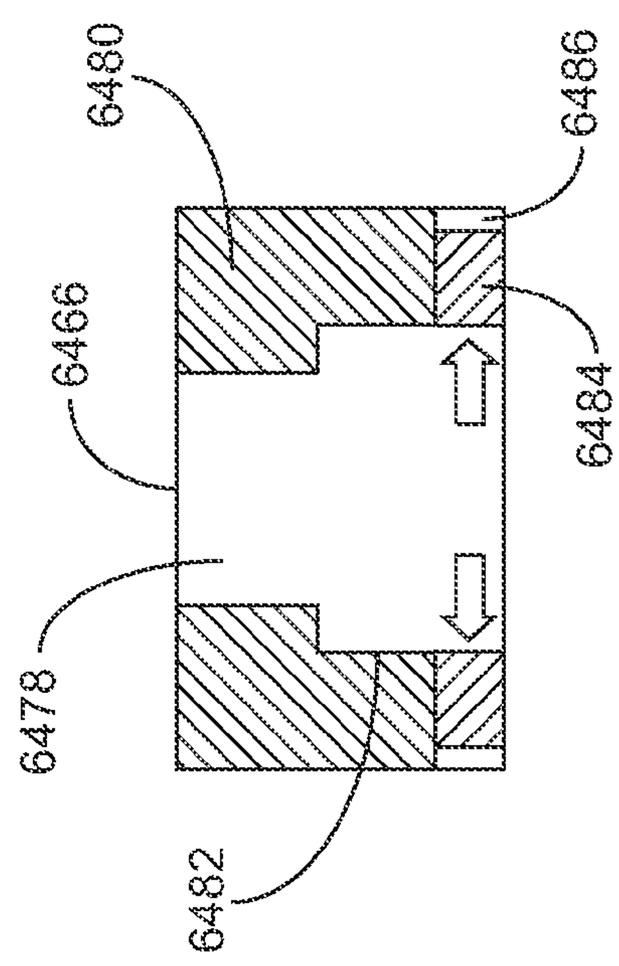

FIG. 111

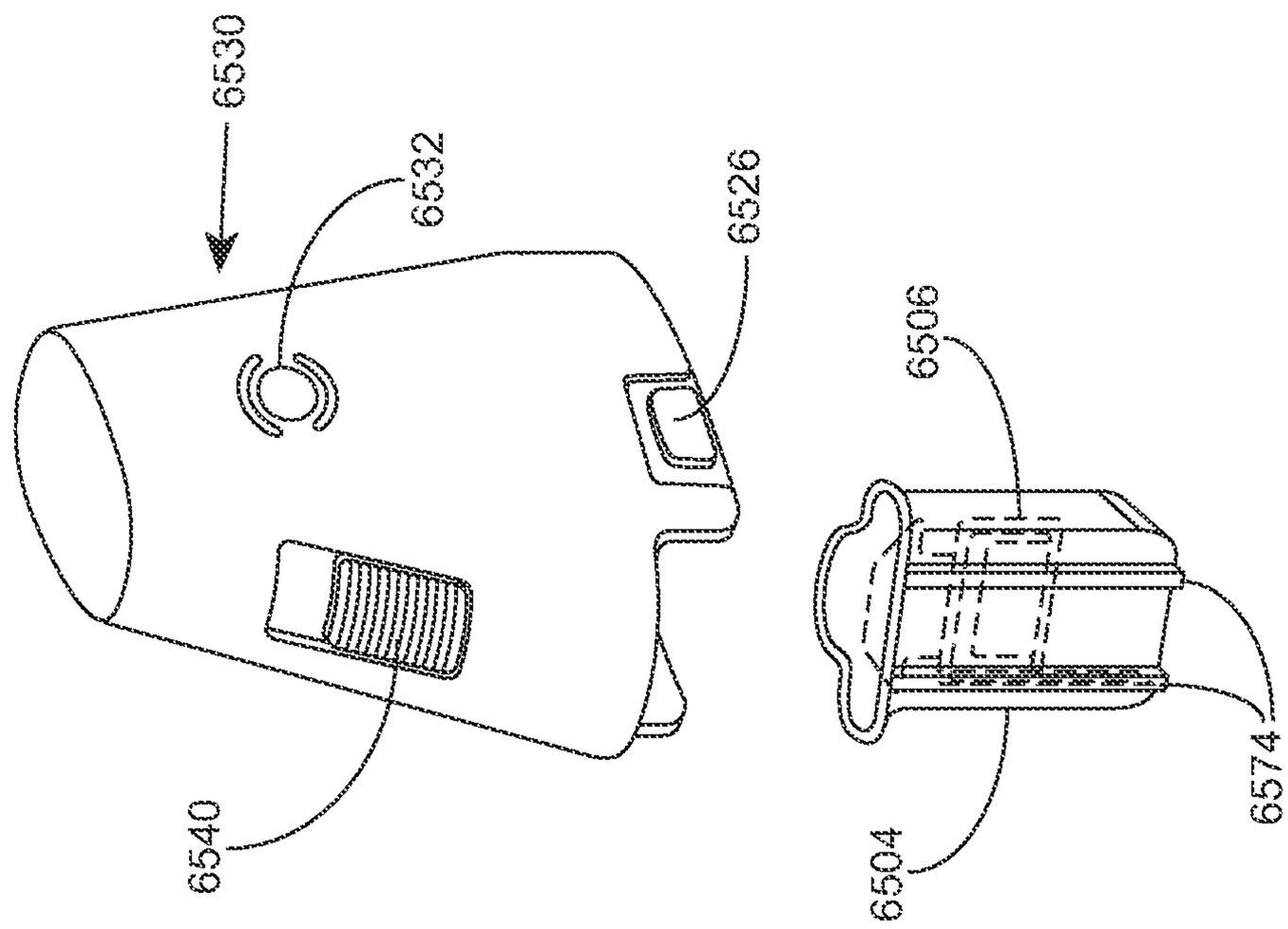

FIG. 114

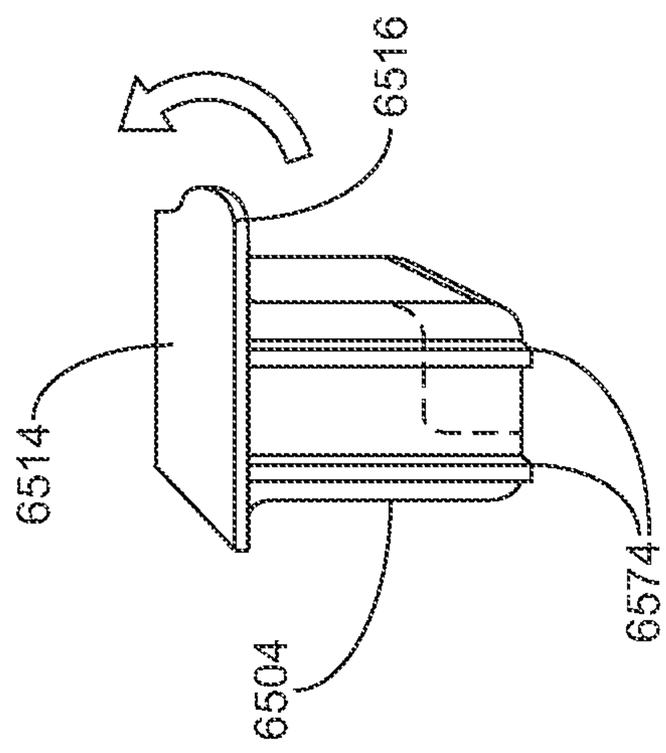

FIG. 113

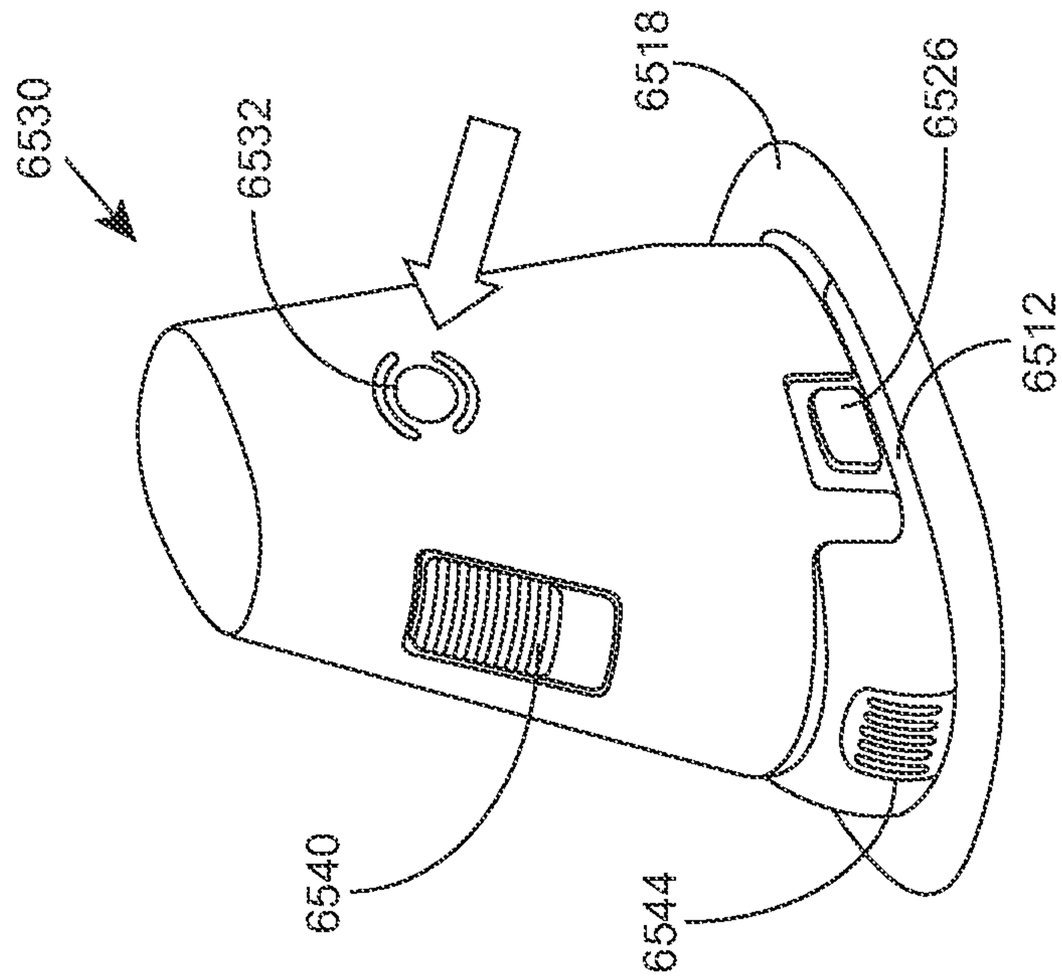

FIG. 116

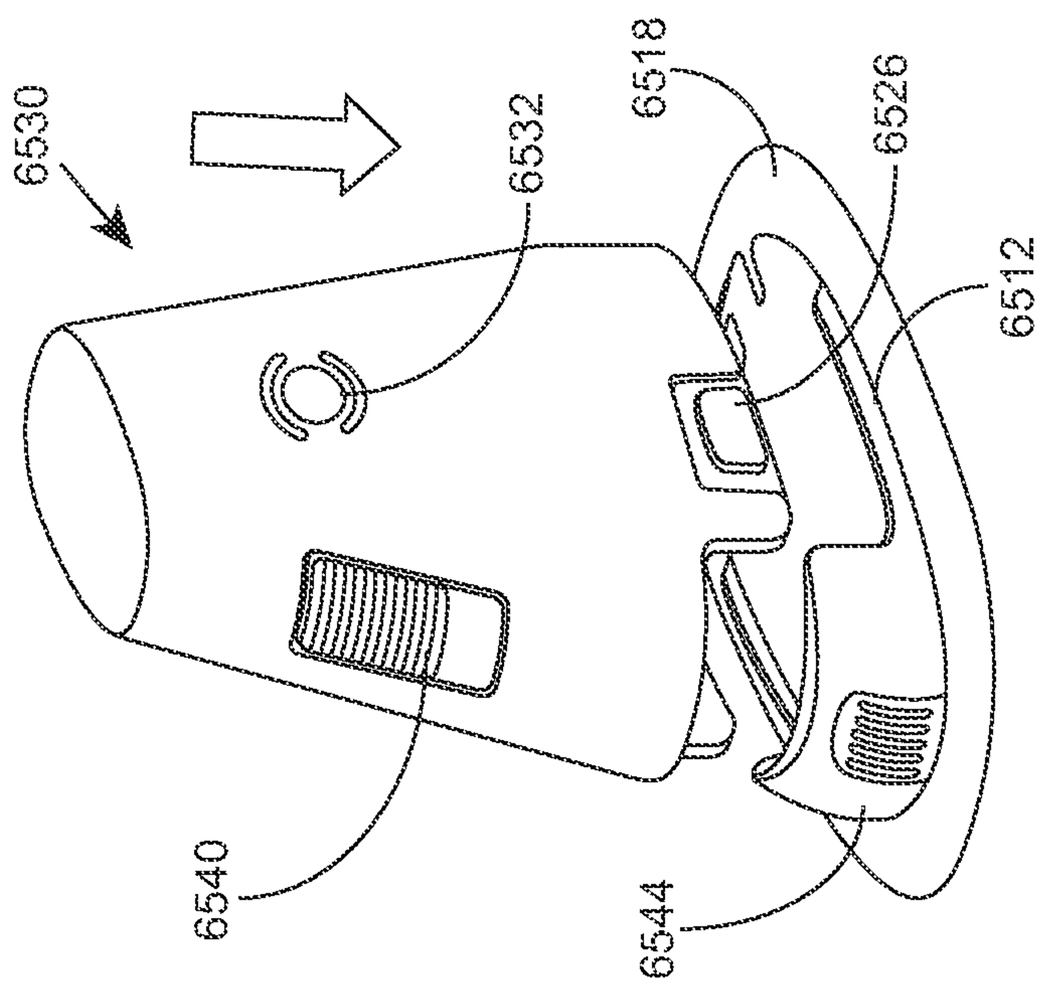

FIG. 115

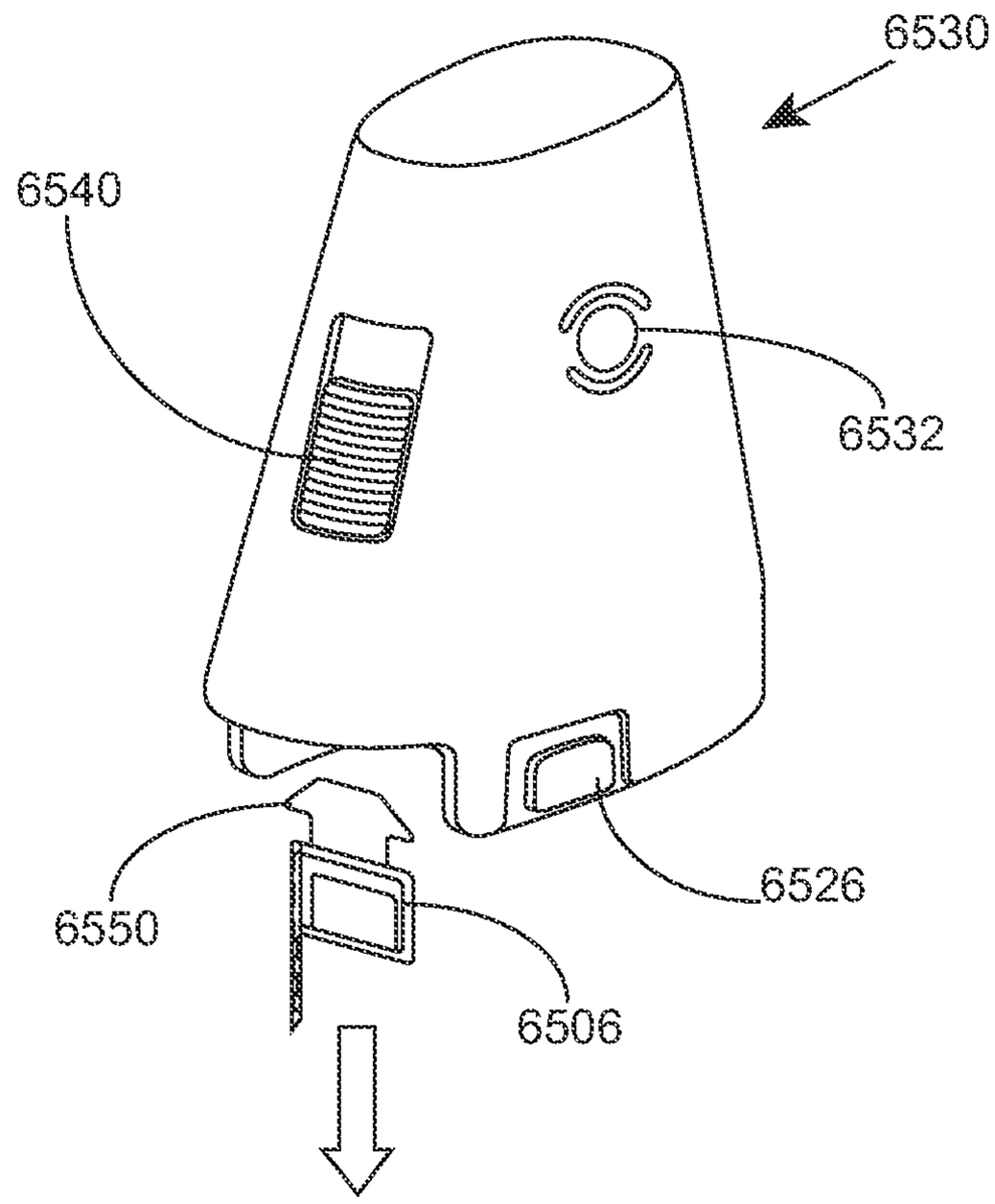

FIG. 117

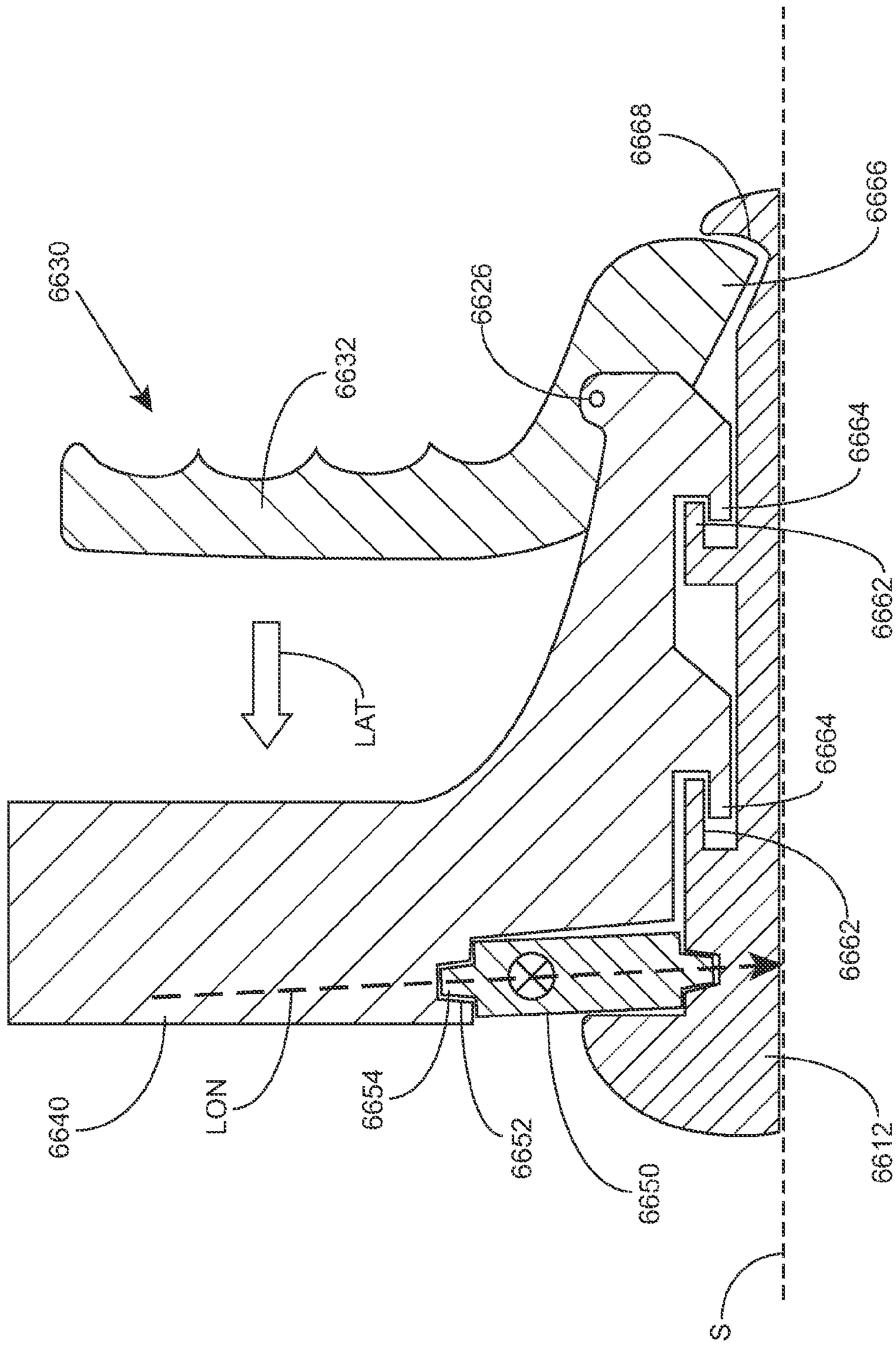
6630
6632
6626
6668
6666
6664
6662
LAT
6664
6662
6640
LON
6654
6652
6650
6612
S

FIG. 118

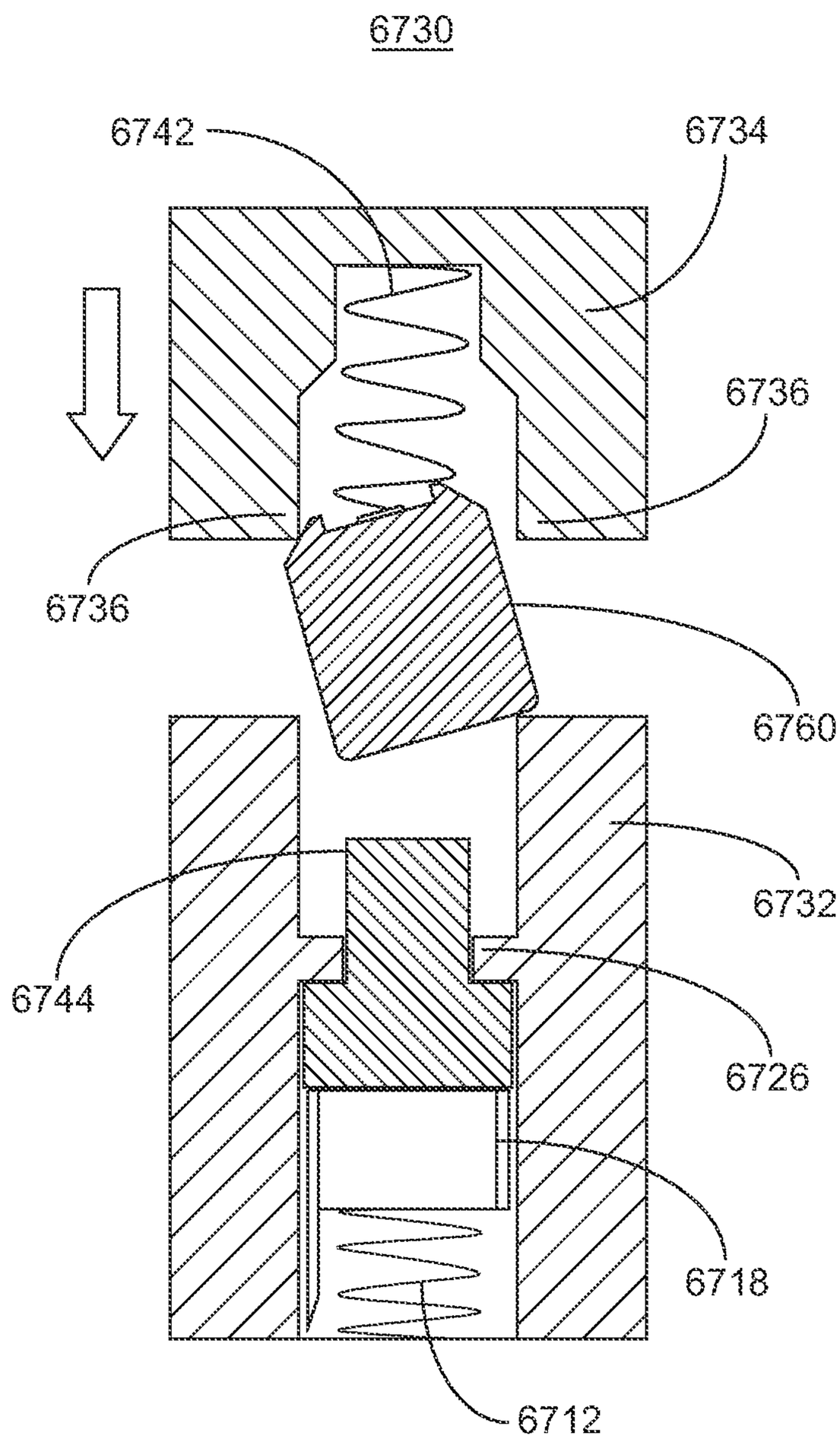

FIG. 119

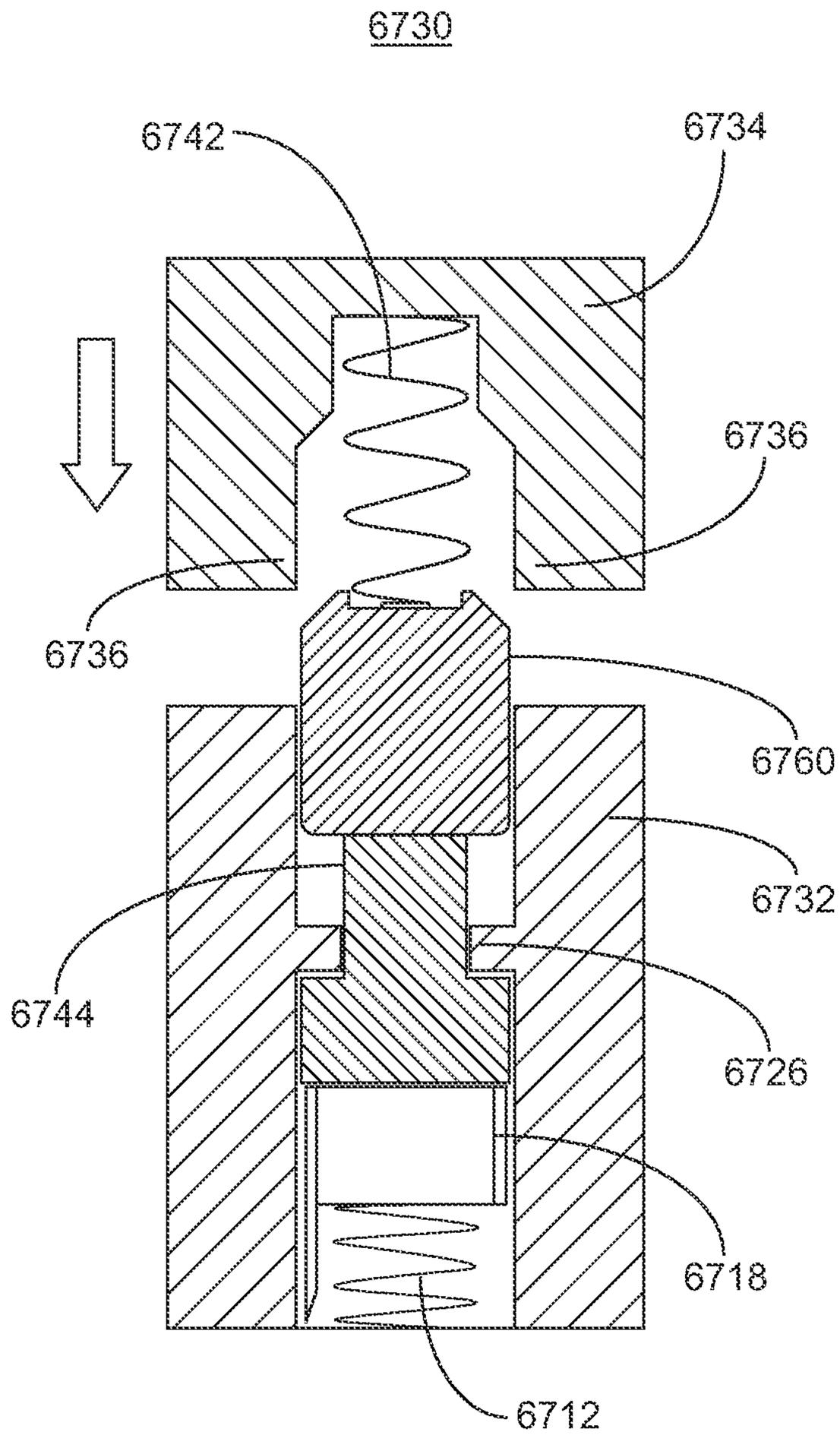

FIG. 120

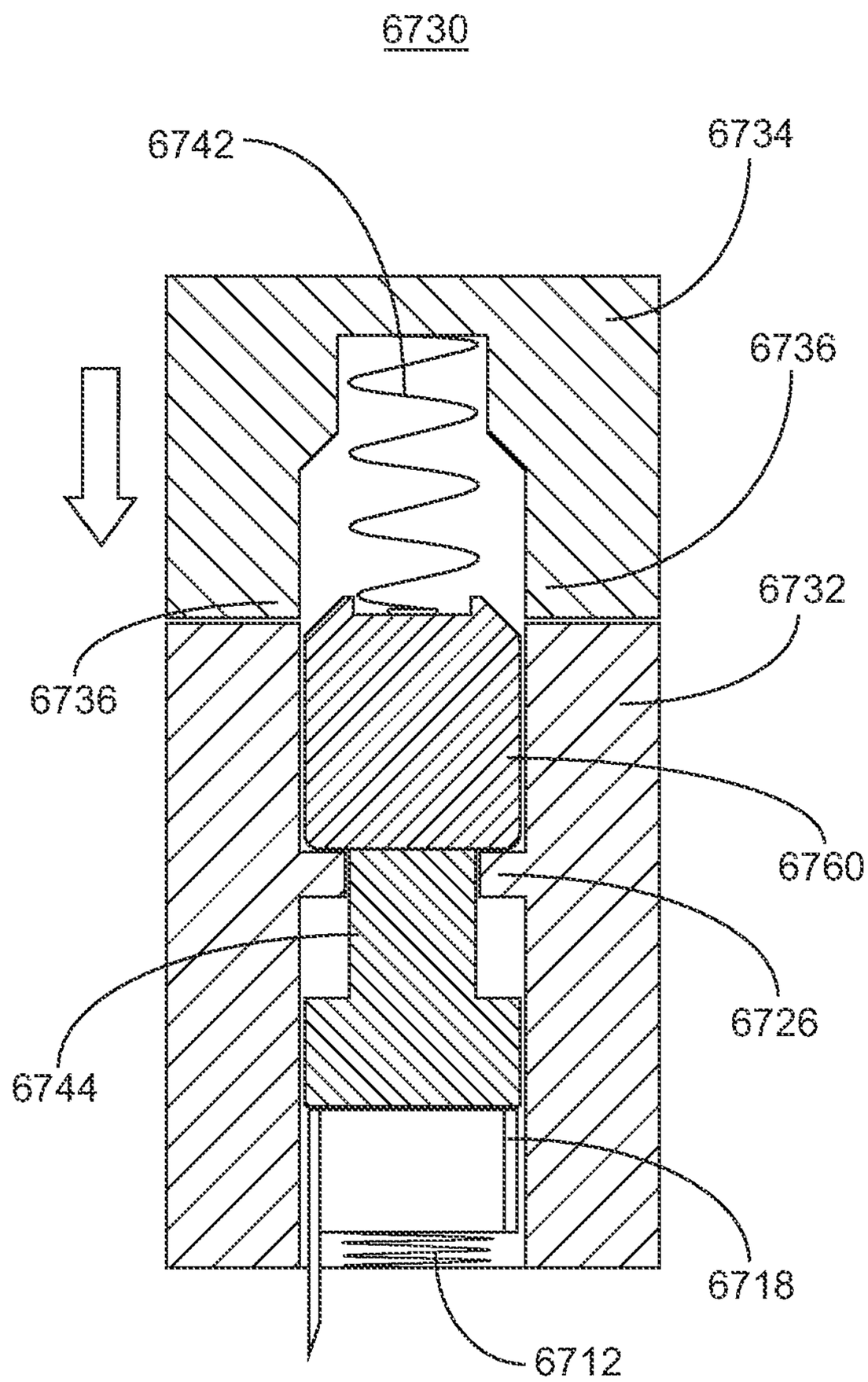

FIG. 121

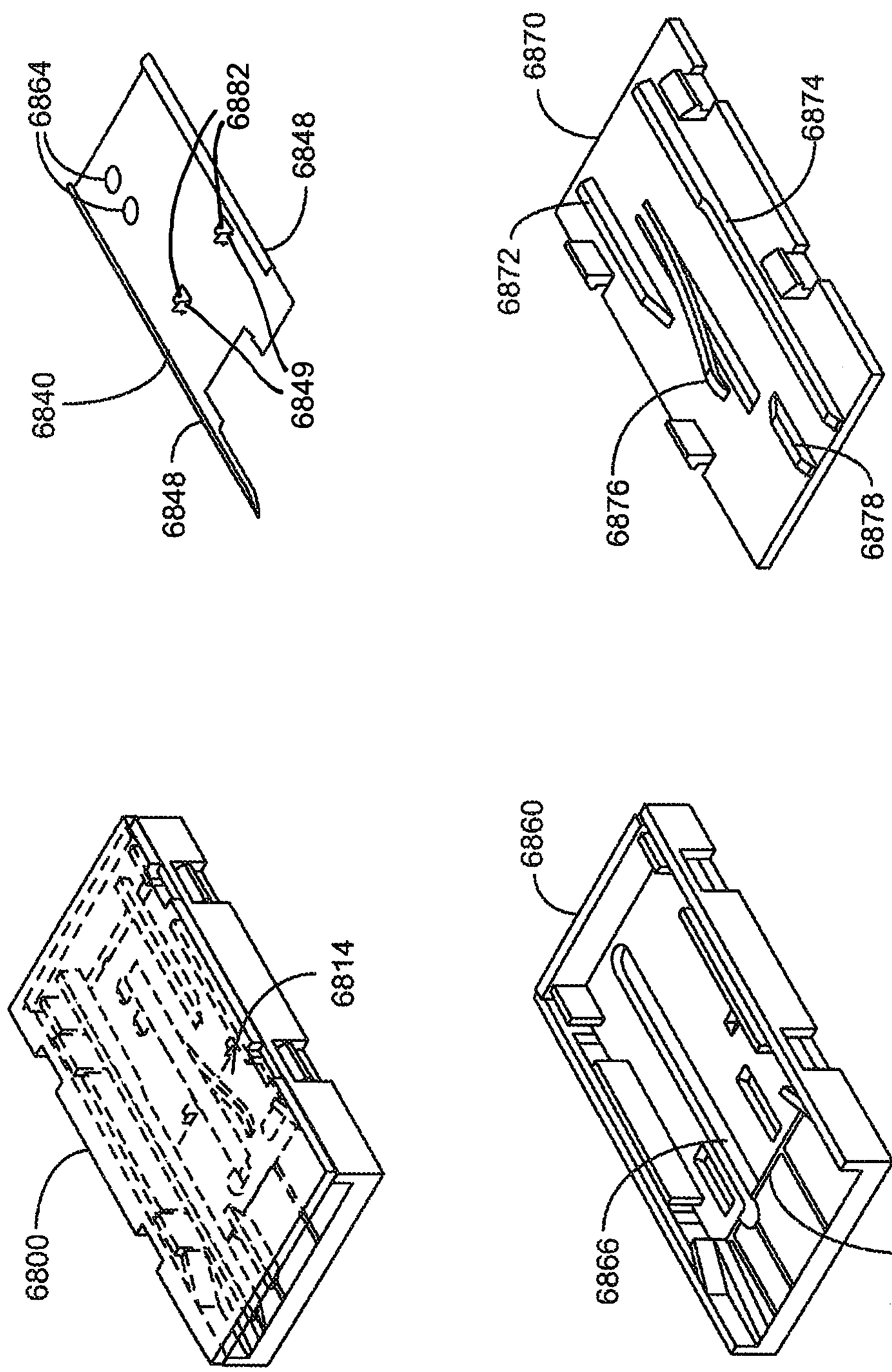
6864
6882
6848
6840
6849
6848
6870
6874
6872
6876
6878
6800
6814
6860
6866
6862

FIG. 122

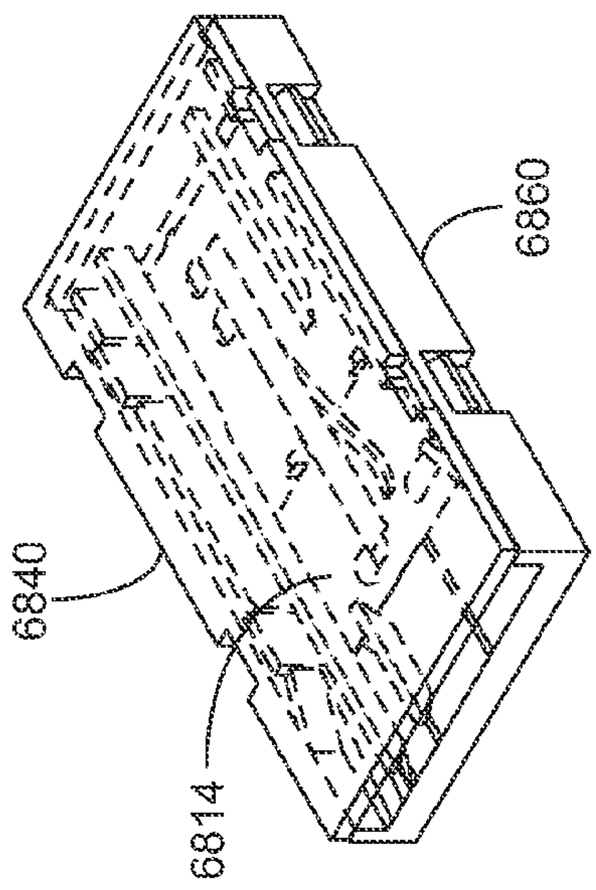

FIG. 123

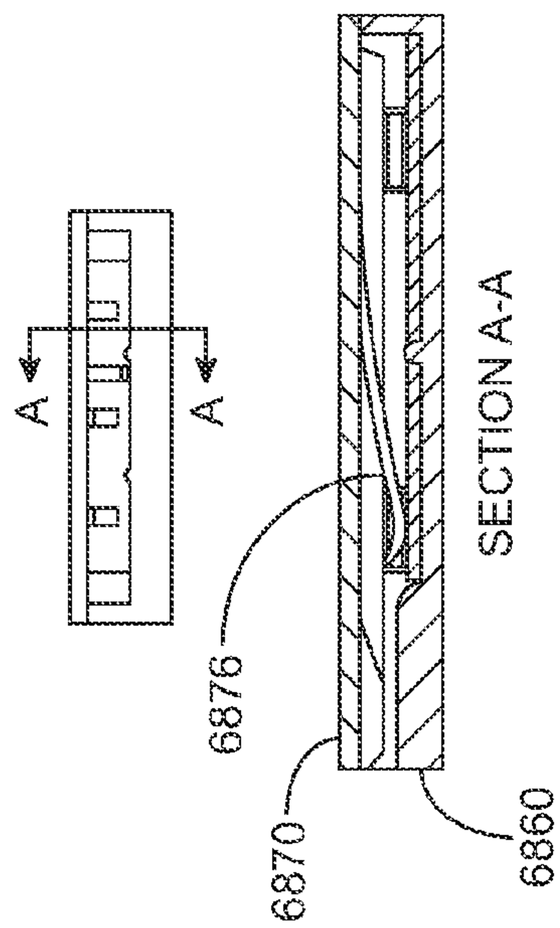

FIG. 124

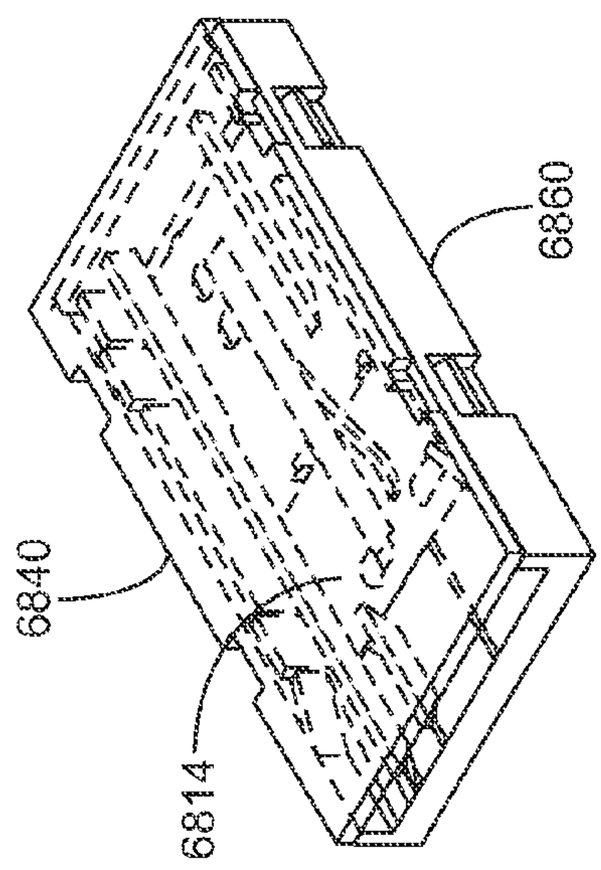

FIG. 125

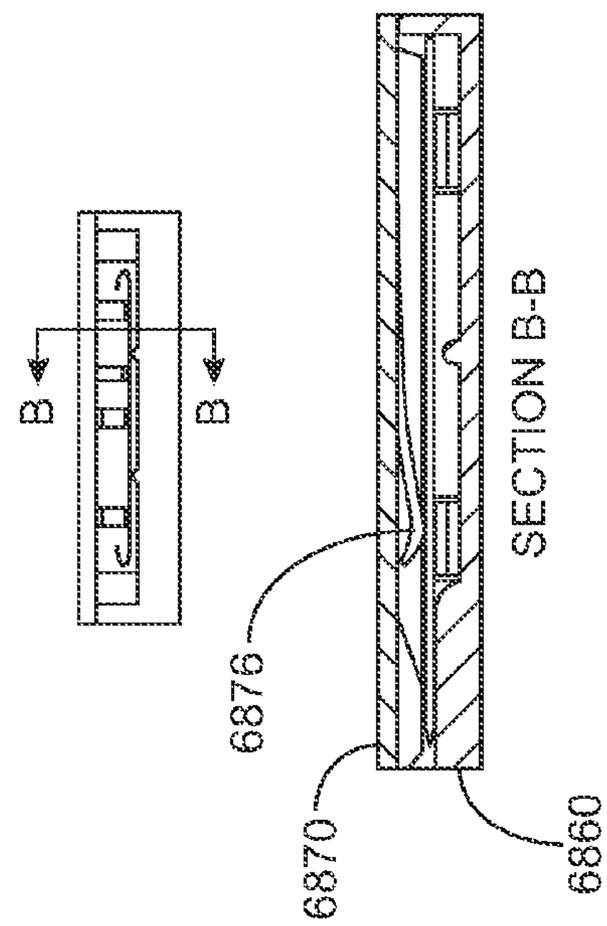

FIG. 126

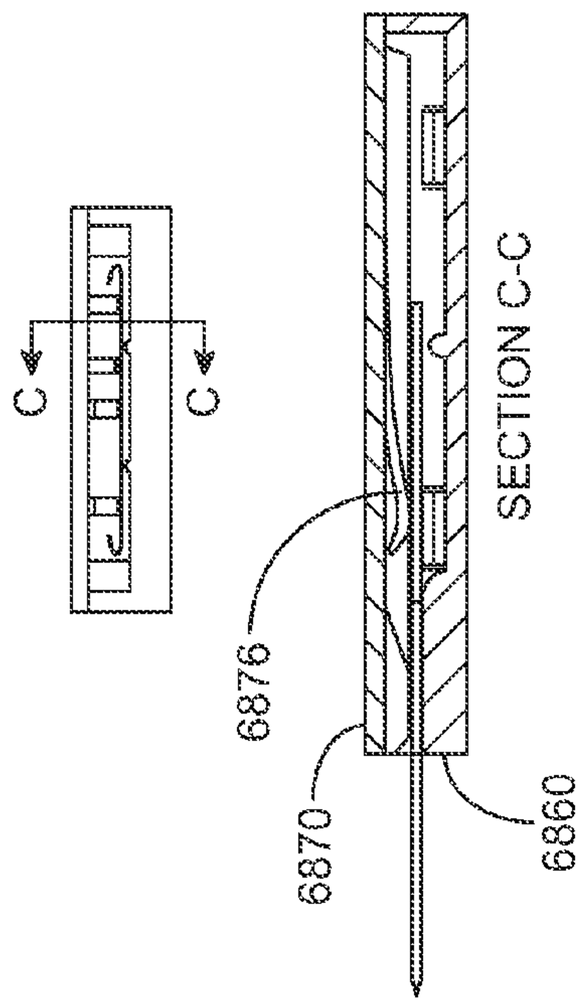

FIG. 128

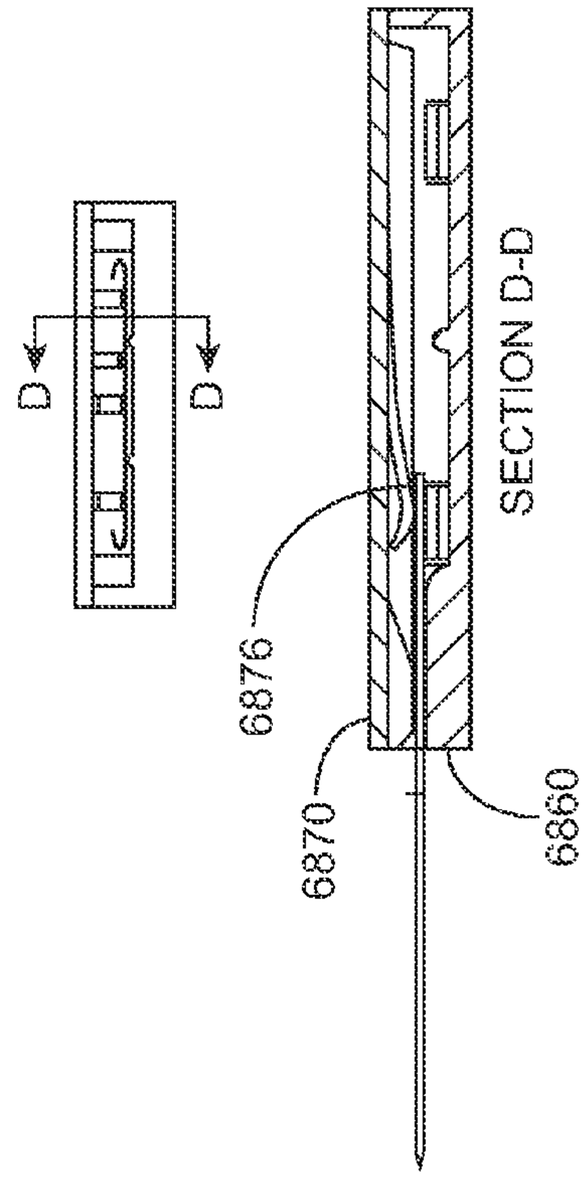

FIG. 130

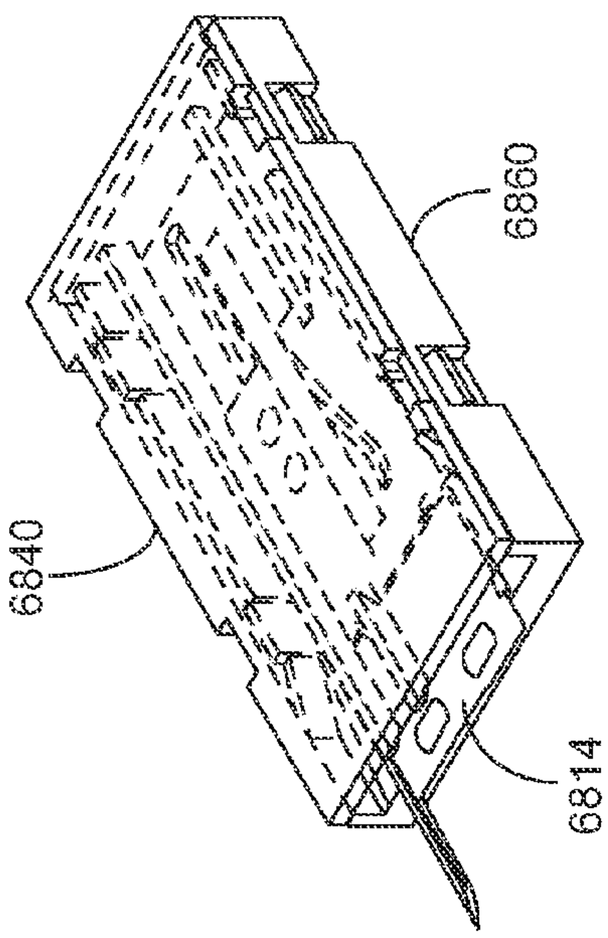

FIG. 127

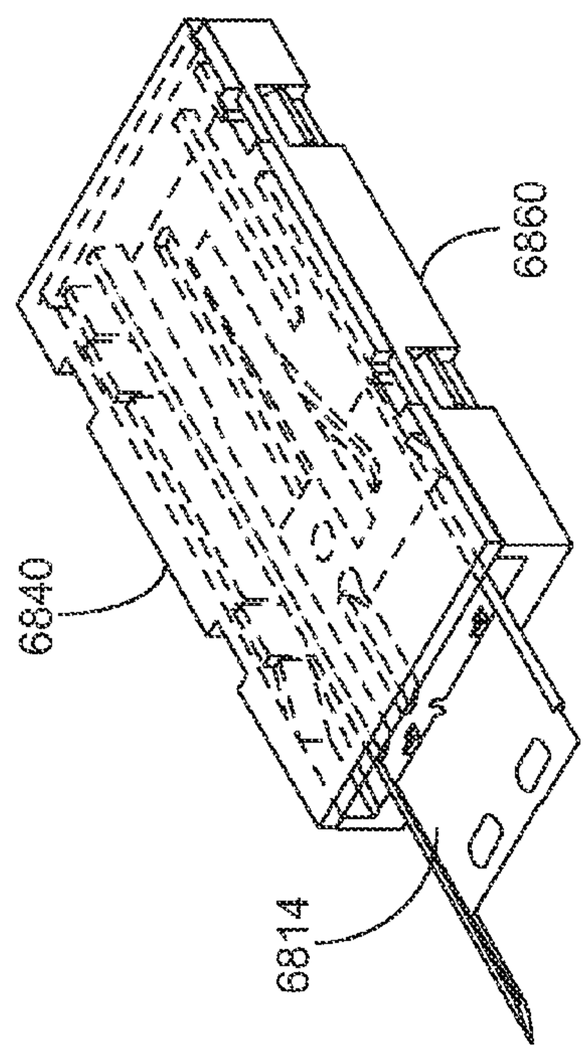

FIG. 129

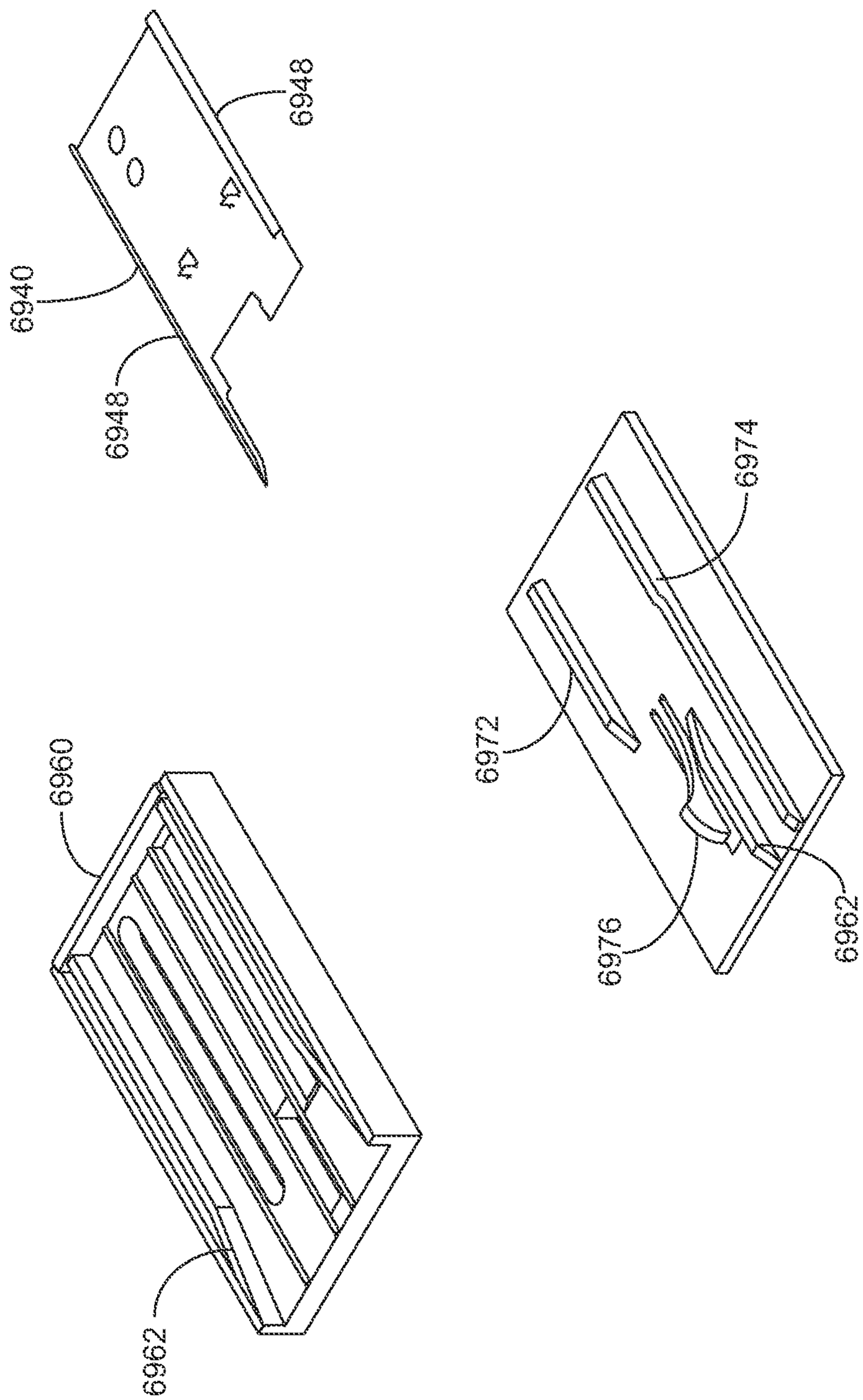

FIG. 131

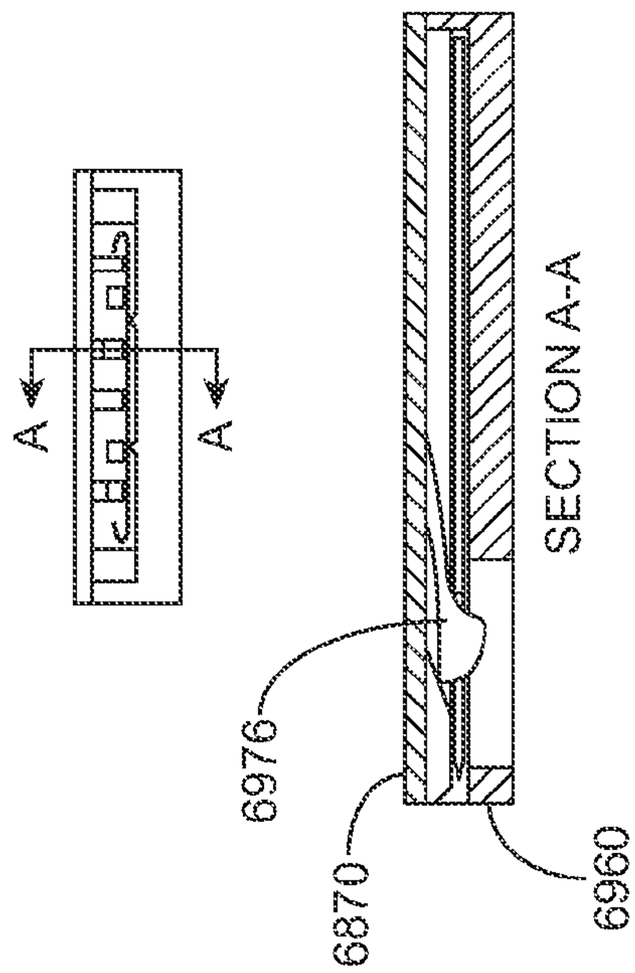

FIG. 133

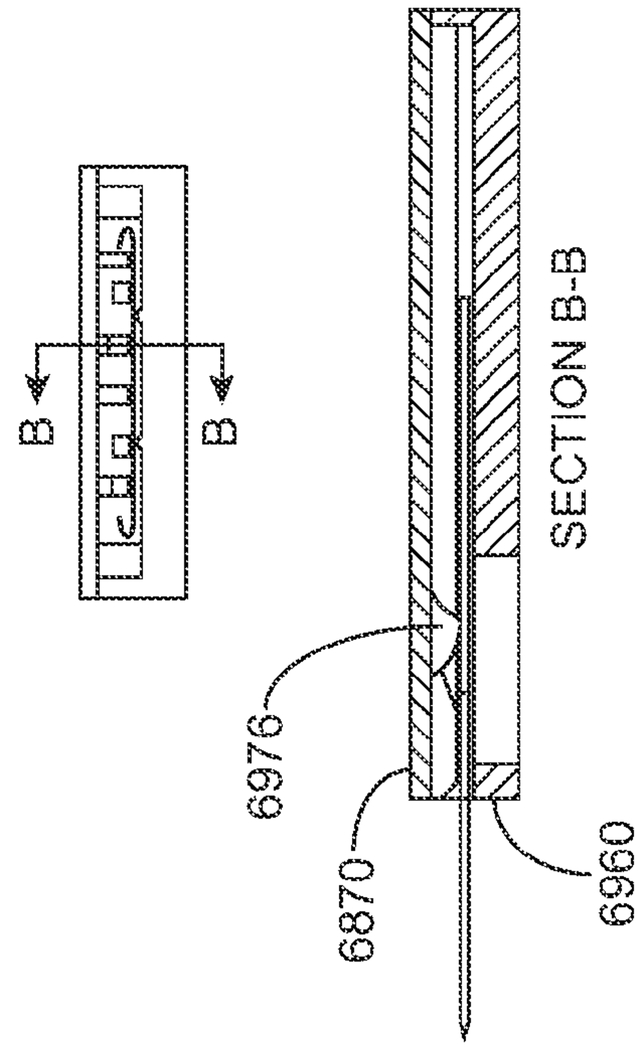

FIG. 135

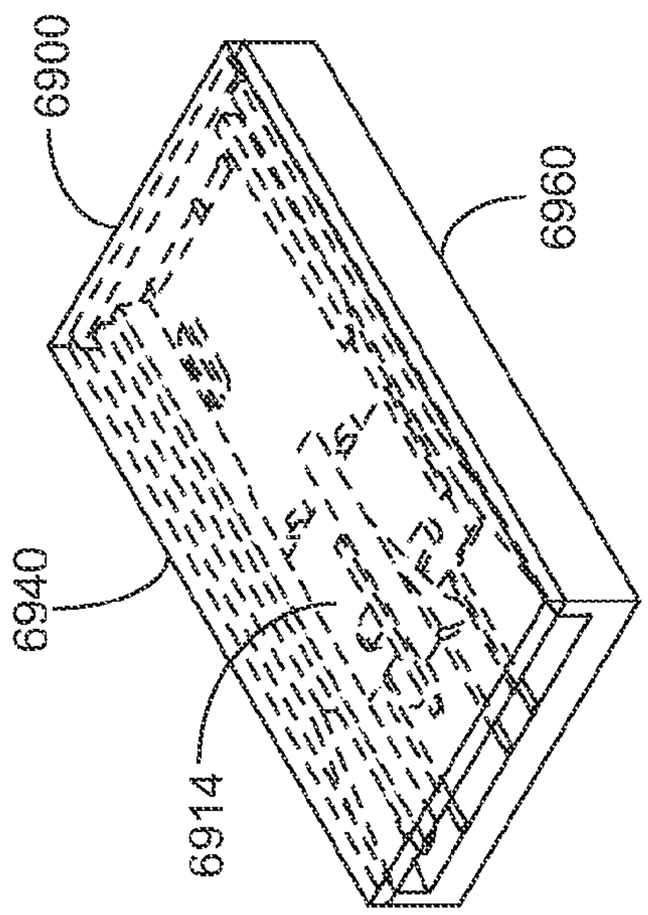

FIG. 132

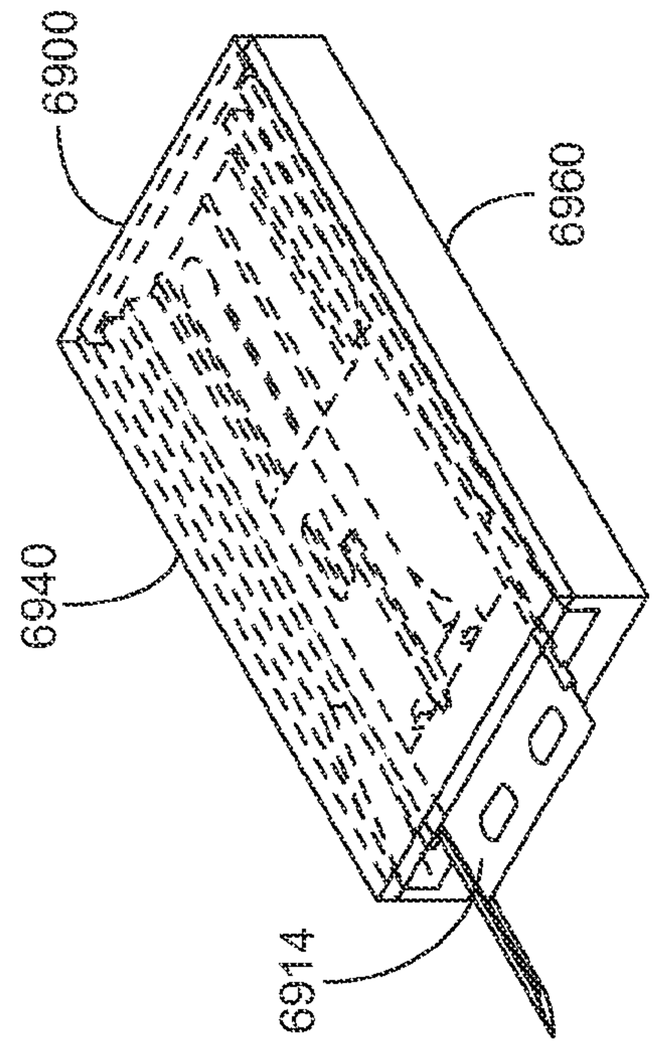

FIG. 134

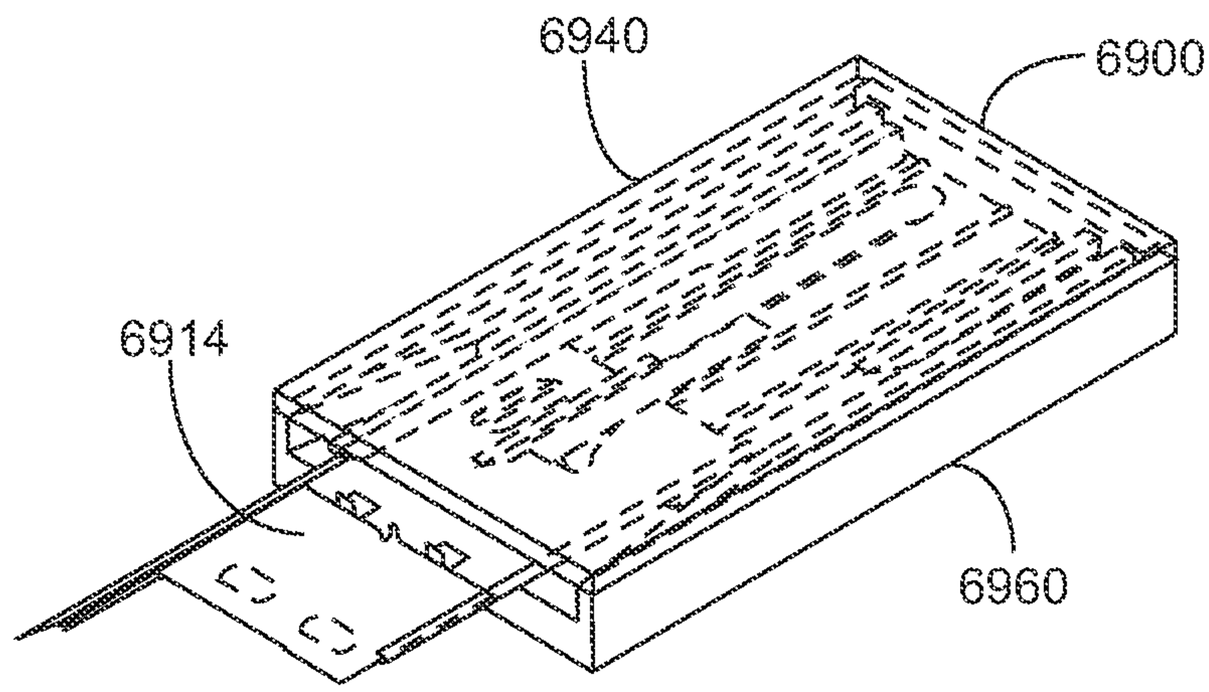

FIG. 136

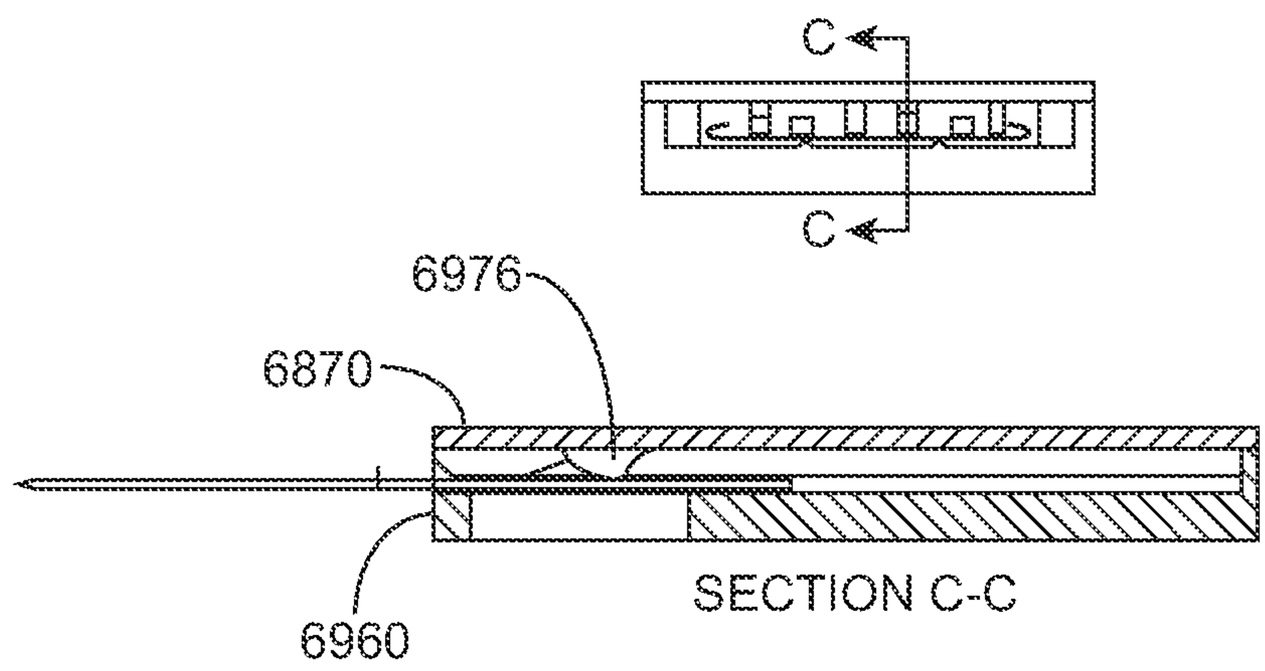

FIG. 137

MEDICAL DEVICE INSERTERS AND PROCESSES OF INSERTING AND USING MEDICAL DEVICES

RELATED APPLICATIONS

The present application claims the benefit of U.S. Provisional Application Nos. 61/317,243, filed Mar. 24, 2010; 61/345,562, filed May 17, 2010; 61/361,374, filed Jul. 2, 2010 61/411,262, filed Nov. 8, 2010, the disclosures of which are incorporated herein by reference for all purposes.

INCORPORATION BY REFERENCE

Patents, applications and/or publications described herein, including the following patents, applications and/or publications are incorporated herein by reference for all purposes: U.S. Pat. Nos. 4,545,382; 4,711,245; 5,262,035; 5,262,305; 5,264,104; 5,320,715; 5,356,786; 5,509,410; 5,543,326; 5,593,852; 5,601,435; 5,628,890; 5,820,551; 5,822,715; 5,899,855; 5,918,603; 6,071,391; 6,103,033; 6,120,676; 6,121,009; 6,134,461; 6,143,164; 6,144,837; 6,161,095; 6,175,752; 6,270,455; 6,284,478; 6,299,757; 6,338,790; 6,377,894; 6,461,496; 6,503,381; 6,514,460; 6,514,718; 6,540,891; 6,560,471; 6,579,690; 6,591,125; 6,592,745; 6,600,997; 6,605,200; 6,605,201; 6,616,819; 6,618,934; 6,650,471; 6,654,625; 6,676,816; 6,730,200; 6,736,957; 6,746,582; 6,749,740; 6,764,581; 6,773,671; 6,881,551; 6,893,545; 6,932,892; 6,932,894; 6,942,518; 7,041,468; 7,167,818; and 7,299,082; 7,381,184; 7,740,581; 7,811,231 U.S. Published Application Nos. 2005/0182306; 2006/0091006; 2007/0056858, now U.S. Pat. No. 8,298,389; 2007/0068807, now U.S. Pat. No. 7,846,311; 2007/0095661; 2007/0108048, now U.S. Pat. No. 7,918,975; 2007/0149873; 2007/0149875, now U.S. Pat. No. 8,515,518; 2007/0199818, now U.S. Pat. No. 7,811,430; 2007/0227911, now U.S. Pat. No. 7,887,682; 2007/0233013; 2008/0058625, now U.S. Pat. No. 7,920,907; 2008/0064937; 2008/0066305, now U.S. Pat. No. 7,895,740; 2008/0071157; 2008/0071158; 2008/0081977, now U.S. Pat. No. 7,618,369; 2008/0102441, now U.S. Pat. No. 7,822,557; 2008/0148873, now U.S. Pat. No. 7,802,467; 2008/0161666; 2008/0179187; 2008/0267823; 2008/0319295, now U.S. Pat. No. 8,597,188; 2008/0319296, now U.S. Pat. No. 8,617,069; 2009/0018425 now U.S. Pat. No. 8,160,670; 2009/0247857, now U.S. Pat. No. 8,346,335; 2009/0257911, now U.S. Pat. No. 8,252,229; 2009/0281406; 2009/0294277; 2009/0054748, now U.S. Pat. No. 7,885,698; 2009/0054749; 2010/0030052; 2010/0065441, now U.S. Pat. No. 8,636,884; 2010/0081905; 2010/0081909, now U.S. Pat. No. 8,219,173; 2010/0213057; 2010/0325868, now U.S. Pat. No. 7,866,026; 2010/0326842; 2010/0326843, now U.S. Pat. No. 8,437,827; 2010/0331643; 2011/0046466; U.S. patent application Ser. Nos. 12/624,767; 12/625,185, now U.S. Pat. No. 8,354,013; 12/625,208; 12/625,524, now U.S. Pat. No. 8,390,455; 12/625,525, now U.S. Pat. No. 8,358,210; 12/625,528, now U.S. Pat. No. 8,115,635; 12/628,177; 12/628,198; 12/628,201; 12/628,203; 12/628,210; 12/698,124; 12/698,129; 12/699,653; 12/699,844; 12/714,439; 12/730,193; 12/794,721, now U.S. Pat. No. 8,595,607; 12/807,278; 12/842,013; 12/870,818; 12/871,901, now U.S. Pat. No. 8,514,086; 12/873,301; 12/873,302; 13/011,897; and U.S. Provisional Application Nos. 61/238,646; 61/246,825; 61/247,516; 61/249,535; 61/317,243; 61/325,155; 61/345,562; and 61/359,265.

BACKGROUND OF THE INVENTION

The detection and/or monitoring of glucose levels or other analytes, such as lactate, oxygen, A1C, or the like, in certain

individuals is vitally important to their health. For example, the monitoring of glucose is particularly important to individuals with diabetes. Diabetics generally monitor glucose levels to determine if their glucose levels are being maintained within a clinically safe range, and may also use this information to determine if and/or when insulin is needed to reduce glucose levels in their bodies or when additional glucose is needed to raise the level of glucose in their bodies.

Growing clinical data demonstrates a strong correlation between the frequency of glucose monitoring and glycemic control. Despite such correlation, many individuals diagnosed with a diabetic condition do not monitor their glucose levels as frequently as they should due to a combination of factors including convenience, testing discretion, pain associated with glucose testing, and cost.

Devices have been developed for the automatic monitoring of analyte(s), such as glucose, in bodily fluid such as in the blood stream or in interstitial fluid ("ISF"), or other biological fluid. Some of these analyte measuring devices are configured so that at least a portion of the devices are positioned below a skin surface of a user, e.g., in a blood vessel or in the subcutaneous tissue of a user, so that the monitoring is accomplished in vivo.

With the continued development of analyte monitoring devices and systems, there is a need for such analyte monitoring devices, systems, and methods, as well as for processes for manufacturing analyte monitoring devices and systems that are cost effective, convenient, and with reduced pain, provide discreet monitoring to encourage frequent analyte monitoring to improve glycemic control.

SUMMARY

An apparatus for inserting a medical device through the skin of a subject is provided, which includes a housing defining a longitudinal cavity therein and a interference member extending into the cavity; a biasing member; a driver member coupled to the biasing member for movement from a proximal position to a distal position and further configured for movement between a misaligned configuration in which the driver member is impeded from distal movement by the interference member and an aligned configuration in which the driver member is not impeded from distal movement by the interference member; and an actuator having an alignment surface for moving the driver member from the misaligned configuration to the aligned configuration.

In some embodiments, the actuator is movable from a proximal position to a distal position. In some embodiments, distal movement of the actuator compresses the first biasing member. In some embodiments, the first position of the driver member is at an oblique angle with respect to the longitudinal cavity. In some embodiments, the second position of the driver member includes a configuration substantially aligned with the longitudinal cavity.

An apparatus for inserting a medical device through the skin of a subject is provided, which includes a housing defining a cantilever member; a sharp movable within the housing from a refracted position to a partially exposed position; and an electrochemical sensor releasably coupled to the sharp for movement with the sharp, and for subsequent insertion in the skin of a subject; wherein the cantilever member resiliently contacts at least one of the sharp and the sensor.

In some embodiments, the housing includes a distal opening for release of the electrochemical sensor therefrom. In some embodiments, the housing defines a longitudinal notch for reception of a drive member of an inserter. In some embodiments, the housing contains a desiccant. In some

embodiments, the housing defines one or more longitudinal ridges for aligning one of the sharp and the sensor.

These and other features, objects, and advantages of the disclosed subject matter will become apparent to those persons skilled in the art upon reading the detailed description as more fully described below.

BRIEF DESCRIPTION OF THE DRAWINGS

A detailed description of various aspects, features, and embodiments of the subject matter described herein is provided with reference to the accompanying drawings, which are briefly described below. The drawings are illustrative and are not necessarily drawn to scale, with some components and features being exaggerated for clarity. The drawings illustrate various aspects and features of the present subject matter and may illustrate one or more embodiment(s) or example(s) of the present subject matter in whole or in part.

FIG. **1** illustrates an analyte monitoring system for real time analyte (e.g., glucose) measurement, data acquisition and/or processing in certain embodiments;

FIGS. **2-3** are views of an electrochemical sensor in accordance with a further embodiment of the disclosed subject matter;

FIGS. **4-5** are schematic views of a needle hub in accordance with one embodiment of the disclosed subject matter;

FIG. **6** is a distal end view of a sharp in accordance with one embodiment of the disclosed subject matter;

FIG. **7** is a side view of a sharp in accordance with one embodiment of the disclosed subject matter;

FIG. **8** is a side view of a sharp in accordance with one embodiment of the disclosed subject matter;

FIG. **9** is a perspective view of a sharp in accordance with one embodiment of the disclosed subject matter;

FIG. **10** is a schematic view of an alternate embodiment for forming a sharp to be used in an inserter in accordance with one embodiment of the disclosed subject matter;

FIG. **11** is a perspective view of an inserter in accordance with one embodiment of the disclosed subject matter;

FIG. **12** is a perspective view with parts separated of an inserter in accordance with one embodiment of the disclosed subject matter;

FIG. **13** is an enlarged sectional view with parts separated of an inserter in accordance with one embodiment of the disclosed subject matter;

FIG. **14** is a side view of another inserter in accordance with the disclosed subject matter;

FIGS. **15-17** are sectional, perspective views of the inserter of FIG. **14** in accordance with another embodiment of the disclosed subject matter;

FIG. **18** is a perspective view of another inserter in accordance with the disclosed subject matter;

FIGS. **19-21** are side views with transparency of the inserter of FIG. **18** in accordance with another embodiment of the disclosed subject matter;

FIG. **22** is a perspective view of another inserter in accordance with the disclosed subject matter;

FIGS. **23-25** are sectional, perspective views of the inserter of FIG. **22** in accordance with another embodiment of the disclosed subject matter;

FIG. **26** is a sectional view in section of another embodiment of an inserter in accordance with the disclosed subject matter;

FIG. **27** is a perspective view of the inserter of FIG. **26** in accordance with the disclosed subject matter;

FIGS. **28-31** are perspective views of components of the inserter of FIG. **26** in accordance with the disclosed subject matter;

FIG. **32** illustrates an exploded view of the inserter of FIG. **26** in accordance with the disclosed subject matter;

FIG. **33** is a side view of the inserter of FIG. **26** in accordance with the disclosed subject matter;

FIGS. **34-36** are side views with transparency of the inserter of FIG. **26** in accordance with the disclosed subject matter;

FIG. **37** is an inserter in accordance with another embodiment in accordance with the disclosed subject matter;

FIG. **38** is a perspective view in section of the inserter of FIG. **37** in accordance with the disclosed subject matter;

FIG. **39** is a cross-sectional view of the inserter of FIG. **37** in accordance with the disclosed subject matter;

FIG. **40** is a side view of the inserter of FIG. **37** in accordance with the disclosed subject matter;

FIGS. **41-44** are perspective views of components of the inserter of FIG. **37** in accordance with the disclosed subject matter;

FIG. **45** is an exploded view of the inserter of FIG. **37** in accordance with the disclosed subject matter;

FIG. **46** is a side view with transparency of the inserter of FIG. **37** in accordance with the disclosed subject matter;

FIGS. **47-51** are perspective views of another inserter in accordance with the disclosed subject matter;

FIG. **52** is an exploded perspective view of another embodiment of the disclosed subject matter;

FIG. **53** is a sectional view of an inserter in accordance with the disclosed subject matter;

FIGS. **54-55** are perspective views from below of the inserter of FIG. **53**;

FIG. **56** is a perspective view of another inserter in accordance with the disclosed subject matter;

FIGS. **57-60** are perspective views of various components of the inserter of FIG. **56**;

FIG. **61-62** are perspective views of various components of the inserter of FIG. **56**;

FIGS. **63-65** depict different subassemblies of the components of the inserter of FIG. **56**;

FIGS. **66-67** are cross-sectional views of a subassembly of the components of the inserter of FIG. **56**;

FIGS. **68-70** depict the steps used to actuate the inserter of FIG. **56**;

FIG. **71** is a perspective view of an inserter assembly in accordance with the disclosed subject matter;

FIG. **72** is a perspective view of a component of an inserter assembly of FIG. **71** in accordance with the disclosed subject matter;

FIG. **73** is a perspective view of a component of an analyte measurement system in accordance with the disclosed subject matter;

FIG. **74** is a perspective view with parts separated of the inserter assembly of FIG. **71** in accordance with the disclosed subject matter;

FIG. **75** is a cross-sectional view of the inserter assembly of FIG. **71** in accordance with the disclosed subject matter;

FIG. **76** is a side view of a portion of an inserter assembly in accordance with the disclosed subject matter;

FIG. **77** is a view of an analyte sensor in accordance with the disclosed subject matter;

FIGS. **78-79** are perspective views of a portion of an inserter assembly in accordance with the disclosed subject matter;

FIGS. **80-90** are views of analyte sensors in accordance with the disclosed subject matter;

FIGS. **91-92** are cross-sectional views of an inserter assembly in accordance with the disclosed subject matter;

FIGS. **93-94** are cross-sectional views of another inserter assembly in accordance with the disclosed subject matter;

FIGS. **95-96** are cross-sectional views of a further inserter assembly in accordance with the disclosed subject matter;

FIGS. **97-98** are views of a portion of an inserter assembly in accordance with the disclosed subject matter;

FIG. **99** is a cross-sectional view of a portion of an inserter assembly in accordance with the disclosed subject matter;

FIGS. **100-101** are perspective views of a portion of an inserter assembly in accordance with the disclosed subject matter;

FIGS. **102-105** are side views of various inserter assemblies in accordance with the disclosed subject matter;

FIGS. **106-112** are views of a sharp and sharp carrier in accordance with the disclosed subject matter;

FIG. **113** is a perspective view of a portion of an inserter assembly in accordance with the disclosed subject matter;

FIGS. **114-117** are perspective views illustrating the operation of an inserter assembly in accordance with the disclosed subject matter;

FIG. **118** is a side view of an inserter assembly in accordance with the disclosed subject matter;

FIGS. **119-121** are cross-sectional views of an inserter assembly in accordance with the disclosed subject matter;

FIG. **122** is a perspective view with parts separated of an embodiment of a sharp/sensor cartridge in accordance with the disclosed subject matter;

FIG. **123** is a perspective view of the cartridge of FIG. **122** in a first stage of deployment in accordance with the disclosed subject matter;

FIG. **124** is a cross-sectional view of the cartridge of FIG. **122** in a neutral state in accordance with the disclosed subject matter;

FIG. **125** is a perspective view of the cartridge of FIG. **122** in a neutral state in accordance with the disclosed subject matter;

FIG. **126** is a cross-sectional view of the cartridge of FIG. **122** in a first stage of deployment in accordance with the disclosed subject matter;

FIG. **127** is a perspective view of the cartridge of FIG. **122** in a second stage of deployment in accordance with the disclosed subject matter;

FIG. **128** is a cross-sectional view of the cartridge of FIG. **122** in a second stage of deployment in accordance with the disclosed subject matter;

FIG. **129** is a perspective view of the cartridge of FIG. **122** in a third stage of deployment in accordance with the disclosed subject matter;

FIG. **130** is a cross-sectional view of the cartridge of FIG. **122** in a third stage of deployment in accordance with the disclosed subject matter;

FIG. **131** is a perspective view with parts separated of another embodiment of a component of an inserter in accordance with the disclosed subject matter;

FIG. **132** is a perspective view of the cartridge of FIG. **131** in a neutral state in accordance with the disclosed subject matter;

FIG. **133** is a cross-sectional view of the cartridge of FIG. **131** in a neutral state in accordance with the disclosed subject matter;

FIG. **134** is a perspective view of the cartridge of FIG. **131** in a second stage of deployment in accordance with the disclosed subject matter;

FIG. **135** is a cross-sectional view of the cartridge of FIG. **131** in a second stage of deployment in accordance with the disclosed subject matter;

FIG. **136** is a perspective view of the cartridge of FIG. **131** in a third stage of deployment in accordance with the disclosed subject matter; and

FIG. **137** is a cross-sectional view of the cartridge of FIG. **131** in a third stage of deployment in accordance with the disclosed subject matter.

DETAILED DESCRIPTION OF THE EMBODIMENTS

A detailed description of the disclosure is provided herein. It should be understood, in connection with the following description, that the subject matter is not limited to particular embodiments described, as the particular embodiments of the subject matter may, of course, vary. It is also to be understood that the terminology used herein is for the purpose of describing particular embodiments only, and is not intended to be limiting, since the scope of the disclosed subject matter will be limited only by the appended claims.

Where a range of values is provided, it is understood that each intervening value between the upper and lower limit of that range, and any other stated or intervening value in that stated range, is encompassed within the disclosed subject matter. Every range stated is also intended to specifically disclose each and every "subrange" of the stated range. That is, each and every range smaller than the outside range specified by the outside upper and outside lower limits given for a range, whose upper and lower limits are within the range from said outside lower limit to said outside upper limit (unless the context clearly dictates otherwise), is also to be understood as encompassed within the disclosed subject matter, subject to any specifically excluded range or limit within the stated range. Where a range is stated by specifying one or both of an upper and lower limit, ranges excluding either or both of those stated limits, or including one or both of them, are also encompassed within the disclosed subject matter, regardless of whether or not words such as "from," "to," "through," or "including" are or are not used in describing the range.

Unless defined otherwise, all technical and scientific terms used herein have the same meaning as commonly understood by one of ordinary skill in the art to which this disclosed subject matter belongs. Although any methods and materials similar or equivalent to those described herein can also be used in the practice or testing of the present disclosed subject matter, this disclosure may specifically mention certain exemplary methods and materials.

All publications mentioned in this disclosure are, unless otherwise specified, incorporated by reference herein for all purposes, including without limitation to disclose and describe the methods and/or materials in connection with which the publications are cited.

The publications discussed herein are provided solely for their disclosure prior to the filing date of the present application. Nothing herein is to be construed as an admission that the present disclosed subject matter is not entitled to antedate such publication by virtue of prior invention. Further, the dates of publication provided may be different from the actual publication dates, which may need to be independently confirmed.

As used herein and in the appended claims, the singular forms "a," "an," and "the" include plural referents unless the context clearly dictates otherwise.

Nothing contained in the Abstract or the Summary should be understood as limiting the scope of the disclosure. The

Abstract and the Summary are provided for bibliographic and convenience purposes and due to their formats and purposes should not be considered comprehensive.

As will be apparent to those of skill in the art upon reading this disclosure, each of the individual embodiments described and illustrated herein has discrete components and features which may be readily separated from or combined with the features of any of the other several embodiments without departing from the scope or spirit of the present disclosed subject matter. Any recited method can be carried out in the order of events recited, or in any other order which is logically possible.

Reference to a singular item includes the possibility that there are plural of the same item present. When two or more items (for example, elements or processes) are referenced by an alternative "or," this indicates that either could be present separately or any combination of them could be present together except where the presence of one necessarily excludes the other or others.

Generally, embodiments of the present disclosure relate to an apparatus for inserting a medical device at least partially into the skin of the patient. Some embodiments relate to in vivo methods and devices for detecting at least one analyte such as glucose in body fluid. Accordingly, embodiments include in vivo analyte sensors configured so that at least a portion of the sensor is positioned in the body of a user (e.g., within the ISF), to obtain information about at least one analyte of the body, e.g., transcutaneously positioned in user's body. In certain embodiments, an in vivo analyte sensor is coupled to an electronics unit that is maintained on the body of the user to process information obtained from the sensor.

In certain embodiments, analyte information is communicated from a first device such as an on body electronics unit to a second device which may include user interface features, including a display, and/or the like. Information may be communicated from the first device to the second device automatically and/or continuously when the analyte information is available, or may not be communicated automatically and/or continuously, but rather stored or logged in a memory of the first device. Accordingly, in many embodiments of the system, analyte information derived by the sensor/on body electronics (for example, on body electronics) is made available in a user-usable or viewable form only when queried by the user such that the timing of data communication is selected by the user. In some embodiments, the display of information is selected by the user, while the timing of data communication is not.

In this manner, analyte information is only provided or evident to a user (provided at a user interface device) in some embodiments when desired by the user even though an in vivo analyte sensor automatically and/or continuously monitors the analyte level in vivo, i.e., the sensor automatically monitors analyte such as glucose on a pre-defined time interval over its usage life. For example, an analyte sensor may be positioned in vivo and coupled to on body electronics for a given sensing period, e.g., about 14 days. In certain embodiments, the sensor-derived analyte information is automatically communicated from the sensor electronics assembly to a remote monitor device or display device for output to a user throughout the 14 day period according to a schedule programmed at the on body electronics (e.g., about every 1 minute or about every 5 minutes or about every 10 minutes, or the like). In certain embodiments, sensor-derived analyte information is only communicated from the sensor electronics assembly to a remote monitor device or display device at user-determined times, e.g., whenever a user decides to check analyte information. At such times, a communications system is activated and sensor-derived information is then sent from the on body electronics to the remote device or display device.

In still other embodiments, the information may be communicated from the first device to the second device automatically and/or continuously when the analyte information is available, and the second device stores or logs the received information without presenting or outputting the information to the user. In such embodiments, the information is received by the second device from the first device when the information becomes available (e.g., when the sensor detects the analyte level according to a time schedule). However, the received information is initially stored in the second device and only output to a user interface or an output component of the second device (e.g., display) upon detection of a request for the information on the second device.

Accordingly, in certain embodiments an inserter as described herein is used to place a sensor electronics assembly on the body so that at least a portion of the in vivo sensor is in contact with bodily fluid such as ISF. Once the sensor is electrically coupled to the electronics unit, sensor derived analyte information may be communicated from the on body electronics to a display device on-demand by powering on the display device (or it may be continually powered), and executing a software algorithm stored in and accessed from a memory of the display device, to generate one or more request commands, control signal or data packet to send to the on body electronics. The software algorithm executed under, for example, the control of the microprocessor or application specific integrated circuit (ASIC) of the display device may include routines to detect the position of the on body electronics relative to the display device to initiate the transmission of the generated request command, control signal and/or data packet.

Display devices may also include programming stored in memory for execution by one or more microprocessors and/or ASICs to generate and transmit the one or more request command, control signal or data packet to send to the on body electronics in response to a user activation of an input mechanism on the display device such as depressing a button on the display device, triggering a soft button associated with the data communication function, and so on. The input mechanism may be alternatively or additionally provided on or in the on body electronics which may be configured for user activation. In certain embodiments, voice commands or audible signals may be used to prompt or instruct the microprocessor or ASIC to execute the software routine(s) stored in the memory to generate and transmit the one or more request command, control signal or data packet to the on body device. In the embodiments that are voice activated or responsive to voice commands or audible signals, on body electronics and/or display device includes a microphone, a speaker, and processing routines stored in the respective memories of the on body electronics and/or the display device to process the voice commands and/or audible signals. In certain embodiments, positioning the on body electronics and the display device within a predetermined distance (e.g., close proximity) relative to each other initiates one or more software routines stored in the memory of the display device to generate and transmit a request command, control signal or data packet.

Different types and/or forms and/or amounts of information may be sent for each on demand reading, including but not limited to one or more of current analyte level information (i.e., real time or the most recently obtained analyte level information temporally corresponding to the time the reading is initiated), rate of change of an analyte over a predetermined

time period, rate of the rate of change of an analyte (acceleration in the rate of change), historical analyte information corresponding to analyte information obtained prior to a given reading and stored in memory of the assembly. Some or all of real time, historical, rate of change, rate of rate of change (such as acceleration or deceleration) information may be sent to a display device for a given reading. In certain embodiments, the type and/or form and/or amount of information sent to a display device may be preprogrammed and/or unchangeable (e.g., preset at manufacturing), or may not be preprogrammed and/or unchangeable so that it may be selectable and/or changeable in the field one or more times (e.g., by activating a switch of the system, etc.). Accordingly, in certain embodiments, for each on demand reading, a display device will output a current (real time) sensor-derived analyte value (e.g., in numerical format), a current rate of analyte change (e.g., in the form of an analyte rate indicator such as an arrow pointing in a direction to indicate the current rate), and analyte trend history data based on sensor readings acquired by and stored in memory of on body electronics (e.g., in the form of a graphical trace). Additionally, the on skin or sensor temperature reading or measurement associated with each on demand reading may be communicated from the on body electronics to the display device. The temperature reading or measurement, however, may not be output or displayed on the display device, but rather, used in conjunction with a software routine executed by the display device to correct or compensate the analyte measurement output to the user on the display device.

As described, embodiments include inserters for in vivo analyte sensors and on body electronics that together provide body wearable sensor electronics assemblies. In certain embodiments, in vivo analyte sensors are fully integrated with on body electronics (fixedly connected during manufacture), while in other embodiments they are separate but connectable post manufacture (e.g., before, during or after sensor insertion into a body). On body electronics may include an in vivo glucose sensor, electronics, battery, and antenna encased (except for the sensor portion that is for in vivo positioning) in a waterproof housing that includes or is attachable to an adhesive pad. In certain embodiments, the housing withstands immersion in about one meter of water for up to at least 30 minutes. In certain embodiments, the housing withstands continuous underwater contact, e.g., for longer than about 30 minutes, and continues to function properly according to its intended use, e.g., without water damage to the housing electronics where the housing is suitable for water submersion.

Embodiments include sensor insertion devices, which also may be referred to herein as sensor delivery units, or the like. Insertion devices may retain on body electronics assemblies completely in an interior compartment, i.e., an insertion device may be "pre-loaded" with on body electronics assemblies during the manufacturing process (e.g., on body electronics may be packaged in a sterile interior compartment of an insertion device). In such embodiments, insertion devices may form sensor assembly packages (including sterile packages) for pre-use or new on body electronics assemblies, and insertion devices configured to apply on body electronics assemblies to recipient bodies.

Embodiments include portable handheld display devices, as separate devices and spaced apart from an on body electronics assembly, that collect information from the assemblies and provide sensor derived analyte readings to users. Such devices may also be referred to as meters, readers, monitors, receivers, human interface devices, companions, or the like. Certain embodiments may include an integrated in vitro analyte meter. In certain embodiments, display devices include one or more wired or wireless communications ports such as USB, serial, parallel, or the like, configured to establish communication between a display device and another unit (e.g., on body electronics, power unit to recharge a battery, a PC, etc.). For example, a display device communication port may enable charging a display device battery with a respective charging cable and/or data exchange between a display device and its compatible informatics software.

Compatible informatics software in certain embodiments include, for example, but not limited to stand alone or network connection enabled data management software program, resident or running on a display device, personal computer, a server terminal, for example, to perform data analysis, charting, data storage, data archiving and data communication as well as data synchronization. Informatics software in certain embodiments may also include software for executing field upgradable functions to upgrade firmware of a display device and/or on body electronics unit to upgrade the resident software on the display device and/or the on body electronics unit, e.g., with versions of firmware that include additional features and/or include software bugs or errors fixed, etc. Embodiments may include a haptic feedback feature such as a vibration motor or the like, configured so that corresponding notifications (e.g., a successful on-demand reading received at a display device), may be delivered in the form of haptic feedback.

Embodiments include programming embedded on a computer readable medium, i.e., computer-based application software (may also be referred to herein as informatics software or programming or the like) that processes analyte information obtained from the system and/or user self-reported data. Application software may be installed on a host computer such as a mobile telephone, PC, an Internet-enabled human interface device such as an Internet-enabled phone, personal digital assistant, or the like, by a display device or an on body electronics unit. Informatics programming may transform data acquired and stored on a display device or on body unit for use by a user.

Embodiments of the subject disclosure are described primarily with respect to glucose monitoring devices and systems, and methods of glucose monitoring, for convenience only and such description is in no way intended to limit the scope of the disclosure. It is to be understood that the analyte monitoring system may be configured to monitor a variety of analytes at the same time or at different times.

As described in detail below, embodiments include devices, systems, kits and/or methods to monitor one or more physiological parameters such as, for example, but not limited to, analyte levels, temperature levels, heart rate, user activity level, over a predetermined monitoring time period. Also provided are methods of manufacturing. Predetermined monitoring time periods may be less than about 1 hour, or may include about 1 hour or more, e.g., about a few hours or more, e.g., about a few days of more, e.g., about 3 or more days, e.g., about 5 days or more, e.g., about 7 days or more, e.g., about 10 days or more, e.g., about 14 days or more, e.g., about several weeks, e.g., about 1 month or more. In certain embodiments, after the expiration of the predetermined monitoring time period, one or more features of the system may be automatically deactivated or disabled at the on body electronics assembly and/or display device.

For example, a predetermined monitoring time period may begin with positioning the sensor in vivo and in contact with a body fluid such as ISF, and/or with the initiation (or powering on to full operational mode) of the on body electronics. Initialization of on body electronics may be implemented with a command generated and transmitted by a display

device in response to the activation of a switch and/or by placing the display device within a predetermined distance (e.g., close proximity) to the on body electronics, or by user manual activation of a switch on the on body electronics unit, e.g., depressing a button, or such activation may be caused by the insertion device, e.g., as described in U.S. patent application Ser. No. 12/698,129 filed on Feb. 1, 2010 and U.S. Provisional Application Nos. 61/238,646, 61/246,825, 61/247,516, 61/249,535, 61/317,243, 61/345,562, and 61/361,374, the disclosures of each of which are incorporated herein by reference for all purposes.

When initialized in response to a received command from a display device, the on body electronics retrieves and executes from its memory software routine to fully power on the components of the on body electronics, effectively placing the on body electronics in full operational mode in response to receiving the activation command from the display device. For example, prior to the receipt of the command from the display device, a portion of the components in the on body electronics may be powered by its internal power supply such as a battery while another portion of the components in the on body electronics may be in powered down or maintained in a low power state including no power state, inactive mode, or all components may be in an inactive, powered down mode. Upon receipt of the command, the remaining portion (or all) of the components of the on body electronics is switched to active, fully operational mode.

Embodiments of on body electronics may include one or more printed circuit boards with electronics including control logic implemented in ASIC, microprocessors, memory, and the like, and transcutaneously positionable analyte sensors forming a single assembly. On body electronics may be configured to provide one or more signals or data packets associated with a monitored analyte level upon detection of a display device of the analyte monitoring system within a predetermined proximity for a period of time (for example, about 2 minutes, e.g., 1 minute or less, e.g., about 30 seconds or less, e.g., about 10 seconds or less, e.g., about 5 seconds or less, e.g., about 2 seconds or less) and/or until a confirmation, such as an audible and/or visual and/or tactile (e.g., vibratory) notification, is output on the display device indicating successful acquisition of the analyte related signal from the on body electronics. A distinguishing notification may also be output for unsuccessful acquisition in certain embodiments.

In certain embodiments, the monitored analyte level may be correlated and/or converted to glucose levels in blood or other fluids such as ISF. Such conversion may be accomplished with the on body electronics, but in many embodiments will be accomplished with display device electronics. In certain embodiments, glucose level is derived from the monitored analyte level in the ISF.

Analyte sensors may be insertable into a vein, artery, or other portion of the body containing analyte. In certain embodiments, analyte sensors may be positioned in contact with ISF to detect the level of analyte, where the detected analyte level may be used to infer the user's glucose level in blood or interstitial tissue.

Embodiments include transcutaneous sensors and also wholly implantable sensors and wholly implantable assemblies in which a single assembly including the analyte sensor and electronics are provided in a sealed housing (e.g., hermetically sealed biocompatible housing) for implantation in a user's body for monitoring one or more physiological parameters.

Embodiments include analyte monitors that are provided in small, lightweight, battery-powered and electronically-controlled systems. Such systems may be configured to detect physical parameters of subjects, such as signals indicative of in vivo analyte levels using an electrochemical sensor, and collect such signals, with or without processing. Any suitable measurement technique may be used to obtain signals from the sensors, e.g., may detect current, may employ potentiometry, etc. Techniques may include, but are not limited to amperometry, coulometry, and voltammetry. In some embodiments, sensing systems may be optical, colorimetric, and the like. In some embodiments, the portion of the system that performs this initial processing may be configured to provide the raw or at least initially processed data to another unit for further collection and/or processing. Such provision of data may be affected for example, by a wired connection, such as an electrical, or by a wireless connection, such as an IR or RF connection.

In certain systems, the analyte sensor is in communication with on body electronics. The on-body unit may include a housing in which the on body electronics and at least a portion of the sensor are received.

Certain embodiments are modular. The on-body unit may be separately provided as a physically distinct assembly from a monitor unit, e.g., which displays or otherwise indicates analyte levels to a user. The on-body unit may be configured to provide the analyte levels detected by the sensor and/or other information (such as temperature, sensor life, etc.) over a communication link to the monitor unit. The monitor unit, in some embodiments, may include, e.g., a mobile telephone device, an in vitro glucose meter, a personal digital assistant, or other consumer electronics such as MP3 device, camera, radio, personal computer, etc., or other communication-enabled data-processing device.

The display unit may perform a variety of functions such as but not limited to data storage and/or processing and/or analysis and/or communication, etc., on the received analyte data to generate information pertaining to the monitored analyte levels and/or process the other information. The monitor unit may incorporate a display screen, which can be used, for example, to display measured analyte levels, and/or an audio component such as a speaker to audibly provide information to a user, and/or a vibration device to provide tactile feedback to a user. It is also useful for a user of an analyte-monitoring system to be able to see trend indications (including the magnitude and direction of any ongoing trend, e.g., the rate of change of an analyte or other parameter, and the amount of time a subject is above and/or below a threshold, such as a hypoglycemic and/or hyperglycemic threshold, etc.); such data may be displayed either numerically, or by a visual indicator such as an arrow that may vary in visual attributes, like size, shape, color, animation, or direction. The monitor unit may further be adapted to receive information from or about an in vitro analyte test strip, which may be manually or automatically entered into the monitor unit. In some embodiments, a monitor unit may incorporate an in vitro analyte test strip port and related electronics in order to be able to make discrete (e.g., blood glucose) measurements using an in vitro test strip (see, e.g., U.S. Pat. No. 6,175,752, the disclosure of which is incorporated by reference herein for all purposes).

The modularity of these systems may vary where one or more components may be constructed to be single use and one or more may be constructed to be re-useable. In some embodiments, the sensor is designed to be attachable and detachable from the on body electronics (and the on-body unit may be reusable), e.g., so that one or more of the components may be reused one or more times, while in other embodiments, the sensor and on body electronics may be provided as an integrated, undetachable package, which may be designed to be disposable after use, i.e., not reused.

Embodiments of In Vivo Monitoring Systems

For purpose of illustration, and not limitation, the inserters described herein may be used in connection with an exemplary analyte monitoring system as depicted in FIG. **1**. It is understood that the inserters described herein may be used with any medical device on its own or in connection with a system. FIG. **1** shows an exemplary in vivo-based analyte monitoring system **100** in accordance with embodiments of the present disclosure. As shown, in certain embodiments, analyte monitoring system **100** includes on body electronics **1100** electrically coupled to in vivo analyte sensor **14** (a proximal portion of which is shown in FIG. **1**), and attached to adhesive layer **218** for attachment on a skin surface on the body of a user. On body electronics **1100** includes on body housing **122** that defines an interior compartment.

Also shown in FIG. **1** is insertion device **200** (or insertion devices **300**, **400**, **2400**, **2500**, **2700**, **3700** described herein) that, when operated, transcutaneously positions a portion of analyte sensor **14** through a skin surface and in fluid contact with ISF, and positions on body electronics **1100** and adhesive layer **218** on a skin surface, as will be described in greater detail herein. In certain embodiments, on body electronics **1100**, analyte sensor **14** and adhesive layer **218** are sealed within the housing of insertion device **200** before use, and in certain embodiments, adhesive layer **218** is also sealed within the housing or the adhesive layer can provide a seal for preserving the sterility of the apparatus. Additional details regarding insertion devices are discussed, e.g., in U.S. patent application Ser. No. 12/698,129 and U.S. Provisional Application Nos. 61/238,646, 61/246,825, 61/247,516, 61/249,535, and 61/345,562, the disclosures of each of which are incorporated herein by reference for all purposes.

Referring back to the FIG. **1**, analyte monitoring system **100** includes display device **1200** which includes a display **1220** to output information to the user, an input component **1210** such as a button, actuator, a touch sensitive switch, a capacitive switch, pressure sensitive switch, jog wheel or the like, to input data or command to display device **1200** or otherwise control the operation of display device **1200**. It is noted that some embodiments may include display-less devices or devices without any user interface components. These devices may be functionalized to store data as a data logger and/or provide a conduit to transfer data from on body electronics and/or a display-less device to another device and/or location. Embodiments will be described herein as display devices for exemplary purposes which are in no way intended to limit the embodiments of the present disclosure. It will be apparent that display-less devices may also be used in certain embodiments.

In certain embodiments, on body electronics **1100** may be configured to store some or all of the monitored analyte related data received from analyte sensor **14** in a memory during the monitoring time period, and maintain it in memory until the usage period ends. In such embodiments, stored data is retrieved from on body electronics **1100** at the conclusion of the monitoring time period, for example, after removing analyte sensor **14** from the user by detaching on body electronics **1100** from the skin surface where it was positioned during the monitoring time period. In such data logging configurations, real time monitored analyte level is not communicated to display device **1200** during the monitoring period or otherwise transmitted from on body electronics **1100**, but rather, retrieved from on body electronics **1100** after the monitoring time period.

In certain embodiments, input component **1210** of display device **1200** may include a microphone and display device **1200** may include software configured to analyze audio input received from the microphone, such that functions and operation of the display device **1200** may be controlled by voice commands. In certain embodiments, an output component of display device **1200** includes a speaker for outputting information as audible signals. Similar voice responsive components such as a speaker, microphone and software routines to generate, process and store voice driven signals may be provided to on body electronics **1100**.

In certain embodiments, display **1220** and input component **1210** may be integrated into a single component, for example a display that can detect the presence and location of a physical contact touch upon the display such as a touch screen user interface. In such embodiments, the user may control the operation of display device **1200** by utilizing a set of preprogrammed motion commands, including, but not limited to, single or double tapping the display, dragging a finger or instrument across the display, motioning multiple fingers or instruments toward one another, motioning multiple fingers or instruments away from one another, etc. In certain embodiments, a display includes a touch screen having areas of pixels with single or dual function capacitive elements that serve as LCD elements and touch sensors.

Display device **1200** also includes data communication port **1230** for wired data communication with external devices such as remote terminal (personal computer) **1700**, for example. Example embodiments of the data communication port **1230** include USB port, mini USB port, RS-232 port, Ethernet port, Firewire port, or other similar data communication ports configured to connect to the compatible data cables. Display device **1200** may also include an integrated in vitro glucose meter, including in vitro test strip port **1240** to receive an in vitro glucose test strip for performing in vitro blood glucose measurements.

Referring still to FIG. **1**, display **1220** in certain embodiments is configured to display a variety of information—some or all of which may be displayed at the same or different time on display **1220**. In certain embodiments the displayed information is user-selectable so that a user can customize the information shown on a given display screen. Display **1220** may include but is not limited to graphical display **1380**, for example, providing a graphical output of glucose values over a monitored time period (which may show important markers such as meals, exercise, sleep, heart rate, blood pressure, etc, numerical display **1320**, for example, providing monitored glucose values (acquired or received in response to the request for the information), and trend or directional arrow display **1310** that indicates a rate of analyte change and/or a rate of the rate of analyte change, e.g., by moving locations on display **1220**.

As further shown in FIG. **1**, display **1220** may also include date display **1350** providing for example, date information for the user, time of day information display **1390** providing time of day information to the user, battery level indicator display **1330** which graphically shows the condition of the battery (rechargeable or disposable) of the display device **1200**, sensor calibration status icon display **1340** for example, in monitoring systems that require periodic, routine or a predetermined number of user calibration events, notifying the user that the analyte sensor calibration is necessary, audio/vibratory settings icon display **1360** for displaying the status of the audio/vibratory output or alarm state, and wireless connectivity status icon display **1370** that provides indication of wireless communication connection with other devices such as on body electronics, data processing module **1600**, and/or remote terminal **1700**. As additionally shown in FIG. **1**, display **1220** may further include simulated touch screen button

1250, **1260** for accessing menus, changing display graph output configurations or otherwise for controlling the operation of display device **1200**.

Referring back to FIG. **1**, in certain embodiments, display **1220** of display device **1200** may be additionally, or instead of visual display, configured to output alarms notifications such as alarm and/or alert notifications, glucose values etc, which may be audible, tactile, or any combination thereof. In one aspect, the display device **1200** may include other output components such as a speaker, vibratory output component and the like to provide audible and/or vibratory output indication to the user in addition to the visual output indication provided on display **1220**. Further details and other display embodiments can be found in, e.g., U.S. patent application Ser. No. 12/871,901, U.S. provisional application Nos. 61/238,672, 61/247,541, 61/297,625, the disclosures of each of which are incorporated herein by reference for all purposes.

After the positioning of on body electronics **1100** on the skin surface and analyte sensor **14** in vivo to establish fluid contact with ISF (or other appropriate body fluid), on body electronics **1100** in certain embodiments is configured to wirelessly communicate analyte related data (such as, for example, data corresponding to monitored analyte level and/or monitored temperature data, and/or stored historical analyte related data) when on body electronics **1100** receives a command or request signal from display device **1200**. In certain embodiments, on body electronics **1100** may be configured to at least periodically broadcast real time data associated with monitored analyte level which is received by display device **1200** when display device **1200** is within communication range of the data broadcast from on body electronics **1100**, i.e., it does not need a command or request from a display device to send information.

For example, display device **1200** may be configured to transmit one or more commands to on body electronics **1100** to initiate data transfer, and in response, on body electronics **1100** may be configured to wirelessly transmit stored analyte related data collected during the monitoring time period to display device **1200**. Display device **1200** may in turn be connected to a remote terminal **1700** such as a personal computer and functions as a data conduit to transfer the stored analyte level information from the on body electronics **1100** to remote terminal **1700**. In certain embodiments, the received data from the on body electronics **1100** may be stored (permanently or temporarily) in one or more memory of the display device **1200**. In certain other embodiments, display device **1200** is configured as a data conduit to pass the data received from on body electronics **1100** to remote terminal **1700** that is connected to display device **1200**.

Referring still to FIG. **1**, also shown in analyte monitoring system **100** are data processing module **1600** and remote terminal **1700**. Remote terminal **1700** may include a personal computer, a server terminal a laptop computer or other suitable data processing devices including software for data management and analysis and communication with the components in the analyte monitoring system **100**. For example, remote terminal **1700** may be connected to a local area network (LAN), a wide area network (WAN), or other data network for uni-directional or bi-directional data communication between remote terminal **1700** and display device **1200** and/or data processing module **1600**.

Remote terminal **1700** in certain embodiments may include one or more computer terminals located at a physician's office or a hospital. For example, remote terminal **1700** may be located at a location other than the location of display device **1200**. Remote terminal **1700** and display device **1200** could be in different rooms or different buildings. Remote terminal **1700** and display device **1200** could be at least about one mile apart, e.g., at least about 100 miles apart, e.g., at least about 1000 miles apart. For example, remote terminal **1700** could be in the same city as display device **1200**, remote terminal **1700** could be in a different city than display device **1200**, remote terminal **1700** could be in the same state as display device **1200**, remote terminal **1700** could be in a different state than display device **1200**, remote terminal **1700** could be in the same country as display device **1200**, or remote terminal **1700** could be in a different country than display device **1200**, for example.

In certain embodiments, a separate, optional data communication/processing device such as data processing module **1600** may be provided in analyte monitoring system **100**. Data processing module **1600** may include components to communicate using one or more wireless communication protocols such as, for example, but not limited to, infrared (IR) protocol, Bluetooth® protocol, Zigbee® protocol, and 802.11 wireless LAN protocol. Additional description of communication protocols including those based on Bluetooth® protocol and/or Zigbee® protocol can be found in U.S. Patent Publication No. 2006/0193375 incorporated herein by reference for all purposes. Data processing module **1600** may further include communication ports, drivers or connectors to establish wired communication with one or more of display device **1200**, on body electronics **1100**, or remote terminal **1700** including, for example, but not limited to USB connector and/or USB port, Ethernet connector and/or port, FireWire connector and/or port, or RS-232 port and/or connector.

In certain embodiments, data processing module **1600** is programmed to transmit a polling or query signal to on body electronics **1100** at a predetermined time interval (e.g., once every minute, once every five minutes, or the like), and in response, receive the monitored analyte level information from on body electronics **1100**. Data processing module **1600** stores in its memory the received analyte level information, and/or relays or retransmits the received information to another device such as display device **1200**. More specifically in certain embodiments, data processing module **1600** may be configured as a data relay device to retransmit or pass through the received analyte level data from on body electronics **1100** to display device **1200** or a remote terminal (for example, over a data network such as a cellular or WiFi data network) or both.

In certain embodiments, on body electronics **1100** and data processing module **1600** may be positioned on the skin surface of the user within a predetermined distance of each other (for example, about 1-12 inches, or about 1-10 inches, or about 1-7 inches, or about 1-5 inches) such that periodic communication between on body electronics **1100** and data processing module **1600** is maintained. Alternatively, data processing module **1600** may be worn on a belt or clothing item of the user, such that the desired distance for communication between the on body electronics **1100** and data processing module **1600** for data communication is maintained. In a further aspect, the housing of data processing module **1600** may be configured to couple to or engage with on body electronics **1100** such that the two devices are combined or integrated as a single assembly and positioned on the skin surface. In further embodiments, data processing module **1600** is detachably engaged or connected to on body electronics **1100** providing additional modularity such that data processing module **1600** may be optionally removed or reattached as desired.

Referring again to FIG. **1**, in certain embodiments, data processing module **1600** is programmed to transmit a command or signal to on body electronics **1100** at a predetermined time interval such as once every minute, or once every 5 minutes or once every 30 minutes or any other suitable or desired programmable time interval to request analyte related data from on body electronics **1100**. When data processing module **1600** receives the requested analyte related data, it stores the received data. In this manner, analyte monitoring system **100** may be configured to receive the continuously monitored analyte related information at the programmed or programmable time interval, which is stored and/or displayed to the user. The stored data in data processing module **1600** may be subsequently provided or transmitted to display device **1200**, remote terminal **1700** or the like for subsequent data analysis such as identifying frequency of periods of glycemic level excursions over the monitored time period, or the frequency of the alarm event occurrence during the monitored time period, for example, to improve therapy related decisions. Using this information, the doctor, healthcare provider or the user may adjust or recommend modification to the diet, daily habits and routines such as exercise, and the like.

In another embodiment, data processing module **1600** transmits a command or signal to on body electronics **1100** to receive the analyte related data in response to a user activation of a switch provided on data processing module **1600** or a user initiated command received from display device **1200**. In further embodiments, data processing module **1600** is configured to transmit a command or signal to on body electronics **1100** in response to receiving a user initiated command only after a predetermined time interval has elapsed. For example, in certain embodiments, if the user does not initiate communication within a programmed time period, such as, for example about 5 hours from last communication (or 10 hours from the last communication, or 24 hours from the last communication), the data processing module **1600** may be programmed to automatically transmit a request command or signal to on body electronics **1100**. Alternatively, data processing module **1600** may be programmed to activate an alarm to notify the user that a predetermined time period of time has elapsed since the last communication between the data processing module **1600** and on body electronics **1100**. In this manner, users or healthcare providers may program or configure data processing module **1600** to provide certain compliance with analyte monitoring regimen, so that frequent determination of analyte levels is maintained or performed by the user.

In certain embodiments, when a programmed or programmable alarm condition is detected (for example, a detected glucose level monitored by analyte sensor **14** that is outside a predetermined acceptable range indicating a physiological condition) which requires attention or intervention for medical treatment or analysis (for example, a hypoglycemic condition, a hyperglycemic condition, an impending hyperglycemic condition or an impending hypoglycemic condition), the one or more output indications may be generated by the control logic or processor of the on body electronics **1100** and output to the user on a user interface of on body electronics **1100** so that corrective action may be timely taken. In addition to or alternatively, if display device **1200** is within communication range, the output indications or alarm data may be communicated to display device **1200** whose processor, upon detection of the alarm data reception, controls the display **1220** to output one or more notification.

In certain embodiments, control logic or microprocessors of on body electronics **1100** include software programs to determine future or anticipated analyte levels based on information obtained from analyte sensor **14**, e.g., the current analyte level, the rate of change of the analyte level, the acceleration of the analyte level change, and/or analyte trend information determined based on stored monitored analyte data providing a historical trend or direction of analyte level fluctuation as function time during monitored time period. Predictive alarm parameters may be programmed or programmable in display device **1200**, or the on body electronics **1100**, or both, and output to the user in advance of anticipating the user's analyte level reaching the future level. This provides the user an opportunity to take timely corrective action.

Information, such as variation or fluctuation of the monitored analyte level as a function of time over the monitored time period providing analyte trend information, for example, may be determined by one or more control logic or microprocessors of display device **1200**, data processing module **1600**, and/or remote terminal **1700**, and/or on body electronics **1100**. Such information may be displayed as, for example, a graph (such as a line graph) to indicate to the user the current and/or historical and/or and predicted future analyte levels as measured and predicted by the analyte monitoring system **100**. Such information may also be displayed as directional arrows (for example, see trend or directional arrow display **1310**) or other icon(s), e.g., the position of which on the screen relative to a reference point indicated whether the analyte level is increasing or decreasing as well as the acceleration or deceleration of the increase or decrease in analyte level. This information may be utilized by the user to determine any necessary corrective actions to ensure the analyte level remains within an acceptable and/or clinically safe range. Other visual indicators, including colors, flashing, fading, etc., as well as audio indicators including a change in pitch, volume, or tone of an audio output and/or vibratory or other tactile indicators may also be incorporated into the display of trend data as means of notifying the user of the current level and/or direction and/or rate of change of the monitored analyte level. For example, based on a determined rate of glucose change, programmed clinically significant glucose threshold levels (e.g., hyperglycemic and/or hypoglycemic levels), and current analyte level derived by an in vivo analyte sensor, the system **100** may include an algorithm stored on computer readable medium to determine the time it will take to reach a clinically significant level and will output notification in advance of reaching the clinically significant level, e.g., 30 minutes before a clinically significant level is anticipated, and/or 20 minutes, and/or 10 minutes, and/or 5 minutes, and/or 3 minutes, and/or 1 minute, and so on, with outputs increasing in intensity or the like.

Referring again back to FIG. **1**, in certain embodiments, software algorithm(s) for execution by data processing module **1600** may be stored in an external memory device such as an SD card, microSD card, compact flash card, XD card, Memory Stick card, Memory Stick Duo card, or USB memory stick/device including executable programs stored in such devices for execution upon connection to the respective one or more of the on body electronics **1100**, remote terminal **1700** or display device **1200**. In a further aspect, software algorithms for execution by data processing module **1600** may be provided to a communication device such as a mobile telephone including, for example, WiFi or Internet enabled smart phones or personal digital assistants (PDAs) as a downloadable application for execution by the downloading communication device.

Examples of smart phones include Windows®, Android™, iPhone® operating system, Palm® WebOS™, Blackberry® operating system, or Symbian® operating system based

mobile telephones with data network connectivity functionality for data communication over an internet connection and/or a local area network (LAN). PDAs as described above include, for example, portable electronic devices including one or more microprocessors and data communication capability with a user interface (e.g., display/output unit and/or input unit, and configured for performing data processing, data upload/download over the internet, for example. In such embodiments, remote terminal **1700** may be configured to provide the executable application software to the one or more of the communication devices described above when communication between the remote terminal **1700** and the devices are established.

In still further embodiments, executable software applications may be provided over-the-air (OTA) as an OTA download such that wired connection to remote terminal **1700** is not necessary. For example, executable applications may be automatically downloaded as software download to the communication device, and depending upon the configuration of the communication device, installed on the device for use automatically, or based on user confirmation or acknowledgement on the communication device to execute the installation of the application. The OTA download and installation of software may include software applications and/or routines that are updates or upgrades to the existing functions or features of data processing module **1600** and/or display device **1200**.

Referring back to remote terminal **1700** of FIG. **1**, in certain embodiments, new software and/or software updates such as software patches or fixes, firmware updates or software driver upgrades, among others, for display device **1200** and/or on body electronics **1100** and/or data processing module **1600** may be provided by remote terminal **1700** when communication between the remote terminal **1700** and display device **1200** and/or data processing module **1600** is established. For example, software upgrades, executable programming changes or modification for on body electronics **1100** may be received from remote terminal **1700** by one or more of display device **1200** or data processing module **1600**, and thereafter, provided to on body electronics **1100** to update its software or programmable functions. For example, in certain embodiments, software received and installed in on body electronics **1100** may include software bug fixes, modification to the previously stalled software parameters (modification to analyte related data storage time interval, resetting or adjusting time base or information of on body electronics **1100**, modification to the transmitted data type, data transmission sequence, or data storage time period, among others). Additional details describing field upgradability of software of portable electronic devices, and data processing are provided in U.S. application Ser. Nos. 12/698,124, 12/794,721, now U.S. Pat. No. 8,595,607, Ser. Nos. 12/699,653, and 12/699,844, and U.S. Provisional Application Nos. 61/359,265 and 61/325,155 the disclosures of which are incorporated by reference herein for all purposes.

The Sensor

The analyte sensor **14** of the analyte measurement system **100** may be used to monitor levels of a wide variety of analytes. Analytes that may be monitored include, for example, acetylcholine, amylase, bilirubin, cholesterol, chorionic gonadotropin, creatine kinase (e.g., CK-MB), creatine, DNA, fructosamine, glucose, glutamine, growth hormones, hormones, ketones, lactate, peroxide, prostate-specific antigen, prothrombin, RNA, thyroid-stimulating hormone, and troponin. The concentration of drugs, such as, for example, antibiotics (e.g., gentamicin, vancomycin, and the like), digitoxin, digoxin, drugs of abuse, theophylline, and warfarin, may also be monitored. One or more analyte may be monitored by a given sensor. In those embodiments that monitor more than one analyte, the analytes may be monitored at the same or different times, which may use the same on body electronics (e.g., simultaneously) or with different on body electronics.

In one embodiment of the present disclosure, sensor **14** is physically positioned in or on the body of a user whose analyte level is being monitored. Sensor **14** may be configured to continuously sample the analyte level of the user and convert the sampled analyte level, e.g., glucose concentration into a corresponding data signal, e.g., a current or voltage, for input into on body electronics. Alternatively, sensor **14** may be configured to sample analyte levels on demand. The on body electronics may amplify, filter, average, and/or otherwise process signal provided by the sensor.

An embodiment of the sensor **14** is illustrated in FIG. **2**. It is understood that the inserters described herein can be used with other medical devices. The shape(s) described herein are exemplary only. Other sensor shapes are contemplated. In some embodiments, sensor **14** includes a substrate which is a dielectric, e.g., a polymer or plastic material, such as polyester or polyamide. In this embodiment, the sensor is constructed so that a portion is positionable beneath skin and a portion is above skin. Accordingly, sensor **14** includes an insertion or internal portion **30** and an external or electrical contact portion **32**. In some embodiments, the contact portion **32** includes several conductive contacts **36**, **38**, and **40** (herein shown as three contacts) for connection to other electronics, e.g., at the on body electronics **1100** (See FIG. **1**.), The contacts provided in this embodiment are for a working electrode, a reference electrode, and a counter electrode. In some embodiments, two or more working electrodes are provided. The operative portions of these electrodes, that is, working electrode, reference electrode, and counter electrode (not individually shown), are provided at the insertion portion, e.g., at the distal end of insertion portion **30**, e.g., portion **34**. In some embodiments, one or more electrodes may be external to the body, e.g., an external counter electrode. The contact and operative portions of the electrodes are connected by circuit traces **42**, **44**, and **46** running on the surface of the substrate. In some embodiments, the traces are provided in channels, or may be embedded within the substrate, or may traverse different sides of the substrate. The conductive contacts, conductive traces, and electrodes are fabricated from conductive material, such as platinum, palladium, gold, carbon, or the like. More than one material may be used for a given sensor. Further details of sensors are described, e.g., in U.S. Pat. Nos. 6,175,572 and 6,103,033, which are incorporated by reference herein for all purposes.

Sensor **14** may include a proximal retention portion **48**. The insertion portion **30** and the proximal retention portion **48** are sized and configured to be positioned with a sharp for installation into the skin of a subject, as described herein. In use, the sensor **14** may be configured to bend (e.g., along the line B) and therefore be positioned in two substantially perpendicular, intersecting planes. Such bending may occur prior to or during coupling to the on body electronics as described below (See FIG. **17**).

Portions **48** and **52** provide a path for electrical connections, e.g., the conductive traces, between the proximal and distal portions of the sensor. Sensor **14** is further provided with a notch or cut-out **54**. Such configuration facilitates the sensor **14** to bend (e.g., along the line indicated by line B) such that retention portion **48** remains upright and therefore be positioned in two substantially perpendicular, intersecting

planes, as illustrated in FIG. **3**. As will be described below, the sensor tab **50** can be encased in the on body housing **122** to aid in securing and positioning the sensor **14**. Proximal retention portion **48** maintains its longitudinal alignment with insertion portion **30** for positioning within an insertion sharp.

Embodiments of analyte sensors have been described herein to operate electrochemically, through an arrangement of electrodes having chemical sensing layers applied thereto, by generating an electrical current proportional to the volume of a redox reaction of the analyte (and indicative of analyte concentration), catalyzed by an analyte-specific oxidizing enzyme. Embodiments exist in which the number of electrodes provided to bring about and detect the level of these reactions is two, three, or a greater number. However, other types of sensors may be employed as described herein.

A portion of sensor **14** may be situated above the surface of the skin, with a distal portion **30** penetrating through the skin and into the subcutaneous space in contact with the user's biofluid, such as ISF. Further details regarding the electrochemistry of sensor **14** is provided in U.S. Pat. Nos. 5,264,104; 5,356,786; 5,262,035; 5,320,725; and 6,990,366, each of which is incorporated by reference herein for all purposes.

In some embodiments, the sensor is implantable into a subject's body for a usage period (e.g., a minute or more, at least one day or more, about one to about 30 days or even longer, about three to about fourteen days, about three to about seven days, or in some embodiments, longer periods of up to several weeks) to contact and monitor an analyte present in a biological fluid. In this regard, the sensor can be disposed in a subject at a variety of sites (e.g., abdomen, upper arm, thigh, etc.), including intramuscularly, transcutaneously, intravascularly, or in a body cavity.

In some embodiments, sensor **14** is employed by insertion and/or implantation into a user's body for some usage period. In such embodiments, the substrate may be formed from a relatively flexible material.

While the embodiments illustrated in FIGS. **2-3** have three electrodes, other embodiments can include a fewer or greater number of electrodes. For example, a two-electrode sensor can be utilized. The sensor **14** may be externally-powered and allow a current to pass which currcnt is proportional to the amount of analyte present. Alternatively, the sensor **14** itself may act as a current source in some embodiments. In some two-electrode embodiments, the sensor may be self-biasing and there may be no need for a reference electrode. An exemplary self-powered, two-electrode sensor is described in U.S. patent application Ser. No. 12/393,921, filed Feb. 26, 2009, and entitled "Self-Powered Analyte Sensor," which is hereby incorporated by reference herein for all purposes. The level of current provided by a self-powered sensor may be low, for example, on the order of nanoamperes, in certain embodiments.

Insertion Assembly

Insertion assemblies are provided which are used to install a medical device to the subject. In some embodiments, an insertion assembly includes an inserter and the medical device itself. The inserter can be configured to insert various medical devices into the subject, such as, for example, an analyte sensor, an infusion set, or a cannula. In some embodiments, the inserter can be configured to install a combination of such devices, e.g., a combined sensor/infusion set, etc., at the same or different times or locations. For example, in certain embodiments, a given inserter can be configured to install a first device and a second device at different times. In this regard, the inserter can be reusable. For example, an inserter may be modifiable to be used with more than one medical device, to include more than one type of medical device, e.g., by attaching an adapter and/or detaching a portion of an inserter. The inserter can install the medical device in, under, or through the skin of the subject, or place the medical device on the surface of the skin. The medical device can include features or structures, e.g., barbs, tabs, adhesive, etc., to maintain the device in position with respect to the skin after insertion. The inserter device may also be used as a lancet, e.g., to pierce the skin without inserting or installing a medical device.

In some embodiments, an insertion assembly includes an inserter, a medical device, such as an analyte sensor, and a mount for supporting the medical device at least partially in or on the skin of the subject. In some embodiments, the mount is a support structure, plate and/or member which is attached, adhered, or otherwise secured to the skin of the subject. The mount may be inserted simultaneously with the medical device by the inserter. In other embodiments, the mount is installed after or before installation of the medical device. A mount may be applied by the inserter or separately. The mount may include features or structures (e.g., adhesive, guides, barbs, tabs, etc.) to maintain the sensor in position with respect to the skin after insertion and/or maintain the sensor in relative position with respect to the sensor control unit. In some embodiments, an adhesive pad or strip is used to secure the medical device, e.g., the sensor and/or the sensor control unit, and no mount is used.

In some embodiments, an insertion assembly includes an inserter, an analyte sensor, a mount, and a power supply. The mount and power supply may be inserted simultaneously with the analyte sensor by the inserter. In other embodiments, the mount and battery are installed after or before installation of the analyte sensor. In such case, the mount and/or power supply may be applied by the inserter or separately. The power supply may be used to provide a current or a potential to the sensor and/or to provide power for communication of one or more signals to the monitor unit.

In some embodiments, an insertion assembly includes an inserter, a medical device such as an analyte sensor, a mount, and a sensor control unit. The mount and sensor control unit may be deployed and/or installed simultaneously with the analyte sensor by the inserter. In other embodiments, the mount and sensor control unit are installed after or before installation of the analyte sensor. For example, the mount and the analyte sensor may be installed by the inserter, and the sensor control unit may be subsequently installed. In other embodiments, the mount is installed, followed by insertion of the analyte sensor by the inserter, and further followed by installation of the sensor control unit. In other embodiments, the mount and sensor control unit are installed first, and the analyte sensor is subsequently installed.

In some embodiments, electronics of the sensor control unit provide a voltage or current to the analyte sensor. In some embodiments, the electronics processes signals are provided by the analyte sensor. In further embodiments, the electronics may include communication functionality for providing signal relating to signal provided by the analyte sensor to a further component, such as, e.g., a monitor unit, a computer, or other component. In some embodiments, communications circuitry, such as RFID antenna or other communications circuitry, is provided. The power supply may be used to power some or all of these functions. In some embodiments, power is provided from the monitor unit, e.g., via inductive coupling.

An inserter may include a plurality of different components. For example, an inserter may include one or more

components for advancing a sharp towards the skin of the subject. The sensor and sensor control unit and/or mounting structure may be supported by a support structure, such as a carriage. A driver may be provided for advancing the sharp and/or the analyte sensor/support structure. In some embodiments, the actuator is directly or indirectly coupled to the sharp and/or support structure, such that manual force and speed applied by the subject to the actuator is transferred to the sharp and/or support structure. In some embodiments, the applied force drives the sharp and/or support structure between a retracted position and an advanced position. In some embodiments, the sensor and sensor control unit and/or mounting structure is maintained in a retracted position prior to installation by contacting projections extending inwardly from a sheath. In accordance with this embodiment, the sensor and sensor control unit and/or mounting structure are temporarily maintained operatively between the support structure and the projections disposed on the interior wall of the sheath.

An inserter can also include one or more components for retracting the sharp, while allowing the analyte sensor and optional mount and/or electronics to remain on the subject. The components for retracting the sharp can include a refractor. It is understood that the retractor and the actuator may be the same structure or include some common components. In some embodiments, the refractor is directly or indirectly coupled to the sharp such that the manual force applied by the user is transferred from the retractor to the sharp to retract the sharp from the skin. In other embodiments, a drive assembly may be provided to retract the sharp. For example, the drive assembly may include a spring, motor, hydraulic piston, etc., to retract the sharp away from the skin of the subject. The drive assembly may also include a linear drive component.

In some embodiments, the retractor withdraws the sharp upon actuation by the user. In such cases, the user actuates the retractor when it is desired to withdraw the sharp. For example, the retractor may include a release switch. Upon activation of the release switch, the drive assembly, e.g., the spring or other driver, retracts the sharp from the skin. In other embodiments, the retractor and the actuator include common components. After activating the actuator to advance the sharp and the analyte sensor, the user releases the actuator, which allows the drive assembly to withdraw the sharp from the skin.

In some embodiments, the retractor withdraws the sharp without further user interaction after actuation of insertion. For example, the inserter may include features or components which automatically retract the sharp upon advancement of the sharp and support structure by a predetermined amount. Inserter devices, in which no further action by the user is required to initiate withdrawal of the sharp after insertion, are referred to herein as having "automatic" withdrawal of the sharp.

Inserter Devices

One embodiment of a needle hub for an inserter is illustrated in FIGS. **4-5**. Needle hub **136** supports sharp **124**, having a sharpened distal portion **160**. In some embodiments, as discussed herein, a longitudinal wall opening or gap **162** is provided in at least a portion of the wall of the sharp **124**. The length N of the gap **162** is selected to be commensurate with the length of the insertion portion **30** through to the proximal retention portion **48** of the sensor, and in certain embodiments may be about 3 mm to about 50 mm, e.g., about 5 mm, or about 10 mm, or about 15 mm, or about 20 mm. The length L of the sharp **124** may be about 3 mm to about 50 mm, e.g., 5 mm or more, or about 10 mm, or about 20 mm, or about 30 mm, or about 50 mm, and is selected based upon the length of the insertion portion **30** of a sensor and the desired depth of the insertion portion **30** of the sensor **14**. In some embodiments, the distance or spacing between the two edges of the gap is about 0.2 mm to about 0.5 mm, e.g., about 0.22 mm, about 0.25 mm, etc.

The distal portion **160** of sharp **124** is illustrated in greater detail in FIGS. **6-8**. As illustrated in FIG. **6**, sharp **124** has a substantially "C"- or "U"-shaped profile in this embodiment, but may have other configurations, e.g., substantially "V"-shaped. A longitudinal gap **162** is provided in the wall of the sharp **124**. FIG. **7** illustrates distal portion **160** as provided with an angled tip. In some embodiments, the angled tip may be provided with a first angled tip portion **164** and a second steep-angled tip portion **166**. The exemplary configuration, which includes multiple edges and faces, provides a sharp point to reduce penetration force, trauma, and bleeding for the subject. The distal section of the sensor body has a width sized to fit within the gap **162** of the insertion sharp **124** having a diameter less than about 20 gauge to about 26 gauge, e.g., 21 gauge to about 25 gauge, where in certain embodiments the sharp is 21 gauge or 23 gauge or 25 gauge. Such sharp may be used with a sensor having a width or diameter—at least the portion that is carried by the sharp—of about 0.20 mm to about 0.80 mm, e.g., about 0.25 mm to about 0.60 mm, where, in some embodiments, the width or diameter of at least a portion of a sensor is 0.27 mm or 0.33 mm or 0.58 mm. In some embodiments, sharp **124** is fabricated from a sheet of metal and folded into a substantially "V," "U" or "C" configuration in cross-section. Various technologies can be used to manufacture a folded sheet of metal to form sharp **124**. For example, etched-sheet metal technology can be used to form the sharp **124**. In this manner, the sharp can be formed having a very sharp edge so that penetration through the skin during insertion is less painful. In other embodiments, a progressive die technology may be utilized to form a complex sheet-metal shape that has a sharp edge as depicted in FIG. **9**. In some embodiments, the sharp **124** can be molded with a plastic cap so that the sharp can be handled during the inserter assembly process. Further, the die cut sharp may be molded with plastic to reinforce the "V," "U" or "C" shaped sheet metal configuration. In other embodiments, a laser-cut sharp can be formed. In this manner, the laser can be used to form the wall opening or gap **162** and first-angled tip portion **164** and a second, steep-angled tip portion **166**.

In another embodiment, a sharp **124** may be formed from a standard hypodermic needle utilizing the method depicted in FIG. **10**. First, the hypodermic needle (having a circular cross-section) is cut to the desired length for sharp **124**. Next, the hypodermic needle is compressed so that its cross-section is permanently deformed from a circular shape to an oval shape. The tip of the hypodermic needle is then ground to a bevel to produce a sharp point to reduce the required penetration force, as previously discussed. Finally, the top section of the needle is removed by appropriate techniques (e.g., grinding, electropolishing, etc.). The resulting sharp **124** has a "U"-shaped configuration and provides ample space for the insertion of sensor **14**. In some embodiments, the tip-grinding step and the compression step may be carried out in reversed order.

Due to the compression step, a user may initially start with a larger diameter hypodermic needle so that the finished sharp **124** will have similar dimensions to the previously described sharps.

FIGS. **11-12** illustrate the position of on body housing **122** with respect to the needle hub **136** and sharp **124**. The on body

housing **122** can be configured to hold at least a portion of sensor **14** and sensor control unit. As illustrated in FIG. **11**, the sharp **124** extends through an aperture **168** in the on body housing **122**. Thus, in some embodiments, the sharp **124** is uncoupled to on body housing **122**. The distal portion of sensor **14** is positioned within the sharp **124**. As further illustrated in FIG. **12**, electronics of the sensor control unit (e.g., a printed circuit board containing electronics components of the on-body unit) and sensor hub **123** are positioned within on body housing **122**. Sensor **14** may include a positioning structure, or slit **127**, which receives a positioning member, such as tab **129** of sensor hub **123**. A power supply **82**, such as a battery, e.g., a single use disposable battery, or rechargeable battery, is provided. The power supply **82** is used to provide potential or current to the sensor in some embodiments. In embodiments where a passive communications protocol such as passive RFID is used, no power supply is provided for the communications. Such power is provided by the monitor unit. In some embodiments, where the sensor control unit is used to transmit one or more signals, one or more power supplies may be used to provide power for such communications circuitry. In some embodiments, the active operational life of the battery may exceed the active operational life of the sensor **14**.

FIG. **13** illustrates in cross-section the orientation of the on body housing **122** with respect to the sharp **124** of an inserter, such as inserter **1500** (see FIG. **52**). As discussed herein, sensor **14** is disposed in a substantially bent configuration in some embodiments, such that a portion of the sensor, e.g., the insertion portion **30** and the proximal retention portion **48**, are substantially vertical (e.g., substantially aligned with the longitudinal axis of an inserter and substantially perpendicular to the skin surface) and the contact portion **32** (shown in profile) is oriented in a substantially horizontal configuration, and in electrical contact with the data-processing unit electronics, such as circuit **80**. The sensor tab **50** can be encased in the plastic of the on body housing **122** (e.g., "overmolded") and secured in place. The notch **56** provides further stability to the sensor **14**, e.g., by allowing the sensor tab **50** to be encased by the material of the on body housing **122**, and further provides a means for vertically orienting the sensor **14** during mounting, e.g., by allowing vertical positioning of the notch **56** with respect to a vertical landmark of the on body housing **122**.

The sensor **14**, mounted with the on body housing **122**, can be disposed within a recess of the carriage **130** such as a concave recess in the carriage **130**. Alternatively, the sensor **14**, mounted with the on body housing **122**, can be disposed between the support structure and one or more projections extending from the wall of the sheath. In yet another alternative, the sensor **14**, mounted with the on body housing **122**, can be held in position by a releasable friction fit coupling to the sharp **124**. In this manner, the carriage need not have a recess within which the sensor mounted with the on body housing is disposed. In the initial configuration of the inserter, the sharp **124** extends through a longitudinal aperture **168** formed in a carriage **130**. In some embodiments, the aperture **168** is appropriately sized, such that neither the sharp **124** nor needle hub **136** is in contact with the carriage **130**. Accordingly, the needle hub **136** (and sharp **124**) on the one hand, and the carriage **130** (FIG. **13**) and the on body housing **122**, on the other hand, move simultaneously, but independently from one another. In other embodiments, a friction fit may be provided between the aperture and the sharp.

The insertion portion **30** and proximal retention portion **48** of the sensor **14** are disposed within a longitudinal bore **162** within the sharp **124** (See, e.g., FIG. **6**). The proximal retention portion **48** is disposed within the longitudinal bore of the sharp **124** and provides additional stability to the mounting of the sensor **14** within the sharp **124**. The longitudinal wall gap or opening **162** of sharp **124** is aligned with the sensor **14**, such that the tab **50** and the contact portion **32** extend laterally outward from the sharp **124**.

An embodiment of an inserter is illustrated in FIGS. **14-17**. An inserter **900** includes a handle **902** and may include a removable distal cap or seal (not shown) for maintaining a sterile environment for the medical device and sharp housed therein. As illustrated in FIG. **14**, distal cap or seal is removed from handle **902**. Inserter **900** includes a base **942** that defines a distal surface **912** for placement on the skin of a subject. Inserter **900** may be utilized to advance a medical device into the skin of the subject. In some embodiments, handle **902** is advanced relative to base **942** in order to advance the sensor into the skin of the patient.

As illustrated in FIG. **15**, the inserter **900** includes an initial configuration in which the handle **902** is disposed in a proximal position with respect to the base **942**. In such configuration, the sharp **924** is disposed in a configuration spaced apart from the aperture **920** of the adhesive layer **918**. Extending distally from the upper surface of handle **902** are side walls **974**, which terminate in a shoulder portion **975**.

Needle carrier **934** is axially slidable within handle **902** and base **942** in the direction of arrow N. Needle carrier **934** supports needle hub **936**, from which sharp **924** extends longitudinally within the inserter **900**. In some embodiments, the sharp is supported at an oblique angle, e.g., between 0° and 90° with respect to the skin surface. Initially, needle carrier **934** is coupled to inner rail **928** through inter-engagement of finger **986** of needle carrier **934** with shoulder **987** of inner rail **928**.

Inserter **900** includes an advancement spring **947**. Inner rail **928** includes a spring retention portion **984** for advancement spring **947**. The inner surface of handle **902** serves as an upper engagement surface for advancement spring **947**. In some embodiments, spring retention portion **984** is fabricated having several projections that extend through an aperture **982** in the wall of base **942**. Spring retention portion **984** is resiliently movable. As downward force is applied to handle **902**, the ledge **937** of handle **902** contacts spring retention portion **984**, driving such projections inward. Such inward motion releases the inner rail **928**, and allows advancement spring **947** to advance the inner rail **928** distally, thereby advancing the sharp **924** into the skin of the subject, as illustrated in FIG. **16**.

Refraction spring **946** is disposed between spring retention portion **948** of base **942** and shoulder portion **949** of needle carrier **934**. Initially, retraction spring **946** is in a compressed state. As carriage **930** reaches a distal position, the distal surface of the on body housing **122** engages the upper surface of adhesive pad **918**, thereby becoming adhered to the skin surface S of the subject. At the same time, flanges **970** of base **942** engage fingers **986** disposed on the needle carrier **934**. Fingers **986** are pivoted outwards by flanges **970**. Such pivoting of fingers causes fingers **986** to become disengaged from shoulder **984** of inner rail **928**. Shuttle **934** is thereby disengaged from inner rail **928**.

As illustrated in FIG. **17**, disengagement of the shuttle **934** from the inner rail **928** permits the spring **946** to expand, thereby advancing the needle carrier **934** to a proximal position, thereby withdrawing the sharp **924** from the skin of the subject, while leaving the sensor **14** in the skin.

A further embodiment of an inserter is illustrated in FIGS. **18-21** and designated inserter **1000**. Inserter **1000** is substantially identical to inserter **900** described herein, with the substantial differences noted herein and illustrated in the accompanying figures.

An inserter **1000** includes a housing **1002**, and may include a removable distal cap or seal (not shown) for maintaining a sterile environment for the medical device and sharp housed therein. As illustrated in FIG. **18**, distal cap or seal is removed from housing **1002**. Inserter **1000** includes a base **1042** which defines a distal surface **1012** for placement on the skin of a subject. Inserter **1000** may be utilized to advance a medical device into the skin of the subject. In some embodiments, side buttons **1084** are depressed relative to base **1042** in order to advance the medical device into the skin of the patient. In some embodiments, side buttons **1084** are depressed relative to base **1042** in order to advance the medical device into the skin of the patient.

As illustrated in FIG. **19**, the inserter **1000** includes an initial configuration in which the sharp **1024** is disposed in a configuration spaced apart from distal portion **1012** of the base **1042**. It is understood that inserter **1000** may incorporate an adhesive layer (not shown) positioned across the distal portion **1012** of base **1042**.

On-body unit inserter **1028** includes carriage **1030** for supporting on body housing **122**. On-body unit inserter **1028** also includes flange **1029** which normally rests on shoulder portions **1086** (as illustrated in FIGS. **19-21**). When side buttons **1084** are depressed inwardly, latch portions on flange **1029** are deflected from engagement with shoulder portions **1086**. As illustrated in FIG. **20**, advancement spring **1047** is released from compression, thereby advancing on-body unit inserter **1028** as elsewhere, along with needle carrier **1034** into the skin of the subject.

Retraction spring **1046** is disposed between needle carrier **1034** and housing **1002**. Initially, retraction spring **1046** is in a compressed state. As carriage **1028** reaches a distal position, on-body unit inserter **1028** is disengaged from needle carrier **1034**. The distal surface of the on body housing **122** engages the skin or the upper surface of adhesive pad (not shown), thereby becoming adhered to the skin surface S of the subject. Latches on needle carrier **1034** attach it to on-body unit inserter **1028**. Upon firing the inserter by pressing tabs **1084**, the on-body unit inserter **1028** is pushed by spring **1047** towards the skin surface, bringing along needle carrier **1034** and loading extension spring **1046**. As on-body unit inserter **1028** reaches the distal position (towards the skin of the subject), protrusions on housing **1002** disengage latches on needle carrier **1034**, connecting it to on-body unit inserter **1028**. Extension spring **1046** now pulls needle carrier **1034** back into the proximal position.

As illustrated in FIG. **21**, disengagement of the needle carrier **1034** from the inner rail **1028** permits the spring **1046** to contract with the bias, thereby advancing the needle carrier **1034** to a proximal position and withdrawing the sharp **1024** from the skin of the subject, while leaving the sensor **14** in the skin.

A further embodiment of an inserter is illustrated in FIGS. **22-25**. Inserter **1100** is substantially identical to inserters **900** and **1000** described herein, with the substantial differences noted herein and illustrated in the accompanying figures.

An inserter **1100** includes a housing **1102** and may include a removable distal cap or seal (not shown) for maintaining a sterile environment for the medical device and/or sharp housed therein. As illustrated in FIG. **22**, distal cap or seal is removed from housing **1102**. Inserter **1100** includes a base **1142** which defines a distal surface **1112** for placement on the skin of a subject. Inserter **1100** may be utilized to advance a medical device into the skin of the subject. In some embodiments, a manual actuator bar **1114** is depressed relative to base **1142** in order to advance the medical device into the skin of the patient. It is understood that inserter **1100** may incorporate an adhesive layer (not shown) which is positioned across the distal portion **1112** of base **1142**.

As illustrated in FIG. **23**, the inserter **1100** includes an initial configuration in which the sharp **1124** is disposed in a configuration spaced apart from distal portion **1112** of the base **1142**. Manual advancement of the actuator may be performed by distal advancement of actuator bar **1114**.

On-body unit inserter **1128** includes carriage **1130** for supporting on body housing **122**. Retraction spring **1146** is disposed between needle carrier **1134** and base **1142**. Initially, retraction spring **1146** is in a compressed state. As actuator bar **1114** is moved distally, carriage **1128** is moved distally and reaches a distal position, such that flanges **1188** of base **1142** engage fingers **1186** disposed on the shuttle **1134**. Fingers **1186** are pivoted outwards by flanges **1188**. Such pivoting of fingers **1186** causes fingers **1186** to become disengaged from shoulder **1187** of inner rail **1128**. Shuttle **1134** is thereby disengaged from inner rail **1128**. The distal surface of the on body housing **122** engages the skin or the upper surface of adhesive pad (not shown), thereby becoming adhered to the skin surface of the subject (FIG. **24**).

As illustrated in FIG. **25**, disengagement of the shuttle **1136** from the inner rail **1028** permits the spring **1146** to expand with the bias, thereby advancing the needle carrier **1136** to a proximal position and withdrawing the sharp **1124** from the skin of the subject, while leaving the sensor **14** in the skin. Once the sharp **1124** has been withdrawn from the subject, it is no longer accessible from the distal portion of the inserter **1100**, and unable to make contact by accident with the subject's skin.

A further embodiment of an inserter is illustrated in FIGS. **26-36**. Inserter **1200** is substantially identical to inserters **900**, **1000**, and **1100** described herein, with the substantial differences noted herein and illustrated in the accompanying figures.

Inserter **1200** includes a housing **1202**, an on-body unit inserter **1228**, a needle retractor **1234**, and a rotor **1208** with a torsion spring (not shown), all of which are depicted separately in FIGS. **28-31**. As illustrated in FIGS. **28-31**, housing **1202** includes slots **1254**; on-body unit inserter **1228** includes slots **1252**, tabs **1253**, and opening **1262**; needle retractor **1234** includes tabs **1250** and opening **1260**; and rotor **1208** includes rotor follower **1264**.

FIG. **32** illustrates an exploded view of inserter **1200**. As illustrated, in some embodiments, inserter **1200** includes housing **1202**, on-body unit inserter **1228**, needle retractor **1234**, and rotor **1208**. Tabs **1250** can be disposed on needle retractor **1234** and configured to engage slots **1252** disposed on on-body unit inserter **1228** when assembled as shown in FIG. **33**. Tabs **1253** can be disposed on on-body unit inserter **1228** and configured to engage slots **1254** disposed on housing **1202**. Needle retractor **1234** and on-body unit inserter **1228** can each contain openings (**1260**, **1262**) to receive rotor follower **1264** disposed on rotor **1208** after rotor **1208** has been inserted into housing **1202**. Additionally, on-body unit inserter **1228** can provide support for on body housing **122** (not shown) for installation to the skin of a subject.

As illustrated in FIG. **34**, in some embodiments, manually depressing the on-body unit inserter **1228** can cause the torsion spring to wind as the rotor **1208** rotates, guided by the cam path. As illustrated in FIG. **35**, continued distal advancement of the on-body unit inserter **1228** causes the rotor follower **1264** to go "over center" within cam **1264**. At such point, the torsion spring (not shown) is allowed to unwind (FIG. **93**). With reference to FIG. **36**, further unwinding of the torsion spring pulls up the needle retractor **1234** from the insertion site, while leaving the on-body unit inserter in place.

A further embodiment of an inserter is illustrated in FIGS. **37-46**. Inserter **1300** is substantially identical to inserters **900**, **1000**, **1100**, and **1200** described herein, with the substantial differences noted herein and illustrated in the accompanying figures.

Inserter **1300** includes a housing **1302**, an on-body unit inserter **1334**, a needle retractor **1328** and a rotor **1308** with torsion spring **1365**. As illustrated in FIGS. **37**, **38**, **39**, **45** and **46**, the on-body unit inserter **1334** and needle retractor **1328** are disposed within the housing **1302**. Rotor **1308** includes a rotor follower **1364** which engages a slot **1362** provided in the needle retractor **1328** and a slot **1360** in the on-body unit inserter **1334**. The on-body unit inserter **1334** provides a support portion for supporting on body housing **1302** (not shown).

In operation, torsion spring **1365** is loaded. A release button (not shown) is depressed in order to release torsion spring **1365**. Rotor **1308** drives on-body unit inserter **1334** and needle retractor **1328** downwardly simultaneously. A compression spring **1367** holds down on-body unit inserter **1334**. As rotor **1308** continues to rotate, slot **1360** allows on-body unit inserter **1334** to travel down and then be held down, while slot **1362** allows needle retractor **1328** to travel down and then back up to lift the needle from insertion site.

A further embodiment of an inserter is illustrated in FIGS. **47-51**. Inserter **1400** is substantially identical to inserters **900**, **1000**, **1100**, **1200**, and **1300** described herein, with the substantial differences noted herein and illustrated in the accompanying figures.

Inserter **1400** may be used for installation of a medical device, e.g., on body housing **122**, in connection with a cartridge or carrier **1406**. In some embodiments, inserter **1400** includes a body **1402** and an actuator **1404**. The carrier **1406** may include a needle hub **1436** including a sharp (not shown) as well as an on body housing **122**. In use, the body **1402** is placed on a mount **1408** attached to subject by use of an adhesive pad **1418**. As shown in FIG. **47**, carrier **1406** is loaded into inserter **1400** laterally as shown.

With reference to FIG. **48**, a first disposable portion of inserter **1400** includes adhesive pad **1418** and mount **1408**. The second disposable portion of inserter **1400** includes carrier **1406** which removably contains needle hub **1436** and sensor hub **1437** (not shown) which is substantially identical to on body housing **122** described herein. Inserter **1400** further includes body **1402**, actuator **1404**, and return spring **1409** (not shown). Mount **1408** is removably attached to body **1402**. Carrier **1406** can be slid on to body **1402** to transfer needle hub **1436** and carrier **1406** to inserter **1400**. As shown in FIG. **48**, carrier **1406** can then be removed from inserter **1400**. Needle hub **1436** and sensor hub **1437** remain in inserter **1400**. Adhesive pad **1418** is then adhesively applied to the skin of a subject. Alternatively, adhesive pad **1418** may be applied to the skin of a subject before attaching body **1402** and mount **1408**.

In FIG. **49**, actuator **1404** is pressed down, performing a manual insertion of needle hub **1436** and sensor hub **1437**, with the needle located in needle hub **1436** and a distal sensor portion penetrating the skin of the subject. When pressure is released from actuator **1404**, return spring **1409** (not shown) retracts the needle from the skin of the subject and out of sensor hub **1437**. As shown in FIG. **50**, body **1402** can be removed from mount **1408**, leaving sensor hub **1437** in mounting base **1408**. In FIG. **51**, in some exemplary embodiments, carrier **1406** is slid on to housing **1402**, transferring needle **1436** to carrier **1406**. Carrier **1406**, with needle **1436**, is then removed from housing **1402** and may be disposed of properly, and inserter **1400** is ready to be used again. Communication electronics (not shown) are then attached to mounting base **1408**, making electrical contact with sensor hub **1437**.

A further embodiment of an inserter is illustrated in FIG. **52**. Inserter **1500** is substantially identical to inserters **900**, **1000**, **1100**, **1200**, **1300**, and **1400** described herein, with the substantial differences noted herein and illustrated in the accompanying figures.

Inserter **1500** includes a housing **1502**, which may be fabricated as a molded plastic tube and may further include a living hinge cap **1504**. In some embodiments, a living hinge is a thin flexible plastic junction that connects two mating parts. The hinge keeps the parts attached and may be folded completely without failure to allow the two parts to fully mate.

Cap **1504** may be further provided with a cutout portion to provide access to the index finger and restrict the insertion motion along a desired axis. Cap **1504** is closed up and bonded to the housing through chemical or ultrasonic bonding after the bellow-button assembly (described herein) is provided.

Inserter further includes bellows **1506**, which, in some embodiments, is constructed from molded thin wall plastic with an integrated compression spring which collapses during the insertion action, and which provides the force to retract sharp **1524** after insertion. Bellows **1506** also hides sharp **1524** from exposure. The top portion **1520** of the bellows **1506** is secured to button **1514**, and bottom portion **1521** is secured to housing **1502**.

A button **1514** provides the capability of the user to insert on body housing **122** into the skin of the subject. Button **1514** may be fabricated from plastic and may further include anti-rotation features, e.g., recess **1515** which glides along longitudinal ridge **1517**, restricting motion to the desired longitudinal axis. Needle hub **1536** is glued or directly molded onto button **1514**. Sharp **1524** is securely held on to on body housing **122**, as described herein (See, e.g., FIGS. **11-13**).

An adhesive patch **1518** secures on body housing **122** to the skin of the subject. In some embodiments, the adhesive patch **1518** includes a high-tack (i.e., high strength adhesive) region for contact with the skin. A protective liner is provided for removal prior to insertion. On the side of the adhesive patch facing inserter **1500**, low-tack region **1530** is provided on the periphery of the patch to allow easy removal of housing **1502** after insertion is completed. A high-tack region **1532** is provided in the center portion of the patch to secure on body housing **122** in place.

Referring to FIGS. **53-55**, inserter kit **1600** is illustrated with inserter **2310** and an adhesive mount **2312** removably attached to the bottom thereof. Inserter **1600** is further described in U.S. Pat. No. 7,381,184, which is incorporated by reference herein for all purposes.

After preparing an insertion site on the skin, typically in the abdominal region, the user removes a liner (not shown) from adhesive mount **2312** to expose the bottom surface and a portion of the top surface of an adhesive tape **2320** located beneath mount **2312**. Mount **2312**, with inserter **2310** attached, is then applied to the subject's skin at the insertion site. Actuator button **2324** is depressed, causing inserter **2310** to fire, thereby inserting sensor **2314** into the subject's skin with a predetermined velocity and force. Once sensor **2314** has been inserted into the skin, the patient removes inserter **2310** from mount **2312** by pressing release tabs (not shown) on opposite sides of inserter **2310** and lifting inserter **2310** away from mount **2312**.

Once inserter **2310** is removed from mount **2312**, communications electronics (not shown) can be slid into place. The circuitry of the communications electronics device makes

electrical contact with the contact pads on sensor **2314** after the communications electronics is fully seated on mount **2312**. Once initialization and synchronization procedures are completed, electrochemical measurements from sensor **2314** can be sent wirelessly from the communications electronics to a receiver unit

In some embodiments, inserter kit **1600** is assembled from the following components: housing **2334**, actuator button **2324**, drive spring **2336**, shuttle **2338**, introducer sharp **2340**, sensor **2314**, retraction spring **2342**, inserter base **2344**, upper liner (not shown), adhesive mount **2312**, adhesive tape **2320**, and lower liner (not shown).

Shuttle **2338** is slidably and non-rotatably constrained on base **2344** by arcuate guides **2360**. Shuttle **2338** is generally formed by an outer ring **2362** and an inner cup-shaped post **2364** connected by two bridges **2366**. Bridges **2366** slide between the two slots (not shown) formed between guides **2360** and allow shuttle **2338** to travel along guides **2360** without rotating. Retraction spring **2342** is captivated at its outer circumference by guides **2360**, at its bottom by the floor **2370** of base **2344**, at its top by bridges **2366**, and at its inner circumference by the outer surface of shuttle post **2364**. Drive spring **2336** is captivated at its bottom and outer circumference by the inside surface of shuttle post **2364**, at its top by the ceiling **2372** inside actuator button **2324**, and at its inner circumference by stem **2374** depending from ceiling **2372**. When drive spring **2336** is compressed between actuator button **2324** and shuttle **2338** it urges shuttle **2338** towards base **2344**. When retraction spring **2342** is compressed between shuttle **2338** and base **2344**, it urges shuttle **2338** towards actuator button **2324**.

Retraction spring **2342** will return shuttle **2338** to the neutral position as shown after firing, but without sensor **2314** which remains inserted in subject's skin. Drive spring **2336** is preferably designed to be stiffer than retraction spring **2342** so that shuttle **2338** oscillations are quickly dampened out, and so introducer sharp **2340** does not return to sensor **2314** or the patient to cause injury. With sensor **2314** inserted in the subject's skin, inserter **2310** can be removed from mount **2312** and then lifting inserter **2310** away from mount **2312**. Introducer sharp **2340** remains protected inside housing **2334** during disposal of inserter **2310**. Communications electronics can now be slid into place on mount **2312** as previously described.

In some embodiments, a proximal portion of stem **2374** is enlarged to create an interference fit with the coils of spring **2336**. For example, one or more laterally extending ribs **2610** are added to stem **2374**. The interference fit between ribs **2610** and spring **2336** is typically provided at the proximal (top) coils of spring **2336**.

The diameter of the coils of spring **2336** increases slightly when compressed and decreases slightly when extended. Ribs **2610** on stem **2374** provide greatest interference when spring **2336** is extended. The interference fit provides increased stability of shuttle **2338** during insertion. In some embodiments, the interference fit prevents or minimizes distal movement of spring **2336**, which may cause impact of spring **2336** against shuttle **2338** and the end of the distal travel of these components.

Referring to FIGS. **56-70**, in another exemplary embodiment, inserter **2600** generally includes: actuator button **2602** (FIG. **57**), shuttle **2604** (FIG. **58**), inserter sharp **2610** with skin piercing edge **2612** (FIG. **58**), retraction spring **2608** (FIG. **59**), sensor **2614** (FIG. **60**), housing **2616** (FIG. **61**), and base **2618** (FIG. **62**). It is understood that inserter **2600** may include additional or fewer components than described herein. Inserter **2600** is substantially identical to inserter **1600** described herein, with the substantial differences noted herein and illustrated in the accompanying figures. The assembly of the different components of inserter **2600** is depicted in FIGS. **63-65**. As shown in FIG. **63**, actuator button is adapted to be slidably inserted through an opening in shuttle **2604** where it locks into position. Further, as shown in FIG. **64**, retraction spring **2608** is adapted to be inserted into a second opening on the opposite side of shuttle **2604**. Additionally, in this view, sensor **2614** has been attached to inserter sharp **2610**. As shown in FIG. **60**, sensor **2614** incorporates a biasing arm **2615** that positively seats the sensor **2614** into the inserter sharp **2610**. This allows the inserter sharp **2610** and sensor insertion portion **30** to be smaller, reducing the trauma and pain to the subject. Any number of the aforementioned sensor connection methods can be utilized in conjunction with inserter **2600**. For example, inserter sharp **2610** may be provided with rails and dimples, as previously described, in order to retain sensor **2614**, the sharp **2610** having a diameter of about 20 to about 26 gauge, e.g., 21 gauge to about 25 gauge, where, in certain embodiments, the sharp is 21 gauge or 23 gauge or 25 gauge. Such sharp may be used with a sensor having a width or diameter—at least the portion that is carried by the sharp—of about 0.20 mm to about 0.80 mm, e.g., about 0.25 mm to about 0.60 mm, where, in some embodiments, the width or diameter of at least a portion of a sensor is 0.27 mm or 0.33 mm or 0.58 mm.

FIG. **66** depicts a cross-sectional view of the assemblage of FIG. **65** after inserter **2600** has been fully assembled (joining housing **2616** to base **2618**). As depicted, retraction spring **2608** is surrounded by guides **2622** on its sides and by shuttle **2604** and base **2618** when inserter **2600** is assembled. Additionally, shuttle **2604** is adapted to slidably move on rails (not shown) within base **2618**, thereby allowing it to move in a linear direction when actuator button **2602** is depressed. FIG. **66** depicts the actuator button **2602** locked onto the shuttle **2604** using the first of two detent grooves **2607**. In this configuration, the shuttle **2604** and actuator button **2602** are in a locked state relative to the housing **2616** and base **2618**, preventing accidental deployment of the shuttle during shipping and handling. This configuration also allows for significantly smaller packaging, resulting in lower shipping costs and improved bulk process efficiencies such as sterilization. FIG. **67** depicts the actuator button **2602** locked onto the shuttle **2604** using the second of two detent grooves **2607**. In this configuration, the shuttle is ready to be deployed. The actuator button **2602** is moved to the second detent groove **2607** by a user pulling axially on the actuator button **2602** and housing **2616**.

FIGS. **68-70** illustrate the steps utilized to deploy sensor **2614** using inserter **2600**. FIG. **68** depicts inserter **2600** in a first configuration. The upward force exerted by retraction spring **2608** on shuttle **2604** (and consequently actuator button **2602**) keeps inserter **2600** in its cocked position in the first configuration. As actuator button **2602** is pressed by a user against the bias of retraction spring **2608**, it exerts a downward force on shuttle **2604** and retraction spring **2608**. Introducer sharp **2610**, on which sensor **2614** is mounted, is consequently driven downward and into the skin of the subject (e.g., to a second configuration). Skin piercing edge **2612** pierces the skin of the subject and allows sensor **2614** to be properly inserted, as shown in FIG. **69**.

As the force is removed from actuator button **2602**, retraction spring **2608** exerts an upward force on shuttle **2604**, thereby causing introducer sharp **2610** to return proximally to its original position inside of housing **2616** (e.g., to the first configuration). Sensor **2614** remains implanted in the patient's skin, as shown in FIG. **70**. In this position, the

plunger is bent approximately 90 degrees by the user, which prevents further use of the device, and provides obvious visual and tactile indications that the device is used and ready to be disposed.

In another aspect of the disclosed subject matter, an inserter assembly, as illustrated in FIG. **71**, is provided which is useful for installing a medical device, such as an analyte sensor, in the skin of a subject. Inserter assembly **4300** may include an inserter, a medical device, such as an analyte sensor, and a mount for positioning the medical device at least partially in or on the skin of the subject. In some embodiments, the mount is a support structure, plate and/or member which is attached, adhered, or otherwise secured to the skin of the subject. The mount may be applied to the skin of the subject simultaneously with the medical device by the inserter. In other embodiments, the mount is installed after or before installation of the medical device. A mount may be applied by the inserter or separately. The mount may include features or structures (e.g., adhesive, guides, barbs, tabs, etc.) to maintain the sensor in position with respect to the skin after insertion and/or maintain the sensor in relative position with respect to the sensor control unit.

Inserter assembly **4300** is useful for analyte measurement systems, e.g., glucose measurement systems which include an on-body unit that may be assembled on the skin of the subject. For example, the on-body unit may include a sensor and a sensor control unit. The sensor is typically installed in the patient. Subsequently, the sensor control unit is installed and coupled to the sensor. In other embodiments, the sensor control unit is installed at the patient first, followed by installation of the sensor, which is then coupled to the sensor control unit. In yet other embodiments, the sensor and sensor control unit are simultaneously installed and coupled. An optional mount may or may not be used to position the sensor and/or the sensor control unit.

Generally, the inserter assembly **4300** is useful to install a sensor in the skin of a subject. A sensor (not shown) may be preloaded within inserter **4310** prior to installation. After preparing an insertion site on the skin of a subject, the user removes an upper liner **4316** and lower liner **4318** from mount **4312** to expose the bottom surface and a portion of the top surface of an adhesive tape located on the bottom surface of the mount **4312**. Mount **4312**, with inserter **4310** attached, is then applied to the subject's skin at the insertion site. In some embodiments, the mount **4312** is first attached, and then the inserter is coupled to or positioned within and/or adjacent to the mount **4312**. The inserter includes an actuator button **4324** (see FIG. **74**) to be depressed causing inserter **4310** to fire, thereby inserting a sensor into the user's skin. As will be described herein, certain embodiments install the sensor with a predetermined velocity and force upon actuation. In some embodiments of the disclosed subject matter, the inserter includes a safety member to impede actuation of the inserter as described below.

In some embodiments, the sensor **4314** remains positioned at the mount **4312** by one or more positioning techniques. For example, as illustrated in FIG. **72**, sensor **4314** has a surface **4356** that extends orthogonally from main surface **4346**. Surface **4356** may include an adhesive portion that contacts the subject's skin **4328** or the mount **4312**. In some embodiments, the raised end stop **4444** of mount **4312** is provided with a raised bead or bump which is received in an aperture in sensor **4314**. Following insertion of the sensor **4314** into the skin, the user may remove the inserter **4310** from mount **4312**, e.g., by pressing release tabs **4326** on opposite sides of inserter **4310** and lifting inserter **4310** away from mount **4312**. In some embodiments, the inserter **4310** is retained by other techniques, e.g., a friction-fit or a snap-fit with the mount **4312**.

Once inserter **4310** is removed from mount **4312**, a sensor control unit **4330** can be positioned into place with respect to the mount **4312**. The circuitry of sensor control unit **4330** makes electrical contact with the contacts on sensor **4314** after sensor control unit **4330** is seated on mount **4312**. For example, as shown in FIG. **72**, seal has an exterior wall for surrounding electrical contacts on sensor **4314** (not shown in FIG. **72**), and interior walls for isolating electrical contacts from each other. In some embodiments, rails on sensor control unit **4330** are slidable within corresponding rails or grooves **4434** on mount **4312**.

In some embodiments, initialization and synchronization procedures are completed, and then electrochemical measurements from sensor **4314** can be provided from sensor control unit **4330** to a monitor unit, such as, e.g., portable monitor unit **4332**, shown in FIG. **73**. Sensor control unit **4330** and monitor unit **4332** communicate via connection **20** (in this embodiment, a wireless radio frequency (RF) connection). Communication may occur, e.g., via RF communication, infrared communication, Bluetooth® communication, Zigbee® communication, 802.1x communication, or WiFi communication, etc. In some embodiments, the communication may include a radio frequency of 433 MHz, 13.56 MHz, or the like. In some embodiments, communication between sensor control unit **4330** and monitor unit **4332** may include radio frequency identification (RFID) techniques, and may be active RFID or passive RFID, where, in some embodiments, passive RFID technology and the respective system components include the necessary components therefor. For example, in one embodiment, the monitor unit may include a backscatter RFID reader configured to transmit an RF field such that when the sensor control unit is within the transmitted RF field, an antenna is tuned and in turn provides a reflected or response signal (for example, a backscatter signal) to the monitor unit. The reflected or response signal may include sampled analyte level data from the analyte sensor. Additional exemplary details for various embodiments can be found in, e.g., U.S. patent application Ser. No. 12/698,124 filed Feb. 1, 2010, the disclosure of which is incorporated by reference herein for all purposes.

Sensor **4314**, mount **4312** and sensor control unit **4330** can remain in place on the subject for a predetermined maximum period of time that may include hours, days, weeks, or a month or more. These components are then removed so that sensor **4314** and mount **4312** can be properly discarded in some embodiments. The entire procedure above can then be repeated with a new inserter **4310**, sensor **4314** and mount **4312**, reusing sensor control unit **4330** and monitor unit **4332**. In other embodiments, inserter **4310** is reusable.

Referring to FIG. **74**, the inserter assembly **4300** according to one embodiment can be assembled as shown from the following components: housing **4334**, actuator button **4324**, drive spring **4336**, shuttle **4338**, introducer sharp **4340**, sensor **4314**, retraction spring **4342**, inserter base **4344**, upper liner **4316**, adhesive mount **4312**, adhesive tape **4320**, and lower liner **4318**.

In some embodiments, sensor main surface **4346** is slidably mounted between U-shaped rails **4348** of introducer sharp **4340**. In addition to the holding members disposed on the introducer, as described above, retention techniques are provided in certain embodiments to retain the sensor **4314** in position on sharp **4340** during storage of the inserter **4300** and/or during insertion of the sensor **4314** into the subject's skin. For example, a sensor dimple (not shown) is provided

which engages an introducer dimple (also not shown). Introducer sharp **4340** can be mounted to face **4354** of shuttle **4338**, such as with adhesive, heat stake or ultrasonic weld.

In some embodiments, shuttle **4338** can be slidably and non-rotatably constrained on base **4344** by arcuate guides **4360**. The shuttle can be generally formed by an outer ring **4362** and an inner cup-shaped post **4364** connected by two bridges **4366**. Bridges **4366** can be configured to slide between the two slots **4368** formed between guides **4360** and allow shuttle **4338** to travel along guides **4360** without rotating. In some embodiments, a retraction spring **4342** is provided, which can be captivated at its outer circumference by guides **4360**, at its bottom by the floor **4370** (see FIG. **75**) of base **4344**, at its top by bridges **4366**, and at its inner circumference by the outer surface of shuttle post **4364**. In some embodiments, a drive spring is provided for advancing the sensor **4314** and the sharp **4340** into the skin of the subject. For example, drive spring **4336** is captivated at its bottom and outer circumference by the inside surface of shuttle post **4364**, at its top by the ceiling **4372** (see FIG. **75**) inside actuator button **4324**, and at its inner circumference by stem **4374** depending from ceiling **4372**. In some embodiments, a drive spring is omitted from the inserter assembly. In such case, for example, sensor **4314** and sharp **4340** are distally advanced by manual force applied by a user.

When drive spring **4336** is compressed between actuator button **4324** and shuttle **4338** it can urge shuttle **4338** towards base **4344**. When retraction spring **4342** is compressed between shuttle **4338** and base **4344**, it urges shuttle **4338** towards actuator button **4324**.

When sensor **4314**, introducer sharp **4340**, shuttle **4338**, retraction spring **4342**, drive spring **4336** and actuator button **4324** are assembled between base **4344** and housing **4334** as shown in FIGS. **74-75** and described above, housing **4334** is snapped into place on base **4344**. Base **4344** is held onto housing **4334** by upper base barbs **4390** that engage upper openings **4392** in housing **4334**, and lower base barbs that engage lower openings in housing **4334**. Further details regarding the construction and operation of inserter **4300** is provided in U.S. Pat. No. 7,381,184 which is incorporated by reference herein in its entirety for all purposes.

In some embodiments, retention techniques and/or structures are provided to assist in supporting the sensor **4314** with respect to the sharp **4340** during storage and insertion. As illustrated in FIGS. **76-90**, retention mechanisms are provided which are located on the sensor and/or the sharp.

FIGS. **76-77** illustrate a sensor **4514** which is provided with one or two laterally extending tabs **4560**. Tabs **4560** engage the rails **4548** of the sharp **4540** for retention. In some embodiments, a radiused edge on the ears allow them to be formed in two punch operations, e.g., a hole punch and a straight cut. A gap between left hard-stop **4549** and the top of sensor **4514** produces, during firing, a moment that biases the sensor tip into the sharp channel. During deployment, the sensor deflects to disengage the sharp.

FIGS. **78-79** illustrate an inserter having a sensor retention mechanism in accordance with a further embodiment of the subject disclosure. Sharp **4640** is provided with a clip **4660** that engages a retention window **4662** at the top of sensor **4614** to provide retention of sensor **4614** in sharp **4640**, and vertical registration. Two drive blocks **4659** and **4661** on carrier **4654** traverse sharp **4640** to engage the top edge of sensor **4614**. There is a gap between the left drive block **4659** and the top edge of sensor **4614**. Right drive block **4661** is in contact with the top edge of sensor **4614**. During insertion, the upward drive force of the skin on sensor **4614** produces a clock-wise rotational moment on sensor **4614** that biases sharp **4614** into the sharp channel.

The clip feature **4660** and the window **4662** can be moved to the left to bias the tip of the sensor **4614** into the channel during shipping. During deployment, the sensor **4614** and the clip **4662** deflect to transfer the sensor **4614** to the mount **4312**.

FIG. **80** illustrates a further embodiment of a sensor retention technique. In particular, sensor **4714** is provided with a retention member **4760**, which extends from the contact portion **4732** of the sensor **4714**. Retention member **4760** is resiliently biased in the position as shown. When the sensor **4714** is inserted within the sharp (not shown), the retention member engages the inner portion of rails (not shown) of the sharp, and provides a retention force to the sensor **4714**.

FIG. **81** illustrates another embodiment of a sensor retention technique. Sensor **4814** is provided with a dimple **4860** which is thermally formed. As shown in FIG. **82**, a raised bump **4864** on the sharp **4840** frictionally contacts thermally formed dimple **4860** in order to provide retention force to the sensor **4814**. In some embodiments, raised bump is formed using heat. In another embodiment, a raised bump is formed on the sensor and the dimple is formed on the sharp.

FIGS. **83-84** illustrate an aperture **4960** which is formed in the contact portion of the sensor **4914**. A raised bump or tab **4962** is provided on the sharp **4940**. The interaction of the tab **4962** within the aperture **4960** of the sensor **4914** assists in retaining the sensor **4914** within the inserter.

FIGS. **85-86** illustrate a technique for retention of the sensor **5014** which is similar to the techniques illustrated in FIGS. **81-84**. For example, a raised bump **5062** is provided on sharp **5040** which engages the contact portion **5032** of the sensor **5014**. In such configuration, the raised bump **5062** creates a bias force against the contact portion **5032**. Such force acts as a frictional force to assist retention of the sensor **5014** within the sharp **5040**.

FIGS. **87** and **88** illustrate sensors having retention members which engage a raised post or button on the sharp. FIG. **87** illustrates that contact portion **5132** of sensor **5114** includes a pair of "pincer fingers" **5160** having a substantially arcuate configuration which surround and engage a post **5162** provided on the sharp. Similarly, FIG. **88** illustrates sensor **5214** having a pair of proximally extending arms **5260**, which engage a post **5262** on the sharp.

FIG. **89** illustrates a sensor **5314** having a laterally extending arm **5360** which defines a channel **5364** between the arm **5360** and the contact portion **5332** of the sensor **5314**. As illustrated in the figure, a post **5360** may be positioned within the channel **5364**, and provides frictional resistance to maintain the sensor **5314** within the sharp.

FIG. **90** illustrates a sensor **5414** having a proximally extending arm **5460** which defines a channel **5362** between the arm **5460** and the contact portion **5432** of the sensor **5414**. As illustrated in the figure, a tab **5364** is provided on the arm **5460** and is received within a gap provided in the rails of the sharp. This interaction of the tab **5364** with the gap provides frictional resistance to maintain the sensor **5414** within the sharp.

FIGS. **91-92** refer to sensor retention techniques which include a retention member which provides a frictional force substantially normal (perpendicular) to the surface of the sensor. FIGS. **91** and **92** illustrate a retention member which is provided within the housing **5534** of the inserter **5510**. For example, the retention member **5560** may extend distally from the housing **5534** and includes a laterally extending tab **5562** which contacts the sensor **5563** and provides a frictional force to assist retention of the sensor within the sharp **5540**.

FIGS. **93** and **94** illustrate a retention member which is provided with the base **5644** of the inserter **5610**. For example, retention member may include a cantilever **5660** which extends proximally from base **5644** of the inserter **5610**. Cantilever **5660** may include a laterally extending member **5662** which contacts the sensor **5661** and provides a frictional force to assist retention of the sensor within the sharp **5640**. When the carrier **5666** bottoms down, the cantilever **5660** ceases contact and release of the sensor occurs.

FIGS. **95** and **96** illustrate a resilient or elastomeric member which is disposed within the housing **5734** of the inserter **5710**. For example, elastomeric member **5760** is manufactured from TPE and presses against the sensor and the resulting friction keeps the sensor in place. The TPE material creates a higher friction with respect to the sensor, and therefore requires less pressure to produce the sensor holding force. When the inserter **5710** is actuated, the frictional forces are directed upward keeping the sensor inside the sharp. When the carrier bottoms down, the contact with the friction rib ceases and the sensor releases to the mount. In some embodiments, the elastomeric member **5760**, or rib, is produced with a second-shot injection molded process or press-fit into housing **5734**.

FIGS. **97** and **98** refer to retention members which provide a frictional force in a substantially coplanar direction to the surface of the sensor. FIG. **97** illustrates a retention member or cantilever **5860** which is biased against the side edge of the contact portion **5832** of the sensor **5814**. In some embodiments, cantilever **5860** is provided on the carrier or sharp (not shown). FIG. **98** illustrates a sensor retention technique which includes a retention member, or cantilever **5960** which is biased against the sensor, as described in FIG. **97**. Cantilever **5960** includes a laterally extending portion which is at least partially received in an optionally provided notch **5964** in sensor **5914**. In addition, a second retention member, or retention spring **5990**, is provided which is biased to engage the front surface of the sensor. In some embodiments, retention spring **5990** is partially received in cut-out **5994** (or a slot) to capture the sensor.

In some embodiments, an inserter assembly is provided which includes a reusable inserter apparatus. Repeated uses of the inserter include the use of a removable and exchangeable sensor and sharp which may be coupled to the inserter during deployment of the sensor, and in which the sharp is removed and discarded after deployment.

FIGS. **99-101** illustrate a system of sharp/sensor packs **6002** which contain a plurality of sensor/sharp combinations **6006**. As illustrated in FIGS. **99** and **101**, a support is provided which includes a plurality of trays **6004** which are useful for containing the sensor/sharp configuration **6006**, and well as a desiccant **6010** which is contained in a chamber **6008**. A well **6012** is provided on one side of the tray **6004** to accommodate the sensor sharp for installation into a patient. A cover, such as a foil lid **6014** is applied to the top of the support to maintain the sterility of the sensor/sharp combination until installation in a subject. FIG. **100** is a perspective view which illustrates an exemplary configuration of pack **6002**. The foil lid **6014** for each of trays **6004** may include a tab **6016** to facilitate removal of the lid from the tray **6004** (FIGS. **100**, **101**).

FIGS. **102-105** illustrate a plurality of reusable inserters which are useful in combination with the sharp/sensor packs **6002** described herein. FIG. **102** illustrates an inserter **6030** which includes a body portion **6032**, a loading or cocking structure **6036**, and an actuator button **6040** for deploying the sensor into the skin of the subject. The advancement structure of inserter **6030** may include a cocking structure which is pulled to arm, e.g., by withdrawing the cocking structure **6036** from the housing **6032**; which is pushed to arm, e.g., by depressing the cocking structure **6036** into the housing **6032**; or which is rotated to arm, e.g., by rotating the cocking structure **6036** in a rotational movement parallel to the longitudinal axis of the inserter **6030**, or perpendicular to the longitudinal axis of the inserter **6030**. The driving mechanism of inserter **6030** is substantially similar to the driving mechanisms as disclosed in U.S. Patent Publication 2008/0082166, now U.S. Pat. No. 8,167,934, U.S. Pat. No. 6,197,040, or U.S. Pat. No. 4,976,724, which are incorporated by reference in their entirety herein for all purposes.

To insert the sharp/sensor combination into the inserter **6030**, the foil lid is removed from sharp/sensor pack **6002**. The distal end portion **6034** of the inserter **6030** is positioned within the walls **6004** of the tray **6002**, as indicated in the direction of arrow E. The distal end portion **6034** comes to rest on the upper surface of desiccant chamber **6008**, such that the insertion sharp remains exposed.

FIG. **103** illustrates an inserter **6130** substantially identical to the inserter **6030** described herein. Inserter **6130** is used in connection with sharp/sensor trays **6102**. Trays **6102** include a desiccant chamber **6108** which is located in the center portion of the tray **6102**. Accordingly, a channel **6112** surrounds the periphery of desiccant chamber **6108**. When the inserter **6130** is applied to the sharp/sensor tray **6102**, the distal end portion **6134** can be positioned within the channel **6112**. As illustrated in FIG. **103**, this configuration allows the sensor and sharp to be completely housed within the inserter **6130**.

FIG. **104** illustrates an inserter **6230** substantially identical to the inserters **6030** and **6130** described herein, with the differences noted herein and illustrated in the figures. Inserter **6230** may be used in connection with sharp/sensor trays **6204**. The tray **6204** and inserter **6230** are sized and configured such that tray **6204** is capable of being positioned entirely within the distal end portion **6234** of inserter **6230**. One or more support struts **6220** are provided adjacent the distal end portion **6234** to stabilize the inserter with respect to any surface on which the inserter **6230** and trays **6204** are placed for the insertion step. Support struts **6220** may also secure inserter **6230** to an adhesive mount (not shown) during insertion.

FIG. **105** illustrates an inserter **6330** which is substantially identical to the inserters **6030**, **6130**, and **6230** described herein, with the differences noted herein and illustrated in the figures. Inserter **6330** may be used in connection with sharp/sensor tray **6304**. In some embodiment, tray **6304** includes a distally projecting handle portion **6340** which may be grasped by the user to facilitate insertion of the sharp/sensor into the inserter.

FIGS. **106-107** illustrate an exemplary sharp/sensor combination for use with inserters **6030**, **6130**, **6230**, and **6330** described herein. Sharp **6440** includes side rails **6448** for sliding reception of a sensor therein. A locking tab **6450** is also provided on the proximal portion of the sharp and includes cut-out portion **6452** for interlocking with the carrier of the inserter **6030** (or **6130**, **6230**, or **6330**). As illustrated in FIGS. **108-112** carrier **6466** includes reception structure for mating reception with the sharp **6440**. For example, carrier **6466** may include a pair of walls **6478** providing a channel **6480** in which said sharp **6440** may be positioned. Walls **6478** are provided with cutout portions **6482** for reception of undercut portion **6452** in locking tab **6450**. A pair of securement members **6484** are movably mounted on the carrier **6466**. For example, members **6484** are biased via a spring **6486** towards a center portion of the carrier **6466**. As illustrated in FIG. **111**, securement members **6484** may be moved outwardly against the spring bias to allow for the insertion of the locking tab

6450 into the cutout portion 6482 of the carrier. Securement member 6484 is subsequently released and returns to a position to engage the undercut portion 6452 to prevent accidental removal of the sharp and sensor from the inserter (FIG. 112). It is understood that coupling of the sharp and carrier may be provided by alternative techniques such as frictional fit, snap-fit, bayonet mounts, magnetic coupling, etc.

FIGS. 113-117 illustrate a further embodiment of the subject disclosure that is reusable, and useful with the sharp/sensor packs discussed herein. FIG. 113 illustrates a sensor pack 6504 which is similar to the sensor packs described herein. Sharp/sensor pack 6504 also includes one or more reinforcing ribs 6574 to prevent accidental deformation of the pack 6504 when the sensor is being inserted into the inserter.

As illustrated in FIG. 114, inserter 6530 is provided which is substantially similar to inserters 6030, 6130, 6230, and 6330 described herein, with the differences noted herein or illustrated in the figures. Inserter 6530 includes a carrier (not shown) for coupling with a sharp/sensor combination. As illustrated in the figure, inserter 6530 is lowered onto sharp/sensor pack 6504 in order to couple the sharp 6506 with the carrier. As illustrated in FIG. 115, inserter 6530 which now contains the sharp/sensor 6506 is positioned over the mount 6512. Mount 6512 may include an adhesive for securement to the skin of the subject. Inserter 6530 includes a locking structure 6526 which allows for temporary engagement of the inserter 6530 with the mount 6512.

As illustrated in FIG. 116, the sensor is deployed by depressing actuation button 6532 on the inserter 6530 to advance the sensor into the skin by use of an internal drive mechanism, such as, e.g., a spring. It is understood that the above-described process may alternatively be carried out by using an inserter which allows the user to provide a manual distal force for deployment of the sensor.

Following installation of the sensor, inserter 6530 is decoupled from the mount, e.g., by depressing locking buttons 6526 on inserter 6530. Once the inserter 6530 is separated from the mount, the user may remove and discard the sharp. In some embodiments, inserter 6530 includes a sliding lever 6540 which allows for removal of the sharp. It is understood that disengagement of the sharp from carrier may be executed in one of several ways, e.g., sliding switch allows securement member (discussed herein) to slide outwardly and allow disengagement of the contact portions 6483 of the securement members 6484 from the undercut portions 6452 of locking tab 6450.

FIG. 118 illustrates an inserter 6630 and engagement structure for mounting on mount 6612. Inserter 6630 includes a body portion 6640 which is configured to advance a sharp/sensor cartridge into the skin S of a subject along longitudinal axis LON. The longitudinal axis LON may be substantially perpendicular to the skin surface. In some embodiments, axis LON forms an acute angle with the skin surface. Mount 6612 and inserter 6630 are each provided with complementary locking structures 6662 on the mount 6612 and 6664 on the inserter. Inserter is advanced laterally (direction LAT) over mount 6612. Inserter 6630 may be locked in place by pivoting locking structure 6632 about pivot 6626. Following such pivoting action, the engagement portion 6666 of locking structure 6632 is received in recess 6668 in mount 6612. Securement of the inserter to the mount is further provided by insertion of the sharp/sensor cartridge 6650 between the inserter 6630 and the mount 6612. For example, cartridge 6650 includes raised tabs 6654 which are slidable within complementary grooves 6652 provided on the inserter 6630 and mount 6612. Insertion of the cartridge is carried out in a direction perpendicular to the direction in which the inserter is attached to the mount, e.g., a direction perpendicular to the plane of the page.

FIGS. 119-121 illustrate another embodiment of an inserter in accordance with the disclosed subject matter. Inserter 6730 is useful for advancing a medical device, such as an analyte sensor, into the skin of a subject. Inserter 6730 includes a hammer member 6760 which accumulates advancement energy to provide a more rapid and powerful advancement stroke. As illustrated in FIG. 119, hammer member 6760 is initially positioned somewhat askew with respect to the longitudinal axis of the device. As the alignment trigger 6734 is advanced distally, alignment sleeves 6736 gradually pivot the hammer member 6760 into a longitudinal configuration. As the hammer member 6760 is being pivoted into position, the advancement spring continues to be compressed. With reference to FIG. 120, the hammer member 6760 is pivoted into alignment with the central bore of the inserter 6730, e.g., along the longitudinal axis represented by the arrow. Consequently, the tension of advancement spring 6742 is immediately released, which permits rapid distal movement of the hammer member 6760. Hammer member 6760 contacts carrier 6744, which in turn contacts sharp/sensor combination 6718 to provide distal movement.

As illustrated in FIG. 121, a ledge or lateral member 6726 is provided with the internal bore of the inserter. As the hammer member 6760 advances distally, the distal surface of the hammer member contacts the ledge 6726. Interengagement of the hammer member 6760 and the ledge 6726 inhibits further distal travel of the hammer member 6760.

FIG. 122 illustrates an exemplary embodiment of a simplified unit, or cartridge 6800, which holds certain components for sterility and subsequent interaction with the subject. In some embodiments, the components include the sharp 6840, the housing 6860, the sensor 6814. The cartridge 6800 may be used in connection with any of the inserters 6030, 6130, 6230, 6330, 6530 and/or 6730 described herein. In some embodiments, the cartridge includes a housing and a lid which contain the sharp and sensor therein. In some embodiments, a resilient member or other cantilever structure is used to maintain the alignment of the sharp and sensor within the cartridge. Interaction of the cartridge with the inserter advances the sensor and sharp such that the sensor is installed at the subject.

As illustrated in FIGS. 123-124, the sharp 6840 and sensor 6814 may sit in a recessed portion of the disposable cartridge 6800. A spring finger or cantilever 6876 on the housing lid maintains a load on the sharp 6840 and sensor 6814 to keep it depressed in the cavity. Attachment for a lid to the base of the cartridge housing 6860 is not shown in the figure above, but methods such as snaps, heat stake, or ultrasonic welding may be used to join the two housings in assembly. The sensor 6814 is contained within the sharp 6840, laterally by the two rounded ends 6848 of the sharp, and in the orthogonal lateral direction (in relation to the views shown above), by two bent tabs 6849 on the sharp 6840 and the cartridge housing base cavity. The sharp is held in its lateral position by not only the cavity, but also by the raised pyramid feature 6878 shown on the housing base 6870. In the figure above, the locating pyramid sits in the opening 6882 created from the bent tab in the sharp. The engagement features to locate/attach/engage the cartridge to the inserter portion of the device are not shown in the figures above, but may include such features as illustrated in FIGS. 106-112 above.

As illustrated in FIGS. 125 and 126, when the cartridge 6800 is loaded onto the reusable inserter part of the device, the sharp is raised out of its cavity by stationary elements built

onto the inserter (not shown). Features from the reusable portion of the inserter enter through the two shorter slots shown FIG. **122**. These features will remain stationary throughout the sensor delivery action of the inserter device.

In the longer middle slot **6866**, a stepped feature from the inserter, mates with the opening on the sharp (shown as two holes **6864** in the figure above). The stepped portion of the feature provides a force on the back portion of the sharp to keep it raised against the force of the sprung cantilever **6876** on the housing. This feature of the inserter will move in relation to the cartridge and provide the drive and retraction movement for the sharp through insertion and delivery of the sensor. In some embodiments, the force is transmitted through driving pins which are part of the movable portion of the inserter device. The driving pins protrude through holes **6864**. In case of minor misalignment of the driving pins (not shown), ribs on the cartridge housing lid will constrain the sharp from tilting up.

Once the sharp and sensor are raised from the cavity portion of the cartridge, they are no longer constrained by the recessed cavity portion of the housing base and the pyramid feature maintaining the sharp position. The sharp is held in its raised position by the stationary and stepped drive feature of the inserter, balanced with the force of the cantilever finger on the lid housing. The sensor is kept in place by being pinched against the cantilever finger on the housing lid. The sharp is constrained in its retracted position by the mated drive feature of the inserter.

As the inserter is actuated, the mated inserter drive feature drives the sharp downward as it moves through the longer slot shown in the figure above (see FIGS. **127-129**). The driven sharp slides along the stationary ribs of the inserter, ribbed features built into the cartridge housing, and the housing lid cantilever finger. The friction force of the cantilever keeps the sensor up against the 'drive block' and bends in the sharp sheet metal to assure the tail is not exposed from the sharp channel during insertion. In some embodiments, the 'drive block' features are longitudinal constraints either built into the sharp or the carrier which constrain the sensor from proximal movement with respect to the sharp. In another embodiment, the drive block features are protrusions on the carrier or bends on the sharp which push the sensor as the sharp is propelled distally.

The sensor is kept from popping over the drive block features by the stationary ribs built into the housing lid. As the cantilever slides over the top edge of the sensor, the retention force is relieved from the sensor, and it can be captured onto the mount portion of the device with relatively little force. Alternately, if geometry permits, and the finger is positioned appropriately, the pinching of the cantilever on the sharp may provide enough resistance on the return motion of the sharp to keep the sensor in its inserted position even without a capture device on the mount. The inserter drive feature then retracts the sharp, leaving the sensor in place on the mount portion (that is attached to the skin) of the device.

The cartridge can be removed from the inserter. As the cartridge is removed, the force from the housing lid cantilever presses the sharp back into the recess on the cartridge base housing. The base housing is removed and can be discarded.

Another embodiment of the cartridge is illustrated in FIGS. **131-137**. As illustrated in FIG. **131**, the sharp **6940** and sensor **6914** in this embodiment abuts ribs **6972** and **6974** and on insertion plane to which the sharp **6940** will be driven and retracted by the inserter into the skin. The sharp and sensor are held in place by a central cantilever feature **6976** built onto the cartridge lid housing. This cantilever **6976** has geometry such that a vertical portion of the end of the cantilever is butted against the sharp **6940** and sensor **6914**.

As illustrated in FIGS. **132** and **133**, the cartridge **6900** is loaded onto the inserter, in which a stationary feature on the inserter (not shown) raises the cartridge cantilever so that the ramped portion of the cantilever end feature is now in line with the insertion plane of the sharp. Also, a driving element of the inserter (not shown) fits through the slot opening on the sharp. In the embodiment described herein, a step is not required on the driving element on this design.

As the sharp is driven downward (see, FIGS. **134-135**), the cantilever arm **6976** is pushed up, keeping the sensor in position against the sharp **6940**. Stationary ribs on the housing lid assure that the sharp **6940** maintains its insertion plane during insertion, and also assures that the pinching force of the cantilever does not cause the sensor to hop the drive block elements integrated into the sharp. The stationary ribs keep the sensor flat against the sharp through the insertion motion.

As illustrated in FIGS. **136-137**, the sensor **6914** is captured at the bottom of its motion on the mount, as discussed hereinabove. The drive elements on the inserter retract the sharp **6940** back to its starting position. The cantilever arm **6976** returns to its original unbiased configuration. The cartridge **6900** is removed from the inserter and can be discarded.

It is understood that the subject matter described herein is not limited to particular embodiments described, as such may, of course, vary. It is also understood that the terminology used herein is for the purpose of describing particular embodiments only, and is not intended to be limiting, since the scope of the present subject matter is limited only by the appended claims.

The invention claimed is:

1. An apparatus, comprising:

a housing;

a handle coupled to and at least partially surrounding the housing;

a medical device including a sensor moveably and releasably held within the housing, the medical device moveable between a retracted position and a distal position; and

a sharp releasably coupled to the medical device and supporting the sensor;

wherein a force applied to the handle moves the housing into the handle and the medical device from the retracted position to the distal position;

wherein the sensor comprises a plurality of electrodes including a working electrode, wherein the working electrode comprises an analyte-responsive enzyme and a mediator, wherein at least one of the analyte-responsive enzyme and the mediator is chemically bonded to a polymer disposed on the working electrode, and wherein at least one of the analyte-responsive enzyme and the mediator is crosslinked with the polymer.

2. The apparatus of claim **1**, further comprising a carrier for moveably holding the sharp in the housing wherein the carrier remains holding the sharp while the medical device moves from the retracted position to the distal position.

3. The apparatus of claim **1**, wherein the medical device includes an on-body housing including a sensor control unit, and wherein the sensor is coupled to the sensor control unit.

4. The apparatus of claim **3**, wherein the sharp is positioned through the sensor control unit prior to the force being applied to the handle to move the housing into the handle and the sharp from the retracted position to the partially exposed position.

5. The apparatus of claim **4**, wherein the sensor control unit includes sensor electronics and the sharp is positioned through the sensor electronics.

6. The apparatus of claim **1**, wherein the housing is configured to recede into the handle when the force is applied to the handle.

7. The apparatus of claim **1**, wherein the sharp is configured to penetrate a skin surface when the force is applied to the handle.

8. The apparatus of claim **1**, wherein a distal end of the housing is configured for placement on a skin surface and an entire width of a proximal end of the housing is fully contained within the handle.

9. An apparatus, comprising:

a housing;

a handle coupled to and at least partially surrounding the housing;

a sharp moveable within the housing from a retracted position to a partially exposed position;

an electrochemical sensor releasable coupled to the sharp for movement with the sharp and for insertion under a skin surface; and

a carrier for moveably supporting the sharp within the housing;

wherein a force applied to the handle moves the housing into the handle and the sharp from the refracted position to the partially exposed position;

wherein the electrochemical sensor comprises a plurality of electrodes including a working electrode, wherein the working electrode comprises an analyte-responsive enzyme and a mediator, wherein at least one of the analyte-responsive enzyme and the mediator is chemically bonded to a polymer disposed on the working electrode, and wherein at least one of the analyte-responsive enzyme and the mediator is crosslinked with the polymer.

10. The apparatus of claim **9**, wherein the housing comprises a distal opening for release of the electrochemical sensor therefrom.

11. The apparatus of claim **9**, wherein the housing contains a desiccant.

12. The apparatus of claim **9**, wherein the housing defines one or more longitudinal ridges for aligning one of the sharp and the sensor.

13. The apparatus of claim **9**, further comprising a medical device including an on-body housing including a sensor control unit, wherein the sensor is coupled to the sensor control unit.

14. The apparatus of claim **13**, wherein the sharp is positioned through the sensor control unit prior to the force being applied to the handle to move the housing into the handle and the sharp from the retracted position to the partially exposed position.

15. The apparatus of claim **14**, wherein the sensor control unit includes sensor electronics and the sharp is positioned through the sensor electronics.

16. The apparatus of claim **9**, wherein the housing is configured to recede into the handle when the force is applied to the handle.

17. The apparatus of claim **9**, wherein the sharp is configured to penetrate the skin surface when the force is applied to the handle.

18. The apparatus of claim **9**, wherein a distal end of the housing is configured for placement on the skin surface and an entire width of a proximal end of the housing is fully contained within the handle.

* * * * *