US009289637B2

(12) **United States Patent**
Publicover et al.

(10) **Patent No.: US 9,289,637 B2**
(45) **Date of Patent: Mar. 22, 2016**

(54) **REBOUNDING APPARATUS WITH TENSIONED ELASTIC CORDS**

(71) Applicants: **Mark W. Publicover**, Saratoga, CA (US); **Jon P. Hylbert**, Los Gatos, CA (US); **Donald Strasser**, Rocklin, CA (US); **Kevin B. Charles**, Millbrae, CA (US)

(72) Inventors: **Mark W. Publicover**, Saratoga, CA (US); **Jon P. Hylbert**, Los Gatos, CA (US); **Donald Strasser**, Rocklin, CA (US); **Kevin B. Charles**, Millbrae, CA (US)

(*) Notice: Subject to any disclaimer, the term of this patent is extended or adjusted under 35 U.S.C. 154(b) by 159 days.

(21) Appl. No.: **13/776,704**

(22) Filed: **Feb. 26, 2013**

(65) **Prior Publication Data**

US 2013/0316876 A1 Nov. 28, 2013

Related U.S. Application Data

(63) Continuation-in-part of application No. 13/562,240, filed on Jul. 30, 2012, now abandoned, which is a continuation-in-part of application No. 13/420,519, filed on Mar. 14, 2012, now abandoned, which is a

(Continued)

(51) **Int. Cl.**
A63B 5/11 (2006.01)
A63B 5/16 (2006.01)
(Continued)

(52) **U.S. Cl.**
CPC ***A63B 5/11*** (2013.01); *A63B 21/0414* (2013.01); *A63B 21/0552* (2013.01);
(Continued)

(58) **Field of Classification Search**
CPC .. A63B 5/11; A63B 21/0555; A63B 2225/30; A63B 21/0552; A63B 2225/09; A63B 21/0557; F16B 5/0692
USPC ..... 482/26–29; 403/220, 241; 24/17 B, 18, 24/115 H, 129 A, 129 B, 129 R; 182/139
See application file for complete search history.

(56) **References Cited**

U.S. PATENT DOCUMENTS

1,050,442 A 1/1913 Friswell
2,916,746 A 12/1959 Pease
(Continued)

FOREIGN PATENT DOCUMENTS

CN 200995024 Y 12/2007
DE 2504875 A1 8/1976
(Continued)

OTHER PUBLICATIONS

International Search Report and Written Opinion, dated May 18, 2011, issued in PCT/US2010/048820.
(Continued)

Primary Examiner — Oren Ginsberg
Assistant Examiner — Joshua Lee
(74) *Attorney, Agent, or Firm* — Klarquist Sparkman, LLP

(57) **ABSTRACT**

A trampoline with a frame has a rebounding mat that is tensioned to the frame with a plurality of flexible and cordlike linear elastic members. Preferably each cordlike elastic member is connected to the frame and the rebounding mat at one of two alternative positions to alter the tension. The alternative positions permit a tensioning process that extends the lifetime of elastic cords having a fabric sheath. This independent tension of each elastic member is via connector member that grips the rebounding mat but also grasps opposing the ends of the elastic members as well as central portion thereof so that two segment of the cord between each end and the central portion are preferably wrapped around the trampoline frame.

33 Claims, 52 Drawing Sheets

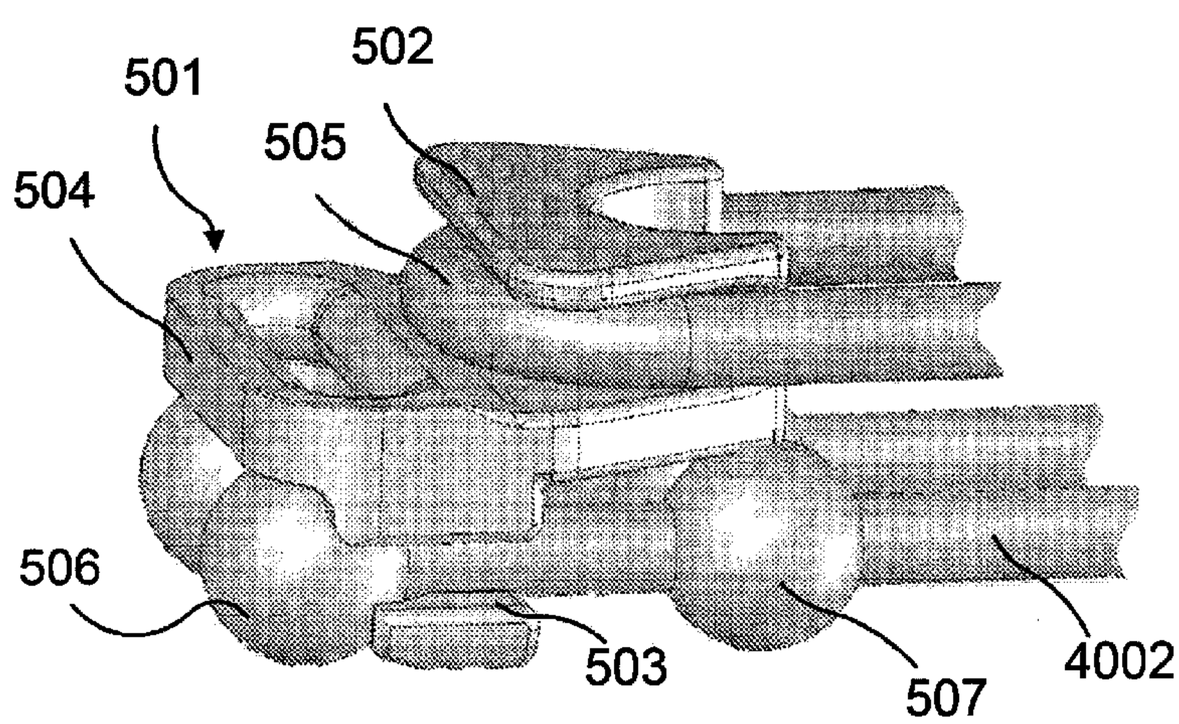

Related U.S. Application Data

continuation-in-part of application No. PCT/US2010/048820, filed on Sep. 14, 2010, now abandoned, which is a continuation-in-part of application No. 12/881,105, filed on Sep. 14, 2009, now abandoned, application No. 13/776,704, which is a continuation-in-part of application No. 13/562,240, filed on Jul. 30, 2012, now abandoned, which is a continuation-in-part of application No. 13/420,519, filed on Mar. 14, 2012, now abandoned, which is a continuation-in-part of application No. PCT/US2010/048820, filed on Sep. 14, 2010, now abandoned, which is a continuation-in-part of application No. 12/881,486, filed on Sep. 29, 2009, now abandoned, application No. 13/776,704, which is a continuation-in-part of application No. 13/562,240, filed on Jul. 30, 2012, now abandoned, which is a continuation-in-part of application No. 13/420,519, filed on Mar. 14, 2012, now abandoned, which is a continuation-in-part of application No. PCT/US2010/048820, filed on Sep. 14, 2010, now abandoned, application No. 13/776,704, which is a continuation-in-part of application No. 13/562,240, filed on Jul. 30, 2012, now abandoned, which is a continuation-in-part of application No. 13/403,973, filed on Feb. 23, 2012, now abandoned, which is a continuation-in-part of application No. 13/068,855, filed on May 18, 2010, now abandoned, application No. 13/776,704, which is a continuation-in-part of application No. 13/562,240, filed on Jul. 30, 2012, now abandoned, which is a continuation-in-part of application No. 13/403,973, filed on Feb. 23, 2012, now abandoned, application No. 13/776,704, which is a continuation-in-part of application No. 13/562,240, filed on Jul. 30, 2012, now abandoned, application No. 13/776,704, which is a continuation-in-part of application No. 13/562,240, filed on Jul. 30, 2012, now abandoned, which is a continuation-in-part of application No. 13/420,519, filed on Mar. 14, 2012, now abandoned, which is a continuation-in-part of application No. 13/403,973, filed on Feb. 23, 2012, now abandoned.

(60) Provisional application No. 61/321,571, filed on Apr. 7, 2010, provisional application No. 61/446,035, filed on Feb. 23, 2011, provisional application No. 61/598,869, filed on Feb. 14, 2012, provisional application No. 61/751,240, filed on Jan. 10, 2013.

(51) **Int. Cl.**

A63B 21/055	(2006.01)
F16B 5/06	(2006.01)
A63B 21/04	(2006.01)

(52) **U.S. Cl.**

CPC *A63B 21/0555* (2013.01); *A63B 21/0557* (2013.01); *A63B 2225/09* (2013.01); *A63B 2225/30* (2013.01); *F16B 5/0692* (2013.01)

(56) **References Cited**

U.S. PATENT DOCUMENTS

2,991,841	A	7/1961	Sampson et al.	
3,130,630	A	4/1964	Dawes	
4,162,063	A	7/1979	Nissen et al.	
4,331,329	A	5/1982	Mirkovich et al.	
4,513,063	A	4/1985	Hashi et al.	
5,033,169	A *	7/1991	Bindon	24/129 R
5,343,639	A	9/1994	Kilgore et al.	
5,607,736	A	3/1997	Williams	
5,967,943	A	10/1999	Rich	
6,129,649	A	10/2000	Yang	
D440,415	S	4/2001	Bellini	
6,543,094	B2 *	4/2003	D'Addario	24/16 PB
7,033,666	B2	4/2006	Skaja	
7,060,001	B2	6/2006	Publicover	
7,094,181	B2	8/2006	Hall	
D560,082	S	1/2008	Theemann	
7,494,445	B1	2/2009	Chen	
7,686,744	B2	3/2010	Middleton	
D625,986	S *	10/2010	Kolasa	D8/356
8,038,580	B2	10/2011	Schmauck	
2003/0036460	A1	2/2003	Publicover	
2003/0223808	A1 *	12/2003	Kuo et al.	403/220
2005/0113213	A1 *	5/2005	Alexander	482/27
2008/0076638	A1	3/2008	Publicover	
2008/0132384	A1	6/2008	Publicover	
2009/0206621	A1	8/2009	Payne	

FOREIGN PATENT DOCUMENTS

DE	8805500	U1	7/1988
DE	29919912	U1	1/2000
DE	10226707	A1	1/2004
DE	102006028363	B3	8/2007
EP	0791375	A1	8/1997
FR	2541099	A1	8/1986
GB	2123280	A	2/1984
JP	33-002734	U	2/1958
JP	63-146666	U	9/1988
KR	20-0418020	Y1	6/2006
KR	10-2008-0066183		7/2008
WO	WO 2007/147534	A1	12/2007
WO	WO 2008/083614	A1	7/2008
WO	WO 2011/032173	A2	3/2011

OTHER PUBLICATIONS

Japan Patent Office, First Office Action, dated Jan. 5, 2015, issued in Japan Patent Application No. 2012-528999.

European Patent Office, Extended European Search Report, Feb. 20, 2015, issued in European Patent Application No. 10816290.0.

* cited by examiner

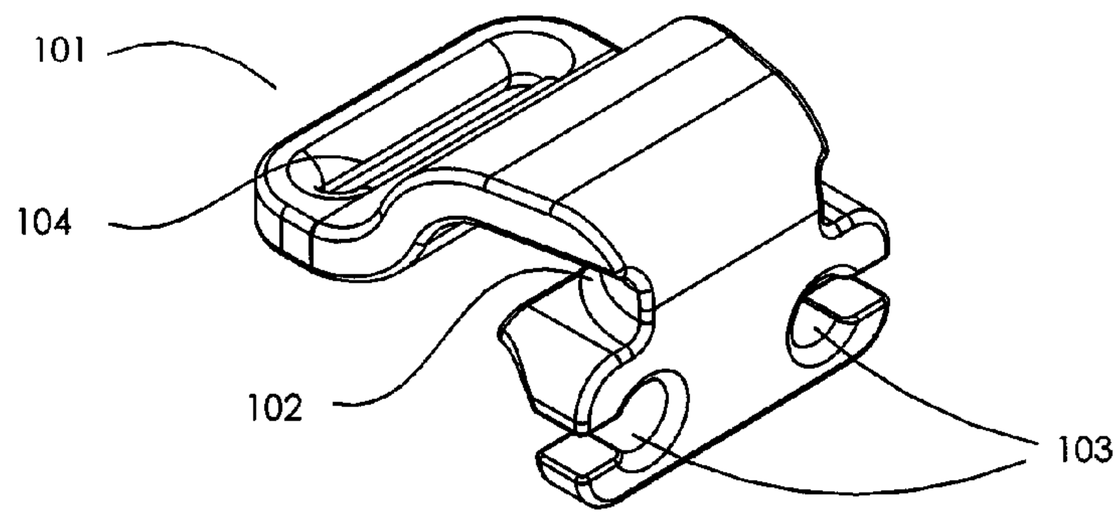

Fig. 1A

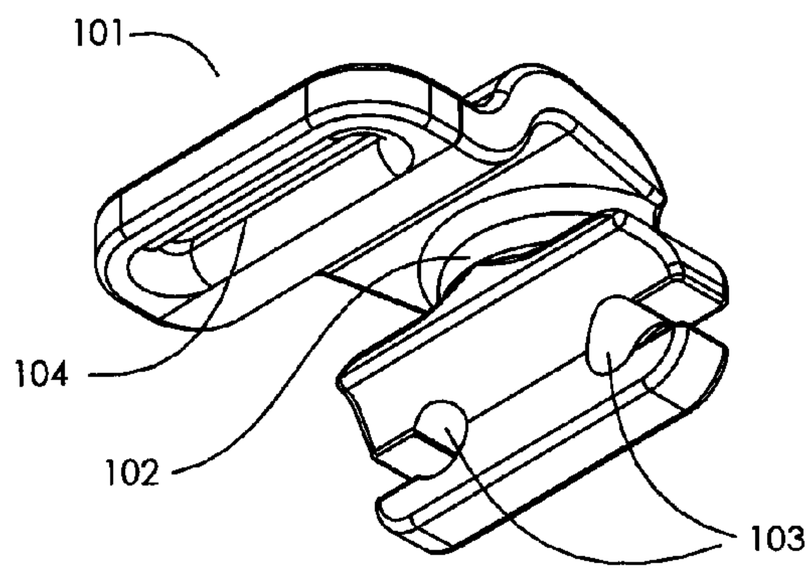

Fig. 1B

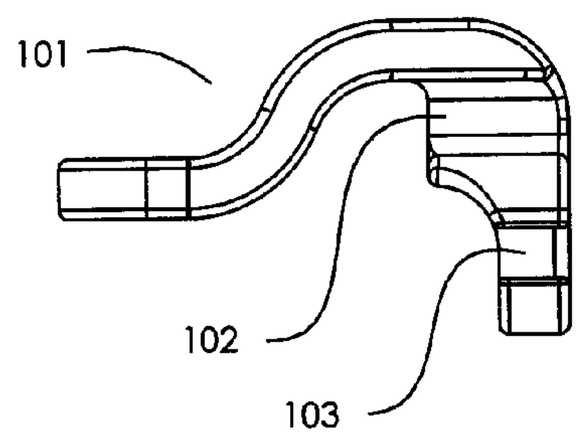

Fig. 1C

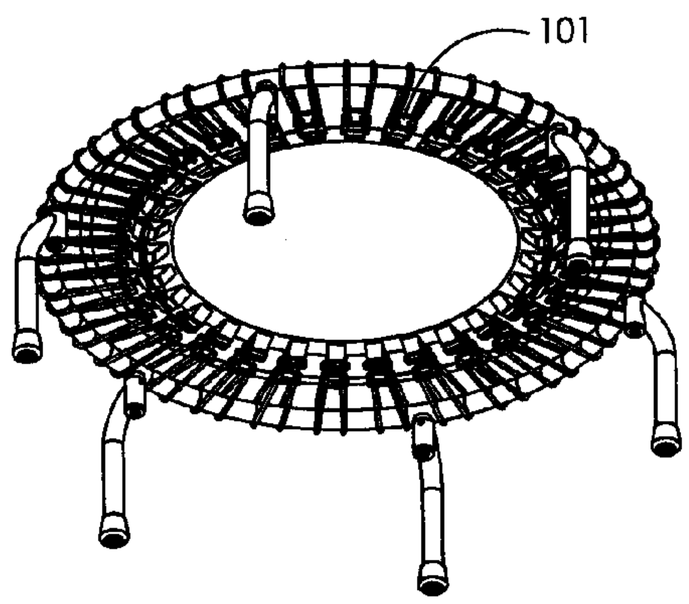

Fig. 1D

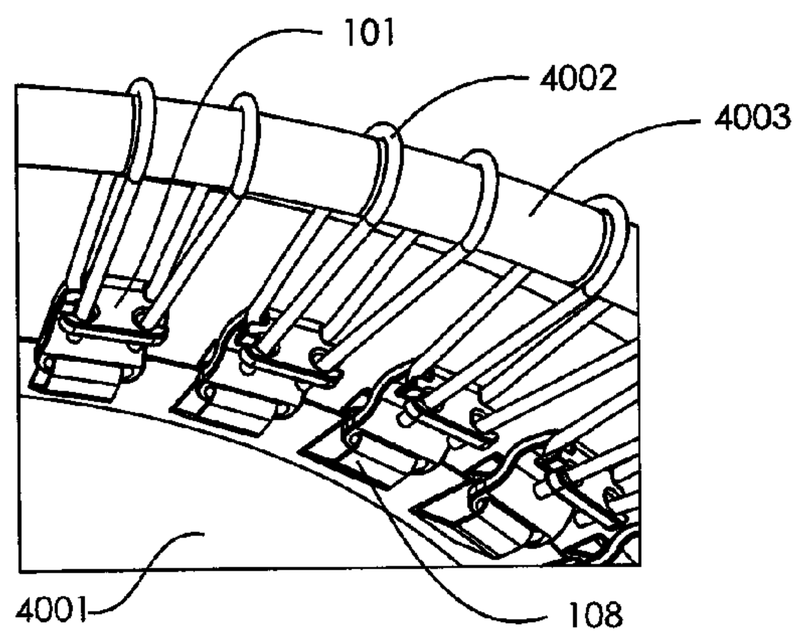

Fig. 1E

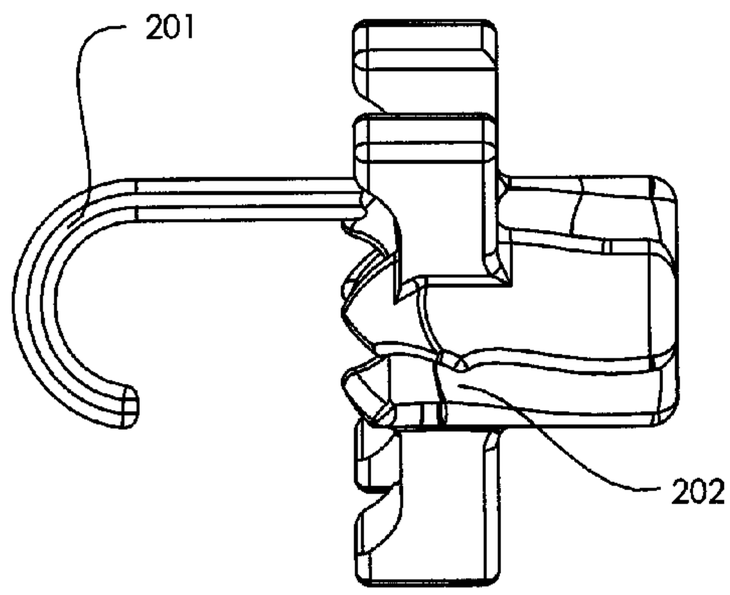

Fig. 2A

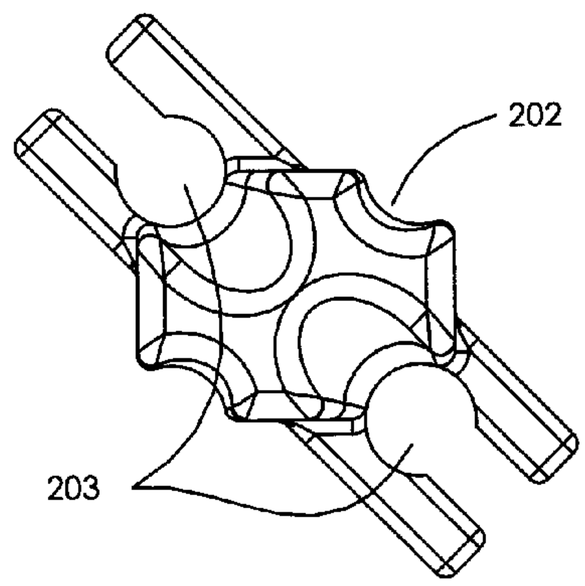

Fig. 2B

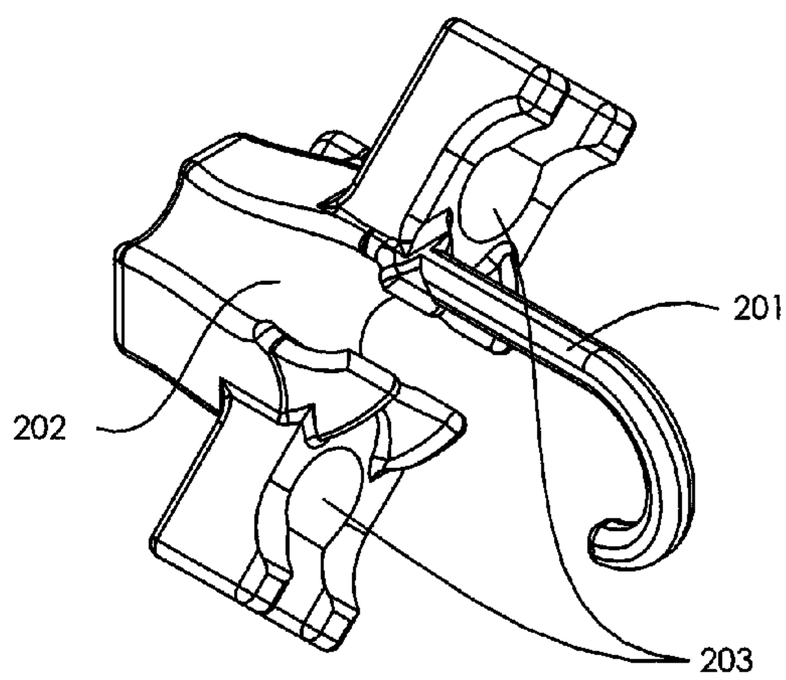

Fig. 2C

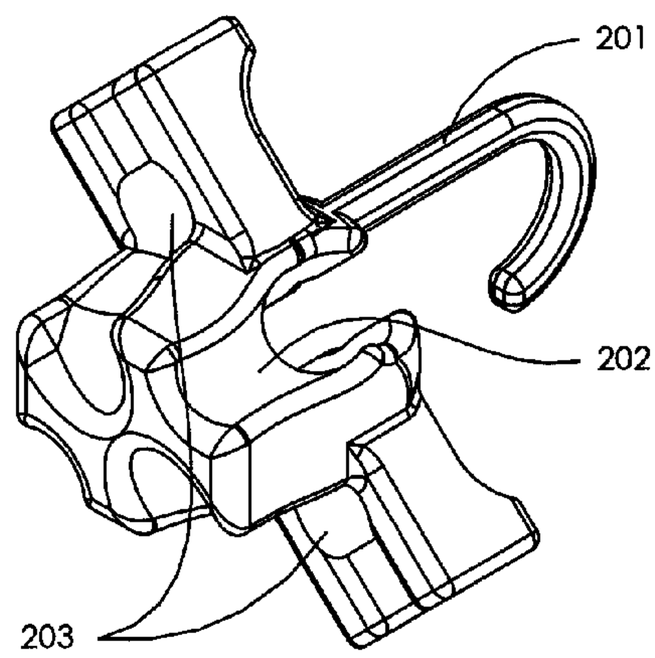

Fig. 2D

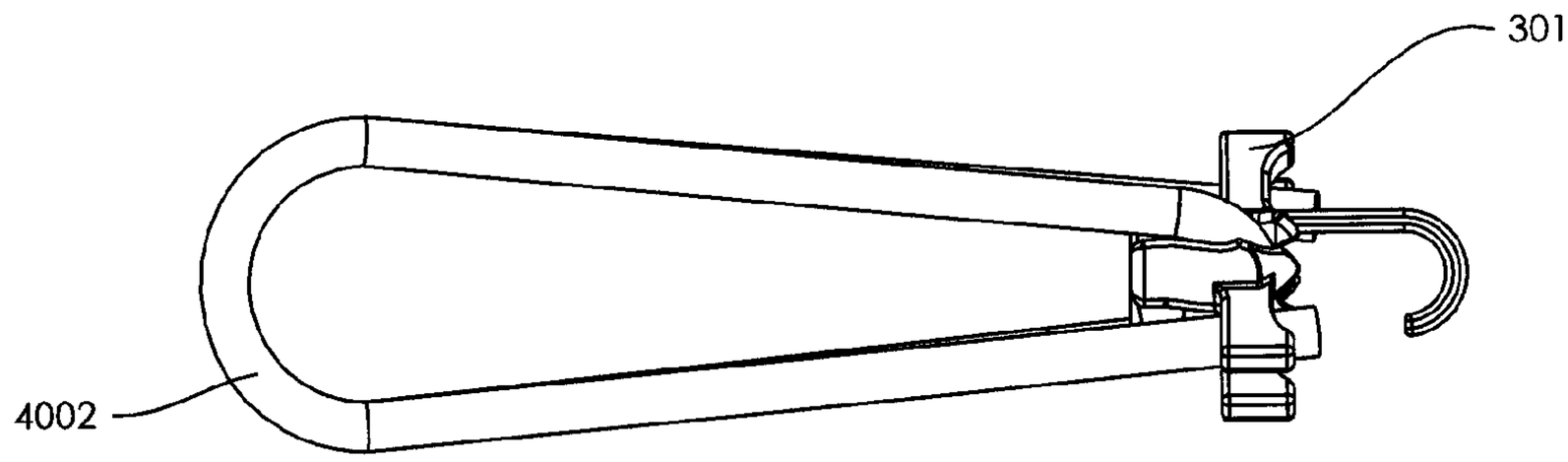

Fig. 3A

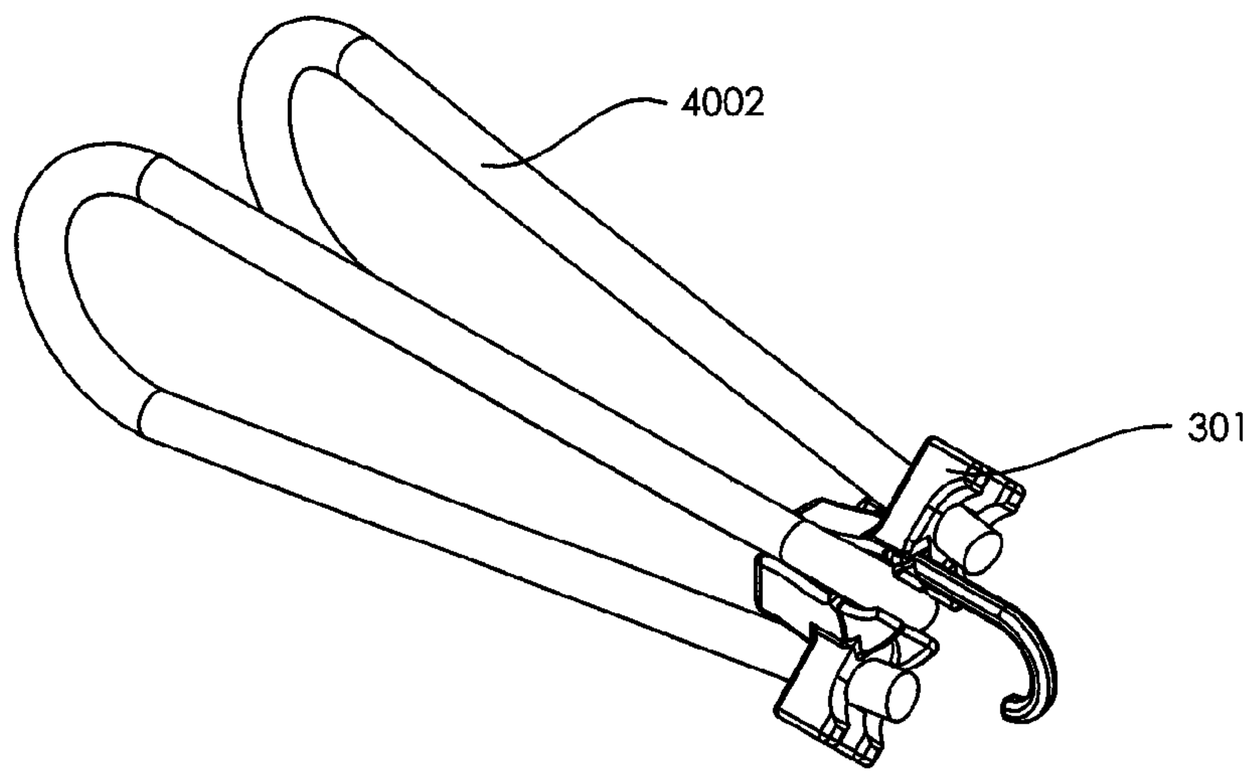

Fig. 3B

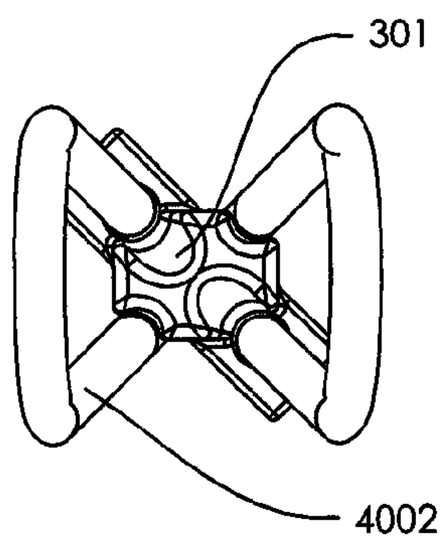

Fig. 3C

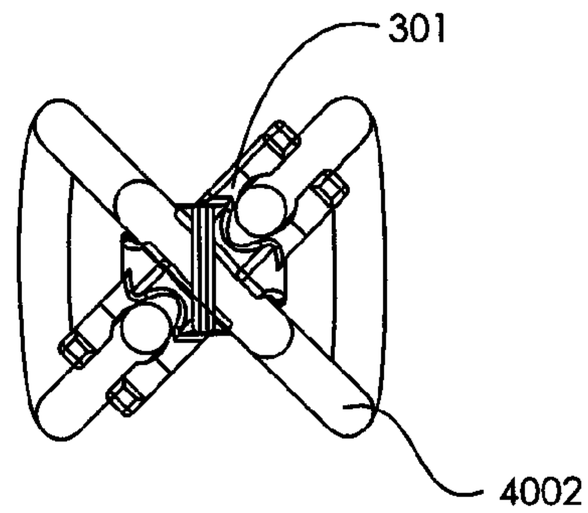

Fig. 3D

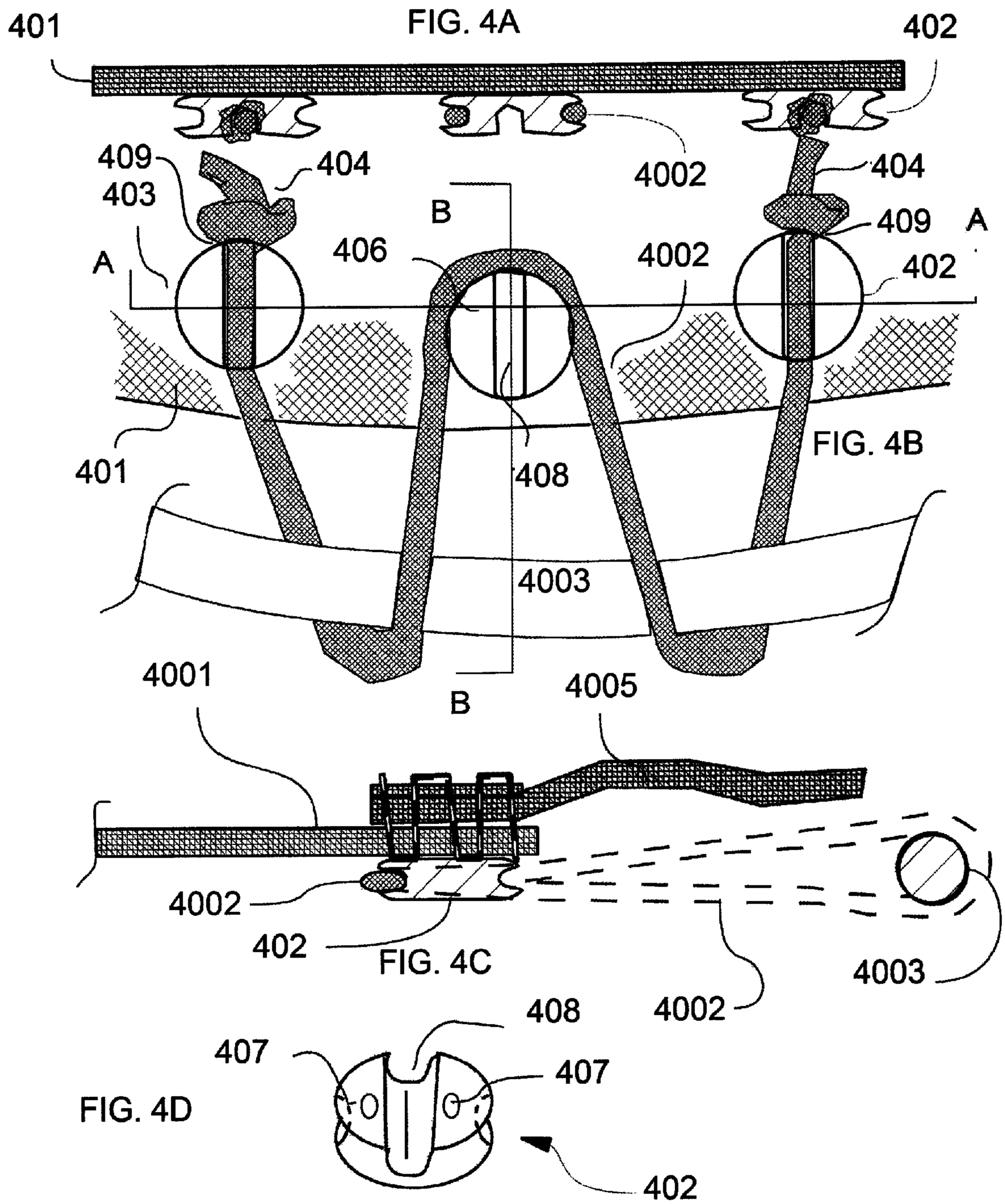

FIG. 4A

FIG. 4B

FIG. 4C

FIG. 4D

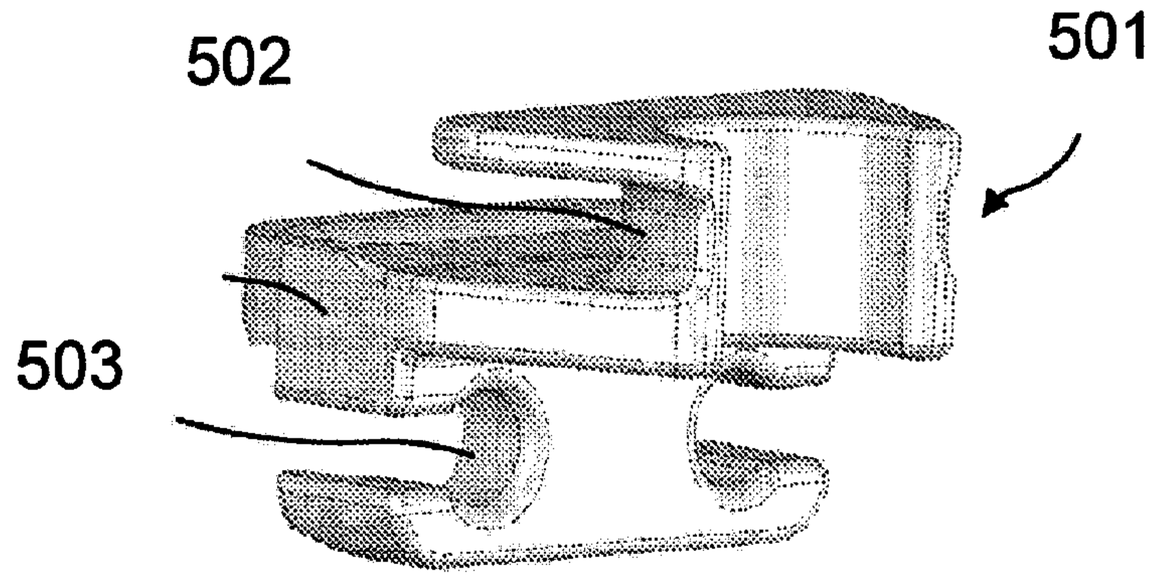

FIG. 5A

FIG. 5B

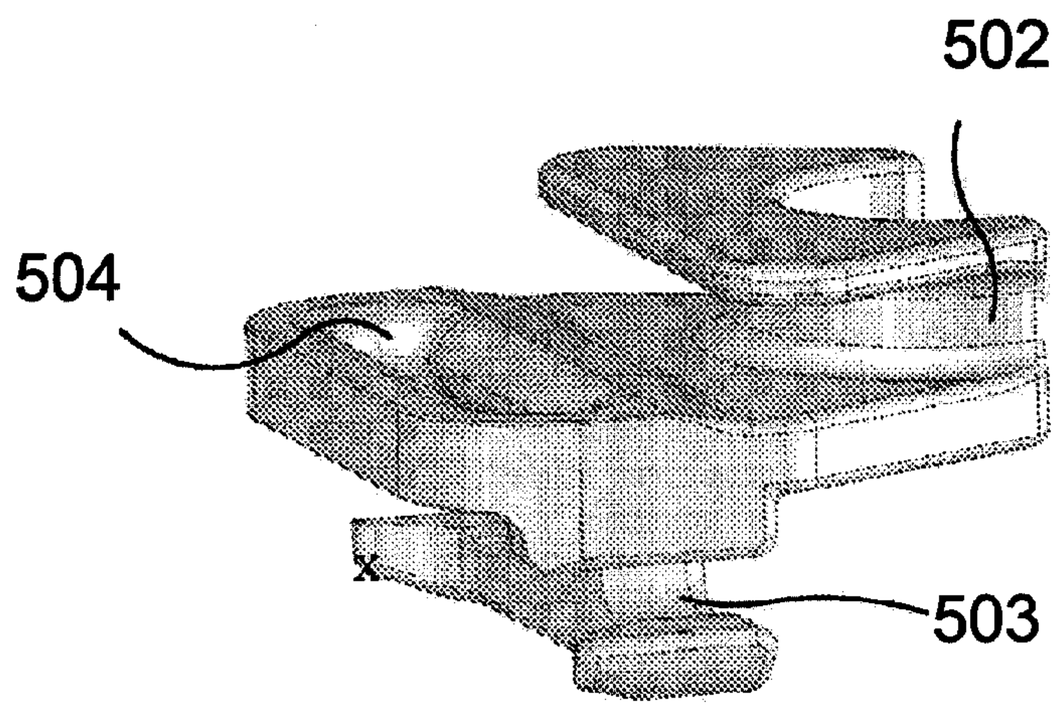

FIG. 5C

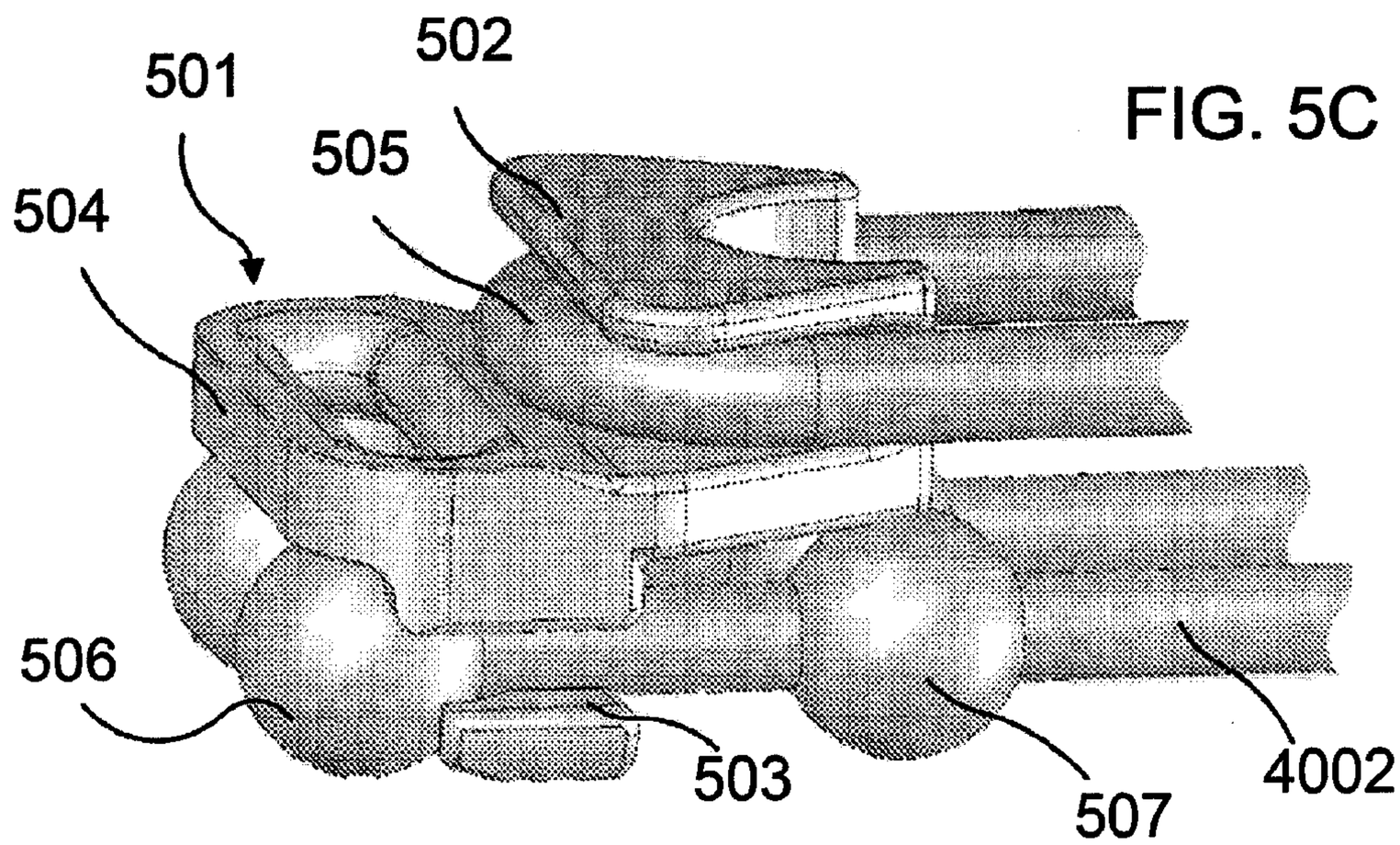

FIG. 6A

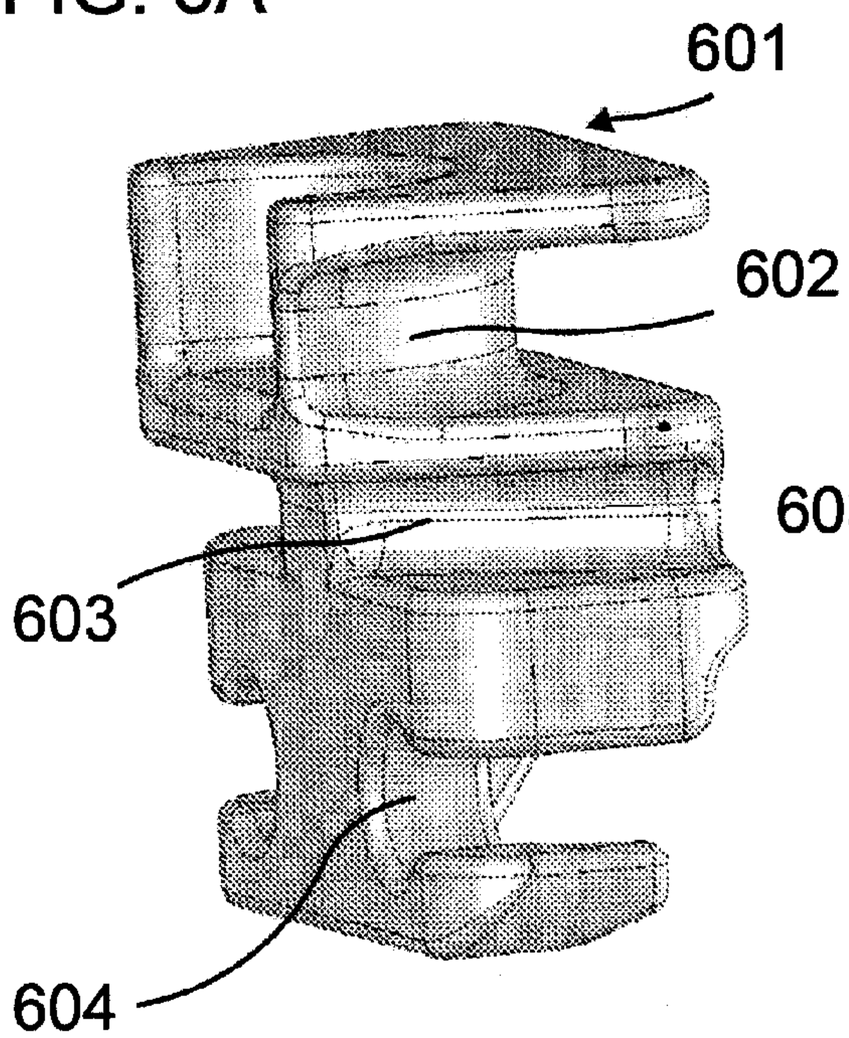

FIG. 6B

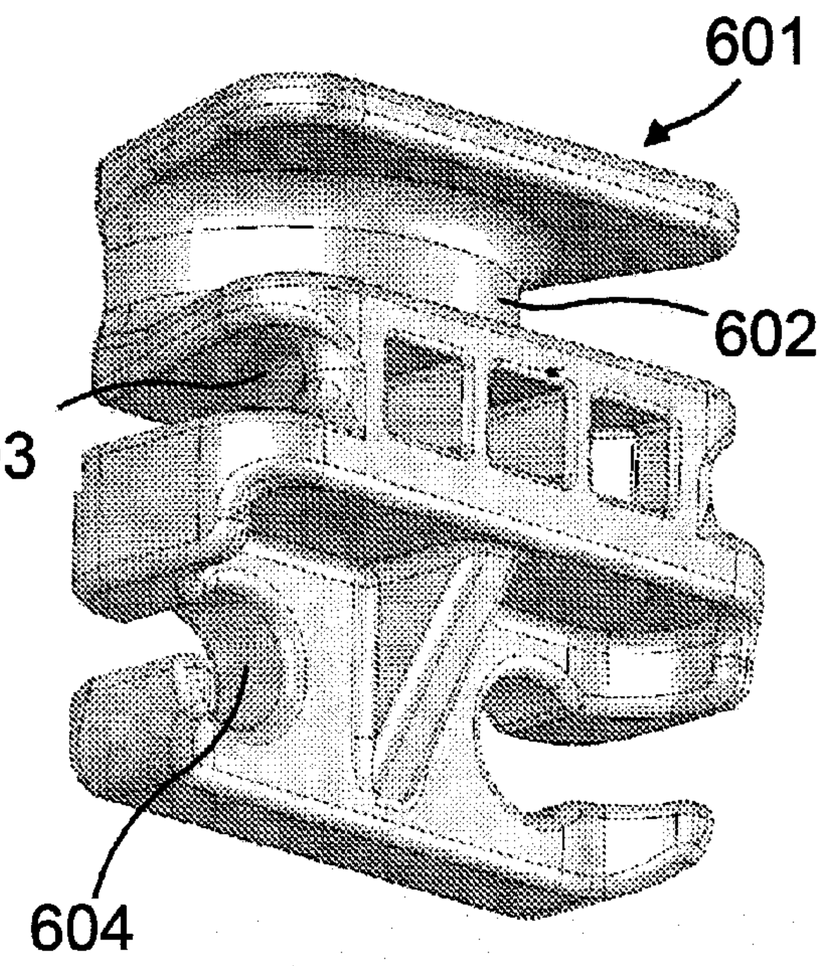

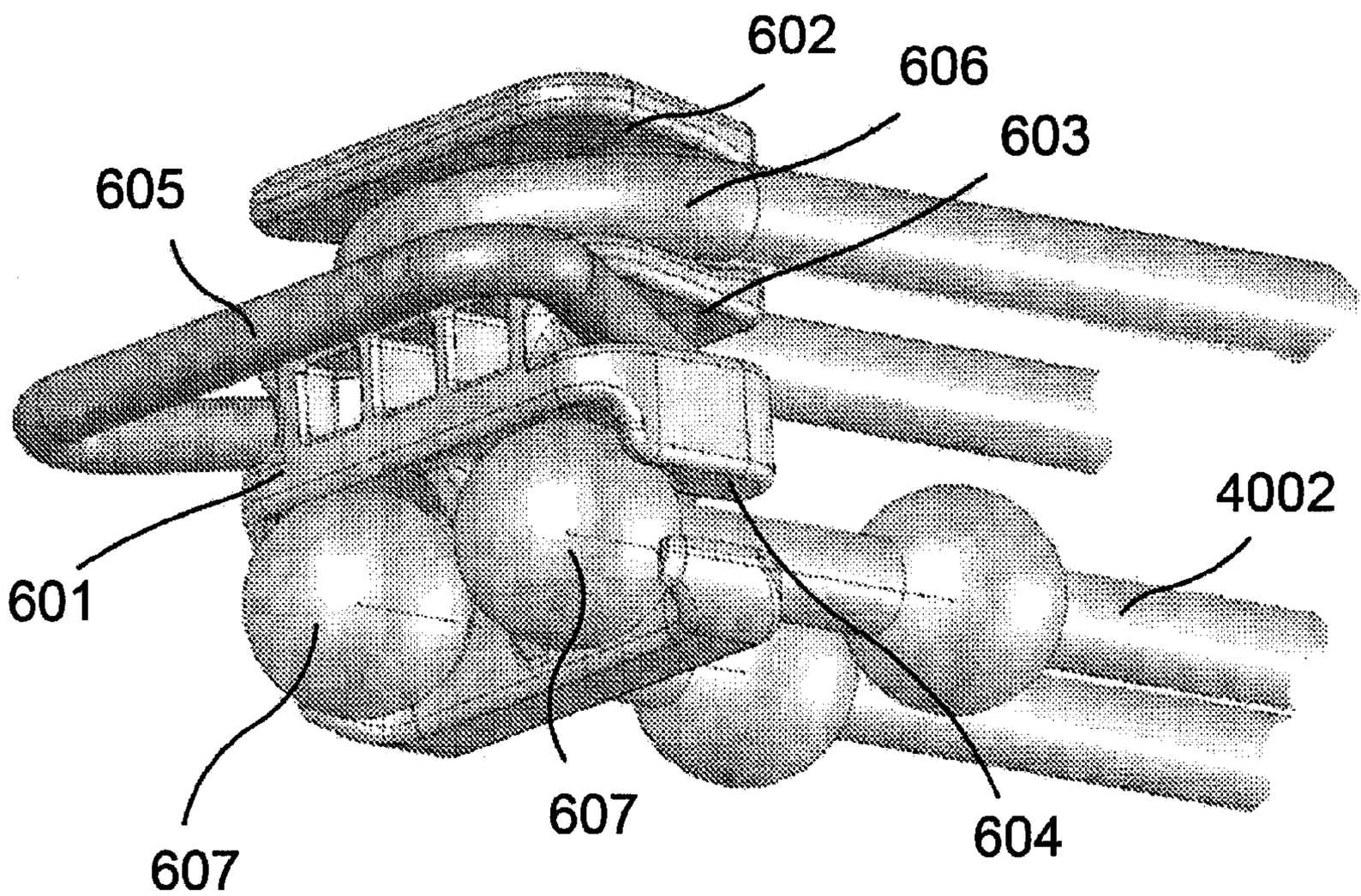

FIG. 6C

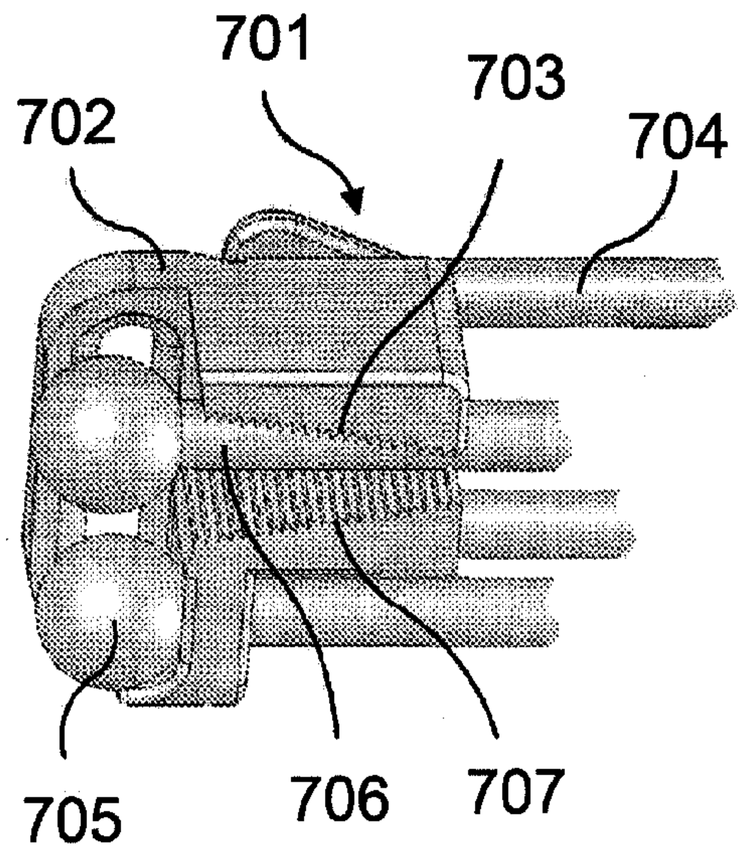

FIG. 7A

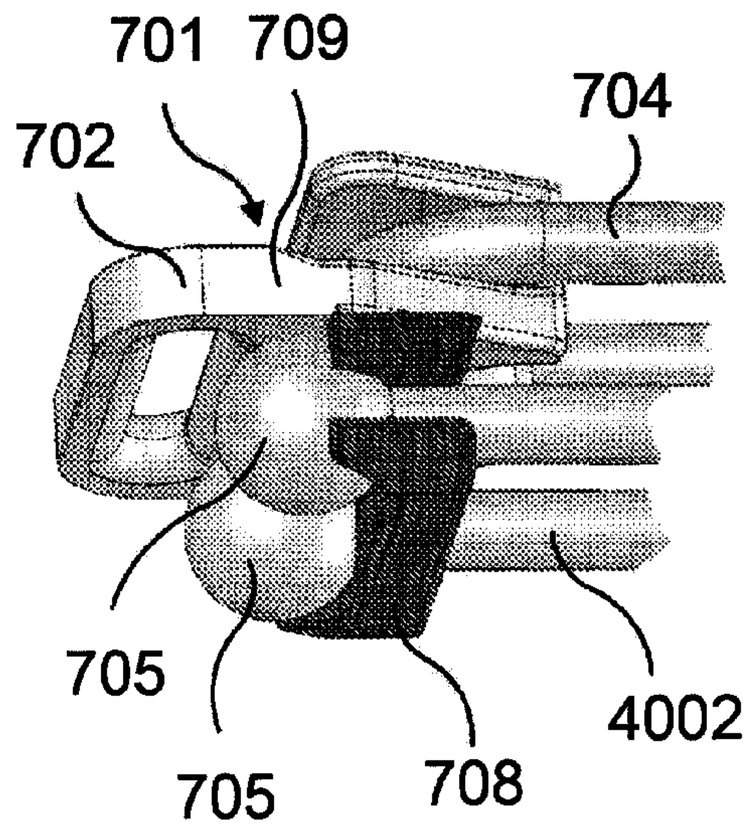

FIG. 7B

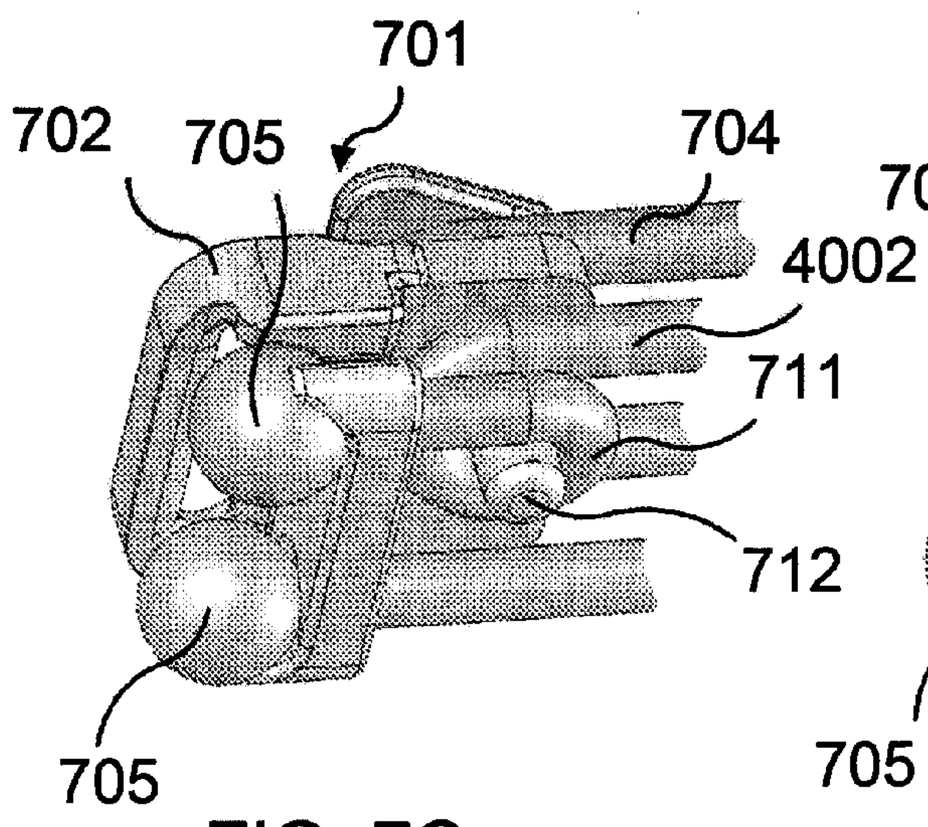

FIG. 7C

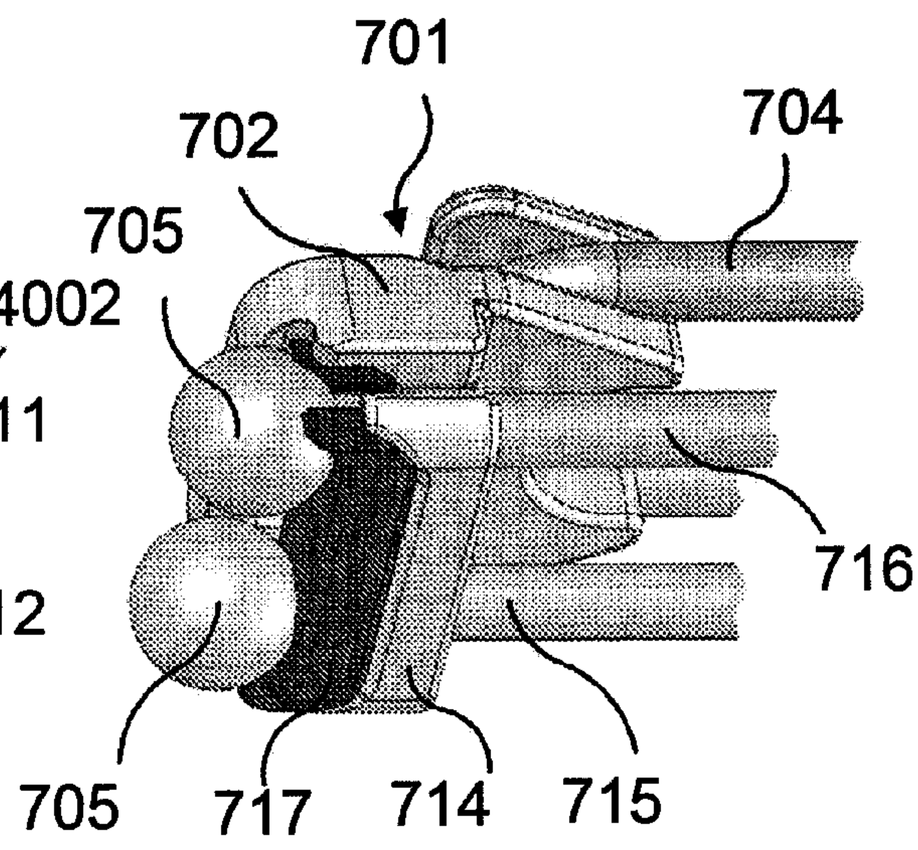

FIG. 7D

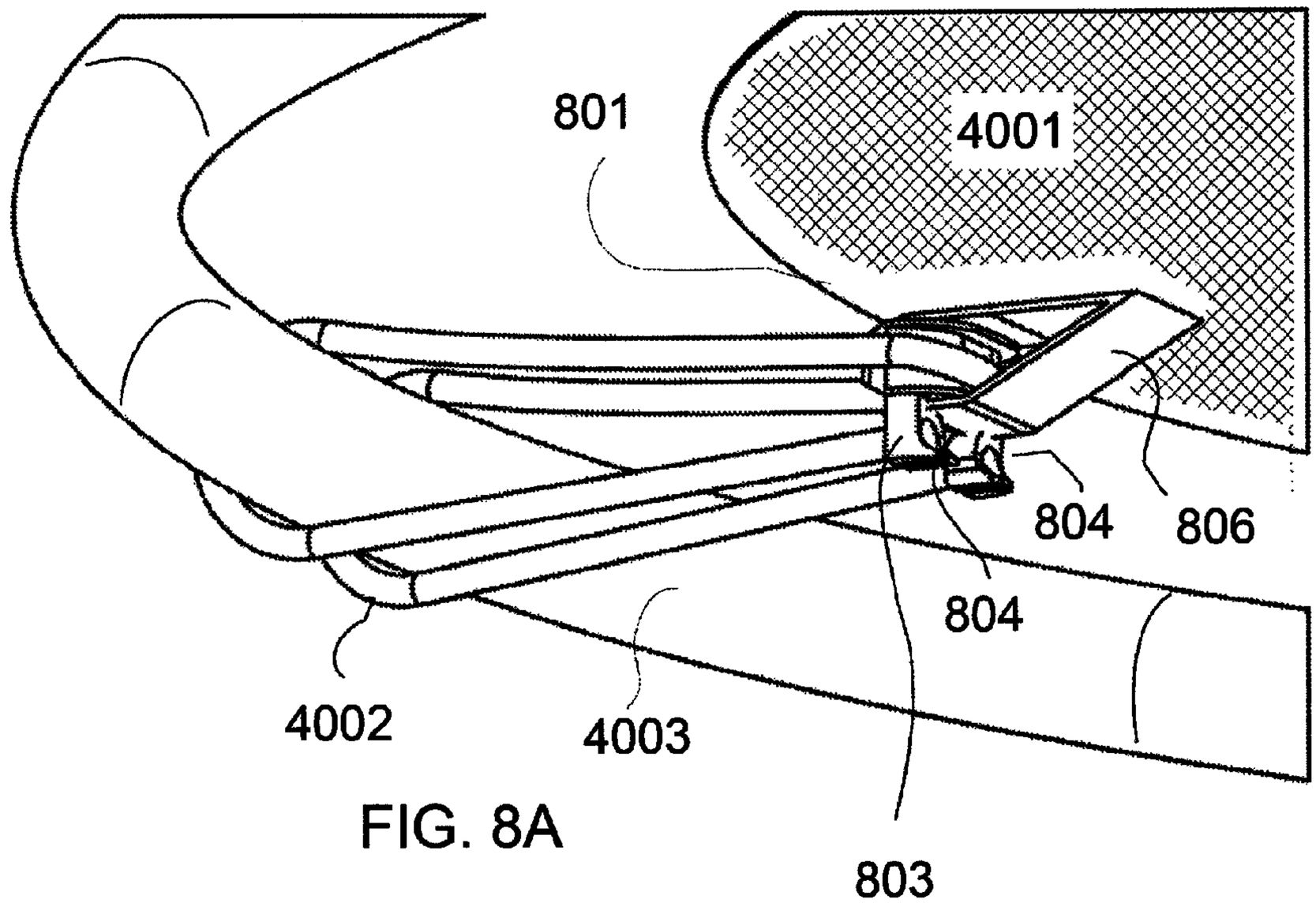

FIG. 8A

FIG. 8B

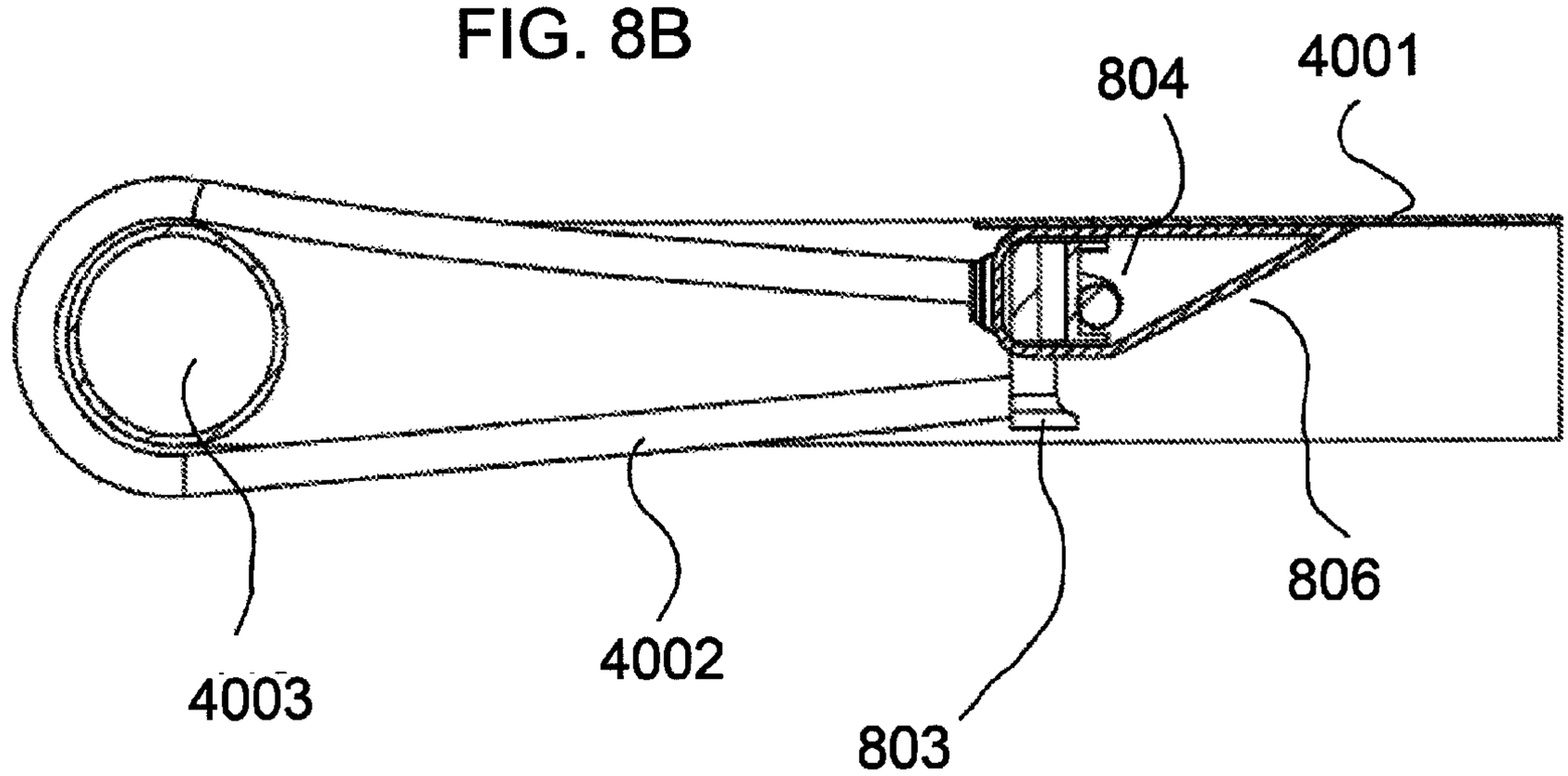

FIG. 8C

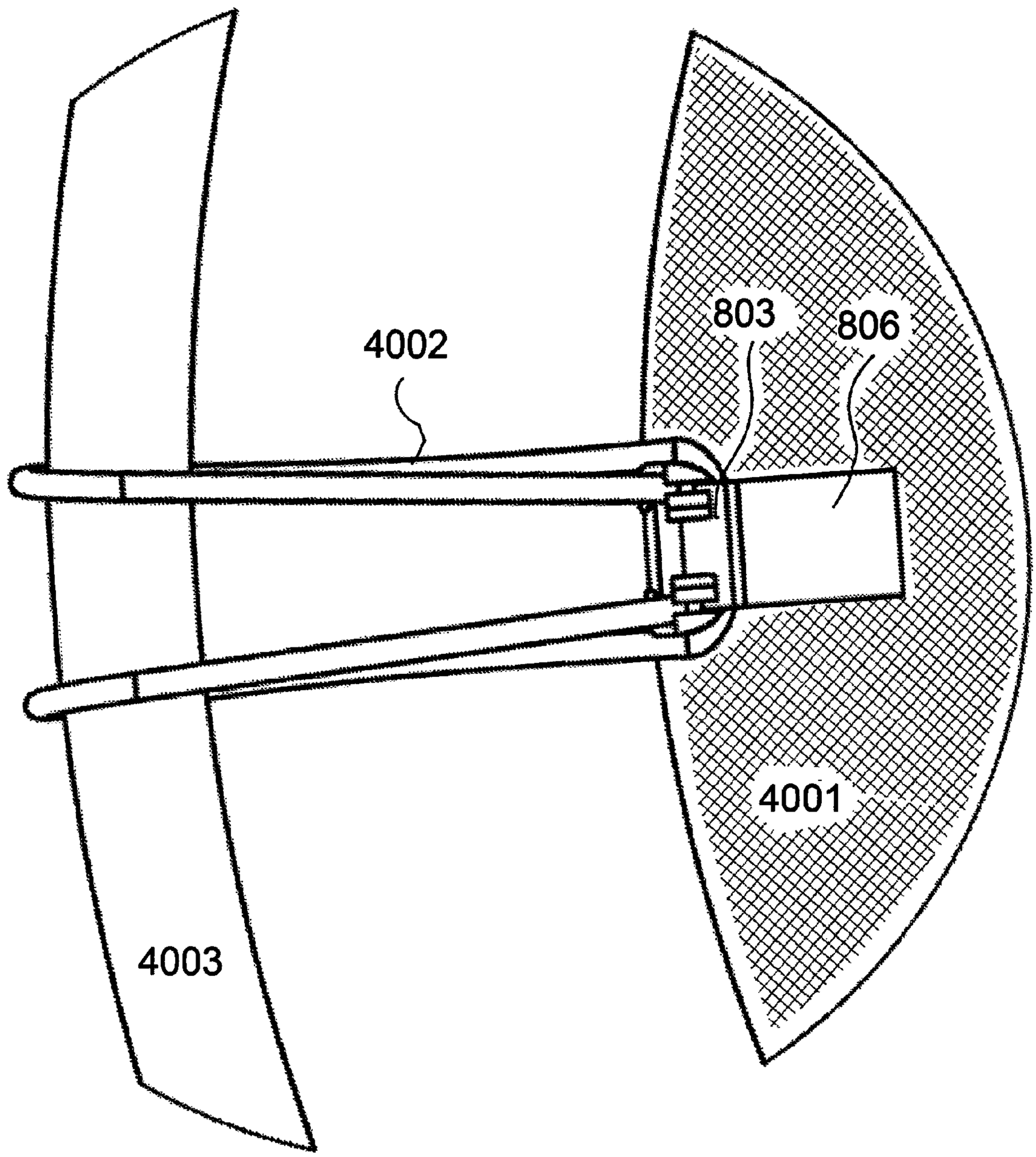

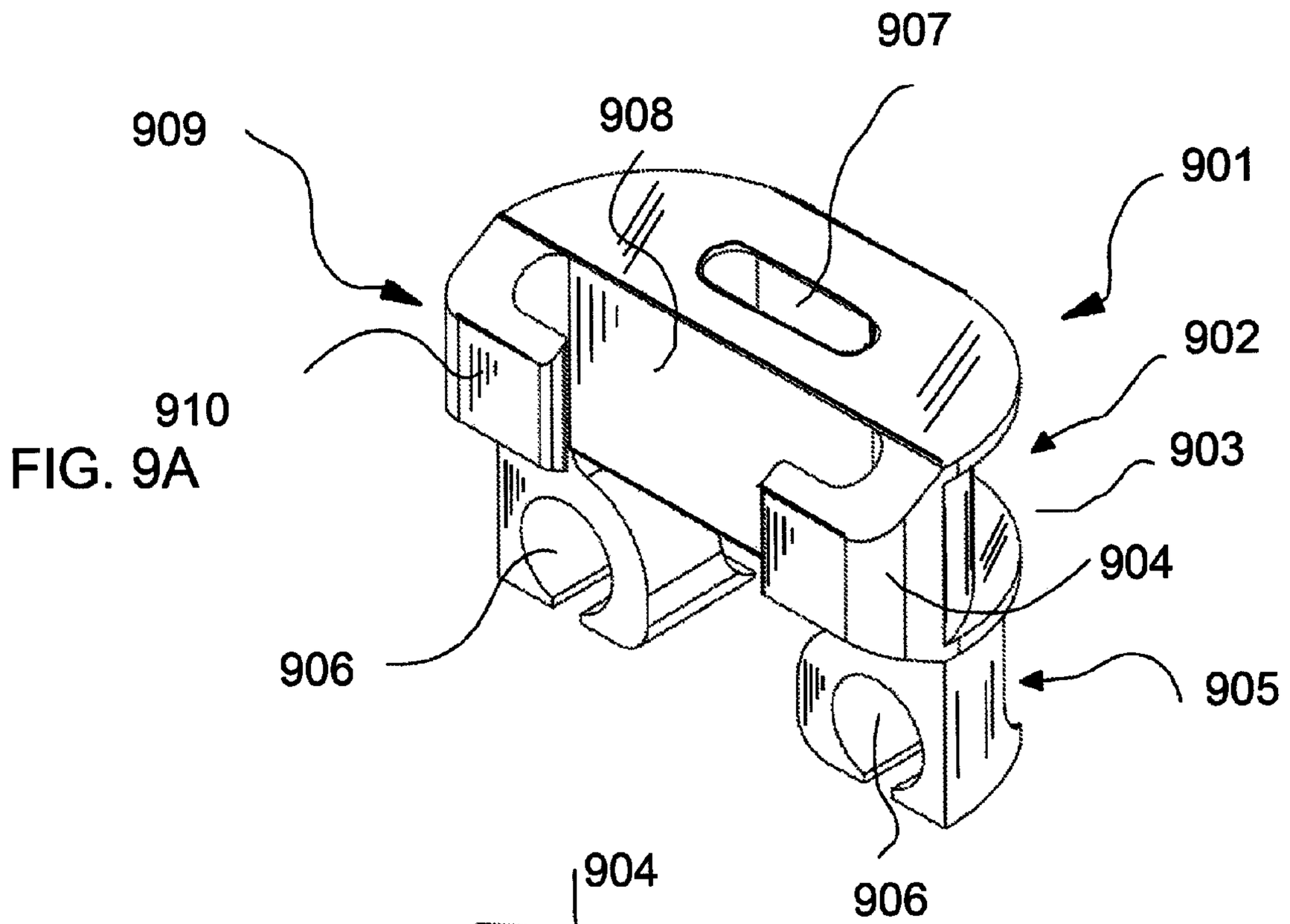
907
909
908
901
902
910
903
904
906
905
906

FIG. 9A

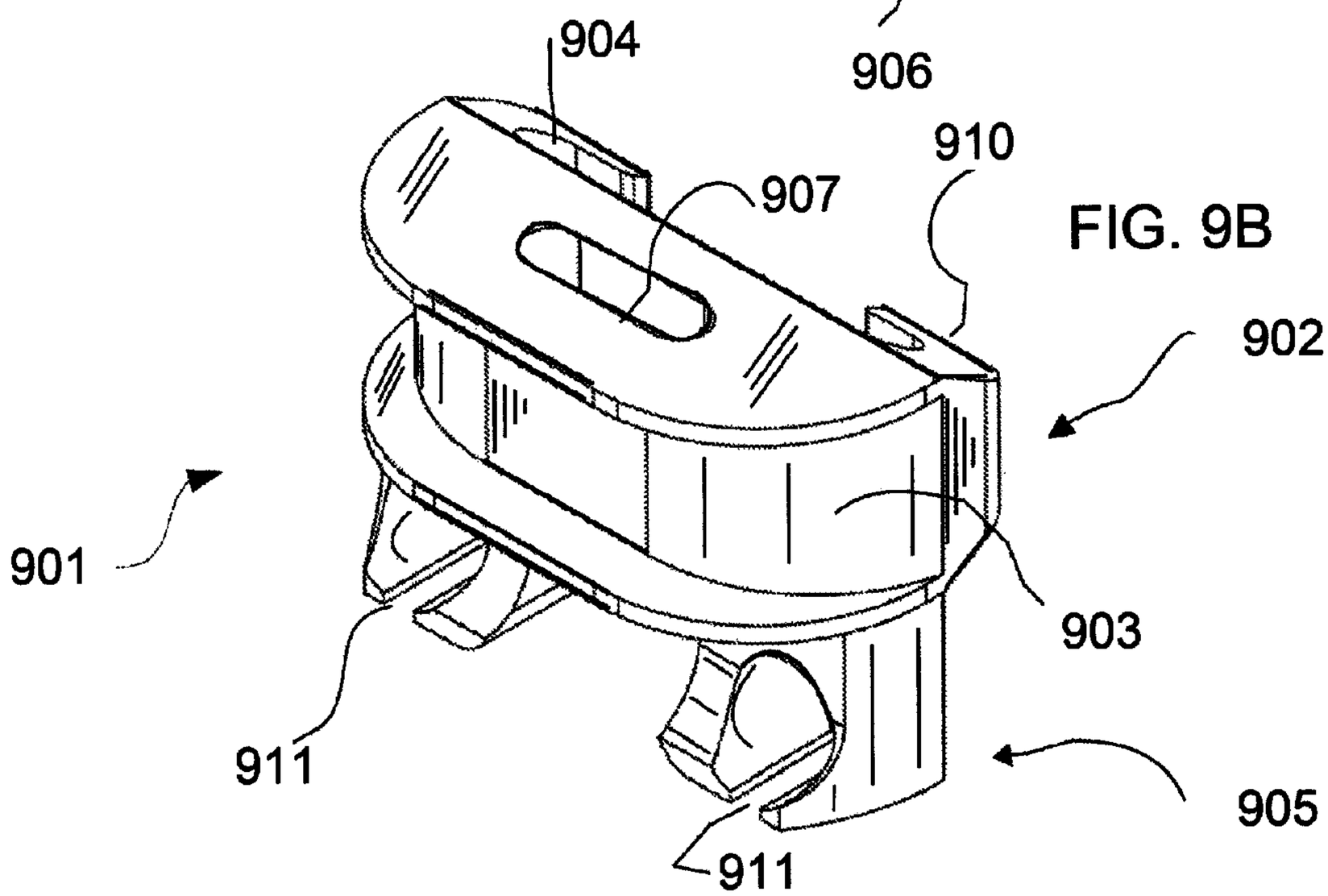
904
910
907
902
901
903
911
905
911

FIG. 9B

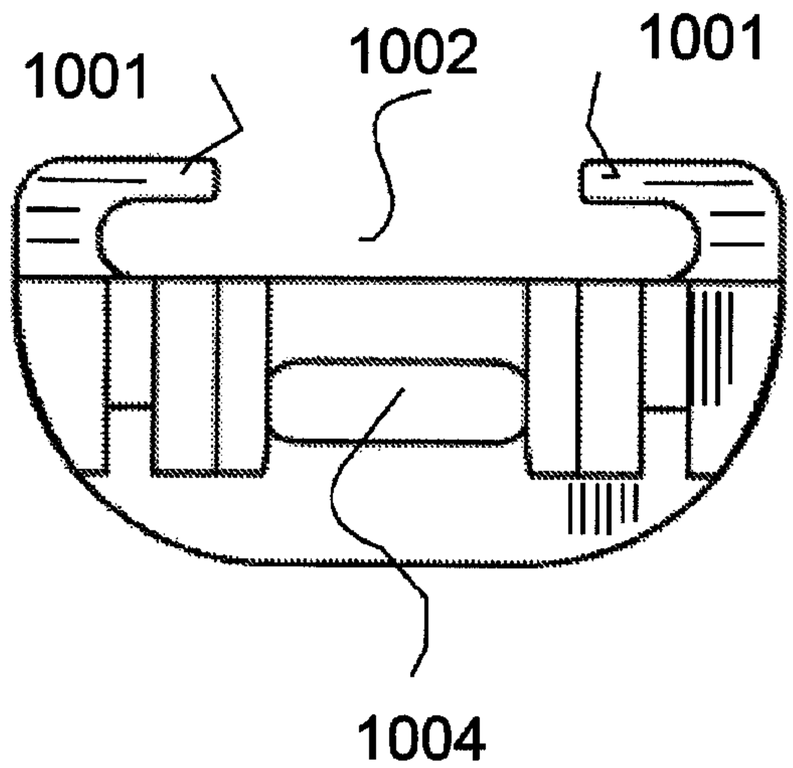

FIG. 10A

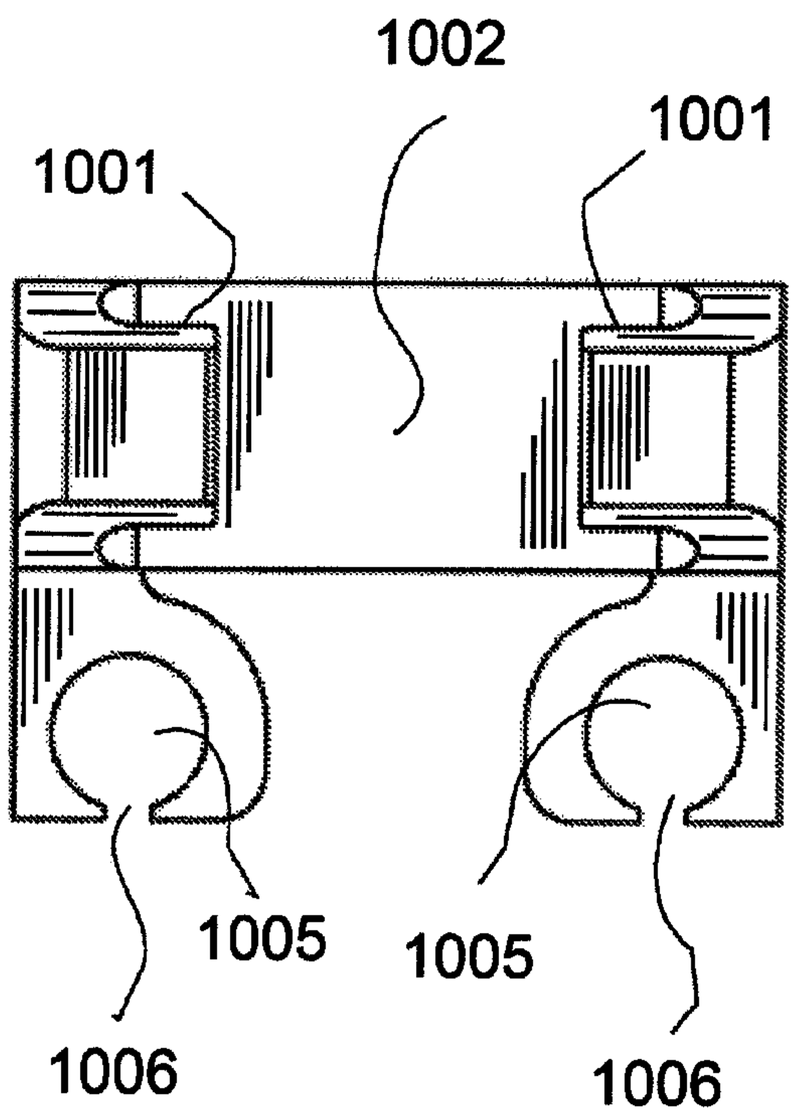

FIG. 10B

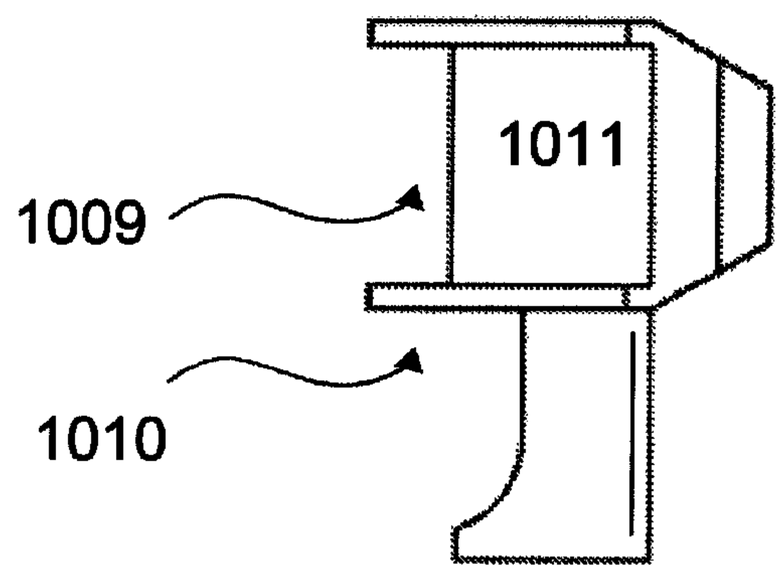

FIG. 10C

FIG. 11A

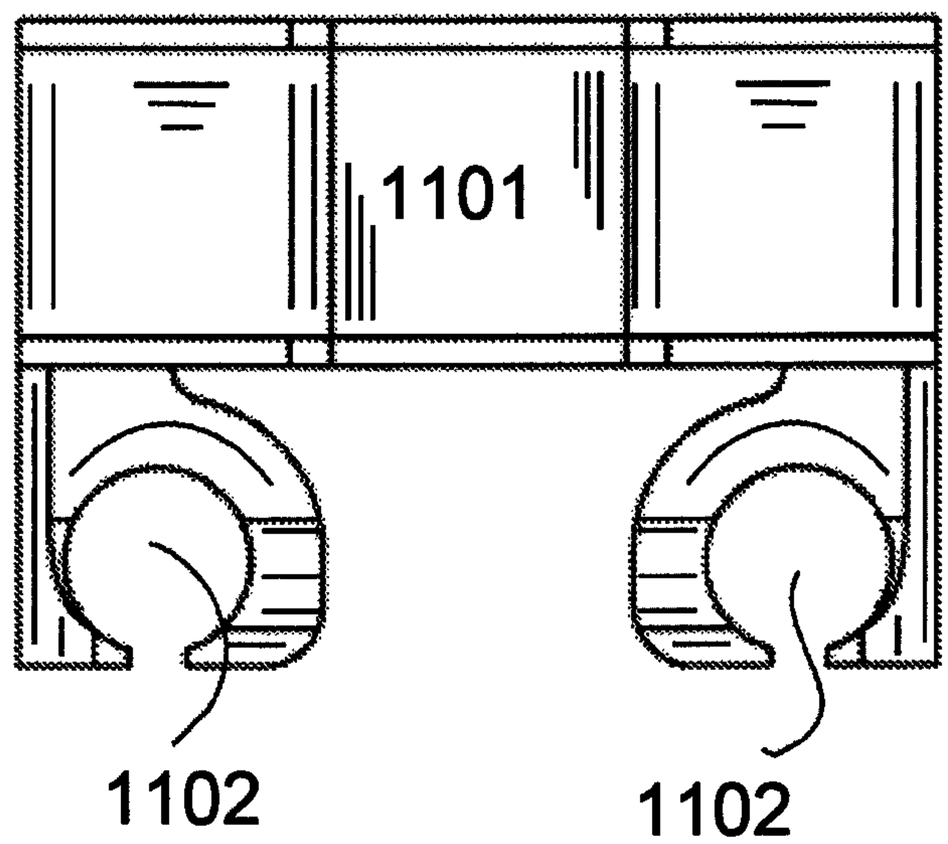

FIG. 11B

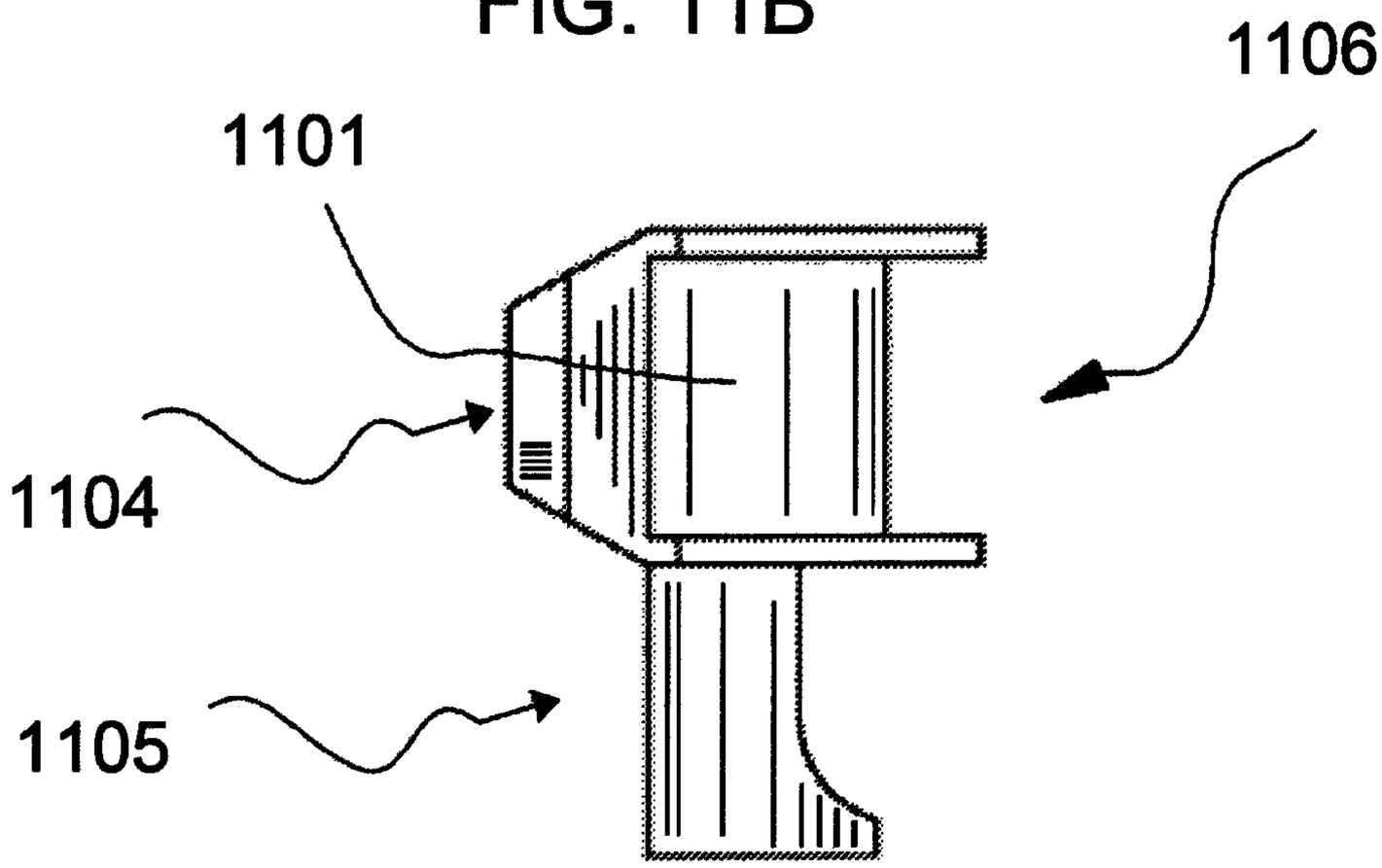

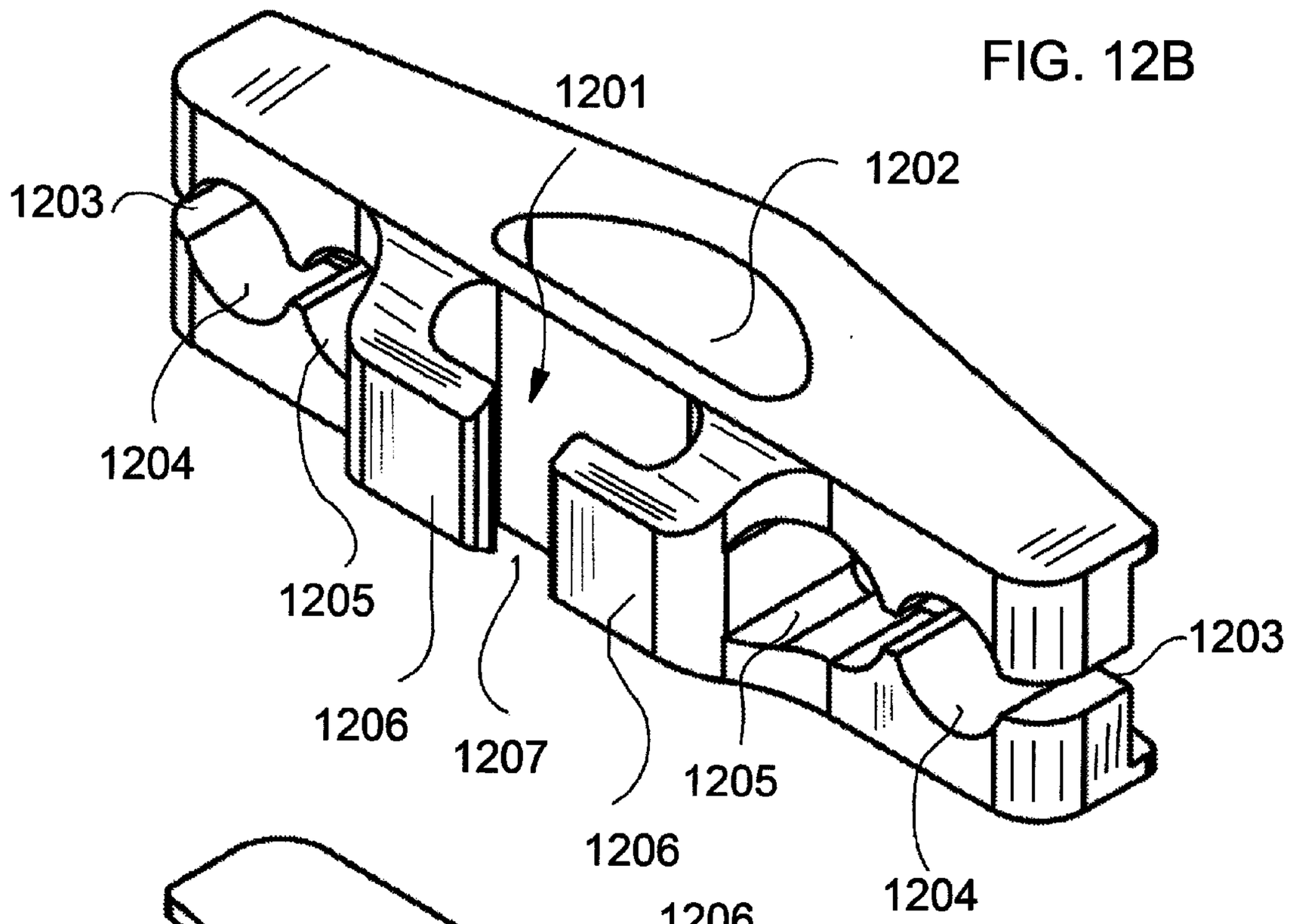

FIG. 12B

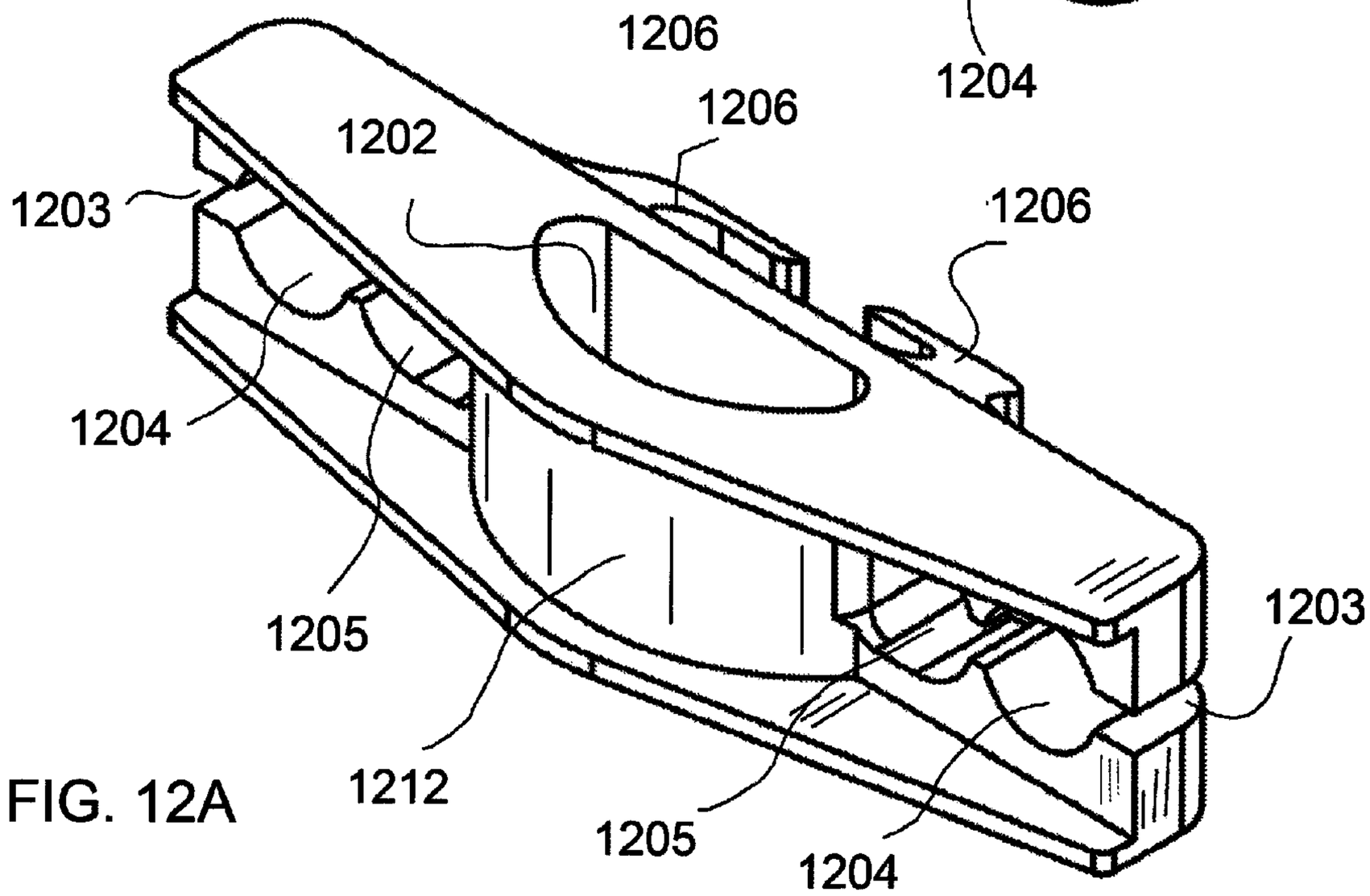

FIG. 12A

FIG. 13

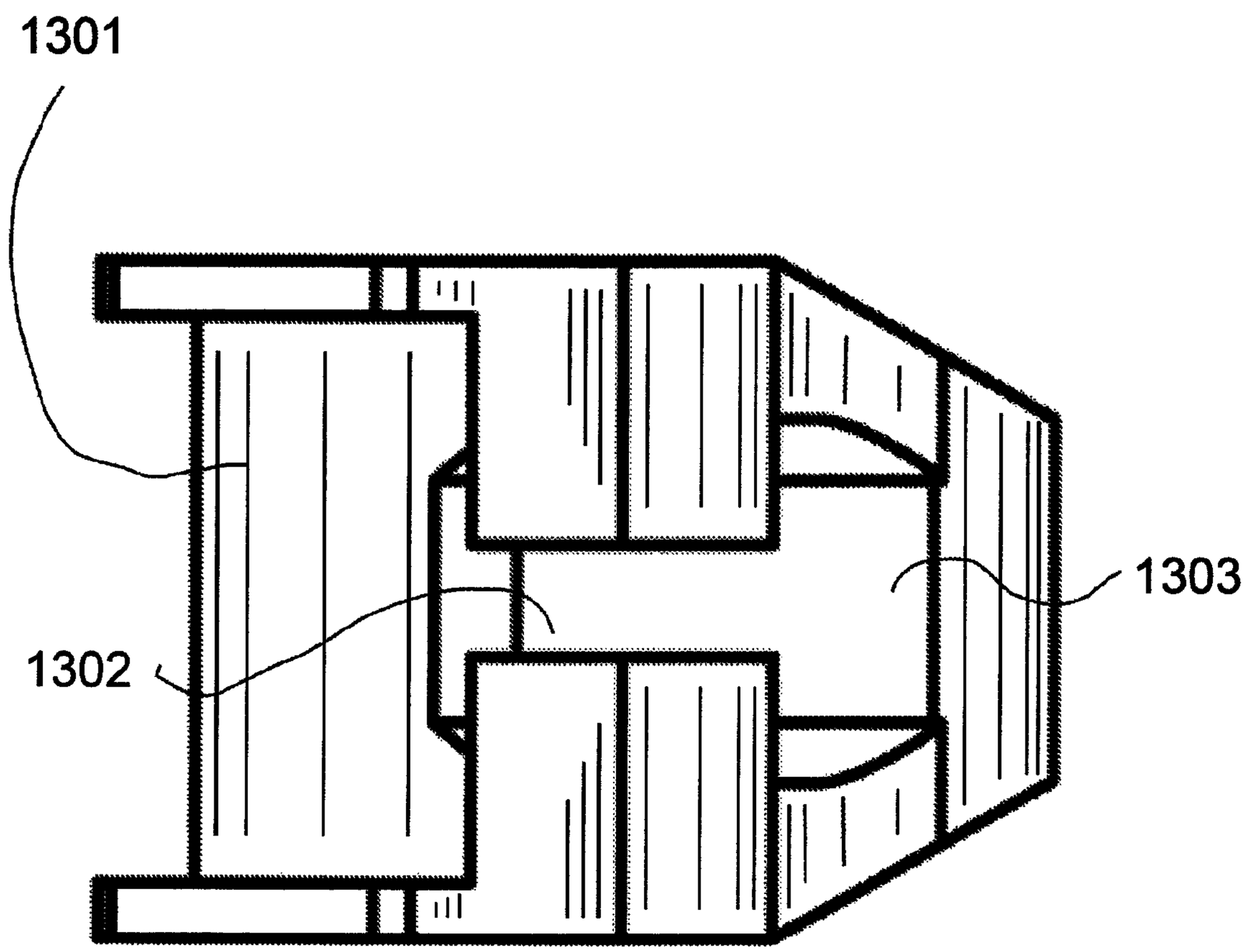

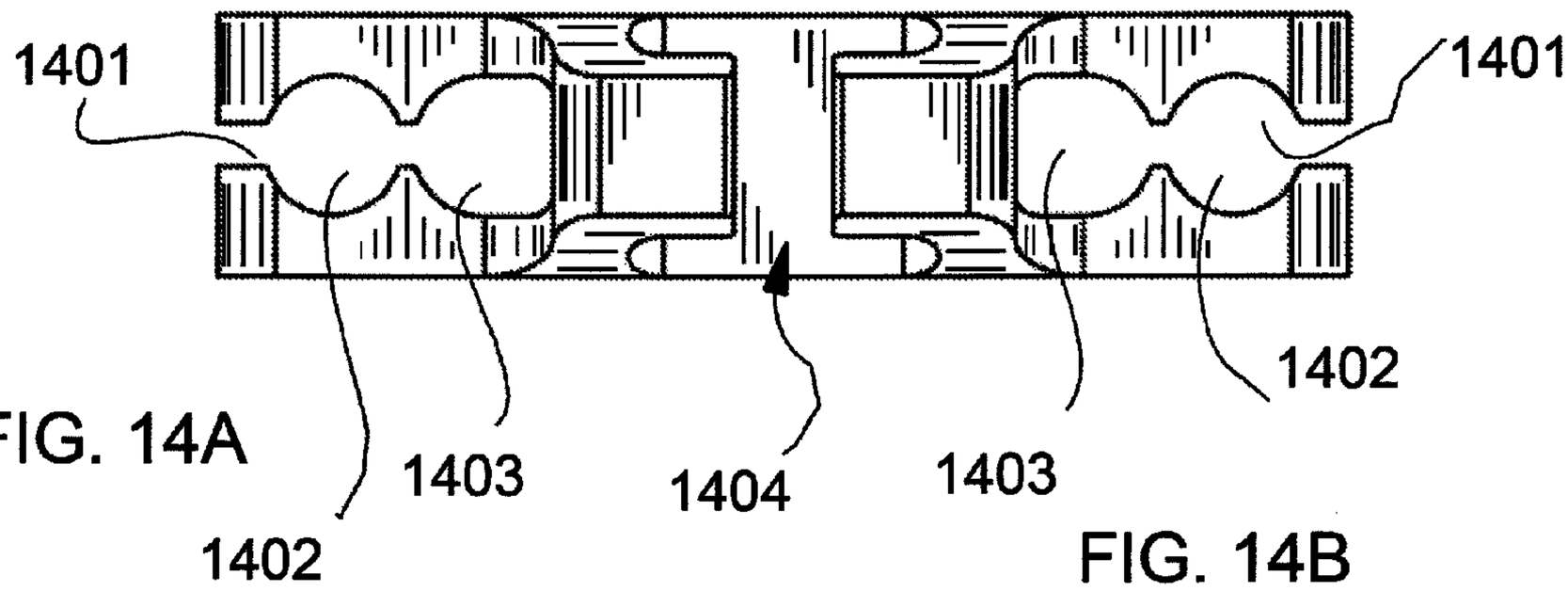

FIG. 14A

FIG. 14B

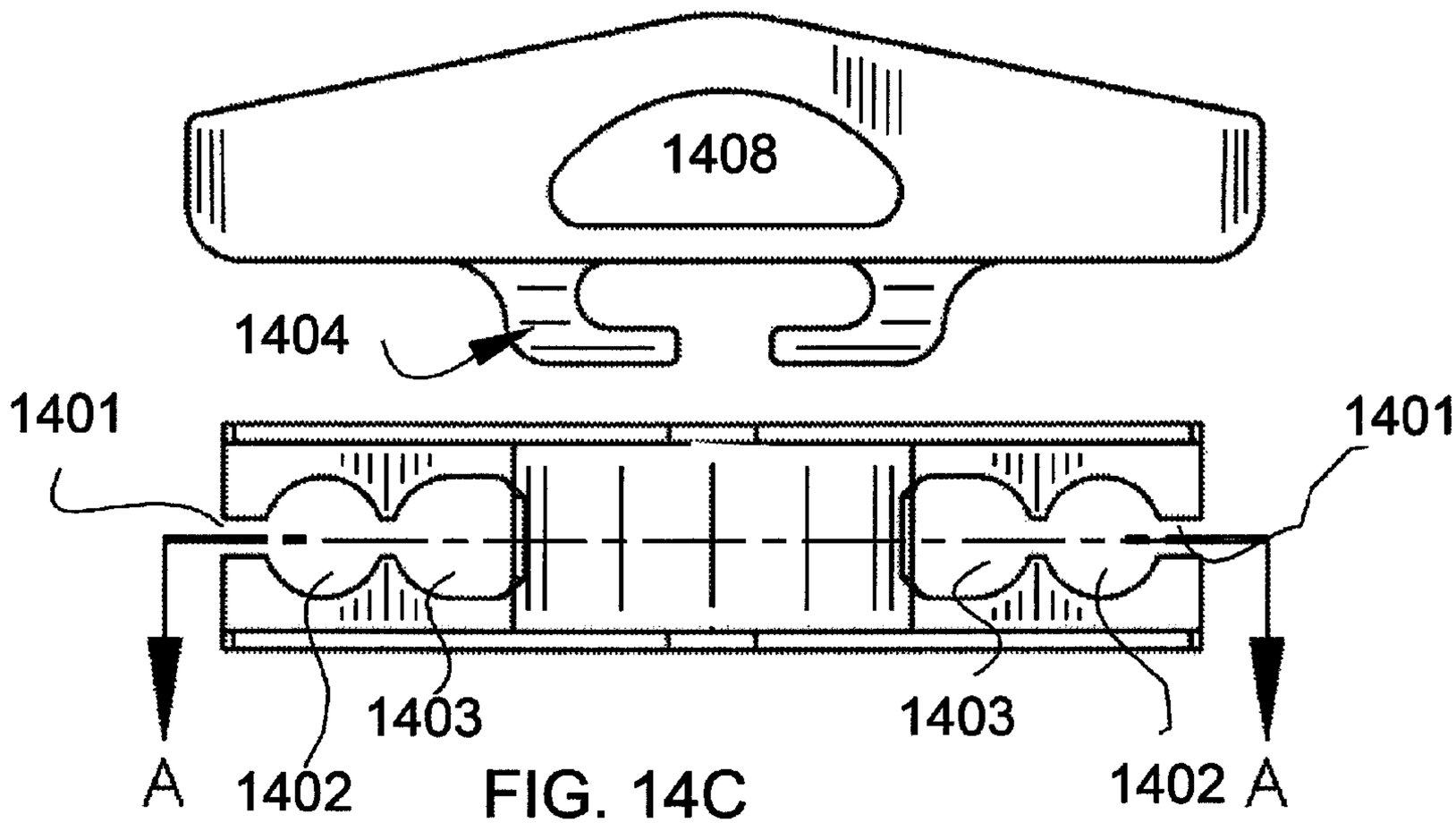

FIG. 14C

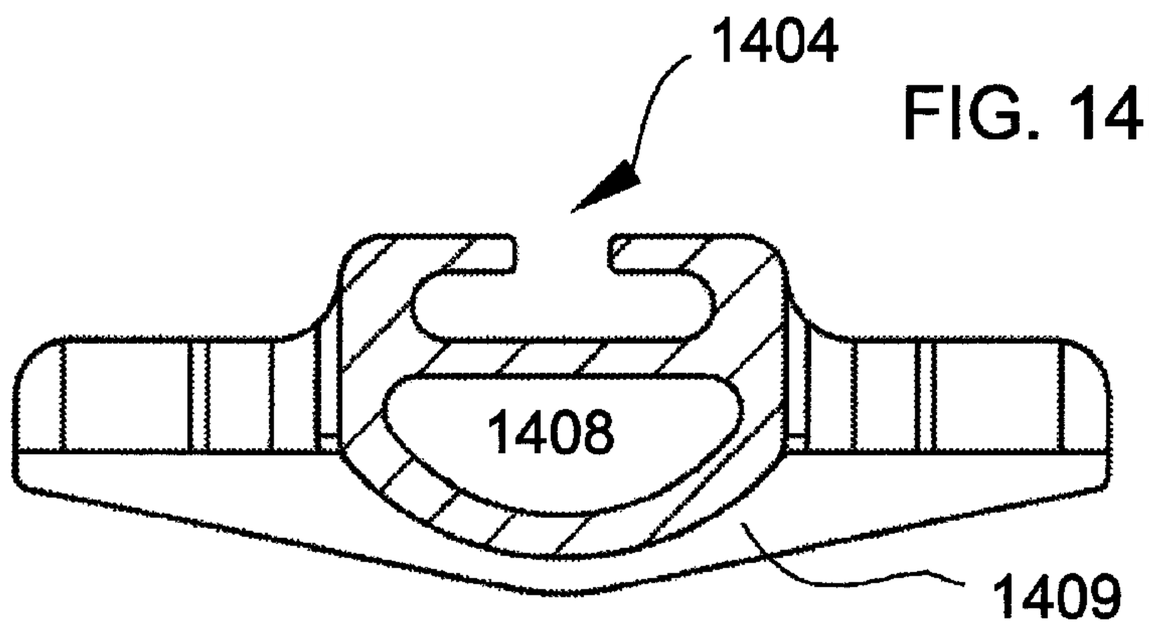

FIG. 14D

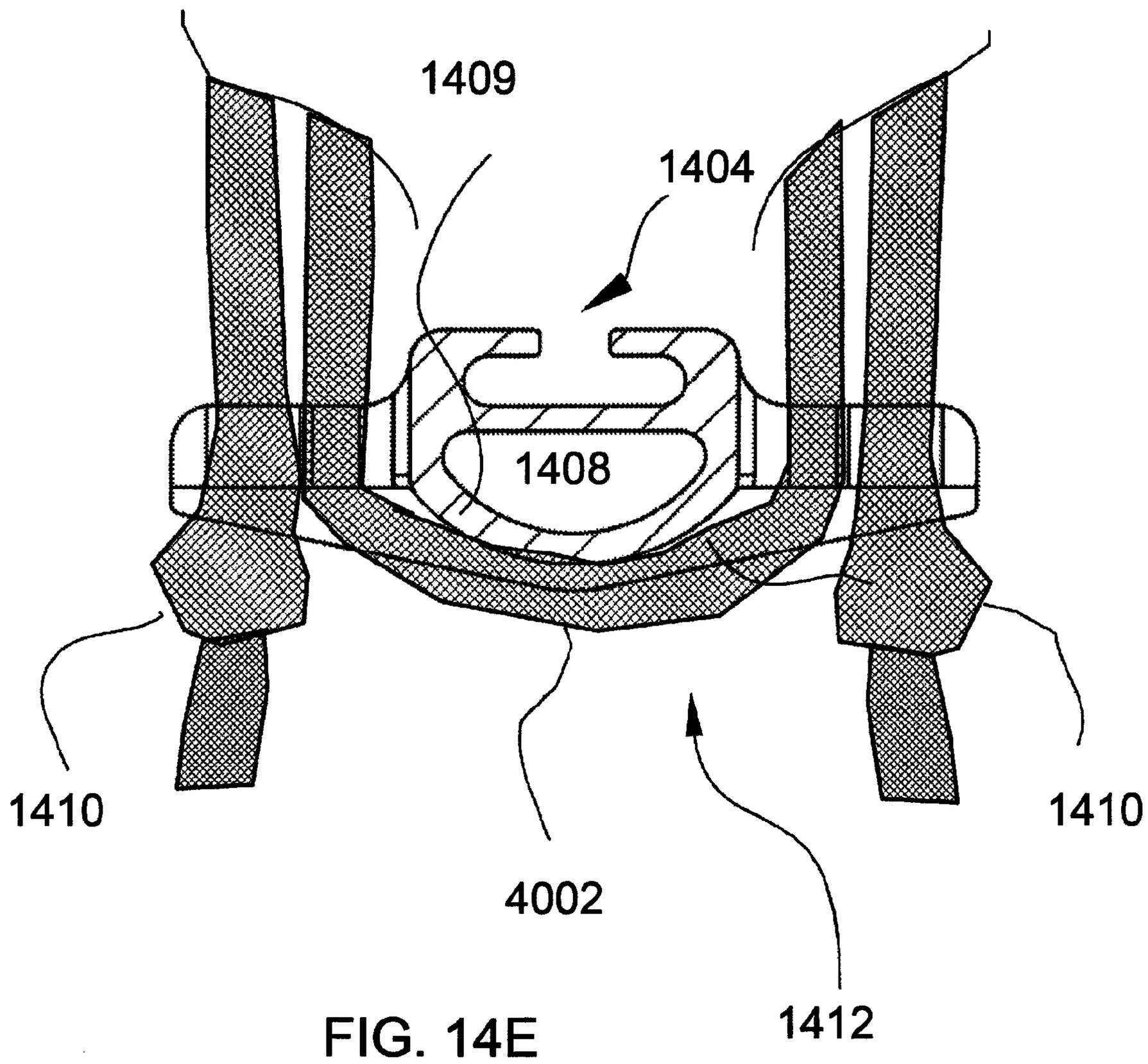

FIG. 14E

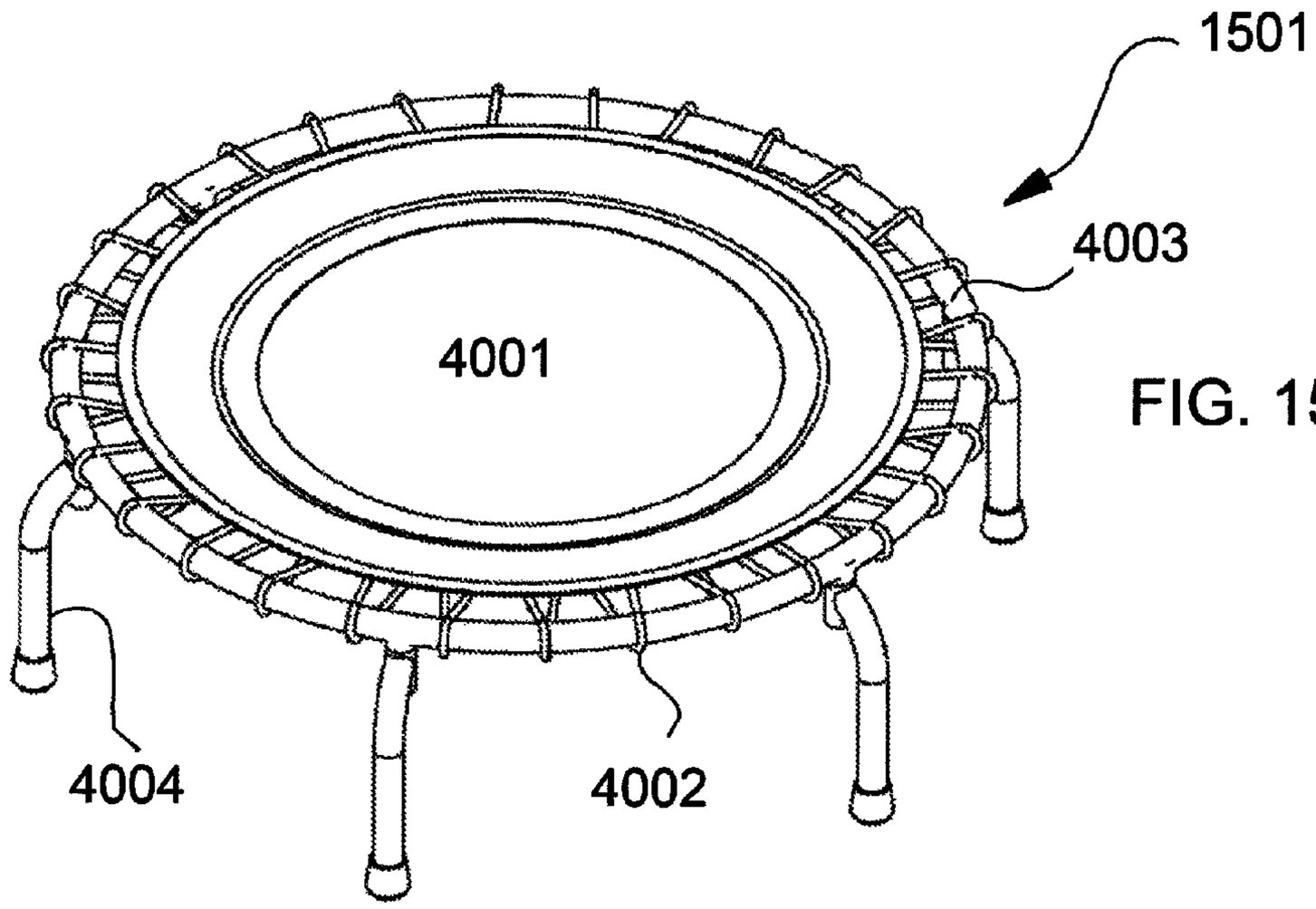

FIG. 15A

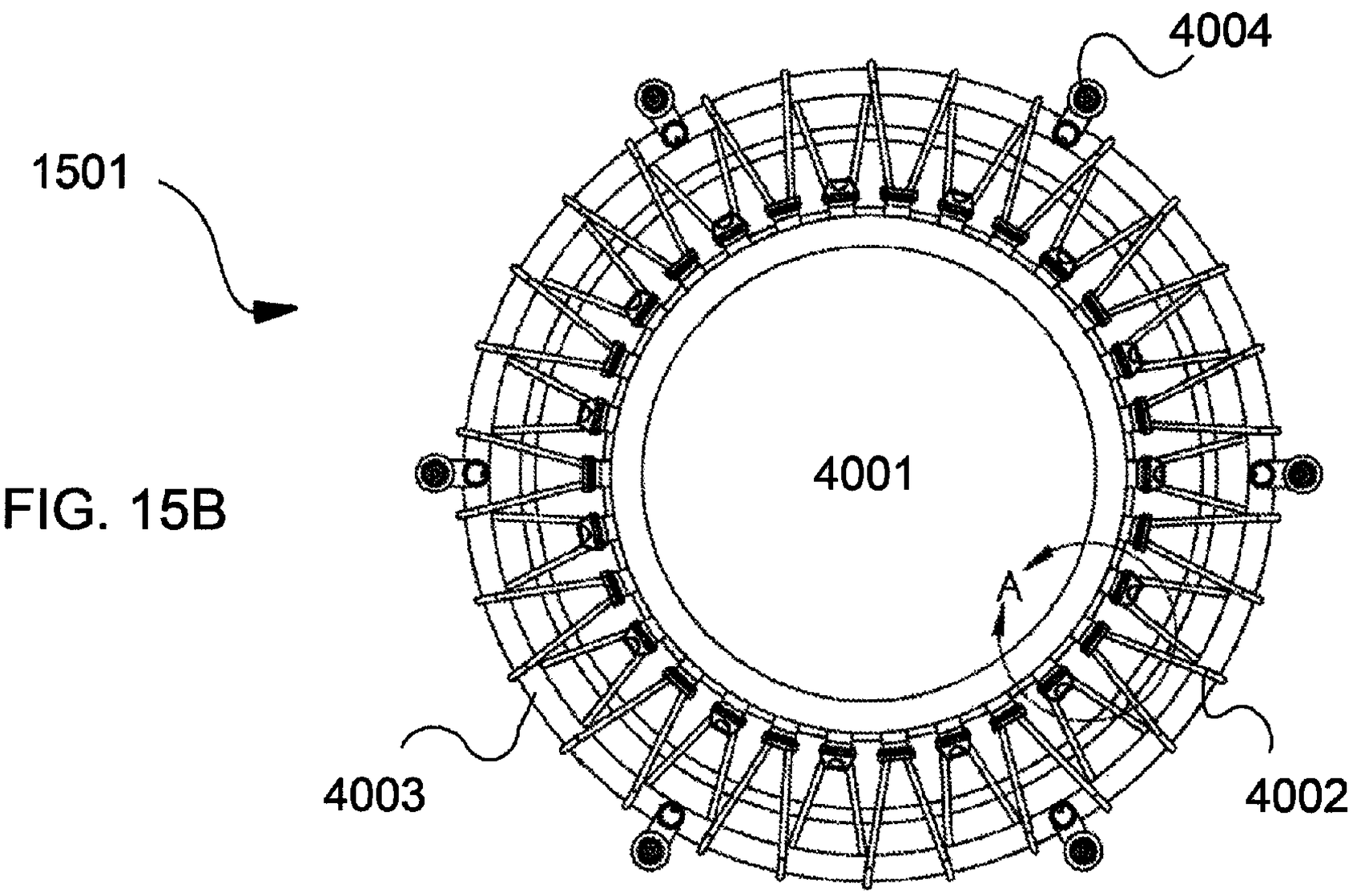

FIG. 15B

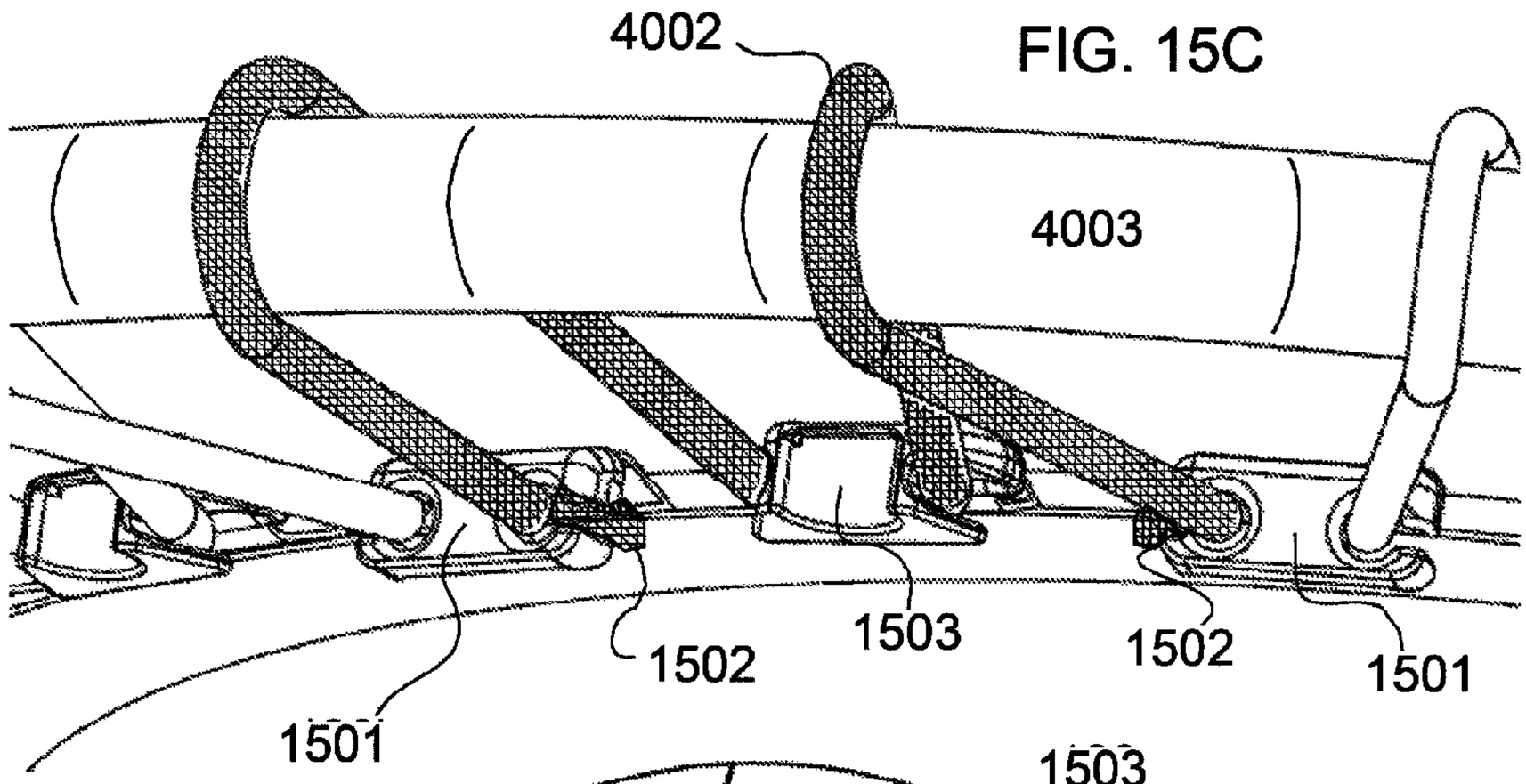

FIG. 15C

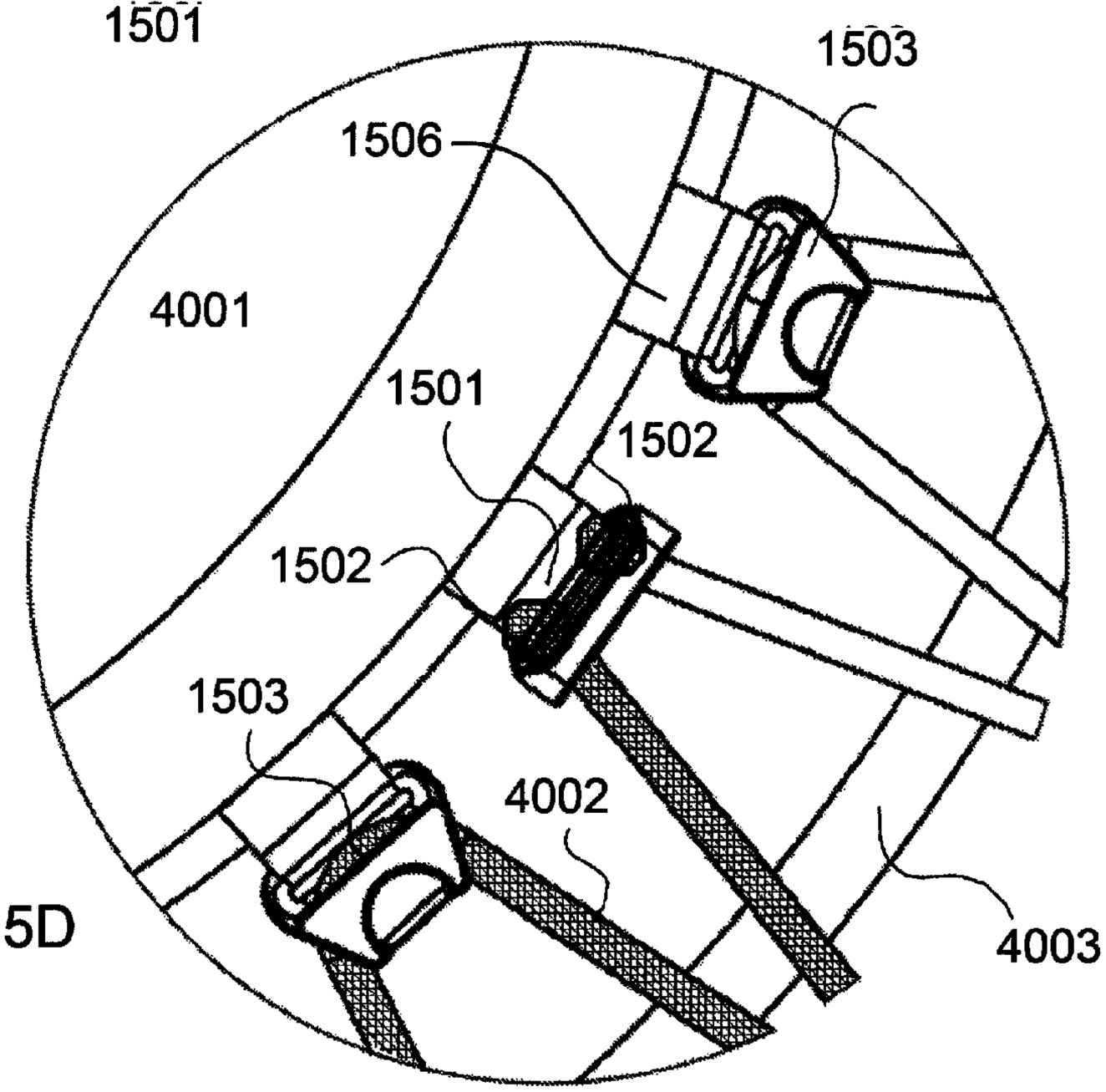

FIG. 15D

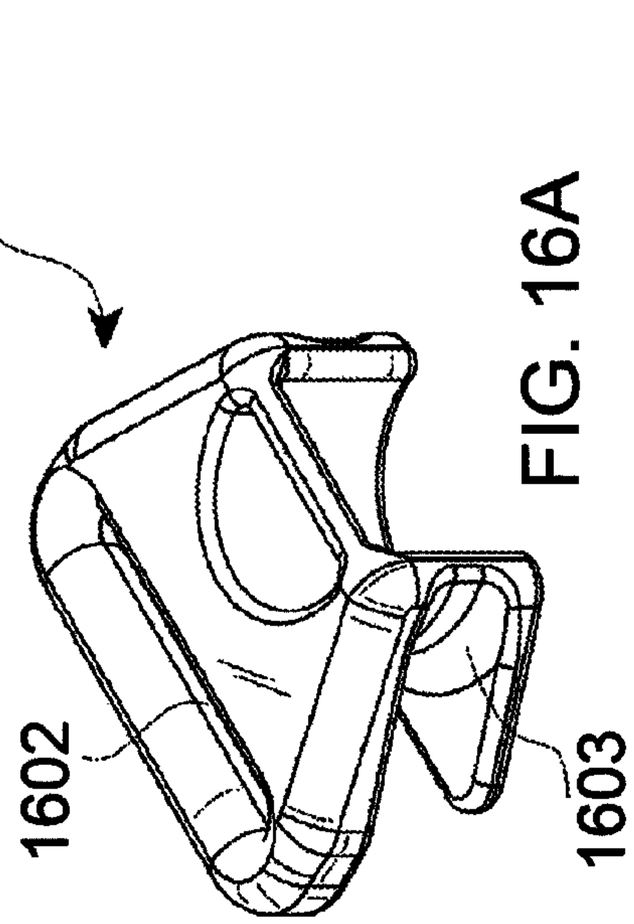

FIG. 16A

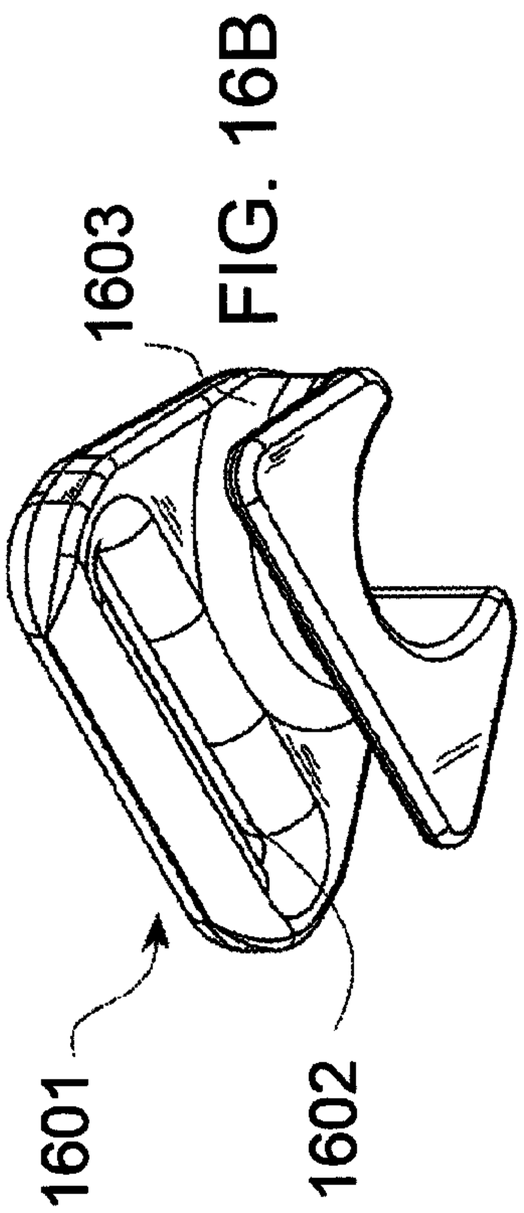

FIG. 16B

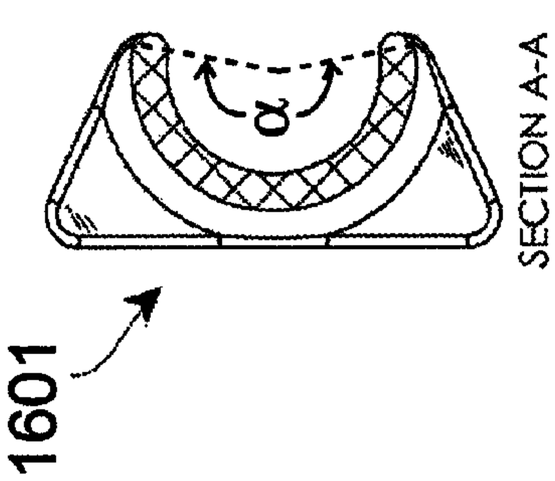

FIG. 16E

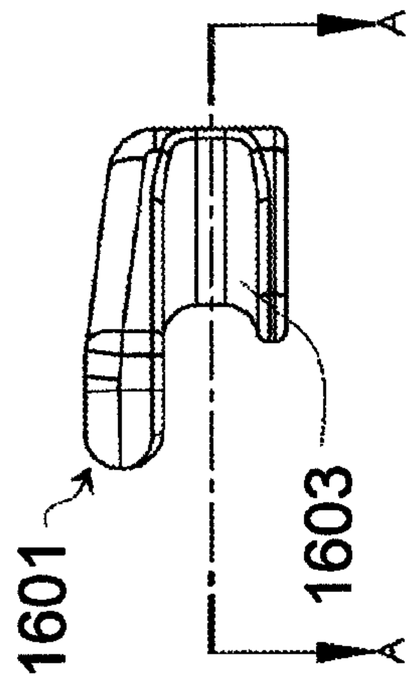

FIG. 16D

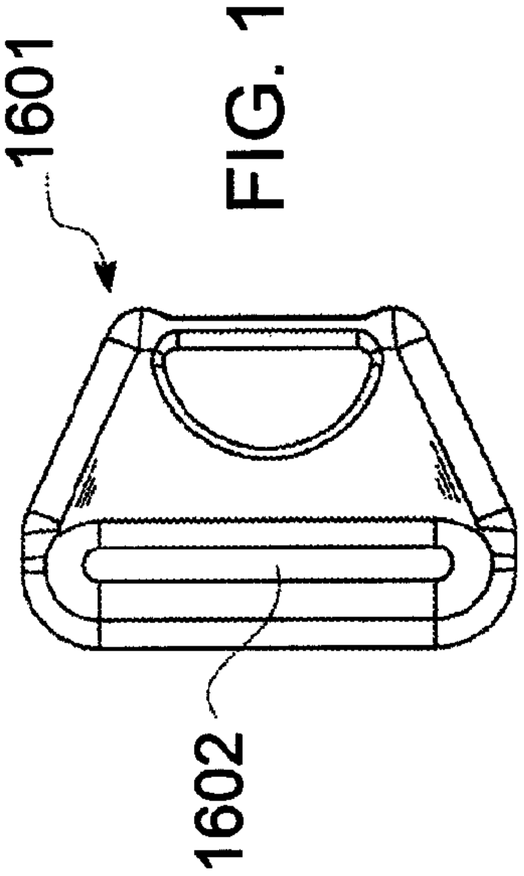

FIG. 16C

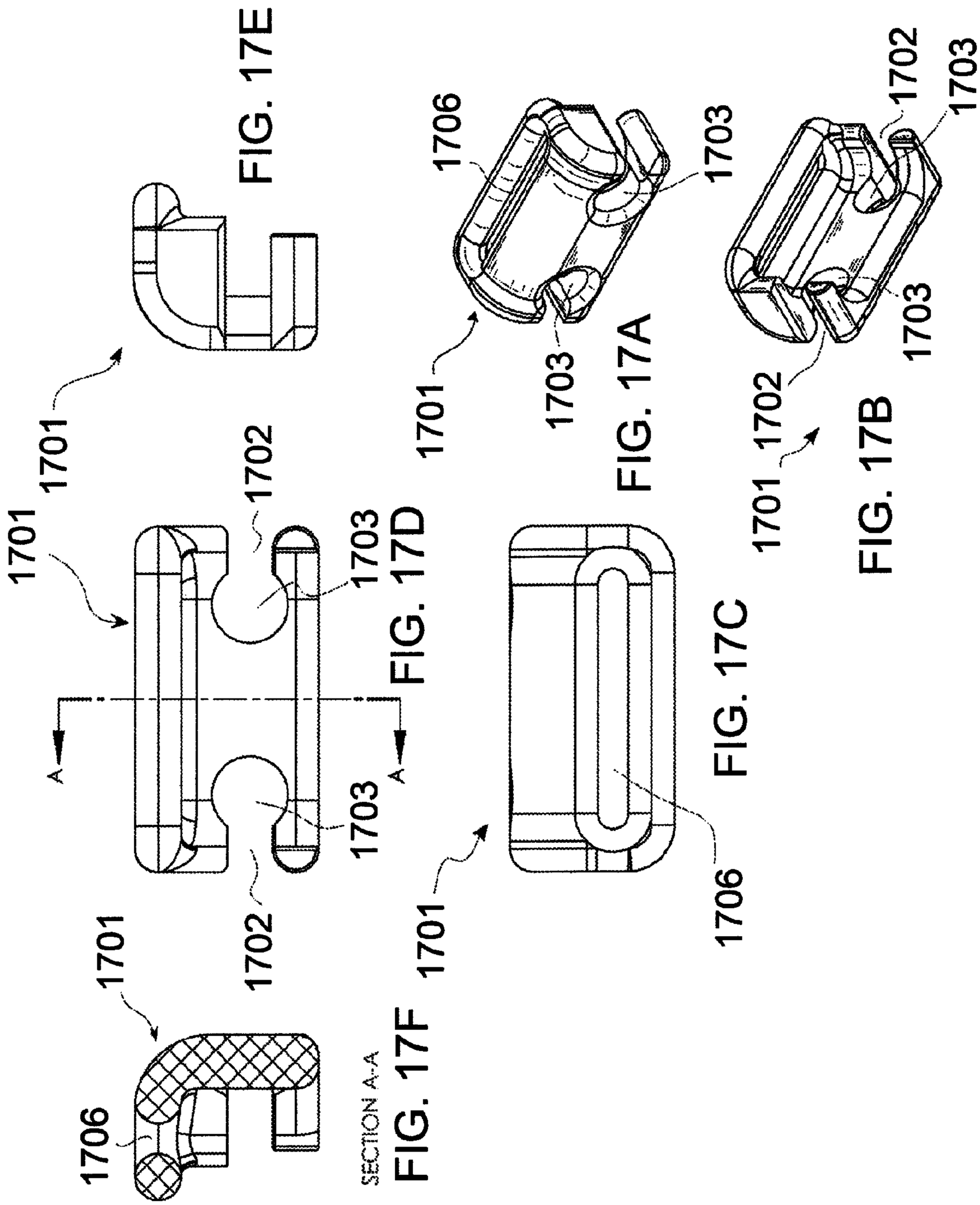

FIG. 17E

FIG. 17A

FIG. 17B

FIG. 17D

FIG. 17C

FIG. 17F

FIG. 18

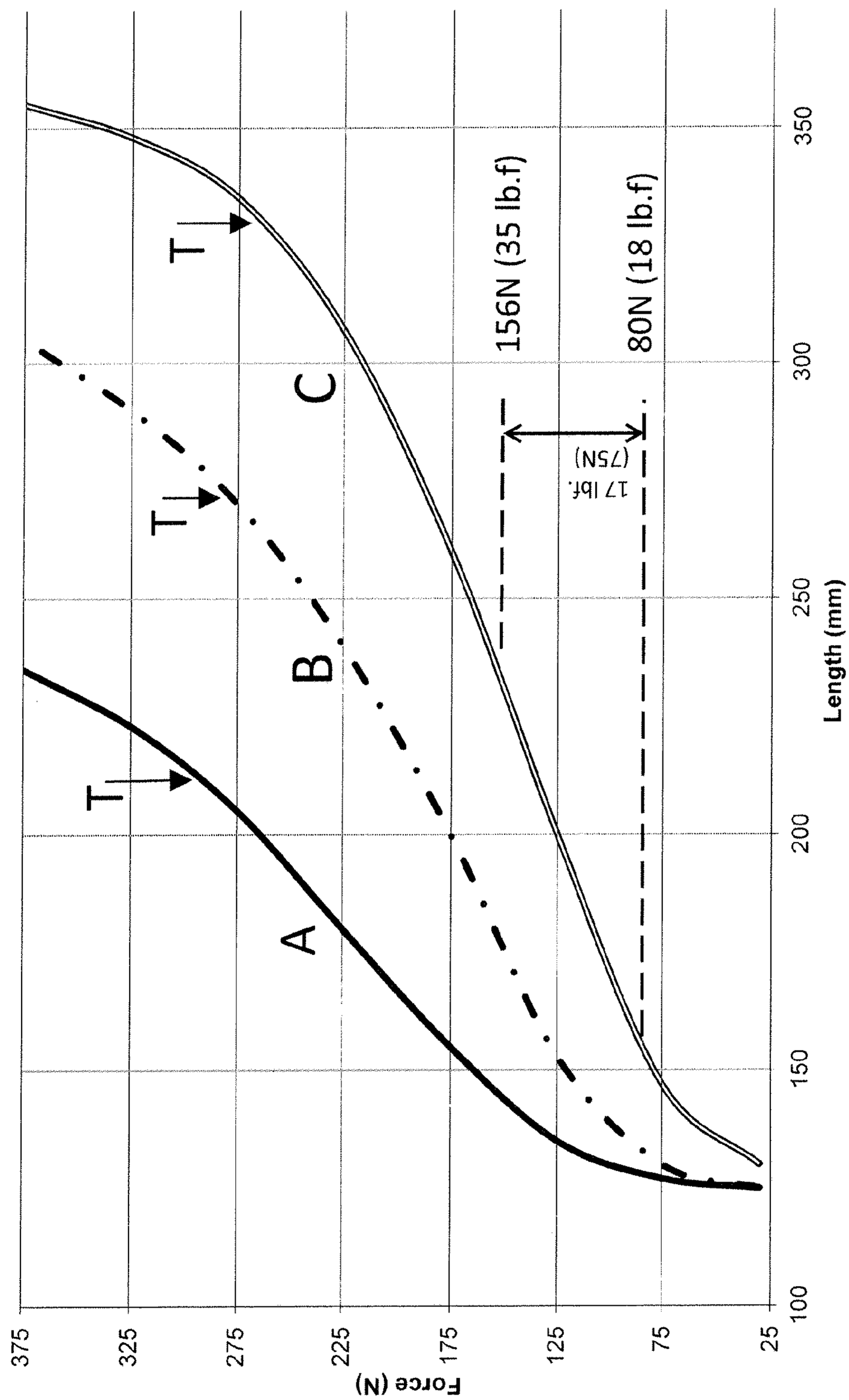
Force (N)
375
325
275
225
175
125
75
25
100
150
200
250
300
350
Length (mm)
A
B
C
T
T
T
156N (35 lb.f)
80N (18 lb.f)
17 lbf.
(75N)

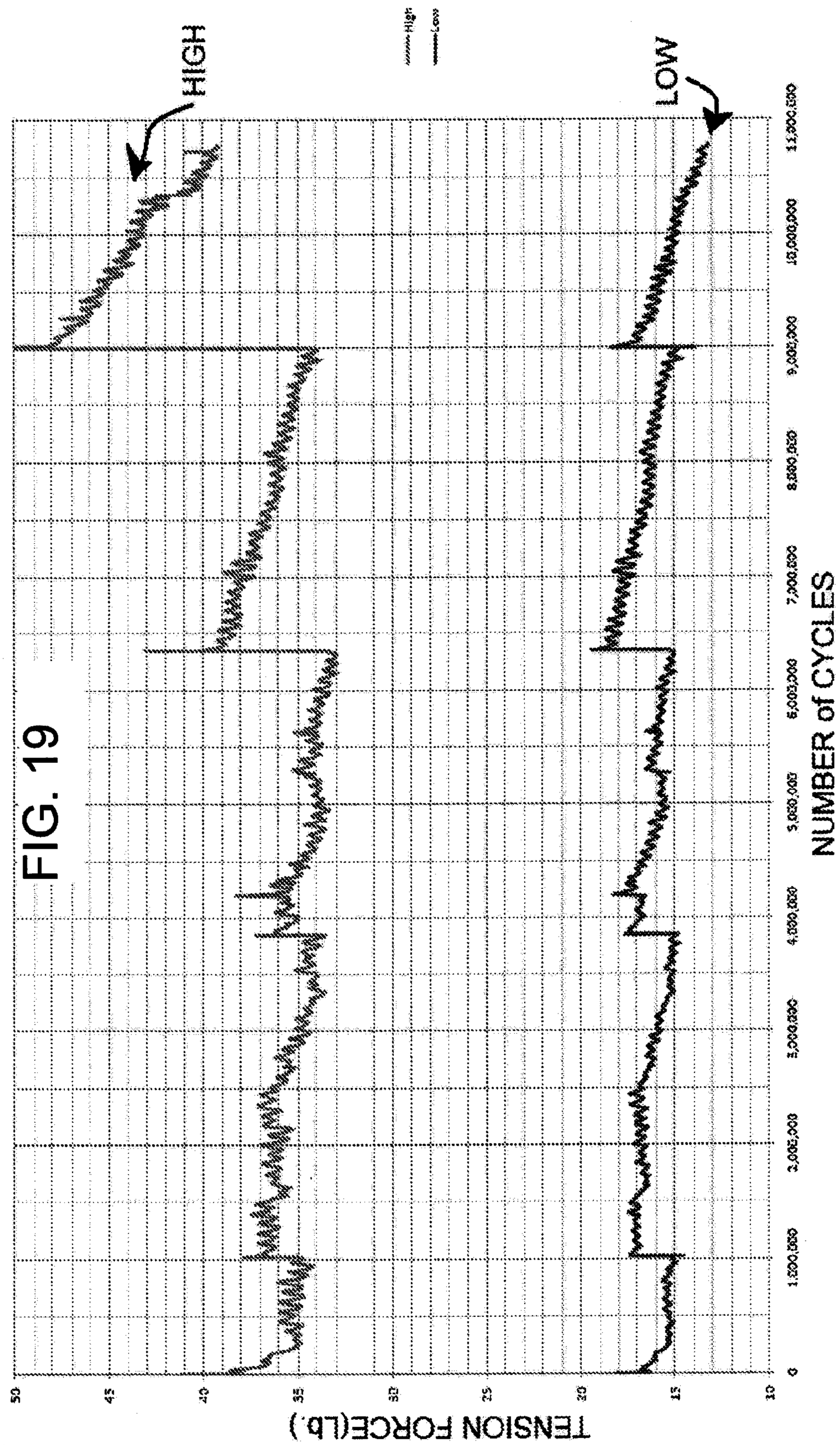
FIG. 19
HIGH
LOW
High
Low
TENSION FORCE(Lb.)
50
45
40
35
30
25
20
15
10
0
1,000,000
2,000,000
3,000,000
4,000,000
5,000,000
6,000,000
7,000,000
8,000,000
9,000,000
10,000,000
11,000,000
NUMBER of CYCLES

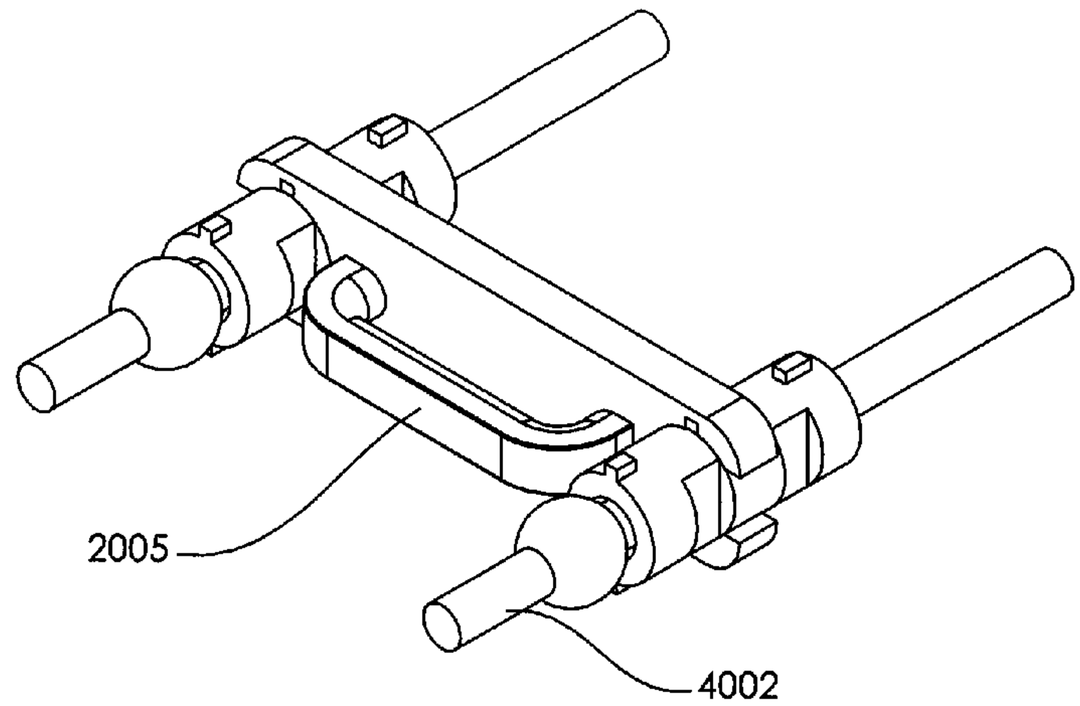

Fig. 20A

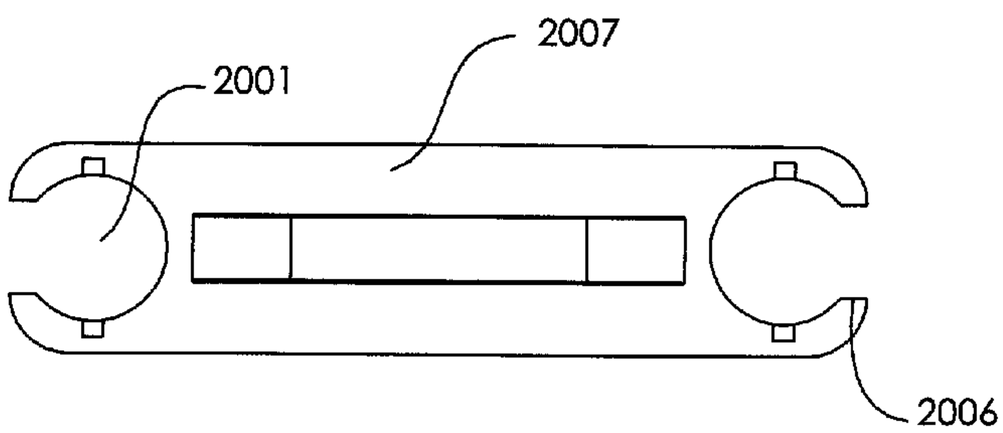

Fig. 20B

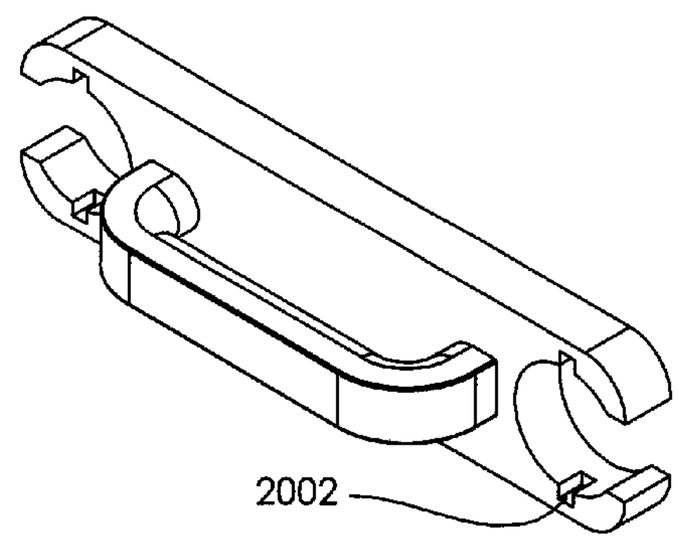

Fig. 20C

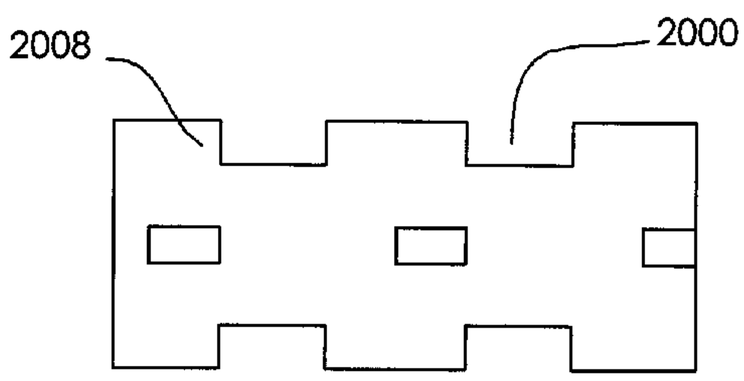

Fig. 20D

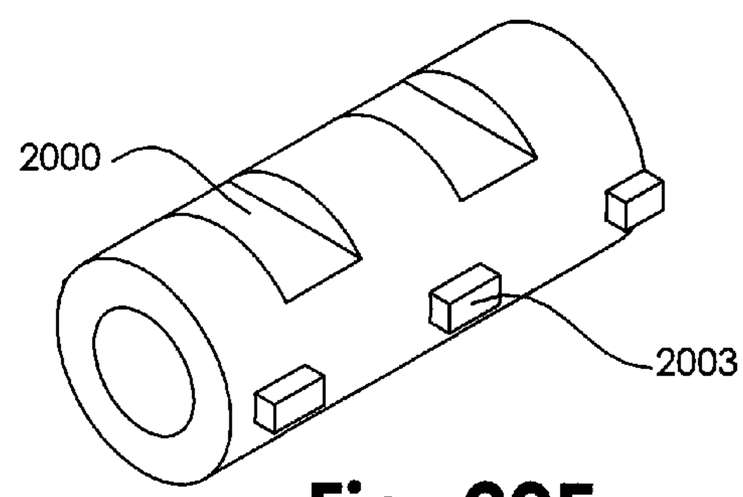

Fig. 20E

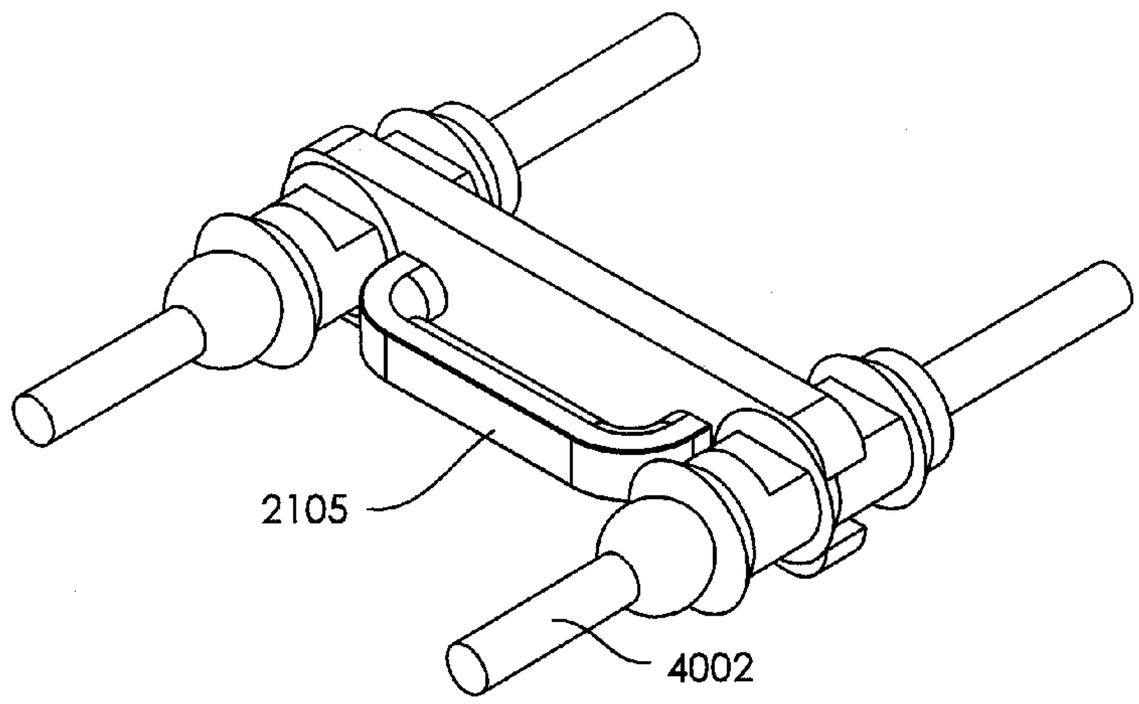

Fig. 21A

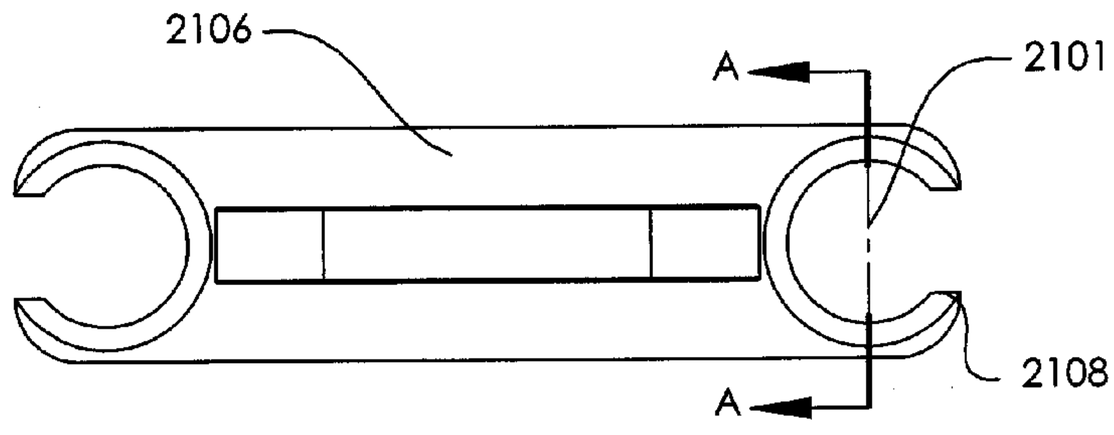

Fig. 21B

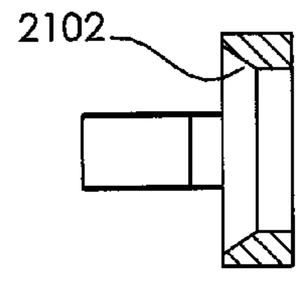

Fig. 21C

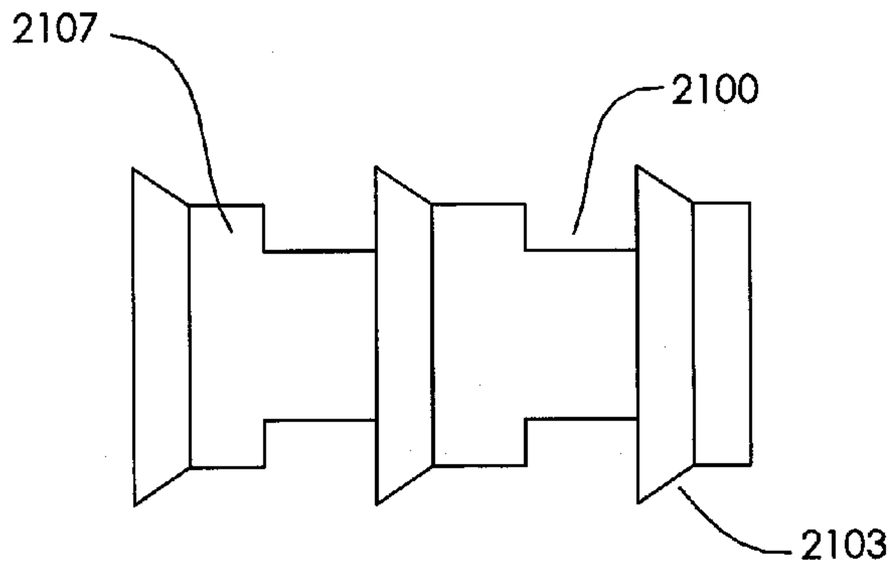

Fig. 21D

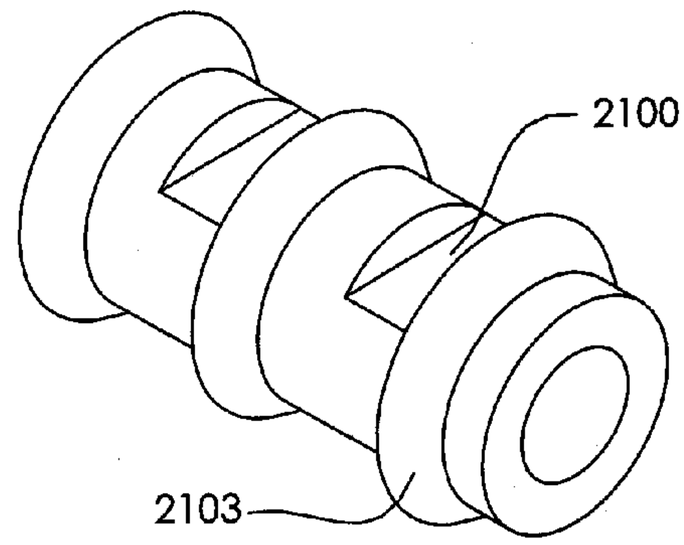

Fig. 21E

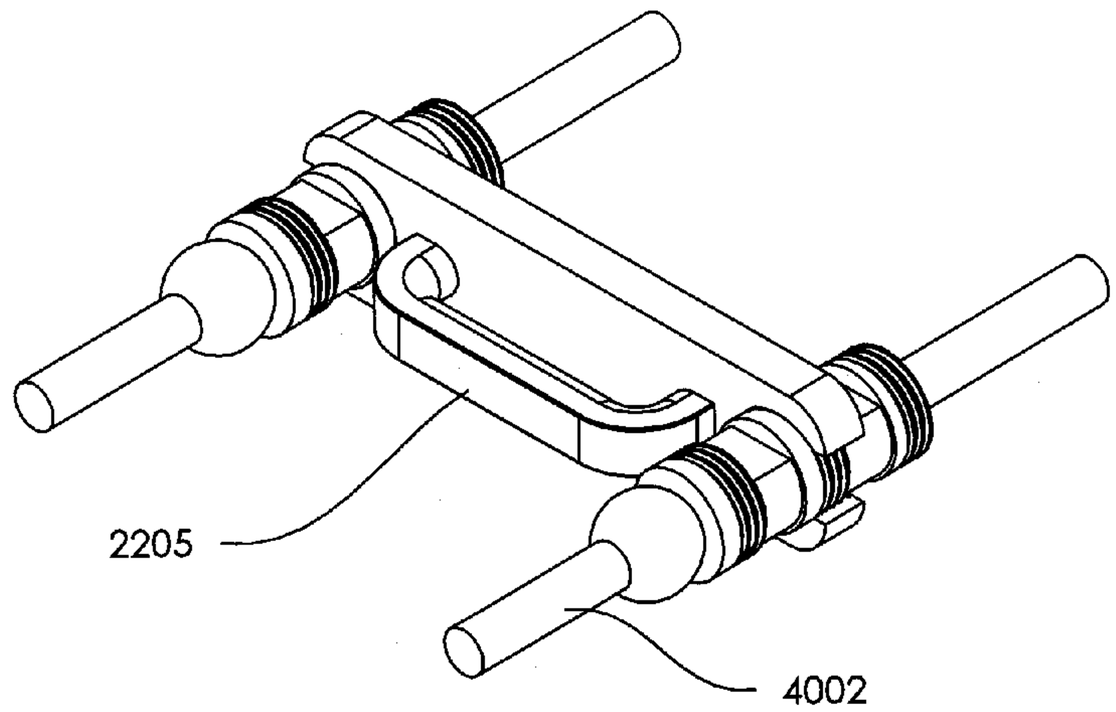

Fig. 22A

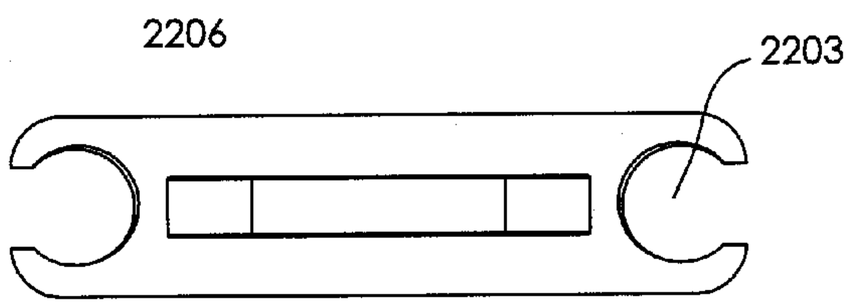

Fig. 22B

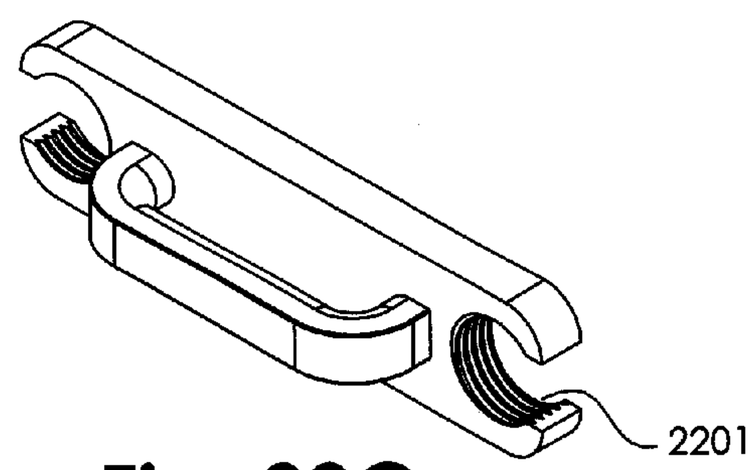

Fig. 22C

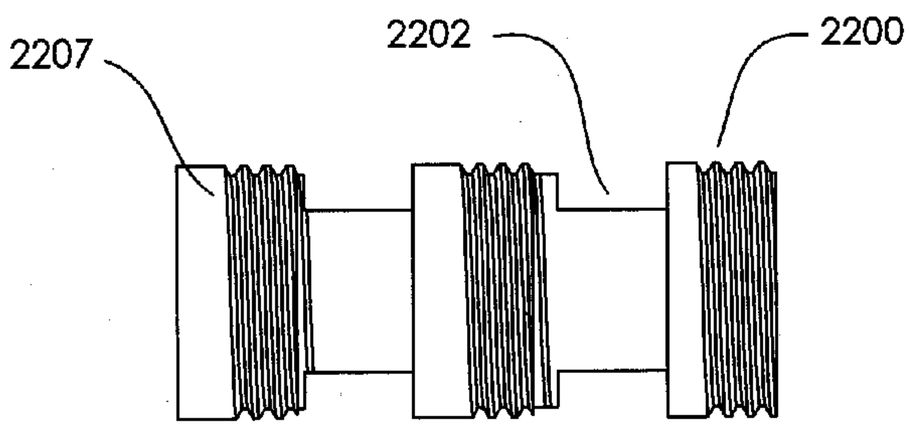

Fig. 22D

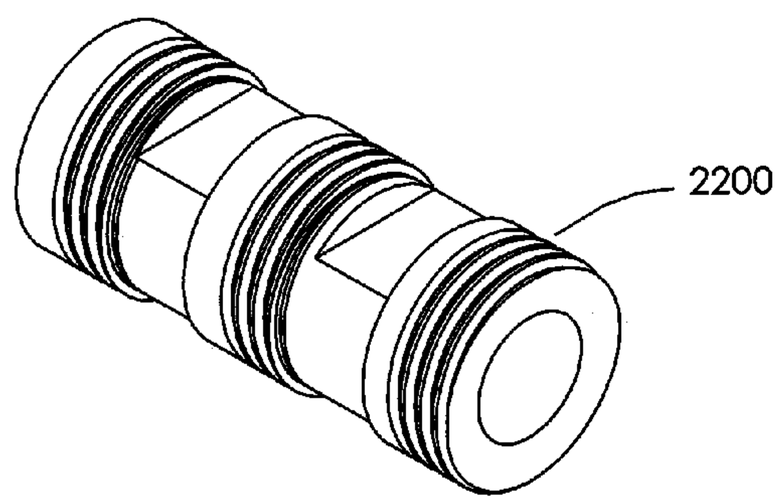

Fig. 22E

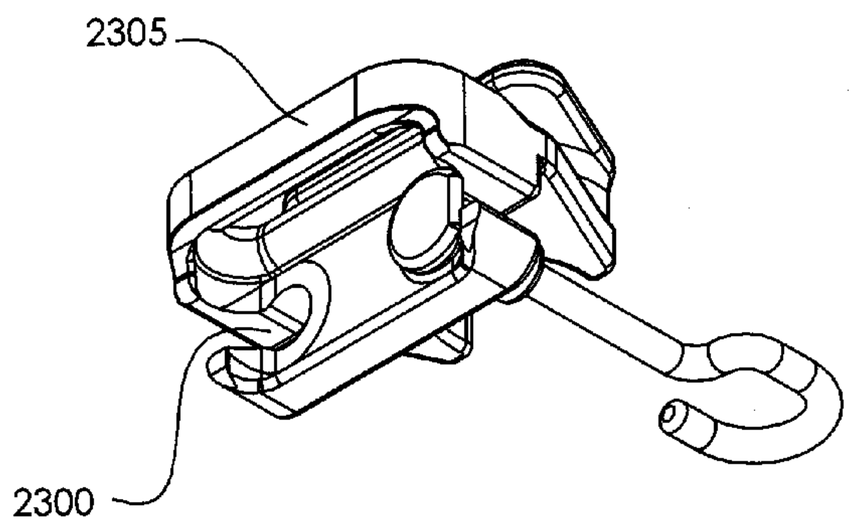

Fig. 23A

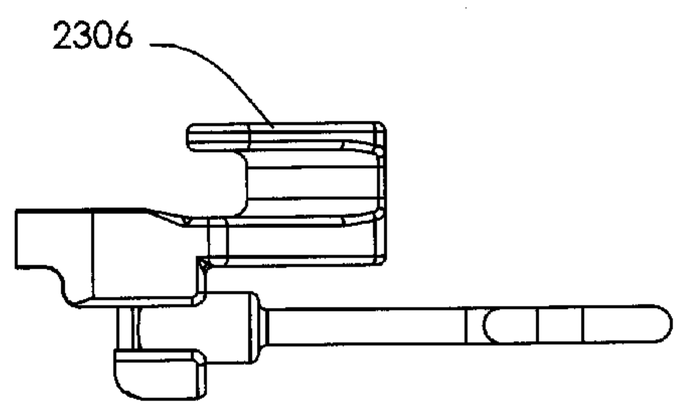

Fig. 23B

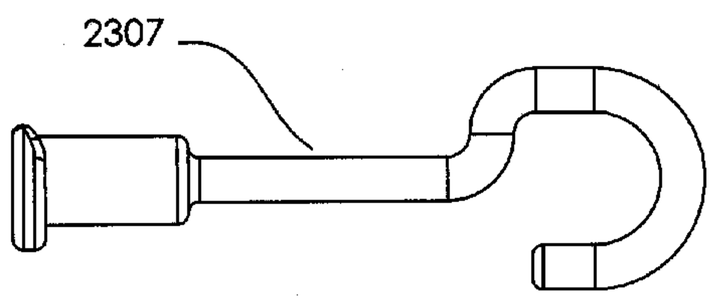

Fig. 23C

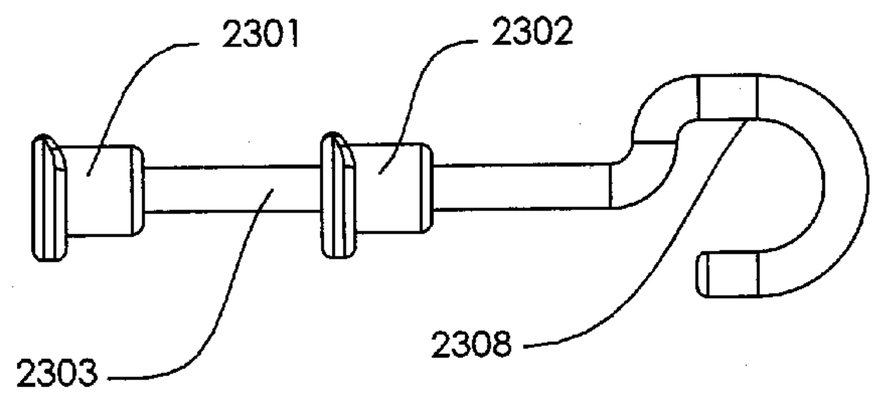

Fig. 23D

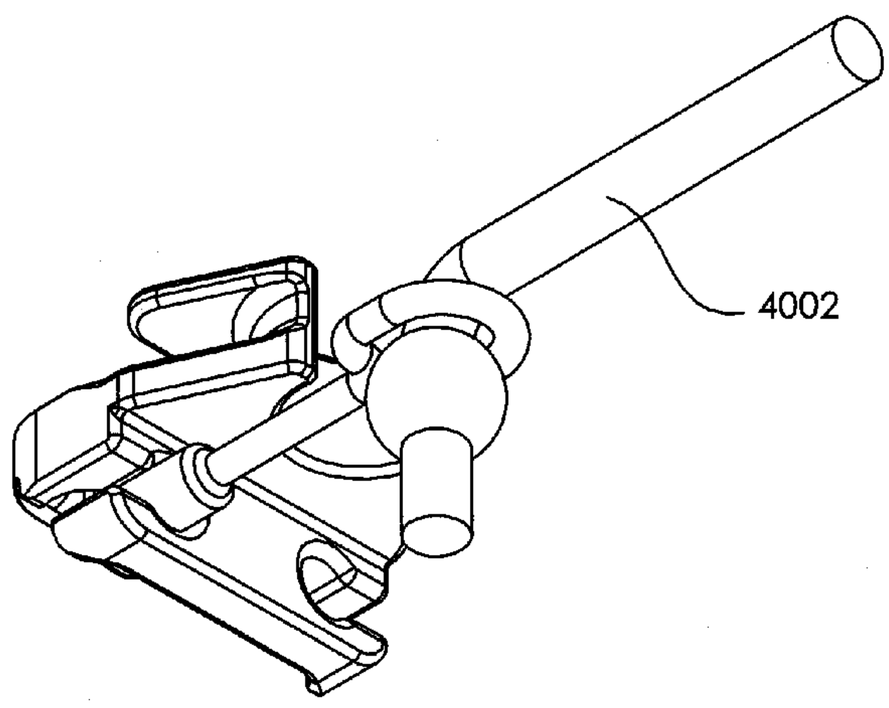

Fig. 23E

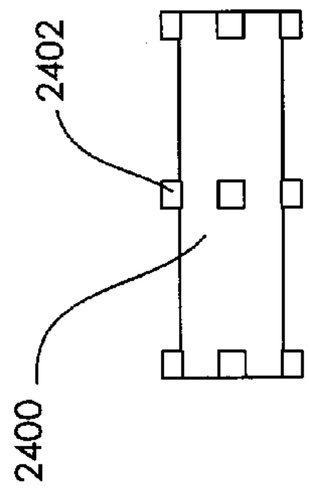

Fig. 24C

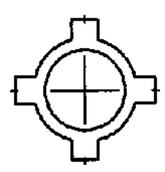

Fig. 24B

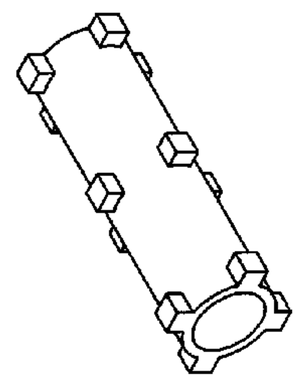

Fig. 24E

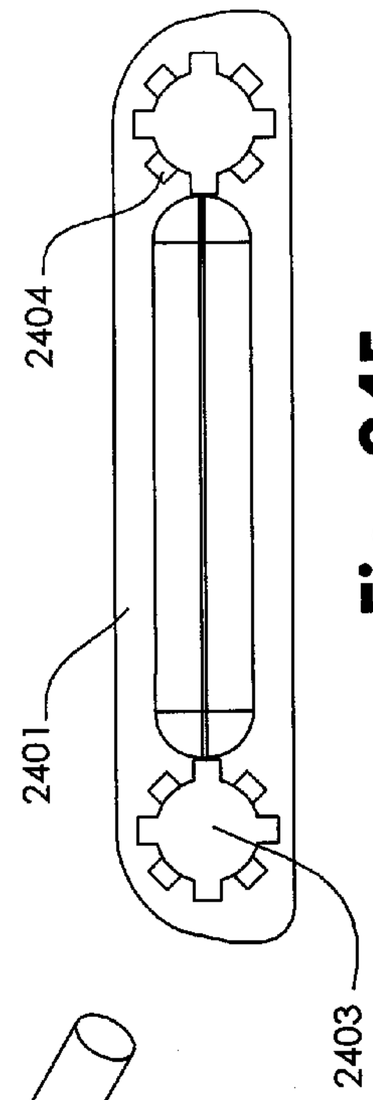

Fig. 24F

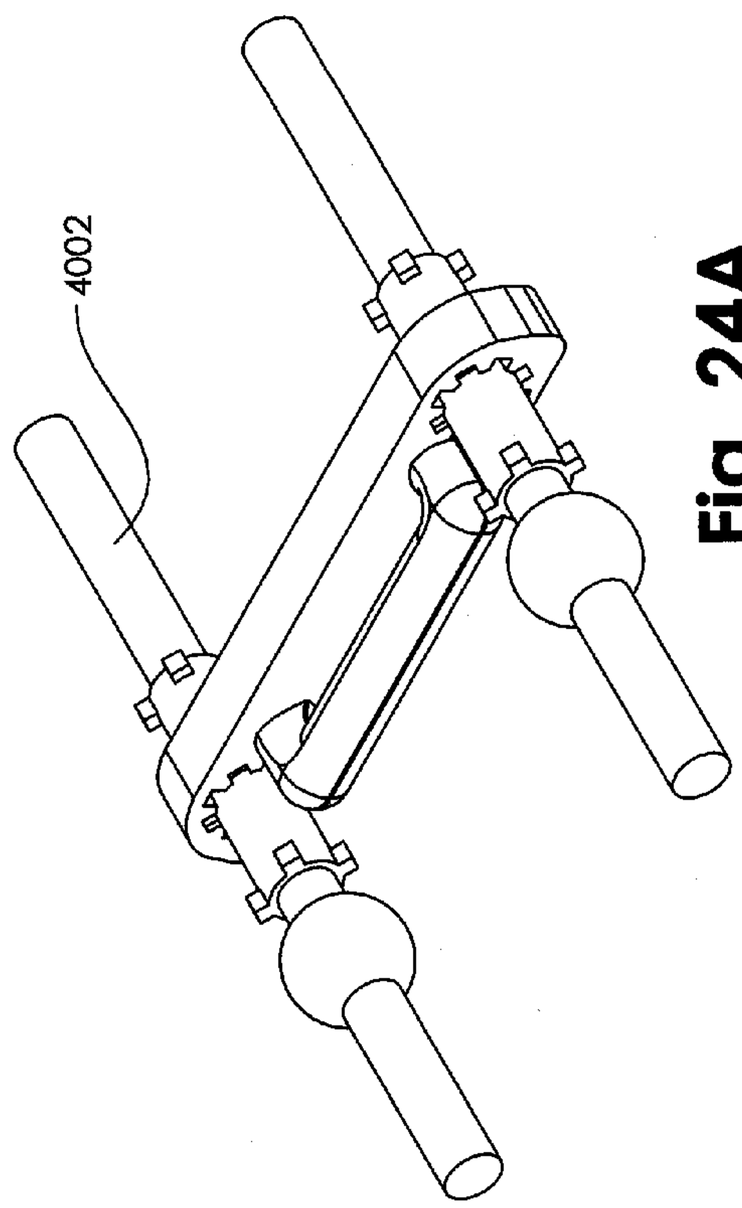

Fig. 24A

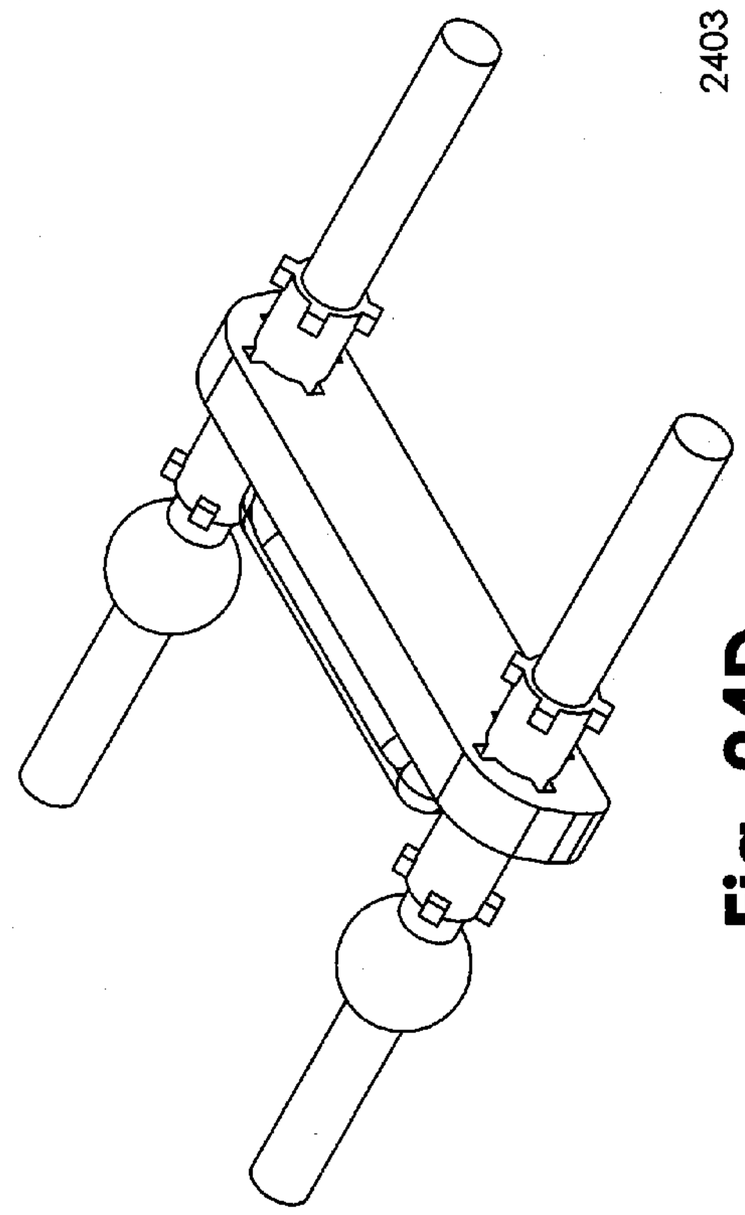

Fig. 24D

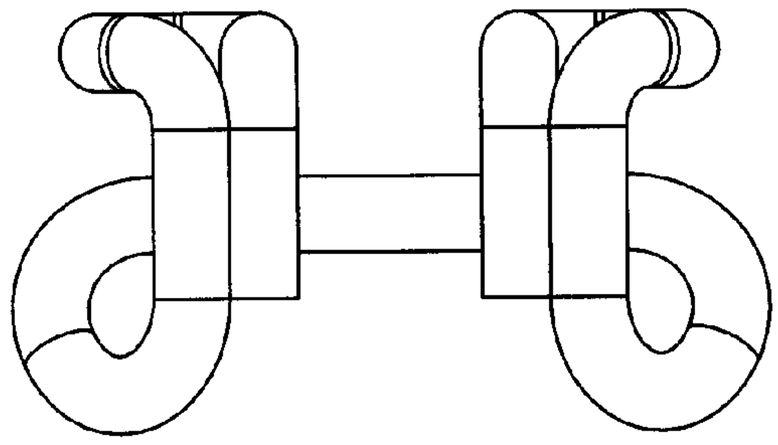

Fig. 25A

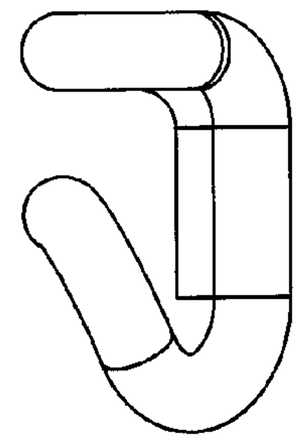

Fig. 25B

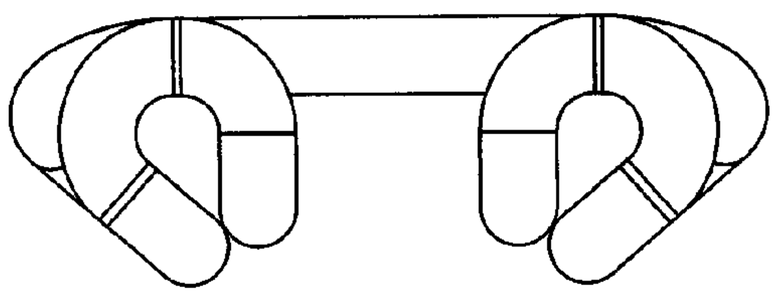

Fig. 25C

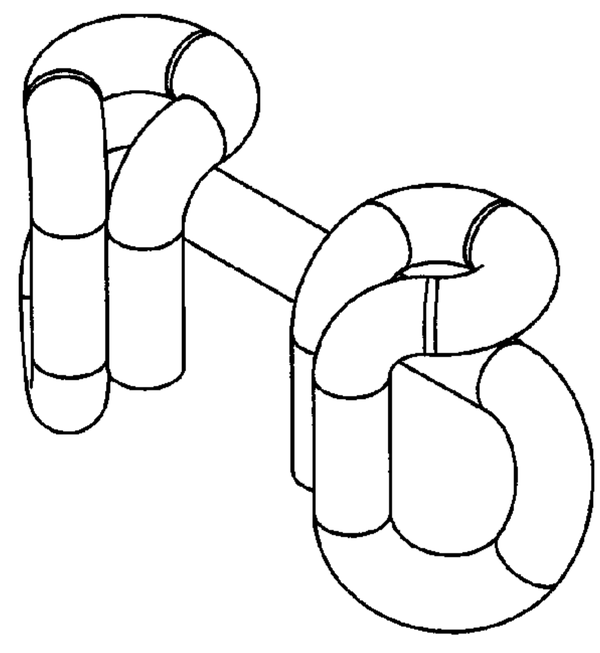

Fig. 25D

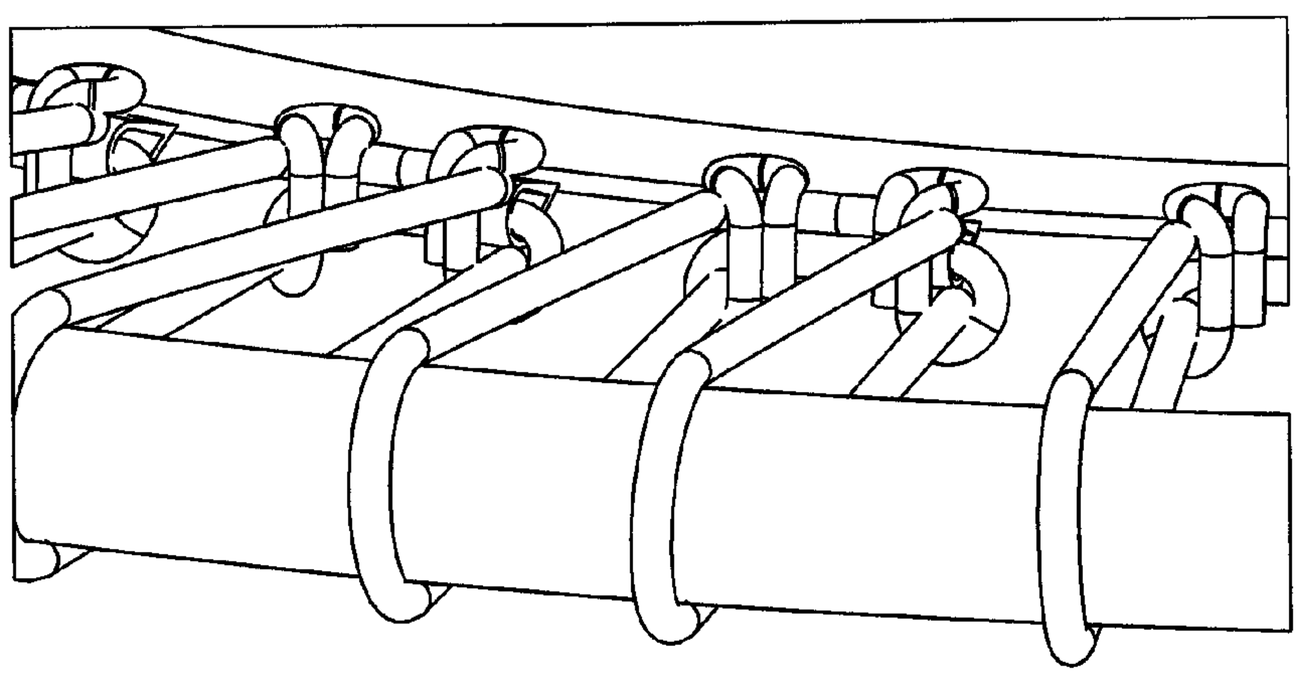

Fig. 25E

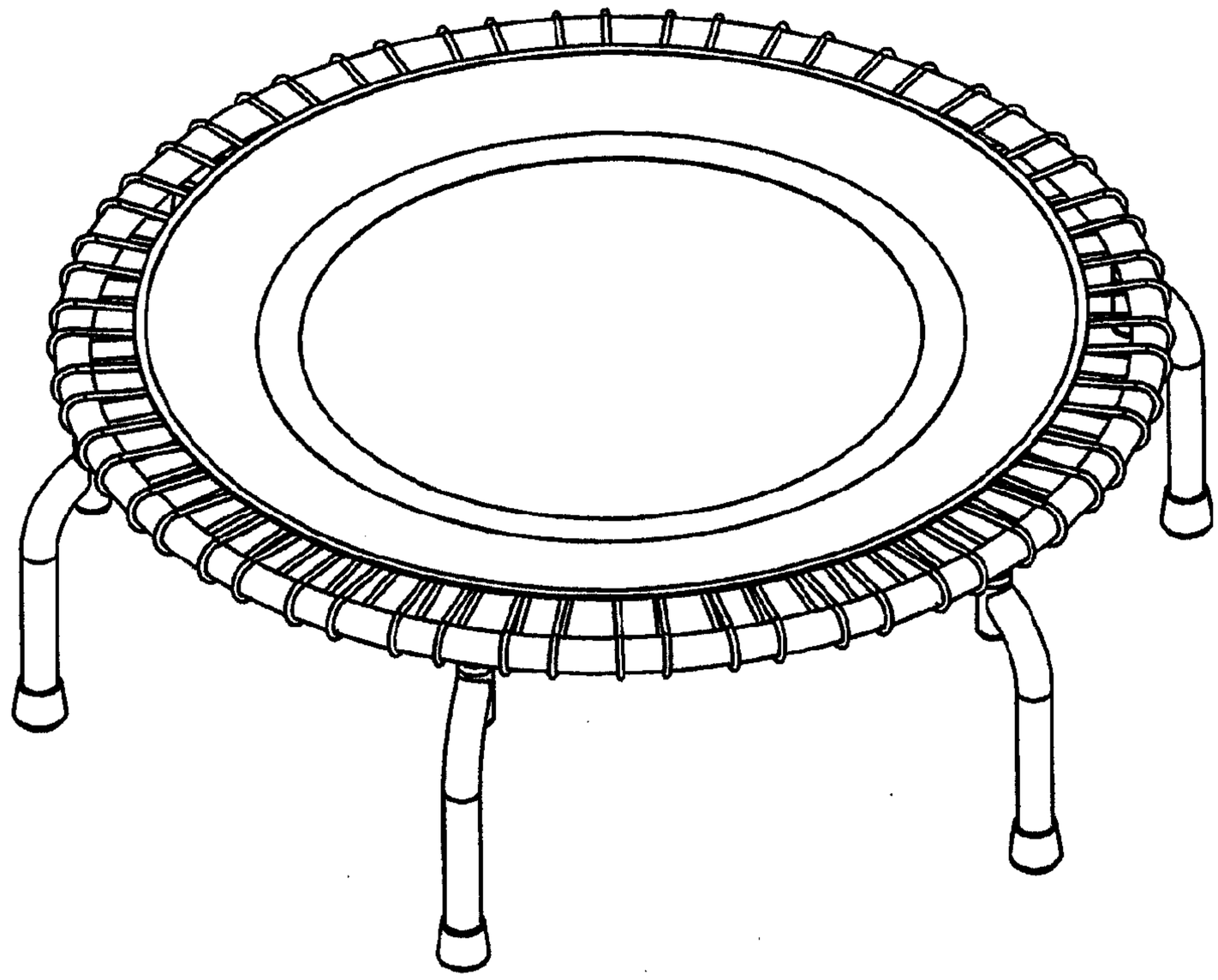

FIG. 26A

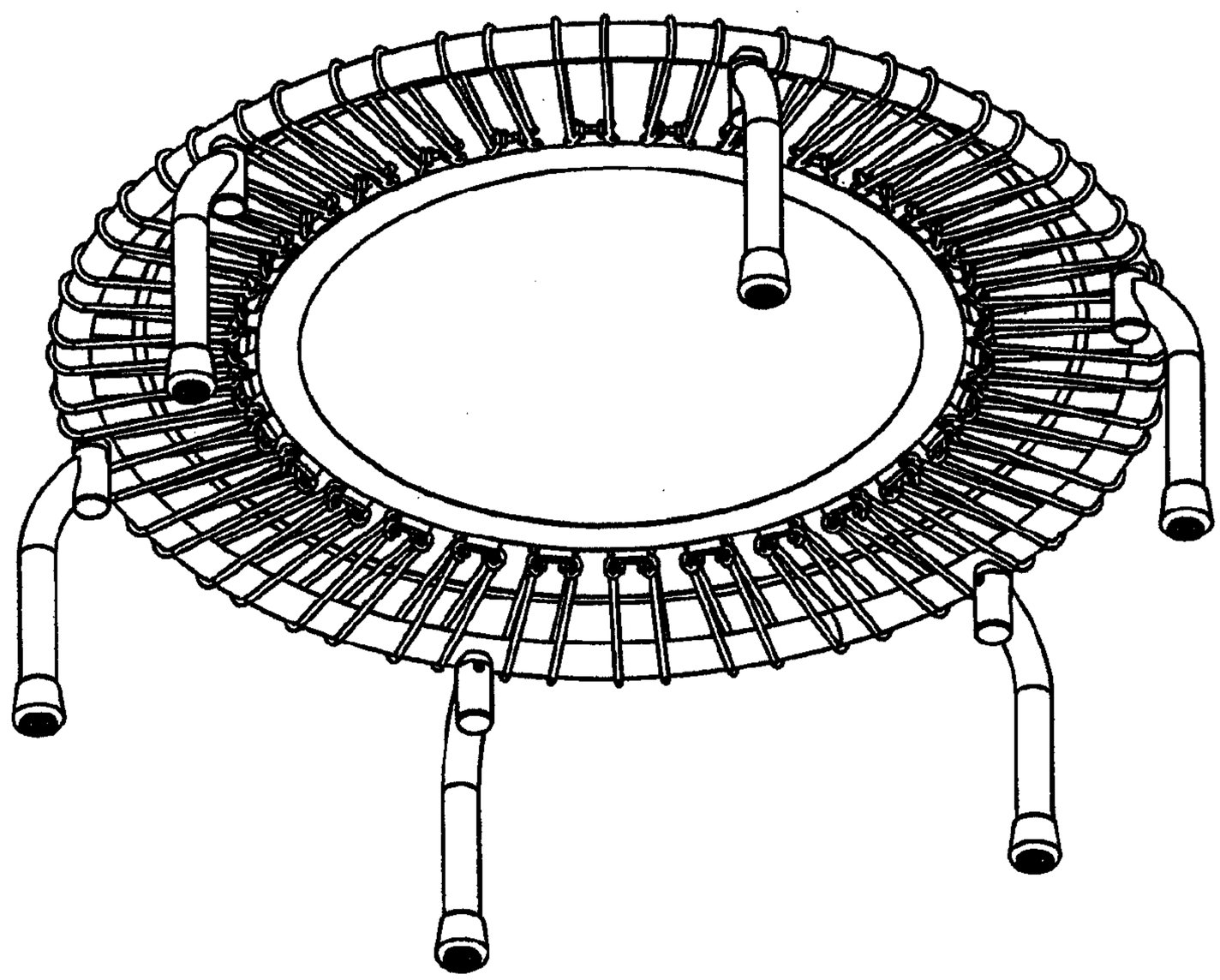

FIG. 26B

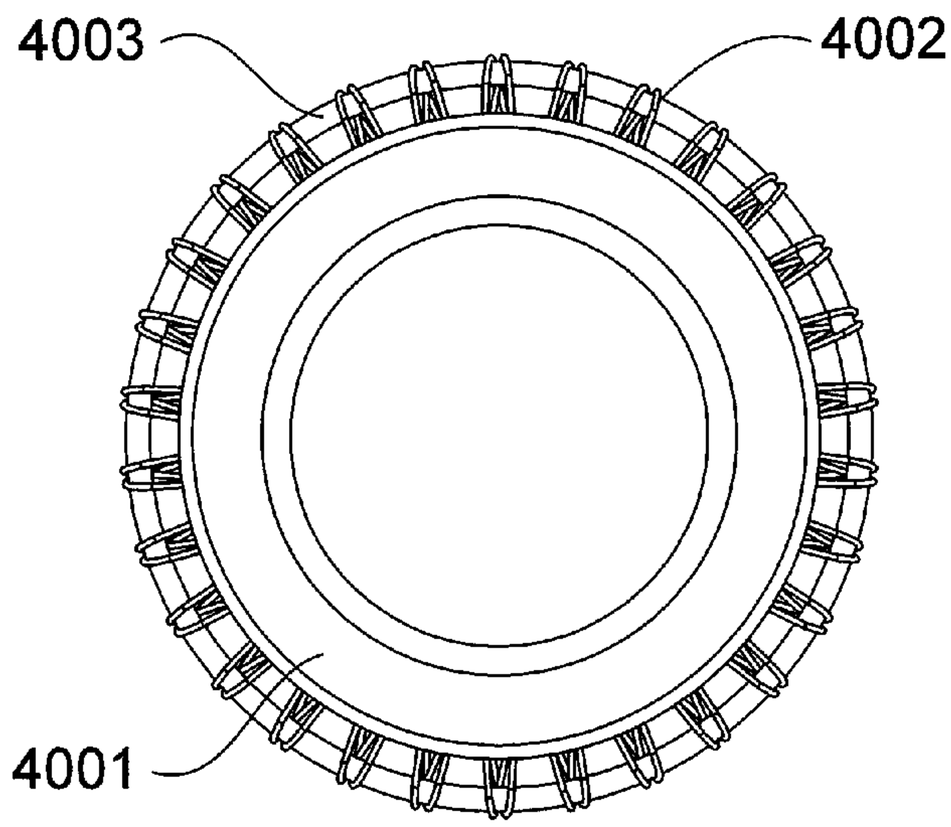

Fig. 27A

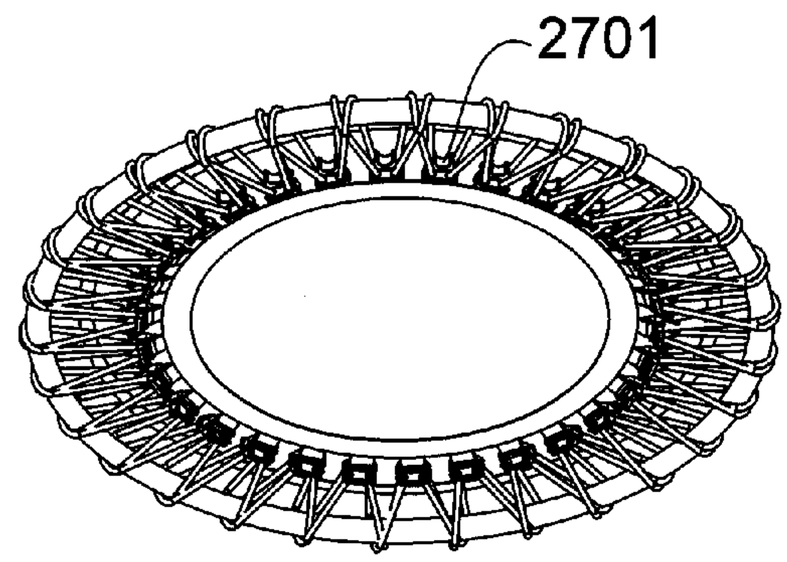

Fig. 27B

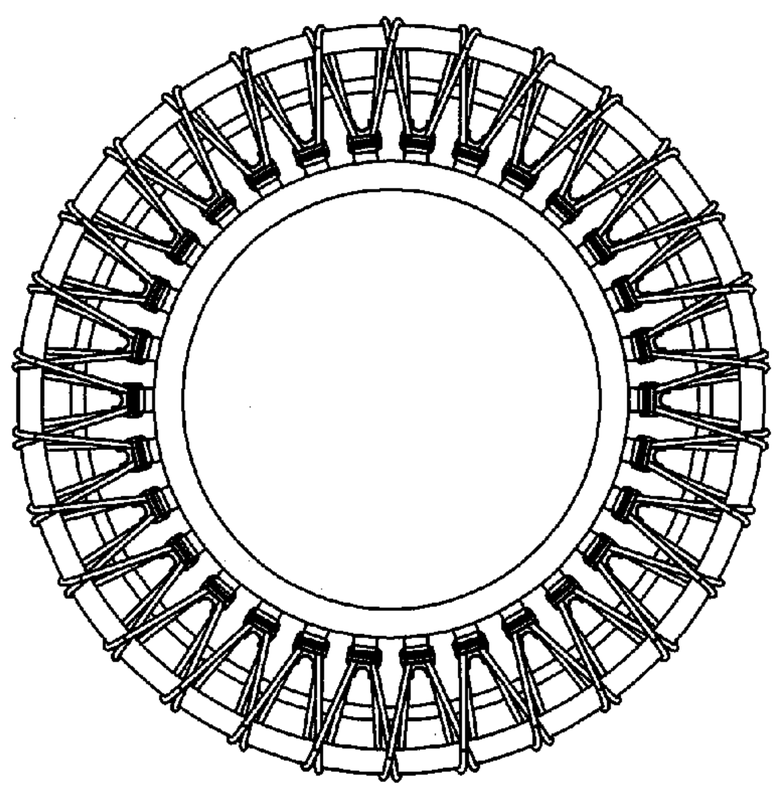

Fig. 27C

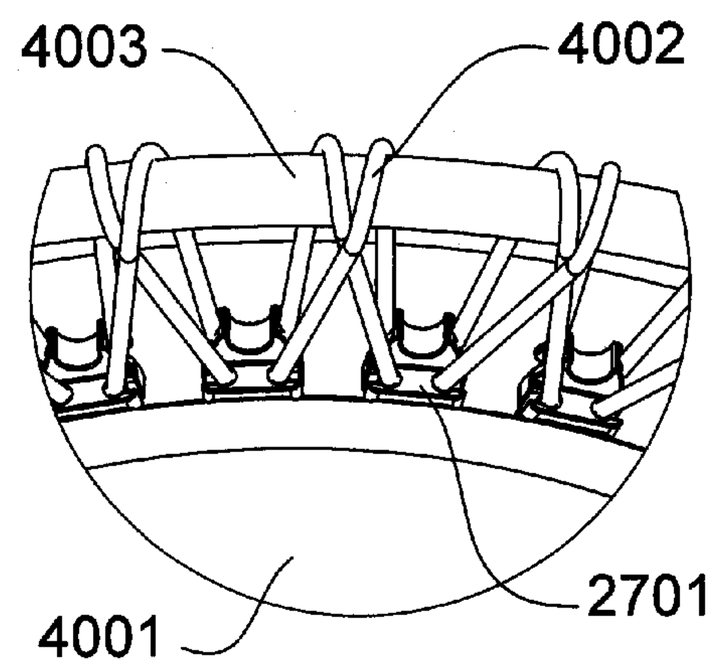

Fig. 27D

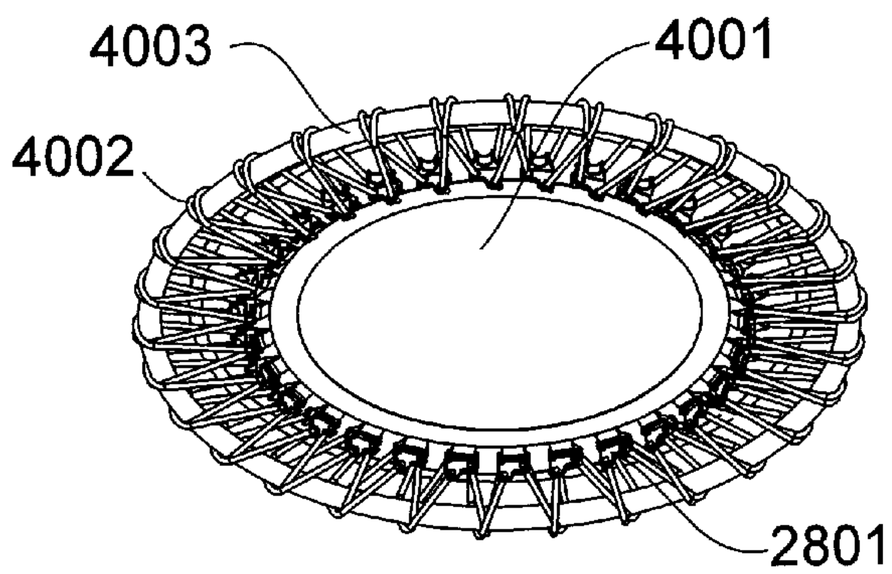

Fig. 28A

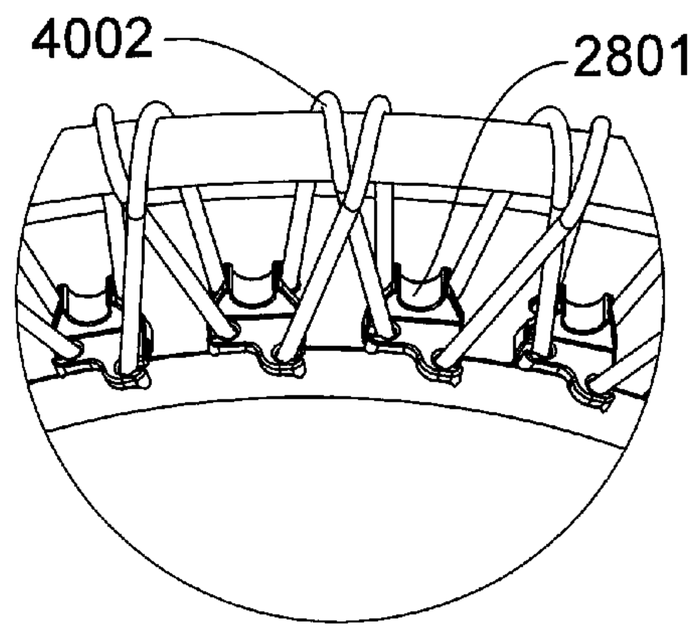

Fig. 28B

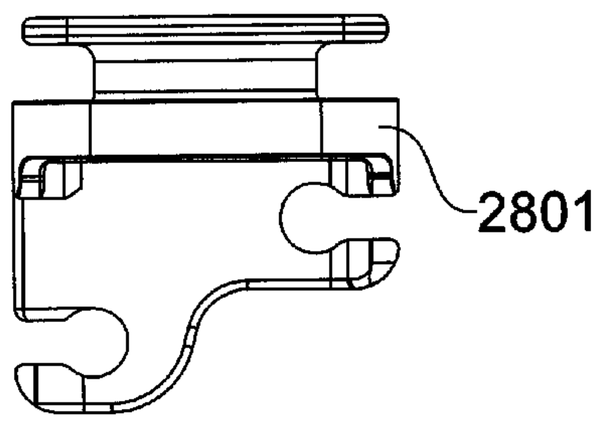

Fig. 28C

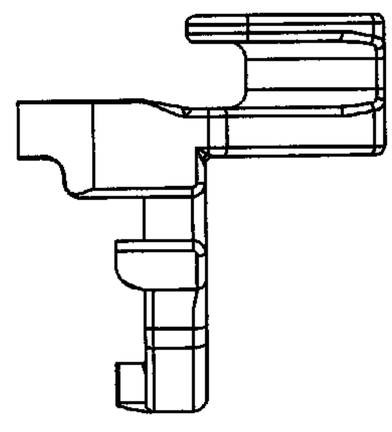

Fig. 28D

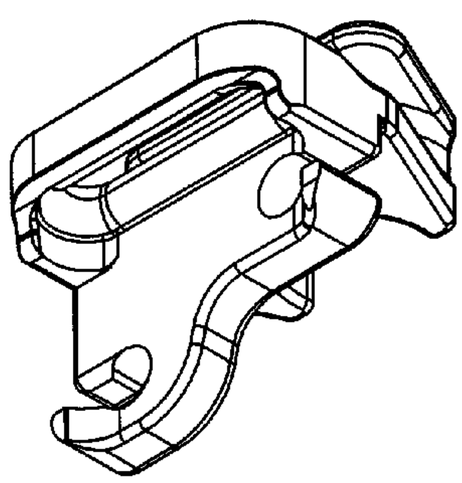

Fig. 28E

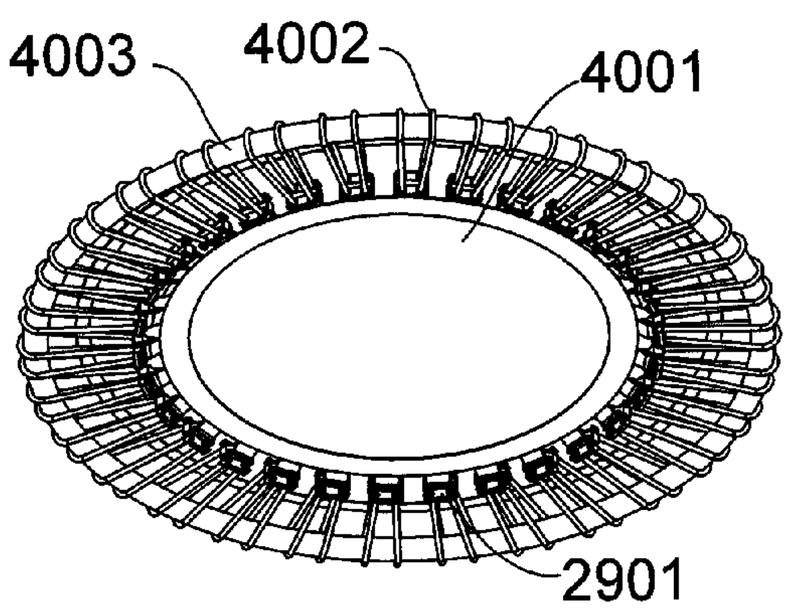

Fig. 29A

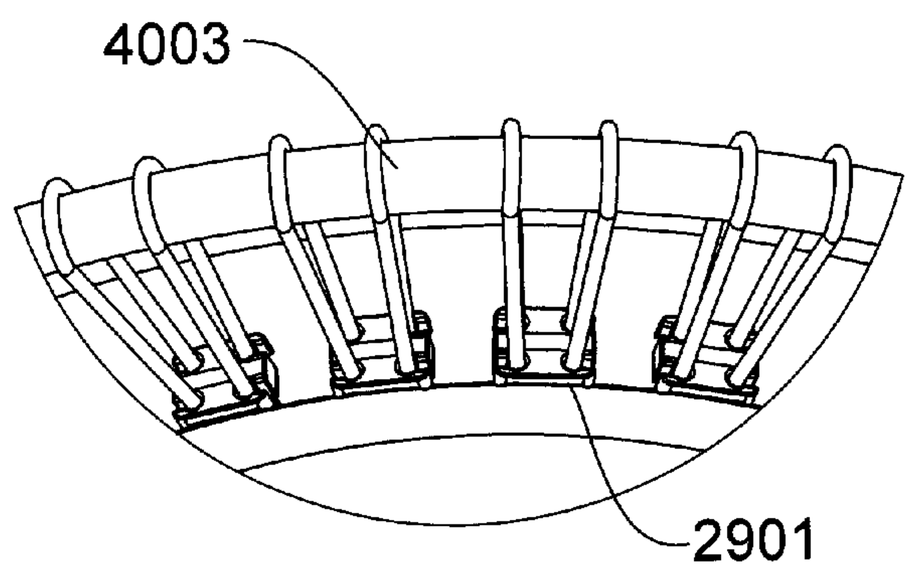

Fig. 29B

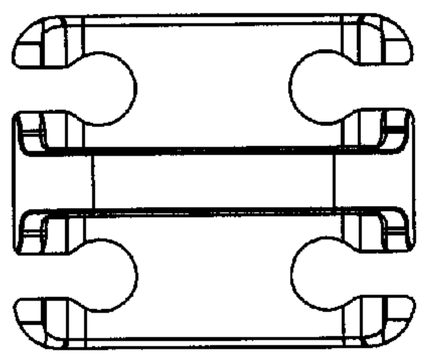

Fig. 29C

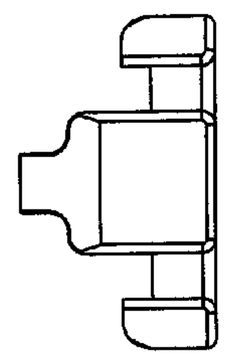

Fig. 29D

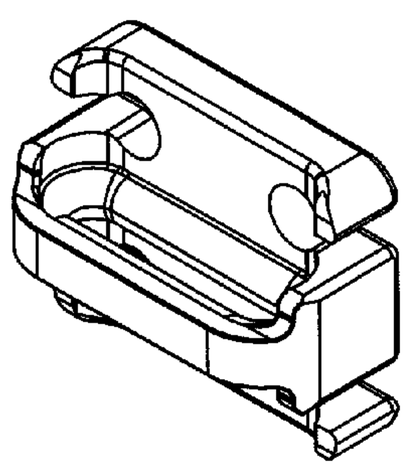

Fig. 29E

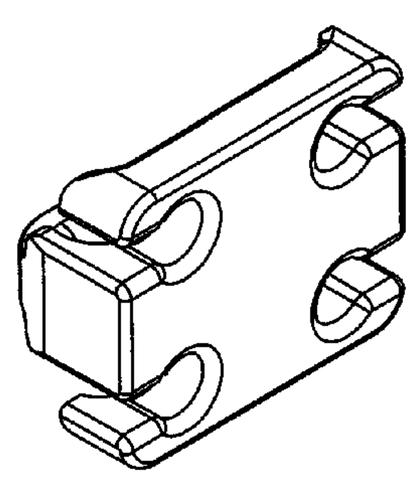

Fig. 29F

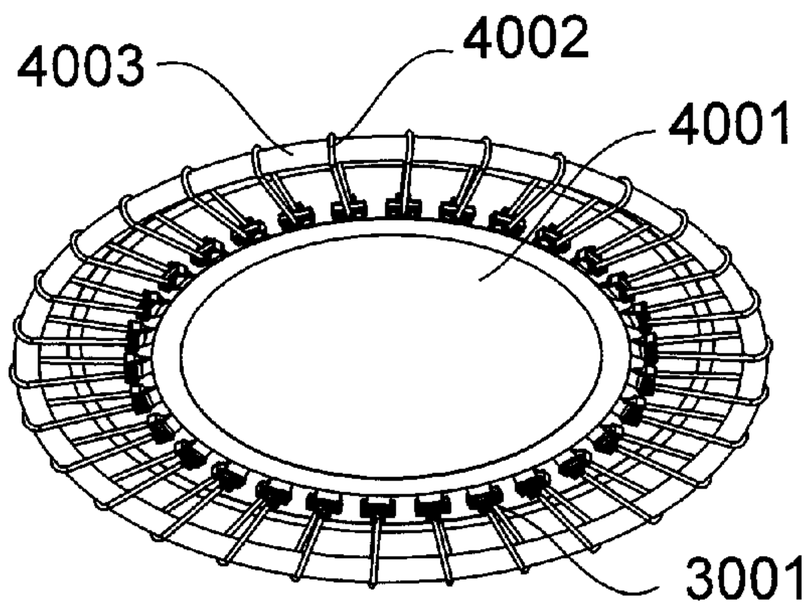

Fig. 30A

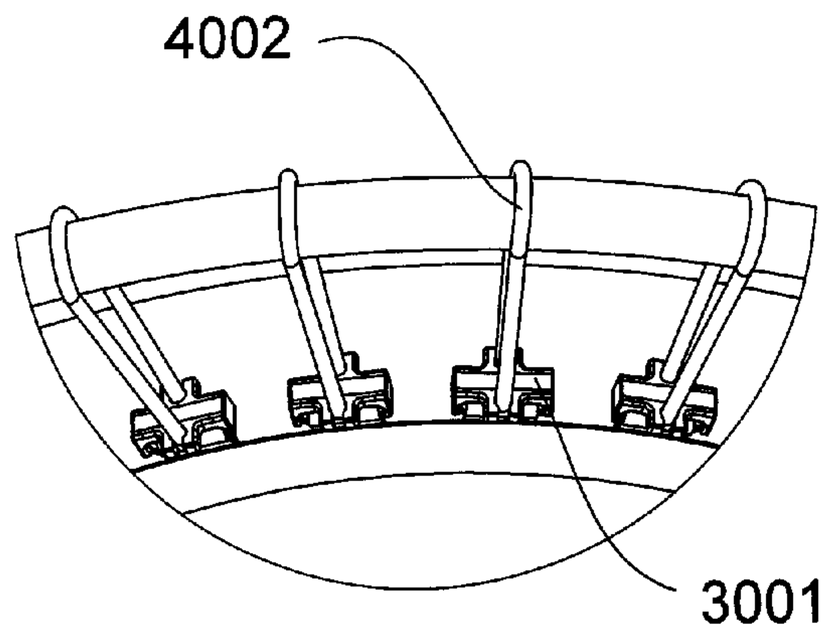

Fig. 30B

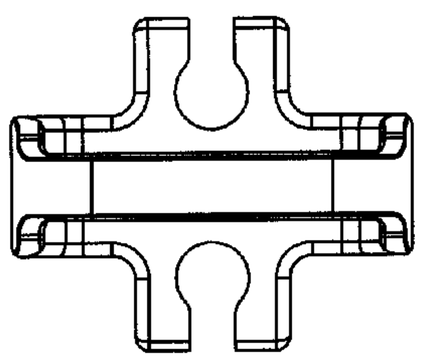

Fig. 30C

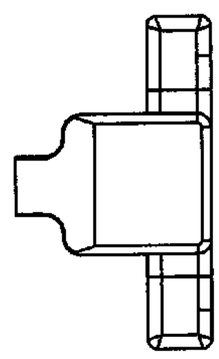

Fig. 30D

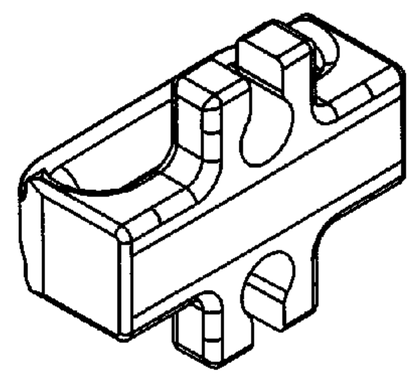

Fig. 30E

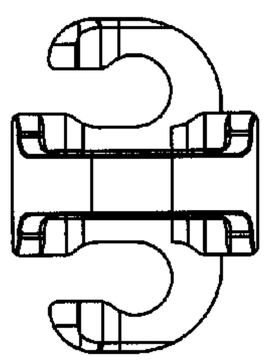

Fig. 30F

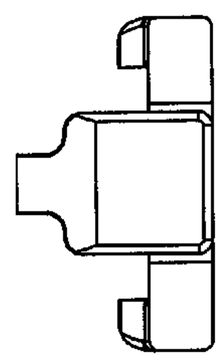

Fig. 30G

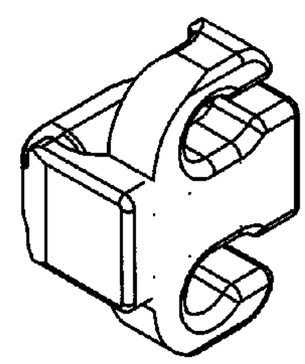

Fig. 30H

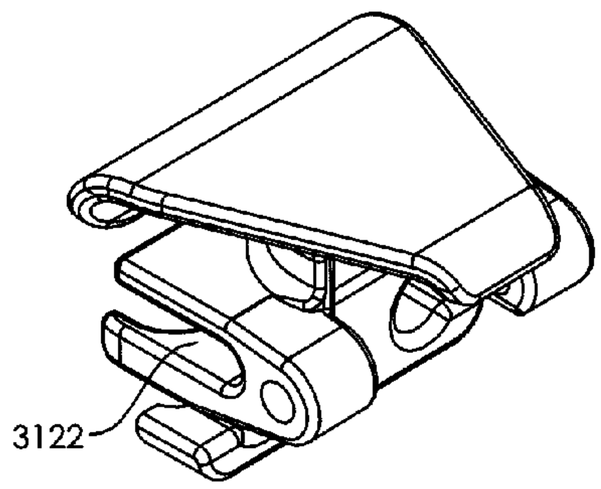

Fig. 31A

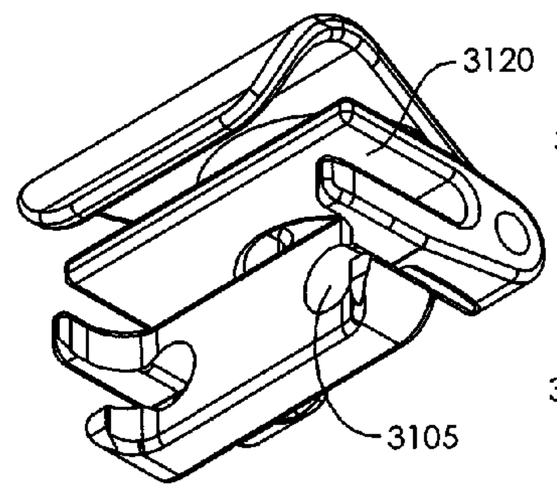

Fig. 31B

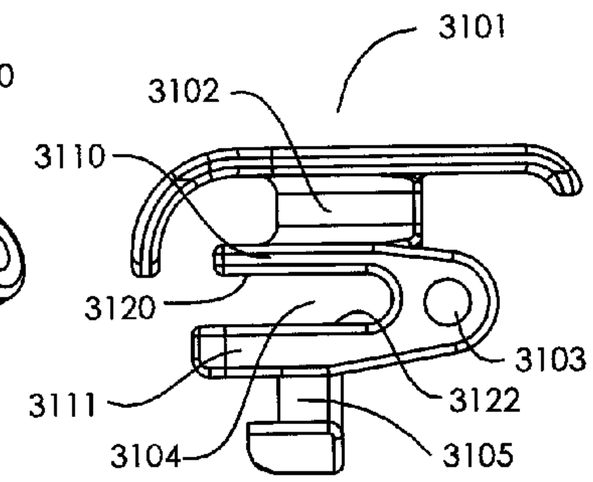

Fig. 31C

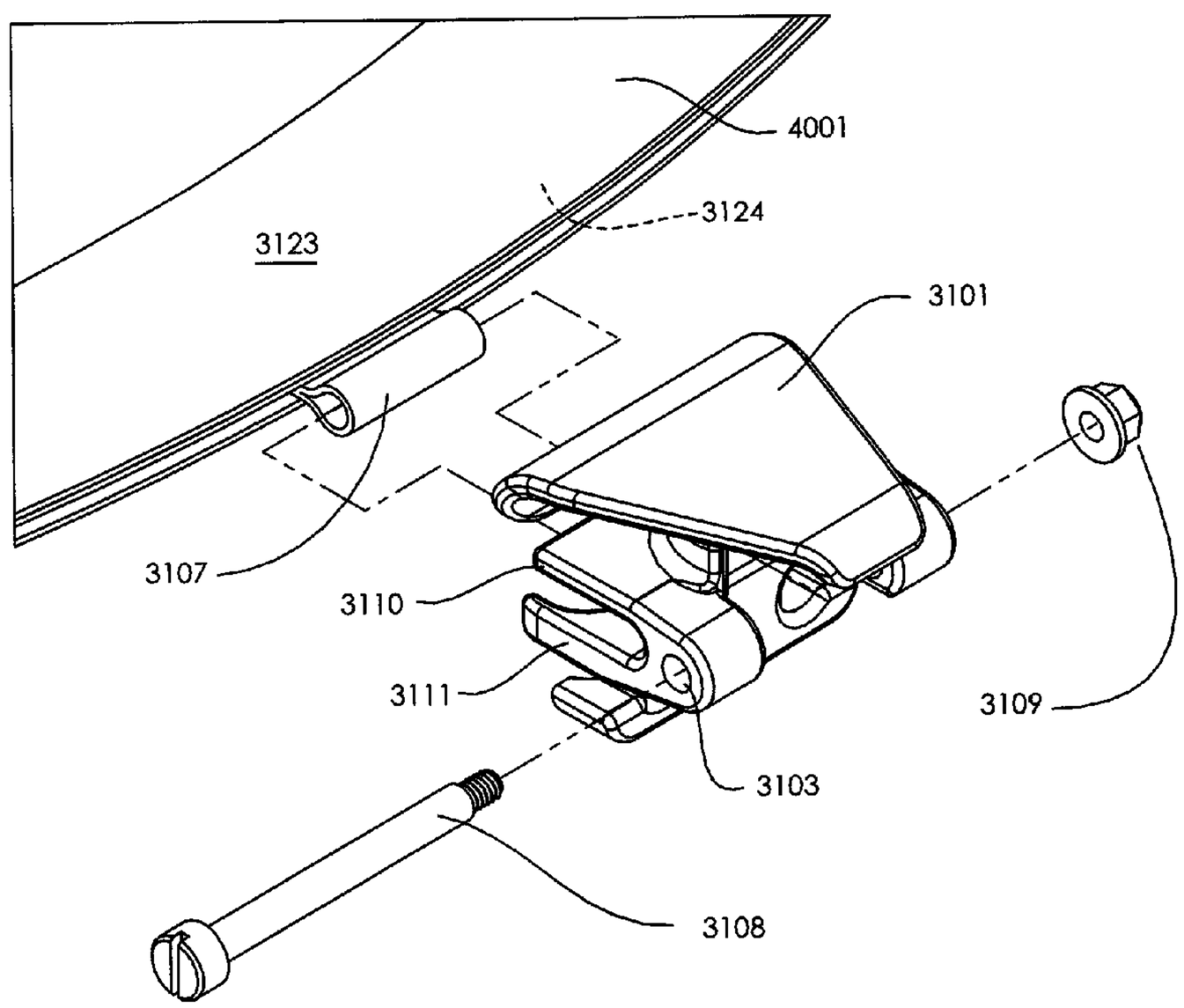

Fig. 31D

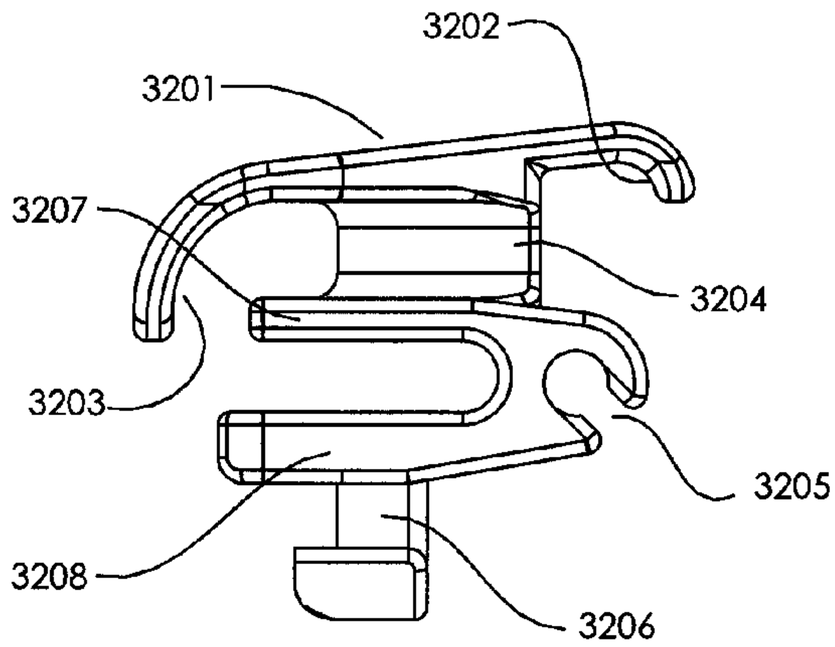

Fig. 32A

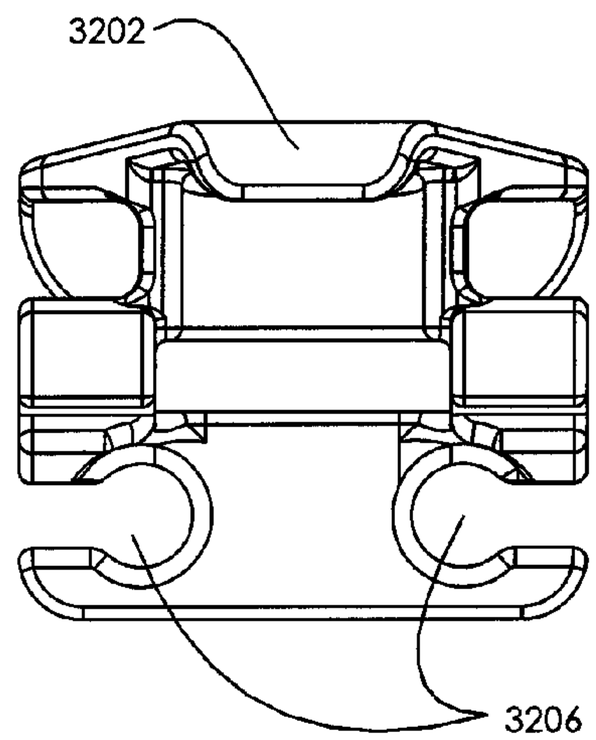

Fig. 32B

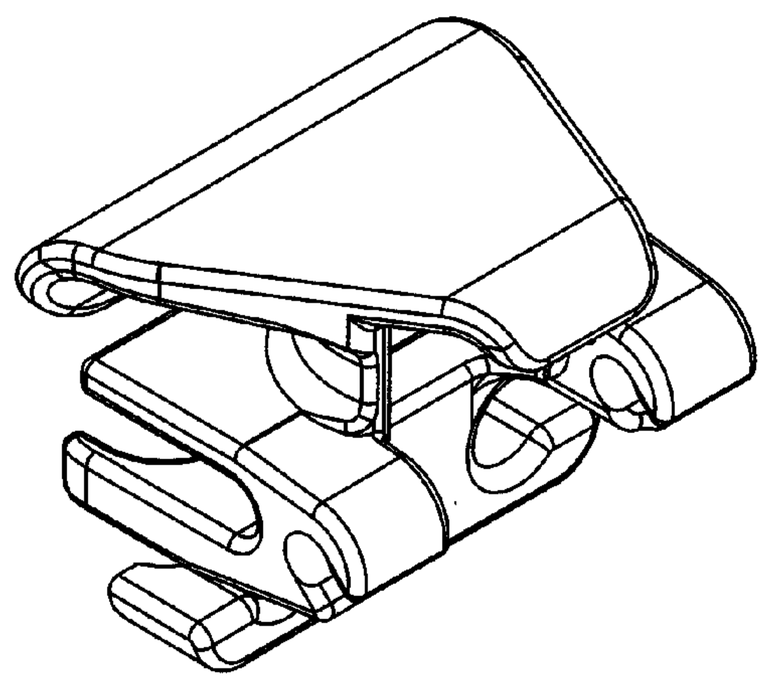

Fig. 32C

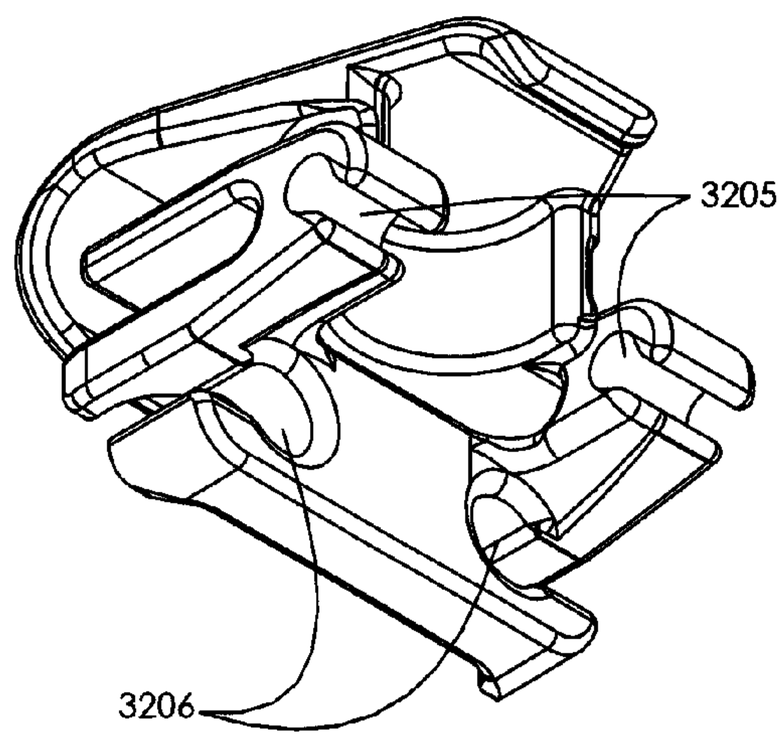

Fig. 32D

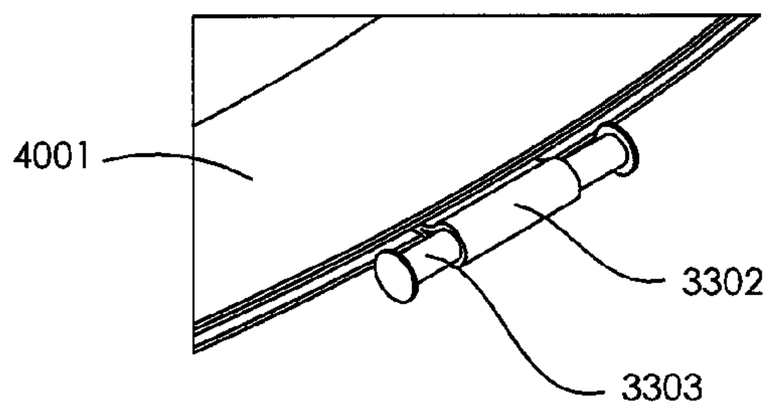

Fig. 33A

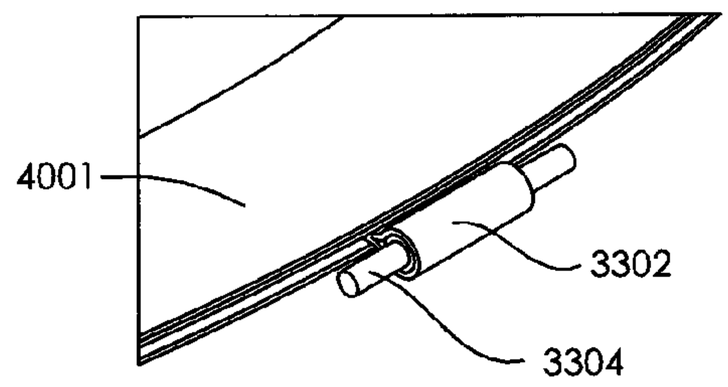

Fig. 33B

Fig. 33C

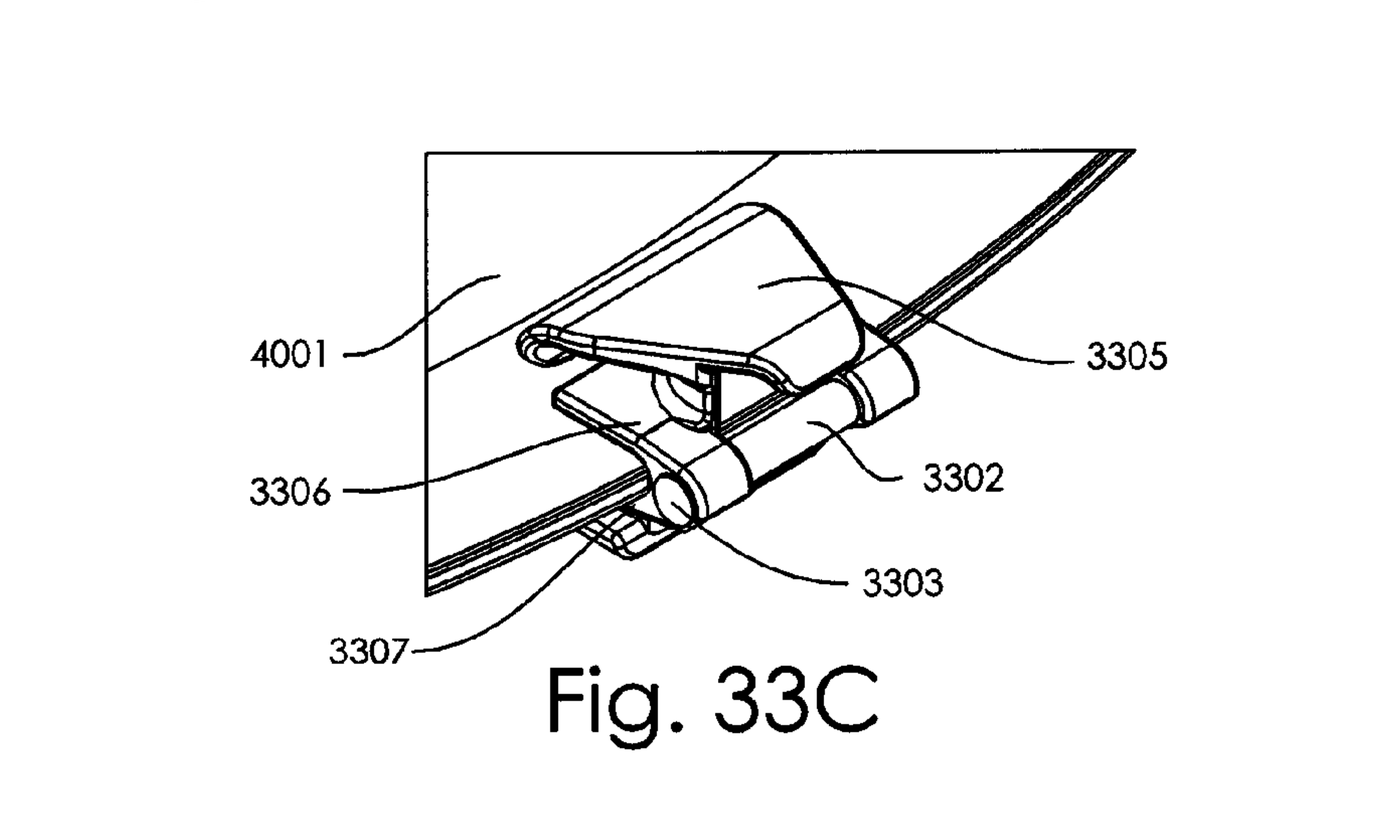

Fig. 33D

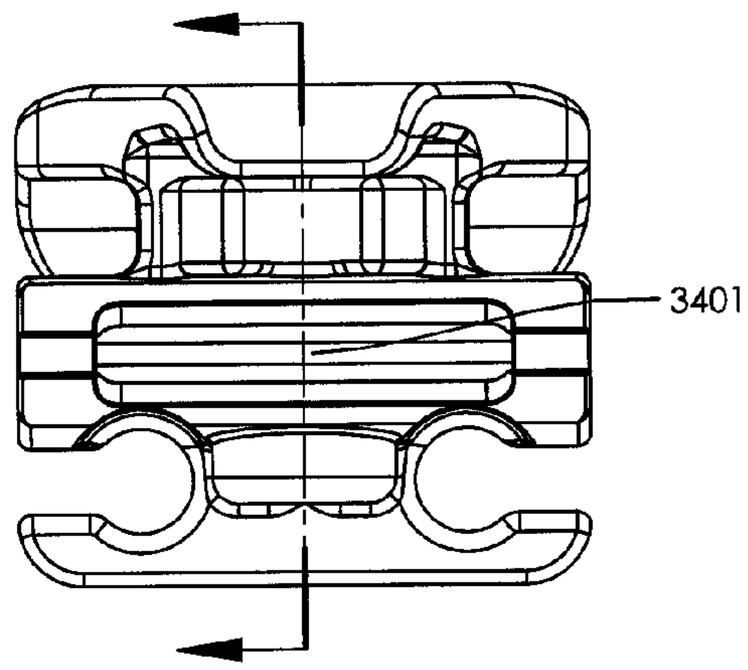

Fig. 34A

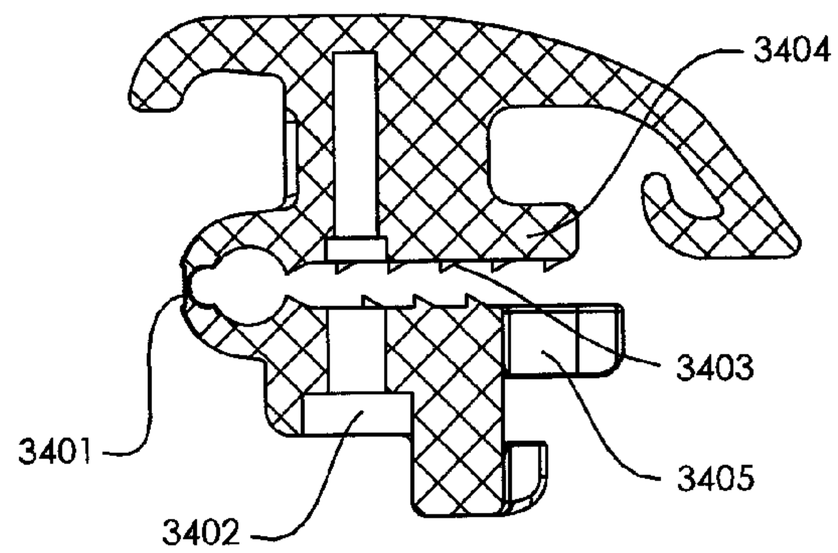

Fig. 34B

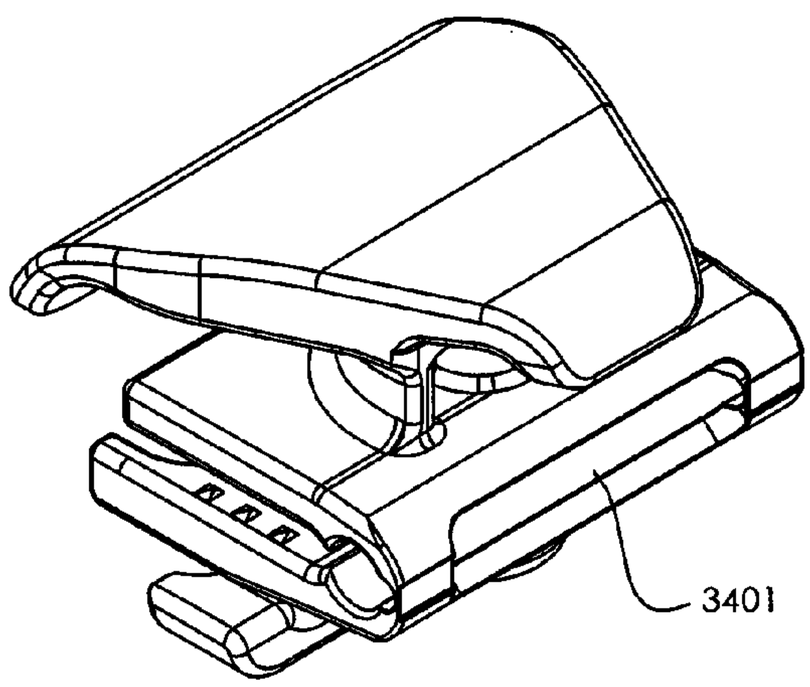

Fig. 34C

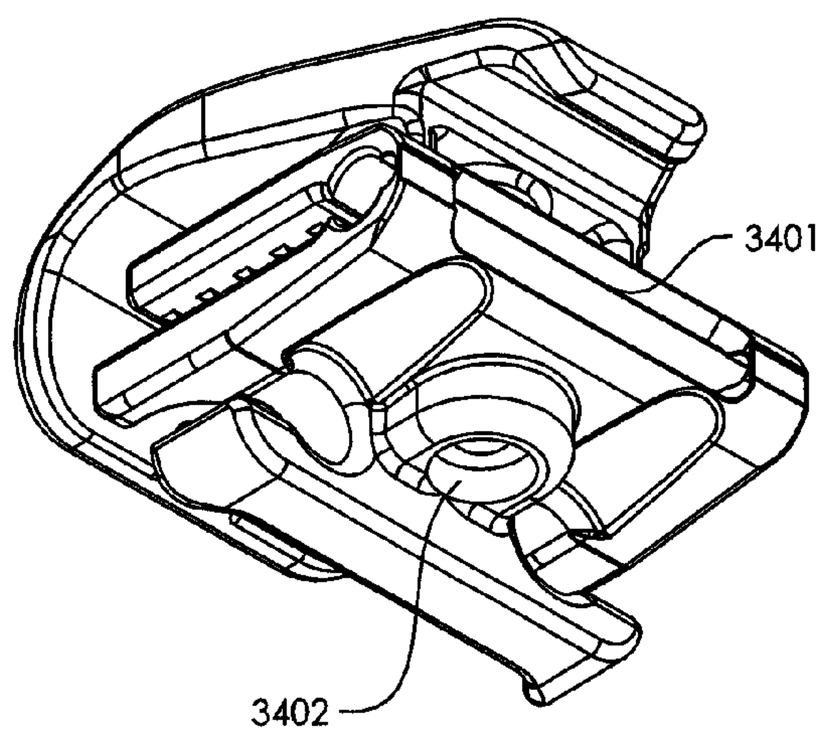

Fig. 34D

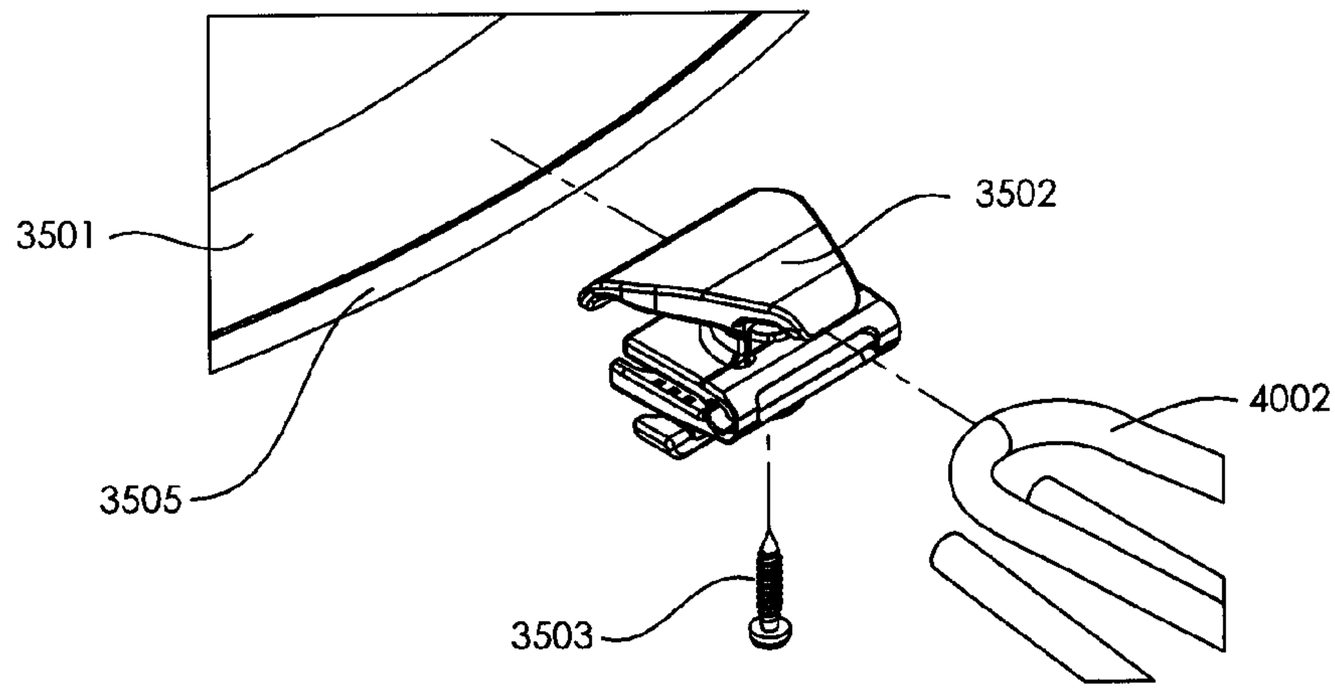

Fig. 35A

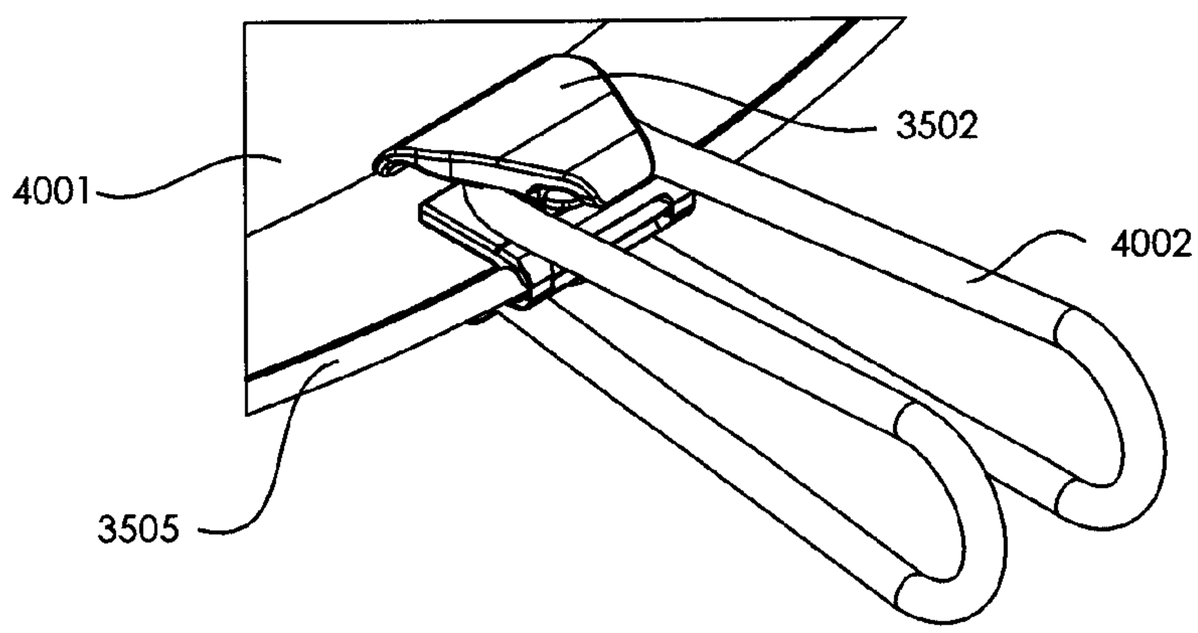

Fig. 35B

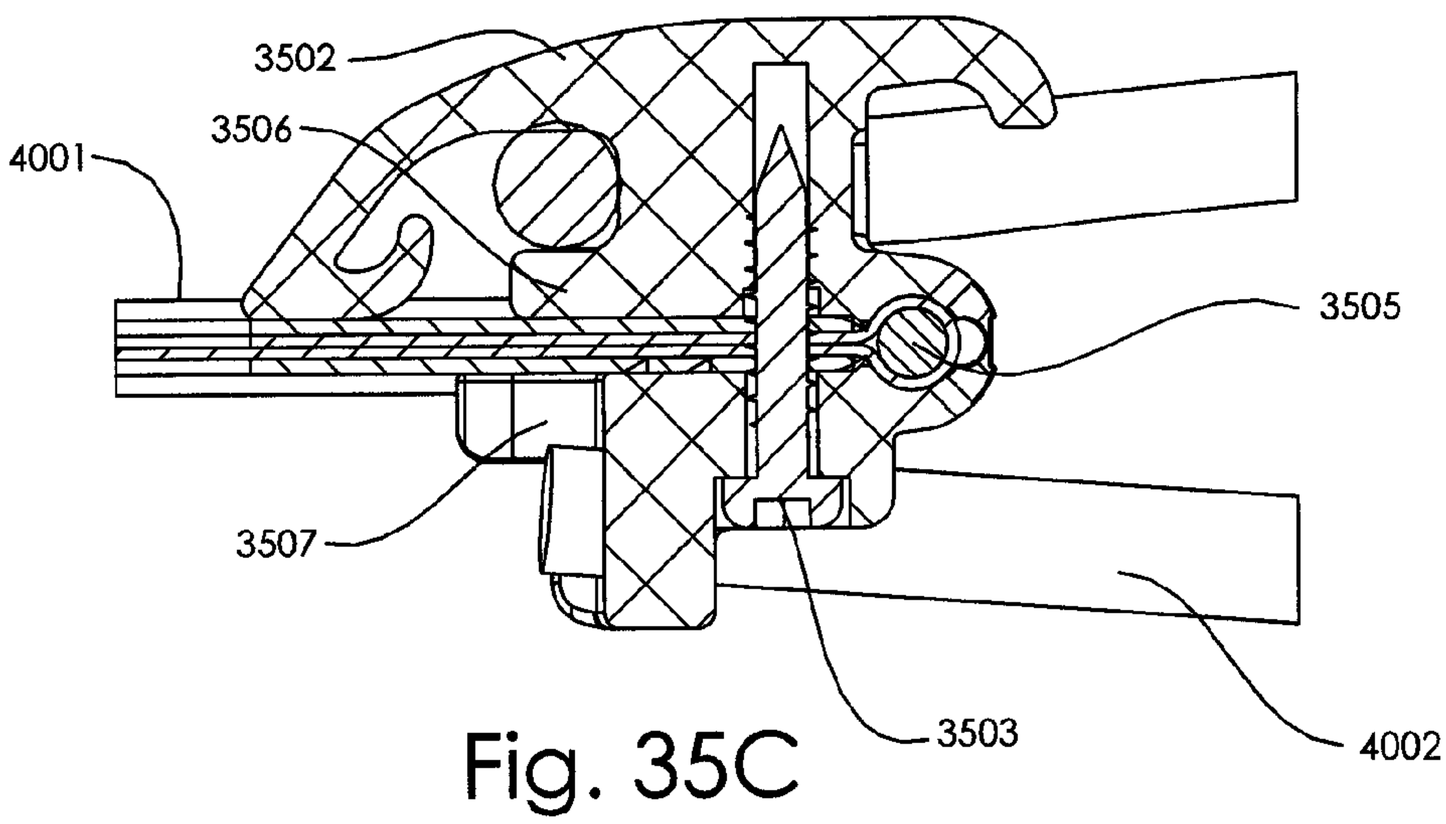

Fig. 35C

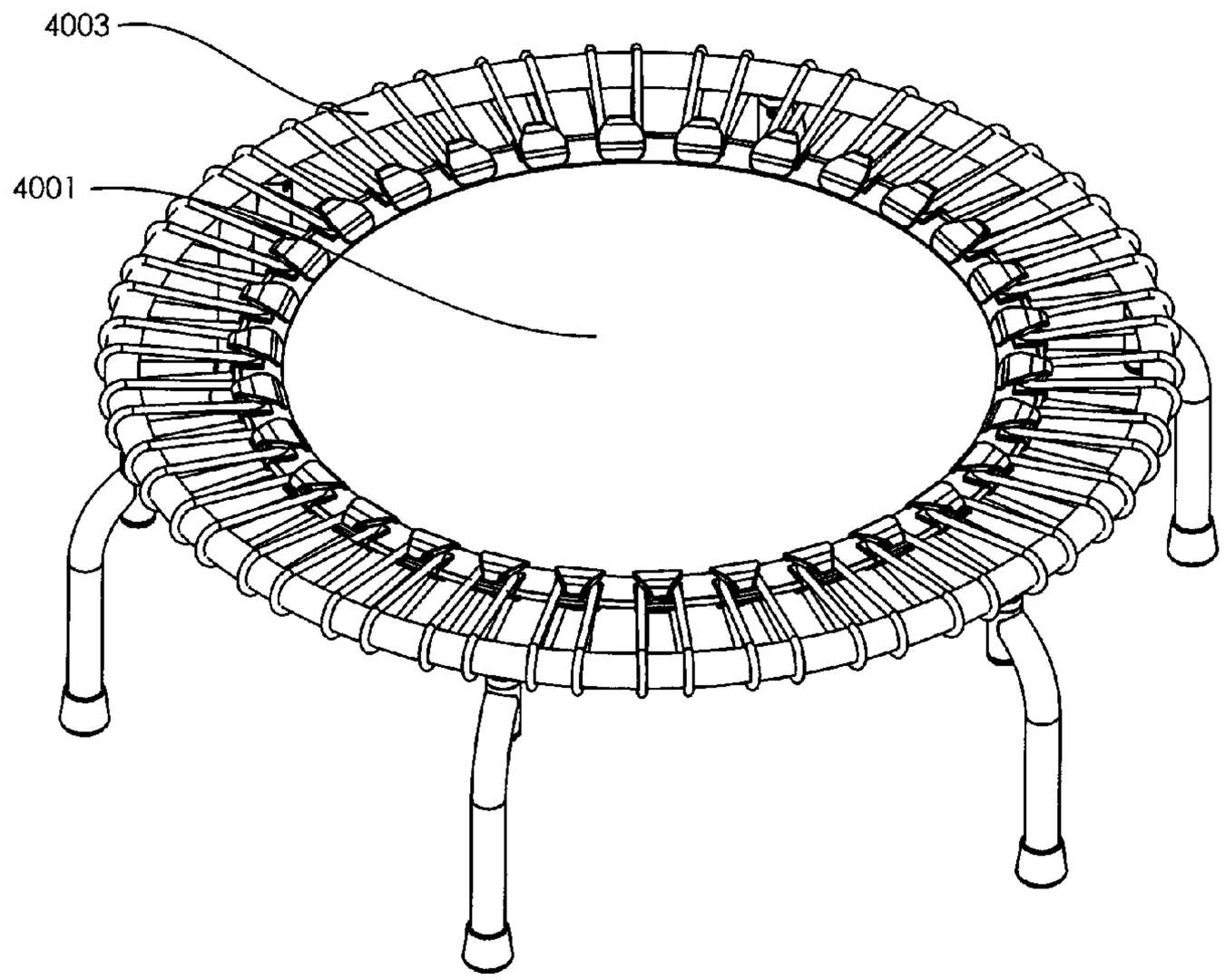

Fig. 36A

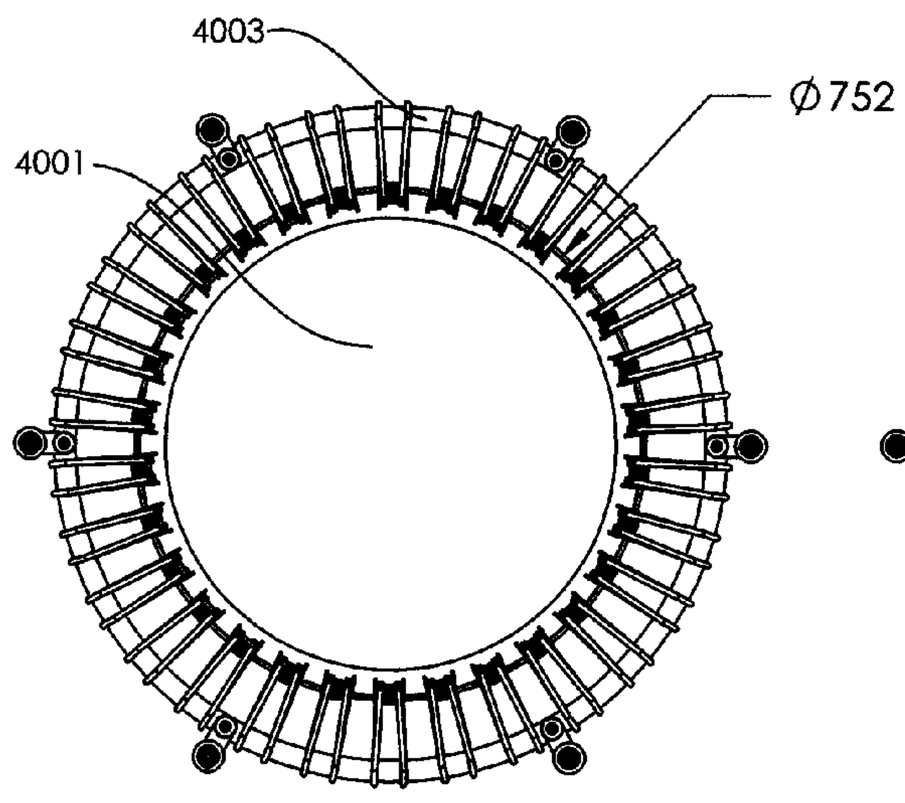

Fig. 36B

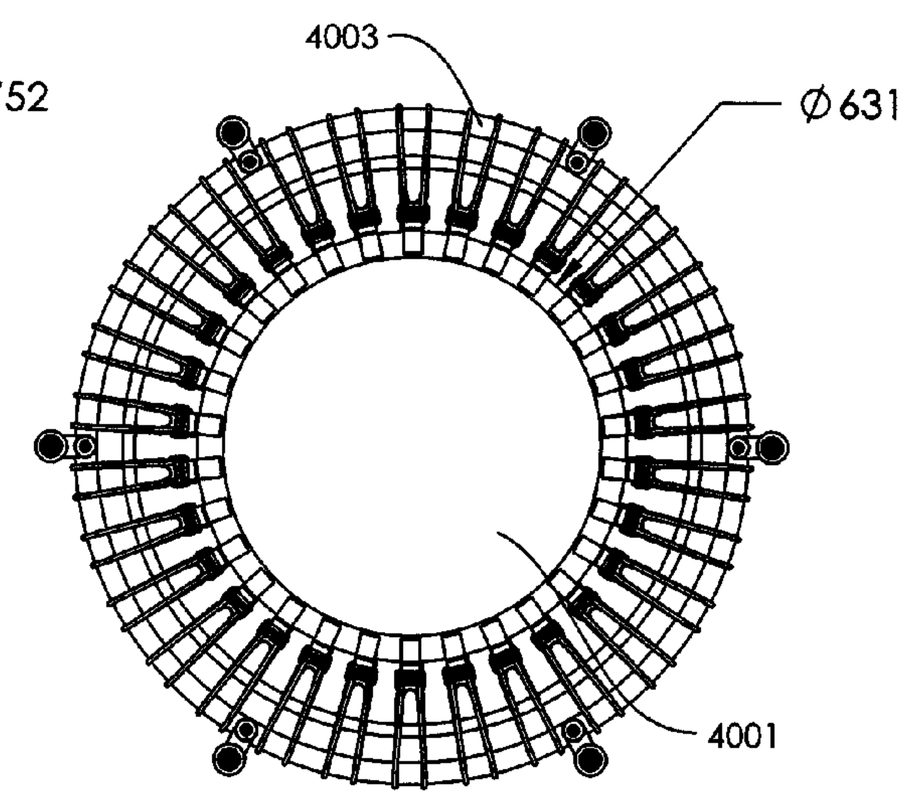

Fig. 36C

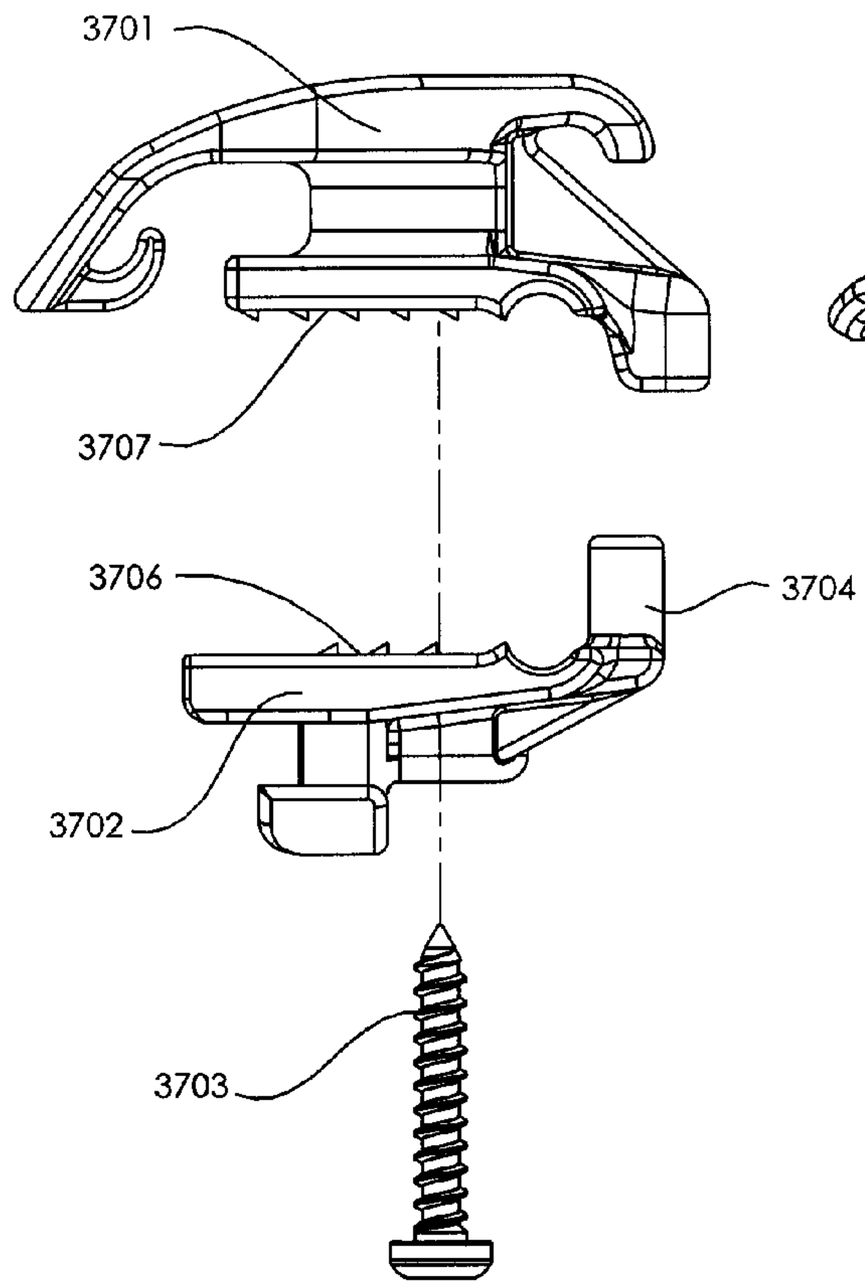

Fig. 37A

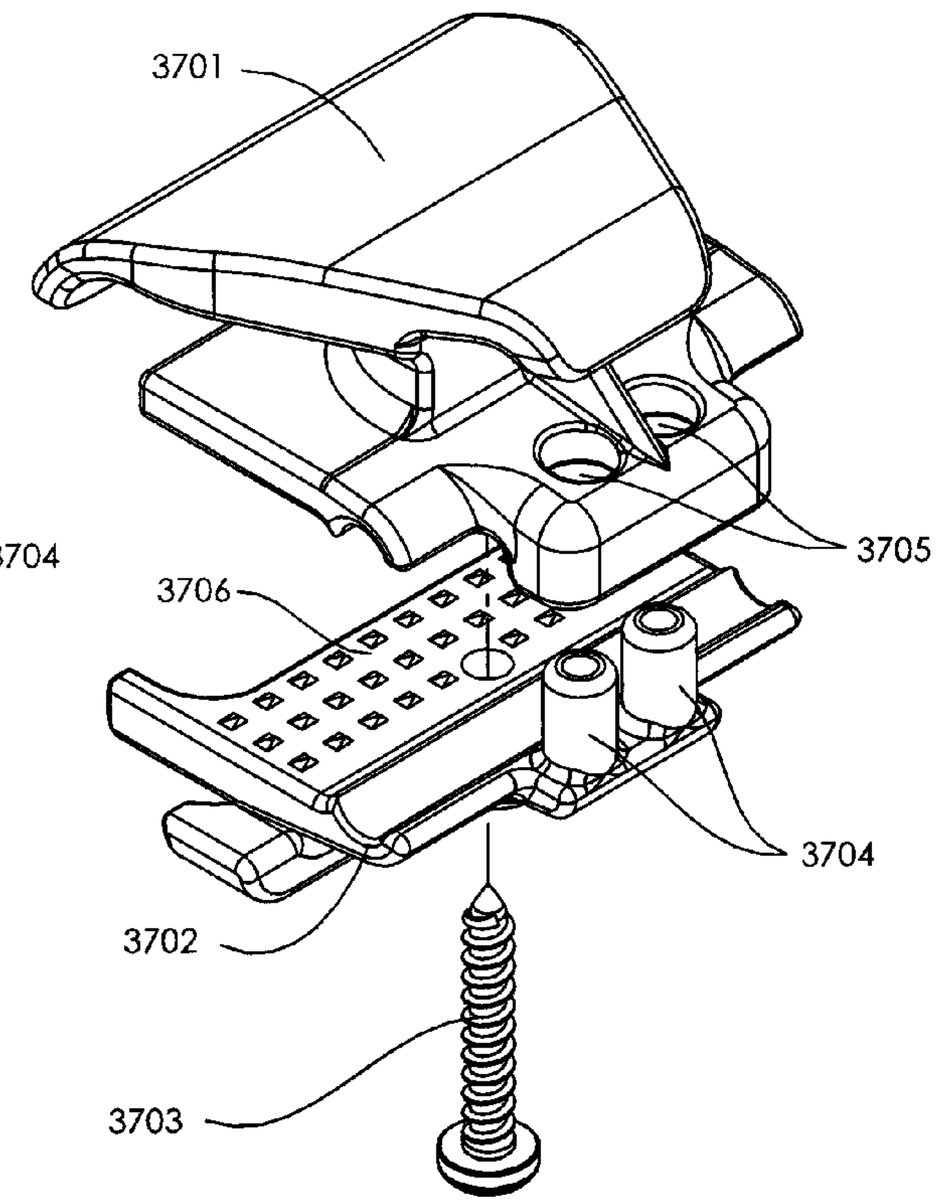

Fig. 37B

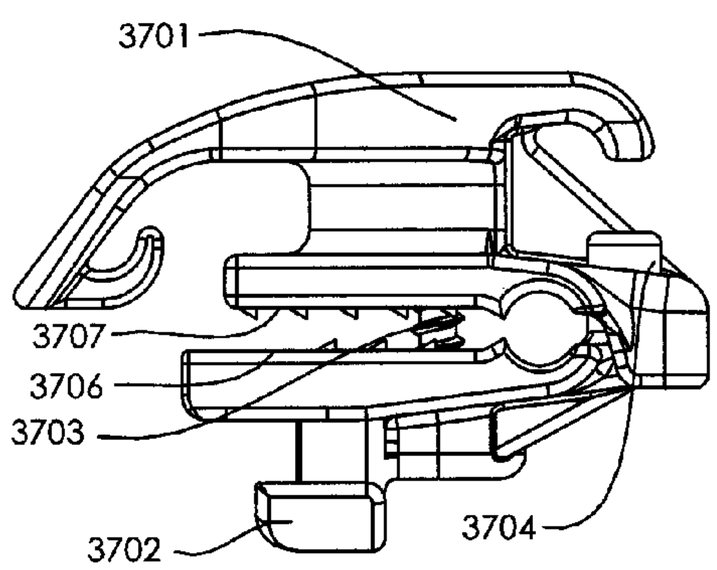

Fig. 37C

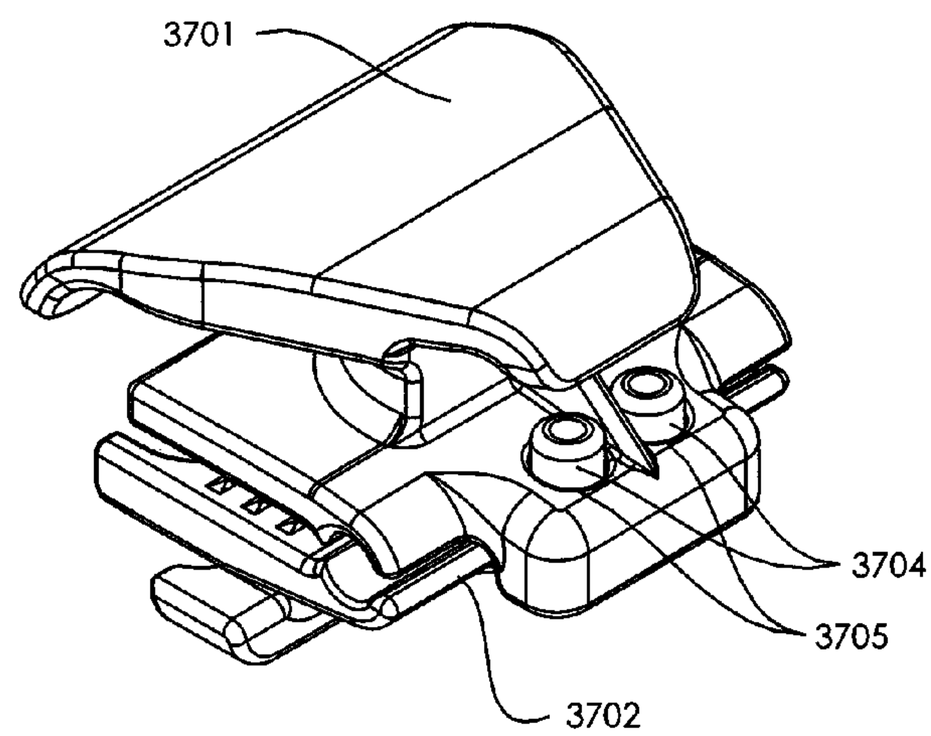

Fig. 37D

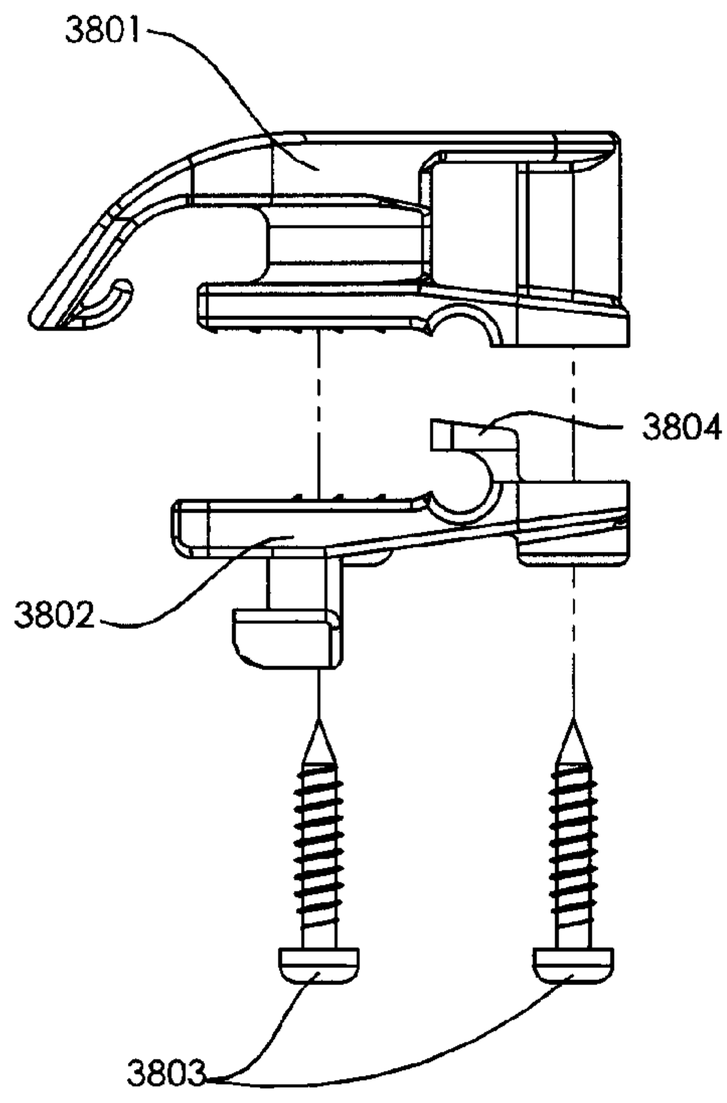

Fig. 38A

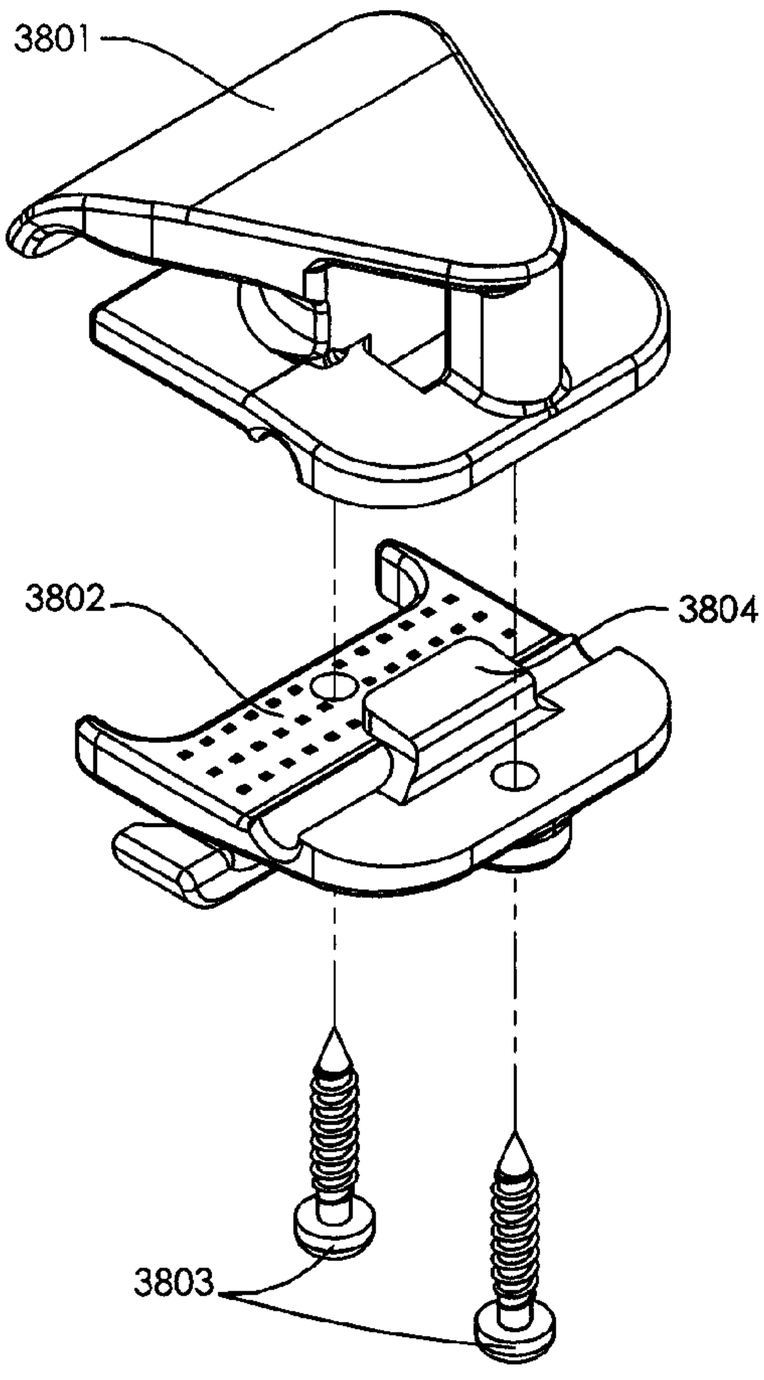

Fig. 38B

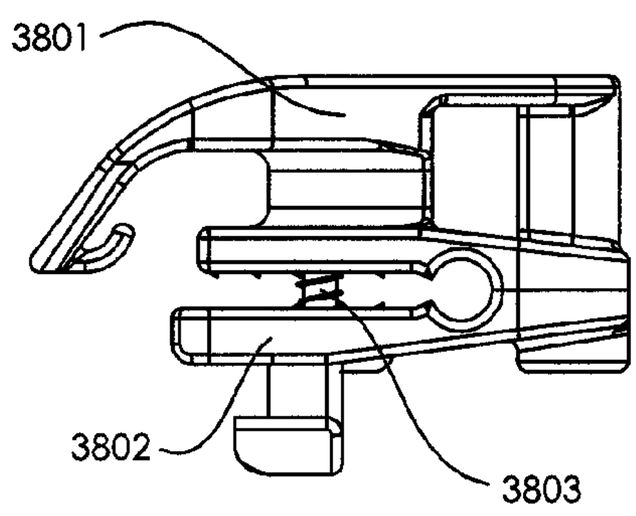

Fig. 38C

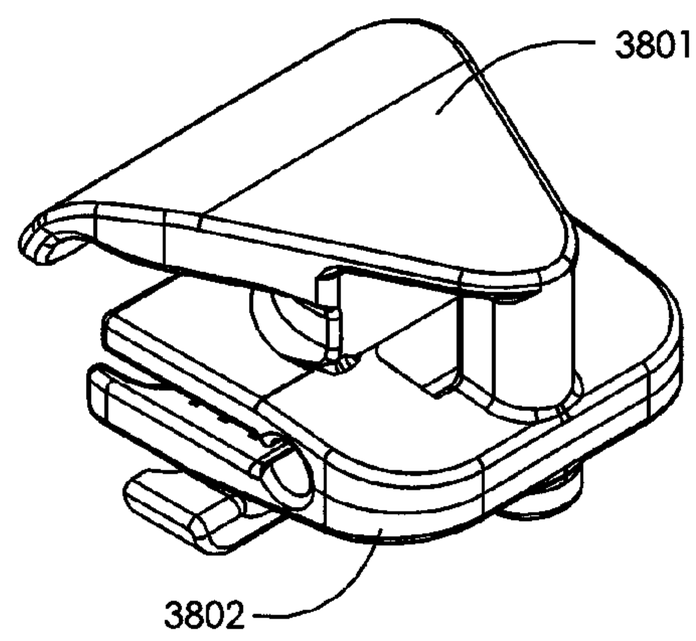

Fig. 38D

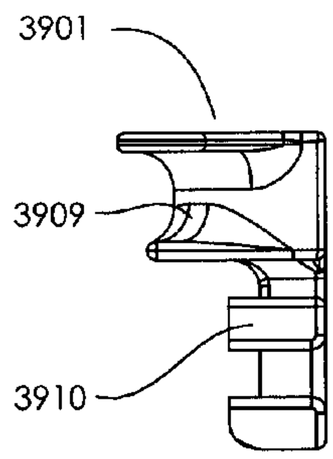

Fig. 39A

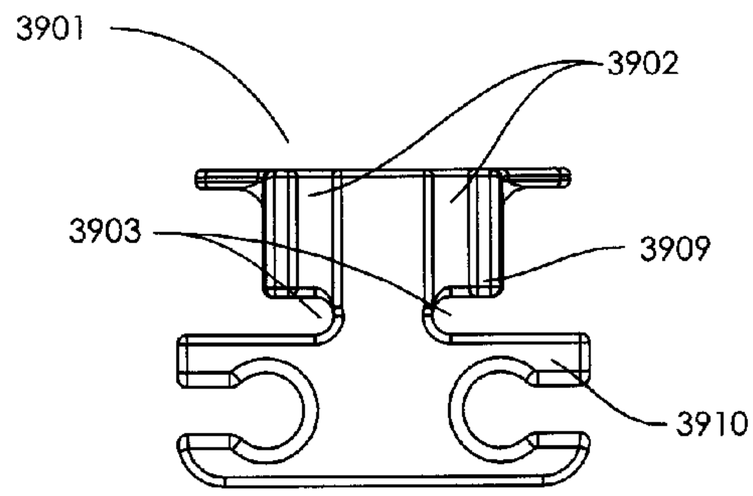

Fig. 39B

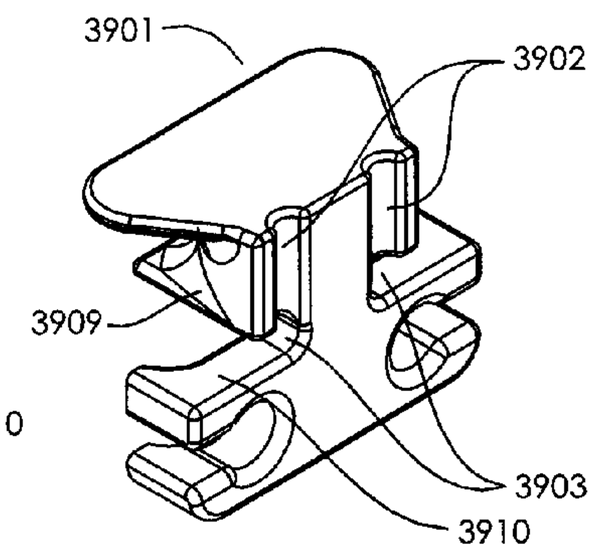

Fig. 39C

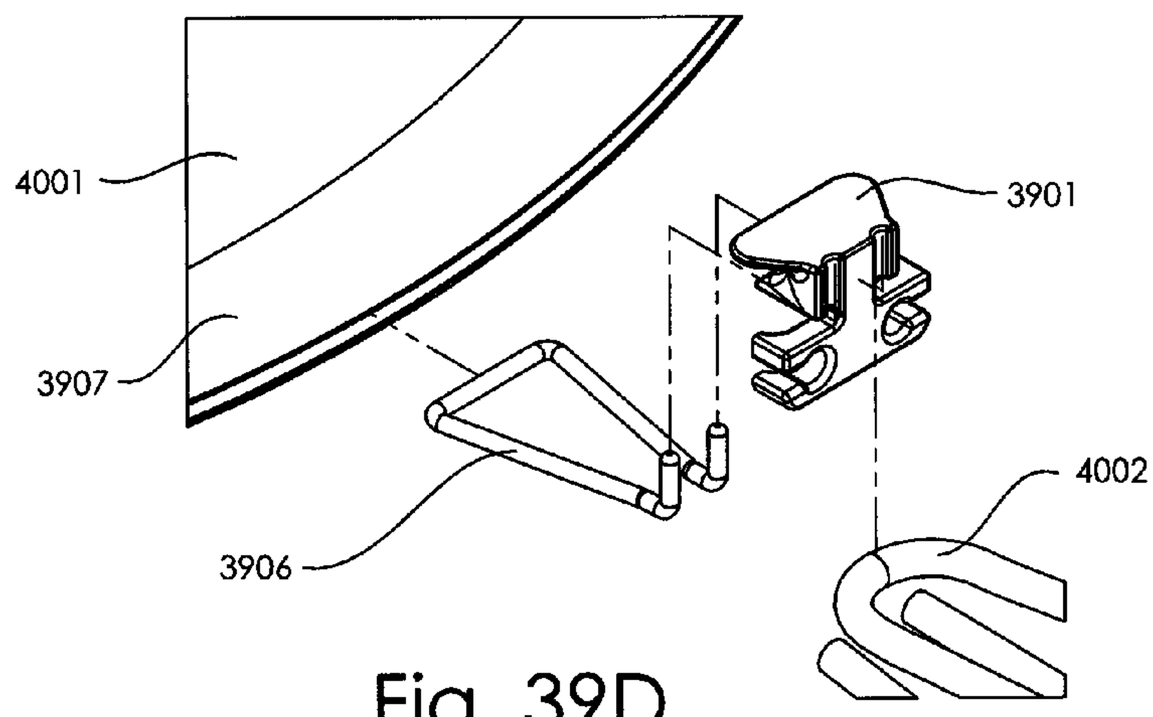

Fig. 39D

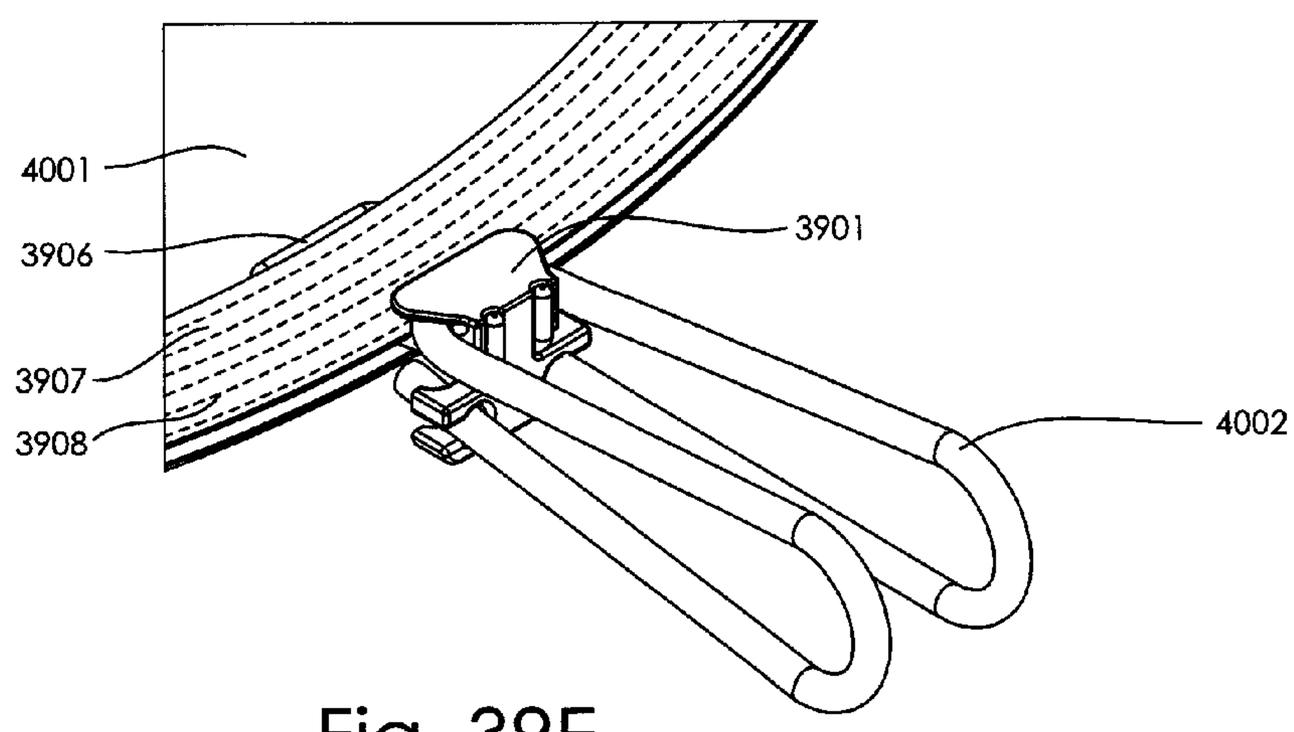

Fig. 39E

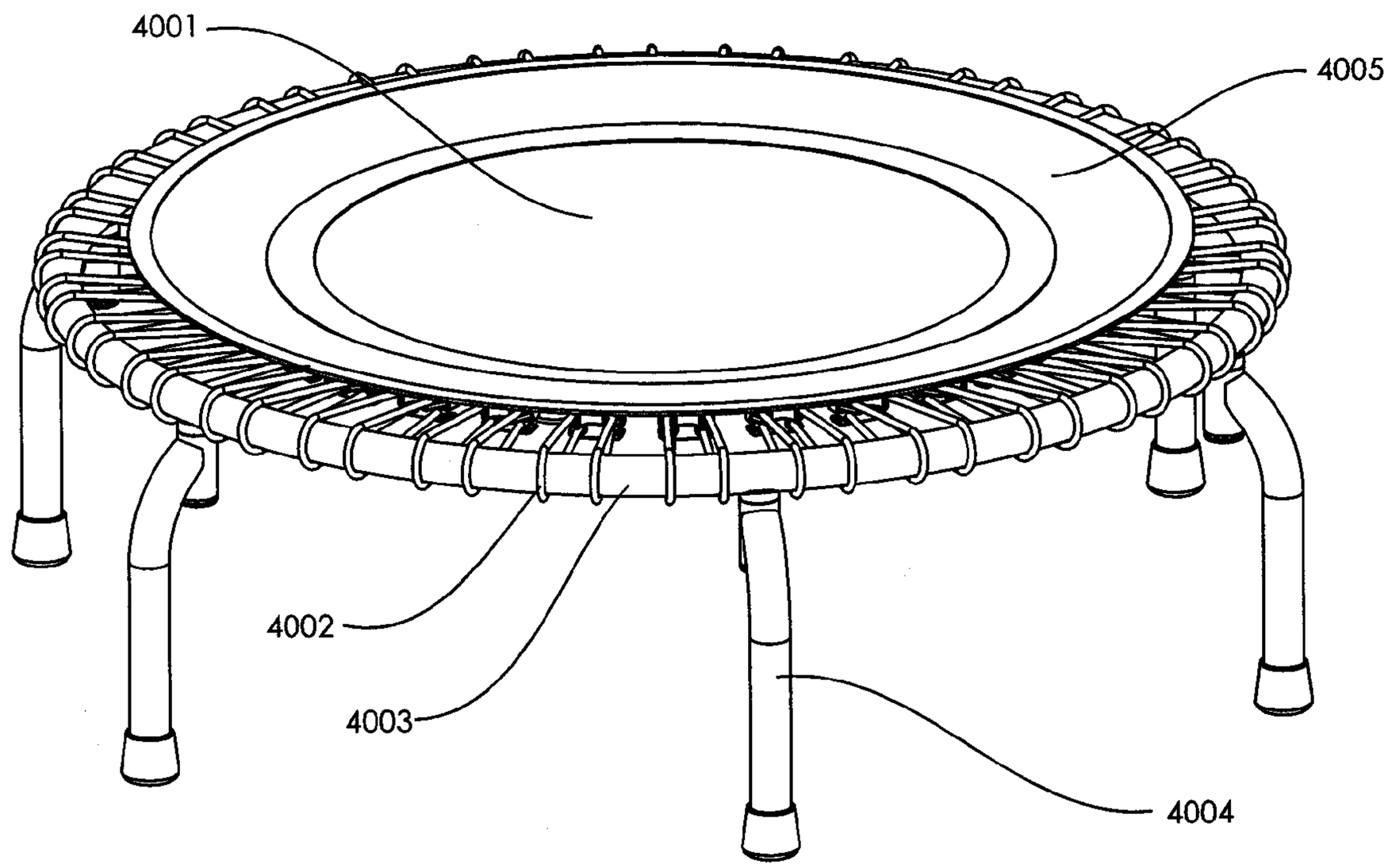

Fig. 40

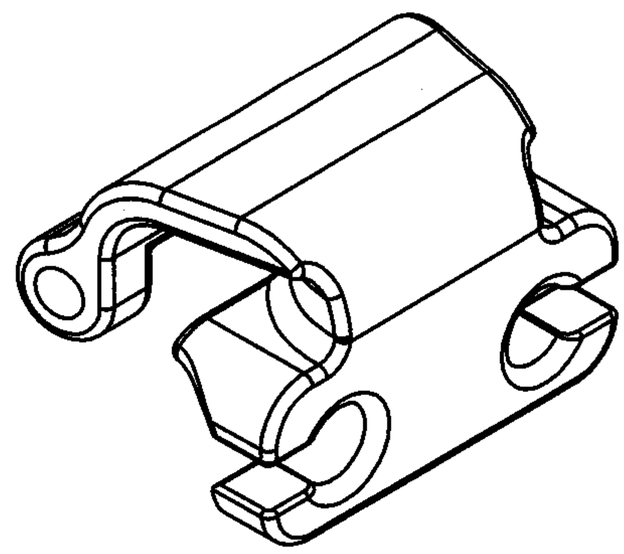

Fig. 41A

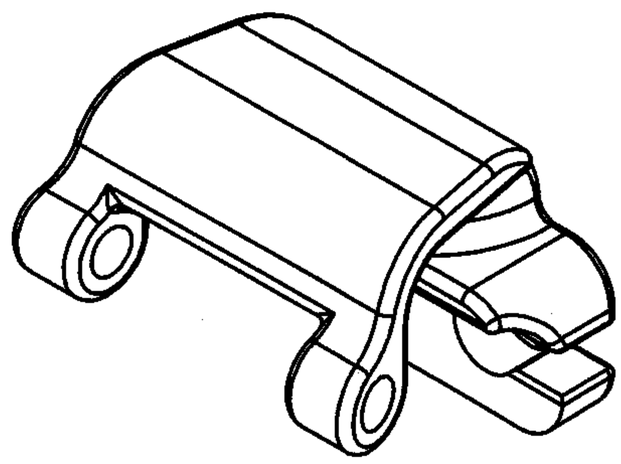

Fig. 41B

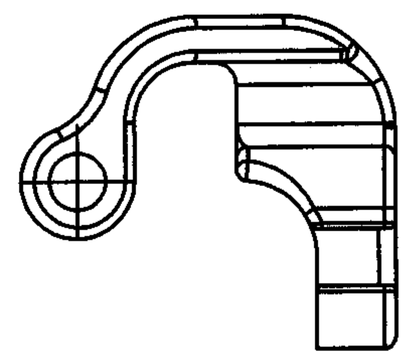

Fig. 41C

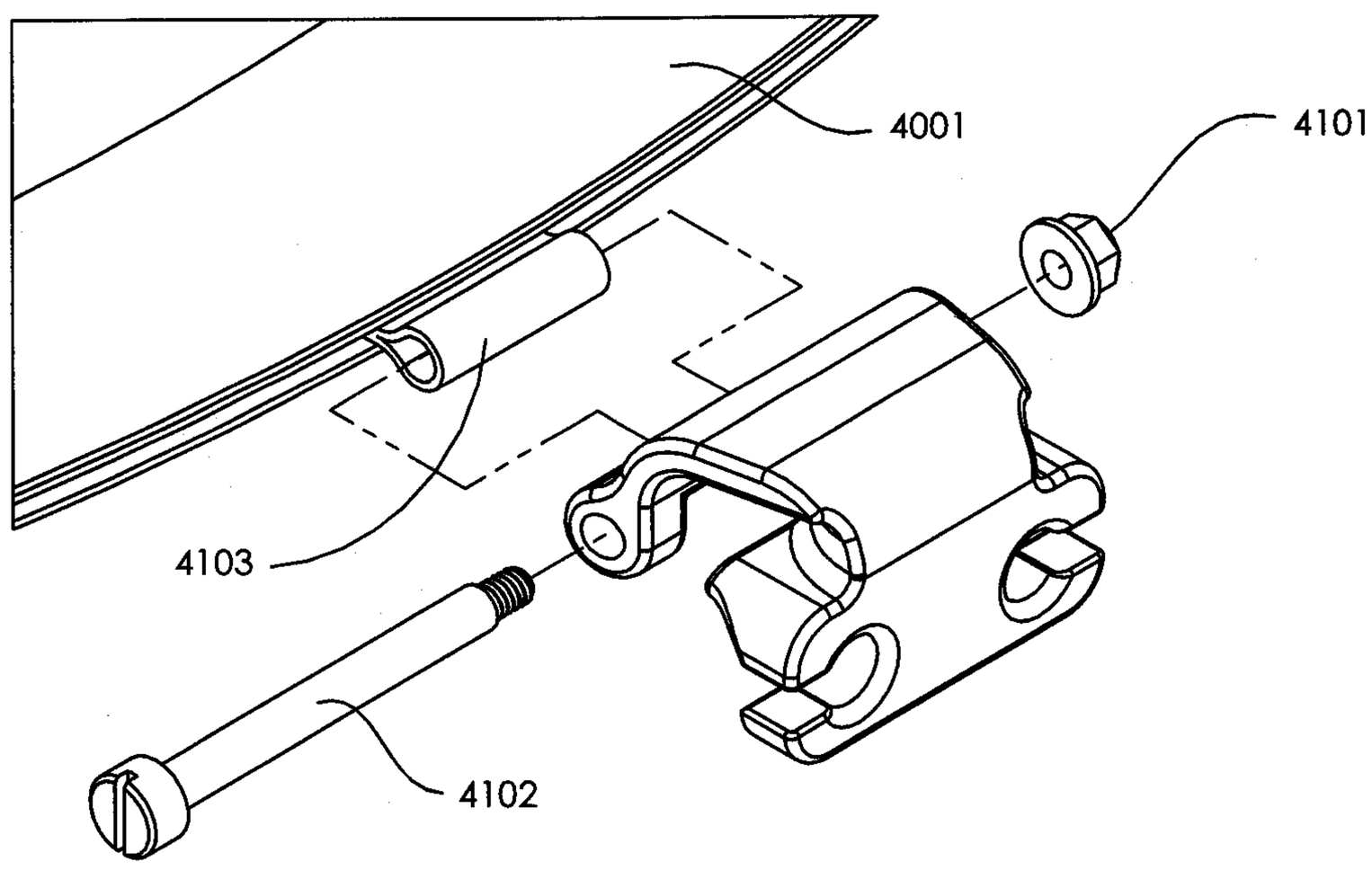

Fig. 41D

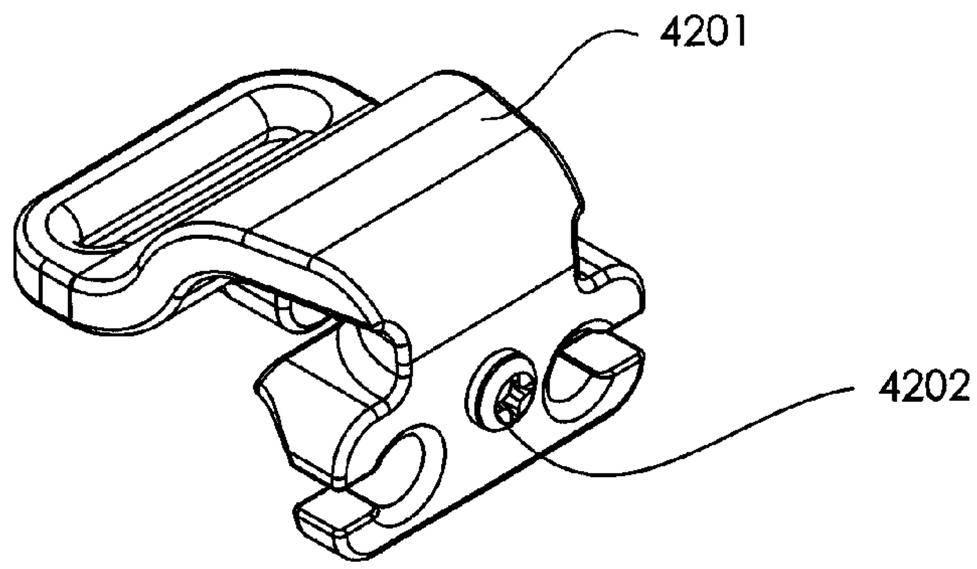

Fig. 42A

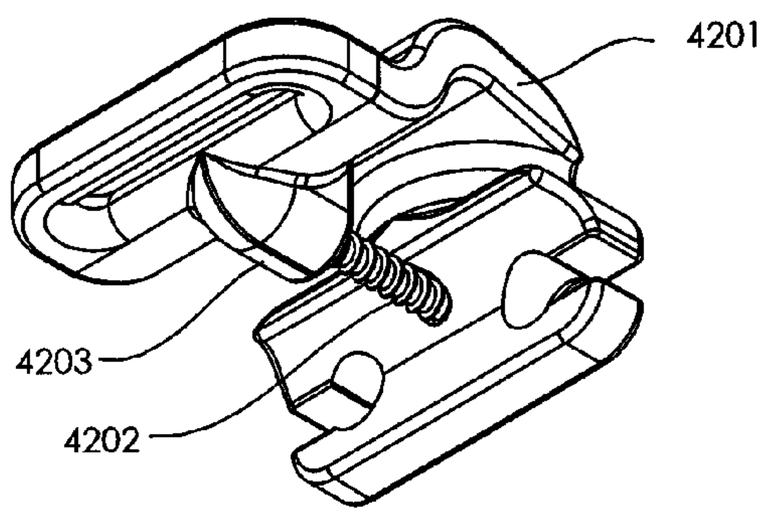

Fig. 42B

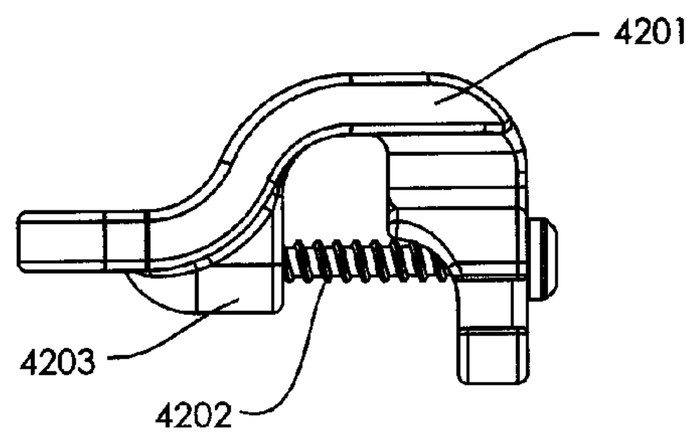

Fig. 42C

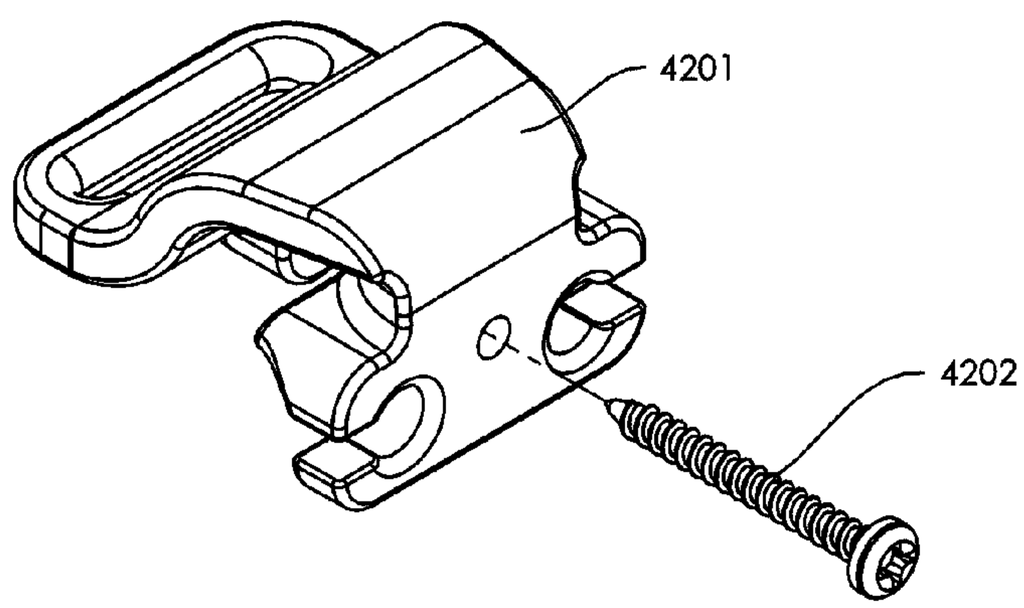

Fig. 42D

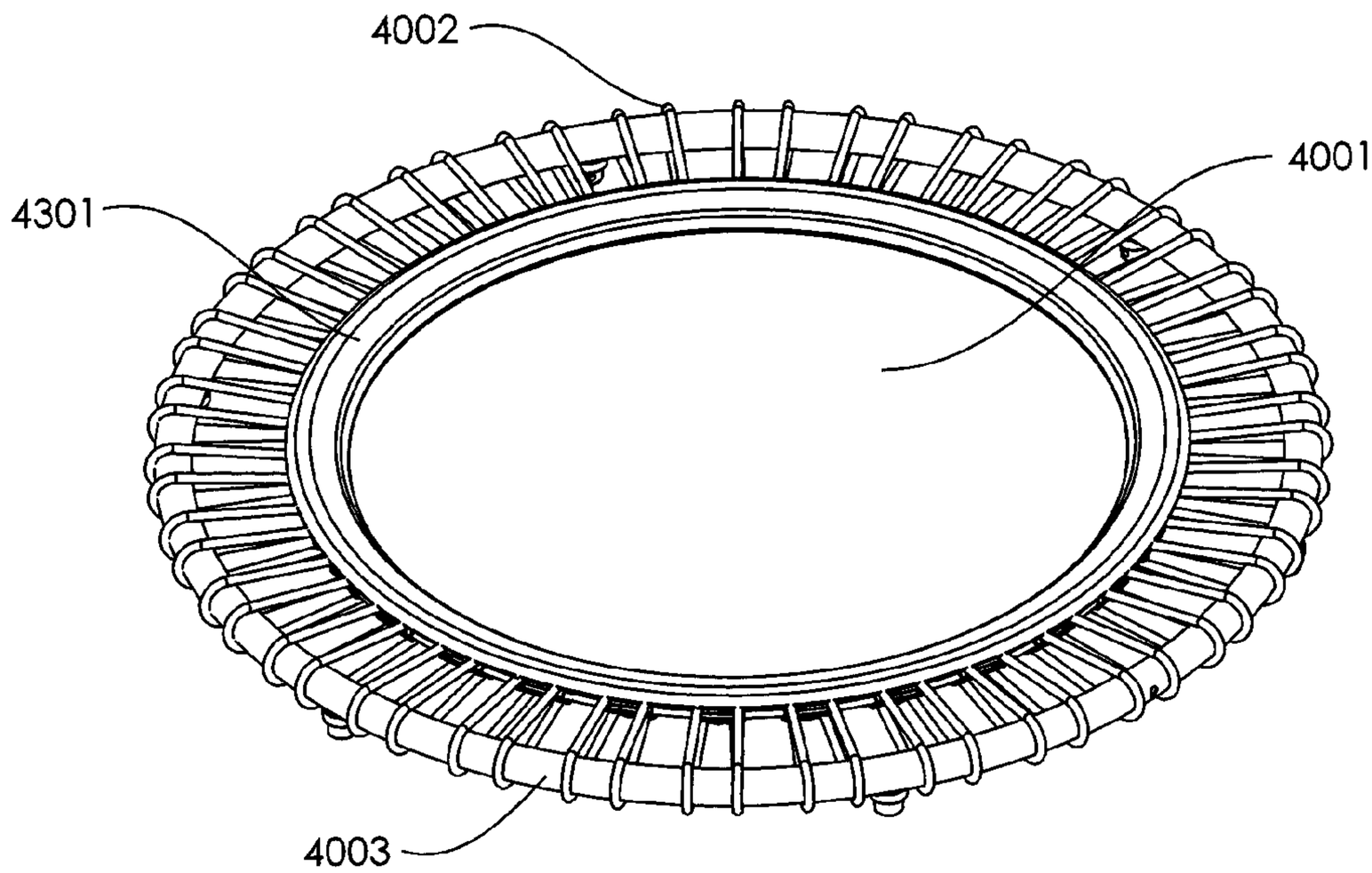

Fig. 43A

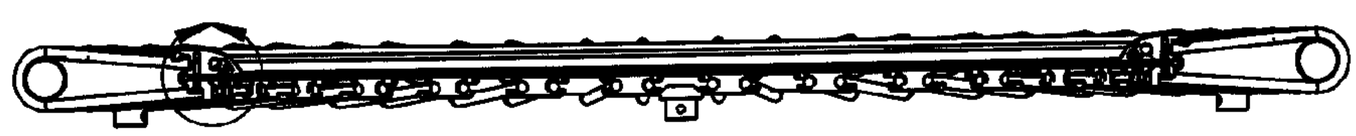

Fig. 43B

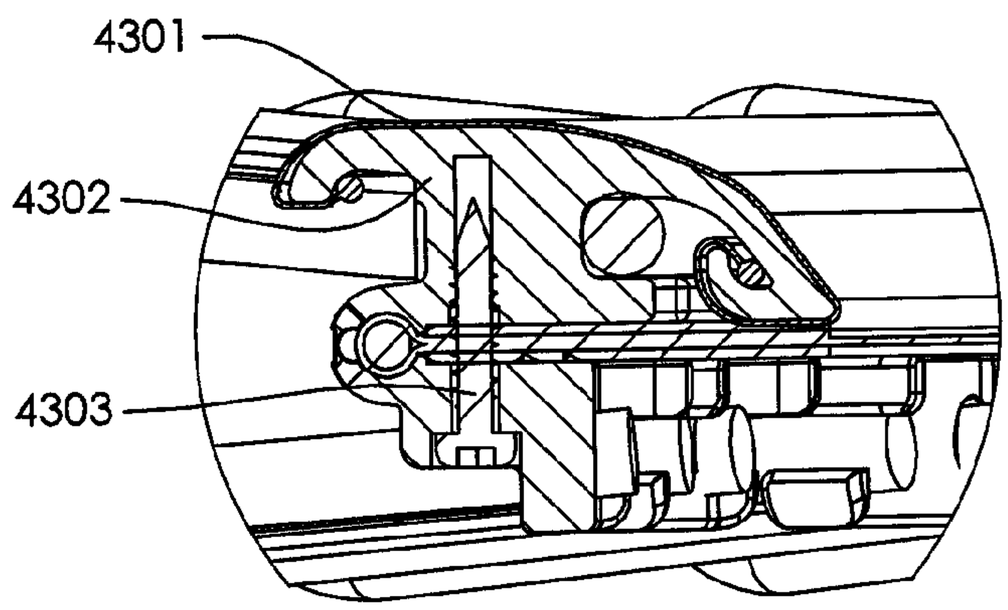

Fig. 43C

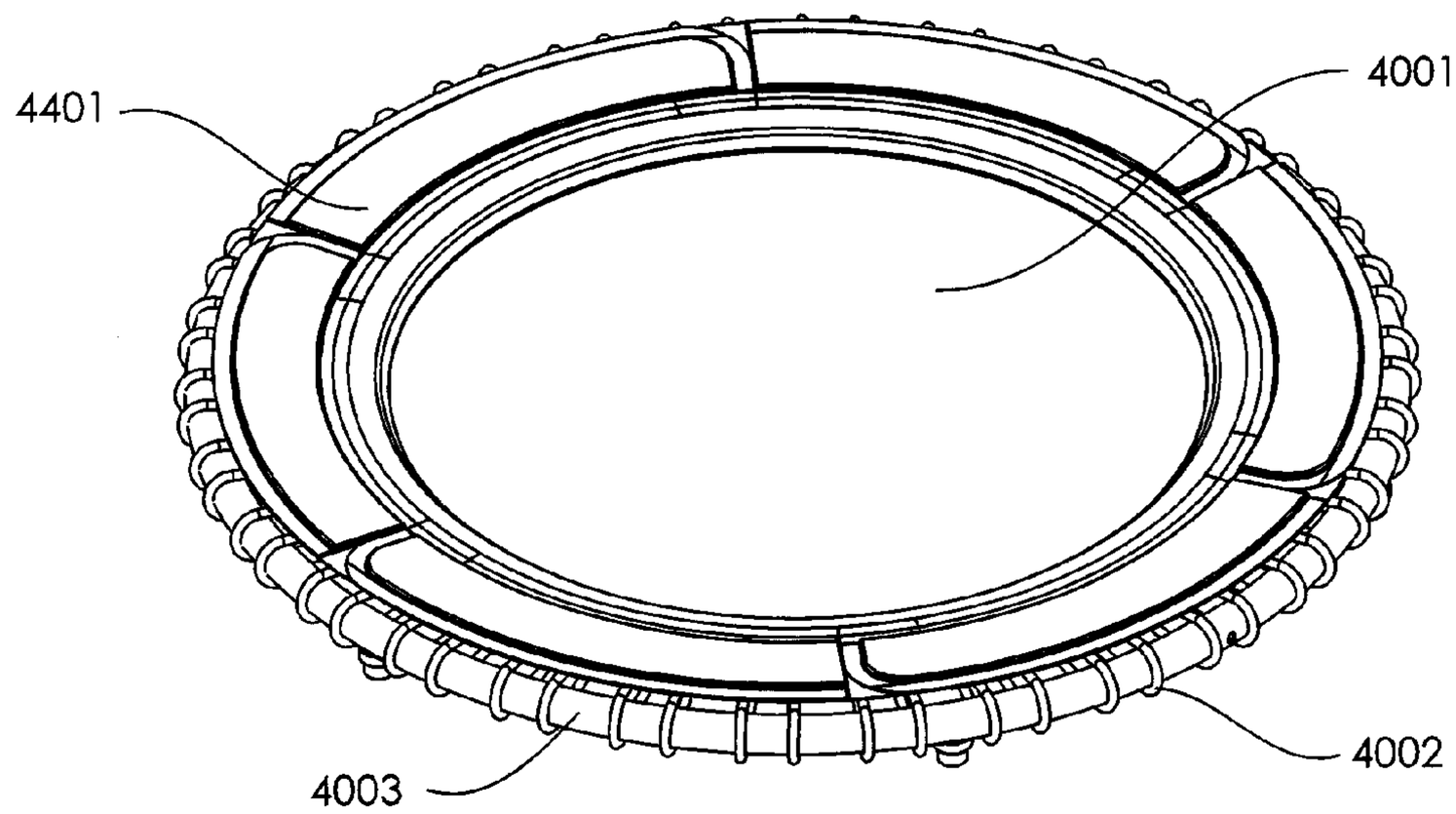

Fig. 44A

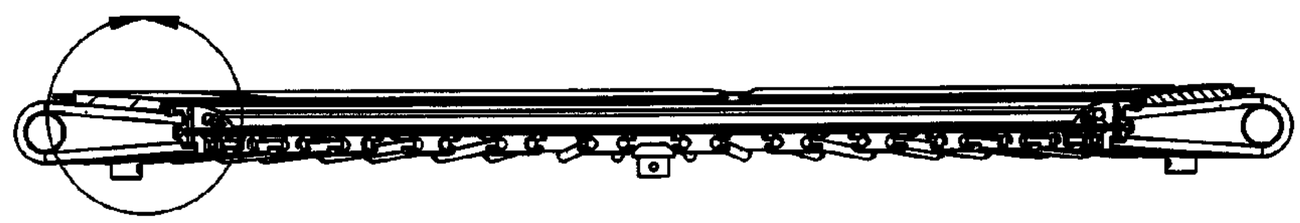

Fig. 44B

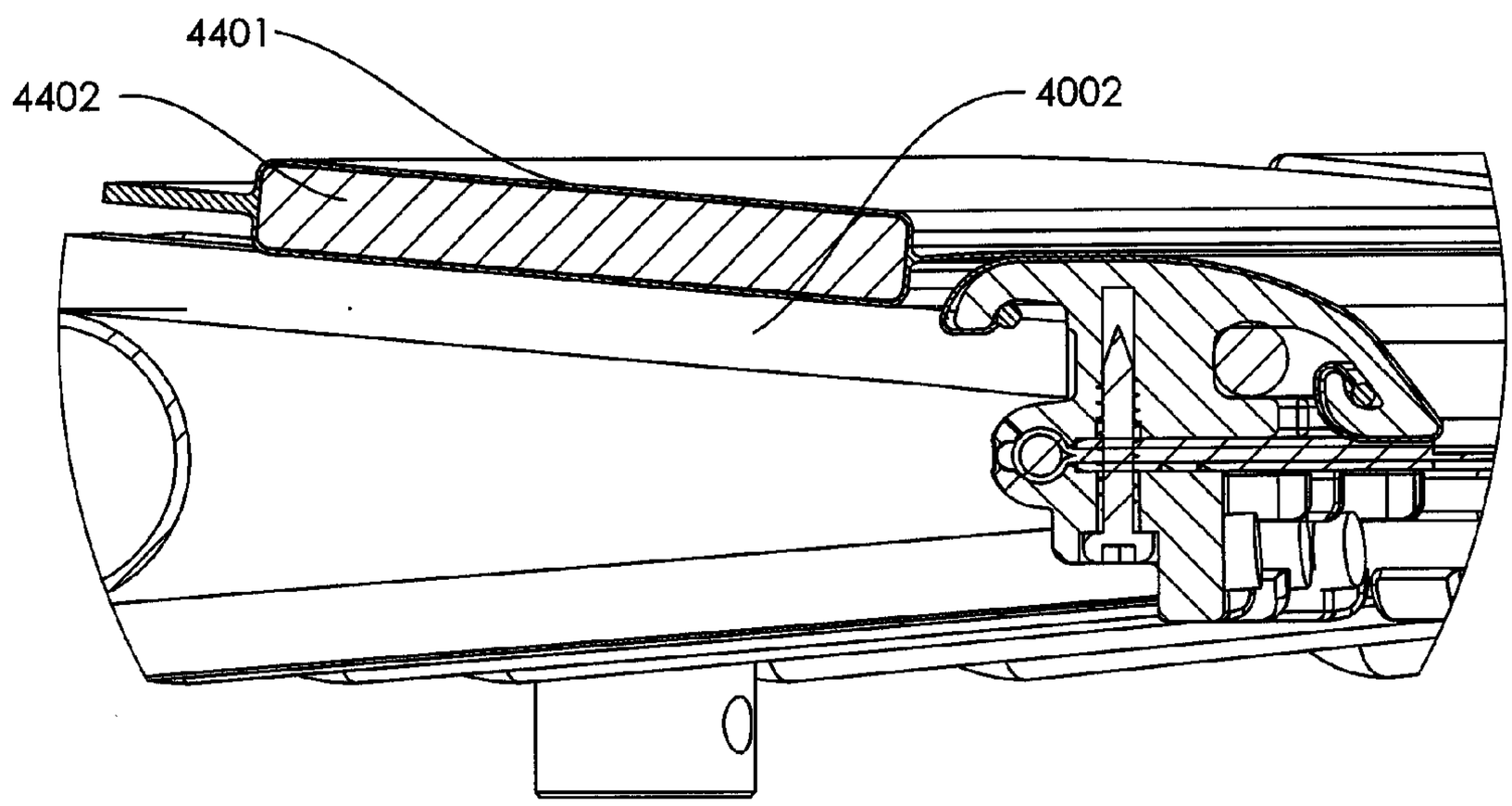

Fig. 44C

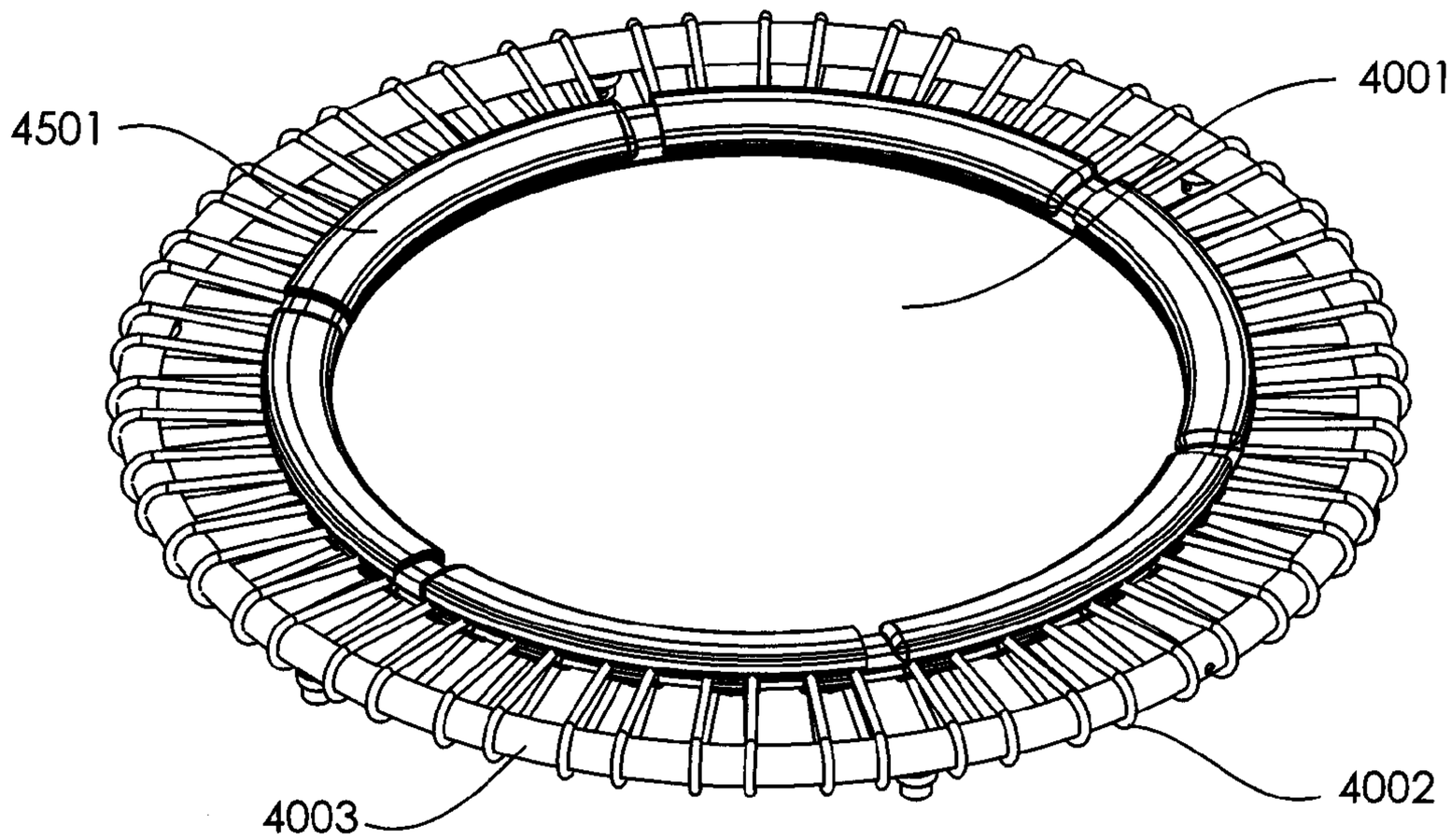

Fig. 45A

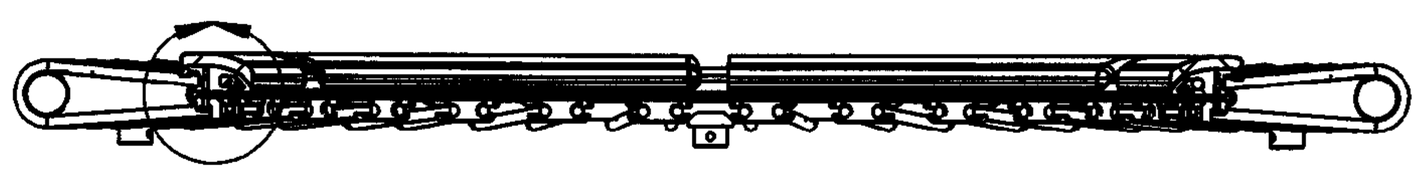

Fig. 45B

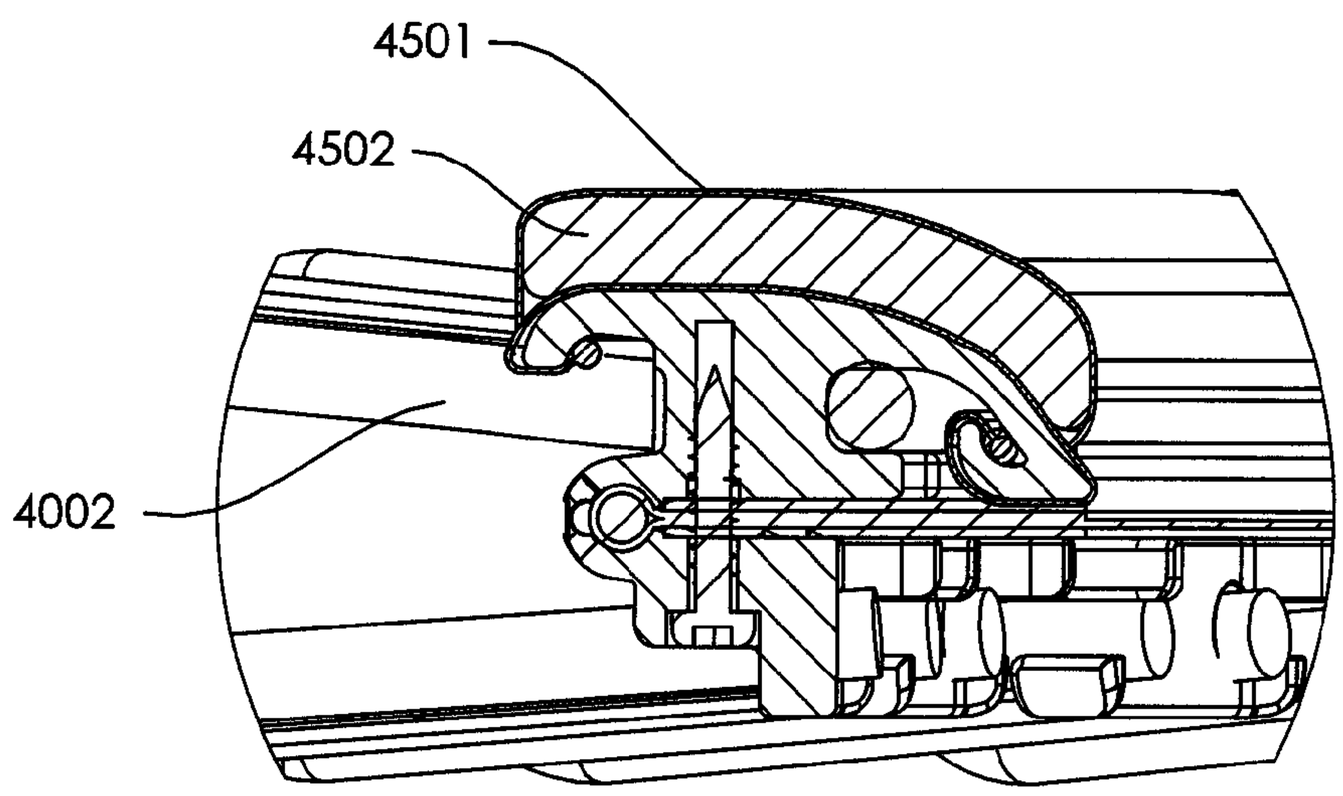

Fig. 45C

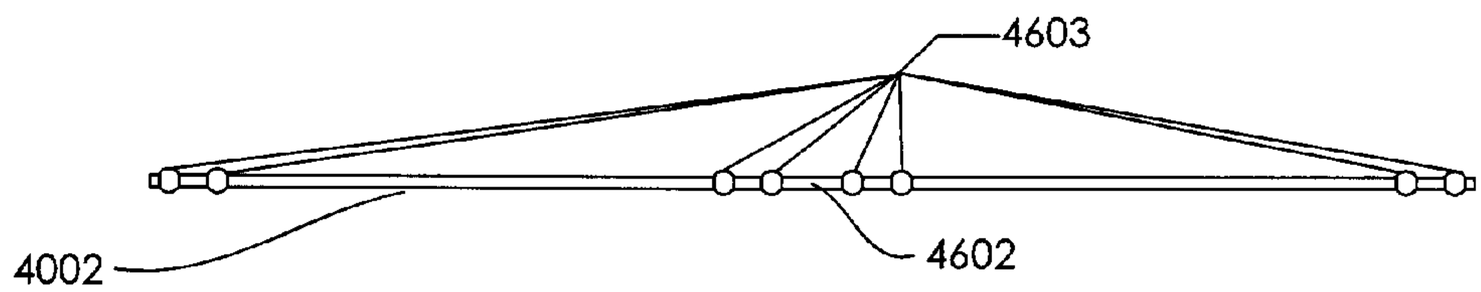

Fig. 46A

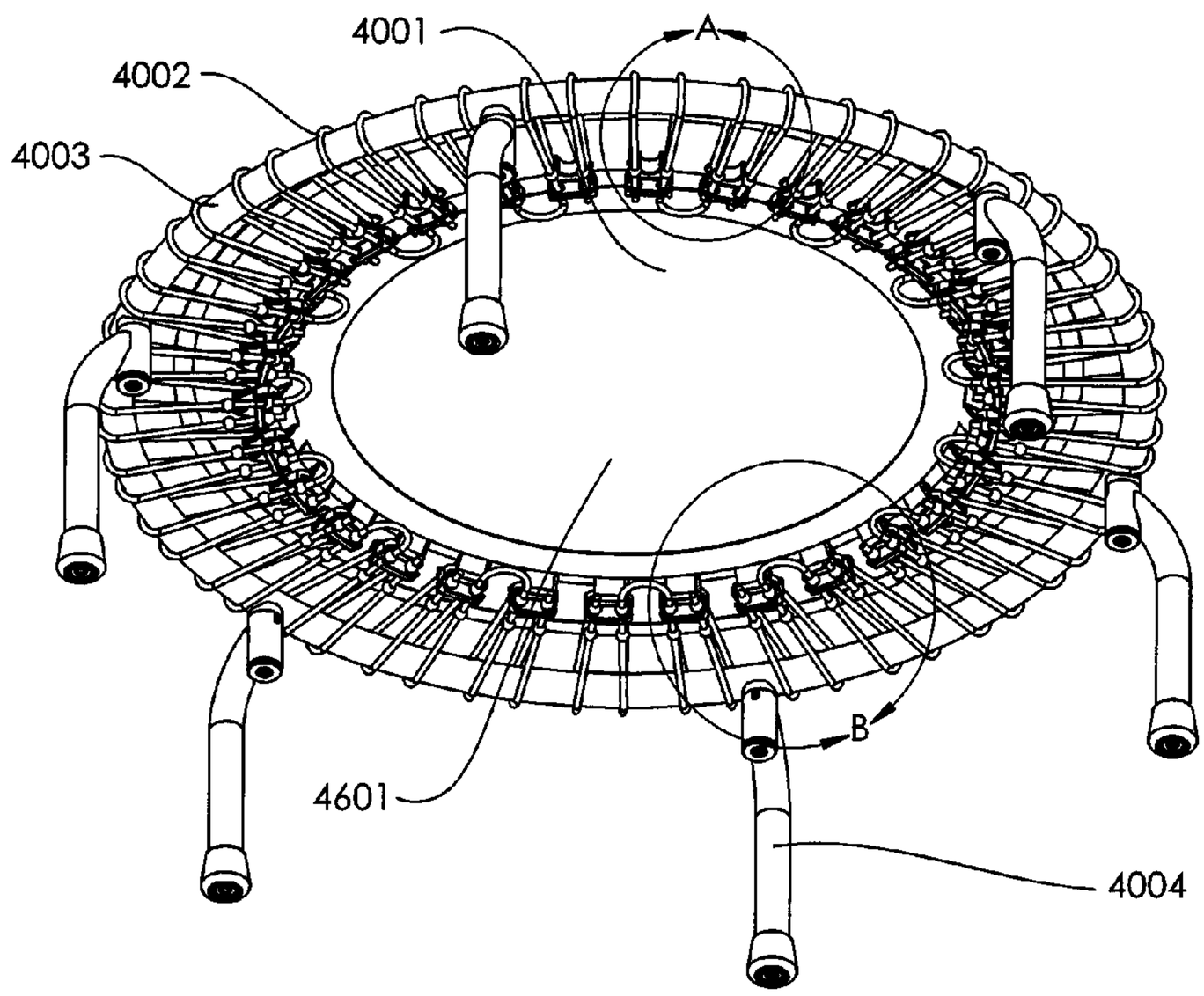

Fig. 46B

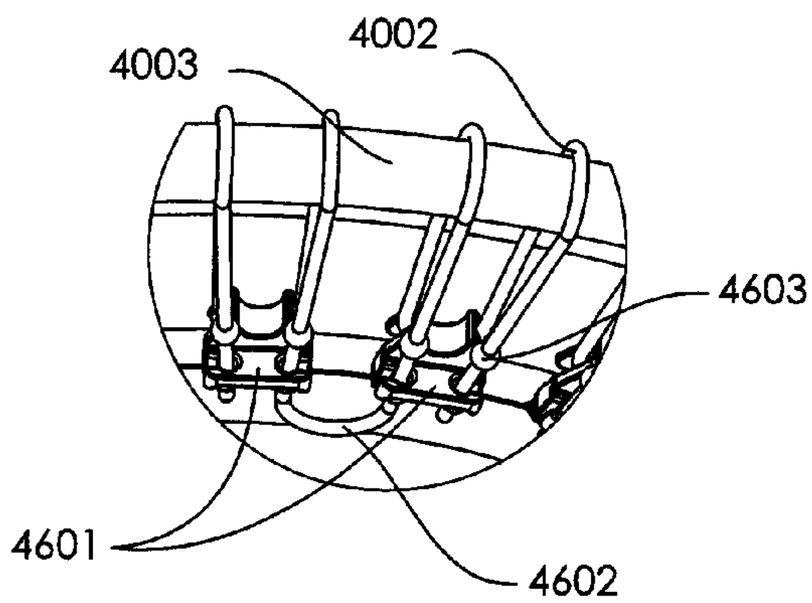

Fig. 46C

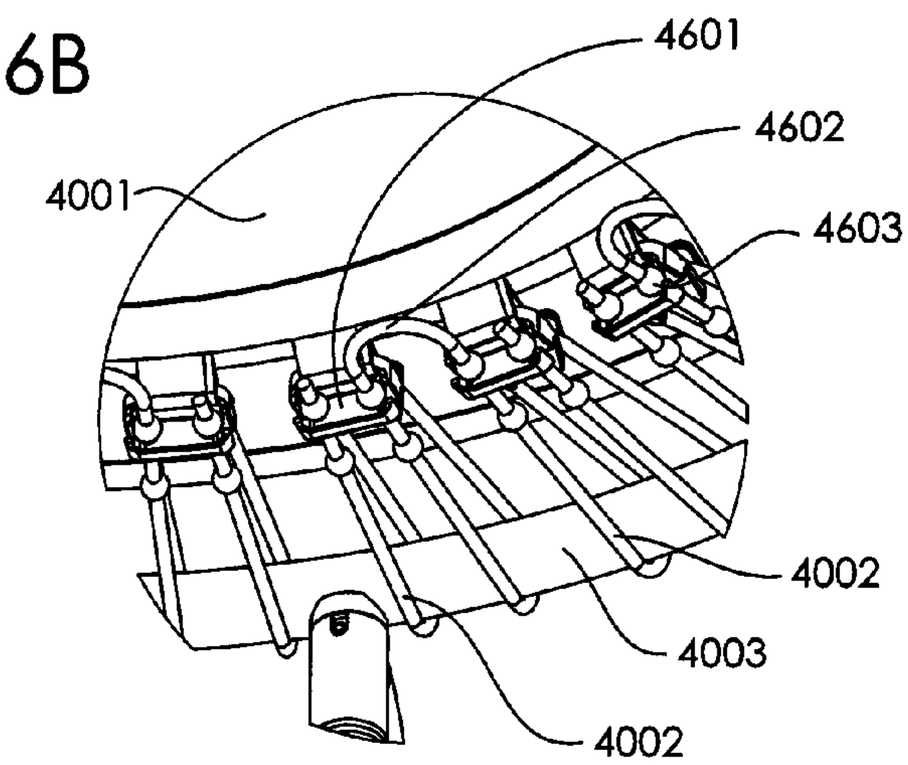

Fig. 46D

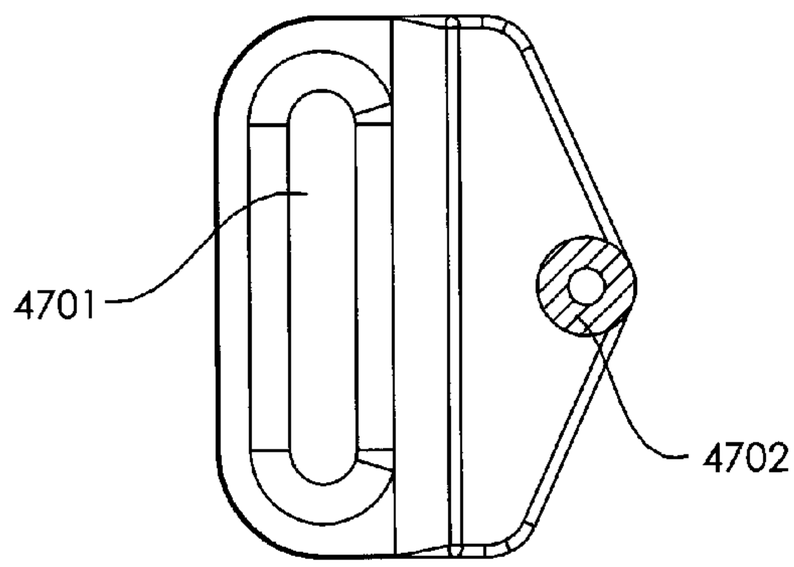

Fig. 47A

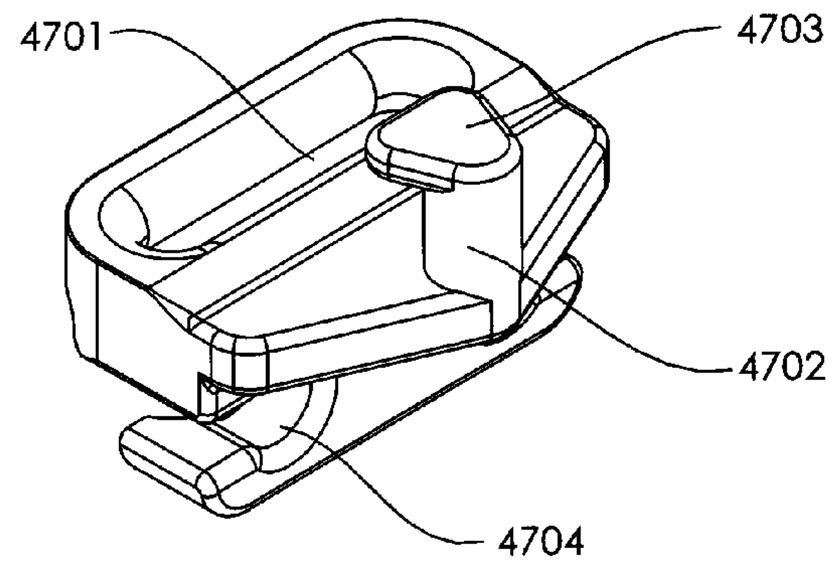

Fig. 47B

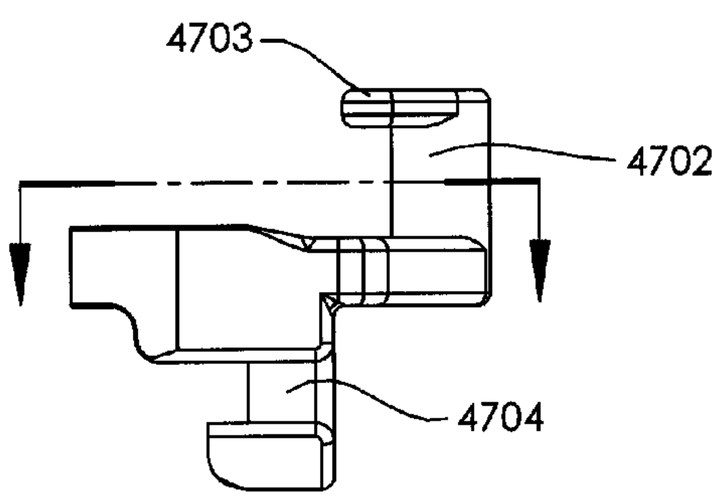

Fig. 47C

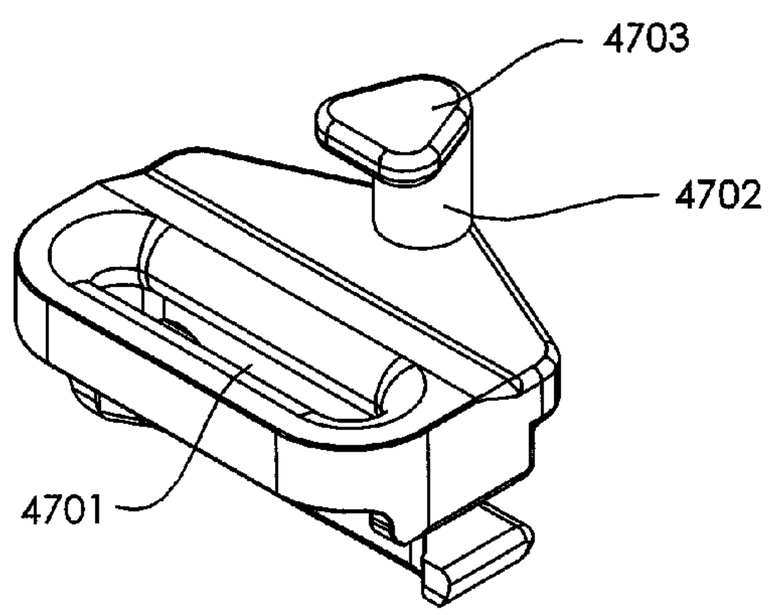

Fig. 47D

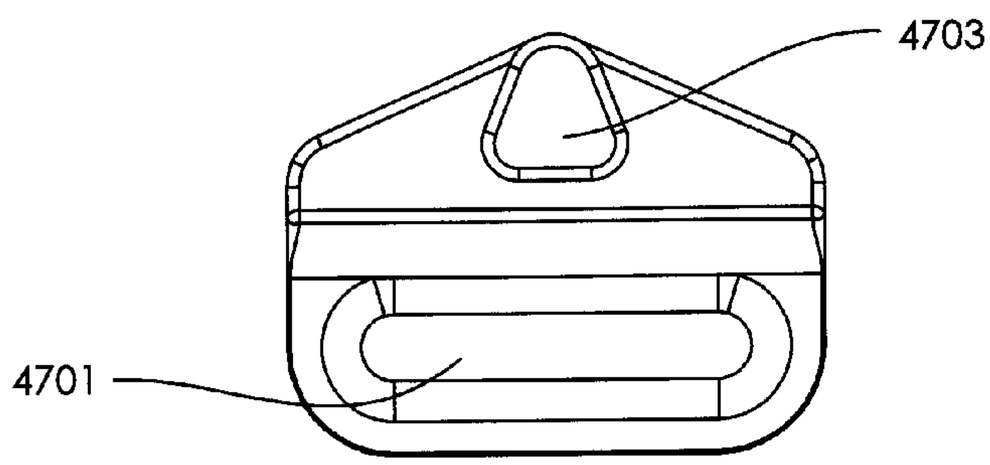

Fig. 47E

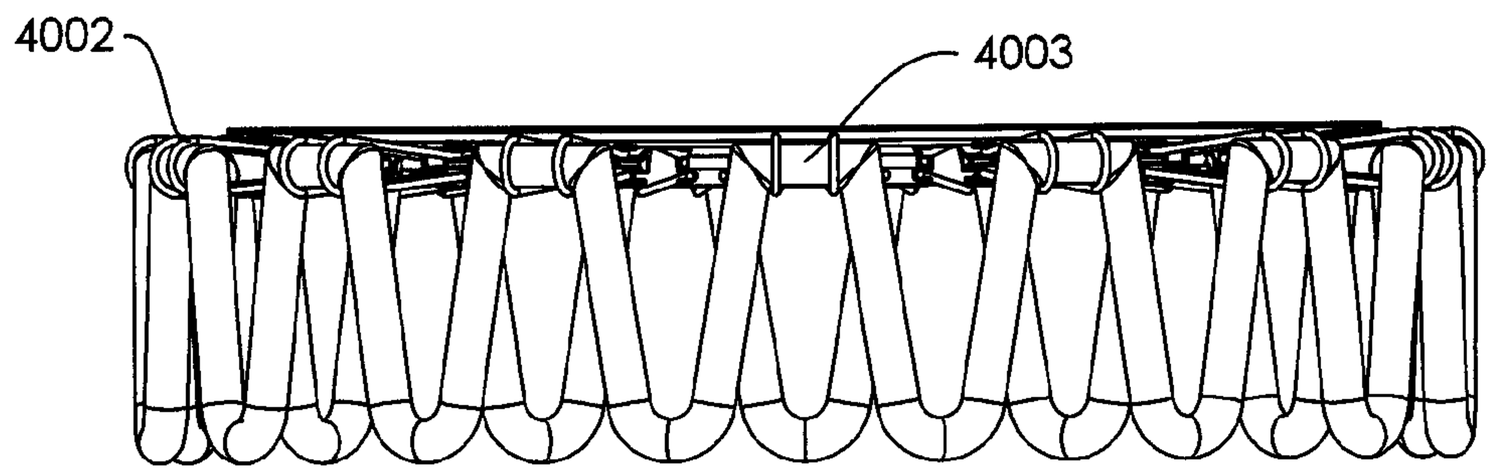

Fig. 48A

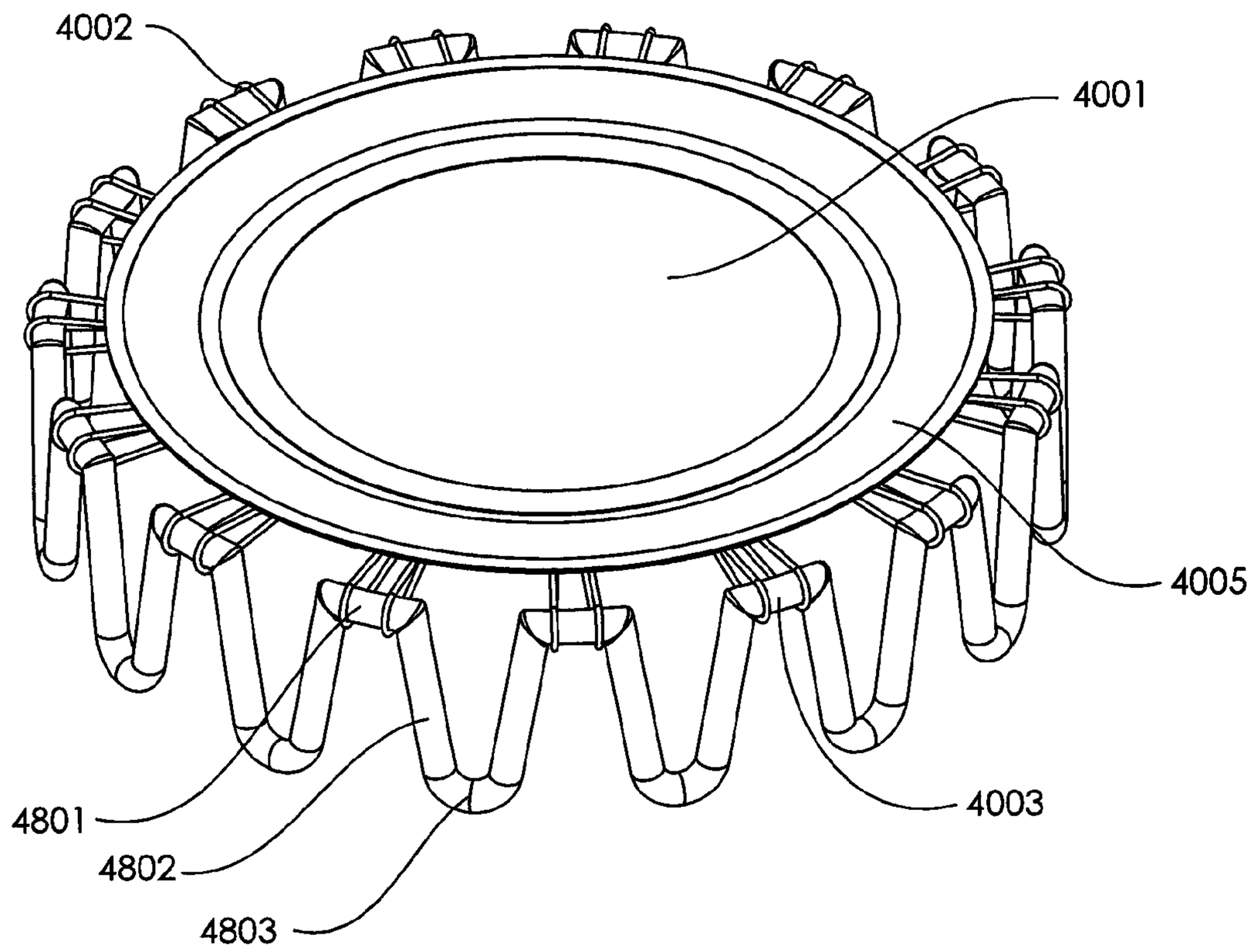

Fig. 48B

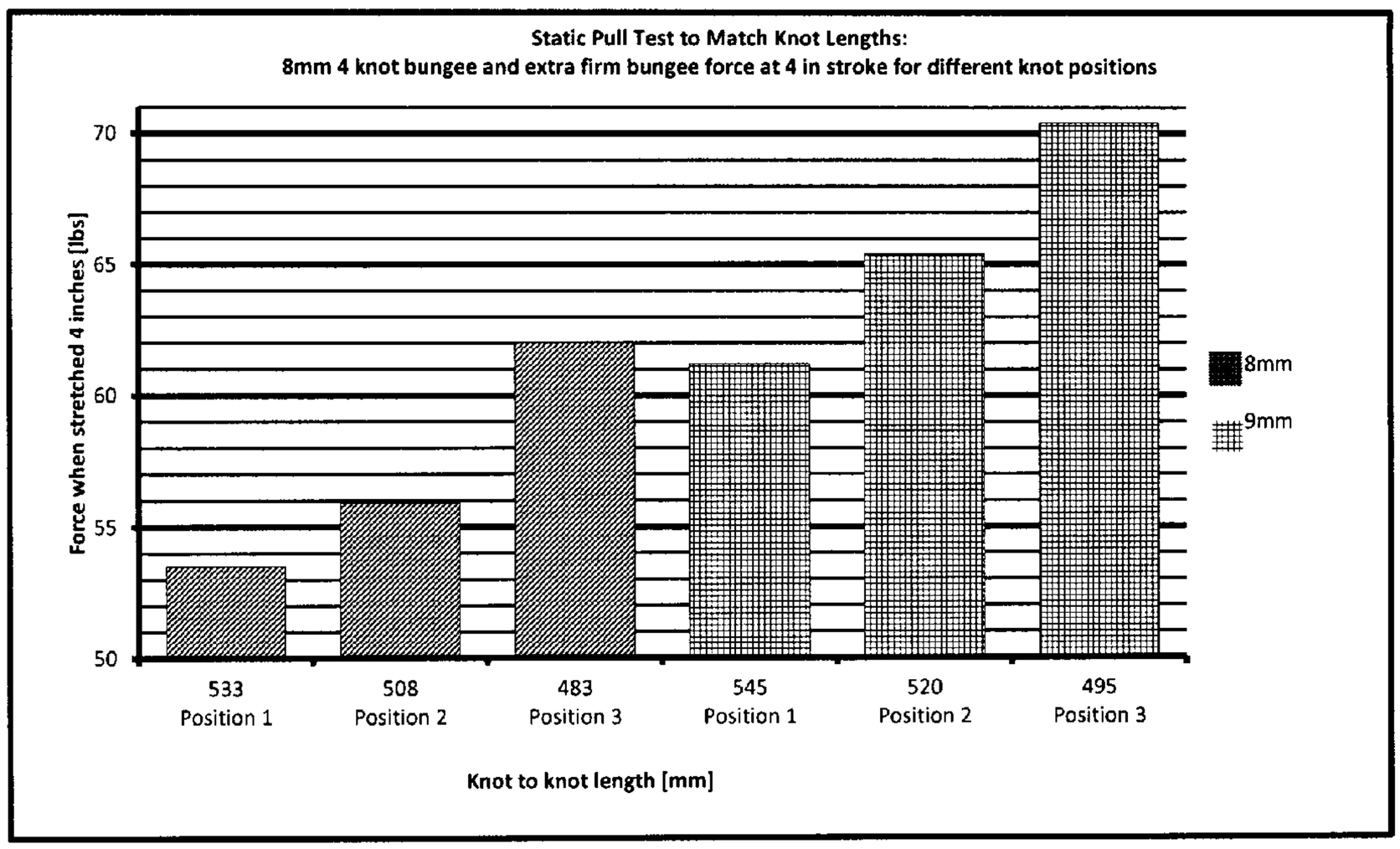
Static Pull Test to Match Knot Lengths:
8mm 4 knot bungee and extra firm bungee force at 4 in stroke for different knot positions
Force when stretched 4 inches [lbs]
70
65
60
55
50
533
Position 1
508
Position 2
483
Position 3
545
Position 1
520
Position 2
495
Position 3
Knot to knot length [mm]
8mm
9mm

Fig. 49

REBOUNDING APPARATUS WITH TENSIONED ELASTIC CORDS

CROSS REFERENCE TO RELATED APPLICATIONS

This is a continuation-in-part of application Ser. No. 13/562,240, filed Jul. 30, 2012, which is a continuation-in-part of application Ser. No. 13/420,519, filed Mar. 14, 2012, which is a continuation-in-part of International Application No. PCT/US10/48820, filed Sep. 14, 2010, which is a continuation-in-part of application Ser. No. 12/881,105, filed Sep. 14, 2009.

This is a continuation-in-part of application Ser. No. 13/562,240, filed Jul. 30, 2012, which is a continuation-in-part of application Ser. No. 13/420,519, filed Mar. 14, 2012, which is a continuation-in-part of International Application No. PCT/US10/48820, filed Sep. 14, 2010, which is a continuation-in-part of application Ser. No. 12/881,486, filed Sep. 29, 2009.

This is a continuation-in-part of application Ser. No. 13/562,240, filed Jul. 30, 2012, which is a continuation-in-part of application Ser. No. 13/420,519, filed Mar. 14, 2012, which is a continuation-in-part of International Application No. PCT/US10/48820, filed Sep. 14, 2010, which claims the benefit of the U.S. Provisional Application No. 61/321,571, filed Apr. 7, 2010.

This is a continuation-in-part of application Ser. No. 13/562,240, filed Jul. 30, 2012, which is a continuation-in-part of application Ser. No. 13/403,973, filed Feb. 23, 2012, which is a continuation-in-part of application Ser. No. 13/068,855, filed May 18, 2010.

This is a continuation-in-part of application Ser. No. 13/562,240, filed Jul. 30, 2012, which is a continuation-in-part of application Ser. No. 13/403,973, filed Feb. 23, 2012, which claims the benefit of U.S. Provisional Application No. 61/446,035, filed Feb. 23, 2011.

This is a continuation-in-part of application Ser. No. 13/562,240, filed Jul. 30, 2012, which claims the benefit of U.S. Provisional Application No. 61/598,869, filed Feb. 14, 2012.

This is a continuation-in-part of application Ser. No. 13/562,240, filed Jul. 30, 2012, which is a continuation-in-part of application Ser. No. 13/420,519, filed Mar. 14, 2012, which is a continuation-in-part of application Ser. No. 13/403,973, filed Feb. 23, 2012.

This claims the benefit of U.S. Provisional Application No. 61/751,240, filed Jan. 10, 2013.

All of the above-referenced applications are incorporated herein by reference in their entireties.

BACKGROUND

This disclosure relates to rebounding apparatus that are relatively small trampoline-type devices for physical exercise. Such devices, commonly referred to as "rebounders," typically are circular, and sometimes rectangular, and have a relatively small diameter of approximately 50 inches or less with the frame encompassing an area of approximately 2,000 square inches or less. Such devices have a relatively small diameter flexible surface area available for jumping of about 1,250 square inches or less, but could be as much as 2,000 square inches or approximately equal to the frame area by using an atypical rebounder spring member arrangement. Examples of such device are shown in U.S. Pat. No. 7,094,181 (to Hall, Aug. 22, 2006) and U.S. Pat. No. 4,331,329 (to Mirkovich et al., May 25, 1982), both of which are incorporated herein by reference. The frames described herein are usually fabricated from a metal such as steel, aluminum, or other metal alloy. Such frames usually define a central opening that supports a flat or planar rebounding mat or jumping surface that is elastically suspended within the central opening. At least one or more of elastic spring members couple the rebounding mat to the frame in elastic suspension. The spring members each have an elongated body that extends between the jumping mat and the frame. The frame can be of several configurations and is not limited by shape in any dimension beyond its need to support a flat rebounding surface at any angle.

The described apparatus may also be fabricated with other materials, such as plastics of various types, fiberglass, Kevlar or other aramid fibers may be used, or other composites of a suitable material, or some combination of any of these materials capable of providing sufficient structural support for a trampoline and its typical usage. The adult and adult sized users of such devices are individual persons generally over 16 years old, and between a height of 4 feet 7 inches and 6 feet 7 inches, with a weight range between 70 lbs to 400 lbs. Children between the ages of 4 to 8 may also use these trampolines for fitness and fun, but their bodyweight is generally lighter, between 30 to 80 lbs. Young people between the ages of 8 and 16 can vary greatly in weight and size, from 50 lbs to in excess of 300 lbs. The instant invention is configurable to support each of individuals in these weight ranges and within these age groups.

Such devices, like larger backyard trampolines, have a bed that is made of flexible fabric attached to an encompassing frame by spring elements. A plurality of legs supports the frame at a distance above the ground. The height of the rebounding surface above the ground surface can range from a few inches to approximately 18 inches. The height may be greater, but generally not higher than 24 inches above the ground surface. Any higher than 24 inches, and safety concerns are raised as a user would be higher off the ground surface on a smaller platform (jump surface) that is unstable. Hence, a device higher than 24 inches above the ground surface generally needs to be of a greater diameter than what's been described, and tends towards being more properly defined as a large trampoline or full size trampoline, and not a fitness rebounder or mini trampoline. The spring members or elements may be of any kind of rope or cord which has elastic qualities which permits the spring member to stretch when extended or compress when extension is reversed or shortened. The spring members may be any type of elastic cords or may be made of a natural or synthetic rubber or other man made elastic material, or include the type of cords known as bungee or shock cords composed of one or more elastic strands forming a core and commonly covered in a sheath of woven material such as cotton, polypropylene, or other suitable material. Also, the spring member may include any other types of metal or composite springs or other type of cords that may function with the indicated embodiments or that may be configured for use with a rebounder described herein.

In a typical prior art trampoline and rebounder configuration, the mat is tensioned by such previously described elastic or spring elements generally arranged radially between the mat outer diameter and the inner diameter of the frame. This area is sometimes covered by a static pad which is attached to the frame, and prevents the user from stepping directly onto the elastic elements or springs.

It is an object of the invention to allow for adjustable spring members which allow for tension adjustments according to a user's weight or athletic ability. Up until this innovation, the only way tension has been changed or adjusted for mini-

trampoline spring members, especially elastic cords, has been to remove an existing cord, and then replace it with an entirely different elastic cord member of a different tension; generally achieved by the replacing cord being of a lesser or greater diameter. Such "swapping out" of cords can be very time consuming, and results in added expense for a consumer due to the requirement to purchase, store, and then locate, additional cords. These requirements and limitations are substantially reduced with the current invention because the same cord is used to change the tension for multiple users. With the current device, the user may adjust the existing cord to alter tension, resulting in a significant gain in utility, as well as reduction in costs and expenses. Additionally, users of different weights and abilities may use the same trampoline and cord members even though they vary greatly in body weight, or athletic ability.

Disclosed herein are trampoline-type devices that comprise an encompassing frame supported by plural legs that contains adjustable bungee (or elastic member) connectors and extenders. Also disclosed are new cord configurations and embodiments of the type disclosed in PCT/US2010/048820. Also disclosed is a cross over elastic cord configuration of the type disclosed in U.S. Provisional Patent Application 61/52,130, filed May 25, 2012. Also, disclosed are additional connector configurations for cord attachment shown in U.S. Provisional Patent Application 61/52,130, filed May 25, 2012.

Also disclosed are cord and elastic spring member connectors which permit a significant increase in the usable surface area of the rebounding mat without any corresponding loss or reduction of elastic spring member length. These connectors shown are called a Through Pin Connector; a Snap Pin Connector; a Through Pin Compression Connector; a Snap Pin Compression Connector; a Clamping Compression Connector; and a Two Part Clamping Compression Connector. These connectors result in a measurably larger usable jump surface, yet without any corresponding loss in spring performance because the original spring length does not need to be altered to accommodate the larger jump surface or mat. This is a significant improvement over current art, and is achieved without an additional need to adjust the height of the jump surface relative to the ground surface.

Also disclosed is a unique clip in connector, that also allows for slightly more usable jump surface though not as significantly and the previously described connectors. Also disclosed is a unique crossover elastic cord member connector.

Also disclosed are various connector and cord covers that may be attached to the jump surface via the connectors that serve to protect those same connectors, and also to further expand the useable surface area of the jump mat.

It is another object to provide such an improved trampoline which is easy to assemble.

SUMMARY

In the present invention, the first object is achieved by providing a rebounding surface comprising a closed frame that is horizontally disposed, a rebounding mat having at least a central portion thereof elastically suspended within the closed frame, at least one cordlike flexible elastic member, each having a first end and an opposing end for coupling the central portion of the rebounding mat in elastic suspension to the frame, a plurality of connectors attached to the perimeter of the central portion of the rebounding mat, each connector connecting a cordlike flexible elastic member to the rebounding mat, wherein at least one of the frame, and at least one cordlike elastic member and a connector of the plurality are adapted to dispose at least one of the first end and opposing end of the at least one cordlike elastic member at least two alternative positions to provide at least two alternative levels of tension to the rebounding mat.

Another way of describing the adjustability of the spring members is that at least one of the connectors couples a cordlike elastic member in a manner such that the tension of the "tensioned portion" of the elastic member can be adjusted by moving a portion of the body of the member relative to the connector. The "tensioned portion" is defined as that portion of the elastic member that extends between the two most distant places where the cord is connected where the tensioned part of the cord member terminates. It can be possible for parts of the cord to extend beyond the tensioned part. As one example, if an elastic bungee were to be knotted, the excess material would be part of the cord, but not part of the tensioned portion of the cord. This is shown in FIG. **4**A, **409**. **409** represent the nexus between the tensioned and non-tensioned portion of the cordlike elastic member. The knot of the cord and some additional cord material are part of the same cord but are not under tension.

An additional aspect of the invention is characterized in that several described connectors, clips, or couplers (interchangeable descriptors) is comprised of no less than three connection location points or positions for retaining an elastic cord member that is capable of multiple tension adjustment positions. One attachment (or mated engagement) position occurs where one segment or length of the cord is directly adjacent and seated such that it fastens or holds along a curve segment of the connector whose angle α is always greater than 180 degrees; preferably at or greater than 200 degrees. Note that "mated engagement" can also refer to a cord segment or bulbous portion being attached or inserted in or to an aperture at a 90 degree angle in the aperture. However, this angle can be greater than 90 degrees. It has been found that 200 degrees optimally minimizes unwanted cord friction along the curved attachment position. This angle is described visually in FIG. **16**E where the angle α is always greater than 180 degrees for the curvilinear surface shown, and duplicated at all other curvilinear surfaces of the other connectors shown. This cord loop attachment position or retaining feature, see FIG. **5**, **502**, holds a central segment of the elastic cord at some location between two additional attachment positions. The second and third attachment positions consist of apertures, apertures or sockets (which are interchangeable terms) that retain the two ends of the elastic cord. Sometimes additional material of the elastic spring member may be present at a distance further from an attachment aperture than the bulbous protrusion secured at an aperture location on a connector, or elsewhere. For example, the cord may be knotted such the terminal end of the cord is not part of the knot, but rather constitutes non functioning excess material. This is defined as the tensioned portion of the cord segment, FIG. **4**A, **409**. The attachable ends of the bungee or elastic cords are of a larger diameter than the apertures or sockets such that they will not slip back through the apertures. These attachable ends may be configured to do this any number of ways; however one preferred method is to knot the cord at or near the end, and at one or more additional locations along the length of the elastic cord so that multiple tension adjustments may be achieved. The remainder of the same cord encircles the frame rail opposite the connector and then returns to be connected at a third tensioned position, which is that portion of the elastic member that is furthest from where the first tensioned coupling occurs. So the elastic cord extends between the two most distant tensioned locations where the cord is connected. Other

ways of ensuring that the coupled or connected ends of the cords are larger than the diameter of the cords themselves may be conceived, some of which are disclosed herein. Knots are a preferred method due to the simplicity and ease of adjustability. Of no less importance is the advantage of knots taking up very little space when compared to other attachments that serve to enlarge the end of a cord member.

Another aspect of the invention is characterized in that the rebounding surface further comprises a plurality of cord-like elastic members, wherein at least some of the plurality of cord-like elastic member are folded at the center thereof, with the folded center thereof wrapped around the connector and each of the two portion thereof between the center and the first and opposing end returning to wraparound an adjacent portion of the frame such that the first and opposing ends are tensioned on return to connect at the periphery of the rebounding mat to provide tension thereto.

In another aspect of the invention, it has been discovered that the service life and utility of fabric containing cord-like elastic members can be greatly extended by a process of re-tensioning, provided they are not initially strained to what has been discovered to be an excessive level. As re-tensioning involves extending the cord-like elastic members beyond the length that provided an initial level of tension, still further aspects of the invention include particular methods and apparatus for conveniently extending the length beyond the initial length so as to achieve a level of tension comparable to the level of tension at the first or initial length extension of the cord or spring member.

When considering trampolines, further extending the cords has not been utilized for several reasons. The most important reason has been that such extension was feared to overly weaken the cord segment such that breakage and possible injury to a user was considered; and so prior art teaches away from such capability for use with a device that suffers extreme shock and repetitive use by weighted jumpers. Additionally, with trampoline devices, the elastic members or cords are set in a substantially horizontal position so that whenever a jumper lands on the trampoline surface, the elastic members receive constant and severe lateral impacts during the cord's extension and contraction. The cords therefore do not stretch in a solely linear (up and down; forward or back) direction, but instead are stretched sideways and down. Thus, rebounding and trampolining places a greater perpendicular sheer force against and upon the cords or spring members, in contrast to what would occur if one were to simply pull or extend and contract a cord without additional lateral stress. In response to these concerns, all known trampolines have used cords designed to be replaceable, but not adjustable in themselves. In these designs, tension is adjusted by replacing in its entirety, an existing cord with a heavier or lighter duty cord. The current invention has rejected the evident assumption that trampoline cords should be adjustable only by replacing the existing cord with another, and not by altering the extension and tension level of the existing bungee cord.

Once a bungee has been chosen for its optimum tension based upon its designated use, the entire cord inevitably breaks down over time and usage because the cell structure within the rubber in the individual strands tear and breakdown. It has been assumed in the industry, that an elastic cord would no longer be useful or re-useable for rebounding as it broke down and fatigued in the manner described; that this degradation was not only irreversible physically, but from a performance degradation standpoint as well, due to cord fatigue and the inevitable breakdown of the cord fibers and materials. The industry apparently continues to believe and act on this assumption. So, trampolines with re-adjustable elastic cords are not produced for rebounders of the diameter encompassed prior to the current invention. Rather, manufacturers typically provide multiple versions of different size bungees that are replaceable in their entirety, but are not adjustable by themselves. In contrast, the devices described herein provide for the exact same bungee to be utilized, for both its extended life, and for its ability to transform its tension to adapt to different or heavier users; without the necessity of a complete bungee cord replacement.

It was not predicted that the fatiguing of the cord would not result in a breakdown of lifespan or use-strength of an individual cord. The bounce quality of the cord was unexpectedly restored to its original performance level by the act of re-tensioning. This occurred, even though the cord had fatigued and broken down below the required threshold performance level prior to re-tensioning for the first time. First tension was tested to last approximately 2 million cycles. The next time the cord was adjusted, it unexpectedly lasted for an additional 2 million cycles as well, before re-tensioning or replacement was considered. This result was not foreseen to the expected result.

Finally, the unexpected results continued when we learned that one could re-tension the cord further (three more times) before it would finally breakdown in the manner expected. The expectation was that once a bungee fatigues, it is no longer usable and must be thrown out and replaced with a new cord. And that therefore, a fatigued bungee could no longer be re-tensioned because its performance characteristics would be degraded to the point where it would no longer perform at the previous level. It was additionally expected that the fatigued cord would break down even more quickly than before the first adjustment. It seemed self evident that a worn out cord is no longer useful or perhaps, even safe. So the question has always presented in the industry, "why bother with re-tensioning a cord for continued use when one need only swap out the existing "broken down" cord for a new one?" Those skilled in the art apparently assume, as we did, that re-tensioning an already fatigued bungee served no useful purpose or utility.

This inventor's engineers believed this; that re-tensioning would give the results that the known art at the time expected; namely that replacement was the only option for bungees once elasticity started to degrade for the purposes of rebounding on a trampoline. The current lifespan of bungees and the fact that bungees are replaced and not re-used currently is evidence of this. However, each time this inventor's engineers re-tensioned a cord, it was found that the original performance standards had not dramatically degraded as expected, but in fact, only minimally or very slightly degraded; such that the user would not be able to notice the change.

Therefore, additional test cycles were added, allowing the bungee to fatigue until its performance fell below performance criteria, until up to the point that three re-tensioning events had occurred. This is shown in the cycle test data appearing in FIGS. **18-19** and in Appendix A. After the third tensioning event, the limit of elasticity of the cord was reached, and it was no longer possible for the cord to stretch far enough to perform an entire rebound cycle a desired manner

As a result of this new data, it was realized that we could therefore re-tension cords, not just for the sole purpose of extending the life of the cords, but we now understood that we had the wherewithal to also increase the overall static tension of the jumping surface using the exact same bungee, in order that a heavier user in particular, could optimize the bounce performance for their own use; without dramatically reducing

the cycle life of the bungee at the increased tension necessary to support that heavier/larger user

Prior to this, it was assumed that one would purchase a bungee and optimize the performance by selecting the right amount of rubber to achieve certain performance characteristics. It was therefore expected that in order to have a bungee designed for a heavier user, that heavier or more substantial bungees would also be required; bungees with more rubber, and/or heavier sheathing, etc.; in short, a heavier bungee for a heavier user. This, in fact, is the current practice in the industry. A manufacturer might have various, lighter or heavier bungees that must replace their standard bungees, in order to accommodate different users by weight or due to the increase in downward force performed by a lighter, but a particularly athletic user. This concept is discussed further in these specifications.

The above and other objects, effects, features, and advantages of the present invention will become more apparent from the following description of the embodiments thereof taken in conjunction with the accompanying drawings.

BRIEF DESCRIPTION OF THE DRAWINGS

The accompanying drawings, incorporated in and forming a part of the specification, illustrate several trampoline and rebounder arrangements. Some embodiments of the invention are described in the following description. Other embodiments are contained in the cross referenced applications that have been incorporated by reference.

In the drawings:

FIG. **1**A is an isometric view of a side by side elastic spring member connector.

FIG. **1**B is a lower isometric view of a side by side elastic spring member connector.

FIG. **1**C is a side view of a side by side elastic spring member connector.

FIG. **1**D shows a rebounder with a mat using side by side elastic spring member connectors.

FIG. **1**E is a close up isometric view of the rebounder using side by side elastic spring member connectors.

FIG. **2**A is a side view of a knotted elastic spring member crossing connector.

FIG. **2**B is a front view of a knotted elastic spring member crossing connector.

FIG. **2**C is a rear isometric view of a knotted elastic spring member crossing connector.

FIG. **2**D is a front isometric view of a knotted elastic spring member crossing connector.

FIG. **3**A is a side view of a knotted elastic spring member crossing connector with an elastic spring member installed.

FIG. **3**B is an isometric view of a knotted elastic spring member crossing connector with an elastic spring member installed.

FIG. **3**C is a front view of a knotted elastic spring member crossing connector with an elastic spring member installed.

FIG. **3**D is a rear view of a knotted elastic spring member crossing connector with an elastic spring member installed.

FIG. **4**A is a cross-sectional elevation at section line A-A of FIG. **4**B of a portion of the underside of a trampoline showing another arrangement for attaching a connector to the elastic cord in a serpentine arrangement.

FIG. **4**B is a plan view from below the trampoline of FIG. **4**A showing a portion thereof deploying several of the connectors.

FIG. **4**C is a partial radial cross-sectional elevation at section line B-B of FIG. **4**B.

FIG. **4**D is a perspective view of the connector of FIGS. **4**A-**4**C.

FIG. **5**A is a perspective view from the front corner of an alternative connector.

FIG. **5**B is a perspective view from the back corner of the connector of FIG. **5**A.

FIG. **5**C is a perspective view from the side of the connector of FIGS. **5**A-**5**B including an attached elastic cord.

FIG. **6**A is a perspective view from the back corner of another alternative connector.

FIG. **6**B is a perspective view from the front corner of the connector of FIG. **6**A.

FIG. **6**C is another perspective view of the connector of FIG. **6**A that also illustrates a tensioned elastic cord and metal V ring installed.

FIGS. **7**A-D are perspective views of other alternative connectors.

FIG. **8**A is a perspective view of another alternative connector.

FIG. **8**B is a cross-sectional elevation of the connector of FIG. **8**A.

FIG. **8**C is a plan view of the underside of the trampoline of FIGS. **8**A-**8**B.

FIG. **9**A is a front perspective view of another alternative connector.

FIG. **9**B is a rear is a perspective view of the connector of FIG. **9**A.

FIGS. **10**A-**10**C are top plan, front elevation and side elevation views respectively of the connector of FIGS. **9**A-**9**B.

FIG. **11**A is a rear elevation view of the connector of FIGS. **9**-**10**.

FIG. **11**B is a side elevation view of the connector of FIGS. **9**-**10**.

FIG. **12**A is a front perspective view of another alternative connector.

FIG. **12**B is a rear perspective view of the connector of FIG. **12**A.

FIG. **13** is a side elevation of the connector of FIGS. **12**A-**12**B.

FIG. **14**A is a front elevation of the connector of FIGS. **12**A-**13**.

FIG. **14**B is a top plan view of the connector of FIG. **14**A.

FIG. **14**C is a rear elevation view of the connector of FIG. **14**A.

FIG. **14**D is a cross-sectional view at section line A-A in FIG. **14**C.

FIG. **14**E is a cross-sectional view of a portion of the trampoline apparatus at section line A-A in FIG. **14**C showing the location of the elastic cord when the connector of FIGS. **11**A-**14**E is deployed.

FIG. **15**A is a perspective view of a rebounder having tensioned elastic cords.

FIG. **15**B is an underside plan view of the rebounder of FIG. **15**A.

FIG. **15**C is an enlarged perspective view of a portion of the underside of the rebounder of FIG. **15**A.

FIG. **15**D is an enlarged plan view of the detailed portion "A" in FIG. **15**B.

FIG. **16**A is a front perspective view of a connector of FIG. **15**B-**15**D.

FIG. **16**B is a rear perspective view of the connector of FIG. **16**A.

FIG. **16**C is a top plan view of the connector of FIG. **16**A.

FIG. **16**D is a side elevation view of the connector of FIG. **16**A.

FIG. **16**E is a cross-section view at section line A-A in FIG. **16**D.

FIG. **17**A is a front perspective view of an alternative connector suitable for use with the rebounder of FIGS. **15**A-D.

FIG. **17**B is a rear perspective view of the connector of FIG. **17**A.

FIG. **17**C is a top plan view of the connector of FIG. **17**A.

FIG. **17**D is a rear elevation view of the connector of FIG. **17**A.

FIG. **17**E is a side elevation view of the connector of FIG. **17**A.

FIG. **17**F is a cross-sectional elevation view at section line A-A in FIG. **17**D.

FIG. **18** is a graph of the stress-strain curves of different fabric covered elastic cords.

FIG. **19** is a graph of the cyclic stress level recorded when an elastic covered fabric cord is repeated cycled with repeated re-tensioning.

FIGS. **20**A-**20**E are views of an adjustable slotted clover bungee connector and its components.

FIGS. **21**A-**21**E are views of an adjustable cone clover bungee connector and its components.

FIGS. **22**A-**22**E are views of an adjustable screw clover bungee connector and its components.

FIG. **23**A is an isometric view of a connector with a rebounder bungee extender.

FIG. **23**B is a side elevation view of the connector and rebounder bungee extender of FIG. **23**A.

FIG. **23**C is a top plan view of the rebounder extender of FIGS. **23**A-**23**B.

FIG. **23**D is a top plan view of an adjustable rebounder extender.

FIG. **23**E is an isometric view of the connector with a rebounder bungee extender of FIGS. **23**A-**23**B with an elastic cord.

FIGS. **24**A-**24**F are views of an adjustable through-hole clover assembly and its components.

FIGS. **25**A-E and FIGS. **26**A-**26**B are views of a rebounder system with elastic members or bungee cords utilizing a wireform connector for adjustable bungees or cords.

FIG. **27**A is a top view of a rebounder with crossed bungees.

FIG. **27**B is a lower isometric view of a rebounder with crossed bungees.

FIG. **27**C is a bottom view of a rebounder with crossed bungees.

FIG. **27**D is a close up lower view of a rebounder with crossed bungees.

FIG. **28**A is a lower isometric view of a rebounder with crossed bungees and offset connectors.

FIG. **28**B is a close up lower view of a rebounder with crossed bungees and offset connectors.

FIG. **28**C is a front view of an offset connector.

FIG. **28**D is a side view of an offset connector.

FIG. **28**E is an isometric view of an offset connector.

FIG. **29**A is a lower isometric view of a rebounder with four point connectors.

FIG. **29**B is a close up lower view of a rebounder with four point connectors.

FIG. **29**C is a front view of a four point connector.

FIG. **29**D is a side view of the four point connector.

FIG. **29**E is a front isometric view of a four point connector.

FIG. **29**F is a rear isometric view of a four point connector.

FIG. **30**A is a lower isometric view of a rebounder with two point connectors.

FIG. **30**B is a close up lower view of a rebounder with four point connectors.

FIG. **30**C is a front view of a two point connector.

FIG. **30**D is a side view of a two point connector.

FIG. **30**E is an isometric view of a two point connector.

FIG. **30**F is a front view of an alternate two point connector.

FIG. **30**G is a side view of an alternate two point connector.

FIG. **30**H is an isometric view of an alternate two point connector.

FIG. **31**A is an isometric view of a through pin compression connector.

FIG. **31**B is a lower isometric view of a through pin compression connector.

FIG. **31**C is a side view of a through pin compression connector.

FIG. **31**D is an exploded assembly view of the through pin compression connector.

FIG. **32**A is a side view of a snap pin compression connector.

FIG. **32**B is a front view of the snap pin compression connector of FIG. **32**A.

FIG. **32**C is an upper isometric view of the snap pin compression connector of FIG. **32**A.

FIG. **32**D is a lower isometric view of the snap pin compression connector of FIG. **32**A.

FIG. **33**A is an isometric view of a dumbbell pin and webbing loop connected to a trampoline mat.

FIG. **33**B is an isometric view of a rolling pin and a webbing loop connected to a trampoline mat.

FIG. **33**C is an isometric view of a snap pin compression connector attached to a trampoline mat.

FIG. **33**D is an isometric view of an installed snap pin compression connector with an elastic cord attached to it.

FIG. **34**A is a front view of a clamping compression connector.

FIG. **34**B is a side cross section of a clamping compression connector.

FIG. **34**C is an upper isometric view of a clamping compression connector.

FIG. **34**D is a lower isometric view of a clamping compression connector.

FIG. **35**A is an exploded view of a clamping compression connector assembly.

FIG. **35**B is an isometric view of a clamping compression connector assembly.

FIG. **35**C is a cross section side view of a clamping compression connector assembly.

FIG. **36**A is an isometric view of a rebounder frame with a mat using compression connectors.

FIG. **36**B is a bottom view of a rebounder frame with a mat using compression connectors enlarging the jump surface without reducing elastic cord length.

FIG. **36**C is a bottom view of a rebounder frame with a mat using the same elastic cord length of FIG. **36**B, with connectors that are separated from the mat reducing the usable jump surface diameter relative to FIG. **36**B.

FIG. **37**A is a side exploded view of a two part clamping compression connector.

FIG. **37**B is an isometric exploded view of a two part clamping compression connector.

FIG. **37**C is a side view of a two part clamping compression connector.

FIG. **37**D is an isometric view of a two part clamping compression connector.

FIG. **38**A is a side exploded view of a two part clamping compression connector with two screws.

FIG. **38**B is an isometric exploded view of a two part clamping compression connector with two screws.

FIG. **38**C is a side view of a two part clamping compression connector where the two parts are attached.

FIG. **38**D is an isometric view of a two part clamping compression connector where the two parts are attached.

FIG. **39**A is a side view of a clip in connector.

FIG. **39**B is a front view of a clip in connector.

FIG. **39**C is an isometric view of a clip in connector.

FIG. **39**D is an exploded isometric view of a clip in connector assembly.

FIG. **39**E is an isometric view of a clip in connector assembly.

FIG. **40** is a general view of key parts of the described mini trampoline.

FIG. **41**A is an isometric view of a side by side pin connector.

FIG. **41**B is a rear isometric view of a side by side pin connector.

FIG. **41**C is a side view of a side by side pin connector.

FIG. **41**D is an exploded assembly view of a side by side pin connector.

FIG. **42**A is an isometric view of a reinforced side by side connector.

FIG. **42**B is a lower isometric view of a reinforced side by side connector.

FIG. **42**C is a side view of a reinforced side by side connector.

FIG. **42**D is an exploded isometric view of a reinforced side by side connector.

FIG. **43**A is a compression connector mat with a connector cover installed.

FIG. **43**B is a side section view of the compression connector mat assembly.

FIG. **43**C is a close up side section view of the compression connector mat assembly.

FIG. **44**A is a compression connector mat with a connector petal cover installed.

FIG. **44**B is a side section view of the compression connector mat assembly.

FIG. **44**C is a close up side section view of the compression connector mat assembly.

FIG. **45**A is a compression connector mat with a padded connector cover installed.

FIG. **45**B is a side section view of the compression connector mat assembly.

FIG. **45**C is a close up side section view of the compression connector mat assembly.

FIG. **46**A is a front view diagram of a connected cord on a rebounding apparatus with a plurality of connectors where a single connected elastic cord is attached to two adjacent connectors.

FIG. **46**B is a lower view of the rebounder connections diagramed in FIG. **46**A where a single elastic cord is attached to two adjacent connectors.

FIG. **46**C is a close up lower outside view of attached connected elastic cords.

FIG. **46**D is a close up lower inside view of attached connected elastic cords.

FIG. **47**A is a top section view of a post connector with an overhang that creates an indentation below where an elastic cord may be coupled.

FIG. **47**B is an upper isometric view of a post connector.

FIG. **47**C is a side view of a post connector.

FIG. **47**D is a rear isometric view of a post connector

FIG. **47**E is a top view of a post connector.

FIG. **48**A is a front view of a V frame rebounder.

FIG. **48**B is an upper isometric view of a V frame rebounder.

FIG. **49** is chart showing the force against an elastic member for a distance shift of approximately 4 inches versus the knot position of the elastic member.

DETAILED DESCRIPTION

Referring to FIGS. **1** through **45**C, there is illustrated therein a new and improved trampoline with adjustable spring members and attachments. In accordance with the present invention trampoline, FIG. **40** shows a general view of the type of rebounder described herein. It has a closed frame **4003**, a rebounding mat **4001** with a central portion having connectors and a surrounding outer portion, **4005**, to cover the connectors. Generally, such a trampoline shown in FIG. **40** will also have legs **4004** descending downward from the frame **4003** for supporting the trampoline above the ground. The shape of frame **4003** and rebounding mat **4001** are usually roughly the same and can be circular, elliptical, rectangular, hexagonal or other polygonal shapes.

Elastic members are attached to the connectors or clips or couplers (interchangeable terms) to the closed frame and are often covered by a surrounding outer portion **4005** is not attached to or constrained by the closed frame **4003**. Prior art trampolines connect some portion of an annular or peripheral member that cover the springs (or a similar tensioning device that support the rebounding mat) to the frame, even when this peripheral member or cover is attached to the rebounding mat.

In the preferred embodiments described more fully below, the elastic members **4002** are soft and deploy rubber or synthetic elastomeric resins and the like. In more preferable embodiments, the elastic members that tension the mat **4001** are cordlike flexible elastic members, such as "Bungee" cords, and similar elastic cords such as those described in U.S. Pat. Nos. 1,050,442 9 (to Friswell, Jan. 14, 1913); 3,130,630 (to Dawes, Oct. 2, 1964); 4,513,063 (to Hashi et al., Apr. 23, 1985) and 5,607,736 (to Williams, Mar. 4, 1997) which are all incorporated herein by reference. Such cord-like elastic members generally compose or more continuous strand or tubes of rubber or an elastomer, covered or otherwise integrated to include one or more layers of woven fabric. Alternatively, the elastic member need not always deploy exterior surrounding fabric sheath as elastic material can be co-woven into a fabric members. In addition, an elastic member **4002** can have a relatively non-elastic cord of cable that is attached to one or more shorter elastic members. The cross-section of the elastic member **4002**, while preferably round, can also be oval or rectangular and the like.

In more preferred embodiments, the closed rebounder frame, FIG. **40**, is circular, and the outer surrounding portion **4005** of the rebounding mat **4001** has an annular shape and extends above the connectors of the various kinds described herein at the edge of the circular central region. One or more elastic cords **4002** can connect the frame **4003** to the rebounding mat **4001** in various configurations that are compatible with the various embodiments for the outer surrounding portion or peripheral region **4005**. Hence, every such combination need not be explicitly described to be appreciated by one of ordinary skill in the art in light of this disclosure. Further, although the invention provides significant benefits to smaller rebounder style trampolines, no intent is made to limit the scope of the claims to any particular style or size trampoline. Although not described in any detail here, a larger trampoline, even greater than 20 feet in diameter could also benefit from adjustable elastic spring members. Such device would be described in more detail in subsequent applications. The

focus of the current invention is to utilize this technology for exercise rebounders of the type described herein.

A plurality of elastic cords can each be relatively short, that is only about 2-3 times the gap between the frame **4003** and the point of connection to the rebounding mat **4001** and can be directly connected to the frame **4003**, but are more preferably wrapped around it, with the ends of each cord **4002** returning to be connected proximal to the rebounding mat **4001**. The connector or coupler that connect the mat **4001** to the frame **4003** via elastic cords **4002** can be simple loops of tough fabric, and may include an intermediate connector or coupler body that is preferably, but not necessary covered by the outer portion **4005** of the rebounding mat **4001**, as shown in FIG. **40**. The central **4001** and outer **4005** portions of the rebounding mat **4001** can be integral or stitched together, or attached with other means such as hook and loop fasteners, rivets, button, snaps and the like.

FIGS. **1**A-**1**E describe a connector that contains three separate attachment locations or positions when holding an elastic member or bungee cord. FIG. **1**A is an isometric view of a side by side elastic cord or bungee connector, **101**. **102** is the curved area for the bungee loop to go around, and **103** are two apertures or sockets for the bungee knots to terminate. **104** is the mat loop slot for the webbing which is sewn to the mat. FIG. **1**B is a lower isometric view of a side by side bungee connector. FIG. **1**C is a side view of a side by side bungee connector. FIG. **1**D shows a rebounder with a mat using side by side bungee connectors, **101**. FIG. **1**E is a close up isometric view of the rebounder using side by side bungee connectors. **105** is the bungee cord, **106** is the rebounder frame which the bungee wraps around, **107** is the rebounder mat, and **108** is the mat loop which is sewn to the mat. All three attachment positions reside below the connector part that secures the part to the rebounding surface. The utility of this connector is improved because it better protects the horizontally extended cords from footfalls or any other contact from above; thus reducing the chance of dislodgment or wearing beyond that caused by standard usage.

The connector shown in FIGS. **1**A-**1**E is comprised of no less than three connection location points or positions for retaining an elastic cord member that is capable of multiple tension adjustment positions. One attachment position occurs where one segment or length of the cord is directly adjacent and seated such that it fastens or holds along a curve segment of the connector whose angle is always greater than 185 degrees; preferably at or greater than 200 degrees. It has been found that 200 degrees optimally minimizes unwanted cord friction along the curved attachment position. This cord loop attachment position or retaining feature, **102**, holds a central segment of the elastic cord at some location between two additional attachment positions. The second and third attachment positions consist of apertures or sockets with openings or apertures that retain the two connectable ends of the elastic cord, **103**. The attachable or connectable or coup-able ends of the bungee or elastic cords are of a larger diameter than the apertures or sockets such that they will not slip back through the apertures or openings. The ends may be configured to do this any number of ways; however one preferred method is to knot the cord at its furthest connectable end and at one or more additional locations along the length of the same elastic cord so that multiple tension adjustments may be achieved. The remainder of the same cord encircles the frame rail opposite the connector and then returns to be connected at a third position which is the other furthest connectable portion of the elastic cord. Other ways of ensuring that the ends of the cords are larger than the diameter of the cords themselves may be conceived, some of which are disclosed herein. Knots are a preferred method due to the simplicity and ease of adjustability. Of no less importance is the advantage of knots taking up very little space when compared to other attachments that serve to enlarge the connectable or attachable end of a cord member.

FIGS. **2**A-**3**D show a very unique connector design that permits the elastic cords or bungees' first attachment position to cross over between the other two terminus attachment positions (or coupling locations), **203**, that secure the two ends of the bungee cord dedicated to that connector, FIG. **3**D, **301**. This cord loop retaining feature holds a central segment of the elastic cord, **4002**. The cross-over portion of the bungee cord, **4002**, is one segment or portion of the cord at a location between the opposing ends. This central segment fastens along a curve of the connector at an angle greater than 180 degrees. The preferred embodiments have an angle at or greater than 200 degrees as it has been found to reduce friction against the cord. As a result of this greater angle, the friction against the cord segment is significantly reduced than would occur with an angle at or below 185 degrees.

FIG. **2**A is a side view of a knotted bungee crossing connector. **201** is the jump surface/mat hook and **202** is the bungee loop groove. FIG. **2**B is a front view of a knotted bungee crossing connector. **202** is the bungee loop groove, and **203** are the two apertures or sockets for the bungee knot termination. FIG. **2**C is a rear isometric view of a knotted bungee crossing connector. This connector is a modified version of the continuous bungee crossing connector that replaces one of the bungee grooves with two bungee termination positions, **203**. FIG. **2**D is a front isometric view of a knotted bungee crossing connector.

FIG. **3**A is a side view of a knotted bungee crossing connector, **301**, with a bungee, **4002**, installed. FIG. **3**B is an isometric view of a knotted bungee crossing connector, **301**, with a bungee, **4002**, installed. This shows how the two knotted ends are attached to the bungee termination positions and the middle of the bungee loops around the connector. FIG. **3**C is a front view of a knotted bungee crossing connector, **301**, with a bungee, **4002**, installed. FIG. **3**D is a rear view of a knotted bungee crossing connector, **301**, with a bungee, **4002**, installed. The drawing shows an open hook for coupling the connector to the jump mat. However, other connections that are not shown, may be used, such as a locking mechanism similar to a carabineer as one example, where the cord may be inserted and removed, but cannot be dislodged when the locking mechanism is closed.

In FIG. **4**A-**4**D the connector or coupler **4**D comprises a disk that has sculpted annular concave depression around the periphery to support the elastic cord **4002** of the same or smaller cross-section and shape. The connector disk **406** also has a transverse slot **408** that extends to bisect the disk **408** through an upper or lower half thereof. On the opposite side of the transverse slot **408** the disk **408** may include holes that extend from the top to the bottom thereof **409** and **409'** for receiving fastener for connecting to the rebounding mat. It should be appreciated from FIG. **4**B, that a single elastic cord **4002** is used to connect the rebounding mat **401** via three such connectors **408** by wrapping around the central of the three, **408**, with the end on opposite side of coupler **408** extending outward to wrap around the frame **4003**, before returning to be secured by the surrounding connectors **120** and **408**. The ends **404** of elastic cords **4002** have knots or bulbous protrusions that are grasped by the edge of connector **408** and **408** when the cord portion just before the knots is placed in the transverse slot **408**. The connectable or attachable ends **404** of

elastic cords **4002** are grasped by the edge of connector **408** and **408** when the cord portion just before the knots is placed in the transverse slot **408**.

It should be noted that the term bulbous protrusion refers to that portion along the elastic cord which has a diameter that is greater than the diameter of the elastic cord member along its length. It may constitute a knot in the cord itself or, it may represent a molded, cast, or extruded member attached to the cord at one or more locations along the length of the cord member. The material of the molded member may be made of plastic, metal, or other composite which serves the same purpose. It may be of any number of polygonal or polyhedral shapes.

FIGS. **5**A-**14**E illustrate alternative embodiments in which a single connector **501** is simultaneously wrapped along a 180 to 200 degree curvilinear surface at one position by the elastic cord **4002**; and extends between the two most distant locations where the tensioned portion of the cord is connectable. The two additional connectable tensioned ends are positioned at each opposing connectable end of the cord, **607** as examples of the attachable ends being described. An attachable tensioned end is that portion of the elastic member that begins the tensioned portion of the cord, see **4**A, **409**. It is possible to have excess cord extending beyond the attachable end that is not under tension. At least one of the connectors couples a cordlike elastic member in a manner such that the tension of the tensioned portion of the member can be adjusted by moving a portion of the body of the member relative to the connector.

One such alternative embodiment to the bungee connector or connector is seen in FIG. **5**. The coupler or bungee connector **501** has a middle attachment position, which is a loop retaining feature or indentation that is a curvilinear surface **502** for supporting a segment of the elastic cord **4002**, nominally a bungee cord or other elastic cord-like member, near mid distance between a second and third attachment positions each comprising a aperture or socket **503** with side openings for retaining and extracting the two attachable or connectable ends of the bungee or elastic member. A webbing attachment feature **504** is a handle or flat slot is for securing flat webbing that is preferably deployed as the connector. In FIG. **5**C connector/bungee clip **501** is shown as installed with a central portion of the bungee between the ends formed into a loop **505** that is seated in the loop retaining feature **502**. The indentation or loop retaining feature comprises a curvilinear surface **502** and is preferably a smooth sculpted annular concave indentation along a portion of the curvilinear surface with an angle greater than 180 degrees, and more optimally 200 degrees. As indicated previously, it has been found that an approximate 200 degree angle minimizes cord friction with the connector at the middle curvilinear surface; middle simply meaning that portion of the elongated cord member that is between the furthest attachable portion of the cord ends Also shown is bungee **4002** with an attachable end which is a enlarged terminator **506**, which is optionally either a knot or the bulbous protrusion, and is secured to a fixed location on the elastic cord member **4002** as shown. Optionally, a second bulbous protrusion **507** secured to the bungee or elastic member **4002** inward of the first terminator **506** may also be used to attach the bungee **4002** to the connector **501**, providing a second adjustment position to the length of the active bungee section. Engaging this additional adjustment position serves to shorten the tensioned or active portion of the elastic cord/bungee. The result is a stiffer, less soft elasticity for the jumper. This adjustment position may be engaged for a more athletic user who jumps with more vigor, force and speed; or, it may be engaged because the user is heavier in weight, regardless of his or hers athleticism.

As the elastic cord or bungee tension decreases over time due to use, it may be incrementally adjusted to maintain the tension within the desired range, greatly extending the useful life of the elastic cords and avoiding the time and expense to replace these components. A further benefit is that the tension of the bungee **4002** may be adjusted to the weight and jumping preference of the user. This capability is explained further in these specifications.

FIGS. **6**A-C shows a bungee connector or coupler **601** capable of being attached to the triangular or V-ring **605** of a typical trampoline, to allow for the use of bungee **4002** instead of the typical metal spring. In this embodiment, the V-ring **605** and any webbing holding it to the periphery of the central portion **4001** of the rebounding mat would be considered a connector. The elastic cord connector or coupler **601** includes a curvilinear cord retaining feature **602**, a V-ring retaining slot of having V-shaped indentation **603** to receive two sides of the ring **605**, as well as the elastic cord terminator **607** comprising a bulbous knot or other object that secures the tensioned portion of the cord, see **4**A, **409** showing the tensioned portion of a cord. FIG. **6**C shows the elastic cord/bungee connector **601** with the central looped portion of bungee or elastic cord **606** seated against a curvilinear surface retaining indentation **602**. Also shown is bungee **4002** with bungee end **607** inserted into retaining feature or aperture **604**. V-ring **605** is shown in V-ring retaining feature **603**. In a typical installation, the V-ring **605** is sewn into a loop of webbing attached to the trampoline mat, such as **4001** in FIG. **40**.

FIGS. **7**A-**7**D illustrate additional embodiments of a coupler or connector **701** similar to that shown in FIGS. **5**A-**6**C, and which provide the user with the ability to adjust the active length of the bungee or similar cord-like elastic members **4002**. FIG. **7**A illustrates a connector **701** which has surfaces **703** and **707** which form a serrated V, which forcibly secures the connected end **705** of the bungee or cord at the desired length. It's method of operation is similar to that of a cleat as used in a sailboat. In such an embodiment, the cord-like elastic member may be grasped at two or more alternative positions at either or both opposing ends by a corresponding chevron shaped appendage attached to or surrounding the member **4002**, which the chevron (s) pointing to the center of the cord.

FIG. **7**B shows a clip **701** having lower body **708** which may be adjusted relative to upper body **709** so as to vary the position of the two cord coupling ends **705** of bungee or cord **4002**, and thereby adjust the tension of the bungee or cord. At least one of the connectors couples a cordlike elastic member or bungee in a manner such that the tension of the tensioned portion, see **4**A, **409**, of the member can be adjusted by moving a portion of the body of the member relative to the connector. The method of adjustment may utilize a ratcheting mechanism, a rail, or a track which provides for the movement of lower body **708** relative to upper body **709** and may be locked in the desired position. An alternative embodiment of a connector **701** allowing for the adjustment of bungee or elastic member tension is shown in FIG. **7**C. As shown, connector assembly **701** allows additional bungee tension to be added by wrapping a portion of the bungee **4002** in a loop **711** about post **712**. The post **712** descends from the portion of the clip **701** that forms the loop retaining feature. In the last of these embodiments shown in FIG. **7**D, the connector **701** includes a nesting spacer **717** that engages into apertures, extending the ends thereof such that the location of bungee terminators **705** are moved distal from the end of the apertures

that they would normally engage. The effect of inserting this nesting spacer **717** is to increase the stretched length of the bungee and thus increase bungee tension. In the embodiment of FIG. **7**A deploying a cleat, the nesting spacer may be a chevron shaped cleat that is inset into the first cleat, **707**.

FIGS. **8**A to **11**B illustrate another embodiment of a connector or coupler **803** and its means for attachment beneath and to the perimeter of the trampoline rebounding mat by an additional portion attached beneath the surface of the jump mat, **806**. As shown in FIG. **8**A, connector **803** is attached to below the periphery of the mat's outer portion **801**, via a tab or flap loop of strap, **806** that is stitched to this outer periphery; which may also be made of rigid or semi-rigid material As illustrated in more detail in FIG. **9**B, the connector **801** has one coupling location that is a rounded or curvilinear surface or channel **903** on the front surface of the upper portion **902** to receive that portion of the elastic cord **4002** that is between the most distant connection of the cord ends. The second and third coupling locations **906** receive the connectable or attachable ends of the elastic cord member. Openings **911** allow for the cords to be inserted and removed for adjustment of the cord.

In FIG. **10**A-C, shows the lower part **1010** of the same connector receives the opposing ends of the elastic cord that are at opposite sides of this central portion. The ends of the elastic cords **804** are held in the spaced apart apertures **1005** formed in the lower portion of the connector **1010**. The elastic cord **4002** may be inserted or removed from each aperture **1005** from the respective side openings, **1006**, also formed in the lower portion **1010**. On the opposite and back side of the upper part **1009** is a grasping member or opening having opposing arms **1001** that form a partially open slot **1002** to resealably secure an attachment point to the jump surface. The hole **1004** that extends vertical between the upper and lower portion **1009** and **1010** is preferred when the connector is made of injection molded plastic to provide even shrinkage of material in the solidification process after molding to consistently provide the same exterior dimension of the connector as the mold shape. FIGS. **11**A and **11**B shows the reverse view of **10**B and **10**C.

FIGS. **12**A to **14**E illustrate a different embodiment of a connector having means for attachment to the perimeter of the trampoline rebounding mat. Disposed in the horizontal center of the front side of connector, shown in FIG. **12**A, a first coupling location, which is the rounded or curvilinear surface or channel **1212** that receives the central portion of the looped elastic cord **4002**. However, in this embodiment of connector the two additional attachment ends of the elastic cords are held in the spaced apart apertures **1204** on the same horizontal plane or portion of the connector as the rounded channel **1212** being separated from the rounded channel **1212** by inner apertures **1205**. The outer apertures are the two additional coupling points or locations that receive the two most distant portions of the elastic member or bungee, see FIG. **14**E, **1410**. The inner apertures **1205** receive the portions of the elastic cord **4002** that are supported along the curvilinear surface or channel **1212**. The inner and outer apertures are shown as optionally connected by an open channel. On the back side of connector or connector is a grasping member **1201** having opposing arms **1206** and **1208** that form a partially open slot **1207** to provide a location to releasably secure the jump surface to the connector.

In FIGS. **14**A-**14**D the two most separated attachable portions of the elastic cords **1410**, which constitute the second and third coupling points for the elastic cord, are held in the spaced apart apertures or sockets **1402** formed in the end of the connector most distal from the opposing arms **1404**, which are disposed farthest from the horizontal center of the connector. The elastic cord **4002** may be inserted or removed from each aperture **1402** from their respective side openings **1401** which are in formed narrow vertical sides of the connector itself.

FIG. **14**E is a cross-sectional plan view with the elastic cord **4002** installed, showing the connected path of the elastic cord **4002**, including ends **1410** as retained by edges around apertures **1402** respectively. When the connector is formed by injection molding plastic it preferably includes the hole **1408** that extends vertically though the center of connector as it ensures even shrinkage of material in the solidification process after molding to achieve exterior dimension of the connector that are consistent with respect to the mold shape.

It should be appreciated that although the application describes a variety of couplers or connectors for use with single wrapped elastic cords, such diverse coupler or connector types can be used together on the periphery of the rebounding mat. The attachable ends of the cords **1410** need not terminate at the frame, but can also terminate in any of the end attachment point of the connectors, which provide for grasping the elastic cord at two alternative positions to vary the tension thereon. Further, a serpentine wrapping configuration may use a plurality of elastic cords to traverse the entire perimeter of the trampoline frame **4003** and rebounding mat's **4001** perimeter.

FIG. **15**A-**17**F illustrate another embodiment of the invention that deploys a plurality of elastic cords **4002** that connect the frame **4003** to the ends, perimeter or central portion of the rebounding mat **4001** using two different type of connectors, specifically a first connector (shown in FIGS. **16**A-D) and a second connector (shown in FIGS. **17**A-F). The two different connectors FIGS. **16** and **17**, alternate in placement around the periphery where they connect to the rebounding mat **4001**. Connectors can optionally both deploy the slot **1706** to securely receive flat webbing that is preferably deployed as the connector for connection to the rebounding mat **4001**. Preferably, each of connector and are attached to below the periphery of the mat's outer portion, via a tab or flap loop of strap, see FIG. **15**D, **1506**, that is stitched to this outer periphery before petals that form an outer skirt.

As illustrated in more detail in FIG. **16**, the connector has a rounded curvilinear surface or channel **1603** on the back surface to receive the central portion of the elastic cord member **4002**. Each cord **4002** is connected to the trampoline mat at two additional coupling points that represent the furthest or most distant attachment ends FIG. **17**, **1703**, by adjacent first connectors, with a central portion there between again connected to the mat **4001** via the intervening second connector. Again it should be noted that the "attachable end" is that part that retains the tensioned portion of the bungee or cord member. Additional cord may be present but not under tension. It is the terminus of the tensioned portion of the cord that matters and not the un-tensioned portion see **4**A, **409**. The portion of the tensioned elastic cord **4002** between adjacent connectors is wrapped around the frame **4003**, before returning to be secured by the surrounding connectors. The ends FIG. **15**D at **1508** and **1504**, of elastic cords **4002** have at least one but preferably plural adjacent knots or bulbous protrusions that are grasped by the edge of connector and when the cord portion just before the knots is placed in the transverse slot FIG. **17**D, **1702**. Thus, connector receives the opposing ends of the elastic cord that are at opposite sides of this central portion. The ends of the elastic cords, see FIG. **15**, **1502** and **1504**, are held in the spaced apart apertures **1703** formed the

edge portions of the connector. The elastic cord **4002** may be inserted or removed from each aperture **1703** from the respective side openings **1702**.

It should be appreciated that the connectors disclosed herein while suitable for low cost manufacture by injection molding plastic, can be made by other processes, as well as be formed of wire to provide the same or equivalent function described herein. Further the elastic cords **4002** can terminate in other mating features for connection to the connectors, such as hooks, clips, latches and the like, as well as the knots and bulbous protrusions disclosed in the preferred modes above.

In another aspect of the invention describing three position adjustable cord connectors, it has been discovered that the service life and utility of fabric containing cord-like elastic members can be greatly extended by a process of re-tensioning, provided they are not initially strained to what has been discovered to be an excessive level. When used for trampolines, further extending the cords has not been utilized for several reasons. The most important reason has been that such extension was feared to overly weaken the cord segment. In response to this concern, all known trampolines have used cords designed to be replaceable but not adjustable. In these designs, tension is adjusted by replacing an existing cord with a heavier or lighter duty cord. The current invention has rejected the industry standard that trampoline cords should be simply replaced when fatigued, and not be adjustable by altering the extension and tension level of the existing bungee cord.

Once a bungee has been chosen for its optimum tension based upon its designated use, the entire cord inevitably breaks down over time and usage because the cell structure within the rubber in the individual strands tear and breakdown. It has been determined prior to the current devices that an elastic cord would no longer be useful or re-useable as it broke down and fatigued in the manner described; that this degradation was irreversible physically. Also, that performance of the cord degrades due to cord fatigue and the inevitable breakdown of the cord fibers and other materials that constitute the cord structure. The industry apparently continues to believe and act on that over extended cords are no longer usable for rebounding. So, trampolines with re-adjustable elastic cords were not produced for rebounders before the devices described herein. To solve the problem of inevitable cord fatigue and breakdown, manufacturers instead have provide multiple versions of different size bungees that are replaceable in their entirety, but are not adjustable in themselves. In contrast, the devices described herein provide for the same bungee to be utilized for both its extended life, and for its ability to transform its tension to adapt to different or heavier users; without the need for a complete bungee cord replacement.

When testing, the ability to reuse a cord that was degraded and broken down from extended use was not expected. It was even more unexpected that re tensioning would restore and extend the lifespan of the existing cord. Additionally, the range of users was relatively unaffected within three adjustment occurrences where re tensioning was initiated. The bounce quality of the cord was restored nearly or to its original performance level by the act of re-tensioning. This occurred, even though the cord had fatigued and broken down below our threshold performance level prior to re-tensioning for the first time. First tension was tested to last 2 million cycles. The next time the cord was adjusted, it lasted for 2 million cycles as well, before re-tensioning or replacement was considered. This result was not expected. It was instead expected that the cord would need to be replaced after elasticity was loss and the cord was worn down from its originally new condition.

Finally, it was learned that one could re-tension the cord further (three more times) before it would finally breakdown such that the cord required replacement. The industry has continued to operate under the theory that once a bungee fatigues, it is no longer usable and must be discarded and replaced with a new cord. And that therefore, a fatigued bungee could no longer be re-tensioned because its performance characteristics would be degraded to the point where it would no longer useful. It was expected that the same cord would be assumed to break down even more quickly than before. It seems self evident that since a worn out cord is no longer useful or perhaps, even safe, that re tensioning was not a solution considered. Why re tension a cord that can simply be replaced with a new, unstrained or fatigued cord? Those skilled in the art apparently assumed, as the inventor initially did, that re-tensioning an already fatigued bungee served no useful purpose or utility.

This inventor's engineers believed that re-tensioning would not serve to extend the life of the cord. So, that replacement was the only option for bungees once elasticity started to degrade for the purposes of rebounding on a trampoline. Re tensioning a cord for adjustability is different from re tensioning a cord to extend the useful life of it. While adjusting for a current user is comprehensible, adjusting just for the purpose of cord life extension is not. The current lifespan of bungees and the fact that bungees are replaced and not re-used currently is evidence of this. Each the inventor's engineers re-tensioned a cord, it was found that the original performance standards were not dramatically degraded as expected, but in fact, only minimally affected; such that the user would not be able to notice any change in bounce performance.

As a result of the first result, additional test cycles were added, allowing the bungee to fatigue until its performance fell below performance criteria, until up to the point that three separate re-tensioning events had occurred. This is shown in the cycle test data included herein [FIGS. **18** & **19**]. After the third tensioning event, the limit of elasticity of the cord was in fact reached, and it was no longer possible for the cord to stretch far enough to perform an entire rebound cycle properly.

It was originally expected that re tensioning elastic cords for a heavier user, would shorten the overall life of the cord. As a result of this new data, it was discovered we could re-tension cords such that a heavier user in particular, could optimize the bounce performance for their own use; without reducing the cycle life of the bungee at the increased tension level.

Prior to this, it was assumed that one would purchase a bungee and optimize the performance by selecting the right amount of rubber to achieve certain performance characteristics. Thus, elastic cords or bungees have been designed so that heavier or more substantial bungee material, with more rubber, and/or heavier sheathing, would also be required; bungees with more rubber, and/or heavier sheathing, etc. This, in fact, is the current practice in the industry. A manufacturer might have various, lighter or heavier bungees that must replace their standard bungees, in order to accommodate different users by weight or due to the increase in downward force performed by a lighter, but a particularly athletic user.

Elastic cords covered with a woven fabric, typically referred to as bungee cords, undergo continuous fatigue when stretched between a low and high tension state when deployed as the elastic member in supported the rebounding mat of a trampoline. The low tension state is the minimum strain to

tension the rebounding mat at equilibrium position, whereas the maximum tension state is reached by the maximum mat displacement by the user. During this fatigue the cords effectively soften in that the tension applied to the rebounding mat in the equilibrium state decreases.

It has been discovered that such loss in stress can be overcome by repeated re-tensioning, that is re-stretching the fabric covered elastic cord in the equilibrium state. However, in the preferred embodiments of the invention the elastic cord is selected for such repeated re-tensioning according to the criteria that is best appreciated with reference to FIG. **18** that illustrates the stress elongation curves of three different commercial bungee cords, that is elastic cords covered with a woven fabric.

However, in any case it is first generally preferred that the rubber used in the fabric covered elastic cord be of high quality to exhibit by itself an ultimate elongation (before significant strain hardening or failure) of at least about 200%, but more preferably 300%, but most preferably over 350%. When such elastic cords are covered with woven fabric, the apparent modulus (slope of the stress strain curve), referred to as strain hardening, will increase up until when the strain limit of the woven fabric is reached. This strain level is labeled "T" for each of the commercial bungee cords labeled "A", "B" and "C" in FIG. **18**.

In so far as the actual tension applied to a rebounding mat of the trampoline, any number of lower modulus elastic cords can be provided to reach the same total tension of fewer elastic cords.

As a non-limiting example, in the case of trampolines sized so that it is preferable that elastic cords are initially tensioned at about 18 Lb-f in the equilibrium state, also reach 35-40 Lb-f, when the rebounding mat almost reaches the floor. This range of force is also indicated on the graph in pounds-force (Lb-f) and Newton (N) units. To accomplish re-tensioning, it is best periodically to stretch and re-secure cords to have a tension of about 15 Lb-f to about 20 Lb-f when at rest. Advantageously, periodic re-tensioning is to about 18 Lb-f. 15 L-f was determined experimentally and selected to be the minimum rest force because anything below that setting resulted in a jump surface that felt loose and unstable to most users tested. 18 Lb-f was selected to be a good starting setting for the 8 mm bungees, but certain users may prefer a firmer feel up to 25 Lb-f. While these ranges were selected from testing data, the individual user makes only subjectively personal choices for their tension adjustments when using the apparatus.

FIG. **19** illustrated the force decrease when such a cord is cycled between strain levels typical of the low and high tension states. After about 1 million (M) cycles, the low tension drops by about 3 lbs to about 15 Lb-f with an almost corresponding drop in the high force level. Each dramatic jump in force represents a re-tensioning in the test apparatus by re-setting a terminal knot position to return the force to the initial level of about 18 Lb-f. It is truly surprisingly and unexpected re-stretching the cord repeated times (after about 1M, 3.8M, 6.4M and **9**M cycles) greatly extends the useful life to more than 1000%, as it is only after about 10 M cycles that the high tension level greatly exceed the objective of a maximum force of about 40 Lb-f. These results are fully summarized in the Table below:

Cycles	Initial Low Force	Initial High Force	Knot Position	Notes
0	18	38.5	1:1	First Position
1,025,300	17.4	37.8	1:2	
3,846,700	17.6	37.2	2:2	
6,351,450	19.5	41.1	2:3	
8,997,440	18.4	55.25	3:3	
10,406,041	13		3:3	Failure

It is believed that the increase in maximum force after the 5th re-stretching is caused by reaching the effective strain limit of the fabric covering, indicated as transition point "T" in FIG. **18**.

Hence, depending on the stress-strain and cyclic fatigue behavior of fabric covered elastic cords that are commercial available, it may be more preferred to deploy a large number of elastic cords that reach the "T" point, FIG. **18**, at higher strain levels (about 2.6× for "C" and 2.0× for "B" in contrast to the lower level of 1.8× for "A") to provide the most opportunities for re-tensioning to extend the products useful life without replacing all the elastic cords. Accordingly, it is further preferred that the elastic cords are re-tensioned when the equilibrium force drops about 25% but more preferably by about 16%, that is from about 18 Lb-f to 13 Lb-f.

It is also preferable that the re-tensioning occur no further than when the maximum stress reaches, when the rebounding mat is fully extended, no more than about 150% or the initial value, but more preferably no more than about 125% thereof. Thus it is believed that the ultimate limit to multiple re-tensioning to extend the useful service life of elastic cords may be the means to apply additional tension, such as by typing knots to provide a shorter length or a closer end grip point or position, as well as reaching close to ultimate elongation of the covered fabric sheathing. The ultimate elongation of the fabric is not necessarily the strain that will tear the fabric, but rather a straining level at which the fabric limits the elasticity of the rubber that will induce further abrasion of the fabric threads on each other, or induce abrasion ore related deterioration of the elastic cord itself.

Other methods of adjusting elastic cords are possible, once the threshold is passed that adjustability is even warranted for rebounders. While knotting the ends of the cords has been found to be very effective, one may also connect the elastic cord to a molded rigid device that performs the actual adjustment function. FIGS. **20**A-**20**E show an adjustable connector with a slotted clover elastic member holder, **2005**. The elastic member holder, **2008**, has one or more or multiple distance settings where it locks into the connector part **2007**. To change settings, the elastic member holder is rotated **2008** and may be pulled out so that the slot **2000** lines up with the connector ends **2006**. The elastic member holder may be removed (**2008**) by pulling it out of the connector **2007** in a sideways direction. Next, the elastic member holder may be reinserted **2008** at a different slot **2000** position, in order to either tighten or loosen the elastic member **2004**. To lock the elastic member holder **2008** in place, it may be rotated so that the clover tabs **2003** line up with the slots in the connector **2002**. Then the elastic member will **2004** pull the holder into the connector hole **2001**. The connector **2007** attaches to the trampoline mat by a strap looping around the connector mat attachment **2005**.

The arrangement of FIGS. **21**A-**21**E is similar to what is shown in FIGS. **20**A-**20**B, except instead of clover tabs, the elastic member holder **2105** interfaces with the connecter by cones. The advantage of the cones is that they provide a larger

mating surface area, which decreases the stress on the parts. To install the cord or elastic member holder, **2007** it is rotated so that the elastic member holder slot **2100** aligns with the connector end **2108**. It then may slide into the connector hole **2101**. The elastic member or cord **2104** applies tension which pulls the elastic member holder cone **2103** against the connector cone **2102**. To change tension settings, it is the same process as described for FIGS. **20**A-**20**E, where the elastic member holder may be removed and reinserted at different tension settings. To lock the bungee holder in place, it is rotated such that the slot on the bungee holder does not align with the side opening on the connector.

22A-**22**E shows an adjustable screw clover bungee connector and its components. Instead of clover tabs as shown in FIGS. **20**A-**20**E, FIGS. **22**A-**22**E shows an elastic member holder that interfaces with the connector by threads. The elastic member holder **2207** inserts into the connector hole **2203** by aligning the desired elastic member or cord holder slot **2202** with the connector slot. Next, the elastic member elastic member holder thread **2200** screws into the connector thread **2201**. The advantage of the threaded elastic member holder **2207** is that the elastic member holder is less likely to come loose during the vigorous use that occurs during rebounding. To change tension settings, the elastic member holder is unscrewed, then removed and reinserted at different tension settings. The freed or released bungee and holder is then free to be removed from the side opening in the connector; allowing for further adjustment and reinsertion, removal or replacement.

FIGS. **23**A-**23**E show another device for adjusting an elastic member. FIG. **23**C shows a side view of another of such arrangement of a bungee or elastic member extender. Another arrangement could utilize an adjustable bungee extender **2307** and its connections. It is a plastic or metal part that attaches to a rebounder connector as shown **2306** showing a curvilinear surface for retaining a portion of the elastic member or cord. It has a hook **2308** at the end where the elastic member knot may be connected to the elastic member or cord **4002**. This part allows the shortening of the tensioned bungee length, thereby resulting in a softer bounce. This is useful when a lighter user desires or requires a softer bounce on a rebounder than is available with its out-of-the-box elastic cords and tension settings, or a user is sharing the rebounder with a heavier user who required a stiffer spring member or bungee. The elastic member extender **2307** attaches to the connector aperture or opening **2300** by sliding the elastic member extender narrow wire section **2303** into the side of the connector. Then, either the tighter **2302** or looser **2301** portion slides into the connector aperture or opening. This part allows the tensioned elastic member length to be shortened, thereby resulting in a softer bounce.

FIG. **23**D shows one such connected arrangement. Another arrangement could utilize a threaded method of adjustment along the length of the extender, which allows for continuous adjustment for the length of the threading.

FIGS. **24**A-**24**D show an adjustable connector with a clover elastic member holder **2400** and its components. It is different from FIGS. **20**A-**22**E because there is no slot in the connector **2401**. When aligned with the aperture **2403**, the elastic member holder **2400** will slide freely through the aperture **2403**. To lock the elastic member **4002** at a certain length, the elastic member holder **2400** is rotated about 45 degrees. At this orientation, the elastic member holder clover tabs **2402** fit into the connector blind slots **2404** so it is not able to slide all the way through the aperture **2403**, which allows for the coupled unit to remain stationary during active movement through use of the rebounding unit.

The connectors shown in FIGS. **20**A-**24**F represent embodiments perhaps less preferred because they take up additional space when compared to utilizing knotted cord ends. This is an especially significant problem unique to trampoline rebounders due to the extremely limited space between the jump surface **4001** and the frame rail **4003**.

Another arrangement that allows for adjustable resilient cords or bungees is to utilize a wire-form connector in lieu of a plastic molded unit that is more common. A wire-form connector has several possible advantages such as increased strength, reduction in space required for the same functionality available with the generally larger plastic connectors; as well as the potential for lower cost construction for a part that performs within the required tolerances for safe and effective use. Additionally, the smaller size of the wire-form connector allows for a slight increase in bungee length allowable in the limited space between the jump surface and the supporting frame. FIGS. **25**A-**26**B show one arrangement of a wire-form connector connecting bungees on a rebounder to the frame. The bungees can be double (or more) knotted such that the knots are secured against the wire-form. The bungee may be pulled through the opening in the wire-form to the various knot settings to either loosen or tighten the tension for the rebounder. A discovered downside of wire-form connectors can be the increased friction created between the metal of the wire-form, and the elastic cord during use. One way to reduce such friction against the cord is to incorporate a molded plastic insert (described, not shown) that is attached, or otherwise connected, to the metal portion of the wire-form such that it is not dislodged once attached. The central portion of the elastic cord rubs along a curvilinear surface of the plastic form and not the metal parts during use. Cord life is increased over that of a wire-form that does not utilize such an attachment.

Additionally disclosed are new cord configurations and embodiments of the type disclosed in PCT/US2010/048820. FIG. **27**A is a top view of a rebounder with crossed elastic cord members **4002**. Element number **2701** is the rebounder frame, **2702** is a bungee cord, and **2703** is the jumping mat. FIG. **27**B is a lower isometric view of a rebounder with crossed bungees. FIG. **27**C is a bottom view of a rebounder with crossed bungees. FIG. **27**D is a close up lower view of a rebounder with crossed bungees. Each bungee loops around the top of a connector, and the bungee ends connect at the tensioned end of the elastic member to the two adjacent bungee connectors located on either side of the described connector.

FIG. **28**A is a lower isometric view of a rebounder with an alternative embodiment of the crossed bungees shown in FIGS. **27**A-D, but includes offset connectors **2801**. The rebounder frame rail **4003**, the rebounder mat **2802**, bungee cord **4002**, and is the offset connector **2801**. FIG. **28**B is closes up lower view the offset connectors **2801**. FIG. **28**C is a front view of an offset connector **2801**. FIG. **28**D is a side view of the offset connector. FIG. **28**E is an isometric view of an offset connector. The offset connector, **2801** has one attachment point lower than the other. The advantage of this configuration is that it allows the elastic members or bungees, **4002**, to cross each other while minimizing or avoiding friction or contact rubbing where they cross each other. Another embodiment for an elastic cord connector for a rebounding apparatus is shown in FIGS. **2**A-**29**F. FIG. **29**A is a lower isometric view of a rebounder with four point aperture connectors for the elastic cord. **4003** is the rebounder frame, **4001** is the rebounder mat, **4002** is a bungee cord, and **2904** is a four point aperture connector. FIG. **29**B is a close up lower view of a rebounder with four point connectors coupled to the

rebounding frame **4003**. FIG. **29**C is a front view of the four point aperture connector. Instead of using one bungee cord per connector as shown in previous embodiments such as that shown in FIG. **5**, the four point connector uses two shorter cords, **4002**. Each cord is knotted near each end so that the tensioned end fits into the four point connector at the tensioned end of the cord, **4002**, and wraps around the frame, **4003**. Some of the cord or a portion of a bulbous extension may reside beyond the tensioned portion; see **4**A, **409**, of the elastic member or cord **4002**. FIG. **29**D is a side view of the four point aperture connector. FIG. **29**E is a front isometric view of a four point aperture connector. FIG. **29**F is a rear isometric view of a four point aperture connector. This device allows for more than three adjustable connection points in contrast to the others shown. Each opening and slot may receive an adjustable end of an elastic cord. Thus, the four connection points may receive at least two individual lengths of elastic cord. While more adjustable ends are available, more individual cord segments are required than with the other shown embodiments in this configuration. Additionally, the cord segments are shorter in length and additional production and part costs may be incurred due to the need to have to double the individual cord segments in comparison to the three connection point connectors described herein. However, it can be seen that instead of two short cord segments, a single longer cord **4003** may be attached with knots or bulbous protrusions that permit a non-tensioned cord segment to extend between the aperture sides closest to the rebounding surface. This cord configuration is not shown in FIG. **29**, but an example of what is being described can be seen in FIG. **46**D, **4602**. The non-tensioned portion of the cord **4002** extends between two upper apertures of the same connector FIG. **29**C and not between two adjacent connectors as shown in FIG. **46**.

FIG. **30**A is a lower isometric view of a rebounder with two connection aperture connectors. **3001** is the rebounder frame, **3002** is a bungee cord, **3003** is the rebounder mat, and **3004** is a two point connector. FIG. **30**B is a close up lower view of a rebounder with two point connectors. Only one elastic member or cord, **4002** attaches to each connector, **3001**. FIG. **30**C is a front view of a two point connector. More options as to cord stiffness and thickness of bungee cords can be envisioned. For example different diameter or stiffness of cord segments may be alternated among the connectors (not shown), or because the connectors are narrower than the larger connectors shown elsewhere, more connectors can be attached to the mat and frame around the entire diameter to modify and tailor the number of cord and connector combinations. This allows one to adjust tension or rebound stiffness for various users and jumpers. FIG. **30**D is a side view of a two point connector. FIG. **30**E is an isometric view of a two point connector. FIG. **30**F is a front view of an alternate two point connector with curved arms encompassing the aperture openings. This alternate connector is even narrower than the first embodiment shown in FIG. **30**C. This allows more connectors to be attached to the mat **4001** and frame **4003**. Another difference between FIG. **30**C is that the bungee cords slides into the connector from the side. This makes sure the bungee doesn't unintentionally pop out or dislodge when the user steps or jumps on the cords. FIG. **30**G is a side view of an alternate two point connector. FIG. **30**H is an isometric view of the alternate curved arm two point connector.

A far more significant advancement for adjustable connectors is shown in FIGS. **31**A-**38**D. As discussed previously as to the connectors shown in FIGS. **20**A-**24**F, space is at a premium in the space between the jump surface **4001** and the rebounder rail, **4003**. Historically, tabs are stitched onto the jump surface which allow for the connector to be attached to the mat, FIG. **15**D, **1506**. Some length of elastic cord is required to permit a smooth rebounding action. If the cords are too short, the rebound is stiff and less resilient, causing a harder feeling bounce experience for the user. The shorter cord length causes the jump mat to stop its rebound decent more sharply than is preferable to a typical user. The harder quicker stop caused by shorter bungees or elastic cords places increased stress on the jumper's spine and body. And yet, while longer cords reduce the hard bottom rebound, the cord length is severely limited due to the jump mats proximity to the ground surface. The result is that there exists a very narrow range within which to achieve a reasonable rebounding experience while still keeping the jumper from constantly striking the ground surface. Typically, rebounders use fabric tabs stitched to the jump mat that serve as connection points for a connector. The connectors possess D-rings of the type shown in FIGS. **1**A and **1**B, **104**. **104** shows the connection point where the tab, FIG. **15**D, **1506** for example, is looped around the D-ring of the connector and sewn onto the jump mat during production. It has been typically preferred in the industry because the connector can move freely up and down and at angle to adapt to the movement of the rebound surface during use.

The connectors shown in FIGS. **31**A-**38**D, and to a lesser degree, FIG. **39**A-FIG. **39**E, are much different in that they dispense with these typical tabs, seen in FIG. **15**D, **1506**, in favor of a new design that permits the connector to be attached directly onto the jump mat itself, while still allowing for free function during rebounding. These "compression" connectors provide several advantages over current designs. First, the usable jump surface is expanded to a significant degree considering the limited space involved. This larger jumping surface allows for safer footfalls as the room to land one's feet is greater; and a jumper can be less fearful or careful about inadvertently striking the edge of the device. Rebounders are of clearly limited dimensions; generally 44 inches or less in diameter. It has been found that this new design provides anywhere from 10 to 40 percent greater usable surface area on the jump surface for footfalls. The second advantage is that no loss in rebound performance suffered despite the significant increase in jump surface area. The cord lengths remain the same despite the increased size of the jump surface. A third advantage is gained with the shown inventions in that they provide curved and smooth upper portions on the upper portion of the connectors, **3305**, that minimize felt impact or interference if a footfall were to inadvertently (or even intentionally) occur on the top of the connector attached to the upper mat surface. Finally, specialized cover attachments are shown which may add additional padding for foot strikes; as well as skirts and extensions that serve to cover the rebounding cords towards the frame rail, FIG. **43**-FIG. **44**. Taken together, a dramatic increase in usable surface area is gained without the need to enlarge the actual footprint of the rebounder frame and legs. Additionally, all of this is gained with no loss in bungee performance because the bungee length does not need to be shortened to account for the greater jump mat surface area.

However, it should be noted that one could actually lengthen the cords while still maintaining the original jump mat dimensions and diameter with the described connectors. In other words, instead of increasing the mat diameter, one could instead keep the mat diameter the same, but increase the overall cord length. In this case the extra space is not used to increase the jump mat surface area, but rather to increase the length of the elastic members. The result is a softer, gentler bounce. Or, the legs of the rebounder may be lengthened and

elevated vertically such that the distance to the ground or floor surface is greater between the rebounding mat and the ground surface. Then the longer cords allowed by the connectors shown in FIGS. **31**A-**39**E, permit a higher performing, better rebounder without the need to use up additional floor space around the rebounder diameter; which can be at a premium both in a home environment or in a commercial gym setting. In a commercial setting, the floor spaces occupied by rebounders are analogous to parking places for automobiles. There are only so many spaces and then the lot is full. For rebounding classes, being able to add even a couple of rebounders to the floor area increases the number of paying users and increases their chances of securing a place in a group fitness rebounder/mini trampoline classes in commercial gyms.

Such connectors more generally comprise an upper portion of the connector that is attached to the upper or top side of the rebounding mat such that a portion of the connecter overlaps the rebounding mat, and is adapted to couple with at least one portion of an elastic cordlike member, **3102**, and also has lower portion of the same connector (or in separate upper and lower parts shown later) that is attachable to the opposite underside of the rebounding mat such that a portion of the connecter overlaps the rebounding mat, and is adapted to couple with at least one portion of the elastic member, **4002**. The overlapped connection dispenses with the common D ring type connector in favor of mat connection location and therefore provides a greater surface area for footfalls on the rebounding mat. A "compression connector" describes how an elastic cord mounts to the connector behind where the connector attaches to the mat. FIG. **8** is actually shows a type of compression connector as well because the elastic cord travels behind the mat webbing towards the interior of the mat surface, but only beneath the mat surface and nowhere else. The unique thing about FIG. **31**-FIG. **39**'s connectors is that the connector is situated both above and below the mat surface contiguously. The cords are moved and placed back even farther and inside the perimeter of the mat surface. This maximizes the mat area.

Another difference between FIG. **8** and those shown in FIGS. **31**-**38** is that those embodiments have the bungee connections spaced evenly above and below the mat surface. But, the connector shown in FIG. **8** has a tendency to rotate until it is balanced because the connector is only supported at its top portion. In contrast, the compression connectors shown in FIGS. **31**-**38** are already evenly balanced because these connectors have an upper and lower portion that are simultaneously attached to the mat which helps ensure that it cannot rotate in the manner likely with connectors attached to only one side of the mat surface. It should be noted that while the drawings show a curved attachment location set to receive a portion of an elastic cord, other kinds of coupling locations can be envisioned. For example, the coupling location could be one or more apertures that retain or couple the approximate end of an elastic cord member as opposed to a segment of the cord. FIG. **31**A is an isometric view of a though pin compression connector. The term compression is meant to express that the position where the elastic member, **4002**, attaches to the connector is now situated behind where the pin holds the connector to the mat. The connector is then squeezed or compressed by the elastic member against the connector pin.

FIG. **31**B is a lower isometric view of a through pin compression connector. FIG. **31**C is a side view of a through pin compression connector **3101**. **3102** is where the bungee loop attaches, **3103** is the pin through hole. Apertures **3105** are provided to receive portions of an elastic cord that may be length-adjusted by changing the locations of bungee knots. FIG. **31**D is an exploded assembly view of the though pin compression connector. It is comprised of the through pin compression connector **3101**, the trampoline bed **4001** with a webbing loop **3107** sewn onto it, a bolt **3108** and a nut **3109**. The bolt **3108** goes through the connector through-hole **3103**, through the webbing loop **3107**, and then though the other side of the connector and it screws into the nut **3109**. This allows the connector to be installed after the mat is sewn. The connector **3101** has an upper portion **3110** and a lower portion **3111**. The upper portion **3110** has a downwardly facing surface **3120**, and the lower portion **3111** has an upwardly facing surface **3122**. The surfaces **3120**, **3122** face each other, extend generally in parallel, and define a channel **3104** that is sized and shaped to receive the edge of a mat **4001**. The mat **4001** has upper and lower surfaces **3123**, **3124**. Surfaces **3120**, **3122** respectively face surfaces **3123**, **3124** the mat **4001** is received in the channel **3104**. The channel is of sufficient depth and width that that, when the mat **4001** is suspended on a frame, any vertically oriented forces asserted by the connector are widely distributed. Advantageously, cord-receiving apertures **3105** are positioned near the elevation of the mat **4001** to avoid torqueing of the mat **4001** by the connector **3101**. Ideally, cord-receiving apertures are located at the same elevation as the mat.

FIG. **32**A is a side view of a snap pin compression connector, **3201**. This connector is superior to current bungee connectors because the bungee attachment location is moved inside and within the edge of the mat. This ensures the entire mat is tensioned and the mat jump surface is increased. Also this connector can be installed after the mat is sewn and produced. **3204** is the place where the bungee loop connects, and **3206** are the sockets or apertures where the bungee knots connector. **3205** is a through hole with an opening slot. This slot allows the connector to pop onto a pin instead of sliding a pin through it and retaining it with a nut. With this configuration a connecter may be "snapped" onto the pin and into place. **3203** and **3202** are hook portions of the upper connector assembly that provide an attachment for an elastic cover which can be retained, examples of which are shown in FIGS. **43**-**45**. FIG. **32**B is a front view of a snap pin compression connector. The two knot apertures or sockets, **3206** are visible. FIG. **32**C is an upper isometric view of a snap pin compression connector. FIG. **3**D is a lower isometric view of a snap pin compression connector.

FIG. **33**A is an isometric view of a dumbbell pin, **3303**, going through a webbing loop, **3302**, which is sewn onto a trampoline mat, **3301**. The dumbbell pin has extensions that prevent the attached connector from sliding side to side. FIG. **33**B is an isometric view of a rolling pin, **3304**, going through a webbing loop, **3302**, sewn onto a trampoline mat, **3301**. The rolling pin does not have extension at the end. FIG. **33**C is an isometric view of the snap pin compression connector, **3305**, attached to a trampoline mat, **3301** via the dumbbell pin **3303**. The connector attaches to the mat by snapping onto the dumbbell pin, **3303**. This allows the connector to be installed after the mat is sewn which is easier than running the large connectors through the sewing machine. FIG. **33**D is an isometric view of a completely installed snap pin compression connector, **3305**, utilizing a dumbbell pin **3303** with a bungee cord, **4002**, attached to it.

FIG. **34**A is a front view of a clamping compression connector that serves to expand the jumping surface area by dispensing with the need for a tag and D ring configuration. FIG. **34**B is a side cross section of a clamping compression connector. This connector has a plastic living or moving hinge, **3401**, which allows it to open and "clamp" onto the edge of the trampoline mat. A screw is then installed from the

bottom of the connector, **3402**, and it goes through the mat and clamps together the two sides of the connector. Teeth or small protrusions, **3403**, provide additional grip to hold the connector in place. FIG. **34**C is an upper isometric view of a clamping compression connector. FIG. **34**D is a lower isometric view of a clamping compression connector. **3402** is the hole that the screw goes through to be tightened and secured into the connector.

FIG. **35**A is an exploded view of the clamping compression connector assembly shown in FIG. **34** now installed with the elastic member attached. It is made up of a clamping compression connector, **3502**, a thread forming screw, **3503**, a hemmed trampoline mat, **3501**, with a rope like reinforced edge, **3505**, and an elastic member or bungee cord, **3504**. FIG. **35**B is an isometric view of a clamping compression connector assembly. FIG. **35**C is a cross section side view of a clamping compression connector assembly when fully attached with the elastic member installed. This shows the screw, **3503**, going through the mat and connector portions residing above and below the mat surface, **3501**, and squeezing the two sides of the connector, **3502**, together. A feature that helps hold the connector in place is a rope like threading, **3505**, that is sewn into the hemmed edge of the rebounder mat, **3501**. The connector has a split hole through it which clamps around this rope to ensure the connector cannot be pulled off. The rope acts to create a slight elevated edging which provides additional purchase for the clamped connector on the jumping surface or mat.

FIG. **36**A is an isometric view of a rebounder frame, **3601**, with a mat using installed compression connectors, **3602**. FIG. **36**B is a bottom view of a rebounder frame, **3601**, with a mat using compression connectors, **3602**. The diameter of the tensioned mat area is dimensioned at approximately 752 mm. FIG. **36**C is a bottom view of a rebounder frame, **3601**, with a mat using our original connectors, **3603**. The diameter of the tensioned mat area is dimensioned approximately 631 mm. The bungee length needs to be the same on both, and since the compression connectors can be installed closer to the edge of the mat than the regular connectors, the compression connectors make it possible to increase the mat diameter by approximately 121 mm.

FIG. **37**A is a side exploded view of a two part clamping compression connector. It is made up of a top part, **3701**, a bottom part, **3702**, and a screw, **3703**. The two plastic parts, **3701** and **3702**, are aligned to the screw, **3703**, which is then is used to clamp them together when rotated or screwed into the screw receiving hole. The advantage to having two separate parts instead of one part that bends is that it ensures the part doesn't break during bending from the jumping action against the mat surface. Also the clamping faces will be parallel. FIG. **37**B is an isometric exploded view of a two part clamping compression connector. Additionally, the upper connector piece has two receiving holes **3705** which accept two matching posts **3704** when the two parts are attached together. This minimizes the flex of the two parts against that portion of the attachment providing strength and enabling a more securely functioning unit. FIG. **37**C is a side view of a two part clamping compression connector. FIG. **37**D is an isometric view of a two part clamping compression connector fully installed where the posts, **3705** and their receiving holes **3704** are joined.

FIG. **38**A is a side exploded view of a two part clamping compression connector utilizing not one, but two screws. It is made up of a top part, **3801**, a bottom part, **3802**, and two screws, **3803**. Having two screws over in contrast to a single screw provides a more balanced clamping load. FIGS. **38**B-**38**D show how the two parts, **3801** and **3802**, are connected to each other with the two screws, **3803**. This design provides an extremely strong and secure connection of the elastic members between the rail and the jump surface, while still expanding the usable jump surface without shortening the cord lengths. It should be noted that the screws, **3703** and **3803**, shown may be replaced with bolts, a plastic piece that locks into place that may be tightened or locked in a various locations along its length, or prongs or tabs that function similarly to something like a female side of a zip tie. A tab can be inserted into the upper molded part, **3701**, or a molded piece may be inserted that snaps into place thus securing the upper and lower portions of the device, other similar parts that serve the same function as the screws shown in the drawings.

FIG. **39**A is a side view of an alternative clip in connector, **3901**. FIG. **39**B is a front view of a clip in connector, **3901**. This plastic connector clips onto a piece of wire that is sewn to the trampoline mat. **3903** are horizontal holes for the wire-form to go through, and **3902** are vertical slots for the wire-form fingers. FIG. **39**C is an isometric view of a clip in connector, **3901**. FIG. **39**D is an exploded isometric view of a clip in connector assembly. It is comprised of a clip in connector, **3901**, a wire-form, **3906**, an elastic spring, **3904**, a trampoline mat, **3905**, and mat edge webbing, **3907**. FIG. **39**E is an isometric view of a clip in connector assembly. The wire-form, **3906**, is sewn in between the trampoline mat, **3905**, and the mat edge webbing, **3907**. It is held together with threads, **3908**. The wire-form will have a diameter small enough so it is possible to sew into place. If the sewing needle hits it, it will be small enough so the needle will deflect to the side of the wire without breaking. The clip in connector, **3901**, can be attached to the wire-form after it is sewn, and then the elastic spring, **3904**, attaches to the connector.

FIG. **41**A is an isometric view of a side by side pin connector, similar to the types shown in FIGS. **1**A-**1**E except a tab and D ring mat attachment is replaced with the side by side pin attachment. This connector holds the bungee cord the same way as the side by side connector in FIG. **1**, but it is held to the mat with a pin or transverse rod or bolt, **4103**, which may be interchangeable terms depending on the part used. It is connected to the rebound surface itself in contrast to FIG. **1** which is attached to webbing via a D ring configuration. This allows the connector unit to mount closer to the edge of the mat. An advantage of this configuration is that is makes sewing the mat easier in production and manufacture. A second advantage is as previously described; a slight increase in the total area of the jump surface area is achieved. A third advantage is that the resulting connection is very strong and secure. FIG. **41**B is a rear isometric view of a side by side pin connector. FIG. **41**C is a side view of a side by side pin connector. FIG. **41**D is an exploded assembly view of a side by side pin connector. **4105** is the trampoline mat, **4104** is the pin webbing, and **4103** is the connector bolt. **4102** is a nut which secures the side by side pin connector to the mat. A pin or a bolt can be used to hold the connector. While a nut, **4102**, is shown to secure the rod from slippage, other methods may be used to achieve the same result.

FIG. **42**A is an isometric view of a reinforced side by side connector similar to that shown in FIGS. **1**A-**1**E and FIGS. **41**A-**41**D. This connector incorporates a screw member which adds an additional reinforcement between two portions of the connector. **4201** is the connector, and **4202** is the screw. **4203** is the threaded receiver for the terminal end of the screw which is composed of the same material as the connector itself. FIG. **42**B is a lower isometric view of a reinforced side by side connector. FIG. **42**C is a side view of a reinforced side by side connector. FIG. **42**D is an exploded isometric view of a reinforced side by side connector. This configuration allows

the elastic cord member to be installed first, and the screw is then installed after, in order to assist in supporting the bending load. This reinforcement allows the plastic part to be thinner and lighter resulting in a less expensive part to fabricate while still creating a very strong and secure attachment

Another aspect of the adjustable tension cord devices that were shown in FIGS. **31**A-**38**D is that of integrated covers which serve to protect the spring members, and to further expand the jump surface area for footfalls. These covers and their coupling are shown in FIGS. **43**A-**45**C. These devices add a protective barrier for the spring members and also permit an additional increase in the surface area of the rebounding matt, without a corresponding loss in cord length between the rail and the matt. The devices shown in FIGS. **31**A-**38**D already possess additional utility by expanding the usable jump surface; which benefit is increased by the addition of the covers.

FIG. **43**A is a compression connector mat with a connector cover installed. **4001** is the trampoline mat, **4002** is a bungee cord, **4003** is the trampoline frame, and **4301** is the connector cover. FIG. **43**B is a side section view of the compression connector mat assembly. FIG. **43**C is a close up side section view of the compression connector mat assembly. The connector cover, **4301**, is made out of an elastic fabric with elastic cords sewn onto the edges. The connector cover edges are hooked onto the receiving features on the compression connectors, **4302**. The connector covers can be customized for the users because they are easy to install and can be attached after manufacturing the trampoline mat.

FIG. **44**A is a compression connector mat with a connector petal cover installed. **4001** is the trampoline mat, **4002** is a bungee cord, **4003** is the trampoline frame, and **4401** is the connector petal cover of the type described in WO2011032173A2, which is incorporated by reference. FIG. **44**B is a side section view of the compression connector mat assembly. FIG. **44**C is a close up side section view of the compression connector mat assembly. The connector petal cover, **4401**, is made out of an elastic fabric with elastic cords sewn onto the edges. Padded petal sections, **4402**, are sewn onto the connector cover, **4401**. The cover attaches the same way as cover described in FIG. **43**, but now the padded petals provide additional area to jump, and it covers the bungee cords, **4002**, for an appealing appearance.

FIG. **45**A is a compression connector mat with a padded connector cover installed. This device adds additional padding coverage over the molded compression connectors themselves. **4001** is the trampoline mat, **4002** is an elastic member or bungee cord, **4003** is the trampoline frame, and **4501** is the padded connector cover. FIG. **45**B is a side section view of the compression connector mat assembly. FIG. **45**C is a close up side section view of the compression connector mat assembly. The padded connector cover, **4501**, is made out of an elastic fabric with elastic cords sewn onto the edges. The connector cover has pockets sewn into it for holding pads, **4502**. The pads, **4502**, slide into the connector cover pockets, **4501**, and cover the connectors. This provides a softer feel if users' footfalls land where the plastic connectors are located on the jumping surface.

Another type of connector is shown in FIGS. **46**A-**46**D. Here is described a way of utilizing a single elastic cord segment to couple to and with two adjacent connectors. In the example shown in FIG. **46**, the connector is similar to that shown in FIG. **5**A-**5**C. The connectors are not limited, however, to the configuration shown but may be of different designs. For example, the same cord configuration may be adapted to the connectors shown in FIGS. **1**A-**3**D, FIGS. **5**A-**14**E, FIGS. **20**A-**22**E, FIGS. **24**A-**26**B, FIGS. **29**-**39**E, and FIGS. **41**A-**42**D. But, in each case, a single cord segment is joined to two adjacent connectors. FIG. **46**A is a front view diagram of a connected cord on a rebounding apparatus with a plurality of connectors where a single connected elastic cord is attached to two adjacent connectors. FIG. **46**B is a lower view of the rebounder connections diagramed in FIG. **46**A where a single elastic cord is attached to two adjacent connectors. FIG. **46**C is a close up lower outside view of attached connected elastic cords. FIG. **46**D is a close up lower inside view of attached connected elastic cords. The advantage of utilizing one cord segment for each of two connectors is that fewer cord segments are required to circumvent the rebounder opening along the perimeter. This reduces manufacturer and parts costs and can simplify assembly. Another advantage, is that this unique configuration creates a rebounder that functions like one where each connector is dedicated to only one cord segment because the segment of the cord spanning the gap between the two adjacent connectors is no under tension when the rebounder is at rest and not in use; and under little to no tension even when the rebounder is in use. All that is required is to space apart the knots or bulbous protrusions along the cord length such that the rebounder functions similarly to how it would if one cord segment was dedicated to only one connector.

It should also be apparent that one cord segment could attach to more than two connectors. For example, one cord could connect **3** connectors in a group, or 4 or 5 or more. Also, groupings of connectors linked by a single elastic member or cord can be envisioned so the groupings of 2, 3, 4, or more may be distributed around the rebounder surface. Finally, it should be apparent that each cord may be moved or migrated during the movement of knots so that un tensioned segments become tensioned segments because they've been shifted or migrated during one or more adjustment events to a place where they are under tension.

FIG. **47**A is a top section view of a post connector with an overhang that creates an indentation below where an elastic cord may be coupled. FIG. **47**B is an upper isometric view of a post connector. FIG. **47**C is a side view of a post connector. FIG. **47**D is a rear isometric view of a post connector. FIG. **47**E is a top view of a post connector. In these drawings, the post's overhang serves as a hook to retain the cord segment and to keep it from slipping out. However, other indentations are possible in addition to the post hook configuration shown. For example, the post may have a simple notch or opening created by removing material from the post itself. In such a design, an overhang is not required. The post could have a locking mechanism of any various designs to secure the elastic cord from slipping out of the indentation. Or, a rounded hook shape may be substituted for the post shown. Also, the post can be repositioned and moved such that the upper coupling location is directly above the lower coupling locations; or, the post may be shifted such that the upper coupling location is not directly above the lower coupling locations. It should also be apparent that instead of a D ring, **4701**, a different mat attachment can be employed of the kinds shown in FIGS. **31**-**39**, simply by replacing the D ring portion **4701** with an attachment point adapted to those used in FIGS. **31**-**39**.

The current invention and the various embodiments described herein are not limited to a conventional trampoline frame that may comprise a closed rail supported by a plurality of legs. All that is required is a frame that defines a central opening that supports a flat or planar rebounding mat or jumping surface that is elastically suspended within the central opening. At least one or more of elastic spring members couple the rebounding mat to the frame in elastic suspension.

The spring members each have an elongated body that extends between the jumping mat and the frame. The frame can be of several configurations and is not limited by shape in any dimension beyond its need to support a flat rebounding surface at any angle. FIG. **48** shows a frame that adheres to this definition, but does not constitute the common closed rail attached to a plurality of legs configuration. However, regardless of the frame design, the rebounding surface or mat is still situated in a planar orientation. The angle may differ as well in other embodiments, but the rebounding surface remains flat so that it may perform the rebounding function for either thrown objects or for a jumping person. FIG. **48**A is a front view of a V frame rebounder that meets this same definition as the more conventional known frames. FIG. **48**B is an upper isometric view of a V frame rebounder. From the forgoing it should be appreciated that numerous variations are possible, and thus the invention is not intended to be limited to the specific arrangements shown in the drawings. For example, the types of connectors may be mixed and matched in concert with each other on a single jumping apparatus. For example FIG. **32**'s connector may be interspersed with the connectors shown in FIGS. **29** and **30**. Other combinations and configurations are possible and the possibilities are very large. Or, entirely different types of spring members may be employed in alternating fashion. For example, one could have a rebounding apparatus that employs metal spring coils interspersed with elastic cord members and their connectors in various configurations. Such configurations would be employed to adapt the apparatus for different users and for different uses in order to optimize and tailor the apparatuses performance. While the invention has been described in connection with a preferred embodiment, it is not intended to limit the scope of the invention to the particular form set forth, but on the contrary, it is intended to cover such alternatives, modifications, and equivalents as may be within the spirit and scope of the invention as defined by the appended claims.

APPENDIX A

Cord and Knot Tests

Here is a table summarizing the testing conducted for a rebounder configuration. The knot lengths were changed for the 9 mm cord for test **104**. The test numbers reflect those test related only to this specific data. The knot lengths were shortened to tighten the 9 mm cord. Also, it was intended to have the loosest 9 mm knot position be closer to the tightest 8 mm knot position. The chart attached compares the 8 mm cord and 9 mm cord once the 9 mm cord knot lengths were changed.

Test Number	Bungee Diameter [mm]	Stroke [in]	Knot Lengths [in]	1st knot change	2nd knot change	3rd knot change	Total Number of Cycles
69	8	3	19-20-21	1,025,300	3,846,700	6,351,450	8,997,440
75	9	3	21.5-22.5-23.5				6,351,329
93	8	4	19-20-21	690,500	1,029,100		1,300,000
94	10	4	19-20-21	58,800	239,050		420,000
95	10	4	19-20-21	18,200	180,062		430,000
97	10	3	21.5-22.5-23.5	436,200	943,400		848,700
98	8	3	19-20-21	1,187,000			5,460,000
99	10	3	19-20-21	424,300	935,100		1,091,100
100	9	3	21.5-22.5-23.5				4,111,000
104	9	3	19.5-20.5-21.5	3,427,422	6,922,650		8,250,000
105	8	4	19-20-21	612,300	1,202,220		1,400,000
106	8	4	19-20-21	612,300	1,099,448		1,231,200

Static Pull Test to Match Knot Lengths

The chart of FIG. **49** shows the force against the elastic member for a distance shift of approximately 4 inches.

Test Setup:

Put bungee on test machine at specified knot setting

Ran machine for a number of cycles at 60 rpm

Stroke set to pull installed bungee 4 inches

Load cell measured average max force

Common Elastic Member or Cord Specifications

Below is a table of common bungee specifications used in testing, and a description of selection criteria: The knot lengths were set to achieve target tension in the elastic cord tension range when stretched 3 inches. Elastic cords were then installed on a test machine with the same initial stretch as the actual rebounding apparatus. The machine stretched the cords at a fixed stroke. The range of stretch strokes we tested was between 3-7 inches. The bungee tension would degrade over time, and once the minimum force dropped below 15 pounds, the cord was tightened to the next knot. This procedure continued until there were no more knots. The number of cycles required to complete the test were compared among the various cords, and the cord that lasted the longest was selected. Other causes of failure included too much abrasion and wear on the frame tube, a decrease in aesthetic appearance of the bungee cord, and a maximum force that exceeded the stretched bungee tension range.

Bungee cord stiffness range	9-20 lb/in
Range of bungee diameter	8-10 mm
Bungee elastic material	Natural Latex Rubber
Bungee sheathing material	Polyester
Range of number of elastic strands	70-140
Range of bungee sheathings	24 × 24, 24 × 16, 24 single braid, 16 single braid
Knot spacing	.7-1.25 inches
Range of knot lengths	17.5-23.5 inches
Minimum Bungee Low Tension	15 pounds
Bungee Tension range when stretched 3 inches	30-60 pounds

The invention claimed is:

1. A rebounding apparatus comprising:

a frame that defines a central opening;

a rebounding mat that is elastically suspended within the central opening;

at least one cordlike elastic member that couples the rebounding mat to the frame so that the mat is in elastic suspension, the member having an elongated body extending between a first end and a second end; and

a plurality of connectors attached to the rebounding mat, each connector coupling one or more elastic members to the rebounding mat,

wherein at least one of the connectors is adapted to receive and secure at least two portions of the elongated body at two separate spaced apart locations on the connector,

wherein at least one cordlike elastic member has a tensioned portion, the tensioned portion having a tension and extending between two spaced-apart positions along the body of the elastic member, the elastic member being secured to the at least one of the connectors at each of the positions, and

wherein at least one of the at least one cordlike elastic member and the at least one of the connectors is adapted to dispose at least one of the first and second ends of the at least one cordlike elastic member at two alternative positions to provide at least two alternative levels of tension to the rebounding mat.

2. The rebounding apparatus of claim **1** wherein at least one of the connectors couples the at least one cordlike elastic member in a manner that the tension of the tensioned portion of the elastic member can be adjusted by moving a portion of the body of the elastic member relative to the connector.

3. A rebounding apparatus according to claim **1** wherein at least one of the connectors engages a cordlike elastic member at three or more separate locations on the connector.

4. A rebounding apparatus according to claim **3** wherein

the at least one of the connectors has an indentation located to receive and engage the cordlike elastic member.

5. A rebounding apparatus according to claim **4**, wherein the indentation comprises a curvilinear surface.

6. A rebounding apparatus according to claim **3** wherein:

the at least one of the connectors has an indentation located to receive and engage the cordlike elastic member and the at least one of the connectors engages a cordlike elastic member at three or more separate locations on the connector including

a first location,

a second location, and

a third location where a portion of the cordlike elastic member is received in the indentation.

7. A rebounding apparatus according to claim **6** wherein the indentation is defined by a curvilinear surface.

8. A rebounding apparatus according to claim **1** wherein at least one connector is engaged with only one member.

9. A rebounding apparatus according to claim **1** wherein:

the mat has a central portion defined by a perimeter; and

the plurality of connectors comprises a plurality of first connectors and a plurality of second connectors,

wherein each of the first and second connectors is attached to the mat at the perimeter of the central portion, and each of the first connectors is located between two second connectors that are adjacent, and

wherein a plurality of cordlike elastic members extends between the connectors with a central portion of each cordlike elastic member wrapped around a first connector, each of two outer portions of each cordlike elastic member wrapping around an adjacent portion of the frame, and each of two outer portions of each cordlike elastic member connecting to one of a pair of second connectors that are adjacent to the first connector.

10. A rebounding apparatus according to claim **3** wherein each of the first and second ends of each cordlike elastic member connects to the same connector that engages the elongated body of the cordlike elastic member.

11. A rebounding apparatus comprising:

a frame that defines a central opening;

a rebounding mat that is elastically suspended within the central opening;

at least one cordlike elastic member that couples the rebounding mat to the frame so that the mat is in elastic suspension, the member having an elongated body extending between a first end and a second end; and

a plurality of connectors attached to the rebounding mat, each connector coupling one or more elastic members to the rebounding mat,

wherein at least one of the connectors engages a cordlike elastic member at three or more separate locations on the connector and has at least one aperture through which a cordlike elastic member extends; and

each cordlike elastic member has a bulbous protrusion at or near at least one of the first and second ends, the dimensions of the bulbous protrusion being greater than those of the aperture such that the bulbous protrusion acts as a stop that limits movement of the cordlike elastic member through the aperture.

12. A rebounding apparatus according to claim **11** wherein:

the cordlike elastic member has a tensioned portion, the tensioned portion having a tension;

the cordlike elastic member has a plurality of spaced-apart bulbous protrusions at or near at least one of the first and second ends; and

the connector is configured to allow the cordlike elastic member to be repositioned so that any one of the bulbous protrusions can be selected to serve as the stop whereby the cordlike elastic member can be moved to adjust the tension of the tensioned portion of the cordlike elastic member.

13. A rebounding apparatus according to claim **11** wherein the bulbous protrusions are knots in the cordlike elastic member.

14. A rebounding apparatus according to claim **11** wherein the bulbous protrusions are molded material connected to the cordlike elastic member.

15. A rebounding apparatus according to claim **1** wherein:

the connector defines two apertures; and

the cordlike elastic member has a central portion that wraps around the frame and has two outer portions, each of the outer portions being connected respectively to each of the apertures.

16. A rebounding apparatus comprising:

a frame that defines a central opening;

a rebounding mat that is elastically suspended within the central opening;

at least one cordlike elastic member that couples the rebounding mat to the frame so that the mat is in elastic suspension, the member having an elongated body extending between a first end and a second end; and

a plurality of connectors attached to the rebounding mat, each connector coupling one or more elastic members to the rebounding mat,

wherein at least one of the connectors has a surface that provides a curved path for engaging a central portion of the cordlike elastic member and at least two apertures for receiving outer portions of the cordlike elastic member, and

wherein the at least one cordlike elastic member has a central portion, an outer portion on either side of the central portion, and a bulbous protrusion at or near at least one of the first and second ends, the dimensions of the bulbous protrusion being greater than those of each

aperture such that the bulbous protrusion acts as a stop that limits movement of the cordlike elastic member through each aperture.

17. A rebounding apparatus according to claim **16** wherein the at least two apertures of the connector are located on opposite sides of the curved path.

18. A rebounding apparatus according to claim **11** wherein:

the connector has a first central portion that receives the elongated body of the cordlike elastic member; and

the at least one aperture of the connector comprises two apertures located on opposite sides of and under the first central portion.

19. A rebounding apparatus according to claim **11** wherein:

the connector has a central portion that receives the elongated body of the cordlike elastic member;

the connector has two apertures that are disposed below the central portion; and

the first and second opposing ends of each cordlike elastic member engage the respective apertures of the connectors that are immediately adjacent and on opposing sides of the connector that engages the central looped portion thereof.

20. A rebounding apparatus according to claim **5** wherein the at least one of the connectors has a downward extending post for wrapping the cordlike elastic member one or more times for varying the tension.

21. A rebounding apparatus according to claim **18** wherein the at least one of the connectors further comprising a nesting spacer for insertion between an end portion of the at least one cordlike elastic member and the two apertures, the nested connector having substantially the same shape as the apertures on a side that engages the at least one cordlike elastic member and a complimentary shape on an opposite side that engages the apertures when the nested spacer is inserted to increase the tension on the at least one cordlike elastic member.

22. A rebounding apparatus according to claim **1** wherein each connector has two apertures and each connector is disposed on a body that is capable of being radially displaced with respect to the center of the rebounding mat on a portion of the connector that engages the center of the cordlike elastic member.

23. A rebounding apparatus according to claim **1** wherein:

the at least one of the connectors has a curvilinear retaining indentation; and

the rebounding apparatus further comprises a looped strap that extends through the curvilinear retaining indentation and connects the at least one of the connectors to the rebounding mat.

24. A rebounding apparatus according to claim **1** wherein the at least one connector has a shaped indentation for engaging a metal ring that is attached to the periphery of the rebounding mat.

25. A rebounding apparatus comprising:

a frame that defines a central opening;

a rebounding mat that is elastically suspended within the central opening;

at least one cordlike elastic member that couples the rebounding mat to the frame so that the mat is in elastic suspension, the member having an elongated body extending between a first end and a second end; and

a plurality of connectors attached to the rebounding mat, each connector coupling one or more elastic members to the rebounding mat,

wherein at least one of the connectors is adapted to receive and secure at least two portions of the elongated body at two separate spaced apart locations on the connector, and wherein the at least one of the connectors comprises:

a first coupling position having a curved path for seating and retaining a cordlike elastic member;

a second coupling position having means to grasp opposing ends of a cordlike elastic member; and

a third coupling position having means to grasp opposing ends of a cordlike elastic member.

26. A rebounding apparatus according to claim **25** wherein:

the cordlike member has at least one protrusion; and

the at least one connector has at least two apertures, including an aperture located at each of the second coupling position and the third coupling position, to matingly engage the protrusion.

27. A rebounding apparatus according to claim **1** further comprising at least one elastic member length and tension adjustment device, the device being attached to the at least one cordlike elastic member and comprising an adjustable slotted clover elastic member connector and a rigid elastic member holder adapted to adjustably engage the slotted clover elastic member connector such that an elastic member length and tension can be modified.

28. A rebounding apparatus according to claim **27** wherein the device is attached to the at least one cordlike elastic member and comprising an adjustable cone clover bungee connector.

29. A rebounding apparatus according to claim **27** wherein the device is attached to the at least one cordlike elastic member and comprising an adjustable screw clover bungee connector.

30. A rebounding apparatus according to claim **27** wherein the device is attached to the at least one cordlike elastic member and comprising an elastic member extender which attaches to a rebounder connector with a hook at an end where the at least one cordlike elastic member may be connected.

31. A rebounding apparatus according to claim **1** wherein:

the first end of the at least one cordlike elastic member has plural spaced-apart adjustment positions; and

the at least one of the connectors is adapted to connect to the at least one cordlike elastic member at any of the plural adjustment positions.

32. A rebounding apparatus according to claim **31** wherein the first end of the at least one cordlike elastic member has a bulbous protrusion at each of the adjustment positions.

33. A rebounding apparatus according to claim **31** wherein the second end of the at least one cordlike elastic member has plural adjustment positions.

* * * * *