US 20160174983A1

(19) United States

(12) Patent Application Publication

(10) Pub. No.: US 2016/0174983 A1

(43) Pub. Date: Jun. 23, 2016

Shelton, IV et al.

(54) **SURGICAL INSTRUMENTS WITH IMPROVED CLOSURE ARRANGEMENTS**

(71) Applicant: **Ethicon Endo-Surgery, Inc.**, Cincinnati, OH (US)

(72) Inventors: **Frederick E. Shelton, IV**, Hillsboro, OH (US); **Jerome R. Morgan**, Cincinnati, OH (US); **Chester O. Baxter, III**, Loveland, OH (US)

(21) Appl. No.: **14/575,143**

(22) Filed: **Dec. 18, 2014**

Publication Classification

(51) **Int. Cl.**

A61B 17/10	(2006.01)
A61B 17/068	(2006.01)

(52) **U.S. Cl.**

CPC ***A61B 17/105*** (2013.01); ***A61B 17/068*** (2013.01)

(57) **ABSTRACT**

A surgical instrument that includes jaw members, at least one of which may be moved to closed positions relative to the other jaw member upon actuation of a closure actuator. Actuation of the closure actuator causes an axially moveable closure member to apply closure motions to at least one of the jaw members. In at least one form, the closure actuator includes a first actuator portion that is configured to move through a first range of axial travel upon actuation of the closure actuator. A second actuator portion interfaces with the axially movable closure member such that upon actuation of said closure actuator, the second actuator portion moves the axially movable closure member through a second range of axial travel that is greater than the first range of axial travel.

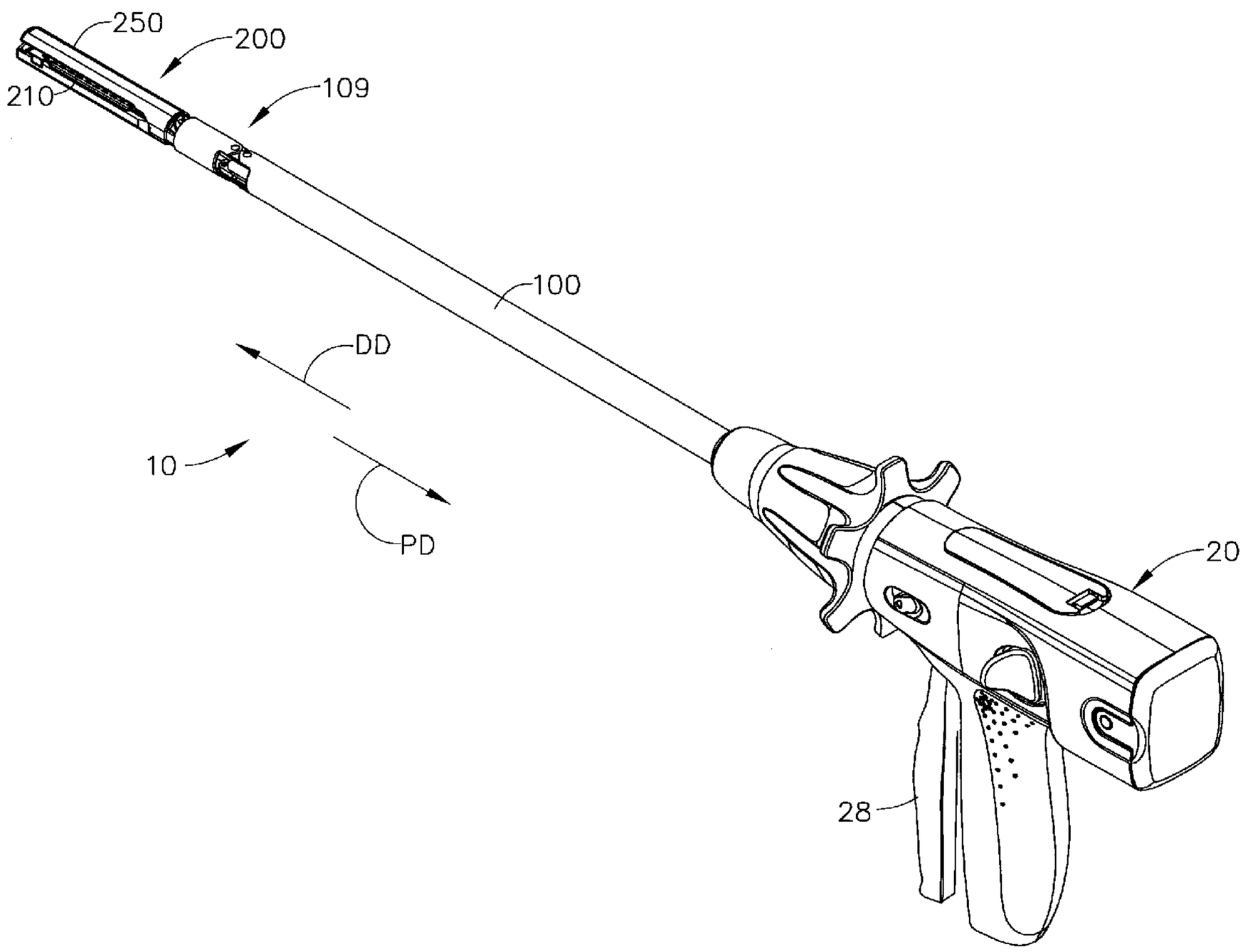

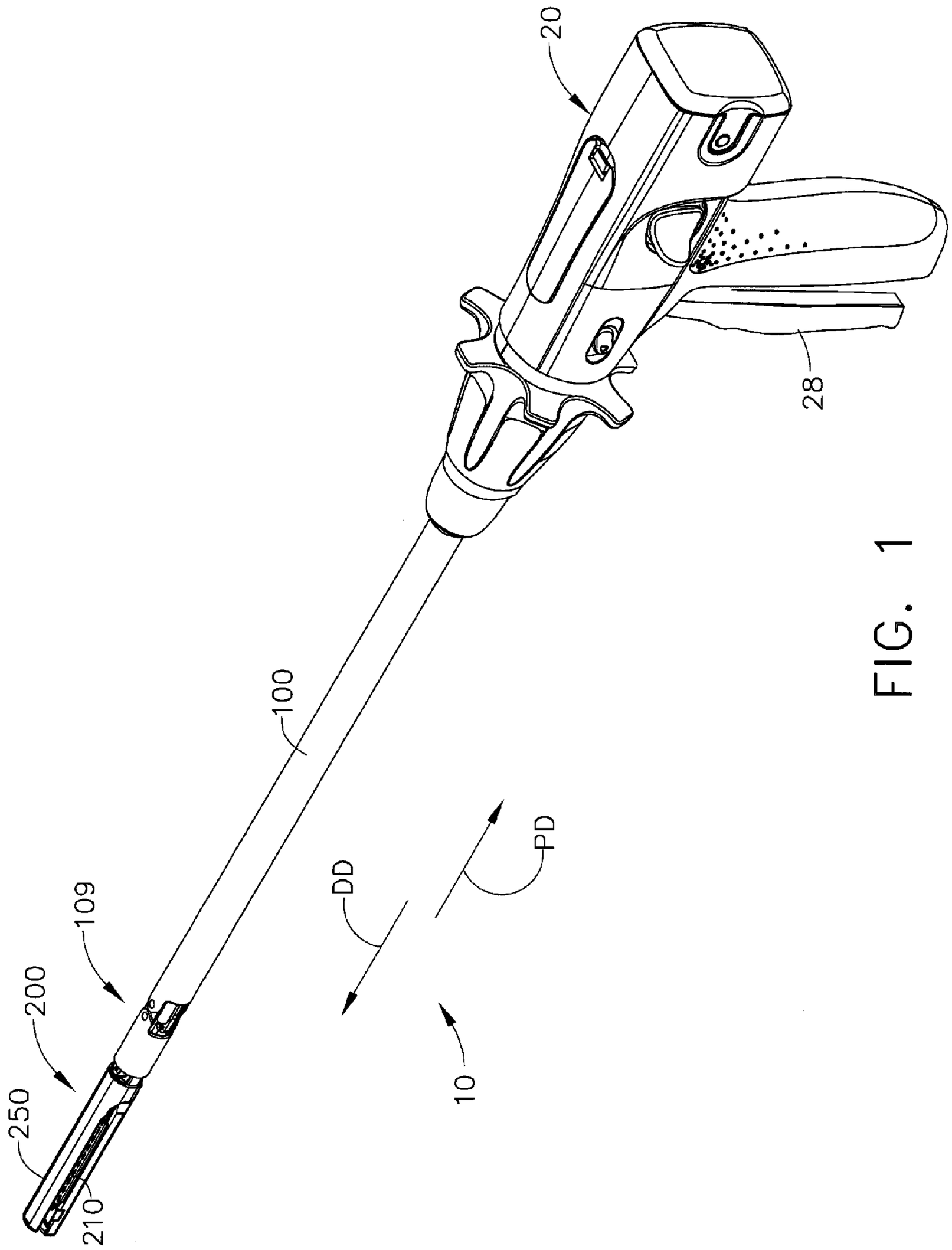

FIG. 1

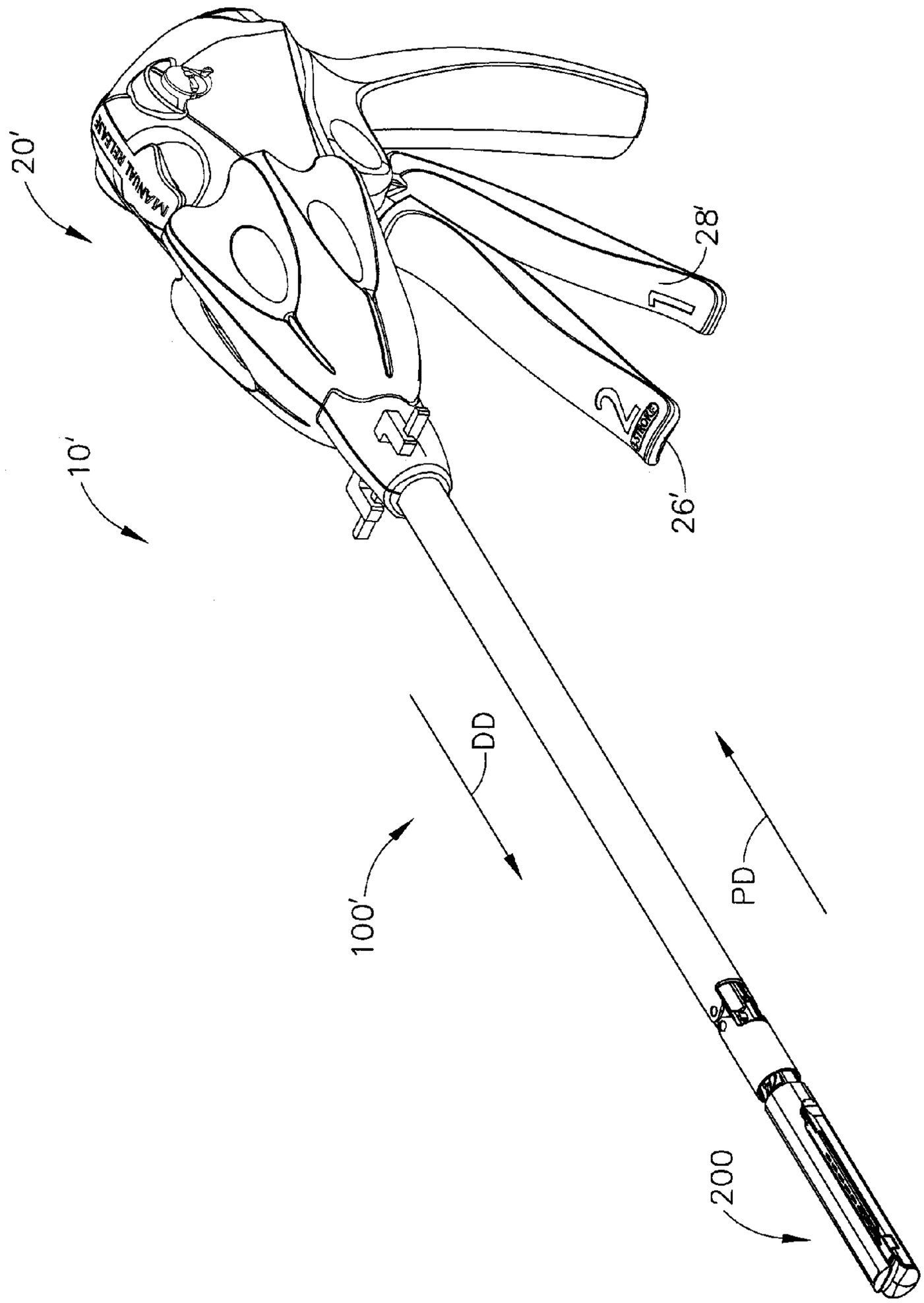

FIG. 2

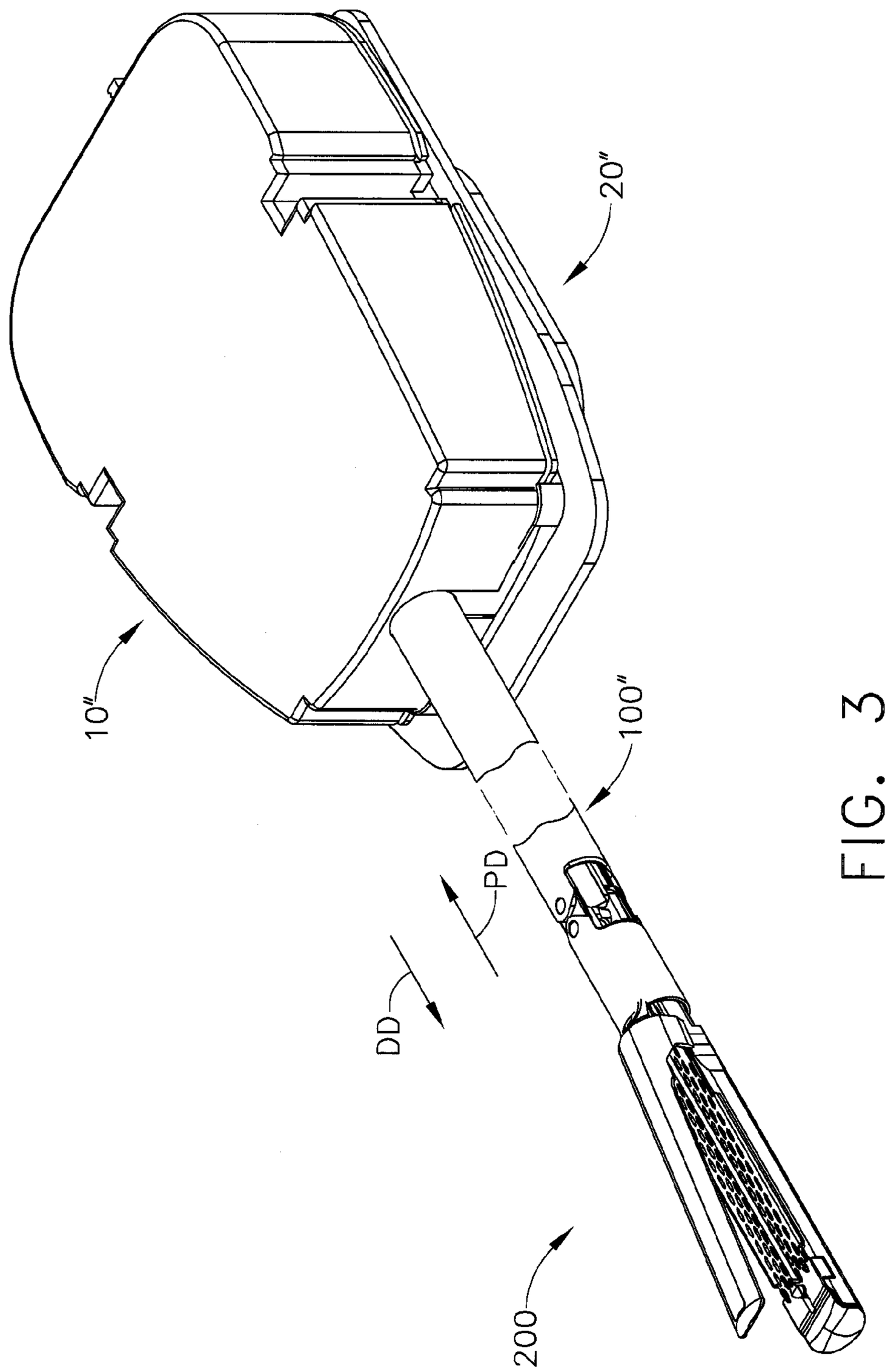

FIG. 3

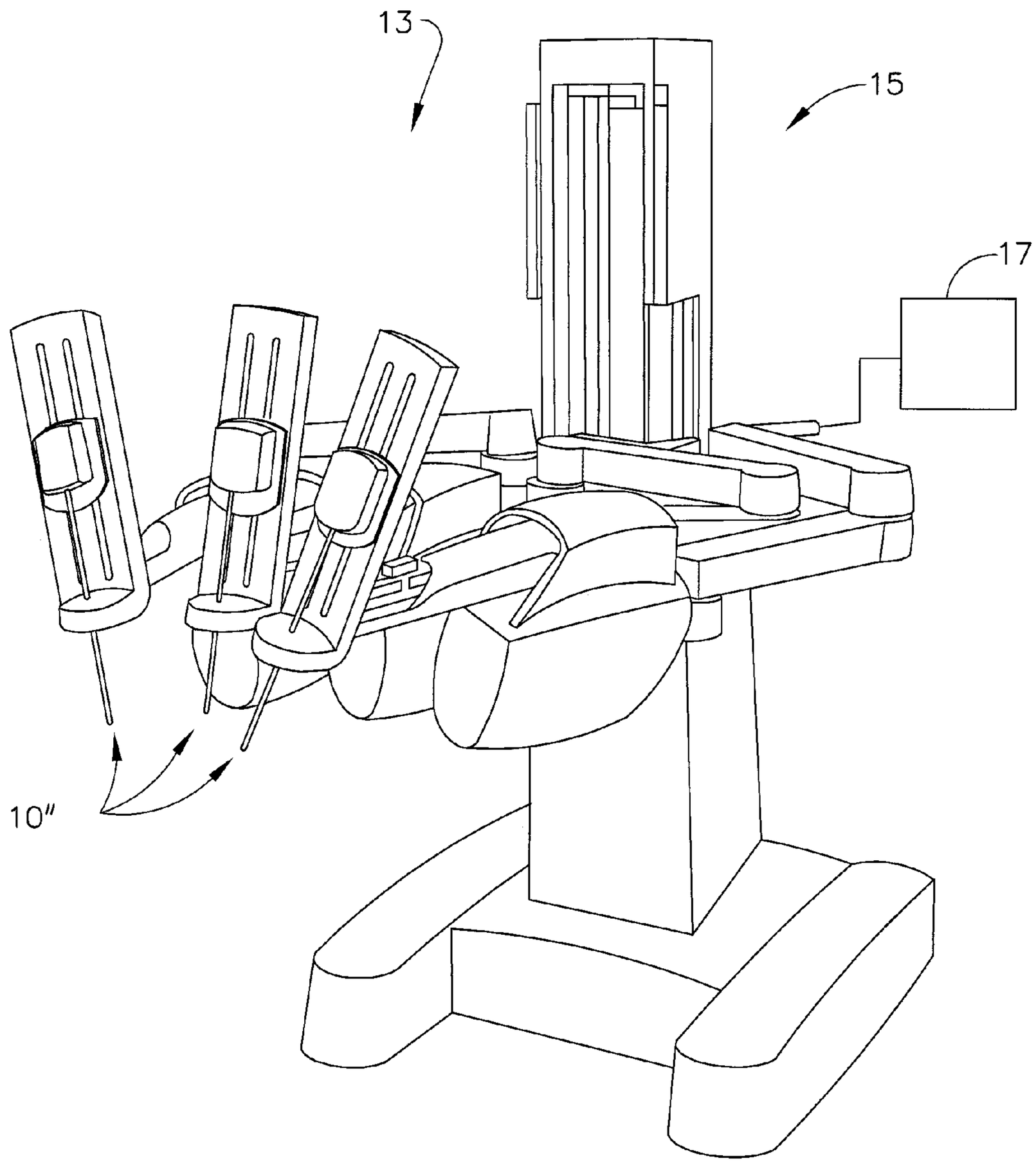

FIG. 4

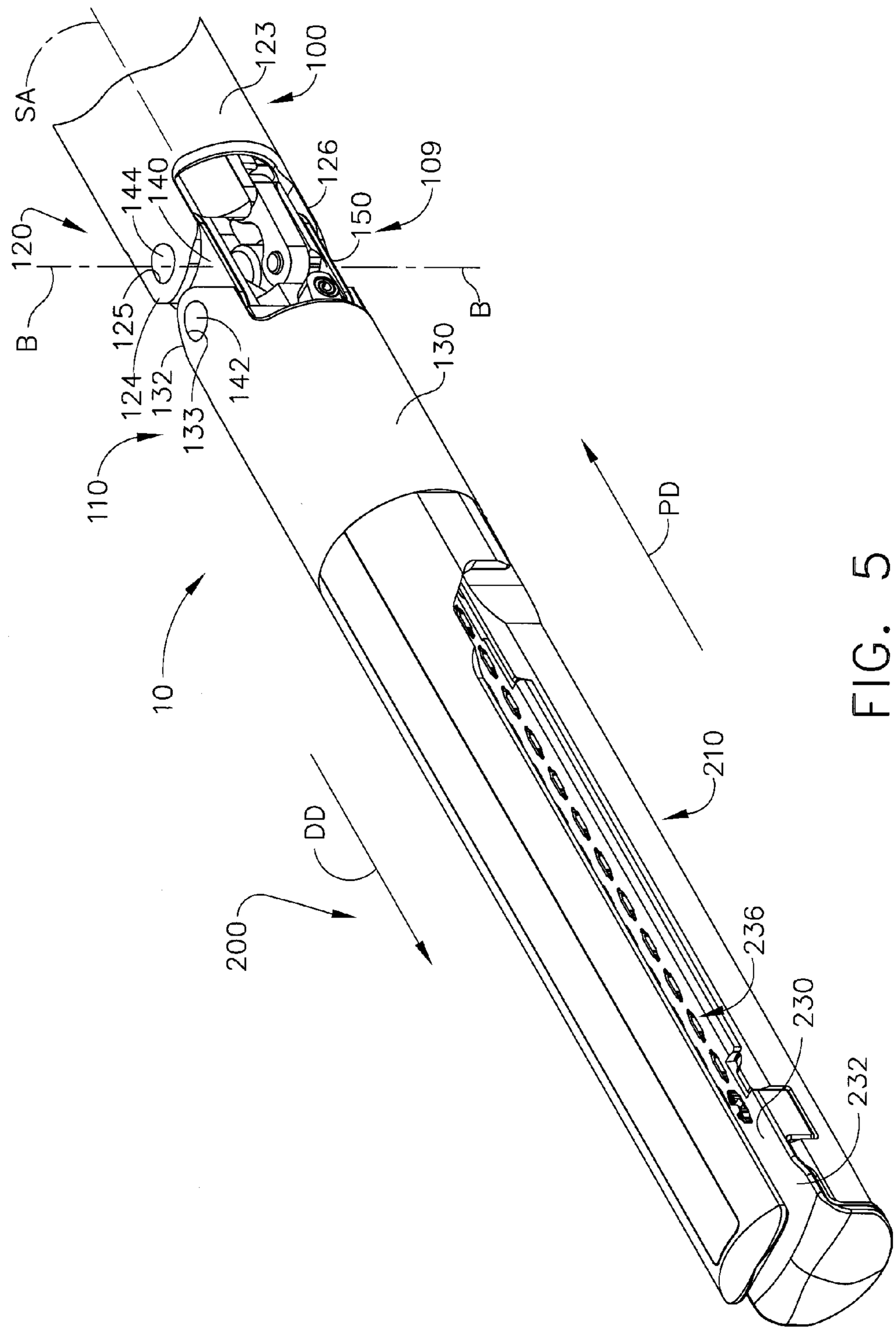
SA
123
100
126
109
150
144
140
120
B
125
124
132
133
142
130
B
110
10
PD
210
DD
200
236
230
232

FIG. 5

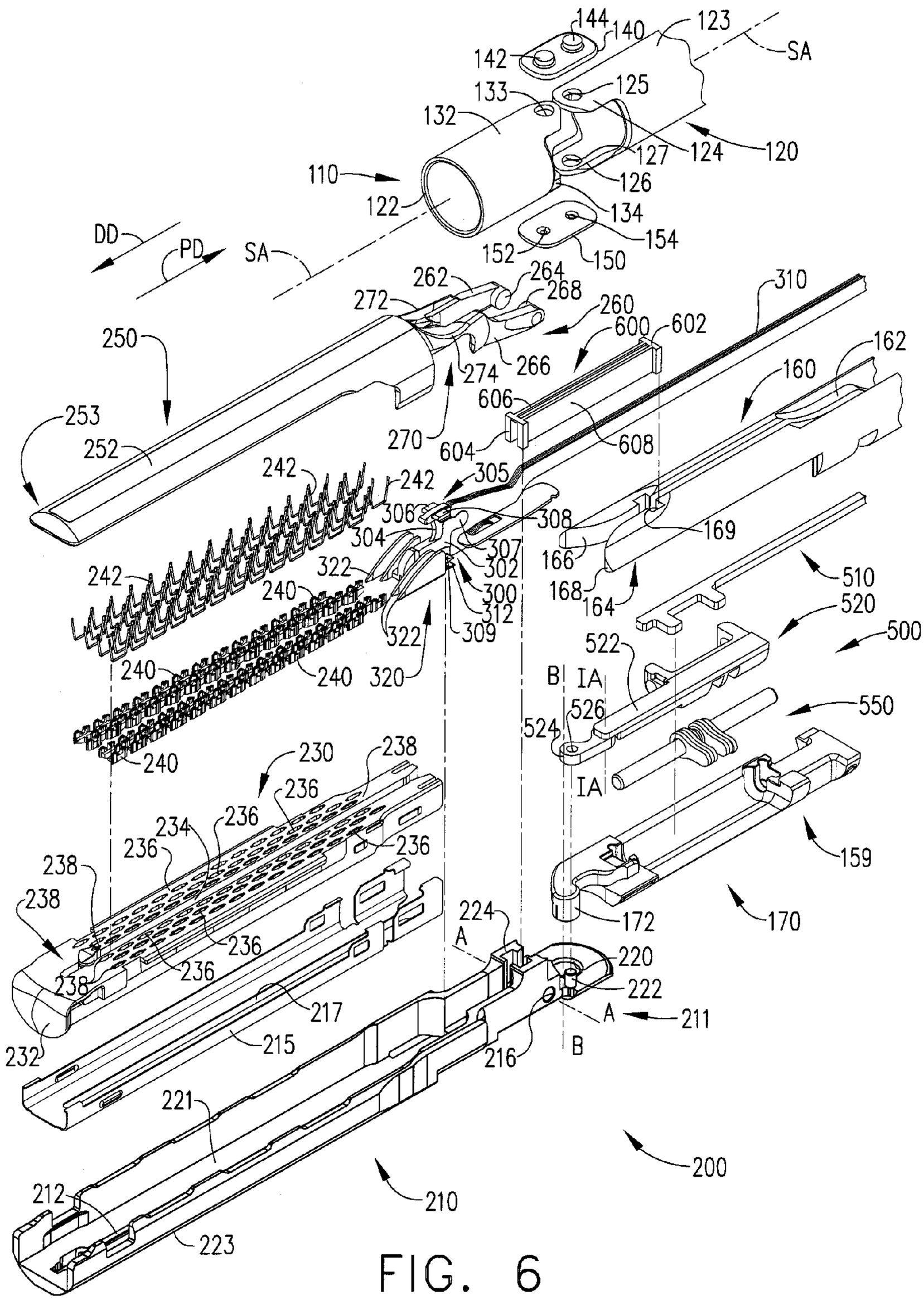
144
140
123
SA
142
125
133
132
127
124
120
110
126
122
134
154
152
150
DD
PD
SA
262
264
268
272
260
310
250
600
602
162
274
266
160
606
253
270
604
608
252
242
305
242
306
308
304
169
307
166
322
302
510
242
240
300
168
164
312
520
309
500
322
522
240
240
320
B
IA
526
550
524
240
230
238
236
IA
236
234
236
236
159
238
238
224
A
172
170
236
220
236
222
238
217
A
211
232
215
216
B
221
200
212
210
223

FIG. 6

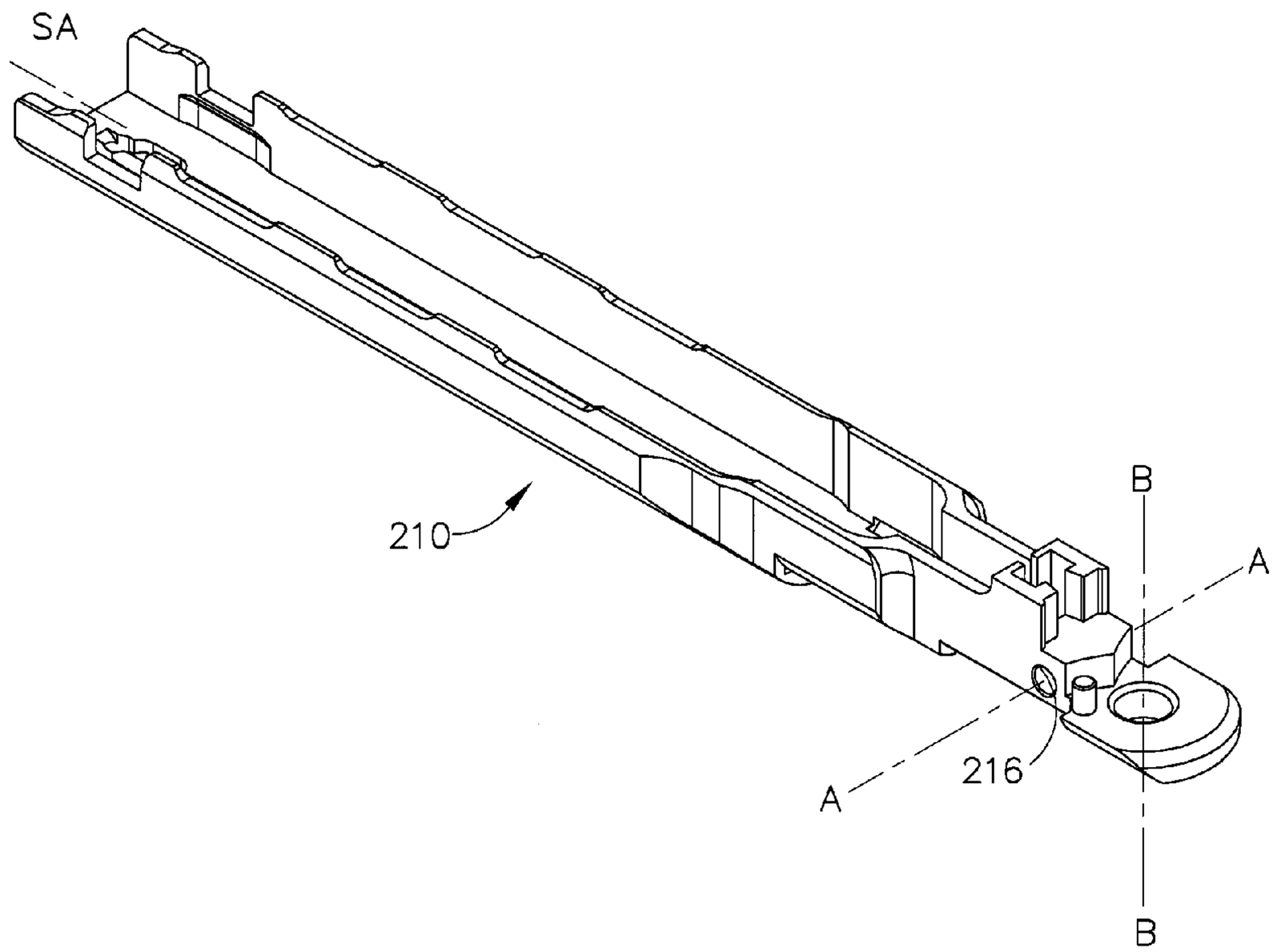

FIG. 7

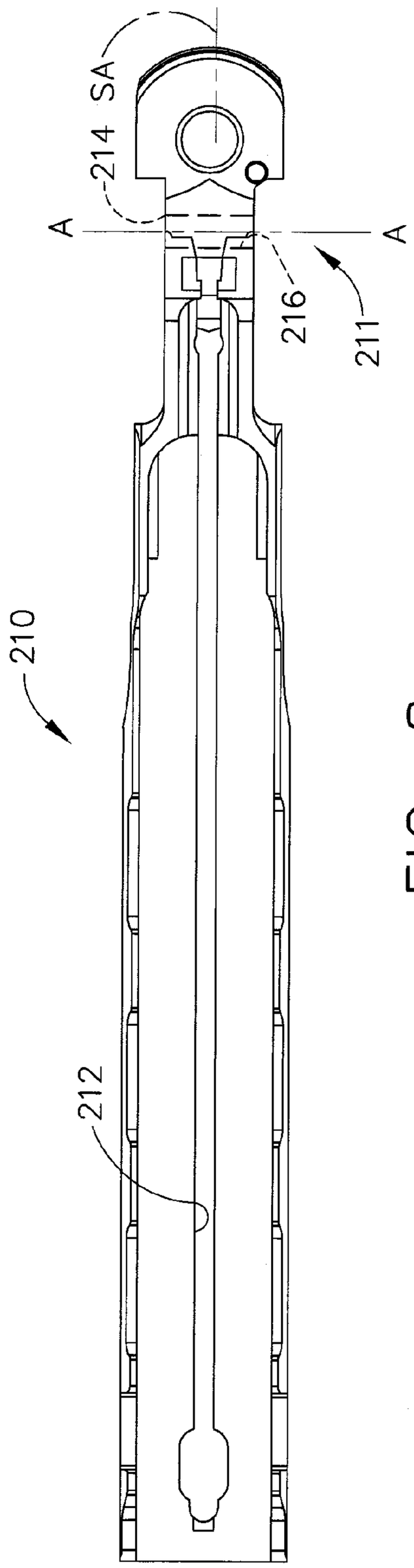

FIG. 8

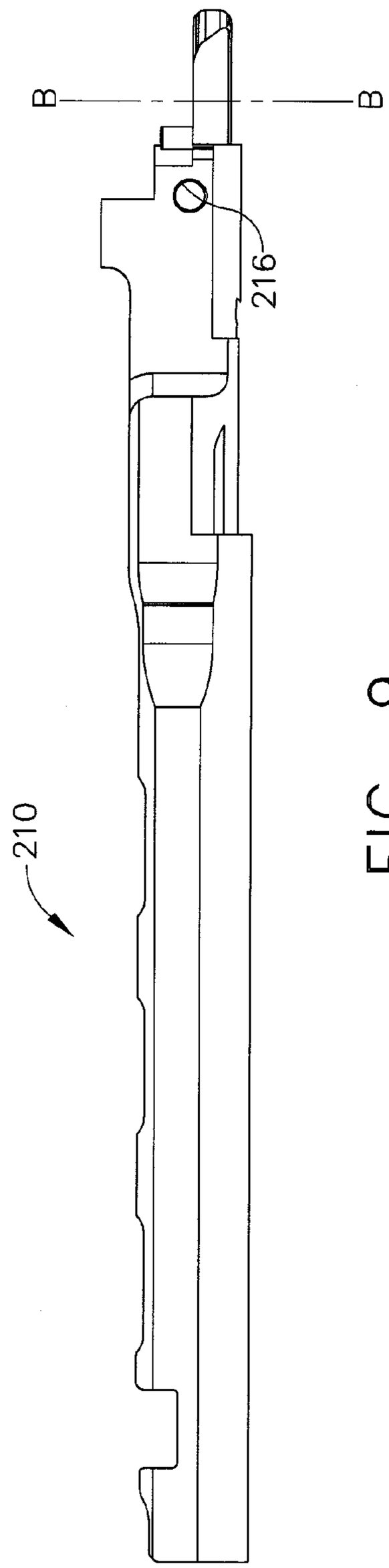

FIG. 9

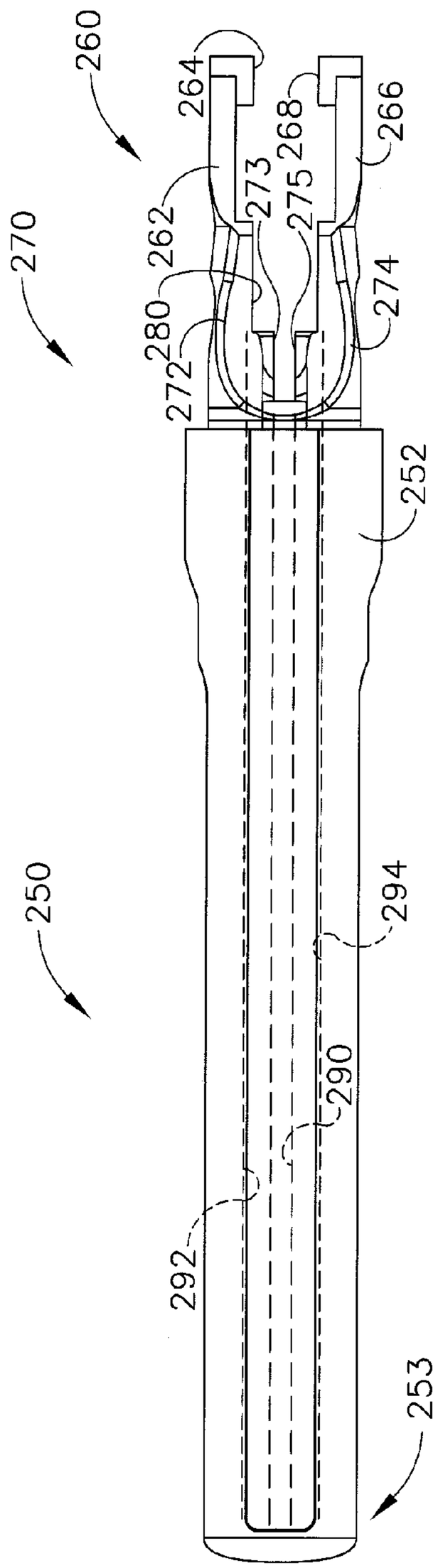
260
264
268
266
270
262
273
275
280
272
274
252
250
294
290
292
253

FIG. 10

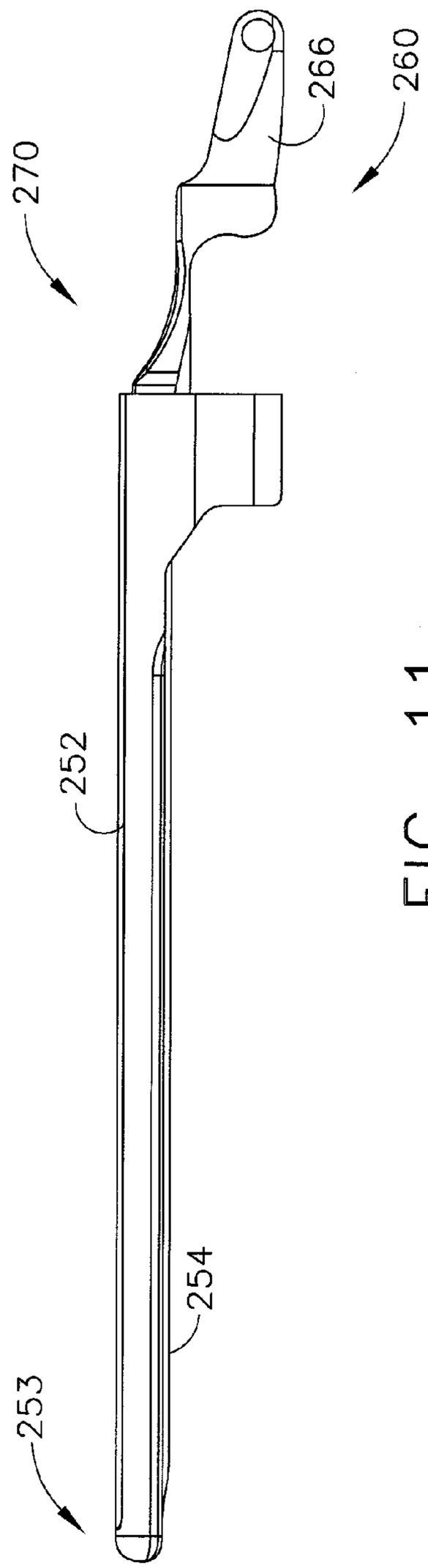
266
260
270
252
250
254
253

FIG. 11

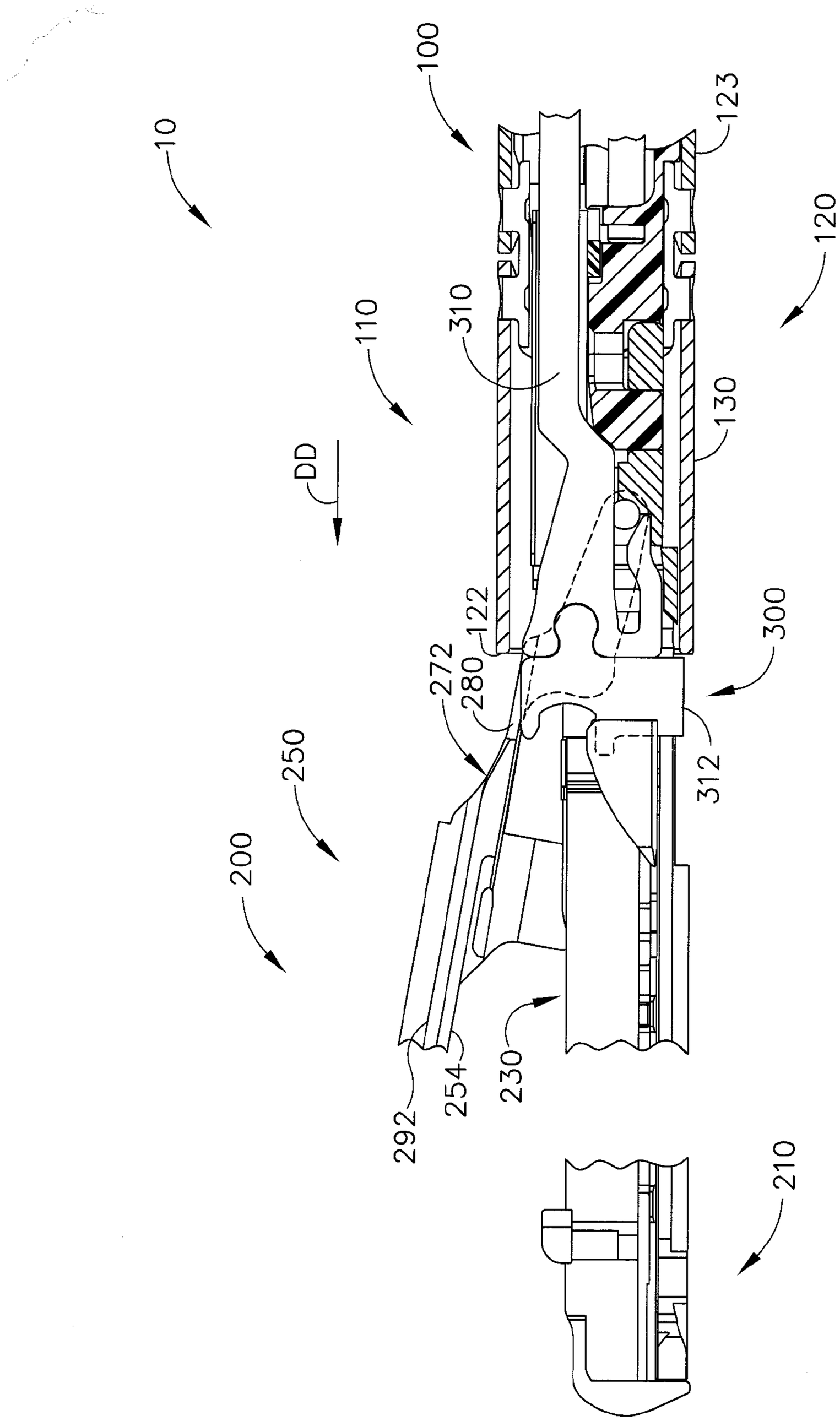
10
100
123
120
110
310
130
DD
122
300
272
280
312
250
200
230
254
292
210

FIG. 12

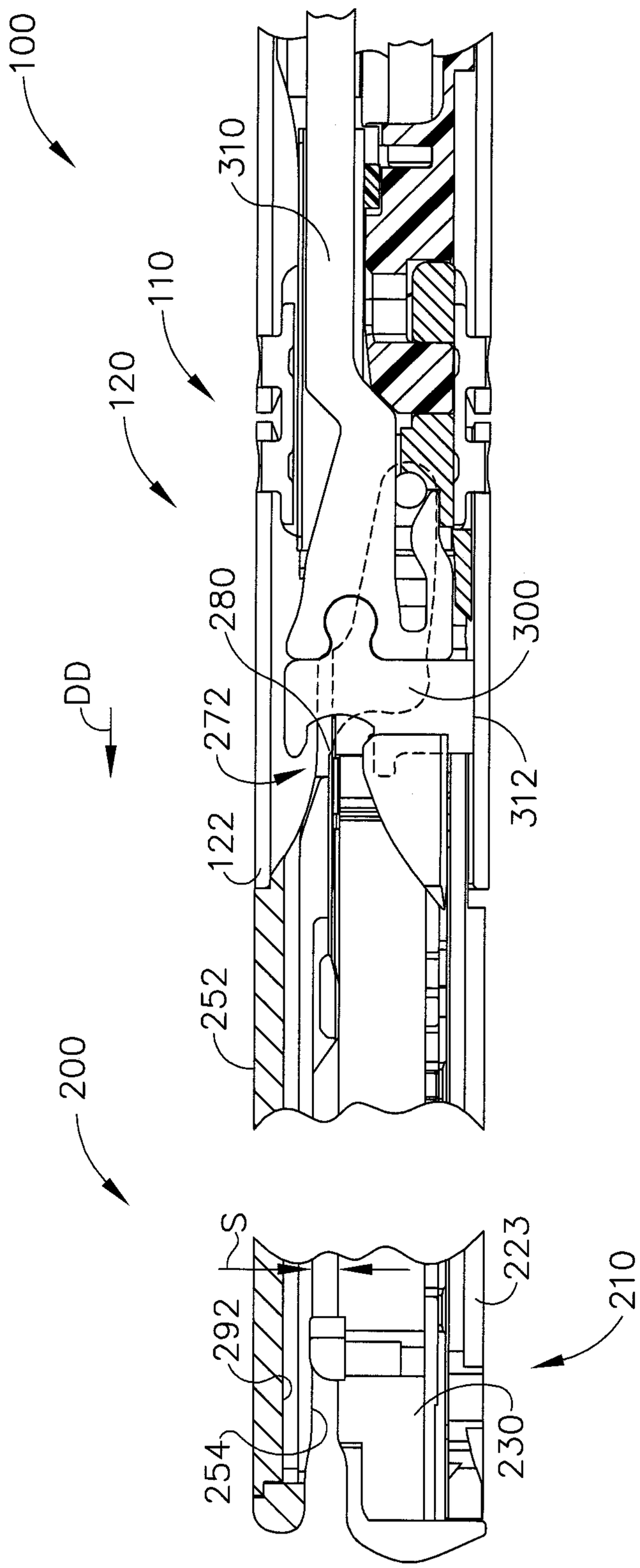
100
310
110
120
280
300
DD
272
312
122
252
200
S
223
210
292
254
230

FIG. 13

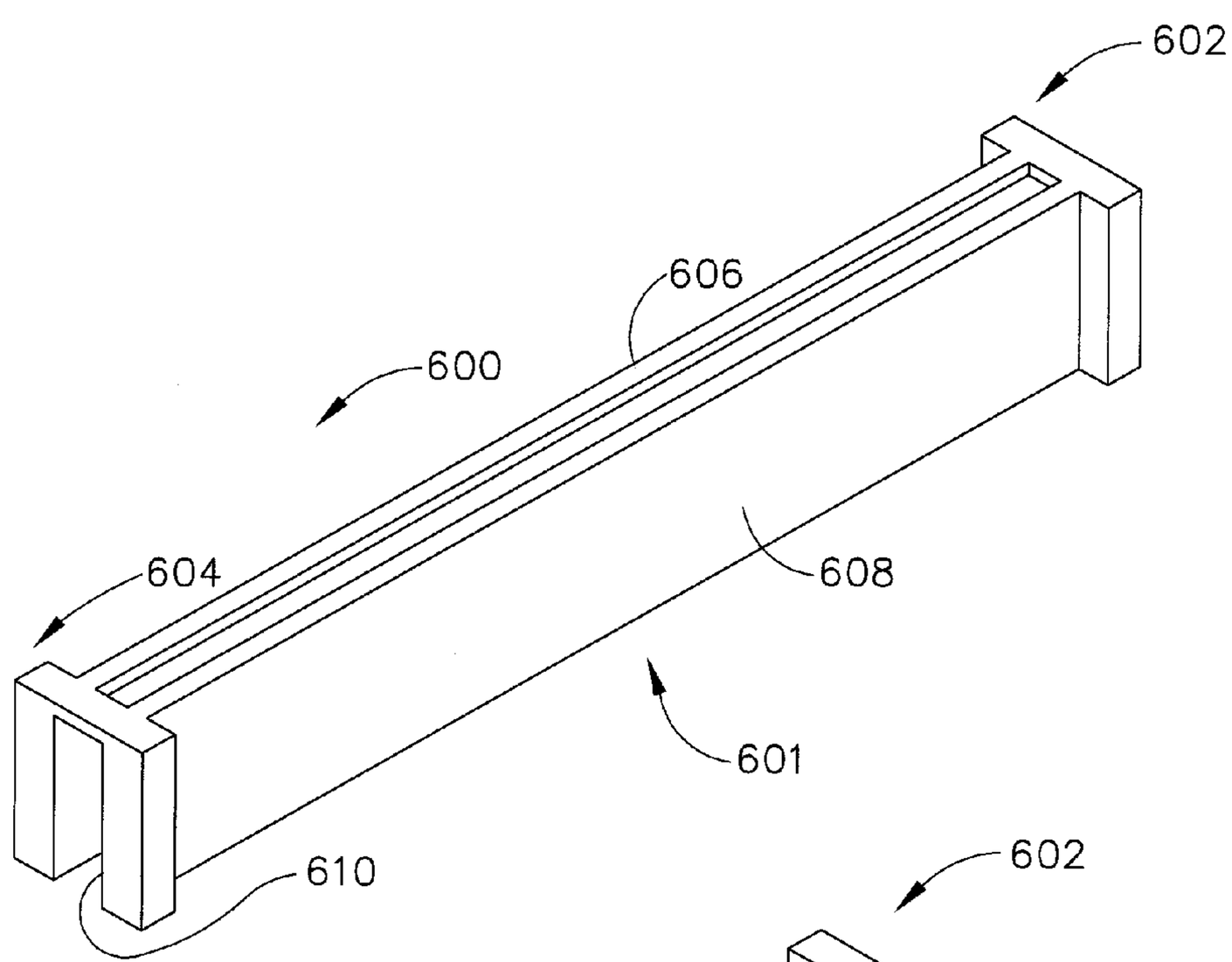

FIG. 14

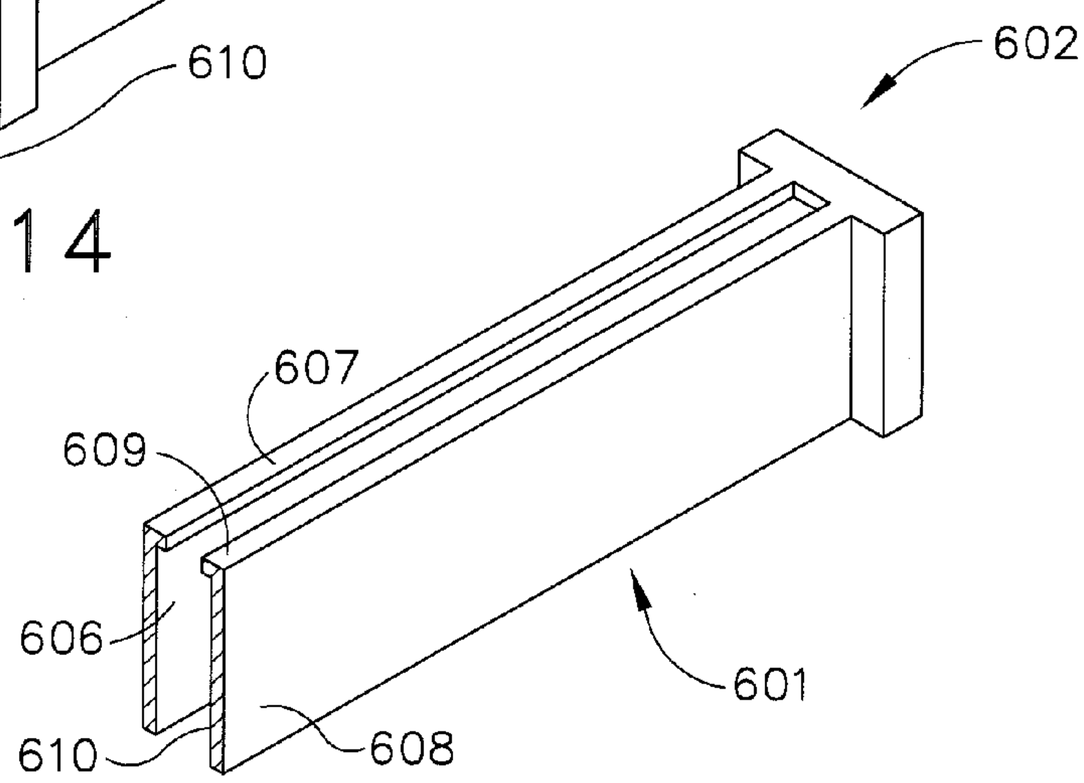

FIG. 15

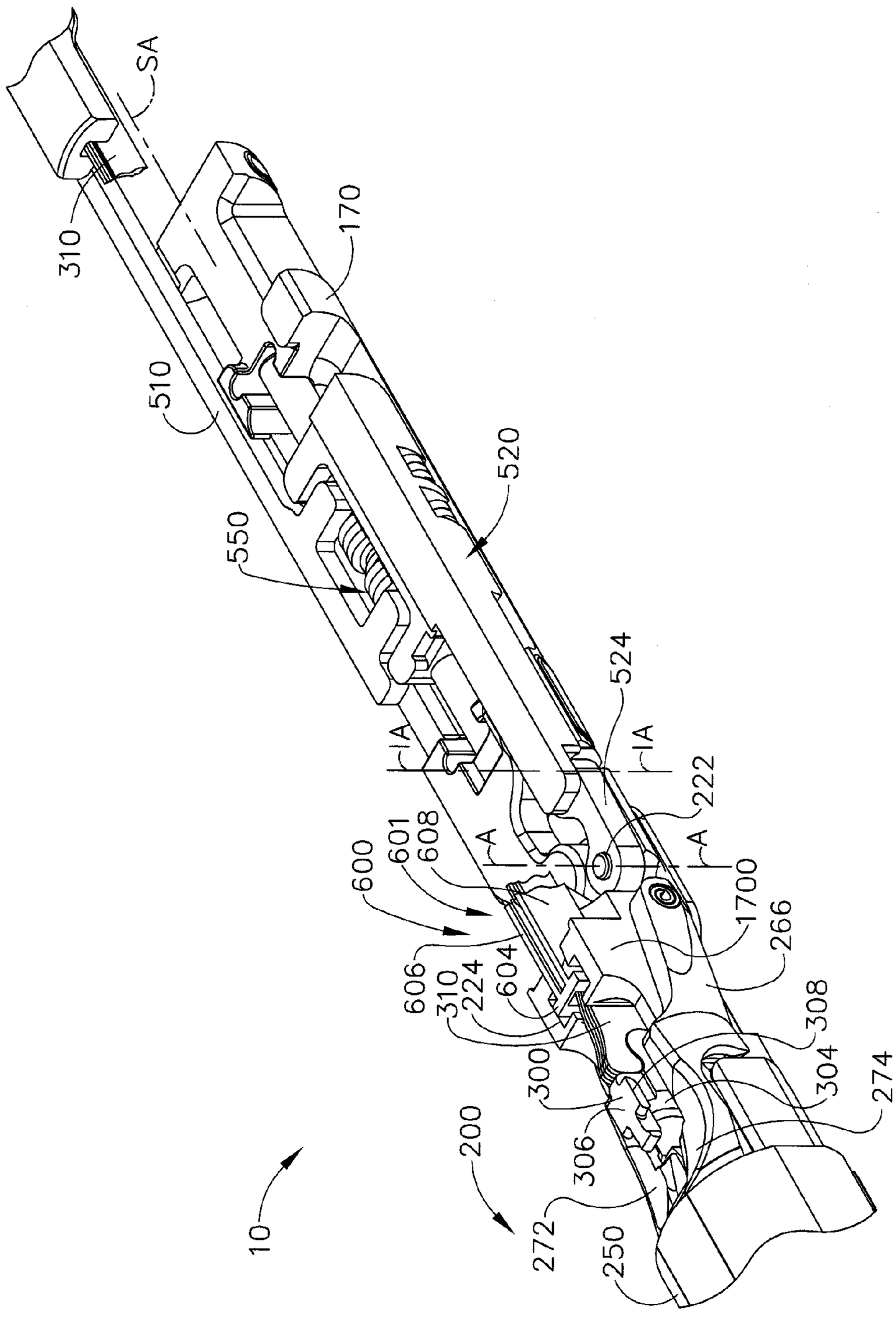
SA
310
170
510
520
550
524
IA
IA
222
A
A
601
608
600
1700
266
606
310
224
604
308
300
304
274
306
200
272
250
10

FIG. 16

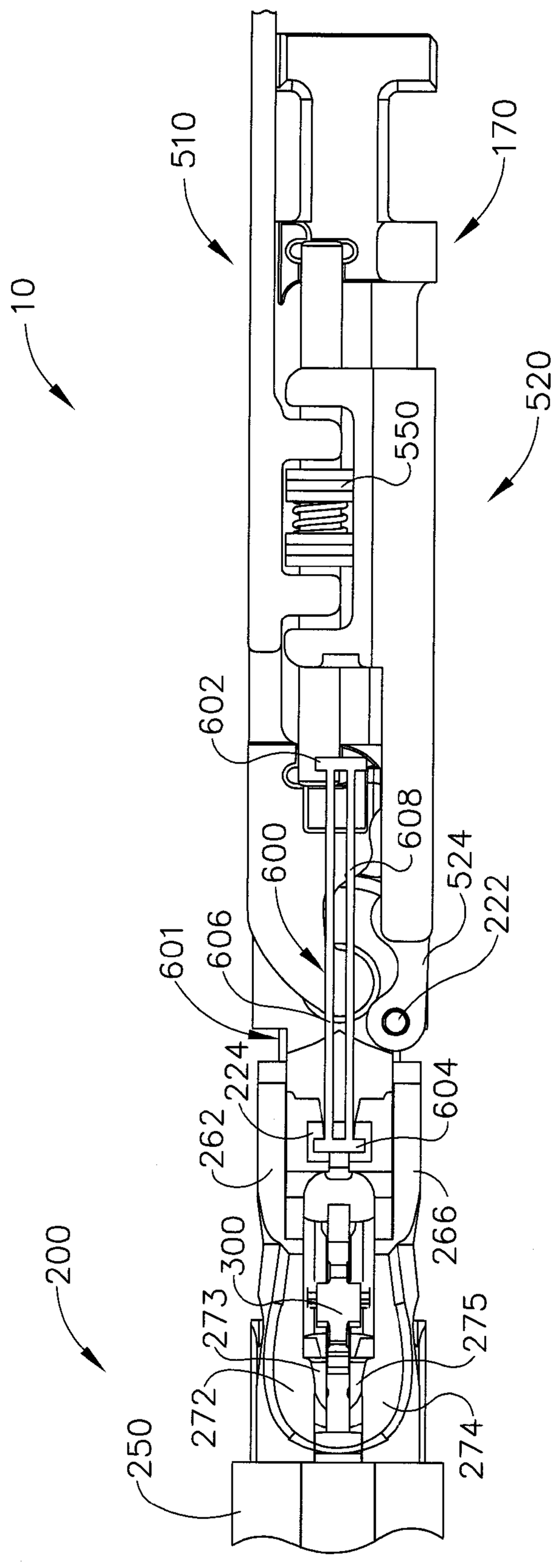
10
510
170
520
550
602
608
600
524
222
601
606
224
604
262
266
200
300
273
275
272
274
250

FIG. 17

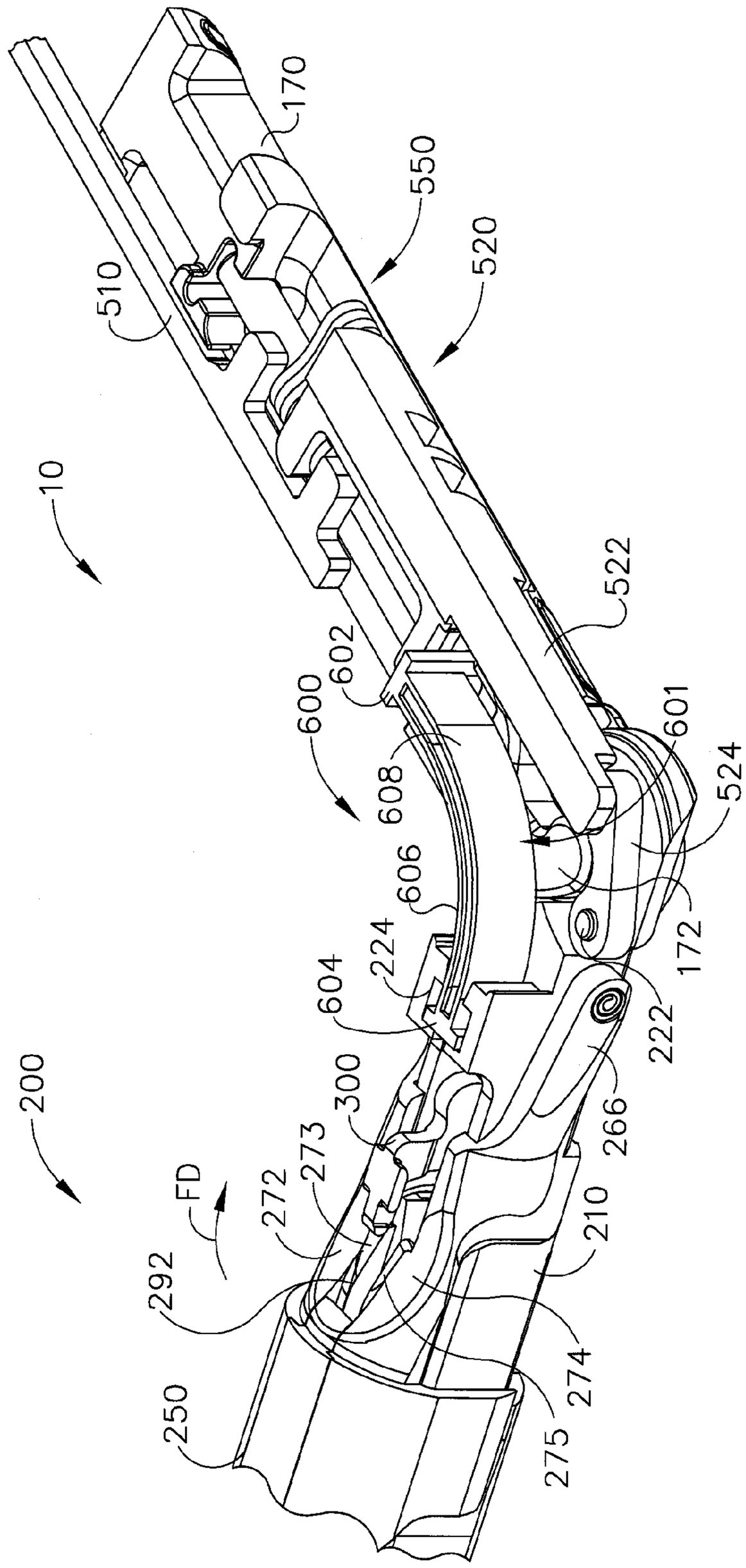
10
170
550
520
510
522
602
600
601
608
524
606
224
172
604
222
300
266
200
FD
273
272
210
292
274
250
275

FIG. 18

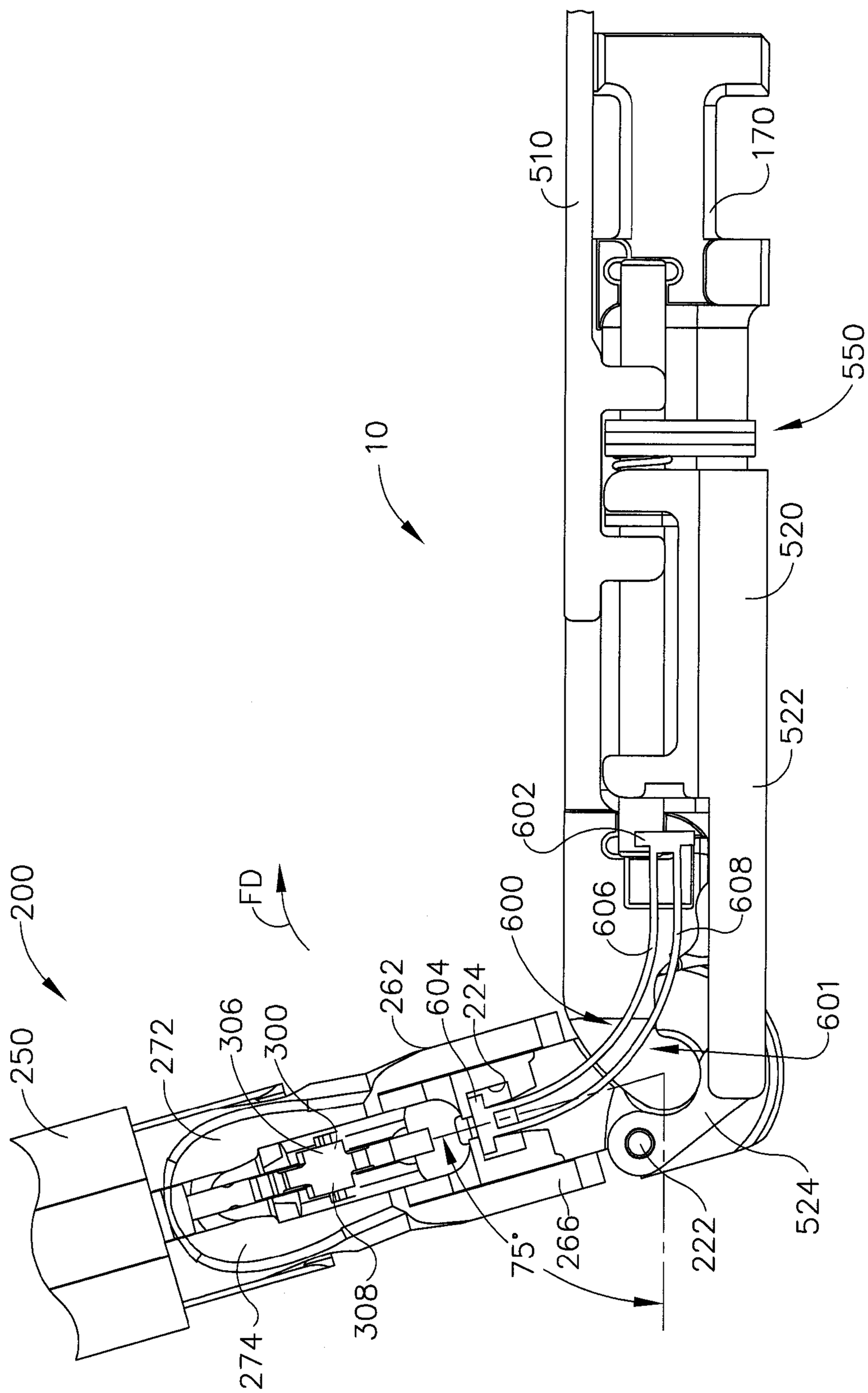
510
170
550
10
520
522
602
606
608
600
601
FD
200
250
272
306
300
262
604
224
524
222
266
75°
308
274

FIG. 19

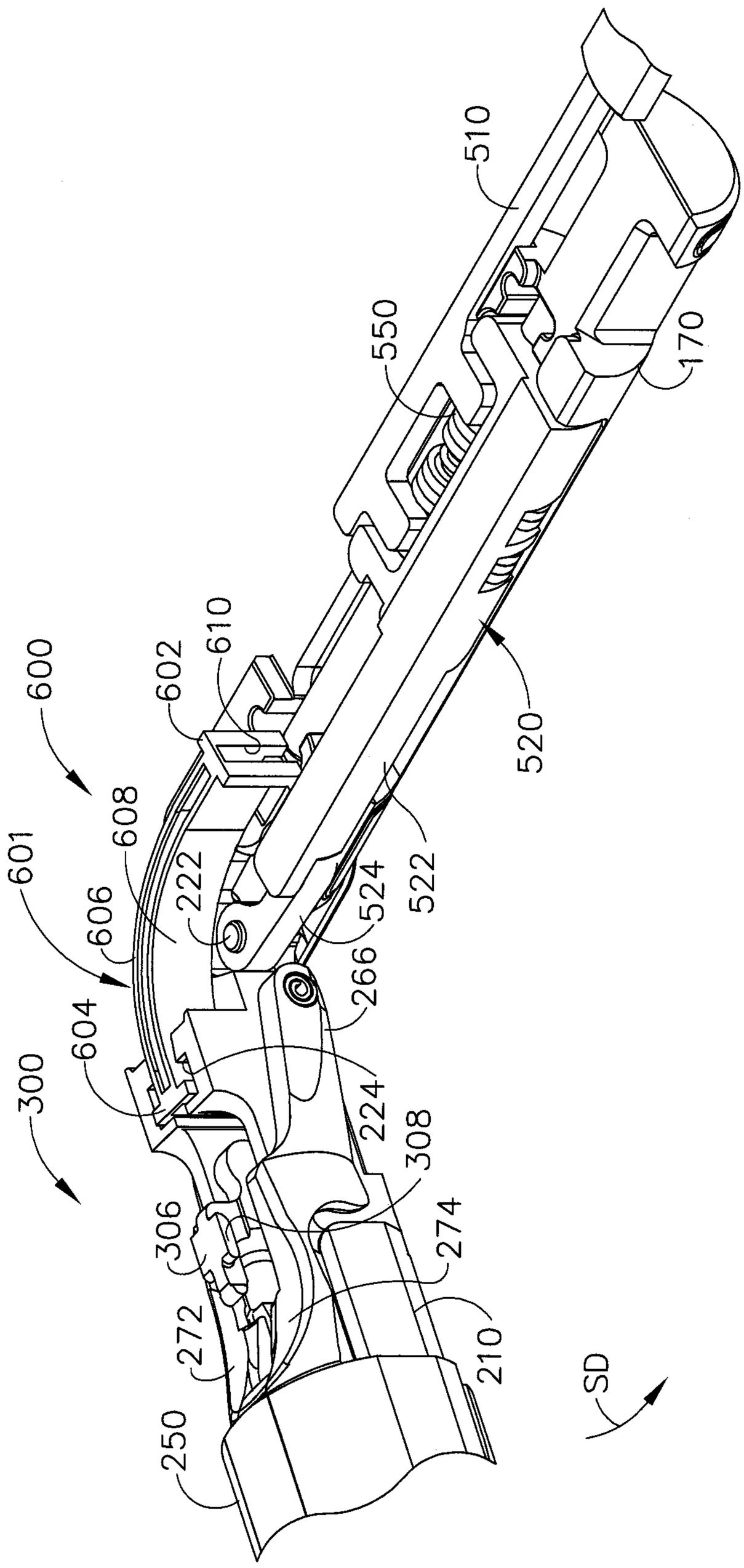
510
550
170
600
602
610
520
601
608
606
222
524
522
266
604
300
224
308
306
274
272
210
250
SD

FIG. 20

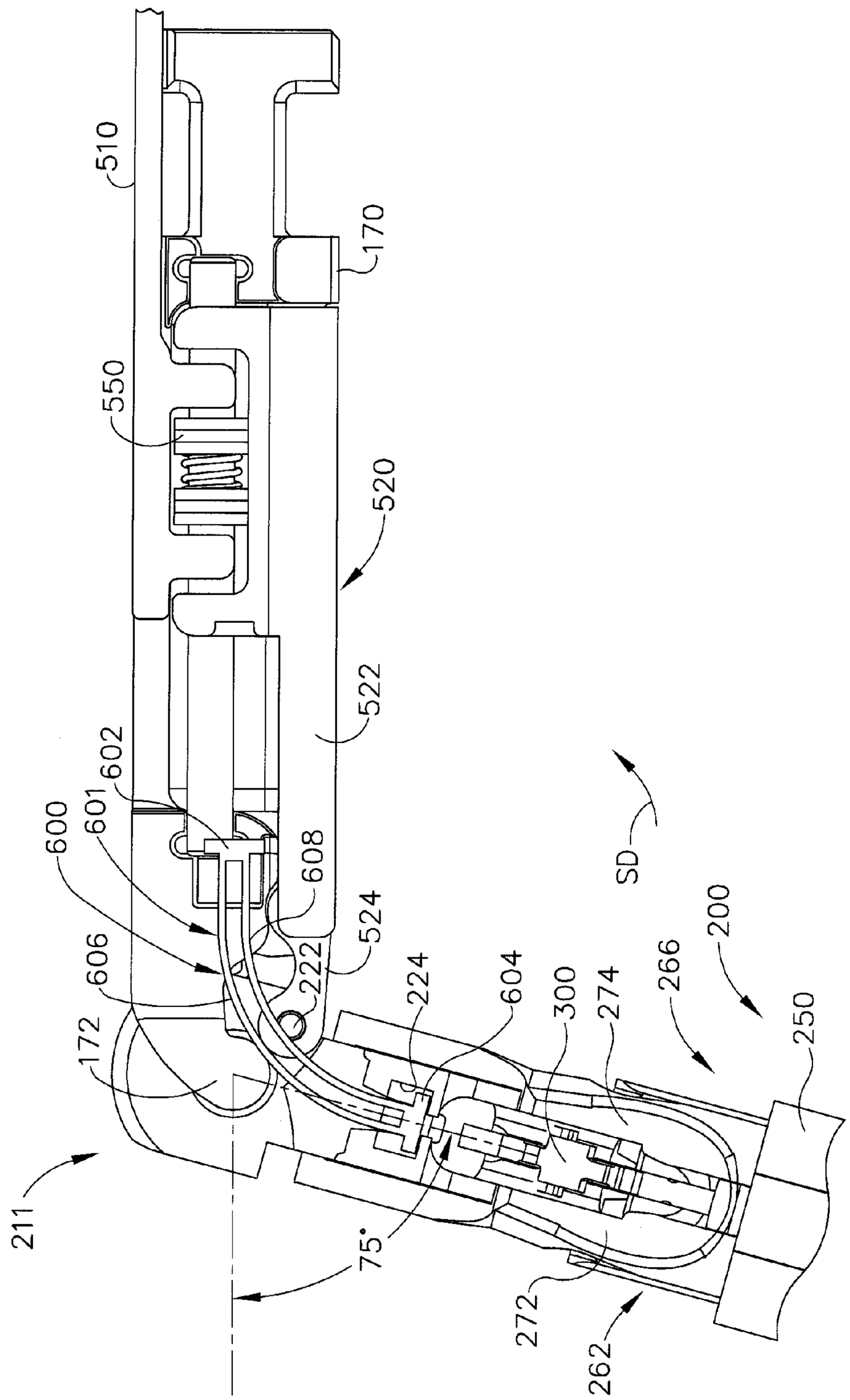
510
170
550
520
522
602
601
600
608
524
606
222
224
604
300
274
266
200
250
SD
172
211
75°
272
262

FIG. 21

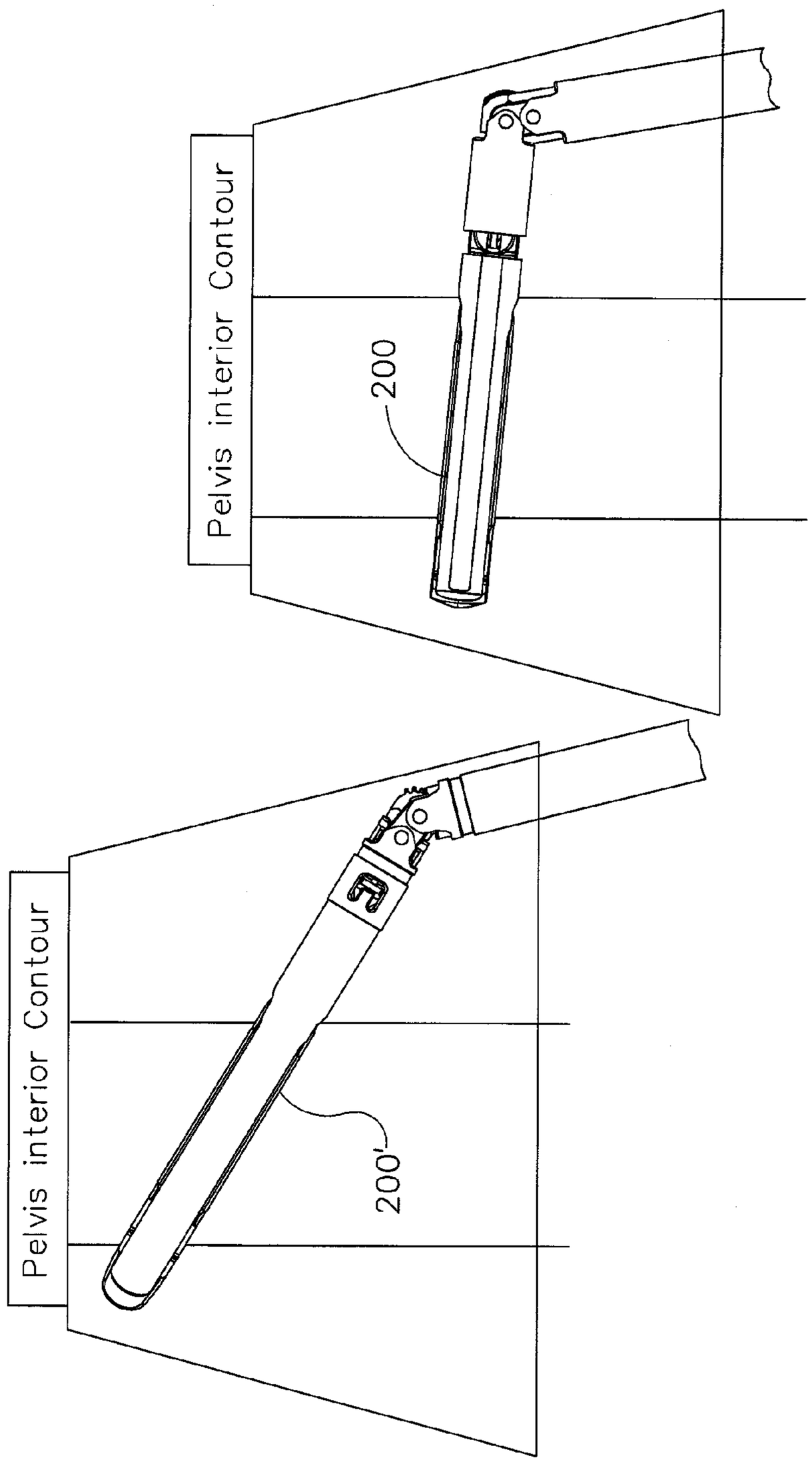

FIG. 22

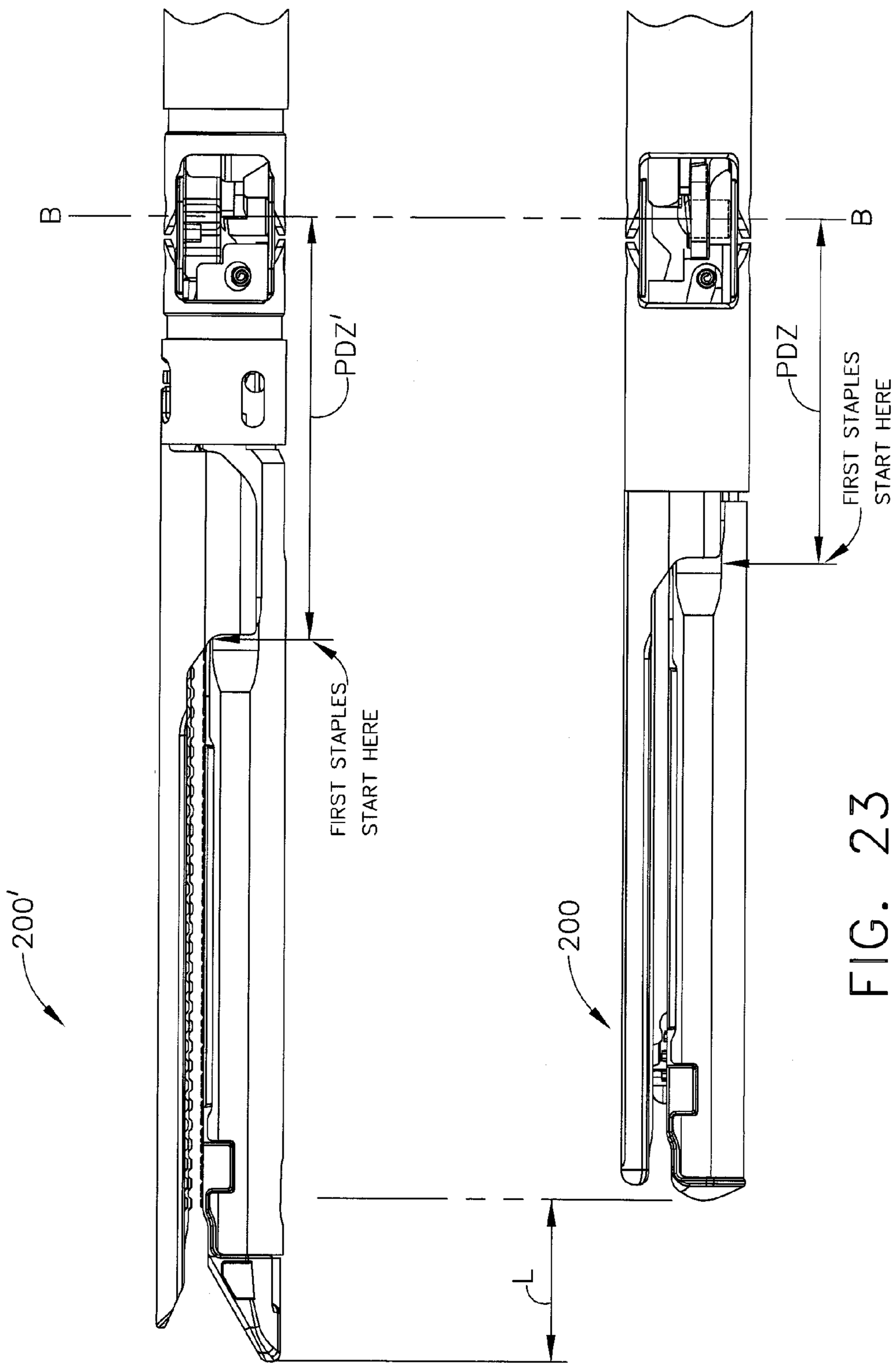
B
B
PDZ'
PDZ
FIRST STAPLES
START HERE
FIRST STAPLES
START HERE
200'
200
L

FIG. 23

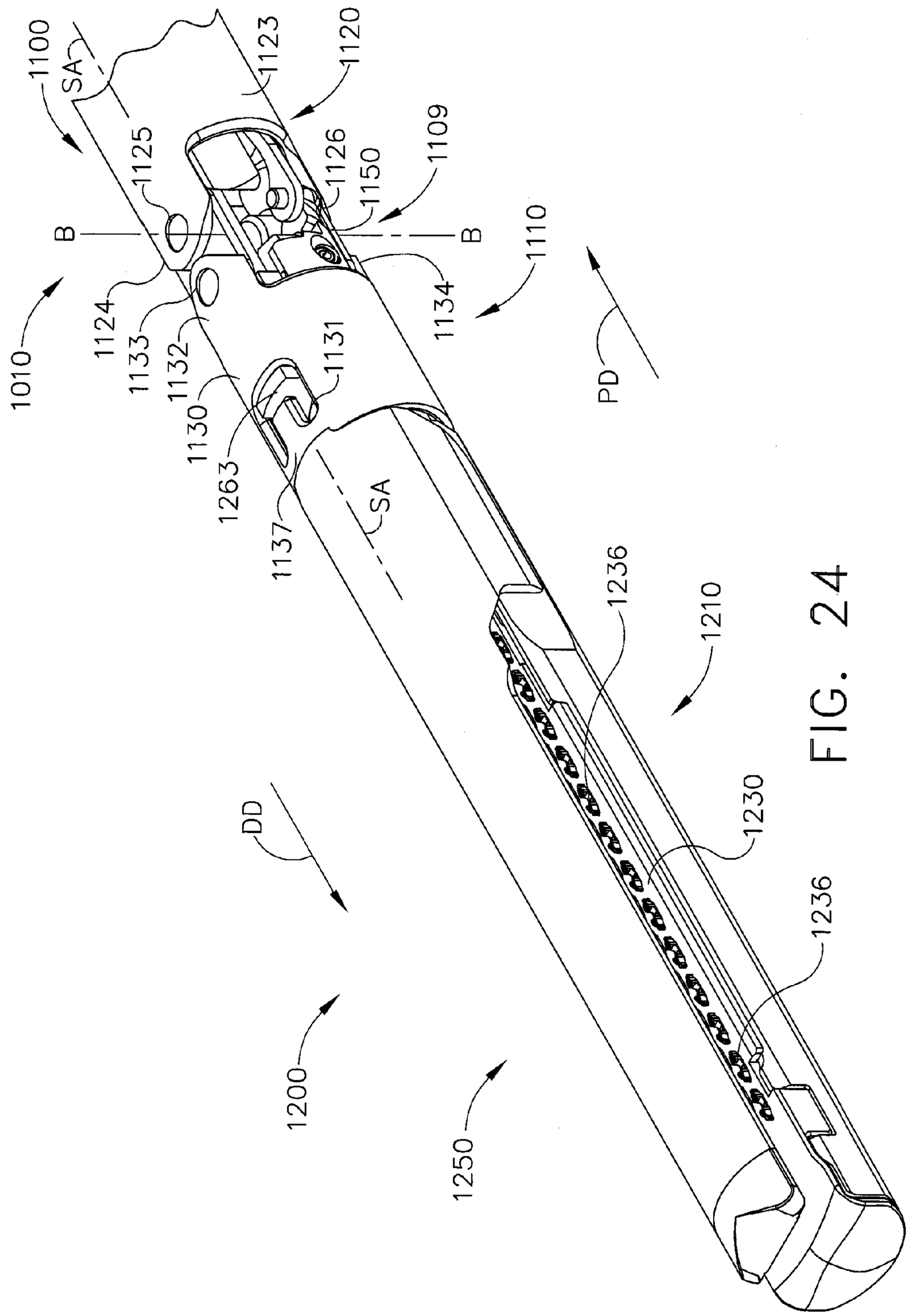
1100
SA
1123
1120
1125
1126
1150
1109
B
B
1110
1124
1133
1132
1131
1134
1010
1130
1263
1137
SA
PD
1236
1210
DD
1230
1236
1200
1250

FIG. 24

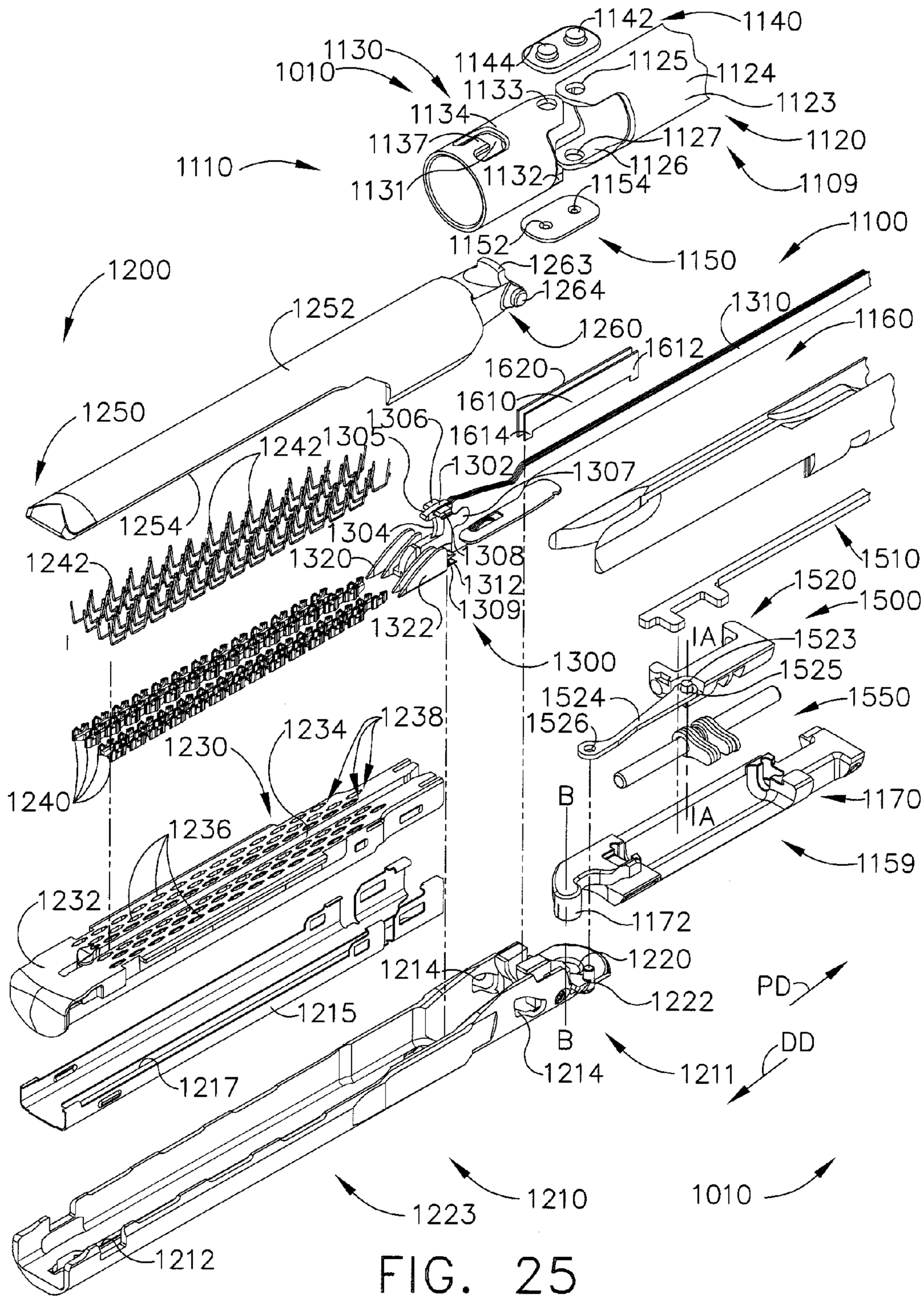
1142
1140
1130
1144
1125
1124
1010
1133
1123
1134
1137
1127
1120
1110
1132
1126
1131
1154
1109
1100
1152
1150
1200
1263
1264
1310
1252
1260
1160
1612
1620
1610
1250
1306
1614
1242
1305
1302
1307
1254
1304
1510
1242
1320
1308
1312
1520
1500
1309
1322
IA
1523
1300
1525
1524
1550
1526
1234
1238
1230
1240
B
1170
IA
1236
1159
1232
1172
1220
1214
PD
1222
1215
B
DD
1214
1211
1217
1210
1010
1223
1212

FIG. 25

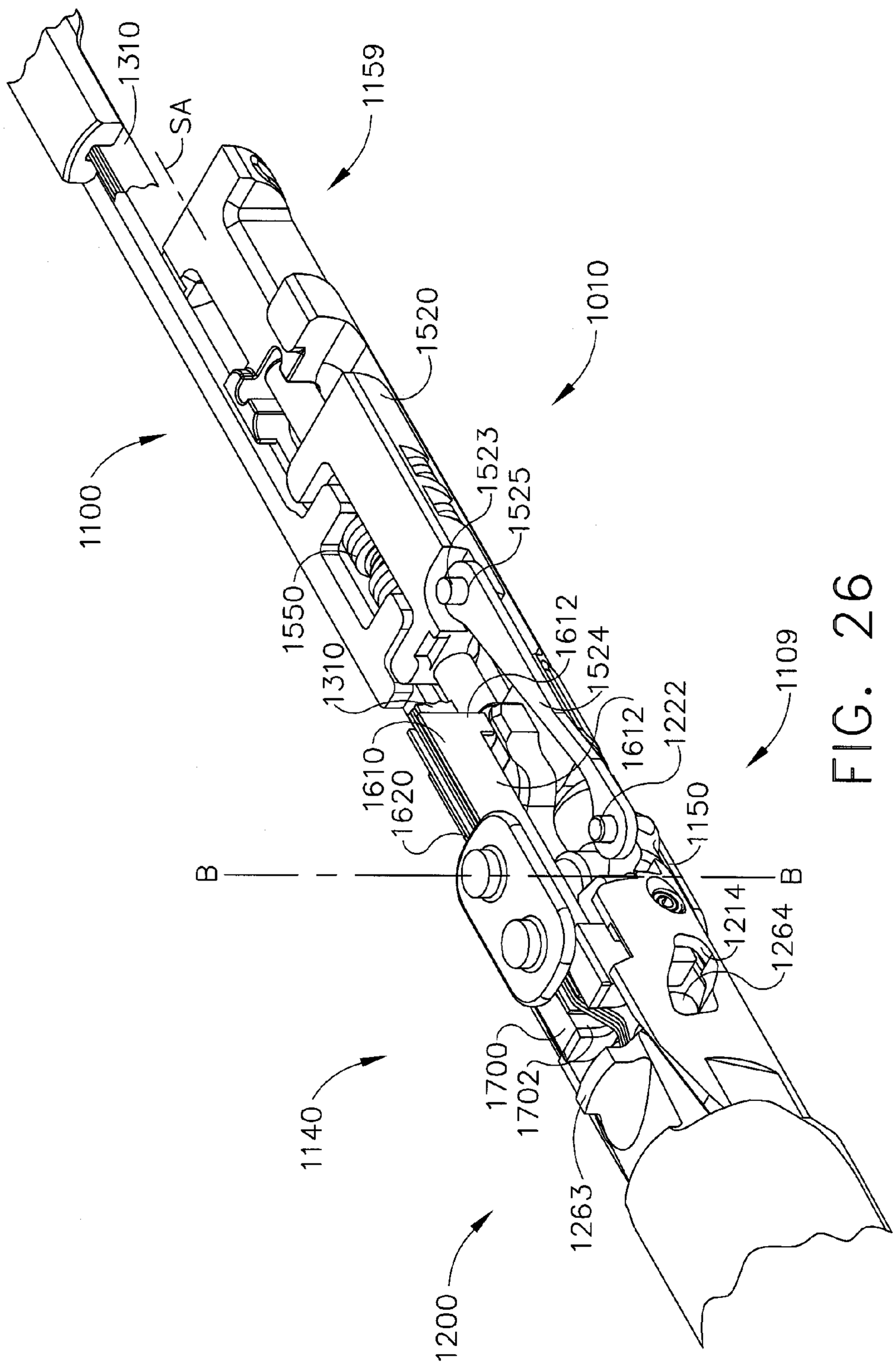
1310
SA
1159
1520
1010
1100
1523
1525
1550
1310
1612
1524
1222
1612
1109
1610
1620
1150
B
B
1214
1264
1700
1702
1140
1263
1200

FIG. 26

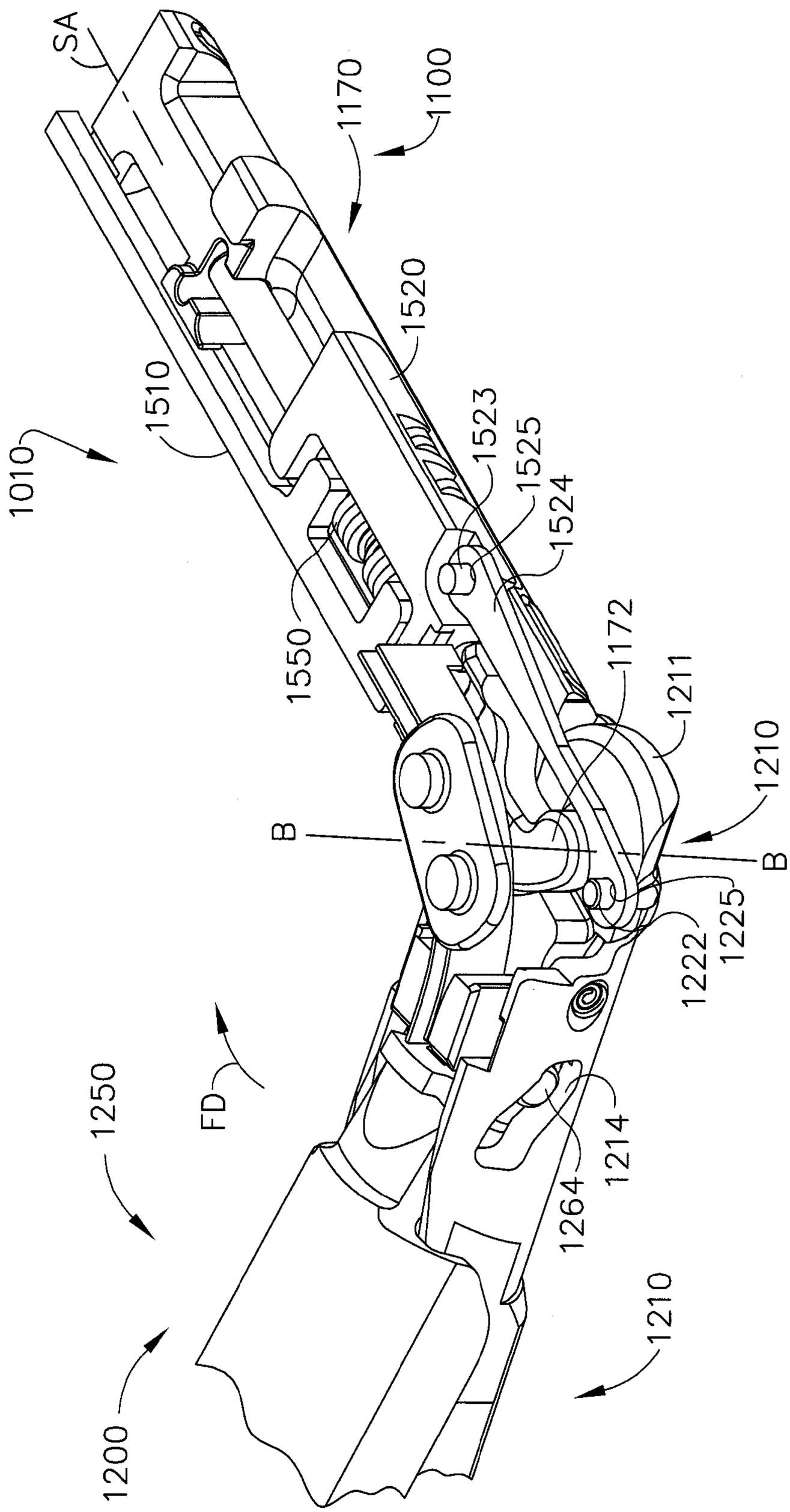
SA
1170
1100
1520
1510
1010
1523
1525
1524
1550
1172
1211
1210
B
B
1225
1222
FD
1250
1214
1264
1210
1200

FIG. 27

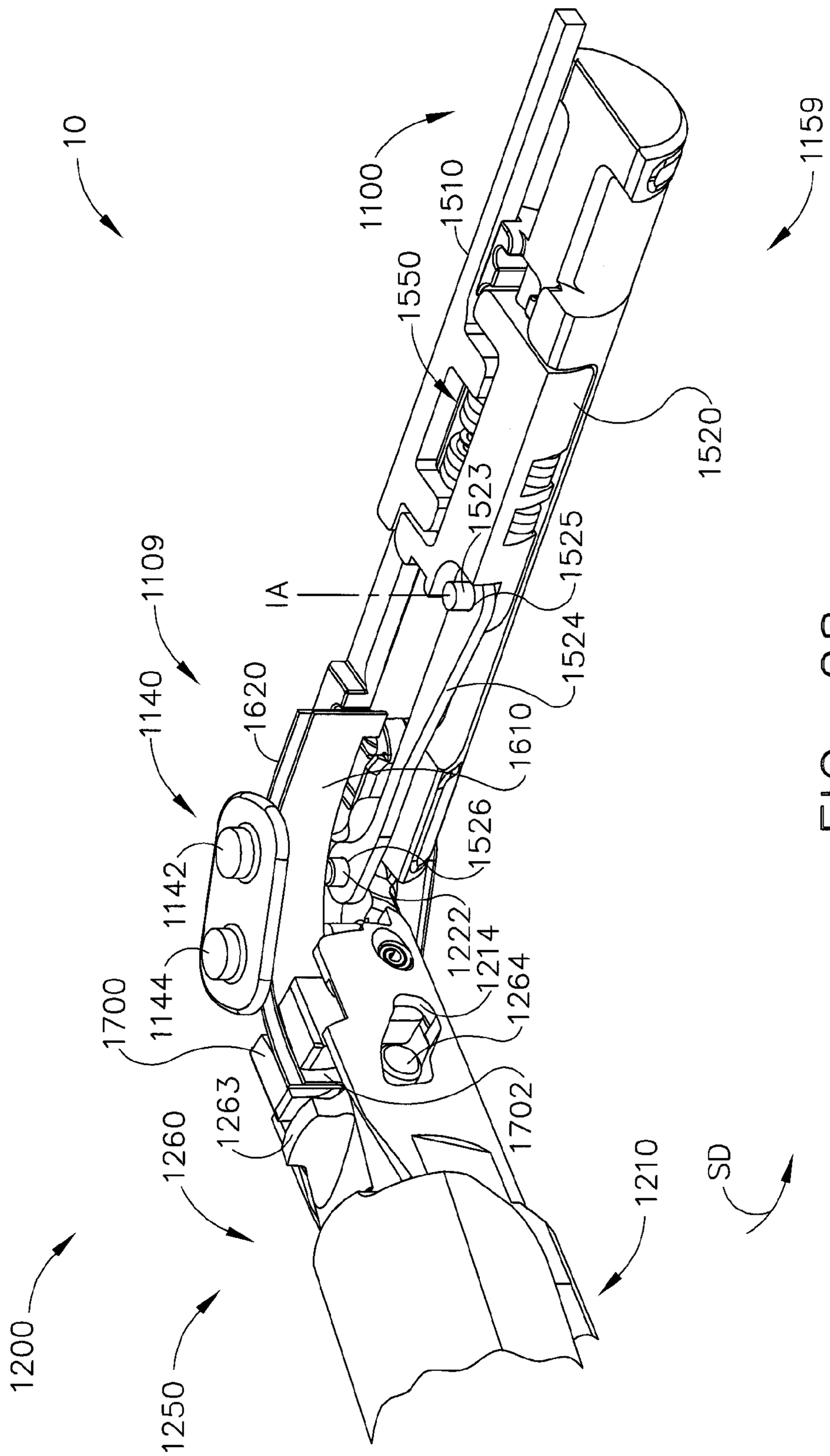
10
1100
1510
1550
1159
1520
1523
1525
1524
1610
1526
1222
1214
1264
1702
IA
1109
1140
1620
1142
1144
1700
1263
1260
1250
1200
1210
SD

FIG. 28

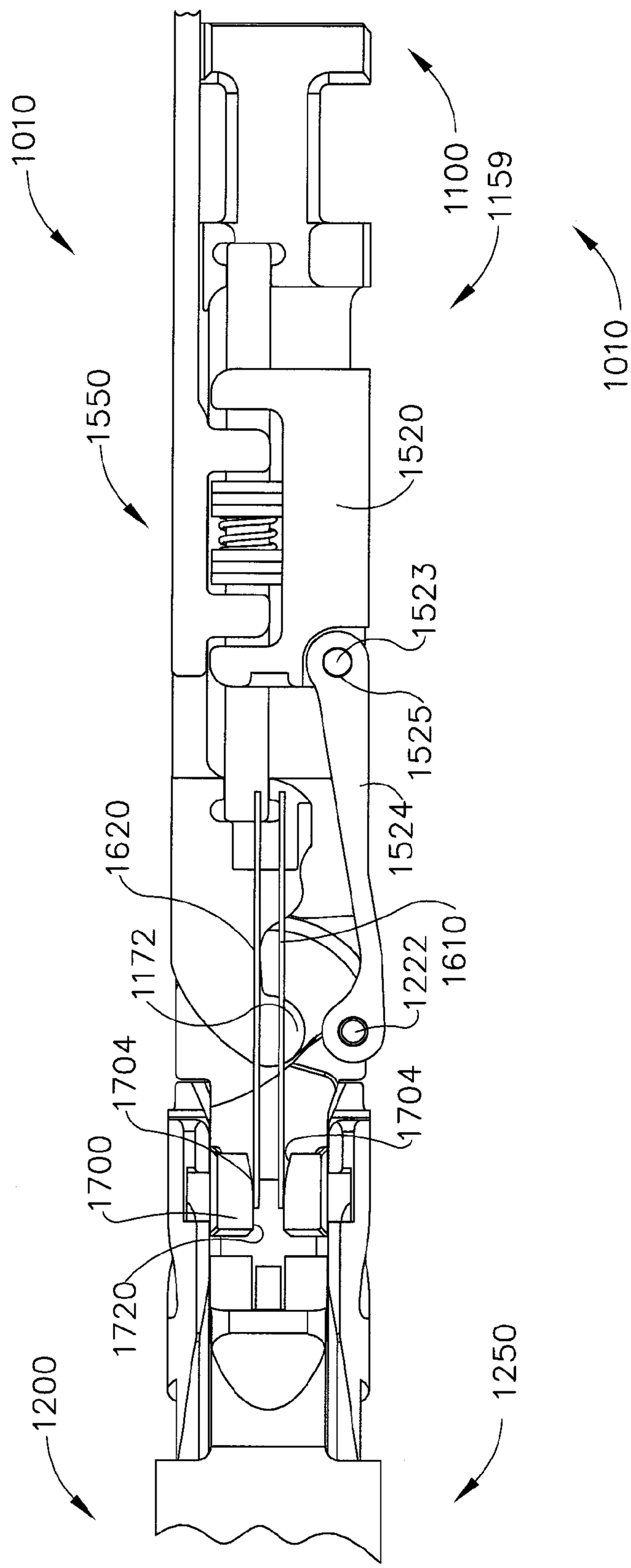
1010
1550
1100
1159
1010
1520
1523
1525
1524
1620
1172
1222
1610
1704
1704
1700
1720
1200
1250

FIG. 29

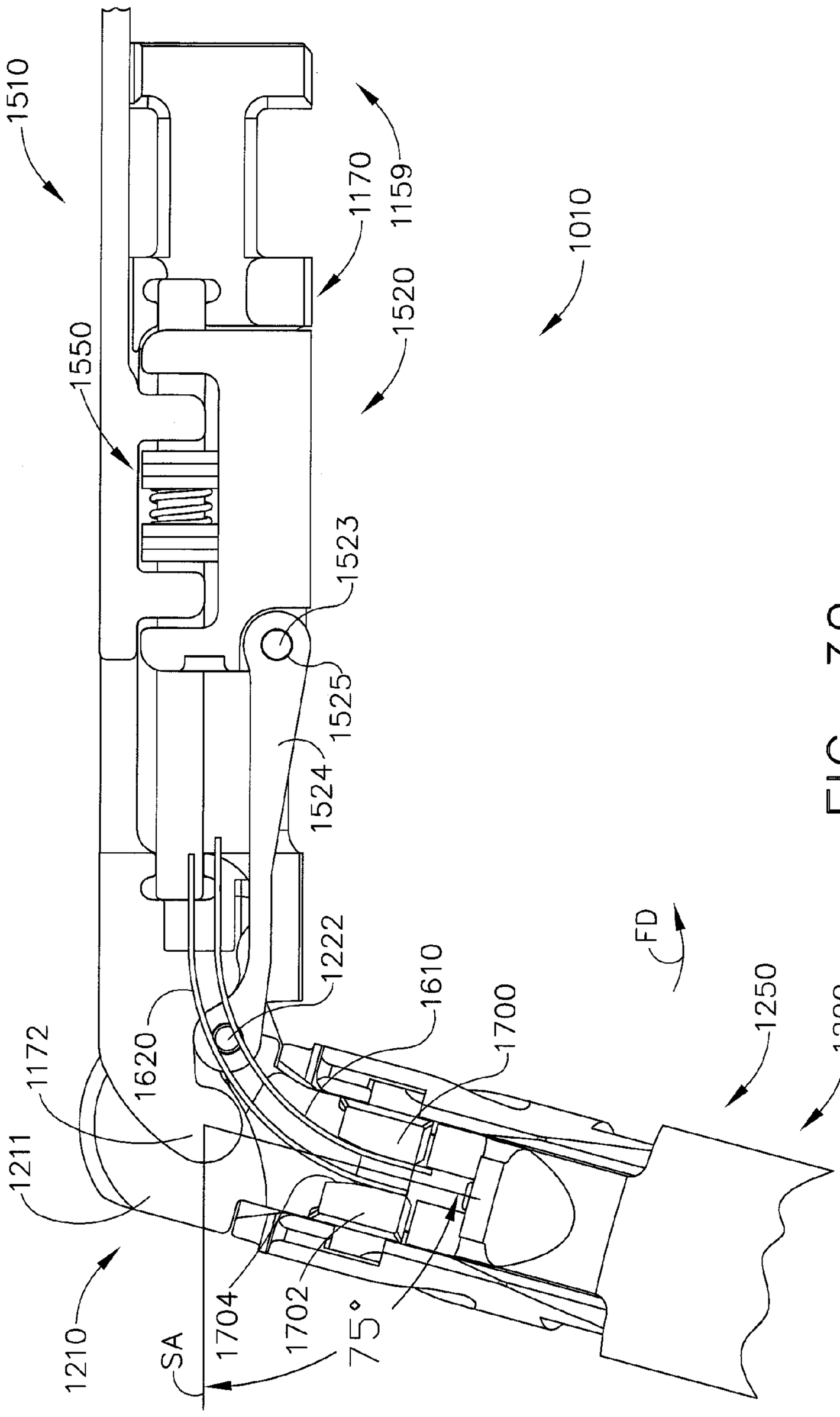
1510
1550
1170
1159
1520
1010
1523
1525
1524
1222
1620
1172
1211
1210
SA
1704
1702
75°
1610
1700
FD
1250
1200

FIG. 30

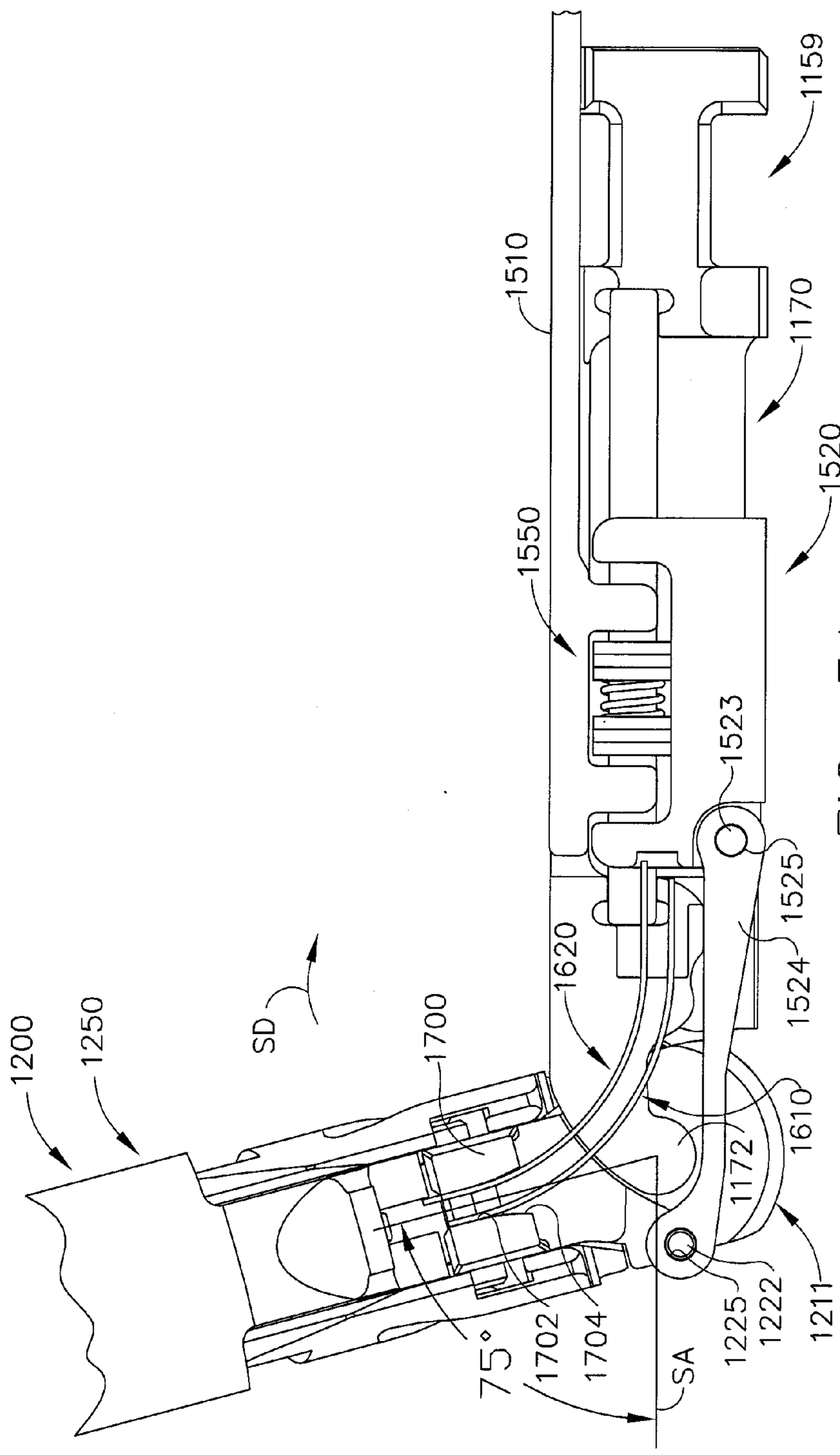
1159
1510
1170
1520
1550
1523
1525
1524
1620
1610
1172
1211
1222
1225
SA
75°
1702
1704
1700
SD
1250
1200

FIG. 31

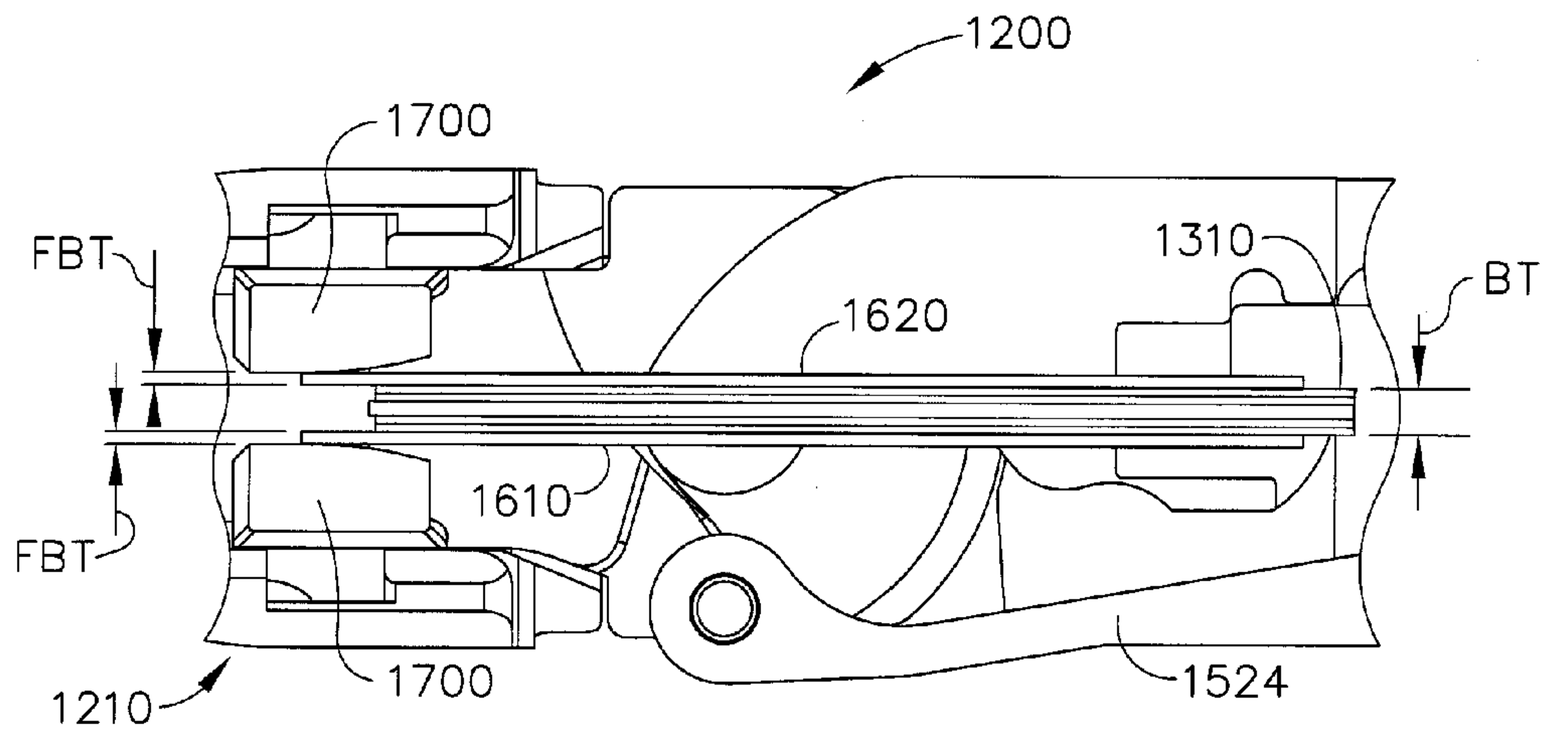
1200
1700
FBT
1310
BT
1620
1610
FBT
1210
1700
1524

FIG. 32

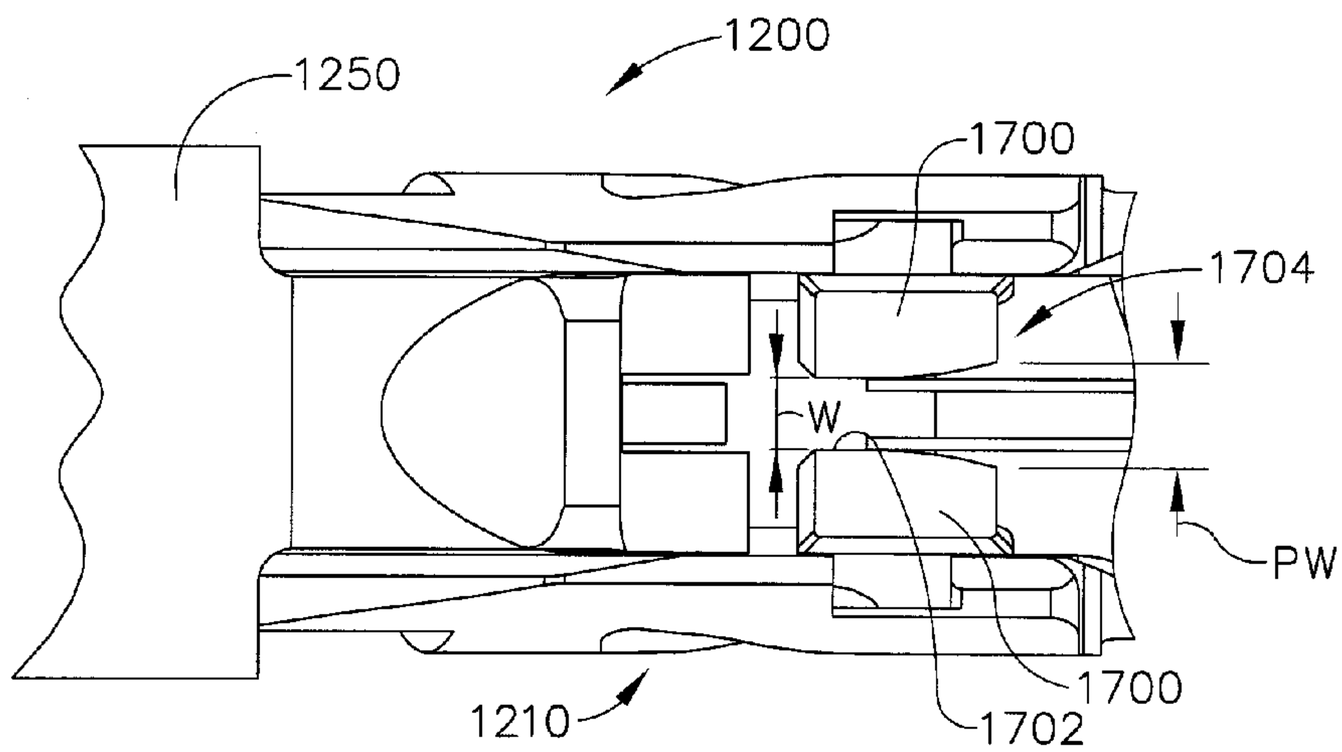
1200
1250
1700
1704
W
PW
1700
1210
1702

FIG. 33

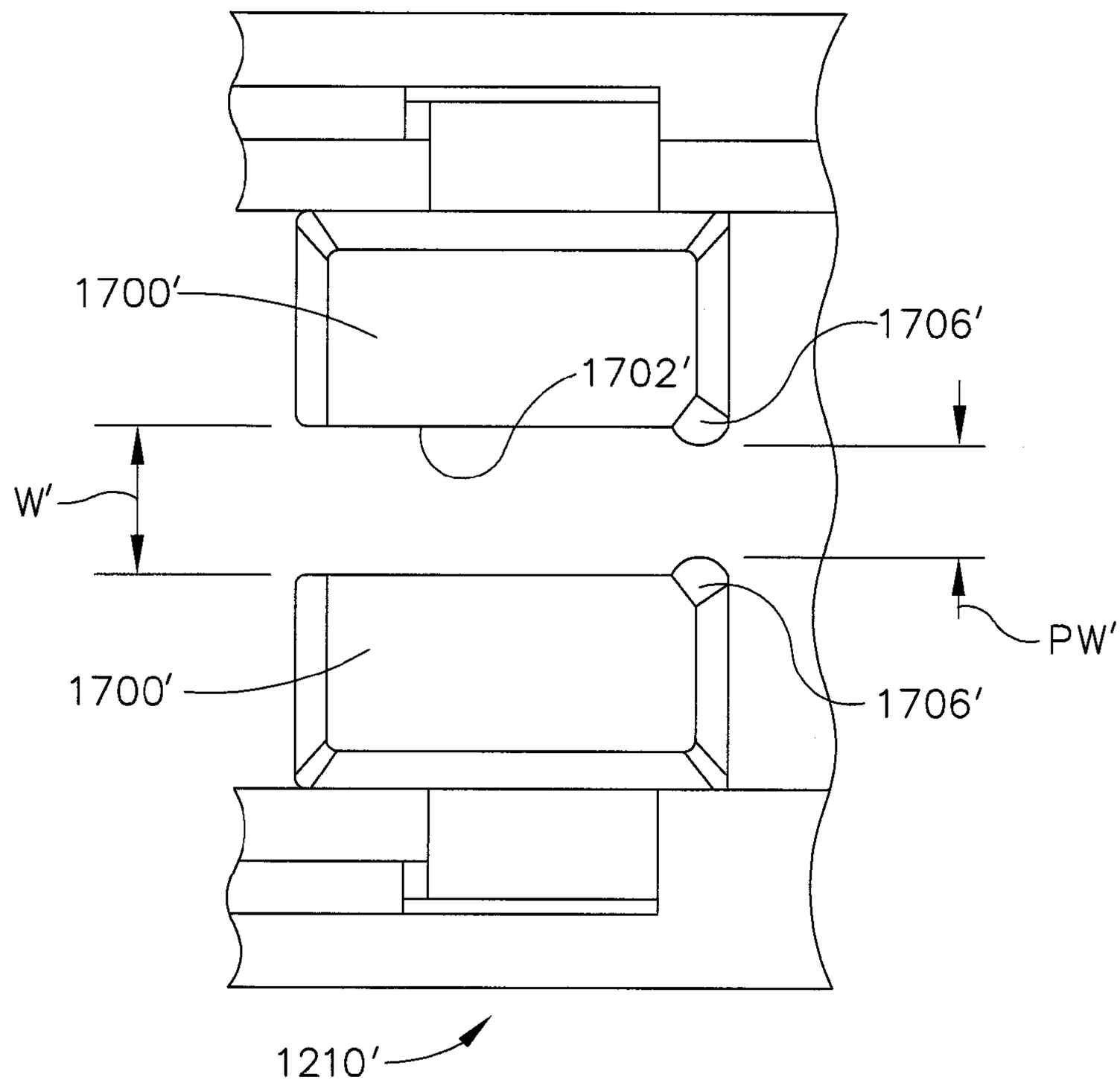

FIG. 34

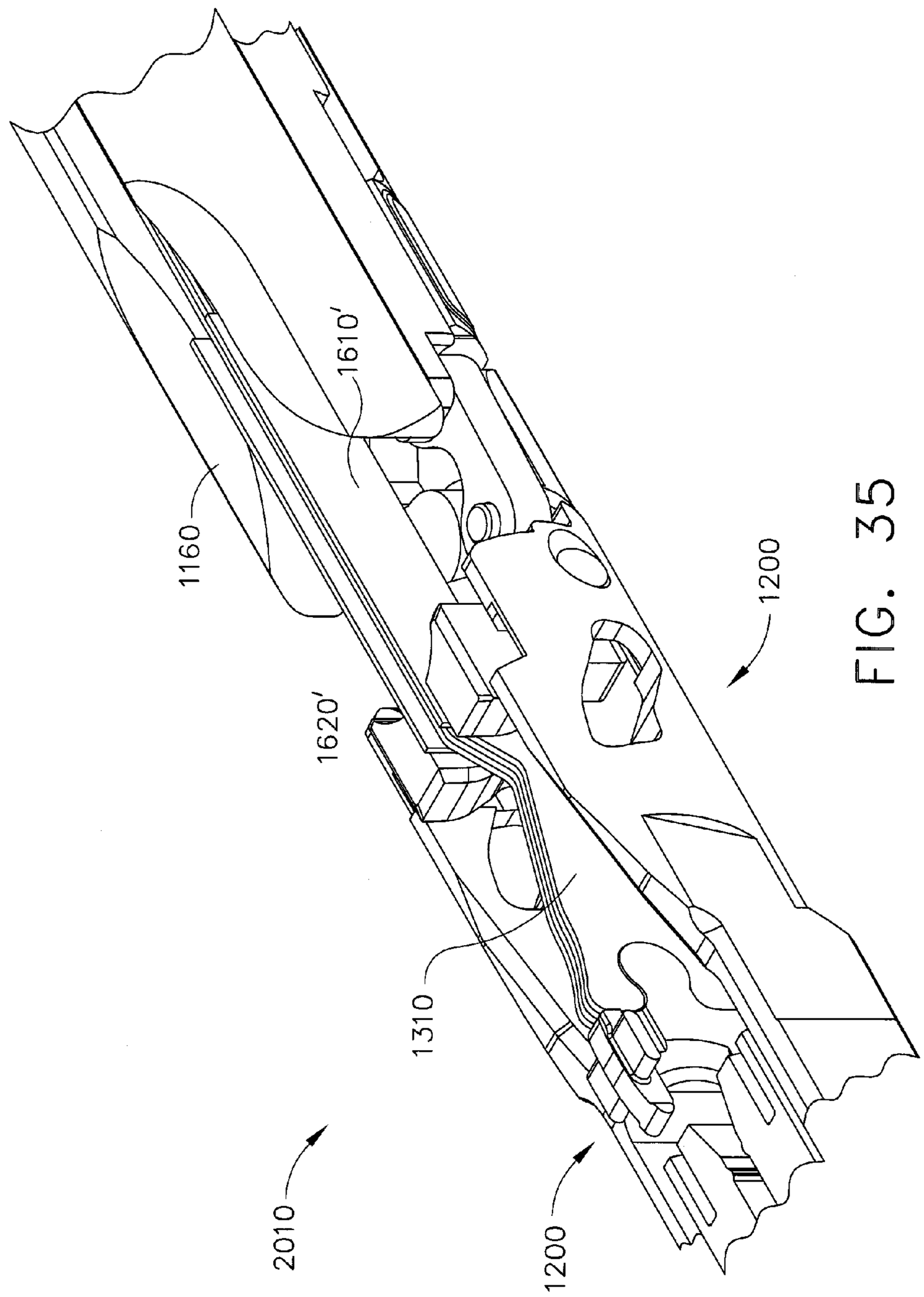

FIG. 35

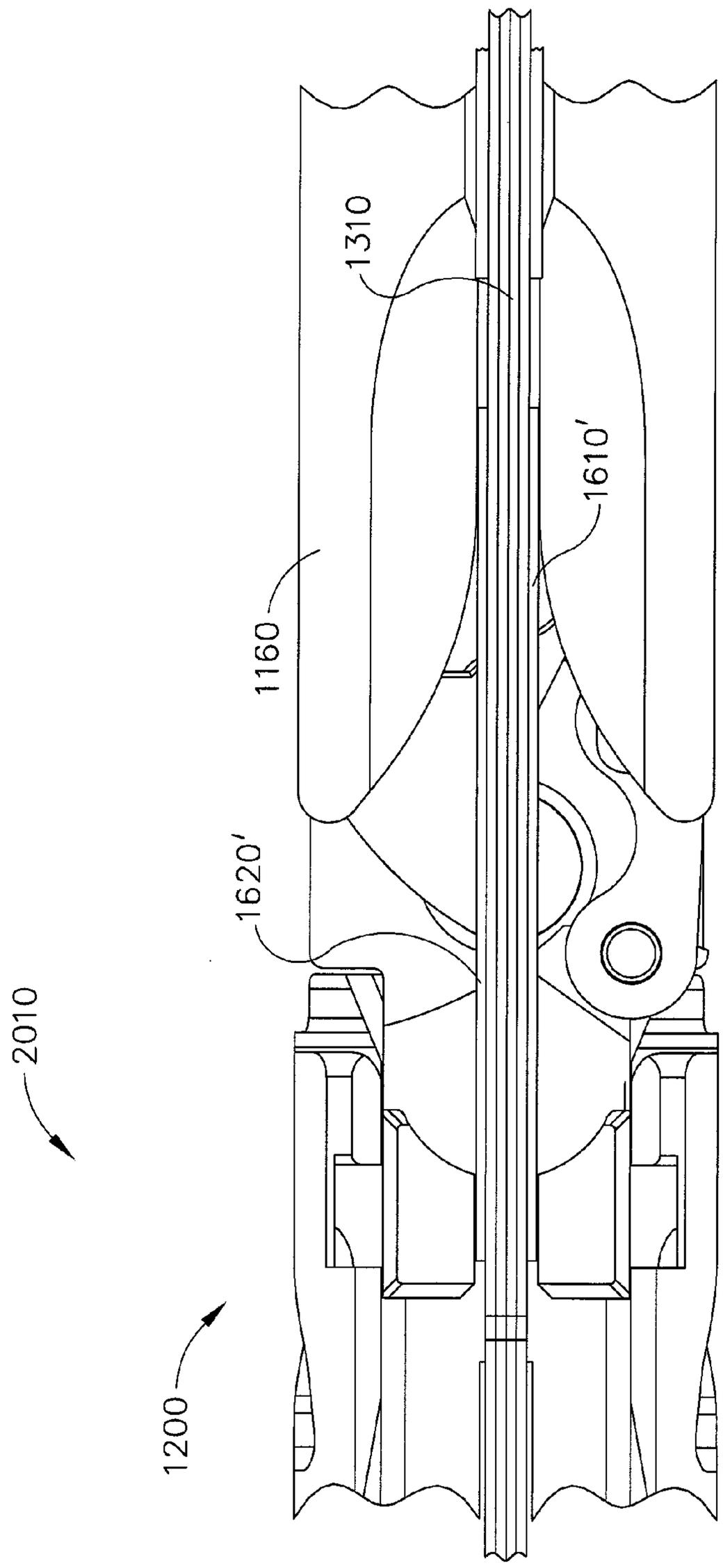

FIG. 36

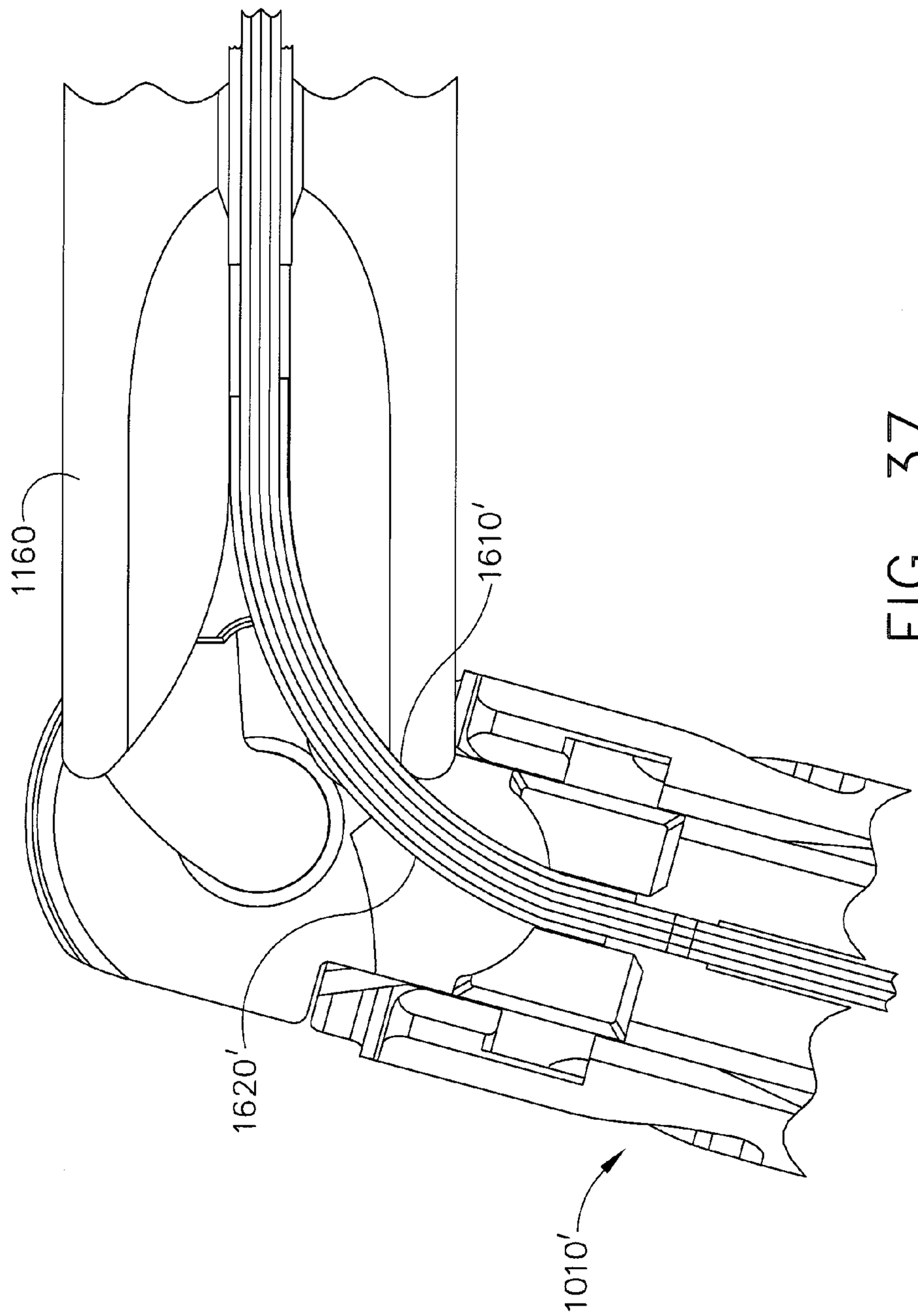

FIG. 37

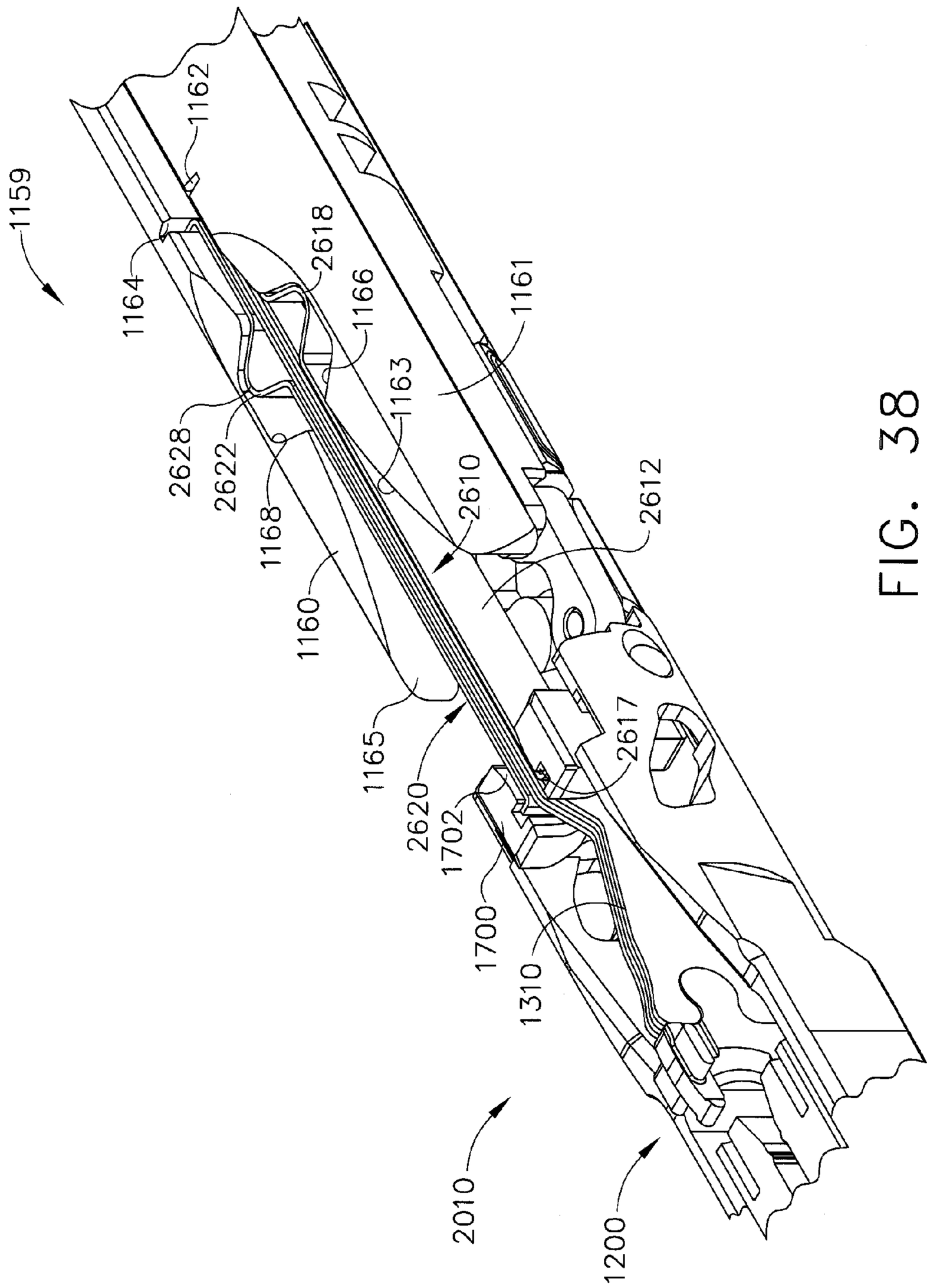
1159
1162
1164
2618
1166
1161
1163
2628
2622
1168
2610
2612
1160
1165
2620
2617
1702
1700
1310
2010
1200

FIG. 38

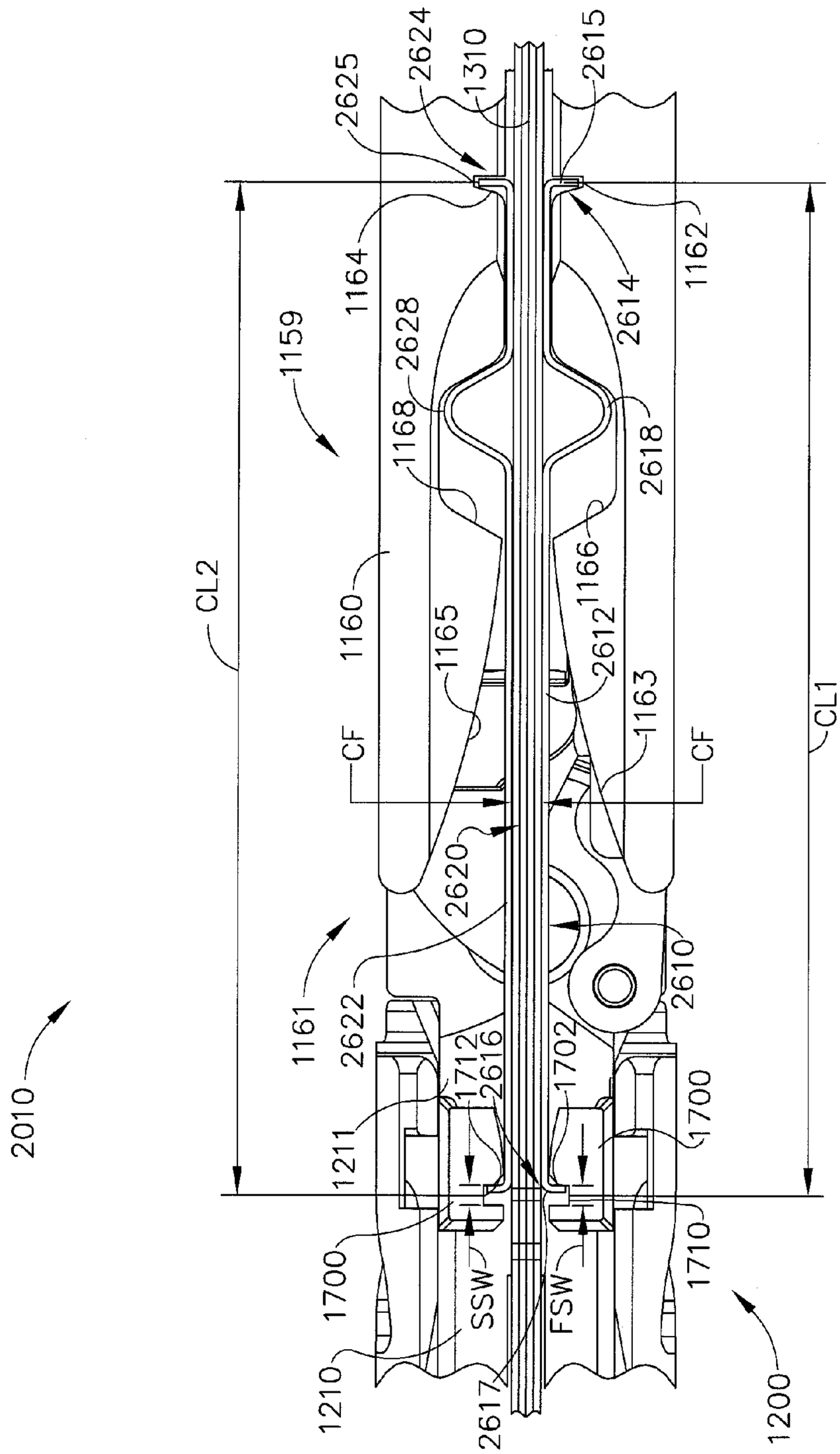
2625
2624
1310
2615
1164
1162
2614
1159
2628
1168
2618
1166
CL2
1160
1165
2612
1163
CF
CF
CL1
2620
2610
1161
2622
2010
1712
2616
1702
1700
1211
1700
1710
SSW
FSW
1210
2617
1200

FIG. 39

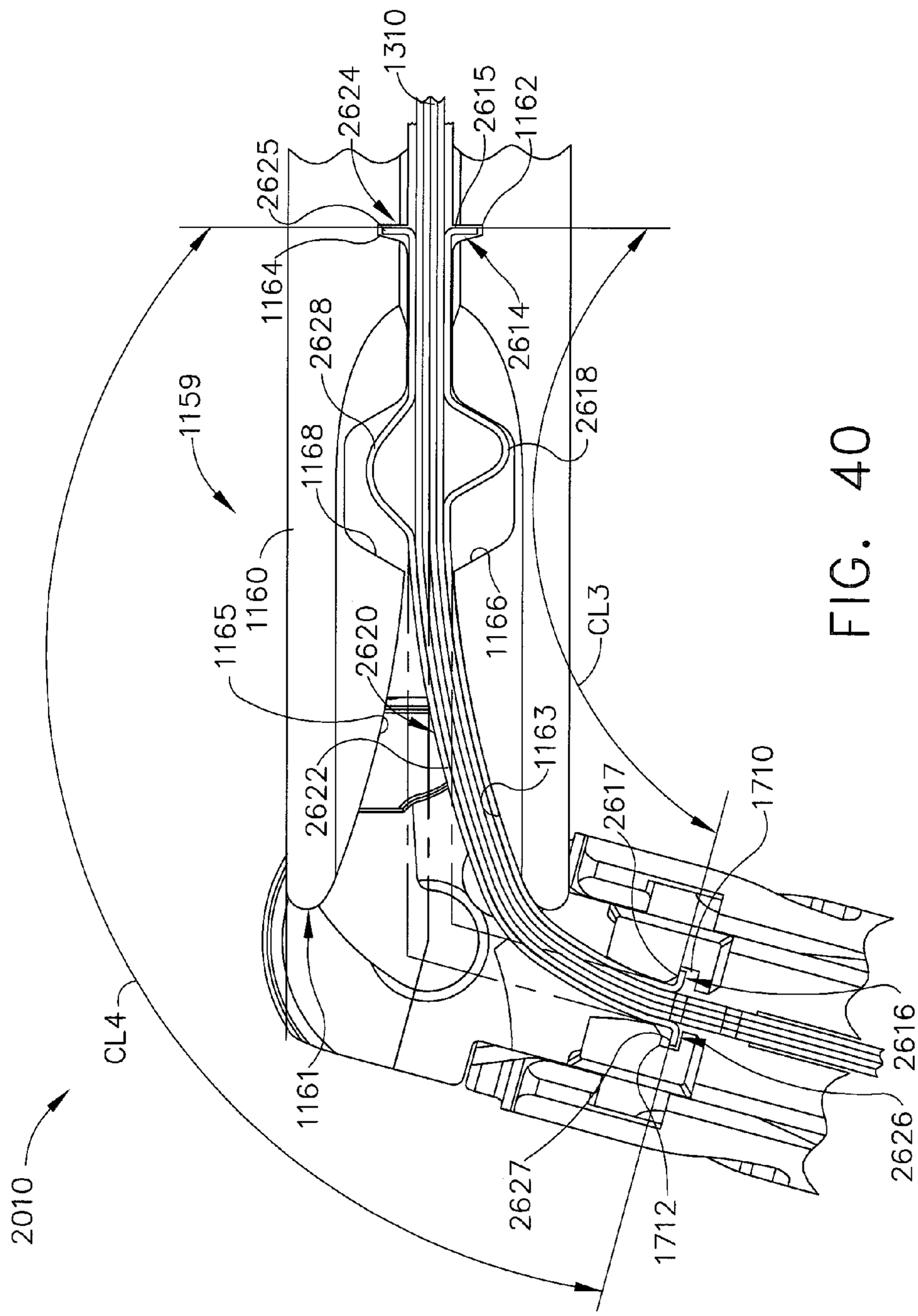
2010
1159
1160
1161
1162
1163
1164
1165
1166
1168
1310
1710
1712
2614
2615
2616
2617
2618
2620
2622
2624
2625
2626
2627
2628
CL3
CL4

FIG. 40

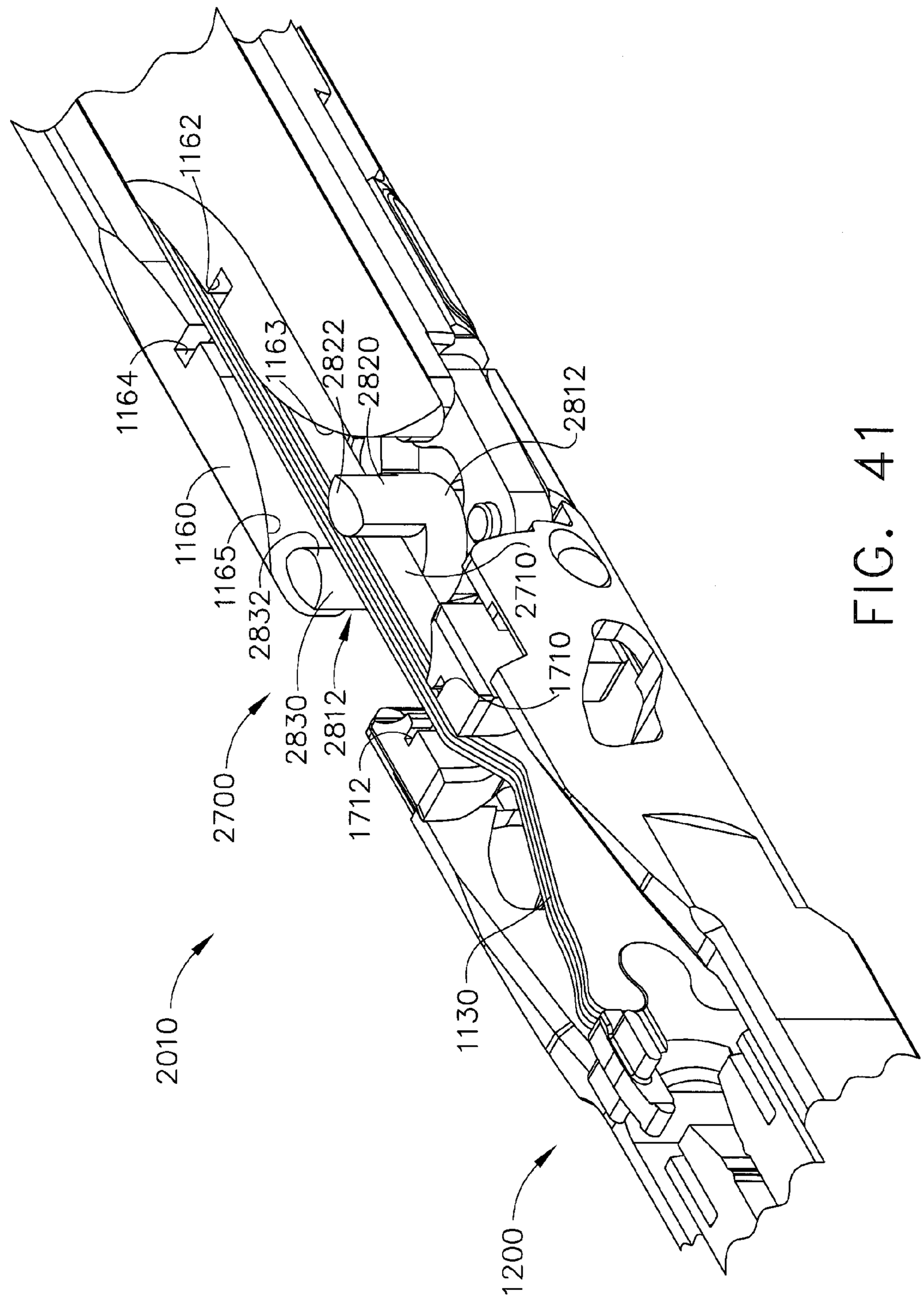
1162
1164
1163
2822
2820
2812
1160
1165
2832
2710
1710
2830
2812
2700
1712
2010
1130
1200

FIG. 41

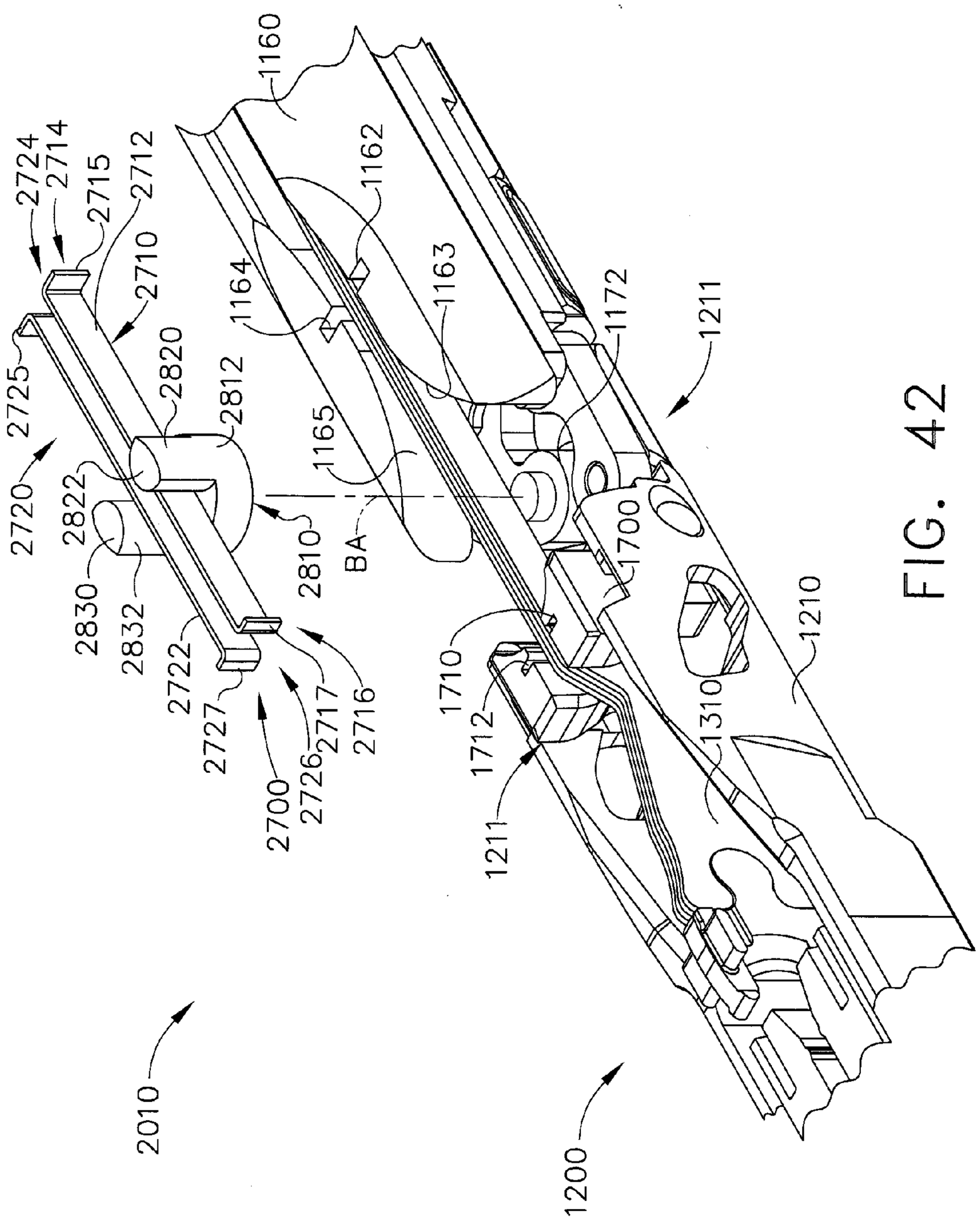
2724
2714
2715
2712
2710
2725
2720
2820
2812
2822
2830
2832
2722
2727
2700
2726
2717
2716
2810
BA
1165
1164
1162
1160
1163
1172
1211
1700
1710
1712
1211
1310
1210
2010
1200

FIG. 42

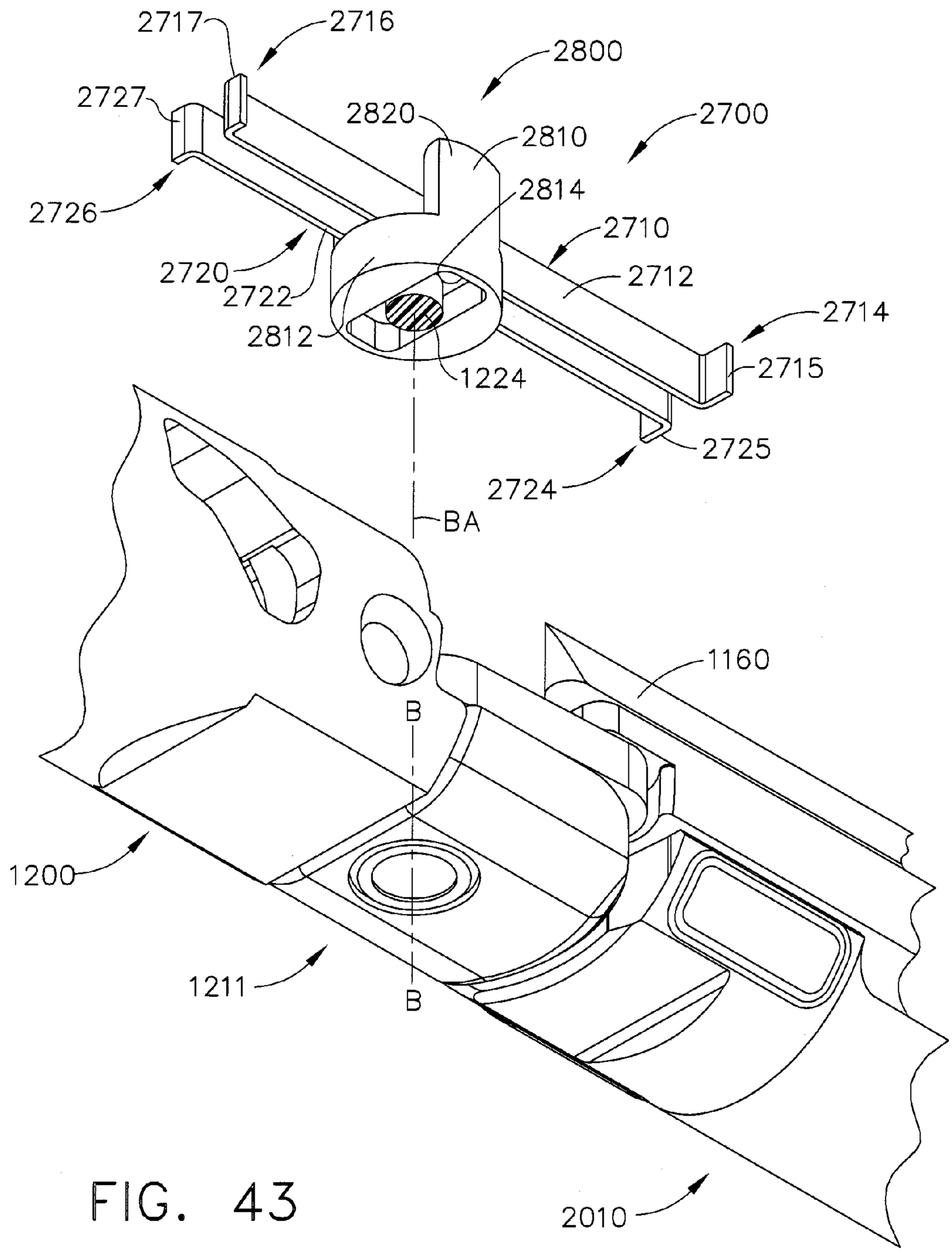
2717
2716
2800
2727
2820
2810
2700
2814
2726
2710
2720
2722
2712
2714
2812
1224
2715
2725
2724
BA
1160
B
1200
1211
B
2010

FIG. 43

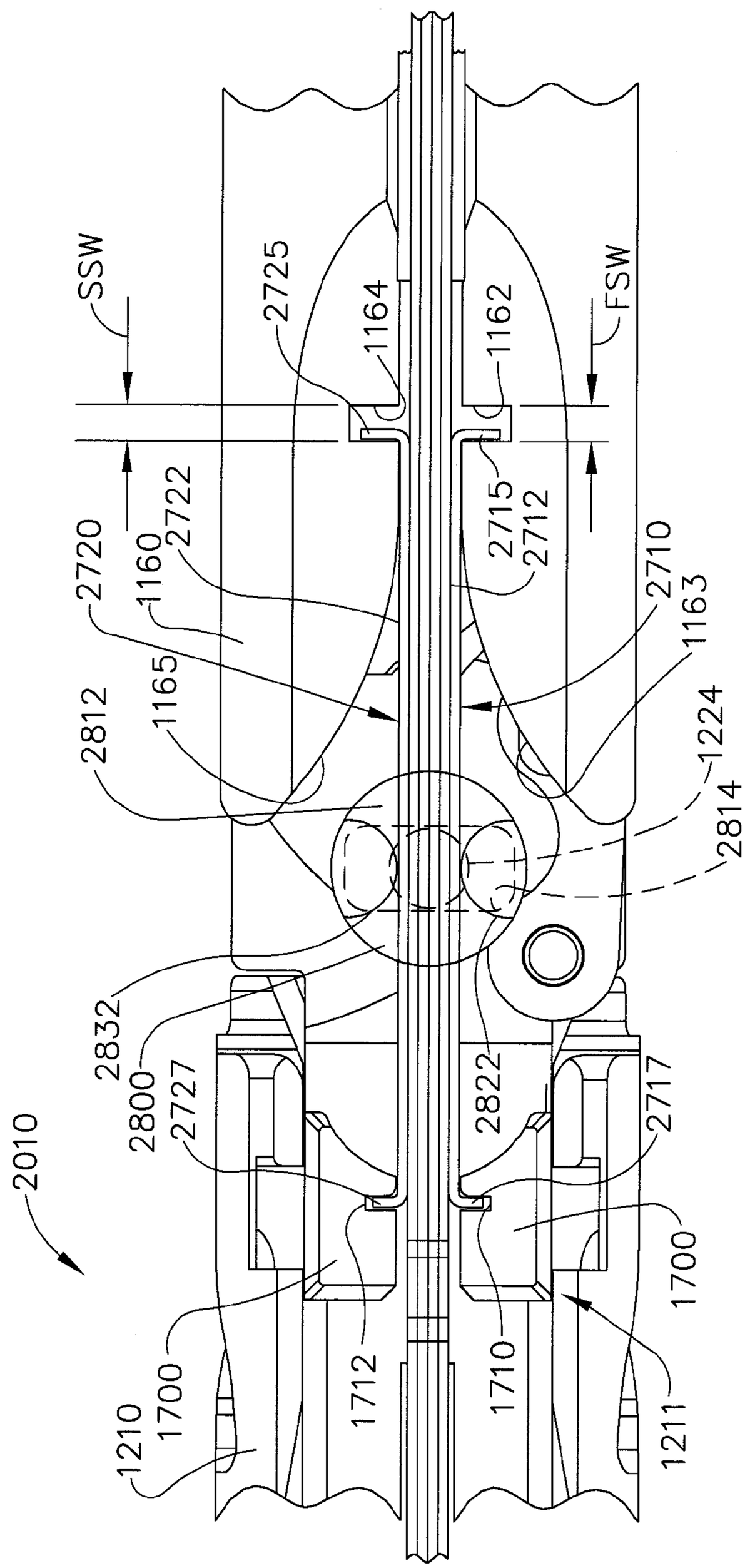
SSW
FSW
2725
1164
1162
2720
1160
2722
2715
2712
2710
1163
2812
1165
1224
2814
2832
2800
2727
2822
2717
2010
1700
1712
1710
1211
1210
1700

FIG. 44

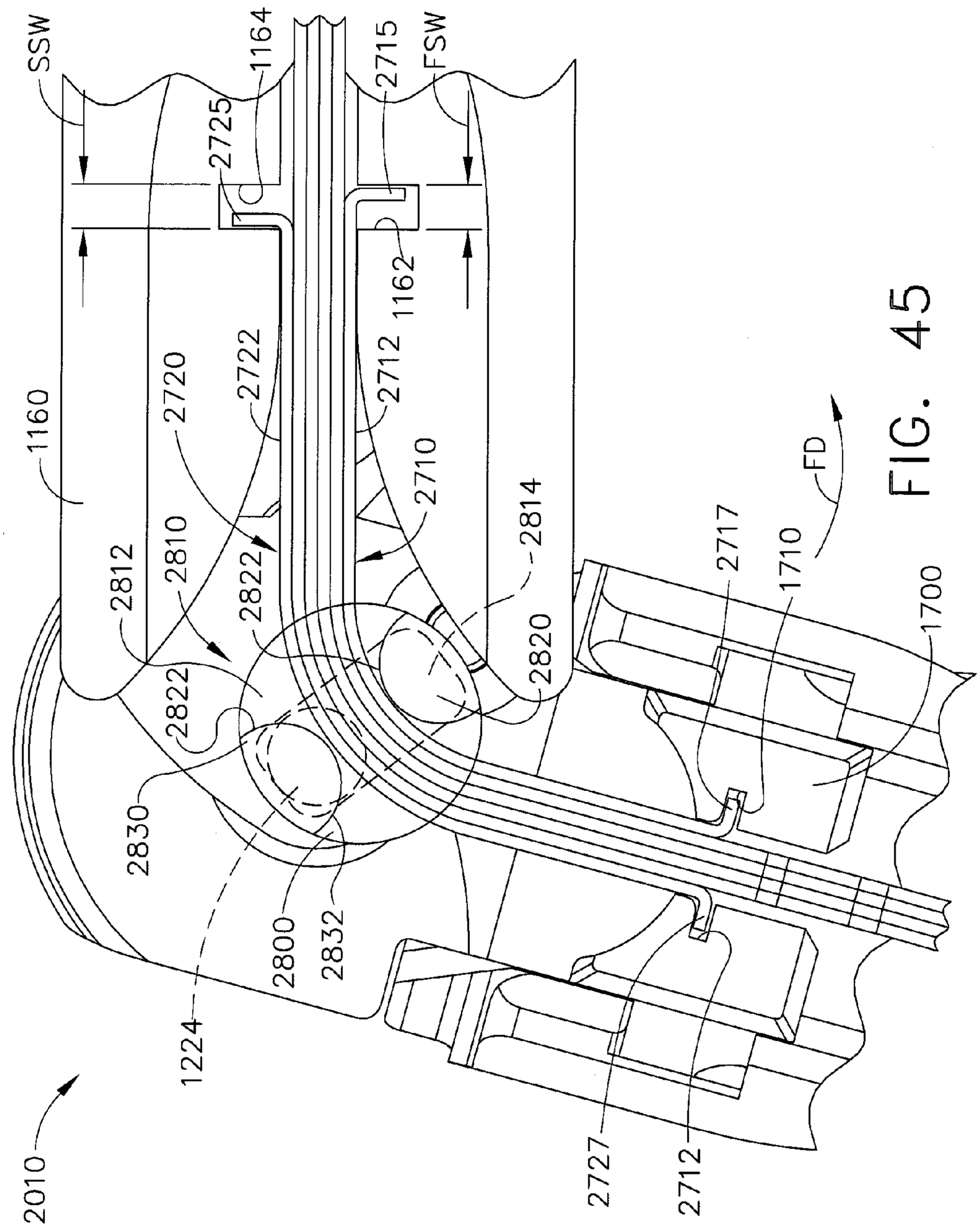
SSW
1164
2725
2715
FSW
1162
1160
2720
2722
2712
2710
2814
2812
2810
2822
2820
2822
2830
2800
2832
1224
2010
2727
2712
2717
1710
FD
1700

FIG. 45

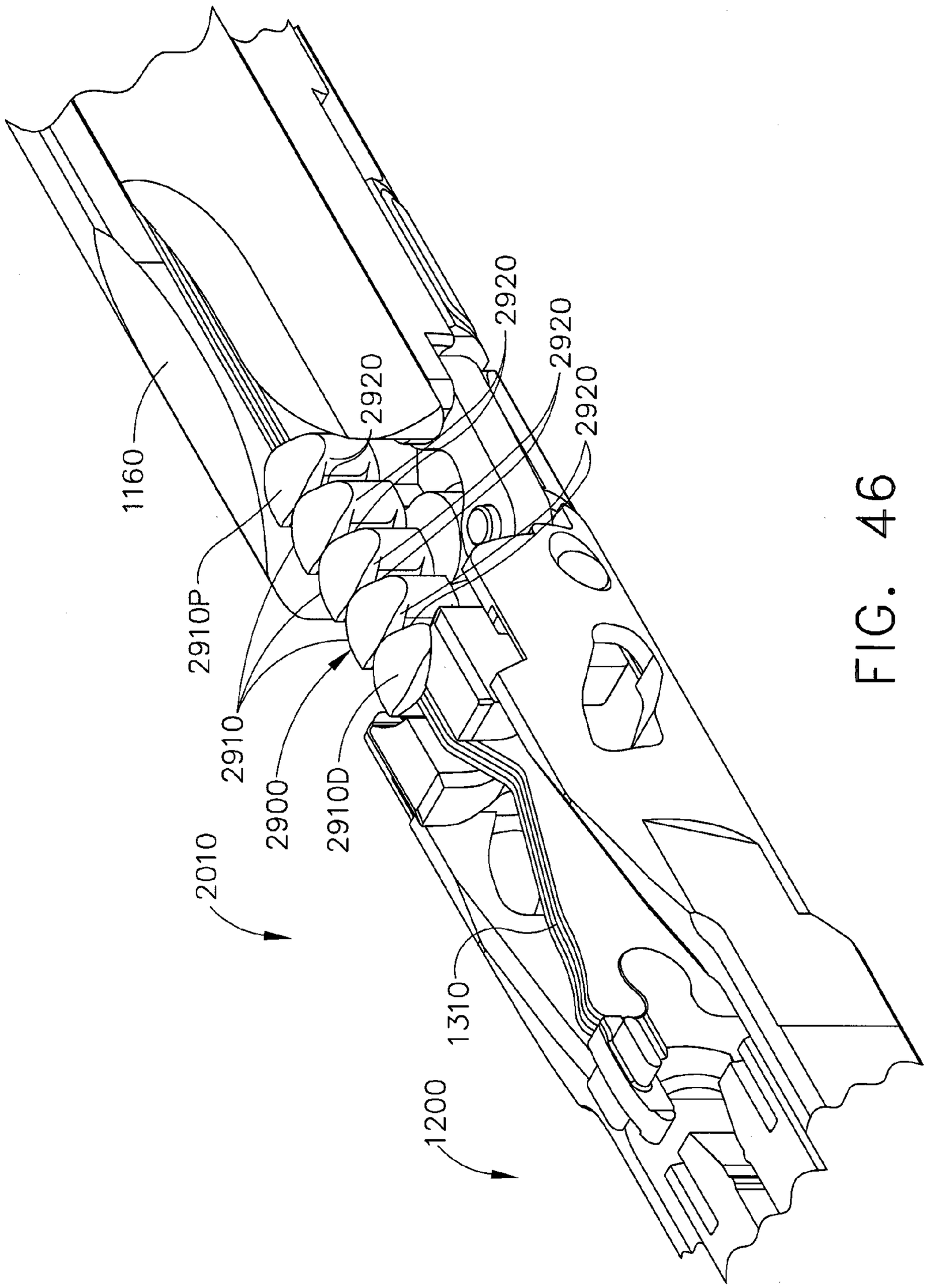
1160
2920
2920
2920
2920
2910P
2910
2900
2910D
2010
1310
1200

FIG. 46

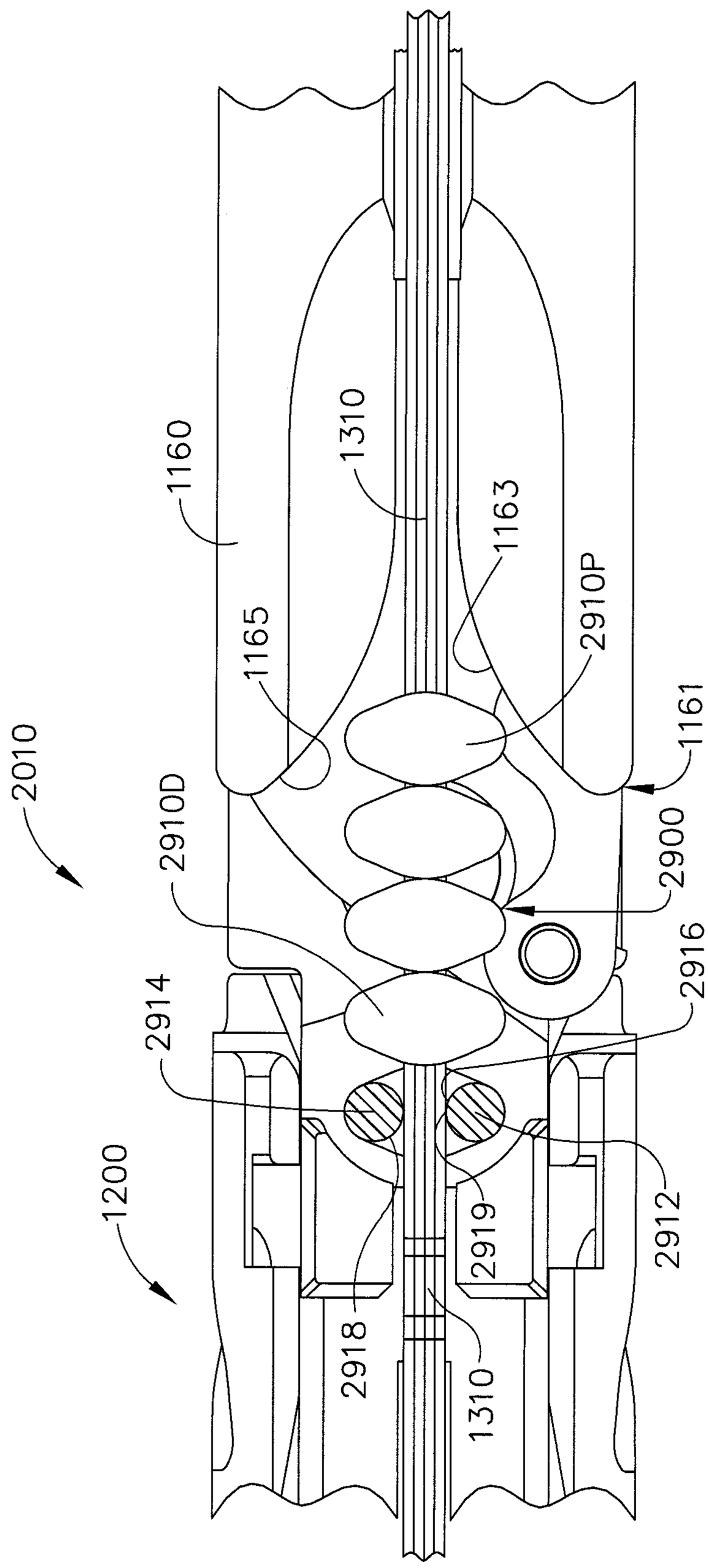
2010
1160
1310
1163
1165
2910P
1161
2910D
2900
2914
2916
1200
2912
2919
2918
1310

FIG. 47

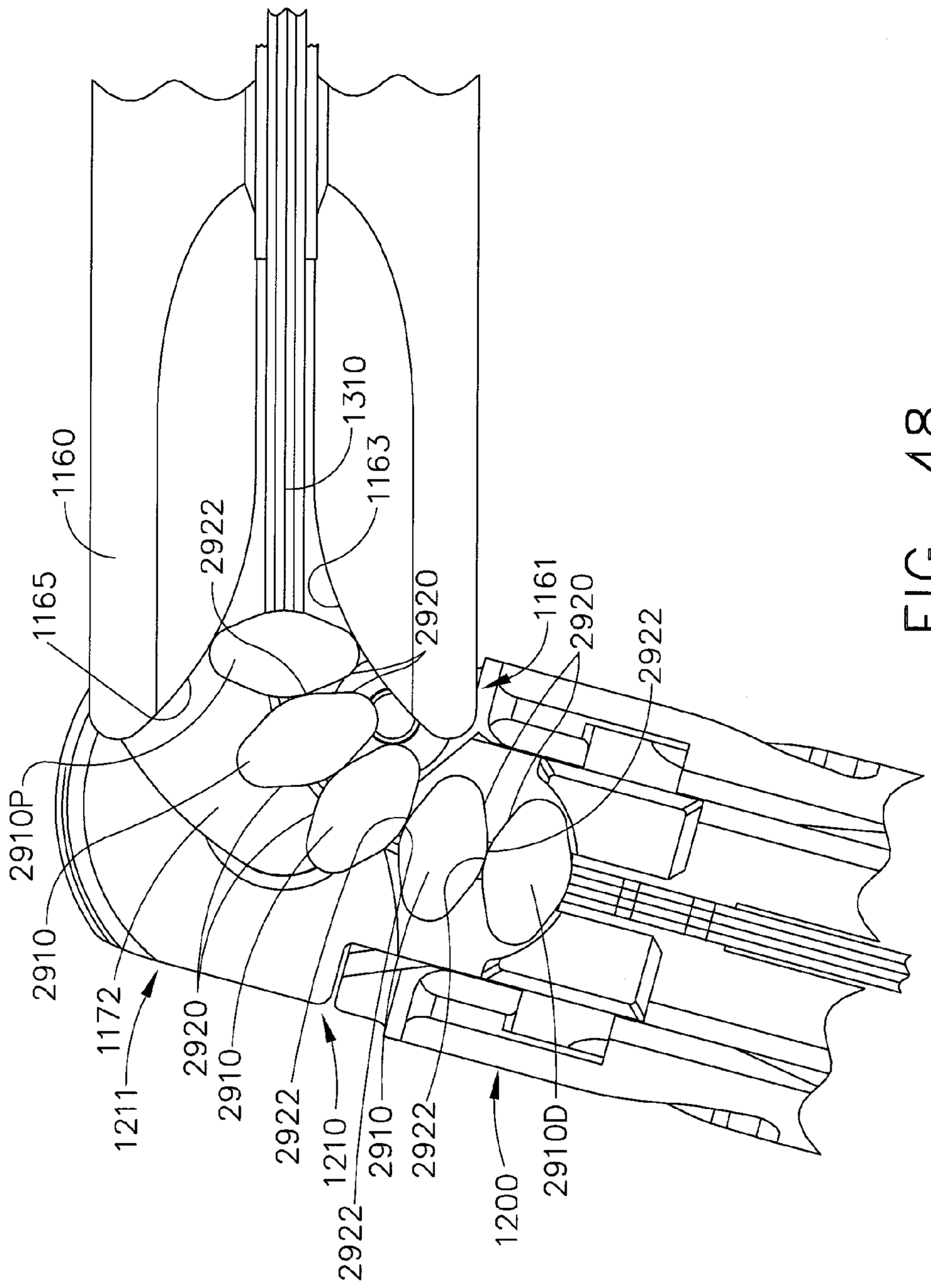
1160
1310
1163
2922
1165
2920
1161
2920
2922
2910P
2910
1172
2920
2910
1211
2922
1210
2910
2922
1200
2910D

FIG. 48

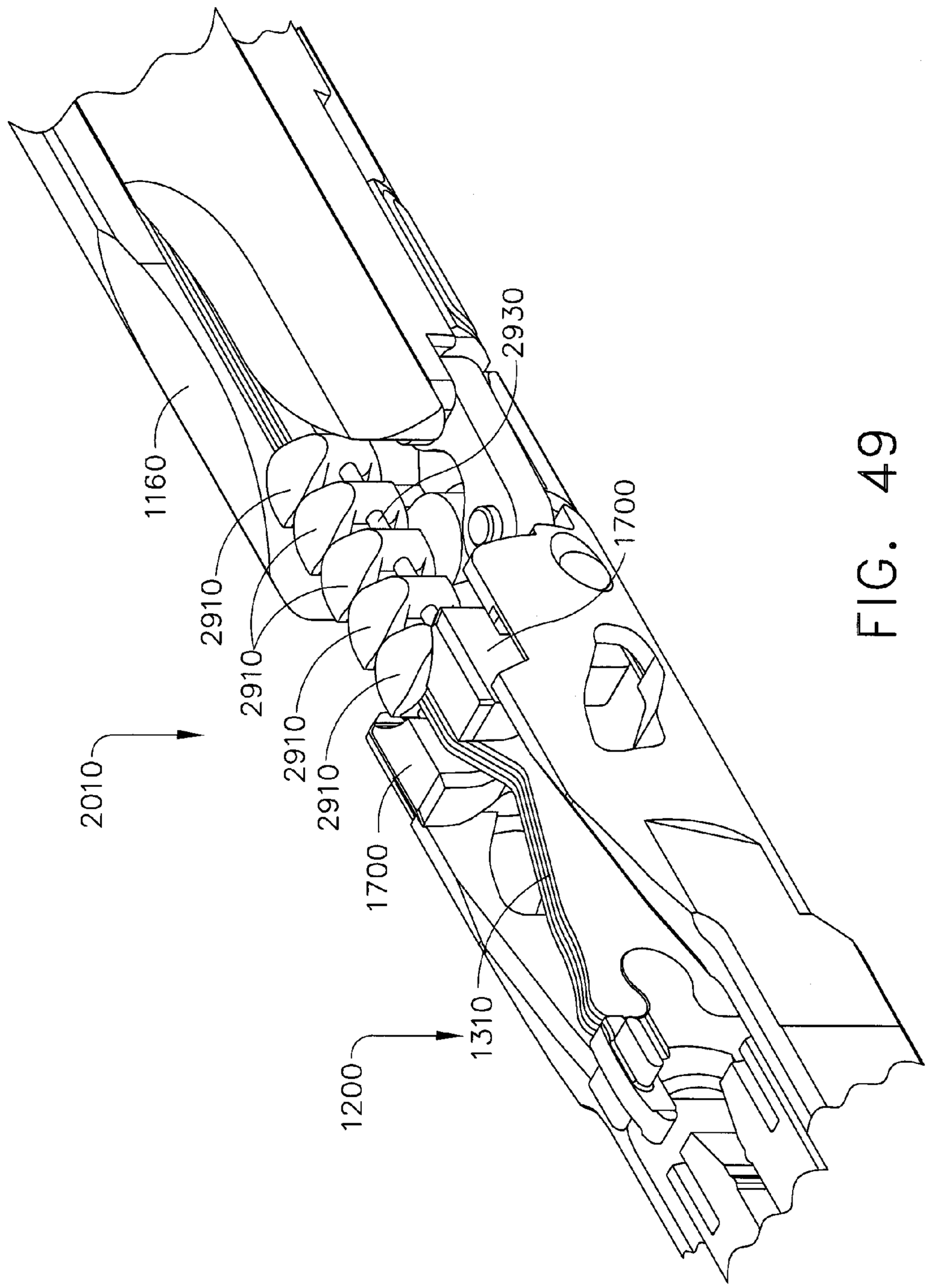

FIG. 49

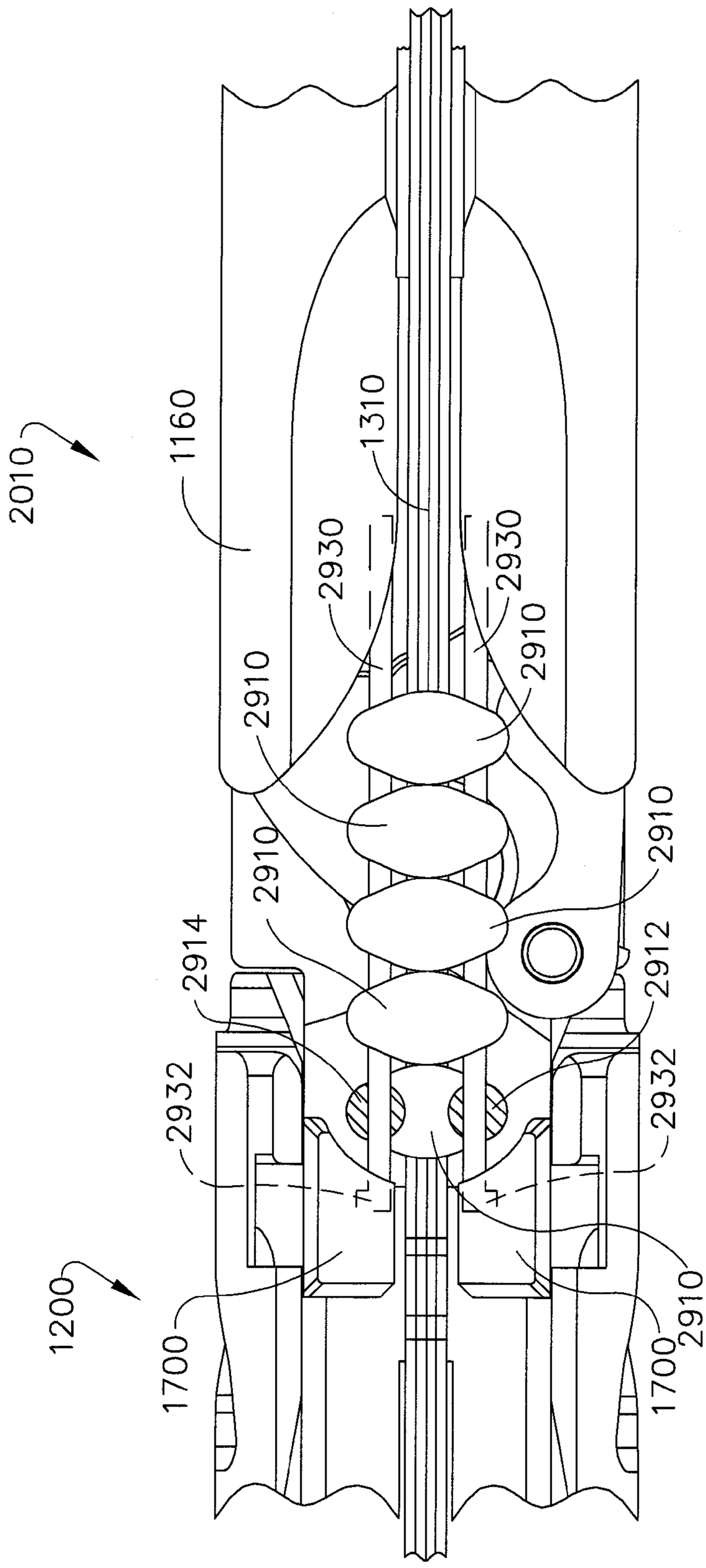
2010
1160
1310
2930
2930
2910
2910
2910
2910
2914
2912
2932
2932
1200
1700
1700
2910

FIG. 50

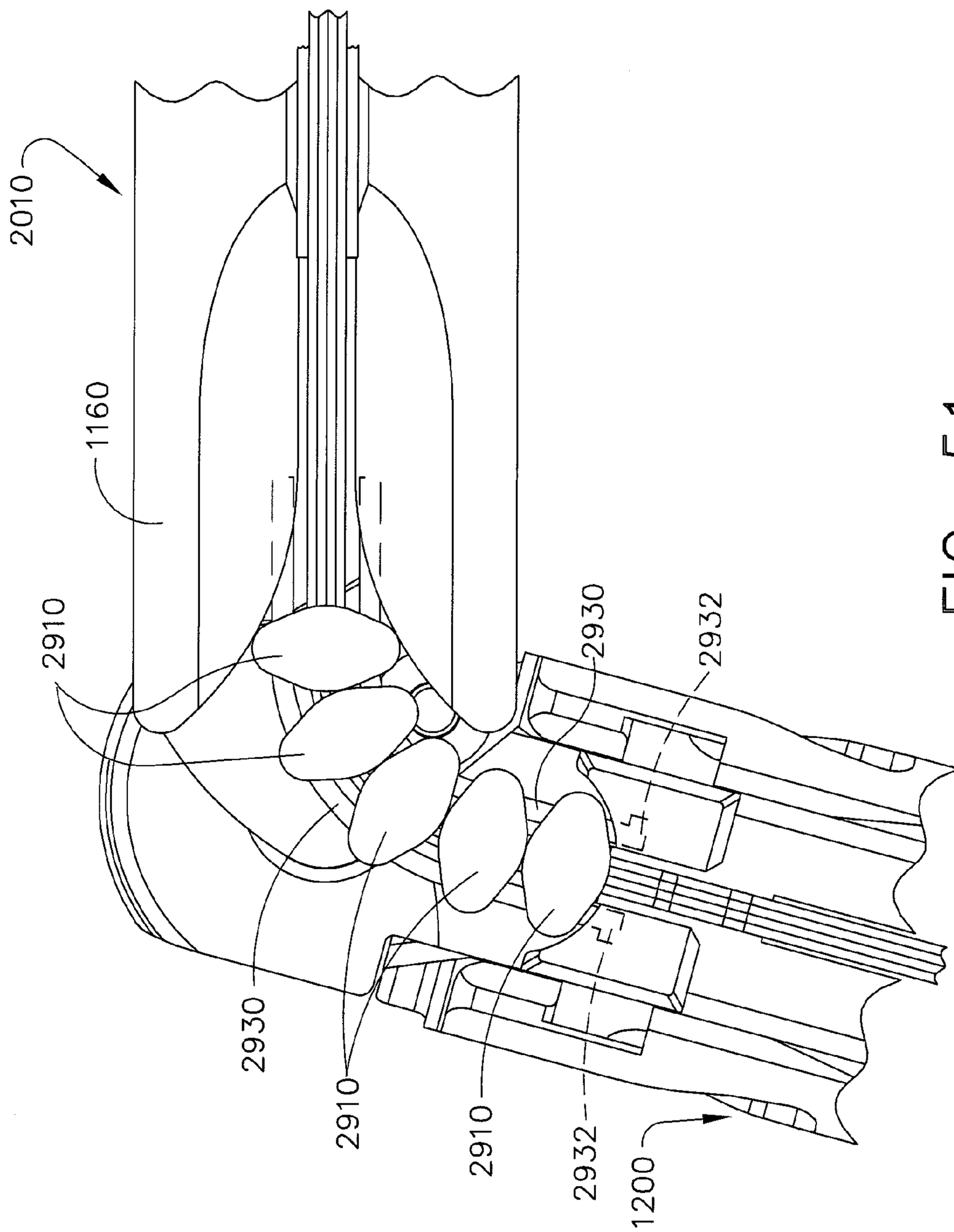

FIG. 51

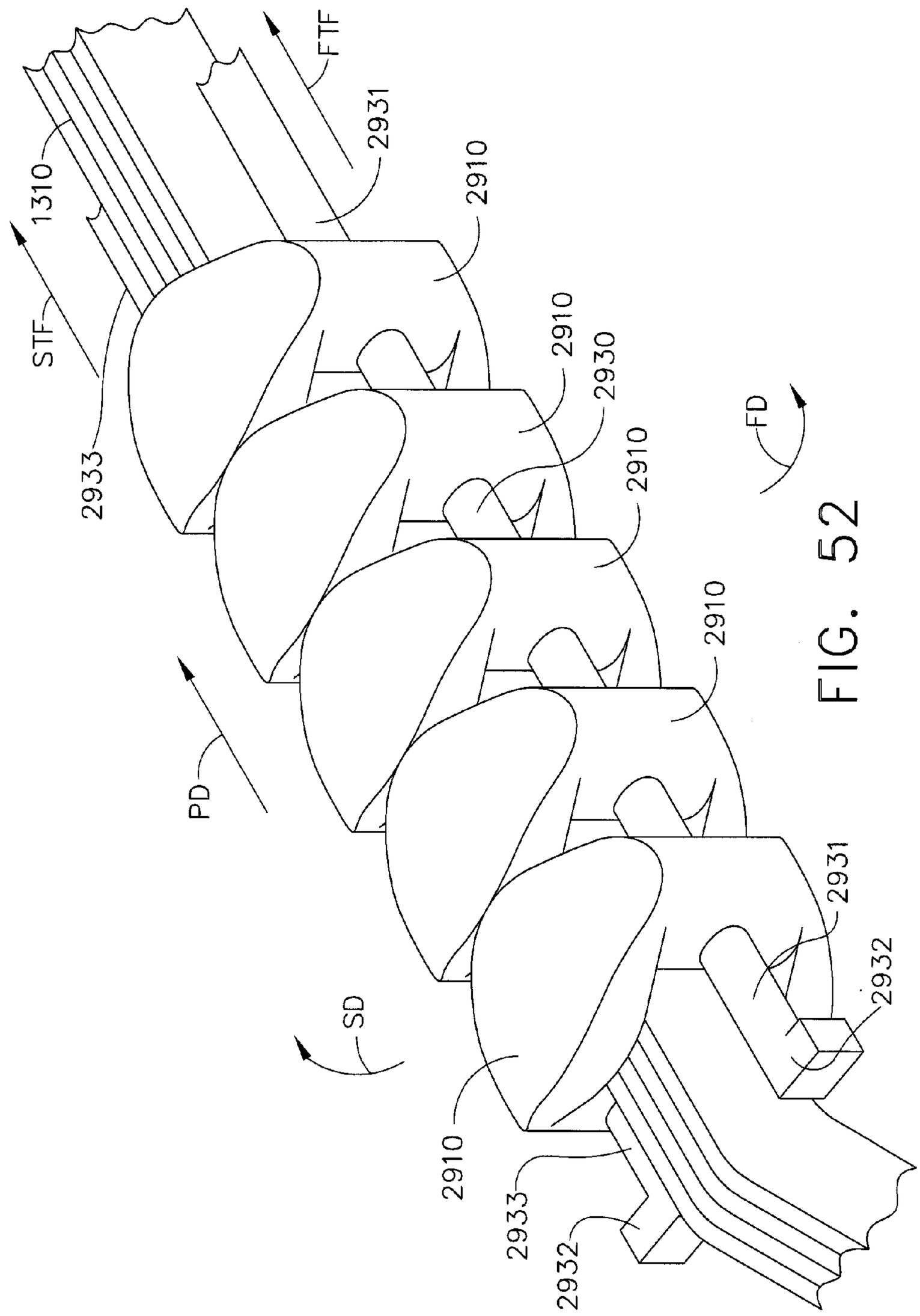
FTF
2931
2910
1310
STF
2933
2910
2930
2910
FD
2910
PD
2931
2932
SD
2910
2933
2932

FIG. 52

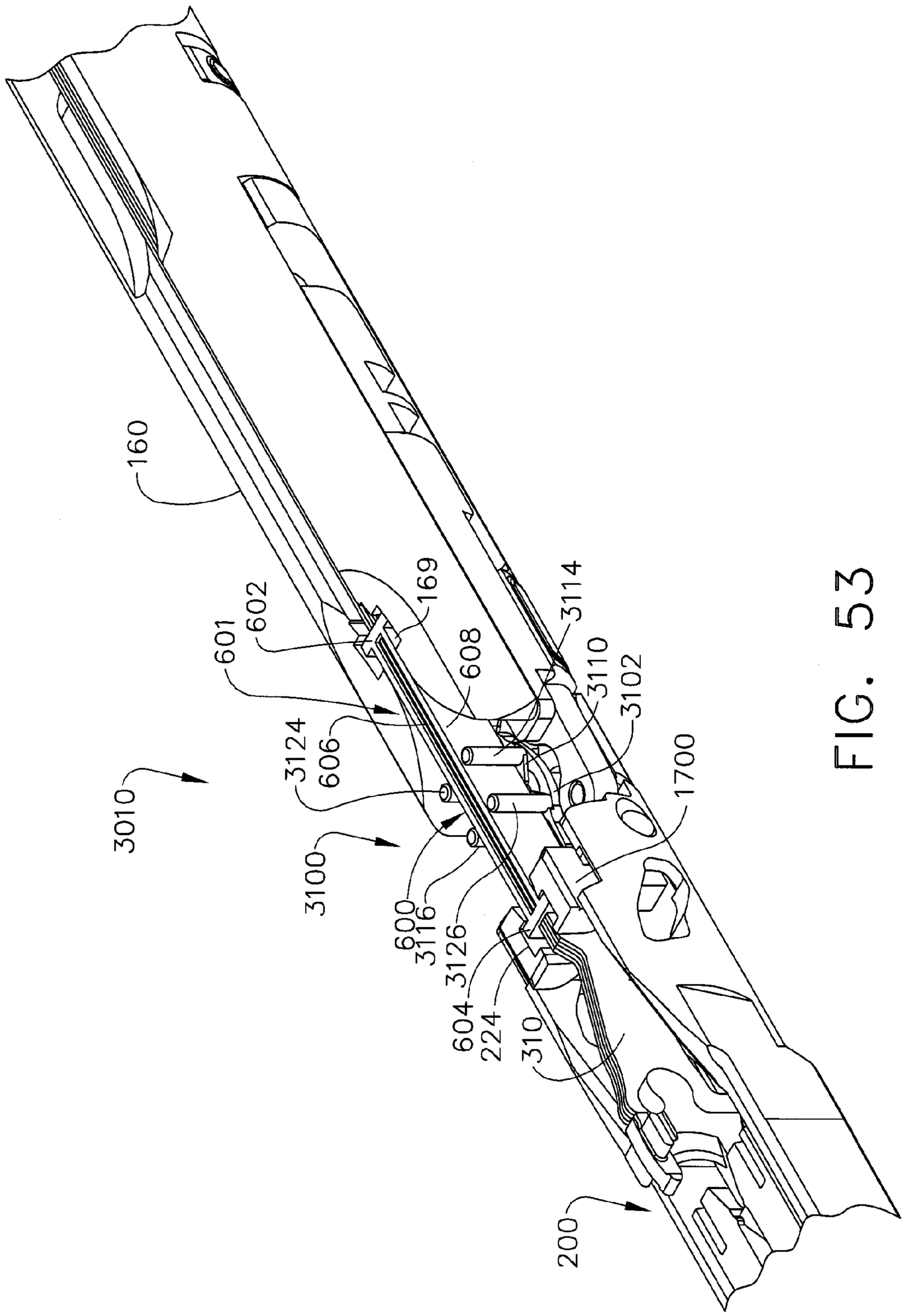
160
169
602
601
608
3114
3110
3102
3124
606
1700
3010
3100
600
3116
3126
604
224
310
200

FIG. 53

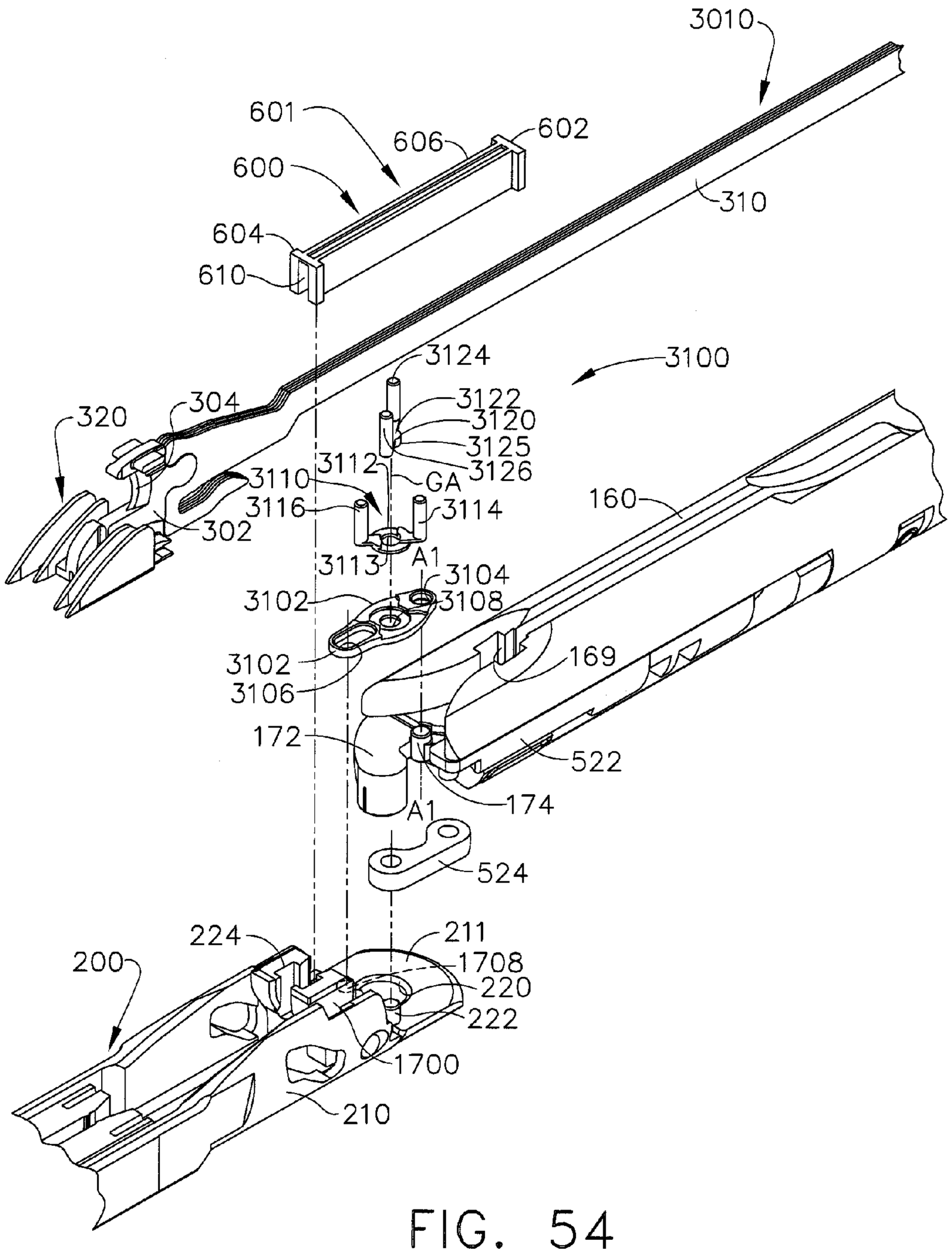
3010
601
606
602
600
310
604
610
3124
3100
3122
3120
320
304
3125
3126
3112
GA
3110
3116
3114
160
302
3113
A1
3104
3102
3108
3102
169
3106
172
522
174
A1
524
224
211
200
1708
220
222
1700
210

FIG. 54

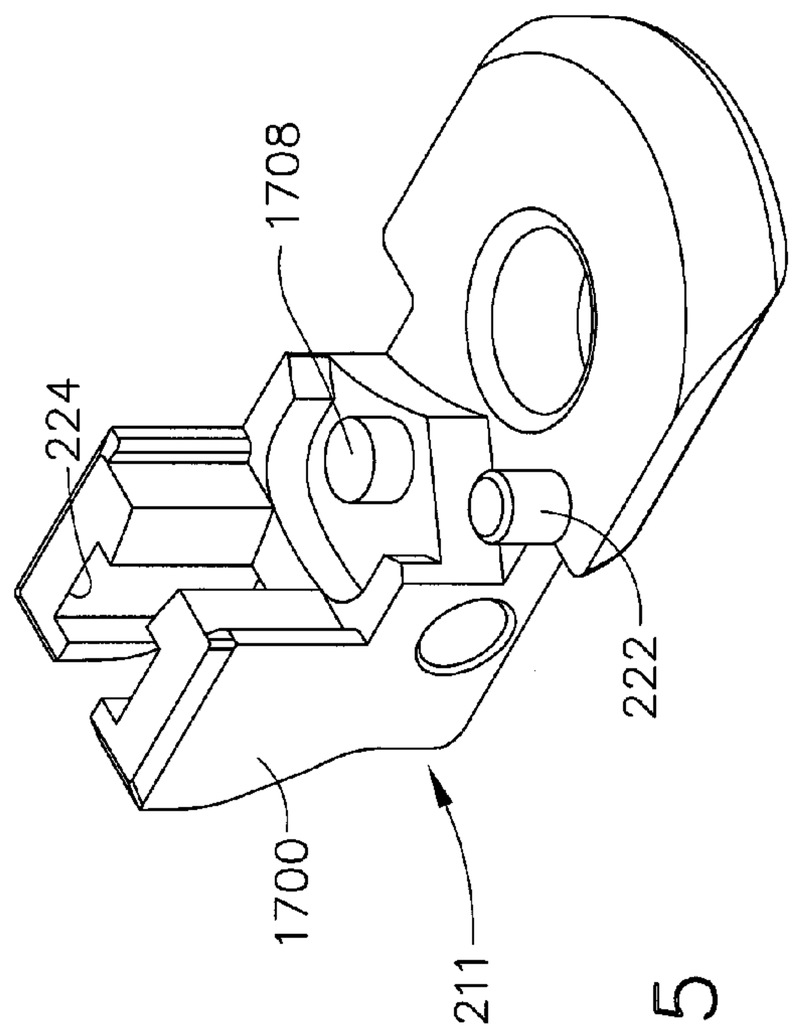
224
1708
222
1700
211

FIG. 55

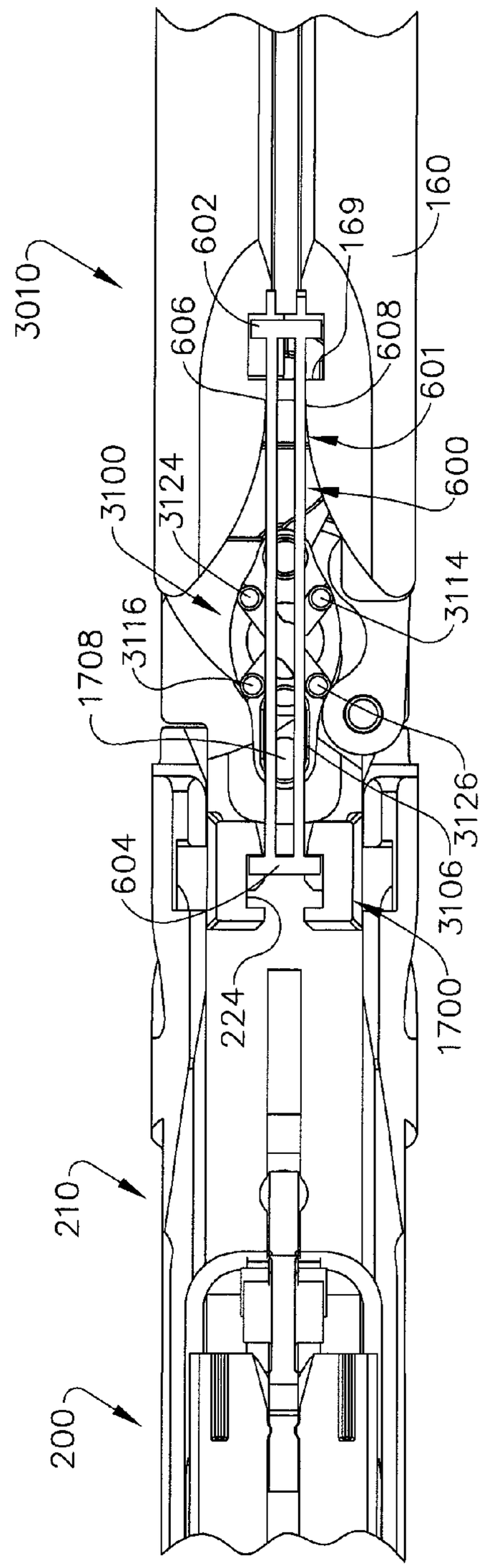
3010
602
169
160
606
608
601
600
3100
3124
3114
3116
1708
3126
604
3106
224
1700
210
200

FIG. 56

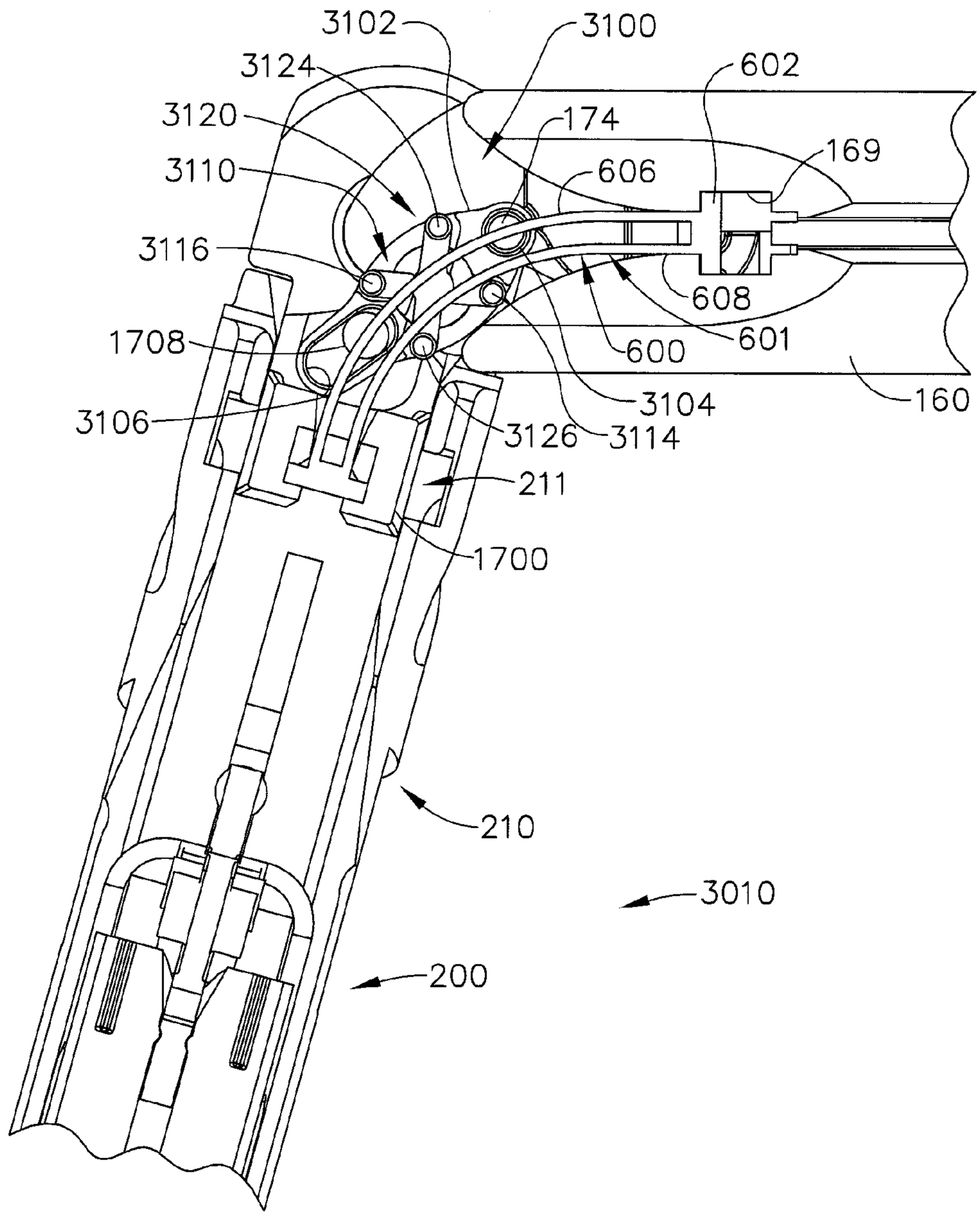
3102
3100
3124
602
3120
174
169
3110
606
3116
608
1708
600
601
3104
160
3106
3126
3114
211
1700
210
3010
200

FIG. 57

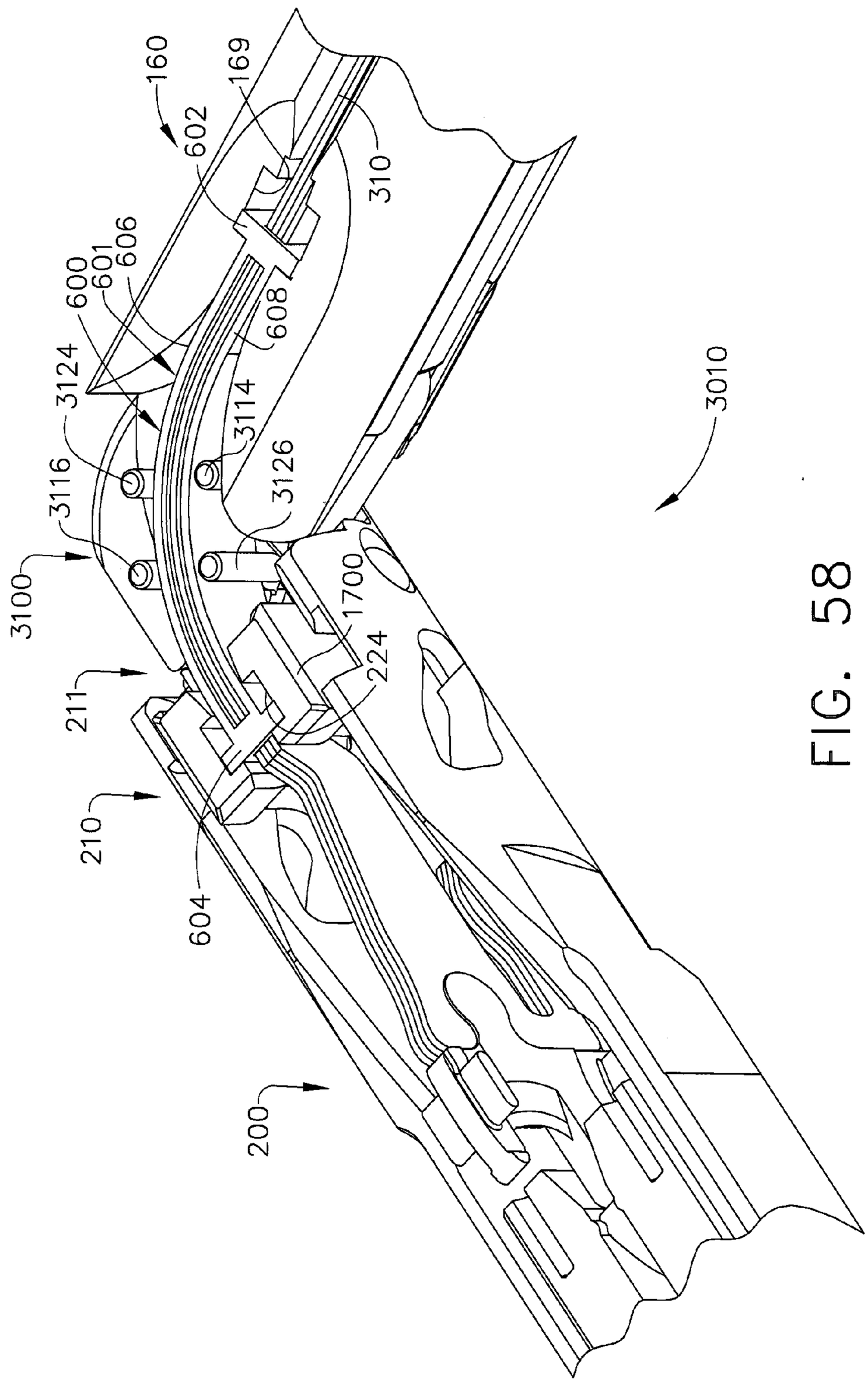
160
169
602
310
600
601
606
608
3124
3114
3126
3116
3100
3010
1700
224
211
210
604
200

FIG. 58

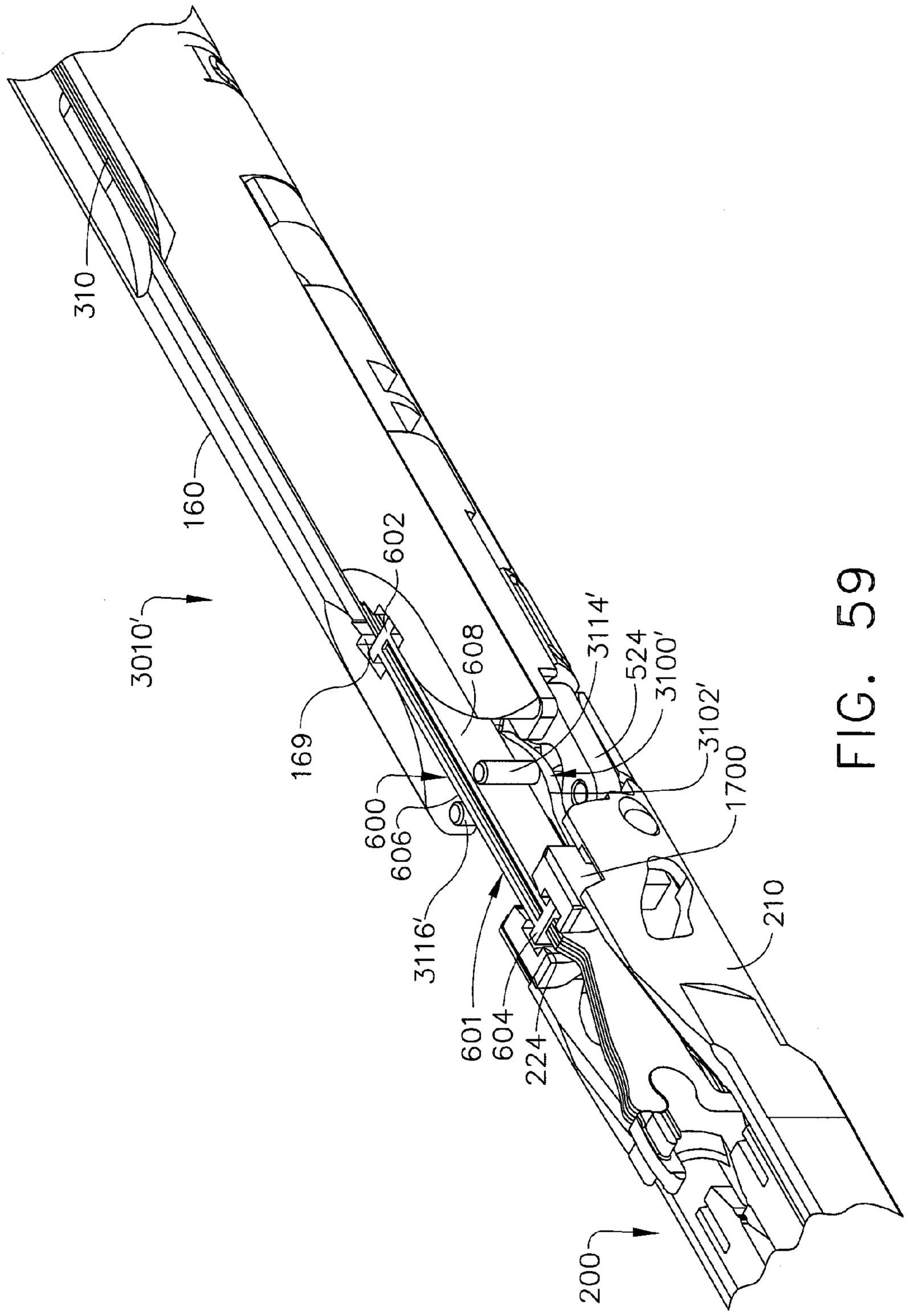
310
160
3010'
602
608
169
600
606
3116'
601
604
224
3114'
524
3100'
3102'
1700
210
200

FIG. 59

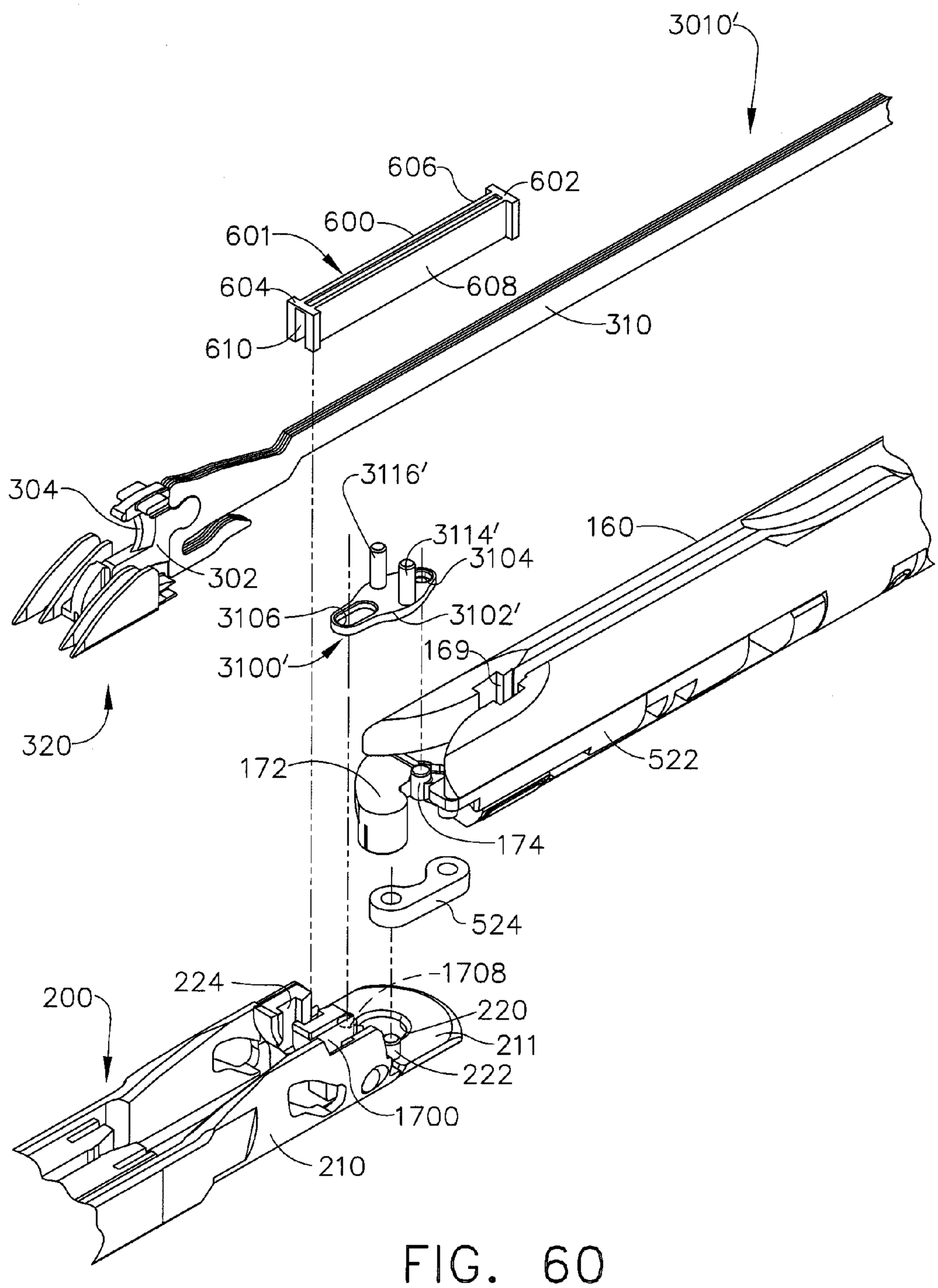
3010'
606
602
600
601
604
608
610
310
304
3116'
3114'
3104
160
302
3106
3102'
3100'
169
320
172
522
174
524
224
1708
200
220
211
222
1700
210

FIG. 60

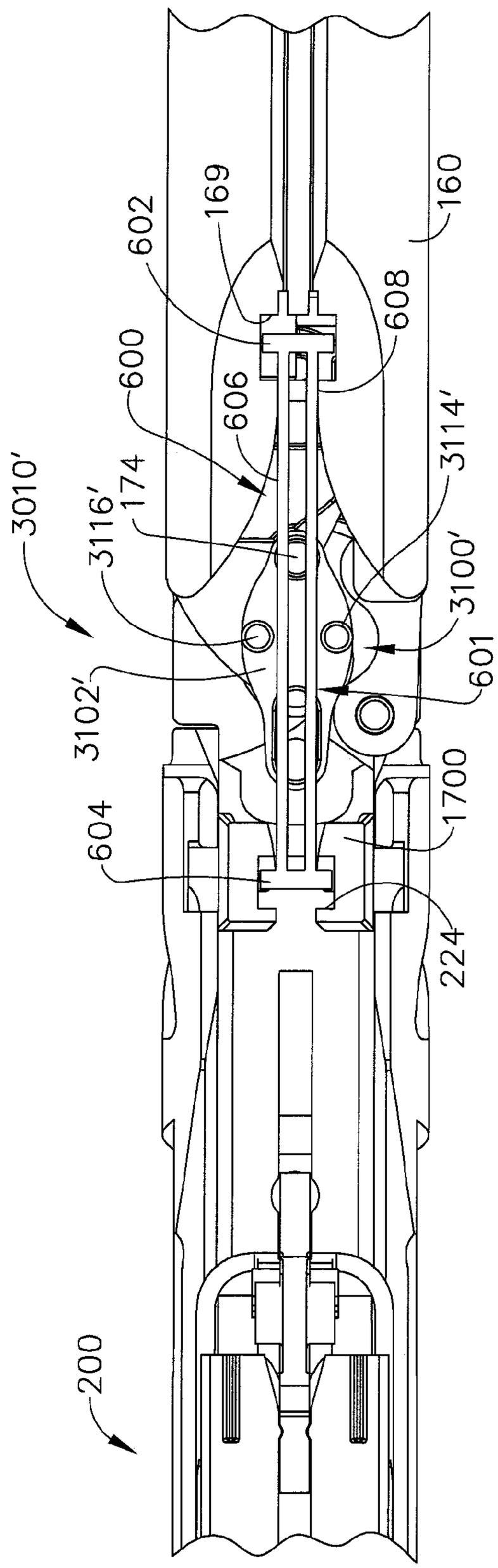
3010'
3116'
174
3102'
604
200
602
600
169
606
608
160
3114'
3100'
601
1700
224

FIG. 61

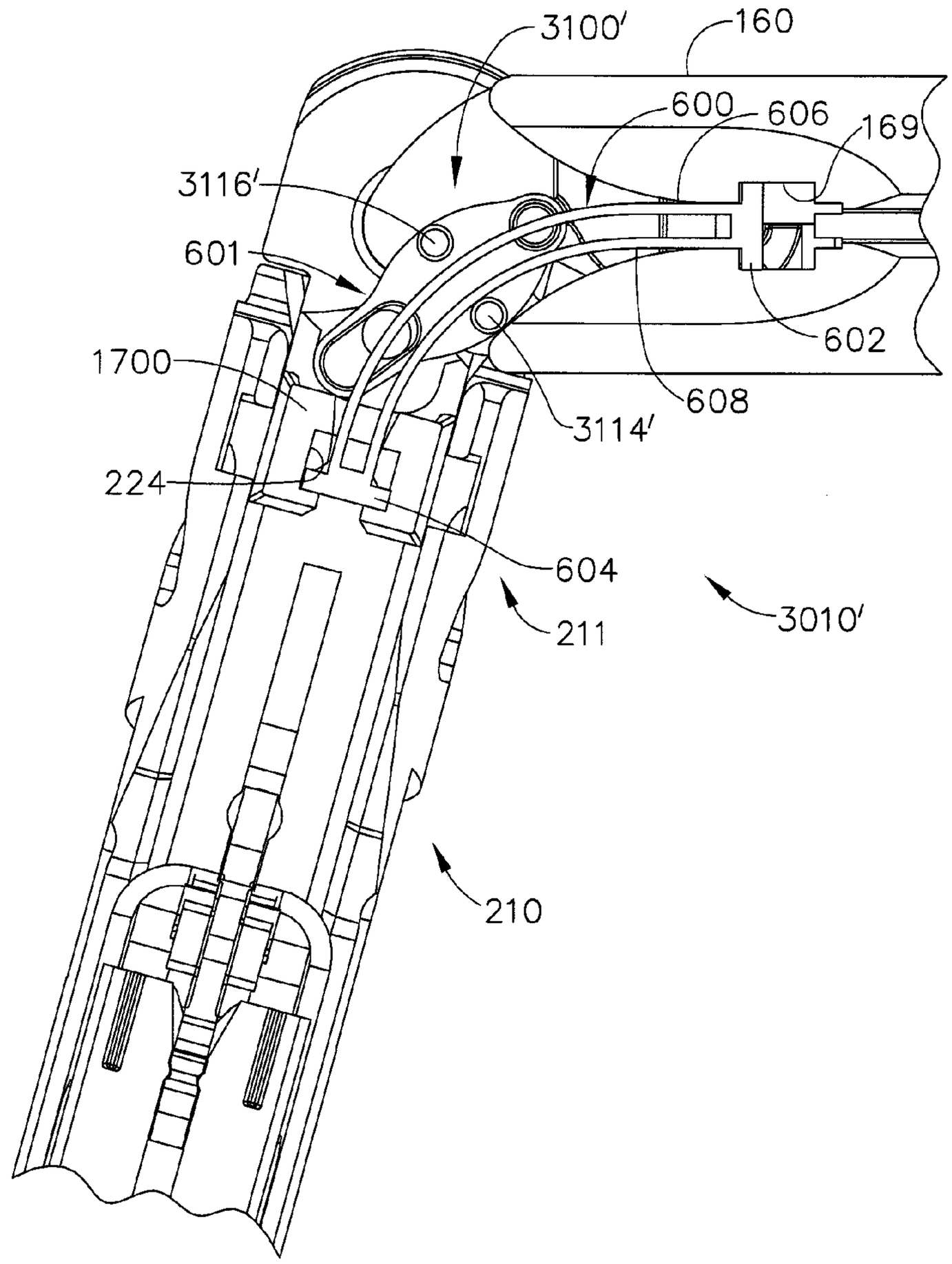
3100′
160
600
606
169
3116′
601
602
1700
608
3114′
224
604
211
3010′
210

FIG. 62

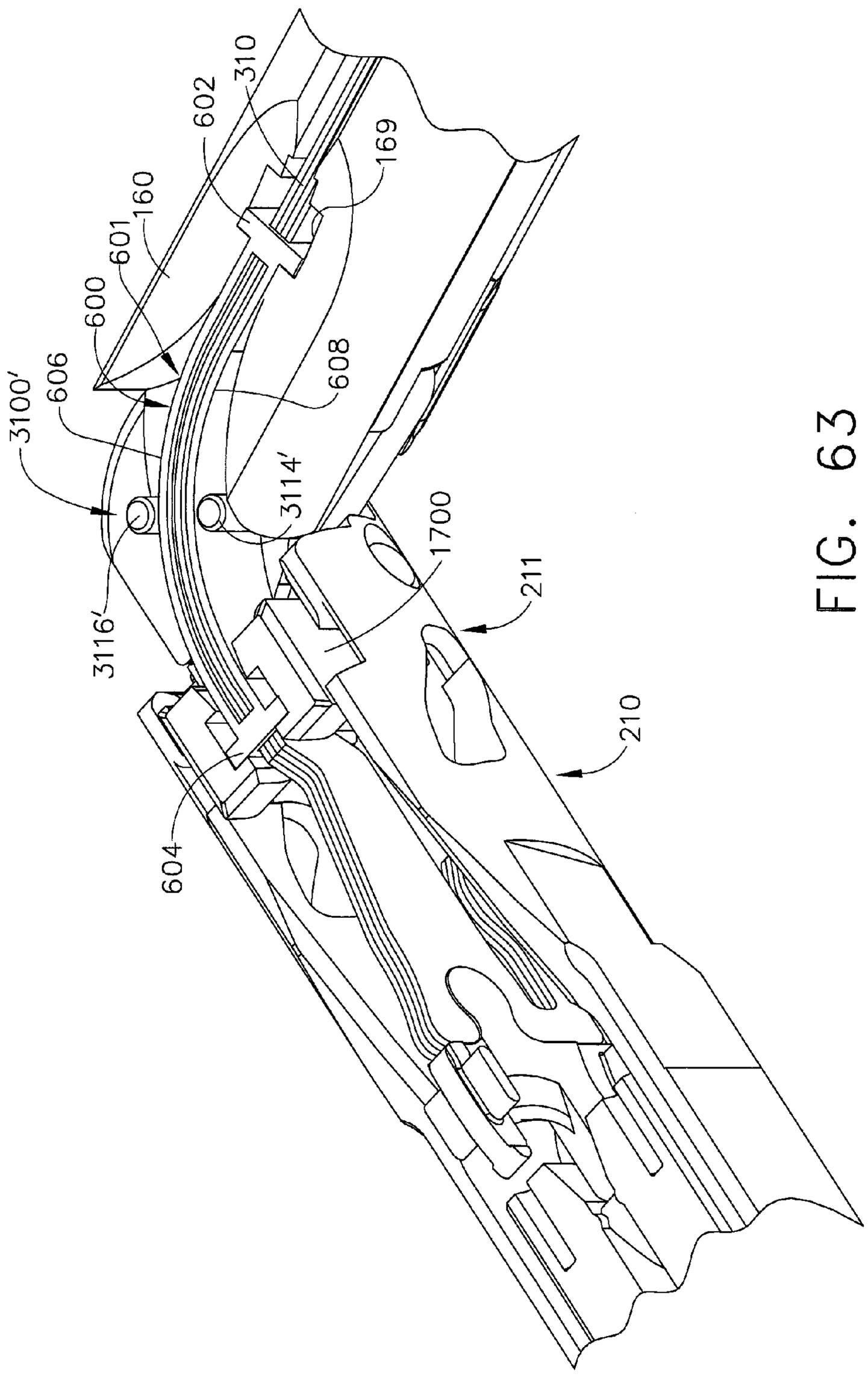

FIG. 63

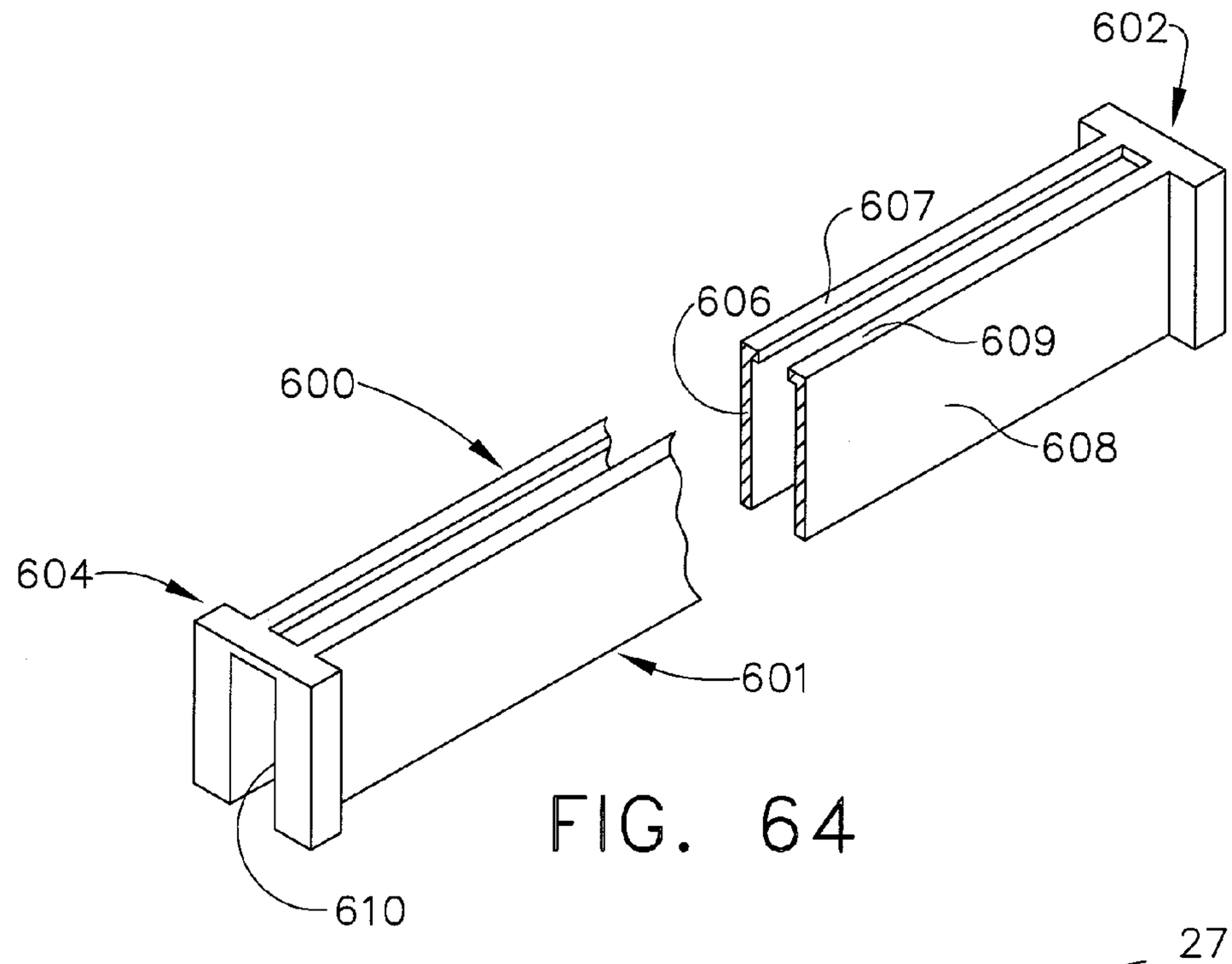
602
607
606
609
600
608
604
601
610

FIG. 64

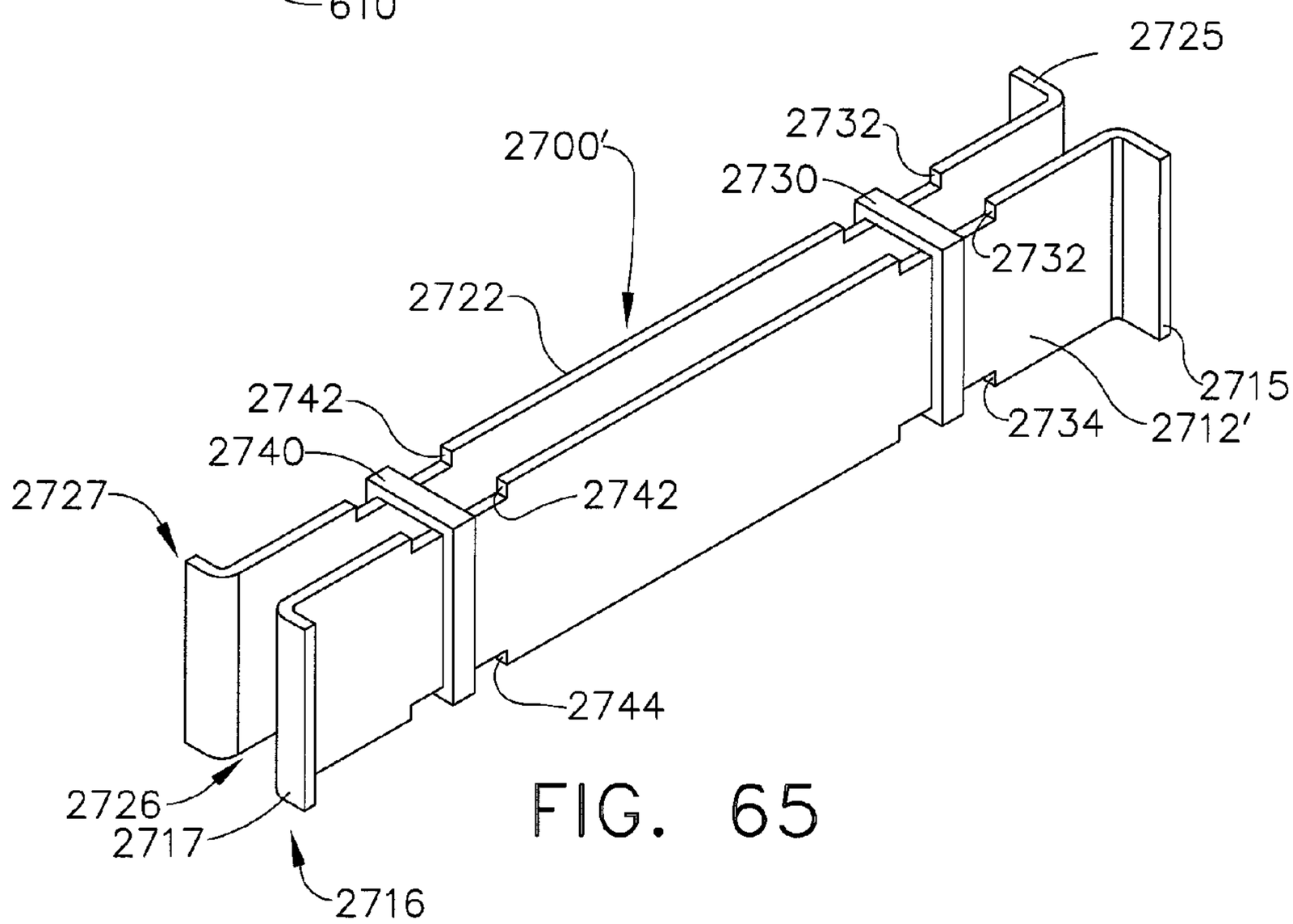
2725
2732
2700'
2730
2732
2722
2715
2742
2734
2712'
2740
2742
2727
2744
2726
2717
2716

FIG. 65

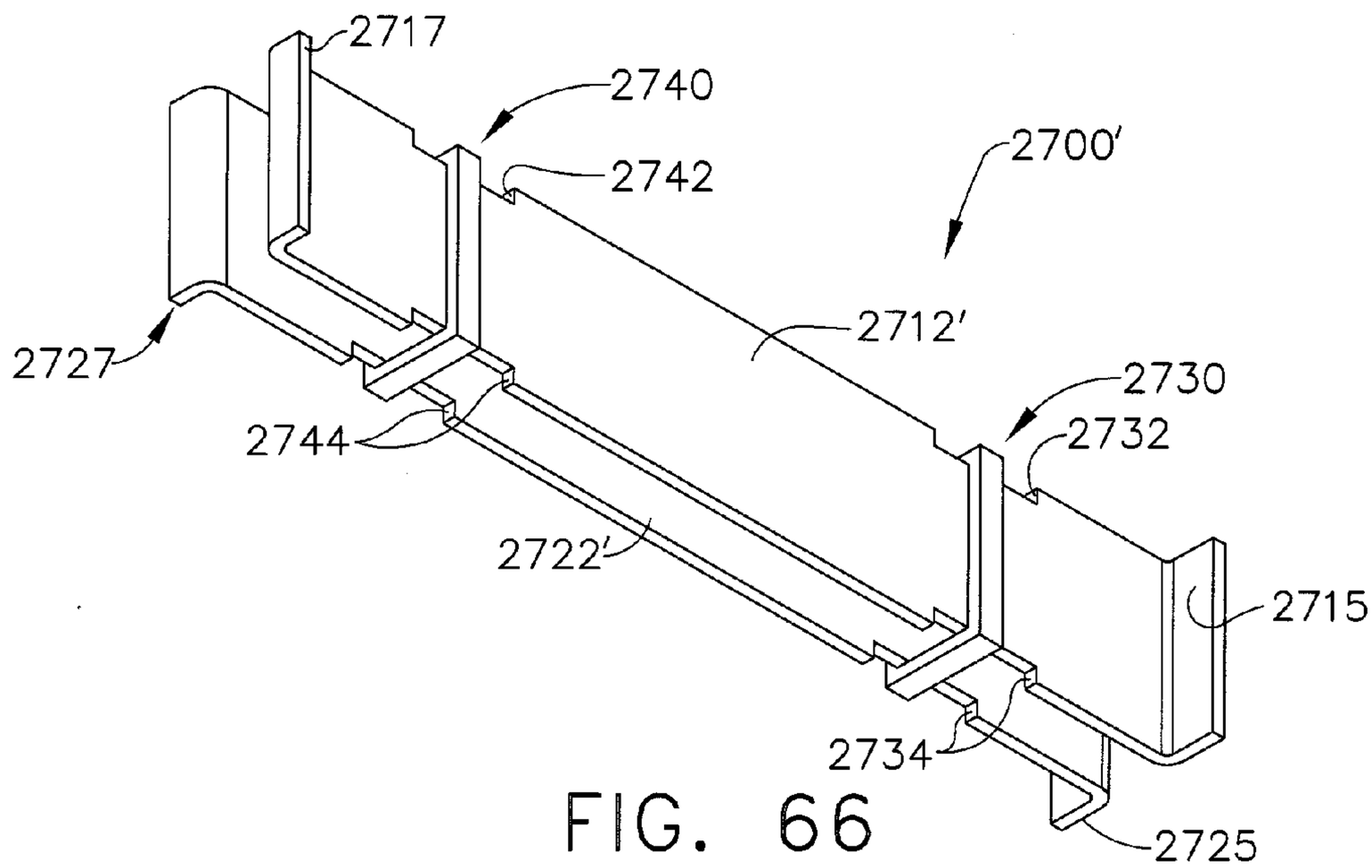
2717
2740
2742
2700′
2712′
2727
2730
2732
2744
2722′
2715
2734
2725

FIG. 66

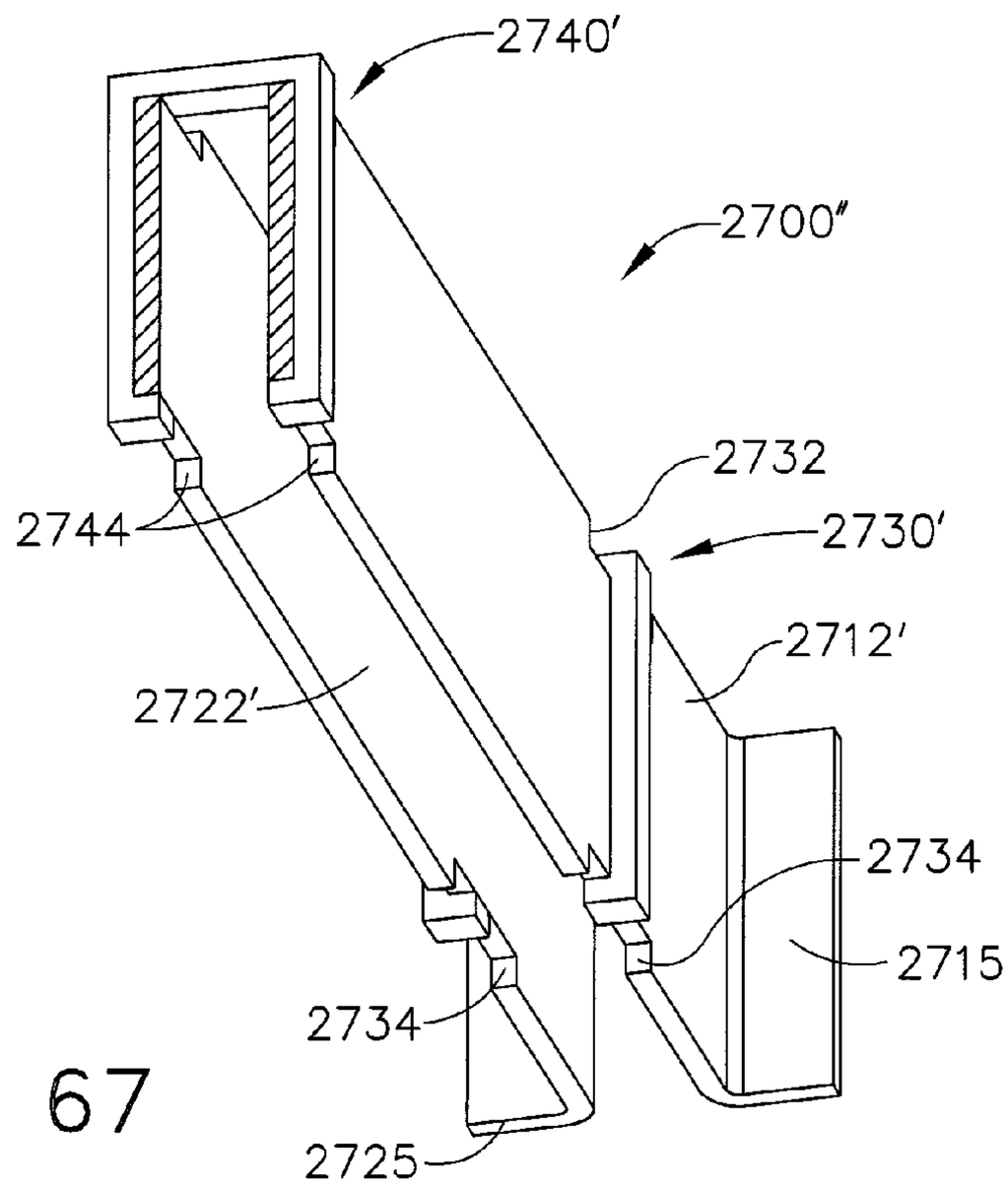
2740′
2700″
2732
2744
2730′
2712′
2722′
2734
2715
2734
2725

FIG. 67

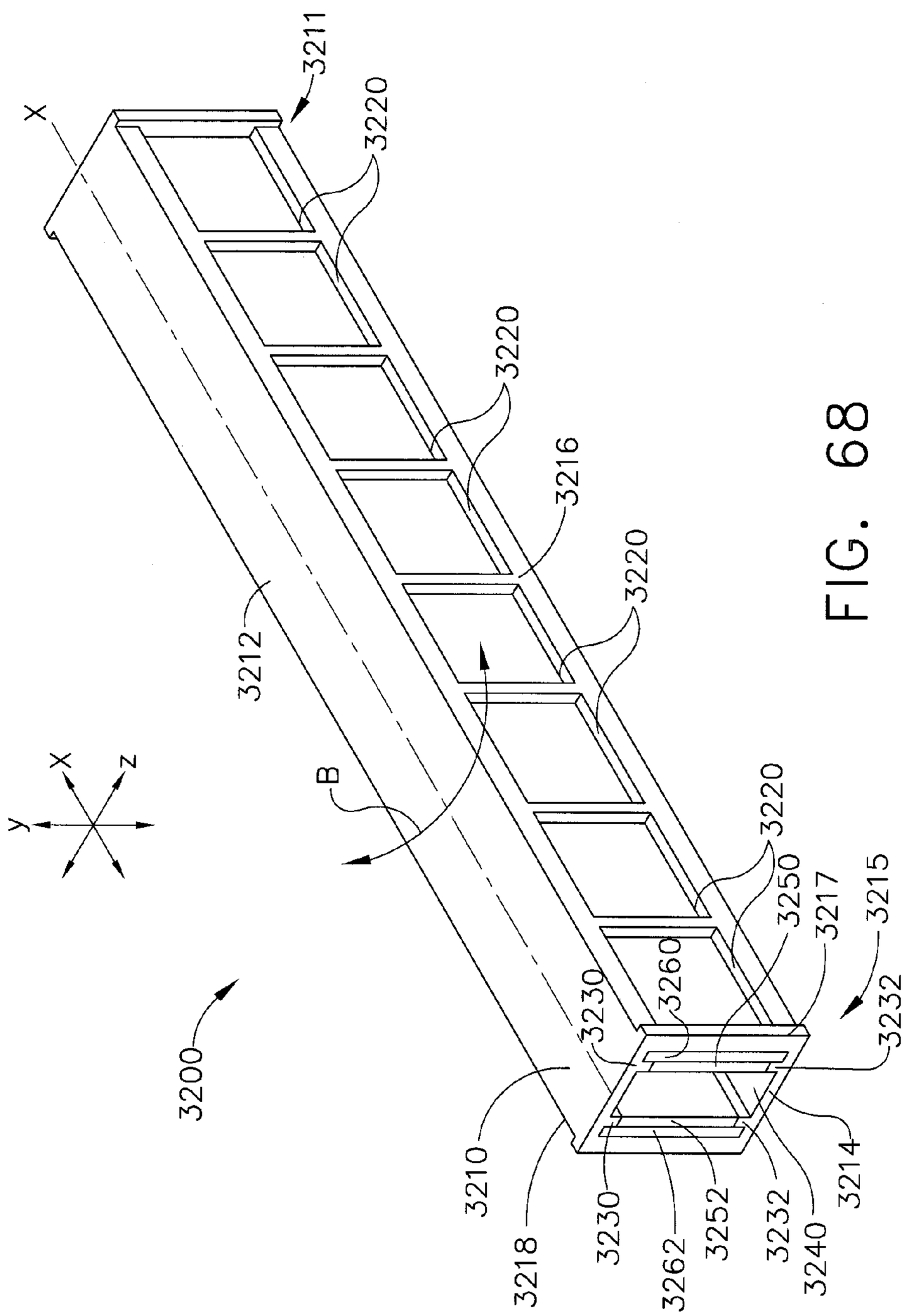
3200
3210
3211
3212
3214
3215
3216
3217
3218
3220
3230
3232
3240
3250
3252
3260
3262
X
B
x
y
z

FIG. 68

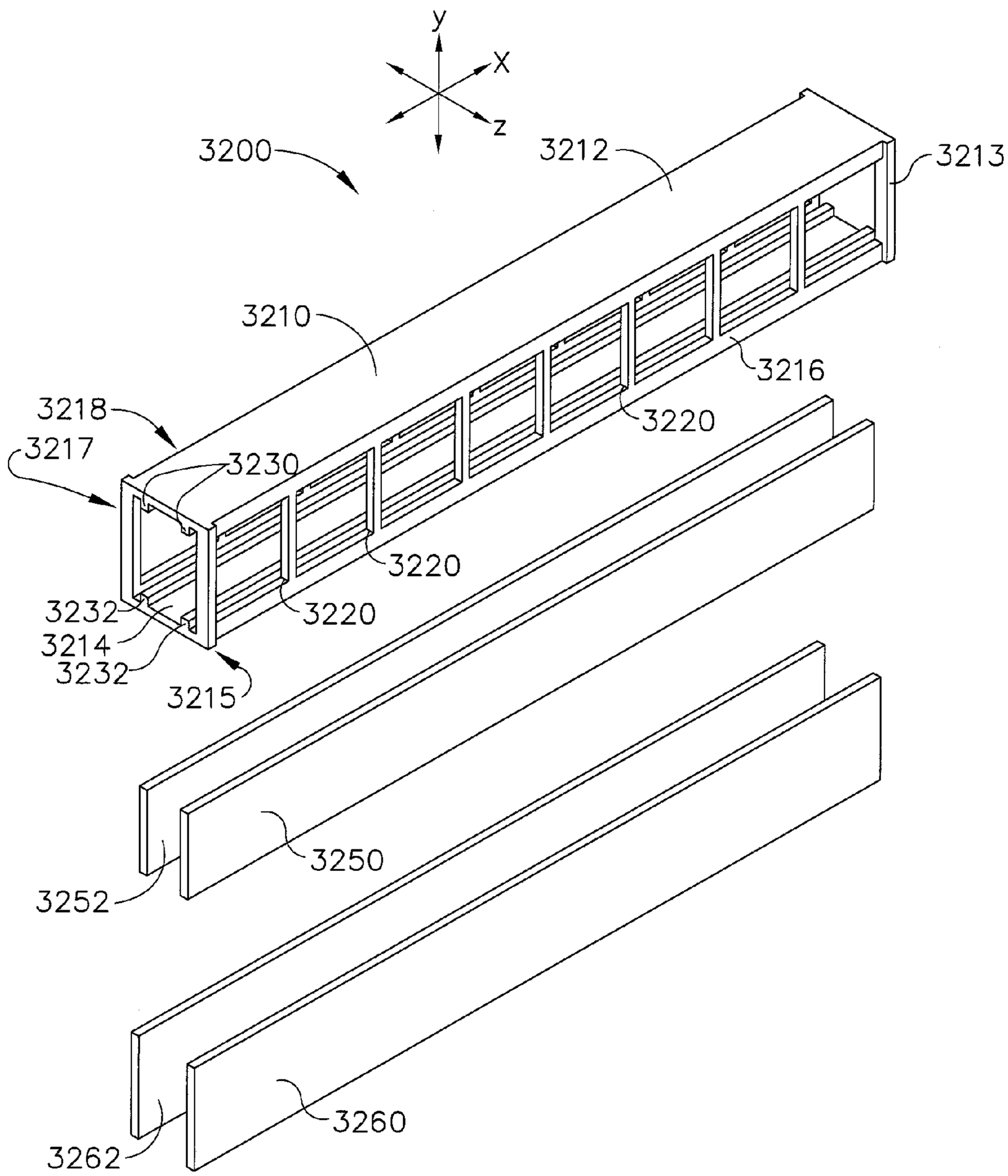
y
x
z
3200
3212
3213
3210
3216
3218
3220
3217
3230
3220
3232
3220
3214
3232
3215
3250
3252
3260
3262

FIG. 69

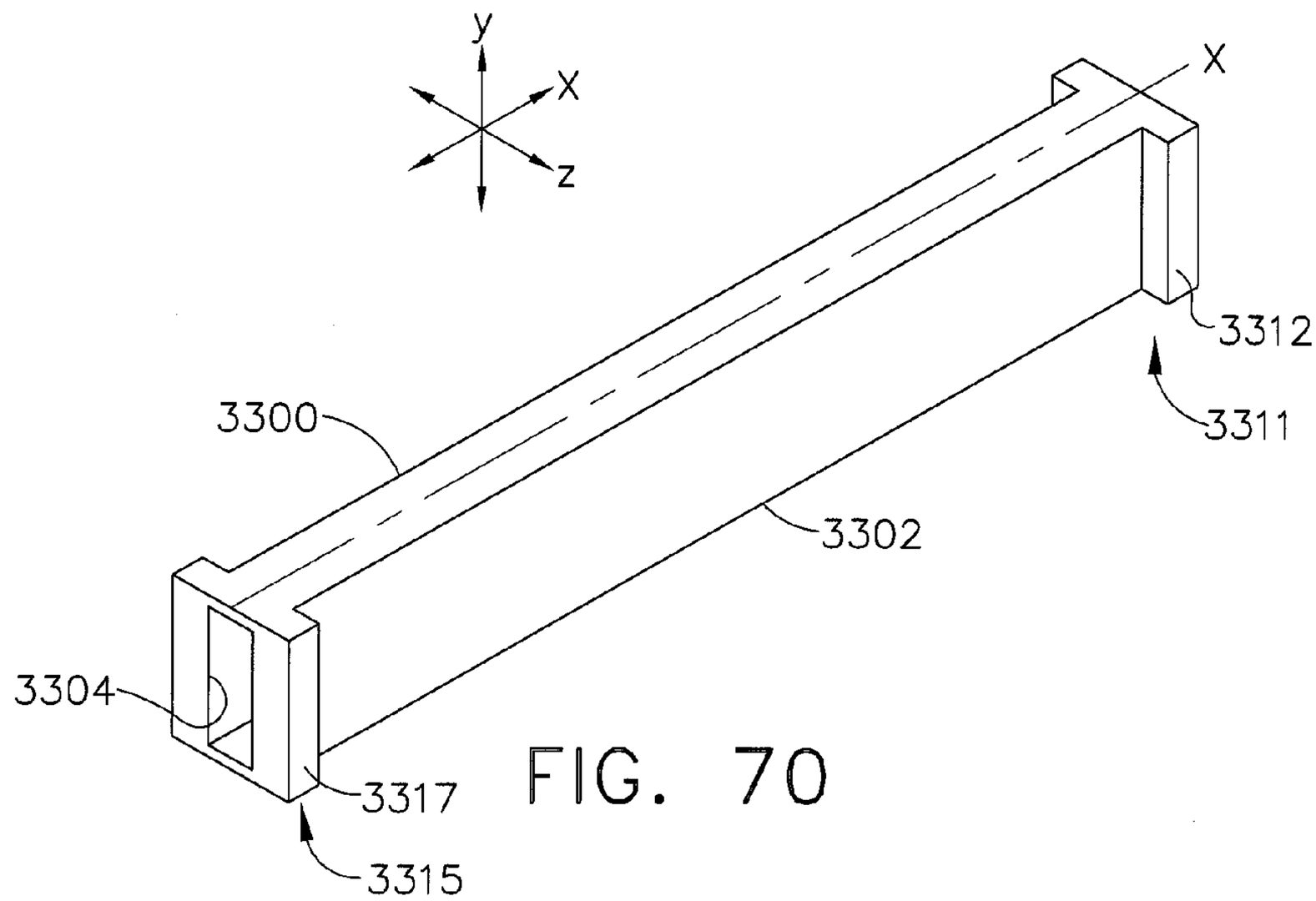
y
X
z
X
3312
3311
3300
3302
3304
3317
3315

FIG. 70

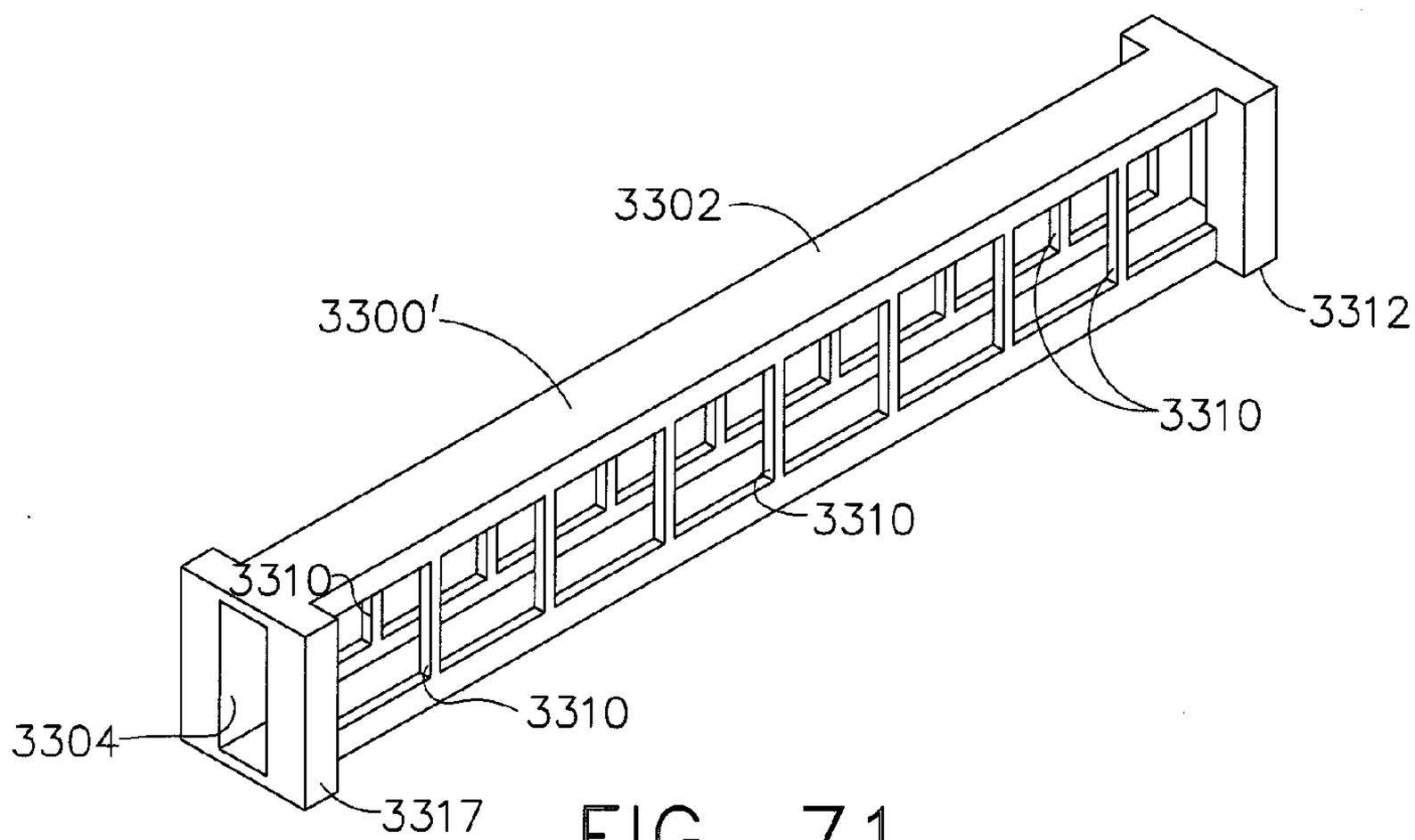
3302
3300'
3312
3310
3310
3310
3310
3304
3317

FIG. 71

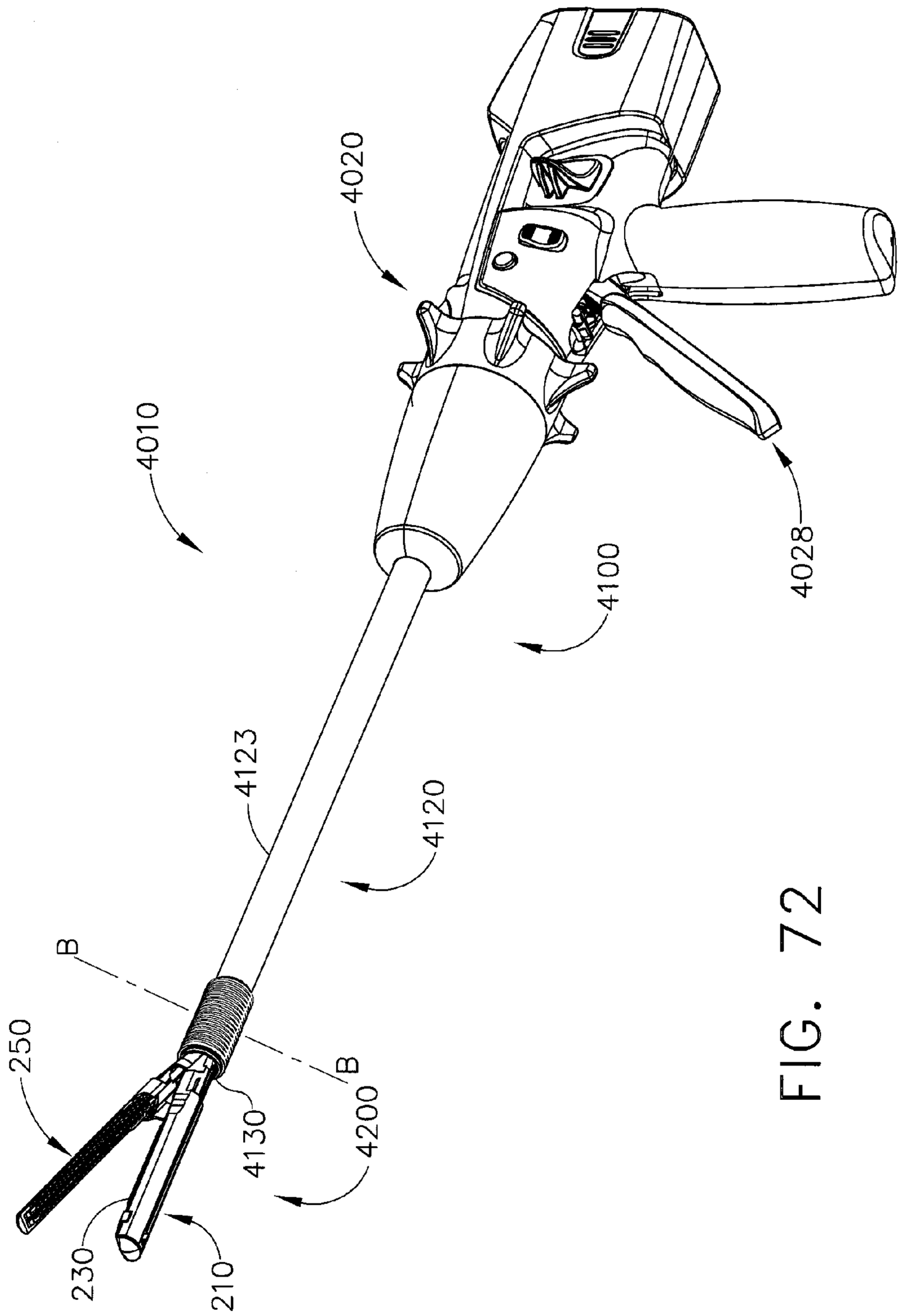

FIG. 72

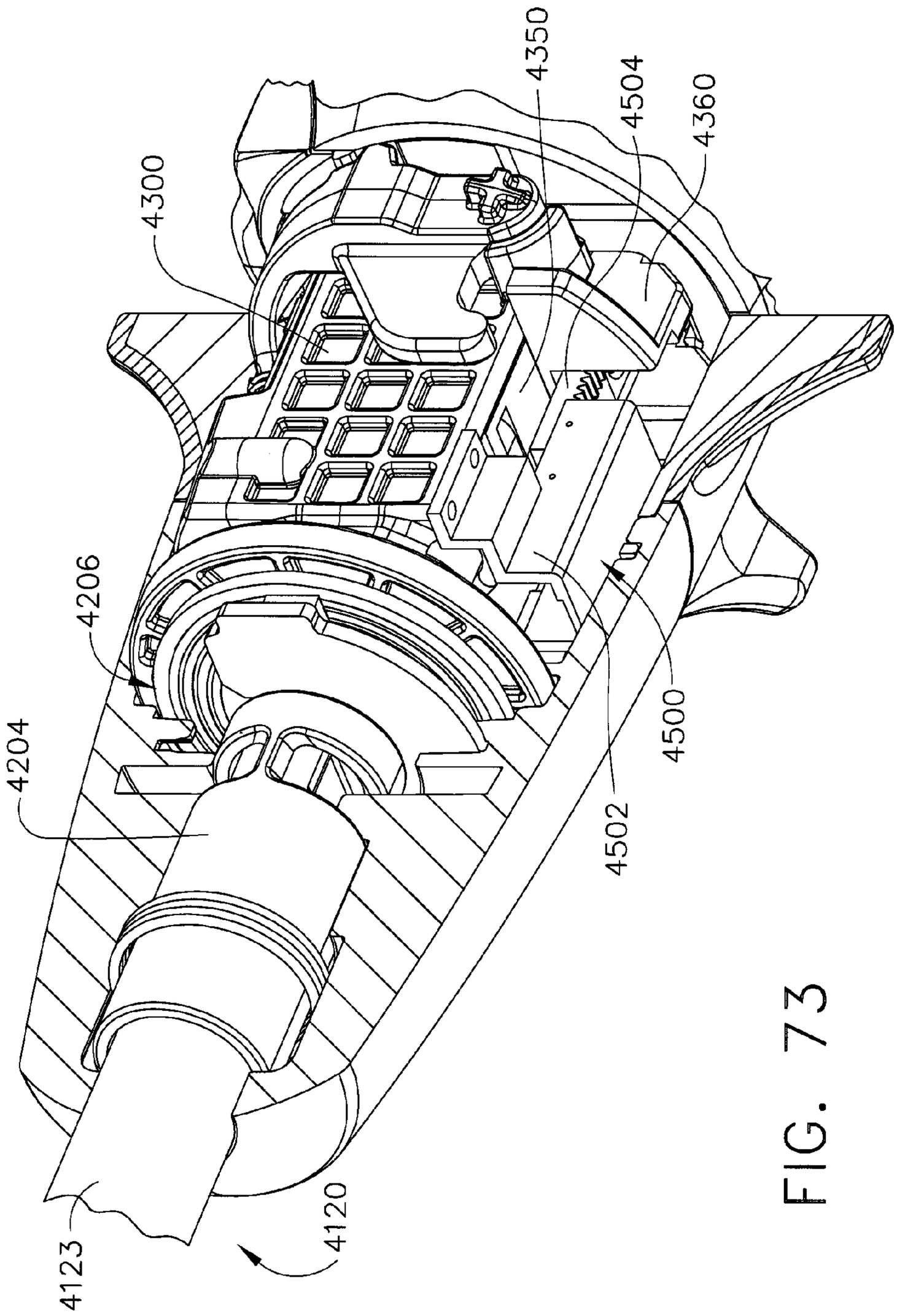

FIG. 73

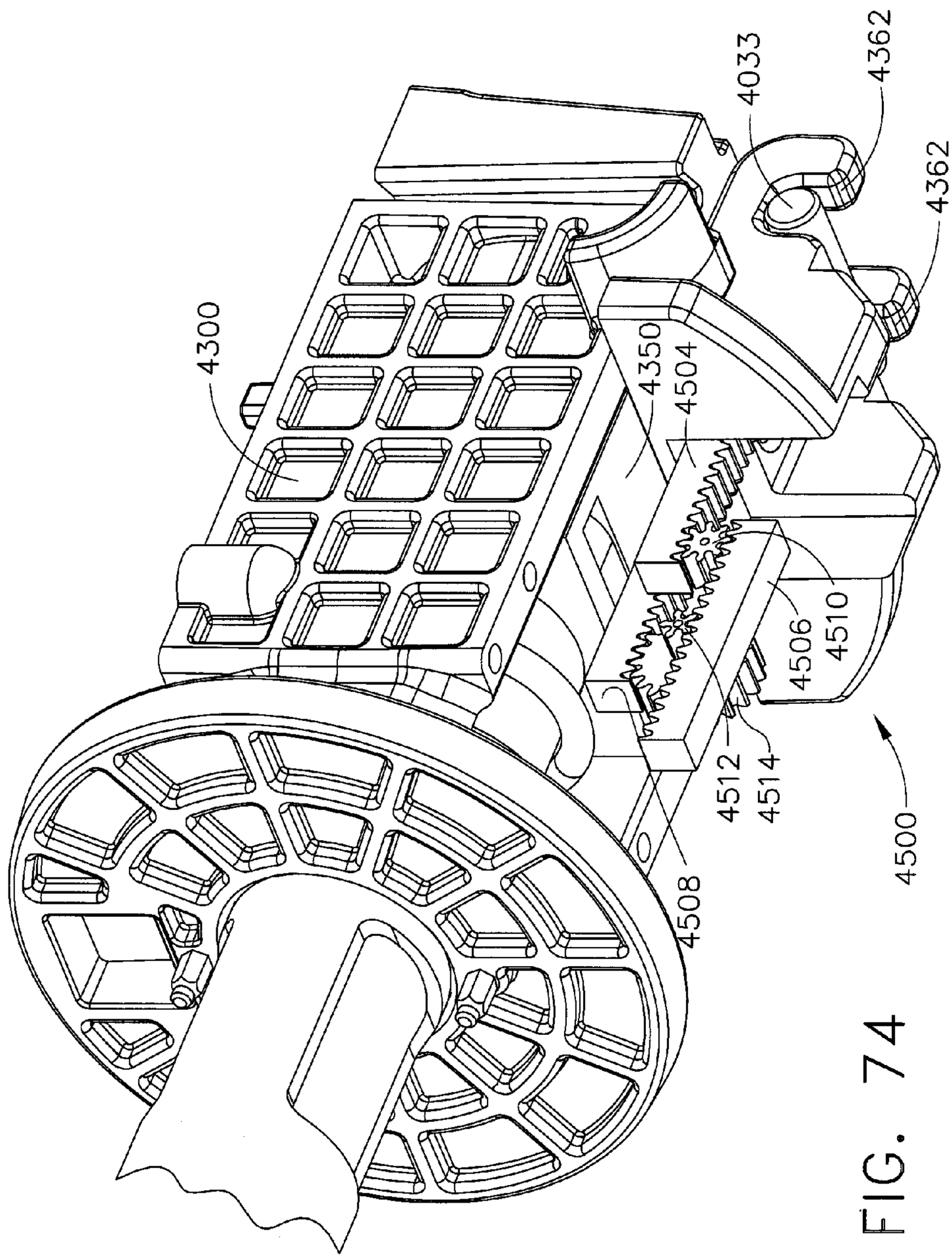

FIG. 74

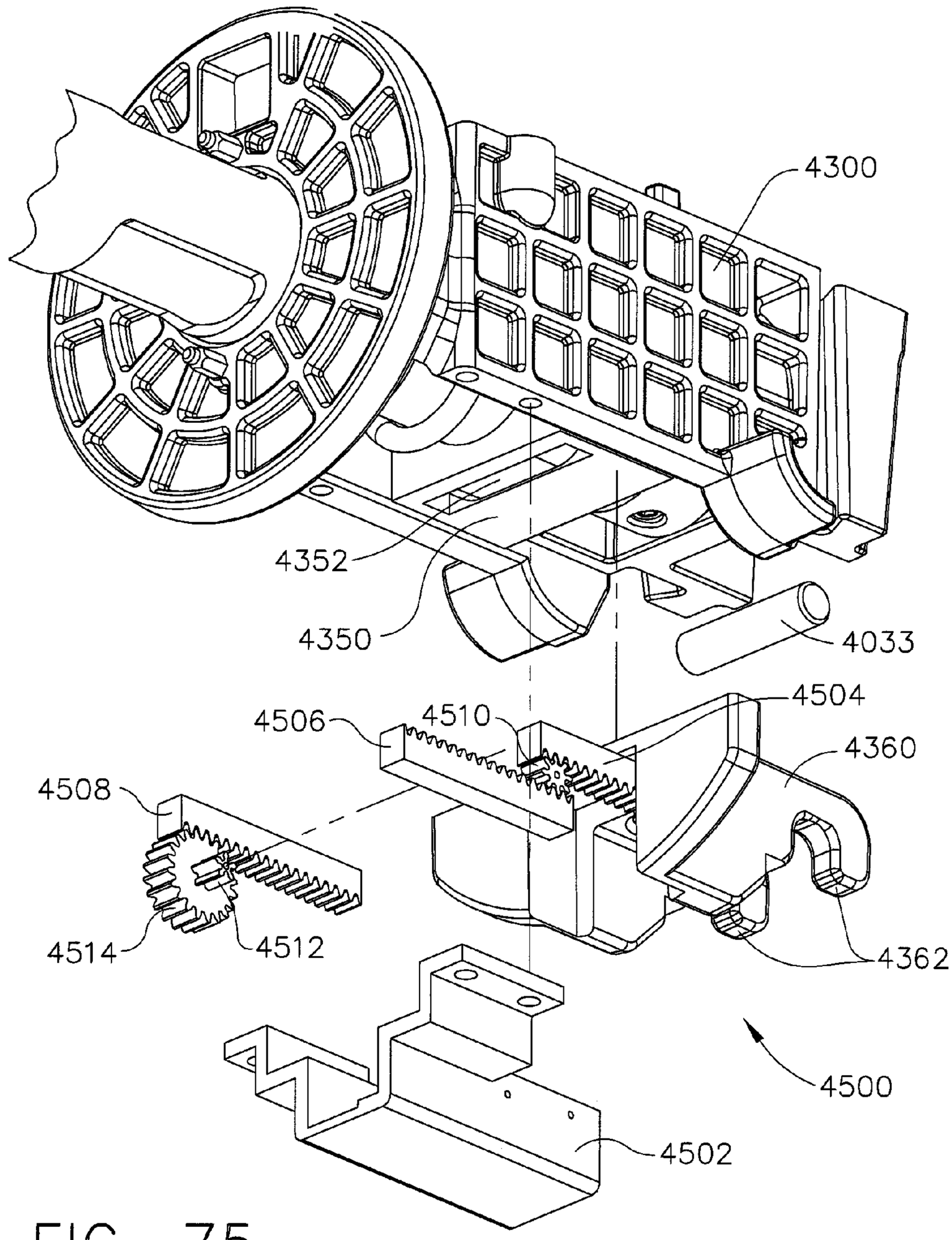
4300
4352
4350
4033
4504
4506
4510
4360
4508
4514
4512
4362
4500
4502

FIG. 75

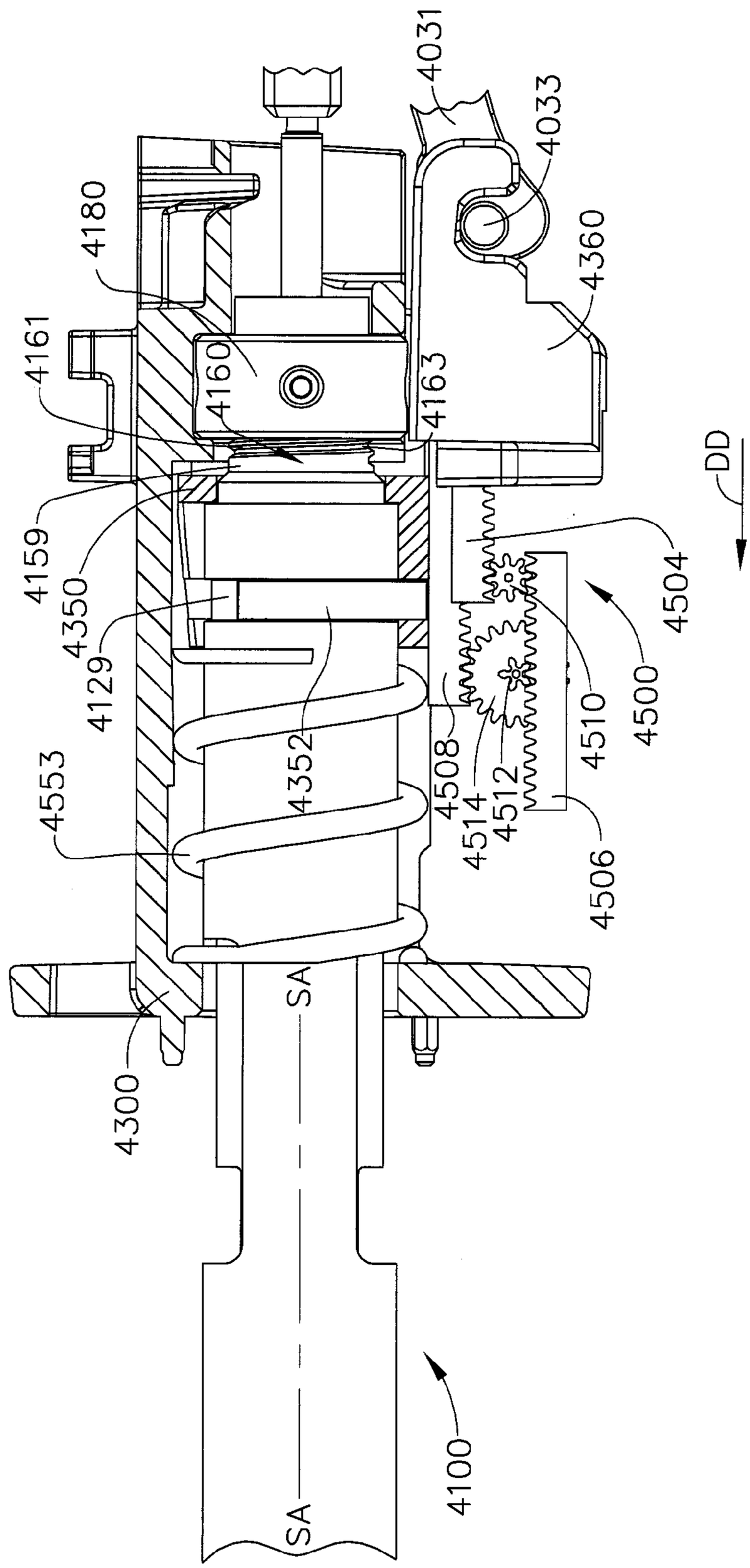
4031
4033
4360
4180
4161
4160
4163
DD
4159
4350
4129
4504
4500
4510
4553
4352
4508
4514
4512
4506
SA
4300
SA
4100

FIG. 76

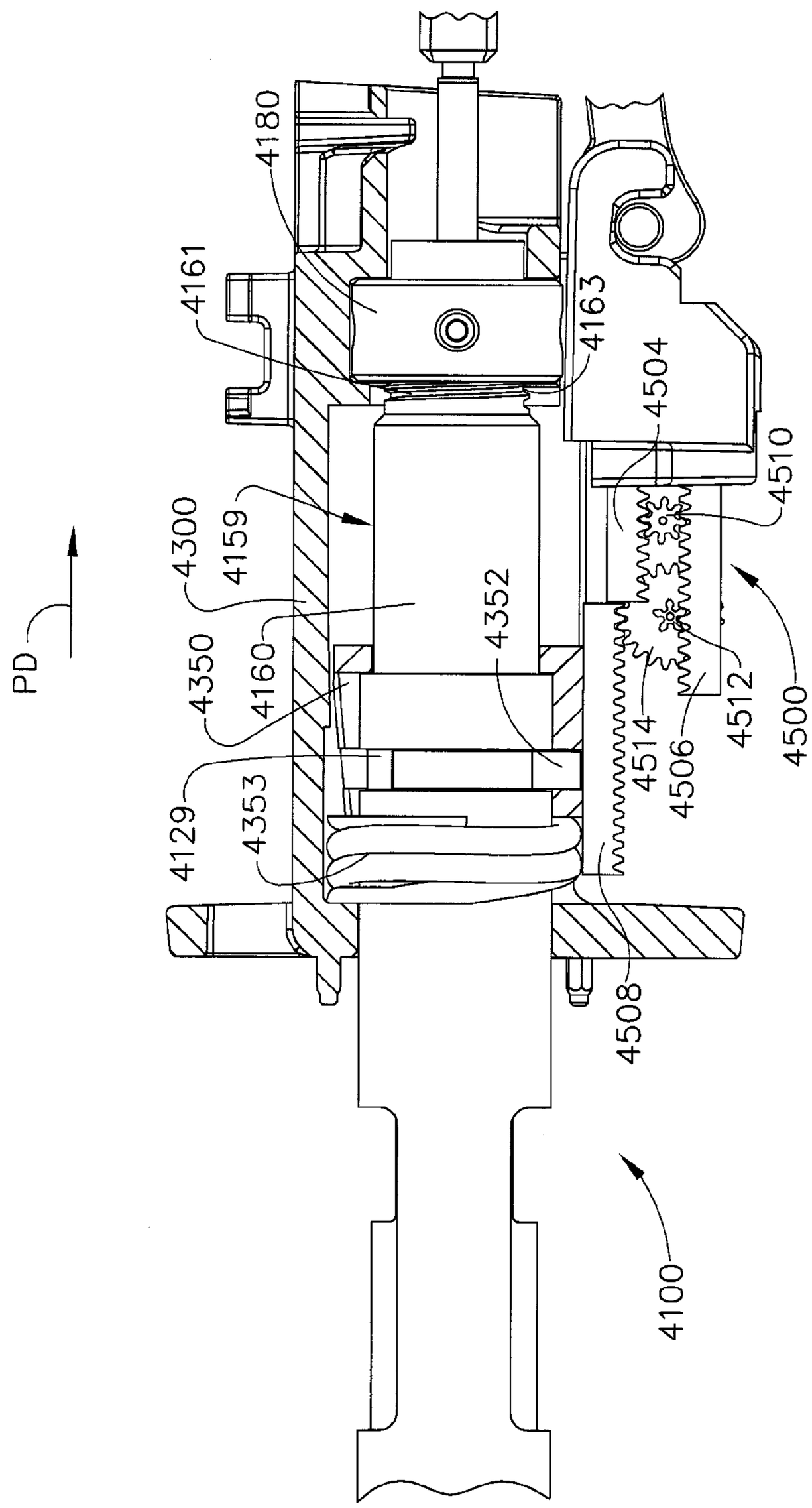
PD
4180
4161
4163
4504
4510
4300
4159
4352
4350
4160
4512
4500
4514
4506
4129
4353
4508
4100

FIG. 77

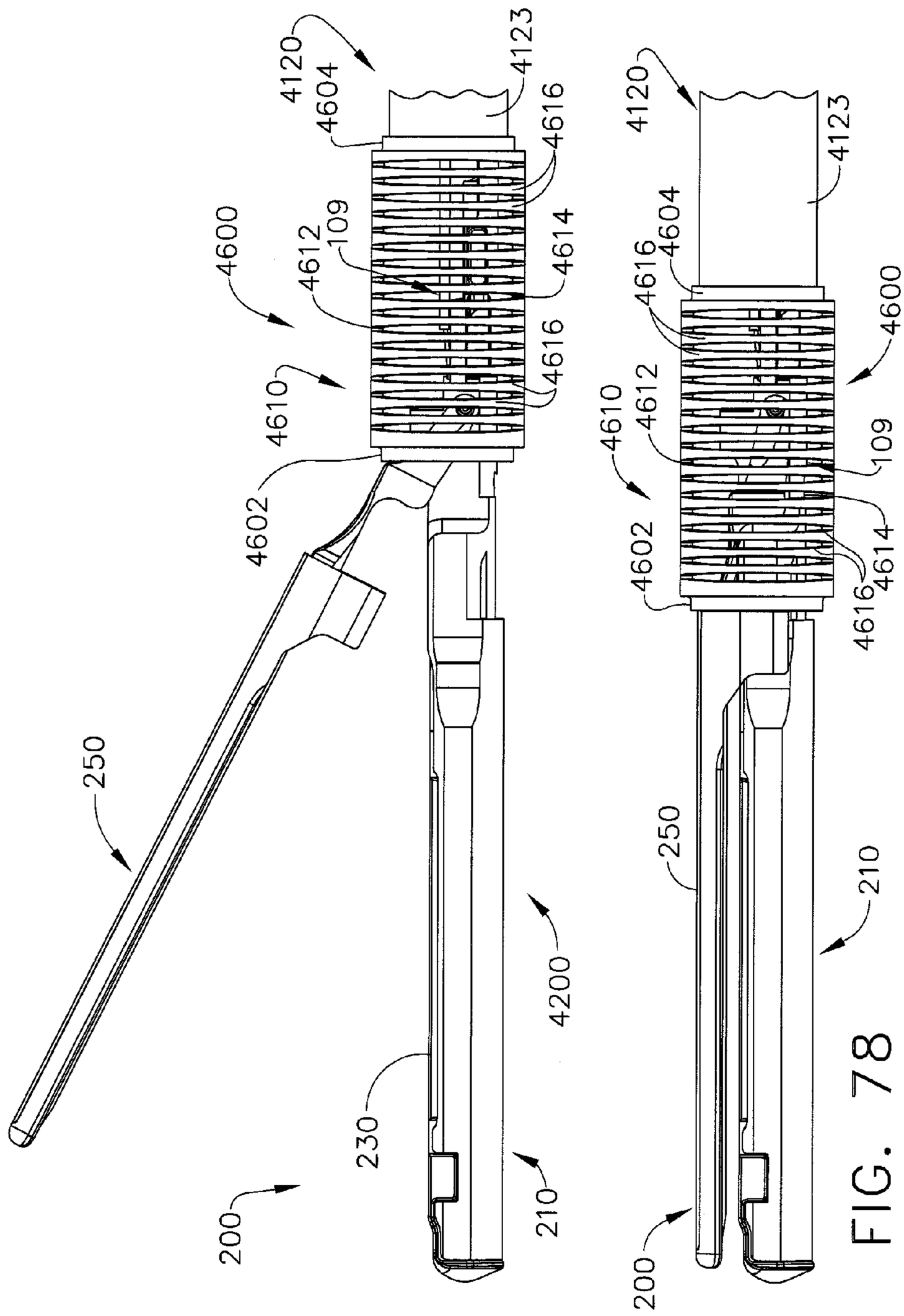
4120
4604
4123
4616
4600
4612
109
4614
4616
4610
4602
250
230
200
210
4200
4120
4123
4604
4616
4600
4610
4612
109
4614
4616
4602
250
210
200

FIG. 78

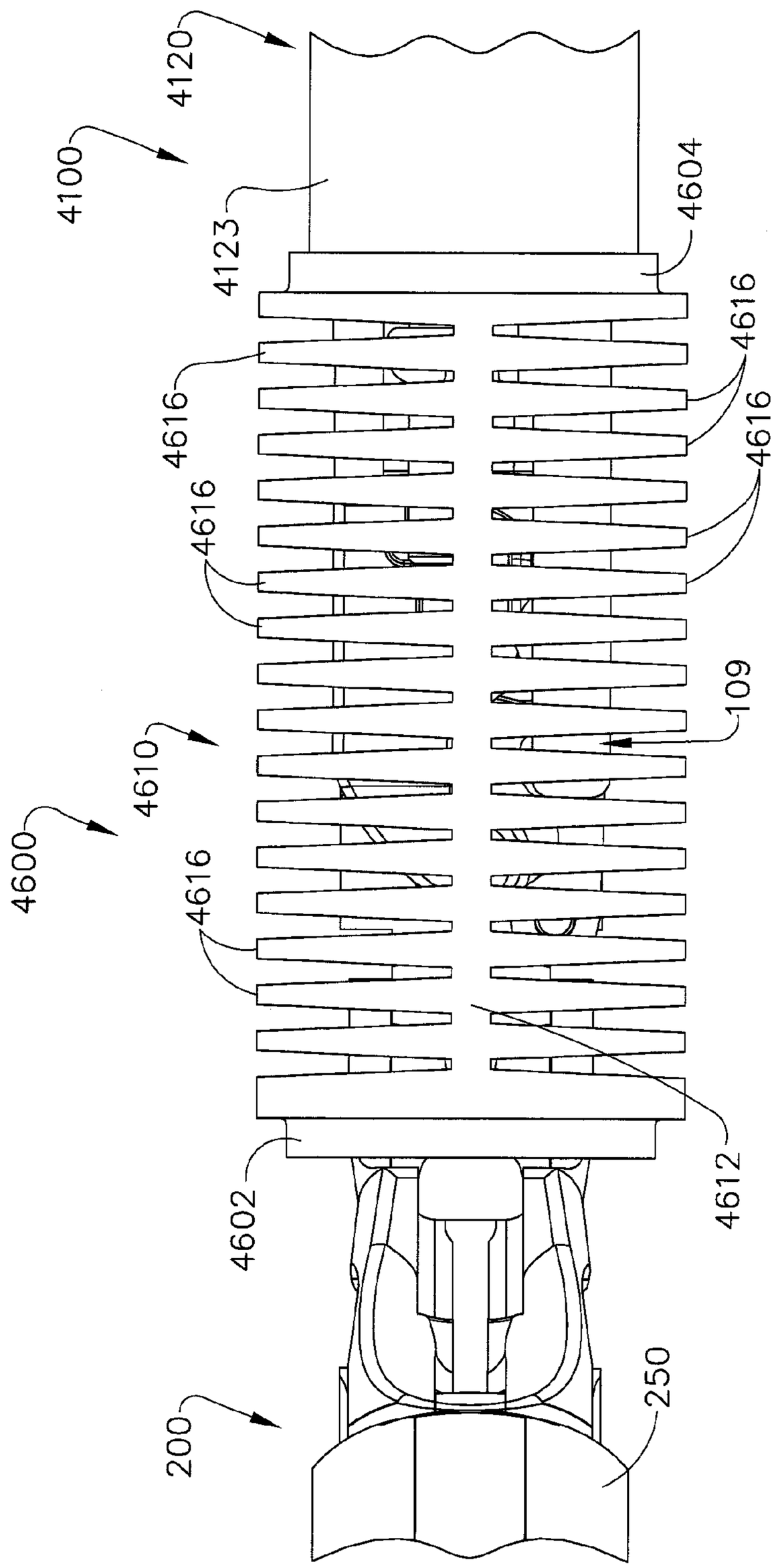
4100
4120
4123
4604
4616
4616
4616
4616
4616
4616
109
4610
4600
4602
4612
200
250

FIG. 79

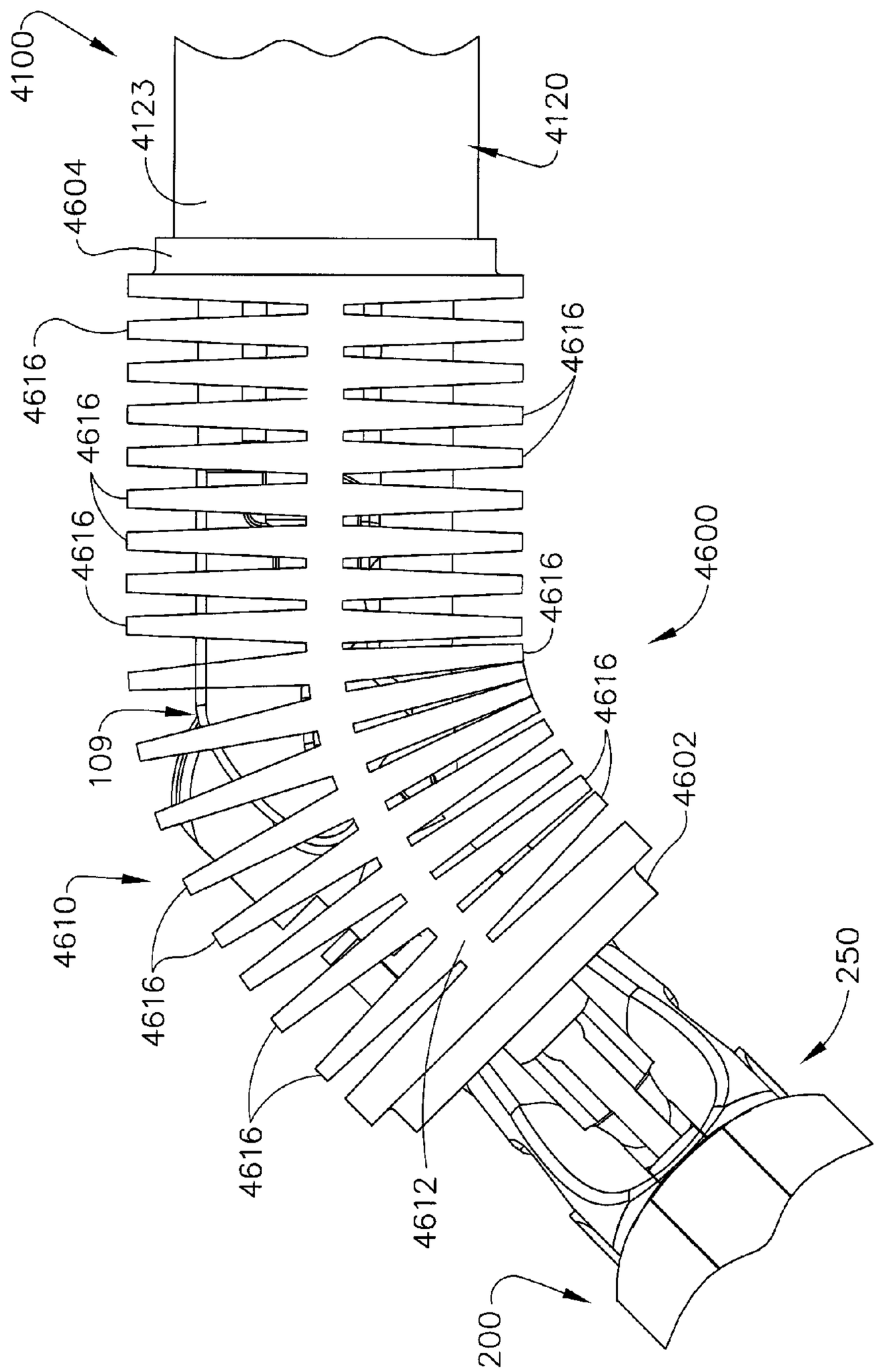
4100
4123
4604
4120
4616
4616
4616
4616
4616
4616
4616
4600
109
4616
4602
4610
4616
250
4616
4612
200

FIG. 80

SURGICAL INSTRUMENTS WITH IMPROVED CLOSURE ARRANGEMENTS

BACKGROUND

[0001] The present invention relates to surgical instruments and, in various embodiments, to surgical stapling and cutting instruments and staple cartridges for use therewith.

[0002] A stapling instrument can include a pair of cooperating elongate jaw members, wherein each jaw member can be adapted to be inserted into a patient and positioned relative to tissue that is to be stapled and/or incised. In various embodiments, one of the jaw members can support a staple cartridge with at least two laterally spaced rows of staples contained therein, and the other jaw member can support an anvil with staple-forming pockets aligned with the rows of staples in the staple cartridge. Generally, the stapling instrument can further include a pusher bar and a knife blade which are slidable relative to the jaw members to sequentially eject the staples from the staple cartridge via camming surfaces on the pusher bar and/or camming surfaces on a wedge sled that is pushed by the pusher bar. In at least one embodiment, the camming surfaces can be configured to activate a plurality of staple drivers carried by the cartridge and associated with the staples in order to push the staples against the anvil and form laterally spaced rows of deformed staples in the tissue gripped between the jaw members. In at least one embodiment, the knife blade can trail the camming surfaces and cut the tissue along a line between the staple rows. Examples of such stapling instruments are disclosed in U.S. Pat. No. 7,794,475, entitled SURGICAL STAPLES HAVING COMPRESSIBLE OR CRUSHABLE MEMBERS FOR SECURING TISSUE THEREIN AND STAPLING INSTRUMENTS FOR DEPLOYING THE SAME, the entire disclosure of which is hereby incorporated by reference herein.

[0003] The foregoing discussion is intended only to illustrate various aspects of the related art in the field of the invention at the time, and should not be taken as a disavowal of claim scope.

BRIEF DESCRIPTION OF THE DRAWINGS

[0004] Various features of the embodiments described herein, together with advantages thereof, may be understood in accordance with the following description taken in conjunction with the accompanying drawings as follows:

[0005] FIG. **1** is a perspective view of a powered surgical instrument embodiment comprising a handle, a shaft, and an articulatable end effector;

[0006] FIG. **2** is a perspective view of a manually-powered surgical instrument embodiment comprising a handle, a shaft, and an articulatable end effector;

[0007] FIG. **3** is a perspective view of a surgical instrument embodiment comprising a housing, a shaft, and an articulatable end effector that is configured for use with a robotically-controlled system;

[0008] FIG. **4** is a perspective view of a robotically-controlled surgical system embodiment;

[0009] FIG. **5** is a perspective view of an articulatable surgical end effector embodiment;

[0010] FIG. **6** is an exploded perspective view of the articulatable surgical end effector of FIG. **5**;

[0011] FIG. **7** is a perspective view of an elongate channel of the surgical end effector of FIGS. **5** and **6**;

[0012] FIG. **8** is a top view of the elongate channel of FIG. **7**;

[0013] FIG. **9** is a side elevational view of the elongate channel of FIGS. **7** and **8**;

[0014] FIG. **10** is a top view of an anvil of the surgical end effector of FIGS. **5** and **6**;

[0015] FIG. **11** is a side elevational view of the anvil of FIG. **10**;

[0016] FIG. **12** is a cross-sectional view of the surgical end effector of FIGS. **5** and **6** with the anvil in an open position;

[0017] FIG. **13** is a cross-sectional side view of the surgical end effector of FIG. **12** with the anvil in a closed position and the firing member in an unfired starting position;

[0018] FIG. **14** is a perspective view of a firing beam guide assembly embodiment;

[0019] FIG. **15** is a cross-sectional perspective view of the firing beam guide assembly of FIG. **14**;

[0020] FIG. **16** is a partial perspective view of the surgical end effector of FIGS. **11** and **12**;

[0021] FIG. **17** is a top view of the surgical end effector of FIG. **16**;

[0022] FIG. **18** is a perspective view of the surgical end effector of FIGS. **16** and **17** articulated in a first direction "FD";

[0023] FIG. **19** is a top view of the surgical end effector of FIG. **18**;

[0024] FIG. **20** is a perspective view of the surgical end effector of FIGS. **16** and **17** articulated in a second direction "SD";

[0025] FIG. **21** is a top view of the surgical end effector of FIG. **20**;

[0026] FIG. **22** is a diagrammatical comparison illustrating the ranges of motion of two surgical end effectors within a human pelvis area;

[0027] FIG. **23** is a side elevational view comparing the proximal dead zones ("PDZ's") of two surgical end effectors;

[0028] FIG. **24** is a perspective view of another articulatable surgical end effector embodiment;

[0029] FIG. **25** is an exploded perspective view of the surgical end effector of FIG. **24**;

[0030] FIG. **26** is a partial perspective view of the surgical end effector of FIGS. **24** and **25**;

[0031] FIG. **27** is another partial perspective view of the surgical end effector of FIGS. **24-26** articulated in a first direction ("FD");

[0032] FIG. **28** is another perspective view of the surgical end effector of FIG. **27** articulated in a second direction ("SD");

[0033] FIG. **29** is a top view of the end effector of FIGS. **24** and **25**;

[0034] FIG. **30** is another top view of the end effector of FIG. **29** articulated in a first direction ("FD");

[0035] FIG. **31** is another top view of the surgical end effector of FIG. **29** articulated in a second direction ("SD");

[0036] FIG. **32** is another top view of a portion of the surgical end effector of FIG. **29**;

[0037] FIG. **33** is an enlarged top view of a portion of the surgical end effector of FIG. **32**;

[0038] FIG. **34** is an enlarged top view of a portion of another surgical end effector embodiment;

[0039] FIG. **35** is a perspective view of a portion of another surgical instrument embodiment;

[0040] FIG. **36** is a top view of the surgical instrument of FIG. **35**;

[0041] FIG. **37** is another top view of the surgical instrument of FIGS. **35** and **36** with the end effector thereof in an articulated orientation;

[0042] FIG. **38** is a perspective view of a portion of another surgical instrument embodiment;

[0043] FIG. **39** is a top view of the surgical instrument of FIG. **38**;

[0044] FIG. **40** is another top view of the surgical instrument of FIGS. **38** and **39** with the end effector thereof in an articulated orientation;

[0045] FIG. **41** is a perspective view of a portion of another surgical instrument embodiment;

[0046] FIG. **42** is an exploded assembly view of a portion of the surgical instrument of FIG. **41**;

[0047] FIG. **43** is another exploded assembly view of a portion of the surgical instrument of FIGS. **41** and **42**;

[0048] FIG. **44** is a top view of a portion of the surgical instrument of FIGS. **41-43**;

[0049] FIG. **45** is another top view of the surgical instrument of FIGS. **41-44** with the end effector thereof in an articulated orientation;

[0050] FIG. **46** is a perspective view of a portion of another surgical instrument embodiment;

[0051] FIG. **47** is a top view of the surgical instrument of FIG. **46**;

[0052] FIG. **48** is another top view of the surgical instrument of FIGS. **46** and **47** with the end effector thereof in an articulated orientation;

[0053] FIG. **49** is a perspective view of a portion of another surgical instrument embodiment;

[0054] FIG. **50** is a top view of the surgical instrument of FIG. **49**;

[0055] FIG. **51** is another top view of the surgical instrument of FIGS. **49** and **50** with the end effector thereof in an articulated orientation;

[0056] FIG. **52** is a partial perspective view of a firing beam support assembly embodiment;

[0057] FIG. **53** is a perspective view of a portion of a surgical instrument embodiment;

[0058] FIG. **54** is an exploded assembly view of a portion of the surgical instrument of FIG. **53**;

[0059] FIG. **55** is a perspective view of a proximal end connector portion of an elongate channel of an end effector embodiment;

[0060] FIG. **56** is a top view of a portion of the surgical instrument of FIGS. **53-55**;

[0061] FIG. **57** is another top view of the surgical instrument of FIGS. **53-56** with the end effector thereof in an articulated orientation;

[0062] FIG. **58** is a perspective view of the articulated surgical instrument of FIG. **57**;

[0063] FIG. **59** is a perspective view of a portion of another surgical instrument embodiment;

[0064] FIG. **60** is an exploded assembly view of a portion of the surgical instrument of FIG. **59**;

[0065] FIG. **61** is a top view of a portion of the surgical instrument of FIGS. **59** and **60**;

[0066] FIG. **62** is a top view of the surgical instrument of FIGS. **59-61** with the end effector thereof in an articulated orientation;

[0067] FIG. **63** is a perspective view of the surgical instrument of FIG. **62**;

[0068] FIG. **64** is a perspective view of a firing beam guide assembly embodiment;

[0069] FIG. **65** is a perspective view of another firing beam guide assembly embodiment;

[0070] FIG. **66** is a bottom perspective view of the firing beam guide assembly of FIG. **65**;

[0071] FIG. **67** is a cross-sectional perspective view of the firing beam guide assembly of FIGS. **65** and **66**;

[0072] FIG. **68** is a perspective view of another firing beam guide assembly embodiment;

[0073] FIG. **69** is an exploded assembly view of the firing beam guide assembly of FIG. **68**;

[0074] FIG. **70** is a perspective view of another firing beam guide assembly embodiment;

[0075] FIG. **71** is a perspective view of another firing beam guide assembly embodiment;

[0076] FIG. **72** is a perspective view of another surgical instrument embodiment;

[0077] FIG. **73** is a cross-sectional perspective view of a portion of the interchangeable shaft assembly of the surgical instrument of FIG. **72**;

[0078] FIG. **74** is a partial perspective view of a portion of the interchangeable shaft assembly of FIG. **72**;

[0079] FIG. **75** is an exploded assembly view of a portion of the interchangeable shaft assembly of FIGS. **72-74**;

[0080] FIG. **76** is a partial cross-sectional view of the interchangeable shaft assembly of FIGS. **72-75**;

[0081] FIG. **77** is another partial cross-sectional view of the interchangeable shaft assembly of FIGS. **72-76**;

[0082] FIG. **78** shows side elevational views of the end effector of the surgical instrument of FIG. **72** with the anvil in an open position and a closed position;

[0083] FIG. **79** is a top view of a portion of the surgical instrument of FIG. **72**; and

[0084] FIG. **80** is another top view of the surgical instrument of FIG. **79** with the end effector thereof in an articulated position.

[0085] Corresponding reference characters indicate corresponding parts throughout the several views. The exemplifications set out herein illustrate certain embodiments of the invention, in one form, and such exemplifications are not to be construed as limiting the scope of the invention in any manner.

DETAILED DESCRIPTION

[0086] Applicant of the present application owns the following patent applications that were filed on Mar. 1, 2013 and which are each herein incorporated by reference in their respective entireties:

[0087] U.S. patent application Ser. No. 13/782,295, entitled ARTICULATABLE SURGICAL INSTRUMENTS WITH CONDUCTIVE PATHWAYS FOR SIGNAL COMMUNICATION, now U.S. Patent Application Publication No. 2014/0246471;

[0088] U.S. patent application Ser. No. 13/782,323, entitled ROTARY POWERED ARTICULATION JOINTS FOR SURGICAL INSTRUMENTS, now U.S. Patent Application Publication No. 2014/0246472;

[0089] U.S. patent application Ser. No. 13/782,338, entitled THUMBWHEEL SWITCH ARRANGEMENTS FOR SURGICAL INSTRUMENTS, now U.S. Patent Application Publication No. 2014/0249557;

[0090] U.S. patent application Ser. No. 13/782,499, entitled ELECTROMECHANICAL SURGICAL

DEVICE WITH SIGNAL RELAY ARRANGEMENT, now U.S. Patent Application Publication No. 2014/0246474;

[0091] U.S. patent application Ser. No. 13/782,460, entitled MULTIPLE PROCESSOR MOTOR CONTROL FOR MODULAR SURGICAL INSTRUMENTS, now U.S. Patent Application Publication No. 2014/0246478;

[0092] U.S. patent application Ser. No. 13/782,358, entitled JOYSTICK SWITCH ASSEMBLIES FOR SURGICAL INSTRUMENTS, now U.S. Patent Application Publication No. 2014/0246477;

[0093] U.S. patent application Ser. No. 13/782,481, entitled SENSOR STRAIGHTENED END EFFECTOR DURING REMOVAL THROUGH TROCAR, now U.S. Patent Application Publication No. 2014/0246479;

[0094] U.S. patent application Ser. No. 13/782,518, entitled CONTROL METHODS FOR SURGICAL INSTRUMENTS WITH REMOVABLE IMPLEMENT PORTIONS, now U.S. Patent Application Publication No. 2014/0246475;

[0095] U.S. patent application Ser. No. 13/782,375, entitled ROTARY POWERED SURGICAL INSTRUMENTS WITH MULTIPLE DEGREES OF FREEDOM, now U.S. Patent Application Publication No. 2014/0246473; and

[0096] U.S. patent application Ser. No. 13/782,536, entitled SURGICAL INSTRUMENT SOFT STOP, now U.S. Patent Application Publication No. 2014/0246476.

[0097] Applicant of the present application also owns the following patent applications that were filed on Mar. 14, 2013 and which are each herein incorporated by reference in their respective entireties:

[0098] U.S. patent application Ser. No. 13/803,097, entitled ARTICULATABLE SURGICAL INSTRUMENT COMPRISING A FIRING DRIVE, now U.S. Patent Application Publication No. 2014/0263542;

[0099] U.S. patent application Ser. No. 13/803,193, entitled CONTROL ARRANGEMENTS FOR A DRIVE MEMBER OF A SURGICAL INSTRUMENT, now U.S. Patent Application Publication No. 2014/0263537;

[0100] U.S. patent application Ser. No. 13/803,053, entitled INTERCHANGEABLE SHAFT ASSEMBLIES FOR USE WITH A SURGICAL INSTRUMENT, now U.S. Patent Application Publication No. 2014/0263564;

[0101] U.S. patent application Ser. No. 13/803,086, entitled ARTICULATABLE SURGICAL INSTRUMENT COMPRISING AN ARTICULATION LOCK, now U.S. Patent Application Publication No. 2014/0263541;

[0102] U.S. patent application Ser. No. 13/803,210, entitled SENSOR ARRANGEMENTS FOR ABSOLUTE POSITIONING SYSTEM FOR SURGICAL INSTRUMENTS, now U.S. Patent Application Publication No. 2014/0263538;

[0103] U.S. patent application Ser. No. 13/803,148, entitled MULTI-FUNCTION MOTOR FOR A SURGICAL INSTRUMENT, now U.S. Patent Application Publication No. 2014/0263554;

[0104] U.S. patent application Ser. No. 13/803,066, entitled DRIVE SYSTEM LOCKOUT ARRANGEMENTS FOR MODULAR SURGICAL INSTRUMENTS, now U.S. Patent Application Publication No. 2014/0263565;

[0105] U.S. patent application Ser. No. 13/803,117, entitled ARTICULATION CONTROL SYSTEM FOR ARTICULATABLE SURGICAL INSTRUMENTS, now U.S. Patent Application Publication No. 2014/0263553;

[0106] U.S. patent application Ser. No. 13/803,130, entitled DRIVE TRAIN CONTROL ARRANGEMENTS FOR MODULAR SURGICAL INSTRUMENTS, now U.S. Patent Application Publication No. 2014/0263543; and

[0107] U.S. patent application Ser. No. 13/803,159, entitled METHOD AND SYSTEM FOR OPERATING A SURGICAL INSTRUMENT, now U.S. Patent Application Publication No. 2014/0277017.

[0108] Applicant of the present application also owns the following patent application that was filed on Mar. 7, 2014 and is herein incorporated by reference in its entirety:

[0109] U.S. patent application Ser. No. 14/200,111, entitled CONTROL SYSTEMS FOR SURGICAL INSTRUMENTS, now U.S. Patent Application Publication No. 2014/0263539.

[0110] Applicant of the present application also owns the following patent applications that were filed on Mar. 26, 2014 and are each herein incorporated by reference in their respective entireties:

[0111] U.S. patent application Ser. No. 14/226,106, entitled POWER MANAGEMENT CONTROL SYSTEMS FOR SURGICAL INSTRUMENTS;

[0112] U.S. patent application Ser. No. 14/226,099, entitled STERILIZATION VERIFICATION CIRCUIT;

[0113] U.S. patent application Ser. No. 14/226,094, entitled VERIFICATION OF NUMBER OF BATTERY EXCHANGES/PROCEDURE COUNT;

[0114] U.S. patent application Ser. No. 14/226,117, entitled POWER MANAGEMENT THROUGH SLEEP OPTIONS OF SEGMENTED CIRCUIT AND WAKE UP CONTROL;

[0115] U.S. patent application Ser. No. 14/226,075, entitled MODULAR POWERED SURGICAL INSTRUMENT WITH DETACHABLE SHAFT ASSEMBLIES;

[0116] U.S. patent application Ser. No. 14/226,093, entitled FEEDBACK ALGORITHMS FOR MANUAL BAILOUT SYSTEMS FOR SURGICAL INSTRUMENTS;

[0117] U.S. patent application Ser. No. 14/226,116, entitled SURGICAL INSTRUMENT UTILIZING SENSOR ADAPTATION;

[0118] U.S. patent application Ser. No. 14/226,071, entitled SURGICAL INSTRUMENT CONTROL CIRCUIT HAVING A SAFETY PROCESSOR;

[0119] U.S. patent application Ser. No. 14/226,097, entitled SURGICAL INSTRUMENT COMPRISING INTERACTIVE SYSTEMS;

[0120] U.S. patent application Ser. No. 14/226,126, entitled INTERFACE SYSTEMS FOR USE WITH SURGICAL INSTRUMENTS;

[0121] U.S. patent application Ser. No. 14/226,133, entitled MODULAR SURGICAL INSTRUMENT SYSTEM;

[0122] U.S. patent application Ser. No. 14/226,081, entitled SYSTEMS AND METHODS FOR CONTROLLING A SEGMENTED CIRCUIT;

[0123] U.S. patent application Ser. No. 14/226,076, entitled POWER MANAGEMENT THROUGH SEGMENTED CIRCUIT AND VARIABLE VOLTAGE PROTECTION;

[0124] U.S. patent application Ser. No. 14/226,111, entitled SURGICAL STAPLING INSTRUMENT SYSTEM; and

[0125] U.S. patent application Ser. No. 14/226,125, entitled SURGICAL INSTRUMENT COMPRISING A ROTATABLE SHAFT.

[0126] Applicant of the present application also owns the following patent applications that were filed on Sep. 5, 2014 and which are each herein incorporated by reference in their respective entireties:

[0127] U.S. patent application Ser. No. 14/479,103, entitled CIRCUITRY AND SENSORS FOR POWERED MEDICAL DEVICE;

[0128] U.S. patent application Ser. No. 14/479,119, entitled ADJUNCT WITH INTEGRATED SENSORS TO QUANTIFY TISSUE COMPRESSION;

[0129] U.S. patent application Ser. No. 14/478,908, entitled MONITORING DEVICE DEGRADATION BASED ON COMPONENT EVALUATION;

[0130] U.S. patent application Ser. No. 14/478,895, entitled MULTIPLE SENSORS WITH ONE SENSOR AFFECTING A SECOND SENSOR'S OUTPUT OR INTERPRETATION;

[0131] U.S. patent application Ser. No. 14/479,110, entitled USE OF POLARITY OF HALL MAGNET DETECTION TO DETECT MISLOADED CARTRIDGE;

[0132] U.S. patent application Ser. No. 14/479,098, entitled SMART CARTRIDGE WAKE UP OPERATION AND DATA RETENTION;

[0133] U.S. patent application Ser. No. 14/479,115, entitled MULTIPLE MOTOR CONTROL FOR POWERED MEDICAL DEVICE; and

[0134] U.S. patent application Ser. No. 14/479,108, entitled LOCAL DISPLAY OF TISSUE PARAMETER STABILIZATION.

[0135] Applicant of the present application also owns the following patent applications that were filed on Apr. 9, 2014 and which are each herein incorporated by reference in their respective entireties:

[0136] U.S. patent application Ser. No. 14/248,590, entitled MOTOR DRIVEN SURGICAL INSTRUMENTS WITH LOCKABLE DUAL DRIVE SHAFTS, now U.S. Patent Application Publication No. 2014/0305987;

[0137] U.S. patent application Ser. No. 14/248,581, entitled SURGICAL INSTRUMENT COMPRISING A CLOSING DRIVE AND A FIRING DRIVE OPERATED FROM THE SAME ROTATABLE OUTPUT, now U.S. Patent Application Publication No. 2014/0305989;

[0138] U.S. patent application Ser. No. 14/248,595, entitled SURGICAL INSTRUMENT SHAFT INCLUDING SWITCHES FOR CONTROLLING THE OPERATION OF THE SURGICAL INSTRUMENT, now U.S. Patent Application Publication No. 2014/0305988;

[0139] U.S. patent application Ser. No. 14/248,588, entitled POWERED LINEAR SURGICAL STAPLER, now U.S. Patent Application Publication No. 2014/0309666;

[0140] U.S. patent application Ser. No. 14/248,591, entitled TRANSMISSION ARRANGEMENT FOR A SURGICAL INSTRUMENT, now U.S. Patent Application Publication No. 2014/0305991;

[0141] U.S. patent application Ser. No. 14/248,584, entitled MODULAR MOTOR DRIVEN SURGICAL INSTRUMENTS WITH ALIGNMENT FEATURES FOR ALIGNING ROTARY DRIVE SHAFTS WITH SURGICAL END EFFECTOR SHAFTS, now U.S. Patent Application Publication No. 2014/0305994;

[0142] U.S. patent application Ser. No. 14/248,587, entitled POWERED SURGICAL STAPLER, now U.S. Patent Application Publication No. 2014/0309665;

[0143] U.S. patent application Ser. No. 14/248,586, entitled DRIVE SYSTEM DECOUPLING ARRANGEMENT FOR A SURGICAL INSTRUMENT, now U.S. Patent Application Publication No. 2014/0305990; and

[0144] U.S. patent application Ser. No. 14/248,607, entitled MODULAR MOTOR DRIVEN SURGICAL INSTRUMENTS WITH STATUS INDICATION ARRANGEMENTS, now U.S. Patent Application Publication No. 2014/0305992.

[0145] Applicant of the present application also owns the following patent applications that were filed on Apr. 16, 2013 and which are each herein incorporated by reference in their respective entireties:

[0146] U.S. Provisional Patent Application Ser. No. 61/812,365, entitled SURGICAL INSTRUMENT WITH MULTIPLE FUNCTIONS PERFORMED BY A SINGLE MOTOR;

[0147] U.S. Provisional Patent Application Ser. No. 61/812,376, entitled LINEAR CUTTER WITH POWER;

[0148] U.S. Provisional Patent Application Ser. No. 61/812,382, entitled LINEAR CUTTER WITH MOTOR AND PISTOL GRIP;

[0149] U.S. Provisional Patent Application Ser. No. 61/812,385, entitled SURGICAL INSTRUMENT HANDLE WITH MULTIPLE ACTUATION MOTORS AND MOTOR CONTROL; and

[0150] U.S. Provisional Patent Application Ser. No. 61/812,372, entitled SURGICAL INSTRUMENT WITH MULTIPLE FUNCTIONS PERFORMED BY A SINGLE MOTOR.

[0151] Applicant of the present application owns the following patent applications that were filed on even date herewith which are each herein incorporated by reference in their respective entireties:

[0152] U.S. patent application Ser. No. _____, entitled SURGICAL INSTRUMENT SYSTEMS COMPRISING AN ARTICULATABLE END EFFECTOR AND MEANS FOR ADJUSTING THE FIRING STROKE OF A FIRING MEMBER; Attorney Docket No. END7415USNP/140289;

[0153] U.S. patent application Ser. No. _____, entitled SURGICAL INSTRUMENT ASSEMBLY COMPRISING LOCKABLE SYSTEMS; Attorney Docket No. END7416USNP/140291;

[0154] U.S. patent application Ser. No. _____, entitled DRIVE ARRANGEMENTS FOR ARTICULATABLE SURGICAL INSTRUMENTS, Attorney Docket No. END7418USNP/140292;

[0155] U.S. patent application Ser. No. _____, entitled LOCKING ARRANGEMENTS FOR DETACHABLE SHAFT ASSEMBLIES WITH ARTICULATABLE SURGICAL END EFFECTORS, Attorney Docket No. END7417USNP/140293;

[0156] U.S. patent application Ser. No. _____, entitled SURGICAL INSTRUMENT WITH AN ANVIL THAT IS SELECTIVELY MOVABLE ABOUT A DISCRETE NON-MOVABLE AXIS RELATIVE TO A STAPLE CARTRIDGE, Attorney Docket No. END7485USNP1140295;

[0157] U.S. patent application Ser. No. _____, entitled SURGICAL INSTRUMENTS WITH ARTICULATABLE END EFFECTORS AND MOVABLE FIRING BEAM SUPPORT ARRANGEMENTS, Attorney Docket No. END7489USNP/140299;

[0158] U.S. patent application Ser. No. _____, entitled SURGICAL INSTRUMENTS WITH ARTICULATABLE END EFFECTORS AND IMPROVED FIRING BEAM SUPPORT ARRANGEMENTS, Attorney Docket No. END7491USNP/140301;

[0159] U.S. patent application Ser. No. _____, entitled SURGICAL INSTRUMENT ASSEMBLY COMPRISING A FLEXIBLE ARTICULATION SYSTEM; Attorney Docket No. END7492USNP/140302; and

[0160] U.S. patent application Ser. No. _____, entitled SURGICAL INSTRUMENT ASSEMBLY COMPRISING A LOCKABLE ARTICULATION SYSTEM; Attorney Docket No. END7494USNP/140304.

[0161] Numerous specific details are set forth to provide a thorough understanding of the overall structure, function, manufacture, and use of the embodiments as described in the specification and illustrated in the accompanying drawings. Well-known operations, components, and elements have not been described in detail so as not to obscure the embodiments described in the specification. The reader will understand that the embodiments described and illustrated herein are non-limiting examples, and thus it can be appreciated that the specific structural and functional details disclosed herein may be representative and illustrative. Variations and changes thereto may be made without departing from the scope of the claims.

[0162] The terms "comprise" (and any form of comprise, such as "comprises" and "comprising"), "have" (and any form of have, such as "has" and "having"), "include" (and any form of include, such as "includes" and "including") and "contain" (and any form of contain, such as "contains" and "containing") are open-ended linking verbs. As a result, a surgical system, device, or apparatus that "comprises," "has," "includes" or "contains" one or more elements possesses those one or more elements, but is not limited to possessing only those one or more elements. Likewise, an element of a system, device, or apparatus that "comprises," "has," "includes" or "contains" one or more features possesses those one or more features, but is not limited to possessing only those one or more features.

[0163] The terms "proximal" and "distal" are used herein with reference to a clinician manipulating the handle portion of the surgical instrument. The term "proximal" referring to the portion closest to the clinician and the term "distal" referring to the portion located away from the clinician. It will be further appreciated that, for convenience and clarity, spatial terms such as "vertical", "horizontal", "up", and "down" may be used herein with respect to the drawings. However, surgical instruments are used in many orientations and positions, and these terms are not intended to be limiting and/or absolute.

[0164] Various exemplary devices and methods are provided for performing laparoscopic and minimally invasive surgical procedures. However, the reader will readily appreciate that the various methods and devices disclosed herein can be used in numerous surgical procedures and applications including, for example, in connection with open surgical procedures. As the present Detailed Description proceeds, the reader will further appreciate that the various instruments disclosed herein can be inserted into a body in any way, such as through a natural orifice, through an incision or puncture hole formed in tissue, etc. The working portions or "end effector" portions of the instruments can be inserted directly into a patient's body or can be inserted through an access device that has a working channel through which the end effector and elongated shaft of a surgical instrument can be advanced.

[0165] A surgical stapling system can comprise a shaft and an end effector extending from the shaft. The end effector comprises a first jaw and a second jaw. The first jaw comprises a staple cartridge. The staple cartridge is insertable into and removable from the first jaw; however, other embodiments are envisioned in which a staple cartridge is not removable from, or at least readily replaceable from, the first jaw. The second jaw comprises an anvil configured to deform staples ejected from the staple cartridge. The second jaw is pivotable relative to the first jaw about a closure axis; however, other embodiments are envisioned in which first jaw is pivotable relative to the second jaw. The surgical stapling system further comprises an articulation joint configured to permit the end effector to be rotated, or articulated, relative to the shaft. The end effector is rotatable about an articulation axis extending through the articulation joint. Other embodiments are envisioned which do not include an articulation joint.

[0166] The staple cartridge comprises a cartridge body. The cartridge body includes a proximal end, a distal end, and a deck extending between the proximal end and the distal end. In use, the staple cartridge is positioned on a first side of the tissue to be stapled and the anvil is positioned on a second side of the tissue. The anvil is moved toward the staple cartridge to compress and clamp the tissue against the deck. Thereafter, staples removably stored in the cartridge body can be deployed into the tissue. The cartridge body includes staple cavities defined therein wherein staples are removably stored in the staple cavities. The staple cavities are arranged in six longitudinal rows. Three rows of staple cavities are positioned on a first side of a longitudinal slot and three rows of staple cavities are positioned on a second side of the longitudinal slot. Other arrangements of staple cavities and staples may be possible.

[0167] The staples are supported by staple drivers in the cartridge body. The drivers are movable between a first, or unfired position, and a second, or fired, position to eject the staples from the staple cavities. The drivers are retained in the cartridge body by a retainer which extends around the bottom of the cartridge body and includes resilient members configured to grip the cartridge body and hold the retainer to the cartridge body. The drivers are movable between their unfired

positions and their fired positions by a sled. The sled is movable between a proximal position adjacent the proximal end and a distal position adjacent the distal end. The sled comprises a plurality of ramped surfaces configured to slide under the drivers and lift the drivers, and the staples supported thereon, toward the anvil.

[0168] Further to the above, the sled is moved distally by a firing member. The firing member is configured to contact the sled and push the sled toward the distal end. The longitudinal slot defined in the cartridge body is configured to receive the firing member. The anvil also includes a slot configured to receive the firing member. The firing member further comprises a first cam which engages the first jaw and a second cam which engages the second jaw. As the firing member is advanced distally, the first cam and the second cam can control the distance, or tissue gap, between the deck of the staple cartridge and the anvil. The firing member also comprises a knife configured to incise the tissue captured intermediate the staple cartridge and the anvil. It is desirable for the knife to be positioned at least partially proximal to the ramped surfaces such that the staples are ejected ahead of the knife.

[0169] FIG. **1** illustrates an exemplary motor driven (or "powered") surgical instrument **10** which includes a housing **20**, an elongate shaft assembly **100** and an end effector **200** that is operably connected to the elongate shaft assembly **100**. The end effector **200** as shown is configured to act as an endocutter for clamping, severing and stapling tissue. However, it will be appreciated that various embodiments may include end effectors configured to act as other surgical devices including, for example, graspers, cutters, staplers, clip appliers, access devices, drug/gene therapy delivery devices, ultrasound, RF, and/or laser energy devices, etc. As indicated above and will be describe further below, various portions of the surgical instrument **10** are motor driven. Further details regarding many aspects of the motor driven components of surgical instrument **10** may be found, for example, in U.S. patent application Ser. No. 13/803,086, entitled ARTICULATABLE SURGICAL INSTRUMENT COMPRISING AN ARTICULATION LOCK, U.S. Patent Application Publication No. 2014/0263541, which has been incorporated by reference in its entirety herein. However, it will be understood that the various end effector arrangements disclosed herein may also be effectively employed in connection with hand-held housings (handles) that contain "manually operable" (i.e. not powered by motor(s)) firing and closure systems such as those disclosed in the aforementioned incorporated U.S. Patent Application Publication No. 2014/0263541. For example, FIG. **2** illustrates the end effector **200** attached to an elongate shaft assembly **100'** that is operably attached to a housing **20'** of a surgical instrument **10'** that operably supports manually operable closure and firing systems.

[0170] It will also be appreciated that various arrangements disclosed herein may be effectively employed in connection with robotically-controlled surgical systems. For example, various arrangements disclosed herein may be employed with various robotic systems, instruments, components and methods disclosed in U.S. patent application Ser. No. 13/118,241, entitled SURGICAL STAPLING INSTRUMENTS WITH ROTATABLE STAPLE DEPLOYMENT ARRANGEMENTS, now U.S. Patent Application Publication No. 2012/0298719, which is hereby incorporated by reference in its entirety herein. For example, FIG. **3** depicts a surgical instrument **10"** that is well-adapted for use with a robotic system such as the robotic system **13** depicted in FIG. **4**. The surgical instrument **10"** includes an end effector **200** that is operably attached to an elongate shaft assembly **100"** that is coupled to a housing **20"** in the form of a tool drive assembly. FIG. **4**, illustrates a robotic arm cart **15** that is configured to actuate a plurality of surgical tools such as surgical tools **10"**. The robotic arm cart **15** and the surgical tools **10"** may be controlled by a master controller **17** that is operably coupled (directly or wirelessly) thereto. Various details concerning the operation of robotic system components and various tool drive assemblies may be found in the aforementioned incorporated U.S. Patent Application Publication No. 2012/0298719, as well as in U.S. Pat. No. 6,132,368, entitled MULTI-COMPONENT TELEPRESENCE SYSTEM AND METHOD, U.S. Pat. No. 5,878,193, entitled AUTOMATED ENDOSCOPE SYSTEM FOR OPTIMAL POSITIONING, U.S. Pat. No. 5,792,135, entitled ARTICULATED SURGICAL INSTRUMENT FOR PERFORMING MINIMALLY INVASIVE SURGERY WITH ENHANCED DEXTERITY AND SENSITIVITY, U.S. Pat. No. 6,231,565, entitled ROBOTIC ARM DLUS FOR PERFORMING SURGICAL TASKS, U.S. Pat. No. 6,783,524, entitled ROBOTIC SURGICAL TOOL WITH ULTRASOUND CAUTERIZING AND CUTTING INSTRUMENT, U.S. Pat. No. 6,364,888, entitled ALIGNMENT OF MASTER AND SLAVE IN A MINIMALLY INVASIVE SURGICAL APPARATUS, U.S. Pat. No. 7,524,320, entitled MECHANICAL ACTUATOR INTERFACE SYSTEM FOR ROBOTIC SURGICAL TOOLS, U.S. Pat. No. 7,691,098, entitled PLATFORM LINK WRIST MECHANISM, U.S. Pat. No. 7,806,891, entitled REPOSITIONING AND REORIENTATION OF MASTER/SLAVE RELATIONSHIP IN MINIMALLY INVASIVE TELESURGERY, and U.S. Pat. No. 7,824,401, entitled SURGICAL TOOL WITH WRITED MONOPOLAR ELECTROSURGICAL END EFFECTORS the entire disclosures of which are each hereby incorporated by reference herein.

[0171] Thus, as used herein, the term "housing" may also encompass a housing or similar portion of a robotic system that houses or otherwise operably supports at least one drive system that is configured to generate and apply at least one control motion which could be used to actuate the interchangeable shaft assemblies disclosed herein and their respective equivalents. The term "frame" may refer to a portion of a handheld surgical instrument, e.g., a "handle". The term "frame" may also represent a portion of a robotically-controlled surgical instrument and/or a portion of the robotic system that may be used to operably control a surgical instrument.

[0172] It should be appreciated that spatial terms such as vertical, horizontal, right, left, etc. are given herein with reference to the Figures assuming that the longitudinal or "shaft axis" of the surgical instrument **10** (or of the other surgical instrument examples disclosed herein) is co-axial to the central axis of the shaft **100**. In actual practice, however, any of the surgical instruments disclosed herein may be oriented at various angles and as such these spatial terms are used relative to the surgical instrument itself. Further, for a hand-held housing, "proximal" is used to denote a perspective of a clinician who is behind the handle who places the end effector distal, or away from him or herself. As used herein, the phrase, "substantially transverse to the longitudinal axis" where the "longitudinal axis" is the axis of the shaft, refers to a direction that is nearly perpendicular to the longitudinal

axis. It will be appreciated, however, that directions that deviate some from perpendicular to the longitudinal axis are also substantially transverse to the longitudinal axis.

[0173] As can be seen in FIG. **1**, the end effector **200** is pivotally connected to the shaft **100** at articulation joint **109**. A variety of articulation joints and control systems are disclosed in various patents and patent applications that have been incorporated by reference herein. Other articulation joints and articulation systems are disclosed in U.S. Pat. No. 7,753,245, entitled SURGICAL STAPLING INSTRUMENTS and U.S. Pat. No. 7,670,334, entitled SURGICAL INSTRUMENT HAVING AN ARTICULATING END EFFECTOR, the entire disclosures of which are hereby incorporated by reference herein. Various other means for articulating the end effector **200** are discussed in greater detail below.

[0174] Referring to FIGS. **5** and **6**, the end effector **200** includes, among other things, an elongate channel **210** that is configured to operably support a staple cartridge **230** therein. The staple cartridge **230** includes a cartridge body **232** that has a centrally-disposed, elongate cartridge slot **234** therein (FIG. **6**). In the illustrated arrangement, the staple cartridge **230** has three rows **238** of staple pockets **236** on each side of the elongate cartridge slot **234**. One or more surgical staples **242** are supported on corresponding staple drivers **240** that are movably supported in the staple pockets **236**. A cartridge pan **215** is attached to the bottom of the cartridge body **232**. The cartridge pan **215** includes a pan slot **217** that is aligned with the cartridge slot **234** and a channel slot **212** in the elongate channel **210**. See FIG. **6**.

[0175] The surgical instrument **10** further includes a firing member **300** that is attached to a firing beam **310** that interfaces with a firing system that is supported in the housing **20**, **20'** or **20"**. The firing system may be powered by a motor arrangement supported in the handle **20** (FIG. **1**) or it may be manually operated by actuating a firing trigger **26'** (FIG. **2**) or it may be powered by the robotic system **13** (FIG. **4**). Whichever arrangement is employed, upon actuation, the firing system will apply an axial firing motion to the firing beam **310** to drive the firing member **300** in the distal direction "DD". As can be seen in FIG. **6**, the firing member **300** includes a vertically-extending firing member body **302** that has a tissue cutting surface or blade **304** thereon. A first firing member tab **306** protrudes from a first lateral side **305** of the firing member body **302** and a second firing member tab **308** protrudes from a second lateral side **307** of the firing member body **302**. In addition, a first middle tab (not shown) protrudes from the first lateral side **305** of the firing member body **302** and a second middle tab **309** protrudes from the second lateral side **307** of the firing member body **302**. The firing member **300** further includes a tab or foot **312** that protrudes laterally from the bottom of the firing member body **302**. The purpose of the tabs **306**, **308**, **309** and foot **312** will be discussed in further detail below. In addition, a wedge sled **320** may be mounted within the cartridge body **232** for driving contact with the firing member **300**. As the firing member **300** is driven distally through the cartridge body **232**, the wedge surfaces **322** contact the staple drivers **240** to actuate the drivers **240** and the surgical staples **242** supported thereon upwardly in the cartridge body **232**.

[0176] The end effector **200** further includes an anvil **250** that includes an anvil body **252** that has a staple forming undersurface **254** thereon. The anvil **250** also includes an anvil mounting portion **260** for pivotally coupling the anvil **250** to the proximal end portion **211** of the elongate channel **210** for pivotal travel relative thereto about a non-movable anvil axis A-A. As can be most particularly seen in FIGS. **6** and **10**, the anvil mounting portion **260** in the illustrated arrangement comprises a proximally protruding first anvil arm **262** that includes an inwardly extending first anvil trunnion **264**. The illustrated anvil mounting portion **260** further comprises a proximally protruding second anvil arm **266** that is spaced from the first anvil arm **262**. A second anvil trunnion **268** protrudes inwardly from the second anvil arm **266**. The first anvil trunnion **264** is rotatably supported in a first trunnion hole **214** that is provided in the proximal end portion **211** of the elongate channel **210** (FIG. **8**) and the second anvil trunnion **268** is rotatably received in a second trunnion hole **216** (FIGS. **3**, **7**, **8** and **9**) in the proximal end portion **211** of the elongate channel **210**. The first and second trunnion holes **214**, **216** serve to define the non-movable anvil axis A-A which is transverse to the longitudinal shaft axis SA-SA. When the first anvil trunnion **264** is rotatably received with the first trunnion hole **214** and the second anvil trunnion **268** is received in the second anvil trunnion hole **216**, the anvil **250** is movable relative to the elongate channel **210** such that the distal end **253** of the anvil **250** can be selectively moved toward and away from the elongate channel **210**.

[0177] Referring to FIGS. **3**, **10** and **11**, the anvil mounting portion **260** includes a closure ramp portion **270**. The closure ramp portion **270** includes a first ramp segment **272** and a second ramp segment **274** that is spaced from the first ramp segment **272** to form a firing member staging opening **280** therebetween. See FIGS. **10**, **12** and **13**. As can be seen in FIG. **12**, the top portion of the firing member **300** may extend into the staging opening **280** when the anvil **250** is in an open position and the firing member **300** is in a starting or unfired position. When the anvil **250** is closed as shown in FIG. **13**, the top of the firing member **300** extends through the staging opening **280**. Referring to FIG. **10**, an elongate anvil slot **290** is provided in the staple-forming undersurface **254** of the anvil **250**. In addition, a first closure ledge **292** and a second closure ledge **294** are formed on the lateral sides of the anvil slot **290**. A first closure ledge ramp **273** is provided in the closure ramp portion **270** and leads onto the first closure ledge **292** and a second closure ledge ramp **275** is provided in the closure ramp portion **270** and leads onto the second closure ledge **294**.

[0178] The anvil **250** is moved to an open position (FIG. **12**) by a spring (not shown) that biases the anvil mounting **260** portion upward relative to the proximal end **211** of the elongate channel **210** so the staple forming undersurface **254** of the anvil **250** is spaced from the surgical staple cartridge **230**. The distal end **253** of the anvil **250** is moved toward the surgical staple cartridge **230** to closed positions relative thereto by actuating a closure system that axially advances a closure member **110** distally into contact with the closure ramp portion **270**. In the illustrated embodiment, for example, the closure member **110** comprises a closure tube assembly **120** that is axially movable in response to closure motions generated by closure system supported in the housing. The closure system may be powered by a motor arrangement supported in the handle **20** or it may be manually operated by actuating a closure trigger **28** (FIG. **1**) or **28'** (FIG. **2**) or it may be powered by the robotic system **13** (FIG. **4**). Whichever arrangement is employed, actuation of the closure system will cause an axial closure motion to be applied to the closure tube assembly **120** of the shaft assembly **100**. FIG. **12** illustrates

the position of the closure tube assembly **120** prior to actuation of the closure system. As the closure tube assembly **120** is driven in the distal direction, "DD", the distal end **122** of the closure tube assembly **120** contacts the closure ramp portion **270** of the anvil mounting portion **260** and pivots the anvil **250** such that the distal end **253** thereof moves toward the surgical staple cartridge **230**. FIG. **13** illustrates the position of the closure tube assembly **120** in a "fully closed" position. Once the anvil **250** is moved into the fully closed position, the firing system may be actuated to axially drive the firing member **300** from the unactuated or starting position shown in FIGS. **12** and **13** distally through the staple cartridge **230** to cut tissue clamped between the staple forming undersurface **254** of the anvil **250** and the staple cartridge **230**. As the firing member **300** moves distally, the first tab **306** moves up the first closure ramp **273** onto the first closure ledge **292** and the second tab **308** moves up the second closure ramp **275** onto the second closure ledge **294** in the anvil **250**. The middle tabs **309** slide on the upper surface of elongate channel **210** and the foot **312** rides on the bottom surface **223** of the elongate channel **210**. The first and second tabs **306**, **308** on the first and second closure ledges **292**, **294** as well as the middle tabs **309** and foot **312** serve to space the staple forming undersurface **254** of the anvil **250** at a desired spacing "S" from the upper surface or cartridge deck of the surgical staple cartridge. See FIG. **13**.

[0179] As can be seen in FIG. **5**, in the illustrated example, the end effector **200** is selectively articulatable about articulation axis B-B that is transverse to a shaft axis SA-SA that is defined by the elongate shaft assembly **100**. In the illustrated arrangement, the closure tube assembly **120** includes a proximal closure tube shaft segment **123** that extends to the housing **20**, **20'**, **20"** and operably interfaces with the closure system supported therein. The proximal closure tube segment **123** is pivotally coupled to a distal closure tube segment **130**. As can be seen in FIG. **6**, for example, the proximal closure tube segment **123** includes upper and lower distally projecting tangs **124**, **126**. The distal closure tube segment **130** includes proximally projecting upper and lower tangs **132**, **134**. An upper double pivot link **140** includes upwardly projecting distal and proximal pivot pins **142**, **144** that engage respectively an upper distal pin hole **133** in the upper proximally projecting tang **132** and an upper proximal pin hole **125** in the upper distally projecting tang **124**. A lower double pivot link **150** includes downwardly projecting distal and proximal pivot pins **152**, **154** that engage respectively a lower distal pin hole (not shown) in the proximally protruding tang **134** and the pin hole **127** in the distally protruding tang **126**.

[0180] In the illustrated arrangement, as well as the alternative arrangements, the elongate shaft assembly **100** further includes a frame assembly or spine assembly or restraining assembly generally designated as **159**. In one arrangement, for example, the frame assembly **159** includes a proximal frame portion **160** and a distal frame portion **170**. The proximal frame portion **160** is configured to movably support the firing beam **310** therein and extends back to the housing **20**, **20'**, **20"**, whichever the case may be. The proximal end (not shown) of the proximal frame portion **160** may operably interface with a corresponding control system that may facilitate rotation of the frame assembly **159** (and the end effector **200** coupled thereto) about the shaft axis SA-SA. Further details regarding the construction and operation of such control systems may be found in various references that have been incorporated by reference herein. As can be seen in FIG. **6**, the distal frame portion **170** includes a pivot pin **172** that is rotatably received within a pivot aperture **220** defined in the proximal end **211** of the elongate channel **210**. The pivot aperture **220** defines the articulation axis B-B about which the pivot pin **172** may pivot. Stated another way, the elongate channel **210** may pivot about the pivot pin **172** and around articulation axis B-B when an articulation motion is applied to the elongate channel **210**. Still referring to FIG. **6**, the proximal end **211** of the elongate channel **210** includes a drive pin **222** that is configured to be operably engaged with an articulation driver. The drive pin **222** is configured to receive a force applied thereto by an articulation driver system **500** and, depending on the direction in which the force is applied to the drive pin **222**, causes the end effector **200** to articulate in a first direction "FD" or a second, opposite, direction "SD".

[0181] The illustrated articulation driver system **500** may be similar to the articulation driver system disclosed in U.S. Patent Application Publication No. 2014/0263541 which has been incorporated by reference in its entirety herein. In one form, for example, the articulation driver system **500** includes a proximal articulation driver **510** and a distal articulation driver **520**. See FIG. **6**. As discussed in the aforementioned incorporated reference, the proximal articulation driver **510** is supported for selective axial travel in the distal and proximal directions in response to articulation control motions applied thereto by an articulation control system. The articulation control system may, for example, be operably supported in the housing **20**, **20'**, **20"**, whichever the case may be. When a drive or articulation control motion is transmitted to the proximal articulation driver **510**, whether it is in the proximal direction or the distal direction, the drive force can be transmitted to the distal articulation driver **520** through an articulation lock **550**, as was described in detail in the aforementioned incorporated reference. Further details regarding the operation of the distal articulation lock **550** may be gleaned from review of that reference and, for the sake of brevity, will not be repeated herein.

[0182] As discussed in further detail in the aforementioned incorporated reference, movement of the proximal articulation driver **510**, whether it be proximal or distal, can unlock the articulation lock **550** that is operably supported in the distal articulation driver and the distal frame portion **170**. In the arrangement depicted in FIG. **6**, for example, the distal articulation driver **520** includes a distally-extending portion **522** that is pivotally coupled to an intermediate link **524** for relative pivotal travel about an intermediate axis IA-IA. See FIG. **6**. Although not specifically shown in FIG. **6**, the distally protruding portion **522** includes a downwardly extending proximal pin that is pivotally received within a proximal pivot hole in the intermediate link **524**. The distal end of the intermediate link **524** includes a distal pivot hole **526** for receipt of the drive pin **222** therein. Actuation of the proximal articulation driver **510** will ultimately result in the articulation of the elongate channel **210** through the distal articulation driver and the articulation lock **550**. For example, an initial proximal movement of the proximal articulation driver **510** can unlock the proximal movement of the distal articulation driver **520** and the articulation lock **550** while a further proximal movement of the proximal articulation driver **510** can drive the distal articulation driver **520** and the articulation lock **550** proximally. Similarly, an initial distal movement of the proximal articulation driver **510** can unlock the distal movement of the distal articulation driver **520** and the articulation lock **550**

while a further distal movement of the proximal articulation driver **510** can drive the distal articulation driver **520** and the articulation lock **550** distally.

[0183] Still referring to FIG. **6**, for example, the firing beam **310** may comprise a laminated structure. Such arrangement enables the firing beam **310** to sufficiently flex when the end effector **200** is articulated about the articulation axis B-B. The firing beam **310** is slidably supported in a firing bar slot **162** in the proximal frame portion **160**. The distal end portion **164** of the proximal frame portion **160** is formed with two opposed radiused surfaces **166**, **168** to provide added lateral support to the firing beam **310** during articulation.

[0184] End effectors that employ firing beams or firing members and which are capable of articulating over a range of, for example, forty five degrees have numerous challenges to overcome. To facilitate operable articulation of such end effectors, the firing member or firing beam must be sufficiently flexible to accommodate such range of articulation. However, the firing beam or firing member must also avoid buckling while encountering the compressive firing loads. To provide additional support to the firing beam or firing member various "support" or "blowout" plate arrangements have been developed. Several of such arrangements are disclosed in U.S. Pat. No. 6,964,363, entitled SURGICAL STAPLING INSTRUMENT HAVING ARTICULATION JOINT SUPPORT PLATES FOR SUPPORTING A FIRING BAR and U.S. Pat. No. 7,213,736, entitled SURGICAL STAPLING INSTRUMENT INCORPORATING AN ELECTROACTIVE POLYMER ACTUATED FIRING BAR TRACK THROUGH AN ARTICULATION JOINT, the entire disclosures of each being hereby incorporated by reference herein. Blowout plates that provide substantial buckle resistance also are difficult to bend in general which adds to the forces the articulation joint system must accommodate.

[0185] FIGS. **14** and **15** illustrate a firing beam support assembly **600** in the form of a firing beam guide assembly **601** that is employed in the illustrated surgical instrument **10**. As can be seen in those Figures, as well as in FIG. **6**, the firing beam guide assembly **601** includes a proximal end **602** and a distal end **604** that are interconnected by firing beam support members **606**, **608** that are separated by a firing beam slot **610** that extends through the proximal and distal ends **602**, **604**. In a plan view, the firing beam guide assembly **601** somewhat resembles an "I-beam" arrangement with a slot extending through the central web of the beam. As can be seen in FIG. **15**, for example, the firing beam support member **606** is "plate-like" or comprises a plate that includes an inwardly extending upper lip **607** and the firing beam support member **608** is "plate-like" or comprises a plate that includes an inwardly extending upper lip **609**. The upper lips **607**, **609** provide some bending strength to the firing beam support members **606**, **608** and may serve to prevent the firing beam **310** from popping out of the top of the firing beam guide assembly **601** during flexing of the firing beam **310**. The firing beam guide assembly **601** may be fabricated from, for example, glass-filled ISOPLAST®, Nylon, glass-filled VECTRA®, etc. and be of integral construction. In other arrangements, the firing beam support members **606**, **608** may comprise components that are distinct from the proximal and distal ends and are attached thereto by appropriate fastening techniques such as welding over-molding, etc.

[0186] As can be seen in FIG. **6**, the proximal end **602** of the firing beam guide assembly **601** is received within a proximal beam cavity **169** formed in the distal end portion **164** of the proximal frame portion **160**. The distal end **604** of the firing beam guide assembly **601** is received within a distal bar cavity **224** formed in an upstanding support lug **1700** formed in the proximal end **211** of the elongate channel **210**. To facilitate some axial movement of the firing beam guide assembly **601** during articulation of the end effector **200**, the proximal beam cavity **169** is sized relative to the proximal end portion **602** of the firing beam support assembly **600** to permit some axial movement of the proximal end portion **602** therein. Similarly, the distal beam cavity **224** may be sized relative to the distal end portion **604** of the firing beam guide assembly **601** to facilitate axial movement of the firing beam guide assembly **601** relative to the elongate channel **210** during articulation thereof. FIG. **17** illustrates the end effector **200** in an unarticulated position wherein the end effector **200** is essentially coaxial with the shaft assembly **100**. This end effector position enables the end effector **200** and a portion of the elongated shaft assembly **100** to be inserted into the patient through a trocar, for example. FIGS. **18** and **19** illustrate the end effector **200** articulated in a first direction "FD" and FIGS. **20** and **21** illustrate the end effector **200** articulated in an opposite, second direction "SD".

[0187] End effectors such as those disclosed herein as well as those end effectors disclosed in the previously incorporated U.S. Patent Application Publication No. 2014/0263541 are often employed when performing a lower anterior resection of the colon ("LAR"). LAR is a common surgery for rectal cancer and is occasionally performed to remove a diseased or ruptured portion of the intestine in cases of diverticulitis. The ability to access the target portion(s) of the colon with these end effectors during a LAR may be effected by the following factors: (i) the articulation angle of the shaft, (ii) the distance from the articulation pivot or axis and the proximal-most staples (sometimes referred to as the "proximal dead zone"), (iii) the distance from the distal-most staples and the distal end of the end effector (sometimes referred to as the "distal dead zone"), and (iv) the shaft diameter. FIG. **22** compares the range of motion within a pelvis contour of an end effector **200** as disclosed herein to the range of motion of an end effector **200'** of the type that includes an anvil that is pivotally coupled to the elongate channel by a kidney slot arrangement as disclosed in the aforementioned incorporated U.S. Patent Application Publication No. 2014/0263541. In one end effector arrangement **200'**, for example, the proximal dead zone PDZ" is approximately 1.54 inches long. Conversely, the proximal dead zone PDZ that may be attained in connection with at least one implementation of end effector **200** as disclosed herein may be reduced by, for example, 0.320 inches. See FIG. **23**. Thus, PDZ<PDZ'. As can also be seen in that Figure, the distance from the distal end **201** of the end effector to the articulation axis A-A or pivot point is less than the distance from the distal end **201'** of the end effector **200'** to the articulation axis B-B or pivot point by an amount of approximately 0.9 inches (length "L" in FIG. **23**) in at least one implementation, for example. Thus, the manipulability of end effector **200** presents a vast improvement of the manipulability of prior end effector arrangements. In addition, the end effector **200** enjoys a marked increase of mechanical advantage (as much as an increase of, for example, 300% in some cases) by moving the pivot or articulation axis more proximally and the closure member or fulcrum more distally. Such improvement of access will allow, for example, a 60 mm endocutter to get almost 90 degrees to the colon creating a significantly better perpendicular transection that may mini-

mize its effects of the subsequent circular stapler firing and therefore reduce the likelihood of leaks. By reducing the distance from the articulation joint to the first or proximal-most staple will allow the endocutter to be rotated more with respect to the pelvic girdle increasing its effective access angle with respect to the colon for "deep" LARs. Additional moving from cam-channel to cam-tube architecture improves the mechanical advantage of the system and thereby reduces the loads transmitted back to the handle or housing and increases instrument robustness.

[0188] FIGS. **24-31** illustrate another surgical instrument **1010** that includes an end effector **1200** that is operably attached to an elongate shaft assembly **1100**. The elongate shaft assembly **1100** may be operably coupled to any of the housings **20**, **20'**, **20"** as discussed above. The end effector **1200** is pivotally connected to the elongate shaft assembly **1100** at articulation joint **1109**. The end effector **1200** includes, among other things, an elongate channel **1210** that is configured to operably support a staple cartridge **1230** therein. See FIG. **25**. The staple cartridge **1230** includes a cartridge body **1232** that has a centrally-disposed, elongate cartridge slot **1234** therein. In the illustrated arrangement, the staple cartridge **1230** has three rows **1238** of staple pockets **1236** on each side of the elongate slot **1234**. One or more staples **1242** are supported on corresponding staple drivers **1240** that are movably supported in the staple pockets **1236**. A cartridge pan **1215** is attached to the bottom of the cartridge body **1232**. The cartridge pan **1215** includes a pan slot **1217** that is aligned with the cartridge slot **1234** and a channel slot **1212** in the elongate channel **1210**.

[0189] The surgical instrument **1010** further includes a firing member **1300** that is attached to a firing beam **1310** that interfaces with a firing system supported in the housing **20**, **20'** or **20"**. The firing system may be powered by a motor arrangement supported in the handle **20** (FIG. **1**) or it may be manually operated by actuating a firing trigger **26'** (FIG. **2**) or it may be powered by the robotic system **13** (FIG. **4**). Whichever arrangement is employed, upon actuation, the firing system will apply an axial firing motion to the firing beam **1310** to drive the firing member **1300** in the distal direction "DD". As can be seen in FIG. **25**, the firing member **1300** includes a vertically-extending firing member body **1302** that has a tissue cutting surface or blade **1304** thereon. A first firing member tab **1306** protrudes from a first lateral side **1305** of the firing member body **1302** and a second firing member tab **1308** protrudes from a second lateral side **1307** of the firing member body **1302**. In additional a first middle tab (not shown) protrudes from the first lateral side **1305** of the firing member body **1302** and a second middle tab **1309** protrudes from the second lateral side **1307** of the firing member body **1302**. The firing member **1300** further includes a tab or foot **1312** that protrudes laterally from the bottom of the firing member body **1302**. The purpose of the tabs **1306**, **1308**, **1309** and foot **1312** will be discussed in further detail below. In addition, a wedge sled **1320** may be mounted within the cartridge body **1232** for driving contact with the firing member **1300**. As the firing member **1300** is driven distally through the cartridge body **1232**, the wedge surfaces **1322** contact the staple drivers **1240** to drive the drivers **1240** and the surgical staples **1242** supported thereon upwardly in the cartridge body **1232** as is known.

[0190] The end effector **1200** further includes an anvil **1250** that includes an anvil body **1252** that has a staple forming undersurface **1254** thereon. The anvil **1250** also includes an anvil mounting portion **1260** for pivotally coupling the anvil **1250** to the proximal end portion **1211** of the elongate channel **1210** for pivotal travel relative thereto. The anvil mounting portion **1260** includes two (only one can be seen in FIGS. **25-28**) laterally-extending anvil trunnions **1264**. The anvil trunnions **1264** are movably received within corresponding kidney slots **1214** that are provided in the proximal end portion **1211** of the elongate channel **1210**. Such arrangement enables the anvil **1250** to pivot relative to the elongate channel **1210** upon application of closing and opening motions to the anvil mounting portion **1260**. The anvil mounting portion **1260** includes an upstanding anvil tab **1263** that operably interacts with a horseshoe-shaped opening **1131** provided in a closure member **1110**.

[0191] In the illustrated example, the closure member **1110** comprises a closure tube assembly **1120** that includes a distal closure tube segment **1130** in which the opening **1131** is provided. The closure tube assembly **1120** includes a proximal closure tube shaft segment **1122** that extends to the housing **20**, **20'**, **20"** and operably interfaces with the closure system supported therein. The proximal closure tube segment **1123** is pivotally coupled to the distal closure tube segment **1130**. As can be seen in FIG. **25**, for example, the proximal closure tube segment **1123** includes upper and lower distally projecting tangs **1124**, **1126**. The distal closure tube segment **1130** includes proximally projecting upper and lower tangs **1132**, **1134**. An upper double pivot link **1140** includes upwardly projecting distal and proximal pivot pins **1142**, **1144** that engage respectively an upper distal pin hole **1133** in the upper proximally projecting tang **1132** and an upper proximal pin hole **1125** in the upper distally projecting tang **1124**. A lower double pivot link **1150** includes downwardly projecting distal and proximal pivot pins **1152**, **1154** that engage respectively a lower distal pin hole (not shown) in the proximally protruding tang **1134** and the pin hole **1127** in the distally protruding tang **1126**. Movement of the distal closure tube **1130** in the distal direction "DD" will cause the anvil **1250** to pivot to a closed position relative to the surgical staple cartridge **1230** by virtue of the interaction between the opening **1131** in the distal closure tube **1130** and the anvil tab **1263** and movement of the distal closure tube **1130** in the proximal direction "PD" will pivot the anvil **1250** to an open position by virtue of the central tab **1137** in the distal closure tube segment **1130**. Movement of the distal closure tube segment **1130** is controlled by a closure system that may be powered by a motor arrangement supported in the handle **20** or it may be manually operated by actuating a closure trigger **28'** (FIG. **2**) or it may be powered by the robotic system **13** (FIG. **4**).

[0192] The anvil **1250** may further have an anvil slot and closure ledges as was discussed above with respect to anvil **250** for interaction with the tabs **1306**, **1308** as was also described above in detail. Once the anvil **1250** is moved into the fully closed position, the firing system may be actuated to axially drive the firing member **1300** from the unactuated or starting position distally through the staple cartridge **1230** to cut tissue clamped between the staple forming undersurface **1254** of the anvil **1250** and the staple cartridge **1230**. As the firing member **1300** moves distally, the first tab **1306** movably engages the first closure ledge and the second tab **1308** movably engages the second closure ledge in the anvil **1250**. The middle tabs **1309** slide on the upper surface of elongate channel **1210** and the foot **1312** rides on the bottom surface **1223** of the elongate channel **1210**. The first and second tabs **1306**, **1308** on the first and second closure ledges as well as the

middle tabs **1309** and foot **1312** serve to space the staple forming undersurface **1254** of the anvil **2150** at a desired spacing from the upper surface or cartridge deck of the surgical staple cartridge **1230**.

[0193] As can be seen in FIGS. **24-26**, in the illustrated example, the end effector **1200** is selectively articulatable about articulation axis B-B that is transverse to a shaft axis SA-SA that is defined by the elongate shaft assembly **1100**. In the illustrated arrangement, the elongate shaft assembly **1100** further includes a frame assembly or spine assembly or restraining assembly generally designated as **1159**. In one arrangement, for example, the frame assembly **1159** includes a proximal frame portion **1160** and a distal frame portion **1170**. The proximal frame portion **1160** is configured to movably support the firing beam **1310** therein and extends back to the housing **20**, **20'**, **20"**, whichever the case may be. The proximal end (not shown) of the proximal frame portion **1160** may operably interface with a corresponding control system that may facilitate rotation of the frame assembly **1159** (and the end effector **1200** coupled thereto) about the shaft axis SA-SA. Further details regarding the construction and operation of such control systems may be found in various references that have been incorporated by reference herein.

[0194] As can be seen in FIG. **25**, the distal frame portion **1170** includes a pivot pin **1172** that is rotatably received within a pivot aperture **1220** defined in the proximal end **1211** of the elongate channel **1210**. The pivot aperture **1120** defines the articulation axis B-B about which the pivot pin **1172** may pivot. Stated another way, the elongate channel **1210** may pivot about the pivot pin **1172** and around articulation axis B-B when an articulation motion is applied to the elongate channel **1210**. Still referring to FIG. **25**, the proximal end **1211** of the elongate channel **1210** includes a drive pin **1222** that is configured to be operably engaged with an articulation driver. The drive pin **1222** is configured to receive a force applied thereto by an articulation driver system **1500** and, depending on the direction in which the force is applied to the drive pin **1222**, causes the end effector **1200** to articulate in a first direction or a second, opposite, direction about articulation axis B-B.

[0195] The illustrated articulation driver system **1500** may be similar to the articulation driver system disclosed in U.S. Patent Application Publication No. 2014/0263541, which has been incorporated by reference in its entirety herein. In one form, for example, the articulation driver system **1500** includes a proximal articulation driver **1510** and a distal articulation driver **1520**. As discussed in the aforementioned incorporated reference, the proximal articulation driver **1510** is supported for selective axial travel in the distal and proximal directions in response to articulation control motions applied thereto by an articulation control system. The articulation control system may, for example, be operably supported in the housing **20**, **20'**, **20"**, whichever the case may be. When a drive or articulation control motion is transmitted to the proximal articulation driver **1510**, whether it is in the proximal direction or the distal direction, the drive force can be transmitted to the distal articulation driver **1520** through an articulation lock **1550**, as was described in detail in the aforementioned incorporated reference. Further details regarding the operation of the distal articulation lock **1550** may be gleaned from review of that reference and, for the sake of brevity, will not be repeated herein.

[0196] As discussed in further detail in the aforementioned incorporated reference, movement of the proximal articulation driver **1510**, whether it be proximal or distal, can unlock the articulation lock **1550** that is operably supported in the distal articulation driver and the distal frame portion **1170**. In the arrangement depicted in FIG. **25**, for example, an intermediate link **1524** is pivotally coupled to the distal articulation driver **1520** for relative pivotal travel about an intermediate axis IA-IA. As can be seen in FIG. **25**, a pivot pin **1523** is formed in the distal articulation driver **1520** and extends into a proximal pivot hole **1525** in the intermediate link **1524**. The distal end of the intermediate link **1524** includes a distal pivot hole **1526** for receipt of the drive pin **1222** therein. Actuation of the proximal articulation driver **1510** will ultimately result in the articulation of the elongate channel **1210** through the distal articulation driver and the articulation lock **1550**. For example, an initial proximal movement of the proximal articulation driver **1510** can unlock the proximal movement of the distal articulation driver **1520** and the articulation lock **1550** while a further proximal movement of the proximal articulation driver **1510** can drive the distal articulation driver **1520** and the articulation lock **1550** proximally. Similarly, an initial distal movement of the proximal articulation driver **1510** can unlock the distal movement of the distal articulation driver **1520** and the articulation lock **1550** while a further distal movement of the proximal articulation driver **1510** can drive the distal articulation driver **1520** and the articulation lock **1550** distally.

[0197] In arrangements that employ conventional blowout plates to provide buckle support to the firing beam, depending on the path of curvature (due to the articulation direction) only one of the blowout plates may effectively be doing any work. Thus, it may be advantageous in at least some applications to tie or couple the inside and outside blowout plates (or "firing beam support members") together which would allow them to act as a couple rather than independently from each other. Such arrangement may, for example, provide more than double the moment of inertia of the outside plate alone, while still minimizing the overall force to bend. In some arrangements, as will be described in further detail below, the blowout plates (or firing beam support members) are configured such that they may move longitudinally with respect to each other. Because neither member is on the centerline of the bend, for example, one of the members has a longer path and the other member has a shorter path.

[0198] In the illustrated example, the surgical instrument **1010** further includes a first firing beam support member **1610** and a second firing beam support member **1620**. The first and second firing beam support members **1610**, **1620** may each comprise a plate that is fabricated from, for example, stainless steel, spring steel, titanium, NITINOL™, etc. As can be seen in FIG. **25** the first firing beam support member **1610** includes a proximal downwardly extending mounting tab **1612** and a distal downwardly extending mounting tab **1614**. The second firing beam support member **1620** includes similar proximal and distal downwardly extending tabs (not viewable in FIG. **25**). As can be seen in FIG. **26**, the firing beam **1310** slidably extends between the first and second firing beam support members **1610**, **1620**. The distal ends of the first and second firing beam support members **1610**, **1620** are slidably received within a slot **1702** formed in an upstanding support lug **1700** formed on the proximal end **1211** of the elongate channel **1210**. FIGS. **27** and **30** illustrate articulation of the end effector **1200** in a first direction "FD". As can be seen in those Figures, the first firing beam support member **1610** moves slightly distal with respect

to the second firing beam support member **1620** to provide bending support to the firing beam **1310** during articulation. The mounting tabs may serve to limit the degree of axial movement of the firing beam support members. FIGS. **28** and **31** illustrate articulation of the end effector **1200** in a second direction "SD". As can be seen in those Figures, the second firing beam support member **1620** moves slightly distal with respect to the first firing beam support member **1610** to provide bending or buckling support to the firing beam **1310** during articulation. As illustrated in FIGS. **30** and **31**, such arrangement permits articulation of the end effector **1200** through ranges of approximately seventy five degrees (75°) to both sides of the shaft axis SA-SA. In at least one arrangement, the slot **1702** is sized to provide clearance between the firing beam support members **1610**, **1610** and the firing beam **1310** of approximately 0.05"-0.015" for example, to facilitate sliding travel of the firing beam support members **1610**, **1620** within the slot **1702** and slidable travel of the firing beam **1310** during firing of the instrument (i.e., axial advancement in the distal direction of the firing beam **1310**). In one arrangement, for example, the slot **1702** may be 0.05"-0.065" wide ("W"), firing beam support members **1610**, **1620** may each have a thickness of approximately 0.008"-0.015" ("FBT") and the firing beam **1310** may have a beam thickness of approximately 0.045" ("BT"). See FIG. **32**. As can be seen in FIG. **33**, the proximal end **1704** of the slot **1702** flares outward to facilitate bending or flexing of the firing beam support members **1610**, **1620** during articulation of the end effector **1200**. The proximal end **1704** of the slot **1702** has a proximal slot width "PW" of approximately 0.07"-0.08", for example. Other slot widths may also be employed. As such, in the illustrated example PT>PW. It will be understood that the firing beam support members **1610** and **1620** help to support the firing beam **1310** during articulation of the end effector and serve to prevent the firing beam **1310** from bucking under the compressive firing loads.

[0199] FIG. **34** illustrates a portion of another elongate channel **1210'** that includes an upstanding support lug **1700'** with a slot **1702'** therein for slidably receiving the firing beam support members **1610**, **1620** (not shown in FIG. **34**) in the manner described above. In this arrangement, however, a pair of opposed protrusions or detents **1706'** is formed in the support lug **1700'** such that the width of the proximal end of the slot **1702** ("PW") is less than the width of the slot **1702** ("W") as shown. The distal exit of **1620** from **1160** is preferably tighter than the retaining slot which holds the "L" portion of the beam. This "tightening" serves to make the support plates behave like cantilever beams rather than floating pivot joints and can significantly increase the firing beam support that the plate provides to the firing beam. For example, comparing the cantilever arrangement to a "pivot" arrangement (loose fit), the cantilever arrangement is expected to provide a 4×-16× better resistance which results in much lower deflection of the support plate right at the start.

[0200] Referring now to FIGS. **35-37**, the surgical instrument **1010'** shown therein is substantially identical to surgical instrument **1010** described in detail above and employs firing beam support members **1610'** and **1620'** to provide bucking support to the firing beam **1310** during articulation of end effector **1200**. FIGS. **35** and **36** illustrate the positions of the firing beam support members **1610'**, **1620'** when the end effector is in an unarticulated position. FIG. **37** illustrates the end effector **1200** in an articulated position. As can be seen in that Figure, the firing beam support members **1610'**, **1620'** move longitudinally with respect to each other during articulation. More specifically, as shown in that Figure, for example, the firing beam support member **1610'** on the short curve side

[0201] FIGS. **38-40** illustrate another surgical instrument **2010** that may be, for example, identical to surgical instrument **1010** except for at least some of the differences discussed below. For example, surgical instrument **2010** employs a firing beam support assembly, generally designated as **2600** that comprises a first firing beam support member **2610** and a second firing beam support member **2620**. The firing beam support members **2610**, **2620** each comprise a compression band arrangement that laterally supports the firing beam **1310** during articulation while also facilitating axial movement of the firing beam **1310** therebetween during firing and retraction strokes thereof. More particularly, in one arrangement, the first firing beam support member **2610** comprises a first compression band **2612** that may comprise, for example, a band-like member fabricated from spring steel or similar material. As can be seen in FIGS. **38-40**, the first compression band **2612** includes a first proximal mounting member **2614** in the form of a first proximal mounting tab **2615** that is configured to be received within a mounting slot **1162** in the proximal frame portion **1160**. In addition, the first proximal compression band **2612** further includes a first distal mounting member **2616** in the form of a first distal mounting tab **2617** that is configured to be received within a first distal mounting slot **1710** in the upstanding support lug **1700** formed on the proximal end **1211** of the elongate channel **1210**. As can be most particularly seen in FIG. **39**, the first distal mounting slot **1710** has a first slot width "FSW" that is greater than the thickness of the first distal mounting tab **2617** to facilitate axial movement of the first distal mounting tab **2617** within the first distal mounting slot **1710**. In addition, the first compression band **2612** includes a first spring portion or fold **2618** that is mountingly received within a first elongate cavity **1166** in the proximal frame portion **1160**.

[0202] As can be further seen in FIG. **39**, the second firing beam support member **2620** comprises a second compression band **2622** that may comprise, for example, a band-like member fabricated from spring steel or similar material. The second compression band **2622** includes a second proximal mounting member **2624** in the form of a second proximal mounting tab **2625** that is configured to be received within a mounting slot **1164** in the proximal frame portion **1160**. In addition, the second proximal compression band **2622** further includes a second distal mounting member **2626** in the form of a second distal mounting tab **2627** that is configured to be received within a second distal mounting slot **1712** in the other upstanding support lug **1700** formed on the proximal end **1211** of the elongate channel **1210**. As can be most particularly seen in FIG. **39**, the second distal mounting slot **1712** has a second slot width "SSW" that is greater than the thickness of the second distal mounting tab **2627** to facilitate axial movement of the second distal mounting tab **2627** within the second distal mounting slot **1712**. In addition, the second compression band **2622** includes a second spring portion or fold **2628** that is mountingly received within a second elongate cavity **1168** in the proximal frame portion **1160**. As can also be seen in FIGS. **38-40**, in the illustrated embodiment, the distal end **1161** of the proximal frame portion **1160** has opposed radiused surfaces **1163**, **1165** that are configured to laterally support the firing beam support members **2610**, **2620** during articulation of the end effector **1200**.

[0203] FIG. **39** illustrates the positions of the first and second compression bands **2610**, **2620** when the end effector **1200** is in an unarticulated position. When in that position, the first and second compression bands **2610**, **2620** apply opposing compression forces "CF" to the opposite lateral sides of the flexible firing beam **1310** while permitting axial travel of the firing beam **1310** during firing and retraction strokes. When in that unarticulated position, each of the first and second compression bands **2610**, **2620** have a first unarticulated length "CL**1**", "CL**2**", respectively. FIG. **40** illustrates the positions of the first and second compression bands **2610**, **2620** when the end effector **1200** has been articulated in one articulation direction. As can be seen in that Figure, the first compression band **2610** has elongated (CL**3**>CL**1**) and the second compression band **2620** has been compressed (CL**4**<CL**2**). The spring portions **2618** and **2628** facilitate the elongation and compression of the compression bands **6210**, **2620** during articulation while also maintaining the lateral compression forces on the firing beam **1310** to thereby prevent bucking of the firing beam **1310** as it is axially moved therebetween.

[0204] FIGS. **41-45** illustrate another surgical instrument **2010** that may be, for example, identical to surgical instrument **1010** except for at least some of the differences discussed below. For example, surgical instrument **2010** employs a firing beam support assembly, generally designated as **2700** that comprises a first firing beam support member **2710** and a second firing beam support member **2720**. The firing beam support members **2710**, **2720** each comprise a compression band arrangement that laterally supports the firing beam **1310** during articulation while also facilitating axial movement of the firing beam **1310** therebetween during firing and retraction strokes thereof. More particularly, in one arrangement the first firing beam support member **2710** comprises a first compression band **2712** that may comprise, for example, a band-like member fabricated from spring steel or similar material. As can be seen in FIG. **42**, the first compression band **2712** includes a first proximal mounting member **2714** in the form of a first proximal mounting tab **2715** that is configured to be received within a first mounting slot **1162** in the proximal frame portion **1160**. In addition, the first proximal compression band **2712** further includes a first distal mounting member **2716** in the form of a first distal mounting tab **2717** that is configured to be received within a first distal mounting slot **1710** in the upstanding support lug **1700** formed on the proximal end portion **1211** of the elongate channel **1210**. As can be most particularly seen in FIG. **44**, the mounting slot **1162** in the proximal frame portion **1160** has a first slot width "FSW" that is greater than the thickness of the first proximal mounting tab **2715** to facilitate axial movement of the first distal mounting tab **2715** within the first proximal mounting slot **1162**.

[0205] As can be further seen in FIG. **44**, the second firing beam support member **2720** comprises a second compression band **2722** that may comprise, for example, a band-like member fabricated from spring steel or similar material. The second compression band **2722** includes a second proximal mounting member **2724** in the form of a second proximal mounting tab **2725** that is configured to be received within a mounting slot **1164** in the proximal frame portion **1160**. In addition, the second proximal compression band **2722** further includes a second distal mounting member **2726** in the form of a second distal mounting tab **2727** that is configured to be received within a second distal mounting slot **1712** in the other upstanding support lug **1700** formed on the proximal end portion **1211** of the elongate channel **1210**. As can be most particularly seen in FIG. **44**, the second proximal mounting slot **1164** has a second slot width "SSW" that is greater than the thickness of the second proximal mounting tab **2725** to facilitate axial movement of the second proximal mounting tab **2725** within the second proximal mounting slot **1164**. As can also be seen in FIGS. **41**, **42** and **44**, in the illustrated embodiment, the distal end **1161** of the proximal frame portion **1160** has opposed radiused surfaces **1163**, **1165** that are configured to laterally support the firing beam support members **2710**, **2720** during articulation of the end effector **1200**.

[0206] Still referring to FIGS. **41-45**, the surgical instrument **2010** further comprises a movable firing beam support assembly **2800** that is configured to provide support to the compression bands **2712**, **2722** during articulation of the end effector **1200**. In the illustrated arrangement, the movable firing beam support assembly **2800** comprises a support boss assembly **2810** that is rotatably and laterally movable relative to a centrally disposed boss axis or support axis BA that is transverse to the shaft axis SA-SA and parallel to the articulation axis B-B. Referring now to FIG. **42**, a support boss pin **1224** protrudes upwardly from the distal end portion **1211** of the elongate channel **1210**. In the illustrated arrangement, the support boss pin **1224** is concentrically located with respect to the pivot pin **1172** such that the boss axis BA is coaxial with the articulation axis B-B. In one arrangement, for example, the support boss pin **1224** is integrally formed with the pivot pin **1172**.

[0207] As can be further seen in FIG. **42**, in the illustrated arrangement, the support boss assembly **2810** includes a body portion **2812** that includes a first support boss **2820** that is spaced from a second support boss **2830**. The first support boss **2820** includes a first arcuate support surface **2822** and the second support boss **2830** includes a second arcuate support surface **2832**. The first arcuate support surface **2822** is spaced from the second arcuate support surface **2832** by a slot **2834** is sufficiently wide enough to receive the first firing beam support member **2710** and the second firing beam support member **2720** and the firing beam **1310** to pass therebetween while the first arcuate support surface remains in tangential movable contact with the first firing beam support member **2710** and the second arcuate support surface **2832** remains in tangential movable contact with the second firing beam support member **2720** during articulation of the end effector **1200**. In addition, to facilitate such contact between the first arcuate support surface **2822** and the first firing beam support member **2710** and the second arcuate support surface **2832** and the second firing beam support member **2720** during articulation of the end effector **1200**, the support boss assembly **2810** is configured to not only rotate about the boss axis BA-BA but to also move laterally relative to the boss axis BA-BA. For example, in the illustrated arrangement, a mounting cavity **2814** is formed in the body portion **2812** to movably receive the support boss pin **1224** therein. See FIG. **43**. Such lateral movement of the support boss assembly **2810** during articulation is illustrated, for example, in FIG. **45** wherein the position of the support boss pin **1224** is shown in phantom lines in the mounting cavity **2814** (also shown in phantom lines). Such arrangement enables the support boss assembly **2810** to move in lateral directions, for example, that are transverse to the shaft axis SA-SA. FIG. **45** illustrates articulation of the end effector **1200** about the articulation

axis (not shown) in a first direction "FD". As can be seen in that Figure, in addition to lateral movement and rotation of the support boss assembly **2800** so as to provide lateral (anti-buckling) support to the firing beam support members **2710**, **2720** as well as the firing beam **1310**, it can be observed that the first proximal mounting tab **2715** has moved axially relative to the second proximal mounting tab **2725** within their respective mounting slots **1164**, **1162**. Such arrangement therefore provides effective anti-buckling support to the firing beam **1310** during articulation of the end effector **1200** while enabling the firing beam **1310** to move axially during firing and retraction strokes. While the firing beam support assembly **2800** is well-suited for use in connection with the firing beam support members and/or compression plate arrangements of the various types disclosed herein, it will also be appreciated that the firing beam support assembly **2800** may be effectively employed with surgical instruments that do not include such structures. In these alternative arrangements, for example, the firing beam support assembly is configured to provide support directly to the firing beam itself as it is articulated about the articulation joint.

[0208] FIGS. **46-48** illustrate another surgical instrument **2010** that may be, for example, identical to surgical instrument **1010** except for at least some of the differences discussed below. For example, surgical instrument **2010** employs a firing beam support assembly, generally designated as **2900** that comprises a plurality of movable firing beam support members **2910** that are movably journaled on a portion of the firing beam **1310**. For the purpose of illustration, the proximal-most movable firing beam support member has been designed as **2910**P and the distal-most movable firing beam support member has been designated **2910**D. In the illustrated arrangement, each of the movable firing beam support members **2910** has the same shape and configuration. As can be most particularly seen in FIG. **47**, for example, each movable firing beam support member **2910** includes a first support boss **2912** that is spaced from a second support boss **2914**. The first support boss **2912** includes a first arcuate support surface **2916** and the second support boss **2914** includes a second arcuate support surface **2918**. In the illustrated embodiment, for example, each of the first and second support bosses **2912**, **2914** have a circular cross-sectional shape. The first arcuate support surface **2916** is spaced from the second arcuate support surface **2918** by a slot **2919** that is sufficiently wide enough to receive the firing beam **1310** therebetween while the first arcuate support surface **2916** remains in tangential movable contact with a lateral side portion of the firing beam **1310** and the second arcuate support surface **2918** remains in tangential movable contact with the other lateral side portion of the firing beam support member **1310** during articulation of the end effector **1200**. It will be understood that the first and second support bosses **2912**, **2914** prevent buckling of the firing beam **1310** during articulation and actuation of the firing beam **1310**.

[0209] As can also be seen in FIGS. **46-48**, each of the movable firing beam support members **2910** have opposed arcuate rocker surfaces **2920** that define a central contact area or rocker point **2922**. FIG. **48** illustrates the positions of the movable firing beam support members **2910** during articulation of the end effector **1200**. As can be seen in that Figure, the movable firing beam support members **2910** pivot relative to each other while remaining in contact with each other to support the firing beam **1310** and prevent buckling thereof during articulation and operation thereof. As shown in FIG. **48**, the distal end **1161** of the proximal frame portion **1160** has opposed radiused surfaces **1163**, **1165** which serve to support portions of the proximal-most movable firing beam support member **2910**P during articulation. Likewise, each of the upstanding support lugs **1700** include an arcuate or dished surface **1701** for receiving a portion of the distal-most movable firing beam support member **2910**D therein during articulation.

[0210] FIGS. **49-51** illustrate use of tension members **2930** to provide support to the movable firing beam support members **2910** and to maintain the rocker surfaces **2920** of adjacent movable firing beam support members **2910** in pivotal contact with each other. In one example, two tension members **2930** are employed and may each comprise a cable or wire member that has a distal end **2932** that is anchored into the upstanding support lug **1700**. The proximal end (not shown) of each tension member **2930** may be located within the handle or housing and movably supported therein. FIG. **51** illustrates articulation of the end effector **1200** with the tension members **2930** retaining the adjacent movable firing beam support members **2910** in contact with each other to thereby provide an arcuate support structure for preventing buckling of the firing beam **1310** during actuation thereof. FIG. **52** illustrates a firing beam support assembly **2900** that can be used in connection with an articulatable end effector that is attached to the elongated shaft by a flexible joint arrangement of the type disclosed in, for example, U.S. Pat. No. 7,213,736 entitled SURGICAL STAPLING INSTRUMENT INCORPORATING AN ELECTROACTIVE POLYMER ACTUATED FIRING BAR TRACK THROUGH AN ARTICULATION JOINT which has been herein incorporated by reference in its entirety. In this arrangement, for example, the end effector **1200** may be articulated by applying an articulation motion to one of the tension members **2930** depending upon the desired direction of articulation. More specifically, referring to FIG. **52**, to cause the end effector to articulate in a first direction "FD", an articulation motion in the form of a first tension force "FTF" is applied to the first tension member **2931**. The first tension force "FTF" may be applied to the first tension member **2931** by an actuator arrangement (not shown) in the handle or housing configured to pull the first tension member **2931** in the proximal direction "PD". Similarly, to cause the end effector to articulate in a second direction "SD", an articulation motion in the form of a second tension force "STF" is applied to the second tension member **2933**. The second tension force "STF" may be applied to the second tension member **2933** by an actuator arrangement (not shown) in the handle or housing that is configured to pull the second tension member **2933** in the proximal direction "PD".

[0211] When the end effector is articulated, a certain amount of stress is introduced into the articulation drive mechanism which may make the firing beams significantly more easy to buckle and thereby potentially reduce the loads that can be transmitted thereby. Various firing beam support assemblies disclosed herein address such problems. FIGS. **53-58** illustrate another surgical instrument **3010** that may be, for example, identical to surgical instrument **10** except for at least some of the differences discussed below. For example, surgical instrument **3010** employs a dynamic firing beam support assembly, generally designated as **3100**, that is used on connection with the firing beam support assembly **600** as was described in detail hereinabove. As described above, the firing beam guide assembly **601** includes a proximal end **602**

and a distal end **604** that are interconnected by firing beam support members **606**, **608** that are separated by a firing beam slot **610** that extends through the proximal and distal ends **602**, **604**. The proximal end **602** of the firing beam guide assembly **601** is received within a proximal beam cavity **169** formed in the distal end portion **164** of the proximal frame portion **160**. The distal end **604** of the firing beam guide assembly **601** is received within a distal bar cavity **224** formed in an upstanding support lug **1700** formed in the proximal end portion **211** of the elongate channel **210**. To facilitate some axial movement of the firing beam guide assembly **601** during articulation of the end effector **200**, the proximal beam cavity **169** is sized relative to the proximal end portion **602** of the firing beam guide assembly **601** to permit some axial movement of the proximal end portion **602** therein. Similarly, the distal beam cavity **224** may be sized relative to the distal end portion **604** of the firing beam guide assembly **601** to facilitate axial movement of the firing beam guide assembly **601** relative to the elongate channel **210** during articulation thereof.

[0212] Referring now to FIG. **54**, in the illustrated example, the dynamic or "movable" firing beam support assembly **3100** comprises a support base **3102** that is movably journaled on an upstanding pivot pin **174** formed on the frame assembly **159**. More specifically, the pivot pin **174** is rotatably received within a pivot hole **3104** in the support base **3102** such that pivot pin **174** extends upwardly therethrough. The support base **3102** is movable about a base axis A1-A1 defined by the pivot pin **174**. In addition, the support base **3102** includes an elongate slot **3106** that is sized to movably receive a blowout base guide pin **1708** that is formed on the proximal end portion or mounting member **211** of elongate channel **210**. See FIG. **55**. In addition, the dynamic beam support assembly **3100** includes a first movable support or pin guide **3110** and a second movable support or pin guide **3120**. The first and second movable pin guides **3110**, **3120** can move independently relative to each other and relative to the support base **3102** about a guide axis GA-GA defined by a pivot hole **3108** in the support base **3102**. As can be seen in FIG. **54**, for example, the first movable pin guide **3110** comprises a first pin guide base **3112** that has a first upstanding support member or pin **3114** and a second upstanding support member or pin **3116** protruding therefrom. Similarly, the second movable pin guide **3120** comprises a second pin guide base **3122** that has a primary upstanding support member or pin **3124** and a secondary upstanding support member or pin **3126**. The second pin guide base **3122** includes a mounting pin **3125** that extends through a mounting hole **3113** in the first pin guide base **3112** and is received within a base mounting hole **3108** in the support base **3102**.

[0213] In the illustrated example, the first support member or pin **3114** and the primary support member or pin **3124** are configured to movably contact the first side plate **606** of the firing beam guide assembly **601** depending upon the direction in which the end effector is articulated. Similarly, the second support member or pin **3116** and the secondary support member or pin **3126** are configured to movable contact the second side plate **608** depending upon the direction of articulation. The first and primary pins **3114**, **124** may slidably contact the first side plate **606** and the second and secondary pins **3116**, **3126** may slidably contact the second side plate **608** when the end effector is in an unarticulated (axially aligned with the shaft axis SA-SA). Such arrangement serves to support the firing beam before and during articulation. In alternative examples, the movable firing beam support assembly **3100** may be used without a firing beam guide assembly **601** or firing beam support plates, etc. In such arrangements, for example, the first and primary pins **3114**, **3124** may directly contact a first lateral side portion of the firing beam and the second and secondary pins **3116**, **3126** may directly contact a second lateral side portion of the firing beam to provide anti-buckling support directly to the firing beam.

[0214] FIGS. **59-63** illustrate another surgical instrument **3010'** that may be, for example, identical to surgical instrument **3010** except for at least some of the differences discussed below. For example, the dynamic or "movable" firing beam support assembly **3100'** only includes two upstanding support pins **3114'** and **3116'**. The support base **3102'** is substantially similar to the base **3102** except that the upstanding pins **3114'** and **3116'** are attached directly to the base **3102'** and move therewith.

[0215] The dynamic or movable firing beam support assembly **3100** and **3100'** offer several advantages over prior arrangements. For example, such structure relates the angle of articulation to the amount of lateral support that is supplied to the firing beam. This dynamic version of the active support not only pivots with the articulation of the distal and proximal channel retainer, it also pivots the support elements (movable pins) themselves with respect to the support plates varying the unsupported lengths with respect to the articulation angle. The changes in support plate resilience could be tuned with a dynamic analysis to provide more support when fully articulated or more support when straight or whatever is desired. Traditional support plate and blow-out plate designs cannot adjust at all and provide the same support anywhere in the articulation span. This dynamically changing support structure can be configured to support the system when it is at its weakest while also not over compensating when it is at is strongest. Self locking, the pivoting structures will only pivot until they are loaded at which point they will bind and provide support. Such arrangements are relatively easy to manufacture and assemble. "Dynamically changing" means that it can vary the unsupported section in relation to the risk of buckling. The dynamic arrangement may be effectively employed in connection with various support member configurations disclosed herein.

[0216] The idea behind active support is to allow the angle of articulation to be related to the amount of support that is supplied to the firing beam and the firing beam support member. This may be done by creating a couple that provides a shorter unsupported zone the more likely the beams are to buckle (i.e., their higher articulation angle). The movable configurations of dynamic arrangements disclosed herein provide support to the distal and proximal channel retainers and allow the support assembly to pivot and slide with respect to them. Such arrangement provides support to the outside articulation support plate when it most needs the shorter unsupported zone. Another feature is that the right and left support plates are also linked together by the linkage itself further increasing the buckle resistance since both the inside and outside support plates would both have to buckle in order for the system to fail.

[0217] FIGS. **64-71** illustrate various firing beam support assemblies that may be used with various surgical instrument examples disclosed herein. FIG. **64** is a perspective view of a firing beam support assembly **600** that was described in detail above. FIGS. **65** and **66** illustrate a firing beam support assembly **2700'** that is similar to the firing beam support assembly **2700** described above except for at least some of the

differences discussed below. For example, the first and second compression bands **2712'** **2722'** are loosely coupled together by proximal and distal couplers **2730**, **2740** that facilitate axial movement of the compression bands **2712'**, **2722'** relative to each other while maintaining the compression bands **2712'**, **2722'** in compressive contact with the firing beam **1310** in the manners described in detail herein. The proximal and distal couplers **2730**, **2740** may extend completely around the compression bands **2712'**, **2722'**. To facilitate relative axial movement of the bands **2712'**, **2722'**, the proximal coupler **2730** is received within proximal top and bottom notches **2732**, **2734** in each of the compression bands **2712'**, **2722'** and the distal coupler **2740** is received within distal top and bottom notches in each of the compression bands **2712'**, **2722'** as shown. FIG. **68** illustrate another firing beam support assembly **2700"** that is identical to the firing beam support assembly **2700'** except that the couplers **2730'** and **2740'** do not extend completely around both of the compression bands **2712'**, **2722'**. In both arrangements, the proximal and distal couplers enable the compression plates to move axially relative to each other while preventing or at least limiting the lateral movement away from each other in directions that are transverse to the shaft axis. Thus, such arrangement retains the compression plates in contact with the firing beam during articulation of the end effector. It will also be understood that the axial length of the notches essentially defines the amount of relative axial travel that the compression plates may move relative to each other.

[0218] FIGS. **68** and **69** illustrate another firing beam support assembly **3200** that may be used in connection with various surgical instrument examples disclosed herein. As can be seen in those Figures, the firing beam support assembly **3200** may include a support retainer **3210** that has a somewhat box-like shape. In the illustrated example, the retainer **3200** includes solid top and bottom portions **3212**, **3214** that are interconnected by spaced side members **3216**, **3218** that each have a series of windows **3220** therein to provide the retainer with some bending flexure (represented by arrow "B") in the Z directions, but no significant flexure in the "Y" directions. The proximal end **3211** of the support retainer **3210** includes a proximal flange **3213** for movable mounting within an aperture in the spine or frame assembly of the surgical instrument as was described herein. Similarly, the distal end **3215** of the support retainer **3210** has a distal flange **3217** for movable mounting within an aperture in the proximal end portion of the elongate channel as was also described herein. A pair of downwardly extending top lugs **3230** protrude from the top portion **3212** and a pair of upwardly protruding bottom lugs **3232** protrude from the bottom portion **3214** as shown. The top and bottom lugs **3230** and **3232** define a firing beam channel **3240** through which the firing beam (not shown) may axially extend. In one arrangement, the outer laminate layers of the firing beam may be received between the lugs **3230** and **3232**. In the illustrated example, however, first and second friction spacers **3250**, **3252** extend between the lugs **3230**, **3232**. In addition, the illustrated example includes compression plates **3260**, **3262** of the type and construction described herein to provide compressive support to the firing beam as it passes through the retainer to prevent bucking of the firing beam during articulation of the surgical instrument.

[0219] FIG. **70** illustrates another firing beam support assembly **3300** that may be used in connection with various surgical instrument examples disclosed herein. As can be seen in those Figures, the firing beam support assembly **3300** includes a tubular body **3302** that is fabricated from, for example, Nylon, polcarbonate, Isoplast®, etc. The body **3302** includes a firing beam passage **3304** for movably receiving a firing beam (not shown) therethrough and is configured to afford some bending/flexure in the Z directions. The proximal end **3311** of the firing beam support assembly **3300** includes a proximal flange **3313** for movable mounting within an aperture in the spine or frame assembly of the surgical instrument as was described herein. Similarly, the distal end **32315** of the firing beam support assembly **3300** has a distal flange **3317** for movable mounting within an aperture in the proximal end portion of the elongate channel as was also described herein. FIG. **71** illustrates another firing beam support assembly **3300'** that is identical to the firing beam support assembly **3300** but includes windows **3310** in the side walls thereof to enhance the flexibility of the body **3302** in the Z directions.

[0220] FIG. **72** illustrates an exemplary motor driven (or "powered") surgical instrument **4010** which includes a housing or handle **4020**, an elongate shaft assembly **4100** and an end effector **4200** that is operably connected to the elongate shaft assembly **4100**. The end effector **4200** is similar to end effector **200** as was discussed in detail above. As indicated above and will be describe further below, various portions of the surgical instrument **4010** are motor driven. In addition, the elongate shaft assembly **4010** is configured for detachment from the handle **4020**. Various features and details regarding these components may be found in U.S. patent application Ser. No. 13/803,053, entitled INTERCHANGEABLE SHAFT ASSEMBLIES FOR USE WITH A SURGICAL INSTRUMENT, U.S. Patent Application Publication No. 2014/0263564, the entire disclosure of which is hereby incorporated by reference herein.

[0221] The end effector **4200** includes, among other things, an elongate channel **210** that is configured to operably support a staple cartridge **230** therein. The end effector **200** further includes an anvil **250** that includes an anvil body **252** that has a staple forming undersurface **254** thereon. The anvil **250** is moved between open and closed positions by a closure tube assembly **4120** that is axially advanced in the distal and proximal directions by actuating the closure trigger **4028**. The closure tube assembly **4120** includes a proximal closure tube shaft segment **4123** that is pivotally coupled to a distal closure tube segment **4130** in the manners described herein to facilitate articulation about an articulation axis B-B. The proximal closure tube shaft segment **4123** includes a proximal end portion **4200** that operably interfaces with a nozzle assembly **4202**, a switch drum arrangement **4204** and a slip ring assembly **4206**. Further details regarding the nozzle assembly, the switch drum arrangement and the slip ring assembly may be found in U.S. Patent Application Publication No. 2014/0263564, which has been herein incorporated by reference in its entirety as well as in U.S. patent application Ser. No. 14/226,075, filed Mar. 26, 2014, entitled MODULAR POWERED SURGICAL INSTRUMENT WITH DETACHABLE SHAFT ASSEMBLIES, the entire disclosure of which is also hereby incorporated by reference herein.

[0222] The closure tube arrangements disclosed in the references above generally have a fixed closure stroke range. That is, actuation of the closure trigger or other closure actuator arrangement results in the axial advancement of the closure tube. The magnitude of such axial advancement is limited to the amount of space available in the handle or housing for accommodating all of the various components of the

closure system. For example, the hand-held embodiments employ a handle that can be easily supported and manipulated in one hand. Such handle arrangements, however have limited space for accommodating the closure and firing systems. As discussed in detail in those references, in some arrangements, the firing trigger is movably linked to a closure shuttle that is attached to the closure tube assembly. Actuation of the closure trigger causes the linkage arrangement to axially advance the closure shuttle and the closure tube assembly. Various advantages may be gained by increasing the amount or magnitude of such closure stroke.

[0223] The shaft assembly **4100** includes a chassis **4300** that is configured to be removably coupled to the handle **4020** in the various manners described in further detail in the above-identified references. As can be seen in FIGS. **76** and **77**, the shaft assembly **4100** includes the proximal frame or proximal spine portion **4160** that includes a proximal end **4161** which is rotatably supported in a chassis **4300**. In the illustrated example, the proximal end **4141** of the proximal frame portion **4160** has a thread **4163** formed thereon for threaded attachment to a spine bearing **4180** configured to be supported within the chassis **4300**. Such an arrangement facilitates rotatable attachment of the proximal frame portion **4160** to the chassis **4300** such that the spine assembly **4159** may be selectively rotated about a shaft axis SA-SA relative to the chassis **4300**.

[0224] Referring primarily to FIGS. **75-77**, the interchangeable shaft assembly **4100** includes a closure shuttle **4350** that is slidably supported within the chassis **4300** such that it may be axially moved relative thereto. The proximal closure tube segment **4123** is coupled to the closure shuttle **4350** for relative rotation thereto. For example, a U shaped connector **263** is inserted into an annular slot **4129** in the proximal closure tube segment **4123** and is retained within vertical slots in the closure shuttle **4350**. Such an arrangement serves to attach the proximal closure tube segment **4123** to the closure shuttle **4350** for axial travel therewith while enabling the proximal closure tube segment **4123** to rotate relative to the closure shuttle **4350** about the shaft axis SA-SA. A closure spring **4353** is journaled on the proximal closure tube segment **4123** and serves to bias the closure tube proximal closure tube segment **4123** in the proximal direction "PD" which can serve to pivot the closure trigger **4028** into the unactuated position when the shaft assembly **4100** is operably coupled to the handle **4020**.

[0225] The shaft assembly **4100** further includes a closure transmission assembly **4500** for amplifying the amount of closure motion that is applied to the closure shuttle **4350** and ultimately to the anvil through the closure tube assembly. Such arrangement offers various advantages such as the ability to increase the closure stroke which can lead to more jaw opening ability. Stated another way, this extra stroke capability on both the proximal and distal ends allow the distal closure tube segment to also be retracted in the proximal direction further to provide the anvil with the ability to open further. As can be seen in FIGS. **75** and **76**, the closure transmission **4500** links the closure shuttle **4350** to a proximal closure hook assembly **4360**. The proximal closure hook assembly **4360** includes hooks **4362** that are adapted to hookingly engage the attachment pin **4033** that is attached to a second closure link **4031** that is operably coupled to the closure trigger **4028** as described in detail in U.S. patent application Ser. No. 14/226,075. As described in that reference, actuation of the closure trigger **4028** will distally advance the closure link **4031** and apply a distal closure motion to the proximal closure hook assembly **4360**.

[0226] In the illustrated example, the closure transmission assembly **4500** includes a proximal closure hook rack **4504** that is attached to the proximal closure hook assembly **4360**. In addition, the closure transmission assembly **4500** further includes a transfer rack **4506** that is movably supported in transmission housing **4502**. The closure transmission assembly **4500** further includes a distal closure rack **4508** that is attached to the closure shuttle **4350**. A closure pinion **4510** is in meshing engagement with the closure hook rack **4504** and the transfer rack **4506**. A transfer pinion gear **4512** is attached to a multiplier pinion gear **4514** and is in meshing engagement with the transfer rack **4506**. The multiplier pinion is in meshing engagement with the distal closure rack **4508**. Thus, actuation of the closure trigger **4028** results in the distal advancement of the closure hook rack **4504** which ultimately results in the distal advancement of the distal closure hook rack **4508** and the closure shuttle **4350**. Distal movement of the closure shuttle **4350** results in distal movement of the closure tube assembly.

[0227] Thus, the closure transmission assembly essentially comprises means for increasing a closure stroke of the closure tube assembly. For example, a conventional closure arrangement may comprise a closure actuator that, upon actuation, applies a closure motion to the closure tube assembly. Application of such closure motion results in the axial movement of the closure tube assembly through a closure stroke that has a maximum range of axial closure travel "MCT". A surgical instrument that employs a closure transmission assembly of the various types and constructions disclosed herein will also have a closure stroke that has a maximum range of axial closure travel "MCT**1**". With all other aspects of these devices being otherwise the same or identical, MCT**1**>MCT.

[0228] Referring now to FIGS. **78-80**, the end effector **200** is coupled to the elongate shaft assembly **4100** by an articulation joint **109** of the type and construction described above. However, other articulation joint arrangements could also be employed. In the illustrated example, the shaft assembly **4100** includes a closure tube assembly **4120** that includes the proximal closure tube segment **4123**. The illustrated example further includes a flexible closure tube segment **4600** that is coupled to the distal end of the distal closure tube segment **4123** for travel therewith. The flexible closure tube segment **4600** sized to extend over the articulation joint **109** and includes a distal end **4602** and a proximal end **4604**. The proximal end **4604** is attached to the distal end of the distal closure tube segment **4123**. A flexible tubular segment **4610** extends between the proximal end **4604** and the distal end **4602** and, in the illustrated example, includes two spaced, axially extending upper and lower spine members **4612**, **4614**. Extending from each lateral side are a plurality of spaced rib members **4616** that serve to define a tubular path through which the articulation joint extends. When the closure tube assembly **4120** is axially advanced in the distal direction "DD", the distal end **4602** of the flexible closure tube segment **4600** interacts with the anvil **250** in the various manners described herein to move the anvil **250** to closed positions. The flexible closure tube segment **4600** also accommodates articulation of the end effector **200** as illustrated in FIG. **80**.

EXAMPLES

Example 1

[0229] A surgical instrument comprising a surgical end effector that comprises first and second jaw members wherein application of a closure motion to at least one of the first and second jaw members results in the movement of the at least one of the first and second jaw members to a closed position relative to the other of the first and second jaw members. The surgical instrument further comprises a closure system that comprises an axially movable closure member that is configured to apply the closure motion to the at least one of the first and second jaw members. A closure actuator includes a first actuator portion that is configured to move axially through a first range of axial travel upon actuation of the closure actuator. A closure transmission interfaces with the first actuator portion. The closure transmission comprises a second actuator portion that interfaces with the axially movable closure member such that upon actuation of the closure actuator, the second actuator portion moves the axially movable closure member through a second range of axial travel that is greater than the first range of axial travel.

Example 2

[0230] The surgical instrument of Example 1, wherein the closure transmission further comprises a transfer member that is axially movable between the first actuator portion and the second actuator portion. The transfer member is oriented in operable engagement with the first actuator portion such that axial movement of the first actuator portion results in axial movement of the transfer member. A multiplier member is in operable engagement with the transfer member and the second actuator portion such that axial movement of the transfer member results in axial movement of the second actuator portion.

Example 3

[0231] the surgical instrument of Examples 1 or 2, wherein the first actuator portion comprises a first axially movable closure rack and the second actuator portion comprises a second axially movable closure rack that is in operable engagement with the first axially movable closure rack.

Example 4

[0232] The surgical instrument of Example 3, wherein the closure transmission comprises a transfer rack that is axially movable between the first axially movable closure rack and the second axially movable closure rack. A closure pinion gear is supported in operable meshing engagement with the first closure rack and the transfer rack. A transfer pinion gear is supported in operable meshing engagement with the transfer rack. A multiplier pinion gear is coupled to the transfer pinion gear and is oriented in operable meshing engagement with the second axially movable closure rack.

Example 5

[0233] The surgical instrument of Examples 1, 2, 3 or 4, further comprising a housing that operably supports the closure actuator. A shaft assembly is operably coupled to the housing and the surgical end effector, the shaft assembly comprises the axially movable closure member.

Example 6

[0234] The surgical instrument of Example 5, wherein the shaft assembly is configured for removable operable attachment to the housing.

Example 7

[0235] The surgical instrument of Examples 5 or 6, wherein the shaft assembly comprises a chassis that is configured for operable removable attachment to the housing. The chassis operably supports the closure transmission.

Example 8

[0236] The surgical instrument of Example 5, wherein the closure member comprises a tubular member that is configured to move axially relative to a frame portion of the shaft assembly.

Example 9

[0237] The surgical instrument of Examples 1, 2, 3, 4, 5, 6, 7 or 8, wherein one of the first and second jaw members comprise an elongate channel that is configured to support a surgical staple cartridge therein and the other of the first and second jaw members comprises an anvil.

Example 10

[0238] The surgical instrument of Example 5, wherein the end effector is operably coupled to the shaft assembly by an articulation joint.

Example 11

[0239] The surgical instrument of Examples 5 or 10, wherein the shaft assembly comprises a frame assembly that is coupled to the housing and the closure member comprises a closure tube assembly that is axially movably supported on the frame assembly.

Example 12

[0240] The surgical instrument of Example 11, wherein the closure tube assembly comprises a proximal closure tube segment that operably interfaces with the closure transmission and a flexible closure tube segment that interfaces with the proximal closure tube segment and extends over the articulation joint to operably interface with the at least one of the first and second jaw members.

Example 13

[0241] A surgical instrument comprising a surgical instrument that comprises an end effector. The end effector comprises a surgical staple cartridge and an anvil, wherein at least one of the surgical staple cartridge and the anvil is movable in response to a closure motion applied thereto. The surgical instrument further comprises a shaft assembly that operably interfaces with at least one of the surgical staple cartridge and the anvil. A handle is operably coupled to the shaft assembly. A closure actuator is operably supported by the handle and includes a first actuator portion that is configured to move axially a predetermined first range of axial travel upon actuation of the closure actuator. An axially movable closure member is configured to apply the closure motion to the at least one of the surgical staple cartridge and the anvil. A closure transmission interfaces with the first actuator portion and com-

prises a second actuator portion that interfaces with the axially movable closure member such that upon actuation of the closure actuator, the second actuator portion moves the axially movable closure member through a second range of axial travel that is greater than the first range of axial travel.

Example 14

[0242] The surgical instrument of Example 13, wherein at least one of the surgical staple cartridge and the anvil is coupled to the shaft assembly by an articulation joint.

Example 15

[0243] The surgical instrument of Examples 13 or 14, wherein the shaft assembly comprises a frame assembly that is coupled to the handle and at least one of the surgical staple cartridge and the anvil. The closure member comprises a closure tube assembly that is axially movably supported on the frame assembly.

Example 16

[0244] The surgical instrument of Example 15, wherein the closure tube assembly comprises a proximal closure tube segment that operably interfaces with the second actuator portion. A flexible closure tube segment interfaces with the proximal closure tube segment and extends over the articulation joint to operably interface with the at least one of the surgical staple cartridge and the anvil.

Example 17

[0245] The surgical instrument of Examples 13, 14, 15 or 16, wherein the second actuator portion is operably coupled to the first actuator portion by an axially movable transfer rack and a plurality of gears.

Example 18

[0246] A surgical instrument comprising a surgical end effector that comprises first and second jaw members wherein application of a closure motion to at least one of the first and second jaw members results in the movement of the at least one of the first and second jaw members to a closed position relative to the other of the first and second jaw members. The surgical instrument further comprises a closure system comprising an axially movable closure member that is configured to apply the closure motion to the at least one of the first and second jaw members. The surgical instrument further comprises a closure actuator that includes a first actuator portion that is configured to move axially through a first range of axial travel upon actuation of the closure actuator. The surgical instrument further comprises means for moving the axially movable closure member through a second range of axial travel that is greater than the first range of axial travel upon actuation of the closure actuator.

Example 19

[0247] The surgical instrument of Example 18, wherein one of the first and second jaws comprises a surgical staple cartridge and the other of the first and second jaws comprises an anvil.

Example 20

[0248] The surgical instrument of Examples 18 or 19, wherein the closure actuator comprises a closure trigger that is support on a housing that is operably coupled to the end effector by a shaft assembly.

[0249] The entire disclosures of:

[0250] U.S. Pat. No. 5,403,312, entitled ELECTROSURGICAL HEMOSTATIC DEVICE, which issued on Apr. 4, 1995;

[0251] U.S. Pat. No. 7,000,818, entitled SURGICAL STAPLING INSTRUMENT HAVING SEPARATE DISTINCT CLOSING AND FIRING SYSTEMS, which issued on Feb. 21, 2006;

[0252] U.S. Pat. No. 7,422,139, entitled MOTOR-DRIVEN SURGICAL CUTTING AND FASTENING INSTRUMENT WITH TACTILE POSITION FEEDBACK, which issued on Sep. 9, 2008;

[0253] U.S. Pat. No. 7,464,849, entitled ELECTRO-MECHANICAL SURGICAL INSTRUMENT WITH CLOSURE SYSTEM AND ANVIL ALIGNMENT COMPONENTS, which issued on Dec. 16, 2008;

[0254] U.S. Pat. No. 7,670,334, entitled SURGICAL INSTRUMENT HAVING AN ARTICULATING END EFFECTOR, which issued on Mar. 2, 2010;

[0255] U.S. Pat. No. 7,753,245, entitled SURGICAL STAPLING INSTRUMENTS, which issued on Jul. 13, 2010;

[0256] U.S. Pat. No. 8,393,514, entitled SELECTIVELY ORIENTABLE IMPLANTABLE FASTENER CARTRIDGE, which issued on Mar. 12, 2013;

[0257] U.S. patent application Ser. No. 11/343,803, entitled SURGICAL INSTRUMENT HAVING RECORDING CAPABILITIES; now U.S. Pat. No. 7,845,537;

[0258] U.S. patent application Ser. No. 12/031,573, entitled SURGICAL CUTTING AND FASTENING INSTRUMENT HAVING RF ELECTRODES, filed Feb. 14, 2008;

[0259] U.S. patent application Ser. No. 12/031,873, entitled END EFFECTORS FOR A SURGICAL CUTTING AND STAPLING INSTRUMENT, filed Feb. 15, 2008, now U.S. Pat. No. 7,980,443;

[0260] U.S. patent application Ser. No. 12/235,782, entitled MOTOR-DRIVEN SURGICAL CUTTING INSTRUMENT, now U.S. Pat. No. 8,210,411;

[0261] U.S. patent application Ser. No. 12/249,117, entitled POWERED SURGICAL CUTTING AND STAPLING APPARATUS WITH MANUALLY RETRACTABLE FIRING SYSTEM, now U.S. Pat. No. 8,608,045;

[0262] U.S. patent application Ser. No. 12/647,100, entitled MOTOR-DRIVEN SURGICAL CUTTING INSTRUMENT WITH ELECTRIC ACTUATOR DIRECTIONAL CONTROL ASSEMBLY, filed Dec. 24, 2009; now U.S. Pat. No. 8,220,688;

[0263] U.S. patent application Ser. No. 12/893,461, entitled STAPLE CARTRIDGE, filed Sep. 29, 2012, now U.S. Pat. No. 8,733,613;

[0264] U.S. patent application Ser. No. 13/036,647, entitled SURGICAL STAPLING INSTRUMENT, filed Feb. 28, 2011, now U.S. Pat. No. 8,561,870;

[0265] U.S. patent application Ser. No. 13/118,241, entitled SURGICAL STAPLING INSTRUMENTS WITH ROTATABLE STAPLE DEPLOYMENT ARRANGEMENTS, now U.S. Patent Application Publication No. 2012/0298719;

[0266] U.S. patent application Ser. No. 13/524,049, entitled ARTICULATABLE SURGICAL INSTRUMENT COMPRISING A FIRING DRIVE, filed on Jun. 15, 2012; now U.S. Patent Application Publication No. 2013/0334278;

[0267] U.S. patent application Ser. No. 13/800,025, entitled STAPLE CARTRIDGE TISSUE THICKNESS SENSOR SYSTEM, filed on Mar. 13, 2013;

[0268] U.S. patent application Ser. No. 13/800,067, entitled STAPLE CARTRIDGE TISSUE THICKNESS SENSOR SYSTEM, filed on Mar. 13, 2013;

[0269] U.S. Patent Application Publication No. 2007/0175955, entitled SURGICAL CUTTING AND FASTENING INSTRUMENT WITH CLOSURE TRIGGER LOCKING MECHANISM, filed Jan. 31, 2006; and

[0270] U.S. Patent Application Publication No. 2010/0264194, entitled SURGICAL STAPLING INSTRUMENT WITH AN ARTICULATABLE END EFFECTOR, filed Apr. 22, 2010, now U.S. Pat. No. 8,308,040, are hereby incorporated by reference herein.

[0271] Although the various embodiments of the devices have been described herein in connection with certain disclosed embodiments, many modifications and variations to those embodiments may be implemented. Also, where materials are disclosed for certain components, other materials may be used. Furthermore, according to various embodiments, a single component may be replaced by multiple components, and multiple components may be replaced by a single component, to perform a given function or functions. The foregoing description and following claims are intended to cover all such modification and variations.

[0272] With respect to the use of substantially any plural and/or singular terms herein, those having skill in the art can translate from the plural to the singular and/or from the singular to the plural as is appropriate to the context and/or application. The various singular/plural permutations are not expressly set forth herein for sake of clarity.

[0273] The herein described subject matter sometimes illustrates different components contained within, or connected with, different other components. It is to be understood that such depicted architectures are merely exemplary, and that in fact many other architectures may be implemented which achieve the same functionality. In a conceptual sense, any arrangement of components to achieve the same functionality is effectively "associated" such that the desired functionality is achieved. Hence, any two components herein combined to achieve a particular functionality can be seen as "associated with" each other such that the desired functionality is achieved, irrespective of architectures or intermedial components. Likewise, any two components so associated can also be viewed as being "operably connected," or "operably coupled," to each other to achieve the desired functionality, and any two components capable of being so associated can also be viewed as being "operably couplable," to each other to achieve the desired functionality. Specific examples of operably couplable include but are not limited to physically mateable and/or physically interacting components, and/or wirelessly interactable, and/or wirelessly interacting components, and/or logically interacting, and/or logically interactable components.

[0274] Although various embodiments have been described herein, many modifications, variations, substitutions, changes, and equivalents to those embodiments may be implemented and will occur to those skilled in the art. Also, where materials are disclosed for certain components, other materials may be used. It is therefore to be understood that the foregoing description and the appended claims are intended to cover all such modifications and variations as falling within the scope of the disclosed embodiments. The following claims are intended to cover all such modification and variations.

[0275] The devices disclosed herein can be designed to be disposed of after a single use, or they can be designed to be used multiple times. In either case, however, the device can be reconditioned for reuse after at least one use. Reconditioning can include any combination of the steps of disassembly of the device, followed by cleaning or replacement of particular pieces, and subsequent reassembly. In particular, the device can be disassembled, and any number of the particular pieces or parts of the device can be selectively replaced or removed in any combination. Upon cleaning and/or replacement of particular parts, the device can be reassembled for subsequent use either at a reconditioning facility, or by a surgical team immediately prior to a surgical procedure. Those skilled in the art will appreciate that reconditioning of a device can utilize a variety of techniques for disassembly, cleaning/replacement, and reassembly. Use of such techniques, and the resulting reconditioned device, are all within the scope of the present application.

[0276] Preferably, the invention described herein will be processed before surgery. First, a new or used instrument is obtained and if necessary cleaned. The instrument can then be sterilized. In one sterilization technique, the instrument is placed in a closed and sealed container, such as a plastic or TYVEK bag. The container and instrument are then placed in a field of radiation that can penetrate the container, such as gamma radiation, x-rays, or high-energy electrons. The radiation kills bacteria on the instrument and in the container. The sterilized instrument can then be stored in the sterile container. The sealed container keeps the instrument sterile until it is opened in the medical facility.

[0277] Any patent, publication, or other disclosure material, in whole or in part, that is said to be incorporated by reference herein is incorporated herein only to the extent that the incorporated materials does not conflict with existing definitions, statements, or other disclosure material set forth in this disclosure. As such, and to the extent necessary, the disclosure as explicitly set forth herein supersedes any conflicting material incorporated herein by reference. Any material, or portion thereof, that is said to be incorporated by reference herein, but which conflicts with existing definitions, statements, or other disclosure material set forth herein will only be incorporated to the extent that no conflict arises between that incorporated material and the existing disclosure material.

[0278] In summary, numerous benefits have been described which result from employing the concepts described herein. The foregoing description of the one or more embodiments has been presented for purposes of illustration and description. It is not intended to be exhaustive or limiting to the precise form disclosed. Modifications or variations are possible in light of the above teachings. The one or more embodiments were chosen and described in order to illustrate principles and practical application to thereby enable one of ordinary skill in the art to utilize the various embodiments and with various modifications as are suited to the particular use contemplated. It is intended that the claims submitted herewith define the overall scope.

What is claimed is:

1. A surgical instrument, comprising:

a surgical end effector comprising first and second jaw members wherein application of a closure motion to at least one of said first and second jaw members results in the movement of the at least one of said first and second jaw members to a closed position relative to the other of said first and second jaw members; and

a closure system comprising:

an axially movable closure member configured to apply said closure motion to said at least one of said first and second jaw members;

a closure actuator including a first actuator portion configured to move axially through a first range of axial travel upon actuation of said closure actuator; and

a closure transmission interfacing with said first actuator portion and comprising a second actuator portion interfacing with said axially movable closure member such that upon actuation of said closure actuator, said second actuator portion moves said axially movable closure member through a second range of axial travel that is greater than said first range of axial travel.

2. The surgical instrument of claim **1** wherein said closure transmission further comprises:

a transfer member axially movable between said first actuator portion and said second actuator portion, said transfer member in operable engagement with said first actuator portion such that axial movement of said first actuator portion results in axial movement of said transfer member; and

a multiplier member in operable engagement with said transfer member and said second actuator portion such that axial movement of said transfer member results in axial movement of said second actuator portion.

3. The surgical instrument of claim **1** wherein said first actuator portion comprises a first axially movable closure rack and wherein said second actuator portion comprises a second axially movable closure rack in operable engagement with said first axially movable closure rack.

4. The surgical instrument of claim **3** wherein said closure transmission further comprises:

a transfer rack axially movable between said first axially movable closure rack and said second axially movable closure rack;

a closure pinion gear supported in operable meshing engagement with said first closure rack and said transfer rack;

a transfer pinion gear supported in operable meshing engagement with said transfer rack; and

a multiplier pinion gear coupled to said transfer pinion gear and in operable meshing engagement with said second axially movable closure rack.

5. The surgical instrument of claim **1** further comprising:

a housing operably supporting said closure actuator; and

a shaft assembly operably coupled to said housing and said surgical end effector, said shaft assembly comprising said axially movable closure member.

6. The surgical instrument of claim **5** wherein said shaft assembly is configured for removable operable attachment to said housing.

7. The surgical instrument of claim **6** wherein said shaft assembly comprises a chassis configured for operable removable attachment to said housing, said chassis operably supporting said closure transmission.

8. The surgical instrument of claim **5** wherein said closure member comprises a tubular member configured to move axially relative to a frame portion of said shaft assembly.

9. The surgical instrument of claim **5** wherein one of said first and second jaw members comprises an elongate channel configured to support a surgical staple cartridge therein and the other of said first and second jaw members comprises an anvil.

10. The surgical instrument of claim **5** wherein said end effector is operably coupled to said shaft assembly by an articulation joint.

11. The surgical instrument of claim **10** wherein said shaft assembly comprises a frame assembly coupled to said housing and wherein said closure member comprises a closure tube assembly axially movably supported on said frame assembly.

12. The surgical instrument of claim **11** wherein said closure tube assembly comprises:

a proximal closure tube segment operably interfacing with said closure transmission; and

a flexible closure tube segment interfacing with said proximal closure tube segment and extending over said articulation joint to operably interface with the at least one of said first and second jaw members.

13. A surgical instrument, comprising:

an end effector comprising:

a surgical staple cartridge; and

an anvil, at least one of said surgical staple cartridge and said anvil being movable in response to a closure motion applied thereto and wherein said surgical instrument further comprises:

a shaft assembly operably interfacing with at least one of said surgical staple cartridge and said anvil;

a handle operably coupled to said shaft assembly;

a closure actuator operably supported by said handle and including a first actuator portion configured to move axially a predetermined first range of axial travel upon actuation of said closure actuator;

an axially movable closure member configured to apply said closure motion to the at least one of said surgical staple cartridge and said anvil; and

a closure transmission interfacing with said first actuator portion and comprising a second actuator portion interfacing with said axially movable closure member such that upon actuation of said closure actuator, said second actuator portion moves said axially movable closure member through a second range of axial travel that is greater than said first range of axial travel.

14. The surgical instrument of claim **13** wherein at least one of said surgical staple cartridge and said anvil is coupled to said shaft assembly by an articulation joint.

15. The surgical instrument of claim **14** wherein said shaft assembly comprises a frame assembly coupled to said handle and said at least one of said surgical staple cartridge and said anvil wherein said closure member comprises a closure tube assembly axially movably supported on said frame assembly.

16. The surgical instrument of claim **15** wherein said closure tube assembly comprises:

a proximal closure tube segment operably interfacing with said second actuator portion; and

a flexible closure tube segment interfacing with said proximal closure tube segment and extending over said articulation joint to operably interface with the at least one of said surgical staple cartridge and said anvil.

17. The surgical instrument of claim **16** wherein said second actuator portion is operably coupled to said first actuator portion by an axially movable transfer rack and a plurality of gears.

18. A surgical instrument, comprising:

a surgical end effector comprising first and second jaw members wherein application of a closure motion to at least one of said first and second jaw members results in the movement of the at least one of said first and second jaw members to a closed position relative to the other of said first and second jaw members; and

a closure system comprising:

an axially movable closure member configured to apply said closure motion to said at least one of said first and second jaw members;

a closure actuator including a first actuator portion configured to move axially through a first range of axial travel upon actuation of said closure actuator; and

means for moving the axially movable closure member through a second range of axial travel that is greater than said first range of axial travel upon actuation of said closure actuator.

19. The surgical instrument of claim **18** wherein one of said first and second jaws comprises a surgical staple cartridge and the other of said first and second jaws comprises an anvil.

20. The surgical instrument of claim **18** wherein said closure actuator comprises a closure trigger support on a housing that is operably coupled to said end effector by a shaft assembly.

* * * * *