US009397627B2

(12) **United States Patent**
Qureshey et al.

(10) **Patent No.: US 9,397,627 B2**
(45) **Date of Patent: Jul. 19, 2016**

(54) **NETWORK-ENABLED AUDIO DEVICE**

(75) Inventors: **Safi Qureshey**, Santa Ana, CA (US); **Daniel D. Sheppard**, Brea, CA (US)

(73) Assignee: **Black Hills Media, LLC**, Wilmington, DE (US)

(*) Notice: Subject to any disclaimer, the term of this patent is extended or adjusted under 35 U.S.C. 154(b) by 547 days.

(21) Appl. No.: **11/563,230**

(22) Filed: **Nov. 27, 2006**

(65) **Prior Publication Data**

US 2007/0088804 A1 Apr. 19, 2007

Related U.S. Application Data

(63) Continuation of application No. 09/805,470, filed on Mar. 12, 2001, now abandoned, which is a continuation-in-part of application No. 09/096,703, filed on Jun. 12, 1998, now abandoned.

(60) Provisional application No. 60/246,842, filed on Nov. 8, 2000, provisional application No. 60/072,127, filed on Jan. 22, 1998.

(51) **Int. Cl.**
H04L 29/06 (2006.01)
H03G 3/00 (2006.01)
(Continued)

(52) **U.S. Cl.**
CPC ***H03G 3/00*** (2013.01); ***G06F 17/30749*** (2013.01); ***G06F 17/30752*** (2013.01);
(Continued)

(58) **Field of Classification Search**
CPC H04L 65/4084
USPC 709/217, 219
See application file for complete search history.

(56) **References Cited**

U.S. PATENT DOCUMENTS

3,291,919 A 12/1966 Robitaille
3,609,227 A 9/1971 Kuljian
(Continued)

FOREIGN PATENT DOCUMENTS

CN 1276126 12/2000
CN 1477877 2/2004
(Continued)

OTHER PUBLICATIONS

"Imerge Multi-room SoundServer Application note," Issue 1.1, Aug. 2000, 9 pages.
(Continued)

Primary Examiner — Asghar Bilgrami

(57) **ABSTRACT**

A network-enabled audio device that provides a display device that allows the user to select playlists of music much like a jukebox is disclosed. The user can compose playlists from disk files, CD's, Internet streaming audio broadcasts, online music sites, and other audio sources. The user can also select a desired Web broadcast from a list of available Web broadcasts. In addition, the user can play standard audio CD's and MP3 encoded CD's and have access to local AM/FM stations. Further, the software, the user controls, and the display in the network-enabled audio device are operably configured and connected such that the user can listen to playlists that include CD's and other audio sources just as the user would choose a playlist in a jukebox. The user accesses a server site via a PC and the Internet. From the server site, the user obtains a list of the devices in his or her Internet Personal Audio Network (IPAN) and what songs are on those devices. The IPAN includes an IPAN server, an IPAN client, and IPAN software stored on the network-enabled audio device. Thus, the network-enabled audio device provides people who are or are not comfortable with computers a way of taking music from various sources and putting it into one place for listening pleasure. In one embodiment, the Personal Computer (PC) is used to compose the playlists, but the user is able to listen to playlists and other audio sources without using the PC.

28 Claims, 49 Drawing Sheets

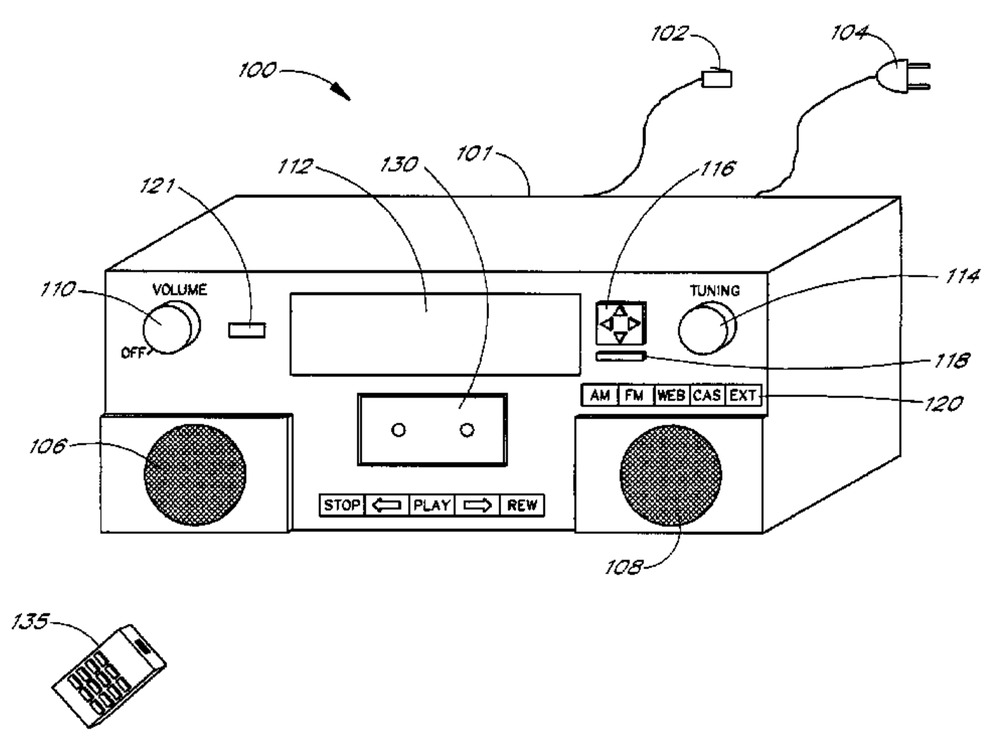

(51) **Int. Cl.**

G06F 17/30	(2006.01)
G06Q 30/06	(2012.01)
H04B 1/08	(2006.01)
H04H 20/38	(2008.01)
H04H 20/82	(2008.01)
H04H 60/06	(2008.01)
H04H 60/74	(2008.01)
H04L 12/28	(2006.01)
H04L 29/08	(2006.01)
G06F 21/10	(2013.01)
H04H 40/18	(2008.01)
H04H 60/82	(2008.01)
H04M 3/53	(2006.01)
H04M 3/533	(2006.01)
H04M 7/00	(2006.01)

(52) **U.S. Cl.**

CPC ***G06F17/30772*** (2013.01); ***G06F 17/30775*** (2013.01); ***G06F 21/10*** (2013.01); ***G06Q 30/0641*** (2013.01); ***H04B 1/08*** (2013.01); ***H04H 20/38*** (2013.01); ***H04H 20/82*** (2013.01); ***H04H 40/18*** (2013.01); ***H04H 60/06*** (2013.01); ***H04H 60/74*** (2013.01); ***H04H 60/82*** (2013.01); ***H04L 12/2812*** (2013.01); ***H04L 29/06027*** (2013.01); ***H04L 65/4076*** (2013.01); ***H04L 65/4084*** (2013.01); ***H04L 67/00*** (2013.01); *H04L 2012/2849* (2013.01); *H04M 3/533* (2013.01); *H04M 3/5307* (2013.01); *H04M 7/0006* (2013.01); *H04M 2201/60* (2013.01)

(56) **References Cited**

U.S. PATENT DOCUMENTS

4,357,710 A 11/1982 Kramer et al.
4,682,370 A 7/1987 Matthews
4,720,873 A 1/1988 Goodman et al.
4,788,675 A 11/1988 Jones et al.
4,829,500 A 5/1989 Saunders
4,920,432 A 4/1990 Eggers et al.
5,035,438 A 7/1991 Cronquist
5,119,188 A 6/1992 McCalley et al.
5,127,003 A 6/1992 Doll, Jr. et al.
5,129,036 A 7/1992 Dean et al.
5,132,992 A 7/1992 Yurt et al.
5,134,719 A 7/1992 Mankovitz
5,168,481 A 12/1992 Culbertson et al.
5,189,630 A 2/1993 Barstow et al.
5,191,573 A 3/1993 Hair
5,192,999 A 3/1993 Graczyk et al.
5,215,466 A 6/1993 Rubio
5,262,875 A 11/1993 Mincer et al.
5,282,028 A 1/1994 Johnson et al.
5,305,438 A 4/1994 MacKay et al.
5,349,678 A 9/1994 Morris et al.
5,351,276 A 9/1994 Doll, Jr. et al.
5,355,302 A 10/1994 Martin et al.
5,396,417 A 3/1995 Burks et al.
5,414,455 A 5/1995 Hooper et al.
5,418,713 A 5/1995 Allen
5,440,334 A 8/1995 Walters et al.
5,440,336 A 8/1995 Buhro et al.
5,442,701 A 8/1995 Guillou et al.
5,455,570 A 10/1995 Cook et al.
5,475,835 A 12/1995 Hickey
5,481,535 A 1/1996 Hershey
5,512,935 A 4/1996 Majeti et al.
5,526,284 A 6/1996 Mankovitz
5,534,913 A 7/1996 Majeti et al.
5,539,635 A 7/1996 Larson, Jr.
5,544,161 A 8/1996 Bigham et al.
5,550,576 A 8/1996 Klosterman
5,553,126 A 9/1996 Tang
5,557,541 A 9/1996 Schulhof et al.
5,568,645 A 10/1996 Morris et al.
5,570,134 A 10/1996 Hong
5,572,442 A 11/1996 Schulhof et al.
5,577,128 A 11/1996 Farinelli
5,581,461 A 12/1996 Coll et al.
5,581,479 A 12/1996 McLaughlin et al.
5,583,763 A 12/1996 Atcheson et al.
5,592,511 A 1/1997 Schoen et al.
5,594,779 A 1/1997 Goodman
5,616,876 A 4/1997 Cluts
5,617,565 A 4/1997 Augenbraun et al.
5,618,045 A 4/1997 Kagan
5,625,608 A 4/1997 Grewe et al.
5,629,867 A 5/1997 Goldman
5,636,211 A 6/1997 Newlin et al.
5,640,193 A 6/1997 Wellner
5,652,841 A 7/1997 Nemirovsky et al.
5,654,886 A 8/1997 Zereski, Jr. et al.
5,661,787 A 8/1997 Pocock
5,671,436 A 9/1997 Morris et al.
5,673,322 A 9/1997 Pepe et al.
5,682,525 A 10/1997 Bouve et al.
5,684,799 A 11/1997 Bigham et al.
5,703,795 A 12/1997 Mankovitz
5,706,427 A 1/1998 Tabuki
5,710,970 A 1/1998 Walters et al.
5,721,827 A 2/1998 Logan et al.
5,727,048 A 3/1998 Hiroshima et al.
5,732,216 A 3/1998 Logan et al.
5,734,719 A 3/1998 Anderson et al.
5,734,893 A 3/1998 Li et al.
5,740,035 A 4/1998 Cohen et al.
5,758,257 A 5/1998 Herz et al.
5,768,527 A 6/1998 Zhu et al.
5,781,889 A 7/1998 Martin
5,790,426 A 8/1998 Robinson
5,790,935 A 8/1998 Payton
5,793,980 A 8/1998 Glaser et al.
5,794,217 A 8/1998 Allen
5,796,727 A 8/1998 Harrison et al.
5,805,154 A 9/1998 Brown
5,809,246 A 9/1998 Goldman
5,812,765 A 9/1998 Curtis
5,812,937 A 9/1998 Takahisa et al.
5,815,662 A 9/1998 Ong
5,818,510 A 10/1998 Cobbley et al.
5,818,512 A 10/1998 Fuller
5,819,160 A 10/1998 Foladare et al.
5,819,273 A 10/1998 Vora et al.
5,828,839 A 10/1998 Moncrieff
5,832,499 A 11/1998 Gustman
5,844,893 A 12/1998 Gollnick et al.
5,850,340 A 12/1998 York
5,852,610 A 12/1998 Olaniyan
5,855,015 A 12/1998 Shoham
5,857,149 A 1/1999 Suzuki
5,862,171 A 1/1999 Mahany
5,864,682 A 1/1999 Porter et al.
5,870,390 A 2/1999 Campanella
5,873,045 A 2/1999 Lee et al.
5,874,986 A 2/1999 Gibbon et al.
5,878,223 A 3/1999 Becker et al.
5,878,429 A 3/1999 Morris et al.
5,880,721 A 3/1999 Yen
5,884,048 A 3/1999 Takano
5,884,282 A 3/1999 Robinson
5,890,152 A 3/1999 Rapaport et al.
5,892,536 A 4/1999 Logan et al.
5,903,892 A 5/1999 Ali et al.
5,903,901 A 5/1999 Kawakura et al.
5,905,865 A * 5/1999 Palmer et al. 725/112
5,907,831 A 5/1999 Lotvin et al.
5,914,941 A 6/1999 Janky
5,918,223 A 6/1999 Blum et al.
5,920,856 A 7/1999 Syeda-Mahmood
5,923,902 A 7/1999 Inagaki
5,926,624 A 7/1999 Katz et al.
5,930,765 A 7/1999 Martin

(56) **References Cited**

U.S. PATENT DOCUMENTS

5,933,822	A	8/1999	Braden-Harder et al.	
5,943,398	A	8/1999	Klein et al.	
5,943,422	A	8/1999	Van Wie et al.	
5,948,084	A	9/1999	Ha	
5,949,492	A	9/1999	Mankovitz	
5,949,776	A	9/1999	Mahany et al.	
5,949,877	A	9/1999	Traw et al.	
5,953,005	A	9/1999	Liu	
5,956,716	A	9/1999	Kenner et al.	
5,959,945	A	9/1999	Kleiman	
5,968,120	A	10/1999	Guedalia	
5,973,722	A	10/1999	Wakai et al.	
5,973,724	A	10/1999	Riddle	
5,974,441	A	10/1999	Rogers et al.	
5,983,200	A	11/1999	Slotznick	
5,983,218	A	11/1999	Syeda-Mahmood	
5,986,692	A	11/1999	Logan et al.	
5,990,868	A	11/1999	Frederick	
5,991,306	A	11/1999	Burns et al.	
5,991,693	A	11/1999	Zalewski	
5,991,737	A	11/1999	Chen	
6,005,563	A	12/1999	White et al.	
6,006,225	A	12/1999	Bowman et al.	
6,009,422	A	12/1999	Ciccarelli	
6,012,086	A	1/2000	Lowell	
6,014,569	A	1/2000	Bottum	
6,018,522	A	1/2000	Schultz	
6,018,768	A	1/2000	Ullman et al.	
6,026,150	A	2/2000	Frank et al.	
6,029,165	A	2/2000	Gable	
6,032,202	A	2/2000	Lea	
6,035,350	A	3/2000	Swamy et al.	
6,038,591	A	3/2000	Wolfe et al.	
6,038,601	A	3/2000	Kemper et al.	
6,038,668	A	3/2000	Chipman et al.	
6,041,311	A	3/2000	Chislenko et al.	
6,041,326	A	3/2000	Amro et al.	
6,044,403	A	3/2000	Gerszberg et al.	
6,051,389	A	4/2000	Ahl et al.	
6,055,566	A	4/2000	Kikinis	
6,060,997	A	5/2000	Taubenheim et al.	
6,064,379	A	5/2000	DeMoney	
6,067,562	A	5/2000	Goldman	
6,081,780	A	6/2000	Lumelsky	
6,081,830	A	6/2000	Schindler	
6,088,455	A	7/2000	Logan et al.	
6,088,722	A	7/2000	Herz et al.	
6,092,142	A	7/2000	Mehta	
6,093,880	A	7/2000	Arnalds	
6,104,334	A	8/2000	Allport	
6,105,060	A	8/2000	Rothblatt	
6,108,686	A	8/2000	Williams, Jr.	
6,122,658	A	9/2000	Chaddha	
6,122,757	A	9/2000	Kelley	
6,125,387	A	9/2000	Simonoff et al.	
6,127,941	A	10/2000	Van Ryzin	
6,128,663	A	10/2000	Thomas	
6,131,130	A	10/2000	Van Ryzin	
6,134,590	A	10/2000	Perlman	
6,144,375	A	11/2000	Jain et al.	
6,157,411	A	12/2000	Williams et al.	
6,160,997	A	12/2000	Oberlaender	
6,161,132	A	12/2000	Roberts	
6,161,142	A	12/2000	Wolfe et al.	
6,166,735	A	12/2000	Dom et al.	
6,167,393	A	12/2000	Davis, III et al.	
6,169,573	B1	1/2001	Sampath-Kumar et al.	
6,182,128	B1 *	1/2001	Kelkar et al.	725/87
6,192,340	B1 *	2/2001	Abecassis	G10H 1/0058 455/185.1
6,195,436	B1	2/2001	Scibora et al.	
6,195,654	B1	2/2001	Wachtel	
6,195,657	B1	2/2001	Rucker et al.	
6,199,076	B1	3/2001	Logan et al.	
6,204,885	B1	3/2001	Kwoh	
D440,553	S	4/2001	Bolas et al.	
6,212,282	B1	4/2001	Mershon	
6,223,210	B1 *	4/2001	Hickey	H04H 60/06 709/203
6,226,672	B1	5/2001	DeMartin et al.	
6,229,621	B1	5/2001	Kulakowski et al.	
6,233,430	B1	5/2001	Helferich	
6,233,682	B1	5/2001	Fritsch	
6,243,725	B1	6/2001	Hempleman et al.	
6,243,760	B1	6/2001	Armbruster et al.	
6,246,672	B1	6/2001	Lumelsky	
6,248,946	B1	6/2001	Dwek	
6,253,069	B1	6/2001	Mankovitz	
6,253,193	B1	6/2001	Gitner	
6,255,961	B1	7/2001	Van Ryzin et al.	
6,256,303	B1	7/2001	Drakoulis et al.	
6,256,554	B1	7/2001	DiLorenzo	
6,263,503	B1	7/2001	Margulis	
6,263,507	B1	7/2001	Ahmad et al.	
6,289,165	B1	9/2001	Abecassis	
6,292,786	B1	9/2001	Deaton et al.	
6,295,093	B1	9/2001	Park et al.	
6,295,555	B1	9/2001	Goldman	
6,311,194	B1	10/2001	Sheth et al.	
6,314,094	B1	11/2001	Boys	
6,317,722	B1	11/2001	Jacobi et al.	
6,317,784	B1	11/2001	Mackintosh et al.	
6,321,225	B1	11/2001	Heckerman et al.	
6,334,127	B1	12/2001	Bieganski et al.	
6,335,927	B1	1/2002	Elliott et al.	
6,338,044	B1	1/2002	Cook et al.	
6,339,693	B1	1/2002	Chan	
6,344,607	B2	2/2002	Cliff	
6,345,289	B1	2/2002	Lotspiech et al.	
6,349,329	B1	2/2002	Mackintosh et al.	
6,349,339	B1	2/2002	Williams	
6,351,596	B1	2/2002	Ostrover	
6,351,733	B1	2/2002	Saunders et al.	
6,354,748	B1	3/2002	Vrvilo	
6,372,974	B1	4/2002	Gross et al.	
6,374,237	B1	4/2002	Reese	
6,377,782	B1	4/2002	Bishop et al.	
6,385,596	B1	5/2002	Wiser et al.	
6,389,403	B1	5/2002	Dorak, Jr.	
6,389,467	B1	5/2002	Eyal	
6,389,469	B1	5/2002	Vekslar et al.	
6,407,750	B1	6/2002	Gioscia et al.	
6,411,992	B1	6/2002	Srinivasan et al.	
6,415,282	B1	7/2002	Mukherjea et al.	
6,438,579	B1	8/2002	Hosken	
6,446,080	B1	9/2002	Van Ryzin et al.	
6,456,234	B1	9/2002	Johnson	
6,460,076	B1	10/2002	Srinivasan	
6,473,792	B1 *	10/2002	Yavitz et al.	709/217
6,477,707	B1	11/2002	King et al.	
6,484,199	B2	11/2002	Eyal	
6,487,390	B1	11/2002	Virine et al.	
6,496,122	B2	12/2002	Sampsell	
6,496,802	B1	12/2002	van Zoest et al.	
6,501,389	B1	12/2002	Aguirre	
6,502,194	B1 *	12/2002	Berman et al.	726/28
6,505,123	B1	1/2003	Root et al.	
6,505,160	B1	1/2003	Levy et al.	
6,507,727	B1	1/2003	Henrick	
6,519,648	B1	2/2003	Eyal	
6,519,770	B2	2/2003	Ford	
6,526,335	B1	2/2003	Treyz et al.	
6,526,411	B1	2/2003	Ward	
6,546,421	B1	4/2003	Wynblatt et al.	
6,546,555	B1	4/2003	Hjelsvold et al.	
6,549,942	B1	4/2003	Janky	
6,560,651	B2	5/2003	Katz et al.	
6,567,847	B1	5/2003	Inoue	
6,581,103	B1	6/2003	Dengler	
6,587,127	B1	7/2003	Leeke et al.	
6,600,898	B1	7/2003	De Bonet et al.	
6,601,103	B1	7/2003	Goldschmidt	
6,608,907	B1	8/2003	Lee	
6,609,039	B1	8/2003	Schoen	

(56) **References Cited**

U.S. PATENT DOCUMENTS

6,609,096 B1 8/2003 De Bonet et al.
6,615,039 B1 9/2003 Eldering
6,622,018 B1 9/2003 Erekson
6,628,928 B1 9/2003 Crosby et al.
6,631,410 B1 10/2003 Kowalski et al.
6,640,145 B2 10/2003 Hoffberg et al.
6,643,376 B1 11/2003 Ackerman
6,647,389 B1 11/2003 Fitch et al.
6,647,411 B2 11/2003 Towell et al.
6,647,417 B1 11/2003 Hunter et al.
6,657,116 B1 12/2003 Gunnerson
6,662,231 B1 12/2003 Drosset et al.
6,670,537 B2 12/2003 Hughes et al.
6,675,015 B1 1/2004 Martini et al.
6,675,268 B1 1/2004 DeKoning et al.
6,675,384 B1 1/2004 Block et al.
6,678,215 B1 1/2004 Treyz et al.
6,684,249 B1 1/2004 Frerichs et al.
6,690,657 B1 2/2004 Lau
6,697,824 B1 2/2004 Bowman-Amuah
6,701,355 B1 * 3/2004 Brandt G06Q 30/02 709/219
6,711,622 B1 3/2004 Fuller et al.
6,711,741 B2 3/2004 Yeo
6,721,403 B1 4/2004 Mandalia
6,721,741 B1 4/2004 Eyal et al.
6,725,275 B2 4/2004 Eyal
6,725,461 B1 4/2004 Dougherty et al.
6,728,585 B2 4/2004 Neoh
6,735,628 B2 5/2004 Eyal
6,741,869 B1 5/2004 Lehr
6,748,237 B1 6/2004 Bates et al.
6,754,468 B1 6/2004 Sieben et al.
6,769,028 B1 7/2004 Sass et al.
6,772,127 B2 8/2004 Saunders et al.
6,778,869 B2 8/2004 Champion
6,779,115 B1 8/2004 Naim
6,782,253 B1 8/2004 Shteyn et al.
6,792,280 B1 9/2004 Hori et al.
6,792,470 B2 9/2004 Hakenberg et al.
6,793,142 B2 9/2004 Yap
6,823,225 B1 11/2004 Sass
6,826,283 B1 11/2004 Wheeler et al.
6,829,475 B1 12/2004 Lee et al.
6,839,705 B1 1/2005 Grooters
6,853,841 B1 2/2005 St. Pierre
6,865,600 B1 3/2005 Brydon et al.
6,865,609 B1 3/2005 Gubbi
6,876,642 B1 4/2005 Adams et al.
6,876,643 B1 4/2005 Aggarwal
6,879,963 B1 4/2005 Rosenberg
6,882,299 B1 4/2005 Allport
6,882,641 B1 4/2005 Gallick et al.
6,892,230 B1 5/2005 Gu
6,925,489 B1 * 8/2005 Curtin 709/217
6,933,433 B1 8/2005 Porteus et al.
6,937,860 B2 8/2005 Jahn
6,946,988 B2 9/2005 Edwards et al.
6,947,571 B1 9/2005 Rhoads et al.
6,954,443 B2 10/2005 Forstadius et al.
6,954,763 B2 10/2005 Nunome et al.
6,965,770 B2 11/2005 Walsh
6,970,127 B2 11/2005 Rakib
6,970,703 B2 11/2005 Fuchs et al.
6,973,476 B1 12/2005 Naden et al.
6,975,266 B2 12/2005 Abraham et al.
6,981,040 B1 12/2005 Konig et al.
6,982,780 B2 1/2006 Morley et al.
6,985,694 B1 1/2006 De Bonet et al.
6,990,208 B1 1/2006 Lau et al.
6,990,497 B2 1/2006 O'Rourke et al.
6,993,532 B1 1/2006 Platt et al.
6,999,783 B2 2/2006 Toyryla et al.
7,000,188 B1 2/2006 Eustace
7,010,263 B1 * 3/2006 Patsiokas 455/3.02
7,010,537 B2 3/2006 Eyal et al.
7,010,613 B2 3/2006 Connor
7,013,290 B2 3/2006 Ananian
7,020,704 B1 3/2006 Lipscomb et al.
7,020,710 B2 3/2006 Weber et al.
7,022,905 B1 4/2006 Hinman et al.
7,028,082 B1 4/2006 Rosenberg et al.
7,028,327 B1 4/2006 Dougherty et al.
7,031,931 B1 4/2006 Meyers
7,035,871 B2 4/2006 Hunt et al.
7,035,912 B2 4/2006 Arteaga
7,043,477 B2 5/2006 Mercer et al.
7,047,092 B2 5/2006 Wimsatt
7,047,315 B1 5/2006 Srivastava
7,058,694 B1 6/2006 De Bonet et al.
7,061,482 B2 6/2006 Ferris
7,065,342 B1 6/2006 Rolf
7,065,579 B2 6/2006 Traversat
7,072,309 B2 7/2006 Xie et al.
7,072,932 B1 7/2006 Stahl
7,075,000 B2 7/2006 Gang et al.
7,076,204 B2 7/2006 Richenstein
7,076,523 B2 7/2006 Schneider et al.
7,079,807 B1 7/2006 Daum et al.
7,081,579 B2 7/2006 Alcalde et al.
7,082,106 B2 7/2006 Sharma et al.
7,099,296 B2 8/2006 Belcea
7,102,067 B2 9/2006 Gang et al.
7,103,643 B1 9/2006 Jacobs et al.
7,107,045 B1 9/2006 Knoop
7,109,975 B2 9/2006 Fedorak et al.
7,120,871 B1 10/2006 Harrington
7,130,608 B2 10/2006 Hollstrom et al.
7,130,616 B2 10/2006 Janik
7,133,924 B1 11/2006 Rosenberg et al.
7,134,040 B2 11/2006 Ayres
7,136,399 B2 11/2006 Lanigan
7,136,934 B2 11/2006 Carter et al.
7,139,770 B2 11/2006 Nakase et al.
7,143,939 B2 12/2006 Henzerling
7,149,983 B1 12/2006 Robertson et al.
7,152,110 B2 12/2006 Pierce
7,171,018 B2 1/2007 Rhoads et al.
7,171,491 B1 1/2007 O'Toole et al.
7,181,023 B1 2/2007 Andrews
7,185,054 B1 2/2007 Ludwig et al.
7,187,947 B1 3/2007 White et al.
7,188,352 B2 3/2007 Nathan et al.
7,194,322 B2 3/2007 Kaneko et al.
7,203,838 B1 4/2007 Glazer et al.
7,206,838 B2 4/2007 Boyd et al.
7,212,830 B2 5/2007 Tamaki et al.
7,215,949 B2 5/2007 Sauriol
7,218,611 B2 5/2007 Mimura et al.
7,228,054 B2 6/2007 Cowgill
7,237,198 B1 6/2007 Chaney et al.
7,240,106 B2 7/2007 Cochran et al.
7,248,893 B2 7/2007 Christensen et al.
7,249,147 B2 7/2007 Juszkiewicz
7,249,367 B2 7/2007 Bove, Jr. et al.
7,260,638 B2 8/2007 Crosbie
7,269,854 B2 9/2007 Simmons et al.
7,277,765 B1 10/2007 Beckmann et al.
7,277,955 B2 10/2007 Elliott
7,281,034 B1 10/2007 Eyal
7,292,588 B2 11/2007 Milley et al.
7,293,277 B1 11/2007 Nathan
7,299,271 B2 11/2007 Sato
7,299,304 B2 11/2007 Saint-Hilaire et al.
7,301,900 B1 11/2007 Laksono
7,302,224 B2 11/2007 Sibley
7,308,489 B2 12/2007 Weast
7,325,043 B1 1/2008 Rosenberg et al.
7,340,768 B2 3/2008 Rosenberger
7,343,141 B2 3/2008 Ellis et al.
7,343,160 B2 3/2008 Morton
7,343,414 B2 3/2008 Lipscomb et al.
7,370,016 B1 5/2008 Hunter et al.
7,373,109 B2 5/2008 Pohja et al.

(56) **References Cited**

U.S. PATENT DOCUMENTS

7,378,903	B2	5/2008	Bates
7,403,769	B2	7/2008	Kopra et al.
7,426,329	B2	9/2008	Calhoon et al.
7,428,023	B2	9/2008	Allen et al.
7,451,117	B2	11/2008	Coziann et al.
7,451,177	B1	11/2008	Johnson et al.
7,454,511	B2	11/2008	Weast
7,468,934	B1	12/2008	Janik
7,469,283	B2	12/2008	Eyal et al.
7,472,353	B1	12/2008	Wolff et al.
7,483,958	B1	1/2009	Elabbady et al.
7,490,171	B2	2/2009	Saint-Hilaire et al.
7,496,665	B2	2/2009	Karaoguz et al.
7,503,059	B1	3/2009	Rothschild
7,512,685	B2	3/2009	Lunsford
7,512,702	B1	3/2009	Srivastava et al.
7,516,212	B2	4/2009	Nguyen et al.
7,525,289	B2	4/2009	Janik et al.
7,535,465	B2	5/2009	Morse et al.
7,555,543	B2	6/2009	Encarnacion et al.
7,567,987	B2	7/2009	Shappell
7,571,014	B1	8/2009	Lambourne et al.
7,577,665	B2	8/2009	Ramer et al.
7,590,084	B2	9/2009	Perlman
7,606,872	B2	10/2009	Stevenson et al.
7,613,736	B2	11/2009	Hicken
7,613,893	B2	11/2009	Saint-Hilaire et al.
7,627,343	B2	12/2009	Fadell et al.
7,643,894	B2	1/2010	Braithwaite et al.
7,647,385	B2	1/2010	Encarnacion et al.
7,652,844	B2	1/2010	Edwards et al.
7,660,601	B2	2/2010	Janik et al.
7,668,939	B2	2/2010	Encarnacion et al.
7,668,964	B2	2/2010	Millington
7,680,959	B2	3/2010	Svendsen
7,688,803	B1	3/2010	Young et al.
7,693,992	B2	4/2010	Watson
7,696,816	B2	4/2010	Bates
7,698,723	B2	4/2010	Hicks
7,702,363	B2	4/2010	Cao
7,702,403	B1	4/2010	Gladwin et al.
7,711,838	B1	5/2010	Boulter et al.
7,712,125	B2	5/2010	Herigstad et al.
7,720,463	B2	5/2010	Marsico
7,734,688	B2	6/2010	Langdon
7,739,335	B2	6/2010	Siegel et al.
7,742,606	B2	6/2010	Kreifeldt et al.
7,765,192	B2	7/2010	Svendsen
7,768,234	B2	8/2010	Janik et al.
7,783,722	B1	8/2010	Rosenberg et al.
7,786,705	B2	8/2010	Janik et al.
7,792,311	B1	9/2010	Holmgren et al.
7,797,272	B2	9/2010	Picker et al.
7,797,321	B2	9/2010	Martin et al.
7,802,278	B2	9/2010	Kweon
7,805,682	B1	9/2010	Lambourne
7,827,110	B1	11/2010	Wieder
7,827,236	B2	11/2010	Ferris
7,827,581	B1	11/2010	Eiger
7,840,691	B1	11/2010	De Bonet et al.
7,856,485	B2	12/2010	Prager et al.
7,870,088	B1	1/2011	Chen et al.
7,890,661	B2	2/2011	Spurgat et al.
7,899,915	B2	3/2011	Reisman
7,904,505	B2	3/2011	Rakers et al.
7,904,579	B2	3/2011	Janik et al.
7,917,557	B2	3/2011	Shteyn et al.
7,917,645	B2	3/2011	Ikezoye et al.
7,917,932	B2	3/2011	Krikorian
7,920,824	B2	4/2011	Janik et al.
7,926,085	B2	4/2011	Del Beccaro et al.
7,928,310	B2	4/2011	Georges et al.
7,996,873	B1	8/2011	Nathan et al.
8,005,724	B2	8/2011	Dunning et al.
8,014,423	B2	9/2011	Thaler et al.
8,023,998	B2	9/2011	Croome
8,024,419	B2	9/2011	Gudorf
8,028,038	B2	9/2011	Weel
8,028,093	B2	9/2011	Karaoguz et al.
8,028,323	B2	9/2011	Weel
8,036,265	B1	10/2011	Reynolds et al.
8,045,952	B2	10/2011	Qureshey et al.
8,050,652	B2	11/2011	Qureshey et al.
8,082,355	B1	12/2011	Weber et al.
8,086,287	B2	12/2011	Mooney
8,135,796	B1	3/2012	Abdelaziz et al.
8,160,495	B2	4/2012	Khedouri et al.
8,214,422	B1	7/2012	Woodward et al.
8,214,873	B2	7/2012	Weel
8,230,099	B2	7/2012	Weel
8,260,656	B1	9/2012	Harbick et al.
8,281,001	B2	10/2012	Busam et al.
8,359,351	B2	1/2013	Istvan et al.
8,381,252	B2	2/2013	Young
8,433,240	B2	4/2013	Slotznick
8,787,164	B2	7/2014	Julia et al.
8,788,080	B1	7/2014	Kallai et al.
8,832,746	B2	9/2014	Pack et al.
8,843,228	B2	9/2014	Lambourne
8,918,480	B2	12/2014	Qureshey et al.
2001/0005368	A1	6/2001	Rune
2001/0025259	A1	9/2001	Rouchon
2001/0034763	A1	10/2001	Jacobs et al.
2001/0039659	A1	11/2001	Simmons et al.
2001/0042107	A1	11/2001	Palm
2001/0042109	A1	11/2001	Bolas et al.
2001/0044321	A1	11/2001	Ausems et al.
2001/0051852	A1	12/2001	Sundaravel et al.
2001/0053994	A1	12/2001	Atcheson et al.
2001/0054060	A1	12/2001	Fillebrown
2002/0002039	A1	1/2002	Qureshey et al.
2002/0007418	A1	1/2002	Hegde et al.
2002/0010759	A1	1/2002	Hitson et al.
2002/0013852	A1	1/2002	Janik
2002/0022453	A1	2/2002	Balog et al.
2002/0023084	A1	2/2002	Eyal et al.
2002/0023270	A1	2/2002	Thomas et al.
2002/0026442	A1	2/2002	Lipscomb
2002/0032019	A1	3/2002	Marks et al.
2002/0035616	A1	3/2002	Diamond et al.
2002/0040255	A1	4/2002	Neoh
2002/0042915	A1	4/2002	Kubischta et al.
2002/0048224	A1	4/2002	Dygert et al.
2002/0049037	A1	4/2002	Christensen et al.
2002/0049760	A1	4/2002	Scott et al.
2002/0053078	A1	5/2002	Holtz et al.
2002/0065902	A1	5/2002	Janik et al.
2002/0068558	A1	6/2002	Janik
2002/0072326	A1	6/2002	Qureshey et al.
2002/0072817	A1	6/2002	Champion
2002/0073204	A1	6/2002	Dutta et al.
2002/0080719	A1	6/2002	Parkvall et al.
2002/0083148	A1	6/2002	Hussain et al.
2002/0087996	A1	7/2002	Bi et al.
2002/0116082	A1	8/2002	Gudorf
2002/0116476	A1	8/2002	Eyal et al.
2002/0122410	A1	9/2002	Kulikov
2002/0123276	A1	9/2002	Peetz
2002/0138630	A1	9/2002	Solomon et al.
2002/0144259	A1	10/2002	Gutta et al.
2002/0147782	A1	10/2002	Dimitrova et al.
2002/0151327	A1	10/2002	Levitt
2002/0161858	A1	10/2002	Goldman
2002/0165793	A1	11/2002	Brand et al.
2002/0165912	A1	11/2002	Wenocur et al.
2002/0166123	A1	11/2002	Schrader et al.
2002/0168938	A1	11/2002	Chang
2002/0170062	A1	11/2002	Chen et al.
2002/0173273	A1	11/2002	Spurgat et al.
2002/0173339	A1	11/2002	Safadi
2002/0174243	A1	11/2002	Spurgat et al.
2002/0174426	A1	11/2002	Gutta et al.
2002/0183059	A1	12/2002	Noreen et al.
2002/0184635	A1	12/2002	Istvan

(56) **References Cited**

U.S. PATENT DOCUMENTS

2002/0194260	A1	12/2002	Headley et al.
2002/0194619	A1	12/2002	Chang et al.
2002/0199001	A1	12/2002	Wenocur et al.
2003/0014750	A1	1/2003	Kamen
2003/0014759	A1	1/2003	Van Stam
2003/0018799	A1	1/2003	Eyal
2003/0022675	A1	1/2003	Mergler
2003/0023427	A1	1/2003	Cassin et al.
2003/0033420	A1	2/2003	Eyal et al.
2003/0041110	A1	2/2003	Wenocur et al.
2003/0045955	A1	3/2003	Janik
2003/0050062	A1	3/2003	Chen et al.
2003/0058805	A1	3/2003	Meyerson
2003/0060157	A1	3/2003	Henrick
2003/0080874	A1	5/2003	Yumoto et al.
2003/0088479	A1	5/2003	Wooten et al.
2003/0093790	A1	5/2003	Logan et al.
2003/0093797	A1	5/2003	Bazzaz
2003/0103627	A1	6/2003	Nierzwick et al.
2003/0103644	A1	6/2003	Klayh
2003/0115351	A1	6/2003	Giobbi
2003/0126211	A1	7/2003	Anttila et al.
2003/0126239	A1	7/2003	Hwang
2003/0126293	A1	7/2003	Bushey
2003/0130009	A1	7/2003	Kung
2003/0137531	A1	7/2003	Katinsky et al.
2003/0140343	A1	7/2003	Falvo et al.
2003/0147624	A1	8/2003	Trajkovic et al.
2003/0165128	A1	9/2003	Sisodia
2003/0177503	A1	9/2003	Sull et al.
2003/0182315	A1	9/2003	Plastina et al.
2003/0204439	A1	10/2003	Cullen, III
2003/0217102	A1	11/2003	Jystad et al.
2003/0225834	A1	12/2003	Lee et al.
2003/0227478	A1	12/2003	Chatfield
2003/0229549	A1	12/2003	Wolinsky et al.
2003/0229900	A1	12/2003	Reisman
2003/0236843	A1	12/2003	Weber et al.
2004/0002938	A1	1/2004	Deguchi
2004/0006634	A1	1/2004	Ferris
2004/0010798	A1	1/2004	Galli et al.
2004/0015401	A1	1/2004	Lee et al.
2004/0019497	A1	1/2004	Volk et al.
2004/0024912	A1	2/2004	Fukao et al.
2004/0030929	A1	2/2004	Bi et al.
2004/0031058	A1	2/2004	Reisman
2004/0055014	A1	3/2004	Edelson
2004/0057348	A1	3/2004	Shteyn et al.
2004/0078382	A1	4/2004	Mercer et al.
2004/0086120	A1	5/2004	Akins, III et al.
2004/0090984	A1	5/2004	Saint-Hilaire et al.
2004/0103280	A1	5/2004	Balfanz et al.
2004/0107219	A1	6/2004	Rosenberger
2004/0107242	A1	6/2004	Vert et al.
2004/0119894	A1	6/2004	Higgins et al.
2004/0121723	A1	6/2004	Poltorak
2004/0133914	A1	7/2004	Smith et al.
2004/0148393	A1	7/2004	Breiter et al.
2004/0158579	A1	8/2004	Gopalakrishnan
2004/0160307	A1	8/2004	Saikkonen et al.
2004/0162830	A1	8/2004	Shirwadkar et al.
2004/0174863	A1	9/2004	Caspi et al.
2004/0181604	A1	9/2004	Immonen
2004/0186733	A1	9/2004	Loomis et al.
2004/0199494	A1	10/2004	Bhatt
2004/0205028	A1	10/2004	Verosub et al.
2004/0225519	A1	11/2004	Martin
2004/0225746	A1	11/2004	Niell et al.
2004/0246372	A1	12/2004	Megeid
2004/0249708	A1	12/2004	Jacobs et al.
2004/0255340	A1	12/2004	Logan
2004/0260407	A1	12/2004	Wimsatt
2004/0260427	A1	12/2004	Wimsatt
2004/0260786	A1	12/2004	Barlie
2004/0267899	A1	12/2004	Rahman et al.
2004/0267965	A1	12/2004	Vasudevan et al.
2005/0021369	A1	1/2005	Cohen et al.
2005/0021470	A1	1/2005	Martin et al.
2005/0025320	A1	2/2005	Barry
2005/0033780	A1	2/2005	Simelius et al.
2005/0044561	A1	2/2005	McDonald
2005/0059379	A1	3/2005	Sovio et al.
2005/0060264	A1	3/2005	Schrock et al.
2005/0060757	A1	3/2005	Suh
2005/0071881	A1	3/2005	Deshpande
2005/0091693	A1	4/2005	Amine et al.
2005/0113946	A9	5/2005	Janik
2005/0120373	A1	6/2005	Thomas et al.
2005/0125828	A1	6/2005	Fujiwara et al.
2005/0149967	A1	7/2005	Hanley et al.
2005/0151327	A1	7/2005	Udagawa et al.
2005/0160258	A1	7/2005	O'Shea et al.
2005/0160270	A1	7/2005	Goldberg et al.
2005/0165888	A1	7/2005	Elliott
2005/0187976	A1	8/2005	Goodman et al.
2005/0192000	A1	9/2005	Lloyd
2005/0196153	A1	9/2005	Bullwinkle et al.
2005/0198233	A1	9/2005	Manchester et al.
2005/0210507	A1	9/2005	Hawkins et al.
2005/0234995	A1	10/2005	Plastina et al.
2005/0240494	A1	10/2005	Cue et al.
2005/0240959	A1	10/2005	Kuhn et al.
2005/0245233	A1	11/2005	Anderson
2005/0251453	A1	11/2005	Lu
2005/0251565	A1	11/2005	Weel
2005/0251566	A1	11/2005	Weel
2005/0251576	A1	11/2005	Weel
2005/0251807	A1	11/2005	Weel
2005/0262204	A1	11/2005	Szeto et al.
2005/0267944	A1	12/2005	Little, II
2005/0278380	A1	12/2005	Ferris
2006/0020662	A1	1/2006	Robinson
2006/0026147	A1	2/2006	Cone et al.
2006/0059260	A1	3/2006	Kelly et al.
2006/0072724	A1	4/2006	Cohen et al.
2006/0074808	A1	4/2006	Boesen
2006/0085821	A9	4/2006	Simmons et al.
2006/0087926	A1	4/2006	Hwang
2006/0101003	A1	5/2006	Carson et al.
2006/0135059	A1	6/2006	Hill
2006/0141962	A1	6/2006	Forbes et al.
2006/0143236	A1	6/2006	Wu
2006/0156346	A1	7/2006	Kulakowski
2006/0161621	A1	7/2006	Rosenberg
2006/0167576	A1	7/2006	Rosenberg
2006/0168264	A1	7/2006	Baba et al.
2006/0171395	A1	8/2006	Deshpande
2006/0173825	A1	8/2006	Hess et al.
2006/0174348	A1	8/2006	Rhoads et al.
2006/0184960	A1	8/2006	Horton et al.
2006/0195442	A1	8/2006	Cone et al.
2006/0212442	A1	9/2006	Conrad et al.
2006/0212444	A1	9/2006	Handman et al.
2006/0212478	A1	9/2006	Plastina et al.
2006/0218180	A1	9/2006	Bodlaender et al.
2006/0218613	A1	9/2006	Bushnell
2006/0224971	A1	10/2006	Paulin et al.
2006/0256669	A1	11/2006	Sakuma et al.
2006/0287746	A1	12/2006	Braithwaite et al.
2006/0288074	A1	12/2006	Rosenberg
2006/0294201	A1	12/2006	Kito et al.
2006/0294212	A1	12/2006	Kikkawa et al.
2007/0025194	A1	2/2007	Morse et al.
2007/0038999	A1	2/2007	Millington
2007/0061301	A1	3/2007	Ramer et al.
2007/0078660	A1	4/2007	Ferris
2007/0079352	A1	4/2007	Klein, Jr.
2007/0089132	A1	4/2007	Qureshey et al.
2007/0089135	A1	4/2007	Qureshey et al.
2007/0150918	A1	6/2007	Carpenter et al.
2007/0156647	A1	7/2007	Shen et al.
2007/0156897	A1	7/2007	Lim
2007/0168388	A1	7/2007	Plastina et al.
2007/0174864	A1	7/2007	Castillo

(56) **References Cited**

U.S. PATENT DOCUMENTS

2007/0180063	A1	8/2007	Qureshey et al.
2007/0186231	A1	8/2007	Haeuser et al.
2007/0199014	A1	8/2007	Clark et al.
2007/0203968	A1	8/2007	Jung et al.
2007/0219996	A1	9/2007	Jarvinen
2007/0220100	A1	9/2007	Rosenberg
2007/0220552	A1	9/2007	Juster et al.
2007/0247979	A1	10/2007	Brillon et al.
2007/0255752	A1	11/2007	Miller
2007/0264982	A1	11/2007	Nguyen et al.
2007/0265979	A1	11/2007	Hangartner
2007/0266031	A1	11/2007	Adams et al.
2007/0282949	A1	12/2007	Fischer et al.
2007/0283268	A1	12/2007	Berger et al.
2007/0286169	A1	12/2007	Roman
2008/0016205	A1	1/2008	Svendsen
2008/0031433	A1	2/2008	Sapp et al.
2008/0033821	A1	2/2008	Jacobi et al.
2008/0046909	A1	2/2008	Smetana et al.
2008/0085769	A1	4/2008	Lutnick et al.
2008/0109095	A1	5/2008	Braithwaite et al.
2008/0114481	A1	5/2008	Braithwaite et al.
2008/0125889	A1	5/2008	Atherton et al.
2008/0133520	A1	6/2008	Hempleman et al.
2008/0133759	A1	6/2008	Weel
2008/0208379	A1	8/2008	Weel
2008/0208823	A1	8/2008	Hicken
2008/0209013	A1	8/2008	Weel
2009/0063645	A1	3/2009	Casey et al.
2009/0064029	A1	3/2009	Corkran et al.
2009/0070267	A9	3/2009	Hangartner
2009/0077041	A1	3/2009	Eyal et al.
2009/0077160	A1	3/2009	Svendsen et al.
2009/0193472	A1	7/2009	Braithwaite et al.
2010/0172512	A1	7/2010	Braithwaite et al.
2010/0185732	A1	7/2010	Hyman
2011/0016483	A1	1/2011	Opdycke
2011/0026727	A1	2/2011	Braithwaite et al.
2011/0034121	A1	2/2011	Ng et al.
2011/0044468	A1	2/2011	Braithwaite et al.
2011/0044469	A1	2/2011	Braithwaite et al.
2011/0157476	A1	6/2011	Arling et al.
2012/0042007	A1	2/2012	Weel
2012/0042094	A1	2/2012	Qureshey et al.
2012/0042337	A1	2/2012	De Bonet et al.
2012/0143729	A1	6/2012	Qureshey et al.

FOREIGN PATENT DOCUMENTS

CN	1636388		7/2005
EP	0663737		7/1995
EP	0789502		8/1997
EP	672991		5/1998
EP	952732		10/1999
EP	984584		3/2000
GB	2306869	A	7/1997
GB	2397205		7/2004
JP	09-081164		3/1997
JP	2000-148169		5/2000
JP	2001-222288		8/2001
JP	2002-006868		1/2002
JP	2002-082679		3/2002
JP	2003-255962		9/2003
JP	2003-288085		10/2003
JP	2004-061673		2/2004
KR	2000-0058998		10/2000
WO	WO 96/17451		6/1996
WO	97/26601	A2	7/1997
WO	WO 97/44747		11/1997
WO	WO 98/21891		5/1998
WO	WO 99/18518		4/1999
WO	WO 99/38266		7/1999
WO	WO 99/43111		8/1999
WO	WO 99/57646		11/1999
WO	WO 00/52935		9/2000
WO	WO 01/17142		3/2001
WO	WO 01/36064		5/2001
WO	WO 01/53994		7/2001
WO	WO 01/61894		8/2001
WO	WO 02/21841		3/2002
WO	WO 2004/027606		4/2004

OTHER PUBLICATIONS

Veronica Hendricks, "Imerge SoundServer," Techonline, http://www.techonline.com/scripts/tol.exe?TEMPLATE, top.ops &AREA,1&CONTENT,8988&NET,13&USER.todd_ Bergeson@3com.com, Copyright 1999-2000 TechOnLine, Inc., printed Sep. 22, 2000, 2 pages.

"NPR : National Public Radio : News & Analysis, World, US, Music & Arts," http://www.npr.org, Copyright 2007 NPR, printed Oct. 16, 2007, 7 pages.

"Webradio Com," http://www.webradio.com/eflp/web+radio/pid73231/D284974/C2243539, Copyright 2007 www.webradio.com, printed Oct. 16, 2007, 1 page.

"RCS Acquires Decision Inc.; Offers Complete Software Solution for Radio Station Programming Operations," Businesswire, Feb. 9, 1993, Copyright 1995 Reuters Info. Svcs., 2 pages.

Mary Weller, "Radio Station Software: Programmes That Meet Your Stations Needs," Music & Media, Nov. 28, 1992, p. 11, Copyright 1995 Information Access Co., 3 pages.

Chris McConnell, "The tapeless revolution comes to radio (disk-based radio broadcasting storage, production and editing systems)," Broadcasting & Cable, v124, n41, p. 77, Oct. 10, 1994, Copyright 1995 Info Access Co., 4 pages.

"Blockbuster and IBM Announce New Multimedia Ventures," May 11, 1993, 2 pages.

"IBM Launches Business to Deploy Multimedia Applications and Services," Jan. 20, 1993, 3 pages.

"Audio Switcher Model CCSW84-01," Computer Concepts Corp. Digital Commercial System, Feb. 1991, 3 pages.

"Digital On-Air Studio System," Jan. 31, 1994, Copyright format only 1997 Knight-Ridder Info., 1 page.

"Relatable's Open Source Audio Signature Solution, TRM," http://web.archive.org/web/20001117082600/http://www.relatable.com/tech/trm.html, copyright Relatable 2000, printed Nov. 28, 2007, 2 pages.

"A Music Revolution . . . SoundServer," imerge, undetermined date, 2 pages.

"The Computer Concepts Traffic System. You'll wonder how you managed without it," Computer Concepts Corporation, printed Apr. 1990, 1 page.

"About Intermind's Channel Communications Patents," downloaded from <http://www.intermind.com/materials/patent_desc.html> on Feb. 27, 1998, 5 pages.

"About.com: http://quintura.com/," at <http://websearch.about.com/gi/dynamic/offisite.htm?zi=1/XJ&sdn=web...f=10&su=p284.8.150.ip_&tt=13&bt=0&bts=0&zu=http%3A//quintura.com/>, copyright 2007, Quintura Inc., printed Oct. 17, 2007, 2 pages.

Lingnau et al., "An Http-based Infrastructure for Mobile Agents," at <http://www.w3.org/Conferences/WWW4/Papers/150/>, 1995, pp. 1-15, printed Dec. 20, 1999, 15 pages.

"anthony.liekens.net >> Music >> Cloud," at <http://anthony.liekens.net/index.php/Music/Cloud>, page last modified on Apr. 12, 2007, copyright 2000-2006, Anthony Liekens, printed Oct. 17, 2007, 4 pages.

"AOL Music Now," at <http://web.archive.org/web/20060508184531/aol.musicnow.com/az/home.jhtml?_requesti . . . >, copyright 2006, AOL Music Now LLC, printed Nov. 16, 2007, 1 page.

"Apple—iPod + iTunes," at <http://www.apple.com/itunes/>, copyright 2007 by Paramount Pictures, printed Feb. 7, 2007, 2 pages.

Aguilera, M.K. and Strom, R.E., "Efficient Atomic Broadcast Using Deterministic Merge," Proceedings of ACM Symposium on Principles of Distributed Computing (PODC), Jul. 16-19, 2000, copyright 2000, ACM, New York, New York, 10 pages.

(56) **References Cited**

OTHER PUBLICATIONS

Huhn, Mary, "Fed Up With Radio? Create Your Own Online Station," New York Post, at <http://pqasb.pqarchiver.com/nypost/access/68457933.html?FMT=FT&di . . . >, Nov. 22, 1998, printed Oct. 13, 2009, 2 pages.
"Frequently Asked Questions about Intermind's Patents," downloaded from <http://www.intermind.com/materials/patent_faq.html> on Feb. 27, 1998, 9 pages.
Kaplan, Marc A., "IBM Cryptolopes TM, SuperDistribution and Digital Rights Management," found at <http://www.research.ibm.com/people/k/kaplan/cryptolope-docs/crypap.html> from the Internet Archive, copyright Dec. 30, 1996, IBM Corporation, printed Mar. 15, 2000, 7 pages.
Krigel, Beth Lipton, "Imagine Radio spinning off," CNET News, at <http://news.cnet.com/Imagine-Radio-spinning-off/2100-1033_3-213613.html>, Jul. 22, 1998, printed Oct. 13, 2009, 3 pages.
"InferNote is an exploration tool for your music collection," at <http://www.itweaks.com/infdoc/index.html>, copyright 2004, otherslikeyou.com Inc., printed Feb. 7, 2007, 13 pages.
Egyhazy et al., "Intelligent Web Search Agents," at <http://csgrad.cs.vt.edu/~tplunket/article.html>, pp. 1-23, printed Dec. 20, 1999, 23 pages.
"Intermind Announces Approval of First Patent Application," dated Oct. 7, 1997, downloaded from <http://www.intermind.com/inside/press_rel/100797_allow.html>, 3 pages.
Lehmann-Haupt, Rachel, "Library/Internet Radio; Listeners Take on Role of the Deejay," The New York Times, at <http://www.nytimes.com/1998/11/05/technology/library-internet-radio-lis . . . >, Nov. 5, 1998, printed Oct. 13, 2009, 2 pages.
Lehmann-Haupt, Rachel, "Library/Internet Radio; On Spinner, Wide Range of Choices," The New York Times, at <http://www.nytimes.com/1998/11/05/technology/library-internet-radio-on-spinner-wide-range-of-choices.html?scp=1&sq=On . . . >, Nov. 5, 1998, printed Oct. 15, 2009, 5 pages.
Lehmann-Haupt, Rachel, "Library/Internet Radio; Web Radio Expands Listening Horizons," The New York Times, at <http://www.nytimes.com/1998/11/05/technology/library-internet-radio-web-radio-expands-listening-horizons.html?scp=2&sq= . . . >, Nov. 5, 1998, printed Oct. 15, 2009, 5 pages.
Boswell, Wendy, "Loading 'Quintura—Search With Quintura, a Tag Cloud Search Engine'," at <http://websearch.about.com/od/dailywebsearchtips/qt/dnt0830.htm?p=1>, copyright 2007, About.com, Inc., printed Oct. 17, 2007, 1 page.
"Master's Projects of the KR&R Group," Faculty of Sciences, Vrije Universiteit, Amsterdam, URL unknown, publication date unknown, obtained on or prior to Apr. 22, 2009, 7 pages.
Henry, Alan, "MixxMaker: The Mix Tape Goes Online," Jan. 18, 2008, AppScout, found at <http://appscout.pcmag.com/crazy-start-ups-vc-time/276029-mixxmaker-the-mix-tape-goes-online#fbid=DfUZtDa46ye>, printed Nov. 15, 2011, 4 pages.
"Music Artist Cloud," at <http://artistcloud.camaris.be/>, copyright 2007, mac, printed Oct. 17, 2007, 2 pages.
"FAQ," at <http://blog.pandora.com/faq/>, copyright 2005-2006, Pandora Media, Inc., printed Aug. 8, 2006, 20 pages.
"Pandora—Frequently Asked Questions," from <http:www.pandora.com>, obtained on or prior to Apr. 22, 2009, copyright 2005-2009, Pandora Media, Inc., 48 pages.
"Pandora Internet Radio—Find New Music, Listen to Free Web Radio," at <http://www.pandora.com/>, copyright 2005-2007, Pandora Media, Inc., printed Feb. 7, 2007, 1 page.
"Pandora Radio—Listen to Free Internet Radio, Find New Music—The Music Genome Project," at <http://www.pandora.com/mgp>, copyright 2005-2007, Pandora Media, Inc., printed Oct. 26, 2007, 1 page.
Merkel, Oliver et al., "Protecting VoD the Easier Way," Proceedings of the sixth ACM International Conference on Multimedia, Sep. 13-16, 1998, Bristol, United Kingdom, 1998, pp. 21-28, 8 pages.
Krigel, Beth Lipton, "Radio features at center of Net law," CNET News, at <http://news.cnet.com/Radio-features-at-center-of-Net-law/2100-1033_3-214752.html>, Aug. 24, 1998, printed Oct. 15, 2009, 2 pages.
Nickell, Joe Ashbrook, "Roll Your Own Radio," at <http://www.wired.com/print/culture/lifestyle/news/1998/08/14706>, Aug. 28, 1998, printed Oct. 13, 2009, 1 page.
Madan, Sameer, "Search the Web without a headache," PC World (India), pp. 40-41, Feb. 1998, printed Dec. 20, 1999, 2 pages.
"Searching and Browsing Radio Time," URL unknown, publication date unknown, obtained on or prior to Apr. 22, 2009, 3 pages.
Lamantia, Joe, "Second Generation Tag Clouds," Feb. 23, 2006, at <http://www.joelamantia.com/blog/archives/ideas/second_generation_tag_clouds.html>, copyright 2006, Joe Lamantia, printed Nov. 29, 2007, 19 pages.
"Start Listening with Last.fm," at <http://www.last.fm/>, date unknown but may date back as early as 2002, 1 page.
"Tag cloud in standalone player—Feedback and Ideas—Last.fm," at <http://www.last.fm/forum/21717/_/333289>, posting dated Oct. 4, 2007,copyright 2002-2007, Last.fm Ltd., printed Oct. 17, 2007, 2 pages.
Hearst, Marti A. et al., "Tag Clouds: Data Analysis Tool or Social Signaller?," Proceedings of the 41st Annual Hawaii International Conference on System Sciences (HICSS 2008), Jan. 7-10, 2008, Waikoloa, Big Island, Hawaii, p. 160, available from <http://csdl2.computer.org/persagen/DLAbsToc.jsp?resourcePath=/dl/proceedings/&toc=comp/proceedings/hicss/2008/3075/00/3075toc.xml&DOI=10.1109/HICSS.2008.422>, 10 pages.
"TalkStreamLive.com—A Dynamic Directory of Streaming Radio," at <http://www.talkstreamlive.com/aboutus.aspx>, from the Internet Archive, dated Aug. 1, 2008, copyright 2006-2008, 3 pages.
Rouarch, Pierre, "The Cloud Search Beta," at <http://www.itcom3.com/thecloudsearch/aboutthecloudsearch.php>, copyright 2007, Pierre Rouarch, printed Oct. 17, 2007, 2 pages.
Gibbon, John F. et al., "The Use of Network Delay Estimation for Multimedia Data Retrieval," IEEE Journal on Selected Areas in Communications, vol. 14, No. 7, Sep. 1996, pp. 1376-1387, 12 pages.
Hochmair, H.H. et al., "User Interface Design for Semantic Query Expansion in Geo-data Repositories," Angewandte Geoinformatik 2006—Beitrage zum 18, AGIT-Symposium Salzburg: Heidelberg: Wichmann, 2006, 10 pages.
Smith, Patricia, "WebCompass Takes Web Searching in the Right Direction," Seybold Report on Desktop Publishing, vol. 10, No. 10, pp. 1-9, found at <http://www.seyboldseminars.com/seybold_report/reports/D1010001.htm>, copyright 1996, Seybold Publications Inc., 9 pages.
"Welcome to Internet Talk Radio from Talkzone.com," at <http://www.talkzone.com/> from the Internet Archive, dated Jul. 19, 2008, copyright 2007-2008, Syndication Networks Corp., 2 pages.
"What is BlogTalkRadio," at <http://www.blogtalkradio.com/whatis.aspx> from the Internet Archive, dated Feb. 28, 2009, copyright 2009, appears that it may have existed in 2008, BlogTalkRadio.com, 2 pages.
"YouTube—Broadcast Yourself.," at <http://www.youtube.com/>, copyright 2007, YouTube, LLC, printed Oct. 26, 2007, 2 pages.
"Defendant Sonos Inc.'s Initial Disclosures," Civil Action No. 2:13-cv-06062, Oct. 28, 2013, 21 pages.
Alvear, Jose, "3Com to Acquire Kerbango for $80 Million," Streaming Media Magazine, Jun. 27, 2000.
U.S. Appl. No. 60/174,706, Palm, filed Jan. 6, 2000, 10 pages.
Pachet, Francois, "A Combinatorial Approach to Content-based Music Selection," IEEE 1999.
Li, Yalun, "A Framework for Universal Personal Computing," Dept. of Electrical Engineering, The University of British Columbia, 1996.
Mao, Zhuoqing, "Achieving Service Portability in Iceberg," EECS Dept., University of California at Berkeley, IEEE 2000.
"AddressBook:1 Service," for UPnP Verson 1.0, Standardized DCP (SDCP) Dec. 10, 2012, Document Version 1.0, Service Template Version 2.00, 35 pages.
"Amazon.com: Kerbango 100E Internet Radio: MP3 Players & Accessories," Amazon.com, first available Sep. 4, 1999) printed Sep. 2, 2013.

(56) **References Cited**

OTHER PUBLICATIONS

Kevin C. Almeroth et al., "An Alternative Paradigm for Scalable On-Demand Applications: Evaluating and Deploying the Interactive Multimedia Jukebox," IEEE Transactions on Knowledge and Data Engineering, vol. 11, No. 4, Jul./Aug. 1999, pp. 658-672, copyright 1999 IEEE, 15 pages.
"An introduction to the Synchronized Multimedia Integration Language," Editor Peiy Liu, Siemens Corporate Research, IEEE 1998.
Helder, "Audio on Demand extensions to Jungle Monkey," University of Michigan, EECS 571 Project Report, Apr. 20, 1999.
Jonas, Karl, "Audio Streaming on the Internet Experiences with Real-Time Streaming of Audio Streams," German National Research Center for Information Technology (GMD), IEEE 1997.
"BasicManagement:1 Service Template Version 1.01," for UPnP Version 1.0, Standardized DCP (SDCP) Jul. 20, 2010, 72 pages.
"BasicManagement:2 Service Template Version 1.01," for UPnP Version 1.0, Standardized DCP (SDCP) Feb. 16, 2012, 145pages.
"BinaryLight:1 Device Template Version 1.01," for UPnP Version 1.0, Standardized DCP, Nov. 23, 2003, 7 pages.
Declaration of V. Michael Bove, Jr., with regard to U.S. Pat. No. 8,045,952 (Inter Partes Review No. IPR2013-00593), 40 pages.
Declaration of V. Michael Bove, Jr., with regard to U.S. Pat. No. 8,050,652 (Inter Partes Review No. IPR2013-00594), 41 pages.
"Calendar:1 Service," for UPnP Verson 1.0, Standardized DCP (SDCP) Dec. 10, 2012; Document Version 1.0, Service Template Version 2.00, 39 pages.
"CallManagement:1 Service," for UPnP Verson 1.0, Standardized DCP (SDCP) Mar. 22, 2011, Document Version 1.0, Service Template Version 2.00, 312 pages.
"CallManagement:2 Service," for UPnP Verson 1.0, Standardized DCP (SDCP) Dec. 10, 2012, Document Version 1.0, Service Template Version 2.00, 303 pages.
Nielsen, J., et al., "Comparative Design Review: An Exercise in Parallel Design," Interchi'93, Apr. 24-29, 1993, pp. 414-417.
Clark, Louise; Sasse, Angela, "Conceptual Design Reconsidered: The Case of the Internet Session Directory Tool," University College London, In People and Computers XII: Proceedings of HCI'97.
"ConfigurationManagement:1 Service Template Version 1.01," for UPnP Version 1.0, Standardized DCP (SDCP) Jul. 20, 2010, 103 pages.
"ConfigurationManagement:2 Service Template Version 1.01," for UPnP Version 1.0, Standardized DCP (SDCP) Mar. 4, 2013, 160 pages.
"ConnectionManager:2 Service, Annex A—Control Point Requirements," for UPnP Version 1.0, Standardized DCP Annex, Oct. 6, 2010, Service Template Version: 2.00, 4 pages.
"ContentDirectory:1 Service Annex A—Control Point Requirements," for UPnP Version 1.0, Standardized DCP Annex, Oct. 6, 2010, Service Template Version 2:00, 4 pages.
Douglas, G., "Copyright and Peer-To-Peer Music File Sharing: The Napster Case and the Argument Against Legislative Reform," vol. 11, No. 1 (Mar. 2004) 16 pages.
Krishnan, V., et al., "Customized Internet Radio," Proceedings of the 9th International World Wide Web Conference on Computer Networks: The International Journal of Computer and Telecommunications Networking, vol. 33, Issue 1-6, Jun. 2000, pp. 609-618 (12 pages).
Krishnan, Venky, Chang, Grace, "Customized Internet Radio," Hewlett-Packard Labs, 2000.
Matthew Eccles, "Telephonic Discovery Deposition of Matthew Eccles," in ITC Investigation No. 337-TA-882, Taken Oct. 14, 2013, 12 pages.
Shin, "Design and Implementation of the SMIL (Synchronized Multimedia Inegration Language) Player," Dept. of Computer Engineering, Sejong University, IEEE, Jun. 24, 2002.
Kruse, Kelly; Mori, Rob, "Designing an Internet Radio Interface Prototype," Sun Microsystems, Inc., Interactive Posters, CHI Mar. 31-Apr. 5, 2001.
"DeviceProtection:1 Service," for UPnP Version 1.0, Standardized DCP (SDCP), Version 1.0, Feb. 24, 2011, Service Template Version 2.00, 67 pages.
"DigitalSecurityCamera:1 Device Template version 1.01," for UPnP Version 1.0, Standardized DCP, Mar. 24, 2005, 8 pages.
"DigitalSecurityCameraMotionImage:1 Service Template Version 1.01," for UPnP Version 1.0, Standardized DCP, Mar. 24, 2005, 23 pages.
"DigitalSecurityCameraSettings:1 Service Template Version 1.01," for UPnP Version 1.0, Standardized DCP, Mar. 24, 2005, 18 pages.
"DigitalSecurityCameraStillImage:1 Service Template Version 1.01," for UPnP Version 1.0, Standardized DCP, Mar. 24, 2005, 20 pages.
"DimmableLight:1 Device Template Version 1.01," for UPnP Version 1.0, Standardized DCP, Nov. 23, 2003, 7 pages.
"Dimming:1 Service Template Version 1.01," for UPnP Version 1.0, Standardized DCP, Nov. 23, 2003, 29 pages.
Brassil, Jack, "Enhancing Internet Streaming Media with Cueing Protocols," IEEE INFOCOM 2001.
Expert Report of Jerry Black, Ph.D., ITC Investigation No. 337-TA-882, filed Nov. 12, 2013, 26 pages.
Expert Report of Kevin Jeffay Ph.D., ITC Investigation No. 337-TA-882, filed Nov. 12, 2013, 155 pages.
"ExternalActivity:1.0 Service Template Version 1.01," for UPnP version 1.0, Standardized DCP, Sep. 11, 2002, 16 pages.
"Feeder:1.0 Service Template Version 1.01," for UPnP Version 1.0, Standardized DCP, Sep. 11, 2002, 20 pages.
Hauver, David, "Flycasting: Using Collaborative Filtering to Generate a Playlist for Online Radio," Dept. of Computer Science, University of Virginia, IEEE 2001.
"InputConfig:1 Service," for UPnP Verson 1.0, Standardized DCP (SDCP) Mar. 22, 2011, Document Version 1.0, Service Template Version 2.00, 43 pages.
Schulzrinne, "Integrated Internet Appliances: More than Just a Phone," Internet Real-Time (IRT) Laboratory, Columbia University, Feb. 15, 1999.
Stoll, Felderhoff, Spikofski, "Internet Radio and Excellent Audio Quality; Dreamboat or Reality?" IBC'97, Amsterdam, Sep. 12-16, 1997.
Crouch, Cameron, "Internet radio dumps the PC; New stand-alone devices let you listen to Web-based broadcasts, from CDs to radio stations. (Kerbango/AudioRamp.com) (Product Information)," Network World, Feb. 14, 2000.
"InternetGatewayDevice:2 Device Template Version 1.01," for UPnP Versions 1.0 and 1.1, Standardized DCP (SDCP), Version 1.00, Dec. 10, 2010, 28 pages.
"Respondents' and Intervenor's Joint Notice of Prior Art," ITC Investigation No. 337-TA-882, filed Oct. 25, 2013, 49 pages.
Expert Report of Dr. Kevin Jeffay, Exhibit No. 34—Lipscomb Chart directed to U.S. Pat. No. 8,045,952, 70 pages.
Expert Report of Dr. Kevin Jeffay, Exhibit No. 35—Lipscomb Chart directed to U.S. Pat. No. 8,050,652, 71 pages.
Expert Report of Dr. Kevin Jeffay, Exhibit No. 57—RealPlayer Chart directed to U.S. Pat. No. 8,045,952, 91 pages.
Expert Report of Dr. Kevin Jeffay, Exhibit No. 58—RealPlayer Chart directed to U.S. Pat. No. 8,050,652, 98 pages.
Kerbango From Wikipedia, the free encyclopedia, en.wikipedia.org/wiki/Kerbango, printed on Sep. 2, 2013.
Metcalfe, Bob, "Kerbango AM/FM/IM Radio moves us toward the Broadcast Internet," web.archive.org/web/20081229161920/http://www.infoworld.com/articles/op/xml/00/06/12/000612opmetcalfe.html, printed Sep. 2, 2013.
Kerbango FAQ web.archive.org/web/20000617123538/http://kerbango.com/radio/faq.html, Jun. 17, 2000, printed Sep. 2, 2013.
Kerbango Internet Radio, "www.gadgetcentral.com/kerbango_intro.html," posted Jan. 2000.
"Kerbango Internet Radio, Product Intro," http://web.archive.org/web/20000824175603, Apr. 1, 2000.
"Kerbango Internet Radio, Product Intro," http://web.archive.org/web/2000052214305, Apr. 1, 2000.
"Lansonic Capabilities," [online] Aug. 17, 2000 [Downloaded from the Internet on Aug. 23, 2013] URL: <web.archive.org/web/

(56) **References Cited**

OTHER PUBLICATIONS

20000817023735/http://www.lansonic.com/capability.htm> (p. 6 of Yamaha Corporation of America Exhibit 1013) 1 page.
"Lansonic Company Information," [online] Sep. 18, 2000 [Downloaded from the Internet on Aug. 23, 2013] URL: <web.archive.org/web/20000918102826/http://www.lansonic.com/co info.htm> (p. 20 of Yamaha Corporation of America Exhibit 1013) 1 page.
"Lansonic DAS-750 Product Photographs," [online] Jun. 19, 2000 [Downloaded from the Internet on Aug. 23, 2013] URL: <web.archive.org/web/20000619153458/http://www.lansonic.com/photos.htm> (p. 7 of Yamaha Corporation of America Exhibit 1013) 1 page.
"Lansonic DAS-750 Product Photographs—Enlarged Front," [online] Jun. 20, 2000 [Downloaded from the Internet on Aug. 23, 2013] URL: <web.archive.org/web/20000620195000/http://www.lansonic.com/images/a_ned_front.jpg> (p. 8 of Yamaha Corporation of America Exhibit 1013) 1 page.
"Lansonic DAS-750 User Manual," [online] Sep. 18, 2000 [Downloaded from the Internet on Aug. 23, 2013] URL: <web.archive.org/web/20000918102806/http://www.lansonic.com/excertps.htm> (pp. 12-17 of Yamaha Corporation of America Exhibit 1013) 6 pages.
"Lansonic Digital Audio Server and MP3 Player Frequently Asked Questions," [online] Aug. 17, 2000 [Downloaded from the Internet on Aug. 23, 2013] URL: <web.archive.org/web/20000817023740/http://www.lansonic.com/faq_3_1_00.htm> (pp. 9-11 of Yamaha Corporation of America Exhibit 1013) 3 pages.
"Lansonic Digital Audio Server DAS-750," [online] Sep. 18, 2000 [Downloaded from the Internet on Aug. 23, 2013] URL: <web.archive.org/web/20000918102747/http://www.lansonic.com/configuration.htm> (pp. 1-2 of Yamaha Corporation of America Exhibit 1013) 2 pages.
"Lansonic Ignites Digital Music Revolution," [online] Press Release Dated Jan. 5, 2000 [Downloaded from the Internet on Aug. 23, 2013] Downloaded from Internet Archive Dated Jun. 19, 2000, URL: <web.archive.org/web/20000619182933/http://www.lansonic.com/pr.htm> (p. 21 of Yamaha Corporation of America Exhibit 1013) 1 page.
"Lansonic Order Form," [online] Aug. 17, 2000 [Downloaded from the Internet on Aug. 23, 2013] URL: <web.archive.org/web/20000817024550/http://www.lansonic.com/order.htm> (pp. 18-19 of Yamaha Corporation of America Exhibit 1013) 2 pages.
"Lansonic Specifications," [online] Aug. 17, 2000 [Downloaded from the Internet on Aug. 23, 2013] URL: <web.archive.org/web/20000817023726/http://www.lansonic.com/specifications.htm> (p. 5 of Yamaha Corporation of America Exhibit 1013) 1 page.
"LAUNCHcast Radio—Yahoo! Messenger," http://messenger.yahoo.com/launch.php, copyright 2007 Yahoo! Inc., printed Nov. 8, 2007, 1 page.
"LinkAuthentication:1," Service Template Version 1.01, for UPnP Version 1.0, Standardized DCP, Oct. 17, 2003, 32 pages.
"Liquid Audio Products and Services," http://web.archive.org/web/20000615070537, Jun. 15, 2000, printed on Sep. 24, 2013.
"LowPowerDevice:1 Service Template Version 1.01," for UPnP Version 1.0, Design Complete, Aug. 28, 2007, Document Version 1.00, 23 pages.
"LowPowerProxy:1 Service Template Version 1.01," for UPnP Version 1.0, Standardized DCP, Aug. 28, 2007, Document Version 1.00, 18 pages.
"ManageableDevice:1 Device Template Version 1.01," for UPnP Version 1.0, Standardized DCP (SDCP) Jul. 20, 2010, 14 pages.
"ManageableDevice:2 Device Template Version 1.01," for UPnP Version 1.0, Standardized DCP (SDCP) Feb. 16, 2012, 23 pages.
"MediaManagement:1 Service," for UPnP Verson 1.0, Standardized DCP (SDCP) Mar. 22, 2011, Document Version 1.0, Service Template Version 2.00, 228 pages.
"MediaManagement:2 Service," for UPnP Verson 1.0, Standardized DCP (SDCP) Dec. 10, 2012, Document Version 1.0, Service Template Version 2.00, 192 pages.
"Messaging:1 Service," for UPnP Verson 1.0, Standardized DCP (SDCP) Mar. 22, 2011, Document Version 1.0, Service Template Version 2.00, 72 pages.
"Messaging:2 Service," for UPnP Verson 1.0, Standardized DCP (SDCP) Dec. 10, 2012, Document Version 1.0, Service Template Version 2.00, 74 pages.
Tomas Bostrom, Susanne Eliasson, Per Lindtorp, Fabio Moioli and Mats Nystrom, "Mobile Audio Distribution," Royal Institue of Technology, Stockholm, Sweden, Personal Technologies (1999) vol. 3, Issue 4, pp. 166-172.
Knudsen, C., "MP3 Linux Players," Linux Journal, vol. 1999 Issue 63es, Jul. 1999, Article 10 (5 pages).
Hacker, S., "MP3: The Definitive Guide," O'Reilly, 1st Ed. Mar. 2000, 378 pages.
Schmandt, Chris, "Multimedia Nomadic Services on Today's Hardware," IEEE Network Sep./Oct. 1994.
Rose, "Music in the Home: Interfaces for Music Appliances," Personal Technologies (2000) vol. 4, Issue 1, pp. 45-53.
Weiss, A., "Music Selection for Internet Radio," Department of Computer Science, University of Cantergury, New Zealand, Nov. 3, 2000, 56 pages.
Gribble, "The Ninja Jukebox," Ninja Research Group, presentation date unknown, Univ. of Cal. at Berkeley.
"Nullsoft SHOUTcast," http://web.archive.org/web/20000815054138, Aug. 15, 2000, printed on Sep. 24, 2013.
Adam Field, Pieter Hartel, Wim Mooij, "Personal DJ, an Architecture for Personalised Content Delivery," www10, ACM 1-58113-348-0, May 1-5, 2001.
Petition for Inter Partes Review of U.S. Pat. No. 8,045,952 (Inter Partes Review No. IPR2013-00593) Filed Sep. 18, 2013, 57 pages.
Petition for Inter Partes Review of U.S. Pat. No. 8,050,652 (Inter Partes Review No. IPR2013-00594) Filed Sep. 18, 2013, 65 pages.
"PhoneManagement:1," for UPnP Verson 1.0, Standardized DCP (SDCP) Mar. 22, 2011, Document Version 1.0, Service Template Version 2.00, 53 pages.
"PhoneManagement:2," for UPnP Verson 1.0, Standardized DCP (SDCP) Dec. 10, 2012, Document Version 1.0, Service Template Version 2.00, 74 pages.
USDC N. Dist. of CA, Case No. C-99-5183 MHP, Plaintiffs' Memorandum of Points and Authorities in Opposition to Defendant Napster, Inc.'s Motion for Summary Adjudication on the Applicability of the 17 U.S.C. '512(a) Safe Harbor Affirmative Defense.
"Presence:1 Service," for UPnP Verson 1.0, Standardized DCP (SDCP) Dec. 10, 2012, Document Version 1.0, Service Template Version 2.00, 37 pages.
"PrintBasic:1 Service Template Version 1.01," for UPnP Version 1.0, Approved Standard, Aug. 8, 2002, 42 pages.
"PrintEnhanced:1 Service Template Version 1.01," for UPnP Version 1.0, Standardized DCP, Oct. 28, 2006, Document Revision 1.01, 83 pages.
Young, Cliff, "Protium, an Infrastructure for Partitioned Applications," Bell Laboratories, Lucent Technologies, IEEE 2001.
Helbig, Tobias; Schreyer, Oliver, "Protocol for Browsing in Continuous Data for Cooperative Multi-Server and Multi-Client Applications," Philips Research Laboratories, IDMS'98, LNCS 1483, pp. 231-236, 1998.
"RadiusClient:1," Service Template Version 1.01, for UPnP Version 1.0, Standardized DCP, Oct. 17, 2003, 12 pages.
Akst, Daniel, "RealAudio Gives Rise to Online Radio Programs," Los Angeles Times, Jul. 8, 1996.
RealAudio Server, Administrator's Guide, Release 2.0, Progressive Networks, Inc., 1996.
"RealPlayer Plus Specifications," http://web.archive.org/web/19980121234859, Jan. 21, 1998, printed on Sep. 24, 2013.
RealPlayer 7 Plus User Manual, RealNetworks, Inc. 2000.
RealPlayer 8 Plus User Manual, RealNetworks, Inc. 2000.
"RealPlayer Plus 5.0 Makes Your Computer the World's Coolest Entertainment Center," http://web.archive.org/web/19980121234541/http://www.real.com, Jan. 21, 1998.
"RealPlayer Plus G2 Manual," Copyright 1998-1999, Real Networks, Inc., 82 pages.
RealServer Administration and Content Creation Guide, Version 4.0, Progressive Networks, Inc., 1995-1997.
RealServer Administration Guide RealServer 7.0 Powered by RealSystem G2, RealNetworks, 1998-1999.

(56) **References Cited**

OTHER PUBLICATIONS

RealServer Administration Guide RealServer G2, RealNetworks, 1997.
"Relatable's Open Source Audio Signature Solution, TRM," http://web.archive.org/web/20001117082600/http://www.relatable.com/tec h/trm.html, copyright Relatable 2000, printed Nov. 28, 2007, 2 pages.
Wolz, Ursula, "r-MUSIC, A Collaborative Music DJ for Ad Hoc Networks," Dept. of Computer Science, The College of New Jersey, Proceedings of the Fourth International Conference on Web Delivering of Music (WEDELMUSIC'04) 2004.
"Scan:1.0 Service Template Version 1.01," for UPnP Version 1.0, Standardized DCP, Sep. 11, 2002, 54 pages.
"Scanner:1.0 Device Template Version 1.01," for UPnP Version 1.0, Standardized DCP, Sep. 11, 2002, 9 pages.
"ScheduledRecording:1 Service Annex A—Control Point Requirements," for UPnP Version 1.0, Standardized DCP Annex, Oct. 6, 2010, Service Template Version: 2.00, 5 pages.
"ScheduledRecording:1 Service Template Version 1.01," for UPnP Version 1.0, Approved Standard, May 31, 2006, Document Version 1.00, 267 pages.
"ScheduledRecording:2 Service," for UPnP Version 1.0, Standardized DCP (SDCP) Dec. 31, 2010, Service Template Version 1.01, 245 pages.
"ScheduledRecording:2 Service Annex A—Control Point Requirements," for UPnP Version 1.0, Standardized DCP Annex, Oct. 6, 2010, Service Template Version: 2.00, 5 pages.
"ScheduledRecording:2 Service Template Version 1.01," for UPnP Version 1.0, Standardized DCP, Sep. 30, 2008, Document Version 1.0, 273 pages.
"ServiceType:V Formatting (MS Word) Guidelines," Contribuing Members of the UPnP Forum, 2008, 26 pages.
"SHOUTcast Online Documentation," http://web.archive.org/web/20000815054155, Jul. 20, 1999, printed on Sep. 24, 2013.
"SHOUTcast Online Documentation—Configuring your SHOUTcast Server," http://web.archive.org/web/20000620161230, Jul. 20, 1999, printed on Sep. 24, 2013.
"SHOUTcast Online Documentation—How SHOUTcast works," http://web.archive.org/web/20000620182733, Jul. 20, 1999, printed on Sep. 24, 2013.
"SHOUTcast Online Documentation—What is SHOUTcast?" http://web.archive.org/web/20000620145452, Jul. 20, 1999, printed on Sep. 24, 2013.
"SHOUTcast Online Documentation—FAQ Advanced Topics," http://web.archive.org/web/20000619163953, Jul. 20, 1999, printed on Sep. 24, 2013.
"SHOUTcast Online Documentation—FAQ Troubleshooting," http://web.archive.org/web/20000619191320, Jul. 20, 1999, printed on Sep. 24, 2013.
"SHOUTcast Online Documentation—What is the SHOUTcast Server?" http://web.archive.org/web/20000620063713, Jul. 20, 1999, printed on Sep. 24, 2013.
"SHOUTcast Online Documentation—What Platforms Are Supported," http://web.archive.org/web/20001029073229, Jul. 20, 1999, printed on Sep. 24, 2013.
"SHOUTcast Server—Version 1.7.x Available!," http://web.archive.org/web/20000815054151, Aug. 15, 2000, printed on Sep. 24, 2013.
Hayes, Conor; Cunningham, Pádraig, "Smart Radio—a proposal," Dublin, Trinity College Dublin, Department of Computer Science, TCD-CS-1999-24, 1999, pp. 14.
"SMIL 2.0," Editor Peiy Liu, Siemens Corporate Research, IEEE 2001.
"SoftwareManagement:1 Service Template Version 1.01," for UPnP Version 1.0, Standardized DCP (SDCP) Jul. 20, 2010, 76 pages.
"SoftwareManagement:2 Service Template Version 1.01," for UPnP Version 1.0, Standardized DCP (SDCP) Feb. 16, 2012, 88 pages.
"SolarProtectionBlind:1 Device Template Version 1.01," for UPnP Version 1.0, Standardized DCP, Sep. 9, 2008, 7 pages.
"SwitchPower:1 Service Template Version 1.02," for UPnP Version 1.0, Standardized DCP, May 1, 2011, 11 pages.
"Telephony:1 Security Best Practice," for UPnP Verson 1.0, Standardized DCP (SDCP) Mar. 22, 2011, Document Version 1.0, Service Template Version 2.00, 27 pages.
"TelephonyArchitecture:1," for UPnP Verson 1.0, Standardized DCP (SDCP) Mar. 22, 2011, Document Version 1.0, Service Template Version 2.00, 24 pages.
"TelephonyArchitecture:2," for UPnP Verson 1.0, Standardized DCP (SDCP) Dec. 10, 2012, Document Version 1.0, Service Template Version 2.00, 23 pages.
"TelephonyClient:1 Device," for UPnP Verson 1.0, Standardized DCP (SDCP) Mar. 22, 2011, Document Version 1.0, Service Template Version 2.00, 12 pages.
"TelephonyClient:2 Device," for UPnP Verson 1.0, Standardized DCP (SDCP) Dec. 10, 2012, Document Version 1.0, Service Template Version 2.00, 9 pages.
"TelephonyServer:1 Device," for UPnP Verson 1.0, Standardized DCP (SDCP) Mar. 22, 2011, Document Version 1.0, Service Template Version 2.00, 13 pages.
"TelephonyServer:2 Device," for UPnP Verson 1.0, Standardized DCP (SDCP) Dec. 10, 2012, Document Version 1.0, Service Template Version 2.00, 10 pages.
Raeder, A., "The Internet Express: Radio on the Internet," The Internet Express, Jul./Aug. 1996, Searcher: The Magazine for Database Professionals, pp. 22 and 24-27 (5 pages).
McCandless, Michael, "The MP3 revolution," IEEE Intelligent Systems, May/Jun. 1999.
Crutcher, Laurence, "The Networked Video Jukebox," IEEE Transactions on Circuits and Systems for Vide:O Technology, vol. 4, No. 2. Apr. 1994.
Moller, Hammar, "The new facilities for the Department for Light and Sound Design of the Theatre Academy of Finland," 95th Covention of AES, Oct. 7-10, 1993.
Goldberg, I., et al., "The Ninja Jukebox," Proceedings of the USITS '99: The 2nd USENIX Symposium on Internet Technologies & Systems, Boulder, Colorado, Oct. 11-14, 1999, 10 pages.
Ian Goldberg, Steven D. Gribble, David Wagner, and Eric A. Brewer, "The Ninja Jukebox," Proceedings of USITS' 99: The 2nd USENIX Symposium on Internet Technologies & Systems Boulder, Colorado, USA, Oct. 11-14, 1999, 11 pages.
"The Ninja Project," http://web.archive.org/web/20000527172201, May 27, 2000, printed on Sep. 24, 2013.
Robertson, M., et al., "The Official MP3.com Guide to MP3," Copyright 1999, MP3.com, Inc., San Diego, CA 30 pages.
Robertson, M., et al., "The Official MP3.com Guide to MP3," Copyright 1999, MP3.com, Inc., San Diego, CA 118 pages.
Atwood, "Timecast offers custom-designed radio," Billboard, May 11, 1996, p. 54.
Chung, Soon; Pereira, Anil, "Timed Petri Net Representation of the Synchronized Multimedia Integration Language (SMIL) of XML," Dept. of Computer Science and Engineering, Wright State University, Proceedings of the International Conference on Information.
TRM: The Universal Barcode for Music and Media from Relatable, â€ found at <http://relatable.com/tech/trm.html>, copyright 2000-2003, Relatable, printed Oct. 3, 2011, 1 page.
"TwoWayMotionMotor:1 Service Template Version 1.01," for UPnP Version 1.0, Standardized DCP, Jul. 27, 2007, 30 pages.
Ritchie, J., et al., "UPnP AV Architecture Version 1.0," Jun. 25, 2002, URL:<http://upnp.org/specs/av/UPnP-av-AVArchitecture-v1-20020625.pdf> 22 pages.
"UPnP Device and Services Templates," ISO-IEC, Nov. 30, 2012, 156 pages.
"UPnP FanSpeed:1 Service Template Version 1.01," for UPnP Device Architecture 1.0, Standardized DCP, Sep. 21, 2007, 13 pages.
"UPnP Low Power Architecture," for UPnP Version 1.0, Design Complete, Aug. 28, 2007, Document Version 1.00, 44 pages.
"UPnP Printer:1 Device Template Version 1.01," for UPnP Device Architecture 1.0, Standardized DCP, Oct. 15, 2008, 7 pages.
"UPnP Printer:1 Device Template Version 1.01, Annex A—Optional Service Addition Version 1.0," for UPnP Device Architecture 1.0, Standardized DCP, Oct. 15, 2008, 4 pages.
"UPnP-av-SchemaFiles," Dec. 31, 2010, 46 pages.
"UPnP-av-SchemaFiles," Mar. 31, 2013, 13 pages.

(56) **References Cited**

OTHER PUBLICATIONS

"UPnP-av-SchemaFiles," Nov. 28, 2007, 12 pages.
"UPnP-av-TestFiles," Dec. 31, 2010, 86 pages.
"UPnP-av-TestFiles," Sep. 27, 2007, 142 pages.
"UPnP-basic-testFiles," Dec. 11, 2002, 3 pages.
"UPnP-cs-SchemaFiles," Mar. 6, 2008, 4 pages.
"UPnP-cs-TestFiles," Mar. 2, 2009, 147 pages.
"UPnP-dm-SchemaFiles," Feb. 16, 2012, 5 pages.
"UPnP-dm-SchemaFiles," Jan. 14, 2010, 4 pages.
"UPnP-dm-TestFiles," Feb. 16, 2012, 194 pages.
"UPnP-dm-TestFiles," Jan. 14, 2010, 233 pages.
"UPnP-gw-IGD-TestFiles," Dec. 10, 2010, 85 pages.
"UPnP-gw-IGD-TestFiles," Feb. 24, 2011, 96 pages.
"UPnP-gw-IGD-TestFiles," Sep. 21, 2001, 62 pages.
"UPnP-gw-SchemaFiles," Feb. 24, 2011, 3 pages.
"UPnP-gw-SchemaFiles," Nov. 3, 2009, 4 pages.
"UPnP-gw-WLAN-TestFiles," Oct. 17, 2003, 45 pages.
"UPnP-ha-DigitalSecurityCameraTestFiles," Mar. 24, 2005, 19 pages.
"UPnP-ha-HVAC-TestFiles," May 13, 2003, 31 pages.
"UPnP-ha-Lighting-TestFiles," Nov. 23, 2003, 14 pages.
"UPnP-ha-SolarProtectionBlind-TestFiles," Sep. 9, 2008, 7 pages.
"UPnP-Ip-SchemaFiles," Apr. 4, 2007, 4 pages.
"UPnP-Ip-TestFiles," Nov. 14, 2008, 7 pages.
"UPnP-phone-SchemaFiles," Dec. 10, 2012, 14 pages.
"UPnP-phone-SchemaFiles," Mar. 22, 2011, 3 pages.
"UPnP-phone-TestFiles," Dec. 10, 2012, 9 pages.
"UPnP-phone-TestFiles," Mar. 22, 2011, 18 pages.
"UPnP-pntr-SchemaFile," May 9, 2005, 110 pages.
"UPnP-pntr-TestFile," Oct. 28, 2009, 8 pages.
"UPnP-scnr-TestFiles," Sep. 11, 2002, 21 pages.
"UPnP-sec-SchemaFiles," Nov. 20, 2003, 22 pages.
"UPnP-sec-TestFiles," Nov. 14, 2008, 15 pages.
Gebhard, Harald, "Virtual Inernet Broadcasting," University of Dortmund, Germany, IEEE Communicaitons Magazine, Jun. 2001.
Paul, Baldine, "VTJukebox: Implementation Issues for RTP-Based Recording and On-Demand Multicast of Multimedia Conferences," At&T Labs—Research, 1998.
"WANConnectionDevice:2 Device Template Version 1.01," for UPnP Versions 1.0 and1.1, Standardized DCP (SDCP), Version 1.00, Sep. 10, 2010, 13 pages.
"WANDevice:1 Device Template Version 1.01," for UPnP Version 1.0, Standardized DCP, Nov. 12, 2001, 12 pages.
"WANDevice:2 Device Template Version 1.01," for UPnP Versions 1.0 and 1.1, Proposed DCP (PDCP), Version 1.0, Sep. 10, 2010, 11 pages.
"WANIPConnection:2 Service," for UPnP Version 1.0, Standardized DCP (SDCP) Sep. 10, 2010, Service Template Version 2.00, 85 pages.
"WANIPv6FirewallControl:1 Service," for UPnP Version 1.0, Standardized DCP (SDCP), version 1.00, Dec. 10, 2010, Service Template Version: 2.00, 39 pages.
"What is the Lansonic Digital Audio Server," [online] Aug. 15, 2000 [Downloaded from the Internet on Aug. 23, 2013] URL: <web.archive.org/web/20000815200431/http://www.lansonic.com/product.htm> (pp. 3-4 of Yamaha Corporation of America Exhibit 1013) 2 pages.
"WLANAccessPointDevice:1 Device Template Version 1.01," for UPnP Version 1.0, Standardized DCP, Oct. 17, 2003, 15 pages.
"WLANConfiguration:1, Service Template Version 1.01," for UPnP Version 1.0, Standardized DCP, Oct. 17, 2003, 71 pages.
"XHTML-Print Photo Templates for UPnP PrintEnhanced:1," for UPnP Version 1.0, Design Complete—Version 1.0, May 4, 2005, 79 pages.
"XHTML-Print/CSS Print Profile Guidelines for PrintEnhanced:1," for UPnP Version 1.0, Design Complete Version 1.0, May 4, 2005, 55 pages.
U.S. Appl. No. 60/157,736, Libscomb, et al., filed Oct. 5, 1999, 13 pages.
U.S. Appl. No. 60/176,829, Lipscomb, filed Jan. 19, 2000, 14 pages.
U.S. Appl. No. 60/176,830, Lipscomb, filed Jan. 19, 2000, 15 pages.
U.S. Appl. No. 60/176,833, Libscomb, filed Jan. 19, 2000, 37 pages.
U.S. Appl. No. 60/177,063, Lipscomb,filed Jan. 19, 2000, 29 pages.
U.S. Appl. No. 60/177,783, Lipscomb, et al., filed Jan. 24, 2000, 4 pages.
U.S. Appl. No. 60/177,867, Lipscomb, et al., filed Jan. 24, 2000, 29 pages.
U.S. Appl. No. 60/177,884, Libscomb, et al., filed Jan. 24, 2000, 5 pages.
U.S. Appl. No. 60/233,741 to Dannie C. Lau, et al., filed Sep. 19, 2000, entitled, "Personal Device-To-Device Networking," 18 pages.
Declaration of Kevin Jeffay, Ph.D., with regard to U.S. Pat. No. 8,045,952, May 9, 2014 (Inter Partes Review No. IPR2014-00740), 33 pages.
Declaration of Kevin Jeffay, Ph.D., with regard to U.S. Pat. No. 8,050,652, May 8, 2014 (Inter Partes Review No. IPR2014-00737), 37 pages.
Hacker, S., "MP3: The Definitive Guide," 1st Edition Mar. 2000, 378 pages.
Petition for Inter Partes Review of U.S. Pat. No. 8,045,952 (Inter Partes Review No. IPR2014-00740) Filed May 9, 2014, 66 pages.
Petition for Inter Partes Review of U.S. Pat. No. 8,050,652 (Inter Partes Review No. IPR2014-00737) Filed May 8, 2014, 64 pages.
Non-Published U.S. Appl. No. 09/653,964 to Steve Perlman, filed Sep. 1, 2000 (first publicly available Mar. 30, 2010) 98 pages.
2:14-cv-471-BHM v. *Pioneer Corporation, et al.*—Pioneer/Yamaha Courtesy Invalidity Contentions, Jan. 29, 2014, 37 pages.
"3Com Demonstrates Kerbango Internet Radio at NAB Radio Show," San Francisco, CA, Sep. 21, 2000, 2 pages.
"3COM Plans to Acquire Kerbango, Developers of the First Internet Radio," Business Wire, Santa Clara, California, Jun. 27, 2000, 3 pages.
U.S. Appl. No. 60/212,831, Fleenor, filed Jun. 21, 2000, 14 pages.
Kouvelas, "A Combined Network, System and User Based Approach to improving the Quality of Multicast Audio," Department of Computer Science, University College London, May 1998, 125 pages.
Mauve, M., "A General Framework and Communication Protocol for the Real-Time Transmission of Interactive Media," Reihe Informatik 16/98, 16 pages.
Gbaguidi, C., et al.,"A Generic Service Management Architecture for Multimedia Multipoint Communications," Swiss Federal Institute of Technology, Telecommunications Laboratory / Telecommunications Services Group (1995) 12 pages.
Yang, et al., "A Real-Time Synchronization Model and Transport Protocol for Multimedia Applications," Copyright 1994 IEEE, Communications and Multimedia Laboratory, Department of Computer Science and Information Engineering, National Taiwan University, 8 pages.
Kawaguchi, N., et al., "Ad-Hoc On-Demand Communication System Based on Mobile Agents," Proceedings of the 3rd International Symposium on Wireless Personal Multimedia Communications (WPMC2000) 2000, 6 pages.
"AltaVista Radio Now Available on 3Com Kerbango Internet Tuning Service—The Heart of the Soon to be Released Kerbango Internet Radio," San Francisco, Sep. 21, 2000, NAB Radio Show, 3 pages.
Ramanathan, et al., "Architectures for Personalized Multimedia," IEEE MultiMedia (1994), vol. 1, Issue 1, 10 pages.
"Arrakis Digilink DC4-100," Protocol Update—Jul. 10, 2000, Arrakis Systems, Inc., 2 pages.
"Audio Point: Welcome to the Coolest Way to Listed to Digital Music Over Your Conventional Stereo Equipment," Home Director, Inc., Revision Sep. 2002, 2 pages.
Dipert, B., ed., "Audio Receivers Tune in to Binary Broadcasts," Apr. 26, 2001, 5 pages.
Bloom, B., "Audio Request ARQ1-20 Home MP3/CD Player/Recorder With HD Storage," Equipment Review No. 2, Mar./Apr. 2001, Audiophile Audition, 7 pages.
"Audio Request: Music the Way You Want It," Copyright 2001, ReQuest, Inc., 75 pages.
"Audio ReQuest User Manual: ReQuest Serious Play," Copyright 2005, ReQuest, Inc., 44 pages.

(56) **References Cited**

OTHER PUBLICATIONS

"Audio ReQuest Users Manual for ARQTera ARQFusion ARQnitro ARQ2 Pro ARQ Zone ARQ1 Pro," ReQuest, Inc., date unknown, 63 pages.
"AudioTron: Digital Music Player for Home Networks—Accessories," Turtle Beach Connected Audio, Feb. 12, 2003 (Archived at http://web.archive.org/web/20030212144240/http://www.turtlebeach.com/site/products/audiotron/accessories.asp) 2 pages.
"AudioTron: Digital Music Player for Home Networks—Accessories," Turtle Beach Connected Audio, Aug. 6, 2002 (Archived at http://web.archive.org/web/20020806183335/http://www.turtlebeach.com/site/products/audiotron/accessories.asp) 2 pages.
"AudioTron Digital Music and Internet Radio Player—Reference Manual," AudioTron Reference Manual, Version 3.0, May 2002, Copyright 2002 Voyetra Turtle Beach, Inc., 70 pages.
Heathering, B., "AudioTron Digital Music Player," Feb. 24, 2003, Home Toys Inc. Copyright 1996-2002 (Archived at http://web.archive.org. . . www.hometoys.com/htinews/apr01/reviews/audiotron/audiotron.com) 2 pages.
"AudioTron: Digital Music Player for Home Networks," Turtle Beach Connected Audio, Apr. 1, 2003 (Archived at http://web.archive.org/web/20030401095445/http://www.turtlebeach.com/site/products/audiotron/producthome.asp) 2 pages.
"AudioTron: Digital Music Player for Home Networks—Frequently Asked Questions," Turtle Beach Connected Audio, Feb. 12, 2003 (Archived at http://web.archive.org/web/20030212144110/http://www.turtlebeach.com/site/products/audiotron/faqs.asp) 10 pages.
"AudioTron: Digital Music Player for Home Networks—in Detail," Turtle Beach Connected Audio, Apr. 1, 2003 (Archived at http://web.archive.org/web/20030401211824/http://www.turtlebeach.com/site/products/audiotron/indetail.asp) 2 pages.
"AudioTron: Digital Music Player for Home Networks—in Detail," Turtle Beach Connected Audio, Jun. 9, 2002 (Archived at http://web.archive.org/web/20020609155522/http://www.turtlebeach.com/site/products/audiotron/indetail.asp) 2 pages.
"AudioTron: Digital Music Player for Home Networks—Partner Products," Turtle Beach Connected Audio, Feb. 2, 2003 (Archived at http://web.archive.org/web/20030202062712/http://www.turtlebeach.com/site/products/audiotron/partners.asp) 2 pages.
"AudioTron: Digital Music Player for Home Networks—Product Downloads," Turtle Beach Connected Audio, Aug. 7, 2002 (Archived at http://web.archive.org/web/20020807224358/http://www.turtlebeach.com/site/products/audiotron/downloads.asp) 1 page.
"AudioTron: Digital Music Player for Home Networks—Products & Awards," Turtle Beach Connected Audio, Feb. 10, 2003 (Archived at http://web.archive.org/web/20030210104730/http://www.turtlebeach.com/site/products/audiotron/reviews.asp) 3 pages.
"AudioTron: Digital Music Player for Home Networks—Product Reviews & Awards," Turtle Beach Connected Audio, Aug. 6, 2002 (Archived at http://web.archive.org/web/20020806184002/http://www.turtlebeach.com/site/products/audiotron/reviews.asp) 3 pages.
"AudioTron Setup Guide—Digital Music Player for Home Networks," Copyright 2001-2002, Voyetra Turtle Beach, Inc., 38 pages.
"AudioTron: Digital Music Player for Home Networks—Specifications," Turtle Beach Connected Audio, Feb. 2, 2003 (Archived at http://web.archive.org/web/20030202062309/http://www.turtlebeach.com/site/products/audiotron/specs.asp) 2 pages.
"AudioTron: Digital Music Player for Home Networks—Specifications," Turtle Beach Connected Audio, Aug. 6, 2002 (Archived at http://web.archive.org/web/20020806184248/http://www.turtlebeach.com/site/products/audiotron/specs.asp) 2 pages.
"AudioTron: Digital Music Player for Home Networks—Requirements," Turtle Beach Connected Audio, Feb. 2, 2003 (Archived at http://web.archive.org/web/20030202063415/http://www.turtlebeach.com/site/products/audiotron/whatdoineed.asp) 2 pages.
"AudioTron: Digital Music Player for Home Networks—System Requirements," Turtle Beach Connected Audio, Apr. 9, 2002 (Archived at http://web.archive.org/web/20020409132409/http://www.turtlebeach.com/site/products/audiotron/whatdoineed.asp) 1 page.
"AudioTron: Digital Music Player for Home Networks—Top 10 Things to Look at Before You Buy a Digital Audio Receiver," Turtle Beach Connected Audio, Feb. 28, 2003 (Archived at http://web.archive.org/web/20030228031931/http://www.turtlebeach.com/site/products/audiotron/comparisons.asp) 2 pages.
"AudioTron: Digital Music Player for Home Networks—User Comments," Turtle Beach Connected Audio, Feb. 12, 2003 (Archived at http://web.archive.org/web/20030212144608/http://www.turtlebeach.com/site/products/audiotron/feedback.asp) 2 pages.
"AudioTron: Digital Music Player for Home Networks—User Comments," Turtle Beach Connected Audio, Aug. 7, 2002 (Archived at http://web.archive.org/web/20020807224930/http://www.turtlebeach.com/site/products/audiotron/feedback.asp) 2 pages.
"AudioTron: Digital Music Player for Home Networks—Product Downloads," Turtle Beach Connected Audio, Feb. 12, 2003 (Archived at http://web.archive.org/web/20030212145129/http://www.turtlebeach.com/site/products/audiotron/downloads.asp) 1 page.
AVS Forum, "CD Changers (200-300)," Jul. 22, 2000, 4 pages.
Buerk, L., et al, "AVTransport: 1 Service Template Version 1.01," for UPnP Version 1.0, Standardized DCP, Jun. 25, 2002, UPnP Forum, 67 pages.
2:14-cv-471-BHM v. *Pioneer Corporation, et al.*—Pioneer/Yamaha Courtesy Invalidity Contentions—Exhibit C-1—Berman Chart—U.S. Pat. No. 6,502,194 to Berman, et al., directed to U.S. Pat. No. 8,045,952 to Qureshey, Jan. 29, 2014, 2 pages.
2:14-cv-471-BHM v. *Pioneer Corporation, et al.*—Pioneer/Yamaha Courtesy Invalidity Contentions—Exhibit C-10d—Kerbango Device Chart—Kerbango Radio 100E device, directed to U.S. Pat. No. 8,045,952 to Qureshey, Jan. 29, 2014, 16 pages.
2:14-cv-471-BHM v. *Pioneer Corporation, et al.*—Pioneer/Yamaha Courtesy Invalidity Contentions—Exhibit C-10p—Kerbango Press Chart—Kerbango Prior Art Press Publications, directed to U.S. Pat. No. 8,045,952 to Qureshey, Jan. 29, 2014, 11 pages.
2:14-cv-471-BHM v. *Pioneer Corporation, et al.*—Pioneer/Yamaha Courtesy Invalidity Contentions—Exhibit C-11—Perlman Chart—WIPO Publication No. WO 02/21841 to Perlman, directed to U.S. Pat. No. 8,045,952 to Qureshey, Jan. 29, 2014, 12 pages.
2:14-cv-471-BHM v. *Pioneer Corporation, et al.*—Pioneer/Yamaha Courtesy Invalidity Contentions—Exhibit C-12—Watson Chart—U.S. Pat. No. 7,693,992 to Watson, directed to U.S. Pat. No. 8,045,952 to Qureshey, Jan. 29, 2014, 14 pages.
2:14-cv-471-BHM v. *Pioneer Corporation, et al.*—Pioneer/Yamaha Courtesy Invalidity Contentions—Exhibit C-13—Sass Chart—U.S. Pat. No. 6,823,225 to Sass, directed to U.S. Pat. No. 8,045,952 to Qureshey, Jan. 29, 2014, 5 pages.
2:14-cv-471-BHM v. *Pioneer Corporation, et al.*—Pioneer/Yamaha Courtesy Invalidity Contentions—Exhibit C-2—Leeke Chart—U.S. Pat. No. 6,587,127 to Leeke, et al., directed to U.S. Pat. No. 8,045,952 to Qureshey, Jan. 29, 2014, 3 pages.
2:14-cv-471-BHM v. *Pioneer Corporation, et al.*—Pioneer/Yamaha Courtesy Invalidity Contentions—Exhibit C-3—Wolff Chart—U.S. Pat. No. 7,472,353 to Wolff, et al., directed to U.S. Pat. No. 8,045,952 to Qureshey, Jan. 29, 2014, 2 pages.
2:14-cv-471-BHM v. *Pioneer Corporation, et al.*—Pioneer/Yamaha Courtesy Invalidity Contentions—Exhibit C-4d—Lansonic DAS-750 Device Chart—Lansonic DAS-750 System, directed to U.S. Pat. No. 8,045,952 to Qureshey, Jan. 29, 2014, 11 pages.
2:14-cv-471-BHM v. *Pioneer Corporation, et al.*—Pioneer/Yamaha Courtesy Invalidity Contentions—Exhibit C-4w—Lansonic DAS-750 Website Chart—Lansonic Digital Audio Server DAS-750 Web Pages, directed to U.S. Pat. No. 8,045,952 to Qureshey, Jan. 29, 2014, 3 pages.
2:14-cv-471-BHM v. *Pioneer Corporation, et al.*—Pioneer/Yamaha Courtesy Invalidity Contentions—Exhibit C-5—Cluts Chart—U.S. Pat. No. 5,616,876 to Cluts, directed to U.S. Pat. No. 8,045,952 to Qureshey, Jan. 29, 2014, 3 pages.
2:14-cv-471-BHM v. *Pioneer Corporation, et al.*—Pioneer/Yamaha Courtesy Invalidity Contentions—Exhibit C-6—Johnson Chart—U.S. Pat. No. 7,451,177 to Johnson, et al., directed to U.S. Pat. No. 8,045,952 to Qureshey, Jan. 29, 2014, 4 pages.
2:14-cv-471-BHM v. *Pioneer Corporation, et al.*—Pioneer/Yamaha Courtesy Invalidity Contentions—Exhibit C-7—Langdon Chart—

(56) **References Cited**

OTHER PUBLICATIONS

U.S. Pat. No. 7,734,688 to Langdon, directed to U.S. Pat. No. 8,045,952 to Qureshey, Jan. 29, 2014, 9 pages.
12:14-cv-471-BHM v. *Pioneer Corporation, et al.*—Pioneer/Yamaha Courtesy Invalidity Contentions—Exhibit C-8—Lipscomb Chart—U.S. Pat. No. 7,020,704 to Lipscomb, directed to U.S. Pat. No. 8,045,952 to Qureshey, Jan. 29, 2014, 11 pages.
2:14-cv-471-BHM v. *Pioneer Corporation, et al.*—Pioneer/Yamaha Courtesy Invalidity Contentions—Exhibit C-9d—Philips. FW-i1000 Chart—Philips FW-i1000 (Fwi) Kerbango Device, directed to U.S. Pat. No. 8,045,952 to Qureshey, Jan. 29, 2014, 16 pages.
2:14-cv-471-BHM v. *Pioneer Corporation, et al.*—Pioneer/Yamaha Courtesy Invalidity Contentions—Exhibit C-9m—Philips FW-i1000 Manual—Philips Streamium FW-i1000 Manual, directed to U.S. Pat. No. 8,045,952 to Qureshey, Jan. 29, 2014, 3 pages.
2:14-cv-471-BHM v. *Pioneer Corporation, et al.*—Pioneer/Yamaha Courtesy Invalidity Contentions—Exhibit D-1—Leeke Chart—U.S. Pat. No. 6,587,127 to Leeke, et al., directed to U.S. Pat. No. 8,050,652 to Qureshey, Jan. 29, 2014, 6 pages.
2:14-cv-471-BHM v. *Pioneer Corporation, et al.*—Pioneer/Yamaha Courtesy Invalidity Contentions—Exhibit D-10—Perlman Chart—WIPO Publication No. WO 02/21841 to Perlman, directed to U.S. Pat. No. 8,050,652 to Qureshey, Jan. 29, 2014, 36 pages.
2:14-cv-471-BHM v. *Pioneer Corporation, et al.*—Pioneer/Yamaha Courtesy Invalidity Contentions—Exhibit D-11—Watson Chart—U.S. Pat. No. 7,693,992 to Watson, directed to U.S. Pat. No. 8,050,652 to Qureshey, Jan. 29, 2014, 109 pages.
2:14-cv-471-BHM v. *Pioneer Corporation, et al.*—Pioneer/Yamaha Courtesy Invalidity Contentions—Exhibit D-12—Langdon Chart—U.S. Pat. No. 7,734,688 to Langdon, directed to U.S. Pat. No. 8,050,652 to Qureshey, Jan. 29, 2014, 17 pages.
2:14-cv-471-BHM v. *Pioneer Corporation, et al.*—Pioneer/Yamaha Courtesy Invalidity Contentions—Exhibit D-13—Sass Chart—U.S. Pat. No. 6,823,225 to Sass, directed to U.S. Pat. No. 8,050,652 to Qureshey, Jan. 29, 2014, 15 pages.
2:14-cv-471-BHM v. *Pioneer Corporation, et al.*—Pioneer/Yamaha Courtesy Invalidity Contentions—Exhibit D-2—Berman Chart—U. S. Pat. No. 6,502,194 to Berman, et al. in view of WIPO Publication No. WO 99/38266 to Qureshey, et al., directed to U.S. Pat. No. 8,050,652 to Qureshey, Jan. 29, 2014, 5 pages.
2:14-cv-471-BHM v. *Pioneer Corporation, et al.*—Pioneer/Yamaha Courtesy Invalidity Contentions—Exhibit D-3d—Lansonic DAS-750 Device Chart—Lansonic DAS-750 System, directed to U.S. Pat. No. 8,050,652 to Qureshey, Jan. 29, 2014, 47 pages.
2:14-cv-471-BHM v. *Pioneer Corporation, et al.*—Pioneer/Yamaha Courtesy Invalidity Contentions—Exhibit D-3w—Lansonic DAS-750 Website Chart—Lansonic Digital Audio Server DAS-750 Web Pages, directed to U.S. Pat. No. 8,050,652 to Qureshey, Jan. 29, 2014, 6 pages.
2:14-cv-471-BHM v. *Pioneer Corporation, et al.*—Pioneer/Yamaha Courtesy Invalidity Contentions—Exhibit D-4—White Chart—U.S. Pat. No. 7,187,947 to White, et al., directed to U.S. Pat. No. 8,050,652 to Qureshey, Jan. 29, 2014, 5 pages.
2:14-cv-471-BHM v. *Pioneer Corporation, et al.*—Pioneer/Yamaha Courtesy Invalidity Contentions—Exhibit D-5—Johnson Chart—U. S. Pat. No. 7,451,177 to Johnson, et al., directed to U.S. Pat. No. 8,050,652 to Qureshey, Jan. 29, 2014, 8 pages.
2:14-cv-471-BHM v. *Pioneer Corporation, et al.*—Pioneer/Yamaha Courtesy Invalidity Contentions—Exhibit D-6—Lipscomb Chart—U.S. Pat. No. 7,020,704 to Lipscomb, directed to U.S. Pat. No. 8,050,652 to Qureshey, Jan. 29, 2014, 8 pages.
2:14-cv-471-BHM v. *Pioneer Corporation, et al.*—Pioneer/Yamaha Courtesy Invalidity Contentions—Exhibit D-7—Leyden Chart—WIPO Publication No. WO 01/61894 to Leyden, et al., directed to U.S. Pat. No. 8,050,652 to Qureshey, Jan. 29, 2014, 8 pages.
2:14-cv-471-BHM v. *Pioneer Corporation, et al.*—Pioneer/Yamaha Courtesy Invalidity Contentions—Exhibit D-8d—Philips FW-i1000 Chart—Philips FW-i1000 (Fwi) Kerbango Device, directed to U.S. Pat. No. 8,050,652 to Qureshey, Jan. 29, 2014, 55 pages.
2:14-cv-471-BHM v. *Pioneer Corporation, et al.*—Pioneer/Yamaha Courtesy Invalidity Contentions—Exhibit D-8m—Philips FW-i1000 Manual—Philips Streamium FW-i1000 Manual, directed to U.S. Pat. No. 8,050,652 to Qureshey, Jan. 29, 2014, 11 pages.
2:14-cv-471-BHM v. *Pioneer Corporation, et al.*—Pioneer/Yamaha Courtesy Invalidity Contentions—Exhibit D-9d—Kerbango Device Chart—Kerbango Radio 100E device, directed to U.S. Pat. No. 8,050,652 to Qureshey, Jan. 29, 2014, 62 pages.
2:14-cv-471-BHM v. *Pioneer Corporation, et al.*—Pioneer/Yamaha Courtesy Invalidity Contentions—Exhibit D-9p—Kerbango Press Chart—Kerbango Prior Art Press Publications, directed to U.S. Pat. No. 8,050,652 to Qureshey, Jan. 29, 2014, 46 pages.
Kardach, "Bluetooth Architecture Overview," Intel Corporation, Technology Journal Q2, 2000, 7 pages.
Kansal, "Bluetooth Primer," Copyright 2002, Red-M, 30 pages.
"Specification of the Bluetooth System," Specification vol. 1, v1.0 B, Bluetooth, Dec. 1, 1999 (Part H1) 255pages.
"Specification of the Bluetooth System," Specification vol. 1, v1.0 B, Bluetooth, Dec. 1, 1999 (Parts A-B) 182 pages.
"Specification of the Bluetooth System," Specification vol. 1, v1.0 B, Bluetooth, Dec. 1, 1999 (Parts C-D) 150 pages.
"Specification of the Bluetooth System," Specification vol. 1, v1.0 B, Bluetooth, Dec. 1, 1999 (Parts E-F) 207 pages.
"Specification of the Bluetooth System," Specification vol. 1, v1.0 B, Bluetooth, Dec. 1, 1999 (Parts H2-H4) 57 pages.
"Specification of the Bluetooth System," Specification vol. 1, v1.0 B, Bluetooth, Dec. 1, 1999 (Parts I-Index) 290 pages.
"Bluetooth White Paper 1.1," AU-System, Jan. 2000, 26 pages.
Blackwell, G., "cd3o Wireless Network MP3 Player," date unknown, at least as early as Oct. 12, 2013, (http://www.wi-fiplanet.com/reviews/CD/article.php/3338481/cd3o-Wireless-Network-MP3-Player.htm) 2 pages.
CEDIA (Custom Electronic Design and Installation Association) Expo 2002, Mineapolis, Sep. 25-29, 2002, Panel, 4 pages.
"Cirrus Logic's Maverick Processor Chosen for Turtle Beach Audiotron Internet Audio Appliance," Cirrus Logic, Inc. Press Release, News Archive 2000, 2 pages.
"Competition Catastrophe: A Device That Will Add 800 Stations to Your Market," Radio Ink, vol. XIV, No. 21—Oct. 11, 1999, 6 pages.
Pope, S. T., et al., "Content Analysis and Queries in a Sound and Music Database," International Computer Music Conference Proceedings (1999) pp. 124-130.
K. Debique, et al., Content Directory:1 Service Template Version 1.01 for UPnP Version 1.0, Standardized DCP, Jun. 25, 2002, Copyright 1999-2002 Contributing Members of the UPnP Forum, 89 pages.
"Creative Introduces the Zen X-Fi and the Zen X-Fi With Wireless Lan—The Only Players to Improve the Quality of MP3 Music Playback With X-Fi Audio Technology," Creative Press Release, Singapore, Jul. 10, 2008, 2 Pages.
"Creative Sound Blaster Wireless Music," User's Guide, Copyright 2003, Creative Technology Ltd. (Version 1.0, Aug. 2003) 66 pages.
Hermann, R., et al., "DEAPspace—Transient ad hoc Networking of Pervasive Devices," Computer Networks 35 (2001) pp. 411-428.
"Digilink 4 Control Protocol," Arrakis Systems, Inc., Dec. 14, 2000, 51 pages.
"DigiLink 4 by Arrakis Systems, Inc. Music Library Features," Arrakis Systems, Inc., Jan. 21, 2000, 82 pages.
"Digilink Application Note—Link Groups Feature," Arrakis Systems, Inc., May 12, 2000, 1 page.
"Digilink Application Note—Recording the Latest News, Weather, Sports," Arrakis Systems, Inc., Jun. 26, 2000, 1 page.
"Digilink DC4-100 Whole House Music Library System, 3rd Party Control Systems," Arrakis Systems, Inc., Feb. 15, 2001, 5 pages.
"Digilink DC4-100 Whole House Music Library System, CD Music Management for the Home," Arrakis Systems, Inc., date unknown, 2 pages.
Howard, B., "Digital Jukeboxes," PC Magazine, Oct. 1, 2002, 3 pages.
"Don't Dream It. Stream It. Streamium Broadband Internet Micro System MCi200," Copyright 2001, Philips Consumer Electronic Company, 2 pages.

(56) **References Cited**

OTHER PUBLICATIONS

"Enigma Digital and Kerbango Enter Strategic Promotional Relationship to Offer Music Lifestyles at the Touch of a Button," Santa Monica, CA and Cupertino, CA, Mar. 16, 2000, 2 pages.
"Ericsson Review: The Telecommunications Technology Journal," No. 3. 1998, 44 pages.
"Escient and Audio Request Compatibility Memo (ZR-4630)," Niles Audio Corporation, Dec. 4, 2002, 1 page.
"P800/P802," Sony Ericsson White Paper, Jan. 2003, pp. 1-14, 24-25, 36, 70-72, 87-88, 94, and 112 (24 pages).
Bonanno, C., "From the Computer Room to the Living Room: The Future of Digital Home Audio," Home Toys Article, Aug. 2000 (Archived at http://web.archive.org/web/200302020092947/http://hometoys.com/htinews/aug00/articles/tbeach/tbeach.htm) 2 pages.
"Home Control Via Touch Panel," Elan Home Systems, Copyright 2002, 4 pages.
"2003 Canadian Product Catalog," Home Director, Trusted Technology Advisor for Builders, Version 6.4, Copyright 2003, Home Director, Inc., 30 pages.
"Home Director Announces Availability of AudioPoint Digital Audio Receiver; Play MP3 Digital Music or Streaming Internet Radio on Conventional Stereo Equipment," PR Newswire, Sep. 27, 2002, 4 pages.
"Home Director Announces Availability of AudioPoint Digital Audio Receiver; Play MP3 Digital Music or Streaming Internet Radio on Conventional Stereo Equipment," PR Newswire, Sep. 27, 2002, 2 pages.
"Home Director: Innovations in Home Networking," Home Director, Inc., Copyright 2002 (Archived at web.archive.org/web/20031129164409/http://homedirector.com/) 1 page.
Wong, W., "Home Networking Opens Its Doors for Business," CNET News, Oct. 19, 1999, 4 pages.
"HP Digital Entertainment Center Owner's Guide: DE100C," Copyright 2001, Hewlett-Packard Company, 118 pages.
"HP Digital Media Receiver User's Guide," Copyright 2002, Hewlett-Packard Company, 67 pages.
"iMerge M1000 SoundServer—Specs," iMerge Ltd, Manufactured Nov. 2000-Aug. 2003 (downloaded from the Internet Oct. 12, 2013) <URL:www.imerge.co.uk/products/m1000/m1000$_{13}$ home.php> 2 pages.
"iMerge M1000 SoundServer User Guide," Copyright 2001, iMerge Ltd., 40 pages.
"iMerge S1000 SoundServer—Specs," iMerge Ltd, Manufactured May 2001-Nov. 2002 (downloaded from the Internet Oct. 12, 2013) <URL:www.imerge.co.uk/products/s1000/s1000_home.php> 2 pages.
"iMerge S1000 SoundServer User Guide," Copyright 2001, iMerge Ltd., 60 pages.
"iMerge S2000 SoundServer—Specs," iMerge Ltd, Manufactured Nov. 2002-Aug. 2004 (downloaded from the Internet Oct. 12, 2013) <URL:www.imerge.co.uk/products/s2000/s2000_home.php> 2 pages.
"iMerge S2000 SoundServer Hard Disk Audio System User Guide," Copyright 2002, iMerge Ltd., 48 pages.
"iMerge XiVA Server Utilities Application Note," Copyright 2002, iMerge Ltd., 4 pages.
"iMerge XiVA Server Utilities User Manual," Copyright 2002, iMerge Ltd., 4 pages.
Carroll, J., "Industries Blind to What's Ahead," Globe & Mail, Mar. 12, 2001, 2 pages.
"IntelliControl Home Theater Automation System," Niles Audio Corporation, Copyright 2003, 8 pages.
"Internet Audio iM Jukebox (PC Link) Set-Up" Quick Reference Guide—Internet Audio Operations, iM Jukebox, Apr. 20, 2001, 2 pages.
"Internet Audio Mini Hi-Fi System," Philips FW-i1000 Manual, EL4965E006/MAC4110/12-98, 106 pages.
"iPAQ Music Center—Addendum A," Copyright 2002, Compaq Computer Corporation, 38 pages.
"iPronto—Dashboard for the Digital Home," Copyright 2002, Philips Consumer Electronics, 13 pages.
"Is Bluetooth Worth the Wait?" The Economist, Dec. 7, 2000, 7 pages.
Carroll, J., "Is This Guy Crazy or Just Way Ahead of His Time," Link Magazine, Jul. 2002, pp. 18-20.
"Kerbango," from Wikipedia, the free encyclopedia, en.wikipedia.org/wiki/Kerbango, Last Modified May 16, 2012, 1 page.
"Kerbango and ApplianceWare Deliver Digital Music Library," Indian Wells, California DEMO 2000, Feb. 7, 2000 (3Com Corporation Press Release) 2 pages.
"Kerbango and Arbistron Strike Strategic Alliance to Enhance Internet Radio Industry's Most In-Depth Research to Internet Broadcasters and Advertisers," Cupertino, CA and New York, NY, May 23, 2000, 4 pages.
"Kerbango and Interep Interactive Team Up on Advertising for Kerbango Internet Radio," Boston, MA Radio Ink Internet Conference, May 17, 2000, Kerbango, Inc., 2 pages.
"Kerbango Internet Radio by 3Com Clinches Awards at the 2001 International Consumer Electronics Show: World's First Stand-Alone Internet Radio Appliance Wins CEA Innovations 2001 "Best of Show" Lauren and Dealerscope Magazine's "Editors' Choice" Award," Jan. 8, 2001, 2 pages.
"Kerbango Radio AM FM Internet, Model 100E for Broadband Connections, Tuning Service," Copyright 2000, Kerbango, a division of 3Com Corporation, DS-01-091300, 2 pages.
Kerbango Tuning Service Screenshot, Kerbango, Inc., Mar. 1, 2000, 1 page.
Kerbango Tuning Service Screenshot, Kerbango, Inc., Mar. 1, 2000, (Archived at web.archive.org/web/20000301135348/http://www.kerbango.com/tuner/index.html?fcn_menu=1&tuning_id=0 &bwc=) 1 page.
"Kerbango Tuning Service User Guide," Copyright 2000, Kerbango, Inc., (Archived at web.archive.org/web/.../http://www.kerbango.com/help/index.html?play_sound=1) 3 pages.
"Lansonic Digital Audio Server DAS-750," Sep. 18, 2000, 21 pages.
"Lansonic DAS-750 Digital Audio Server Operating Instructions, Version 2.2.0," Copyright 2001, Digital Voice Systems, Inc. (Feb. 2, 2002) 104 pages.
"Lansonic DAS-950 Pro Series," [online] Feb. 2, 2002 [Downloaded from the Internet on Jan. 21, 2014] URL: <web.archive.org. . . http://www.lansonic.com/DAS-950_main.htm> 2 pages.
"Lansonic's New 3-Zone Output Digital Audio Server," CEDIA, 2002, Westford, MA, Home Toys, date unknown (CEDIA Expo 2002 held Sep. 25-29, 2002,Minneapolis, MN) 3 pages.
"Live365's Extensive Internet Radio Station Collection Coming to 3COM Kerbangosm Tuning Service," Santa Clara, CA Jan. 8, 2001, 3 pages.
"Many New ELAN Products Shipping Around CES 2003," Lexington, KY, Home Toys, date unknown (CES 2003 held Jan. 9-19, 2003, Las Vegas, NV) 2 pages.
Ritchie, J., "MediaRenderer:1 Device Template Version 1.01," for UPnP 1.0, Standardized DCP, Jun. 25, 2002, UPnP Forum, 12 pages.
"MegaTouch Combo Jukebox Owner's Manual," Copyright 2003, Merit Industries, Inc., PM0378-07, 58 pages.
"MegaTunes Owner's Manual," Copyright 2004, Merit Industries, Inc., PM0396-07, 30 pages.
"Merit Remote Sound System Installation Manual," Copyright 2003, Merit Industries, Inc., PM0397-02, 14 pages.
Maloney, P., "Microsoft's MongoMusic.com "Sounds Like" a Possible Winner," RAIN Radio and Internet Newsletter, Sep. 26, 2000, 6 pages.
"MongoMusic.com and Kerbango Team Up to Personalize Internet Radio for Consumers," Cupertino, CA and Menlo Park, CA, Mar. 13, 2000, 3 pages.
"MantaVista's Hard Hat Linux Embedded in World's First Standalone Internet Radio," Indian Wells, CA, Demo 2000, Feb. 7, 2000, 2 pages.
Spring, T., "Move MP3s to Home Stereo," Computerworld, Apr. 28, 2000, 3 pages.
Spring, T., "Move MP3s to Your Home Stereo," CNN.com, May 1, 2000, (http://europe.cnn.com/2000/TECH/computing/05/01.mnp3.stereo.idg/index.html) 3 pages.

(56) **References Cited**

OTHER PUBLICATIONS

Hacker, S., "MP3: The Definitive Guide, Sample Chapter 6, Hardware, Portables, Home Stereos, and Kits," 1st Edition Mar. 2000, 32 pages.
Schmid, P., "Multimedia in the Living Room: From DVD Player to Media Center," Mar. 12, 2004 (www.tomsguide.com/us/multimedia-in-the-living-room,review-243-9.html) 4 pages.
Schmid, P., "Multimedia in the Living Room: From DVD Player to Media Center: 7. Cd3o C300," Tom's Guide—Home Theatre—Home Theatre Review, Mar. 12, 2004, 4 pages.
Schmid, P., "Multimedia in the Living Room: From DVD Player to Media Center: 9. Cd3o C300, Continued," Tom's Guide—Home Theatre—Home Theatre Review, Mar. 12, 2004, 4 pages.
"MultiZone Audio Preamplifier Installation & Operation Guide: Four-Source, Six-Zone Preamplifier," A4.6Ci, Copyright 2002, Niles Audio Corporation, 107 pages.
"Multi-Zone With Escient Tune-Base CD Mgmt," AVS Forums, Nov. 11, 2000, Copyright 2013 AVS, 6 pages.
Brown, B., et al., "Music Sharing as a Computer Supported Collaborative Application," HP Laboratories Bristol, HPL-2001-103, May 2, 2001, 21 pages.
"Networked MP3 Player Lineup Bows From cd3o," Twice, Jan. 9, 2003 (www.twice.com/news/networked-mp3-plyaer-lineup-bows-cd3o-0) 1 page.
"New Devices Boost MP3 Use At Home," CNET News, May 24, 2000, 3 pages.
"Omnifi DMSI User Manual," Omnifi Media, Jul. 2003, 36 pages.
"News! Dec. 2001," Practically Networked, Dec. 2001, online <URL:http://www.practically.networked.com/news/news_12_01.htm> 7 pages.
Little, T.D.C., et al., "Prospects for Interactive Video-On-Demand," (MCL Technical Report, Feb. 15, 1994) IEEE Multimedia, vol. 1, No. 3, Fall 1994, pp. 14-24.
Salonidis, T., "Proximity Awareness and Ad Hoc Network Establishment in Bluetooth," Electrical and Computer Engineering Department, University of Maryland; AT&T Labs Research; IBM T.J. Watson Research Center (2001) 26 pages.
Greenberg, K., "Radio the Hard-Drive Way," ADWEEK, Jun. 12, 2000, 2 pages.
"Redband's Broadcasting's Audio Programs Now Available on the Kerbango Internet Tuning Service," San Francisco, CA, Sep. 21, 2000, 2 pages.
"Reinventing Radio," Kerbango Overview, Jul. 2000, Kerbango, Inc., 3 pages.
"Reinventing Radio: Internet Startup-Kerbango-Debuts at Upside's Launch," Kerbango Resources, Cupertino, California, Oct. 13, 1999, <http://www.tuner.espace.com/press/101399.html> 4 pages.
"Rio Advanced Digital Audio Center, User's Guide," SONICblue, Inc., Copyright 2001-2002, 116 pages.
"Rio One User Guide," Copyright 2001, SONICblue Incorporated, 23 pages.
"Rio PMP300 User's Guide," Copyright 1998, Diamond Multimedia Systems, Ltd., 27 pages.
"Rio500 Getting Started Guide," Copyright 1999, Diamond Multimedia Systems, Ltd., 2 pages.
"RioReceiver—Getting Started," Copyright 2002, SONICblue, Inc., 4 pages.
"Roku Control Protocol—Functional Specification," Jul. 13, 2006, Version 2.0, Roku, LLC, 135 pages.
"Roku SoundBridge M1000 and M2000," PCMag.com, http://www.pcmag.com/article2/0,2817,1646246,00.asp, Sep. 20, 2004.
"Roku SoundBridge M1000/M1001 Network Music System," [online] Jul. 18, 2012, <URL:http://www.amazon.com/Roku-SoundBridge-M1001-Network-System/dp/B000B|6AH8//> 6 pages.
"Roku SoundBridge Network Music Player," Copyright 2006, Roku, LLC, 2 pages.
"Roku SoundBridge Network Music Player User Guide, Software V. 2.5," Copyright 2006, Roku, LLC, 74 pages.
"SoundBridge Radio Wi-Fi Music System User Guide, Software V. 2.5," Roku, LLC, date unknown, 51 pages.
"Roku SoundBridge Wi-Fi Setup Instructions," Revision 1.2, Aug. 31, 2004, 14 pages.
"User Guide for Software Release 1.5.18, HD1000," Copyright 2004, Roku, LLC (Revised Apr. 29, 2004) 34 pages.
"SB1—SqueezeboxWiki," Copyright 2012, Logitech (http://wiki.slimdevices.com/index.php?title=SB1&oldid=10934) 1 page.
"Simplefi Wireless Digital Audio Receiver, Installation & User Guide," Copyright 2001, Motorola, Inc., 111 pages.
Gibbs, M., "Sit Back and Listen to the Tunes," Network World, Aug. 19, 2002, 5 pages.
SLIMP3—SqueezeboxWiki, Copyright 2012, Logitech (http://wiki.slimdevices.com/index.php?title=SLIMP3&oldid=10936) 1 page.
"SLIMP3 Network MP3 Player Owner's Manual," Copyright 2003, Slim Devices Inc., Revision Apr. 5, 2003, 15 pages.
Nwana, H. S., "Software Agents: An Overview," Knowledge Engineering Review, vol. 11, No. 3, pp. 205-244, Oct./Nov. 1996, 49 pages.
Townley, J., "Sonicbox Releases iM Software Tuner," InternetNews.com, Apr. 11, 2000, 2 pages.
"Sony Unveils Palm-Powered Handheld Strategy," CNET News, Jul. 13, 2000, 5 pages.
"SoundBridge User Guide: Wireless Network Music Player, Software Version 2.5," Copyright 2006, Roku, LLC, 37 pages.
"Squeezebox (Network Music Player)," from Wikipedia, the free encyclopedia, en.wikipedia.org/wiki/Squeezebox_(network_music_player), Last Modified Mar. 31, 2012, 5 pages.
Tatarinov, I., "Static Caching in Web Servers—Abstract," Proceedings of the 6th International Conference on Computer Communications and Networks, Sep. 22-25, 1997, 2 pages.
Ng, W.C.T., et al., "Streaming Multimedia Content Over Home Network With an Intelligent Controller," The 29th Annual Conference of the IEEE, Nov. 2-6, 2003, Copyright 2003 IEEE, pp. 1802-1807.
"Streamium MC-i200 Getting Started," Philips, May 31, 2002, 2 pages.
Cardoza, P., "Take a Look At the Latest Integrated PDA/Cell Phone Devices," [online] Tech Republic, Apr. 8, 2002 (downloaded on Jun. 11, 2013) Downloaded from the Internet: URL: <http://www.techrepublic.com/article/take-a-look-at-the-latest-integrated-pda-cell-phone-devices/>, 3 pages.
"The BroadcastWeb Network and Kerbango Sign Co-Marketing Agreement," Boca Raton, FL, Feb. 7, 2000, 3 pages.
Van Winkle, W., "The Easy Upgrade," CCNews, Mar. 11, 2003 (Archived at http://www.archive.org/web/20030311134950/http://www.ccnmag.com/index.php?sec+mag&id=134.0) 4 pages.
"The History of Broadcasting and Growth of Internet Audio," Kerbango, Inc., date unknown, 2 pages.
Scherf, K., "The Home Network Market: Data and Multimedia Connectivity, a Parks Associates White Paper," Copyright Sep. 2003, Parks Associates, 13 pages.
"Thomson Multimedia Expands Reach of Digital Audio With Plans to Offer Internet Radio Products," Paris, Indianapolis, IN, Jun. 27, 2000, 4 pages.
Brandt, E., et al., "Time in Distributed Real-Time Systems," Carnegie Mellon University, Research Showcase, Computer Science Department, School of Computer Science, Paper 498, Jan. 1, 1999, 5 pages.
"Join LinkedIn and See How You are Connected to TouchTunes. It's Free," TouchTunes—LinkedIn (date unknown) Downloaded on Jul. 18, 2012 (downloaded from the Internet: <URL:www.linkedin.com/company/touchtunes>) 2 pages.
"TouchTunes Software Manual," Copyright 2003, Merit Industries, Inc., PM0377-03, 22 pages.
Busby, C., "TouchTunes Tyranny: Why the Digital JukeBox Revolution is Revolting,"http://www.thebollard.bangordailynews.com/2009/10/07/touchtunes-tyranny.com) Oct. 7, 2009, 6 pages.
"TuneBase Pro MK-II a CD Library Management System, User's Guide," Document Version 05311999, May 31, 1999, Escient, 56 pages.
LaBanca, R., "Turtle Beach AudioTron," The Home Automation Forum, Copyright 1999 (Archived at http://www.archive.org/web/20021205173424/http://www.homeautomationforum.com/reviews/atron/atron.html) 2 pages.

(56) **References Cited**

OTHER PUBLICATIONS

LaBanca, R., "Turtle Beach AudioTron Continued: But wait, there's more!" The Home Automation Forum, Oct. 23, 2002 (Archived at http://www.archive.org/web/20021023235309/http://www.homeautomationforum.com/reviews/atron/atron2.html) 3 pages.
LaBanca, R., "Turtle Beach AudioTron Continued: But What About Automation?" The Home Automation Forum, Nov. 4, 2002 (Archived at http://www.archive.org/web/20021104171610/http://www.homeautomationforum.com/reviews/atron/atron3.html) 2 pages.
Bell, I., "Turtle Beach AudioTron Review," Apr. 17, 2002 (Archived at http://web.archive.org/web/20030103061851/http://www.designtechnica.com/reviews.php?op=showcontent&id=23&page=3) 2 pages.
Bell, I., "Turtle Beach AudioTron Review," by Corsair, Apr. 17, 2002 (Archived at http://web.archive.org/web/20030212134345/http://www.designtechnica.com/reviews.php?op=showcontent&id=23) 2 pages.
"Turtle Beach AudioTron Review," WhiningDog.net, Jul. 31, 2002 (Archived at http://web.archive.org/web/20030202100233/http://www.whiningdog.net/Reviews/Gadgets/Audio/MP3/20020801-AudioTron/page1.htm) 2 pages.
"Turtle Beach AudioTron Review: Navigation and Playback," WhiningDog.net, Jul. 31, 2002 (Archived at http://web.archive.org/web/20030302225111/http://www.whiningdog.net/Reviews/Gadgets/Audio/MP3/20020801-AudioTron/page4.htm) 3 pages.
"Turtle Beach AudioTron Review: Other Stuff," WhiningDog.net, Jul. 31, 2002 (Archived at http://web.archive.org/web/20030310213307/http://www.whiningdog.net/Reviews/Gadgets/Audio/MP3/20020801-AudioTron/page5.htm) 3 pages.
"Turtle Beach AudioTron Review: Package Contents," WhiningDog.net, Jul. 31, 2002 (Archived at http://web.archive.org/web/20030212215140/http://www.whiningdog.net/Reviews/Gadgets/Audio/MP3/20020801-AudioTron/page2.htm) 4 pages.
"Turtle Beach AudioTron Review: Web Server Interface," WhiningDog.net, Jul. 31, 2002 (Archived at http://web.archive.org/web/20030107223623/http://www.whiningdog.net/Reviews/Gadgets/Audio/MP3/20020801-AudioTron/page3.htm) 3 pages.
Bell, I., "Turtle Beach AudioTron Review," by XMS, Apr. 17, 2002 (Archived at http://web.archive.org/web/20030220223536/http://www.designtechnica.com/reviews.php?op=showcontent&id=23&page=2) 2 pages.
Gowan, M., "Use Your PC to Serve Up Music: Turn Your PC Into a Music Server with Turtle Beach's Great-Sounding, Networked Digital-Music Player," PC World, Feb. 2, 2001, 2 pages.
"Via DJ Digital Music Server," Copyright 2003, Elan Home Systems, 2 pages.
"Via DJ Digital Music Server Installation Manual," Copyright 2003, Elan Home Systems, 16 pages.
"Via DJ Digital Music Server Users Guide," Copyright 2003, Elan Home Systems, 33 pages.
"Welcome to Kerbango! Entertainment," Kerbango, Inc., Apr. 8, 2000 (Archived at <URL:http://www.kerbango.com/tuner/index.html?fcn_menu=1&tuning_id=10&bwc=) 1 page.
"Welcome to Kerbango! Music," Kerbango, Inc., May 11, 2000 (Archived at <URL:http://www.kerbango.com/tuner/index.html?fcn_menu=1&tuning_id=1&bwc=) 1 page.
"Welcome to Kerbango! News," Kerbango, Inc., May 11, 2000 (Archived at <URL:http://www.kerbango.com/tuner/index.html?fcn_menu=1&tuning_id=7&bwc=) 1 page.
"Welcome to the Merit Technical Center," Merit Industries, Inc., Revised Aug. 24, 2004, 1 page.
Manes, S., "Wired Jukeboxes," Forbes, Dec. 10, 2001, 4 pages.
Frodigh, M., et al., "Wireless Ad Hoc Networking—The Art of Networking Without a Network," Ericsson Review No. 4, 2000, 16 pages.
"Wireless LAN Networking—Whitepaper," U.S. Robotics, IEEE Computer Society (2009) 12 pages.
"World's First Standalone Internet Radio Unveiled by Kerbango," PR Newswire, Indian Wells, California, DEMO 2000, Feb. 7, 2000, 4 pages.
"World-Wide Internet Radio: Internet Audio Mini Hi-Fi System," FW-I 1000, Jun. 2001, Royal Philips Electronics N.V., 2 pages.
"www.com and Kerbango, Inc. Joint Forces to Take Internet Radio Beyond the Computer," Los Angeles, May 22, 2000, 3 pages.
"Xantech IR-DC4 (IR/RS232 Interface Module) Installation Instructions," Xantech, Nov. 16, 1998, 4 pages.
"Zoned Audio/Video Z Series," Elan Home Systems, Copyright 2003, 8 pages.
Decision—Institution of Inter Partes Review entered Mar. 20, 2014 for IPR2013-00593, 29 pages.
Decision—Institution of Inter Partes Review entered Mar. 20, 2014 for IPR2013-00594, 34 pages.
Patent Owner's Preliminary Response to Inter Partes Review of U.S. Pat. No. 8,045,952 (Inter Partes Review No. IPR2013-00593) Filed Dec. 26, 2013, 50 pages.
Patent Owner's Preliminary Response to Inter Partes Review of U.S. Pat. No. 8,050,652 (Inter Partes Review No. IPR2013-00594) Filed Dec. 26, 2013, 57 pages.
ITC Investigation No. 337-TA-882 Respondents and Intervenors Joint Notice of Prior Art—Appendix A1—UPnP AV 1.0 Chart directed to U.S. Pat. No. 8,028,323, 181 pages.
ITC Investigation No. 337-TA-882 Respondents and Intervenors Joint Notice of Prior Art—Appendix A2—UPnP AV 1.0 Chart directed to U.S. Pat. No. 8,214,873, 269 pages.
ITC Investigation No. 337-TA-882 Respondents and Intervenors Joint Notice of Prior Art—Appendix A3—UPnP AV 1.0 Chart directed to U.S. Pat. No. 8,230,099, 54 pages.
ITC Investigation No. 337-TA-882 Respondents and Intervenors Joint Notice of Prior Art—Appendix B1—UPnP Version 1.0 Chart directed to U.S. Pat. No. 8,028,323, 222 pages.
ITC Investigation No. 337-TA-882 Respondents and Intervenors Joint Notice of Prior Art—Appendix B2—UPnP Version 1.0 Chart directed to U.S. Pat. No. 8,214,873, 324 pages.
ITC Investigation No. 337-TA-882 Respondents and Intervenors Joint Notice of Prior Art—Appendix B3—UPnP Version 1.0 Chart directed to U.S. Pat. No. 8,230,099, 67 pages.
ITC Investigation No. 337-TA-882 Respondents and Intervenors Joint Notice of Prior Art—Appendix C1—Encarnacion Chart directed to U.S. Pat. No. 8,028,323, 189 pages.
ITC Investigation No. 337-TA-882 Respondents and Intervenors Joint Notice of Prior Art—Appendix C2—Encarnacion Chart directed to U.S. Pat. No. 8,214,873, 266 pages.
ITC Investigation No. 337-TA-882 Respondents and Intervenors Joint Notice of Prior Art—Appendix C3—Encarnacion Chart directed to U.S. Pat. No. 8,230,099, 79 pages.
ITC Investigation No. 337-TA-882 Respondents and Intervenors Joint Notice of Prior Art—Appendix D1—Weast Chart directed to U.S. Pat. No. 8,028,323, 152 pages.
ITC Investigation No. 337-TA-882 Respondents and Intervenors Joint Notice of Prior Art—Appendix D2—Weast Chart directed to U.S. Pat. No. 8,214,873, 225 pages.
ITC Investigation No. 337-TA-882 Respondents and Intervenors Joint Notice of Prior Art—Appendix D3—Weast Chart directed to U.S. Pat. No. 8,230,099, 60 pages.
ITC Investigation No. 337-TA-882 Respondents and Intervenors Joint Notice of Prior Art—Appendix E1—Khedouri Chart directed to U.S. Pat. No. 8,028,323, 212 pages.
ITC Investigation No. 337-TA-882 Respondents and Intervenors Joint Notice of Prior Art—Appendix E2—Khedouri Chart directed to U.S. Pat. No. 8,214,873, 352 pages.
ITC Investigation No. 337-TA-882 Respondents and Intervenors Joint Notice of Prior Art—Appendix E3—Khedouri Chart directed to U.S. Pat. No. 8,230,099, 85 pages.
ITC Investigation No. 337-TA-882 Respondents and Intervenors Joint Notice of Prior Art—Appendix F1—Chen 062 Chart directed to U.S. Pat. No. 8,028,323, 170 pages.
ITC Investigation No. 337-TA-882 Respondents and Intervenors Joint Notice of Prior Art—Appendix F2—Chen 062 Chart directed to U.S. Pat. No. 8,214,873, 244 pages.

(56) **References Cited**

OTHER PUBLICATIONS

ITC Investigation No. 337-TA-882 Respondents and Intervenors Joint Notice of Prior Art—Appendix F3—Chen 062 Chart directed to U.S. Pat. No. 8,230,099, 63 pages.
ITC Investigation No. 337-TA-882 Respondents and Intervenors Joint Notice of Prior Art—Appendix G1—IEEE 2003 Article Chart directed to U.S. Pat. No. 8,028,323, 110 pages.
ITC Investigation No. 337-TA-882 Respondents and Intervenors Joint Notice of Prior Art—Appendix G2—IEEE 2003 Article Chart directed to U.S. Pat. No. 8,214,873, 169 pages.
ITC Investigation No. 337-TA-882 Respondents and Intervenors Joint Notice of Prior Art—Appendix G3—IEEE 2003 Article Chart directed to U.S. Pat. No. 8,230,099, 39 pages.
ITC Investigation No. 337-TA-882 Respondents and Intervenors Joint Notice of Prior Art—Appendix H1—Janik 616 Chart directed to U.S. Pat. No. 8,028,323, 88 pages.
ITC Investigation No. 337-TA-882 Respondents and Intervenors Joint Notice of Prior Art—Appendix H2—Janik 616 Chart directed to U.S. Pat. No. 8,214,873, 132 pages.
ITC Investigation No. 337-TA-882 Respondents and Intervenors Joint Notice of Prior Art—Appendix H3—Janik 616 Chart directed to U.S. Pat. No. 8,230,099, 60 pages.
ITC Investigation No. 337-TA-882 Respondents and Intervenors Joint Notice of Prior Art—Appendix I1—Palm Chart directed to U.S. Pat. No. 8,028,323, 214 pages.
ITC Investigation No. 337-TA-882 Respondents and Intervenors Joint Notice of Prior Art—Appendix I2—Palm Chart directed to U.S. Pat. No. 8,214,873, 321 pages.
ITC Investigation No. 337-TA-882 Respondents and Intervenors Joint Notice of Prior Art—Appendix I3—Palm Chart directed to U.S. Pat. No. 8,230,099, 73 pages.
ITC Investigation No. 337-TA-882 Respondents and Intervenors Joint Notice of Prior Art—Appendix J1—Caspi Chart directed to U.S. Pat. No. 8,028,323, 172 pages.
ITC Investigation No. 337-TA-882 Respondents and Intervenors Joint Notice of Prior Art—Appendix J2—Caspi Chart directed to U.S. Pat. No. 8,214,873, 259 pages.
ITC Investigation No. 337-TA-882 Respondents and Intervenors Joint Notice of Prior Art—Appendix J3—Caspi Chart directed to U.S. Pat. No. 8,230,099, 60 pages.
ITC Investigation No. 337-TA-882 Respondents and Intervenors Joint Notice of Prior Art—Appendix K—Saint-Hilaire Chart directed to U.S. Pat. No. 8,230,099, 40 pages.
ITC Investigation No. 337-TA-882 Respondents and Intervenors Joint Notice of Prior Art—Appendix L—Bi Chart directed to U.S. Pat. No. 8,230,099, 53 pages.
ITC Investigation No. 337-TA-882 Respondents and Intervenors Joint Notice of Prior Art—Appendix M—Falvo Chart directed to U.S. Pat. No. 8,230,099, 38 pages.
ITC Investigation No. 337-TA-882 Respondents and Intervenors Joint Notice of Prior Art—Appendix N—Sound Blaster Chart directed to U.S. Pat. No. 8,230,099, 103 pages.
ITC Investigation No. 337-TA-882 Respondents and Intervenors Joint Notice of Prior Art—Appendix O—Champion Chart directed to U.S. Pat. No. 8,230,099, 43 pages.
ITC Investigation No. 337-TA-882 Respondents and Intervenors Joint Notice of Prior Art—Appendix P—Allen Chart directed to U.S. Pat. No. 8,230,099, 56 pages.
"A complete implementation of the Universal Plug and Play Standard for networked devices," SimpleDevices, May 2, 2004, http://web.archive.org/web/20040502165533/http://simpledevices.com/up np enabler.shtml.
"A new way to bring enhanced content and services to your connected media devices," SimpleDevices, Apr. 13, 2004, http://web.archive.org/web/20040413143604/http://simpledevices.com/mu sic explorer.shtml.
Alexander Sinitsyn, "A Synchronization Framework for Personal Mobile Servers," Philips Research, Proceedings of the Second IEEE Annual Conference on Pervasive Computing and Communications Workshops (PERCOMW'04), 2004 IEEE.
"About SimpleDevices, Inc.," SimpleDevices, Inc., May 1, 2004, http://web.archive.org/web/20040501022142/http://www.simpledevices.co m/aboutus.shtml.
Schneider, "Adhoc Personal Ubiquitous Multimedia Services Via UPNP," Siemens Corporate Research, 2001 IEEE International Conference on Multimedia and Expo ISBN 0-7695-1198-8/01.
"Alcatel and Korean WiderThan.com extend cooperation agreement with global reseller alliance," Pressi.com, Feb. 17, 2003.
"ALi and Oregan Offer Industry Leading 802.11a/b/g Networked DVD Player and Digital Media Adapter Solutions," Business Wire, Jan. 5, 2004.
Hiles, "All MHS Use Cases," Digital Home Working Group, v0.5, Feb. 27, 2004, pp. 1-259.
"Allegro Media Server Lets Users Stream iTunes," Online Reporter, Jan. 24, 2004.
Declaration of Kevin Almeroth, Ph.D., with regard to U.S. Pat. No. 8,028,323, Apr. 20, 2014 (Inter Partes Review No. IPR2014-00709), 32 pages.
Declaration of Kevin Almeroth, Ph.D., with regard to U.S. Pat. No. 8,214,873, May 1, 2014 (Inter Partes Review No. IPR2014-00723), 32 pages.
Declaration of Kevin Almeroth, Ph.D., with regard to U.S. Pat. No. 8,230,099, Apr. 30, 2014 (Inter Partes Review No. IPR2014-00711), 33 pages.
Amended Petition for Inter Partes Review of U.S. Pat. No. 8,045,952 (Inter Partes Review No. IPR2015-00340) Filed Jan. 7, 2015, 64 pages.
"Apogee claims to be first with content-based billing.(Apogee Networks)(Brief Article)(Product Announcement)," New Media Age, HighBeam Research, Mar. 8, 2001.
"Apogee unveils platform for accurate billing of WAP-based Internet service.(Company Business and Marketing)(Brief Article)," Telecomworldwire, HighBeam Research, Mar. 1, 2001.
"Apple—iPod classic," at <http://www.apple.com/ipodclassic/>, printed Oct. 26, 2007, 1 page.
"Arcadyan Ships First Digital Media Receiver for European Market," Business Wire, Dec. 17, 2003.
Caesar, Matthew, "Architecture of iMode," Apr. 3, 2002.
"ATSC Recommended Practice: Program and System Information Protocol Implementation Guidelines for Broadcasters" Jun. 25, 2002, Advanced Television Systems Committee, 8 pages.
"Audio: 1 Sample Service Template for UPnP Version 1.0," Contributing Members of the UPnP Forum, 2001.
"AvantGo arrives in UK.(Industry Trend or Event), (Brief Article)," New Media Age, HighBeam Research, Nov. 30, 2000.
Bopardikar, R., et al., "AVTransport:1 Service Annex A—Control Point Requirements," For UPnP Version 1.0, Standardized DCP Annex, Service Template Version: 2.00, Oct. 6, 2010, UPnP Forum, 4 pages.
"AVTransport:1 Service, Annex A—Control Point Requirements," for UPnP Version 1.0, Standardized DCP Annex, Oct. 6, 2010, Service Template Version: 2:00, 4 pages.
"AVTransport:2 Service Template Version 1.01," for UPnP Version 1.0, Standardized DCP, Sep. 30, 2008, Document Version 1.0, 96 pages.
"AVTransport:2 Service, Annex A—Control Point Requirements," for UPnP Version 1.0, Standardized DCP Annex, Oct. 6, 2010, Service Template Version: 2.00, 5 pages.
"AVTransport:3 Service," for UPnP Version 1.0, Standardized DCP (SDCP), Dec. 31, 2010, Service Template Version 1.01, 131 pages.
"AVTransport1.SyntaxTests.xml," date unknown, 3 pages.
"AVTransportl.xml," date unknown, 7 pages.
"AVTransport2.SyntaxTests.xml," date unknown, 4 pages.
"AVTransport2.xml," date unknown, 12 pages.
"Babulous :: Keep it loud," at <http://www.babulous.com/home.jhtml>, copyright 2009, Babulous, Inc., printed Mar. 26, 2009, 2 pages.
"Basic:1.0 Device Definition Version 1.0 for UPnP Version 1.0," Contributing Members of the UPnP Forum, 2002.
BHM v Sonos "First Amended Complaint for Patent Infringement," filed Sep. 11, 2012, in Civil Action No. 1:12-cv-00637(RGA), 22 pages.

(56) **References Cited**

OTHER PUBLICATIONS

BHM v Sonos "Complaint for Patent Infringement," filed Jan. 21, 2014, in Civil Action No. 2:14-cv-00486, 31 pages.
Dismissal Order in *Black Hills Media, LLC* v. *Yamaha Corp. of America*, Case No. 2:13-cv-06054 (C.D. Cal.) Dated Jan. 14, 2014, 7 pages.
Order Staying *Black Hills Media, LLC* v. *Yahama Corp. of America*, Case No. 8:14-cv-00101 (C.D. Cal.) dated May 8, 2014, 9 pages.
2:14-cv-471-BHM v. Pioneer Corporation, et al.—Pioneer/Yamaha Courtesy Invalidity Contentions—Exhibit E-1 —Janik Chart—U.S. Patent Publication No. 2002/0068558 to Janik, in view of U.S Patent Publication No. 2002/0065902 to Janik, directed to U.S. Pat. No. 8,214,873 to Weel, Jan. 29, 2014, 5 pages.
2:14-cv-471-BHM v. Pioneer Corporation, et al.—Pioneer/Yamaha Courtesy Invalidity Contentions—Exhibit E-10d—cd3o Device Chart—cd3o System, directed to U.S. Pat. No. 8,214,873 to Weel, Jan. 29, 2014, 22 pages.
2:14-cv-471-BHM v. Pioneer Corporation, et al.—Pioneer/Yamaha Courtesy Invalidity Contentions—Exhibit E-10m—cd3o Manual Chart—cd3o Network MP3 Player Product Manual, directed to U.S. Pat. No. 8,214,873 to Weel, Jan. 29, 2014, 8 pages.
2:14-cv-471-BHM v. Pioneer Corporation, et al.—Pioneer/Yamaha Courtesy Invalidity Contentions—Exhibit E-11d—Lansonic DAS—750 Device Chart—Lansonic DAS-750 System, directed to U.S. Pat. No. 8,214,873 to Weel Jan. 29, 2014, 26 pages.
2:14-cv-471-BHM v. Pioneer Corporation, et al.—Pioneer/Yamaha Courtesy Invalidity Contentions—Exhibit E-11m—Lansonic DAS-750 Manual Chart—Lansonic Digital Audio Server Operating Instructions Version 2.2.0 DAS-750-PRO, directed to U.S. Pat. No. 8,214,873 to Weel Jan. 29, 2014, 7 pages.
2:14-cv-471-BHM v. Pioneer Corporation, et al.—Pioneer/Yamaha Courtesy Invalidity Contentions—Exhibit E-12d—Lansonic DAS-950 Device Chart—Lansonic DAS-950 System, directed to U.S. Pat. No. 8,214,873 to Weel Jan. 29, 2014, 24 pages.
2:14-cv-471-BHM v. Pioneer Corporation, et al.—Pioneer/Yamaha Courtesy Invalidity Contentions—Exhibit E-12p—Lansonic DAS-950 Archived Web Chart—Lansonic DAS-950 Pro Series Archived Web Page dated Feb. 2, 2002, directed to U.S. Pat. No. 8,214,873 to Weel Jan. 29, 2014, 17 pages.
2:14-cv-471-BHM v. Pioneer Corporation, et al.—Pioneer/Yamaha Courtesy Invalidity Contentions—Exhibit E-13—Juszkiewicz Chart—U.S. Pat. No. 7,249,147 to Juszkiewicz, directed to U.S. Pat. No. 8,214,873 to Weel, Jan. 29, 2014, 8 pages.
2:14-cv-471-BHM v. Pioneer Corporation, et al.—Pioneer/Yamaha Courtesy Invalidity Contentions—Exhibit E -14—IEEE 2003 Article Chart—Non-Patent Literature Document entitled, "Streaming Multimedia Content Over Home Network With An Intelligent Controller," (IEEE 2003 Article) directed to U.S. Pat. No. 8,214,873 to Weel, Jan. 29, 2014, 24 pages.
2:14-cv-471-BHM v. Pioneer Corporation, et al.—Pioneer/Yamaha Courtesy Invalidity Contentions—Exhibit E-2—Bi + Erekson Chart—U.S. Patent Publication No. 2002/0087996 to Bi, et al. in view of U.S. Pat. No. 6,622,018 to Erekson, directed to U.S. Pat. No. 8,214,873 to Weel, Jan. 29, 2014, 4 pages.
2:14-cv-471-BHM v. Pioneer Corporation, et al.—Pioneer/Yamaha Courtesy Invalidity Contentions—Exhibit E-3—Berman + Van Ryzin Chart—U.S. Pat. No. 6,502,194 to Berman, et al. in view of U.S. Pat. No. 6,127,941 to Van Ryzin, directed to U.S. Pat. No. 8,214,873 to Weel, Jan. 29, 2014, 4 pages.
2:14-cv-471-BHM v. Pioneer Corporation, et al.—Pioneer/Yamaha Courtesy Invalidity Contentions—Exhibit E-4—UPnP AV 1.0 Chart—Non-Patent Literature Document entitled, "UPnP AV Architecture:1," directed to U.S. Pat. No. 8,214,873 to Weel, Jan. 29, 2014, 28 pages.
2:14-cv-471-BHM v. Pioneer Corporation, et al.—Pioneer/Yamaha Courtesy Invalidity Contentions—Exhibit E-5—Encarnacion Chart—U.S. Pat. No. 7,668,939 to Encarnacion, directed to U.S. Pat. No. 8,214,873 to Weel, Jan. 29, 2014, 30 pages.
2:14-cv-471-BHM v. Pioneer Corporation, et al.—Pioneer/Yamaha Courtesy Invalidity Contentions—Exhibit E-6—Weast Chart—U.S. Pat. No. 7,454,511 to Weast, directed to U.S. Pat. No. 8,214,873 to Weel, Jan. 29, 2014, 20 pages.
2:14-cv-471-BHM v. Pioneer Corporation, et al.—Pioneer/Yamaha Courtesy Invalidity Contentions—Exhibit E-7—Chen Chart—U.S. Patent Publication No. 2002/0170062 to Chen, directed to U.S. Pat. No. 8,214,873 to Weel, Jan. 29, 2014, 29 pages.
2:14-cv-471-BHM v. Pioneer Corporation, et al.—Pioneer/Yamaha Courtesy Invalidity Contentions—Exhibit E-8—Khedouri Chart—U.S. Pat. No. 8,160,495 to Khedouri, directed to U.S. Pat. No. 8,214,873 to Weel, Jan. 29, 2014, 30 pages.
2:14-cv-471-BHM v. Pioneer Corporation, et al.—Pioneer/Yamaha Courtesy Invalidity Contentions—Exhibit E-9d—TurtleBeach AudioTron Device Chart—TurtleBeach AudioTron System, directed to U.S. Pat. No. 8,214,873 to Weel, Jan. 29, 2014, 41 pages.
2:14-cv-471-BHM v. Pioneer Corporation, et al.—Pioneer/Yamaha Courtesy Invalidity Contentions—Exhibit E-9m—TurtleBeach AudioTron Manual Chart—TurtleBeach AudioTron Reference Manual, directed to U.S. Pat. No. 8,214,873 to Weel, Jan. 29, 2014, 17 pages.
2:14-cv-471-BHM v. Pioneer Corporation, et al.—Pioneer/Yamaha Courtesy Invalidity Contentions—Exhibit F-1—Bi Chart—U.S. Patent Publication No. 2002/0087996 to Bi, et al., directed to U.S. Pat. No. 8,230,099 to Weel, Jan. 29, 2014, 5 pages.
2:14-cv-471-BHM v. Pioneer Corporation, et al.—Pioneer/Yamaha Courtesy Invalidity Contentions—Exhibit F-10d—TurtleBeach AudioTron Device Chart—TurtleBeach AudioTron System, directed to U.S. Pat. No. 8,230,099 to Weel, Jan. 29, 2014, 28 pages.
2:14-cv-471-BHM v. Pioneer Corporation, et al.—Pioneer/Yamaha Courtesy Invalidity Contentions—Exhibit F-10m—TurtleBeach AudioTron Manual Chart—TurtleBeach AudioTron Reference Manual, directed to U.S. Pat. No. 8,230,099 to Weel, Jan. 29, 2014, 10 pages.
2:14-cv-471-BHM v. Pioneer Corporation, et al.—Pioneer/Yamaha Courtesy Invalidity Contentions—Exhibit F-11d—cd3o Device Chart—cd3o System, directed to U.S. Pat. No. 8,230,099 to Weel, Jan. 29, 2014, 17 pages.
2:14-cv-471-BHM v. Pioneer Corporation, et al.—Pioneer/Yamaha Courtesy Invalidity Contentions—Exhibit F-11m—cd3o Manual Chart—cd3o Network MP3 Player Product Manual, directed to U.S. Pat. No. 8,230,099 to Weel, Jan. 29, 2014, 7 pages.
2:14-cv-471-BHM v. Pioneer Corporation, et al.—Pioneer/Yamaha Courtesy Invalidity Contentions—Exhibit F-12d—Lansonic DAS-750 Device Chart—Lansonic DAS-750 System, directed to U.S. Pat. No. 8,230,099 to Weel Jan. 29, 2014, 17 pages.
2:14-cv-471-BHM v. Pioneer Corporation, et al.—Pioneer/Yamaha Courtesy Invalidity Contentions—Exhibit F-12m—Lansonic DAS-750 Manual Chart—Lansonic Digital Audio Server Operating Instructions Version 2.2.0 DAS-750-PRO, directed to U.S. Pat. No. 8,230,099 to Weel Jan. 29, 2014, 6 pages.
2:14-cv-471-BHM v. Pioneer Corporation, et al.—Pioneer/Yamaha Courtesy Invalidity Contentions—Exhibit F-13d—Lansonic DAS-950 Device Chart—Lansonic DAS-950 System, directed to U.S. Pat. No. 8,230,099 to Weel Jan. 29, 2014, 16 pages.
2:14-cv-471-BHM v. Pioneer Corporation, et al.—Pioneer/Yamaha Courtesy Invalidity Contentions—Exhibit F-13p—Lansonic DAS-950 Archived Web Chart—Lansonic DAS-950 Pro Series Archived Web Page dated Feb. 2, 2002, directed to U.S. Pat. No. 8,230,099 to Weel Jan. 29, 2014, 16 pages.
2:14-cv-471-BHM v. Pioneer Corporation, et al.—Pioneer/Yamaha Courtesy Invalidity Contentions—Exhibit F-14—Juszkiewicz Chart—U.S. Pat. No. 7,249,147 to Juszkiewicz, directed to U.S. Pat. No. 8,230,099 to Weel, Jan. 29, 2014, 9 pages.
2:14-cv-471-BHM v. Pioneer Corporation, et al.—Pioneer/Yamaha Courtesy Invalidity Contentions—Exhibit F-15—IEEE 2003 Chart—Non-Patent Literature Document entitled, "Streaming Multimedia Content Over Home Network With An Intelligent Controller," (IEEE 2003 Article) directed to U.S. Pat. No. 8,230,099 to Weel, Jan. 29, 2014, 14 pages.
2:14-cv-471-BHM v. Pioneer Corporation, et al.—Pioneer/Yamaha Courtesy Invalidity Contentions—Exhibit F-2—Gladwin Chart—

(56) **References Cited**

OTHER PUBLICATIONS

WIPO Publication No. WO 01/17142 to Gladwin, et al., directed to U.S. Pat. No. 8,230,099 to Weel, Jan. 29, 2014, 5 pages.
2:14-cv-471-BHM v. Pioneer Corporation, et al.—Pioneer/Yamaha Courtesy Invalidity Contentions—Exhibit F-3—Berman Chart—U. S. Pat. No. 6,502,194 to Berman, et al., directed to U.S. Pat. No. 8,230,099 to Weel, Jan. 29, 2014, 6 pages.
2:14-cv-471-BHM v. Pioneer Corporation, et al.—Pioneer/Yamaha Courtesy Invalidity Contentions—Exhibit F-4—Janik + Janik Chart—U.S. Patent Publication No. 2002/0068558 to Janik, in view of U.S. Patent Publication No. 2002/0065902 to Janik, et al., directed to U.S. Pat. No. 8,230,099 to Weel, Jan. 29, 2014, 6 pages.
2:14-cv-471-BHM v. Pioneer Corporation, et al.—Pioneer/Yamaha Courtesy Invalidity Contentions—Exhibit F-5—UPnP AV 1.0 Chart—Non-Patent Literature Document entitled, "UPnP AV Architecture:1," directed to U.S. Patent No. 8,230,099 to Weel, Jan. 29, 2014, 24 pages.
2:14-cv-471-BHM v. Pioneer Corporation, et al.—Pioneer/Yamaha Courtesy Invalidity Contentions—Exhibit F-6—Allen Chart—U.S. Pat. No. 7,428,023 to Allen, directed to U.S. Pat. No. 8,230,099 to Weel, Jan. 29, 2014, 25 pages.
2:14-cv-471-BHM v. Pioneer Corporation, et al.—Pioneer/Yamaha Courtesy Invalidity Contentions—Exhibit F-7—Champion Chart—U.S. Pat. No. 8,230,099 to Champion, directed to U.S. Pat. No. 8,230,099 to Weel, Jan. 29, 2014, 10 pages.
2:14-cv-471-BHM v. Pioneer Corporation, et al.—Pioneer/Yamaha Courtesy Invalidity Contentions—Exhibit F-8—Janik Chart—U.S. Pat. No. 7,130,616 to Janik, directed to U.S. Pat. No. 8,230,099 to Weel, Jan. 29, 2014, 16 pages.
2:14-cv-471-BHM v. Pioneer Corporation, et al.—Pioneer/Yamaha Courtesy Invalidity Contentions—Exhibit F-9—Sound Blaster Chart—Non-Patent Literature Document entitled, "Creative Sound Blaster Wireless Music User's Guide Version 1.0" directed to U.S. Pat. No. 8,230,099 to Weel, Jan. 29, 2014, 36 pages.
2:14-cv-471-BHM v. Pioneer Corporation, et al.—Pioneer/Yamaha Courtesy Invalidity Contentions—Exhibit G-1—Bi Chart—U.S. Patent Publication No. 2002/0087996 to Bi, et al., directed to U.S. Pat. No. 8,458,356 to Weel, Jan. 29, 2014, 4 pages.
2:14-cv-471-BHM v. Pioneer Corporation, et al.—Pioneer/Yamaha Courtesy Invalidity Contentions—Exhibit G-10—TurtleBeach AudioTron Device Chart—TurtleBeach AudioTron System, directed to U.S. Pat. No. 8,458,356 to Weel, Jan. 29, 2014, 15 pages.
2:14-cv-471-BHM v. Pioneer Corporation, et al.—Pioneer/Yamaha Courtesy Invalidity Contentions—Exhibit G-10m—TurtleBeach AudioTron Manual Chart—TurtleBeach AudioTron Reference Manual, directed to U.S. Pat. No. 8,458,356 to Weel, Jan. 29, 2014, 5 pages.
2:14-cv-471-BHM v. Pioneer Corporation, et al.—Pioneer/Yamaha Courtesy Invalidity Contentions—Exhibit G-11d—cd3o Device Chart—cd3o System, directed to U.S. Pat. No. 8,458,356 to Weel, Jan. 29, 2014, 9 pages.
2:14-cv-471-BHM v. Pioneer Corporation, et al.—Pioneer/Yamaha Courtesy Invalidity Contentions—Exhibit G-11m—cd3o Manual Chart—cd3o Network MP3 Player Product Manual, directed to U.S. Pat. No. 8,458,356 to Weel, Jan. 29, 2014, 5 pages.
2:14-cv-471-BHM v. Pioneer Corporation, et al.—Pioneer/Yamaha Courtesy Invalidity Contentions—Exhibit G-12d—Lansonic DAS-750 Device Chart—Lansonic DAS-750 System, directed to U.S. Pat. No. 8,458,356 to Weel Jan. 29, 2014, 10 pages.
2:14-cv-471-BHM v. Pioneer Corporation, et al.—Pioneer/Yamaha Courtesy Invalidity Contentions—Exhibit G-12m—Lansonic DAS-750 Manual Chart—Lansonic Digital Audio Server Operating Instructions Version 2.2.0 DAS-750-PRO, directed to U.S. Pat. No. 8,458,356 to Weel Jan. 29, 2014, 4 pages.
2:14-cv-471-BHM v. Pioneer Corporation, et al.—Pioneer/Yamaha Courtesy Invalidity Contentions—Exhibit G-13d—Lansonic DAS-950 Device Chart—Lansonic DAS-950 System, directed to U.S. Pat. No. 8,458,356 to Weel Jan. 29, 2014, 10 pages.
2:14-cv-471-BHM v. Pioneer Corporation, et al.—Pioneer/Yamaha Courtesy Invalidity Contentions—Exhibit G-13M—Lansonic DAS-950 Archived Web Chart—Lansonic DAS-950 Pro Series Archived Web Page dated Feb. 2, 2002, directed to U.S. Pat. No. 8,458,356 to Weel Jan. 29, 2014, 10 pages.
2:14-cv-471-BHM v. Pioneer Corporation, et al.—Pioneer/Yamaha Courtesy Invalidity Contentions—Exhibit G-14—Juszkiewicz Chart—U.S. Pat. No. 7,249,147 to Juszkiewicz, directed to U.S. Pat. No. 8,458,356 to Weel, Jan. 29, 2014, 10 pages.
2:14-cv-471-BHM v. Pioneer Corporation, et al.—Pioneer/Yamaha Courtesy Invalidity Contentions—Exhibit G-15—IEEE 2003 Chart—Non-Patent Literature Document entitled, "Streaming Multimedia Content Over Home Network With An Intelligent Controller," (IEEE 2003 Article) directed to U.S. Pat. No. 8,458,356 to Weel, Jan. 29, 2014, 12 pages.
2:14-cv-471-BHM v. Pioneer Corporation, et al.—Pioneer/Yamaha Courtesy Invalidity Contentions—Exhibit G-2—Gladwin Chart—WIPO Publication No. WO 01/17142 to Gladwin, et al., directed to U.S. Pat. No. 8,458,356 to Weel, Jan. 29, 2014, 3 pages.
2:14-cv-471-BHM v. Pioneer Corporation, et al.—Pioneer/Yamaha Courtesy Invalidity Contentions—Exhibit G-3—Berman Chart—U. S. Pat. No. 6,502,194 to Berman, et al., directed to U.S. Pat. No. 8,458,356 to Weel, Jan. 29, 2014, 3 pages.
2:14-cv-471-BHM v. Pioneer Corporation, et al.—Pioneer/Yamaha Courtesy Invalidity Contentions—Exhibit G-4—Janik + Janik Chart—U.S. Patent Publication No. 2002/0068558 to Janik, in view of U.S. Patent Publication No. 2002/0065902 to Janik, et al., directed to U.S. Pat. No. 8,458,356 to Weel, Jan. 29, 2014, 6 pages.
2:14-cv-471-BHM v. Pioneer Corporation, et al.—Pioneer/Yamaha Courtesy Invalidity Contentions—Exhibit G-5—UPnP AV 1.0 Chart—Non-Patent Literature Document entitled, "UPnP AV Architecture:1," directed to U.S. Pat. No. 8,458,356 to Weel, Jan. 29, 2014, 16 pages.
2:14-cv-471-BHM v. Pioneer Corporation, et al.—Pioneer/Yamaha Courtesy Invalidity Contentions—Exhibit G-6—Janik Chart—U.S. Pat. No. 7,130,616 to Janik, directed to U.S. Pat. No. 8,458,356 to Weel, Jan. 29, 2014, 10 pages.
2:14-cv-471-BHM v. Pioneer Corporation, et al.—Pioneer/Yamaha Courtesy Invalidity Contentions—Exhibit G-7—Sound Blaster Chart—Non-Patent Literature Document entitled, "Creative Sound Blaster Wireless Music User's Guide Version 1.0," directed to U.S. Pat. No. 8,458,356 to Weel, Jan. 29, 2014, 33 pages.
2:14-cv-471-BHM v. Pioneer Corporation, et al.—Pioneer/Yamaha Courtesy Invalidity Contentions—Exhibit G-8—Allen Chart—U.S. Pat. No. 7,428,023 to Allen, directed to U.S. Pat. No. 8,458,356 to Weel, Jan. 29, 2014, 15 pages.
2:14-cv-471-BHM v. Pioneer Corporation, et al.—Pioneer/Yamaha Courtesy Invalidity Contentions—Exhibit G-9—Champion Chart—U.S. Pat. No. 8,458,356 to Champion, directed to U.S. Pat. No. 8,458,356 to Weel, Jan. 29, 2014, 6 pages.
2:14-cv-471-BHM v. Pioneer Corporation, et al.—Pioneer/Yamaha Courtesy Invalidity Contentions—Exhibit H-10d—'323—TurtleBeach AudioTron Device Chart—TurtleBeach AudioTron System, directed to U.S. Pat. No. 8,028,323 to Weel, Jan. 29, 2014, 27 pages.
2:14-cv-471-BHM v. Pioneer Corporation, et al.—Pioneer/Yamaha Courtesy Invalidity Contentions—Exhibit H-10m—'323—TurtleBeach AudioTron Manual Chart—TurtleBeach AudioTron Reference Manual, directed to U.S. Pat. No. 8,028,323 to Weel, Jan. 29, 2014, 12 pages.
2:14-cv-471-BHM v. Pioneer Corporation, et al.—Pioneer/Yamaha Courtesy Invalidity Contentions—Exhibit H-11d—'323—Lansonic DAS-750 Device Chart—Lansonic DAS-750 System, directed to U.S. Pat. No. 8,028,323 to Weel Jan. 29, 2014, 16 pages.
2:14-cv-471-BHM v. Pioneer Corporation, et al.—Pioneer/Yamaha Courtesy Invalidity Contentions—Exhibit H-11m—'323—Lansonic DAS-750 Manual Chart—Lansonic Digital Audio Server Operating Instructions Version 2.2.0 DAS-750-PRO, directed to U.S. Pat. No. 8,028,323 to Weel Jan. 29, 2014, 5 pages.
2:14-cv-471-BHM v. Pioneer Corporation, et al.—Pioneer/Yamaha Courtesy Invalidity Contentions—Exhibit H-12d—'323—Lansonic DAS-950 Device Chart—Lansonic DAS-950 System, directed to U.S. Pat. No. 8,028,323 to Weel Jan. 29, 2014, 16 pages.
2:14-cv-471-BHM v. Pioneer Corporation, et al.—Pioneer/Yamaha Courtesy Invalidity Contentions—Exhibit H-12P—'323—Lansonic

(56) **References Cited**

OTHER PUBLICATIONS

DAS-950 Archived Web Chart—Lansonic DAS-950 Pro Series Archived Web Page dated Feb. 2, 2002, directed to U.S. Pat. No. 8,028,323 to Weel Jan. 29, 2014, 12 pages.
2:14-cv-471-BHM v. Pioneer Corporation, et al.—Pioneer/Yamaha Courtesy Invalidity Contentions—Exhibit H-1d—'323—cd3o Device Chart—cd3o System, directed to U.S. Pat. No. 8,028,323 to Weel, Jan. 29, 2014, 16 pages.
2:14-cv-471-BHM v. Pioneer Corporation, et al.—Pioneer/Yamaha Courtesy Invalidity Contentions—Exhibit H-1m—'323—cd3o Manua Chart—cd3o Network MP3 Player Product Manual, directed to U.S. Pat. No. 8,028,323 to Weel, Jan. 29, 2014, 6 pages.
2:14-cv-471-BHM v. Pioneer Corporation, et al.—Pioneer/Yamaha Courtesy Invalidity Contentions—Exhibit H-2—'323—Janik + Janik Chart—U.S. Patent Publication No. 2002/0068558 to Janik, in view of U.S. Patent Publication No. 2002/0065902 to Janik, et al., directed to U.S. Pat. No. 8,028,323 to Weel, Jan. 29, 2014, 4 pages.
2:14-cv-471-BHM v. Pioneer Corporation, et al.—Pioneer/Yamaha Courtesy Invalidity Contentions—Exhibit H-3—'323—Bi Chart—U.S. Patent Publication No. 2002/0087996 to Bi, et al., directed to U.S. Pat. No. 8,028,323 to Weel, Jan. 29, 2014, 3 pages.
2:14-cv-471-BHM v. Pioneer Corporation, et al.—Pioneer/Yamaha Courtesy Invalidity Contentions—Exhibit H-4—'323—Berman + Van Ryzin Chart—U.S. Pat. No. 6,502,194 to Berman, et al. in view of U.S. Pat. No. 6,127,941 to Van Ryzin, directed to U.S. Pat. No. 8,028,323 to Weel, Jan. 29, 2014, 4 pages.
2:14-cv-471-BHM v. Pioneer Corporation, et al.—Pioneer/Yamaha Courtesy Invalidity Contentions—Exhibit H-5—'323—UPnP AV 1.0 Chart—Non-Patent Literature Document entitled, "UPnP AV Architecture:1," directed to U.S. Pat. No. 8,028,323 to Weel, Jan. 29, 2014, 16 pages.
2:14-cv-471-BHM v. Pioneer Corporation, et al.—Pioneer/Yamaha Courtesy Invalidity Contentions—Exhibit H-6—'323—Encarnacion Chart—U.S. Pat. No. 7,668,939 to Encarnacion, directed to U.S. Pat. No. 8,028,323 to Weel, Jan. 29, 2014, 16 pages.
2:14-cv-471-BHM v. Pioneer Corporation, et al.—Pioneer/Yamaha Courtesy Invalidity Contentions—Exhibit H-7—'323—Weast Chart—U.S. Pat. No. 7,454,511 to Weast, directed to U.S. Pat. No. 8,028,323 to Weel, Jan. 29, 2014, 13 pages.
2:14-cv-471-BHM v. Pioneer Corporation, et al.—Pioneer/Yamaha Courtesy Invalidity Contentions—Exhibit H-8—'323—Chen Chart—U.S. Patent Publication No. 2002/0170062 to Chen, directed to U.S. Pat. No. 8,028,323 to Weel, Jan. 29, 2014, 20 pages.
2:14-cv-471-BHM v. Pioneer Corporation, et al.—Pioneer/Yamaha Courtesy Invalidity Contentions—Exhibit H-9—'323—Khedouri Chart—U.S. Pat. No. 8,160,495 to Khedouri, directed to U.S. Pat. No. 8,028,323 to Weel, Jan. 29, 2014, 21 pages.
"Billboard Music Charts—Latest Music News—Music Videos," http://www.billboard.com/bbcom/index.jsp, printed Feb. 7, 2007, 2 pages.
Declaration of V. Michael Bove, Jr., with regard to U.S. Pat. No. 8,214,873, May 16, 2014 (Inter Partes Review No. IPR2014-00766), 41 pages.
Declaration of V. Michael Bove, Jr., with regard to U.S. Pat. No. 8,458,356, May 6, 2014 (Inter Partes Review No. IPR2014-00733), 13 pages.
Declaration of V. Michael Bove, Jr., with regard to U.S. Pat. No. 8,214,873, Sep. 18, 2013 (Inter Partes Review No. IPR2013-00598), 42 pages.
Declaration of V. Michael Bove, Jr., with regard to U.S. Pat. No. 8,230,099, Sep. 18, 2013 (Inter Partes Review No. IPR2013-00597), 35 pages.
"CD Player: 1 Sample Service Template for UPnP Version 1.0," Contributing Members of the UPnP Forum, 2001.
"cd3o Network MP3 Player Product Manual," Copyright 2003, cd3o, Inc., 65 pages.
Stone, Glen, "CEA R7.7 Wireless Entertainment Networking," Digital Home Working Group, Aug. 5, 2003.
Jepson, Brian, "Cellular Networking with CDPD," Web Techniques, Nov. 2001.
"ChangeDisc: 1 Sample Service Template for UPnP Version 1.0," Contributing Members of the UPnP Forum, 2000.
"Checklist for UPnP Standard Device Template Version 1.01," Contributing Members of the UPnP Forum, publication date unknown.
"Checklist for UPnP Standard Service Templates Version 1.01," Contributing Members of the UPnP Forum, publication date unknown.
"CNET Names PRISMIQ MediaPlayer Best of CES," PR Newswire, Jan. 14, 2003, pp. 1-2.
"CNN.com—Breaking News, U.S., World, Weather, Entertainment & Video News," http://www.cnn.com/, copyright 2007 Cable News Network LP, LLLP, printed Feb. 7, 2007, 3 pages.
Petersson, Justus, "Connected Home—the Home IMS Gateway," Ericsson, Telefonica, Feb. 28, 2007.
"Connection Manager: 1 Service Template Vrsion 1.01," Contributing Members of the UPnP Forum, Jun. 25, 2002.
"ConnectionManager:1 Service, Annex A—Control Point Requirements," For UPnP Version 1.0, Standardized DCP Annex, Oct. 6, 2010, Service Template Version: 2.00, 4 pages.
"Connection Manager:2 Service Template Version 1.01," For UPnP Version 1.0, Approved Standard, May 31, 2006, Document Version 1.00, 49 pages.
"ConnectionManager:3 Service," for UPnP Version 1.0, Standardized DCP (SDCP), Dec. 31, 2010, Service Template Version 1.01, 84 pages.
"ConnectionManager1.SyntaxTests.xml," date unknown, 1 page.
"ConnectionManager1.xml," date unknown, 3 pages.
"ConnectionManager2.SyntaxTests.xml," date unknown, 1 page.
"ConnectionManager2.xml," date unknown, 4 pages.
"ContentDirectory:2 Service Annex A—Control Point Requirements," For UPnP Version 1.0, Standardized DCP Annex, Oct. 6, 2010, Service Template Version 2:00, 4 pages.
"ContentDirectory:2 Service Template Version 1.01," For UPnP Version 1.0, Approved Standard, May 31, 2006, Document Version 1.00, 172 pages.
"ContentDirectory:3 Service Annex A—Control Point Requirements," For UPnP Version 1.0, Standardized DCP Annex, Oct. 6, 2010, Service Template Version 2:00, 5 pages.
"ContentDirectory:3 Service Template Version 1.01," For UPnP Version 1.0, Standardized DCP, Sep. 30, 2008, Document Version 1.00, 248 pages.
"ContentDirectory:4 Service," For UPnP Version 1.0, Standardized DCP (SDCP) Dec. 31, 2010, Service Template Version 1.01, 377 pages.
"ContentDirectory1.SyntaxTests.xml," date unknown, 3 pages.
"ContentDirectory1.xml," date unknown, 6 pages.
"ContentDirectory2.SyntaxTests.xml," date unknown, 3 pages.
"ContentDirectory2.xml," date unknown, 8 pages.
"ContentDirectory3.SyntaxTests.xml," date unknown, 4 pages.
"ContentDirectory3.xml," date unknown, 10 pages.
"ContentSync:1 Service Template Version 1.01, for UPnP Version 1.0," Contributing Members of the UPnP Forum, 2009, 111 pages.
"Continential Automated Buldings Association,Digital Home White Paper, IS 2003-31," Digital Home Working Group, Jun. 2003, 14 pages.
"ControlValve:1 Service Template for UPnP Device Architecture V 1.0," Contributing Members of the UPnP Forum, 2003, 15 pages.
Corrected Petition for Inter Partes Review of U.S. Pat. No. 8,050,652 (Inter Partes Review No. IPR2015-00590) Filed Feb. 9, 2015, 60 pages.
"CyberLink Reveals UPnP-Compliant Home," PR Newswire, Apr. 12, 2004, pp. 1-3.
Decision—Institution of Inter Partes Review entered Jan. 24, 2013 for IPR2012-00004, 28 pages.
Decision—Institution of Inter Partes Review entered Jul. 3, 2014 for IPR2013-00175, 21 pages.
Decision—Institution of Inter Partes Review entered Mar. 20, 2014 for IPR2013-00597, 23 pages.
Decision—Institution of Inter Partes Review entered Mar. 20, 2014 for IPR2013-00598, 26 pages.
Decision—Institution of Inter Partes Review entered Nov. 4, 2014 for IPR2014-00709, 20 pages.
Decision—Institution of Inter Partes Review entered Nov. 4, 2014 for IPR2014-00711, 22 pages.

(56) **References Cited**

OTHER PUBLICATIONS

Decision—Institution of Inter Partes Review entered Nov. 4, 2014 for IPR2014-00723, 20 pages.
Decision—Institution of Inter Partes Review entered Nov. 10, 2014 for IPR2014-00733, 16 pages.
Decision—Institution of Inter Partes Review entered Nov. 4, 2014 for IPR2014-00737, 24 pages.
Decision—Institution of Inter Partes Review entered Nov. 4, 2014 for IPR2014-00740, 25 pages.
Decision—Institution of Inter Partes Review entered Nov. 24, 2014 for IPR2014-00766, 24 pages.
Decision—Institution of Inter Partes Review and Grant of Joinder entered Jan. 28, 2015 for IPR2015-00337, 6 pages.
Decision—Institution of Inter Partes Review and Grant of Joinder entered Jan. 28, 2015 for IPR2015-00338, 6 pages.
Decision—Institution of Inter Partes Review and Grant of Joinder entered Jan. 28, 2015 for IPR2015-00339, 6 pages.
Decision—Institution of Inter Partes Review and Grant of Joinder entered Jan. 28, 2015 for IPR2015-00340, 6 pages.
Kim, Dong-Sung, "Design and Implementation of Home Network Systems Using UPnP Middleware for Networked Appliances," School of Electrical Engineering and Computer Science, Seoul National University, Jul. 22, 2002, 10 pages.
DLNA, "Design Guidelines," Jul. 1, 2004, http://www.dlna.org/resources, 1 page.
"Designing a UPnP AV MediaServer," Version 1.00, Intel Corporation, 2003, 46 pages.
"DeviceSecurity:1 Service Template for UPnP Device Architure 1.0," Contributing Members of the UPnP Forum, 2003, 66 pages.
"DeviceType:V Device Template Version 1.01 for UPnP Version 1.0," Contributing Members of the UPnP Forum, Jan. 16, 2001, 9 pages.
Stone, Glen, "DHWG HNv1 and Use Case Subcommittee Update," Digital Home Working Group, 2004, 35 pages.
Stone, Glen, "DHWG Status to CEA," Digital Home Working Group, Nov. 11, 2003, 10 pages.
Peter Jansen Associates, "Digital Convergence and Home Entertainment," Apr. 1, 2002, web.archive.org/web/20040619093957/http://wvvw.mediabolic.com/press/i tem.php?id=58, 9 pages.
"Digital Home White Paper," IS 2003-31, Jun. 2003, <www.caba.org. 14 pages.
Smith, "Digital home group touts convergence spec," The Register, Jun. 23, 2004, 2 pages.
"Digital Home Working Group Design Guidelines," Version 1.0, Working Draft, Apr. 1, 2004, Copyright 2004 Digital Home Working Group, 160 pages.
DHWG/DLNA, "Digital Home Working Group Design Guidelines, Version: 1.0," Digital Home Working Group, Version No. HNv1-0.900, Apr. 1, 2004, 160 pages.
DHWG/DLNA, "Digital Living Network Alliance Home Networked Device Interoperability Guidelines Version: 1.0," Digital Living Network Alliance, Jun. 2, 2004, pp. 1-151.
"D-Link Unveils 1st UPnP-Enabled Central Home Storage Drive," PR Newswire, Sep. 16, 2003, pp. 1-3.
"D-Link Wireless Media Player Validated by Intel to Meet Interoperability Guidelines D-Link is the First Major Networking Device Manufacturer to Earn Intel(R) Networked Media Product Requirements (Intel(R) NMPR) Conformance Validation," PR Newswire, May 4, 2004, 4 pages.
D-Link's New Wireless Media Device Plays Digital Music, Videos, and Photos On Home Television and Stereo New D-Link Digital Home Solution Merges Home Entertainment Center With Home Network for Seamless Delivery of Multimedia Content Anywhere in the Home, Jan. 20, 2004, 4 pages.
Ailara, "DLNA Strides Toward Consumer-Friendly Home Networked Devices With New Interoperability Guidelines," DLNA, Jun. 22, 2004, 4 pages.
DV Archive From Wikipedia, the free encyclopedia, en.wikipedia.org/wiki/DVArchive, printed on Sep. 3, 2013.
Brumitt, Barry, " Easy Living: Technologies for Intelligent Environments," The Easy Living Project, Microsoft Research, Handheld and Ubigitous Computing, 2nd International Symposium, Bristol, UKSeptember 2000, 12 pages.
Expert Report of Dr. Kevin C. Almeroth, ITC Investigation No. 337-TA-882, filed Nov. 12, 2013, 178 pages.
Final Written Decision of IPR, with regard to U.S. Pat. No. 8,045,952, Mar. 18, 2015 (Inter Partes Review No. IPR2013-00593), 22 pages.
Final Written Decision of IPR, with regard to U.S. Pat. No. 8,050,652, Mar. 18, 2015 (Inter Partes Review No. IPR2013-00594), 29 pages.
Final Written Decision of IPR, with regard to U.S. Pat. No. 8,230,099, Mar. 18, 2015 (Inter Partes Review No. IPR2013-00597), 31 pages.
Final Written Decision of IPR, with regard to U.S. Pat. No. 8,230,873, Mar. 18, 2015 (Inter Partes Review No. IPR2013-00598), 24 pages.
Mandayan Raghunath et al., "Fostering a Symbiotic Handheld Environment," IEEE Computer Society, pp. 56-65, Sep. 2003.
Williams, "Gadgets getting connected with DLNA," PC World Business Centre, Oct. 14, 2004, 3 pages.
"Goombah" Preview, at <http://www.goombah.com/preview.html>, printed Jan. 8, 2008, 5 pages.
"The HAVi Specification Version 1.1 of the Home Audio/Video Interoperability (HAVi) Architecture," HAVi, Inc., May 15, 2001, 529 pages.
Jussi Teirikangas, "HAVi: Home Audio Video Interoperability," Helsinki University of Technology, 2001, 10 pages.
DHWG/DLNA, "HNv1 Approved Phase 1 Use Cases," Digital Home Working Group, Jan. 29, 2004, pp. 1-23.
DHWG/DLNA, "HNv1 Approved Phase 2 Use Cases," Digital Home Working Group, Jan. 29, 2004, pp. 1-18.
"Home Entertainment Solutions," SimpleDevices, Apr. 13, 2004, http://web.archive.org/web/20040413030604/http://www.simpledevices.co m/homeentertainment.shtml, 1 page.
Peter M. Corcoran et al., "Home Network Infrastructure for Handheld/Wearable Appliances," IEEE Transactions on Consumer Electronics, vol. 48, No. 3, Aug. 2002, pp. 490-495.
DHWG/DLNA, "Home Networked Device Ineroperability Guidelines v1.0," Digital Living Network Alliance, 2004, pp. 1-202.
DHWG/DLNA, "Home Networked Device Ineroperability Guidelines White Paper," Digital Living Network Alliance, Jun. 2004, pp. 1-16.
Miller, "Home Networking with Universal Plug and Play," IEEE Communications Magazine, Dec. 2001 vol. 39 No. 12, 16 pages.
"HouseStatus:1 Service Template for UPnP Device Architecture 1.0," Standardized DCP, May 13, 2003, Contributing Members of the UPnP Forum, 17 pages.
"HVAC_FanOperating Mode:1 Service Template for UPnP Device Architecture 1.0," Standardized DCP, May 13, 2003, Contributing Members of the UPnP Forum, 12 pages.
"HVAC_SetpointSchedule:1 Service Template for UPnP Device Architecture 1.0," Contributing Members of the UPnP Forum, 2003, 16 pages.
"HVAC_System:1 Device Template for UPnP Device Architecture 1.0," Contributing Members of the UPnP Forum, 2003, 8 pages.
"HVAC_UserOperatingMode:1 Service Template for UPnP Device Architecture 1.0," Contributing Members of the UPnP Forum, 2003, 15 pages.
"HVAC_ZoneThermostat:1 Device Template for UPnP Device Architecture 1.0," Contributing Members of the UPnP Forum, 2003, 10 pages.
Ma; Gibbs; Kaplan, "IDTV Broadcast Applications for a Handheld Device," Panasonic Technologies Co., IEEE Communications Society, pp. 85-89, 2004 IEEE.
Vacca, John, "I-Mode Crash Course," McGraw-Hill, 2002, 4 pages.
"InboundConnectionConfig:1 Service," For UPnP Version 1.0, Standardized DCP, Sep. 30, 2009, Document Version 1.0, Service Template Version 2.0, 21 pages.
"Intel accelerates the delivery of the digital home with the extended wireless PC initiative," TV Meets The Web, Sep. 10, 2002, pp. 1-2.

(56) **References Cited**

OTHER PUBLICATIONS

Schwartz, Ephraim, "Intel moving into home electronics with new digital initiative; Chipmaker to support Microsoft UPnP as way to connect TVs and stereos," InfoWorld, Sep. 9, 2002, pp. 1-3.
Salvator, Dave, "Intel Pushes Plug and Play Into Homes; Universal Plug and Play and 802.11 remain the technology Intel is betting on to infiltrate home entertainment networks," ExtremeTech.com, Sep. 10, 2002, pp. 1-3.
"Intel UPnP—Based Remote I/O Developer's Guide," Version 0.4, Intel Corporation, Sep. 12, 2003, 25 pages.
Lemon, Sumner, "Intel: Digital media adapters to hit market in 2003; Dell, Gateway, Mitac, Legend set to launch adapters next year," InfoWorld, Oct. 15, 2002, 2 pages.
Drummond; Ionescu; Nolte, "Intelligent Browsing for Multimedia Applications," University of Ottawa, Proceedings of Multimedia '96, pp. 386-389, 1996 IEEE.
"Intel's Digital Home Vision Moves Closer to Reality With New Industry Enabling Building Blocks," Business Wire, Feb. 28, 2003, pp. 1-4.
"InternetGatewayDevice:1 Device Template Version 1.01 for UPnP Version 1.0," Contributing Members of the UPnP Forum, 2001, 15 pages.
"Interoperable Home Infrastructure," Intel Technology Journal, vol. 6, Issue 04, ISSN 1535-766X, Nov. 15, 2002, 78 pages.
"Introducing the Digital Home Working Group," Digital Home Working Group, 2004, 16 pages.
Jeronimo, "It Just Works: UPnP in the Digital Home," Oct. 5, 2004, http://www.artima.com/spontaneous/upnp digihome.html, 16 pages.
O'Hara, K., et al., "Jukola: Democratic Music Choice In A Public Space," DIS 2004, Aug. 1-4, 2004, Cambridge, MA pp. 145-154.
"LANDevice:1 Device Template Version 1.01 for UPnP Version 1.0," Contributing Members of the UPnP Forum, 2001, 9 pages.
"LANHostConfigManagement:1 Service Template Version 1.01 for UPnP Version 1.0," Contributing Members of the UPnP Forum, 2001, 27 pages.
"Lansonic Professional Series—Digital Audio Server—Operating Instructions," Version 2.2.0, Feb. 2002, DAS-750-PRO, 120 pages.
"Layer3Forwarding:1 Service Template Version 1.01 for UPnP Version 1.0," Contributing Members of the UPnP Forum, 2001, 14 pages.
Brumbaugh, Pete, "Leading GPS Innovator Takes Wireless to the Streets," Garmin Int'l, Oct. 1, 1998, 1 page.
Mascia, J. and Reddy, S., "cs219 Project Report—Lifetrak: Music in Tune With Your Life," Department of Electrical Engineering, UCLA '06, Los Angeles, California, copyright 2006, ACM, 11 pages.
MCi200 Streamium Broadband Internet Micro System, Philips Electronics, 2001, 2 pages.
MC-i200 Streamium Micro Hi-Fi System manual, Philips Consumer Electronics North America, publication date unknown, 39 pages.
MCi250 Streamium Broadband Internet Micro System, Philips Electronics, 2002, 2 pages.
MC-i250 Wireless Broadband Internet Audio System, Philips Electronics, publication date unknown, 42 pages.
"Mediabolic Incorporates Support for UPnP Technology into the Mediabolic ONE Platform," Business Wire, Jan. 6, 2003, pp. 1-2.
"MediaRenderer:2 Device Template Version 1.01," for UPnP Version 1.0, Standardized DCP, Sep. 30, 2008, Version 1.0, 26 pages.
"MediaRenderer:3 Device," for UPnP Version 1.0, Standardized DCP (SDCP) Dec. 31, 2010, Device Template Version 1.01, 29 pages.
"MediaRenderer1.xml," date unknown, 1 page.
"MediaRenderer2.xml," date unknown, 1 page.
"MediaServer:1 and Media Render:1." http://upnp.org/specs/av/av1, p. 1, approved Jun. 24, 2002, printed Oct. 2, 2013.
"MediaServer:1 Device Template Version 1.01 for UPnP 1.0," Contributing Members of the UPnP Forum, Jun. 25, 2002, 12 pages.
"MediaServer:2 Device Template Version 1.01," for UPnP Version 1.0, Approved Standard, May 31, 2006, Document Version 1.00, 24 pages.
"MediaServer:3 Device Template Version 1.01," for UPnP Version 1.0, Standardized DCP, Sep. 30, 2008, Document Version 1.0, 26 pages.
"MediaServer:4 Device," for UPnP Version 1.0, Standardized DCP (SDCP) Dec. 31, 2010, Device Template Version 1.01, 29 pages.
"MediaServer1.xml," date unknown, 1 page.
"MediaServer2.xml," date unknown, 1 page.
"MediaServer3.xml," date unknown, 1 page.
DHWG/DLNA, "MHS Use Case Proposal Samsung," r1.0, Digital Home Working Group, Feb. 25, 2004, pp. 1-36.
"Microsoft Announces Windows Media Connect Technology, Enabling Seamless Media Transfer Between Windows XP-Based PCs and Consumer Electronics Devices," PR Newswire, Jan. 7, 2004, pp. 1-5.
"mobile community, free sms, mobile dating, text flirting and friends networking—playtxt . . . ," http://web.archive.org/web/20070225125113rn_1/www.playtxt.net/playtxt.do, printed Jan. 16, 2008, 1 page.
"Mobile Networking with WAP," Friedr, Vieweg, Sohn, 1st Edition 2000, 4 pages.
"Mobile Use Cases Passed for HNv1," Digital Home Working Group, Oct. 18, 2003, 18 pages.
"MSN—Music," http://music.msn.com/help/sync, copyright 2007 Microsoft, printed Nov. 16, 2007, 1 page.
"Music Downloads—Over 2 Million Songs—Try It Free—Yahoo! Music," http://music.yahoo.com/ymu/default.asp, copyright 2006 Yahoo! Inc., printed Feb. 7, 2007, 1 page.
Wang, J. and Reinders, M.J.T., "Music Recommender system for Wi-Fi Walkman," No. ICT-2003-01 in the ICT Group Technical Report Series, Information & Communication Theory Group, Department of Mediamatics, Faculty of Electrical Engineering, Mathematics and Computer Science, Delft University of Technology, Delft, The Netherlands, 2003, 23 pages.
"musicstrands.com—Because Music is Social," brochure, copyright 2006, MusicStrands, Inc., 2 pages.
"MyStrands Download," at <http://www.mystrands.com/overview.vm>, copyright 2003-2007, MediaStrands, Inc., printed Feb. 7, 2007, 3 pages.
"MyStrands Labs: Patent-pending Technologies," at <http://labs.mystrands.com/patents.html>, earliest description from Nov. 2004, printed Feb. 7, 2007, 5 pages.
"Napster—All the Music You Want," at <http://wvvw.napster.com/using_napster/all_the_music_you_want.html>, copyright 2003-2006, Napster, LLC, printed Feb. 7, 2007, 2 pages.
"Napster.co.uk—Napster To Go," http://www.napster.co.uk/ntg.html, copyright 2003-2007 Napster, LLC, printed Nov. 15, 2007, 2 pages.
"National and Local Weather Forecast, Radar, Map and Report," http://www.weather.com/, copyright 1995-2007 The Weather Channel Interactive, Inc., printed Feb. 7, 2007, 3 pages.
NavTalk Cellular Phone/GPS Receiver Bill of Material, Garmin, Sep. 10, 1998.
NavTalk Quick Guide, Revision A, Garmin, Jan. 23, 1999, 3 pages.
"NEC to Demonstrate a Series of Mobile Internet Applications and Service Creation Software for the European Market at 3GSM 2003," JCN Newswire, Feb. 12, 2003, 2 pages.
"Network Gateway Solutions," SimpleDevices, Apr. 13, 2004, http://web.archive.org/web/20040413033546/http://www.simpledevices.co m/network gateway.shtml, 1 page.
Lea, Rodger, "Networking Home Entertainment Devices with HAVi," Embedded Systems, Sep. 2000, 9 pages.
"Oregan Networks Demonstrates UPnP Enabled," PR Newswire, Feb. 18, 2003, pp. 1-3.
Intel, "Overview of UPnP AV Architecture: A Digital Media Distribution Technology for the Home," Research and Development at Intel, Version 1.00, Jul. 2, 2003, copyright 2003 Intel Corporation, 10 pages.
Patent Owner's Preliminary Response to Inter Partes Review of U.S. Pat. No. 8,230,099 (Inter Partes Review No. IPR2013-00597) Filed Dec. 26, 2013, 50 pages.
Patent Owner's Preliminary Response to Inter Partes Review of U.S. Pat. No. 8,214,873 (Inter Partes Review No. IPR2013-00598) Filed Dec. 26, 2013, 63 pages.
Patent Owner's Preliminary Response to Inter Partes Review of U.S. Pat. No. 8,028,323 (Inter Partes Review No. IPR2014-00709) Filed Aug. 5, 2014, 47 pages.

(56) **References Cited**

OTHER PUBLICATIONS

Patent Owner's Preliminary Response to Inter Partes Review of U.S. Pat. No. 8,230,099 (Inter Partes Review No. IPR2014-00711) Filed Aug. 7, 2014, 67 pages.
Patent Owner's Preliminary Response to Inter Partes Review of U.S. Pat. No. 8,214,873 (Inter Partes Review No. IPR2014-00723) Filed Aug. 11, 2014, 51 pages.
Patent Owner's Preliminary Response to Inter Partes Review of U.S. Pat. No. 8,458,356 (Inter Partes Review No. IPR2014-00733) Filed Aug. 14, 2014, 54 pages.
Patent Owner's Preliminary Response to Inter Partes Review of U.S. Pat. No. 8,050,652 (Inter Partes Review No. IPR2014-00737) Filed Aug. 20, 2014, 67 pages.
Patent Owner's Preliminary Response to Inter Partes Review of U.S. Pat. No. 8,045,952 (Inter Partes Review No. IPR2014-00740) Filed Aug. 20, 2014, 64 pages.
Patent Owner's Preliminary Response to Inter Partes Review of U.S. Pat. No. 8,214,873 (Inter Partes Review No. IPR2014-00766) Filed Aug. 28, 2014, 68 pages.
Petition for Inter Partes Review of U.S. Pat. No. 8,050,652 (Inter Partes Review No. IPR2015- 00334) Filed Dec. 3, 2014, 64 pages.
Petition for Inter Partes Review of U.S. Pat. No. 8,214,873 (Inter Partes Review No. IPR2014- 00766) Filed May 16, 2014, 52 pages.
Petition for Inter Partes Review of U.S. Pat. No. 8,028,323 (Inter Partes Review No. IPR2014- 00709) Filed Apr. 30, 2014, 65 pages.
Petition for Inter Partes Review of U.S. Pat. No. 8,230,099 (Inter Partes Review No. IPR2014- 00711) Filed Apr. 30, 2014, 65 pages.
Petition for Inter Partes Review of U.S. Pat. No. 8,050,652 (Inter Partes Review No. IPR2015- 00590) Filed Jan. 21, 2015, 62 pages.
Petition for Inter Partes Review of U.S. Pat. No. 8,028,323 (Inter Partes Review No. IPR2015- 00337) Filed Dec. 3, 2014, 60 pages.
Petition for Inter Partes Review of U.S. Pat. No. 8,045,952 (Inter Partes Review No. IPR2015- 00340) Filed Dec. 3, 2014, 65 pages.
Petition for Inter Partes Review of U.S. Pat. No. 8,214,873 (Inter Partes Review No. IPR2013-00598) Filed Sep. 18, 2013, 65 pages.
Petition for Inter Partes Review of U.S. Pat. No. 8,214,873 (Inter Partes Review No. IPR2014-00723) Filed May 1, 2014, 66 pages.
Petition for Inter Partes Review of U.S. Pat. No. 8,214,873 (Inter Partes Review No. IPR2015-00339) Filed Dec. 3, 2014, 64 pages.
Petition for Inter Partes Review of U.S. Pat. No. 8,230,099 (Inter Partes Review No. IPR2013-00597) Filed Sep. 18, 2013, 52 pages.
Petition for Inter Partes Review of U.S. Pat. No. 8,230,099 (Inter Partes Review No. IPR2015-00338) Filed Dec. 3, 2014, 63 pages.
Petition for Inter Partes Review of U.S. Pat. No. 8,458,356 (Inter Partes Review No. IPR2014-00733) Filed May 6, 2014, 48 pages.
Petitioner Yamaha Corporation of America's Reply to Patent Owner Response (Inter Partes Review No. IPR2013-00593) Filed Aug. 12, 2014, 21 pages.
Petitioner Yamaha Corporation of America's Reply to Patent Owner Response (Inter Partes Review No. IPR2013-00594) Filed Aug. 12, 2014, 21 pages.
Petitioner Yamaha Corporation of America's Reply to Patent Owner Response (Inter Partes Review No. IPR2013-00597) Filed Aug. 12, 2014, 21 pages.
Petitioner Yamaha Corporation of America's Reply to Patent Owner Response (Inter Partes Review No. IPR2013-00598) Filed Aug. 12, 2014, 22 pages.
Wallace, Brice, "Philips aims to blur TV-PC line," Deseret Morning News, Jan. 8, 2004, 3 pages.
"Philips Consumer Electronics Unveils 'Connected Planet' Strategy," Pressi.com, Aug. 28, 2003, pp. 1-3.
"PlayCD: 1 Sample Service Template for UPnP Version 1.0," Contributing Members of the UPnP Forum, 2001, 18 pages.
Belmont, "Playlist requirements," Intel, Oct. 29, 2003, pp. 1-3.
Griffith, Eric, "Prismiq MediaPlayer," http://www.wi-fiplanet.com/print/reviews/article.php/3091181/PRISMIQ-MediaPlayer.htm, printed Oct. 10, 2013, 2 pages.
PRISMIQ MediaPlayer User Guide, PRISMIQ, Inc. 2003, 44 pages.
PRISMIQ Teams with RealNetworks to Give Consumers Access to Rhapsody on Home Stereos PRISMIQ/Rhapsody Combo On Display During CES; Visit TechHome TechZone (Booth #17695, South Hall 2) and RealNetworks booth (#22611, South Hall) at Las Vegas Convention Center, 5 pages.
"ProxiWeb Fact Sheet," web.archive.org/web/19991022065434/http://www.proxinet.com /products nserv/proxiweb, ProxiNet, Inc. 1999, 1 page.
"Q3 2002 SONICblue Earnings Conference Call—Final," FD (Fair Disclosure) Wire, Nov. 6, 2002, 10 pages.
"QoSDevice:1," For UPnP Version 1.0, Mar. 10, 2005, 28 pages.
"QoSDevice:1 Erratum," UPnP Forum, Jul. 14, 2006, 25 pages.
"QoSManager:1," for UPnP Version 1.0, Mar. 10, 2005, 34 pages.
"QoSManager:1 Erratum," UPnP Forum, Jul. 14, 2006, 31 pages.
"QoSManager:1 Second Erratum," UPnP Forum, Aug. 4, 2008, 2 pages.
"QoSManager:2 Erratum," UPnP Forum, Jul. 31, 2008, 2 pages.
"QoSPolicyHolder 1.0," for UPnP Version 1.02, Mar. 10, 2005, 16 pages.
"QoSPolicyHolder:1 Erratum," UPnP Forum, Jul. 14, 2006, 6 pages.
"RAClient:1 Device," for UPnP Version 1.0, Standardized DCP, Sep. 30, 2009, Document Version 1.0, Device Template Version 2.00, 13 pages.
"RADAConfig:1 Service," for UPnP Version 1.0, Standardized DCP, Sep. 30, 2009, Document Version 1.0, Device Template Version 2.00, 20 pages.
"RADAConfig:2 Service," for UPnP Version 1.0, Standardized DCP, Apr. 30, 2011, Document Version 1.0, Device Template Version 2.00, 38 pages.
"RADASync:1 Service," for UPnP Version 1.0, Standardized DCP, Sep. 30, 2009, Document Version 1.0, Device Template Version 2.00, 29 pages.
"RADASync:2 Service," for UPnP Version 1.0, Standardized DCP, Apr. 30, 2010, Document Version 1.0, Device Template Version 2.00, 32 pages.
Baig, Edward, "Radio days: Out of the past, into the future," USA Today, Jan. 31, 2001, 4 pages.
"Radiolinja Finland Selects 724 Solutions X-treme Mobility Gateway; XMG Enables New Content-Rich Data Services," Business Wire, Jul. 8, 2003, 2 pages.
"RADiscoveryAgent:1 Device," for UPnP Version 1.0, Standardized DCP, Sep. 30, 2009, Document Version 1.0, Device Template Version 2.00, 13 pages.
"RADiscoveryAgent:2 Device," for UPnP Version 1.0, Standardized DCP, Apr. 30, 2010, Document Version 1.0, Device Template Version 2.00, 13 pages.
"RAServer:1 Device," For UPnP Version 1.0, Standardized DCP, Sep. 30, 2009, Document Version 1.0, Device Template Version 2.00, 14 pages.
"RAServer:2 Device," for UPnP Version 1.0, Standardized DCP, Apr. 30, 2011, Document Version 1.0, Device Template Version 2.00, 16 pages.
"RATAConfig:1 Service," for UPnP Version 1.0, Standardized DCP, Sep. 30, 2009, Document Version 1.0, Device Template Version 2.00, 54 pages.
Johnston, M., et al., "Real Networks," Case Study, revised Feb. 18, 1998 (copyright © Kotha & Johnston) 17 pages.
"Remote Access Architecture:1 for UPnP Version 1.0," 2009 UPnP, Sep. 30, 2009, pp. 1-30.
"Remote Access Architecture:2," for UPnP Version 1.0, Standardized DCP, Apr. 30, 2011, Document Version 1.0, Service Template Version 2.00, 53 pages
Wendorft, Roli, "Remote Execution of HAVi Applications on Inernet-Enabled Devices," Philips Research, IEEE, Jun. 25, 2001, 11 pages.
"RemoteUIClient:1 Service Template Version 1.01," for UPnP version 1.0, Standardized DCP, Sep. 2, 2004, 29 pages.
"RemoteUIClientDevice:1 Device Template Version 1.01," for UPnP version 1.0, Standardized DCP, Sep. 2, 2004, 11 pages.
"RemoteUIServer Device:1 Device Template Version 1.01," for UPnP version 1.0, Standardized DCP, Sep. 2, 2004, 11 pages.
"RemoteUIServer:1 Server Template Version 1.01," for UPnP version 1.0, Standardized DCP, Sep. 2, 2004, 20 pages.

(56) **References Cited**

OTHER PUBLICATIONS

"RenderingControl: 1 Service Template Version 1.01 for UPnP Version 1.0," Contributing Members of the UPnP Forum, Jun. 25, 2002, 63 pages.
"RenderingControl:1 Service Annex A—Control Point Requirements," For UPnP Version 1.0, Standardized DCP Annex, Oct. 6, 2010, Service Template Version 2.00, 5 pages.
"RenderingControl:1 Service Template Version 1.01," For UPnP Version 1.0, Standardized DCP, Jun. 25, 2002, 63 pages.
"RenderingControl:2 Service Annex A—Control Point Requirements," For UPnP Version 1.0, Standardized DCP Annex, Oct. 6, 2010, Service Template Version 2.00, 5 pages.
"RenderingControl:2 Service Template Version 1.01," For UPnP Version 1.0, Approved Standard, May 31, 2006, Document Version 1.00, 84 pages.
"RenderingContro1:3 Service," for UPnP Version 1.0, Standardized DCP (SDCP) Dec. 31, 2010, Service Template Version 1.01, 144 pages.
"RenderingControl1.SyntaxTests.xml," date unknown, 6 pages.
"RenderingControl1 .xml," date unknown, 11 pages.
"RenderingControl2.SyntaxTests.xml," date unknown, 7 pages.
"RenderingControl2.xml," date unknown, 14 pages.
Palenchar, Joseph, "Replay TV to boost promotions, distribution. (Twice News)," HighBeam Research, Jun. 9, 2003, 2 pages.
ReplayTV From Wikipedia, the free encyclopedia, en.wikipedia.org/wiki/Replaytv, printed on Sep. 3, 2013, 6 pages.
"Rhapsody—Full-length music, videos and more—FREE," http://www.rhapsody.com/welcome.html, copyright 2001-2007 Listen.com, printed Feb. 7, 2007, 1 page.
"Rockford's Omnifi(TM) Awarded TechTV's Best of CES," PR Newswire, Jan. 16, 2003, pp. 1-3.
Bell, Ian, "ROKU SOUNDBRIDGE M1000 REVIEW," http://www.digitaltrends.com/media-streamer-reviews/roku-soundbridge-m1000-review, Dec. 14, 2004, 8 pages.
"Roku Unveils New Award-Winning Network Music Players; Roku SoundBridge Features Sleek Design, Large Display, Apple iTunes Support," http://www.businesswire.com/news/home/20040107005285/en, Jan. 7, 2004, 3 pages.
"Roku Unveils SoundBridge Music Player," Online Reporter, Jan. 10, 2004, pp. 1-2.
"Roxio The Boom Box Music and recording reviews—CNET Reviews," http://reviews.cnet.com/music-and-recording/roxio-the-boom-box/4505-3669_7-3141440 . . . , printed Nov. 15, 2007, 4 pages.
"ScheduledRecording1.SyntaxTests.xml," date unknown, 4 pages.
"ScheduledRecording1.xml," date unknown, 7 pages.
"ScheduledRecording2.SyntaxTests.xml," date unknown, 4 pages.
"ScheduledRecording2.xml," date unknown, 7 pages.
"SecurityConsole:1 Service Template for UPnP Device Architure 1.0," Contributing Members of the UPnP Forum, 2003, 20 pages.
"Set-top Solutions," SimpleDevices, Apr. 13, 2004, http://web.archive.org/web/20040413044713/http://www.simpledevices.co m/settop.shtml, 1 page.
Smyers, Scott, "Sharing Digital Content in the Home," Digital Home Working Group, Oct. 7, 2003, 17 pages.
Stone, Glen, "Sharing Digital Content in the Home," Digital Home Working Group, Oct. 23, 2003, 23 pages.
"SimpleCenter," SimpleDevices, May 2, 2004, http://web.archive.org/web/20040502165145/http://simpledevices.com/sim plecenter.shtml, 1 pages.
"SimpleDevices Announces New Partnerships for its SimpleWare Integration and Interoperability Program," Business Wire, Jan. 15, 2004, pp. 1-3.
"SimpleDevices has developed a flexible, standards-based media server software development kit that transforms a gateway device into an intelligent and powerful media server," SimpleDevices, Apr. 13, 2004, http://web.archive.org/web/20040413143346/http://, 1 page.
"SimpleDevices Product Showcase," SimpleDevices, Apr. 14, 2004, http://web.archive.org/web/20040414041500/http://www.simpledevices.co m/showcase.shtml, 1 page.
"SimpleDevices Product Solutions," SimpleDevices, Apr. 14, 2004, http://web.archive.org/web/20040414072007/http://www.simpledevices.co m/solutions.shtml, 1 page.
"SimpleDevices Releases New Ver. Software, SimpleWare 2.0," PR Newswire, Jan. 9, 2003, pp. 1-4.
"SimpleDevices Releases New Version of its Software, SimpleWare 2.0," Jan. 9, 2002, http://web.archive.org/web/20040413144147/http://simpledevices.com/pre ss releases/01 09 2003 simpleware.shtml, 2 pages.
"SimpleWare Software Technologies," SimpleDevices, Apr. 13, 2004, http://web.archive.org/web/20040413042557/http://wvvw.simpledevices.co m/products.shtml, 1 page.
"SimpleWare Software Technologies," SimpleDevices, Jul. 10, 2004, http://web.archive.org/web/20040710135809/http://www.simpledevices.co m/products.shtml, 1 page.
SL300i Wifi Wireless Multimedia Link Instructions for use, www.philips.com/streamium, publication date unknown, 54 pages.
SL300i Wireless Multimedia Link, Philips Electronics, 2003, 2 pages.
"SL400i," SimpleDevices, Apr. 13, 2004, http://web.archive.org/web/20040413145728/http://simpledevices.com/sho wcase philips.shtml, 1 page.
SL400i Wifi Wireless Multimedia Link Instructions for use, www.philips.com/streamium, publication date unknown, 55 pages.
SL400i Wireless Multimedia Link, Philips Electronics, 2003, 2 pages.
"SliMP3 Ethernet MP3 Player Owner's Manual," Slim Devices, Inc. 2002, 16 pages.
"SLIMP3 Network MP3 Player," Slim Devices, Inc. 2002, 2 pages.
"Solutions for Content Providers," SimpleDevices, Inc., Apr. 13, 2004, http://web.archive.org/web/20040413025938/http://www.simpledevices.co m/content provider.shtml, 1 page.
"Solutions for Internet Service Providers," SimpleDevices, Apr, 13, 2004, http://web.archive.org/web/20040413031950/http://www.simpledevices.co m/isp.shtml, 1 page.
"Squeezebox Owner's Guide," Slim Devices, Inc., 2003, 22 pages.
"Squeezebox The wireless MP3 player for your digital stereo," Slim Devices, Inc., 2003, 2 pages.
Berniker, Mark, "StarSight launches stand-alone program guide receiver. (StarSight Telecast's CB1500 for cable television operators) (Brief Article)," Broadcasting & Cable, HighBeam Research, Dec. 5, 1994, 1 page.
Walton, Brian, "StarSight: The Future of Television Today," Washington Informer, HighBeam Research, Jun. 22, 1995, 2 pages.
"Start Listening with Last.fm—Scrobbling You Say?" http://www.last.fm/, 1 page, Jul. 23, 2008.
Nichols; Myers, "Studying The Use of Handhelds to Control Smart Appliances," School of Computer Science, Carnegie Mellon University, Proceedings of the 23rd International Conference on Distributed Computing Systems Workshops (ICDCSW'03), 2003 IEEE, 6 pages.
"Supercomm Products," Connected Planet, May 14, 2001, 1 page.
"TemperatureSensor:1 Service Template for UPnP Device Architecture 1.0," Contributing Members of the UPnP Forum, 2003, 13 pages.
"TemperatureSetpoint:1 Service Template for UPnP Device Architecture 1.0," Contributing Members of the UPnP Forum, 2003, 17 pages.
Termination of the Proceeding, Final Judgement, with regard to U.S. Pat. No. 8,028,323, Apr. 22, 2015 (Inter Partes Review Nos. IPR2014-00709 and IPR2015-00337), 4 pages.
Termination of the Proceeding, Final Judgement, with regard to U.S. Pat. No. 8,045,952, Apr. 22, 2015 (Inter Partes Review Nos. IPR2014-00740 and IPR2015-00340), 4 pages.
Termination of the Proceeding, Final Judgement, with regard to U.S. Pat. No. 6,050,652, Apr. 22, 2015 (Inter Partes Review Nos. IPR2014-00737 and IPR2015-00334), 4 pages.
Termination of the Proceeding, Final Judgement, with regard to U.S. Pat. No. 8,214,873, Apr. 23, 2015 (Inter Partes Review No. IPR2014-00766), 3 pages.

(56) **References Cited**

OTHER PUBLICATIONS

Termination of the Proceeding, Final Judgement, with regard to U.S. Pat. No. 6,757,517 (IPR2015-00586); 7,236,739 (IPR2015-00587); 7,742,740 (IPR2015-00588) and 8,050,652 (IPR2015-00590), May 22, 2015, 3 pages.
Roli G. Wendorf; Maarten P. Bodlaender, "THAM 13.2 Remote Execution of HAVi Applications on Internet-Enabled Devices," IEEE 2001, 2 pages.
Gilligan, Gregory, "The TV is the Center of the Digital Home Connected Electronic Products That Work Together Are Highlight of Show," Richmond Times Dispatch, Jan. 9, 2004.
"TV Meets the Web," Financial Times Information Limited, Sep. 10, 2002, 2 pages.
"Two-way Radio for Netizens," Computers Today, Mar. 6, 2000, 2 pages.
Mohanty, "UCS Report Digital Home Working Group Board of Directors Meeting," Digital Home Working Group, May 12, 2004, pp. 1-43.
van der Heijden; Taylor, "Understanding WAP Wireless Applications, Devices, and Services," Artech House, 2000, pp. 98-99 (4 pages total).
UPnP, "Universal Plug and Play Device Architecture," Version 1.0, ftp://vtm.upnp.org/upnp/specs/arch/UPnPDA10_20000613.htm, Jun. 8, 2000, pp. 1-54.
Liu, "UPnP and Home Networking at Intel Developer Forum—Fall 2002," UPnPWorld Archives, Jul. 12, 2002, pp. 1-3.
Kang, Dong-Oh, "UPnP AV Architectural Multimedia System with an OSGi Platform," IEEE 2004, 5 pages.
Ritchie, J., et al., "UPnP AV Architecture: 0.83 For UPnP Version 1.0," Preliminary Design, Jun. 12, 2002, Copyright 2000 Contributing Members of the UPnP Forum, 22 pages.
"UPnP AV Architecture: 1 for UPnP Version 1.0," Standardized DCP, Document Version 1.1, Sep. 30, 2008, 30 pages.
"UPnP AV Architecture: 2 for UPnP Version 1.0," Standardized DCP, Dec. 31, 2010, 35 pages.
"UPnP AV Datastructure Template: 1," for UPnP Version 1.0, Standardized DCP, Document Version 1.0, Sep. 30, 2008, 28 pages.
"UPnP AVTransport:1 Service Template Version 1.01," for UPnP Version 1.0, Standardized DCP, Jun. 25, 2002, 67 pages.
Jeronimo, "UPnP Design by Example, A Software Developer's Guide to Universal Plug and Play," Intel Press, Intel Corp. 2003, 109 pages.
Jeronimo, Weast, "UPnP Design by Example," http://intel.com/intelpress/upnp/index.htm, Dec. 20, 2003, 1 page.
"UPnP Device Architecture 1.0," UPnP Forum, Oct. 15, 2008, 80 pages.
"UPnP Device Architecture 1.1," UPnP Forum, Oct. 15, 2008, 136 pages.
"UPnP Device Architecture 1.1 Annex A—IP Version 6 Support," Mar. 15, 2011, 15 pages.
"UPnP Device Architecture V1.0 Annex A—IP Version 6 Support," Contributing Members of the UPnP Forum, 1999-2002 Microsoft Corporation, 11 pages.
"UPnP Implementers Corporation Certifies First Product in the New AV Device Category; Arcadyan Wireless Home A/V Platform to Display UPnP Certification Logo," Business Wire, Aug. 12, 2003, 3 pages.
"UPnP QoS Architecture:1.0," For UPnP Version 1.0, Mar. 10, 2005, 28 pages.
"UPnP QoS Architecture:2," For UPnP Version 1.0, Standardized DCP, Oct. 16, 2006, Document Version: 1.00, 33 pages.
"UPnP QoSDevice:2 Service Template Version 1.01," for UPnP Version 1.0, Standardized DCP, Oct. 16, 2006, Document Version 1.00, 39 pages.
"UPnP QoSDevice:3 Service Template Version 1.01," for UPnP Version 1.0, Standardized DCP, Nov. 30, 2008, 113 pages.
"UPnP QoSDevice:3 Underlying Technology Interface Addendum Service Template Version 1.01," For UPnP Version 1.0, Standardized DCP, Nov. 30, 2008, 22 pages.
"UPnP QoSManager:2 Service Template Version 1.01," For UPnP Version 1.0, Standardized DCP, Jul. 31, 2008, Document Version 1.00, 37 pages.
"UPnP QoSManager:3 Service Template Version 1.01," For UPnP Version 1.0, Standardized DCP, Nov. 30, 2008, 89 pages.
"UPnP QoSPolicyHolder:2 Service Template Version 1.01," For UPnP Version 1.0, Standardized DCP, Oct. 16, 2006, Document Version 1.00, 16 pages.
"UPnP QoSPolicyHolder:3 Service Template Version 1.01," for UPnP Version 1.0, Standardized DCP, Nov. 30, 2008, 36 pages.
"UPnP Security Ceremonies Design Document for UPnP Device Architecture 1.0," Contributing Members of the UPnP Forum, 2003, 18 pages.
UPnP, "UPnP Vendor's Implementation Guide," http://www.upnp.org/download/UPnP_Vendor_Implementation_Guide, Jan. 5, 2001, pp. 1-8.
"UPnP Vendor's Implementation Guide," Jan. 5, 2001, 5 pages.
UPnP AVWorking Committee, "UPnP XML Data Files for Testing," Jun. 25, 2002, 1 page.
UPnP, UPnPF Membership Database Showing Current 2013 and pre May 2004, 30 pages.
UPnP, UPnPF Membership Database as of Sep. 2003, 92 pages.
"UPnP-QoS Architecture:3," for UPnP Version 1.0, Standardized DCP, Nov. 30, 2008, 47 pages.
"UPnP-qos-SchemaFiles," Oct. 16, 2006, 13 pages.
"UPnP-qos-SchemaFiles," Dec. 5, 2008, 28 pages.
"UPnP-qos-TestFiles," Aug. 4, 2008, 26 pages.
"UPnP-qos-TestFiles," Nov. 23, 2008, 10 pages.
"UPnP-qos-TestFiles," Oct. 16, 2006, 14 pages.
"UPnP-ra-SchemaFiles," Sep. 30, 2009, 4 pages.
"UPnP-ra-TestFiles," Apr. 30, 2011, 36 pages.
"UPnP-ra-TestFiles," Sep. 30, 2009, 24 pages.
"UPnP-rui-TestFiles," Nov. 14, 2008, 9 pages.
"UpTo11.net—Music Recommendations and Search," at <http://www.upto11.net/>, copyright 2005-2006, Upto11.net, printed Feb. 7, 2007, 1 page.
DHWG/DLNA, "1. Use Case Ecosystem Selection Criteria for Home Networking version 1.0 Guidelines," Version 1.0 draft Aug. 6, 2003, pp. 1-3.
DHWG/DLNA, "DHWG Use Case Proposal," Version 1.1, Digital Media Network Business, SAMSUNG Electronics Co., LTD, Aug. 28, 2003, pp. 1-15.
DHWG/DLNA, "Use Case Technical Selection Criteria for Home Networking version 1.0 Guidelines," Version 1.0 draft Aug. 11, 2003, pp. 1-2.
DHWG/DLNA, "Use Cases Passed for HNv1," DHWG, Sep. 11, 2003, pp. 1-74.
"User's Guide ProxiWeb for Palm OS," web.archive.org/web/20000916115046/http://www.proxinet.com/products n serv/guidepalm/#Toc465146931, printed on Sep. 4, 2013, 14 pages.
"UUIDS and GUIDS," Paul J. Leach, Microsoft, Feb. 24, 1997, 16 pages.
"Virtual Replay TV for your PC," www.dvarchive.org, last updated Jul. 12, 2006, printed Sep. 3, 2013, 3 pages.
"WANCableLinkConfig:1 Service Template Version 1.01 for UPnP Version 1.0," Contributing Members of the UPnP Forum, 2001, 25 pages.
"WANCommonInterfaceConfig:1 Service Template Version 1.01 for UPnP Version 1.0," Contributing Members of the UPnP Forum, 2001, 24 pages.
"WANConnectionDevice:1 Device Template Version 1.01 for UPnP Version 1.0," Contributing Members of the UPnP Forum, 2001, 13 pages.
"WANDSLLinkConfig:1 Service Template Version 1.01 for UPnP Version 1.0," Contributing Members of the UPnP Forum, 2001, 27 pages.
"WANEthernetLinkConfig:1 Service Template Version 1.01 for UPnP Version 1.0," Contributing Members of the UPnP Forum, 2001, 10 pages.
"WANIPConnection:1 Service Template Version 1.01 for UPnP Version 1.0," Contributing Members of the UPnP Forum, 2001, 74 pages.

(56) **References Cited**

OTHER PUBLICATIONS

"WANPOTSLinkConfig:1 Service Template Version 1.01 for UPnP Version 1.0," Contributing Members of the UPnP Forum, 2001, 21 pages.
"WANPPPConnection:1 Service Template Version 1.01 for UPnP Version 1.0," Contributing Members of the UPnP Forum, 2001, 89 pages.
"Webjay—Playlist Community," at <http://www.webjay.org/>, copyright 2006, Yahoo! Inc., printed Feb. 7, 2007, 5 pages.
Ricca-Smith, "Science & Technology: Wired for sound and Video," Independent (UK) Ltd., Jan. 14, 2004, 4 pages.
Lakhani, Amit, "Wireless Application Protocol (WAP) and I-Mode: An insight," Stevens Institute of Technology, Apr. 7, 2001, 10 pages.
Bard, "Wireless Convergence of PC and Consumer Electronics in the e-Home," Connected and Extended PC Lab, Intel. Corp., Intel Technology Journal Q2, 2001, 11 pages.
Hartwig, Stephan, "Wireless Microservers," Pervasivie Computing, IEEE, 2002, 9 pages.
Declaration of Andrew Wolfe, Ph.D., with regard to U.S. Pat. No. 8,050,652, Jan. 21, 2015 (Inter Partes Review No. IPR2015-00590), 48 pages.
"Yahoo! Messenger," http://messenger.yahoo.com/webmessengerpromo.php, copyright 2007 Yahoo! Inc., printed Oct. 26, 2007, 1 page.
"Yahoo! Messenger—Chat, Instant message, SMS, PC Calls and More," http://messenger.yahoo.com/webmessengerpromo.php, copyright 2007 Yahoo! Inc., printed Oct. 26, 2007, 1 page.
"Zen Portable Media Center User's Guide," Creative Technology Ltd., Jul. 2004, 52 pages.

* cited by examiner

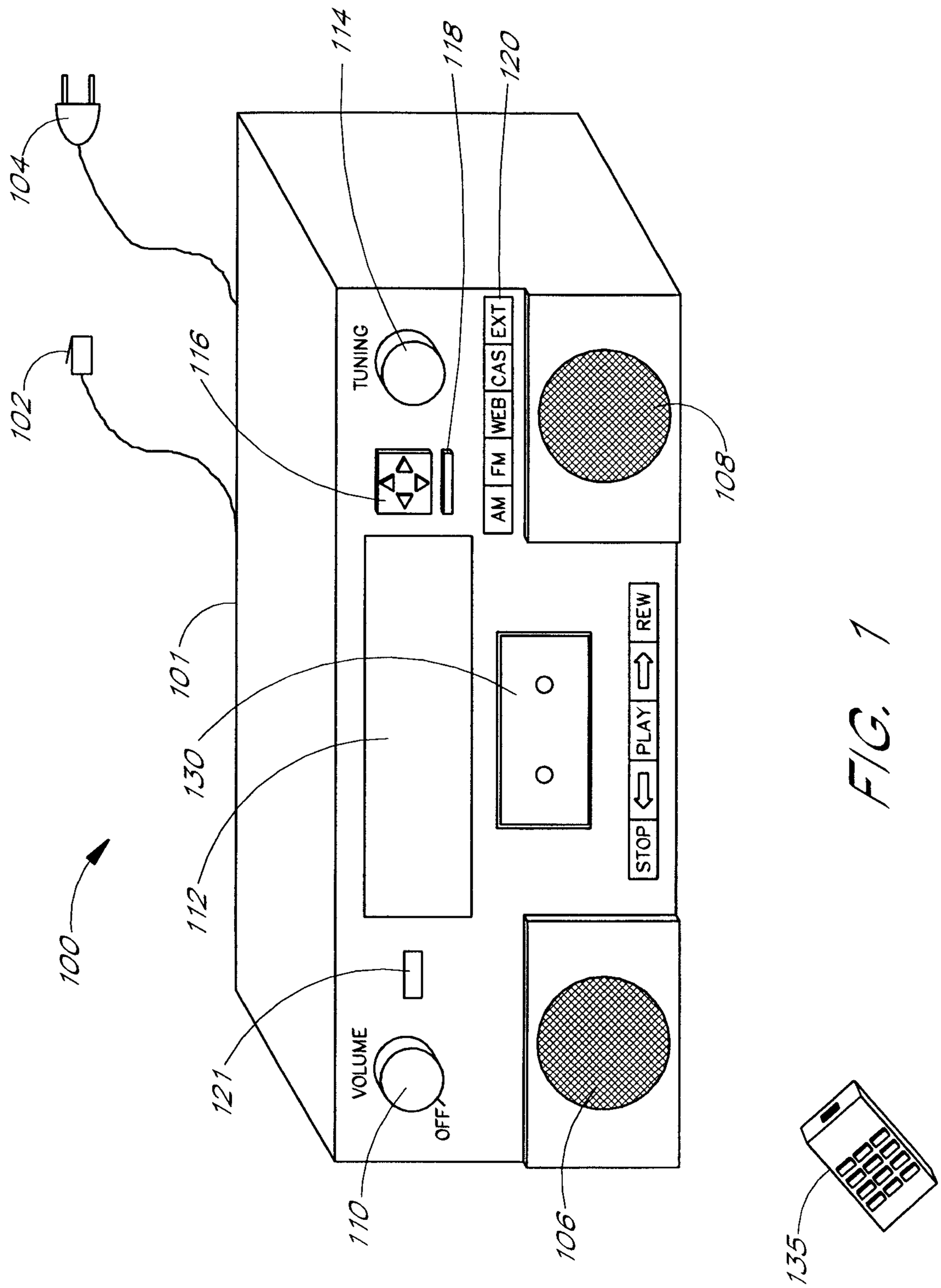
104
102
114
118
120
116
TUNING
AM
FM
WEB
CAS
EXT
108
101
130
112
STOP
PLAY
REW
100
121
VOLUME
OFF
110
106
135

FIG. 1

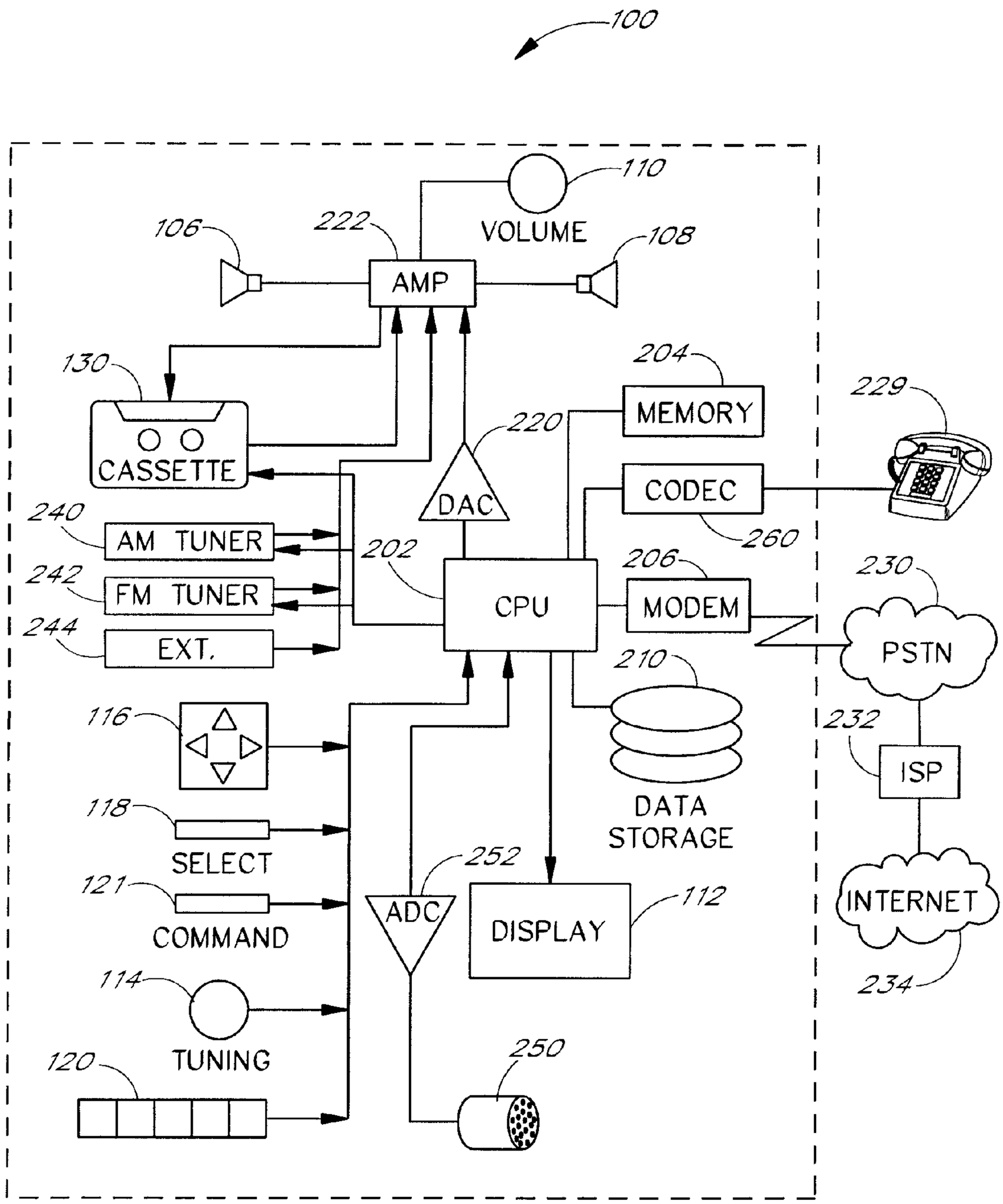
100
110
VOLUME
106
222
108
AMP
130
204
MEMORY
229
220
CASSETTE
CODEC
DAC
240
AM TUNER
202
260
206
230
242
FM TUNER
CPU
MODEM
244
EXT.
PSTN
210
116
232
ISP
118
DATA
STORAGE
SELECT
252
121
ADC
DISPLAY
112
INTERNET
COMMAND
114
234
TUNING
250
120

FIG. 2

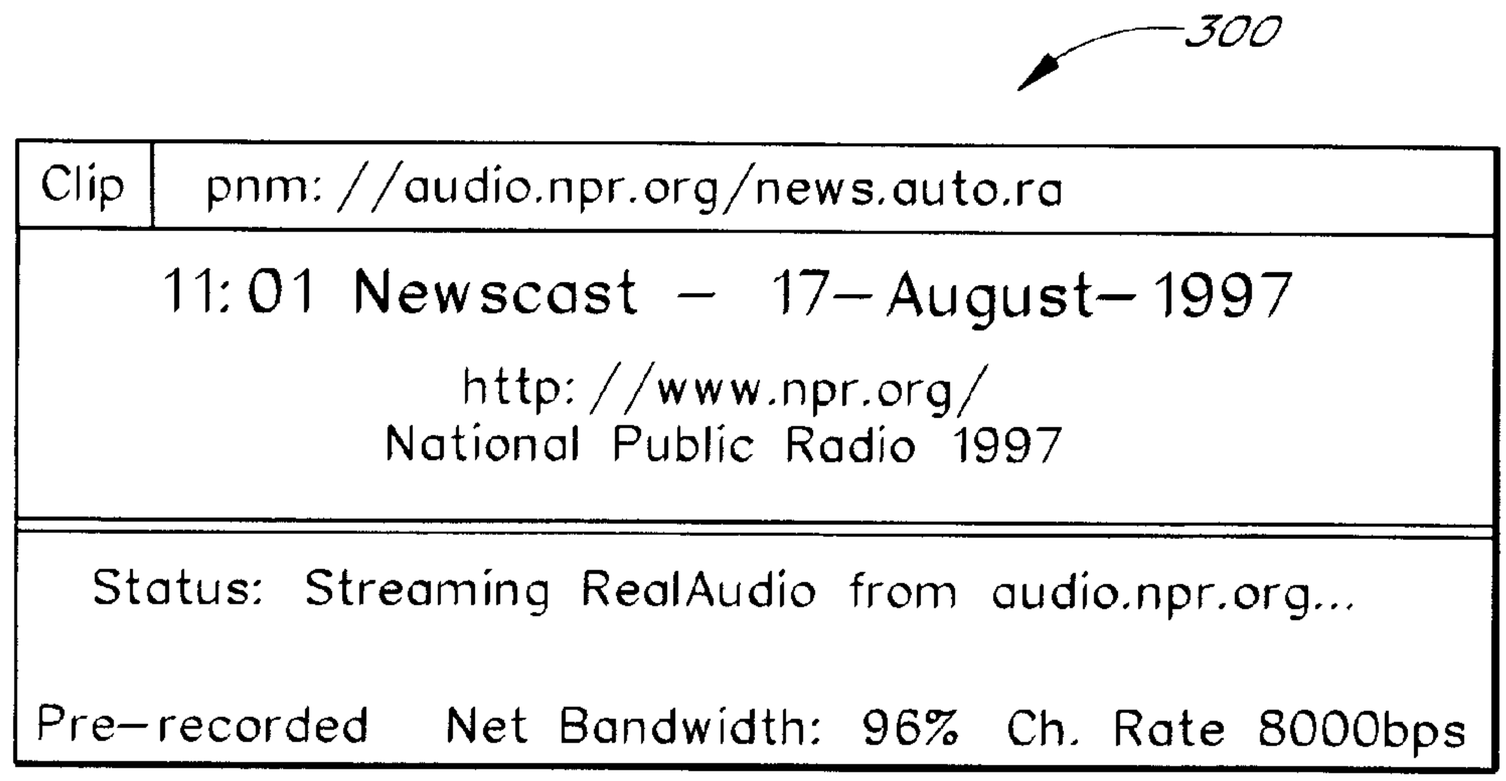

FIG. 3A

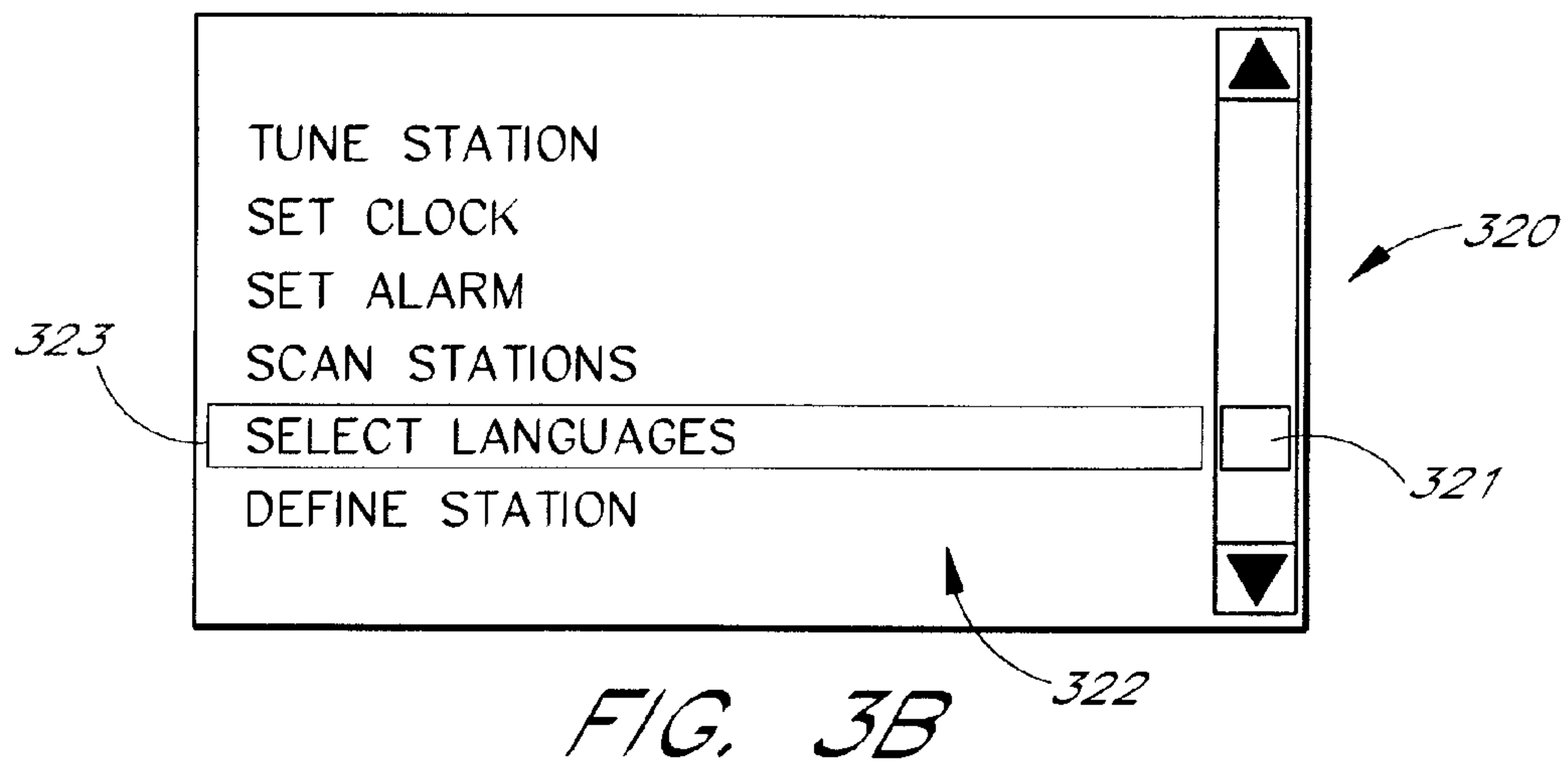

FIG. 3B

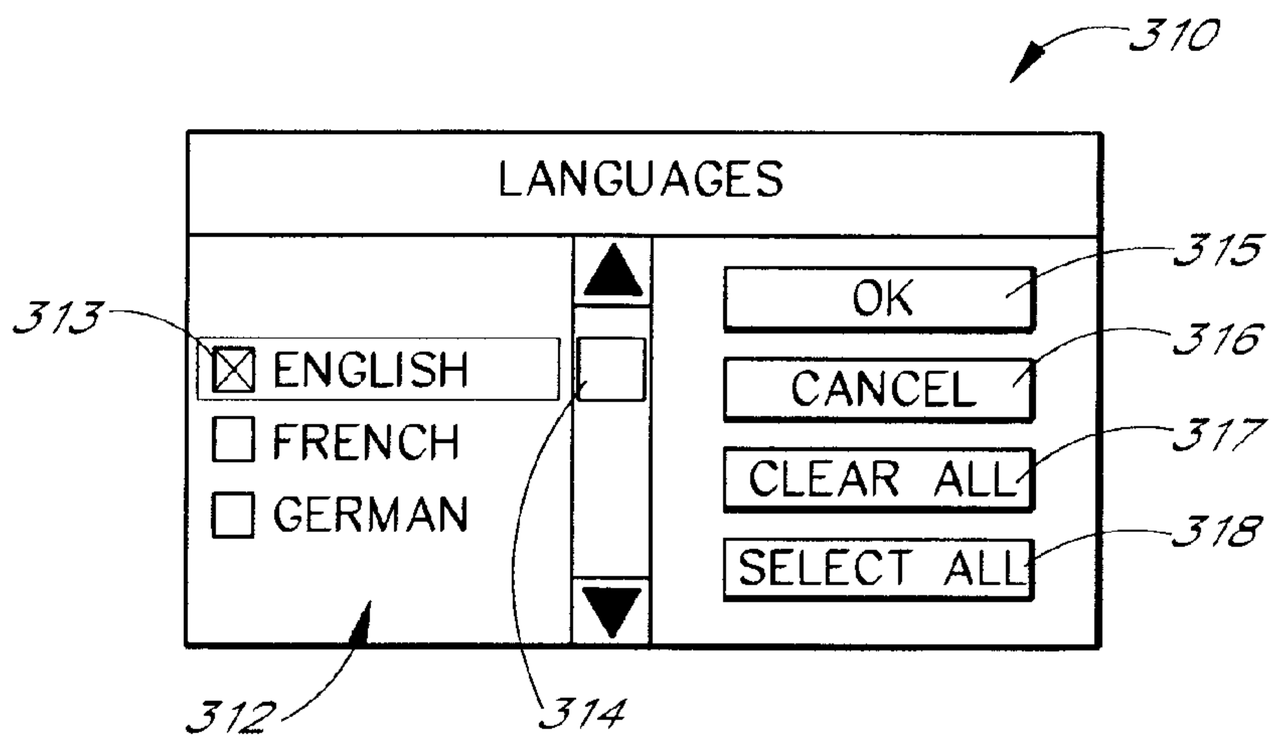

FIG. 3C

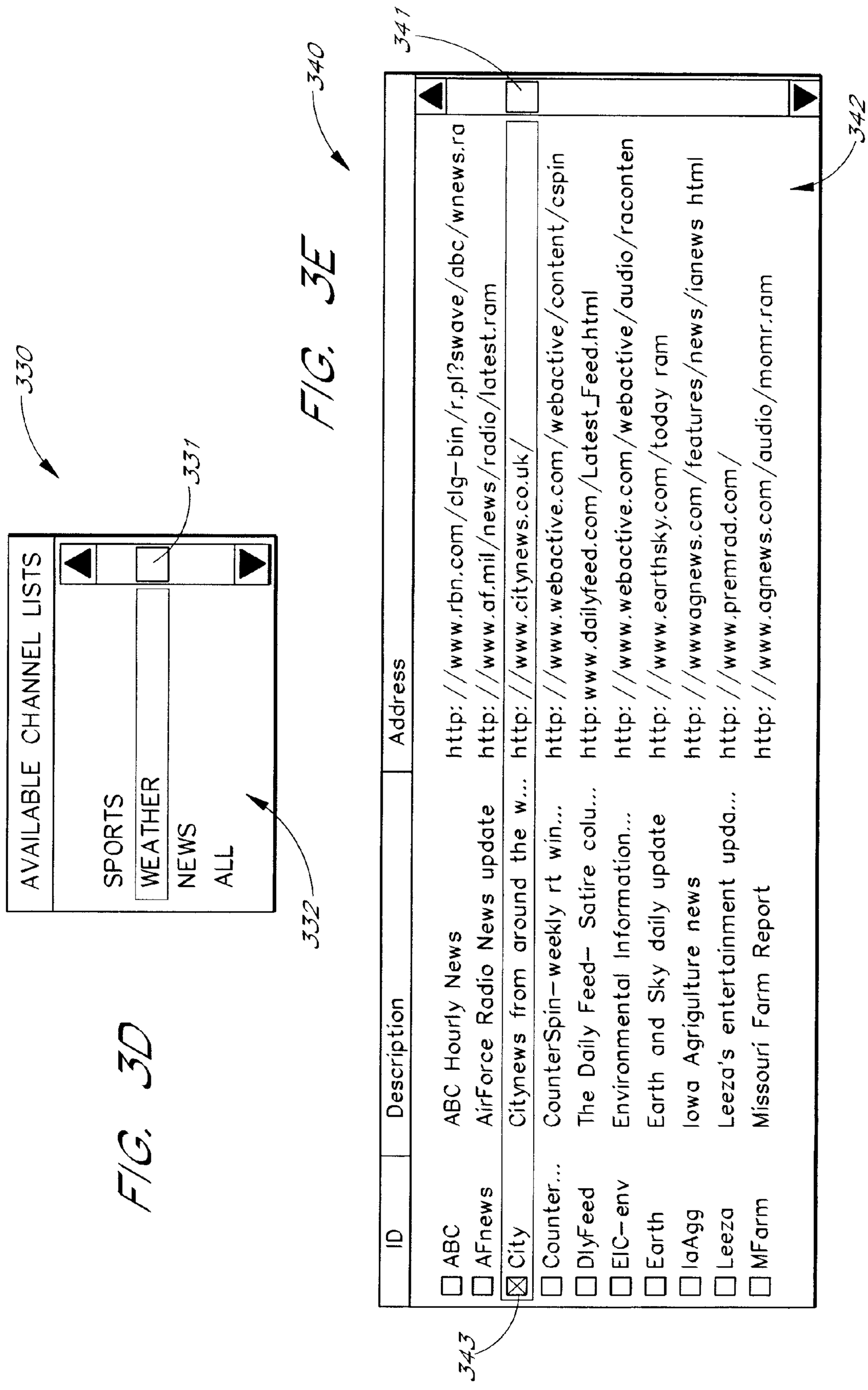
330
AVAILABLE CHANNEL LISTS
SPORTS
WEATHER
NEWS
ALL
331
332
340
341
342
343
ID
Description
Address
ABC
ABC Hourly News
http://www.rbn.com/clg-bin/r.pl?swave/abc/wnews.ra
AFnews
AirForce Radio News update
http://www.af.mil/news/radio/latest.ram
City
Citynews from around the w...
http://www.citynews.co.uk/
Counter...
CounterSpin-weekly rt win...
http://www.webactive.com/webactive/content/cspin
DlyFeed
The Daily Feed- Satire colu...
http:www.dailyfeed.com/Latest_Feed.html
EIC-env
Environmental Information...
http://www.webactive.com/webactive/audio/raconten
Earth
Earth and Sky daily update
http://www.earthsky.com/today ram
IaAgg
Iowa Agrigulture news
http://www.agnews.com/features/news/ianews html
Leeza
Leeza's entertainment upda...
http://www.premrad.com/
MFarm
Missouri Farm Report
http://www.agnews.com/audio/momr.ram

FIG. 3D

FIG. 3E

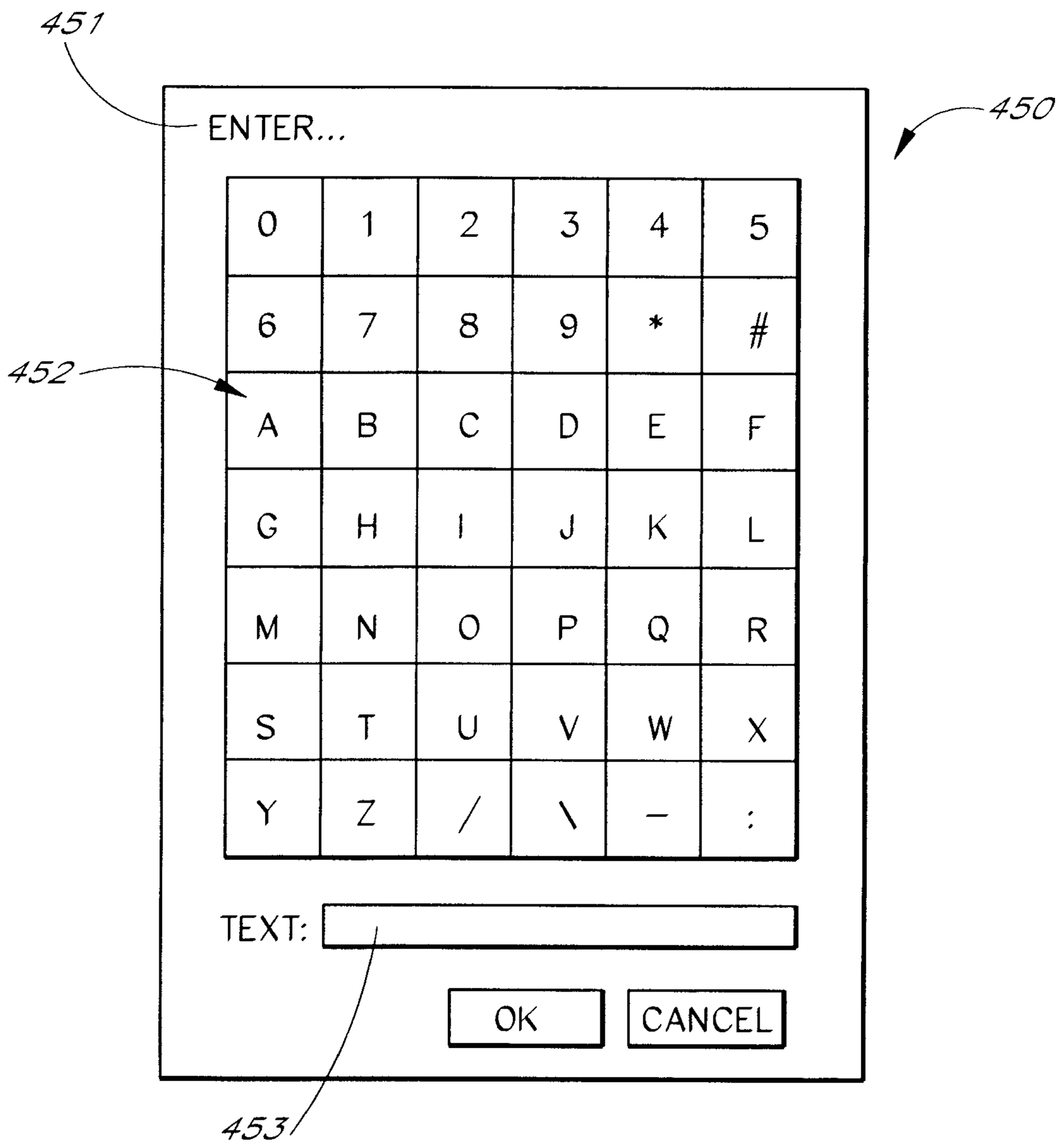
451
450
ENTER...
0
1
2
3
4
5
6
7
8
9
*
#
452
A
B
C
D
E
F
G
H
I
J
K
L
M
N
O
P
Q
R
S
T
U
V
W
X
Y
Z
/
\
–
:
TEXT:
OK
CANCEL
453

FIG. 4

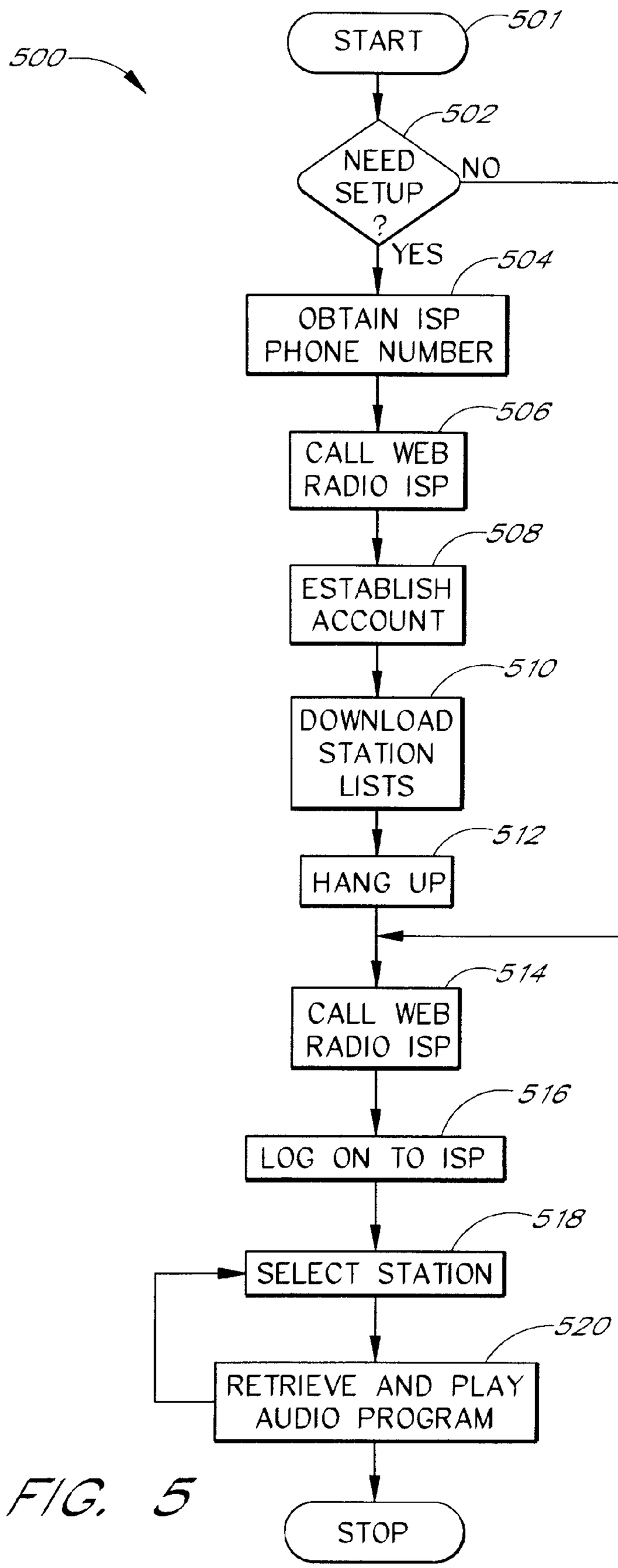
500
START
501
NEED SETUP ?
502
NO
YES
OBTAIN ISP PHONE NUMBER
504
CALL WEB RADIO ISP
506
ESTABLISH ACCOUNT
508
DOWNLOAD STATION LISTS
510
HANG UP
512
CALL WEB RADIO ISP
514
LOG ON TO ISP
516
SELECT STATION
518
RETRIEVE AND PLAY AUDIO PROGRAM
520
STOP

FIG. 5

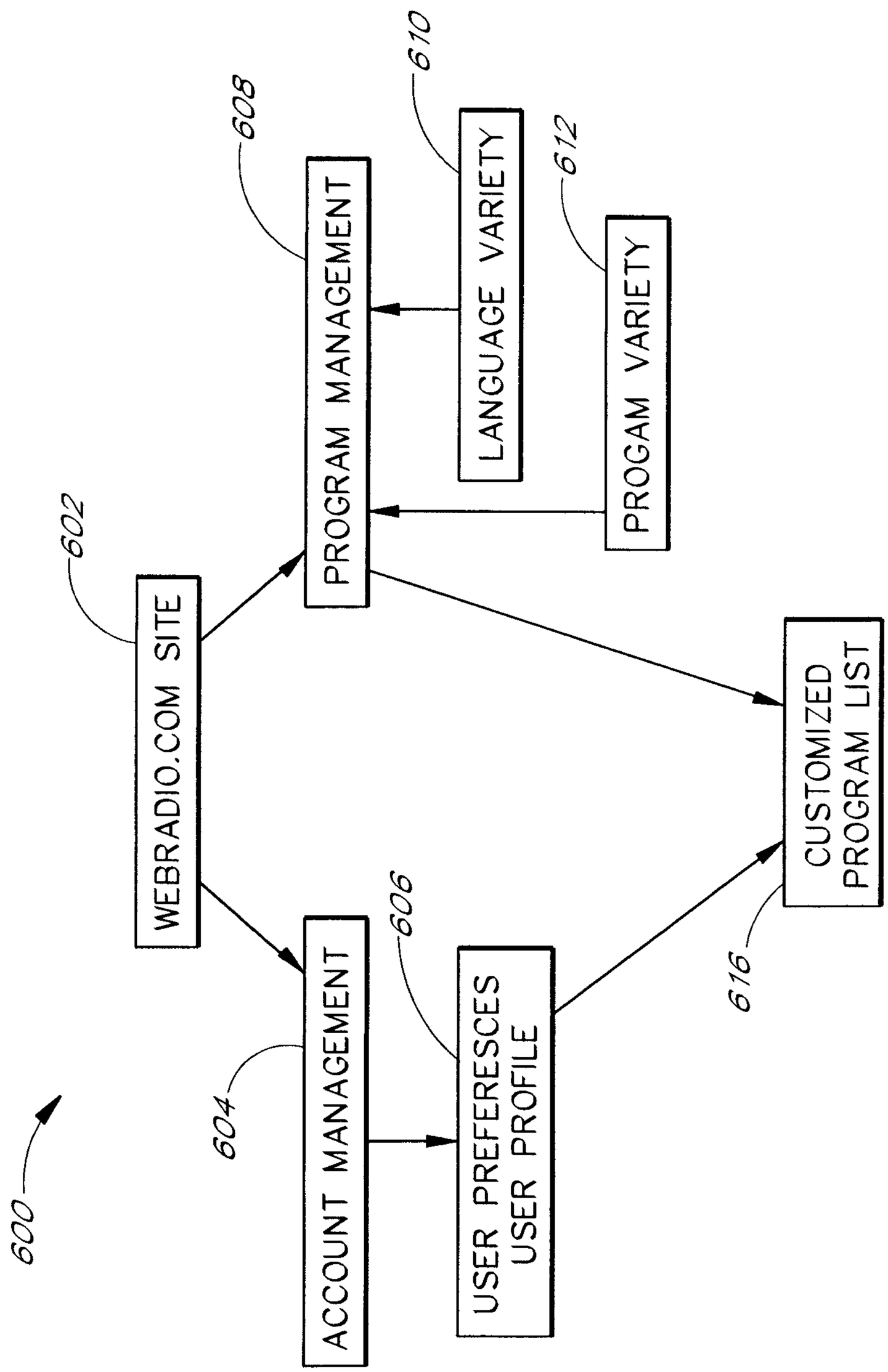
600
602
WEBRADIO.COM SITE
604
ACCOUNT MANAGEMENT
606
USER PREFERESCES
USER PROFILE
608
PROGRAM MANAGEMENT
610
LANGUAGE VARIETY
612
PROGAM VARIETY
616
CUSTOMIZED
PROGRAM LIST

FIG. 6

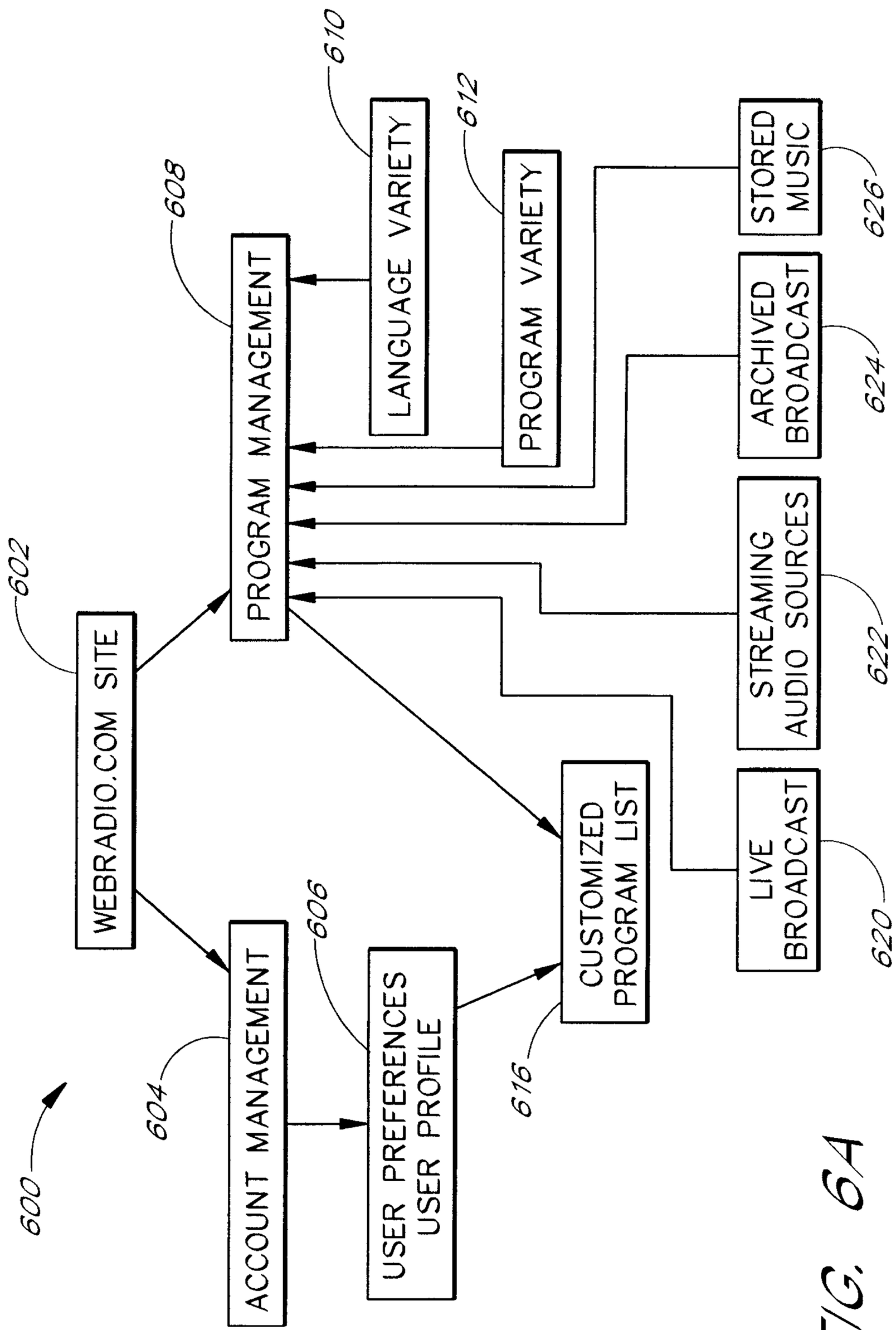
600
602
WEBRADIO.COM SITE
604
ACCOUNT MANAGEMENT
606
USER PREFERENCES
USER PROFILE
608
PROGRAM MANAGEMENT
610
LANGUAGE VARIETY
612
PROGRAM VARIETY
616
CUSTOMIZED
PROGRAM LIST
620
LIVE
BROADCAST
622
STREAMING
AUDIO SOURCES
624
ARCHIVED
BROADCAST
626
STORED
MUSIC

FIG. 6A

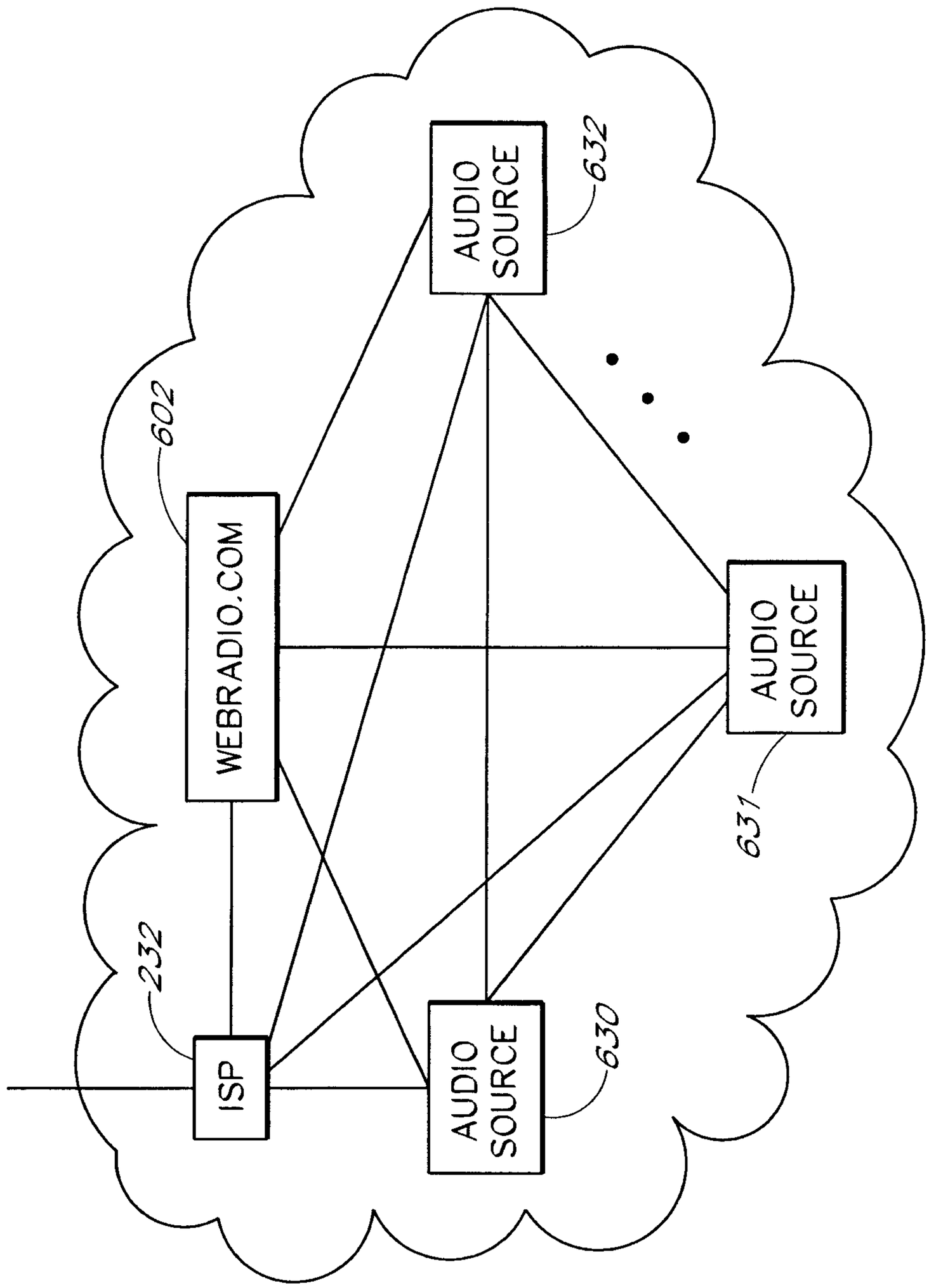
AUDIO SOURCE
632
602
WEBRADIO.COM
AUDIO SOURCE
631
232
ISP
AUDIO SOURCE
630

FIG. 6B

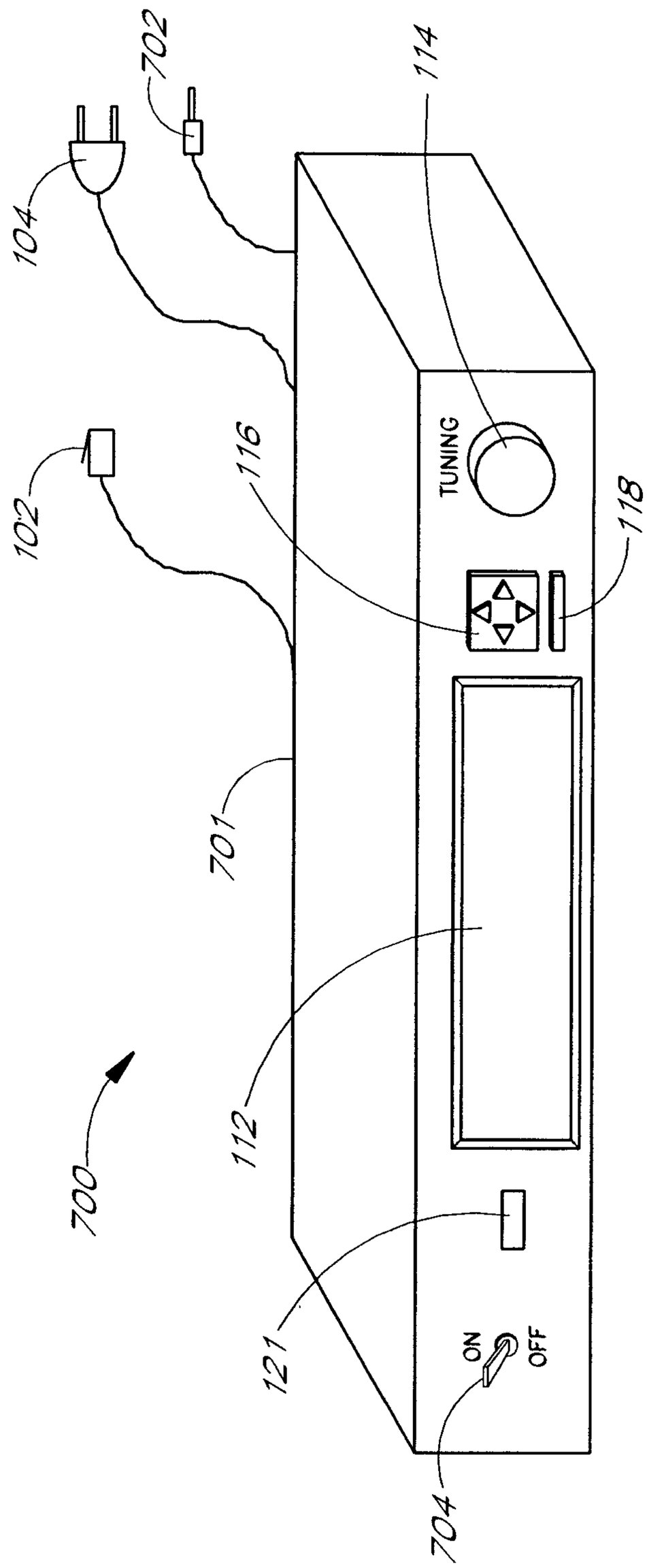

FIG. 7

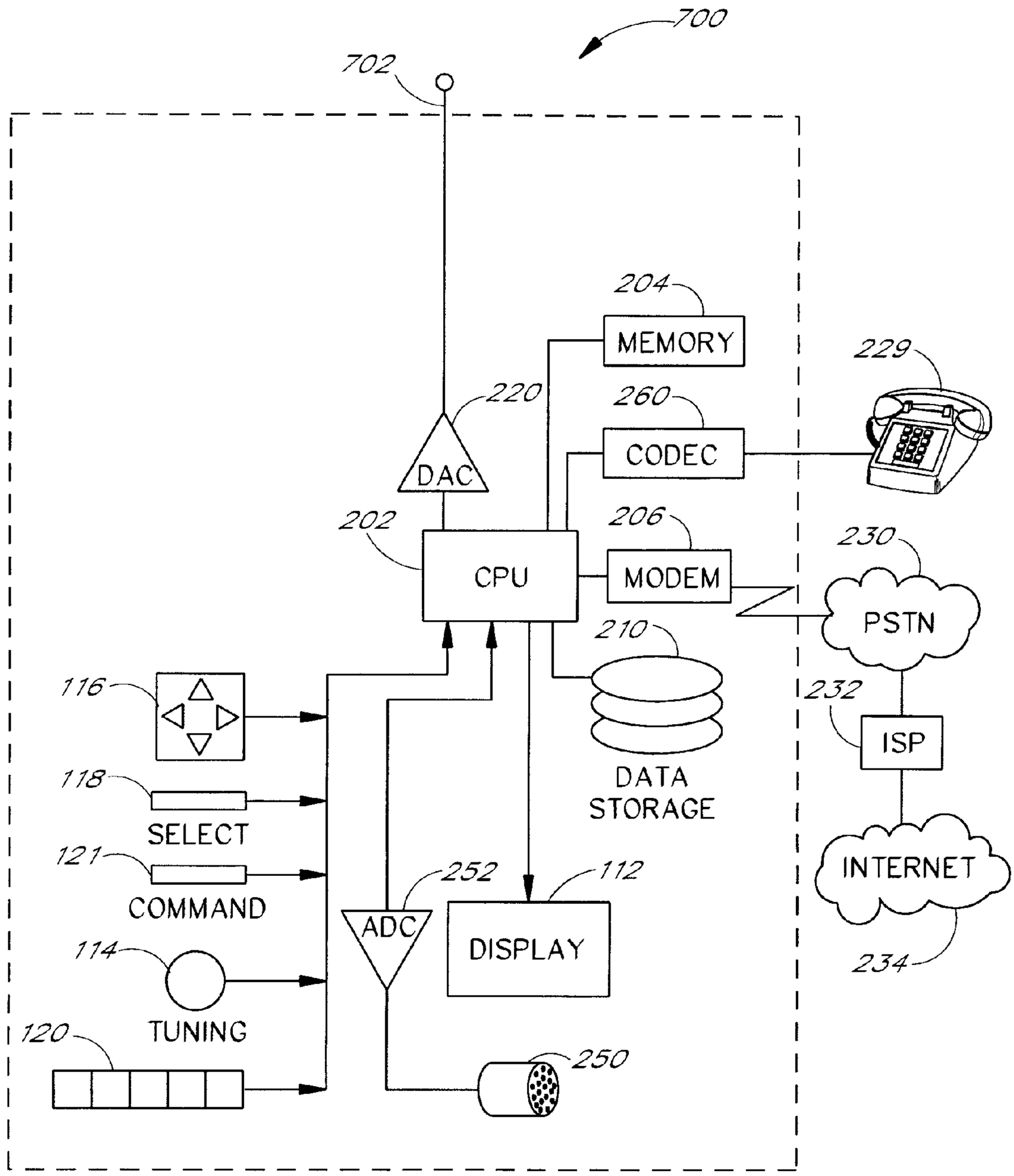
700
702
204
MEMORY
229
220
260
CODEC
DAC
202
206
230
CPU
MODEM
PSTN
210
116
232
ISP
118
DATA
STORAGE
SELECT
121
INTERNET
252
112
COMMAND
ADC
DISPLAY
114
234
TUNING
120
250

FIG. 8

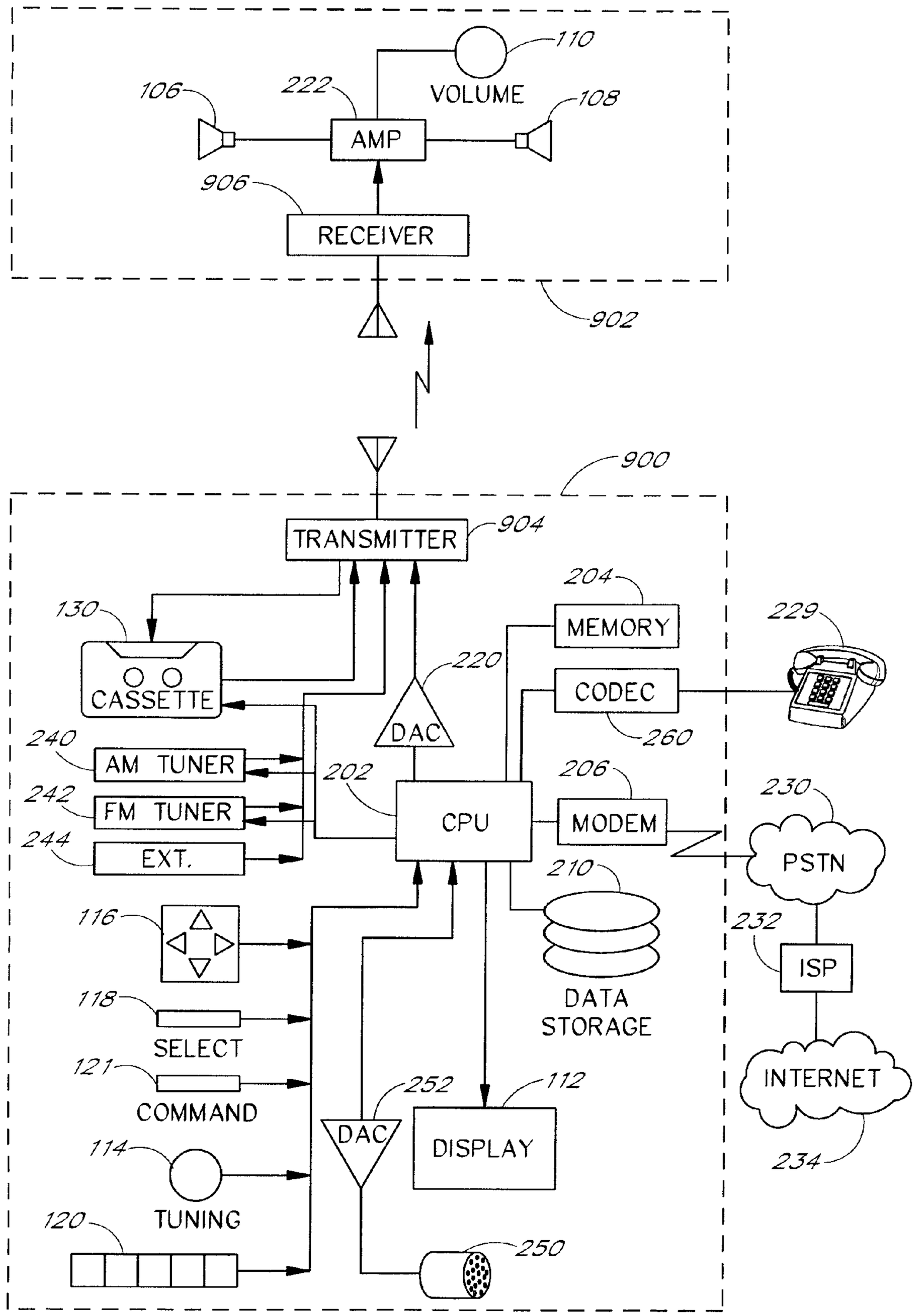
110
VOLUME
106
222
108
AMP
906
RECEIVER
902
900
TRANSMITTER
904
204
MEMORY
229
130
CASSETTE
220
CODEC
DAC
260
240
AM TUNER
202
206
230
242
FM TUNER
CPU
MODEM
244
EXT.
PSTN
210
116
232
ISP
118
DATA
STORAGE
SELECT
121
INTERNET
COMMAND
252
112
DAC
DISPLAY
114
234
TUNING
120
250

FIG. 9

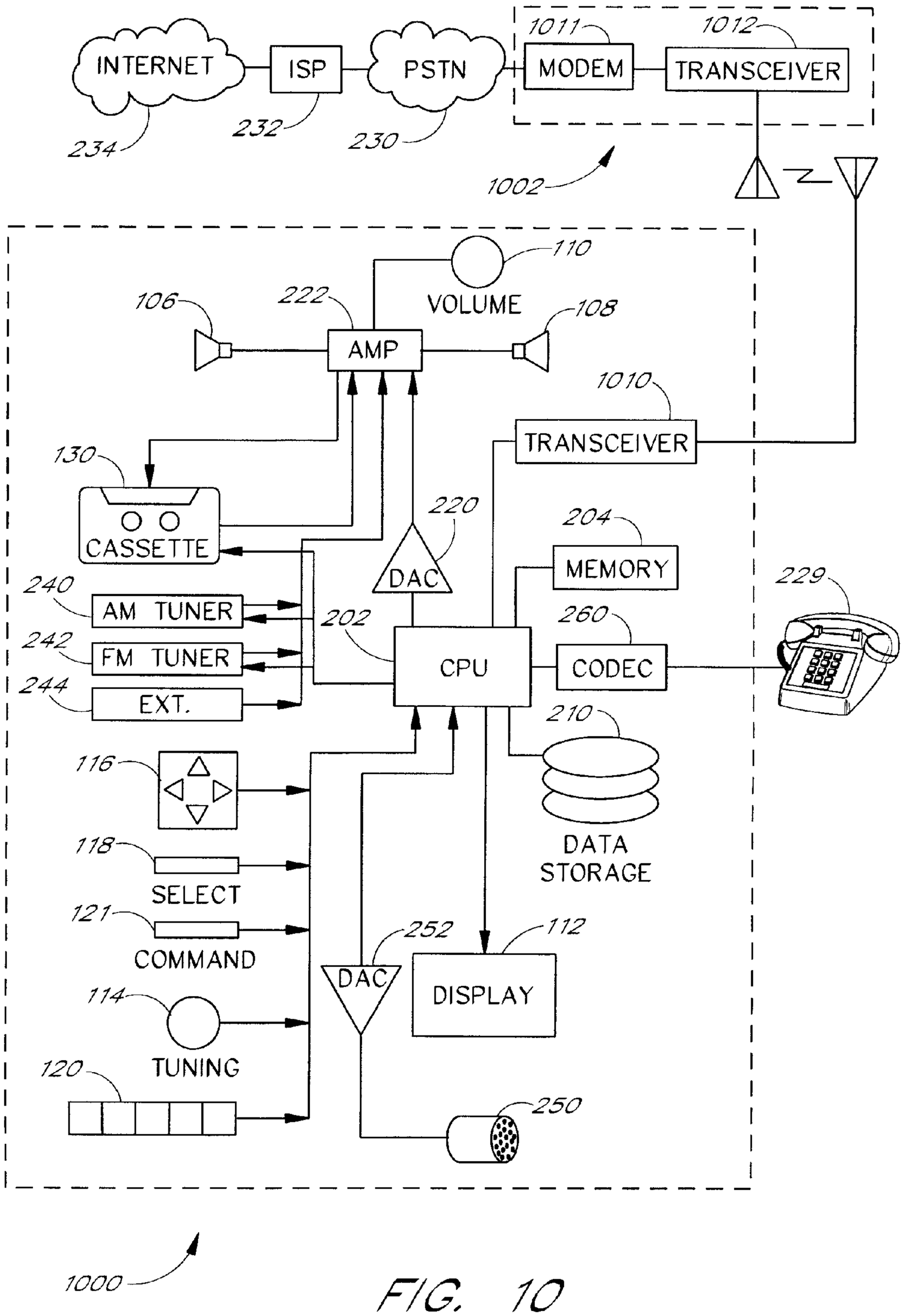
INTERNET
ISP
PSTN
MODEM
TRANSCEIVER
1011
1012
234
232
230
1002
110
VOLUME
106
222
AMP
108
1010
TRANSCEIVER
130
CASSETTE
220
DAC
204
MEMORY
229
240
AM TUNER
202
CPU
260
CODEC
242
FM TUNER
244
EXT.
210
116
DATA
STORAGE
118
SELECT
121
COMMAND
252
112
DAC
DISPLAY
114
TUNING
120
250
1000

FIG. 10

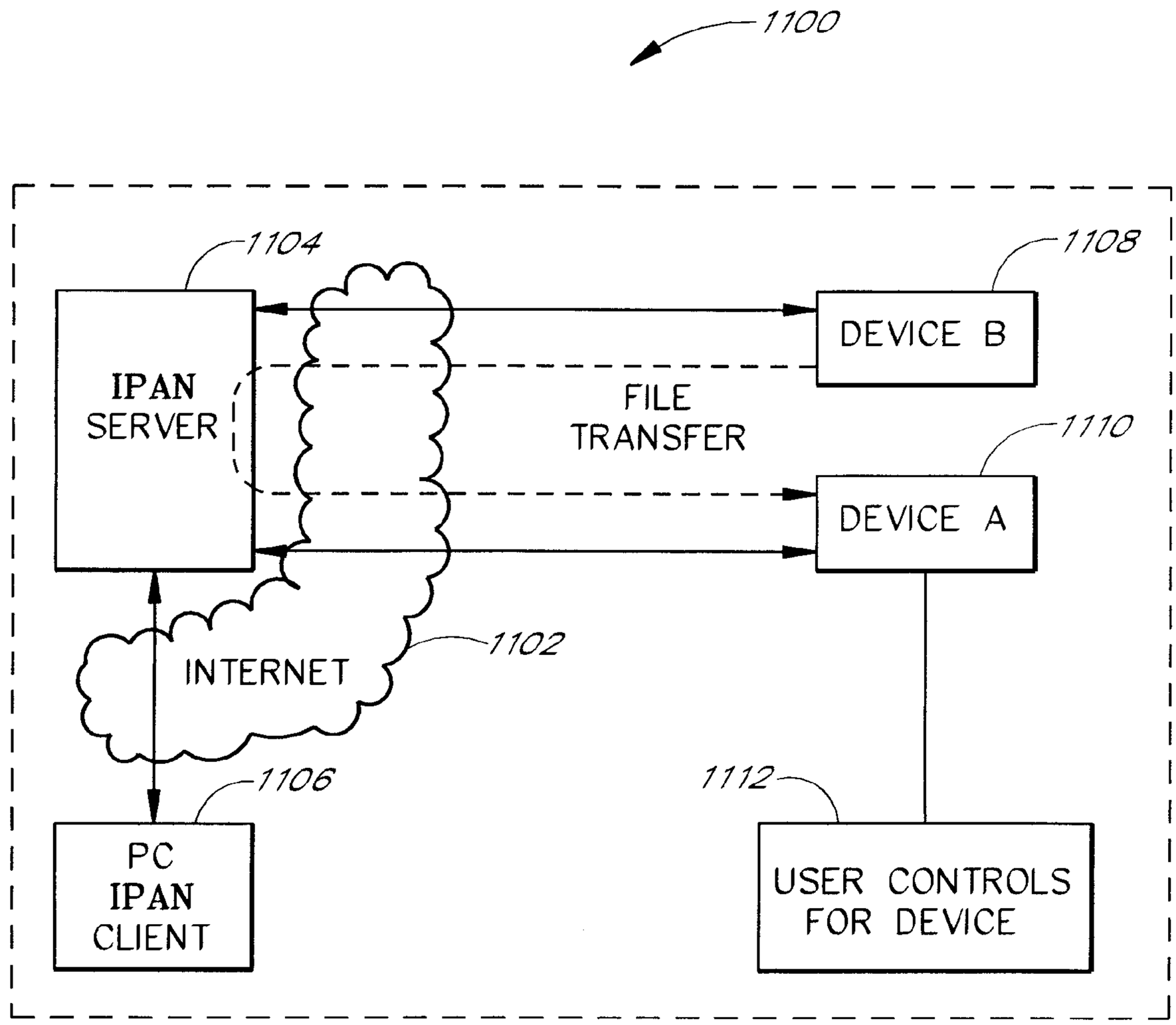
1100
1104
1108
IPAN
SERVER
DEVICE B
FILE
TRANSFER
1110
DEVICE A
INTERNET
1102
1106
1112
PC
IPAN
CLIENT
USER CONTROLS
FOR DEVICE

FIG. 11

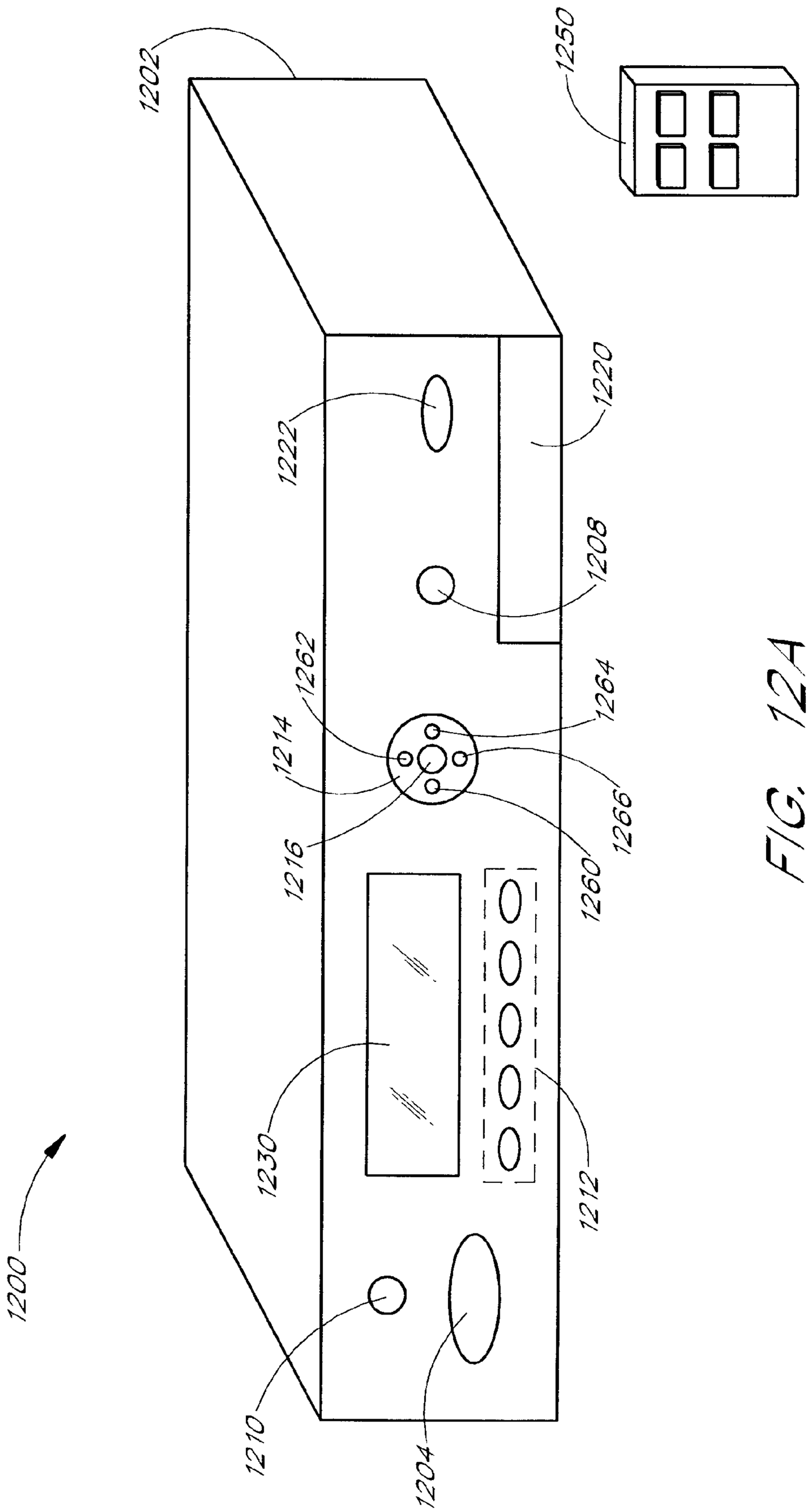
1200
1202
1204
1208
1210
1212
1214
1216
1220
1222
1230
1250
1260
1262
1264
1266

FIG. 12A

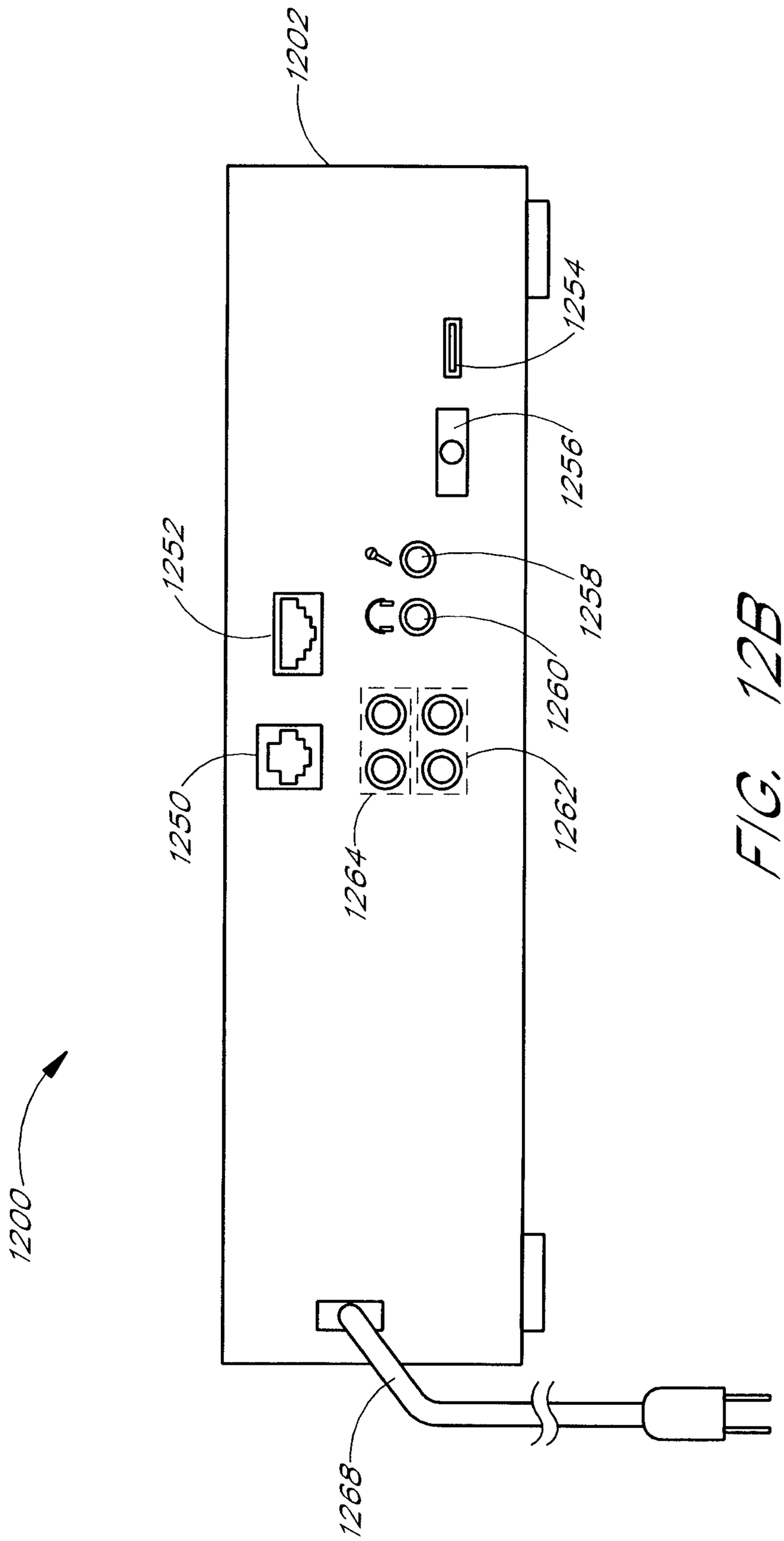

FIG. 12B

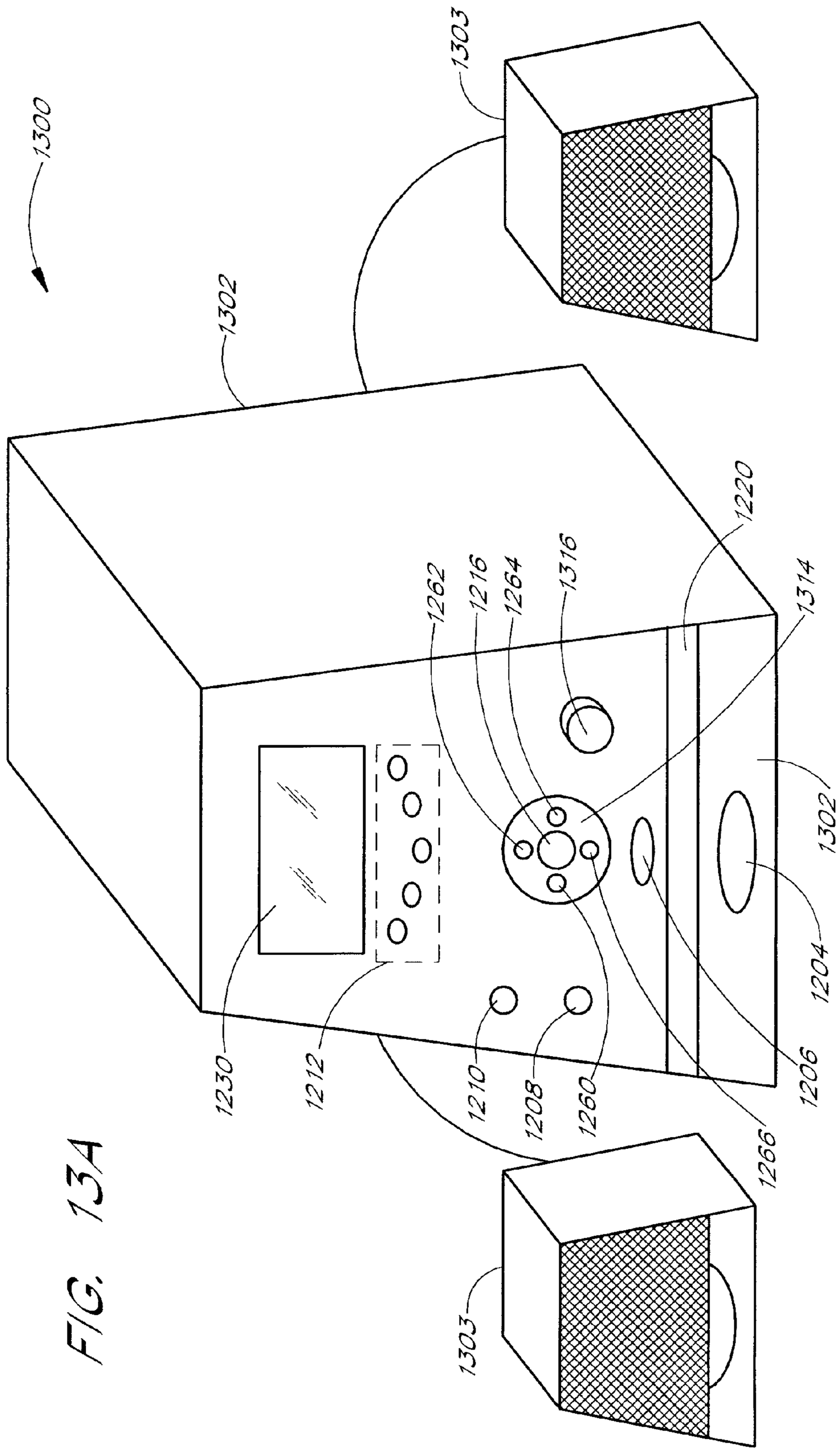
1300
1302
1303
1303
1262
1216
1264
1316
1220
1314
1302
1204
1206
1266
1260
1208
1210
1212
1230

FIG. 13A

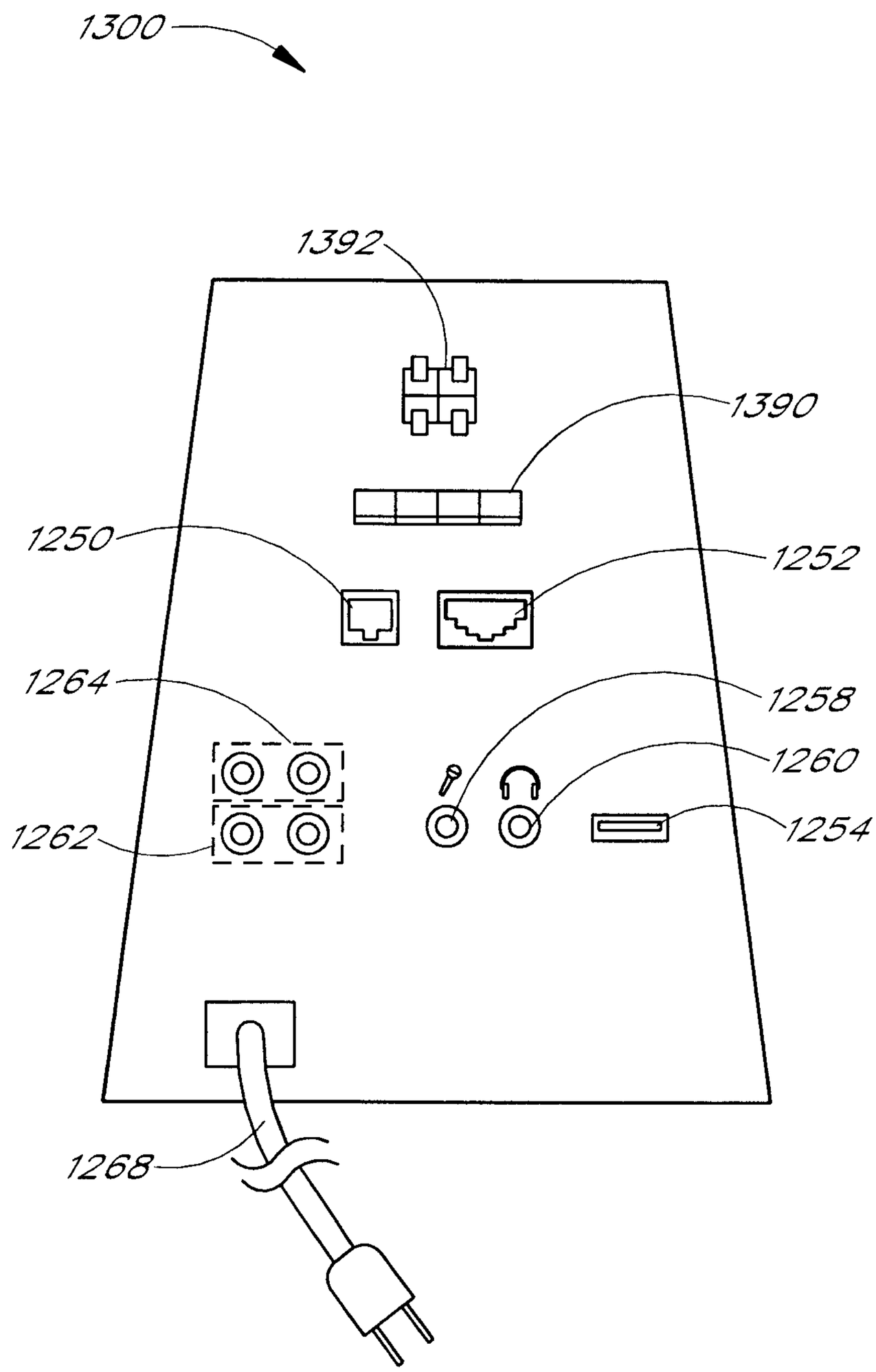

FIG. 13B

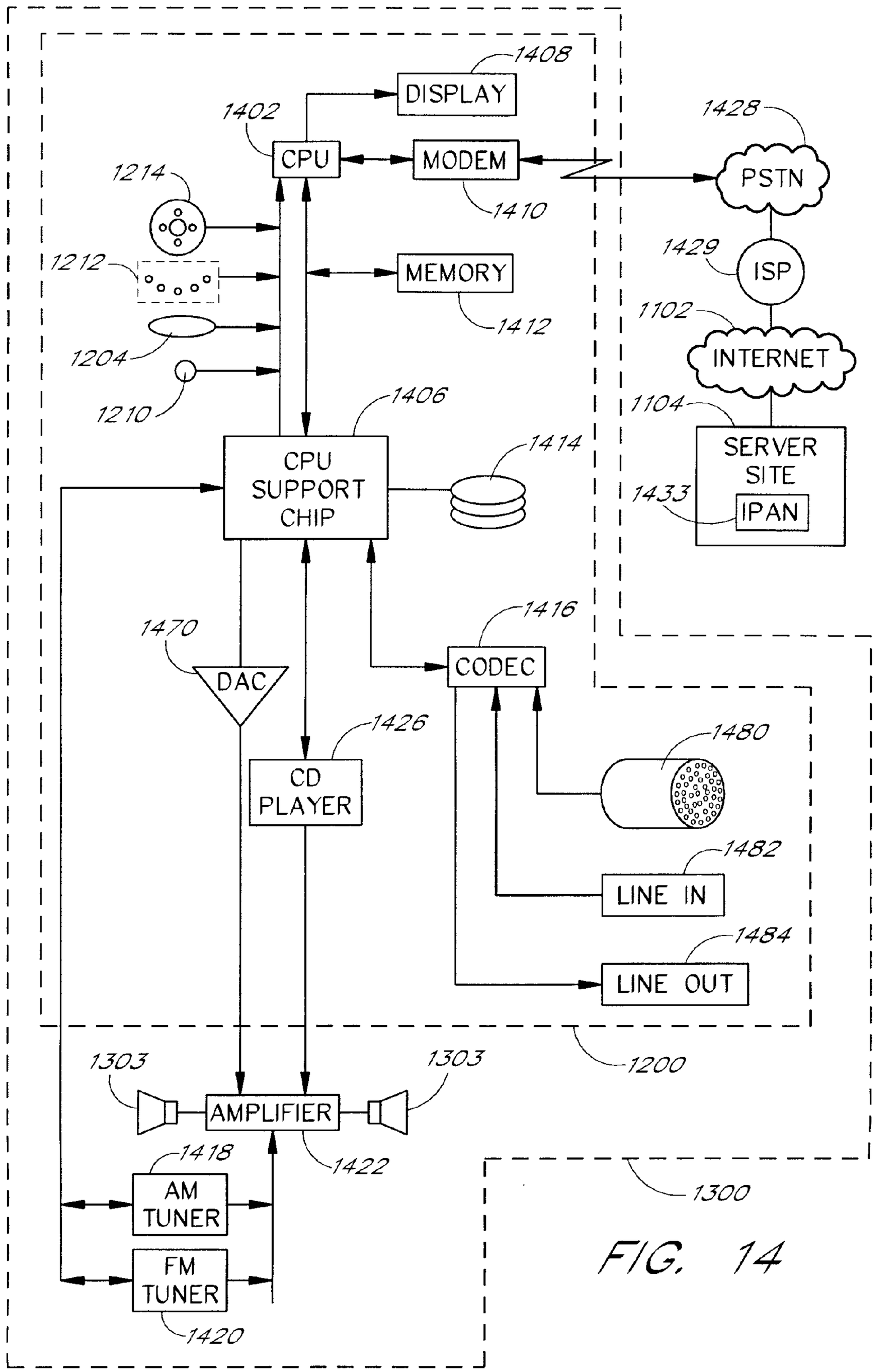
1408
DISPLAY
1402
CPU
MODEM
1410
1428
PSTN
1214
1212
MEMORY
1412
1429
ISP
1102
INTERNET
1204
1210
1406
1104
SERVER SITE
1414
CPU SUPPORT CHIP
1433
IPAN
1470
1416
DAC
CODEC
1426
1480
CD PLAYER
1482
LINE IN
1484
LINE OUT
1200
1303
1303
AMPLIFIER
1418
1422
1300
AM TUNER
FM TUNER
1420

FIG. 14

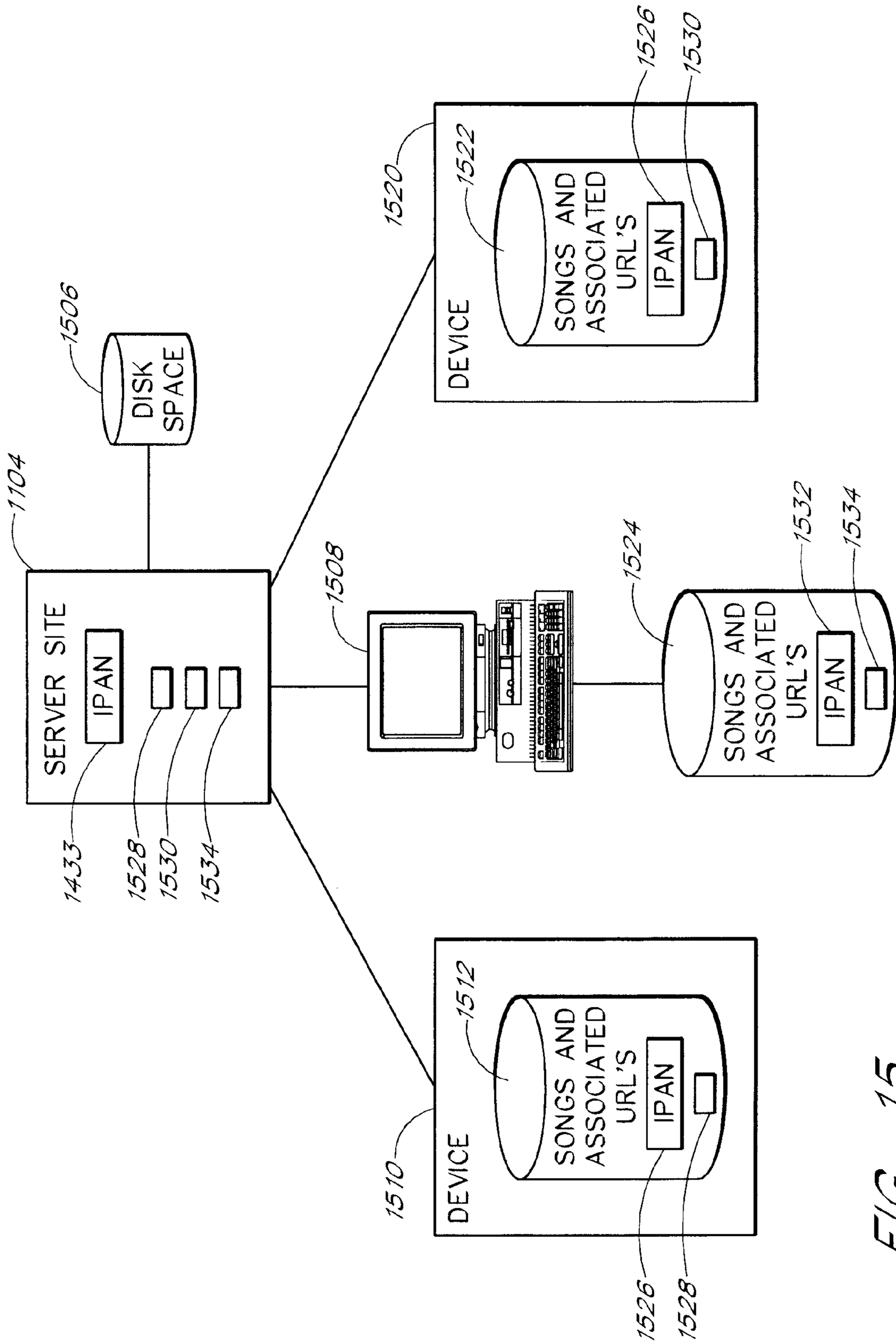
1104
SERVER SITE
IPAN
1433
1528
1530
1534
1506
DISK SPACE
1508
1520
DEVICE
1522
SONGS AND ASSOCIATED URL'S
IPAN
1526
1530
1524
SONGS AND ASSOCIATED URL'S
IPAN
1532
1534
1510
DEVICE
1512
SONGS AND ASSOCIATED URL'S
IPAN
1526
1528

FIG. 15

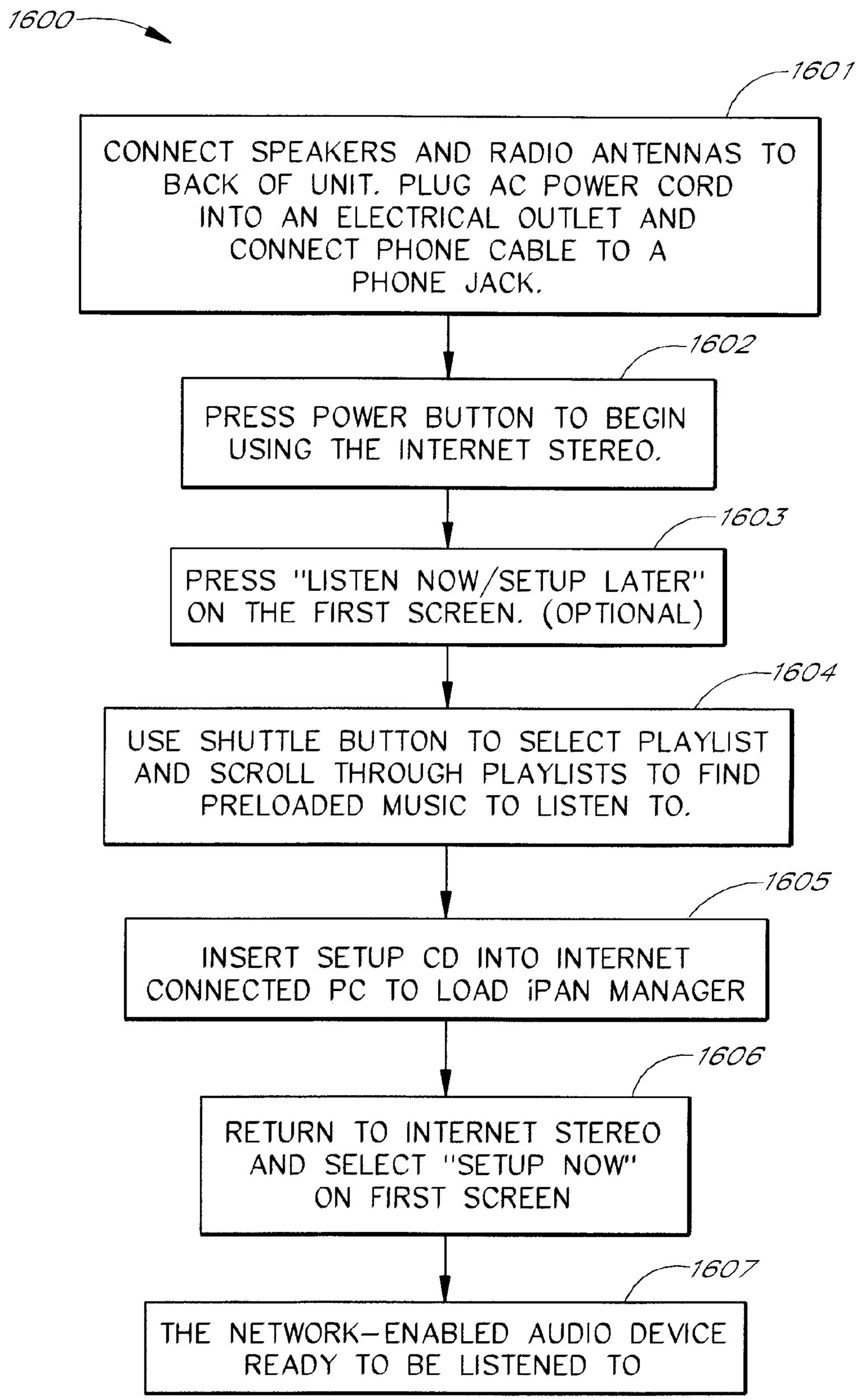
1600
1601
CONNECT SPEAKERS AND RADIO ANTENNAS TO BACK OF UNIT. PLUG AC POWER CORD INTO AN ELECTRICAL OUTLET AND CONNECT PHONE CABLE TO A PHONE JACK.
1602
PRESS POWER BUTTON TO BEGIN USING THE INTERNET STEREO.
1603
PRESS "LISTEN NOW/SETUP LATER" ON THE FIRST SCREEN. (OPTIONAL)
1604
USE SHUTTLE BUTTON TO SELECT PLAYLIST AND SCROLL THROUGH PLAYLISTS TO FIND PRELOADED MUSIC TO LISTEN TO.
1605
INSERT SETUP CD INTO INTERNET CONNECTED PC TO LOAD iPAN MANAGER
1606
RETURN TO INTERNET STEREO AND SELECT "SETUP NOW" ON FIRST SCREEN
1607
THE NETWORK-ENABLED AUDIO DEVICE READY TO BE LISTENED TO

FIG. 16

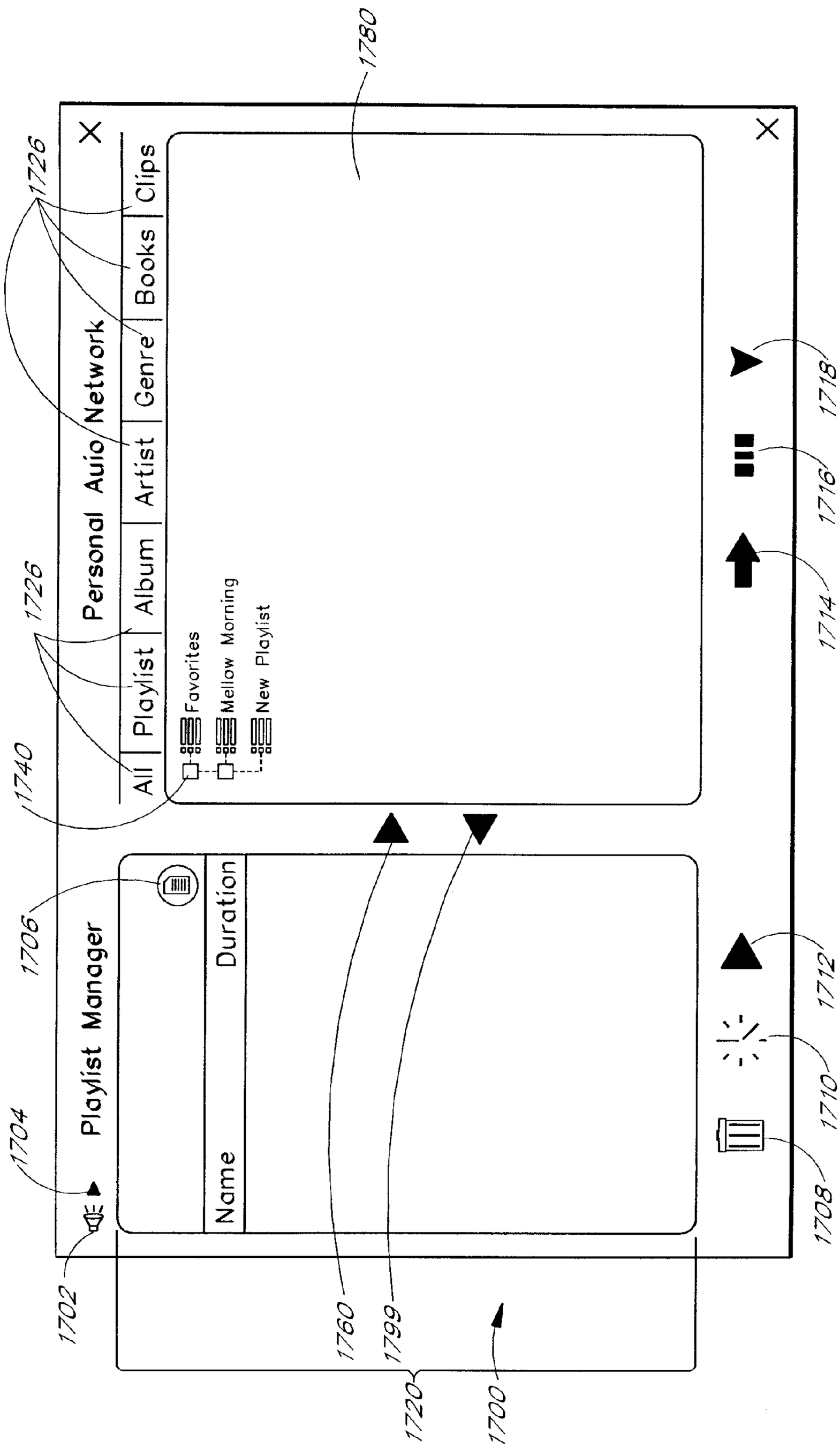
1780
1726
1726
1740
1706
1704
1702
Personal Auio Network
All
Playlist
Album
Artist
Genre
Books
Clips
Favorites
Mellow Morning
New Playlist
Playlist Manager
Name
Duration
1760
1799
1720
1700
1718
1716
1714
1712
1710
1708

FIG. 17A

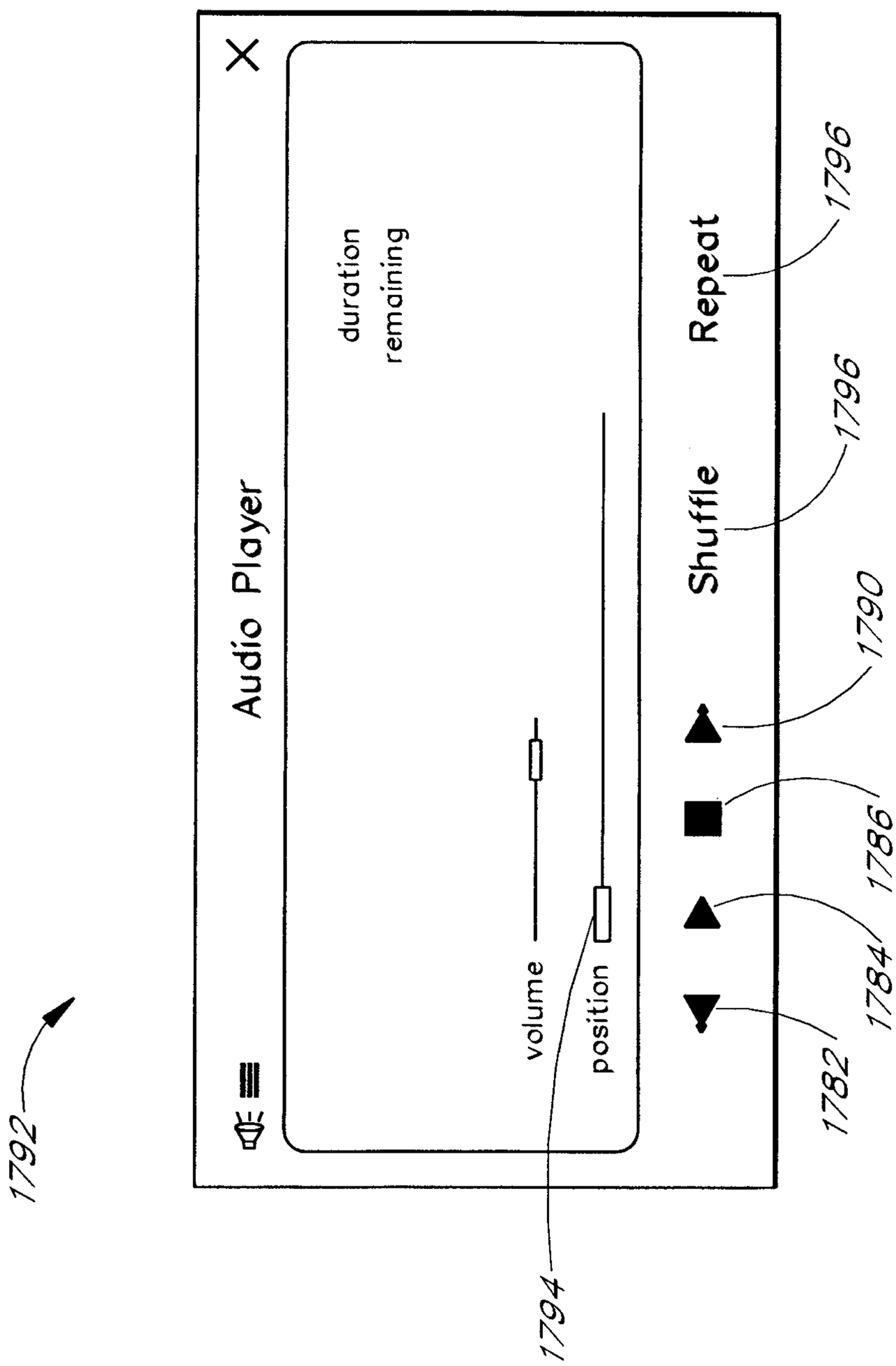
Audio Player
duration
remaining
volume
position
Shuffle
Repeat
1792
1794
1796
1796
1790
1786
1784
1782

FIG. 17B

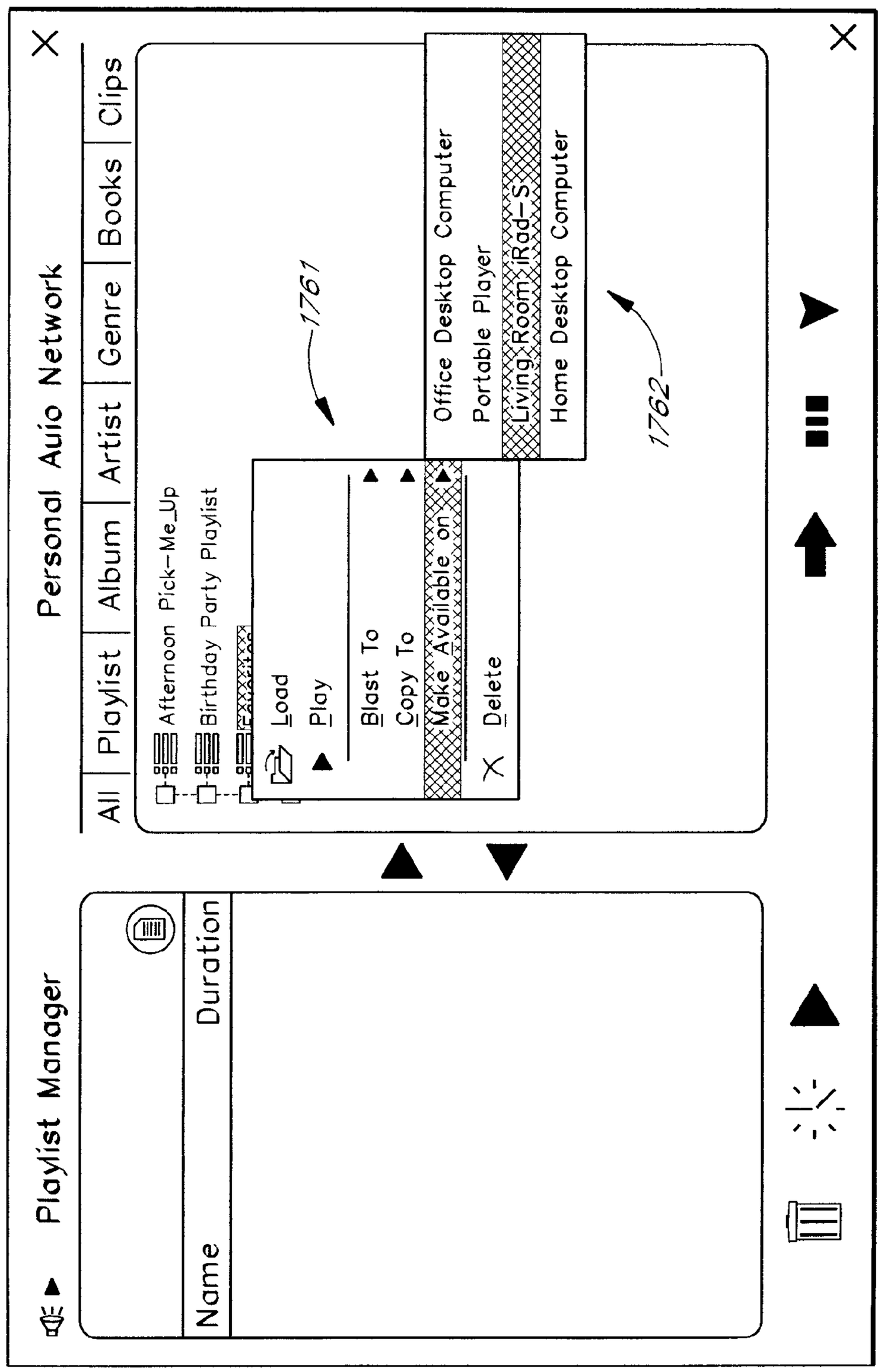
Playlist Manager
Name
Duration
Personal Auio Network
All
Playlist
Album
Artist
Genre
Books
Clips
Afternoon Pick-Me_Up
Birthday Party Playlist
Load
Play
Blast To
Copy To
Make Available on
Delete
Office Desktop Computer
Portable Player
Living Room iRad-S
Home Desktop Computer
1761
1762
1700

FIG. 17C

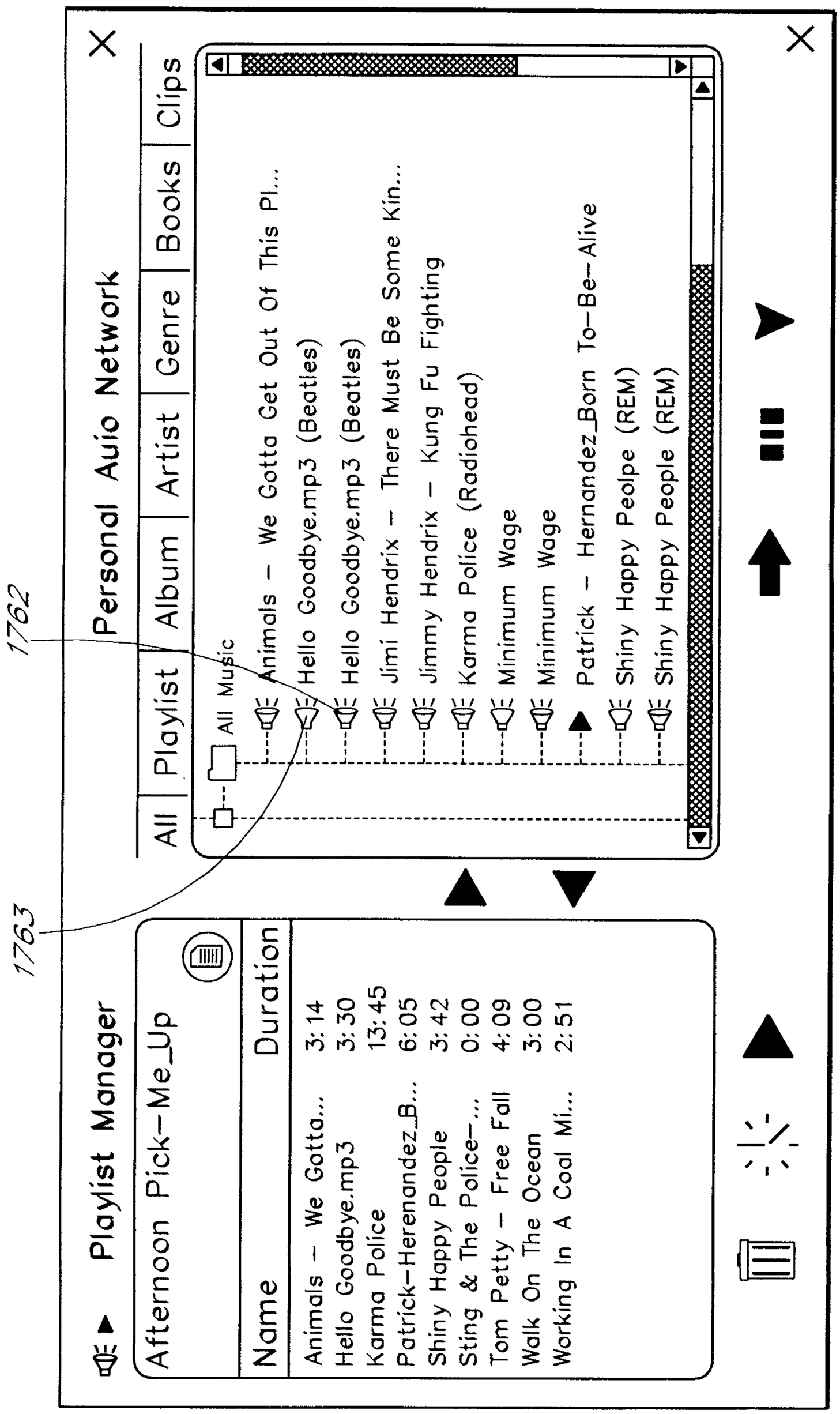
1762
1763
Playlist Manager
Afternoon Pick-Me_Up
Name
Duration
Animals - We Gotta... 3:14
Hello Goodbye.mp3 3:30
Karma Police 13:45
Patrick-Herenandez_B... 6:05
Shiny Happy People 3:42
Sting & The Police-... 0:00
Tom Petty - Free Fall 4:09
Walk On The Ocean 3:00
Working In A Coal Mi... 2:51
Personal Auio Network
All
Playlist
Album
Artist
Genre
Books
Clips
All Music
Animals - We Gotta Get Out Of This Pl...
Hello Goodbye.mp3 (Beatles)
Hello Goodbye.mp3 (Beatles)
Jimi Hendrix - There Must Be Some Kin...
Jimmy Hendrix - Kung Fu Fighting
Karma Police (Radiohead)
Minimum Wage
Minimum Wage
Patrick - Hernandez_Born To-Be-Alive
Shiny Happy Peolpe (REM)
Shiny Happy People (REM)

FIG. 17D

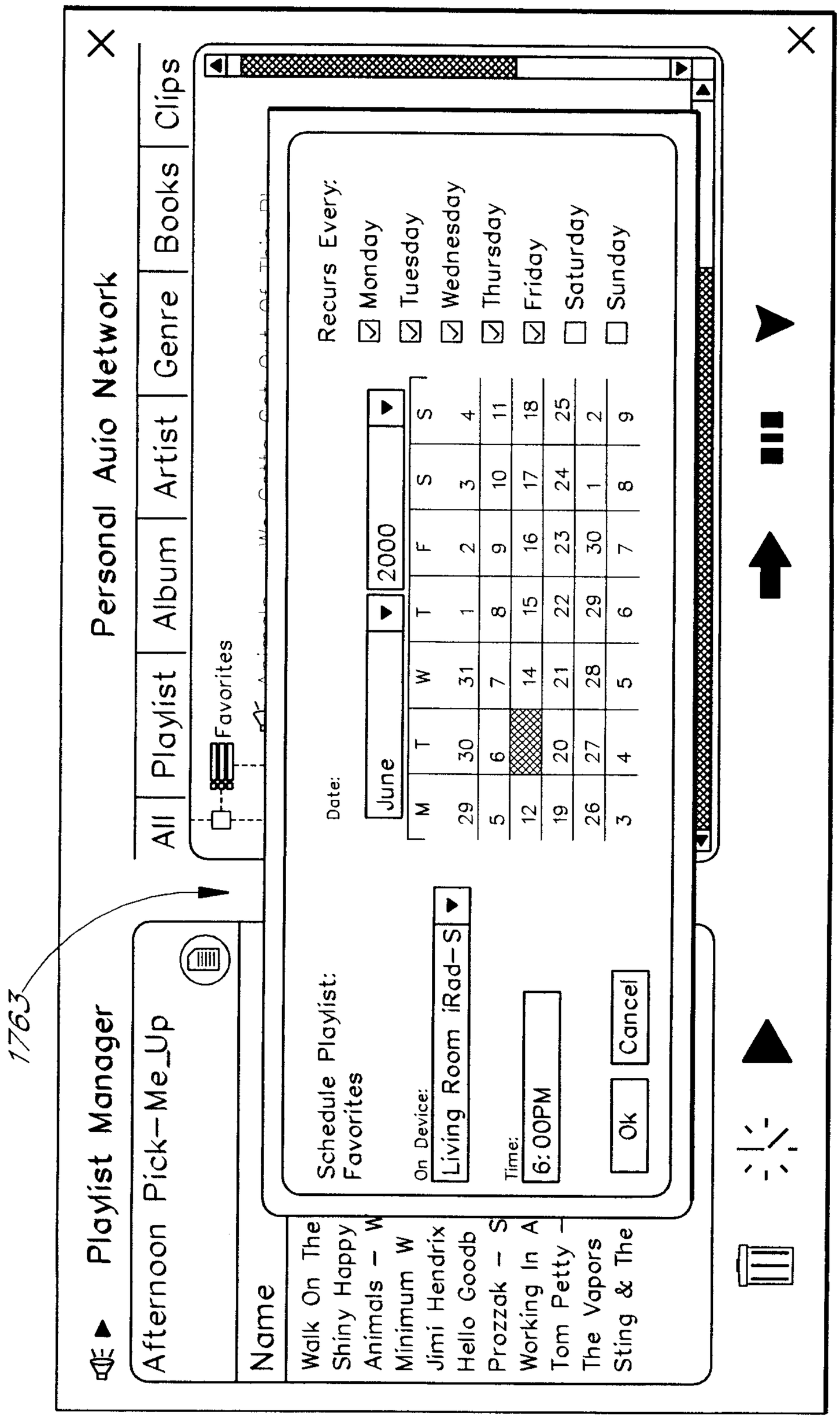
1763
Playlist Manager
Afternoon Pick-Me_Up
Personal Auio Network
All
Playlist
Album
Artist
Genre
Books
Clips
Favorites
Name
Walk On The
Shiny Happy
Animals - W
Minimum W
Jimi Hendrix
Hello Goodb
Prozzak - S
Working In A
Tom Petty -
The Vapors
Sting & The
Schedule Playlist:
Favorites
On Device:
Living Room iRad-S
Time:
6:00PM
Ok
Cancel
Date:
June
2000
M T W T F S S
29 30 31 1 2 3 4
5 6 7 8 9 10 11
12 14 15 16 17 18
19 20 21 22 23 24 25
26 27 28 29 30 1 2
3 4 5 6 7 8 9
Recurs Every:
Monday
Tuesday
Wednesday
Thursday
Friday
Saturday
Sunday

FIG. 17E

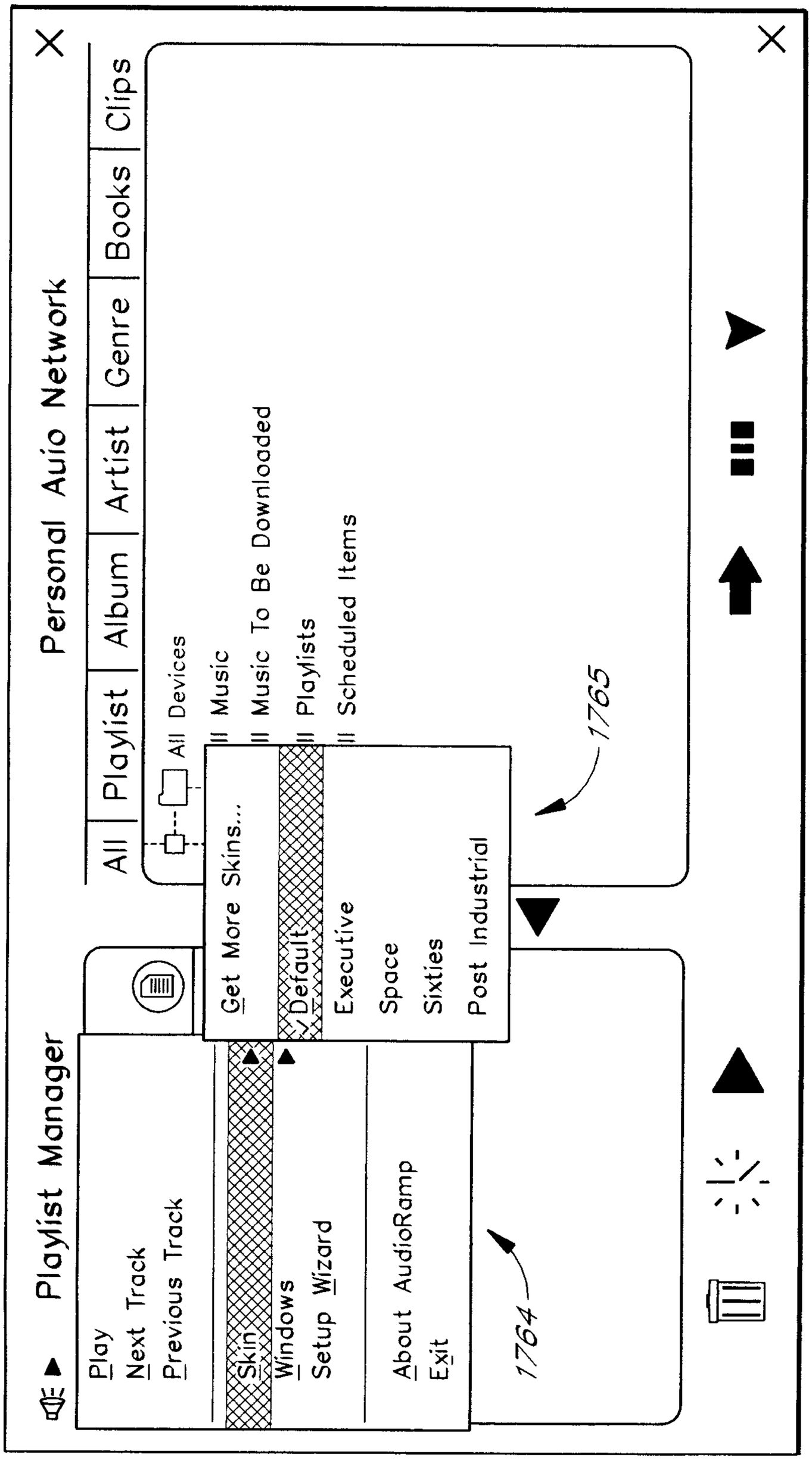
Playlist Manager
Personal Auio Network
All
Playlist
Album
Artist
Genre
Books
Clips
Play
Next Track
Previous Track
Skin
Windows
Setup Wizard
About AudioRamp
Exit
Get More Skins...
Default
Executive
Space
Sixties
Post Industrial
All Devices
Music
Music To Be Downloaded
Playlists
Scheduled Items
1764
1765

FIG. 17F

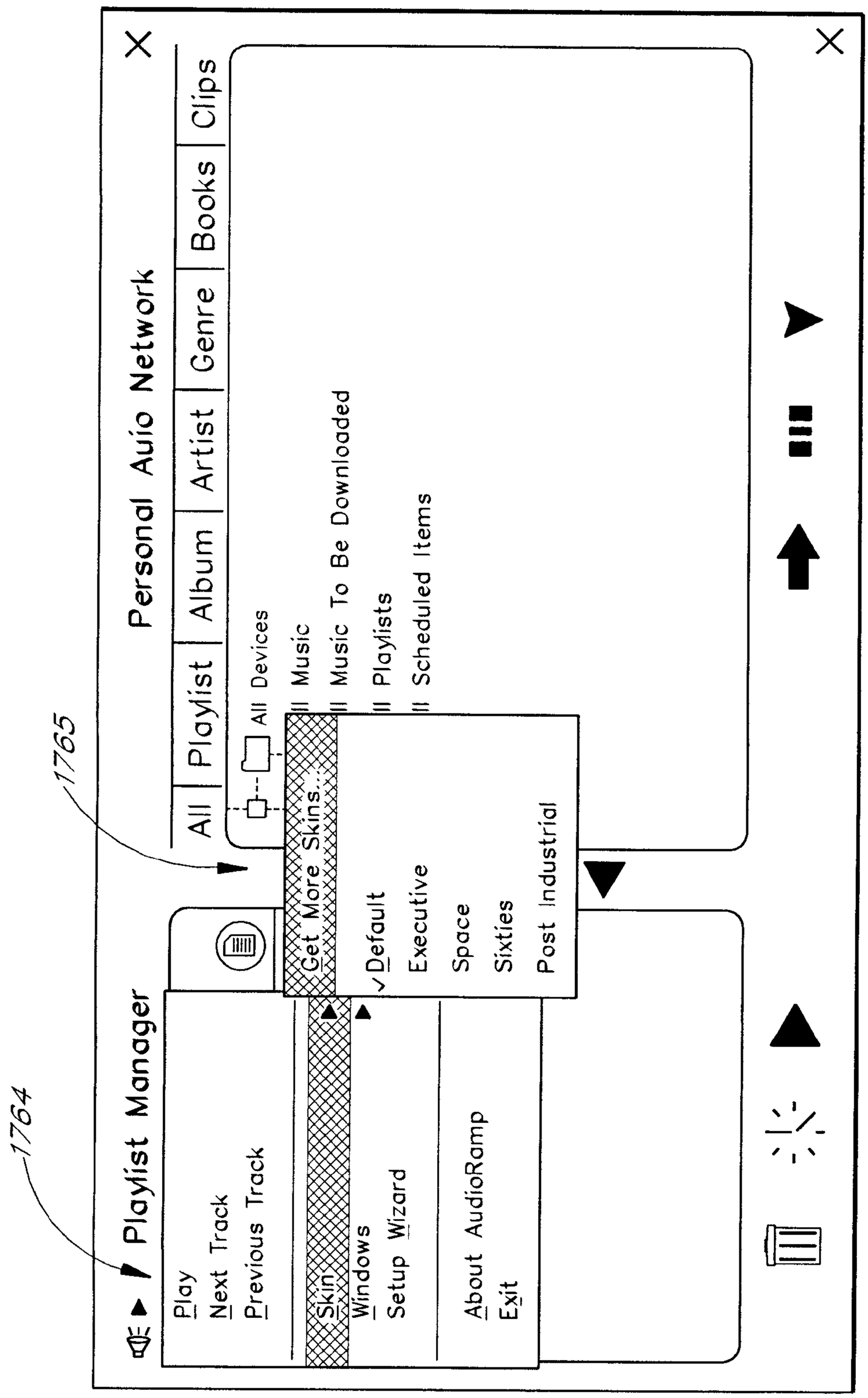
1764
1765
Playlist Manager
Personal Auio Network
All
Playlist
Album
Artist
Genre
Books
Clips
Play
Next Track
Previous Track
Skin
Windows
Setup Wizard
About AudioRamp
Exit
All Devices
Music
Music To Be Downloaded
Playlists
Scheduled Items
Get More Skins...
Default
Executive
Space
Sixties
Post Industrial

FIG. 17G

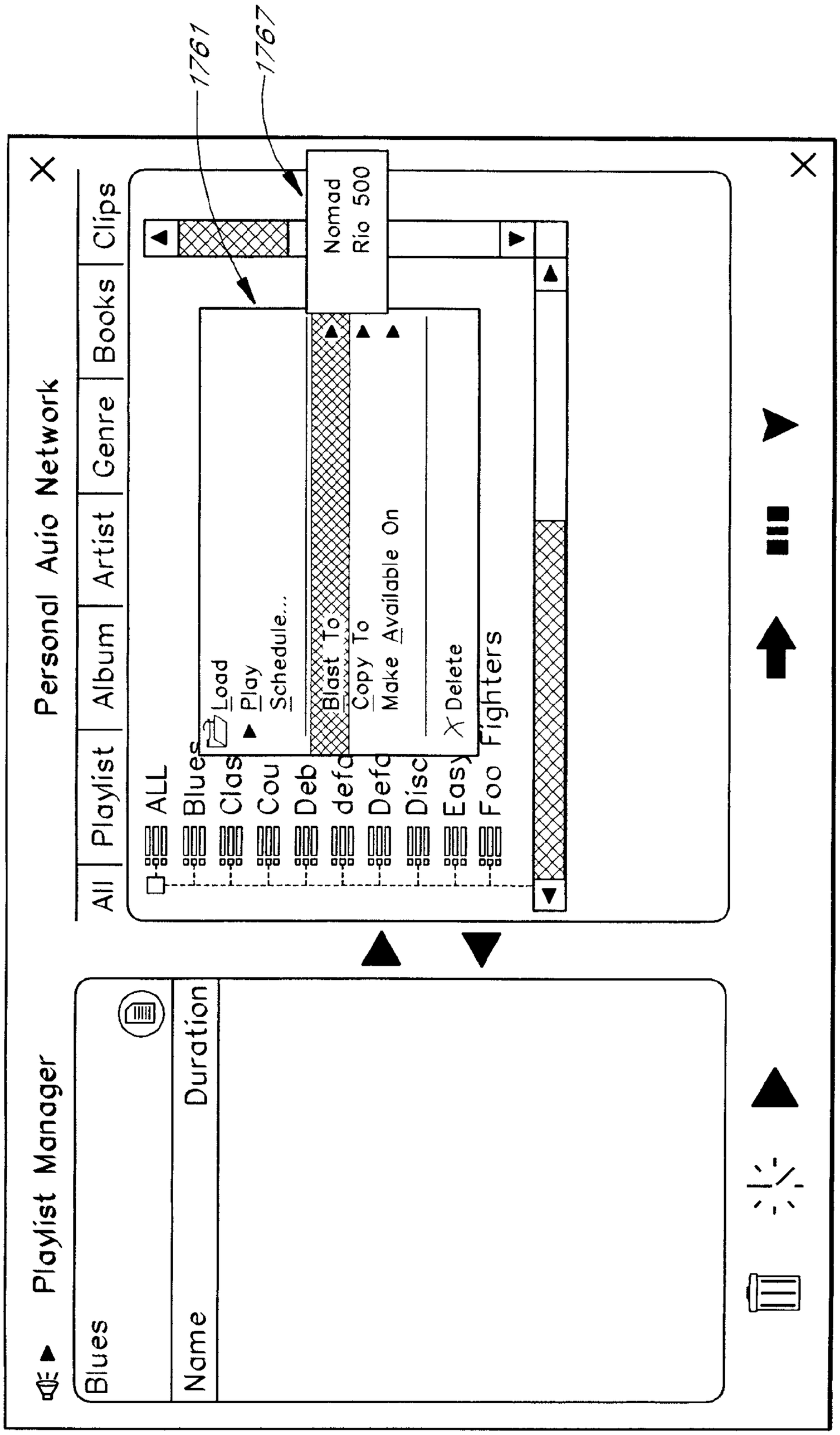
1761
1767
Personal Auio Network
All
Playlist
Album
Artist
Genre
Books
Clips
Nomad Rio 500
ALL
Blues
Clas
Cou
Deb
defa
Defa
Disc
Easy
Foo Fighters
Load
Play
Schedule...
Blast To
Copy To
Make Available On
Delete
Playlist Manager
Blues
Name
Duration

FIG. 17H

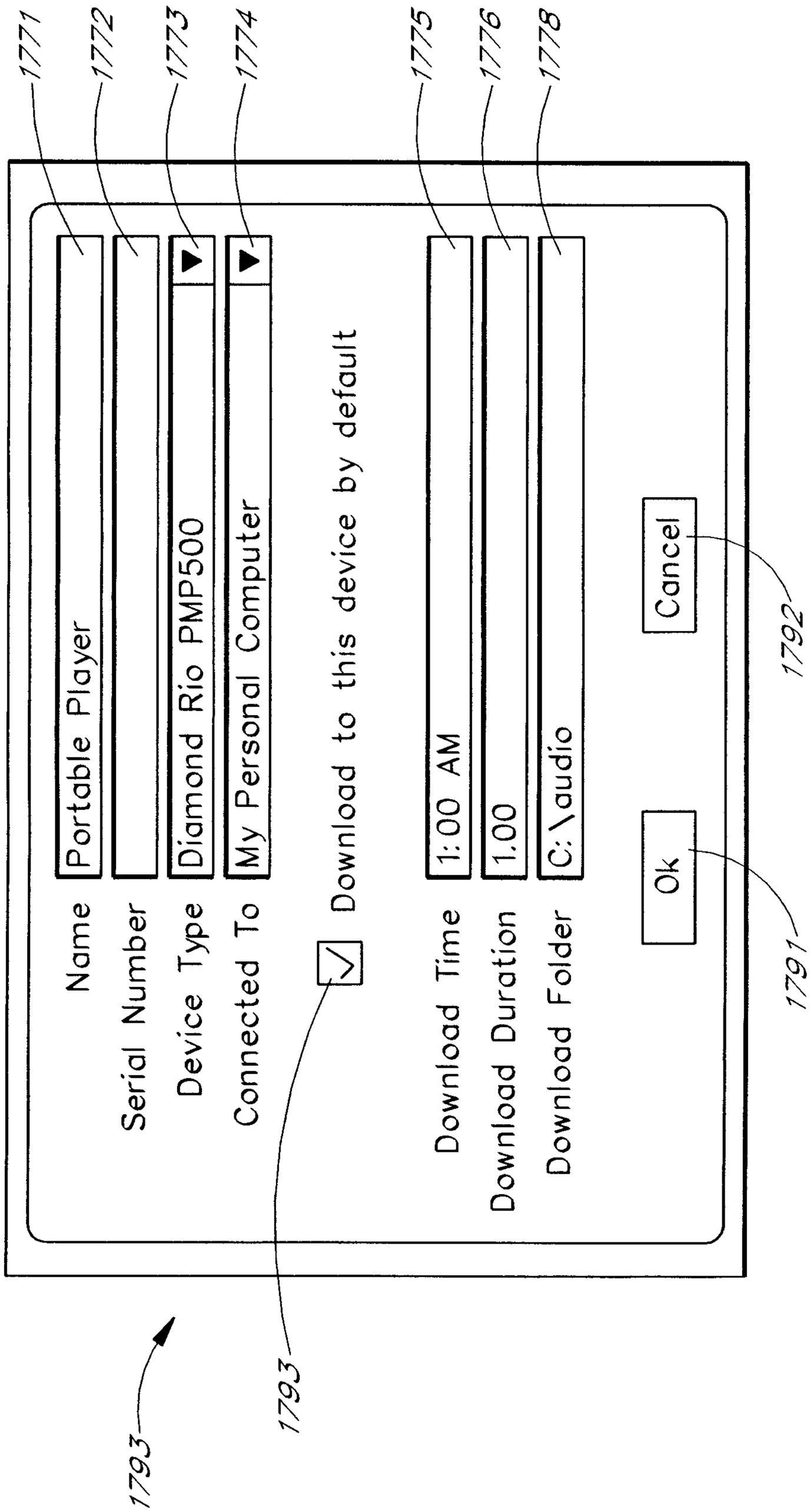
1771
1772
1773
1774
1775
1776
1778
Name
Portable Player
Serial Number
Device Type
Diamond Rio PMP500
Connected To
My Personal Computer
Download to this device by default
Download Time
1:00 AM
Download Duration
1.00
Download Folder
C:\audio
Ok
Cancel
1791
1792
1793
1793

FIG. 171

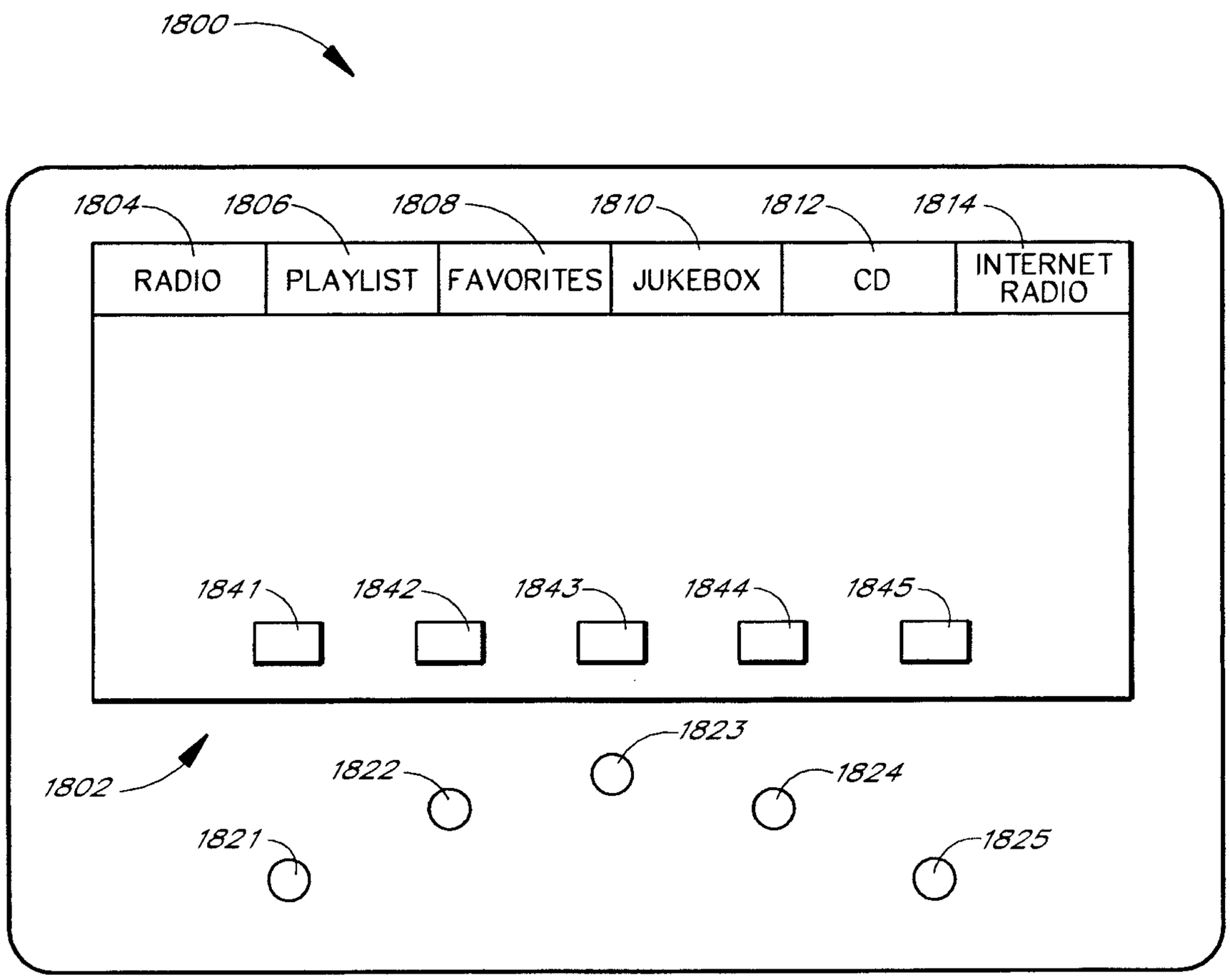
1800
1804
1806
1808
1810
1812
1814
RADIO
PLAYLIST
FAVORITES
JUKEBOX
CD
INTERNET RADIO
1841
1842
1843
1844
1845
1823
1822
1824
1802
1821
1825

FIG. 18A

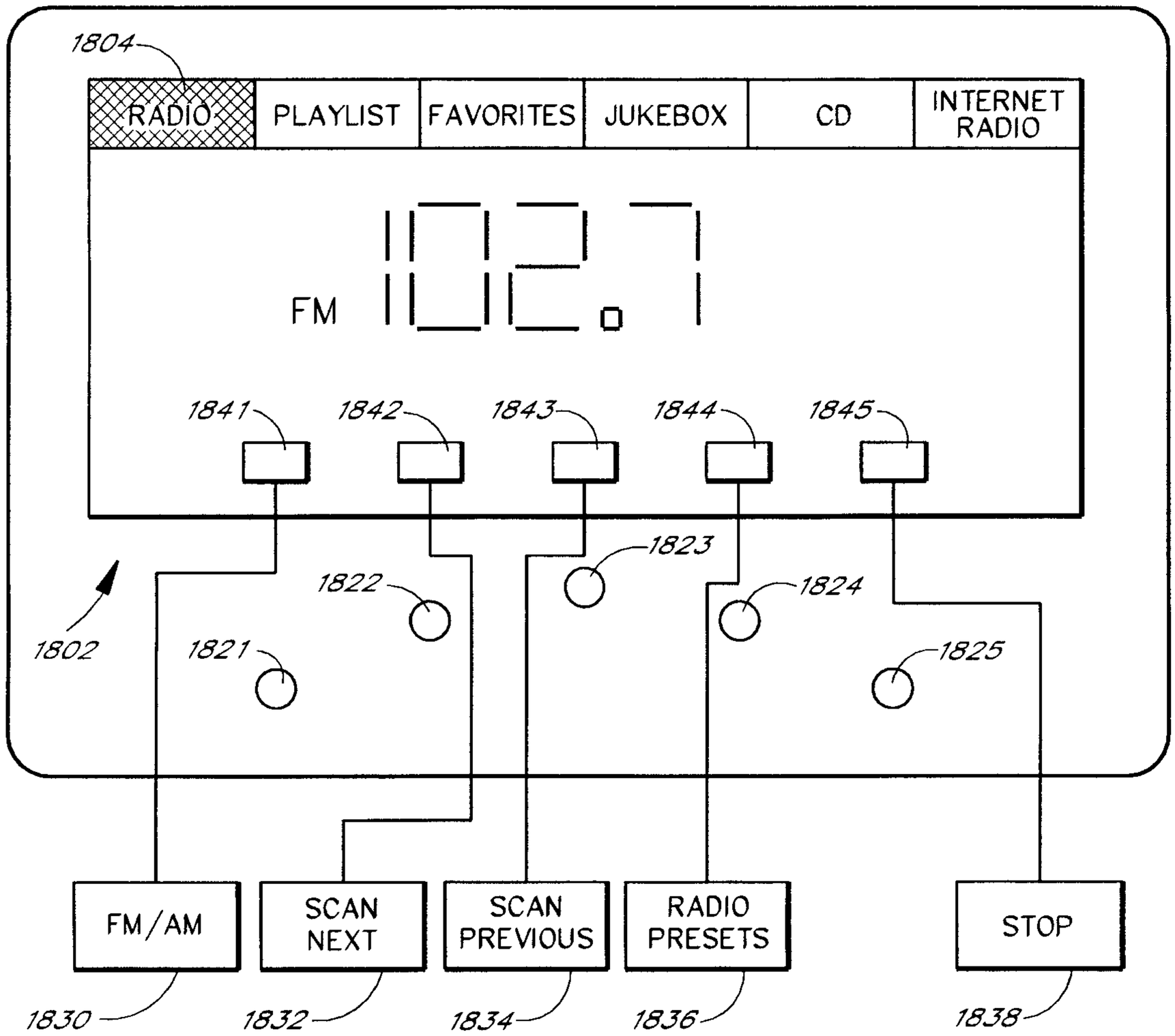
1804
RADIO
PLAYLIST
FAVORITES
JUKEBOX
CD
INTERNET RADIO
FM
102.0
1841
1842
1843
1844
1845
1823
1822
1824
1802
1821
1825
FM/AM
SCAN NEXT
SCAN PREVIOUS
RADIO PRESETS
STOP
1830
1832
1834
1836
1838

FIG. 18B

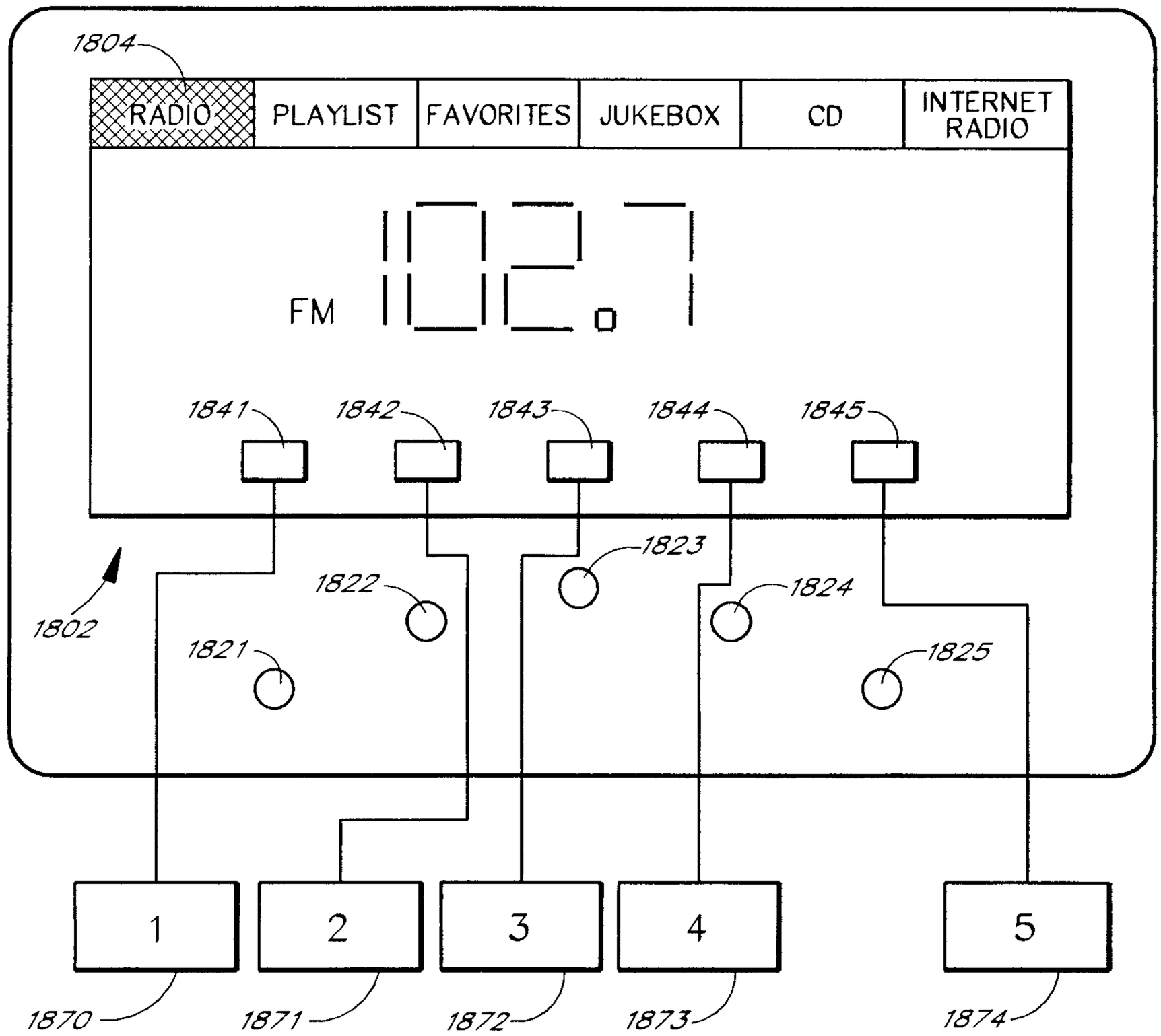
1804
RADIO
PLAYLIST
FAVORITES
JUKEBOX
CD
INTERNET RADIO
FM
1841
1842
1843
1844
1845
1823
1822
1824
1802
1821
1825
1
2
3
4
5
1870
1871
1872
1873
1874

FIG. 18C

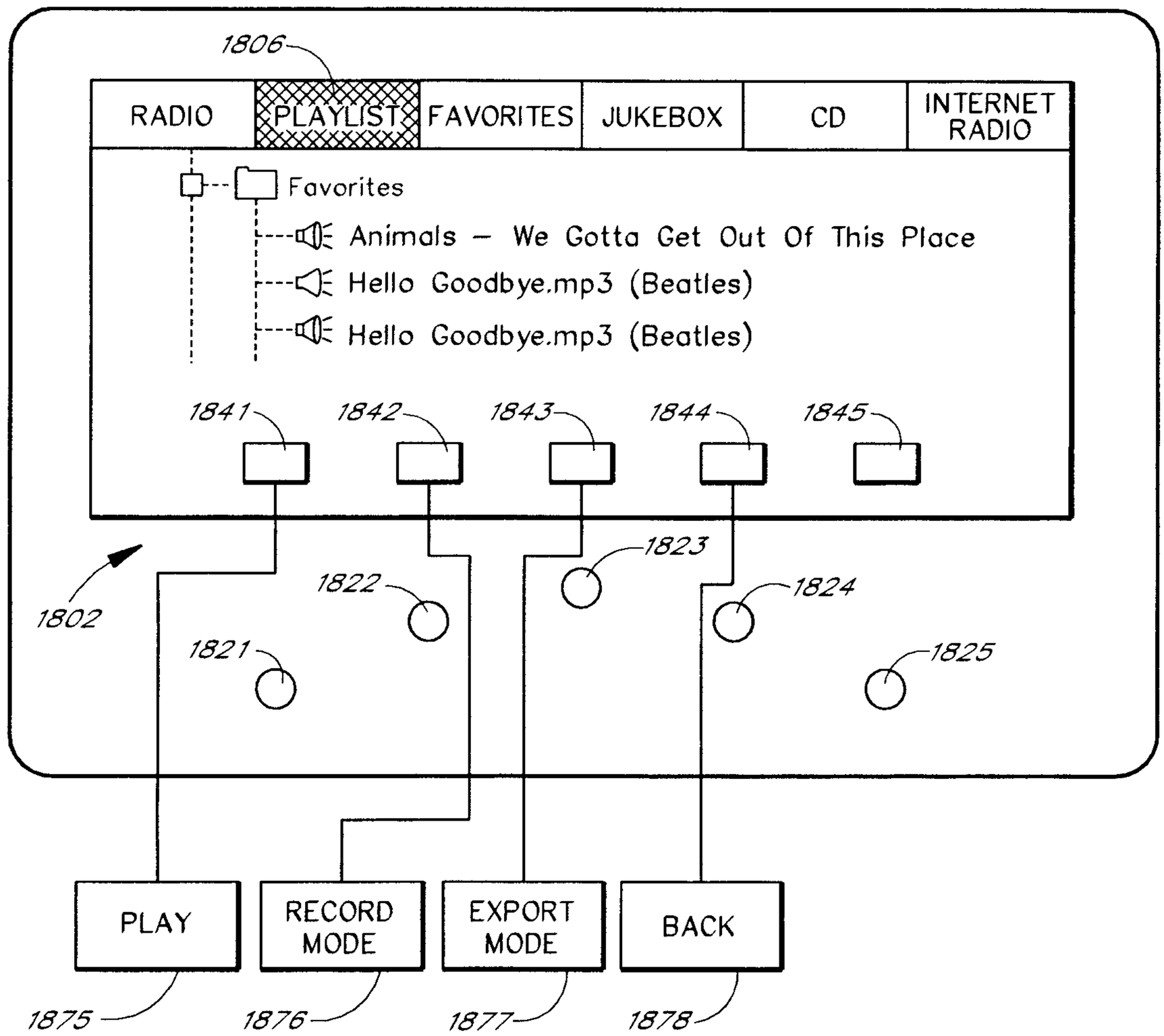
1806
RADIO
PLAYLIST
FAVORITES
JUKEBOX
CD
INTERNET RADIO
Favorites
Animals – We Gotta Get Out Of This Place
Hello Goodbye.mp3 (Beatles)
Hello Goodbye.mp3 (Beatles)
1841
1842
1843
1844
1845
1802
1821
1822
1823
1824
1825
PLAY
RECORD MODE
EXPORT MODE
BACK
1875
1876
1877
1878

FIG. 18D

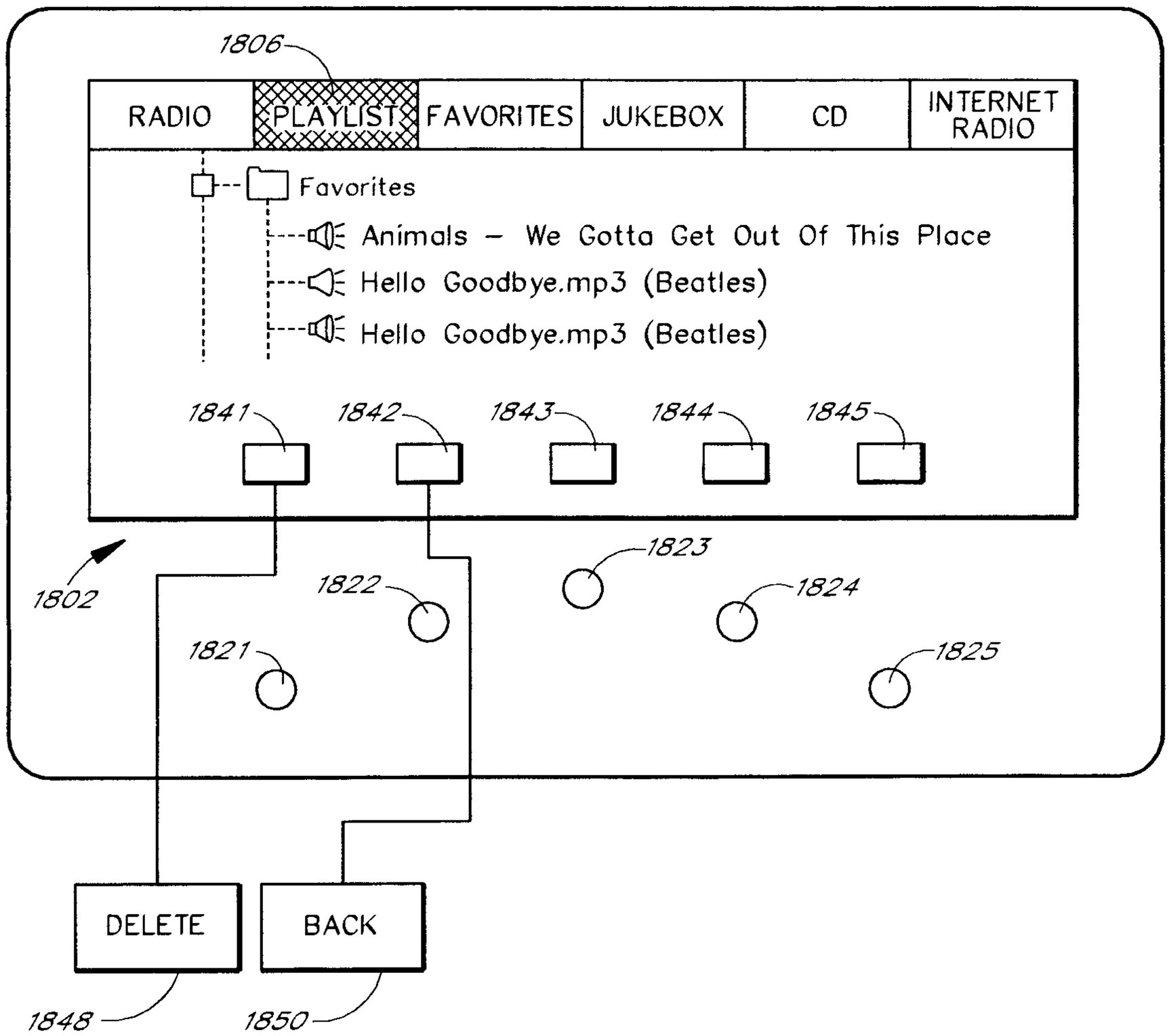
1806
RADIO
PLAYLIST
FAVORITES
JUKEBOX
CD
INTERNET RADIO
Favorites
Animals – We Gotta Get Out Of This Place
Hello Goodbye.mp3 (Beatles)
Hello Goodbye.mp3 (Beatles)
1841
1842
1843
1844
1845
1802
1823
1822
1824
1821
1825
DELETE
BACK
1848
1850

FIG. 18E

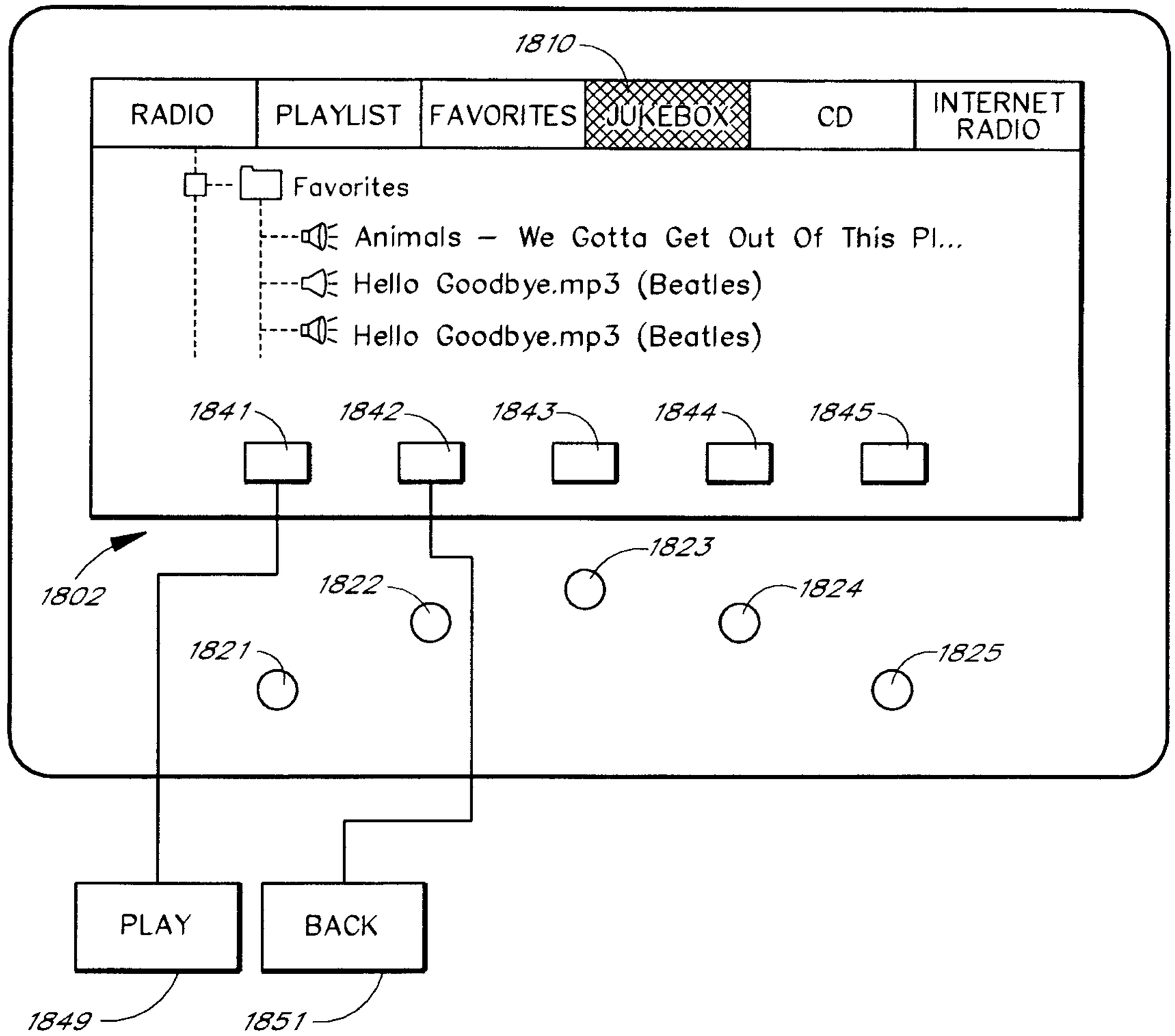
1810
RADIO
PLAYLIST
FAVORITES
JUKEBOX
CD
INTERNET RADIO
Favorites
Animals – We Gotta Get Out Of This Pl...
Hello Goodbye.mp3 (Beatles)
Hello Goodbye.mp3 (Beatles)
1841
1842
1843
1844
1845
1802
1822
1823
1824
1821
1825
PLAY
BACK
1849
1851

FIG. 18F

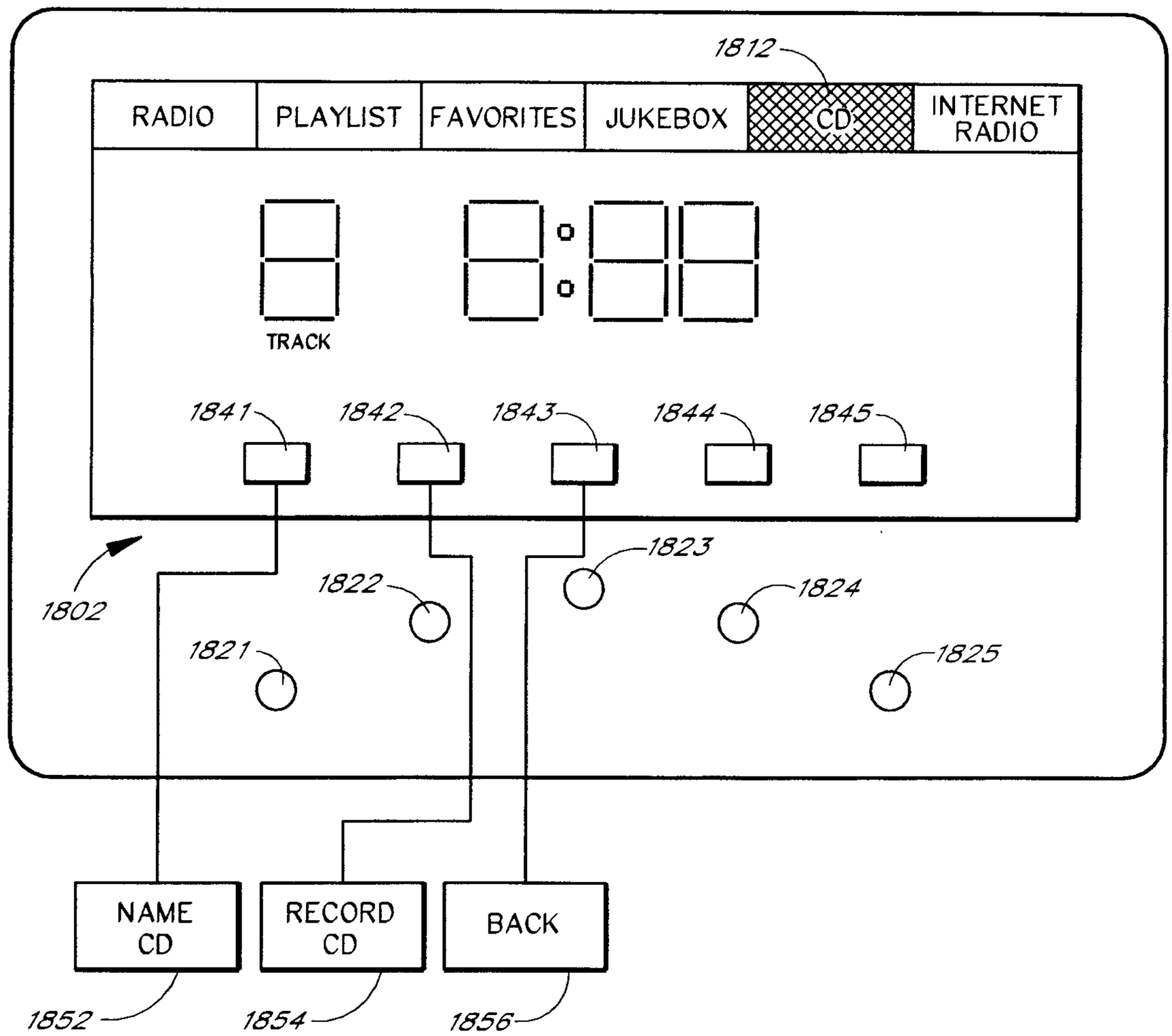
1812
RADIO
PLAYLIST
FAVORITES
JUKEBOX
CD
INTERNET RADIO
TRACK
1841
1842
1843
1844
1845
1802
1822
1823
1824
1821
1825
NAME CD
RECORD CD
BACK
1852
1854
1856

FIG. 18G

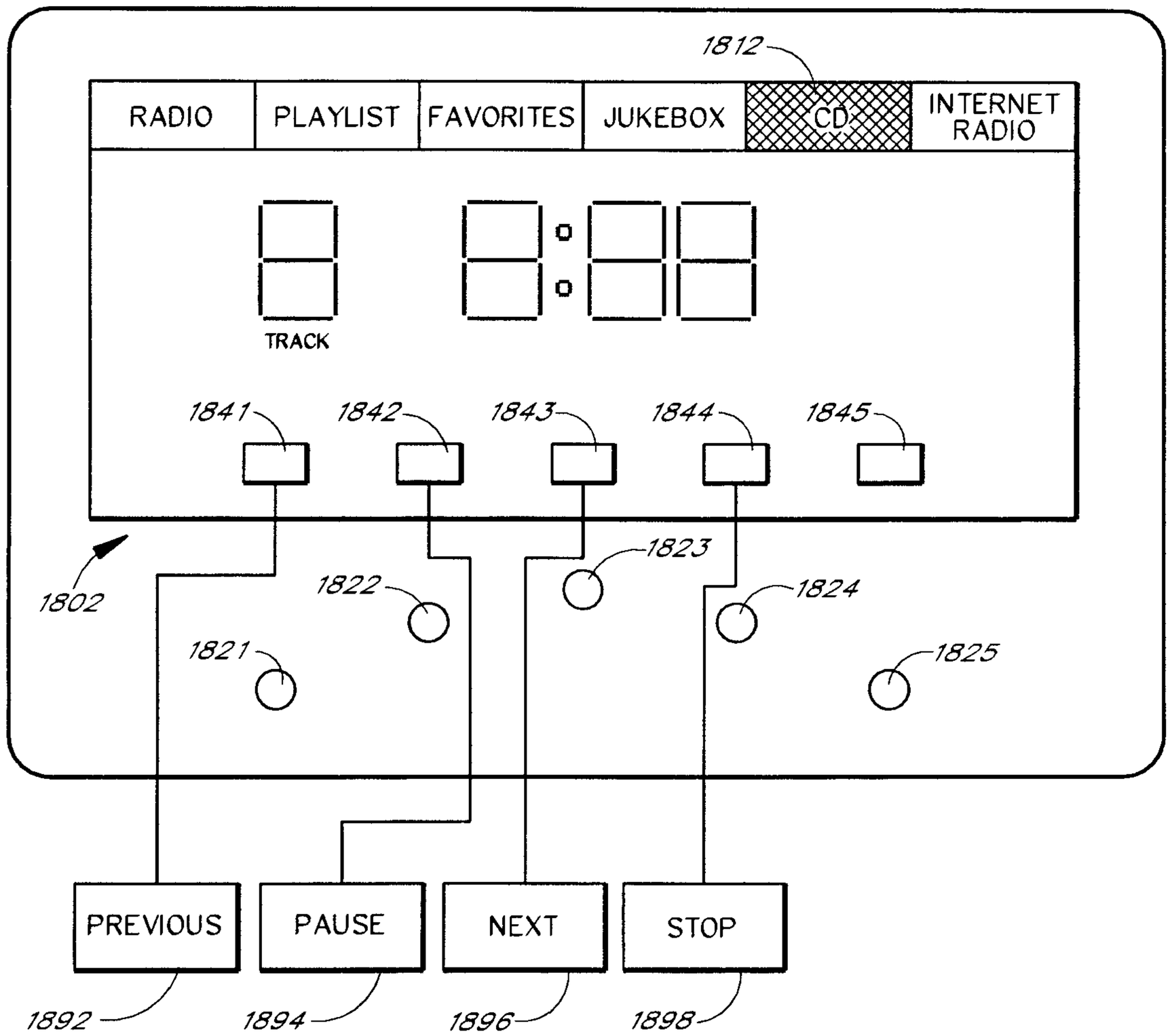
1812
RADIO
PLAYLIST
FAVORITES
JUKEBOX
CD
INTERNET RADIO
TRACK
1841
1842
1843
1844
1845
1802
1822
1823
1824
1821
1825
PREVIOUS
PAUSE
NEXT
STOP
1892
1894
1896
1898

FIG. 18H

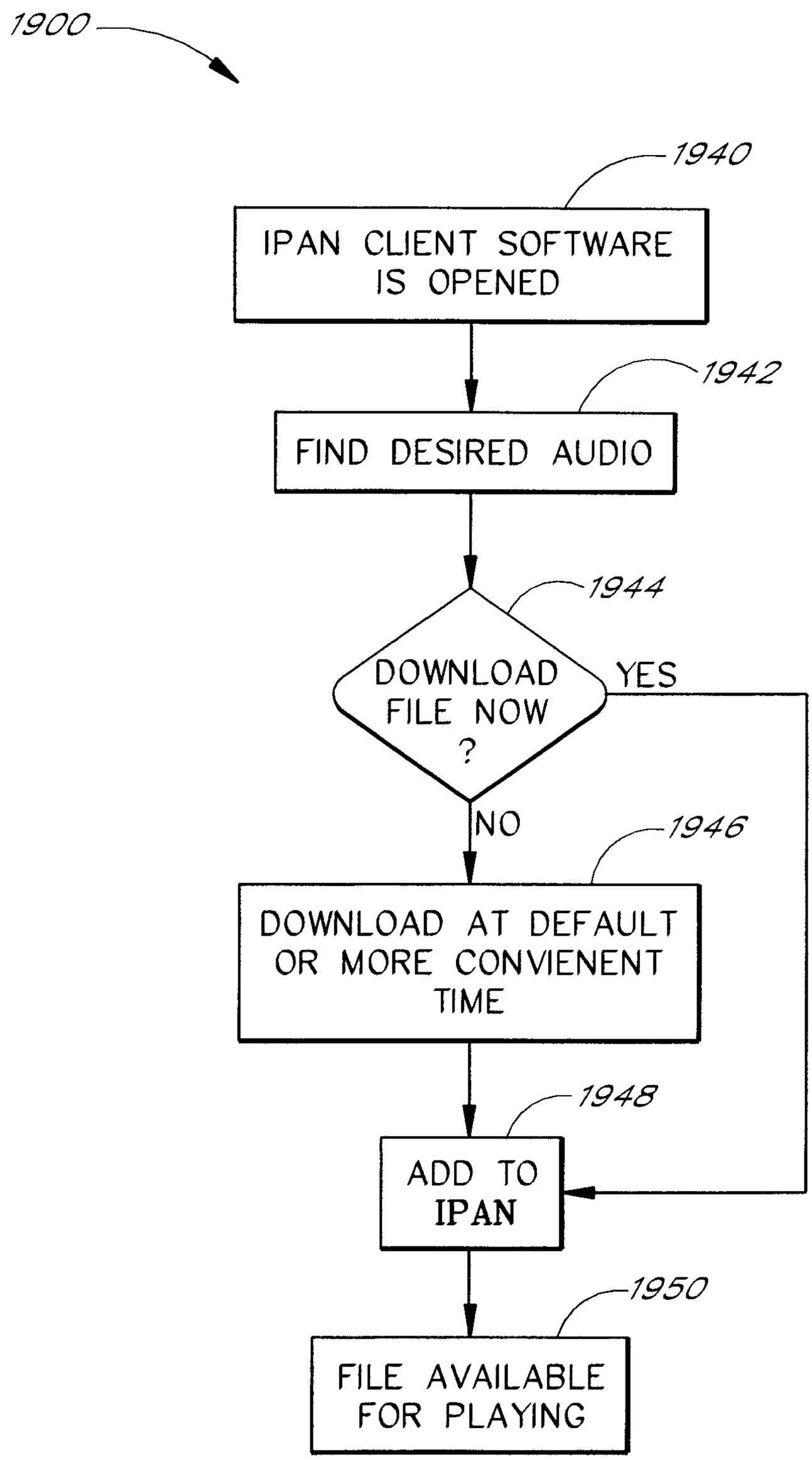
1900
1940
IPAN CLIENT SOFTWARE IS OPENED
1942
FIND DESIRED AUDIO
1944
DOWNLOAD FILE NOW ?
YES
NO
1946
DOWNLOAD AT DEFAULT OR MORE CONVIENENT TIME
1948
ADD TO IPAN
1950
FILE AVAILABLE FOR PLAYING

FIG. 19A

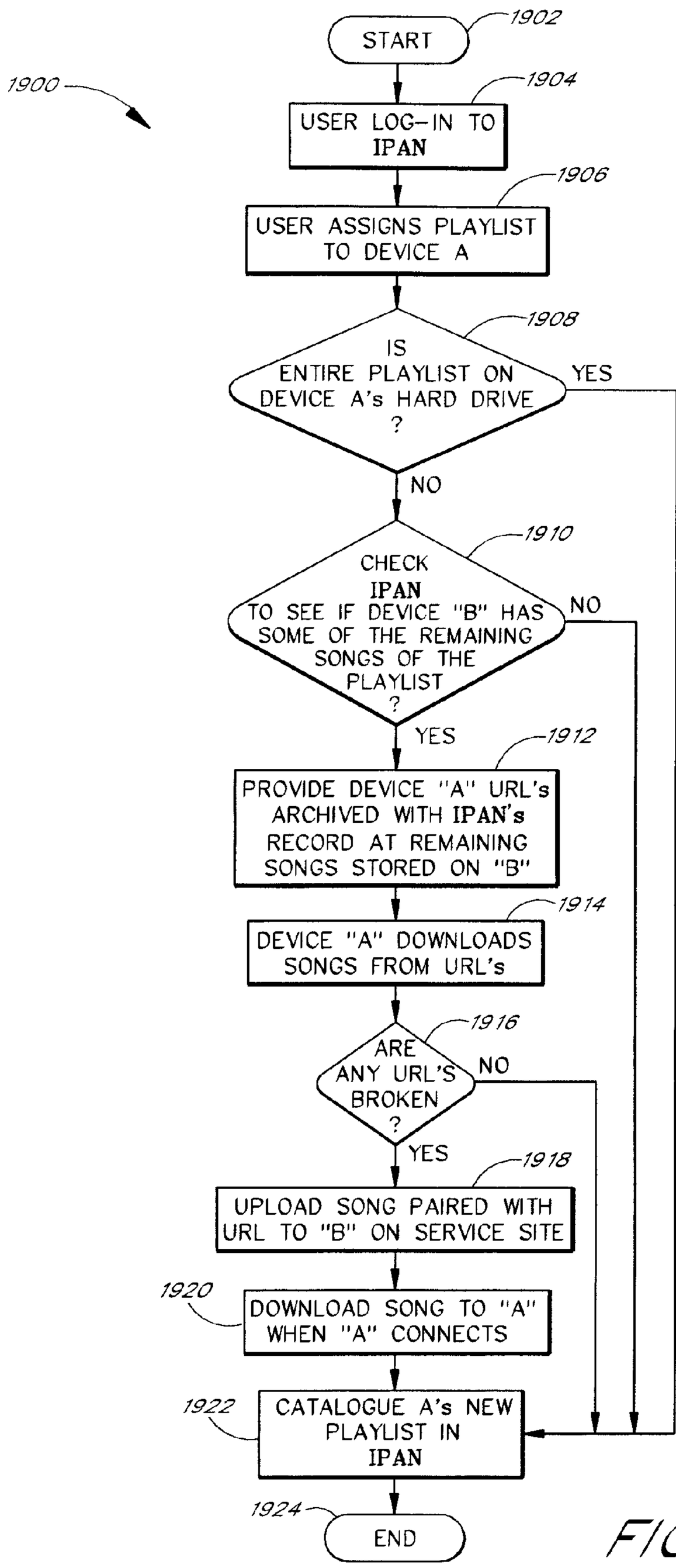
1900
START
1902
USER LOG-IN TO IPAN
1904
USER ASSIGNS PLAYLIST TO DEVICE A
1906
IS ENTIRE PLAYLIST ON DEVICE A's HARD DRIVE ?
1908
YES
NO
CHECK IPAN TO SEE IF DEVICE "B" HAS SOME OF THE REMAINING SONGS OF THE PLAYLIST ?
1910
NO
YES
PROVIDE DEVICE "A" URL's ARCHIVED WITH IPAN's RECORD AT REMAINING SONGS STORED ON "B"
1912
DEVICE "A" DOWNLOADS SONGS FROM URL's
1914
ARE ANY URL'S BROKEN ?
1916
NO
YES
UPLOAD SONG PAIRED WITH URL TO "B" ON SERVICE SITE
1918
1920
DOWNLOAD SONG TO "A" WHEN "A" CONNECTS
1922
CATALOGUE A's NEW PLAYLIST IN IPAN
1924
END

FIG. 19B

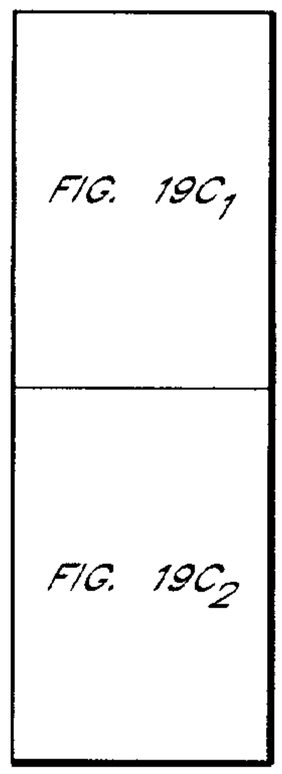

FIG. 19C

FIG. 19C1

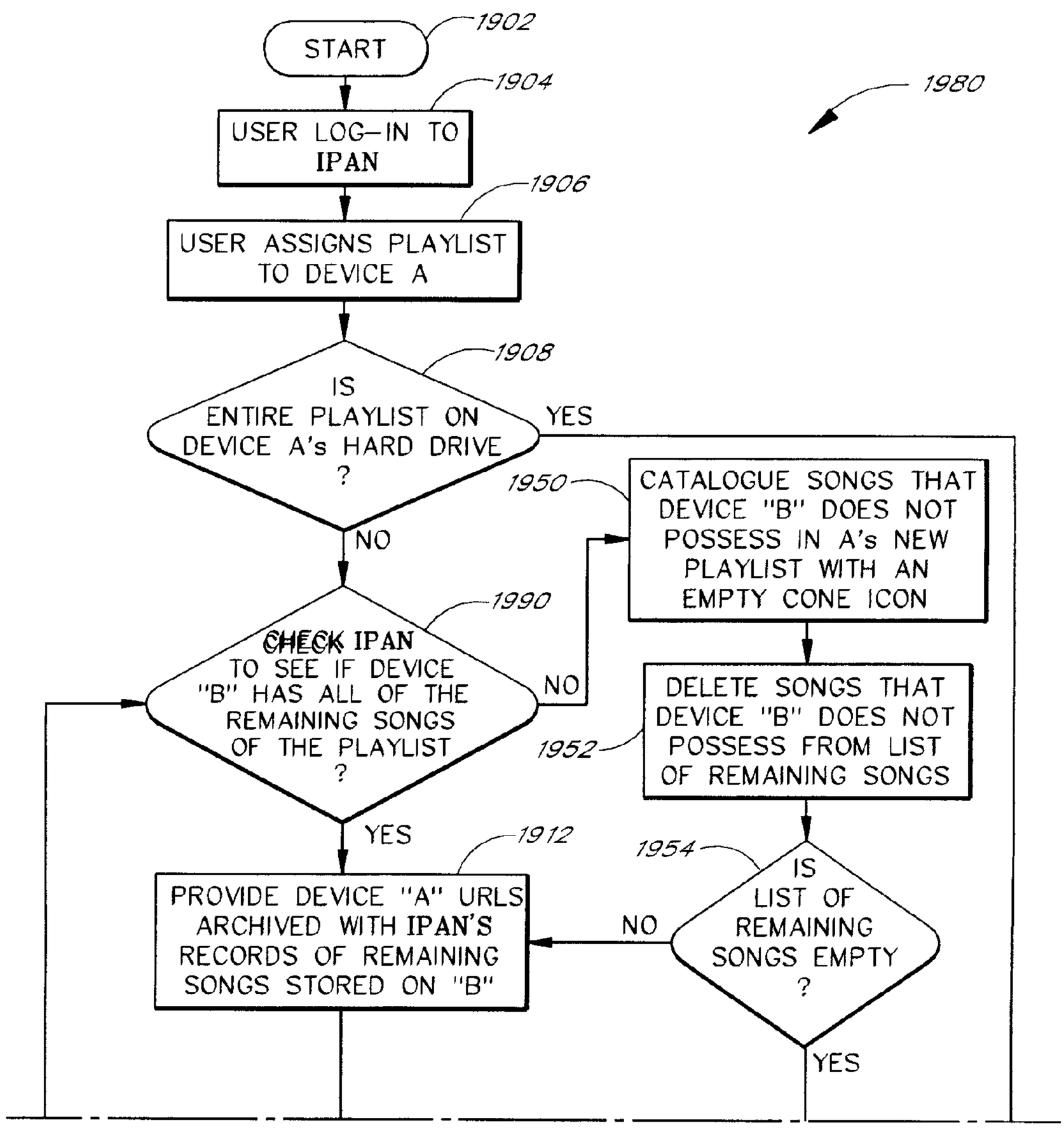

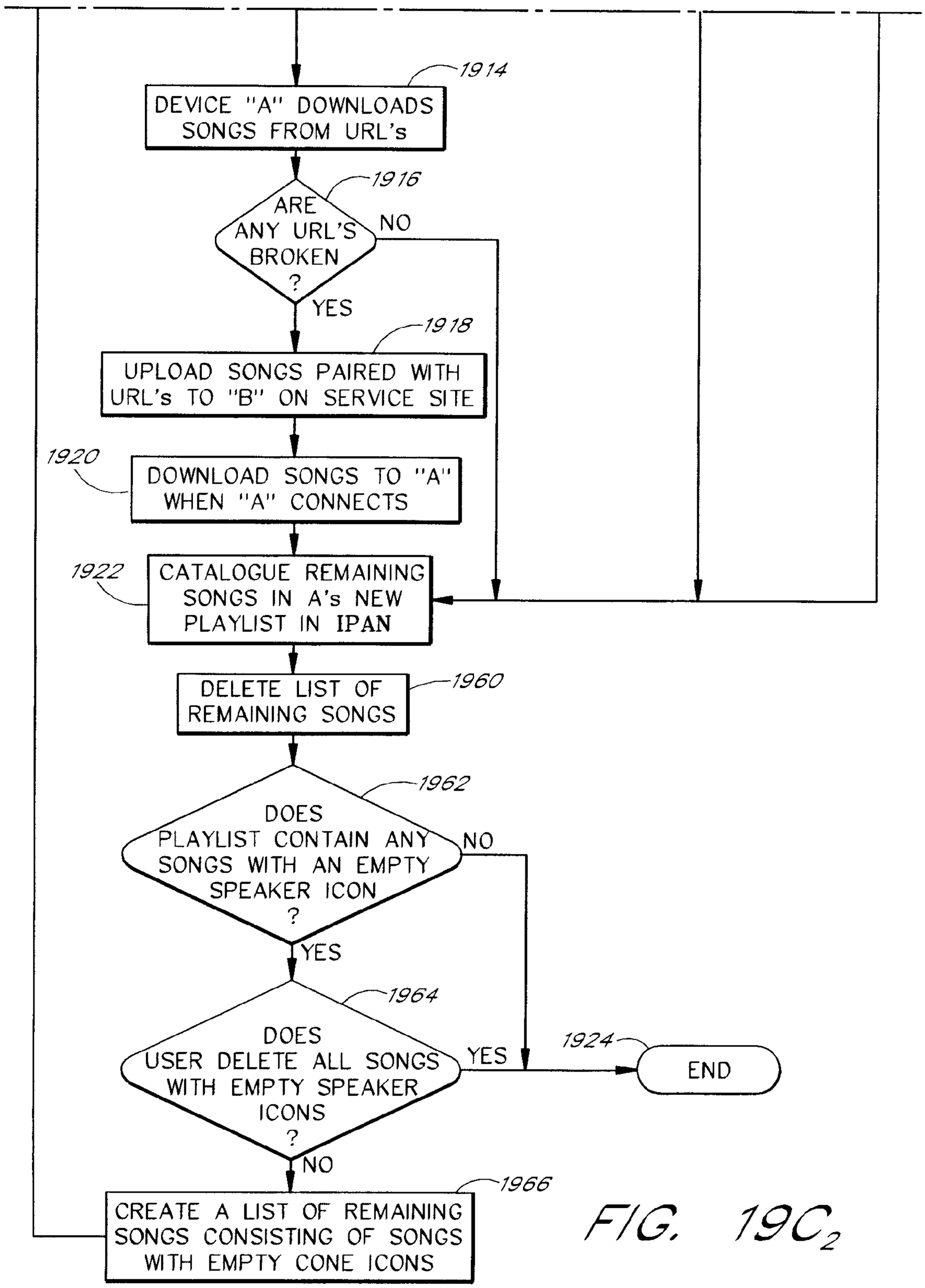
1914
DEVICE "A" DOWNLOADS SONGS FROM URL's
1916
ARE ANY URL'S BROKEN ?
NO
YES
1918
UPLOAD SONGS PAIRED WITH URL's TO "B" ON SERVICE SITE
1920
DOWNLOAD SONGS TO "A" WHEN "A" CONNECTS
1922
CATALOGUE REMAINING SONGS IN A's NEW PLAYLIST IN IPAN
DELETE LIST OF REMAINING SONGS
1960
1962
DOES PLAYLIST CONTAIN ANY SONGS WITH AN EMPTY SPEAKER ICON ?
NO
YES
1964
DOES USER DELETE ALL SONGS WITH EMPTY SPEAKER ICONS ?
YES
1924
END
NO
1966
CREATE A LIST OF REMAINING SONGS CONSISTING OF SONGS WITH EMPTY CONE ICONS

FIG. 19C2

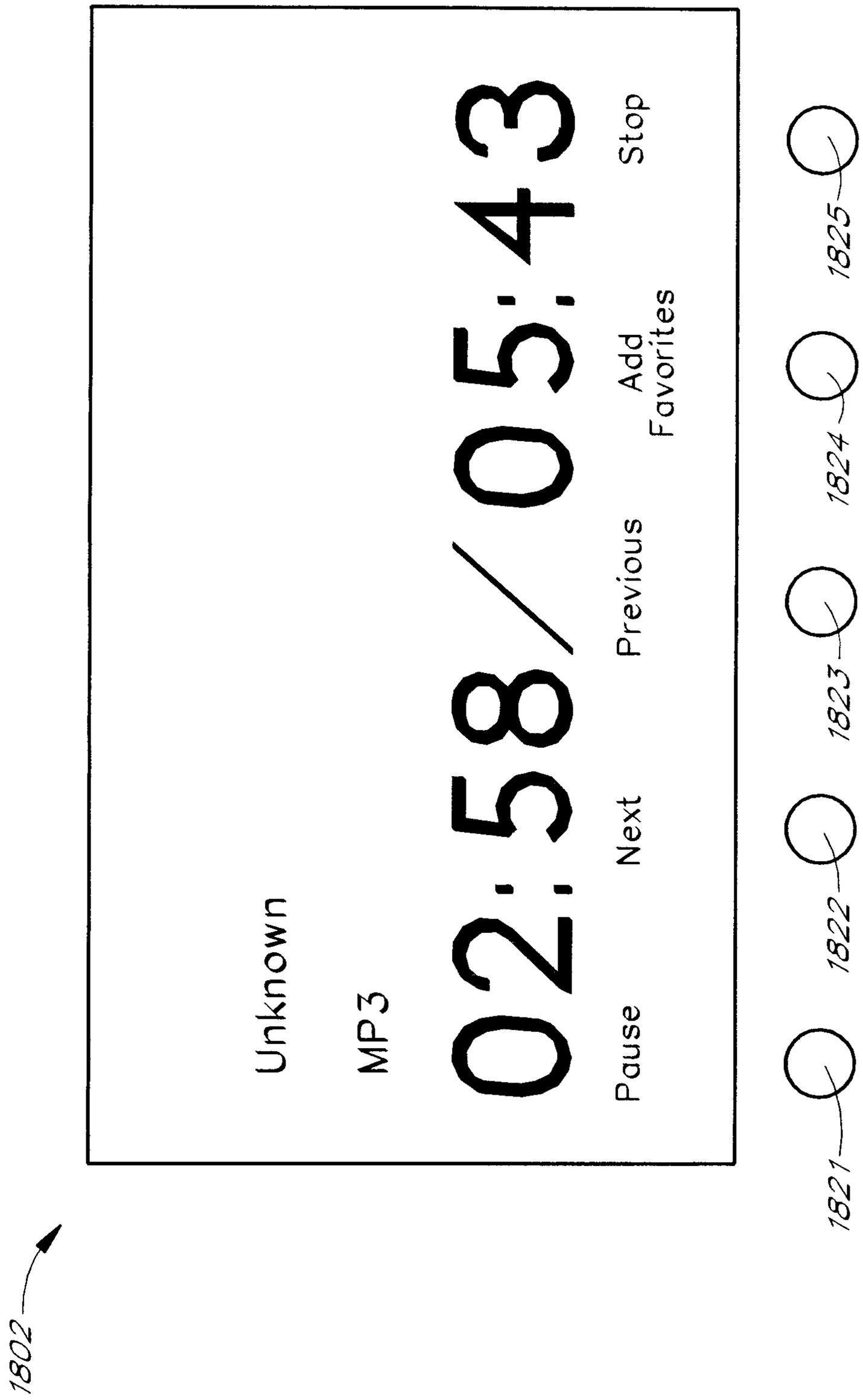
1802
Unknown
MP3
02:58/05:43
Pause
Next
Previous
Add Favorites
Stop
1821
1822
1823
1824
1825

FIG. 20A

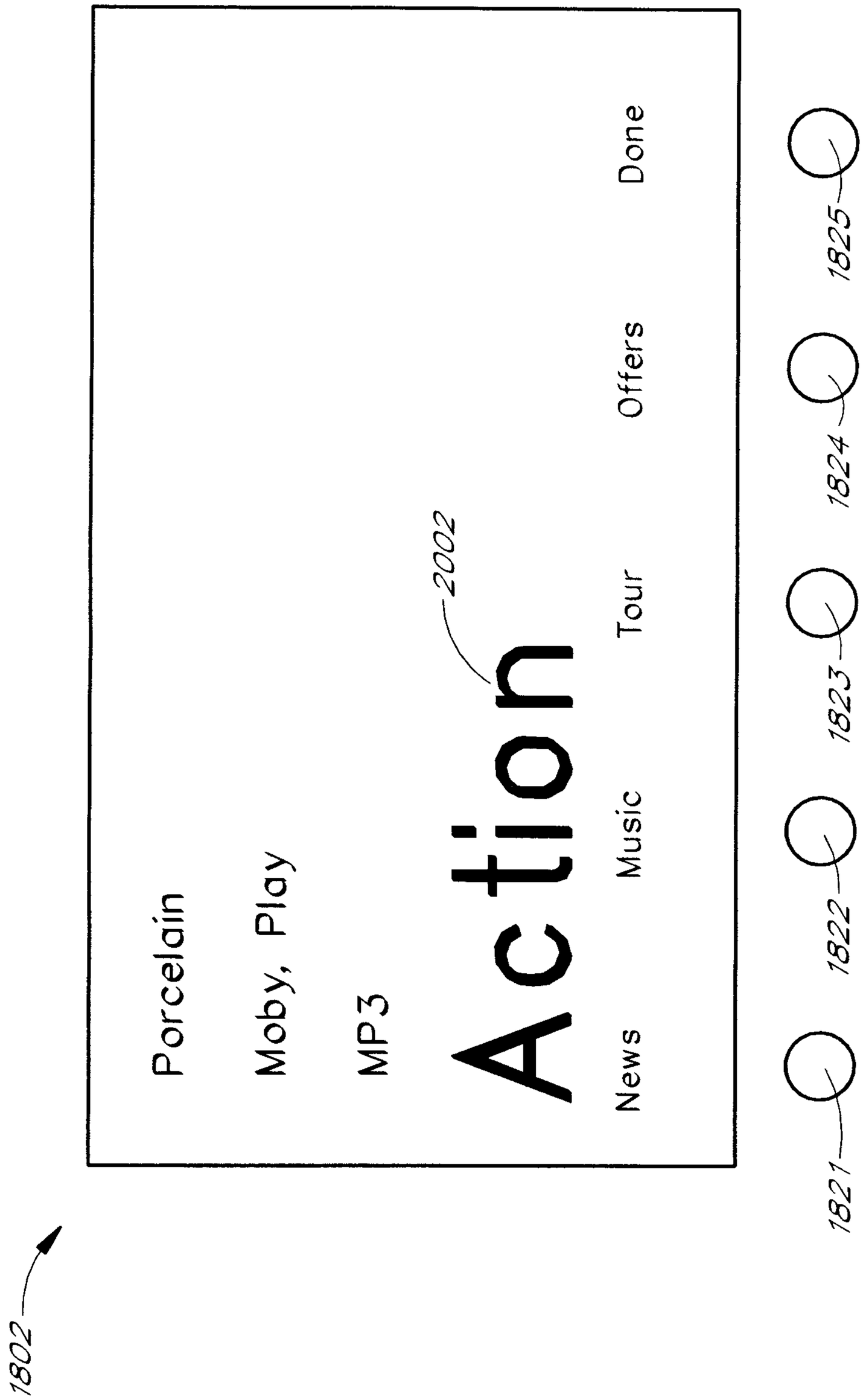
1802
Porcelain
Moby, Play
MP3
Action
2002
News
Music
Tour
Offers
Done
1821
1822
1823
1824
1825

FIG. 20B

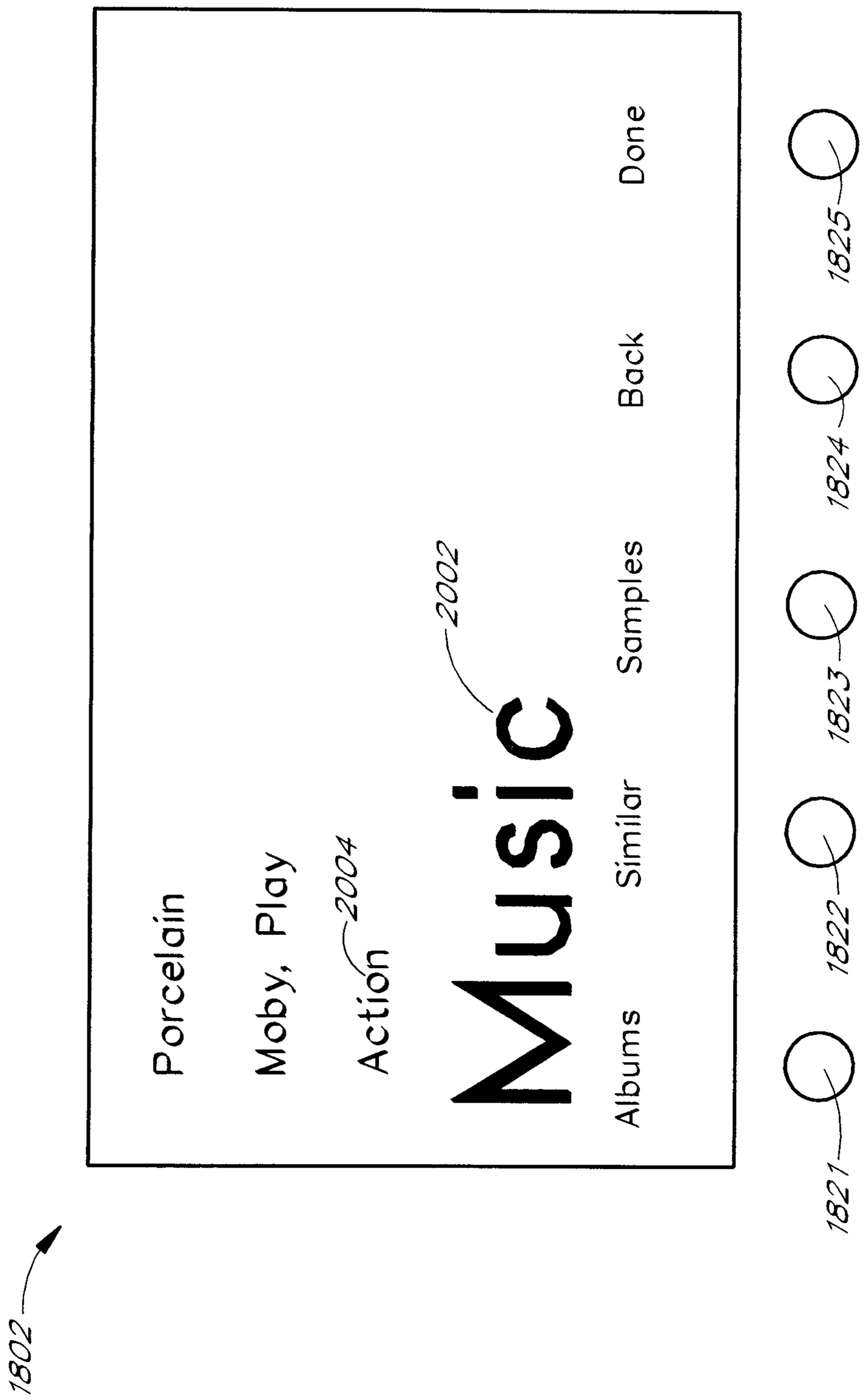
1802
Porcelain
Moby, Play
Action
2004
MUSIC
2002
Albums
Similar
Samples
Back
Done
1821
1822
1823
1824
1825

FIG. 20C

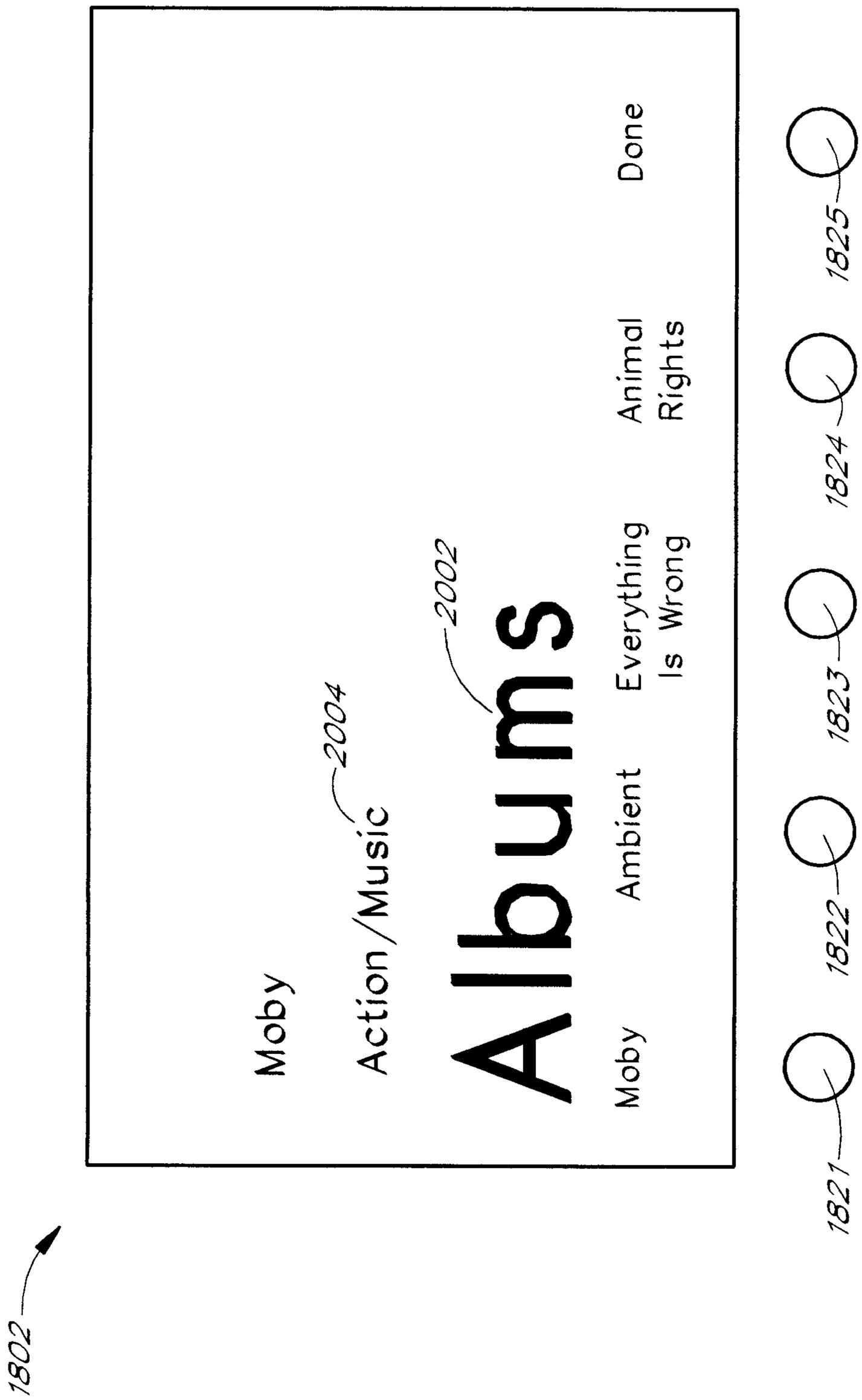
1802
Moby
Action /Music
2004
Albums
2002
Moby
Ambient
Everything Is Wrong
Animal Rights
Done
1821
1822
1823
1824
1825

FIG. 20D

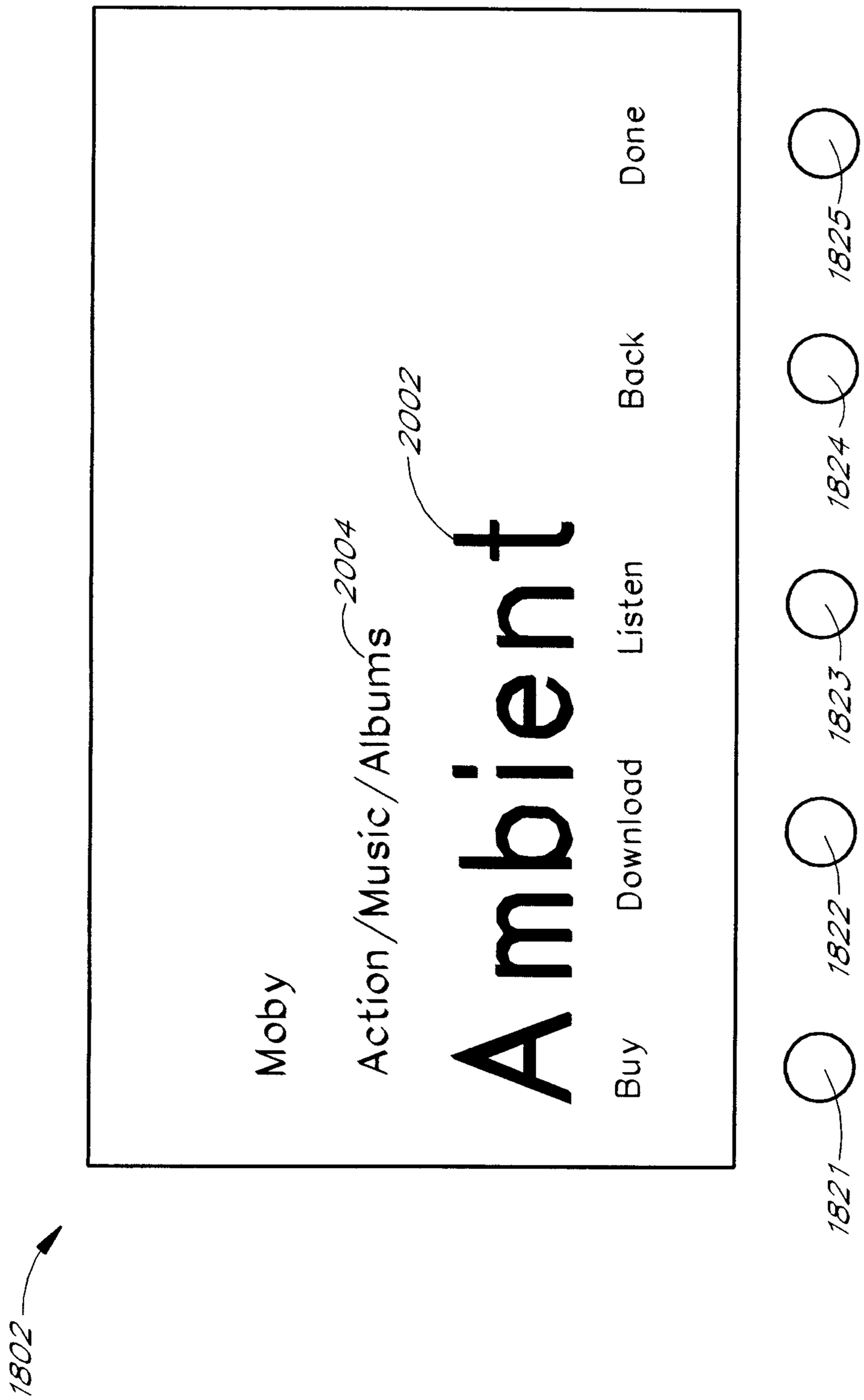
1802
Moby
Action/Music/Albums
2004
Ambient
2002
Buy
Download
Listen
Back
Done
1821
1822
1823
1824
1825

FIG. 20E

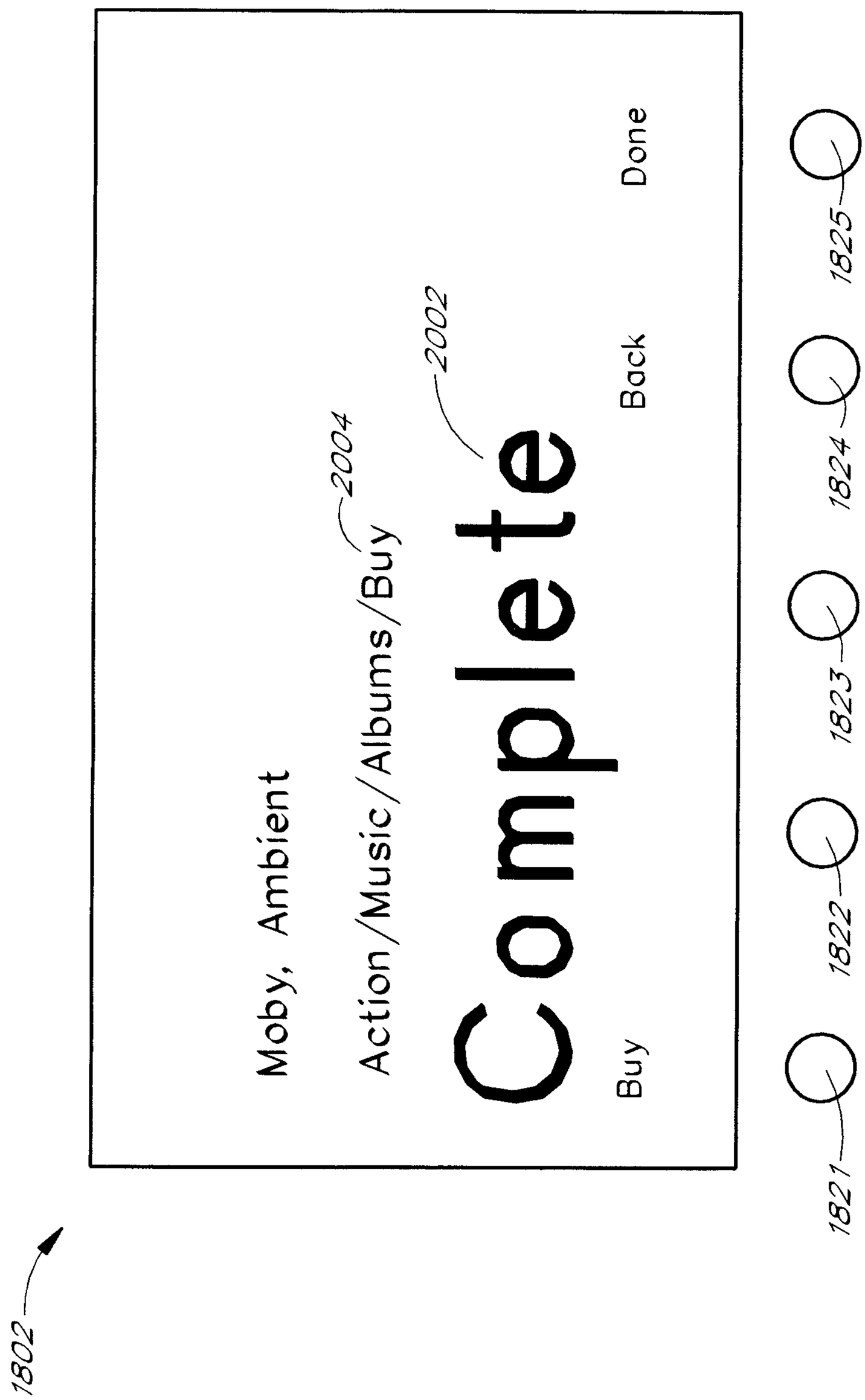
1802
Moby, Ambient
Action/Music/Albums/Buy
2004
2002
Complete
Buy
Back
Done
1821
1822
1823
1824
1825

FIG. 20F

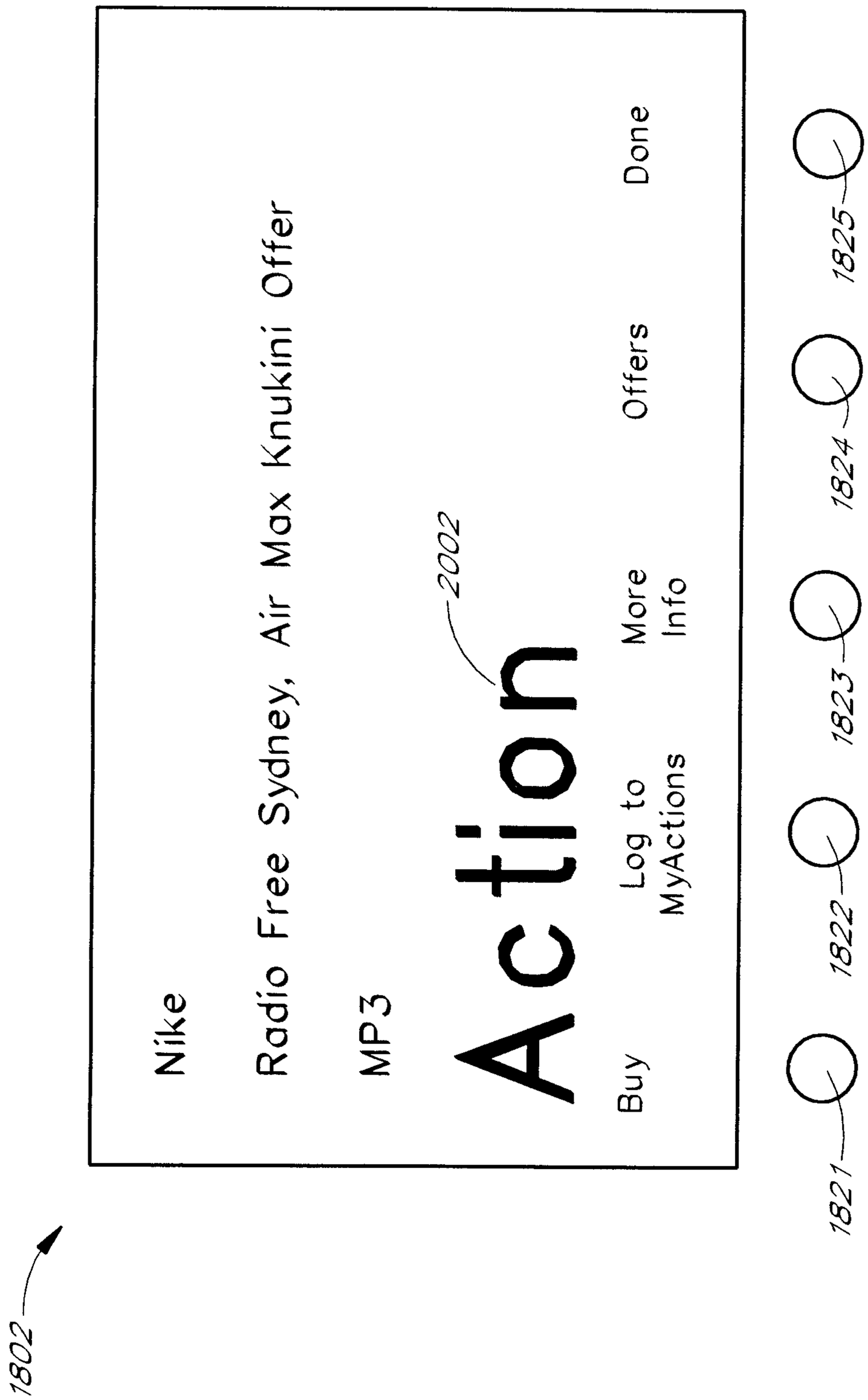
1802
Nike
Radio Free Sydney, Air Max Knukini Offer
MP3
Action
2002
Buy
Log to MyActions
More Info
Offers
Done
1821
1822
1823
1824
1825

FIG. 21

NETWORK-ENABLED AUDIO DEVICE

RELATED APPLICATIONS

The present application is a continuation of U.S. patent application Ser. No. 09/805,470, filed Mar. 12, 2001, which is a continuation-in-part of U.S. patent application Ser. No. 09/096,703, filed Jun. 12, 1998, now abandoned, and which claims the benefit of U.S. Provisional Application No. 60/246,842, filed Nov. 8, 2000. U.S. patent application Ser. No. 09/096,703 also claims the benefit of U.S. Provisional Patent Application No. 60/072,127, filed Jan. 22, 1998. The disclosures of these previous applications are hereby incorporated by reference in their entireties.

BACKGROUND OF THE INVENTION

1. Field of the Invention

The present invention relates to the field of audio file transfers and, more particularly, relates to the field of management and distribution of audio files over a computer network such as the Internet.

2. Description of the Related Art

The Internet is a worldwide array of interconnected computers and information servers that allow anyone with a computer and access to the Internet to get information about virtually any subject 24 hours a day. For the average consumer, an Internet Service Provider (ISP) provides access to the Internet. ISPs such as CompuServe, Prodigy, and America On-Line, currently link over ten million users to the Internet. Users typically connect to the ISP by using standard telephone lines and a telephone modem. Cable modems that allow a user to connect to the ISP over cable television lines, and satellite connections to the Internet, are also available.

The Internet provides a wealth of information from stock reports to headline news. One of the newer services provided on the Internet is a streaming audio (e.g., RealAudio and MPEG audio) service. Streaming audio services are often provided in connection with the World Wide Web (Web) and thus are often called Web radio broadcasts. With streaming audio, a user with a Personal Computer (PC), a sound card, and the necessary software can listen to audio programs from anywhere in the world. For example, Radio Prague provides daily Internet broadcasts from the Czech Republic. Listeners in the U.S. can listen to these Web radio broadcasts either in real time, or stored for later replay. Thus, unlike more traditional radio broadcasts where the listener must be within a reception area, Web radio broadcasts can be heard anywhere, so long as the listener has a connection to the Internet and the necessary computer hardware and software.

Unfortunately, even with the ever-decreasing cost of personal computers, the hardware and software needed to listen to a Web radio broadcast is beyond the financial means of many people. Even for those that can afford a personal computer, listening to a Web radio broadcast ties up the computer so that the user cannot use it for other purposes. Moreover, the use of a personal computer to receive streaming audio (e.g., Web radio broadcasts) requires a certain amount of computer literacy on the part of the user. The user must be able to install the Web Radio software, configure the Web Radio software to communicate with the ISP, and find the various Web radio broadcasts provided on the Web.

In addition to listening to Web radio broadcasts, users may wish to listen to audio files. With a group of PC's in a home and in a network, users can download songs from one PC to another or upload songs from one PC to another. However, users cannot play a song on one PC by using the controls of another PC. In addition, the users must purchase multiple PC's, which can be costly. Further, the user must be able to install the network connection and the appropriate software. Moreover, even if the user can afford to purchase multiple PC's and install the proper connection, the user would have difficulty playing music in addition to performing other tasks on the PC. For example, the Web radio broadcast may be interrupted. Also, a skip over parts of a song may result if the user is using a word processing program at the same time as listening to music.

SUMMARY OF THE INVENTION

The present invention solves these and other problems by providing a network-enabled audio device for listening to a variety of audio sources with substantially equal convenience. The network-enabled audio device has a visual display for providing audio source choices to a user. The visual display also provides functions for managing audio sources. User control buttons allow a user to choose an audio source to listen to. The menu buttons allow the user to choose functions for managing the audio sources. In one embodiment, there is also tuner circuitry for receiving radio frequency signals from radio broadcast stations. In one embodiment, a CD player allows the user to listen to CD's. In one embodiment, the network-enabled audio device also has one or more audio amplifiers and one or more loudspeakers operably connected to said audio amplifiers. In one embodiment, a modem is used for transmitting and receiving digital data over a communications network. One embodiment includes a data storage device.

A first software module is stored on the data storage device, and the software module is configured to decode compressed audio files into a playable (e.g. uncompressed) format. A second software module is also stored on the data storage device. The second software module is configured to use the modem to connect to an Internet service provider to receive assignments of playlists from a third software module. The playlists include references to audio from a variety of audio sources. The assignments provide information about the location of other web sites containing the audio sources. The second software module is configured to subsequently connect through an Internet service provider to web sites to download audio files.

A third software module is also stored on the data storage device. The third software module is configured to use the modem to connect to an Internet service provider to receive digitized audio broadcasts from the Internet service provider. The module is further configured to provide a select-broadcast display to allow the user to selectably connect a program broadcast to the input of one or more audio amplifiers either from a local AM or FM radio station or from the world wide Web so that, to the user, reception of a broadcast from the World Wide Web is no more complicated than listening to a local FM or AM radio station.

One aspect of the present invention is a network-enabled audio device that allows a user to store files, to play standard audio CD's, to play MP3 encoded CDs, to record songs from CD's, to receive digitized radio broadcasts over the World Wide Web (Web), and to receive assignments of playlists of songs from other network-enabled audio devices. The network-enabled audio device provides the hardware and software to perform those functions without the need for expensive equipment. Optionally, a Local Area Network can be configured in place of, or in addition to, the Internet connection to facilitate assignments of playlists and other features. Without an Internet connection or other network connection,

the network-enabled audio device can play standard audio CD's, can play MP3 encoded CD's, and can record CD's.

The network-enabled audio device provides a display device, such as a Liquid Crystal Display (LCD) that allows the user to select playlists of music much like a jukebox. The user can compose playlists from disk files, CD's, Internet streaming audio broadcasts, online music sites, and other audio sources. In one embodiment, the user can also compose playlists from links to AM/FM broadcasts. The user can also select a desired Web broadcast from a list of available Web broadcasts. In addition, the user can play standard audio CD's and MP3 encoded CD's and have access to local AM/FM stations. Further, the software, the user controls, and the display in the network-enabled audio device are operably configured and connected such that the user can listen to playlists that include CD's and other audio sources just as the user would choose a playlist in a jukebox. Thus, the network-enabled audio device provides people who are or are not comfortable with computers a way of taking music from various sources and putting it into one place for listening pleasure. In one embodiment, the Personal Computer (PC) is used to compose the playlists, but the user is able to listen to playlists and other audio sources without using the PC.

In one embodiment, the network-enabled audio device is a low-cost tabletop box that connects to an AC power line and optionally to a phone line or to a local area network connection such as Ethernet. The device includes a display device, speakers, a control panel, a computer processor, stored software, a modem, an AM/FM tuner, and a CD player. Optionally, the device can include multiple computer processors or support computer processors. The user accesses the server site via a PC and the Internet. From the server site, the user obtains a list of the devices in his or her Internet Personal Audio Network (IPAN) and what songs are on those devices. The IPAN includes an IPAN server, an IPAN client, and IPAN software stored on the network-enabled audio device. In one embodiment, the IPAN client includes a standard web browser, an IPAN plug-in to the standard web browser, and an IPAN active tray software module. In one embodiment, any standard web browser may be used, but the IPAN client includes the IPAN plug-in and the IPAN active tray software module.

The IPAN client and the IPAN server store the name of the song and the associated Uniform Resource Locator (URL). The user can list multiple devices as being part of his or her IPAN. At a default time, such as for example 2 a.m., each device establishes a connection to an Internet Service Provider (ISP). The stored software module in each device connects to the server site home page, via the ISP, and inquires whether any songs or playlists have been assigned to the device. The user can bypass the default time for accessing the server and access the server by manually pressing one of the buttons.

In one embodiment, the network-enabled audio device has no disk for data storage space. Rather, a local area network (LAN) connection to a PC or other network-enabled audio device allows the use of disk space on another device. In one embodiment, the network-enabled audio device comprises speakers, an AC power line, and a network line. A home PC is connected to the network-enabled audio device through the network line. The network connection can be a Home Phoneline Networking Alliance (HPNA) network connection so that the connection may be done through existing phone lines in a home. Optionally, the network connection can be an Ethernet connection. Multiple network-enabled audio devices can be connected to each other and ultimately to the PC through the network line.

In one embodiment, the network-enabled audio device does not have any storage space other than memory. This embodiment provides for a low-cost system that can play songs from playlists stored on the IPAN Manager or on the PC's storage space without having to store the audio files locally.

Another aspect of the present invention is a network-enabled component audio device system for listening to a variety of audio sources with substantially equal convenience. A visual display provides audio source choices to a user. The visual display also provides menu choices for managing audio sources to the user. The user control buttons allow the user to choose an audio source to listen to. The menu buttons allow the user to choose functions for managing the audio sources. The network-enabled component audio device has a CD player for listening to compact discs. A modem is used for transmitting and receiving digital data over a communications network. In one embodiment, a data storage device is provided.

A first software module is configured to decode compressed audio files. The first software module is stored on the data storage device. A second software module is configured to use the modem to connect to an Internet service provider to receive assignments of playlists from the second software module. The playlists include titles of audio from a variety of audio sources. The assignments provide information about the location of other web sites containing the audio sources. The software module is configured to connect through the ISP to the web sites to download the audio files.

In one embodiment, the network-enabled audio device is a component hardware device for an audio system. The network-enabled audio device provides an audio output to the audio system. The audio system provides amplifiers and loudspeakers. The network-enabled audio device includes an enclosure that connects to an AC power line, a network line, and the audio system. The network line is a computer data connection, such as, for example, a telephone line, a cable line, an Ethernet line, a Token-Ring line, a twisted pair line, an infrared link, a radio frequency link, an IEEE 1394 FireWire line, etc. The network-enabled audio device includes a display device, a control panel, at least one computer processor, a stored software module, and a modem. In one embodiment, the network-enabled audio device connects to the IPAN server site.

Another aspect of the present invention is a method for assigning playlists of music from one electronic device to another. First, a network connection is used for transmitting and receiving digital data over a communication network to an Internet service provider. Next, the process provides a first software module to manage playlists of songs. The software module allows a user to compose playlists from a variety of audio sources. The software module allows a user to assign a playlist from a first device to a second device. Next, the process checks the second device's data storage space for songs listed on the assigned playlist. Next, the process accesses a server site to obtain locations of the web sites the first device downloaded its audio files from. The process then provides a second software module to connect to various web sites to download remaining songs needed for the playlist. The second software module connects if songs needed to form the playlist are not stored on the second device's data storage space. Finally, the process uploads files to the server from the first device and downloads files the second device if the second software module is unable to download a file from said web site.

BRIEF DESCRIPTION OF THE DRAWINGS

The various novel features of the invention are illustrated in the figures listed below and described in the detailed description that follows.

FIG. **1** is a perspective view of one embodiment of a tabletop intelligent radio apparatus.

FIG. **2** is a block diagram of the functional elements of the intelligent radio apparatus.

FIG. **3**A shows a default display that appears while a Web broadcast is being received.

FIG. **3**B shows a menu display that allows the user to select one of the command and setup displays shown in FIGS. **3**C-**3**E.

FIG. **3**C illustrates a select language display that allows a user to specify desired languages (e.g., English, French, etc.).

FIG. **3**D illustrates a display that allows a user to select a type of program material (e.g., news, sports, weather, etc.).

FIG. **3**E illustrates a display that allows a user to select various program broadcasts.

FIG. **4** illustrates a data-entry display that the intelligent radio apparatus uses to allow the user to input alphanumeric text.

FIG. **5** is a flowchart that illustrates operation of the intelligent radio apparatus.

FIG. **6** is a flow graph that illustrates operation of the intelligent radio networked system.

FIG. **6**A illustrates the information management and data processing functions provided by a Web radio Web site (e.g., www.webradio.com) to produce a list of Web radio broadcast stations for the user.

FIG. **6**B illustrates a relationship between the Web radio Web site and other web sites that provide streaming audio programming.

FIG. **7** is a perspective view of a tabletop intelligent radio tuner.

FIG. **8** is a block diagram of the functional elements of the intelligent radio tuner shown in FIG. **7**.

FIG. **9** is a block diagram of the functional elements of an embodiment of the intelligent radio that provides a remote playback capability.

FIG. **10** is a block diagram of the functional elements of an embodiment of the intelligent radio that provides a remote access capability.

FIG. **11** is a perspective view of one embodiment of the computing environment of a network-enabled audio device configuration.

FIG. **12**A is a perspective front view of one embodiment of the network enabled component audio device as shown in FIG. **11** that integrates with a home stereo entertainment system.

FIG. **12**B is a perspective rear view of one embodiment of the network-enabled component audio device as shown in FIG. **11** that integrates with a home stereo entertainment system.

FIG. **13**A is a perspective front view of one embodiment of a stand alone network-enabled audio device as shown in FIG. **11**.

FIG. **13**B is a perspective rear view of one embodiment of a stand alone network-enabled audio device as shown in FIG. **11**.

FIG. **14** is a block diagram of the functional elements of the network-enabled audio device as shown in FIGS. **12**A, **12**B, **13**A, and **13**B.

FIG. **15** is a block diagram illustrating the configuration between several network-enabled audio devices and a stereo web site as shown in FIG. **11**.

FIG. **16** illustrates a process for connecting the components and setting up the software for the network-enabled audio device as shown in FIGS. **12**A, **12**B, **13**A, and **13**B.

FIG. **17**A shows a default display of the current playlists when the Internet Personal Area network (IPAN) manager software is started.

FIG. **17**B illustrates a display that allows the user to control the sound and perform other functions on the audio source.

FIG. **17**C illustrates the menus used to assign a playlist, as shown in FIG. **17**A, to another device.

FIG. **17**D illustrates the songs within a playlist and links to other devices that have the songs present on their hard disk space.

FIG. **17**E illustrates a schedule window that appears for a song (shown in FIG. **17**D) to be played at a particular time on a specific device.

FIG. **17**F illustrates the window that appears to allow the user to choose a default look and feel for the IPAN manager window, as shown in FIG. **17**A.

FIG. **17**G illustrates the window that appears to allow the user to choose other options and the look and feel for the IPAN manager window, as shown in FIG. **17**A.

FIG. **17**H illustrates the window that appears to allow the user to move audio files from one device to another device.

FIG. **17**I shows a display for allowing a user to add a device to the IPAN.

FIG. **18**A shows a default display of the network-enabled audio device, as shown in FIGS. **12**A, **12**B, **13**A, and **13**B.

FIG. **18**B shows a display for allowing a user to operate the radio functions of the network-enabled audio device, as shown in FIGS. **12**A, **12**B, **13**A, and **13**B.

FIG. **18**C shows a display for allowing a user to use preset radio stations of the network-enabled audio device, as shown in FIGS. **12**A, **12**B, **13**A, and **13**B.

FIG. **18**D shows a display for allowing a user to play a playlist stored on the network-enabled audio device, as shown in FIGS. **12**A, **12**B, **13**A, and **13**B.

FIG. **18**E shows a display for allowing a user to delete a song from a playlist stored on the network-enabled audio device, as shown in FIGS. **12**A, **12**B, **13**A, and **13**B.

FIG. **18**F shows a display allowing a user to play the songs from all the playlists stored on the network-enabled audio device as shown in FIGS. **12**A, **12**B, **13**A, and **13**B.

FIG. **18**G shows a display for allowing a user to collect information about a CD and copy a CD to the internal hard drive of the network-enabled audio device shown in FIGS. **12**A, **12**B, **13**A, and **13**B.

FIG. **18**H shows a display that allows a user to play and navigate through the audio stored on the CD.

FIG. **19**A is a flowchart showing the process for downloading audio files found when navigating the Internet.

FIG. **19**B is a flowchart showing the process for assigning playlists from one device to another.

FIG. **19**C, which comprises FIG. **19**C_1 and FIG. **19**C_2, is a flowchart of the process shown in FIG. **19**B that assigns playlists with missing songs from one device to another.

FIG. **20**A shows a default display of the network-enabled audio device before the action button has been pressed, as shown in FIGS. **12**A, **12**B, **13**A, and **13**B.

FIG. **20**B shows a display of the menu items on the network-enabled audio device after the action button has been pressed.

FIG. **20**C shows a display of the menu items on the network-enabled audio device after the "music" menu item has been chosen.

FIG. **20**D shows a display of the menu items on the network-enabled audio device after the "albums" menu item has been chosen.

FIG. **20**E shows a display of the menu items on the network-enabled audio device after the menu item representing an album has been chosen.

FIG. **20**F shows a display of the menu items on the network-enabled audio device after the "buy" menu item has been chosen.

FIG. **21** shows a display including an advertisement after the action button has been pressed on the network-enabled audio device.

In the figures, the first digit of any three-digit number generally indicates the number of the figure in which the element first appears. For example, an element with the reference number **502** first appears in FIG. **5**. Where four-digit reference numbers are used, the first two digits indicate the figure number.

DETAILED DESCRIPTION

One aspect of the present invention is an intelligent radio device that allows a user to receive digitized radio broadcasts over the World Wide Web (Web). The intelligent radio provides the hardware and software necessary to receive digitized audio from the Web without the need for a personal computer or other expensive equipment. The intelligent radio provides a display device, such as a Liquid Crystal Display (LCD) that allows the user to select a desired Web broadcast from a list of available Web broadcasts. The display also allows the user to select Web broadcasts in a particular language. The software, the user controls, and the display in the intelligent radio **100** are operably configured and connected such that a user can tune into a Web radio broadcast in a manner similar to the way a user would use the controls on a conventional radio to tune into an AM or FM radio station. Thus, the intelligent radio provides people who are not comfortable with computers, or who do not own or have access to a computer, an opportunity to listen to streaming audio information from the Internet.

In one embodiment, the intelligent radio is a low-cost tabletop box that connects to an AC power line and a phone line. The device includes a display device, speakers, a control panel, a computer processor, a stored software program, and a modem. The intelligent radio uses the modem to establish a telephone connection to an Internet Service Provider (ISP). The stored software program connects to a Web Radio home page, via the ISP, and downloads a list of Web radio station addresses. Alternatively, the user can enter a web address (e.g., a Uniform Resource Locator (URL)) to connect directly to a web page that provides audio broadcasts (instead of first connecting to the Web Radio home page). The user may use buttons on the control panel to scroll through the display and select a Web radio broadcast "station" for listening. When a station is selected, the stored software program connects to the station and begins to receive digitized audio data transmitted by the station. The intelligent radio converts the received data to analog audio and plays the audio on one or more loudspeakers.

In an alternate embodiment, the intelligent radio is a tuner that connects to an audio system such as a component stereo system. The tuner provides an audio output to the audio system. The audio system provides amplifiers and loudspeakers. The tuner comprises an enclosure that connects to an AC power line, a network line, and the audio system. The network line may be any type of computer data connection, including, for example, a telephone line, a cable line, an Ethernet line, a Token-Ring line, a twisted pair line, an infrared link, a radio frequency link, an IEEE-1394 FireWire line, etc. The tuner includes a display device, a control panel, a computer processor, a stored software program, and a modem. The intelligent radio uses the modem to establish a telephone connection to an Internet Service Provider (ISP). The stored software program connects to a Web Radio home page, usually provided by the ISP, and downloads a list of Web radio stations. A user uses use buttons on the control panel (or remote control) to scroll through the display and select a Web radio broadcast "station" for listening. Alternatively, the user may use voice-activated commands to scroll through the display. When a station is selected, the stored software program connects to the station and begins to receive digitized audio data transmitted by the station. The intelligent radio converts the received data to analog audio, which is provided to the audio system.

FIG. **1** illustrates one embodiment of a tabletop intelligent radio **100**. The intelligent radio **100** is mounted in an enclosure **101** and connects to household AC power through a power cord **104** and to a communications network by a network cable **102**. The network cable **102** may be a telephone line, a network cable, a cable TV cable, a connection to a wireless (e.g., satellite) unit, etc. For example, the communications network may use Iridium satellites developed by the Motorola Corp., Globalstar satellites developed by a consortium of European manufacturers which includes Aérospatiale and Alcatel, P21 satellites developed on a project financed by Inmarsat, or the Odyssey satellite system developed by a TRW consortium associated with Teleglobe/Canada.

User controls are mounted on the front of the enclosure **101** and include a combined on-off and volume control **110**, a command button **121**, a cursor control **116**, a select button **118**, a tuning control **114**, and a button bar **120**. The cursor control **116** provides up, down, left, and right movements of a cursor or other entity on a display device **112**. The button bar **120** provides buttons to select an audio source, including, for example, "AM" radio, "FM" radio, "Web" radio, "Cassette", and "External" input. Also mounted on the front of the enclosure **101** is the display device **112**, which provides information to the user. An optional cassette player/recorder **130** provides the capability to play and record audio cassettes. The intelligent radio **100** also includes a left stereo speaker **106** and a right stereo speaker **108** that may be mounted in the enclosure **101** or in separate enclosures. A wireless remote **135** provides remote operation of the intelligent radio **100**. In some embodiments, a microphone is provided as well. An output from the microphone is provided to an analog-to-digital converter to convert the analog microphone signal into digital data. The microphone may be placed in the intelligent radio **100**, in the wireless remote **135**, or both.

FIG. **2** is a block diagram of the functional elements of the intelligent radio **100**. The intelligent radio **100** comprises a Central Processor Unit (CPU) **202** that is used to run the intelligent radio software. The CPU **202** is connected to a random access memory **204**, a data storage device **210**, and a modem **206**. The data storage device **210** may be any type of non-volatile data storage device, including, for example, a floppy disk drive, a hard disk drive, a flash memory, a CD-ROM, a DVD-ROM, a CMOS memory with battery backup, etc. The data storage device **210** provides storage for software programs used by the intelligent radio **100**. The software stored on the data storage device **210** may be upgraded by downloading new software from the Web. The data storage device **210** may also provide storage for digitized audio material, such as recorded Web radio broadcasts, CD-Audio, etc. The modem **206** is connected to a communications network

230, shown as a Public Switched Telephone Network (PSTN), by the network cable 102. Although the communications network 230 is shown as a PSTN network, one skilled in the art will recognize that the network 230 may also be a cable television (CATV) network, a satellite network, or any other communications network. In one embodiment, the network 230 comprises both a Direct TV/PC satellite connection that provides information to the intelligent radio 100 at high speed (e.g., 400,000 bytes per second or more), and a PSTN network connection so the intelligent radio can upload information back to the ISP 232 (because many Direct TV/PC connections are only one-way). In yet another embodiment, the satellite network is a two-way satellite network that uses the satellite for both download and upload. In one embodiment, the satellite network uses the Iridium™ system developed, in part, by the Motorola Corp.

Optionally, a telephone 229 is connected to a first port of a codec 260. A second port of the codec 260 is provided to the CPU 202. The codec 260 provides digital-to-analog conversion and analog-to-digital conversion for the telephone 229. The codec 260 also provides standard telephone interface signals, such as a ringing signal, to the telephone 229, and telephone status conditions, such as receiver up or receiver down, to the CPU 202. In some embodiments, the codec 260 and the modem 206 may be combined as a telephone modem. The telephone 229 may be connected even when the network 230 is not a telephone network.

The modem 206 provides an interface between the CPU 202 and the communications network 230 and the operational characteristics of the modem 206 are determined by the type of communications network 230. Thus, if the network 230 is a PSTN network, then a telephone modem is used; if the network 230 is a CATV network, then a cable modem is used, etc. In a preferred embodiment, the modem 206 is integral to the intelligent radio 100. In other embodiments, the modem 206 is provided in a separate enclosure. An Internet Service Provider (ISP) 232 provides the user with a connection from the communications network 230 to the Web via the Internet 234. Note that FIG. 2 shows functional elements, but not necessarily hardware configurations. Thus, for example, the modem 206 may be implemented in software on the CPU 202. The CPU 202 may be a Digital Signal Processor (DSP). The CPU 202 may comprise a single computer processor, or multiple computer processors. In one embodiment, the CPU 202 comprises two processors, a DSP and a general purpose microprocessor. In one embodiment, the modem 206 is provided in a plug-in module such that the intelligent radio can be configured for different types of computer networks by simply changing the modem plug-in to suit the type of network being used.

The CPU 202 provides data to the display device 112. The CPU 202 receives user inputs from the command button 121, the tuning control 114, the button bar 120, the select button 118, and the cursor control 116. The CPU 202 provides digitized audio samples to an input of a Digital-to-Analog Converter (DAC) 220. The analog audio output of the DAC 220 is provided to an amplifier 222. In a preferred embodiment, the DAC 220 and the amplifier 222 are each two-channel devices, providing left and right stereo channels. A left channel output of the amplifier 222 is provided to the left channel speaker 106 and a right channel output of the amplifier 222 is provided to the right channel speaker 108. The volume control 110 controls the gain of the amplifier 222.

As shown in the preferred embodiment in FIG. 2, the other optional audio sources such as the cassette device 130, an AM tuner 240, an FM tuner 242, and an external input 244 also provide inputs to the amplifier 222. Other optional audio sources may be provided, such as, for example, an audio CD, a DVD, a digital audio tape unit, etc. The CPU 202 controls the cassette device 130, the AM tuner 240, the FM tuner 242, and other optional audio sources. A line output from the amplifier 222 may also be provided to a record input of the cassette device 130.

As described above, the button bar 120 is used to select one of the audio sources. When the button bar 120 is set to "AM," the intelligent radio 100 operates in an AM radio mode. In the AM radio mode, an analog output from the AM tuner 240 is provided to the amplifier 222. Also in the AM radio mode, the display device 112 displays the frequency of an AM station selected by the AM tuner 240. The user may use the tuning control 114 to select a desired AM station. The AM mode is optional.

An analog output from a microphone 250 is provided to an analog input of an analog-to-digital converter 252. A digital output from the analog-to-digital converter 252 is provided to the CPU 202. The microphone 250 and converter 252 allow for voice commands to control the intelligent radio. The microphone 250 and converter 252 are optional. In some embodiments, a microphone is also placed in a wireless remote so that voice commands can be provided from the wireless remote.

When the button bar 120 is set to "FM," the intelligent radio 100 operates in an FM radio mode. In the FM radio mode, the analog audio output from the FM tuner is provided to the amplifier 222, and the display device 112 displays the frequency of the FM station selected by the FM tuner 242. The FM mode is also optional.

When the button bar 120 is set to "Cassette," the intelligent radio 100 operates in a cassette playback mode. In the cassette playback mode, analog output from the cassette player is provided to the amplifier 222, and the display device 112 displays information relating to the cassette playback. The cassette playback mode is also optional. The cassette device 130 may also optionally be configured to provide a record capability such that the cassette can be used to record audio information from any of the other modes. Thus, for example, the cassette can be used to record FM radio, AM radio, or Web radio broadcasts.

When the button bar 120 is set to "Web," the intelligent radio 100 operates in a Web Radio mode. In the Web Radio mode, the intelligent radio 100 uses the modem 206 to connect to the ISP 232. The ISP 232 provides a list of available Web broadcasts, and access to the Internet 234, so that the various Web broadcasts can be received by the intelligent radio 100. In the Web Radio mode, the display device 112 is used to select a Web broadcast and to provide information about the selected Web broadcast.

FIGS. 3A through 3E show various displays provided by the display device 112 while in the Web Radio mode. FIG. 3A shows a default display 300 that appears while a Web broadcast is being received. FIG. 3B shows a menu display that allows the user to select one of the command and setup displays shown in FIGS. 3C-3E.

The display 300, shown in FIG. 3A, includes information about the Web broadcast including the type of broadcast (e.g., "Newscast"), the Web address (URL) of the source for the broadcast (e.g., http://www.npr.org), a description of the broadcast (e.g., "National Public Radio 1997"), a broadcast format (e.g., "Streaming RealAudio"), etc.

FIG. 3B shows a menu display 320 that allows the user to access the various setup and control displays shown in FIGS. 3D-3E. The user activates the menu display 320 by pressing the command button 121. The display 320 provides a menu list 322 that lists the various other command displays. The list

322 may provide: a "Tune Station" command for activating a tune-station display 340, shown in FIG. 3E; a "Select Language" command for activating a select-language display 310, shown in FIG. 3C; and a "Select List" command for activating a select-list display 322, shown in FIG. 3D. The list 322 may also provide commands to activate other displays (not shown) such as "Setup," to initialize the intelligent radio, "Scan Stations," to get a new list of Web broadcast stations from the Internet 234, and "Define Station," to manually define a Web broadcast station not listed. The list 322 may also provide commands to activate other displays such as "Set Clock," and "Set Alarm," to provide optional clock and alarm clock modes for the display device 112.

The display 320 also provides a scroll bar 321 to allow the user to scroll through the list 322 and select an item (command) from the list. Scrolling may be accomplished by using either the cursor control 116 or the tuning control 114. The user uses the cursor control 116 or the tuning control 114 to highlight a desired menu item in the list 322, and then the user presses the select button 118 to select the highlighted menu item.

The select-language display 310, shown in FIG. 3B, allows the user to elect to receive Web broadcasts in one or more selected languages. The display 310 provides a list of available languages 312 and a scroll bar 314 for scrolling through the list 312. Each item in the list 312 corresponds to a language (e.g., English, French, etc.) and each item is provided with a checkbox 313. If a checkbox 313 is checked, then the corresponding language is enabled. The display 310 also provides an OK button 315, a Cancel button 316, a Clear-All button 317, and a Select-All button 318. The Clear-All button 317 clears all of the checkboxes 313, and the Select-All button 318 checks all of the checkboxes 313. The user "presses" one of the buttons 315-318 by using the cursor control 116 to highlight a desired button and then pressing the select button 118 to "press" the highlighted button.

The select-list display 330, shown in FIG. 3D, allows the user to select a preferred type of program material (e.g., Sports, Weather, News, All, etc.). The display 330 includes a list 332 of program types and a scroll bar 331. The user uses the cursor control 116 or the tuning control 114 to highlight a desired program type from the list 332, and then the user presses the select button 118 to select the highlighted program type.

The select-broadcast display 340, shown in FIG. 3E, allows the user to select a Web broadcast. The display 330 includes a list 342 of the available Web broadcasts having the proper language (as selected in the select language display 310) and the desired program type (as selected in the select-list display 331). The user uses the cursor control 116 or the tuning control 114 to highlight a desired broadcast from the list 342, and then the user presses the select button 118 to select the highlighted program type. Each item in the list 342 is provided with a checkbox 343. If the checkbox 343 is checked, then the corresponding broadcast is a preferred (or "fast-tune") broadcast. The user may scroll through the fast-tune broadcasts by using the tuning control 114 from the default display 300 shown in FIG. 3A, without having to activate the select-broadcast display 340. This provides a convenient shortcut feature to allow the user to quickly tune to stations that the user regularly listens to.

FIG. 4 illustrates a data-entry display 450 that allows the user to input alphanumeric text (e.g., the telephone number of the ISP 232 or a URL). The display 450 includes a text prompt 451 to prompt the user for the desired data. The display also includes an on-screen keyboard 452, a text display 453, an OK button 454 and a Cancel button 455. The user enters text by using the cursor control 118 to highlight a desired character on the on-screen keyboard 452 and then pressing the select button 118 to enter the highlighted character into the text display 453. The OK button 454 and the Cancel button 455 are "pressed" in the same fashion.

FIG. 5 is a flowchart 500 that begins at a start block 501 and illustrates the Web Radio mode process. The process advances from the start block 501 to a decision block 502, where the process checks a status flag to determine whether or not the intelligent radio software needs to be initialized (setup). If setup is needed, then the process advances to a process block 504; otherwise, the process jumps over the setup steps to a process block 514. In the process block 504, the process obtains a phone number for the desired ISP 232. The phone number may be obtained from a default phone number stored in the intelligent radio software, or by prompting the user through the data-entry display 450. Once the phone number has been obtained, the process advances to a process block 506, where the modem 206 dials the telephone number and establishes a modem connection with the ISP 232. Once the connection is established, the process advances to a process block 508 where the user establishes an account with the ISP 232.

In one embodiment, the user is prompted for a password that is stored on the data storage device 210 or entered using the data-entry display 450. Establishing an account may include other actions, such as creating a username for the user, changing the phone number used to access the ISP 232, and entering information about the user and the user's account. Once an account is established, the process advances to a process block 510 where a list of available Web radio broadcast stations is downloaded to the intelligent radio 100 from the ISP 232 and stored on the storage device 210. Lists of available languages and program types are also downloaded and stored on the storage device 210. Once the lists are downloaded, the process advances to a hang-up block 512 wherein the modem 206 terminates the network connection (e.g., hangs-up the phone). Upon hang-up, the setup process is complete, and the process advances to the process block 514.

In the process block 514, the modem dials the ISP 232 and then advances to a process block 516 where the intelligent radio 100 logs on to the user's account at the ISP 232. The hang-up, redial, and logon (blocks 512, 514, and 516, respectively) is desirable when using a PSTN, because the initial telephone call, placed in the block 506, is typically a long-distance call or a toll-free (e.g., a 1-800) call. By contrast, the telephone call placed in the block 514 is typically a local call. When using a non-PSTN network (e.g., a cable modem, a satellite network, etc.) then the hang-up, redial, and logon (blocks 512, 514, and 516, respectively) is typically omitted.

Once the user is logged on, the process advances to a process block 518 where the user selects (tunes) a Web radio broadcast station. Once a Web broadcast has been selected, the process advances to a process block 520 where the intelligent radio 100 receives the Web broadcast. The CPU 202 decodes and decompresses the received data as necessary and then sends the decompressed data to the DAC 220 where it is converted to an analog signal that is subsequently played on the speakers 106, 108. The process remains in the process block 520 while the user listens to the Web broadcast.

If the user tunes to a new Web broadcast station (e.g., by turning the tuning control 114 or by activating the select-broadcast display 340) then the process loops back to the process block 518, selects the new station, and returns to the process block 520.

FIG. **6**A illustrates the information management and data processing functions **600** provided by a Web Radio site **602** (e.g., www.webradio.com). Access to the Internet site **602** is made possible by the Internet access provided by the ISP **232**. The Internet site **602** provides a list of Web radio broadcast stations for the user and optionally other value-added services that enhance the operation of the intelligent radio **100**. For example, the Internet site **602** may provide a list of available program sources and streaming audio programming. The site **602** may also maintain user profile comprising a list of preferred Internet "broadcast stations." The site **602** also provides special download capabilities such that the user can download information and software into the intelligent radio. The site **602** also provides upload capabilities such that the user can upload information, such as preferences, etc., from the intelligent radio **100** to the site **602**. For example, the site **602** can provide a customized list of stations for each user and voicemail capability. The site **602** may provide reformatting of streaming audio data into a format better suited for the intelligent radio.

In one embodiment, the site **602** also provides Web telephone capabilities to the intelligent radio **100**, such that the user can use the intelligent radio as a telephone to talk to other users that are connected to the Internet. In one embodiment of the Web telephone, the codec **260** is used to digitize speech from a microphone in the handset of the telephone **229**. The digitized speech is sent over the network **230** to the ISP. The ISP forwards the digitized speech to a remote user. Similarly, the ISP provides digitized speech from the remote user to the intelligent radio. The intelligent radio uses the codec **260** to convert the digitized speech into analog signals that are played on the speakers **106** and **108** or a speaker in the handset of the telephone **229**.

In yet another embodiment, the intelligent radio provides voice email in connection with the site **602**. To receive email, text-to-voice software in the site **602** is used to convert email text into digitized voice data as words spoken in the user's desired language. The digitized voice data is provided to the intelligent radio where it is converted to an analog signal and played on the speakers **106** and **108** or a speaker in the handset of the telephone **229**. To receive email, the user speaks into the microphone **250** or the microphone in the handset of the telephone **229** and the spoken words are converted into digitized speech by the intelligent radio. The intelligent radio sends the digitized speech to the site **602** where it is converted into email text and then emailed to the recipient. The software to convert speech to text and text to speech is provided in the site **602** in order to minimize the cost and complexity of the intelligent radio. Alternatively, the software to convert speech to text and text to speech is provided in the intelligent radio.

In one embodiment, the site **602** also provides special formatting and markup protocols that are tailored to the intelligent radio display **112**. Most existing Internet sites are geared towards a computer or television and assume that a user has a large, high resolution, color monitor. Most existing Internet sites also assume that a user is accessing the site by using a Web browser such as Netscape Navigator™ or Microsoft Internet Explorer™. These browsers support high level protocols such as HyperText Markup Language (HTML). The display **112** may be relatively smaller, and relatively less capable than a traditional computer monitor. In some embodiments, the display **112** does not necessarily need all of the capabilities and complexity of HTML and is thus better served by information that is formatted for the display **112** and that is expressed in a markup language that is suited to the needs of the intelligent radio **100**, without the overhead and complexity of HTML.

When the user connects to the Internet site, information is passed along a first data stream to an account management block **604**. The block **604** provides account management functions relating to the user's account with the ISP **232**. The account management block passes data to a user preference block **606**, which retrieves user profile information and user preferences specified by the user. Information regarding the user preferences may be stored by the ISP **232**, or downloaded from the intelligent radio **100** as needed.

Information is also passed from the process block **602** along a second data stream to a program management block **608**. The program management block **608** accesses a language variety database **610** to determine which languages are available, and a program variety database **612** to determine which types of programs are available. The program management block **608** also accesses program sources such as live broadcasts **620**, archived broadcasts **624**, stored music **626**, and other streaming audio sources **622**.

User profile information from the user preference block **606** and program data from the program management block **608** are provided to a program list block **616**, which constructs a list of available Web programs (broadcasts) that fit the user's preferences. The list constructed in the block **616** is passed to the intelligent radio **100**.

FIG. **6**B shows the conceptual relationship between the site **602** and other Web sites that supply streaming audio information, such as a site **630**, a site **631**, and a site **632**. The Internet provides the ability to transfer data between any two of the sites **602**, **630-632**. The user connects, through the ISP **232**, to the site **602**. The site **602** provides links to the sites **630-632** through the programming lists provided by the site **602**. If the user selects a streaming audio program from one of the sites **630-632**, then the site **602** provides the necessary link to the selected site. In some embodiments, the site **602** provides the link information to the intelligent radio **100**, and the intelligent radio **100** makes a "direct" connection to the selected site. In other embodiments, the site **602** links to the selected site, receives the streaming audio data, reformats the data if desired, and then sends the streaming audio data to the intelligent radio **100**.

FIG. **7** illustrates an embodiment of an intelligent radio tuner **700**. The tuner **700** is mounted in an enclosure **701** and connects to household AC power through a power cord **104**, to a network through a network cable **102**, and to an audio system through an audio line **702**. User controls are mounted on the front of the enclosure **701** and include an on-off switch **704**, a command button **121**, a cursor control **116**, a select button **118**, and a tuning control **114**. The cursor control **116** provides up, down, left, and right movements of a cursor or other entity on a display device **112**. Also mounted on the front of the enclosure **701** is the display device **112**, which provides information to the user.

FIG. **8** is a block diagram of the functional elements of the intelligent radio configured as a tuner **700**. The tuner **700** comprises the Central Processor Unit (CPU) **202** that is used to run the intelligent radio software. The CPU **202** is connected to the random access memory **204**, the data storage device **210**, the modem **206**, and the codec **260**. The data storage device **210** may be any type of non-volatile data storage device, including, for example, a floppy disk drive, a hard disk drive, a flash memory, a CD-ROM, a DVD-ROM, a CMOS memory with battery backup, etc. The modem **206** is connected to a communications network **230**, shown as a Public Switched Telephone Network (PSTN). Although the communications network **230** is shown as a PSTN network, one skilled in the art will recognize that the network **230** may also be a cable television (CATV) network, a satellite net-

work, or any other communications network. The modem **206** provides an interface between the CPU **202** and the communications network **230** and the operational characteristics of the modem **206** are determined by the type of communications network **203**. Thus, if the network **230** is a PSTN network, then a telephone modem is used; and if the network **230** is a CATV network, then a cable modem is used, etc. An Internet Service Provider (ISP) **232** provides the user with a connection from the network **230** to the Web via the Internet **234**.

The CPU **202** provides data to the display device **112**. The CPU **202** receives user inputs from the command button **121**, the tuning control **114**, the select button **118**, and the cursor control **116**. The CPU **202** provides digitized audio samples to an input of a Digital-to-Analog Converter (DAC) **220**. The analog audio output of the DAC **220** is provided to the audio output **702**. In a preferred embodiment, the DAC **220** is a two-channel device, providing left and right stereo channels.

FIG. **9** is a block diagram of the functional elements of an embodiment of an intelligent radio that provides for remote playback. FIG. **9** shows a base unit **900** that is connected to the communications network **230**. The base unit **900** receives streaming audio from the Web and transmits the audio information to a remote playback unit **902**.

The base unit **900** is similar in most respects to the intelligent radio except that the amplifier **222**, the loudspeakers **106** and **108**, and the volume control **110** are not located in the base unit **900**, but rather are located in the remote playback unit **902**. In the base unit, the DAC **220**, the cassette device **130**, the AM tuner **240**, the FM tuner **242**, and the external input **244** are connected to a transmitter **904** rather than the amplifier **222**. The transmitter **904** provides a transmitted signal to a receiver **906** in the remote unit **902**. The receiver **906** provides an audio output to the amplifier **222**.

The base unit **900** receives the streaming audio information from the Internet **234** and uses a transmission carrier to retransmit the audio information to one or more remote units **902**. The transmitter **904** and the receiver **906** may use any form of communication for the transmission carrier, including radio frequency communication, infrared communication, ultrasonic communication, etc. In one embodiment, the transmitter **904** may be a low power FM (Frequency Modulation) transmitter compatible with standard FM broadcast bands, such that the remote playback unit **902** can be a standard FM transistor radio or a stereo receiver. In yet another embodiment, the transmitter **904** may be a low power AM (Amplitude Modulation) transmitter compatible with standard AM broadcast bands, such that the remote playback unit **902** can be a standard AM transistor radio or a stereo receiver.

In other embodiments, the base unit **900** may also include an amplifier **222**, loudspeakers **106** and **108**, and a volume control **110** such that the base unit **900** can provide both playback of the audio information and transmission of the audio information to the remote unit **902**.

FIG. **10** is a block diagram of the functional elements of an embodiment of an intelligent radio that provides for remote access, comprising a base unit **1002** and an intelligent radio **1000**. The base unit **1002** comprises a transceiver **1012** coupled to a modem **1011**. The modem **1011** is connected to the communications network **230**. The modem **1011** receives data from the ISP and provides the data to the transceiver **1012**, which then transmits the data to a transceiver **1010** in the intelligent radio **1000**. The transceiver **1010** transmits data from the intelligent radio **1000** to the transceiver **1012**. The transceiver **1012** provides the data from the intelligent radio **1000** to the modem **1011**, which sends the data to the ISP **232**.

The intelligent radio **1000** is similar in most respects to the intelligent radio **100** shown in FIG. **2**, with the addition of the transceiver **1010**. A data input/output port of the transceiver **1010** is provided to the processor **202** and a Radio Frequency (RF) input/output port of the transceiver **1010** is provided to an antenna. Also, in the intelligent radio **1000**, the modem **206** is optional (because network communications are handled by the transceiver **1010** rather than the modem **206**).

The transceivers **1010** and **1012** use any suitable means for communication, including, for example, optical communication, radio communication, etc. In a preferred embodiment, the transceivers **1010** and **1012** are radio transceivers that use spread-spectrum communication techniques at a frequency of approximately 2.4 GHz. The combination of the base unit **1002** and the intelligent radio **1000** provides a capability similar to that provided by a cordless telephone. The base unit **1002** can be located near a network connection point (e.g., a telephone outlet), and the intelligent radio **1000** can be conveniently placed anywhere within the range of the base unit **1002**. The two-way communication link between the transceiver **1010** and the transceiver **1012** provides a cordless connection to the network **230**.

In one embodiment, the intelligent radio, as shown in FIG. **1**, is a network-enabled audio device. FIG. **11** illustrates one embodiment of the network-enabled audio device configured for use with other electronic devices. In one embodiment, the network-enabled audio device works in conjunction with a PC. With a network connection, software on a PC can be used to assign playlists of songs to the network-enabled audio device. Further, the network-enabled audio devices can be set to turn on at a certain time and play a playlist of music. In one embodiment, songs encompass a variety of audio sources including, but not limited to, audio files containing music and/or advertisements. Optionally, the network-enabled audio devices can turn on through an Internet connection as well. The front panel, including the user controls, can be disabled in order to prevent users from turning the device off when a playlist is scheduled.

In one embodiment, the network-enabled audio device records user activity and provides that information to a server for data mining purposes. For instance, a user's composition of a playlist including songs from The Beatles can be recorded by the network-enabled audio device and sent to a server tracking the number of users composing playlists including songs from The Beatles. Tracking information can then be provided to record companies interested in selling more Beatles MP3's to gauge consumer demand. In one embodiment, a button is provided for allowing the user to turn the logging feature on or off.

In FIG. **11**, an IPAN **1100** includes an IPAN server **1104**, a PC IPAN client **1106**, a network **1102**, a device B **1108**, a device A **1110**, and user controls **1112**. The PC IPAN client **1106** connects to the IPAN Server **1104** through the network **1102** (such as the Internet). The Device **1110** represents a network-enabled audio device, which connects at a default time to the IPAN server **1104**. The user can optionally change the default time or can connect to the IPAN server **1104** at a desired time independent of the default time. The user can use the user controls **1112** on the Device **1110** to bypass the default time and connect to the server **1104** immediately. When the Device **1110** connects, the IPAN server **1104** may have a playlist for the Device **1110**. The IPAN server **1104** downloads the playlist to the device **1110**. The IPAN server **1104** checks to see what devices have the audio files listed in the playlist. The IPAN server **1104** maintains a list of URL's from which the device **1110** received audio files listed in the playlists. In one embodiment, the list of URL's is stored in a

catalog. In one embodiment, the catalog also includes other information such as, for example, a list of available audio playback devices and their settings, scheduled audio playback, and/or commands for system synchronization. The Device **1110** attempts to connect to the URL's listed as the location from which the songs located on the Device's **1108** hard drive were retrieved from. If the URL's do not work and the song exists in the IPAN **1100**, then the audio files are transferred from the Device **1108** to the Device **1110** by uploading the files from the Device **1108** the next time the Device **1108** connects. The next time the Device **1110** connects, it will download the list of files from the server. If the song does not exist in the IPAN, the Device **1110** attempts to download the song at intervals until the user deletes the song from the playlist or the song is added to the Device **1108**. In one embodiment, for example, an empty cone will appear beside the song in the playlist that could not be downloaded. The user can delete the song in order to request a cease in the attempts to download, or the user can refrain from deleting the song from the playlist in order to request that further attempts be made to download the song. A request for further attempts in downloading the song results in further iterations of Device **1110** attempting to download the song from the broken URL followed by attempts to upload the song from Device **1108** when Device **1108** connects.

FIGS. **12**A and **12**B illustrate one embodiment of a network-enabled component audio device **1200**. The device **1200** represents one embodiment of the intelligent radio **700**. FIG. **12**A illustrates a front view of the network-enabled audio device **1200**. The network-enabled audio device **1200** has user controls which are mounted on the front of an enclosure **1202** and include a power button **1204**, a shuttle control **1214**, an enter button **1216**, menu buttons **1212**, an action button **1210**, and a CD-eject button **1222**. On the shuttle control **1214**, there is a right button **1264**, a left button **1260**, an up button **1262**, and a down button **1266** for navigating through menus on the display **1230**. An infrared port **1208** is mounted on the front of the enclosure **1202** to read signals from a remote control **1250**. In one embodiment, the remote control includes buttons for volume, enter, navigation shuttle, action, power, CD eject, and five pre-set menu buttons. A CD player **1220** is also mounted on the front of the enclosure **1202** to play standard audio CD's or MP3 encoded CD's.

In one embodiment, the display **1230** has a menu bar to provide the user with options for listening to playlists, listening to the CD player, or listening to streaming audio. The shuttle control **1214** is used to scroll through the selections in a playlist. Each selection is highlighted as the shuttle control **1214** is pressed right **1264** or left **1260**. When the user makes a choice, the enter button **1216** is pressed to signify that choice being made. If the user chooses the playlist option, a drop down menu is displayed in the display **1230** showing the available playlists. The user then uses the shuttle control **1214** to scroll through the playlists by pressing the up button **1262** or the down button **1266**. Once the user chooses an audio source with the shuttle control **1214**, the user can navigate and play the audio with the group of menu buttons **1212**.

The group of menu buttons **1212** is context sensitive and will change function depending on the audio source. For example, in one embodiment, if the user selects the CD player **1220** as the audio source, then the first menu button in the group of menu buttons **1212** is used to play the CD while the second menu button is used to stop. In one embodiment, the bottom of the display **1230** changes according to the audio source determined by the user. If the user chooses to play CDs, a "play" icon appears above the first button in the group of menu buttons. In one embodiment, if the user chooses to listen to the AM/FM radio, a scan icon appears above the first button in the group of menu buttons **1212**.

In addition to allowing the user to play files, the network-enabled audio device allows the user to play audio CD's on the CD player **1220**. Further, the user can copy and encode songs off CD's in digital formats (known as "ripping") and compose playlists with those songs and other files and streaming audio.

The action button **1210** allows the user to request the latest news, albums, concerts and other information on artists. For example, if the user is listening to a streaming audio broadcast and does not know who the artist is, he or she can press the action button **1210** and receive information on the display **1230** identifying the artists, the name of the songs, interesting facts about the artist, etc. Optionally, the user can acquire similar information by pressing the action button when listening to a CD or a playlist. In one embodiment, the network-enabled audio device **1200** acquires this information by accessing the IPAN server **1104**. The IPAN server **1104** then accesses its own database to search for the requested information. Optionally, the database is located on at least one different server than the IPAN server **1104**. In one embodiment, if the information is not found, a sample of the song will be sent to another server to analyze the sample and report back to the IPAN server **1104** with the correct information.

FIG. **12**B illustrates a rear view of the network-enabled component audio device **1200**. The network-enabled audio device **1200** connects to household AC power through a power cord **1268**. The network-enabled audio device **1200** includes a phone jack **1250**, an Ethernet port **1252**, a line-in connector **1264** having left and right channels, a line-out connector **1262** having left and right channels, a microphone jack **1258**, a headphone jack **1260**, a TOS link **1256**, and a USB port **1254**.

In one embodiment, the phone jack **1250** can be used to either establish a modem connection to an ISP and/or to establish a LAN connection (e.g. Home Phone Network Alliance network connection). The Ethernet port **1252** can be used with an Ethernet cable to provide access to an Ethernet LAN. Optionally, the Ethernet port **1252** can be replaced or supplemented with other types of connections to communications networks. A network cable provided to the Ethernet port **1252** can be a network cable, a cable TV cable, a connection to a wireless (e.g., satellite) unit, a power line, etc. For example, the communications network uses satellites developed by the Motorola Corp., Global Star satellites developed by a consortium of European manufacturers which includes Aérospatiale and Alcatel, P21 satellites developed on a project financed by Inmarasat, or the Odyssey satellite system developed by a TRW consortium associated with Teleglobe/Canada.

In one embodiment, the network-enabled audio device **1200** provides an audio output to an associated audio system. For high-speed interaction with other audio components, the digital out TOS link **1256** (also known as "Optic S/PDIF") is used for an optical connection to provide for the transfer of raw digital streams. Files can be transferred from the network-enabled audio device **1200** without a conversion from digital to analog signals. When the audio file reaches the associated audio system, such as for example a portable MP3 player, the digital audio stream is then converted to an analog stream within the associated audio system to enhance audio quality. The associated audio system provides for amplifiers and loudspeakers.

The line in connector **1264** is an analog line in from another device. The line out connector **1262** is an analog line out to standard left and right RCA-style connectors. The standard

USB host connector **1254** allows downloading of music to portable MP3 players (in a host downloading to a slave relationship) and/or USB networking with a PC or other network-enabled audio device **1200** or **1300**.

FIGS. **13**A and **13**B illustrate one embodiment of a tabletop network-enabled audio device **1300**. FIG. **13**A illustrates a front view of the tabletop version of the network-enabled audio device **1300**. As described in more detail below, the network-enabled audio device **1300** is similar to the network enabled audio device **1200** with the addition of extra features such as a radio, amplifier, and speakers. The network-enabled audio device **1300** has user controls which are mounted on the front of the enclosure **1302** and includes the power button **1204**, the shuttle control **1214**, the enter button **1216**, the menu buttons **1212**, the action button **1210**, the volume control **1316**, and a CD eject button **1222**. The shuttle control **1214** includes the right button **1264**, the left button **1260**, the up button **1262**, and the down button **1266** for navigating through menus on the display **1230**. The infrared port **1208** is mounted on the front of the enclosure **1302** to read signals from the remote control **1250**. In one embodiment, the remote control includes buttons for volume, enter, navigation shuttle, action, power, CD eject, and five pre-set menu buttons. The CD player **1220** is also provided on the device **1300** to play standard audio CD's or MP3 encoded CD's. A right speaker **1303** and a left speaker **1303** are operably connected to the network-enabled audio device **1300**.

In one embodiment, the group of menu buttons **1212** perform the same or similar functions as the group of menu buttons **1212** in the network-enabled component audio device **1200** illustrated in FIG. **12** except that the display **1230** will illustrate an additional option of playing an AM/FM radio. Therefore, when the shuttle control **1214** is used to select the AM/FM radio audio source and the user presses the enter button **1216**, the icons that reflect functions such as tuning, scanning, and other buttons used to navigate and manage an AM/FM audio source appear. If the user chooses to listen to the AM/FM radio, a scan icon appears above the first menu button **1212**.

FIG. **13**B illustrates a rear view of the tabletop network-enabled audio device **1300**. The network-enabled audio device **1300** connects to household AC power through the power cord **1268**. The network-enabled audio device includes the phone jack **1250**, the Ethernet port **1252**, the line-in connector **1264** having left and right channels, the line-out connector **1262** having right and left channels, the microphone jack **1258**, the headphone jack **1260**, an AM/FM antenna port **1390**, left and right speaker outputs **1392**, and the USB port **1254**.

In one embodiment, the network-enabled audio device **1300** has an AM/FM antenna port for connecting to an AM/FM antenna. The network enabled audio device **1300** includes an amplifier and loudspeakers **1303** (as will be described in FIG. **14**) which connect to the left and right speaker outputs **1350**.

FIG. **14** is a block diagram of the functional elements of the network-enabled audio devices **1200** and **1300**. The network-enabled audio device **1300** typically includes the functional elements of the network-enabled audio device **1200**. The network-enabled component audio device system **1300** includes an AM Tuner **1418**, an FM tuner **1420**, an amplifier **1422**, and the speakers **1303**. In one embodiment, the network-enabled audio device **1200** does not include the AM tuner **1418**, the FM tuner **1420**, the amplifier **1422**, or the speakers **1303**. A Central Processing Unit (CPU) **1402** and a CPU Support Chip **1406** are used to run the software on the network-enabled audio devices **1200** and **1300**. In one embodiment, the CPU **1402** is a StrongARM SA-1110 manufactured by Intel, and the CPU Support Chip **1406** is a StrongARM SA-1111 manufactured by Intel. The network-enabled audio device **1200** includes a display **1408**, a modem **1410**, a memory card **1412**, a data storage device **1414**, a codec **1416**, a CD player, a DAC **1470**, a microphone **1480**, a line-in port **1482**, and a line out **1484**. Further, the network-enabled audio device **1200** includes user controls, including a shuttle control **1214**, a group of menu buttons **1212**, an enter button **1204**, and an action button **1210**. The network-enabled audio device **1200** connects externally to a network **1428**. The network **1428** is shown as a Public Switched Telephone Network (PSTN) **1428** that connects to an ISP **1429** which gives access to the Internet **1102**. Through the Internet **1102**, a user can access the server site **1104** and thereby access the server site IPAN software **1433**.

In one embodiment the CPU **1402** communicates with the random access memory **1412**, the telephone modem **1410**, and the display **1408**. The memory **1412** can be flash memory or a combination of flash memory and other types of memory. The memory **1412** can be volatile or non-volatile or a combination of volatile and non-volatile. The modem **1410** is connected to a communications network **1428**, shown as a PSTN **1428**. In one embodiment, the modem **1410** is also connected to an HPNA network. Although the communications network **1428** is shown as a PSTN network, one skilled in the art will recognize that the network **1428** can also be a cable television (CATV) network, a satellite network, or any other communications network. In one embodiment, the network **1428** comprises both a Direct TV/PC satellite connection that provides information to the network-enabled audio device at high speed (e.g., 400,000 bytes per second or more), and a PSTN **1428** network connection so the intelligent radio can upload information back to the ISP **1429** (because many Direct TV/PC connections are only one-way). In yet another embodiment, the satellite network is a two-way satellite network that uses the satellite for both download and upload.

A port of the codec **1416** is provided to the CPU Support Chip **1406**. In one embodiment, the codec is a Cirrus CS4299 audio codec. The codec **1416** provides analog-to-digital conversion for the microphone **1480** and for the line in **1482**, and digital-to-analog conversion for the line out **1484**. In some embodiments, the codec **1416** and the modem **1430** are combined as a telephone modem.

The modem **1410** provides an interface between the CPU **1402** and the communications network **1428** and the operational characteristics of the modem **1410** are determined by the type of communications network **1428**. Thus, if the network **1428** is a PSTN network, then a telephone modem is used; if the network **1428** is a CATV network, then a cable modem is used, etc. In a preferred embodiment, the modem **1430** is integral to the network-enabled audio device. An Internet Service Provider (ISP) **1429** provides the user with a connection from the communications network **1428** to the Web via the Internet **1430**. The server site **1104** can then be accessed, and the server site IPAN software **1433** can be used by the user to manage audio sources and devices. Note that FIG. **14** shows functional elements, but not necessarily hardware configurations. Thus, for example, the modem **1410** can be implemented in software on the CPU **1402** or even on the CPU Support Chip **1406**. The CPU **1402** is a single computer processor, or multiple computer processors. In one embodiment, the CPU **1402** comprises two processors, a Digital Signal Processor (DSP) and a general purpose microprocessor. In one embodiment, the modem **1410** is provided in a plug-in module such that the intelligent radio can be config-

ured for different types of computer networks by simply changing the modem plug-in to suit the type of network being used.

Optionally, the microphone **1480** is connected to a second port of the codec **1416**. An analog output from the microphone **1480** is provided to the codec **1416**. A digital output from the codec **1416** is provided to the CPU **1402**. The microphone **1480** allows for voice commands to control the network-enabled audio device. The microphone **1416** is optional. In one embodiment, a microphone (not shown) is also placed in a wireless remote so that voice commands can be provided from the wireless remote. Optionally, headphones can also be used.

The CPU **1402** provides data to the display device **1408**. The CPU **1402** receives user inputs from the shuttle control **1214**, the group of menu buttons **1212**, the enter button **1202**, and the action button **1210**.

A system bus interface interconnects the CPU **1402** to the CPU Support Chip **1406**. In one embodiment, the CPU Support Chip provides digitized audio samples to an input of the Digital-to-Analog Converter (DAC) **1470**. The analog audio output of the DAC **1470** is provided to the amplifier **1422**. In one embodiment, the DAC **1470** and the amplifier **1422** are each two-channel devices, providing left and right stereo channels. Channel outputs of the amplifier **1422** are provided to the speakers **1303**. The volume control controls the gain of the amplifier **1422**. In one embodiment, the amplifier and speakers are part of an external stereo system.

The CPU support chip **1406** is also operably connected to a CD player **1426** which outputs audio to the amplifier **1422** or an external amplification system. The CPU Support Chip **1406** or optionally the CPU **1402** also maintains software for managing the transfer of audio files from CD's to the network-enabled audio device's hard drive.

FIG. **15** illustrates a configuration for assigning playlists and audio sources to a network-enabled audio device **1510** or other devices such as a PC **1508** from a network-enabled audio device **1520** or another device. Each network-enabled audio device **1510** has a storage space **1512** for network-enabled audio device IPAN software **1526**, a playlist **1528**, and associated URL's and songs within the playlist. Similarly, each network-enabled audio device **1520** has a storage space **1522** for network-enabled audio device IPAN software **1526**, a playlist **1528**, and associated URL's and songs within the playlist. Each client PC **1508** has a storage space **1524** for client IPAN software **1532**, a playlist **1534**, and associated URL's and songs within the playlist. The server site **1104** includes server site IPAN software **1433**, the playlist **1528** stored on the storage space **1522** of device **1510**, the playlist **1530** stored on the storage space **1524** of the client PC **1508**, and the playlist **1530** stored on the storage space **1522** of the device **1520**. A storage space **1506** is provided to the server site **1104** for use in uploading and downloading audio files when URL's are broken. Storage space **1506** for the server site IPAN **1104** and other software programs can be stored externally or locally at the site.

Each network enabled audio device **1510** has storage space **1512** for a playlist **1528**, which is a list of audio files and associated URL's of where the audio files were retrieved from. Optionally, the associated URL's can be archived for only file formats that are streaming audio or MP3. Multiple playlists can be stored on the storage space **1512**. In addition to the playlist **1528**, the actual audio files listed in the playlist are also stored in the storage space **1512**. The audio files can be streaming audio, Windows Media Audio (WMA), and other audio formats. The network enabled audio device **1520** performs the same functions as the network enabled audio device **1510** with the storage space **1522**, the playlist **1530**, the network-enabled audio device IPAN software **1526**, and songs and associated URL's.

The PC client **1508** has a storage space **1524** for a playlist **1534** and associated URL's and songs in the playlist. PC IPAN client software **1532** is also stored on the storage space **1524**. The PC client **1508** includes a web browser (e.g., Microsoft Explorer, Netscape Navigator, etc.), an IPAN plug-in to the web browser, and an IPAN active tray software module.

The IPAN plug-in opens as soon as the web browser is opened. The IPAN plug-in affects the handling of links to MP3 files, streaming audio, and any other audio file type designated. Whenever a user selects, saves, or opens a file in the web browser, the IPAN plug-in intercepts the normal processing of the web browser and will check to see if the file is an audio file. If the file is an audio file, the IPAN plug-in will allow the user to download the audio file to the IPAN **1100** now or to schedule the file for download at a later time. In either case, the URL can be added to the playlist. Further, the IPAN plug-in will periodically connect to the server site IPAN software **1433** to receive software upgrades or to upload updates of the audio files present on the client PC **1433**.

The web browser can be used to connect to the server site **1104** and provide access to the server site IPAN software **1433**. The IPAN active tray software module runs in the background when the PC client **1508** is turned on. Without the web browser being opened, the IPAN active tray software module can play audio files in playlists.

At the server site **1104**, the user can access the server site IPAN software **1433** through a network connection to the server site IPAN **1104** and from the server site IPAN software **1433** the user can assign playlists to different devices such as the network-enabled audio device **1510**, the network-enabled audio device **1520**, or the client PC **1508**. The user composes the playlists from the server site IPAN software **1433**, but typically only stores the title of the song and the URL from which the song came. The playlists stored throughout the IPAN **1100** are also stored in the server site IPAN **1433**. The user then has a master list of where all playlists are located. When the device **1510** connects to the server site IPAN **1104**, a playlist is assigned to it. Within the playlist, the URL's indicate the location from which the audio files associated with the song titles in the playlist can be downloaded. The network-enabled audio device **1510** then proceeds to download the song from the given site specified by the URL to the disk space **1512** on the device **1510**. If the site at the URL is not working, the server site IPAN software **1433** will upload the playlist from the disk space **1522** of another device **1520** the next time the second device **1520** connects to the network. The next time the original device **1510** calls in, it will download the playlist from the server site **1104**.

Further, the server downloads software upgrades, if necessary, when the device accesses the IPAN **1433**. For example, if the disk space in a device that was supposed to have a playlist was accidentally erased, then the server site **1104** provides the URL's for sites to download the lost playlists. In addition, the server site **1104** downloads any other software used to enhance the communications between the server and the device. Software can also be downloaded to be used by the CPU **1402** or the Support Chip CPU **1406**.

In one embodiment, there is no server site **1104**. The PC IPAN client software **1532** stores the playlists that are located throughout the IPAN **1100**. Through a network connection, the PC IPAN client software assigns playlists to devices **1510** and **1520**.

FIG. **16** illustrates the connection steps used when the user first sets up the network-enabled audio device. A user begins at process block **1601** by connecting the speakers and radio antennas to the back of the unit. The user also takes other preparatory measures such as plugging in the AC power cord and connecting a phone cable to a telephone jack. At the next process block **1602**, the user can choose to begin listening to preloaded music without setting up any of the software by pressing the power button **1204** on the machine and pressing the "Listen Now/Setup Later" button on the first screen. The user can thus listen to preloaded music before even setting up the software for the network-enabled audio device. The process then advances to the next process block **1603** where the user can scroll through the playlists of preloaded music by using the shuttle control **1214** and the enter button **1216**. At the next process block **1605**, the user begins to set up the network-enabled audio device **1200** by inserting a setup CD into the CD player **1220**. The process advances to process block **1606** where the user returns to the first screen and selects "Setup Now" in order to begin loading the PC IPAN client software **1532** on the network-enabled audio device **1200**.

FIGS. **17**A through **17**I show various displays provided by the PC IPAN client software **1532** and the server site IPAN software **1433**. In one embodiment, these displays are produced by web pages provided by the server and display on the user's PC in a web browser. FIG. **17**A illustrates a Playlist Manager window **1700** that appears when a user runs the PC IPAN client software **1532** and the server site IPAN software **1433**. The user-control buttons in the Playlist Manager window include a client feature control button **1702**, an audio player window button **1704**, a create new playlist button **1706**, a delete button **1708**, a schedule button **1710**, a play button **1712**, a scan hard drive button **1714**, an add device button **1716**, and a synchronize button **1718**. Personal Audio Information Tabs **1726** allow the user to view classifications for audio such as by artist or playlist. The display playlist and song button **1740** provides access to audio and devices such as PC's, network-enabled audio devices **1200** and **1300**, portable audio devices, etc. Access is provided as a tree control in the playlist window **1780**. The playlist window **1780** displays playlists, the title window **1720** displays songs in the playlist, an arrow button **1760** provides for addition of songs to playlists, and an arrow button **1799** provides for deletion of songs from playlists.

The Client Feature control button **1702** allows the user to select a desired playlist or other audio source to listen to. The client feature control button also allows the user to control the look and feel of the window such as color and background designs ("skins") etc. The user clicks the play button **1712** to play a selection. To control the volume, shuffle, repeat, and other playback functions, the user clicks the audio player window button **1704**. A new popup window appears with buttons for each of those functions. In addition to choosing a playlist, the user can compose a new playlist. The user clicks the new playlist button **1706** to create a new playlist by artist, album, or genre. The user can scan the PC's hard drive for music to incorporate into a playlist by clicking the scan button **1714**. The user can also add a device to the IPAN **1433** by clicking the add device button **1716**.

To help manage playlists and devices, the Playlist Manager **1700** provides personal audio information tabs **1726**. The devices that can be managed include network-enabled audio devices **1200** and **1300**, PC's, portable MP3 players, cell phones, etc. With the personal audio information tabs **1726**, the user can view and manage the devices, playlists, and audio classifications by "All," "Playlist," "Album," "Artist," "Genre," "Books," or "Clips." The playlist window **1780** lists the playlists selected by the personal audio information tabs **1726**. The title window **1720** lists the songs in a playlist selected in the playlist window **1780**. Songs are added to a playlist listed in the playlist window **1780** using the arrow button **1760** and removed from a playlist listed in the playlist window **1780** using the arrow button **1799**. The user deletes audio files from the IPAN **1100** by selecting the file and pressing the delete button **1708**. Further, the user can schedule playlists or streams to be heard at designated devices and at designated times by using the schedule button **1710**. The user can synchronize with the server site IPAN **1433** by clicking the synchronize button **1718**. Playlists are stored on the server site IPAN **1433** in addition to the PC IPAN client **1508** or device **1510**. In other words, a playlist may have been updated at the server site IPAN **1433** by adding or deleting some songs in the playlist. The user can choose to have the same playlist with two different songs at the server site **1104** and on the device **1200** or **1300**. But, if the user made the playlist at the server site IPAN **1433**, the user presses the synchronize button **1718** so that the next time the device **1200** or **1300** connects, an updated playlist will be downloaded. To access a playlist or the playlists on a particular device, the user clicks the display button **1740**.

FIG. **17**B illustrates the display of an audio player window **1792** that includes a previous track button **1782**, a play button **1784**, a stop button **1786**, and a next track button **1790**. The audio player window **1792** is invoked by pressing the audio player window button **1704**. A volume indicator **1794** displays the current volume. The user can click on the volume indicator **1794** to drag it higher or lower to a different volume. The user can click the shuffle button **1796** to "randomize" the playlist as opposed to playing the playlist in the same order. Further, the user can press the repeat button **1798** in order to have continuous play as opposed to the playlist stopping when it runs out of songs to play. The playlists will typically start from the beginning.

FIG. **17**C illustrates the display of the audio player window **1700** showing popup menus that appear when the user attempts to assign a highlighted playlist to another device. After the user highlights a song, the user can right-click on the song in order to have a popup menu **1761** appear with a variety of options such as "Load," "Play," "Blast To," "Copy To," "Make Available On," and "Delete." The user can choose the menu option of "Make Available On" to assign the playlist from one device to another, (e.g. from device **1510** to device **1520**). The addition of the device **1510**, the device **1520**, a portable player, a PC, etc. to the IPAN **1100** will be discussed with reference to FIG. **17**I. Once the "Make Available On" option is chosen, another window **1762** appears with options of devices for the playlist to be assigned to. In FIG. **17**C, the playlist is assigned to "Living Room iRad-S" instead of "Office Desktop computer," "Portable Player," or "Home Desktop Computer."

FIG. **17**D illustrates one embodiment of how the list of songs in a playlist is displayed. A speaker icon **1762** is used to indicate a local audio file. In other words, the audio file is located on some storage space within one of the devices (e.g., a network enabled audio device **1200** or **1300**, a PC, a portable player, etc.). A speaker outline icon **1763** indicates a link to an audio file located elsewhere on another device within the IPAN **1100**. The link can be clicked in order to see what other devices, if any, the file is located on.

FIG. **17**E illustrates a scheduling window **1763** that opens in response to the pressing the schedule button **1710**. The user can schedule playlists to be played at a particular time and on a particular device. The network-enabled audio device will

automatically turn on at the scheduled time and play the given playlist. The user controls can be disabled in order to prevent a user at a remote location from changing the music scheduled to be played at the given time. Optionally, the user controls can be disabled in order to prevent the network-enabled audio device from being turned off. The scheduling window **1763** allows a user to highlight dates on a calendar and choose devices from menus to be played at a specific time. The user can also choose to interactively play the selected playlist on a day of the week at a particular time. For example, the user can choose to have a selected playlist played every Monday, Tuesday, Wednesday, Thursday, and Friday at 6 p.m.

FIG. **17**F illustrates a popup menu for selecting the default look and feel ("skin") of the IPAN client **1508**. The user accesses the "skin" option by pressing the client feature control button **1702** and the client feature control menu **1764** appears. After the user selects "skin" from the client feature control menu **1764**, a "skin" menu **1765** appears to provide different "skin" options such as, for example, "Default," "Executive," "Space," "Sixties," and "Post Industrial." FIG. **17**G shows that the "skin" menu **1765** also provides a "Get More Skins" option to allow the user to see other "skins" besides the ones listed in the "skin" window **1765**.

FIG. **17**H shows how the user can choose to "blast" a playlist of the existing audio files from a device, such as a portable player, and replace them with a new playlist in one easy process. In other words, the user can delete the existing audio files from a playlist without deleting the playlist name and substitute new audio files for the old audio files. After the user selects a song, the user right-clicks on the song to open a window **1766** with the option "Blast To." When the "Blast to" menu item is selected, a popup menu **1767** appears to provide the user with a list of devices that the music can be "Blasted" to. Devices such as the network-enabled audio devices **1200** and **1300**, PC's, portable players, etc. can be "Blasted" to.

FIG. **17**I illustrates a pop up window **1779** for adding a device to the IPAN. A plurality of fields **1771-1774** and a plurality of fields **1775-1778** are provided to allow the user to enter information concerning the new device to be added. The user enters the name of the new device to be added in the field **1771**; the serial number of the device in the field **1772**; the device type of the new device in the field **1773**, the connection point in the field **1774**; the time to automatically download to the new device in the field **1775**; the maximum time for download duration in the field **1776**, and a folder for receiving files in the field **1778**. In addition an OK button **1791** and a Cancel button **1792** are provided. Finally, there is a download box **1793** that is checked to have new files and updates automatically downloaded to the device when it is connected to the IPAN **1100**. A device can become a dedicated MP3 server by downloading files to the device every time an audio file is downloaded to any other device.

The user selects the type of device in the field **1773** from a list of devices supported by the IPAN **1100**. The user may have more than one type of device in the IPAN **1100**. Therefore, the user can enter a name in the field **1771** and the serial number in the field **1772** to distinguish similar devices. If the user designates a portable device, the device which the portable device will be connected to is entered in the field **1774** to provide the IPAN with information about how to access the portable device. The download time is entered in the field **1775** to provide the IPAN with the time when the user would like the device to automatically download. The default time is set to early morning (e.g. between midnight and 5 a.m.) because that is the time when the least amount of people are on the telephone and the Internet. The download duration is entered into the field **1776** to provide a maximum time limit for download duration if desired. The default is unlimited, but the user can set a maximum time so that if the download is not finished within the time limit, the device signs off. Before signing off, the current task will be completed. In other words, if the maximum time is exceeded in the middle of downloading the third song in a download of ten songs, the task of downloading the third song will be completed. The download will continue where it left off upon initiation of the next download command. In the previous example, the download will continue at the fourth song. Finally, the server site IPAN software **1433** will automatically install downloaded files in a designated folder unless the user specifies a different location in the field **1778**.

FIGS. **18**A through **18**H illustrate the use of the display **1800** on the network-enabled audio device. In FIG. **18**A, the screen display **1802** includes a "Radio" menu item **1804**, a "Playlist" menu item **1806**, a "Favorites" menu item **1808**, a "Jukebox" menu item **1810**, a "CD" menu item **1812**, and an "Internet Radio" menu item **1814**. Residing in the lower portion of the display **1800**, the menu buttons **1821-1825** are in the group of menu buttons **1212** and are provided to correspond to icons **1841-1845** residing in the lower portion of the display **1800**. Each one of the icons **1841-1845** represents a different function to be performed with respect to a selected audio source.

The user selects items from the screen display **1802** by using the shuttle control **1214** and the enter button **1216**. For example, to select the "CD" audio source, the user presses right shuttle control **1264** until the "CD" menu item is highlighted. The user then presses the enter button **1216**. Once an audio source is selected, context sensitive icons **1841-1845** appear above the corresponding menu buttons **1821-1825**. Depending on the chosen audio source, the icons **1841-1845** represent different functions.

FIG. **18**B illustrates the screen display **1802** when the audio source is an AM/FM radio, such as the AM/FM "Radio" menu item **1804**. The menu item **1804** is highlighted to indicate that the AM/FM "Radio" audio source has been chosen. The menu buttons **1821-1825** change context to correspond to icons that represent functions related to the audio source selected. Because the AM/FM "Radio" audio source was selected, the menu buttons **1821-1825** change context to correspond to the icons for an AM/FM tuner. The icons **1841-1845** shown as, respectively, a play icon **1841** corresponding to a play function **1830**, a scan next icon **1842** corresponding to a scan next function **1832**, a scan previous icon **1843** corresponding to a scan next function **1834**, a radio presets icon **1844** corresponding to a radio presets function **1836**, and a stop icon **1845** corresponding to a stop function **1838**. As further illustrated in FIG. **18**C, if the menu button **1823** corresponding to the icon **1844** representing the radio presets function **1836** is pressed, the menu buttons **1821-1825** change context to correspond to icons **1841-1845** which represent the choice of preset stations with each of the functions **1870-1874** corresponding to a different radio station. In one embodiment, the radio source menu option **1804** is omitted.

FIG. **18**D shows the screen display **1802** after the user has selected the Playlist menu item **1806**. The menu buttons **1821-1825** are used to select from various playlist icons **1841-1845**. The icons **1841-1845** shown as, respectively, a play icon **1841** corresponding to a play function **1875**, a record icon **1842** corresponding to a record function **1876**, an export icon **1843** corresponding to an export function **1877**, and back to previous menu icon **1845** corresponding to a back to previous menu function **1878**. The shuttle control **1214** and the enter button **1216** are used to select a song from the playlist in order to play. The record function **1876** will record

a playlist to the network-enabled audio device's storage device **1510**. The export mode downloads the playlist to a portable player. After a song is chosen from a playlist in FIG. **18**D, FIG. **18**E shows the menu buttons **1821** and **1822** changing context to correspond to icons **1840** and **1841**. The icons **1841** and **1842** are shown as, respectively, a delete icon **1841** corresponding to a delete function **1848** and a back to previous menu icon **1850** corresponding to a back to previous menu function **1850**.

FIG. **18**F illustrates the Jukebox audio source **1810**, which provides a listing of all the audio files stored on the hard drive **1512** of the network enabled audio device **1510** by Title, Artist, Album or Genre. The menu buttons **1821** and **1822** change contexts to correspond go icons **1840** and **1841**. The icons **1841** and **1842** are shown as, respectively, a play icon **1849** corresponding to a play function **1849** and a back to previous menu icon **1851** corresponding to a back to previous menu function **1851**.

FIG. **18**G illustrates the CD audio source **1812** being selected. The menu buttons **1821-1823** change context to correspond to icons **1841-1843**. The icons **1841-1843** are shown as, respectively, a Name CD icon **1841** corresponding to a Name CD function **1852**, a Record CD icon **1842** corresponding to a Record CD function **1854**, and a back to previous menu icon **1843** corresponding to a back to previous menu function **1856**. The Record CD function **1854** can be used to copy tracks from a CD to the hard drive **1512** for future use in playlists. The Name CD function **1852** is used to retrieve a title name for a track and other information via the Internet from a CD database site after the Record CD function **1854** has been used to copy the CD to the hard drive. In one embodiment, an online database is checked via the Internet.

In FIG. **18**H, when the CD player is being played, menu buttons **1821-1825** change context to correspond to icons **1841-1844**. The icons **1841-1845** are shown as, respectively, a previous track icon **1841** corresponding to a previous track function **1892**, a pause icon **1842** corresponding to a pause function **1894**, a next track icon **1843** corresponding to a next track function **1896**, and a stop icon **1844** corresponding to a stop play function **1898**.

FIG. **19**A is a flowchart that illustrates an audio query process **1900** of the IPAN **1100**. The audio query process **1900** begins at start block **1940** where the PC IPAN client software **1532** is opened. In one embodiment, a portion of the PC IPAN client software **1532** is part of the "active tray" so that when a user turns the PC **1508** on, the PC IPAN client software **1532** is opened. Further, a portion of the PC IPAN client software **1532** is part of the IPAN plug-in so that when an Internet or other network connection is established, the PC IPAN client software **1532** runs in the background to query whether to add an audio file found on the Internet to the server site IPAN **1104**. The process advances to a process block **1942** where the user finds a desired audio file as addressed by a URL. The user can search the Internet for audio without having to access the web site associated with the server site **1502**. In a decision block **1944**, the user is asked, through a menu, if the file is to be downloaded. If the process advances to a process block **1948**, the user has decided to download the file now and the playlist is added to the IPAN **1100**. At a process block **1950**, the file has been downloaded and is available for playing. If the user decides "NO" (i.e. to download the file at a later time or at the default time) the process advances to a process block **1946** to download the file at that default or more convenient time. The process then advances to a process block **1948** when the file is added to the IPAN **1100**. The web site associated with the server site **1104** does not have to be opened. The PC IPAN client software **1532** will download the software to the hard drive of the PC **1508** and connect to the web site associated with the server site **1508** to upload the audio files. At the final process block **1950**, the audio files will be available for playing.

FIG. **19**B is a flowchart **1900** that begins at start block **1902** and illustrates the assignment of playlists to devices. The process advances from the start block **1902** to a process block **1904** where the user logs into the server site IPAN **1433**. The process advances to the next process block **1908** where the user assigns a playlist to a first device **1510**. In one embodiment, the playlist is stored in an SQL database and accessed via active server pages. After the active server pages access the SQL database, the playlist is downloaded to the first device **1510**. The process then advances to a decision block **1908** where the process checks to see if all the songs in the playlist are stored in the first device's hard drive **1512**. If all the songs in the playlist are already on the first device **1510**, the songs on device **1510** are catalogued as being present. If songs need to be downloaded, the server site IPAN **1433** forms a list of remaining songs. In the next process block **1910**, the server site IPAN **1433** compares the list of remaining songs to its records of the songs present on the device **1520** to see if the device **1520** has some of the necessary songs to complete the playlist formation. If the second device **1520** does have some of the remaining songs, the URLs of those songs, which are stored on the Server site IPAN, are provided to the first device **1510**. The remaining songs which the second device **1520** does not have are deleted from the list of remaining songs and do not become part of the playlist. In the next process block **1914**, the first device **1510** will download the songs from the URLs provided to it by server site IPAN **1433**. The first device **1510** downloads all of the remaining songs needed for the playlist from the second device's **1520** URL's, but if all the songs are not on the second device's **1520** playlist, the first device **1510** will either get them from another device or in the worst case compose a playlist from only the songs that could be retrieved.

In the decision block **1916**, the process determines if any URLs are broken. If A is unable to download the files from the URLs, the server site IPAN **1433** will upload the files to the server site in process block **1920**, store the files in the interim, and download the files to the first device **1510** in process block **1922** the next time the first device **1510** calls in. For instance, the first device **1510** can be located on the east coast, and the second device **1520** can be located on the west coast. The first device **1510** may be assigned a playlist that is stored on the disk drive **1522** of the second device **1520**. When the first device connects (e.g., at 2 a.m.) to the server site IPAN **1433**, the first device will receive the URL's for the location where the second device **1520** downloaded the audio files and now the first device **1510** can download the audio files. If the URLs are broken, the first device **1510** will disconnect. When the second device **1520** calls in three hours later at 2 a.m. Pacific Time, the server site IPAN **1433** will upload the audio files to the server site **1104** and store the files on the disk space **1506**. When the first device **1510** connects at 2 a.m. the following evening, the audio files will be ready to download from the server site **1104** to the first device **1510**. The audio files will finally be stored on the disk space **1512**.

At process block **1922**, the songs that are present on the device **1510**'s storage space, the songs that have been downloaded from URL's to the device **1510**, and the songs that have been uploaded to the device **1520** are catalogued in the IPAN **1100**. In one embodiment, the songs are catalogued in the IPAN **1100** at the time that they are found. For instance, the songs that are on the device **1510**'s hard drive found at the process block **1908** can be catalogued in the IPAN **1100** at that

time rather than at process block **1922**. Further, the songs downloaded from URL's can be catalogued at process block **1916** or decision block **1916**. Finally, the songs uploaded from the device **1520** can be catalogued at the time of uploading at process block **1918** or at the time of downloading at process block **1920**. Optionally, delays in cataloguing can be used. In one embodiment, for example, the uploaded songs and the downloaded songs are all catalogued at process block **1920** whereas the songs present on the device **1510**'s storage space are catalogued at the decision block **1908**.

FIG. **19**C is a flowchart **1980** that illustrates another embodiment of the process of flowchart **1900**. In one embodiment, the flowchart **1980** has process and decision blocks that handle an assignment of a playlist that includes songs not present on the device **1510**. The process advances from the start block **1902** through **1908** in the same fashion as the process in flowchart **1900**. In contrast to the process in flowchart **1900**, the process then advances to decision block **1990** rather than **1910**. At decision block **1990**, if songs need to be downloaded, the server site IPAN **1433** checks its records to see if the device **1520** has all the necessary songs on the list of remaining songs to complete the playlist formation. If the device **1520** has none or some but not all of the necessary songs, the process advances to a process block **1950**. At the process block **1950**, the necessary songs that are not present on the device **1520** are catalogued in the new playlist with empty cone icons next to those songs. Optionally, the icon can be a symbol other than an empty cone. The playlist is not yet completely formed and will have additions of songs that are present on the device **1520** at a later point in the process. The process then advances to a process block **1952** and deletes songs that the device **1520** does not have from the list of remaining songs. The process then advances to decision block **1954** to determine if the list of remaining songs is empty. If the list of remaining songs is empty, then the process advances to process block **1922** where the songs present on the device **1510**'s storage space **1512** are catalogued in addition to the missing songs that are catalogued. In one embodiment, cataloguing does not include multiple entries for songs determined to be present at an earlier time. For instance, if a song is present on a device and is catalogued once as being present on the device, a multiple entry for the song being present on the device will not be made at a subsequent iteration of the process. If the list of remaining songs is not empty, the process advances to the process block **1912**. At the process block **1912**, the process in the flowchart **1980** proceeds in the same fashion as the process in flowchart **1900** until the process advances to the process block **1922**. After all the songs (including the missing songs) are catalogued at the process block **1922**, the process advances to the process block **1960** where the list of remaining songs is deleted. At the process block **1962**, if the playlist does not contain any songs with an empty cone icon, the playlist is complete and the process advances to the end process block **1924**. If the playlist contains any songs with an empty cone icon, the process advances to the decision block **1964** to allow the user to delete the missing songs. If the user deletes the missing songs, the playlist is complete, and the process advances to the end process block **1924**. If the user decides not to delete the missing songs, a new list of remaining songs is created consisting of the missing songs not deleted by the user. The process then advances to the decision block **1990**.

At the decision block **1990**, if the device **1520** initially had all the remaining songs on the playlist, the process **1980** proceeds in the same fashion as the process **1900**. In one embodiment, if the process advanced from the process block **1966** rather than **1908**, the missing songs have been added to the storage space **1522** of the device **1520** so that the playlist can now be complete. The process advances through iterations until all the songs present on the playlist are present on the storage space **1512** of the device **1510** or until the user deletes songs from playlist so that no missing songs are present. In one embodiment, the process advances from the process block **1966** to the decision block **1908** in order to check whether the missing songs have been added to the storage space **1512** of the device **1510** or the storage space **1522** of the device **1520** so that the playlist can now be complete.

In one embodiment, the IPAN **1100** includes a network connection so that the first device **1510** and the second device **1520** can have audio files downloaded from the first device **1510** to the second device **1520** almost instantaneously after the assignment of an audio file to the device **1510**. For example, in a home network, the device **1510** does not need to connect to the Internet and can retrieve the necessary file through the network connection.

FIGS. **20**A-**20**F illustrate the use of the action button **1210** on the network-enabled audio devices **1200** or **1300**. FIG. **20**A illustrates the screen display **1802** before the action button **1210** has been pressed. In one embodiment, the action button **1210** can be pressed when an audio source (e.g. an audio source in MP3 file format) with an unidentified artist is playing. Optionally, the action button **1210** can be pressed when an audio source in MP3 file format with an identified artist is playing. Optionally, the action button **1210** can be pressed for audio sources such as, for example, streaming audio, files in WMA file format, CDs, etc. The menu buttons **1821**-**1825** represent the functions that can be performed on the given audio source before the action button **1210** is pressed. For an MP3 file, for example, the menu buttons **1821**-**1825** correspond to a "pause" function, a "next" function, a "previous" function, an "add favorites" function, and a "stop" function. After the action button **1210** is pressed, the menu buttons **1821**-**1825** change context to perform functions that provide additional information on the given audio source and artist. Further, after the action button **1210** is pressed, the artist will no longer be shown as "unknown" because the audio source will be uploaded to a server for analysis to determine the identification of the artist. The server will download the identity of the artist in addition to other information concerning the audio source.

FIG. **20**B illustrates the screen display **1802** after the action button **1210** has been pressed. The "unknown" artist in FIG. **20**A has been determined to be "Moby," and the unidentified MP3 file has been identified as "Porcelain." The menu buttons **1821**-**1825** correspond to menu items that provide information on, or related to, the audio source. A title menu **2002** is provided to indicate the location in the directory of action button options that the user has chosen. If the user is at the beginning of the action button directory structure, the screen display **1802** illustrates the text "action" in the title menu **2002**.

The menu buttons **1821**-**1825** correspond to the menu items "news," "music," "tour," "offers," and "done." By choosing the menu item "news," information will be presented to the user of current events regarding the artist and/or the given audio source. For instance, the "news" function can display Billboard top 40 information, clothing lines introduced by the artist, new albums, etc. The menu button **1822** corresponding to the "music" menu item provides the user access to other audio sources from a given artist. The menu button **1823** corresponding to the "tour" menu item allows the user to get up-to-date information on tours that the artist is going on. The menu **1824** corresponds to the "offers" menu

item which allows the user to receive information on merchandise, promotional items, etc. for the given artist. The menu button **1825** corresponding to the "done" menu item allows a user to turn off the action button **1210**.

FIG. **20**C illustrates the screen display **1802** after the menu item "music" has been chosen. The menu path **2204** lists "action" to indicate to the user that the menu title "music" **2202** was a menu item chosen from the menu items illustrated in the screen shot denoted by the menu title "action." The menu buttons **1821-1825** correspond to the menu items "albums," "similar," "samples," "back," and "done." If the user selects the "albums" menu item the user will be able to view a list of other albums by the artist of the audio source. In one embodiment, the server downloads the albums listing when the action button **1210** is pressed for the first time. Optionally, the server downloads additional information after the user selects one of the menu buttons **1821-1825**. When the user presses the menu button **1822**, the "similar" menu item is chosen and a listing of albums that are from a genre of music similar to that of the audio source or from artists that are in some way similar to the artist of the audio source is presented. If the "similar" menu item is performed on Moby and "Porcelain," a list of techno songs from Moby and/or techno songs from other artists can be presented. If the user presses the menu button **1823** corresponding to the "samples" menu item, audio samples from the artist will be presented. If the user presses the menu button **1824** corresponding to the "back" menu item, the location illustrated in the menu title is returned to. If the user presses the menu button **1825** corresponding to the "done" menu item, the action button **1210** is turned off.

FIG. **20**D illustrates the screen display **1802** after the menu item "albums" has been chosen. The menu path **2204** lists "action/music" to indicate to the user that the menu title "albums" **2202** was a menu item chosen from the menu items illustrated in the screen shot denoted by the menu title "music." The menu buttons **1821-1824** correspond to different albums for the given artist. FIG. **20**D illustrates four of Moby's albums: "Moby," "Ambience," "Everything is Wrong," and "Animal Rights." The menu button **1825** corresponds to the "done" function which allows the user to turn the action button **1210** off.

FIG. **20**E illustrates the screen display **1802** after the menu item "Ambient" is chosen on the screen display **1802** illustrated in FIG. **20**D. The menu path **2204** action/music/albums shows that "Ambient" was chosen from the menu title "albums" **2202**. The menu item "buy" is chosen to purchase the album "Ambient." The menu item "download" is chosen to download the "Ambient" album. The menu item "listen" is pressed to allow the user to listen to the album. The menu item "back" allows the user to access the previous menu title. To reach the screen shot with the menu title "albums" from the menu title "Ambient," the user chooses the "back" menu item. The user can turn the action button off by pressing the "done" menu item.

FIG. **20**F illustrates the screen display **1802** after the user determines to buy the album illustrated in FIG. **20**E. The menu path action/music/albums/buy indicates that the user chose the "buy" menu item in FIG. **20**E. The title menu **2202** "complete" is used at the end of the transaction. The menu item "buy" can be chosen to allow the user to complete the transaction. To reach the screen shot with the menu title "Ambient" from the menu title "Complete," the user chooses the "back" menu item. The menu button **1825** corresponds to the menu item "done" which allows the user to turn the action button **1210** off.

In FIG. **20**B, if the menu item "news" is chosen by the user, the subsequent screen will display the menu path "action," the menu title "news," and the menu items: "listen," "read," "log to myactions," "back," "done." If the user chooses the menu item "read," a subsequent screen displays the menu path "action/news," the menu title "read," and the menu items "log to myactions," "back," and "done." If the user chooses the menu item "log to myactions," information about a particular artist or a particular audio source will be stored in a log for future reference. The displayed menu path will be "action/news/to myactions," the menu title will be "complete," and the menu items will be "back" and "done."

If instead of reading the news, the user would like to listen to the "news," the "listen" menu item can be chosen in the screen displaying the "action" menu path and the "news" menu title. The next screen will display the "action/news" menu path and the "listen" menu title. The screen will also alert the user as to the status of the retrieval of the news. The menu items include "log to myactions," "back" and "done."

In FIG. **20**C, the user can choose the menu item "samples" so that the next screen displays the menu path "action/music," the menu title "samples," and the menu items which include different audio source samples. After the user chooses a sample from the menu items of samples, a screen displays the menu path "action/music/samples," the title menu "Ambient," and the menu items "buy," "download," "listen," "back," and "done." If the user chooses to select the "buy" menu item, the next screen displays the menu path "action/music/samples/buy," the menu title "complete," and the menu items "back," and "done."

In FIG. **20**B, if the user decides to select the menu item "tour," the next screen will display the menu path "action," the menu title "tour," and the menu items "appearing," "log to myactions," "back," and "done." If the user selects the menu item "appearing," the next screen will display a location or locations of tours for the given artist. For example, when the user presses "tour" for "Moby," the screen can display "Dec. 13, 2000 Verizon Amphitheater Irvine Calif." The screen will also display the menu title "appearing" and the menu items "log to myactions," "back," and "done." If the user selects the "log to myactions" menu item, the next screen displays the menu path "action/tour/appearing," the menu title "complete" and the menu items "log to myactions," "back," and "done."

In FIG. **20**B, if the user selects the "offers" menu item, the next screen displays the menu path "action," the menu title "offers," and the menu items "merch," "special," "back," and "done." If the user selects the menu item "merch," the next screen displays the menu path "action/offers," the menu title "merchandise," and the menu items "item one," "item two," "item three," "back," and "done." If the user selects the menu item "item one," the next screen displays the menu path "action/offers/merchandise," "item one," and the menu items "buy," "log to myactions," "back," and "done." If the user selects "buy," the next screen displays the menu path "action/offers/merchandise/buy," the menu title "complete," and the menu items "buy," "back," and "done." The screen also displays the artist and the item selected. For example, the screen displaying "Moby, Item **1**" indicates that the user bought Item **1** by Moby. If instead of buying Item **1**, the user wishes to keep a log of Item **1** for future reference, the user can upload that future reference to a server. For instance, in the next screen, the menu path can be "action/offers/merchandise/to myaudioramp." The menu title is "complete," and the menu items are "back" and "done."

In FIG. **20**C, if the user decides to choose "similar" music, the next screen displays the menu path "action/music," the

menu title "similar," and the menu items that include audio sources similar to that of the artist with the given audio source. Menu items that can appear on the screen for "Moby," for example, are "**808** state," "air," "aphex," "back," and "done." If the user decides to select the menu item "**808** state," the next screen displays the menu path "action/music/similar," the menu title "**808** state," the menu items "buy," "download," "listen," "back," and "done." If the user decides to buy "**808** state," the next screen displays the menu path "action/music/similar/buy," the menu title "complete," and the menu items "back" and "done."

In FIG. **20**C, if the user decides to select the menu item "samples," the next screen displays the menu path "action/music," the menu title "samples," and the menu items that include audio source samples of the given album. The menu items for "Moby" can include "Moby," "Ambient," "Everything is Wrong," "Animal Rights," and "done,"

In FIG. **20**C, if the user selects the menu item "similar," the next screen displays the menu path "action/music/similar," the menu title "listen," and the menu items "back" and "done." The user can also choose to download the similar music. The next screen displays the menu path "action/music/similar," the menu title "download," and the menu items "back" and "done."

In FIG. **21**, after the action button **1210** is pressed, the audio-enabled device **1200** or **1300** can at times play advertisements. For a Nike advertisement, the text "Nike" would be displayed on the first line of the screen. The text of the advertisement, such as "radio free Sydney, air max knukini offer," can be displayed underneath the "Nike" text. The menu title "action" **2002** is displayed and the menu items "buy," "log to myactions," "more info," "offers," and "done" are displayed. If the user decides to buy the products offered in the advertisement, the next screen displays the menu path "action/buy," the menu title "complete," the menu items "back" and "done," and the advertisements are displayed. If the user decides instead to store the offer for a future reference, the menu path "action/to myaudioramp" is displayed in addition to the menu title "complete," and the menu items "back" and "done" are displayed. If the user wishes to receive more information, the "more info" menu item can be chosen. The menu path "action/more info," the menu title "more info," and the menu items "buy," "log to myactions," "offers," and "done" are displayed.

While the above description contains many specifics, these should not be construed as limitations on the scope of the invention, but rather as an exemplification of preferred embodiments thereof. The various user controls and buttons can be relocated, combined, reconfigured, etc. Most of the user controls and buttons can even be omitted entirely in favor of voice-activated commands. One skilled in the art will recognize that many of the various features, and capabilities described in connection with the intelligent radio **100**, are also applicable to other embodiments as well, including the embodiments described in connection with FIGS. **7-10** and the network-enabled audio device in FIGS. **13**A-**21**. One skilled in the art will also recognize that other embodiments are contemplated, including, for example, handheld intelligent radios, and intelligent radios for boats, cars, trucks, planes, and other vehicles, etc.

One skilled in the art will recognize that these features, and thus the scope of the present invention, should be interpreted in light of the following claims and any equivalents thereto.

The invention claimed is:

1. A method of operation of a network-enabled audio device comprising: a) sending, in real-time from the audio device, a user initiated request to a remote server for supplemental information related to a song from a playlist assigned to the device while the song is playing on the device; and b) receiving, by the audio device, the supplemental information from the remote server.

2. The method of claim **1** further comprising displaying the supplemental information to a user upon receiving the supplemental information from the remote server.

3. The method of claim **1** wherein the supplemental information comprises a title of the song and an artist performing the song, and the method further comprises displaying the title of the song and the artist performing the song to a user in real-time while the song is playing.

4. The method of claim **1** wherein the supplemental information comprises news related to an artist performing the song.

5. The method of claim **1** wherein the supplemental information comprises information identifying albums by an artist performing the song.

6. A method comprising: sending, in real-time from an audio device, a user initiated request to a remote server for supplemental information related to a song from a playlist assigned to the device while the song is playing on the device; and receiving the supplemental information from the remote server,

wherein the supplemental information comprises information identifying recommended songs that are similar to the song.

7. The method of claim **6** wherein the song is associated with a music genre and the recommended songs comprise songs that are from the music genre of the song.

8. The method of claim **6** wherein the song is associated with a music genre and the recommended songs comprise songs that are from a second music genre that is similar to the music genre of the song.

9. The method of claim **6** wherein the recommended songs comprise songs by an artist that is similar to an artist performing the song.

10. The method of claim **6** further comprising providing an option to purchase the recommended songs.

11. The method of claim **6** further comprising providing an option to listen to the recommended songs.

12. The method of claim **6** further comprising providing an option to download the recommended songs.

13. A method comprising: sending, in real-time from an audio device, a user initiated request to a remote server for supplemental information related to a song from a playlist assigned to the device while the song is playing on the device; and receiving the supplemental information from the remote server,

wherein the supplemental information comprises information identifying recommended songs that are similar to the song.

14. The method of claim **13** wherein the plurality of songs are other songs by an artist performing the song.

15. The method of claim **1** wherein the supplemental information comprises tour information identifying at least one location and time at which an artist performing the song will be appearing.

16. The method of claim **1** wherein the supplemental information comprises offer information identifying at least one item promoted by an artist performing the song.

17. The method of claim **16** further comprising providing an option to purchase the at least one item.

18. The method of claim **1** further comprising:

a) receiving an advertisement for an item from the remote server; and

b) displaying the advertisement to a user while the song is playing.

19. The method of claim **18** further comprising providing an option to purchase the item in response to the advertisement.

20. The method of claim **1** further comprising interactively presenting the supplemental information to a user.

21. The method of claim **20** wherein the supplemental information includes at least two of a group consisting of: news information related to an artist performing the song, information identifying other albums by the artist performing the song, information identifying recommended songs similar to the song, information enabling the user to listen to samples of other songs, tour information identifying at least one location and date at which the artist performing the song will appear, and offer information identifying at least one item promoted by the artist performing the song.

22. A method comprising: sending, in real-time from an audio device, a user initiated request to a remote server for supplemental information related to a song from a playlist assigned to the device while the song is playing on the device; and receiving the supplemental information from the remote server,

wherein sending the request comprises sending a sample of the song to the remote server, wherein the remote server identifies the song based on the sample of the song in order to provide the supplemental information.

23. The method of claim **4** further comprising displaying the supplemental information to a user upon receiving the supplemental information from the remote server.

24. The method of claim **5** further comprising displaying the supplemental information to a user upon receiving the supplemental information from the remote server.

25. The method of claim **6** further comprising displaying the supplemental information to a user upon receiving the supplemental information from the remote server.

26. The method of claim **13** further comprising displaying the supplemental information to the user upon receiving the supplemental information from the remote server.

27. The method of claim **16** further comprising displaying the supplemental information to a user upon receiving the supplemental information from the remote server.

28. The method of claim **22** further comprising displaying the supplemental information to a user upon receiving the supplemental information from the remote server.

* * * * *