US009443947B2

(12) **United States Patent**
Becker et al.

(10) **Patent No.: US 9,443,947 B2**
(45) **Date of Patent: *Sep. 13, 2016**

(54) **SEMICONDUCTOR CHIP INCLUDING REGION HAVING INTEGRATED CIRCUIT TRANSISTOR GATE ELECTRODES FORMED BY VARIOUS CONDUCTIVE STRUCTURES OF SPECIFIED SHAPE AND POSITION AND METHOD FOR MANUFACTURING THE SAME**

(71) Applicant: **Tela Innovations, Inc.**, Los Gatos, CA (US)

(72) Inventors: **Scott T. Becker**, Scotts Valley, CA (US); **Michael C. Smayling**, Fremont, CA (US)

(73) Assignee: **Tela Innovations, Inc.**, Los Gatos, CA (US)

(*) Notice: Subject to any disclaimer, the term of this patent is extended or adjusted under 35 U.S.C. 154(b) by 0 days.

This patent is subject to a terminal disclaimer.

(21) Appl. No.: **14/711,731**

(22) Filed: **May 13, 2015**

(65) **Prior Publication Data**

US 2015/0249041 A1 Sep. 3, 2015

Related U.S. Application Data

(63) Continuation of application No. 13/774,919, filed on Feb. 22, 2013, which is a continuation of application No. 12/572,225, filed on Oct. 1, 2009, now Pat. No. 8,436,400, which is a continuation of application No.

(Continued)

(51) **Int. Cl.**
H01L 27/10 (2006.01)
H01L 29/423 (2006.01)

(Continued)

(52) **U.S. Cl.**
CPC ***H01L 29/42376*** (2013.01); ***G06F 17/5068*** (2013.01); ***G06F 17/5072*** (2013.01);

(Continued)

(58) **Field of Classification Search**
CPC H01L 27/027; H01L 27/11807; H01L 27/1104; H01L 27/11; H01L 27/092
USPC 257/202, 204, 206, 211, 365
See application file for complete search history.

(56) **References Cited**

U.S. PATENT DOCUMENTS

4,069,493 A 1/1978 Bobenrieth
4,197,555 A 4/1980 Uehara et al.

(Continued)

FOREIGN PATENT DOCUMENTS

EP 0102644 7/1989
EP 0788166 8/1997

(Continued)

OTHER PUBLICATIONS

Kawasaki, H., et al., "Challenges and Solutions of FinFET Integration in an SRAM Cell and a Logic Circuit for 22 nm node and beyond," Electron Devices Meeting (IEDM), 2009 IEEE International, IEEE, Piscataway, NJ, USA, Dec. 7, 2009, pp. 1-4.

(Continued)

Primary Examiner — Quoc Hoang
(74) *Attorney, Agent, or Firm* — Martine Penilla Group, LLP

(57) **ABSTRACT**

A semiconductor chip includes a region that includes a first conductive structure (CS) that forms a gate electrode (GE) of a first transistor of a first transistor type. The region includes a second CS that forms a GE of a second transistor of the first transistor type and a GE of a first transistor of a second transistor type. The region includes another CS that forms a GE of a second transistor of the second transistor type. The GE's of the first and second transistors of the first transistor type are separated by a gate pitch. The GE's of the first and second transistors of the second transistor type are separated by the gate pitch. The first CS has a total length that is greater than one-half of the total length of the second CS. The second and third CS's have at least one respective end aligned with each other.

30 Claims, 28 Drawing Sheets

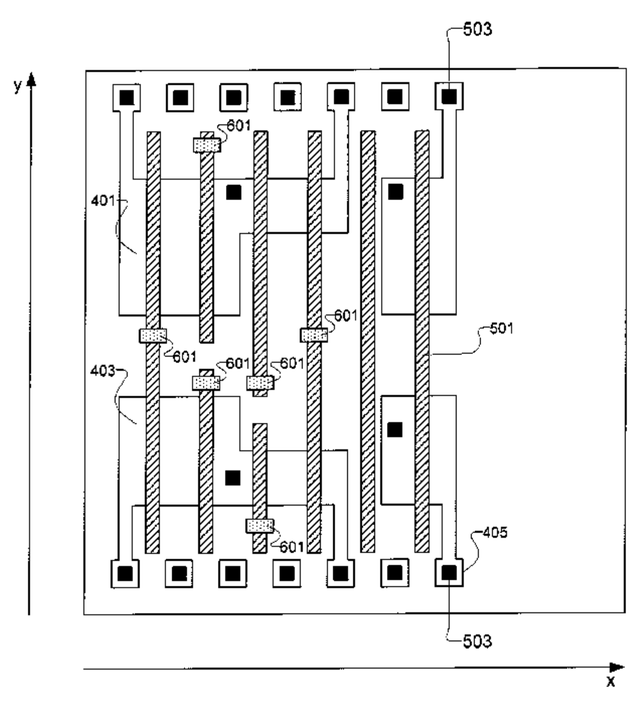

Related U.S. Application Data

12/212,562, filed on Sep. 17, 2008, now Pat. No. 7,842,975, which is a continuation of application No. 11/683,402, filed on Mar. 7, 2007, now Pat. No. 7,446,352.

(60) Provisional application No. 60/781,288, filed on Mar. 9, 2006.

(51) **Int. Cl.**

H01L 27/092	(2006.01)
H01L 27/02	(2006.01)
G06F 17/50	(2006.01)
H01L 27/088	(2006.01)
H01L 21/8238	(2006.01)
H01L 27/118	(2006.01)
H01L 23/522	(2006.01)
H01L 23/528	(2006.01)

(52) **U.S. Cl.**

CPC ... ***H01L21/823871*** (2013.01); ***H01L 23/5226*** (2013.01); ***H01L 23/5283*** (2013.01); ***H01L 27/0207*** (2013.01); ***H01L 27/088*** (2013.01); ***H01L 27/092*** (2013.01); ***H01L 27/11807*** (2013.01); ***H01L 29/42372*** (2013.01); *H01L 2027/11888* (2013.01); *H01L 2924/0002* (2013.01)

(56) **References Cited**

U.S. PATENT DOCUMENTS

4,417,161 A 11/1983 Uya
4,424,460 A 1/1984 Best
4,602,270 A 7/1986 Finegold
4,613,940 A 9/1986 Shenton et al.
4,657,628 A 4/1987 Holloway et al.
4,682,202 A 7/1987 Tanizawa
4,745,084 A 5/1988 Rowson et al.
4,780,753 A 10/1988 Shinichi et al.
4,801,986 A 1/1989 Chang et al.
4,804,636 A 2/1989 Groover, III
4,812,688 A 3/1989 Chu et al.
4,884,115 A 11/1989 Michel et al.
4,928,160 A 5/1990 Crafts
4,975,756 A 12/1990 Haken et al.
5,047,979 A 9/1991 Leung
5,068,603 A 11/1991 Mahoney
5,079,614 A 1/1992 Khatakhotan
5,097,422 A 3/1992 Corbin et al.
5,117,277 A 5/1992 Yuyama et al.
5,121,186 A 6/1992 Wong et al.
5,208,765 A 5/1993 Turnbull
5,224,057 A 6/1993 Igarashi
5,242,770 A 9/1993 Chen et al.
5,268,319 A 12/1993 Harari
5,298,774 A 3/1994 Ueda et al.
5,313,426 A 5/1994 Sakuma et al.
5,338,963 A 8/1994 Klaasen
5,351,197 A 9/1994 Upton et al.
5,359,226 A 10/1994 DeJong
5,365,454 A 11/1994 Nakagawa et al.
5,367,187 A 11/1994 Yuen
5,378,649 A 1/1995 Huang
5,396,128 A 3/1995 Dunning et al.
5,420,447 A 5/1995 Waggoner
5,461,577 A 10/1995 Shaw et al.
5,471,403 A 11/1995 Fujimaga
5,497,334 A 3/1996 Russell et al.
5,497,337 A 3/1996 Ponnapalli et al.
5,526,307 A 6/1996 Yiu et al.
5,536,955 A 7/1996 Ali
5,545,904 A 8/1996 Orbach
5,581,098 A 12/1996 Chang
5,581,202 A 12/1996 Yano et al.
5,612,893 A 3/1997 Hao et al.
5,636,002 A 6/1997 Garofalo
5,656,861 A 8/1997 Godinho et al.
5,682,323 A 10/1997 Pasch et al.
5,684,311 A 11/1997 Shaw
5,684,733 A 11/1997 Wu et al.
5,698,873 A 12/1997 Colwell et al.
5,705,301 A 1/1998 Garza et al.
5,723,883 A 3/1998 Gheewalla
5,723,908 A 3/1998 Fuchida et al.
5,740,068 A 4/1998 Liebmann et al.
5,745,374 A 4/1998 Matsumoto
5,764,533 A 6/1998 deDood
5,774,367 A 6/1998 Reyes et al.
5,780,909 A 7/1998 Hayashi
5,789,776 A 8/1998 Lancaster et al.
5,790,417 A 8/1998 Chao et al.
5,796,128 A 8/1998 Tran et al.
5,796,624 A 8/1998 Sridhar et al.
5,798,298 A 8/1998 Yang et al.
5,814,844 A 9/1998 Nagata et al.
5,825,203 A 10/1998 Kusunoki et al.
5,834,851 A 11/1998 Ikeda et al.
5,838,594 A 11/1998 Kojima
5,841,663 A 11/1998 Sharma et al.
5,847,421 A 12/1998 Yamaguchi
5,850,362 A 12/1998 Sakuma et al.
5,852,562 A 12/1998 Shinomiya et al.
5,858,580 A 1/1999 Wang et al.
5,898,194 A 4/1999 Gheewala
5,900,340 A 5/1999 Reich et al.
5,905,287 A 5/1999 Hirata
5,908,827 A 6/1999 Sirna
5,915,199 A 6/1999 Hsu
5,917,207 A 6/1999 Colwell et al.
5,920,486 A 7/1999 Beahm et al.
5,923,059 A 7/1999 Gheewala
5,923,060 A 7/1999 Gheewala
5,929,469 A 7/1999 Mimoto et al.
5,930,163 A 7/1999 Hara et al.
5,935,763 A 8/1999 Caterer et al.
5,949,101 A 9/1999 Aritome
5,973,507 A 10/1999 Yamazaki
5,977,305 A 11/1999 Wigler et al.
5,977,574 A 11/1999 Schmitt et al.
5,998,879 A 12/1999 Iwaki et al.
6,009,251 A 12/1999 Ho et al.
6,026,223 A 2/2000 Scepanovic et al.
6,037,613 A 3/2000 Mariyama
6,037,617 A 3/2000 Kumagai
6,044,007 A 3/2000 Capodieci
6,054,872 A 4/2000 Fudanuki et al.
6,063,132 A 5/2000 DeCamp et al.
6,077,310 A 6/2000 Yamamoto et al.
6,080,206 A 6/2000 Tadokoro et al.
6,084,255 A 7/2000 Ueda
6,084,437 A 7/2000 Sako
6,091,845 A 7/2000 Pierrat et al.
6,099,584 A 8/2000 Arnold et al.
6,100,025 A 8/2000 Wigler et al.
6,114,071 A 9/2000 Chen et al.
6,144,227 A 11/2000 Sato
6,159,839 A 12/2000 Jeng et al.
6,166,415 A 12/2000 Sakemi et al.
6,166,560 A 12/2000 Ogura et al.
6,174,742 B1 1/2001 Sudhindranath et al.
6,182,272 B1 1/2001 Andreev et al.
6,194,104 B1 2/2001 Hsu
6,194,252 B1 2/2001 Yamaguchi
6,194,912 B1 2/2001 Or-Bach
6,209,123 B1 3/2001 Maziasz et al.
6,230,299 B1 5/2001 McSherry et al.
6,232,173 B1 5/2001 Hsu et al.
6,240,542 B1 5/2001 Kapur
6,249,902 B1 6/2001 Igusa et al.
6,255,600 B1 7/2001 Schaper
6,255,845 B1 7/2001 Wong et al.
6,262,487 B1 7/2001 Igarashi et al.

(56) **References Cited**

U.S. PATENT DOCUMENTS

6,269,472 B1 7/2001 Garza et al.
6,275,973 B1 8/2001 Wein
6,282,696 B1 8/2001 Garza et al.
6,291,276 B1 9/2001 Gonzalez
6,297,668 B1 10/2001 Schober
6,297,674 B1 10/2001 Kono et al.
6,303,252 B1 10/2001 Lin
6,331,733 B1 12/2001 Or-Bach et al.
6,331,791 B1 12/2001 Huang
6,335,250 B1 1/2002 Egi
6,338,972 B1 1/2002 Sudhindranath et al.
6,347,062 B2 2/2002 Nii et al.
6,356,112 B1 3/2002 Tran et al.
6,359,804 B2 3/2002 Kuriyama et al.
6,370,679 B1 4/2002 Chang et al.
6,378,110 B1 4/2002 Ho
6,380,592 B2 4/2002 Tooher et al.
6,388,296 B1 5/2002 Hsu
6,393,601 B1 5/2002 Tanaka et al.
6,399,972 B1 6/2002 Masuda et al.
6,400,183 B2 6/2002 Yamashita et al.
6,408,427 B1 6/2002 Cong et al.
6,415,421 B2 7/2002 Anderson et al.
6,416,907 B1 7/2002 Winder et al.
6,417,549 B1 7/2002 Oh
6,421,820 B1 7/2002 Mansfield et al.
6,425,112 B1 7/2002 Bula et al.
6,425,117 B1 7/2002 Pasch et al.
6,426,269 B1 7/2002 Haffner et al.
6,436,805 B1 8/2002 Trivedi
6,445,049 B1 9/2002 Iranmanesh
6,445,065 B1 9/2002 Gheewala et al.
6,467,072 B1 10/2002 Yang et al.
6,469,328 B2 10/2002 Yanai et al.
6,470,489 B1 10/2002 Chang et al.
6,476,493 B2 11/2002 Or-Bach et al.
6,477,695 B1 11/2002 Gandhi
6,480,032 B1 11/2002 Aksamit
6,480,989 B2 11/2002 Chan et al.
6,492,066 B1 12/2002 Capodieci et al.
6,496,965 B1 12/2002 van Ginneken et al.
6,504,186 B2 1/2003 Kanamoto et al.
6,505,327 B2 1/2003 Lin
6,505,328 B1 1/2003 van Ginneken et al.
6,507,941 B1 1/2003 Leung et al.
6,509,952 B1 1/2003 Govil et al.
6,514,849 B1 2/2003 Hui et al.
6,516,459 B1 2/2003 Sahouria
6,523,156 B2 2/2003 Cirit
6,525,350 B1 2/2003 Kinoshita et al.
6,536,028 B1 3/2003 Katsioulas et al.
6,543,039 B1 4/2003 Watanabe
6,553,544 B2 4/2003 Tanaka et al.
6,553,559 B2 4/2003 Liebmann et al.
6,553,562 B2 4/2003 Capodieci et al.
6,566,720 B2 5/2003 Aldrich
6,570,234 B1 5/2003 Gardner
6,571,140 B1 5/2003 Wewalaarachchi
6,571,379 B2 5/2003 Takayama
6,574,786 B1 6/2003 Pohlenz et al.
6,578,190 B2 6/2003 Ferguson et al.
6,583,041 B1 6/2003 Capodieci
6,588,005 B1 7/2003 Kobayashi et al.
6,590,289 B2 7/2003 Shively
6,591,207 B2 7/2003 Naya et al.
6,609,235 B2 8/2003 Ramaswamy et al.
6,610,607 B1 8/2003 Armbrust et al.
6,617,621 B1 9/2003 Gheewala et al.
6,620,561 B2 9/2003 Winder et al.
6,621,132 B2 9/2003 Onishi et al.
6,632,741 B1 10/2003 Clevenger et al.
6,633,182 B2 10/2003 Pileggi et al.
6,635,935 B2 10/2003 Makino
6,642,744 B2 11/2003 Or-Bach et al.
6,643,831 B2 11/2003 Chang et al.
6,650,014 B2 11/2003 Kariyazaki
6,661,041 B2 12/2003 Keeth
6,662,350 B2 12/2003 Fried et al.
6,664,587 B2 12/2003 Guterman et al.
6,673,638 B1 1/2004 Bendik et al.
6,677,649 B2 1/2004 Mianami et al.
6,687,895 B2 2/2004 Zhang
6,690,206 B2 2/2004 Rikino et al.
6,691,297 B1 2/2004 Misaka et al.
6,700,405 B1 3/2004 Hirairi
6,703,170 B1 3/2004 Pindo
6,709,880 B2 3/2004 Yamamoto et al.
6,714,903 B1 3/2004 Chu et al.
6,732,334 B2 5/2004 Nakatsuka
6,732,338 B2 5/2004 Crouse et al.
6,732,344 B2 5/2004 Sakamoto et al.
6,734,506 B2 5/2004 Oyamatsu
6,737,199 B1 5/2004 Hsieh
6,737,318 B2 5/2004 Murata et al.
6,737,347 B1 5/2004 Houston et al.
6,745,372 B2 6/2004 Cote et al.
6,745,380 B2 6/2004 Bodendorf et al.
6,749,972 B2 6/2004 Yu
6,750,555 B2 6/2004 Satomi et al.
6,760,269 B2 7/2004 Nakase et al.
6,765,245 B2 7/2004 Bansal
6,777,138 B2 8/2004 Pierrat et al.
6,777,146 B1 8/2004 Samuels
6,787,823 B2 9/2004 Shibutani
6,789,244 B1 9/2004 Dasasathyan et al.
6,789,246 B1 9/2004 Mohan et al.
6,792,591 B2 9/2004 Shi et al.
6,792,593 B2 9/2004 Takashima et al.
6,794,677 B2 9/2004 Tamaki et al.
6,794,914 B2 9/2004 Sani et al.
6,795,332 B2 9/2004 Yamaoka et al.
6,795,358 B2 9/2004 Tanaka et al.
6,795,952 B1 9/2004 Stine et al.
6,795,953 B2 9/2004 Bakarian et al.
6,800,883 B2 10/2004 Furuya et al.
6,806,180 B2 10/2004 Cho
6,807,663 B2 10/2004 Cote et al.
6,809,399 B2 10/2004 Ikeda et al.
6,812,574 B2 11/2004 Tomita et al.
6,818,389 B2 11/2004 Fritze et al.
6,818,929 B2 11/2004 Tsutsumi et al.
6,819,136 B2 11/2004 Or-Bach
6,820,248 B1 11/2004 Gan
6,826,738 B2 11/2004 Cadouri
6,834,375 B1 12/2004 Stine et al.
6,841,880 B2 1/2005 Matsumoto et al.
6,850,854 B2 2/2005 Naya et al.
6,854,096 B2 2/2005 Eaton et al.
6,854,100 B1 2/2005 Chuang et al.
6,867,073 B1 3/2005 Enquist
6,871,338 B2 3/2005 Yamauchi
6,872,990 B1 3/2005 Kang
6,877,144 B1 4/2005 Rittman et al.
6,881,523 B2 4/2005 Smith
6,884,712 B2 4/2005 Yelehanka et al.
6,885,045 B2 4/2005 Hidaka
6,889,370 B1 5/2005 Kerzman et al.
6,897,517 B2 5/2005 Houdt et al.
6,897,536 B2 5/2005 Nomura et al.
6,898,770 B2 5/2005 Boluki et al.
6,904,582 B1 6/2005 Rittman et al.
6,918,104 B2 7/2005 Pierrat et al.
6,920,079 B2 7/2005 Shibayama
6,921,982 B2 7/2005 Joshi et al.
6,922,354 B2 7/2005 Ishikura et al.
6,924,560 B2 8/2005 Wang et al.
6,928,635 B2 8/2005 Pramanik et al.
6,931,617 B2 8/2005 Sanie et al.
6,953,956 B2 10/2005 Or-Bach et al.
6,954,918 B2 10/2005 Houston
6,957,402 B2 10/2005 Templeton et al.
6,968,527 B2 11/2005 Pierrat
6,974,978 B1 12/2005 Possley
6,977,856 B2 12/2005 Tanaka et al.

(56) **References Cited**

U.S. PATENT DOCUMENTS

6,978,436	B2	12/2005	Cote et al.
6,978,437	B1	12/2005	Rittman et al.
6,980,211	B2	12/2005	Lin et al.
6,992,394	B2	1/2006	Park
6,992,925	B2	1/2006	Peng
6,993,741	B2	1/2006	Liebmann et al.
6,994,939	B1	2/2006	Ghandehari et al.
6,998,722	B2	2/2006	Madurawe
7,003,068	B2	2/2006	Kushner et al.
7,009,862	B2	3/2006	Higeta et al.
7,016,214	B2	3/2006	Kawamata
7,022,559	B2	4/2006	Barnak et al.
7,028,285	B2	4/2006	Cote et al.
7,041,568	B2	5/2006	Goldbach et al.
7,052,972	B2	5/2006	Sandhu et al.
7,053,424	B2	5/2006	Ono
7,063,920	B2	6/2006	Baba-Ali
7,064,068	B2	6/2006	Chou et al.
7,065,731	B2	6/2006	Jacques et al.
7,079,413	B2	7/2006	Tsukamoto et al.
7,079,989	B2	7/2006	Wimer
7,093,208	B2	8/2006	Williams et al.
7,093,228	B2	8/2006	Andreev et al.
7,103,870	B2	9/2006	Misaka et al.
7,105,871	B2	9/2006	Or-Bach et al.
7,107,551	B1	9/2006	de Dood et al.
7,115,343	B2	10/2006	Gordon et al.
7,115,920	B2	10/2006	Bernstein et al.
7,120,882	B2	10/2006	Kotani et al.
7,124,386	B2	10/2006	Smith et al.
7,126,837	B1	10/2006	Banachowicz et al.
7,132,203	B2	11/2006	Pierrat
7,137,092	B2	11/2006	Maeda
7,141,853	B2	11/2006	Campbell et al.
7,143,380	B1	11/2006	Anderson et al.
7,149,999	B2	12/2006	Kahng et al.
7,152,215	B2	12/2006	Smith et al.
7,155,685	B2	12/2006	Mori et al.
7,155,689	B2	12/2006	Pierrat et al.
7,159,197	B2	1/2007	Falbo et al.
7,174,520	B2	2/2007	White et al.
7,175,940	B2	2/2007	Laidig et al.
7,176,508	B2	2/2007	Joshi et al.
7,177,215	B2	2/2007	Tanaka et al.
7,183,611	B2	2/2007	Bhattacharyya
7,185,294	B2	2/2007	Zhang
7,188,322	B2	3/2007	Cohn et al.
7,194,712	B2	3/2007	Wu
7,200,835	B2	4/2007	Zhang et al.
7,202,517	B2	4/2007	Dixit et al.
7,205,191	B2	4/2007	Kobayashi
7,208,794	B2	4/2007	Hofmann et al.
7,214,579	B2	5/2007	Widdershoven et al.
7,219,326	B2	5/2007	Reed et al.
7,221,031	B2	5/2007	Ryoo et al.
7,225,423	B2	5/2007	Bhattacharya et al.
7,227,183	B2	6/2007	Donze et al.
7,228,510	B2	6/2007	Ono
7,231,628	B2	6/2007	Pack et al.
7,235,424	B2	6/2007	Chen et al.
7,243,316	B2	7/2007	White et al.
7,252,909	B2	8/2007	Shin et al.
7,257,017	B2	8/2007	Liaw
7,264,990	B2	9/2007	Rueckes et al.
7,266,787	B2	9/2007	Hughes et al.
7,269,803	B2	9/2007	Khakzadi et al.
7,278,118	B2	10/2007	Pileggi et al.
7,279,727	B2	10/2007	Ikoma et al.
7,287,320	B2	10/2007	Wang et al.
7,294,534	B2	11/2007	Iwaki
7,302,651	B2	11/2007	Allen et al.
7,308,669	B2	12/2007	Buehler et al.
7,312,003	B2	12/2007	Cote et al.
7,315,994	B2	1/2008	Aller et al.
7,327,591	B2	2/2008	Sadra et al.
7,329,938	B2	2/2008	Kinoshita
7,335,966	B2	2/2008	Ihme et al.
7,337,421	B2	2/2008	Kamat
7,338,896	B2	3/2008	Vanhaelemeersch et al.
7,345,909	B2	3/2008	Chang et al.
7,346,885	B2	3/2008	Semmler
7,350,183	B2	3/2008	Cui et al.
7,353,492	B2	4/2008	Gupta et al.
7,358,131	B2	4/2008	Bhattacharyya
7,360,179	B2	4/2008	Smith et al.
7,360,198	B2	4/2008	Rana et al.
7,366,997	B1	4/2008	Rahmat et al.
7,367,008	B2	4/2008	White et al.
7,376,931	B2	5/2008	Kokubun
7,383,521	B2	6/2008	Smith et al.
7,397,260	B2	7/2008	Chanda et al.
7,400,627	B2	7/2008	Wu et al.
7,402,848	B2	7/2008	Chang et al.
7,404,154	B1	7/2008	Venkatraman et al.
7,404,173	B2	7/2008	Wu et al.
7,411,252	B2	8/2008	Anderson et al.
7,421,678	B2	9/2008	Barnes et al.
7,423,298	B2	9/2008	Mariyama et al.
7,424,694	B2	9/2008	Ikeda
7,424,695	B2	9/2008	Tamura et al.
7,424,696	B2	9/2008	Vogel et al.
7,426,710	B2	9/2008	Zhang et al.
7,432,562	B2	10/2008	Bhattacharyya
7,434,185	B2	10/2008	Dooling et al.
7,441,211	B1	10/2008	Gupta et al.
7,442,630	B2	10/2008	Kelberlau et al.
7,444,609	B2	10/2008	Charlebois et al.
7,446,352	B2	11/2008	Becker et al.
7,449,371	B2	11/2008	Kemerling et al.
7,458,045	B2	11/2008	Cote et al.
7,459,792	B2	12/2008	Chen
7,465,973	B2	12/2008	Chang et al.
7,466,607	B2	12/2008	Hollis et al.
7,469,396	B2	12/2008	Hayashi et al.
7,480,880	B2	1/2009	Visweswariah et al.
7,480,891	B2	1/2009	Sezginer
7,484,197	B2	1/2009	Allen et al.
7,485,934	B2	2/2009	Liaw
7,487,475	B1	2/2009	Kriplani et al.
7,492,013	B2	2/2009	Correale, Jr.
7,500,211	B2	3/2009	Komaki
7,502,275	B2	3/2009	Nii et al.
7,503,026	B2	3/2009	Ichiryu et al.
7,504,184	B2	3/2009	Hung et al.
7,506,300	B2	3/2009	Sezginer et al.
7,508,238	B2	3/2009	Yamagami
7,509,621	B2	3/2009	Melvin, III
7,509,622	B2	3/2009	Sinha et al.
7,512,017	B2	3/2009	Chang
7,512,921	B2	3/2009	Shibuya
7,514,355	B2	4/2009	Katase
7,514,959	B2	4/2009	Or-Bach et al.
7,523,429	B2	4/2009	Kroyan et al.
7,527,900	B2	5/2009	Zhou et al.
7,538,368	B2	5/2009	Yano
7,543,262	B2	6/2009	Wang et al.
7,563,701	B2	7/2009	Chang et al.
7,564,134	B2	7/2009	Lee et al.
7,568,174	B2	7/2009	Sezginer et al.
7,569,309	B2	8/2009	Blatchford et al.
7,569,310	B2	8/2009	Wallace et al.
7,569,894	B2	8/2009	Suzuki
7,575,973	B2	8/2009	Mokhlesi et al.
7,598,541	B2	10/2009	Okamoto et al.
7,598,558	B2	10/2009	Hashimoto et al.
7,614,030	B2	11/2009	Hsu
7,625,790	B2	12/2009	Yang
7,632,610	B2	12/2009	Wallace et al.
7,640,522	B2	12/2009	Gupta et al.
7,646,651	B2	1/2010	Lee et al.
7,653,884	B2	1/2010	Furnish et al.
7,665,051	B2	2/2010	Ludwig et al.
7,700,466	B2	4/2010	Booth et al.
7,712,056	B2	5/2010	White et al.

(56) **References Cited**

U.S. PATENT DOCUMENTS

7,739,627	B2	6/2010	Chew et al.
7,749,662	B2	7/2010	Matthew et al.
7,755,110	B2	7/2010	Gliese et al.
7,770,144	B2	8/2010	Dellinger
7,791,109	B2	9/2010	Wann et al.
7,802,219	B2	9/2010	Tomar et al.
7,825,437	B2	11/2010	Pillarisetty et al.
7,842,975	B2	11/2010	Becker et al.
7,873,929	B2	1/2011	Kahng et al.
7,882,456	B2	2/2011	Zach
7,888,705	B2	2/2011	Becker et al.
7,898,040	B2	3/2011	Nawaz
7,906,801	B2	3/2011	Becker et al.
7,908,578	B2	3/2011	Becker et al.
7,910,958	B2	3/2011	Becker et al.
7,910,959	B2	3/2011	Becker et al.
7,917,877	B2	3/2011	Singh et al.
7,917,879	B2	3/2011	Becker et al.
7,923,266	B2	4/2011	Thijs et al.
7,923,337	B2	4/2011	Chang et al.
7,923,757	B2	4/2011	Becker et al.
7,926,001	B2	4/2011	Pierrat
7,932,544	B2	4/2011	Becker et al.
7,932,545	B2	4/2011	Becker et al.
7,934,184	B2	4/2011	Zhang
7,939,443	B2	5/2011	Fox et al.
7,943,966	B2	5/2011	Becker et al.
7,943,967	B2	5/2011	Becker et al.
7,948,012	B2	5/2011	Becker et al.
7,948,013	B2	5/2011	Becker et al.
7,952,119	B2	5/2011	Becker et al.
7,956,421	B2	6/2011	Becker
7,958,465	B2	6/2011	Lu et al.
7,962,867	B2	6/2011	White et al.
7,962,879	B2	6/2011	Tang et al.
7,964,267	B1	6/2011	Lyons et al.
7,971,160	B2	6/2011	Osawa et al.
7,989,847	B2	8/2011	Becker et al.
7,989,848	B2	8/2011	Becker et al.
7,992,122	B1	8/2011	Burstein et al.
7,994,583	B2	8/2011	Inaba
8,004,042	B2	8/2011	Yang et al.
8,022,441	B2	9/2011	Becker et al.
8,030,689	B2	10/2011	Becker et al.
8,035,133	B2	10/2011	Becker et al.
8,044,437	B1	10/2011	Venkatraman et al.
8,058,671	B2	11/2011	Becker et al.
8,058,690	B2	11/2011	Chang
8,072,003	B2	12/2011	Becker et al.
8,072,053	B2	12/2011	Li
8,088,679	B2	1/2012	Becker et al.
8,088,680	B2	1/2012	Becker et al.
8,088,681	B2	1/2012	Becker et al.
8,088,682	B2	1/2012	Becker et al.
8,089,098	B2	1/2012	Becker et al.
8,089,099	B2	1/2012	Becker et al.
8,089,100	B2	1/2012	Becker et al.
8,089,101	B2	1/2012	Becker et al.
8,089,102	B2	1/2012	Becker et al.
8,089,103	B2	1/2012	Becker et al.
8,089,104	B2	1/2012	Becker et al.
8,101,975	B2	1/2012	Becker et al.
8,110,854	B2	2/2012	Becker et al.
8,129,750	B2	3/2012	Becker et al.
8,129,751	B2	3/2012	Becker et al.
8,129,752	B2	3/2012	Becker et al.
8,129,754	B2	3/2012	Becker et al.
8,129,755	B2	3/2012	Becker et al.
8,129,756	B2	3/2012	Becker et al.
8,129,757	B2	3/2012	Becker et al.
8,129,819	B2	3/2012	Becker et al.
8,130,529	B2	3/2012	Tanaka
8,134,183	B2	3/2012	Becker et al.
8,134,184	B2	3/2012	Becker et al.
8,134,185	B2	3/2012	Becker et al.
8,134,186	B2	3/2012	Becker et al.
8,138,525	B2	3/2012	Becker et al.
8,161,427	B2	4/2012	Morgenshtein et al.
8,178,905	B2	5/2012	Toubou
8,178,909	B2	5/2012	Venkatraman et al.
8,198,656	B2	6/2012	Becker et al.
8,207,053	B2	6/2012	Becker et al.
8,214,778	B2	7/2012	Quandt et al.
8,217,428	B2	7/2012	Becker et al.
8,225,239	B2	7/2012	Reed et al.
8,225,261	B2	7/2012	Hong et al.
8,245,180	B2	8/2012	Smayling et al.
8,247,846	B2	8/2012	Becker
8,253,172	B2	8/2012	Becker et al.
8,253,173	B2	8/2012	Becker et al.
8,258,547	B2	9/2012	Becker et al.
8,258,548	B2	9/2012	Becker et al.
8,258,549	B2	9/2012	Becker et al.
8,258,550	B2	9/2012	Becker et al.
8,258,551	B2	9/2012	Becker et al.
8,258,552	B2	9/2012	Becker et al.
8,258,581	B2	9/2012	Becker et al.
8,264,007	B2	9/2012	Becker et al.
8,264,008	B2	9/2012	Becker et al.
8,264,009	B2	9/2012	Becker et al.
8,283,701	B2	10/2012	Becker et al.
8,294,212	B2	10/2012	Wang et al.
8,316,327	B2	11/2012	Herold
8,356,268	B2	1/2013	Becker et al.
8,378,407	B2	2/2013	Audzeyeu et al.
8,395,224	B2	3/2013	Becker et al.
8,402,397	B2	3/2013	Robles et al.
8,405,163	B2	3/2013	Becker et al.
8,422,274	B2	4/2013	Tomita et al.
8,436,400	B2	5/2013	Becker et al.
8,453,094	B2	5/2013	Kornachuk et al.
8,575,706	B2	11/2013	Becker et al.
8,667,443	B2	3/2014	Smayling et al.
8,701,071	B2	4/2014	Kornachuk et al.
8,735,995	B2	5/2014	Becker et al.
8,756,551	B2	6/2014	Becker et al.
8,836,045	B2	9/2014	Becker et al.
8,839,162	B2	9/2014	Amundson et al.
8,839,175	B2	9/2014	Smayling et al.
8,847,329	B2	9/2014	Becker et al.
8,863,063	B2	10/2014	Becker et al.
9,202,779	B2	12/2015	Kornachuk et al.
2001/0049813	A1	12/2001	Chan et al.
2002/0003270	A1	1/2002	Makino
2002/0015899	A1	2/2002	Chen et al.
2002/0030510	A1	3/2002	Kono et al.
2002/0063582	A1	5/2002	Rikino
2002/0068423	A1	6/2002	Park et al.
2002/0079927	A1	6/2002	Katoh et al.
2002/0149392	A1	10/2002	Cho
2002/0166107	A1	11/2002	Capodieci et al.
2002/0194575	A1	12/2002	Allen et al.
2003/0042930	A1	3/2003	Pileggi et al.
2003/0046653	A1	3/2003	Liu
2003/0061592	A1	3/2003	Agrawal et al.
2003/0088839	A1	5/2003	Watanabe
2003/0088842	A1	5/2003	Cirit
2003/0103176	A1	6/2003	Abe et al.
2003/0106037	A1	6/2003	Moniwa et al.
2003/0117168	A1	6/2003	Uneme et al.
2003/0124847	A1	7/2003	Houston et al.
2003/0125917	A1	7/2003	Rich et al.
2003/0126569	A1	7/2003	Rich et al.
2003/0145288	A1	7/2003	Wang et al.
2003/0145299	A1	7/2003	Fried et al.
2003/0177465	A1	9/2003	MacLean et al.
2003/0185076	A1	10/2003	Worley
2003/0203287	A1	10/2003	Miyagawa
2003/0229868	A1	12/2003	White et al.
2003/0229875	A1	12/2003	Smith et al.
2004/0029372	A1	2/2004	Jang et al.
2004/0049754	A1	3/2004	Liao et al.
2004/0063038	A1	4/2004	Shin et al.
2004/0115539	A1	6/2004	Broeke et al.

(56) **References Cited**

U.S. PATENT DOCUMENTS

2004/0139412	A1	7/2004	Ito et al.
2004/0145028	A1	7/2004	Matsumoto et al.
2004/0153979	A1	8/2004	Chang
2004/0161878	A1	8/2004	Or-Bach et al.
2004/0164360	A1	8/2004	Nishida et al.
2004/0169201	A1	9/2004	Hidaka
2004/0194050	A1	9/2004	Hwang et al.
2004/0196705	A1	10/2004	Ishikura et al.
2004/0229135	A1	11/2004	Wang et al.
2004/0232444	A1	11/2004	Shimizu
2004/0243966	A1	12/2004	Dellinger
2004/0262640	A1	12/2004	Suga
2005/0009312	A1	1/2005	Butt et al.
2005/0009344	A1	1/2005	Hwang et al.
2005/0012157	A1	1/2005	Ryoo et al.
2005/0044522	A1	2/2005	Maeda
2005/0055828	A1	3/2005	Wang et al.
2005/0076320	A1	4/2005	Maeda
2005/0087806	A1	4/2005	Hokazono
2005/0093147	A1	5/2005	Tu
2005/0101112	A1	5/2005	Rueckes et al.
2005/0110130	A1	5/2005	Kitabayashi et al.
2005/0135134	A1	6/2005	Yen
2005/0136340	A1	6/2005	Baselmans et al.
2005/0138598	A1	6/2005	Kokubun
2005/0156200	A1	7/2005	Kinoshita
2005/0185325	A1	8/2005	Hur
2005/0189604	A1	9/2005	Gupta et al.
2005/0189614	A1	9/2005	Ihme et al.
2005/0196685	A1	9/2005	Wang et al.
2005/0205894	A1	9/2005	Sumikawa et al.
2005/0212018	A1	9/2005	Schoellkopf et al.
2005/0224982	A1	10/2005	Kemerling et al.
2005/0229130	A1	10/2005	Wu et al.
2005/0251771	A1	11/2005	Robles
2005/0264320	A1	12/2005	Chan et al.
2005/0264324	A1	12/2005	Nakazato et al.
2005/0266621	A1	12/2005	Kim
2005/0268256	A1	12/2005	Tsai et al.
2005/0278673	A1	12/2005	Kawachi
2005/0280031	A1	12/2005	Yano
2006/0038234	A1	2/2006	Liaw
2006/0063334	A1	3/2006	Donze et al.
2006/0070018	A1	3/2006	Semmler
2006/0084261	A1	4/2006	Iwaki
2006/0091550	A1	5/2006	Shimazaki et al.
2006/0095872	A1	5/2006	McElvain
2006/0101370	A1	5/2006	Cui et al.
2006/0112355	A1	5/2006	Pileggi et al.
2006/0113533	A1	6/2006	Tamaki et al.
2006/0113567	A1	6/2006	Ohmori et al.
2006/0120143	A1	6/2006	Liaw
2006/0121715	A1	6/2006	Chang et al.
2006/0123376	A1	6/2006	Vogel et al.
2006/0125024	A1	6/2006	Ishigaki
2006/0131609	A1	6/2006	Kinoshita et al.
2006/0136848	A1	6/2006	Ichiryu et al.
2006/0146638	A1	7/2006	Chang et al.
2006/0151810	A1	7/2006	Ohshige
2006/0158270	A1	7/2006	Gibet et al.
2006/0177744	A1	8/2006	Bodendorf et al.
2006/0181310	A1	8/2006	Rhee
2006/0195809	A1	8/2006	Cohn et al.
2006/0195810	A1	8/2006	Morton
2006/0197557	A1	9/2006	Chung
2006/0206854	A1	9/2006	Barnes et al.
2006/0223302	A1	10/2006	Chang et al.
2006/0248495	A1	11/2006	Sezginer
2006/0277521	A1	12/2006	Chen
2007/0001304	A1	1/2007	Liaw
2007/0002617	A1	1/2007	Houston
2007/0007574	A1	1/2007	Ohsawa
2007/0038973	A1	2/2007	Li et al.
2007/0074145	A1	3/2007	Tanaka
2007/0094634	A1	4/2007	Seizginer et al.
2007/0101305	A1	5/2007	Smith et al.
2007/0105023	A1	5/2007	Zhou et al.
2007/0106971	A1	5/2007	Lien et al.
2007/0113216	A1	5/2007	Zhang
2007/0172770	A1	7/2007	Witters et al.
2007/0186196	A1	8/2007	Tanaka
2007/0196958	A1	8/2007	Bhattacharya et al.
2007/0209029	A1	9/2007	Ivonin et al.
2007/0210391	A1	9/2007	Becker et al.
2007/0234252	A1	10/2007	Visweswariah et al.
2007/0234262	A1	10/2007	Uedi et al.
2007/0241810	A1	10/2007	Onda
2007/0251771	A1	11/2007	Robles
2007/0256039	A1	11/2007	White
2007/0257277	A1	11/2007	Takeda et al.
2007/0274140	A1	11/2007	Joshi et al.
2007/0277129	A1	11/2007	Allen et al.
2007/0288882	A1	12/2007	Kniffin et al.
2007/0290361	A1	12/2007	Chen
2007/0294652	A1	12/2007	Bowen
2007/0297249	A1	12/2007	Chang et al.
2008/0001176	A1	1/2008	Gopalakrishnan
2008/0005712	A1	1/2008	Charlebois et al.
2008/0021689	A1	1/2008	Yamashita et al.
2008/0022247	A1	1/2008	Kojima et al.
2008/0046846	A1	2/2008	Chew et al.
2008/0081472	A1	4/2008	Tanaka
2008/0082952	A1	4/2008	O'Brien
2008/0086712	A1	4/2008	Fujimoto
2008/0097641	A1	4/2008	Miyashita et al.
2008/0098334	A1	4/2008	Pileggi et al.
2008/0098341	A1	4/2008	Kobayashi et al.
2008/0099795	A1	5/2008	Bernstein et al.
2008/0127000	A1	5/2008	Majumder et al.
2008/0127029	A1	5/2008	Graur et al.
2008/0134128	A1	6/2008	Blatchford et al.
2008/0144361	A1	6/2008	Wong
2008/0148216	A1	6/2008	Chan et al.
2008/0163141	A1	7/2008	Scheffer et al.
2008/0168406	A1	7/2008	Rahmat et al.
2008/0211028	A1	9/2008	Suzuki
2008/0216207	A1	9/2008	Tsai
2008/0244494	A1	10/2008	McCullen
2008/0251779	A1	10/2008	Kakoschke et al.
2008/0265290	A1	10/2008	Nielsen et al.
2008/0276105	A1	11/2008	Hoberman et al.
2008/0283910	A1	11/2008	Dreeskornfeld et al.
2008/0285331	A1	11/2008	Torok et al.
2008/0308848	A1	12/2008	Inaba
2008/0308880	A1	12/2008	Inaba
2008/0315258	A1	12/2008	Masuda et al.
2009/0014811	A1	1/2009	Becker et al.
2009/0024974	A1	1/2009	Yamada
2009/0031261	A1	1/2009	Smith et al.
2009/0032898	A1	2/2009	Becker et al.
2009/0032967	A1	2/2009	Becker et al.
2009/0037864	A1	2/2009	Becker et al.
2009/0057780	A1	3/2009	Wong et al.
2009/0075485	A1	3/2009	Ban et al.
2009/0077524	A1	3/2009	Nagamura
2009/0085067	A1	4/2009	Hayashi et al.
2009/0087991	A1	4/2009	Yatsuda et al.
2009/0101940	A1	4/2009	Barrows et al.
2009/0106714	A1	4/2009	Culp et al.
2009/0155990	A1	6/2009	Yanagidaira et al.
2009/0181314	A1	7/2009	Shyu et al.
2009/0187871	A1	7/2009	Cork
2009/0206443	A1	8/2009	Juengling
2009/0224408	A1	9/2009	Fox
2009/0228853	A1	9/2009	Hong et al.
2009/0228857	A1	9/2009	Kornachuk et al.
2009/0235215	A1	9/2009	Lavin
2009/0273100	A1	11/2009	Aton et al.
2009/0280582	A1	11/2009	Thijs et al.
2009/0302372	A1	12/2009	Chang et al.
2009/0319977	A1	12/2009	Saxena et al.
2010/0001321	A1	1/2010	Becker et al.
2010/0006897	A1	1/2010	Becker et al.
2010/0006898	A1	1/2010	Becker et al.

(56) **References Cited**

U.S. PATENT DOCUMENTS

2010/0006899	A1	1/2010	Becker et al.
2010/0006900	A1	1/2010	Becker et al.
2010/0006901	A1	1/2010	Becker et al.
2010/0006902	A1	1/2010	Becker et al.
2010/0006903	A1	1/2010	Becker et al.
2010/0006947	A1	1/2010	Becker et al.
2010/0006948	A1	1/2010	Becker et al.
2010/0006950	A1	1/2010	Becker et al.
2010/0006951	A1	1/2010	Becker et al.
2010/0006986	A1	1/2010	Becker et al.
2010/0011327	A1	1/2010	Becker et al.
2010/0011328	A1	1/2010	Becker et al.
2010/0011329	A1	1/2010	Becker et al.
2010/0011330	A1	1/2010	Becker et al.
2010/0011331	A1	1/2010	Becker et al.
2010/0011332	A1	1/2010	Becker et al.
2010/0011333	A1	1/2010	Becker et al.
2010/0012981	A1	1/2010	Becker et al.
2010/0012982	A1	1/2010	Becker et al.
2010/0012983	A1	1/2010	Becker et al.
2010/0012984	A1	1/2010	Becker et al.
2010/0012985	A1	1/2010	Becker et al.
2010/0012986	A1	1/2010	Becker et al.
2010/0017766	A1	1/2010	Becker et al.
2010/0017767	A1	1/2010	Becker et al.
2010/0017768	A1	1/2010	Becker et al.
2010/0017769	A1	1/2010	Becker et al.
2010/0017770	A1	1/2010	Becker et al.
2010/0017771	A1	1/2010	Becker et al.
2010/0017772	A1	1/2010	Becker et al.
2010/0019280	A1	1/2010	Becker et al.
2010/0019281	A1	1/2010	Becker et al.
2010/0019282	A1	1/2010	Becker et al.
2010/0019283	A1	1/2010	Becker et al.
2010/0019284	A1	1/2010	Becker et al.
2010/0019285	A1	1/2010	Becker et al.
2010/0019286	A1	1/2010	Becker et al.
2010/0019287	A1	1/2010	Becker et al.
2010/0019288	A1	1/2010	Becker et al.
2010/0019308	A1	1/2010	Chan et al.
2010/0023906	A1	1/2010	Becker et al.
2010/0023907	A1	1/2010	Becker et al.
2010/0023908	A1	1/2010	Becker et al.
2010/0023911	A1	1/2010	Becker et al.
2010/0025731	A1	2/2010	Becker et al.
2010/0025732	A1	2/2010	Becker et al.
2010/0025733	A1	2/2010	Becker et al.
2010/0025734	A1	2/2010	Becker et al.
2010/0025735	A1	2/2010	Becker et al.
2010/0025736	A1	2/2010	Becker et al.
2010/0032722	A1	2/2010	Becker et al.
2010/0032723	A1	2/2010	Becker et al.
2010/0032724	A1	2/2010	Becker et al.
2010/0032726	A1	2/2010	Becker et al.
2010/0037194	A1	2/2010	Becker et al.
2010/0037195	A1	2/2010	Becker et al.
2010/0096671	A1	4/2010	Becker et al.
2010/0115484	A1	5/2010	Frederick
2010/0203689	A1	8/2010	Bernstein et al.
2010/0224943	A1	9/2010	Kawasaki
2010/0229140	A1	9/2010	Strolenberg et al.
2010/0232212	A1	9/2010	Anderson et al.
2010/0252865	A1	10/2010	Van Der Zanden
2010/0264468	A1	10/2010	Xu
2010/0270681	A1	10/2010	Bird et al.
2010/0287518	A1	11/2010	Becker
2010/0301482	A1	12/2010	Schultz et al.
2011/0016909	A1	1/2011	Mirza et al.
2011/0108890	A1	5/2011	Becker et al.
2011/0108891	A1	5/2011	Becker et al.
2011/0154281	A1	6/2011	Zach
2011/0207298	A1	8/2011	Anderson et al.
2011/0260253	A1	10/2011	Inaba
2011/0298025	A1	12/2011	Haensch et al.
2011/0317477	A1	12/2011	Liaw
2012/0012932	A1	1/2012	Perng et al.
2012/0273841	A1	11/2012	Quandt et al.
2013/0097574	A1	4/2013	Balabanov et al.
2013/0200465	A1	8/2013	Becker et al.
2013/0200469	A1	8/2013	Becker et al.
2013/0207198	A1	8/2013	Becker et al.
2013/0207199	A1	8/2013	Becker et al.
2013/0254732	A1	9/2013	Kornachuk et al.
2014/0197543	A1	7/2014	Kornachuk et al.
2015/0249041	A1	9/2015	Becker et al.
2015/0270218	A1	9/2015	Becker et al.

FOREIGN PATENT DOCUMENTS

EP	1394858		3/2004
EP	1670062		6/2006
EP	1833091		8/2007
EP	1730777		9/2007
EP	2251901		11/2010
FR	2860920		4/2005
JP	58-182242		10/1983
JP	58-215827		12/1983
JP	61-182244		8/1986
JP	563-310136	A	12/1988
JP	H01284115		11/1989
JP	03-165061		7/1991
JP	H05152937	A	6/1993
JP	H05211437		8/1993
JP	H05218362		8/1993
JP	H07-153927	A	6/1995
JP	2684980		7/1995
JP	1995-302706		11/1995
JP	1997-09289251	A	11/1997
JP	10-116911		5/1998
JP	1999-045948		2/1999
JP	2001-068558		3/2001
JP	2001-168707		6/2001
JP	2002-026125		1/2002
JP	2002-026296	A	1/2002
JP	2002-184870	A	6/2002
JP	2001-056463		9/2002
JP	2002-258463		9/2002
JP	2002-289703		10/2002
JP	2001-272228		3/2003
JP	2003-100872		4/2003
JP	2003-264231		9/2003
JP	2004-013920		1/2004
JP	2004-200300		7/2004
JP	2004-241529		8/2004
JP	2004-342757	A	12/2004
JP	2005-020008		1/2005
JP	2003-359375		5/2005
JP	2005-135971	A	5/2005
JP	2005-149265		6/2005
JP	2005-183793		7/2005
JP	2005-203447		7/2005
JP	2005-268610		9/2005
JP	2005-114752		10/2006
JP	2006-303022	A	11/2006
JP	2007-012855		1/2007
JP	2007-013060		1/2007
JP	2007-043049		2/2007
JP	2011-515841		5/2011
KR	10-0417093		6/1997
KR	10-1998-087485		12/1998
KR	1998-0084215	A	12/1998
KR	10-1999-0057943	A	7/1999
KR	2000-0005660		1/2000
KR	10-2000-0028830	A	5/2000
KR	10-2002-0034313		5/2002
KR	10-2002-0070777		9/2002
KR	2003-0022006		3/2003
KR	10-2005-0030347	A	3/2005
KR	2005-0037965	A	4/2005
KR	2006-0108233	A	10/2006
TW	386288		4/2000
TW	200709309		3/2007
TW	200709565		3/2007
TW	200811704	A	3/2008

(56) **References Cited**

FOREIGN PATENT DOCUMENTS

TW	200947567 A	11/2009
WO	WO 2005/104356	11/2005
WO	WO 2006/014849	2/2006
WO	WO 2006/052738	5/2006
WO	WO 2007/014053	2/2007
WO	WO 2007/103587	9/2007

OTHER PUBLICATIONS

U.S. Appl. No. 60/625,342, Pileggi et al., May 25, 2006.
Acar, et al., "A Linear-Centric Simulation Framework for Parametric Fluctuations", 2002, IEEE, Carnegie Mellon University USA, pp. 1-8, Jan. 28, 2002.
Amazawa, et al., "Fully Planarized Four-Level Interconnection with Stacked VLAS Using CMP of Selective CVD-A1 and Insulator and its Application to Quarter Micron Gate Array LSIs", 1995, IEEE, Japan, pp. 473-476, Dec. 10, 1995.
Axelrad et al. "Efficient Full-Chip Yield Analysis Methodology for OPC-Corrected VLSI Design", 2000, International Symposium on Quality Electronic Design (ISQED), Mar. 20, 2000.
Balasinski et al. "Impact of Subwavelength CD Tolerance on Device Performance", 2002, SPIE vol. 4692, Jul. 11, 2002.
Burkhardt, et al., "Dark Field Double Dipole Lithography (DDL) for Back-End-Of-Line Processes", 2007, SPIE Proceeding Series, vol. 6520; Mar. 26, 2007.
Capetti, et al., "Sub kl = 0.25 Lithography with Double Patterning Technique for 45nm Technology Node Flash Memory Devices at λ = 193nm", 2007, SPIE Proceeding Series, vol. 6520; Mar. 27, 2007.
Capodieci, L., et al., "Toward a Methodology for Manufacturability-Driven Design Rule Exploration," DAC 2004, Jun. 7, 2004, San Diego, CA.
Chandra, et al., "An Interconnect Channel Design Methodology for High Performance Integrated Circuits", 2004, IEEE, Carnegie Mellon University, pp. 1-6, Feb. 16, 2004.
Cheng, et al., "Feasibility Study of Splitting Pitch Technology on 45nm Contact Patterning with 0.93 NA", 2007, SPIE Proceeding Series, vol. 6520; Feb. 25, 2007.
Chow, et al., "The Design of a SRAM-Based Field-Programmable Gate Array—Part II: Circuit Design and Layout", 1999, IEEE, vol. 7 # 3 pp. 321-330, Sep. 1, 1999.
Clark et al. "Managing Standby and Active Mode Leakage Power in Deep Sub-Micron Design", Aug. 9, 2004, ACM.
Cobb et al. "Using OPC to Optimize for Image Slope and Improve Process Window", 2003, SPIE vol. 5130, Apr. 16, 2003.
Devgan "Leakage Issues in IC Design: Part 3", 2003, ICCAD, Nov. 9, 2003.
DeVor, et al., "Statistical Quality Design and Control", 1992, Macmillan Publishing Company, pp. 264-267, Jan. 3, 1992.
Dictionary.com, "channel," in Collins English Dictionary—Complete & Unabridged 10th Edition. Source location: HarperCollins Publishers. Sep. 3, 2009.
Dusa, et al. "Pitch Doubling Through Dual Patterning Lithography Challenges in Integration and Litho Budgets", 2007, SPIE Proceeding Series, vol. 6520; Feb. 25, 2007.
El-Gamal, "Fast, Cheap and Under Control: The Next Implementation Fabric", Jun. 2, 2003, ACM Press, pp. 354-355.
Firedberg, et al., "Modeling Within-Field Gate Length Spatial Variation for Process-Design Co-Optimization," 2005 Proc. of SPIE vol. 5756, pp. 178-188, Feb. 27, 2005.
Frankel, "Quantum State Control Interference Lithography and Trim Double Patterning for 32-16nm Lithography", 2007, SPIE Proceeding Series, vol. 6520; Feb. 27, 2007.
Garg, et al. "Lithography Driven Layout Design", 2005, IEEE VLSI Design 2005, Jan. 3, 2005.
Grobman et al. "Reticle Enhancement Technology Trends: Resource and Manufacturability Implications for the Implementation of Physical Designs" Apr. 1, 2001, ACM.
Grobman et al. "Reticle Enhancement Technology: Implications and Challenges for Physical Design" Jun. 18, 2001, ACM.
Gupta et al. "Enhanced Resist and Etch CD Control by Design Perturbation", Oct. 4, 2006, Society of Photo-Optical Instrumentation Engineers.
Gupta et al. "A Practical Transistor-Level Dual Threshold Voltage Assignment Methodology", 2005, Sixth International Symposium on Quality Electronic Design (ISQED), Mar. 21, 2005.
Gupta et al. "Detailed Placement for Improved Depth of Focus and CD Control", 2005, ACM, Jan. 18, 2005.
Gupta et al. "Joining the Design and Mask Flows for Better and Cheaper Masks", Oct. 14, 2004, Society of Photo-Optical Instrumentation Engineers.
Gupta et al. "Manufacturing-Aware Physical Design", ICCAD 2003, Nov. 9, 2003.
Gupta et al. "Selective Gate-Length Biasing for Cost-Effective Runtime Leakage Control", Jun. 7, 2004, ACM.
Gupta et al. "Wafer Topography-Aware Optical Proximity Correction for Better DOF Margin and CD Control", Apr. 13, 2005, SPIE.
Gupta, Puneet, et al., "Manufacturing-aware Design Methodology for Assist Feature Correctness," SPIE vol. 5756, May 13, 2005.
Ha et al., "Reduction in the Mask Error Factor by Optimizing the Diffraction Order of a Scattering Bar in Lithography," Journal of the Korean Physical Society, vol. 46, No. 5, May 5, 2005, pp. 1213-1217.
Hakko, et al., "Extension of the 2D-TCC Technique to Optimize Mask Pattern Layouts," 2008 Proc. of SPIE vol. 7028, 11 pages, Apr. 16, 2008.
Halpin et al., "Detailed Placement with Net Length Constraints," Publication Year 2003, Proceedings of the 3rd IEEE International Workshop on System-on-Chip for Real-Time Applications, pp. 22-27, Jun. 30, 2003.
Hayashida, et al., "Manufacturable Local Interconnect technology Fully Compatible with Titanium Salicide Process", Jun. 11, 1991, VMIC Conference.
Heng, et al., "A VLSI Artwork Legalization Technique Base on a New Criterion of Minimum Layout Perturbation", Proceedings of 1997 International Symposium on Physical Design, pp. 116-121, Apr. 14, 1997.
Heng, et al., "Toward Through-Process Layout Quality Metrics", Mar. 3, 2005, Society of Photo-Optical Instrumentation Engineers.
Hu, et al., "Synthesis and Placement Flow for Gain-Based Programmable Regular Fabrics", Apr. 6, 2003, ACM Press, pp. 197-203.
Hur et al., "Mongrel: Hybrid Techniques for Standard Cell Placement," Publication Year 2000, IEEE/ACM International Conference on Computer Aided Design, ICCAD-2000, pp. 165-170, Nov. 5, 2000.
Hutton, et al., "A Methodology for FPGA to Structured-ASIC Synthesis and Verification", 2006, EDAA, pp. 64-69, Mar. 6, 2006.
Intel Core Microarchitecture White Paper "Introducing the 45 nm Next-Generation Intel Core Microarchitecture," Intel Corporation, 2007 (best available publication date).
Jayakumar, et al., "A Metal and VIA Maskset Programmable VLSI Design Methodology using PLAs", 2004, IEEE, pp. 590-594, Nov. 7, 2004.
Jhaveri, T. et al., Maximization of Layout Printability/Manufacturability by Extreme Layout Regularity, Proc. of the SPIE vol. 6156, Feb. 19, 2006.
Kang, S.M., Metal-Metal Matrix (M3) for High-Speed MOS VLSI Layout, IEEE Trans. on CAD, vol. CAD-6, No. 5, Sep. 1, 1987.
Kawashima, et al., "Mask Optimization for Arbitrary Patterns with 2D-TCC Resolution Enhancement Technique," 2008 Proc. of SPIE vol. 6924, 12 pages, Feb. 24, 2008.
Kheterpal, et al., "Design Methodology for IC Manufacturability Based on Regular Logic-Bricks", DAC, Jun. 13, 2005, IEEE/AMC, vol. 6520.
Kheterpal, et al., "Routing Architecture Exploration for Regular Fabrics", DAC, Jun. 7, 2004, ACM Press, pp. 204-207.
Kim, et al., "Double Exposure Using 193nm Negative Tone Photoresist", 2007, SPIE Proceeding Series, vol. 6520; Feb. 25, 2007.
Kim, et al., "Issues and Challenges of Double Patterning Lithography in DRAM", 2007, SPIE Proceeding Series, vol. 6520; Feb. 25, 2007.
Koorapaty, et al., "Exploring Logic Block Granularity for Regular Fabrics", 2004, IEEE, pp. 1-6, Feb. 16, 2004.

(56) **References Cited**

OTHER PUBLICATIONS

Koorapaty, et al., "Heterogeneous Logic Block Architectures for Via-Patterned Programmable Fabric", 13th International Conference on Field Programmable Logic and Applications (FPL) 2003, Lecture Notes in Computer Science (LNCS), Sep. 1, 2003, Springer-Verlag, vol. 2778, pp. 426-436.
Koorapaty, et al., "Modular, Fabric-Specific Synthesis for Programmable Architectures", 12th International Conference on Field Programmable Logic and Applications (FPL_2002, Lecture Notes in Computer Science (LNCS)), Sep. 2, 2002, Springer-Verlag, vol. 2438 pp. 132-141.
Kuh et al., "Recent Advances in VLSI Layout," Proceedings of the IEEE, vol. 78, Issue 2, pp. 237-263, Feb. 1, 1990.
Lavin et al. "Backend DAC Flows for "Restrictive Design Rules"", 2004, IEEE, Nov. 7, 2004.
Li, et al., "A Linear-Centric Modeling Approach to Harmonic Balance Analysis", 2002, IEEE, pp. 1-6, Mar. 4, 2002.
Li, et al., "Nonlinear Distortion Analysis Via Linear-Centric Models", 2003, IEEE, pp. 897-903, Jan. 21, 2003.
Liebmann et al., "Integrating DfM Components into a Cohesive Design-toSilicon Solution," Proc. SPIE 5756, Design and Process Integration for Microelectronic Manufacturing III, Feb. 27, 2005.
Liebmann et al., "Optimizing Style Options for Sub-Resolution Assist Features," Proc. of SPIE vol. 4346, Feb. 25, 2001, pp. 141-152.
Liebmann, et al., "High-Performance Circuit Design for the RET-Enabled 65nm Technology Node", Feb. 26, 2004, SPIE Proceeding Series, vol. 5379 pp. 20-29.
Liebmann, L. W., Layout Impact of Resolution Enhancement Techniques: Impediment or Opportunity?, International Symposium on Physical Design, Apr. 6, 2003.
Liu et al., "Double Patterning with Multilayer Hard Mask Shrinkage for Sub 0.25 k1 Lithography," Proc. SPIE 6520, Optical Microlithography XX, Feb. 25, 2007.
Mansfield et al., "Lithographic Comparison of Assist Feature Design Strategies," Proc. of SPIE vol. 4000, Feb. 27, 2000, pp. 63-76.
Miller, "Manufacturing-Aware Design Helps Boost IC Yield", Sep. 9, 2004, http://www.eetimes.com/showArticle.jhtml?articleID=47102054.
Mishra, P., et al., "FinFET Circuit Design," Nanoelectronic Circuit Design, pp. 23-54, Dec. 21, 2010.
Mo, et al., "Checkerboard: A Regular Structure and its Synthesis, International Workshop on Logic and Synthesis", Department of Electrical Engineering and Computer Sciences, UC Berkeley, California, pp. 1-7, Jun. 1, 2003.
Mo, et al., "PLA-Based Regular Structures and Their Synthesis", Department of Electrical Engineering and Computer Sciences, IEEE, pp. 723-729, Jun. 1, 2003.
Mo, et al., "Regular Fabrics in Deep Sub-Micron Integrated-Circuit Design", Kluwer Academic Publishers, Entire Book, Jun. 1, 2002.
Moore, Samuel K., "Intel 45-nanometer Penryn Processors Arrive," Nov. 13, 2007, IEEE Spectrum, http://spectrum.ieee.org/semiconductors/design/intel-45nanometer-penryn-processors-arrive.
Mutoh et al. "1-V Power Supply High-Speed Digital Circuit Technology with Multithreshold-Voltage CMOS", 1995, IEEE, Aug. 1, 1995.
Op de Beek, et al., "Manufacturability issues with Double Patterning for 50nm half pitch damascene applications, using RELCAS® shrink and corresponding OPC", 2007, SPIE Proceeding Series, vol. 6520; Feb. 25, 2007.
Or-Bach, "Programmable Circuit Fabrics", Sep. 18, 2001, e-ASIC, pp. 1-36.
Otten, et al., "Planning for Performance", DAC 1998, ACM Inc., pp. 122-127, Jun. 15, 1998.
Pack et al. "Physical & Timing Verification of Subwavelength-Scale Designs—Part I: Lithography Impact on MOSFETs", 2003, SPIE vol. 5042, Feb. 23, 2003.
Pandini, et al., "Congestion-Aware Logic Synthesis", 2002, IEEE, pp. 1-8, Mar. 4, 2002.
Pandini, et al., "Understanding and Addressing the Impact of Wiring Congestion During Technology Mapping", ISPD Apr. 7, 2002, ACM Press, pp. 131-136.
Patel, et al., "An Architectural Exploration of Via Patterned Gate Arrays, ISPD 2003", Apr. 6, 2003, pp. 184-189.
Pham, D., et al., "FINFET Device Junction Formation Challenges," 2006 International Workshop on Junction Technology, pp. 73-77, Aug. 1, 2006.
Pileggi, et al., "Exploring Regular Fabrics to Optimize the Performance-Cost Trade-Offs, Proceedings of the 40th ACM/IEEE Design Automation Conference (DAC) 2003", Jun. 2, 2003, ACM Press, pp. 782-787.
Poonawala, et al., "ILT for Double Exposure Lithography with Conventional and Novel Materials", 2007, SPIE Proceeding Series, vol. 6520; Feb. 25, 2007.
Qian et al. "Advanced Physical Models for Mask Data Verification and Impacts on Physical Layout Synthesis" 2003 IEEE, Mar. 24, 2003.
Ran, et al., "An Integrated Design Flow for a Via-Configurable Gate Array", 2004, IEEE, pp. 582-589, Nov. 7, 2004.
Ran, et al., "Designing a Via-Configurable Regular Fabric", Custom Integrated Circuits Conference (CICC). Proceedings of the IEEE, Oct. 1, 2004, pp. 423-426.
Ran, et al., "On Designing Via-Configurable Cell Blocks for Regular Fabrics" Proceedings of the Design Automation Conference (DAC) 2004, Jun. 7, 2004, ACM Press, s 198-203.
Ran, et al., "The Magic of a Via-Configurable Regular Fabric", Proceedings of the IEEE International Conference on Computer Design (ICCD) Oct. 11, 2004.
Ran, et al., "Via-Configurable Routing Architectures and Fast Design Mappability Estimation for Regular Fabrics", 2005, IEEE, pp. 25-32, Sep. 1, 2006.
Reis, et al., "Physical Design Methodologies for Performance Predictability and Manufacturability", Apr. 14, 2004, ACM Press, pp. 390-397.
Robertson, et al., "The Modeling of Double Patterning Lithographic Processes", 2007, SPIE Proceeding Series, vol. 6520; Feb. 25, 2007.
Rosenbluth, et al., "Optimum Mask and Source Patterns to Print a Given Shape," 2001 Proc. of SPIE vol. 4346, pp. 486-502, Feb. 25, 2001.
Rovner, "Design for Manufacturability in Via Programmable Gate Arrays", May 1, 2003, Graduate School of Carnegie Mellon University.
Sengupta, "An Integrated CAD Framework Linking VLSI Layout Editors and Process Simulators", 1998, Thesis for Rice University, pp. 1-101, Nov. 1, 1998.
Sengupta, et al., "An Integrated CAD Framework Linking VLSI Layout Editors and Process Simulators", 1996, SPIE Proceeding Series, vol. 2726; pp. 244-252, Mar. 10, 1996.
Sherlekar, "Design Considerations for Regular Fabrics", Apr. 18, 2004, ACM Press, pp. 97-102.
Shi et al., "Understanding the Forbidden Pitch and Assist Feature Placement," Proc. of SPIE vol. 4562, pp. 968-979, Mar. 11, 2002.
Smayling et al., "APF Pitch Halving for 22 nm Logic Cells Using Gridded Design Rules," Proceedings of SPIE, USA, vol. 6925, Jan. 1, 2008, pp. 69251E-1-69251E-7.
Socha, et al., "Simultaneous Source Mask Optimization (SMO)," 2005 Proc. of SPIE vol. 5853, pp. 180-193, Apr. 13, 2005.
Sreedhar et al. "Statistical Yield Modeling for Sub-Wavelength Lithography", 2008 IEEE, Oct. 28, 2008.
Stapper, "Modeling of Defects in Integrated Circuit Photolithographic Patterns", Jul. 1, 1984, IBM, vol. 28 # 4, pp. 461-475.
Taylor, et al., "Enabling Energy Efficiency in Via-Patterned Gate Array Devices", Jun. 7, 2004, ACM Press, pp. 874-877.
Tian et al. "Model-Based Dummy Feature Placement for Oxide Chemical_Mechanical Polishing Manufacturability" IEEE, vol. 20, Issue 7, Jul. 1, 2001.
Tong, et al., "Regular Logic Fabrics for a Via Patterned Gate Array (VPGA), Custom Integrated Circuits Conference", Sep. 21, 2003, Proceedings of the IEEE, pp. 53-56.
Vanleenhove, et al., "A Litho-Only Approach to Double Patterning", 2007, SPIE Proceeding Series, vol. 6520; Feb. 25, 2007.

(56) **References Cited**

OTHER PUBLICATIONS

Wang, et al., "Performance Optimization for Gridded-Layout Standard Cells", vol. 5567 SPIE, Sep. 13, 2004.
Wang, J. et al., Standard Cell Layout with Regular Contact Placement, IEEE Trans. on Semicon. Mfg., vol. 17, No. 3, Aug. 9, 2004.
Webb, Clair, "45nm Design for Manufacturing," Intel Technology Journal, vol. 12, Issue 02, Jun. 17, 2008, ISSN 1535-864X, pp. 121-130.
Webb, Clair, "Layout Rule Trends and Affect upon CPU Design", vol. 6156 SPIE, Feb. 19, 2006.
Wenren, et al., "The Improvement of Photolithographic Fidelity of Two-dimensional Structures Though Double Exposure Method", 2007, SPIE Proceeding Series, vol. 6520; Feb. 25, 2007.
Wilcox, et al., "Design for Manufacturability: A Key to Semiconductor Manufacturing Excellence", 1998 IEEE, pp. 308-313, Sep. 23, 1998.
Wong, et al., "Resolution Enhancement Techniques and Design for Manufacturability: Containing and Accounting for Variabilities in Integrated Circuit Creation," J. Micro/Nanolith. MEMS MOEMS, Sep. 27, 2007, vol. 6(3), 2 pages.
Wu, et al., "A Study of Process Window Capabilities for Two-dimensional Structures under Double Exposure Condition", 2007, SPIE Proceeding Series, vol. 6520; Feb. 25, 2007.
Xiong, et al., "The Constrained Via Minimization Problem for PCB and VLSI Design", 1988 ACM Press/IEEE, pp. 573-578, Jun. 12, 1998.
Yamamaoto, et al., "New Double Exposure Technique without Alternating Phase Shift Mask", SPIE Proceeding Series, vol. 6520; Feb. 25, 2007.
Yamazoe, et al., "Resolution Enhancement by Aerial Image Approximation with 2D-TCC," 2007 Proc. of SPIE vol. 6730, 12 pages, Sep. 17, 2007.
Yang, et al., "Interconnection Driven VLSI Module Placement Based on Quadratic Programming and Considering Congestion Using LFF Principles", 2004 IEEE, pp. 1243-1247, Jun. 27, 2004.
Yao, et al., "Multilevel Routing With Redundant Via Insertion", Oct. 23, 2006, IEEE, pp. 1148-1152.
Yu, et al., "True Process Variation Aware Optical Proximity Correction with Variational Lithography Modeling and Model Calibration," J. Micro/Nanolith. MEMS MOEMS, Sep. 11, 2007, vol. 6(3), 16 pages.
Zheng, et al."Modeling and Analysis of Regular Symmetrically Structured Power/Ground Distribution Networks", DAC, Jun. 10, 2002, ACM Press, pp. 395-398.
Zhu, et al., "A Stochastic Integral Equation Method for Modeling the Rough Surface Effect on Interconnect Capacitance", 2004 IEEE, Nov. 7, 2004.
Zhu, et al., "A Study of Double Exposure Process Design with Balanced Performance Parameters for Line/Space Applications", 2007, SPIE Proceeding Series, vol. 6520; Feb. 25, 2007.
Zuchowski, et al., "A Hybrid ASIC and FPGA Architecture", 2003 IEEE, pp. 187-194, Nov. 10, 2002.
Alam, Syed M. et al., "A Comprehensive Layout Methodology and Layout-Specific Circuit Analyses for Three-Dimensional Integrated Circuits," Mar. 21, 2002.
Alam, Syed M. et al., "Layout-Specific Circuit Evaluation in 3-D Integrated Circuits," May 1, 2003.
Aubusson, Russel, "Wafer-Scale Integration of Semiconductor Memory," Apr. 1, 1979.
Bachtold, "Logic Circuits with Carbon," Nov. 9, 2001.
Baker, R. Jacob, "CMOS: Circuit Design, Layout, and Simulation (2nd Edition)," Nov. 1, 2004.
Baldi et al., "A Scalable Single Poly EEPROM Cell for Embedded Memory Applications," pp. 1-4, Fig. 1, Sep. 1, 1997.
Cao, Ke, "Design for Manufacturing (DFM) in Submicron VLSI Design," Aug. 1, 2007.
Capodieci, Luigi, "From Optical Proximity Correction to Lithography-Driven Physical Design (1996-2006): 10 years of Resolution Enhancement Technology and the roadmap enablers for the next decade," Proc. SPIE 6154, Optical Microlithography XIX, 615401, Mar. 20, 2006.
Chang, Leland et al., "Stable SRAM Cell Design for the 32 nm Node and Beyond," Jun. 16, 2005.
Cheung, Peter, "Layout Design," Apr. 4, 2004.
Chinnery, David, "Closing the Gap Between ASIC & Custom: Tools and Techniques for High-Performance ASIC Design," Jun. 30, 2002.
Chou, Dyiann et al., "Line End Optimization through Optical Proximity Correction (OPC): A Case Study," Feb. 19, 2006.
Clein, Dan, "CMOS IC Layout: Concepts, Methodologies, and Tools," Dec. 22, 1999.
Cowell, "Exploiting Non-Uniform Access Time," Jul. 1, 2003.
Das, Shamik, "Design Automation and Analysis of Three-Dimensional Integrated Circuits," May 1, 2004.
Dehaene, W. et al., "Technology-Aware Design of SRAM Memory Circuits," Mar. 1, 2007.
Deng, Liang et al., "Coupling-aware Dummy Metal Insertion for Lithography," p. 1, col. 2, Jan. 23, 2007.
Devoivre et al., "Validated 90nm CMOS Technology Platform with Low-k Copper Interconnects for Advanced System-on-Chip (SoC)," Jul. 12, 2002.
Enbody, R. J., "Near-Optimal n-Layer Channel Routing," Jun. 29, 1986.
Ferretti, Marcos et al., "High Performance Asynchronous ASIC Back-End Design Flow Using Single-Track Full-Buffer Standard Cells," Apr. 23, 2004.
Garg, Manish et al., "Litho-driven Layouts for Reducing Performance Variability," p. 2, Figs. 2b-2c, May 23, 2005.
Greenway, Robert et al., "32nm 1-D Regular Pitch SRAM Bitcell Design for Interference-Assisted Lithography," Oct. 6, 2008.
Gupta et al., "Modeling Edge Placement Error Distribution in Standard Cell Library," Feb. 23, 2006.
Grad, Johannes et al., "A standard cell library for student projects," Proceedings of the 2003 IEEE International Conference on Microelectronic Systems Education, Jun. 2, 2003.
Hartono, Roy et al., "Active Device Generation for Automatic Analog Layout Retargeting Tool," May 13, 2004.
Hartono, Roy et al., "IPRAIL—Intellectual Property Reuse-based Analog IC Layout Automation," Mar. 17, 2003.
Hastings, Alan, "The Art of Analog Layout (2nd Edition)," Jul. 4, 2005.
Hurat et al., "A Genuine Design Manufacturability Check for Designers," Feb. 19, 2006.
Institute of Microelectronic Systems, "Digital Subsystem Design," Oct. 13, 2006.
Ishida, M. et al., "A Novel 6T-SRAM Cell Technology Designed with Rectangular Patterns Scalable beyond 0.18 pm Generation and Desirable for Ultra High Speed Operation," IEDM 1998, Dec. 6, 1998.
Jakusovszky, "Linear IC Parasitic Element Simulation Methodology," Oct. 1, 1993.
Jangkrajarng, Nuttorn et al., "Template-Based Parasitic-Aware Optimization and Retargeting of Analog and RF Integrated Circuit Layouts," Nov. 5, 2006.
Kahng, Andrew B., "Design Optimizations DAC-2006 DFM Tutorial, part V)," Jul. 24, 2006.
Kang, Sung-Mo et al., "CMOS Digital Integrated Circuits Analysis & Design," Oct. 29, 2002.
Kottoor, Mathew Francis, "Development of a Standard Cell Library based on Deep Sub-Micron SCMOS Design Rules using Open Source Software (MS Thesis)," Aug. 1, 2005.
Kubicki, "Intel 65nm and Beyond (or Below): IDF Day 2 Coverage (available at http://www.anandtech.com/show/1468/4)," Sep. 9, 2004.
Kuhn, Kelin J., "Reducing Variation in Advanced Logic Technologies: Approaches to Process and Design for Manufacturability of Nanoscale CMOS," p. 27, Dec. 12, 2007.
Kurokawa, Atsushi et al., "Dummy Filling Methods for Reducing Interconnect Capacitance and Number of Fills, Proc. of ISQED," pp. 586-591, Mar. 21, 2005.

(56) **References Cited**

OTHER PUBLICATIONS

Lavin, Mark, "Open Access Requirements from RDR Design Flows," Nov. 11, 2004.
Liebmann, Lars et al., "Layout Methodology Impact of Resolution Enhancement Techniques," pp. 5-6, Apr. 6, 2003.
Liebmann, Lars et al., "TCAD development for lithography resolution enhancement," Sep. 1, 2001.
Lin, Chung-Wei et al., "Recent Research and Emerging Challenges in Physical Design for Manufacturability/Reliability," Jan. 26, 2007.
McCullen, Kevin W., "Layout Techniques for Phase Correct and Gridded Wiring," pp. 13, 17, Fig. 5, Dec. 1, 2006.
Mosis, "Design Rules MOSIS Scalable CMOS (SCMOS) (Revision 8.00)," Oct. 4, 2004.
Mosis, "MOSIS Scalable CMOS (SCMOS) Design Rules (Revision 7.2)," Jan. 1, 1995.
Muta et al., "Manufacturability-Aware Design of Standard Cells," pp. 2686-2690, Figs. 3, 12, Dec. 1, 2007.
Na, Kee-Yeol et al., "A Novel Single Polysilicon EEPROM Cell With a Polyfinger Capacitor," Nov. 30, 2007.
Pan et al., "Redundant Via Enhanced Maze Routing for Yield Improvement," DAC 2005, Jan. 18, 2005.
Park, Tae Hong, "Characterization and Modeling of Pattern Dependencies in Copper Interconnects for Integrated Circuits," Ph.D. Thesis, MIT, May 24, 2002.
Patel, Chetan, "An Architectural Exploration of Via Patterned Gate Arrays (CMU Master's Project)," May 1, 2003.
Pease, R. Fabian et al., "Lithography and Other Patterning Techniques for Future Electronics," IEEE 2008, vol. 96, Issue 2, Jan. 16, 2008.
Serrano, Diego Emilio, Pontificia Universidad Javeriana Facultad De Ingenieria, Departamento De Electronica, "Diseño De Multiplicador 4 × 8 en VLSI, Introduccion al VLSI," 2006 (best available publication date).
Pramanik, "Impact of layout on variability of devices for sub 90nm technologies," 2004 (best available publication date).
Pramanik, Dipankar et al., "Lithography-driven layout of logic cells for 65-nm node (SPIE Proceedings vol. 5042)," Jul. 10, 2003.
Roy et al., "Extending Aggressive Low-K1 Design Rule Requirements for 90 and 65 Nm Nodes Via Simultaneous Optimization of Numerical Aperture, Illumination and Optical Proximity Correction," J.Micro/Nanolith, MEMS MOEMS, 4(2), 023003, Apr. 26, 2005.
Saint, Christopher et al., "IC Layout Basics: A Practical Guide," Chapter 3, Nov. 5, 2001.
Saint, Christopher et al., "IC Mask Design: Essential Layout Techniques," May 24, 2002.
Scheffer, "Physical CAD Changes to Incorporate Design for Lithography and Manufacturability," Feb. 4, 2004.
Smayling, Michael C., "Part 3: Test Structures, Test Chips, In-Line Metrology & Inspection," Jul. 24, 2006.
Spence, Chris, "Full-Chip Lithography Simulation and Design Analysis: How OPC is changing IC Design, Emerging Lithographic Technologies IX," May 6, 2005.
Subramaniam, Anupama R., "Design Rule Optimization of Regular layout for Leakage Reduction in Nanoscale Design," pp. 474-478, Mar. 24, 2008.
Tang, C. W. et al., "A compact large signal model of LDMOS," Solid-State Electronics 46(2002) 2111-2115, May 17, 2002.
Taylor, Brian et al., "Exact Combinatorial Optimization Methods for Physical Design of Regular Logic Bricks," Jun. 8, 2007.
Tian, Ruiqi et al., "Dummy Feature Placement for Chemical-Mechanical Uniformity in a Shallow Trench Isolation Process," IEEE Trans. on Computer-Aided Design of Integrated Circuits and Systems, vol. 21, No. 1, pp. 63-71, Jan. 1, 2002.
Tian, Ruiqi et al., "Proximity Dummy Feature Placement and Selective Via Sizing for Process Uniformity in a Trench-First-Via-Last Dual-Inlaid Metal Process," Proc. of RTC, pp. 48-50, Jun. 6, 2001.
Torres, J. A. et al., "RET Compliant Cell Generation for sub-130nm Processes," SPIE vol. 4692, Mar. 6, 2002.
Uyemura, John P., "Introduction to VLSI Circuits and Systems," Chapters 2, 3, 5, and Part 3, Jul. 30, 2001.
Uyemura, John, "Chip Design for Submicron VLSI: CMOS Layout and Simulation," Chapters 2-5, 7-9, Feb. 8, 2005.
Verhaegen et al., "Litho Enhancements for 45nm-nod MuGFETs," Aug. 1, 2005.
Wong, Ban P., "Bridging the Gap between Dreams and Nano-Scale Reality (DAC-2006 DFM Tutorial)," Jul. 28, 2006.
Wang, Dunwei et al., "Complementary Symmetry Silicon Nanowire Logic: Power-Efficient Inverters with Gain," Aug. 17, 2006.
Wang, Jun et al., "Effects of grid-placed contacts on circuit performance," pp. 135-139, Figs. 2, 4-8, Feb. 28, 2003.
Wang, Jun et al., "Standard cell design with regularly placed contacts and gates (SPIE vol. 5379)," Feb. 22, 2004.
Wang, Jun et al., "Standard cell design with resolution-enhancement-technique-driven regularly placed contacts and gates," J. Micro/Nanolith, MEMS MOEMS, 4(1), 013001, Mar. 16, 2005.
Watson, Bruce, "Challenges and Automata Applications in Chip-Design Software," pp. 38-40, Jul. 16, 2007.
Weste, Neil et al., "CMOS VLSI Design: A Circuits and Systems Perspective, 3rd Edition," May 21, 2004.
Wingerden, Johannes van, "Experimental verification of improved printability for litho-driven designs," Mar. 14, 2005.
Wong, Alfred K., "Microlithography: Trends, Challenges, Solutions and Their Impact on Design," Micro IEEE vol. 23, Issue 2, Apr. 29, 2003.
Xu, Gang, "Redundant-Via Enhanced Maze Routing for Yield Improvement," Proceedings of ASP-DAC 2005, Jan. 18, 2005.
Yang, Jie, "Manufacturability Aware Design," pp. 93, 102, Fig. 5.2, Jan. 16, 2008.
Yongshun, Wang et al., "Static Induction Devices with Planar Type Buried Gate," Chinese Journal of Semiconductors, vol. 25, No. 2, Feb. 1, 2004.
Zobrist, George (editor), "Progress in Computer Aided VLSI Design: Implementations (Ch. 5)," Ablex Publishing Corporation, Feb. 1, 1990.
Petley, Graham, "VLSI and ASIC Technology Standard Cell Library Design," from website www.vlsitechnology.org, Jan. 11, 2005.
Liebmann, Lars, et al., "Layout Optimization at the Pinnacle of Optical Lithography," Design and Process Integration for Microelectronic Manufacturing II, Proceedings of SPIE vol. 5042, Jul. 8, 2003.

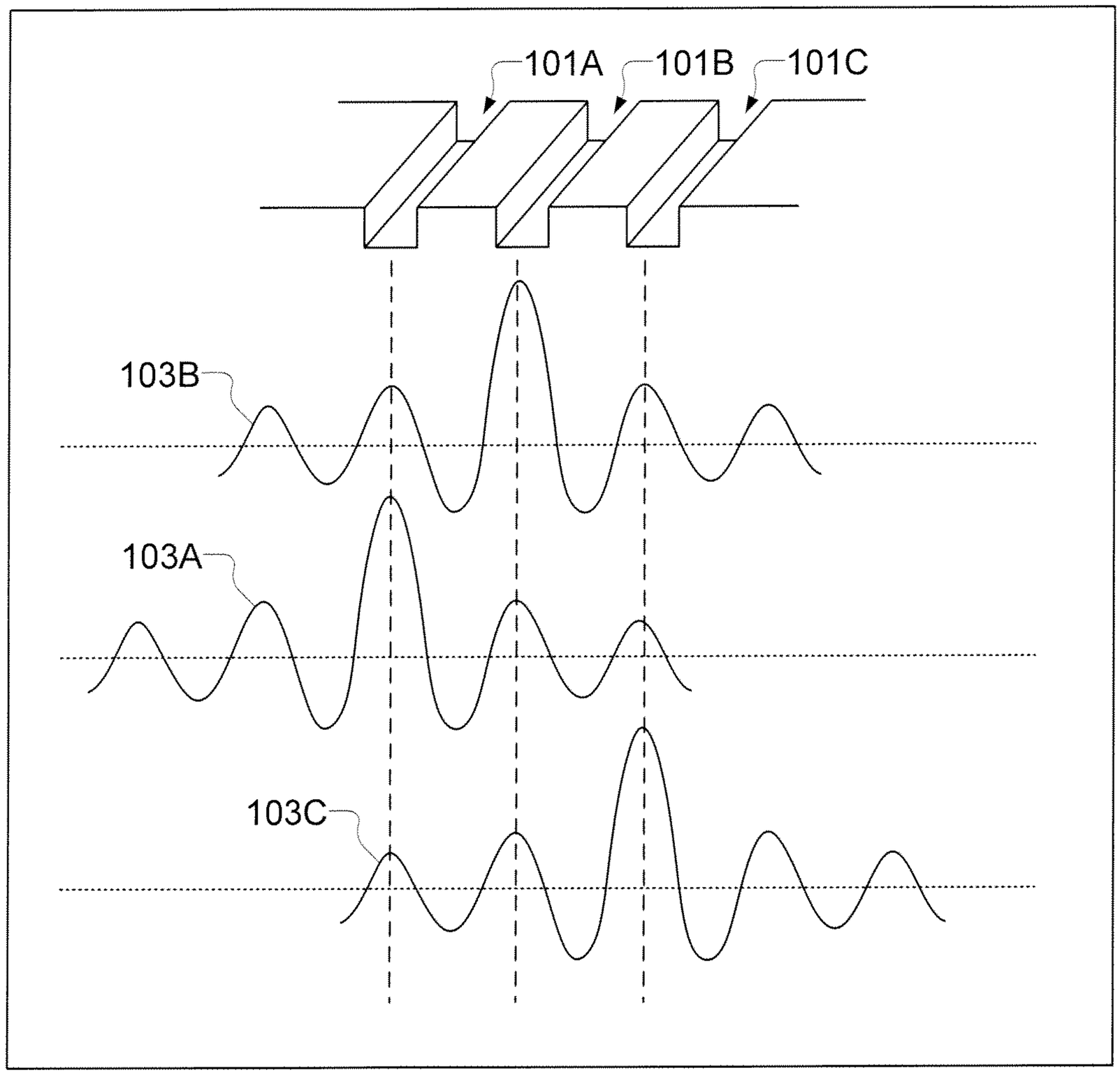

Fig. 1

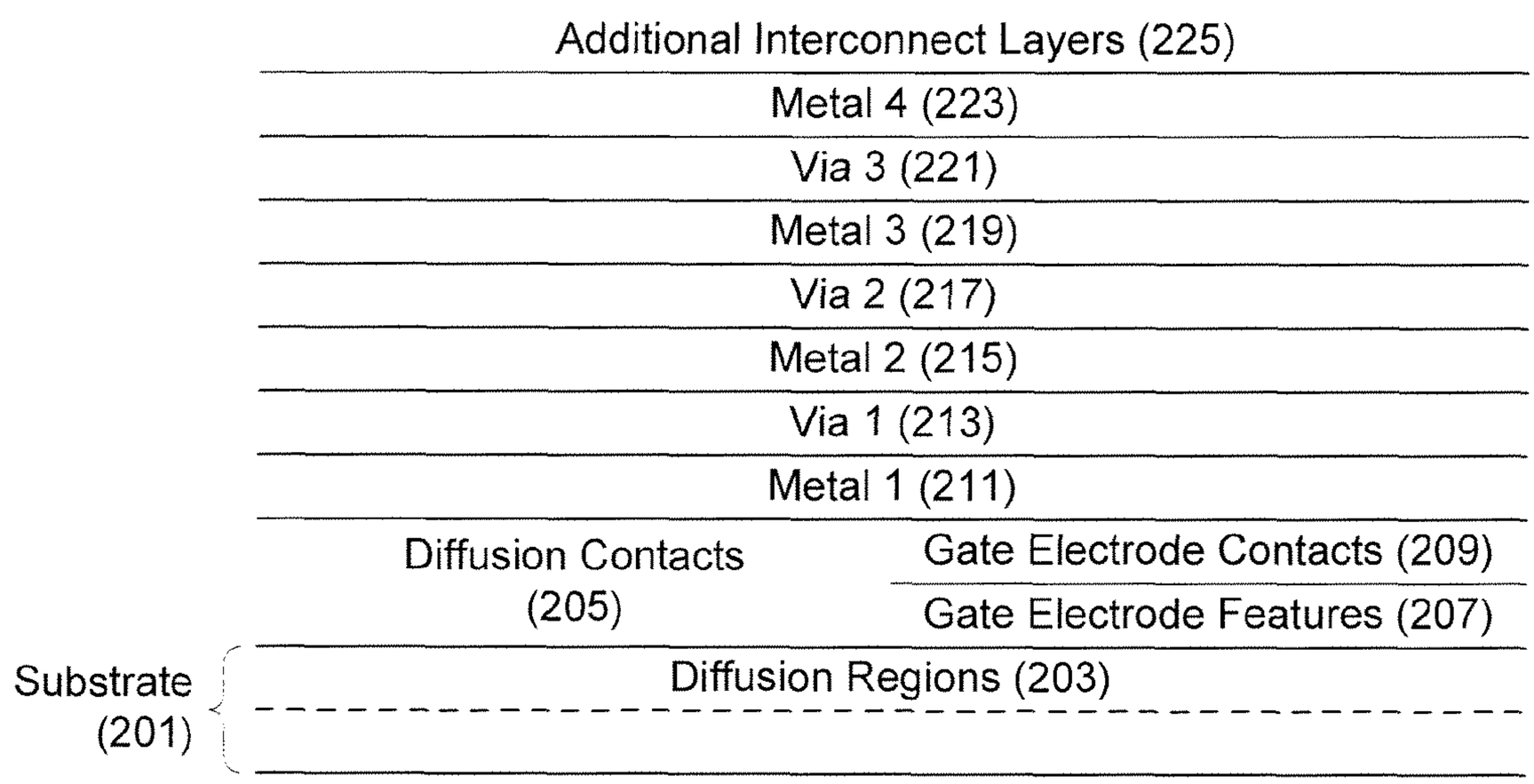
Additional Interconnect Layers (225)
Metal 4 (223)
Via 3 (221)
Metal 3 (219)
Via 2 (217)
Metal 2 (215)
Via 1 (213)
Metal 1 (211)
Diffusion Contacts (205)
Gate Electrode Contacts (209)
Gate Electrode Features (207)
Diffusion Regions (203)
Substrate (201)

Fig. 2

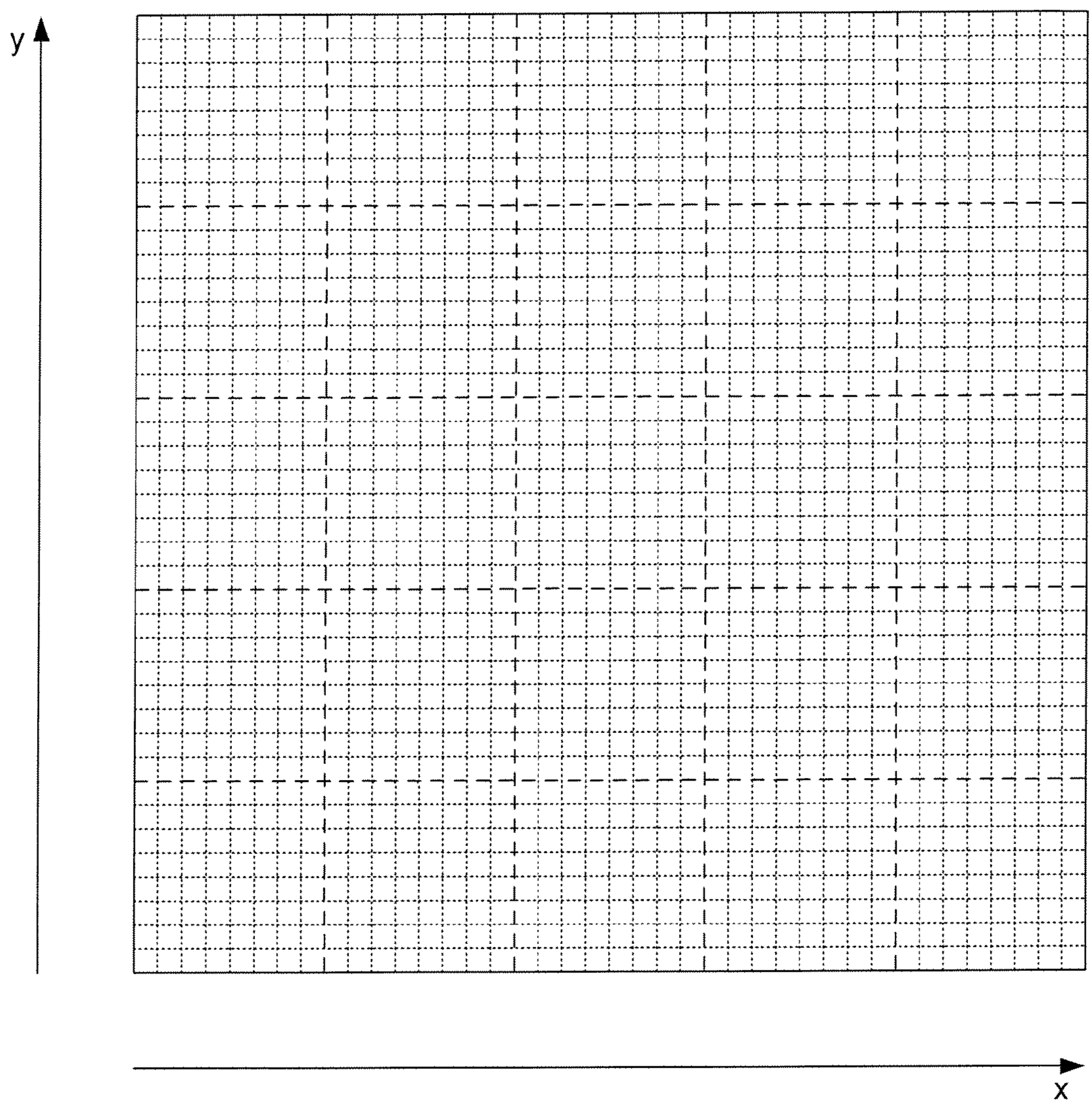

Fig. 3A

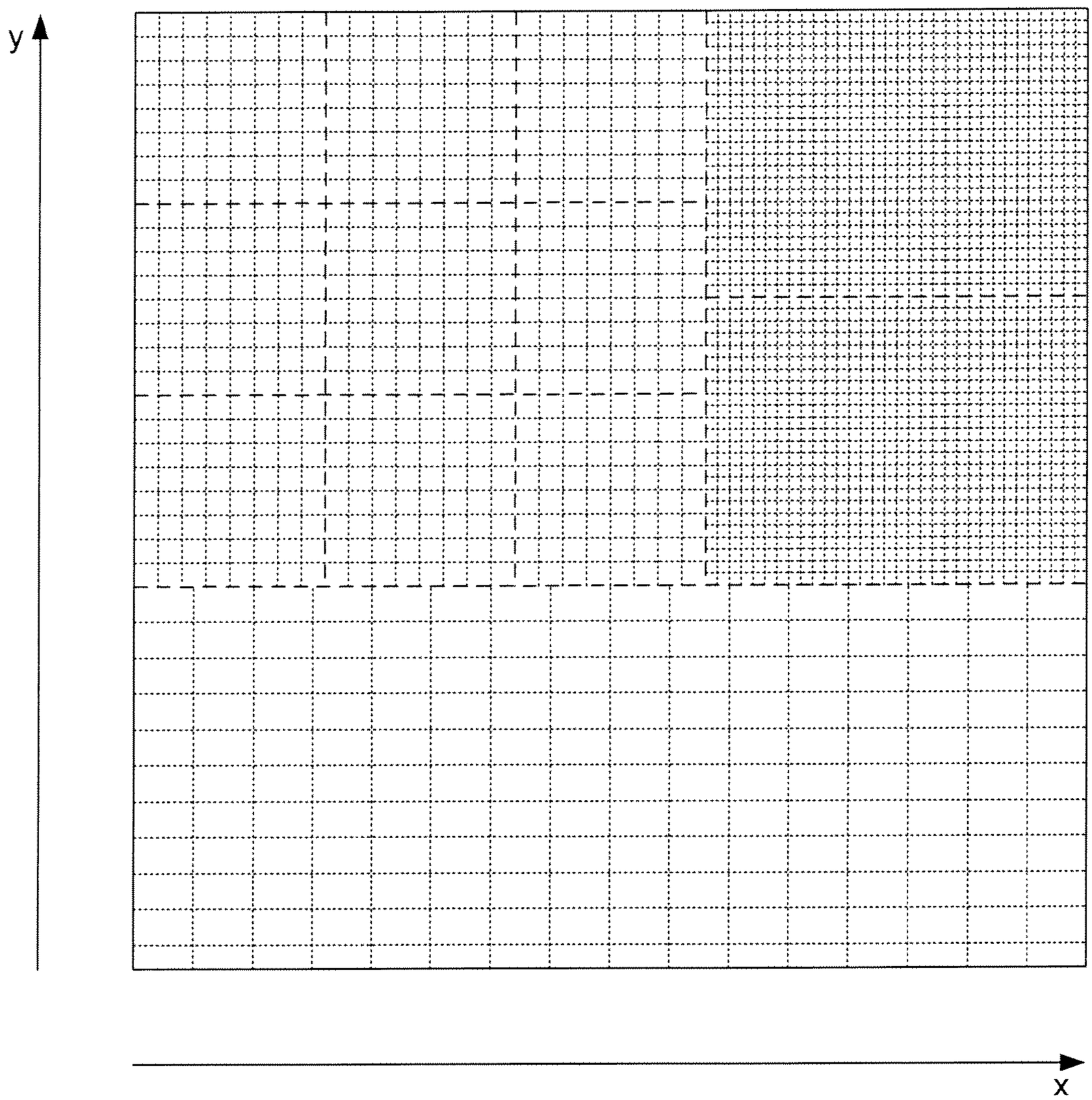

Fig. 3B

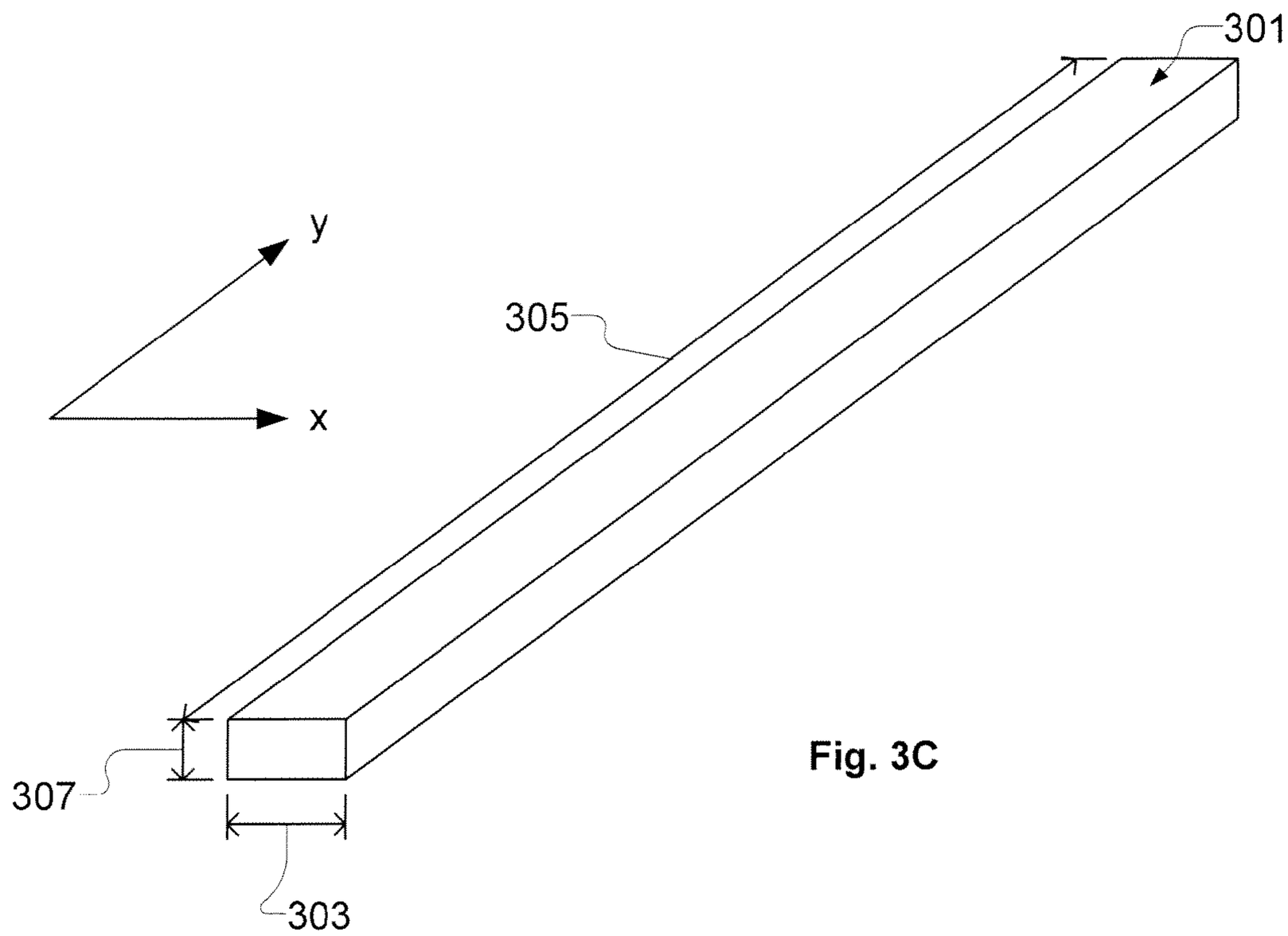

Fig. 3C

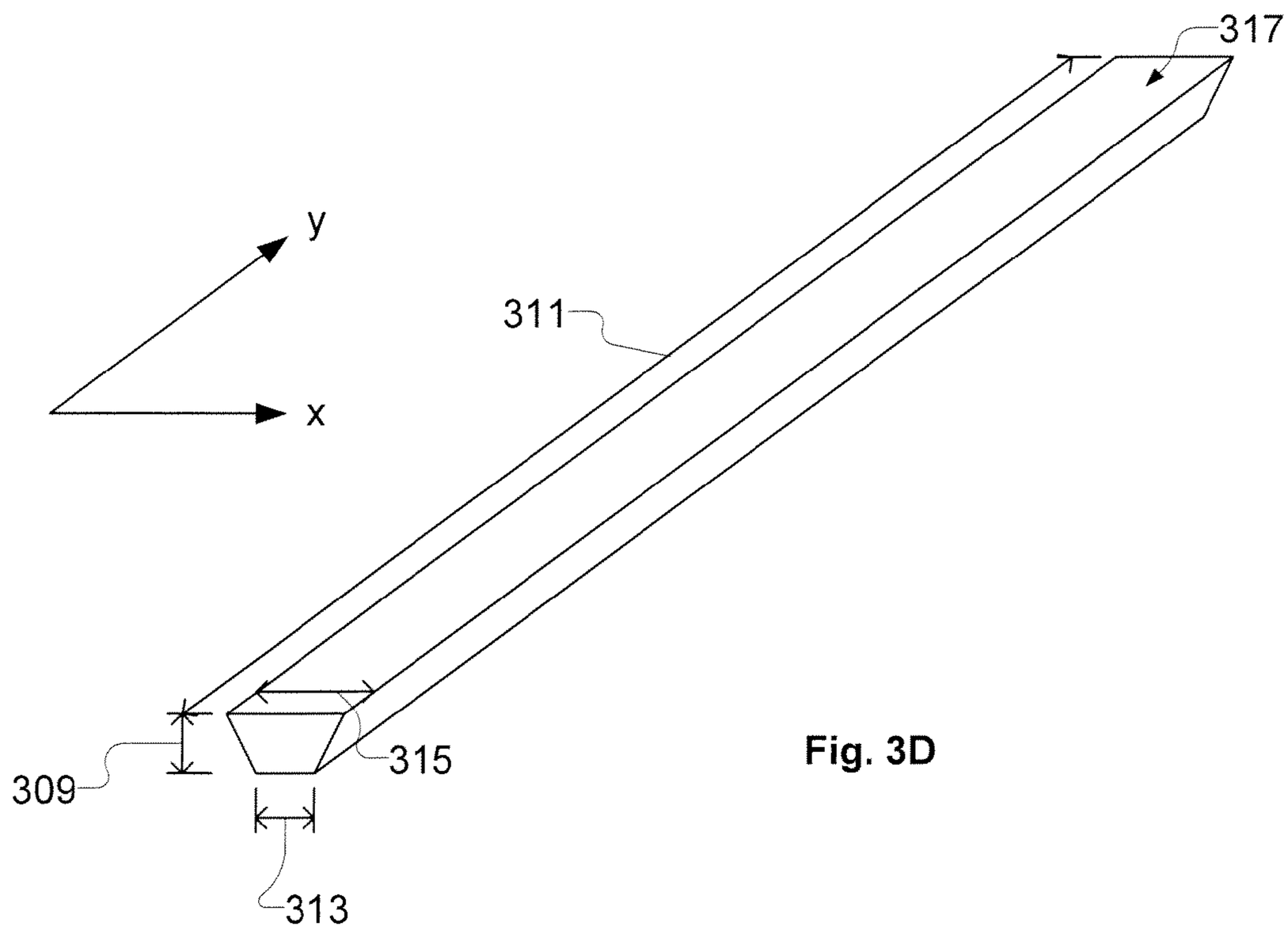

Fig. 3D

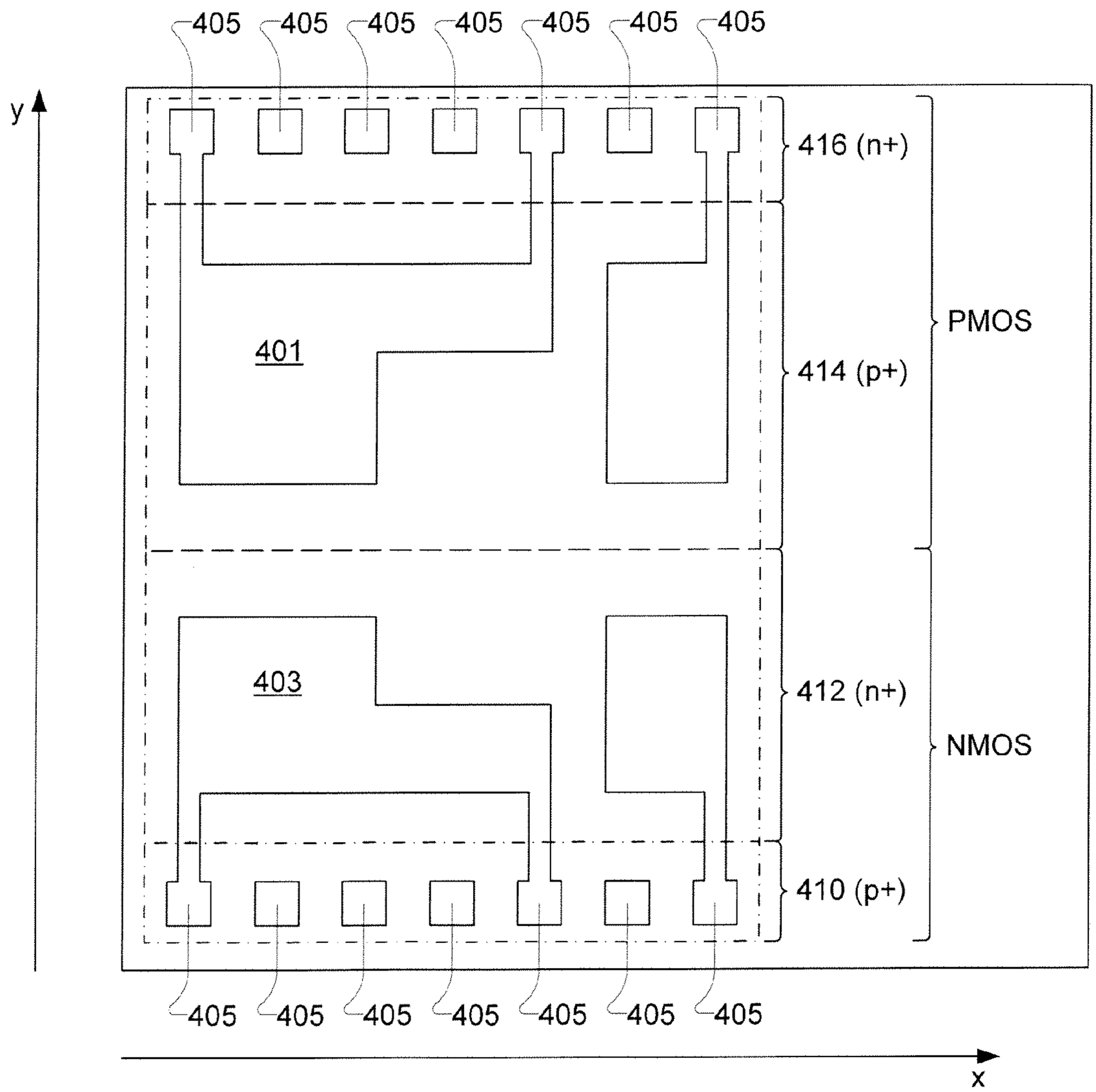
405
405
405
405
405
405
405
y
416 (n+)
401
414 (p+)
PMOS
403
412 (n+)
NMOS
410 (p+)
405
405
405
405
405
405
405
x

Fig. 4

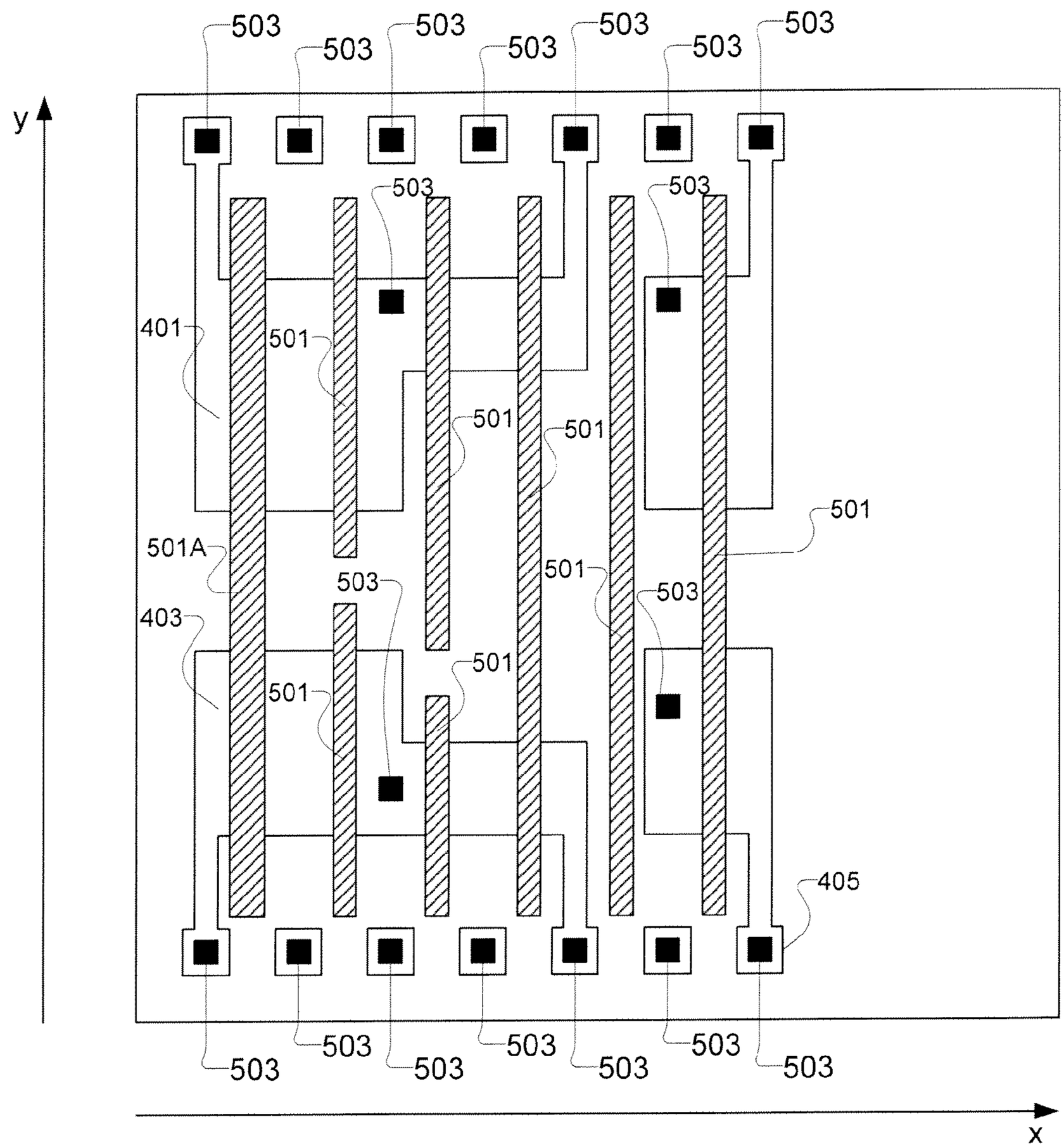
503
503
503
503
503
503
503
y
503
503
401
501
501
501
501
501A
503
503
403
501
501
501
405
503
503
503
503
503
503
x

Fig. 5

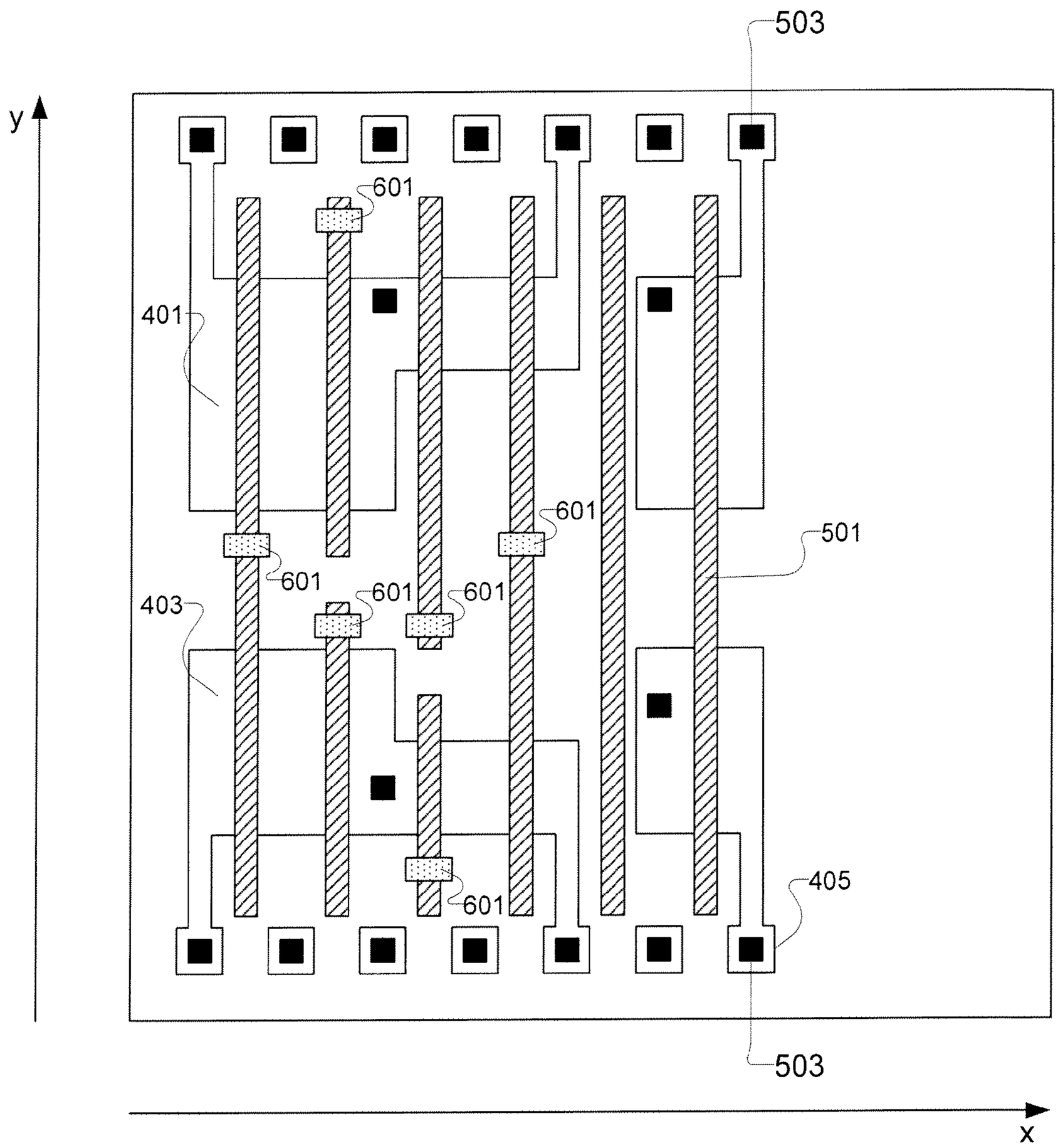

Fig. 6

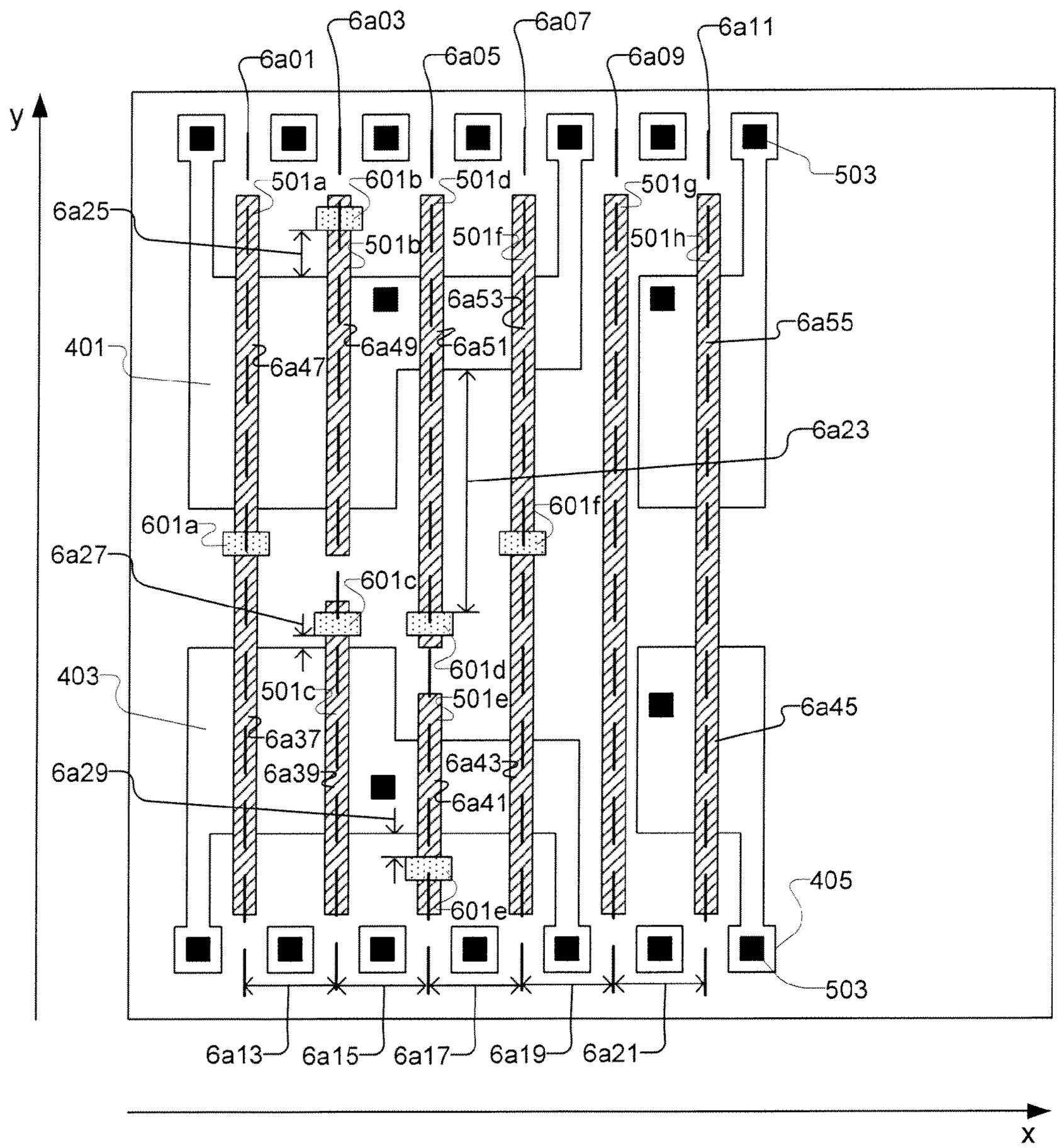
6a03
6a07
6a11
6a01
6a05
6a09
y
503
501a
601b
501d
501g
6a25
501b
501f
501h
6a53
6a55
401
6a49
6a51
6a47
6a23
601f
601a
6a27
601c
601d
403
501c
501e
6a45
6a37
6a43
6a29
6a39
6a41
405
601e
503
6a13
6a15
6a17
6a19
6a21
x

Fig. 6A

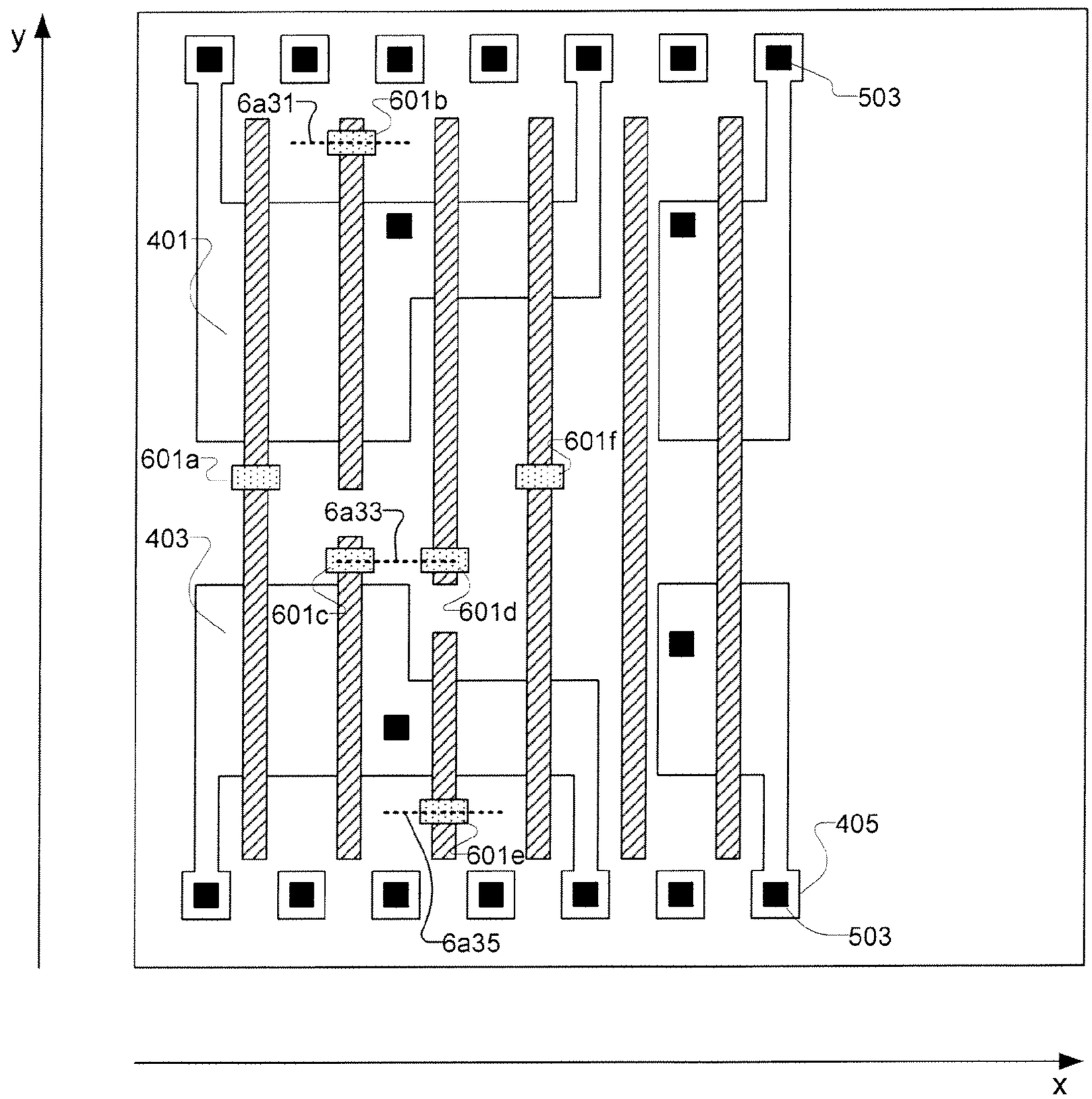
y
x
503
6a31
601b
401
601a
601f
6a33
403
601c
601d
601e
405
6a35
503

Fig. 6B

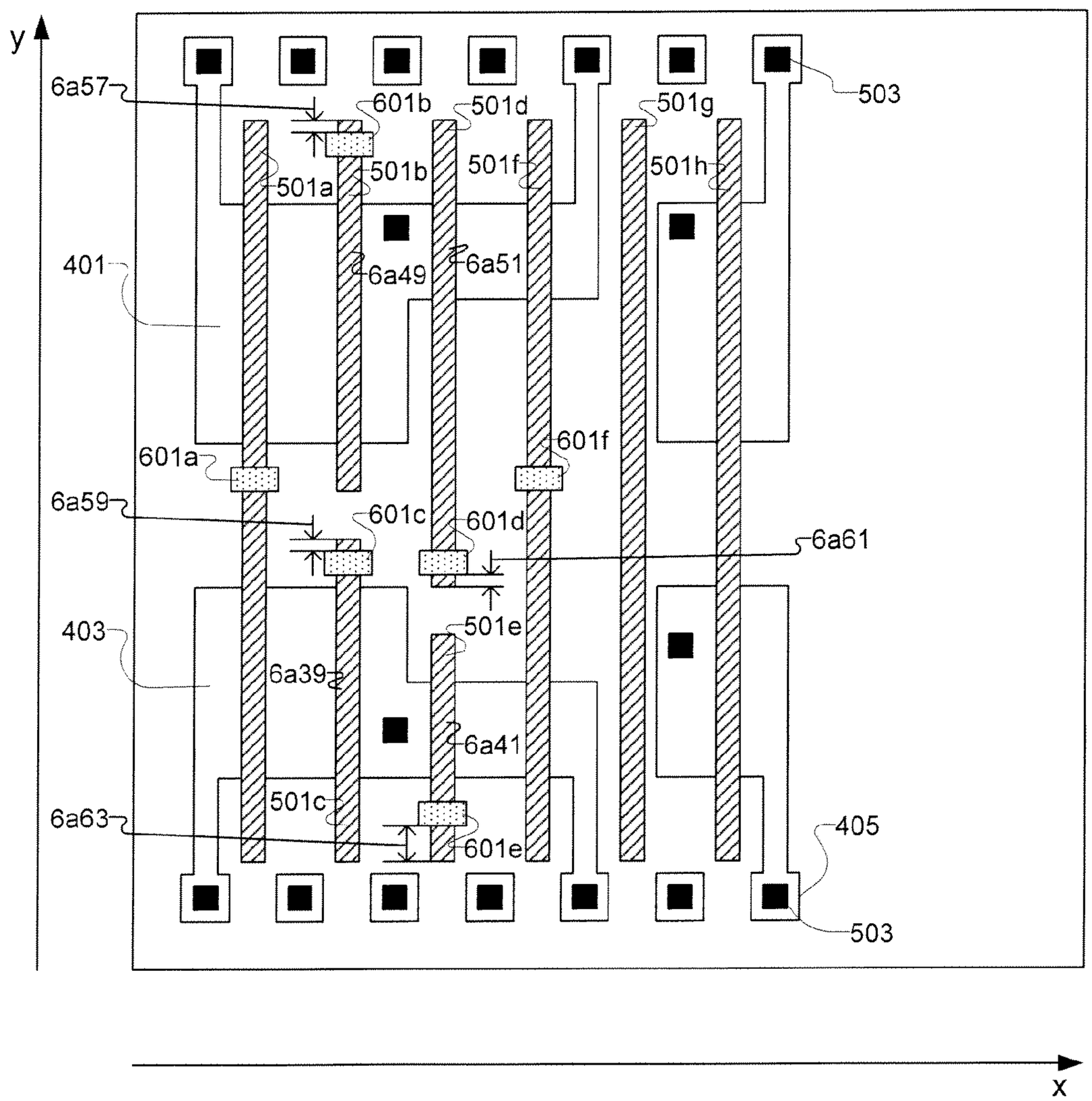
y
6a57
601b
501d
501g
503
501a
501b
501f
501h
401
6a49
6a51
601a
601f
6a59
601c
601d
6a61
403
501e
6a39
6a41
501c
6a63
601e
405
503
x

Fig. 6C

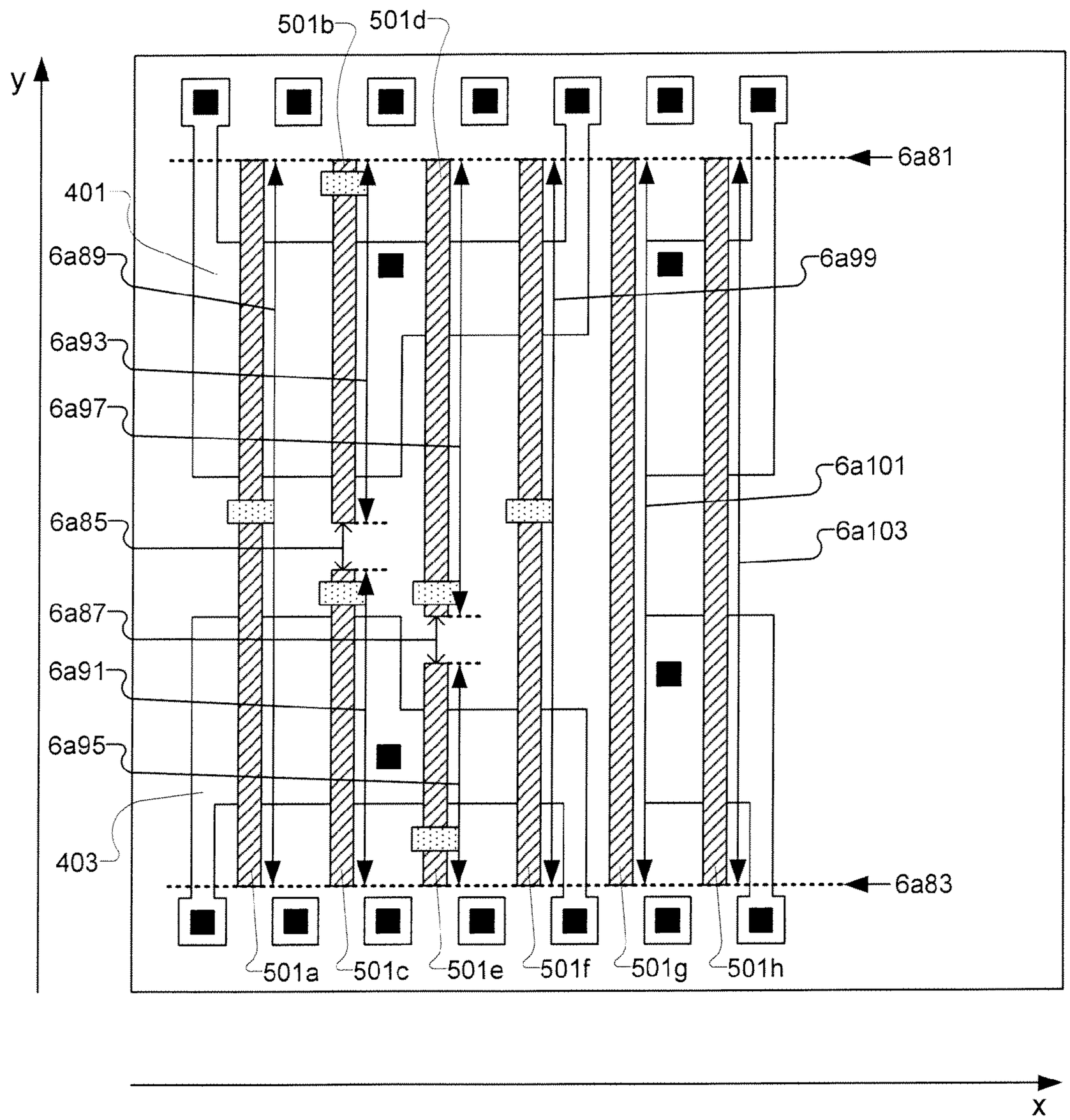
501b
501d
y
6a81
401
6a89
6a99
6a93
6a97
6a101
6a85
6a103
6a87
6a91
6a95
403
6a83
501a
501c
501e
501f
501g
501h
x

Fig. 6D

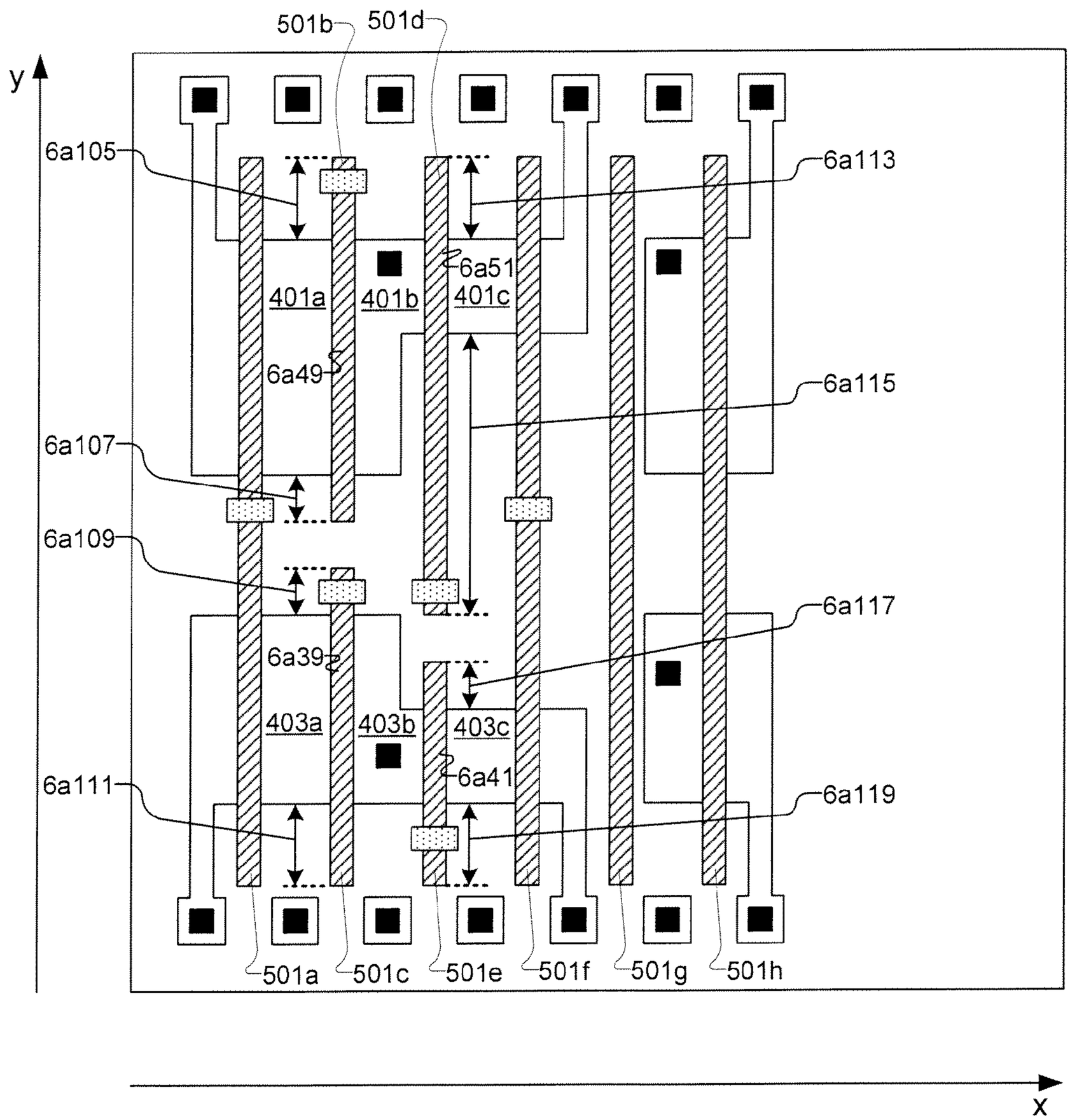
501b
501d
y
6a105
6a113
6a51
401a
401b
401c
6a49
6a115
6a107
6a109
6a117
6a39
403a
403b
403c
6a41
6a111
6a119
501a
501c
501e
501f
501g
501h
x

Fig. 6E

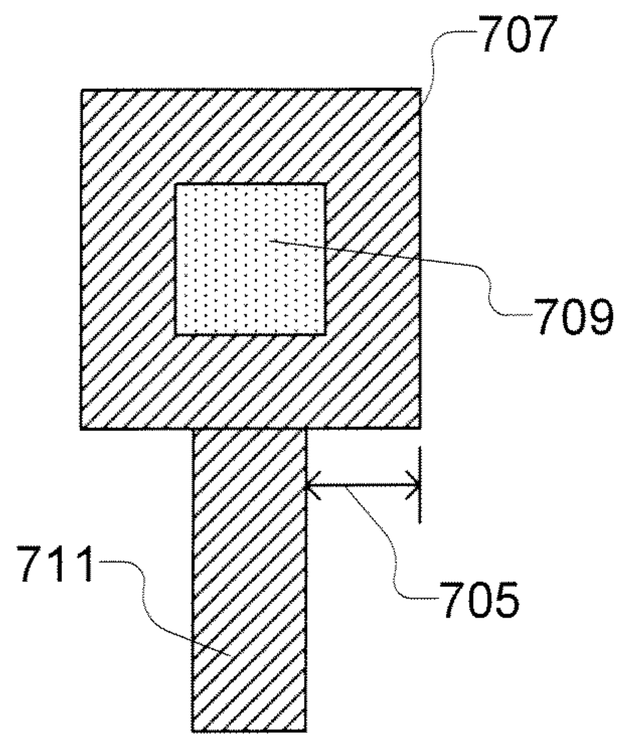

Fig. 7A

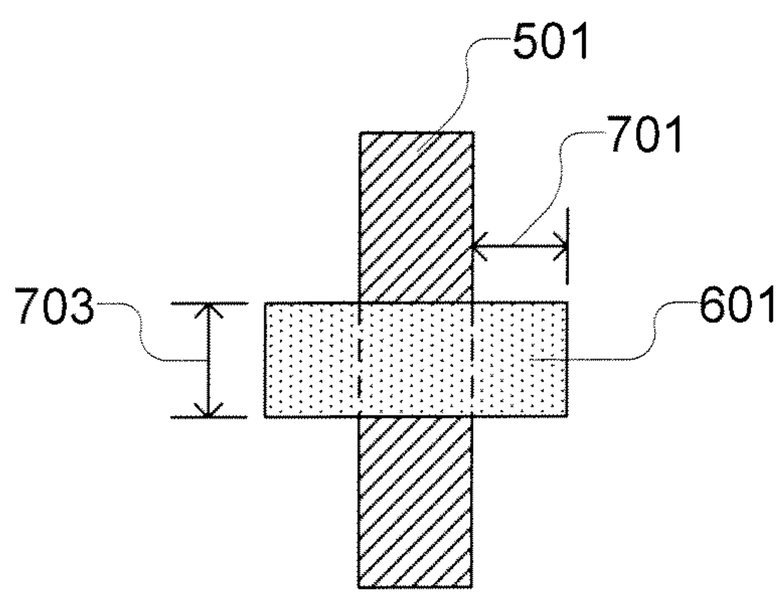

Fig. 7B

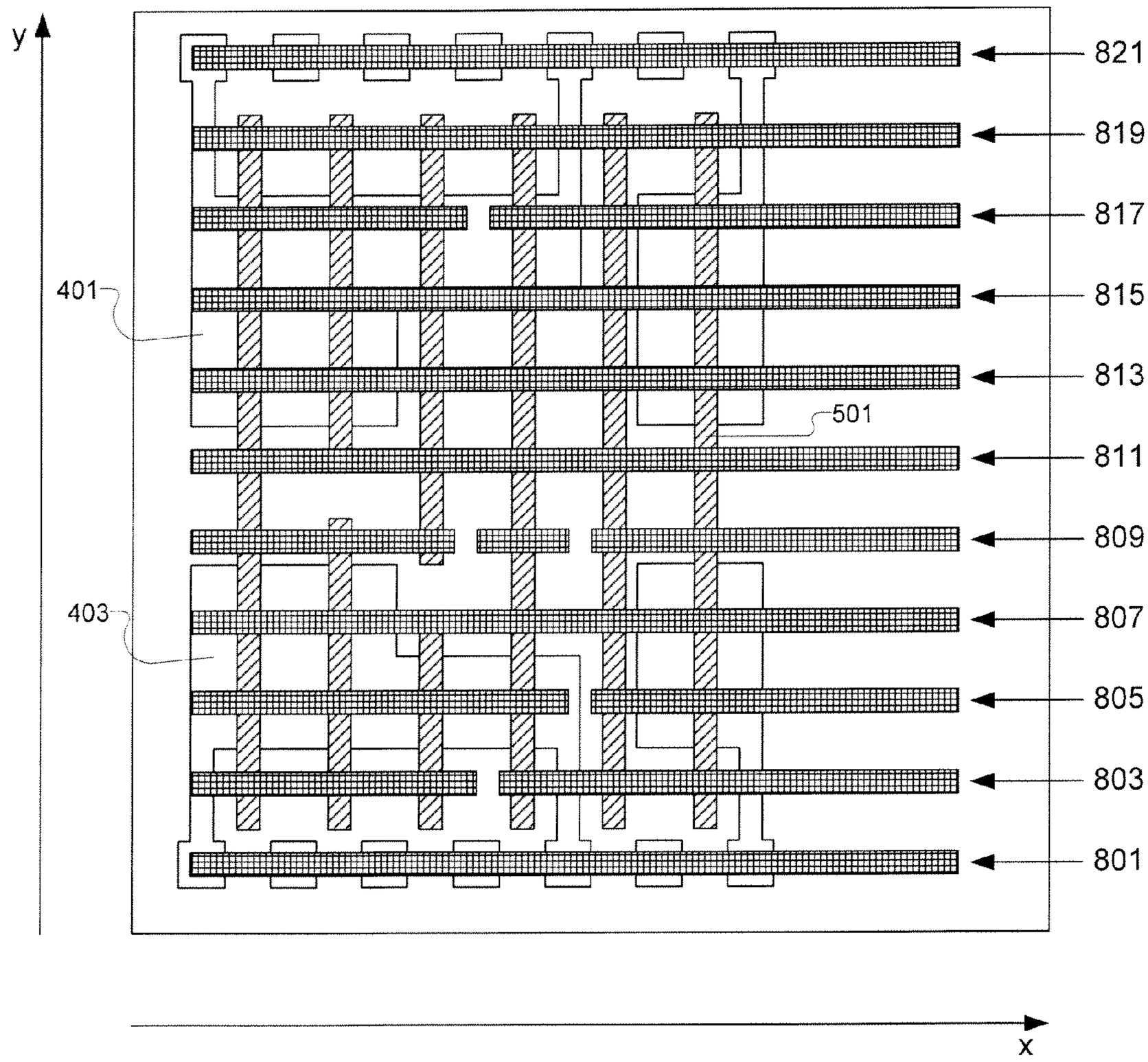

Fig. 8A

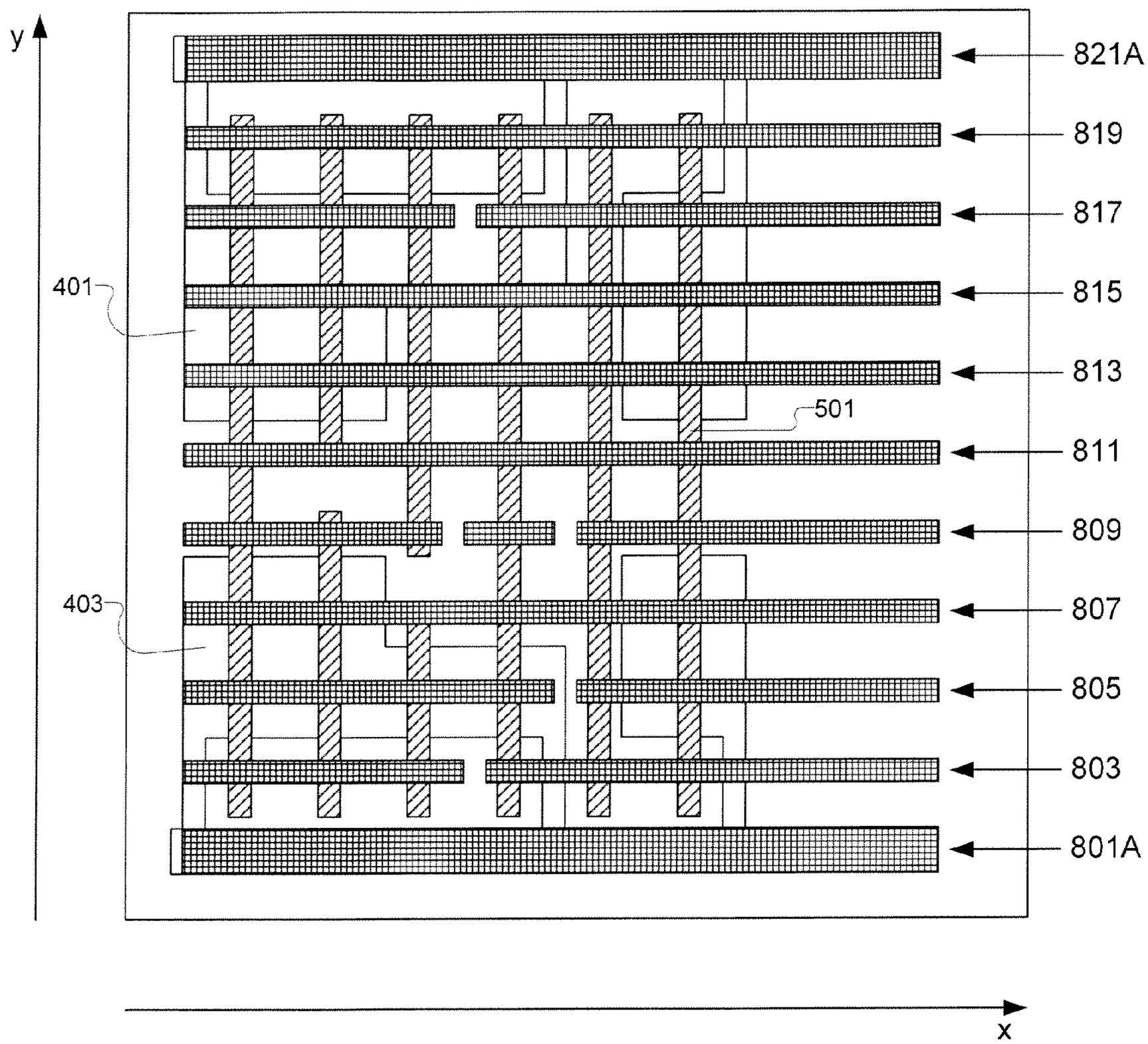

Fig. 8B

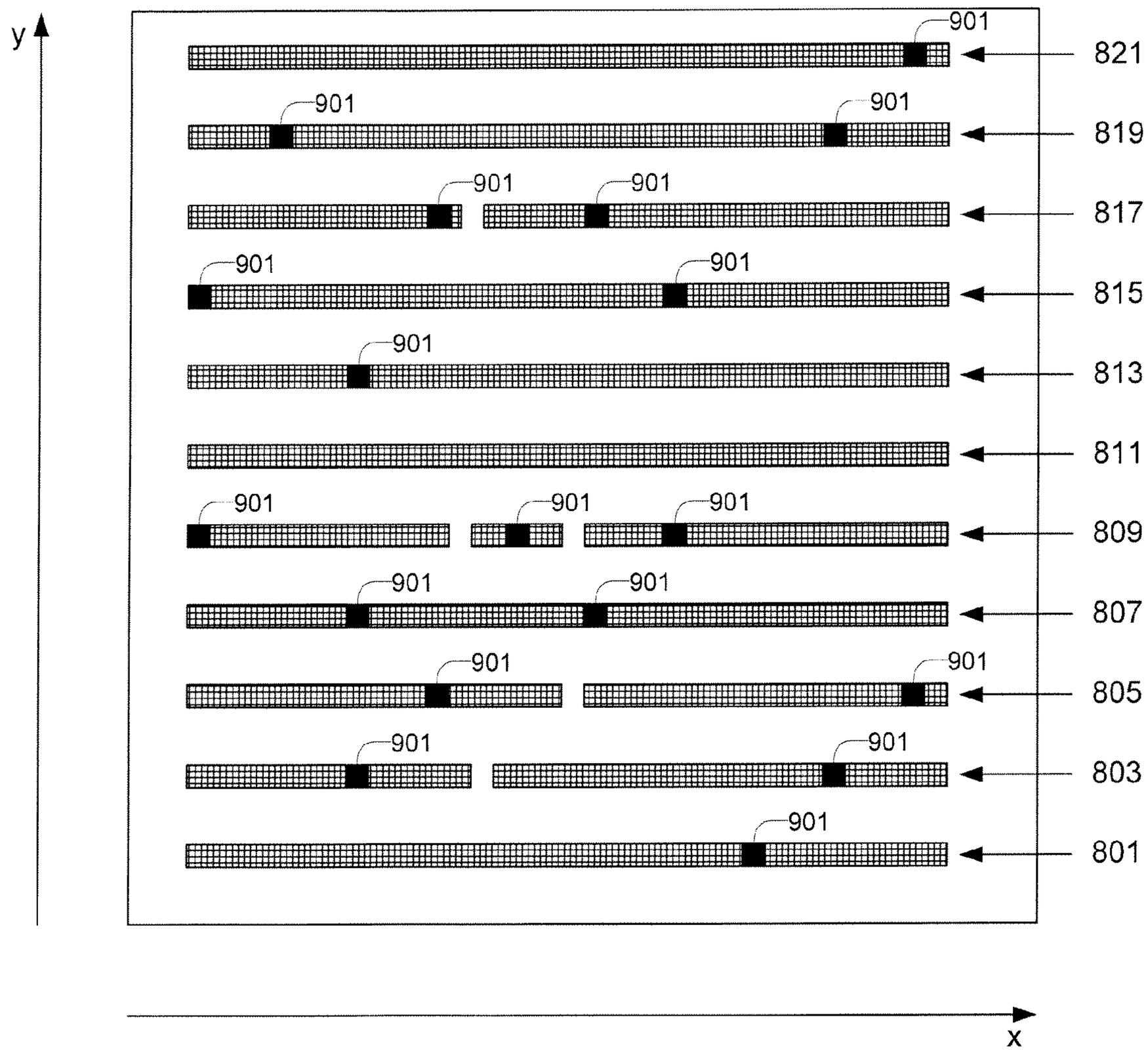

Fig. 9

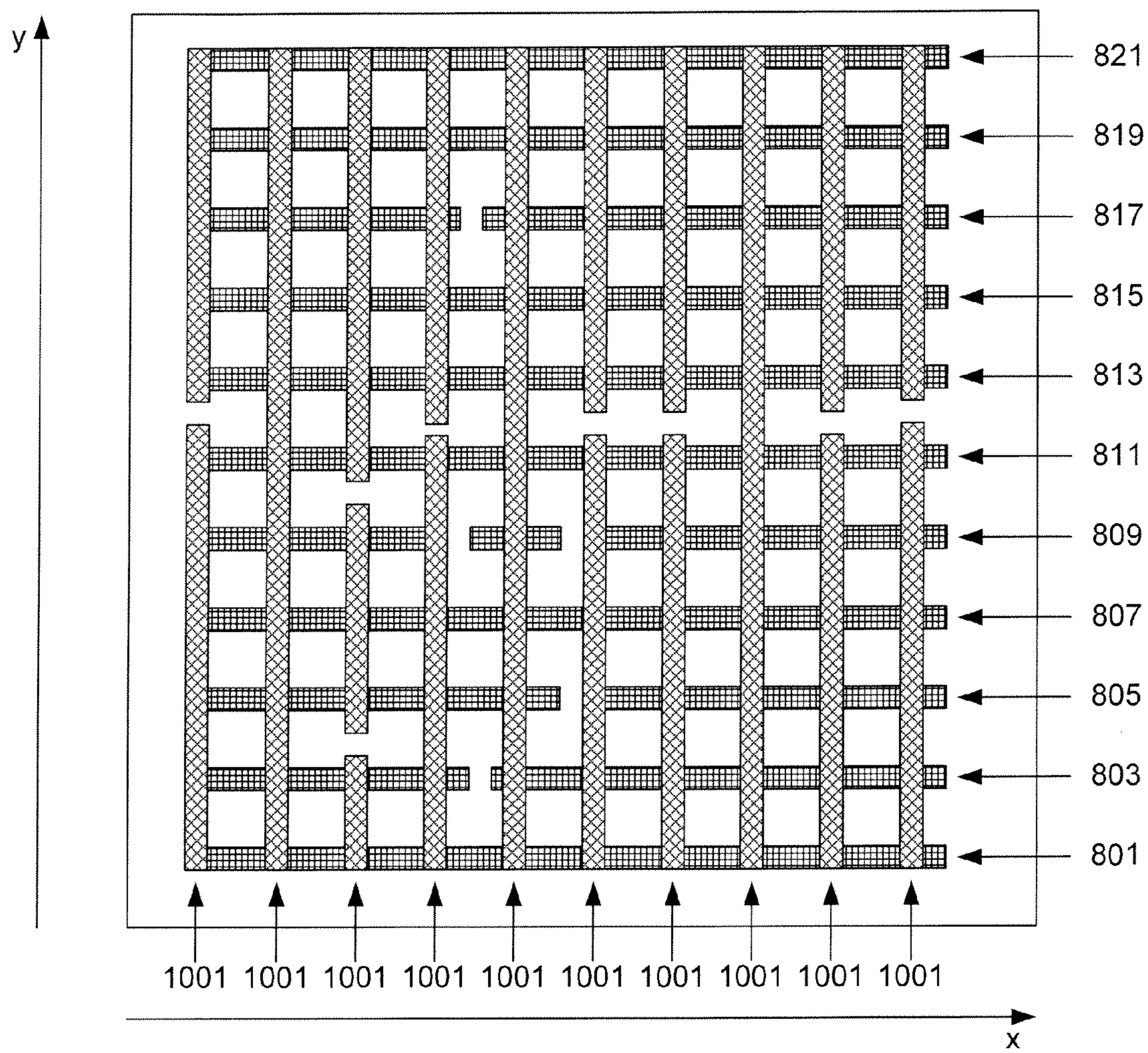
y
821
819
817
815
813
811
809
807
805
803
801
1001 1001 1001 1001 1001 1001 1001 1001 1001 1001
x

Fig. 10

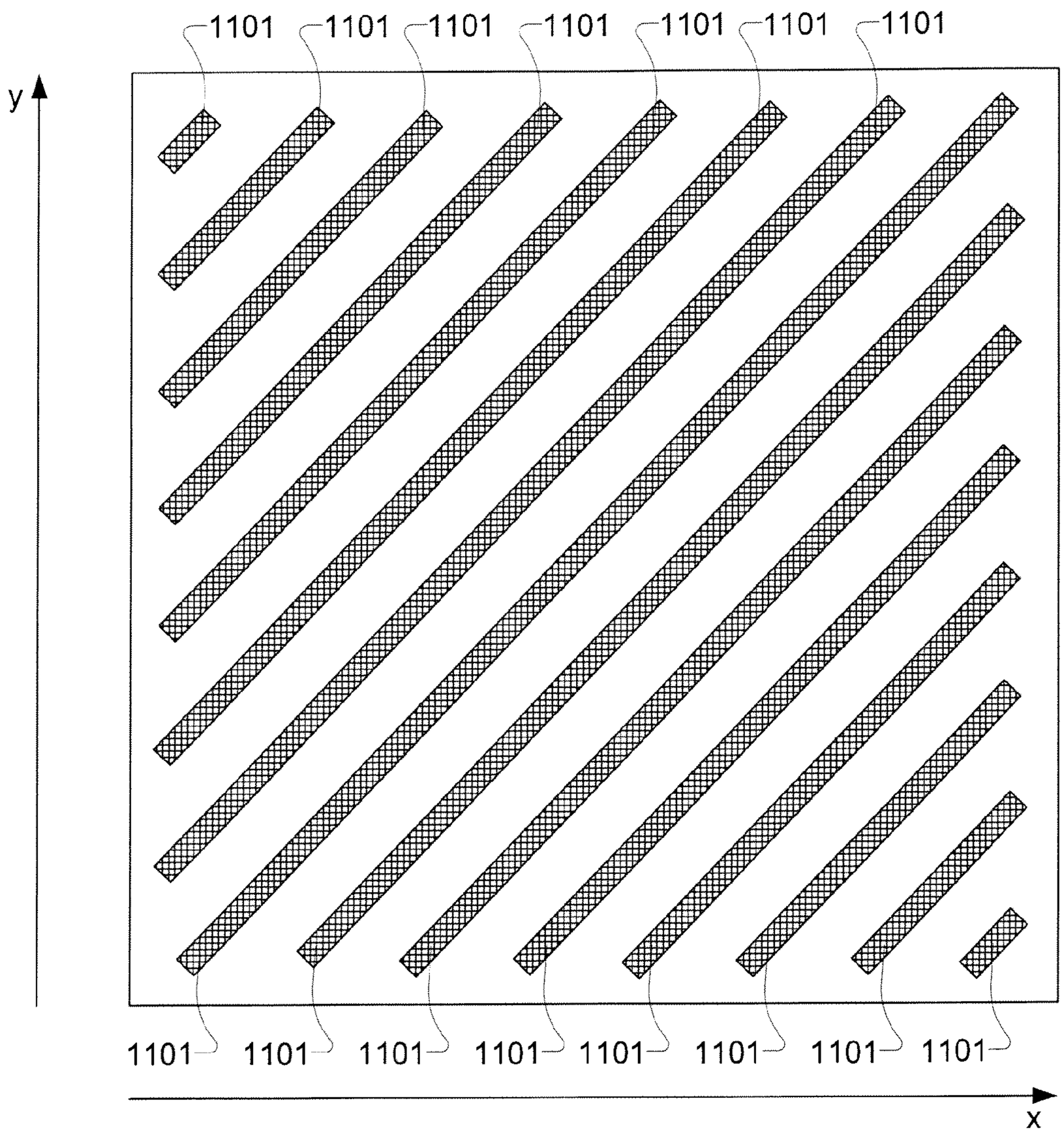
1101
1101
1101
1101
1101
1101
1101
y
1101
1101
1101
1101
1101
1101
1101
1101
x

Fig. 11

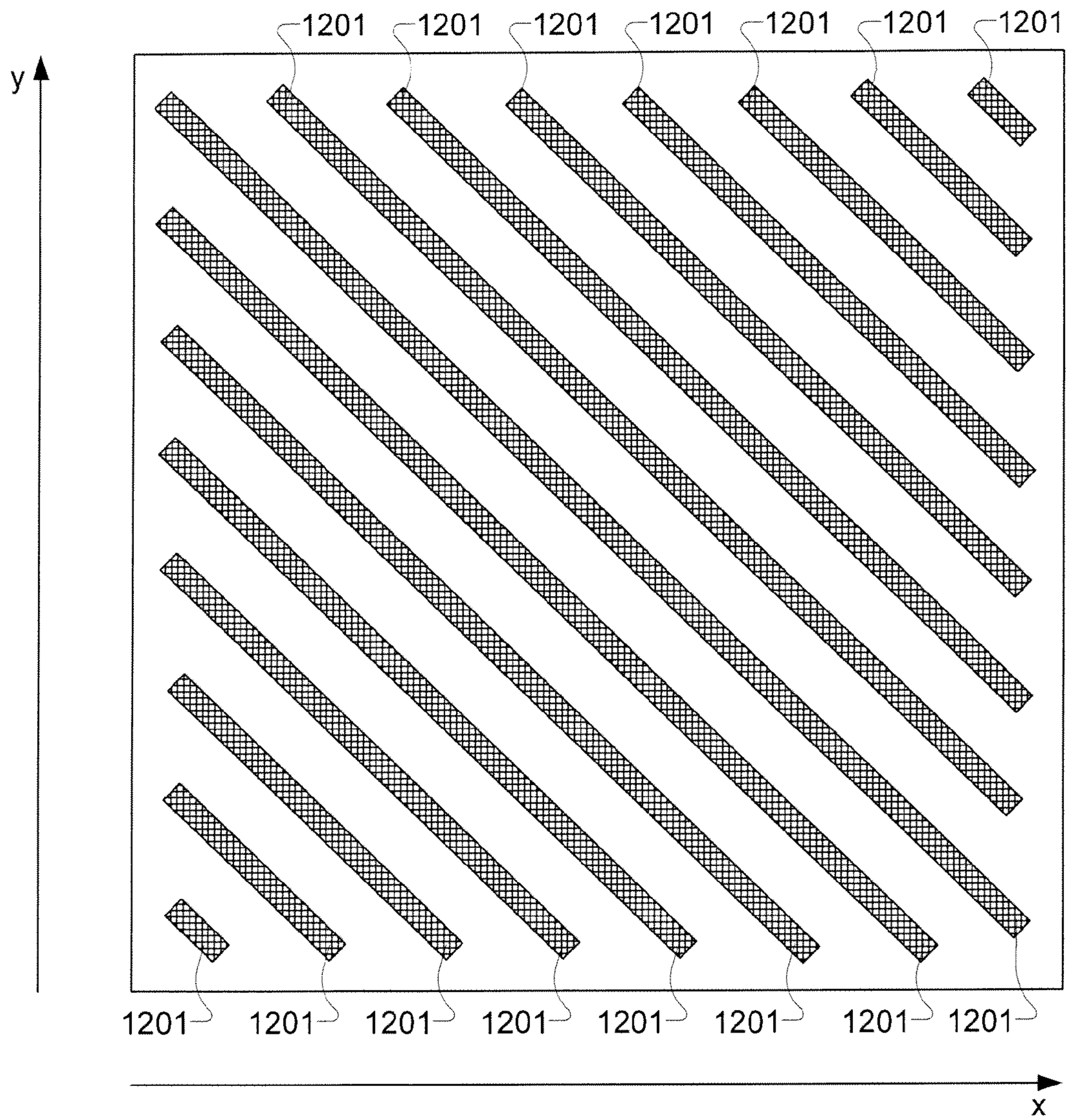
1201
1201
1201
1201
1201
1201
1201
y
1201
1201
1201
1201
1201
1201
1201
1201
x

Fig. 12

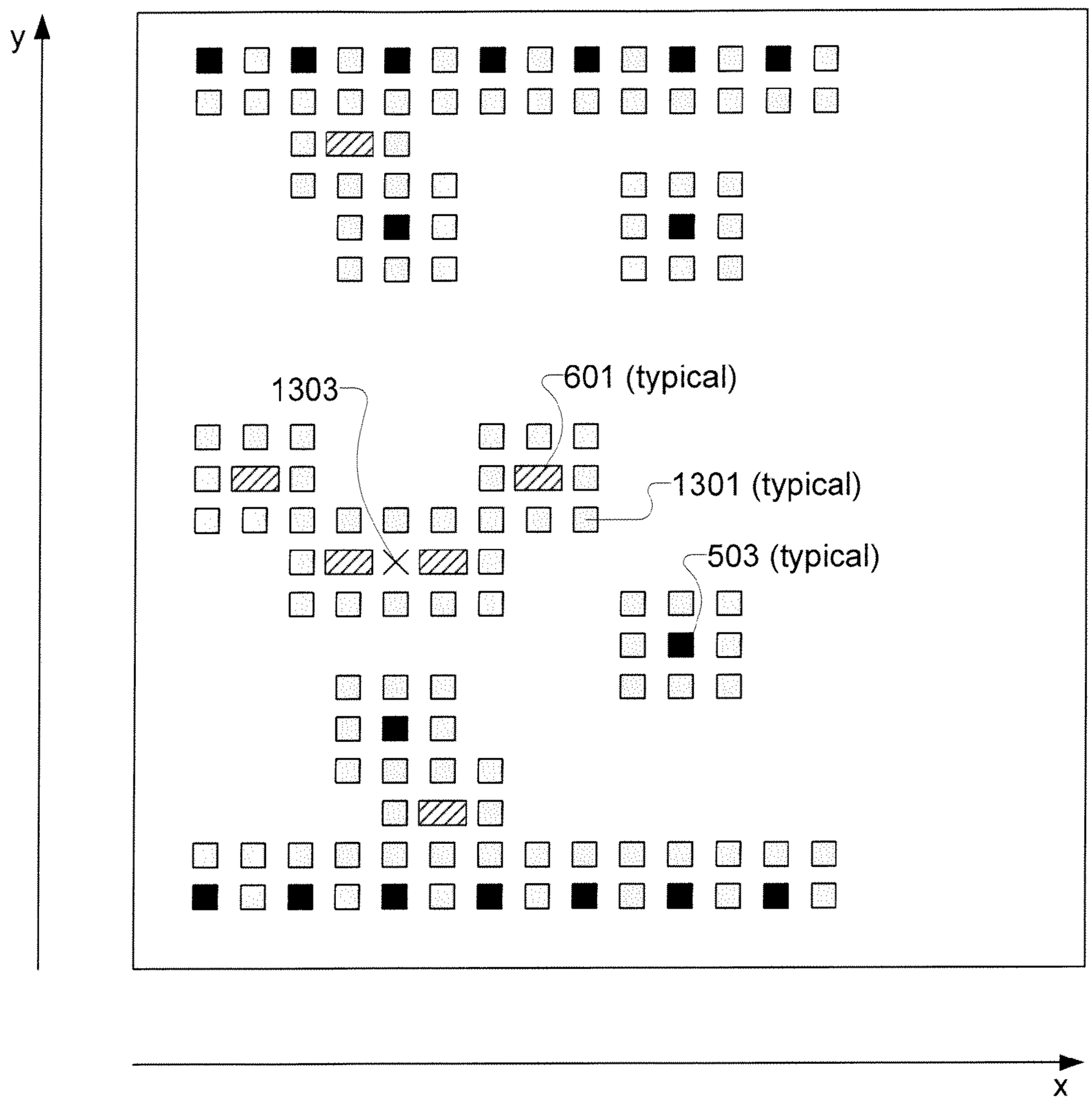

Fig. 13A

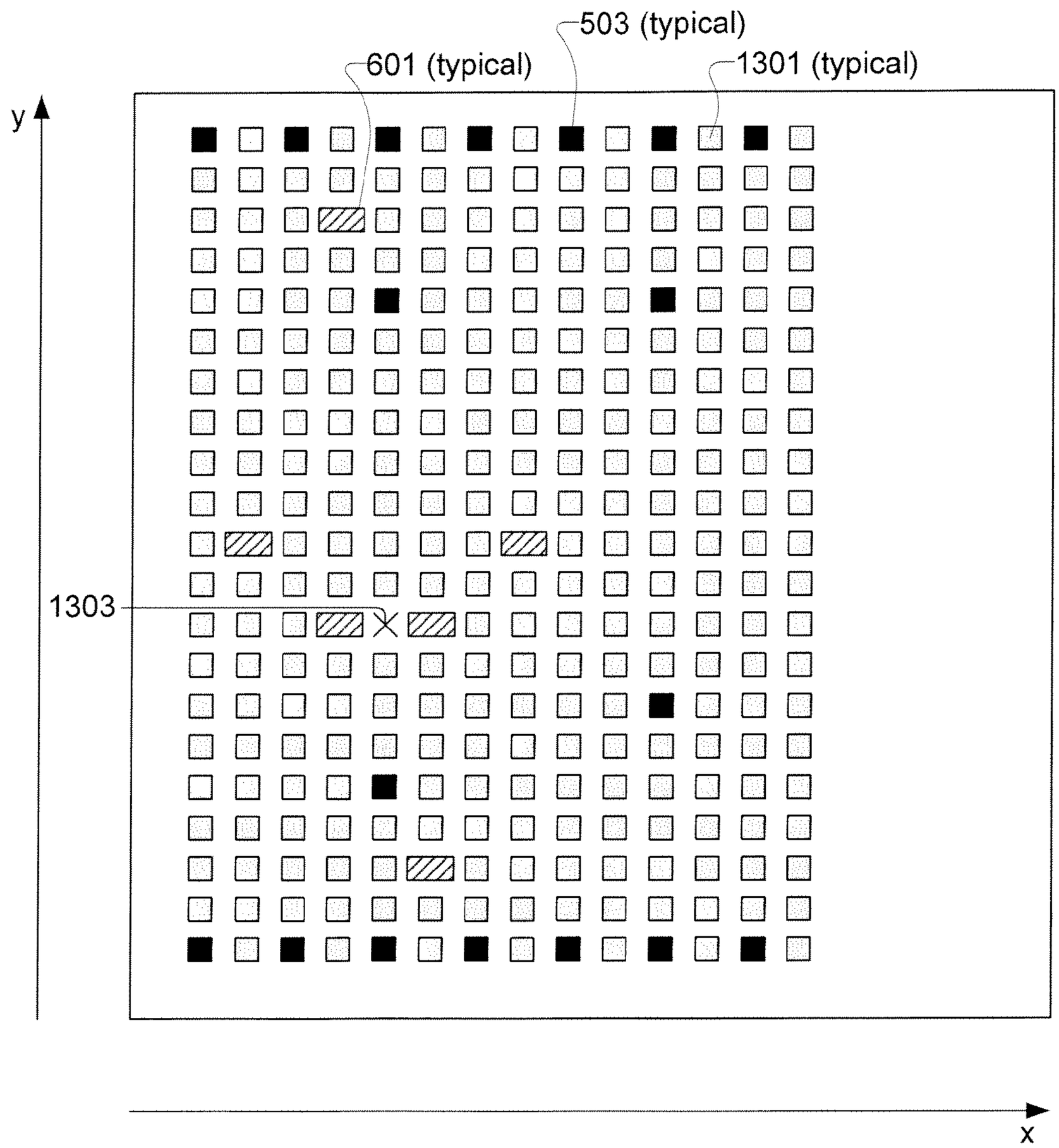

Fig. 13B

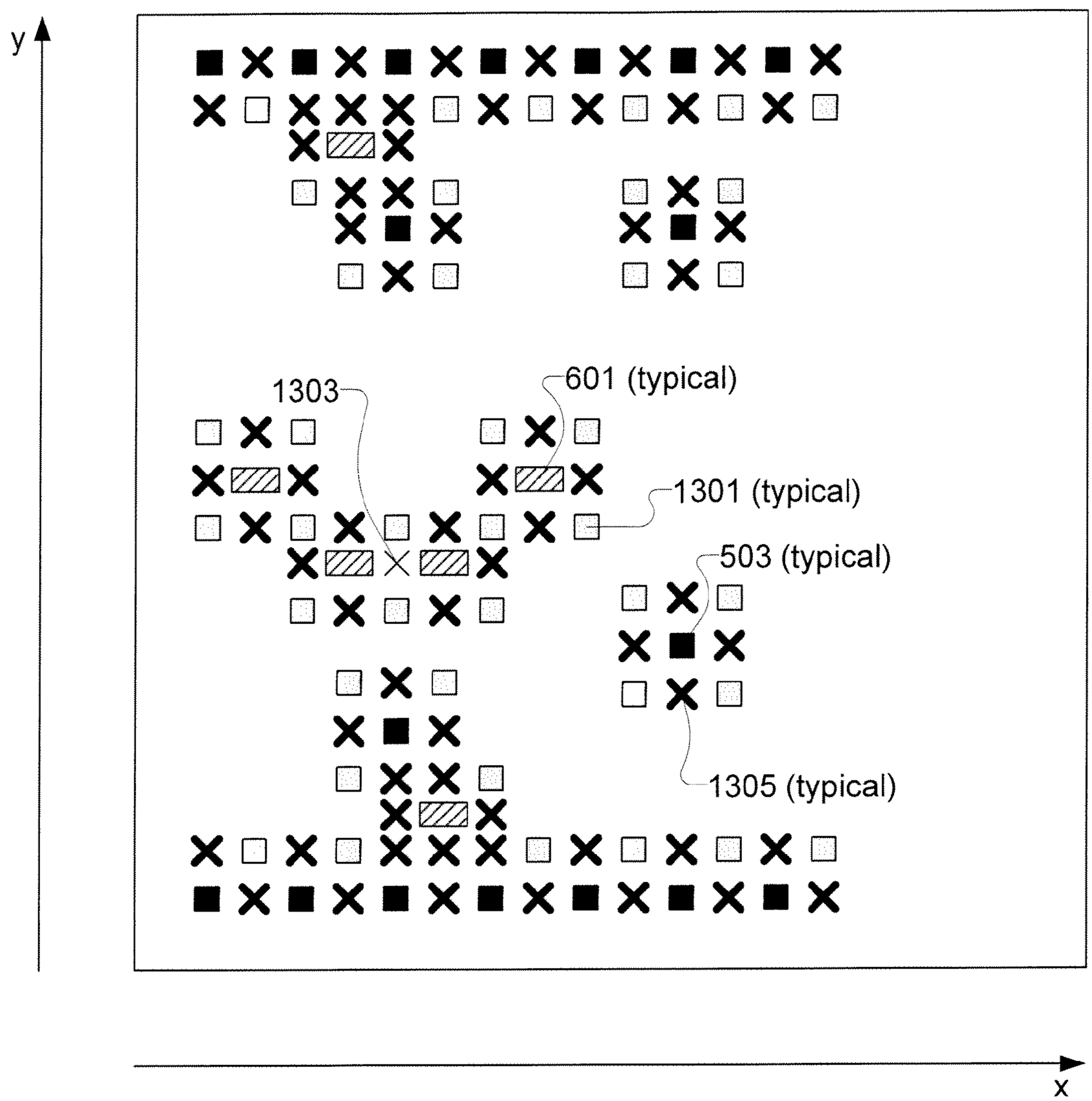

Fig. 13C

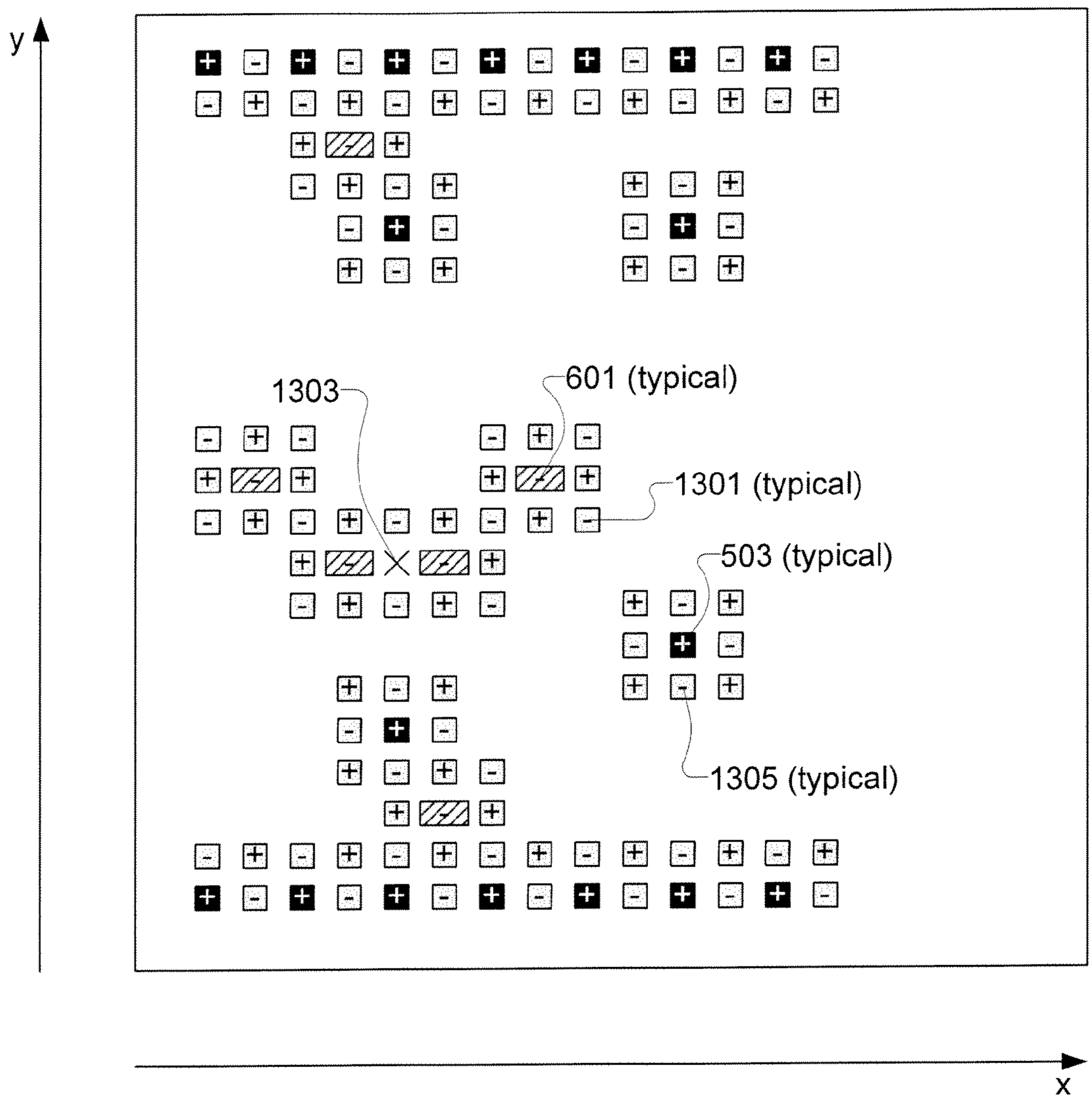

Fig. 13D

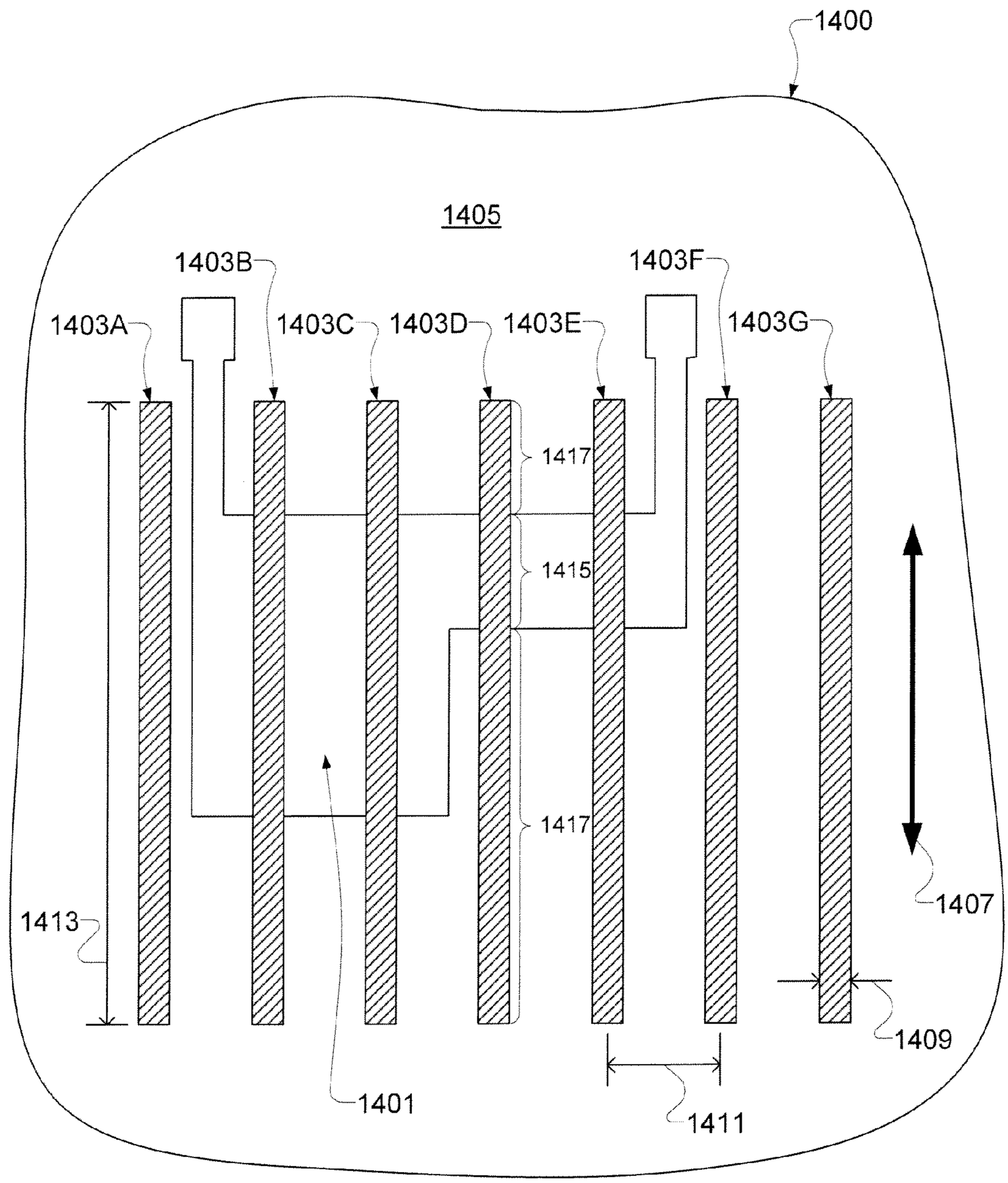
1400
1405
1403A
1403B
1403C
1403D
1403E
1403F
1403G
1417
1415
1417
1413
1407
1409
1401
1411

Fig. 14

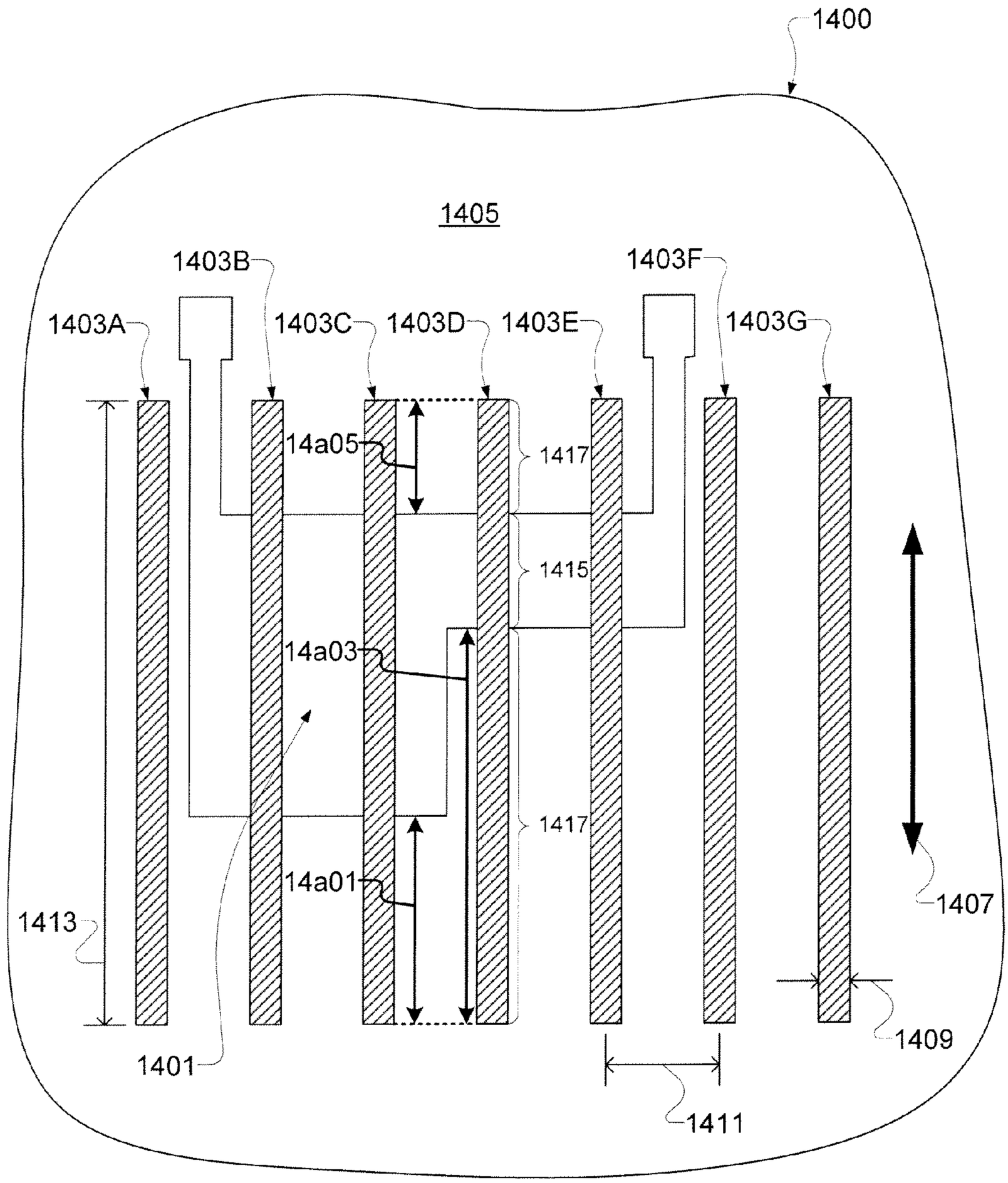
1400
1405
1403A
1403B
1403C
1403D
1403E
1403F
1403G
14a05
1417
1415
14a03
1417
14a01
1413
1401
1407
1409
1411

Fig. 14A

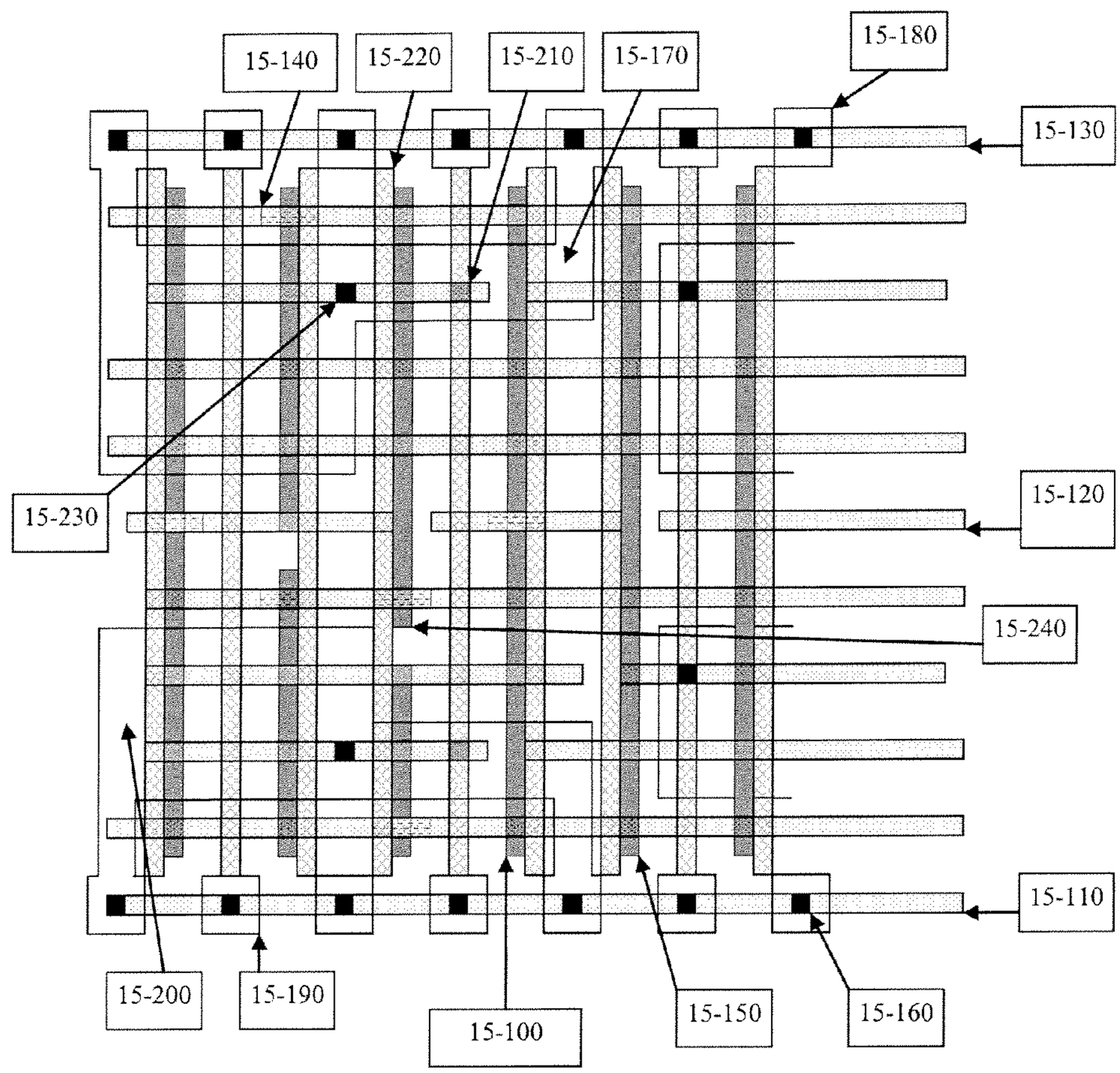

Legend for the Individual Layers of Figure 15

Layer	Pattern
Diffusion (15-170, 15-180, 15-190, 15-200)	
Diffusion Contact (15-160, 15-230)	
Poly Silicon (15-100, 15-150)	
Poly Contact (15-140)	
Metal 1 (15-110, 15-120, 15-130)	
Via (15-210)	
Metal 2 (15-220)	

Fig. 15

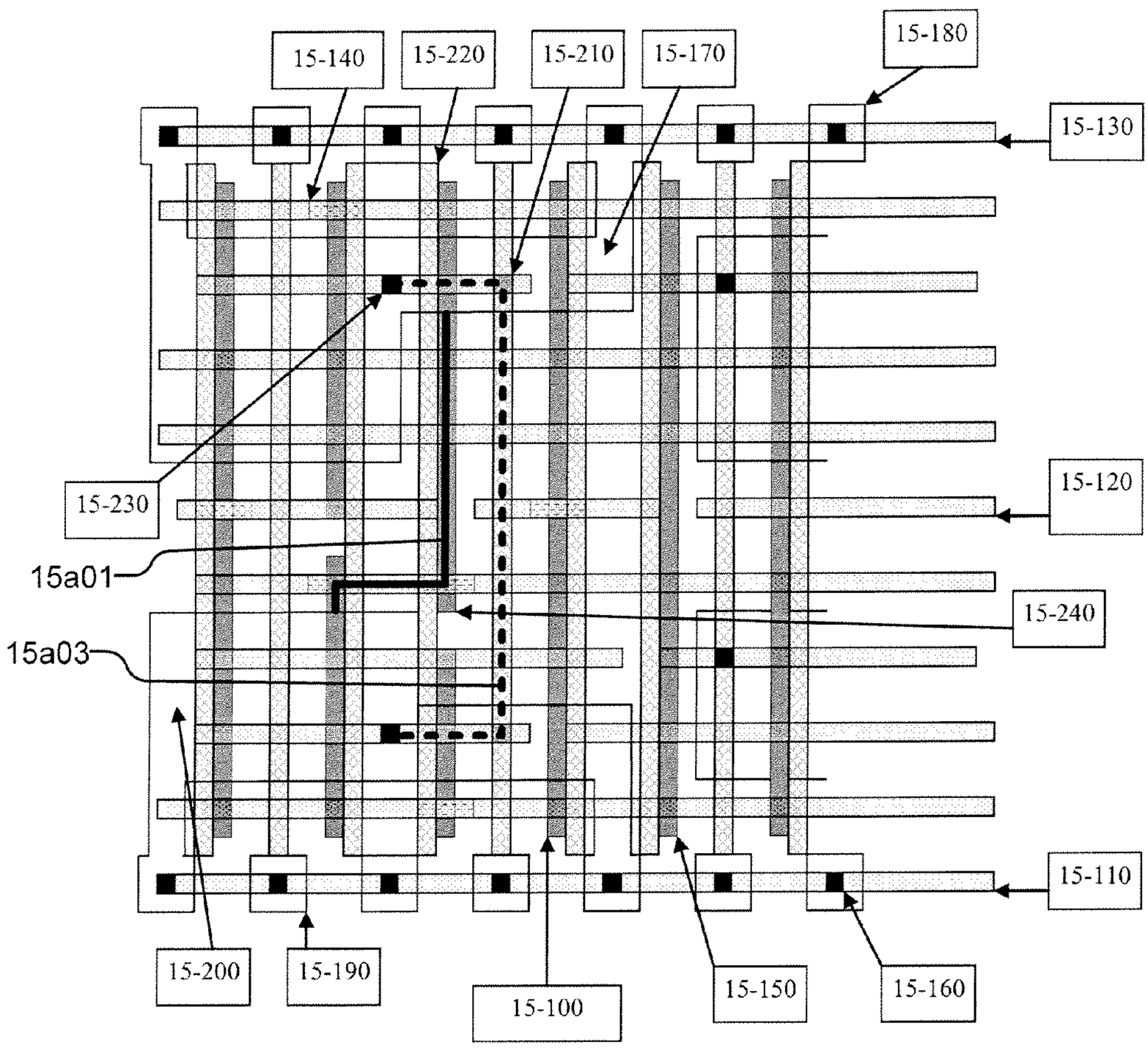

Legend for the Individual Layers of Figure 15

Layer	Pattern
Diffusion (15-170, 15-180, 15-190, 15-200)	
Diffusion Contact (15-160, 15-230)	
Poly Silicon (15-100, 15-150)	
Poly Contact (15-140)	
Metal 1 (15-110, 15-120, 15-130)	
Via (15-210)	
Metal 2 (15-220)	

Fig. 15A

SEMICONDUCTOR CHIP INCLUDING REGION HAVING INTEGRATED CIRCUIT TRANSISTOR GATE ELECTRODES FORMED BY VARIOUS CONDUCTIVE STRUCTURES OF SPECIFIED SHAPE AND POSITION AND METHOD FOR MANUFACTURING THE SAME

CLAIM OF PRIORITY

This application is a continuation application under 35 U.S.C. 120 of prior U.S. application Ser. No. 13/774,919, filed on Feb. 22, 2013, which is a continuation application under 35 U.S.C. 120 of prior U.S. application Ser. No. 12/572,225, filed on Oct. 1, 2009, issued as U.S. Pat. No. 8,436,400, on May 7, 2013, which is a continuation application under 35 U.S.C. 120 of prior U.S. application Ser. No. 12/212,562, filed Sep. 17, 2008, issued as U.S. Pat. No. 7,842,975, on Nov. 30, 2010, which is a continuation application under 35 U.S.C. 120 of prior U.S. application Ser. No. 11/683,402, filed Mar. 7, 2007, issued as U.S. Pat. No. 7,446,352, on Nov. 4, 2008, which claims priority under 35 U.S.C. 119(e) to U.S. Provisional Patent Application No. 60/781,288, filed Mar. 9, 2006. Each of the above-identified applications is incorporated herein by reference in its entirety.

CROSS-REFERENCE TO RELATED APPLICATIONS

This application is related to each application identified in the table below. The disclosure of each application identified in the table below is incorporated herein by reference in its entirety.

Application No.	Filing Date
12/561,207	Sep. 16, 2009
12/561,216	Sep. 16, 2009
12/561,220	Sep. 16, 2009
12/561,224	Sep. 16, 2009
12/561,229	Sep. 16, 2009
12/561,234	Sep. 16, 2009
12/561,238	Sep. 16, 2009
12/561,243	Sep. 16, 2009
12/561,246	Sep. 16, 2009
12/561,247	Sep. 16, 2009
12/563,031	Sep. 18, 2009
12/563,042	Sep. 18, 2009
12/563,051	Sep. 18, 2009
12/563,056	Sep. 18, 2009
12/563,061	Sep. 18, 2009
12/563,063	Sep. 18, 2009
12/563,066	Sep. 18, 2009
12/563,074	Sep. 18, 2009
12/563,076	Sep. 18, 2009
12/563,077	Sep. 18, 2009
12/567,528	Sep. 25, 2009
12/567,542	Sep. 25, 2009
12/567,555	Sep. 25, 2009
12/567,565	Sep. 25, 2009
12/567,574	Sep. 25, 2009
12/567,586	Sep. 25, 2009
12/567,597	Sep. 25, 2009
12/567,602	Sep. 25, 2009
12/567,609	Sep. 25, 2009
12/567,616	Sep. 25, 2009
12/567,623	Sep. 25, 2009
12/567,630	Sep. 25, 2009
12/567,634	Sep. 25, 2009
12/567,641	Sep. 25, 2009
12/567,648	Sep. 25, 2009

-continued

Application No.	Filing Date
12/567,654	Sep. 25, 2009
12/571,343	Sep. 30, 2009
12/571,351	Sep. 30, 2009
12/571,357	Sep. 30, 2009
12/571,998	Oct. 1, 2009
12/572,011	Oct. 1, 2009
12/572,022	Oct. 1, 2009
12/572,046	Oct. 1, 2009
12/572,055	Oct. 1, 2009
12/572,061	Oct. 1, 2009
12/572,068	Oct. 1, 2009
12/572,077	Oct. 1, 2009
12/572,091	Oct. 1, 2009
12/572,194	Oct. 1, 2009
12/572,201	Oct. 1, 2009
12/572,212	Oct. 1, 2009
12/572,218	Oct. 1, 2009
12/572,221	Oct. 1, 2009
12/572,225	Oct. 1, 2009
12/572,228	Oct. 1, 2009
12/572,229	Oct. 1, 2009
12/572,232	Oct. 1, 2009
12/572,237	Oct. 1, 2009
12/572,239	Oct. 1, 2009
12/572,243	Oct. 1, 2009
13/774,919	Feb. 22, 2013
13/774,940	Feb. 22, 2013
13/774,954	Feb. 22, 2013
13/774,970	Feb. 22, 2013
13/827,615	Mar. 14, 2013
13/827,755	Mar. 14, 2013
13/834,302	Mar. 15, 2013
13/837,123	Mar. 15, 2013
14/304,778	Jun. 13, 2014
12/013,342	Jan. 11, 2008
13/073,994	Mar. 28, 2011
14/276,528	May 13, 2014
12/013,356	Jan. 11, 2008
13/047,474	Mar. 14, 2011
12/013,366	Jan. 11, 2008
13/007,582	Jan. 14, 2011
13/007,584	Jan. 14, 2011
12/363,705	Jan. 30, 2009
12/402,465	Mar. 11, 2009
12/753,711	Apr. 2, 2010
12/753,727	Apr. 2, 2010
12/753,733	Apr. 2, 2010
12/753,740	Apr. 2, 2010
12/753,753	Apr. 2, 2010
12/753,758	Apr. 2, 2010
13/741,298	Jan. 14, 2013
12/753,766	Apr. 2, 2010
13/589,028	Aug. 17, 2012
12/753,776	Apr. 2, 2010
12/753,789	Apr. 2, 2010
12/753,793	Apr. 2, 2010
12/753,795	Apr. 2, 2010
12/753,798	Apr. 2, 2010
13/741,305	Jan. 14, 2013
12/753,805	Apr. 2, 2010
12/753,810	Apr. 2, 2010
12/753,817	Apr. 2, 2010
12/754,050	Apr. 5, 2010
12/754,061	Apr. 5, 2010
12/754,078	Apr. 5, 2010
12/754,091	Apr. 5, 2010
12/754,103	Apr. 5, 2010
12/754,114	Apr. 5, 2010
12/754,129	Apr. 5, 2010
12/754,147	Apr. 5, 2010
12/754,168	Apr. 5, 2010
12/754,215	Apr. 5, 2010
12/754,233	Apr. 5, 2010
12/754,351	Apr. 5, 2010
13/591,141	Aug. 21, 2012
12/754,384	Apr. 5, 2010
12/754,563	Apr. 5, 2010

-continued

Application No.	Filing Date
12/754,566	Apr. 5, 2010
13/831,530	Mar. 14, 2013
13/831,605	Mar. 15, 2013
13/831,636	Mar. 15, 2013
13/831,664	Mar. 15, 2013
13/831,717	Mar. 15, 2013
13/831,742	Mar. 15, 2013
13/831,811	Mar. 15, 2013
13/831,832	Mar. 15, 2013
14/242,308	Apr. 1, 2014
14/273,483	May 8, 2014
14/303,587	Jun. 12, 2014
14/476,511	Sep. 3, 2014
14/642,633	Mar. 9, 2015
12/399,948	Mar. 7, 2009
12/411,249	Mar. 25, 2009
13/085,447	Apr. 12, 2011
12/484,130	Jun. 12, 2009
12/479,674	Jun. 5, 2009
12/481,445	Jun. 9, 2009
12/497,052	Jul. 2, 2009
13/540,529	Jul. 2, 2012
12/466,335	May 14, 2009
12/466,341	May 14, 2009
12/512,932	Jul. 30, 2009
12/435,672	May 5, 2009
12/775,429	May 6, 2010
12/904,134	Oct. 13, 2010
13/373,470	Jan. 14, 2011
13/312,673	Dec. 6, 2011
13/473,439	May 16, 2012
13/740,191	Jan. 12, 2013

BACKGROUND

A push for higher performance and smaller die size drives the semiconductor industry to reduce circuit chip area by approximately 50% every two years. The chip area reduction provides an economic benefit for migrating to newer technologies. The 50% chip area reduction is achieved by reducing the feature sizes between 25% and 30%. The reduction in feature size is enabled by improvements in manufacturing equipment and materials. For example, improvement in the lithographic process has enabled smaller feature sizes to be achieved, while improvement in chemical mechanical polishing (CMP) has in-part enabled a higher number of interconnect layers.

In the evolution of lithography, as the minimum feature size approached the wavelength of the light source used to expose the feature shapes, unintended interactions occurred between neighboring features. Today minimum feature sizes are approaching 45 nm (nanometers), while the wavelength of the light source used in the photolithography process remains at 193 nm. The difference between the minimum feature size and the wavelength of light used in the photolithography process is defined as the lithographic gap. As the lithographic gap grows, the resolution capability of the lithographic process decreases.

An interference pattern occurs as each shape on the mask interacts with the light. The interference patterns from neighboring shapes can create constructive or destructive interference. In the case of constructive interference, unwanted shapes may be inadvertently created. In the case of destructive interference, desired shapes may be inadvertently removed. In either case, a particular shape is printed in a different manner than intended, possibly causing a device failure. Correction methodologies, such as optical proximity correction (OPC), attempt to predict the impact from neighboring shapes and modify the mask such that the printed shape is fabricated as desired. The quality of the light interaction prediction is declining as process geometries shrink and as the light interactions become more complex.

In view of the foregoing, a solution is needed for managing lithographic gap issues as technology continues to progress toward smaller semiconductor device features sizes.

SUMMARY

In one embodiment, an integrated circuit is disclosed to include a first gate electrode feature of a first gate electrode track. The first gate electrode feature of the first gate electrode track forms a first n-channel transistor as it crosses an n-diffusion region. The integrated circuit also includes a second gate electrode feature of the first gate electrode track. The second gate electrode feature of the first gate electrode track forms a first p-channel transistor as it crosses a p-diffusion region. The first and second gate electrode features of the first gate electrode track are separated by a first end-to-end spacing. The integrated circuit also includes a first gate electrode feature of a second gate electrode track. The first gate electrode feature of the second gate electrode track forms a second n-channel transistor as it crosses the n-diffusion region. The integrated circuit also includes a second gate electrode feature of the second gate electrode track. The second gate electrode feature of the second gate electrode track forms a second p-channel transistor as it crosses the p-diffusion region. The first and second gate electrode features of the second gate electrode track are separated by a second end-to-end spacing that is offset from the first end-to-end spacing such that a line of sight perpendicular to the first and second gate electrode tracks does not exist through the first and second end-to-end spacings.

In another embodiment, a cell of a semiconductor device is disclosed. The cell includes a substrate portion formed to include a plurality of diffusion regions. The plurality of diffusion regions respectively correspond to active areas of the substrate portion within which one or more processes are applied to modify one or more electrical characteristics of the active areas of the substrate portion. The plurality of diffusion regions are separated from each other by one or more non-active regions of the substrate portion.

Also in this embodiment, the cell includes a gate electrode level of the cell formed above the substrate portion. The gate electrode level includes a number of conductive features defined to extend in only a first parallel direction. Adjacent ones of the number of conductive features that share a common line of extent in the first parallel direction are fabricated from respective originating layout features that are separated from each other by an end-to-end spacing having a size measured in the first parallel direction. The size of each end-to-end spacing between originating layout features corresponding to adjacent ones of the number of conductive features within the gate electrode level of the cell is substantially equal and is minimized to an extent allowed by a semiconductor device manufacturing capability. The number of conductive features within the gate electrode level of the cell includes conductive features defined along at least four different virtual lines of extent in the first parallel direction across the gate electrode level of the cell.

A width size of the conductive features within the gate electrode level is measured perpendicular to the first parallel direction. The width size of the conductive features within a photolithographic interaction radius within the gate electrode level is less than a wavelength of light used in a

photolithography process to fabricate the conductive features within the gate electrode level. The wavelength of light used in the photolithography process is less than or equal to 193 nanometers. The photolithographic interaction radius is five wavelengths of light used in the photolithography process.

Some of the number of conductive features within the gate electrode level of the cell are defined to include one or more gate electrode portions which extend over one or more of the active areas of the substrate portion corresponding to the plurality of diffusion regions. Each gate electrode portion and a corresponding active area of the substrate portion over which it extends together define a respective transistor device.

Also in this embodiment, the cell includes a number of interconnect levels formed above the gate electrode level of the cell. The substrate portion, the gate electrode level of the cell, and the number of interconnect levels are spatially aligned such that structures fabricated within each of the substrate portion, the gate electrode level of the cell, and the number of interconnect levels spatially relate to connect as required to form functional electronic devices within the semiconductor device.

In one embodiment, a semiconductor chip includes a region including a plurality of transistors. Each of the plurality of transistors in the region forms part of circuitry associated with execution of one or more logic functions. The region includes at least ten conductive structures formed within the semiconductor chip. Some of the at least ten conductive structures form at least one transistor gate electrode. Each of the at least ten conductive structures respectively has a corresponding top surface. An entirety of a periphery of the corresponding top surface is defined by a corresponding first end, a corresponding second end, a corresponding first edge, and a corresponding second edge, such that a total distance along the entirety of the periphery of the corresponding top surface is equal to a sum of a total distance along the corresponding first edge and a total distance along the corresponding second edge and a total distance along the corresponding first end and a total distance along the corresponding second end. The total distance along the corresponding first edge is greater than two times the total distance along the corresponding first end. The total distance along the corresponding first edge is greater than two times the total distance along the corresponding second end. The total distance along the corresponding second edge is greater than two times the total distance along the corresponding first end. The total distance along the corresponding second edge is greater than two times the total distance along the corresponding second end. The corresponding first end extends from the corresponding first edge to the corresponding second edge and is located principally within a space between the corresponding first and second edges. The corresponding second end extends from the corresponding first edge to the corresponding second edge and is located principally within the space between the corresponding first and second edges. The top surfaces of the at least ten conductive structures are co-planar with each other. Each of the at least ten conductive structures has a corresponding lengthwise centerline oriented in a first direction along its top surface and extending from its first end to its second end. Each of the at least ten conductive structures has a length as measured along its lengthwise centerline from its first end to its second end. The first edge of each of the at least ten conductive structures is substantially straight. The second edge of each of the at least ten conductive structures is substantially straight. Each of the at least ten conductive structures has both its first edge and its second edge oriented substantially parallel to its lengthwise centerline. Each of the at least ten conductive structures has a width measured in a second direction perpendicular to the first direction at a midpoint of its lengthwise centerline. Each of the first direction and the second direction is oriented substantially parallel to the co-planar top surfaces of the at least ten conductive structures. The at least ten conductive structures are positioned in a side-by-side manner such that each of the at least ten conductive structures is positioned to have at least a portion of its length beside at least a portion of the length of another of the at least ten conductive structures. The width of each of the at least ten conductive structures is less than 45 nanometers. The region has a size of about 965 nanometers as measured in the second direction. Each of the at least ten conductive structures is positioned such that a distance as measured in the second direction between its lengthwise centerline and the lengthwise centerline of at least one other of the at least ten conductive structures is substantially equal to a first pitch that is less than or equal to about 193 nanometers. The region includes a first transistor of a first transistor type, a second transistor of the first transistor type, a first transistor of a second transistor type, and a second transistor of the second transistor type. Each transistor of the first transistor type that has its gate electrode formed by any of the at least ten conductive structures is included in a first collection of transistors, and each transistor of the second transistor type that has its gate electrode formed by any of the at least ten conductive structures is included in a second collection of transistors. The first and second collections of transistors are separated from each other by an inner sub-region of the region, wherein the inner sub-region does not include a source or a drain of any transistor. The first transistor of the first transistor type has a gate electrode formed by a portion of a first conductive structure of the at least ten conductive structures. Any transistor having its gate electrode formed by the first conductive structure is of the first transistor type. The second transistor of the first transistor type has a gate electrode formed by a portion of a second conductive structure of the at least ten conductive structures. The first transistor of the second transistor type has a gate electrode formed by another portion of the second conductive structure. The second conductive structure is positioned such that its lengthwise centerline is separated from the lengthwise centerline of the first conductive structure by the first pitch as measured in the second direction. The second transistor of the second transistor type has a gate electrode formed by one of the at least ten conductive structures. The conductive structure that forms the gate electrode of the second transistor of the second transistor type is positioned such that its lengthwise centerline is separated from the lengthwise centerline of the second conductive structure by the first pitch as measured in the second direction. Any transistor having its gate electrode formed by the conductive structure that forms the gate electrode of the second transistor of the second transistor type is of the second transistor type. The first conductive structure has a total length as measured in the first direction that is greater than one-half of a total length of the second conductive structure as measured in the first direction. The second conductive structure has at least one end substantially positioned at a first reference line oriented in the second direction. And, the conductive structure that forms the gate electrode of the second transistor of the second transistor type also has at least one end substantially positioned at the first reference line.

Other aspects and advantages of the invention will become more apparent from the following detailed description, taken in conjunction with the accompanying drawings, illustrating by way of example the present invention.

BRIEF DESCRIPTION OF THE DRAWINGS

FIG. **1** is an illustration showing a number of neighboring layout features and a representation of light intensity used to render each of the layout features, in accordance with one embodiment of the present invention;

FIG. **2** is an illustration showing a generalized stack of layers used to define a dynamic array architecture, in accordance with one embodiment of the present invention;

FIG. **3**A is an illustration showing an exemplary base grid to be projected onto the dynamic array to facilitate definition of the restricted topology, in accordance with one embodiment of the present invention;

FIG. **3**B is an illustration showing separate base grids projected across separate regions of the die, in accordance with an exemplary embodiment of the present invention;

FIG. **3**C is an illustration showing an exemplary linear-shaped feature defined to be compatible with the dynamic array, in accordance with one embodiment of the present invention;

FIG. **3**D is an illustration showing another exemplary linear-shaped feature defined to be compatible with the dynamic array, in accordance with one embodiment of the present invention;

FIG. **4** is an illustration showing a diffusion layer layout of an exemplary dynamic array, in accordance with one embodiment of the present invention;

FIG. **5** is an illustration showing a gate electrode layer and a diffusion contact layer above and adjacent to the diffusion layer of FIG. **4**, in accordance with one embodiment of the present invention;

FIG. **6** is an illustration showing a gate electrode contact layer defined above and adjacent to the gate electrode layer of FIG. **5**, in accordance with one embodiment of the present invention;

FIGS. **6**A-**6**E show annotated versions of FIG. **6**;

FIG. **7**A is an illustration showing a traditional approach for making contact to the gate electrode;

FIG. **7**B is an illustration showing a gate electrode contact defined in accordance with one embodiment of the present invention;

FIG. **8**A is an illustration showing a metal 1 layer defined above and adjacent to the gate electrode contact layer of FIG. **6**, in accordance with one embodiment of the present invention;

FIG. **8**B is an illustration showing the metal 1 layer of FIG. **8**A with larger track widths for the metal 1 ground and power tracks, relative to the other metal 1 tracks;

FIG. **9** is an illustration showing a via 1 layer defined above and adjacent to the metal 1 layer of FIG. **8**A, in accordance with one embodiment of the present invention;

FIG. **10** is an illustration showing a metal 2 layer defined above and adjacent to the via 1 layer of FIG. **9**, in accordance with one embodiment of the present invention;

FIG. **11** is an illustration showing conductor tracks traversing the dynamic array in a first diagonal direction relative to the first and second reference directions (x) and (y), in accordance with one embodiment of the present invention;

FIG. **12** is an illustration showing conductor tracks traversing the dynamic array in a second diagonal direction relative to the first and second reference directions (x) and (y), in accordance with one embodiment of the present invention;

FIG. **13**A is an illustration showing an example of a sub-resolution contact layout used to lithographically reinforce diffusion contacts and gate electrode contacts, in accordance with one embodiment of the present invention;

FIG. **13**B is an illustration showing the sub-resolution contact layout of FIG. **13**A with sub-resolution contacts defined to fill the grid to the extent possible, in accordance with one embodiment of the present invention;

FIG. **13**C is an illustration showing an example of a sub-resolution contact layout utilizing various shaped sub-resolution contacts, in accordance with one embodiment of the present invention;

FIG. **13**D is an illustration showing an exemplary implementation of alternate phase shift masking (APSM) with sub-resolution contacts, in accordance with one embodiment of the present invention;

FIG. **14** is an illustration showing a semiconductor chip structure, in accordance with one embodiment of the present invention;

FIG. **14**A shows an annotated version of FIG. **14**;

FIG. **15** shows an example layout architecture defined in accordance with one embodiment of the present invention; and

FIG. **15**A shows an annotated version of FIG. **15**.

DETAILED DESCRIPTION

In the following description, numerous specific details are set forth in order to provide a thorough understanding of the present invention. It will be apparent, however, to one skilled in the art that the present invention may be practiced without some or all of these specific details. In other instances, well known process operations have not been described in detail in order not to unnecessarily obscure the present invention.

Generally speaking, a dynamic array architecture is provided to address semiconductor manufacturing process variability associated with a continually increasing lithographic gap. In the area of semiconductor manufacturing, lithographic gap is defined as the difference between the minimum size of a feature to be defined and the wavelength of light used to render the feature in the lithographic process, wherein the feature size is less than the wavelength of the light. Current lithographic processes utilize a light wavelength of 193 nm. However, current feature sizes are as small as 65 nm and are expected to soon approach sizes as small as 45 nm With a size of 65 nm, the shapes are three times smaller than the wavelength of the light used to define the shapes. Also, considering that the interaction radius of light is about five light wavelengths, it should be appreciated that shapes exposed with a 193 nm light source will influence the exposure of shapes approximately 5*193 nm (965 nm) away. When considering the 65 nm sized features with respect to 90 nm sized features, it should be appreciated that approximately two times as many 65 nm sizes features may be within the 965 nm interaction radius of the 193 nm light source as compared to the 90 nm sized features.

Due to the increased number of features within the interaction radius of the light source, the extent and complexity of light interference contributing to exposure of a given feature is significant. Additionally, the particular shapes associated with the features within the interaction radius of the light source weighs heavily on the type of light interactions that occur. Traditionally, designers were

allowed to define essentially any two-dimensional topology of feature shapes so long as a set of design rules were satisfied. For example, in a given layer of the chip, i.e., in a given mask, the designer may have defined two-dimensionally varying features having bends that wrap around each other. When such two-dimensionally varying features are located in neighboring proximity to each other, the light used to expose the features will interact in a complex and generally unpredictable manner. The light interaction becomes increasingly more complex and unpredictable as the feature sizes and relative spacing become smaller.

Traditionally, if a designer follows the established set of design rules, the resulting product will be manufacturable with a specified probability associated with the set of design rules. Otherwise, for a design that violates the set of design rules, the probability of successful manufacture of the resulting product is unknown. To address the complex light interaction between neighboring two-dimensionally varying features, in the interest of successful product manufacturing, the set of design rules is expanded significantly to adequately address the possible combinations of two-dimensionally varying features. This expanded set of design rules quickly becomes so complicated and unwieldy that application of the expanded set of design rules becomes prohibitively time consuming, expensive, and prone to error. For example, the expanded set of design rules requires complex verification. Also, the expanded set of design rules may not be universally applied. Furthermore, manufacturing yield is not guaranteed even if all design rules are satisfied.

It should be appreciated that accurate prediction of all possible light interactions when rendering arbitrarily-shaped two-dimensional features is generally not feasible. Moreover, as an alternative to or in combination with expansion of the set of design rules, the set of design rules may also be modified to include increased margin to account for unpredictable light interaction between the neighboring two-dimensionally varying features. Because the design rules are established in an attempt to cover the random two-dimensional feature topology, the design rules may incorporate a significant amount of margin. While addition of margin in the set of design rules assists with the layout portions that include the neighboring two-dimensionally varying features, such global addition of margin causes other portions of the layout that do not include the neighboring two-dimensionally varying features to be overdesigned, thus leading to decreased optimization of chip area utilization and electrical performance.

In view of the foregoing, it should be appreciated that semiconductor product yield is reduced as a result of parametric failures that stem from variability introduced by design-dependent unconstrained feature topologies, i.e., arbitrary two-dimensionally varying features disposed in proximity to each other. By way of example, these parametric failures may result from failure to accurately print contacts and vias and from variability in fabrication processes. The variability in fabrication processes may include CMP dishing, layout feature shape distortion due to photolithography, gate distortion, oxide thickness variability, implant variability, and other fabrication related phenomena. The dynamic array architecture of the present invention is defined to address the above-mentioned semiconductor manufacturing process variability.

FIG. **1** is an illustration showing a number of neighboring layout features and a representation of light intensity used to render each of the layout features, in accordance with one embodiment of the present invention. Specifically, three neighboring linear-shaped layout features (**101**A-**101**C) are depicted as being disposed in a substantially parallel relationship within a given mask layer. The distribution of light intensity from a layout feature shape is represented by a sinc function. The sinc functions (**103**A-**103**C) represent the distribution of light intensity from each of the layout features (**101**A-**101**C, respectively). The neighboring linear-shaped layout features (**101**A-**101**C) are spaced apart at locations corresponding to peaks of the sinc functions (**103**A-**103**C). Thus, constructive interference between the light energy associated with the neighboring layout features (**101**A-**101**C), i.e., at the peaks of the sinc functions (**103**A-**103**C), serves to reinforce the exposure of the neighboring shapes (**101**A-**101**C) for the layout feature spacing illustrated. In accordance with the foregoing, the light interaction represented in FIG. **1** represents a synchronous case.

As illustrated in FIG. **1**, when linear-shaped layout features are defined in a regular repeating pattern at an appropriate spacing, constructive interference of the light energy associated with the various layout features serves to enhance the exposure of each layout feature. The enhanced exposure of the layout features provided by the constructive light interference can dramatically reduce or even eliminate a need to utilize optical proximity correction (OPC) and/or reticle enhancement technology (RET) to obtain sufficient rendering of the layout features.

A forbidden pitch, i.e., forbidden layout feature spacing, occurs when the neighboring layout features (**101**A-**101**C) are spaced such that peaks of the sinc function associated with one layout feature align with valleys of the sinc function associated with another layout feature, thus causing destructive interference of the light energy. The destructive interference of the light energy causes the light energy focused at a given location to be reduced. Therefore, to realize the beneficial constructive light interference associated with neighboring layout features, it is necessary to predict the layout feature spacing at which the constructive overlap of the sinc function peaks will occur. Predictable constructive overlap of the sinc function peaks and corresponding layout feature shape enhancement can be realized if the layout feature shapes are rectangular, near the same size, and are oriented in the same direction, as illustrated by the layout features (**101**A-**101**C) in FIG. **1**. In this manner, resonant light energy from neighboring layout feature shapes is used to enhance the exposure of a particular layout feature shape.

FIG. **2** is an illustration showing a generalized stack of layers used to define a dynamic array architecture, in accordance with one embodiment of the present invention. It should be appreciated that the generalized stack of layers used to define the dynamic array architecture, as described with respect to FIG. **2**, is not intended to represent an exhaustive description of the CMOS manufacturing process. However, the dynamic array is to be built in accordance with standard CMOS manufacturing processes. Generally speaking, the dynamic array architecture includes both the definition of the underlying structure of the dynamic array and the techniques for assembling the dynamic array for optimization of area utilization and manufacturability. Thus, the dynamic array is designed to optimize semiconductor manufacturing capabilities.

With regard to the definition of the underlying structure of the dynamic array, the dynamic array is built-up in a layered manner upon a base substrate **201**, e.g., upon a silicon substrate, or silicon-on-insulator (SOI) substrate. Diffusion regions **203** are defined in the base substrate **201**. The diffusion regions **203** represent selected regions of the base substrate **201** within which impurities are introduced for the

purpose of modifying the electrical properties of the base substrate **201**. Above the diffusion regions **203**, diffusion contacts **205** are defined to enable connection between the diffusion regions **203** and conductor lines. For example, the diffusion contacts **205** are defined to enable connection between source and drain diffusion regions **203** and their respective conductor nets. Also, gate electrode features **207** are defined above the diffusion regions **203** to form transistor gates. Gate electrode contacts **209** are defined to enable connection between the gate electrode features **207** and conductor lines. For example, the gate electrode contacts **209** are defined to enable connection between transistor gates and their respective conductor nets.

Interconnect layers are defined above the diffusion contact **205** layer and the gate electrode contact layer **209**. The interconnect layers include a first metal (metal 1) layer **211**, a first via (via 1) layer **213**, a second metal (metal 2) layer **215**, a second via (via 2) layer **217**, a third metal (metal 3) layer **219**, a third via (via 3) layer **221**, and a fourth metal (metal 4) layer **223**. The metal and via layers enable definition of the desired circuit connectivity. For example, the metal and via layers enable electrical connection of the various diffusion contacts **205** and gate electrode contacts **209** such that the logic function of the circuitry is realized. It should be appreciated that the dynamic array architecture is not limited to a specific number of interconnect layers, i.e., metal and via layers. In one embodiment, the dynamic array may include additional interconnect layers **225**, beyond the fourth metal (metal 4) layer **223**. Alternatively, in another embodiment, the dynamic array may include less than four metal layers.

The dynamic array is defined such that layers (other than the diffusion region layer **203**) are restricted with regard to layout feature shapes that can be defined therein. Specifically, in each layer other than the diffusion region layer **203**, only linear-shaped layout features are allowed. A linear-shaped layout feature in a given layer is characterized as having a consistent vertical cross-section shape and extending in a single direction over the substrate. Thus, the linear-shaped layout features define structures that are one-dimensionally varying. The diffusion regions **203** are not required to be one-dimensionally varying, although they are allowed to be if necessary. Specifically, the diffusion regions **203** within the substrate can be defined to have any two-dimensionally varying shape with respect to a plane coincident with a top surface of the substrate. In one embodiment, the number of diffusion bend topologies is limited such that the interaction between the bend in diffusion and the conductive material, e.g., polysilicon, that forms the gate electrode of the transistor is predictable and can be accurately modeled. The linear-shaped layout features in a given layer are positioned to be parallel with respect to each other. Thus, the linear-shaped layout features in a given layer extend in a common direction over the substrate and parallel with the substrate.

The underlying layout methodology of the dynamic array uses constructive light interference of light waves in the lithographic process to reinforce exposure of neighboring shapes in a given layer. Therefore, the spacing of the parallel, linear-shaped layout features in a given layer is designed around the constructive light interference of the standing light waves such that lithographic correction (e.g., OPC/RET) is minimized or eliminated. Thus, in contrast to conventional OPC/RET-based lithographic processes, the dynamic array defined herein exploits the light interaction between neighboring features, rather than attempting to compensate for the light interaction between neighboring features.

Because the standing light wave for a given linear-shaped layout feature can be accurately modeled, it is possible to predict how the standing light waves associated with the neighboring linear-shaped layout features disposed in parallel in a given layer will interact. Therefore, it is possible to predict how the standing light wave used to expose one linear-shaped feature will contribute to the exposure of its neighboring linear-shaped features. Prediction of the light interaction between neighboring linear-shaped features enables the identification of an optimum feature-to-feature spacing such that light used to render a given shape will reinforce its neighboring shapes. The feature-to-feature spacing in a given layer is defined as the feature pitch, wherein the pitch is the center-to-center separation distance between adjacent linear-shaped features in a given layer.

To provide the desired exposure reinforcement between neighboring features, the linear-shaped layout features in a given layer are spaced such that constructive and destructive interference of the light from neighboring features will be optimized to produce the best rendering of all features in the neighborhood. The feature-to-feature spacing in a given layer is proportional to the wavelength of the light used to expose the features. The light used to expose each feature within about a five light wavelength distance from a given feature will serve to enhance the exposure of the given feature to some extent. The exploitation of constructive interference of the standing light waves used to expose neighboring features enables the manufacturing equipment capability to be maximized and not be limited by concerns regarding light interactions during the lithography process.

As discussed above, the dynamic array incorporates a restricted topology in which the features within each layer (other than diffusion) are required to be linear-shaped features that are oriented in a parallel manner to traverse over the substrate in a common direction. With the restricted topology of the dynamic array, the light interaction in the photolithography process can be optimized such that the printed image on the mask is essentially identical to the drawn shape in the layout, i.e., essentially a 100% accurate transfer of the layout onto the resist is achieved.

FIG. **3**A is an illustration showing an exemplary base grid to be projected onto the dynamic array to facilitate definition of the restricted topology, in accordance with one embodiment of the present invention. The base grid can be used to facilitate parallel placement of the linear-shaped features in each layer of the dynamic array at the appropriate optimized pitch. Although not physically defined as part of the dynamic array, the base grid can be considered as a projection on each layer of the dynamic array. Also, it should be understood that the base grid is projected in a substantially consistent manner with respect to position on each layer of the dynamic array, thus facilitating accurate feature stacking and alignment.

In the exemplary embodiment of FIG. **3**A, the base grid is defined as a rectangular grid, i.e., Cartesian grid, in accordance with a first reference direction (x) and a second reference direction (y). The gridpoint-to-gridpoint spacing in the first and second reference directions can be defined as necessary to enable definition of the linear-shaped features at the optimized feature-to-feature spacing. Also, the gridpoint spacing in the first reference direction (x) can be different than the gridpoint spacing in the second reference direction (y). In one embodiment, a single base grid is projected across the entire die to enable location of the

various linear-shaped features in each layer across the entire die. However, in other embodiments, separate base grids can be projected across separate regions of the die to support different feature-to-feature spacing requirements within the separate regions of the die. FIG. **3**B is an illustration showing separate base grids projected across separate regions of the die, in accordance with an exemplary embodiment of the present invention.

The base grid is defined with consideration for the light interaction function, i.e., the sinc function, and the manufacturing capability, wherein the manufacturing capability is defined by the manufacturing equipment and processes to be utilized in fabricating the dynamic array. With regard to the light interaction function, the base grid is defined such that the spacing between gridpoints enables alignment of peaks in the sinc functions describing the light energy projected upon neighboring gridpoints. Therefore, linear-shaped features optimized for lithographic reinforcement can be specified by drawing a line from a first gridpoint to a second gridpoint, wherein the line represents a rectangular structure of a given width. It should be appreciated that the various linear-shaped features in each layer can be specified according to their endpoint locations on the base grid and their width.

FIG. **3**C is an illustration showing an exemplary linear-shaped feature **301** defined to be compatible with the dynamic array, in accordance with one embodiment of the present invention. The linear-shaped feature **301** has a substantially rectangular cross-section defined by a width **303** and a height **307**. The linear-shaped feature **301** extends in a linear direction to a length **305**. In one embodiment, a cross-section of the linear-shaped feature, as defined by its width **303** and height **307**, is substantially uniform along its length **305**. It should be understood, however, that lithographic effects may cause a rounding of the ends of the linear-shaped feature **301**. The first and second reference directions (x) and (y), respectively, of FIG. **3**A are shown to illustrate an exemplary orientation of the linear-shaped feature on the dynamic array. It should be appreciated that the linear-shaped feature may be oriented to have its length **305** extend in either the first reference direction (x), the second reference direction (y), or in diagonal direction defined relative to the first and second reference directions (x) and (y). Regardless of the linear-shaped features' particular orientation with respect to the first and second reference directions (x) and (y), it should be understood that the linear-shaped feature is defined in a plane that is substantially parallel to a top surface of the substrate upon which the dynamic array is built. Also, it should be understood that the linear-shaped feature is free of bends, i.e., change in direction, in the plane defined by the first and second reference directions.

FIG. **3**D is an illustration showing another exemplary linear-shaped feature **317** defined to be compatible with the dynamic array, in accordance with one embodiment of the present invention. The linear-shaped feature **317** has a trapezoidal cross-section defined by a lower width **313**, an upper width **315**, and a height **309**. The linear-shaped feature **317** extends in a linear direction to a length **311**. In one embodiment, the cross-section of the linear-shaped feature **317** is substantially uniform along its length **311**. It should be understood, however, that lithographic effects may cause a rounding of the ends of the linear-shaped feature **317**. The first and second reference directions (x) and (y), respectively, of FIG. **3**A are shown to illustrate an exemplary orientation of the linear-shaped feature on the dynamic array. It should be appreciated that the linear-shaped feature **317** may be oriented to have its length **311** extend in either the first reference direction (x), the second reference direction (y), or in diagonal direction defined relative to the first and second reference directions (x) and (y). Regardless of the particular orientation of the linear-shaped feature **317** with regard to the first and second reference directions (x) and (y), it should be understood that the linear-shaped feature **317** is defined in a plane that is substantially parallel to a top surface of the substrate upon which the dynamic array is built. Also, it should be understood that the linear-shaped feature **317** is free of bends, i.e., change in direction, in the plane defined by the first and second reference directions.

Although FIGS. **3**C and **3**D explicitly discuss linear shaped features having rectangular and trapezoidal cross-sections, respectively, it should be understood that the linear shaped features having other types of cross-sections can be defined within the dynamic array. Therefore, essentially any suitable cross-sectional shape of the linear-shaped feature can be utilized so long as the linear-shaped feature is defined to have a length that extends in one direction, and is oriented to have its length extend in either the first reference direction (x), the second reference direction (y), or in diagonal direction defined relative to the first and second reference directions (x) and (y).

The layout architecture of the dynamic array follows the base grid pattern. Thus, it is possible to use grid points to represent where changes in direction occur in diffusion, wherein gate electrode and metal linear-shaped features are placed, where contacts are placed, where opens are in the linear-shaped gate electrode and metal features, etc. The pitch of the gridpoints, i.e., the gridpoint-to-gridpoint spacing, should be set for a given feature line width, e.g., width **303** in FIG. **3**C, such that exposure of neighboring linear-shaped features of the given feature line width will reinforce each other, wherein the linear-shaped features are centered on gridpoints. With reference to the dynamic array stack of FIG. **2** and the exemplary base grid of FIG. **3**A, in one embodiment, the gridpoint spacing in the first reference direction (x) is set by the required gate electrode gate pitch. In this same embodiment, the gridpoint pitch in the second reference direction (y) is set by the metal 1 and metal 3 pitch. For example, in a 90 nm process technology, i.e., minimum feature size equal to 90 nm, the gridpoint pitch in the second reference direction (y) is about 0.24 micron. In one embodiment, metal 1 and metal 2 layers will have a common spacing and pitch. A different spacing and pitch may be used above the metal 2 layer.

The various layers of the dynamic array are defined such that the linear-shaped features in adjacent layers extend in a crosswise manner with respect to each other. For example, the linear-shaped features of adjacent layers may extend orthogonally, i.e., perpendicularly with respect to each other. Also, the linear-shaped features of one layer may extend across the linear-shaped features of an adjacent layer at an angle, e.g., at about 45 degrees. For example, in one embodiment the linear-shaped feature of one layer extend in the first reference direction (x) and the linear-shaped features of the adjacent layer extend diagonally with respect to the first (x) and second (y) reference directions. It should be appreciated that to route a design in the dynamic array having the linear-shaped features positioned in the crosswise manner in adjacent layers, opens can be defined in the linear-shaped features, and contacts and vias can be defined as necessary.

The dynamic array minimizes the use of bends in layout shapes to eliminate unpredictable lithographic interactions. Specifically, prior to OPC or other RET processing, the

dynamic array allows bends in the diffusion layer to enable control of device sizes, but does not allow bends in layers above the diffusion layer. The layout features in each layer above the diffusion layer are linear in shape, e.g., FIG. **3**C, and disposed in a parallel relationship with respect to each other. The linear shapes and parallel positioning of layout features are implemented in each stack layer of the dynamic array where predictability of constructive light interference is necessary to ensure manufacturability. In one embodiment, the linear shapes and parallel positioning of layout features are implemented in the dynamic array in each layer above diffusion through metal 2. Above metal 2, the layout features may be of sufficient size and shape that constructive light interference is not required to ensure manufacturability. However, the presence of constructive light interference in patterning layout features above metal 2 may be beneficial.

An exemplary buildup of dynamic array layers from diffusion through metal 2 are described with respect to FIGS. **4** through **14**. It should be appreciated that the dynamic array described with respect to FIGS. **4** through **14** is provided by way of example only, and is not intended to convey limitations of the dynamic array architecture. The dynamic array can be used in accordance with the principles presented herein to define essentially any integrated circuit design.

FIG. **4** is an illustration showing a diffusion layer layout of an exemplary dynamic array, in accordance with one embodiment of the present invention. The diffusion layer of FIG. **4** shows a p-diffusion region **401** and an n-diffusion region **403**. While the diffusion regions are defined according to the underlying base grid, the diffusion regions are not subject to the linear-shaped feature restrictions associated with the layers above the diffusion layer. The diffusion regions **401** and **403** include diffusion squares **405** defined where diffusion contacts will be located. The diffusion regions **401** and **403** do not include extraneous jogs or corners, thus improving the use of lithographic resolution and enabling more accurate device extraction. Additionally, n+ mask regions (**412** and **416**) and p+ mask regions (**410** and **414**) are defined as rectangles on the (x), (y) grid with no extraneous jogs or notches. This style permits use of larger diffusion regions, eliminates need for OPC/RET, and enables use of lower resolution and lower cost lithographic systems, e.g., i-line illumination at 365 nm. It should be appreciated that the n+ mask region **416** and the p+ mask region **410**, as depicted in FIG. **4**, are for an embodiment that does not employ well-biasing. In an alternative embodiment where well-biasing is to be used, the n+ mask region **416** shown in FIG. **4** will actually be defined as a p+ mask region. Also, in this alternative embodiment, the p+ mask region **410** shown in FIG. **4** will actually be defined as a n+ mask region.

FIG. **5** is an illustration showing a gate electrode layer and a diffusion contact layer above and adjacent to the diffusion layer of FIG. **4**, in accordance with one embodiment of the present invention. As those skilled in the CMOS arts will appreciate, the gate electrode features **501** define the transistor gates. The gate electrode features **501** are defined as linear shaped features extending in a parallel relationship across the dynamic array in the second reference direction (y). In one embodiment, the gate electrode features **501** are defined to have a common width. However, in another embodiment, one or more of the gate electrode features can be defined to have a different width. For example, FIG. **5** shows a gate electrode features **501**A that has a larger width relative to the other gate electrode features **501**. The pitch (center-to-center spacing) of the gate electrode features **501** is minimized while ensuring optimization of lithographic reinforcement, i.e., resonant imaging, provided by neighboring gate electrode features **501**. For discussion purposes, gate electrode features **501** extending across the dynamic array in a given line are referred to as a gate electrode track.

The gate electrode features **501** form n-channel and p-channel transistors as they cross the diffusion regions **403** and **401**, respectively. Optimal gate electrode feature **501** printing is achieved by drawing gate electrode features **501** at every grid location, even though no diffusion region may be present at some grid locations. Also, long continuous gate electrode features **501** tend to improve line end shortening effects at the ends of gate electrode features within the interior of the dynamic array. Additionally, gate electrode printing is significantly improved when all bends are removed from the gate electrode features **501**.

Each of the gate electrode tracks may be interrupted, i.e., broken, any number of times in linearly traversing across the dynamic array in order to provide required electrical connectivity for a particular logic function to be implemented. When a given gate electrode track is required to be interrupted, the separation between ends of the gate electrode track segments at the point of interruption is minimized to the extent possible taking into consideration the manufacturing capability and electrical effects. In one embodiment, optimal manufacturability is achieved when a common end-to-end spacing is used between features within a particular layer.

Minimizing the separation between ends of the gate electrode track segments at the points of interruption serves to maximize the lithographic reinforcement, and uniformity thereof, provided from neighboring gate electrode tracks. Also, in one embodiment, if adjacent gate electrode tracks need to be interrupted, the interruptions of the adjacent gate electrode tracks are made such that the respective points of interruption are offset from each other so as to avoid, to the extent possible, an occurrence of neighboring points of interruption. More specifically, points of interruption within adjacent gate electrode tracks are respectively positioned such that a line of sight does not exist through the points of interruption, wherein the line of sight is considered to extend perpendicularly to the direction in which the gate electrode tracks extend over the substrate. Additionally, in one embodiment, the gate electrodes may extend through the boundaries at the top and bottom of the cells, i.e., the PMOS or NMOS cells. This embodiment would enable bridging of neighboring cells.

With further regard to FIG. **5**, diffusion contacts **503** are defined at each diffusion square **405** to enhance the printing of diffusion contacts via resonant imaging. The diffusion squares **405** are present around every diffusion contact **503** to enhance the printing of the power and ground connection polygons at the diffusion contacts **503**.

The gate electrode features **501** and diffusion contacts **503** share a common grid spacing. More specifically, the gate electrode feature **501** placement is offset by one-half the grid spacing relative to the diffusion contacts **503**. For example, if the gate electrode features **501** and diffusion contact **503** grid spacing is 0.36 μm, then the diffusion contacts are placed such that the x-coordinate of their center falls on an integer multiple of 0.36 μm, while the x-coordinate of the center of each gate electrode feature **501** minus 0.18 μm should be an integer multiple of 0.36 μm. In the present example, the x-coordinates are represented by the following:

Diffusion contact center x-coordinate=I*0.36 μm, where I is the grid number;

Gate electrode feature center x-coordinate=0.18 μm+I*0.36 μm, where I is the grid number.

The grid based system of the dynamic array ensures that all contacts (diffusion and gate electrode) will land on a horizontal grid that is equal to a multiple of one-half of the diffusion contact grid and a vertical grid that is set by the metal 1 pitch. In the example above, the gate electrode feature and diffusion contact grid is 0.36 μm. The diffusion contacts and gate electrode contacts will land on a horizontal grid that is a multiple of 0.18 μm. Also, the vertical grid for 90 nm process technologies is about 0.24 μm.

FIG. **6** is an illustration showing a gate electrode contact layer defined above and adjacent to the gate electrode layer of FIG. **5**, in accordance with one embodiment of the present invention. In the gate electrode contact layer, gate electrode contacts **601** are drawn to enable connection of the gate electrode features **501** to the overlying metal conduction lines. In general, design rules will dictate the optimum placement of the gate electrode contacts **601**. In one embodiment, the gate electrode contacts are drawn on top of the transistor endcap regions. This embodiment minimizes white space in the dynamic array when design rules specify long transistor endcaps. In some process technologies white space may be minimized by placing a number of gate electrode contacts for a cell in the center of the cell. Also, it should be appreciated that in the present invention, the gate electrode contact **601** is oversized in the direction perpendicular to the gate electrode feature **501** to ensure overlap between the gate electrode contact **601** and the gate electrode feature **501**.

FIG. **6**A shows an annotated version of FIG. **6**. The features depicted in FIG. **6**A are exactly the same as the features depicted in FIG. **6**. FIG. **6**A shows a first conductive gate level structure **501***a* having a lengthwise centerline **6***a***01**. FIG. **6**A shows a second conductive gate level structure **501***b* and a third conductive gate level structure **501***c* having a lengthwise centerline **6***a***03**. FIG. **6**A shows a fourth conductive gate level structure **501***d* and a fifth conductive gate level structure **501***e* having the lengthwise centerline **6***a***05**. FIG. **6**A shows a sixth conductive gate level structure **501***f* having a lengthwise centerline **6***a***07**. FIG. **6**A shows a seventh conductive gate level structure **501***g* having a lengthwise centerline **6***a***09**. FIG. **6**A shows an eighth conductive gate level structure **501***h* having a lengthwise centerline **6***a***11**.

FIG. **6**A shows the first conductive gate level structure **501***a* separated from each of the second conductive gate level structure **501***b* and third conductive gate level structure **501***c* by a centerline-to-centerline spacing **6***a***13** as measured in a direction perpendicular to the parallel direction of the gate level structures. FIG. **6**A shows the second conductive gate level structure **501***b* separated from the fourth conductive gate level structure **501***d* by a centerline-to-centerline spacing **6***a***15** as measured in the direction perpendicular to the parallel direction of the gate level structures. FIG. **6**A shows the third conductive gate level structure **501***c* separated from the fifth conductive gate level structure **501***e* by a centerline-to-centerline spacing **6***a***15** as measured in the direction perpendicular to the parallel direction of the gate level structures. FIG. **6**A shows the sixth conductive gate level structure **501***f* separated from each of the fourth conductive gate level structure **501***d* and fifth conductive gate level structure **501***e* by a centerline-to-centerline spacing **6***a***17** as measured in the direction perpendicular to the parallel direction of the gate level structures. FIG. **6**A shows the sixth conductive gate level structure **501***f* separated from the seventh conductive gate level structure **501***g* by a centerline-to-centerline spacing **6***a***19** as measured in the direction perpendicular to the parallel direction of the gate level structures. FIG. **6**A shows the seventh conductive gate level structure **501***g* separated from the eighth conductive gate level structure **501***h* by a centerline-to-centerline spacing **6***a***21** as measured in the direction perpendicular to the parallel direction of the gate level structures.

FIG. **6**A shows the first conductive gate level structure **501***a* forming a gate electrode of a transistor **6***a***47** of a first transistor type and a gate electrode of a transistor **6***a***37** of a second transistor type. FIG. **6**A shows the second conductive gate level structure **501***b* forming a gate electrode of a transistor **6***a***49** of the first transistor type. FIG. **6**A shows the third conductive gate level structure **501***c* forming a gate electrode of a transistor **6***a***39** of the second transistor type. FIG. **6**A shows the fourth conductive gate level structure **501***d* forming a gate electrode of a transistor **6***a***51** of the first transistor type. FIG. **6**A shows the fifth conductive gate level structure **501***e* forming a gate electrode of a transistor **6***a***41** of the second transistor type. FIG. **6**A shows the sixth conductive gate level structure **501***f* forming a gate electrode of a transistor **6***a***53** of the first transistor type and a gate electrode of a transistor **6***a***43** of the second transistor type. FIG. **6**A shows the seventh conductive gate level structure **501***g* not forming a gate electrode of a transistor. FIG. **6**A shows the eighth conductive gate level structure **501***h* forming a gate electrode of a transistor **6***a***55** of the first transistor type and a gate electrode of a transistor **6***a***45** of the second transistor type.

FIG. **6**A shows the contact **601***a* connected to the first conductive gate level structure **501***a*. FIG. **6**A shows the contact **601***b* connected to the second conductive gate level structure **501***b*. FIG. **6**A shows the contact **601***c* connected to the third conductive gate level structure **501***c*. FIG. **6**A shows the contact **601***d* connected to the fourth conductive gate level structure **501***d*. FIG. **6**A shows the contact **601***e* connected to the fifth conductive gate level structure **501***e*. FIG. **6**A shows the contact **601***f* connected to the sixth conductive gate level structure **501***f*.

FIG. **6**A shows the contact **601***b* positioned to contact the second conductive gate level structure **501***b* at a contact-to-gate distance **6***a***25** from a gate electrode of the transistor **6***a***49**. FIG. **6**A shows the contact **601***c* positioned to contact the third conductive gate level structure **501***c* at a contact-to-gate distance **6***a***27** from a gate electrode of the transistor **6***a***39**. FIG. **6**A shows the contact **601***d* positioned to contact the fourth conductive gate level structure **501***d* at a contact-to-gate distance **6***a***23** from a gate electrode of the transistor **6***a***51**. FIG. **6**A shows the contact **601***e* positioned to contact the fifth conductive gate level structure **501***e* at a contact-to-gate distance **6***a***29** from a gate electrode of the transistor **6***a***41**.

FIG. **6**B shows an annotated version of FIG. **6**. The features depicted in FIG. **6**B are exactly the same as the features depicted in FIG. **6**. FIG. **6**B shows the contact **601***b* located at a contact position **6***a***31** in the parallel direction of the conductive gate level structures, i.e., in the y direction. FIG. **6**B shows the contact **601***c* and the contact **601***d* located at a contact position **6***a***33** in the parallel direction of the conductive gate level structures. FIG. **6**B shows the contact **601***e* located at a contact position **6***a***35** in the parallel direction of the conductive gate level structures. FIG. **6**B shows the contacts **601***b* and **601***e* positioned outside the diffusion regions **401** and **403** of different diffusion region types. FIG. **6**B shows the contacts **601***c* and **601***d* positioned between the diffusion regions **401** and **403** of different diffusion region types, i.e., positioned over the inner non-

diffusion region between the diffusion regions **401** and **403** of different diffusion region types.

FIG. **6**C shows an annotated version of FIG. **6**. The features depicted in FIG. **6**C are exactly the same as the features depicted in FIG. **6**. FIG. **6**C shows the second conductive gate level structure **501***b* extending a distance **6***a***57** beyond the contact **601***b* in the parallel direction (y-direction) away from the gate electrode of the transistor **6***a***49**. FIG. **6**C shows the third conductive gate level structure **501***c* extending a distance **6***a***59** beyond the contact **601***c* in the parallel direction (y-direction) away from the gate electrode of the transistor **6***a***39**. FIG. **6**C shows the fourth conductive gate level structure **501***d* extending a distance **6***a***61** beyond the contact **601***d* in the parallel direction (y-direction) away from the gate electrode of the transistor **6***a***51**. FIG. **6**C shows the fifth conductive gate level structure **501***e* extending a distance **6***a***63** beyond the contact **601***e* in the parallel direction (y-direction) away from the gate electrode of the transistor **6***a***41**.

FIG. **6**D shows an annotated version of FIG. **6**. The features depicted in FIG. **6**D are exactly the same as the features depicted in FIG. **6**. FIG. **6**D shows the first conductive gate level structure **501***a* defined to have a length **6***a***89** as measured in the parallel direction (y-direction). FIG. **6**D shows the second conductive gate level structure **501***b* defined to have a length **6***a***93** as measured in the parallel direction (y-direction). FIG. **6**D shows the third conductive gate level structure **501***c* defined to have a length **6***a***91** as measured in the parallel direction (y-direction). FIG. **6**D shows the fourth conductive gate level structure **501***d* defined to have a length **6***a***97** as measured in the parallel direction (y-direction). FIG. **6**D shows the fifth conductive gate level structure **501***e* defined to have a length **6***a***95** as measured in the parallel direction (y-direction). FIG. **6**D shows the sixth conductive gate level structure **501***f* defined to have a length **6***a***99** as measured in the parallel direction (y-direction). FIG. **6**D shows the seventh conductive gate level structure **501***g* defined to have a length **6***a***101** as measured in the parallel direction (y-direction). FIG. **6**D shows the eighth conductive gate level structure **501***h* defined to have a length **6***a***103** as measured in the parallel direction (y-direction).

FIG. **6**D shows the second conductive gate level structure **501***b* positioned in a spaced apart end-to-end manner with the third conductive gate level structure **501***c*. FIG. **6**D shows the second conductive gate level structure **501***b* separated from the third conductive gate level structure **501***c* by a first end-to-end spacing **6***a***85** as measured in the parallel direction (y-direction). FIG. **6**D shows the fourth conductive gate level structure **501***d* positioned in a spaced apart end-to-end manner with the fifth conductive gate level structure **501***e*. FIG. **6**D shows the fourth conductive gate level structure **501***d* separated from the fifth conductive gate level structure **501***e* by a second end-to-end spacing **6***a***87** as measured in the parallel direction (y-direction). FIG. **6**D shows the first end-to-end spacing **6***a***85** positioned over the inner non-diffusion region between the two diffusion regions **401** and **403** of different diffusion types. FIG. **6**D shows the second end-to-end spacing **6***a***87** positioned over the inner non-diffusion region between the two diffusion regions **401** and **403** of different diffusion types. FIG. **6**D shows the first end-to-end spacing **6***a***85** offset in the parallel direction (y-direction) from the second end-to-end spacing **6***a***87**.

FIG. **6**D shows the first, second, fourth, sixth, seventh, and eighth conductive gate level structures **501***a*, **501***b*, **501***d*, **501***f*, **501***g*, **501***h*, respectively, each having an end aligned with a first common position **6***a***81** in the parallel direction (y-direction). FIG. **6**D shows the first, third, fifth, sixth, seventh, and eighth conductive gate level structures **501***a*, **501***c*, **501***e*, **501***f*, **501***g*, **501***h*, respectively, each having an end aligned with a second common position **6***a***83** in the parallel direction (y-direction).

FIG. **6**E shows an annotated version of FIG. **6**. The features depicted in FIG. **6**E are exactly the same as the features depicted in FIG. **6**. FIG. **6**E shows the second conductive gate level feature **501***b* having an outer extension distance **6***a***105** as measured in the parallel direction (y-direction) away from the gate electrode of the transistor **6***a***49** and away from the transistor **6***a***39**. FIG. **6**E shows the second conductive gate level feature **501***b* having an inner extension distance **6***a***107** as measured in the parallel direction (y-direction) away from the gate electrode of the transistor **6***a***49** and toward the transistor **6***a***39**. FIG. **6**E shows the third conductive gate level feature **501***c* having an outer extension distance **6***a***111** as measured in the parallel direction (y-direction) away from the gate electrode of the transistor **6***a***39** and away from the transistor **6***a***49**. FIG. **6**E shows the third conductive gate level feature **501***c* having an inner extension distance **6***a***109** as measured in the parallel direction (y-direction) away from the gate electrode of the transistor **6***a***39** and toward the transistor **6***a***49**.

FIG. **6**E shows the fourth conductive gate level feature **501***d* having an outer extension distance **6***a***113** as measured in the parallel direction (y-direction) away from the gate electrode of the transistor **6***a***51** and away from the transistor **6***a***41**. FIG. **6**E shows the fourth conductive gate level feature **501***d* having an inner extension distance **6***a***115** as measured in the parallel direction (y-direction) away from the gate electrode of the transistor **6***a***51** and toward the transistor **6***a***41**. FIG. **6**E shows the fifth conductive gate level feature **501***e* having an outer extension distance **6***a***119** as measured in the parallel direction (y-direction) away from the gate electrode of the transistor **6***a***41** and away from the transistor **6***a***51**. FIG. **6**E shows the fifth conductive gate level feature **501***e* having an inner extension distance **6***a***117** as measured in the parallel direction (y-direction) away from the gate electrode of the transistor **6***a***41** and toward the transistor **6***a***51**. FIG. **7**A is an illustration showing a traditional approach for making contact to a gate electrode, e.g., polysilicon feature. In the traditional configuration of FIG. **7**A, an enlarged rectangular gate electrode region **707** is defined where a gate electrode contact **709** is to be located. The enlarged rectangular gate electrode region **707** introduces a bend of distance **705** in the gate electrode. The bend associated with the enlarged rectangular gate electrode region **707** sets up undesirable light interactions and distorts the gate electrode line **711**. Distortion of the gate electrode line **711** is especially problematic when the gate electrode width is about the same as a transistor length.

FIG. **7**B is an illustration showing a gate electrode contact **601**, e.g., polysilicon contact, defined in accordance with one embodiment of the present invention. The gate electrode contact **601** is drawn to overlap the edges of the gate electrode feature **501**, and extend in a direction substantially perpendicular to the gate electrode feature **501**. In one embodiment, the gate electrode contact **601** is drawn such that the vertical dimension **703** is same as the vertical dimension used for the diffusion contacts **503**. For example, if the diffusion contact **503** opening is specified to be 0.12 μm square then the vertical dimension of the gate electrode contact **601** is drawn at 0.12 μm. However, in other embodiments, the gate electrode contact **601** can be drawn such that the vertical dimension **703** is different from the vertical dimension used for the diffusion contacts **503**.

In one embodiment, the gate electrode contact **601** extension **701** beyond the gate electrode feature **501** is set such that maximum overlap is achieved between the gate electrode contact **601** and the gate electrode feature **501**. The extension **701** is defined to accommodate line end shortening of the gate electrode contact **601**, and misalignment between the gate electrode contact layer and gate electrode feature layer. The length of the gate electrode contact **601** is defined to ensure maximum surface area contact between the gate electrode contact **601** and the gate electrode feature **501**, wherein the maximum surface area contact is defined by the width of the gate electrode feature **501**.

FIG. **8**A is an illustration showing a metal 1 layer defined above the gate electrode contact layer of FIG. **6**, in accordance with one embodiment of the present invention. The metal 1 layer includes a number of metal 1 tracks **801-821** defined to include linear shaped features extending in a parallel relationship across the dynamic array. The metal 1 tracks **801-821** extend in a direction substantially perpendicular to the gate electrode features **501** in the underlying gate electrode layer of FIG. **5**. Thus, in the present example, the metal 1 tracks **801-821** extend linearly across the dynamic array in the first reference direction (x). The pitch (center-to-center spacing) of the metal 1 tracks **801-821** is minimized while ensuring optimization of lithographic reinforcement, i.e., resonant imaging, provided by neighboring metal 1 tracks **801-821**. For example, in one embodiment, the metal 1 tracks **801-821** are centered on a vertical grid of about 0.24 μm for a 90 nm process technology.

Each of the metal 1 tracks **801-821** may be interrupted, i.e., broken, any number of times in linearly traversing across the dynamic array in order to provide required electrical connectivity for a particular logic function to be implemented. When a given metal 1 track **801-821** is required to be interrupted, the separation between ends of the metal 1 track segments at the point of interruption is minimized to the extent possible taking into consideration manufacturing capability and electrical effects. Minimizing the separation between ends of the metal 1 track segments at the points of interruption serves to maximize the lithographic reinforcement, and uniformity thereof, provided from neighboring metal 1 tracks. Also, in one embodiment, if adjacent metal 1 tracks need to be interrupted, the interruptions of the adjacent metal 1 tracks are made such that the respective points of interruption are offset from each other so as to avoid, to the extent possible, an occurrence of neighboring points of interruption. More specifically, points of interruption within adjacent metal 1 tracks are respectively positioned such that a line of sight does not exist through the points of interruption, wherein the line of sight is considered to extend perpendicularly to the direction in which the metal 1 tracks extend over the substrate.

In the example of FIG. **8**A, the metal 1 track **801** is connected to the ground supply, and the metal 1 track **821** is connected to the power supply voltage. In the embodiment of FIG. **8**A, the widths of the metal 1 tracks **801** and **821** are the same as the other metal 1 tracks **803-819**. However, in another embodiment, the widths of metal 1 tracks **801** and **821** are larger than the widths of the other metal 1 tracks **803-819**. FIG. **8**B is an illustration showing the metal 1 layer of FIG. **8**A with larger track widths for the metal 1 ground and power tracks (**801**A and **821**A), relative to the other metal 1 tracks **803-819**.

The metal 1 track pattern is optimally configured to optimize the use of "white space" (space not occupied by transistors). The example of FIG. **8**A includes the two shared metal 1 power tracks **801** and **821**, and nine metal 1 signal tracks **803-819**. Metal 1 tracks **803**, **809**, **811**, and **819** are defined as gate electrode contact tracks in order to minimize white space. Metal 1 tracks **805** and **807** are defined to connect to n-channel transistor source and drains. Metal 1 tracks **813**, **815**, and **817** are defined to connect to p-channel source and drains. Also, any of the nine metal 1 signal tracks **803-819** can be used as a feed through if no connection is required. For example, metal 1 tracks **813** and **815** are configured as feed through connections.

FIG. **9** is an illustration showing a via 1 layer defined above and adjacent to the metal 1 layer of FIG. **8**A, in accordance with one embodiment of the present invention. Vias **901** are defined in the via 1 layer to enable connection of the metal 1 tracks **801-821** to higher level conduction lines.

FIG. **10** is an illustration showing a metal 2 layer defined above and adjacent to the via 1 layer of FIG. **9**, in accordance with one embodiment of the present invention. The metal 2 layer includes a number of metal 2 tracks **1001** defined as linear shaped features extending in a parallel relationship across the dynamic array. The metal 2 tracks **1001** extend in a direction substantially perpendicular to the metal 1 tracks **801-821** in the underlying metal 1 layer of FIG. **8**A, and in a direction substantially parallel to the gate electrode tracks **501** in the underlying gate electrode layer of FIG. **5**. Thus, in the present example, the metal 2 tracks **1001** extend linearly across the dynamic array in the second reference direction (y).

The pitch (center-to-center spacing) of the metal 2 tracks **1001** is minimized while ensuring optimization of lithographic reinforcement, i.e., resonant imaging, provided by neighboring metal 2 tracks. It should be appreciated that regularity can be maintained on higher level interconnect layers in the same manner as implemented in the gate electrode and metal 1 layers. In one embodiment, the gate electrode feature **501** pitch and the metal 2 track pitch is the same. In another embodiment, the contacted gate electrode pitch (e.g., polysilicon-to-polysilicon space with a diffusion contact in between) is greater than the metal 2 track pitch. In this embodiment, the metal 2 track pitch is optimally set to be ⅔ or ¾ of the contacted gate electrode pitch. Thus, in this embodiment, the gate electrode track and metal 2 track align at every two gate electrode track pitches and every three metal 2 track pitches. For example, in a 90 nm process technology, the optimum contacted gate electrode track pitch is 0.36 μm, and the optimum metal 2 track pitch is 0.24 μm. In another embodiment, the gate electrode track and the metal 2 track align at every three gate electrode pitches and every four metal 2 pitches. For example, in a 90 nm process technology, the optimum contacted gate electrode track pitch is 0.36 μm, and the optimum metal 2 track pitch is 0.27 μm.

Each of the metal 2 tracks **1001** may be interrupted, i.e., broken, any number of times in linearly traversing across the dynamic array in order to provide required electrical connectivity for a particular logic function to be implemented. When a given metal 2 track **1001** is required to be interrupted, the separation between ends of the metal 2 track segments at the point of interruption is minimized to the extent possible taking into consideration manufacturing and electrical effects. Minimizing the separation between ends of the metal 2 track segments at the points of interruption serves to maximize the lithographic reinforcement, and uniformity thereof, provided from neighboring metal 2 tracks. Also, in one embodiment, if adjacent metal 2 tracks need to be interrupted, the interruptions of the adjacent metal 2 tracks are made such that the respective points of inter-

ruption are offset from each other so as to avoid, to the extent possible, an occurrence of neighboring points of interruption. More specifically, points of interruption within adjacent metal 2 tracks are respectively positioned such that a line of sight does not exist through the points of interruption, wherein the line of sight is considered to extend perpendicularly to the direction in which the metal 2 tracks extend over the substrate.

As discussed above, the conduction lines in a given metal layer above the gate electrode layer may traverse the dynamic array in a direction coincident with either the first reference direction (x) or the second reference direction (y). It should be further appreciated that the conduction lines in a given metal layer above the gate electrode layer may traverse the dynamic array in a diagonal direction relative to the first and second reference directions (x) and (y). FIG. **11** is an illustration showing conductor tracks **1101** traversing the dynamic array in a first diagonal direction relative to the first and second reference directions (x) and (y), in accordance with one embodiment of the present invention. FIG. **12** is an illustration showing conductor tracks **1201** traversing the dynamic array in a second diagonal direction relative to the first and second reference directions (x) and (y), in accordance with one embodiment of the present invention.

As with the metal 1 and metal 2 tracks discussed above, the diagonal traversing conductor tracks **1101** and **1201** of FIGS. **11** and **12** may be interrupted, i.e., broken, any number of times in linearly traversing across the dynamic array in order to provide required electrical connectivity for a particular logic function to be implemented. When a given diagonal traversing conductor track is required to be interrupted, the separation between ends of the diagonal conductor track at the point of interruption is minimized to the extent possible taking into consideration manufacturing and electrical effects. Minimizing the separation between ends of the diagonal conductor track at the points of interruption serves to maximize the lithographic reinforcement, and uniformity thereof, provided from neighboring diagonal conductor tracks.

An optimal layout density within the dynamic array is achieved by implementing the following design rules:

at least two metal 1 tracks be provided across the n-channel device area;

at least two metal 1 tracks be provided across the p-channel device area;

at least two gate electrode tracks be provided for the n-channel device; and

at least two gate electrode tracks be provided for the p-channel device.

Contacts and vias are becoming the most difficult mask from a lithographic point of view. This is because the contacts and vias are getting smaller, more closely spaced, and are randomly distributed. The spacing and density of the cuts (contact or vias) makes it extremely difficult to reliably print the shapes. For example, cut shapes may be printed improperly due to destructive interference patterns from neighboring shapes or lack of energy on lone shapes. If a cut is properly printed, the manufacturing yield of the associated contact or via is extremely high. Sub-resolution contacts can be provided to reinforce the exposure of the actual contacts, so long as the sub-resolution contacts do not resolve. Also, the sub-resolution contacts can be of any shape so long as they are smaller than the resolution capability of the lithographic process.

FIG. **13**A is an illustration showing an example of a sub-resolution contact layout used to lithographically reinforce diffusion contacts and gate electrode contacts, in accordance with one embodiment of the present invention. Sub-resolution contacts **1301** are drawn such that they are below the resolution of the lithographic system and will not be printed. The function of the sub-resolution contacts **1301** is to increase the light energy at the desired contact locations, e.g., **503**, **601**, through resonant imaging. In one embodiment, sub-resolution contacts **1301** are placed on a grid such that both gate electrode contacts **601** and diffusion contacts **503** are lithographically reinforced. For example, sub-resolution contacts **1301** are placed on a grid that is equal to one-half the diffusion contact **503** grid spacing to positively impact both gate electrode contacts **601** and diffusion contacts **503**. In one embodiment, a vertical spacing of the sub-resolution contacts **1301** follows the vertical spacing of the gate electrode contacts **601** and diffusion contacts **503**.

Grid location **1303** in FIG. **13**A denotes a location between adjacent gate electrode contacts **601**. Depending upon the lithographic parameters in the manufacturing process, it is possible that a sub-resolution contact **1301** at this grid location would create an undesirable bridge between the two adjacent gate electrode contacts **601**. If bridging is likely to occur, a sub-resolution contact **1301** at location **1303** can be omitted. Although FIG. **13**A shows an embodiment where sub-resolution contacts are placed adjacent to actual features to be resolved and not elsewhere, it should be understood that another embodiment may place a sub-resolution contact at each available grid location so as to fill the grid.

FIG. **13**B is an illustration showing the sub-resolution contact layout of FIG. **13**A with sub-resolution contacts defined to fill the grid to the extent possible, in accordance with one embodiment of the present invention. It should be appreciated that while the embodiment of FIG. **13**B fills the grid to the extent possible with sub-resolution contacts, placement of sub-resolution contacts is avoided at locations that would potentially cause undesirable bridging between adjacent fully resolved features.

FIG. **13**C is an illustration showing an example of a sub-resolution contact layout utilizing various shaped sub-resolution contacts, in accordance with one embodiment of the present invention. Alternative sub-resolution contact shapes can be utilized so long as the sub-resolution contacts are below the resolution capability of the manufacturing process. FIG. **13**C shows the use of "X-shaped" sub-resolution contacts **1305** to focus light energy at the corners of the adjacent contacts. In one embodiment, the ends of the X-shaped sub-resolution contact **1305** are extended to further enhance the deposition of light energy at the corners of the adjacent contacts.

FIG. **13**D is an illustration showing an exemplary implementation of alternate phase shift masking (APSM) with sub-resolution contacts, in accordance with one embodiment of the present invention. As in FIG. **13**A, sub-resolution contacts are utilized to lithographically reinforce diffusion contacts **503** and gate electrode contacts **601**. APSM is used to improve resolution when neighboring shapes create destructive interference patterns. The APSM technique modifies the mask so that the phase of light traveling through the mask on neighboring shapes is 180 degrees out of phase. This phase shift serves to remove destructive interference and allowing for greater contact density. By way of example, contacts in FIG. **13**D marked with a plus "+" sign represent contacts exposed with light waves of a first phase while contacts marked with a minus sign "−" represent contacts exposed with light waves that are shifted in phase by 180 degrees relative to the first phase used for the "+" sign

contacts. It should be appreciated that the APSM technique is utilized to ensure that adjacent contacts are separated from each other.

As feature sizes decrease, semiconductor dies are capable of including more gates. As more gates are included, however, the density of the interconnect layers begins to dictate the die size. This increasing demand on the interconnect layers drives higher levels of interconnect layers. However, the stacking of interconnect layers is limited in part by the topology of the underlying layers. For example, as interconnect layers are built up, islands, ridges, and troughs can occur. These islands, ridges, and troughs can cause breaks in the interconnect lines that cross them.

To mitigate these islands and troughs, the semiconductor manufacturing process utilizes a chemical mechanical polishing (CMP) procedure to mechanically and chemically polish the surface of the semiconductor wafer such that each subsequent interconnect layer is deposited on a substantially flat surface. Like the photolithography process the quality of the CMP process is layout pattern dependent. Specifically, an uneven distribution of a layout features across a die or a wafer can cause too much material to be removed in some places and not enough material to be removed in other places, thus causing variations in the interconnect thickness and unacceptable variations in the capacitance and resistance of the interconnect layer. The capacitance and resistance variation within the interconnect layer may alter the timing of a critical net causing design failure.

The CMP process requires that dummy fill be added in the areas without interconnect shapes so that a substantially uniform wafer topology is provided to avoid dishing and improve center-to-edge uniformity. Traditionally, dummy fill is placed post-design. Thus, in the traditional approach the designer is not aware of the dummy fill characteristics. Consequently, the dummy fill placed post-design may adversely influence the design performance in a manner that has not been evaluated by the designer. Also, because the conventional topology prior to the dummy fill is unconstrained, i.e., non-uniform, the post-design dummy fill will not be uniform and predictable. Therefore, in the conventional process, the capacitive coupling between the dummy fill regions and the neighboring active nets cannot be predicted by the designer.

As previously discussed, the dynamic array disclosed herein provides optimal regularity by maximally filling all interconnect tracks from gate electrode layer upward. If multiple nets are required in a single interconnect track, the interconnect track is split with a minimally spaced gap. For example, track **809** representing the metal 1 conduction line in FIG. **8**A represents three separate nets in the same track, where each net corresponds to a particular track segment. More specifically, there are two poly contact nets and a floating net to fill the track with minimal spacing between the track segments. The substantially complete filling of tracks maintains the regular pattern that creates resonant images across the dynamic array. Also, the regular architecture of the dynamic array with maximally filled interconnect tracks ensures that the dummy fill is placed in a uniform manner across the die. Therefore, the regular architecture of the dynamic array assists the CMP process to produce substantially uniform results across the die/wafer. Also, the regular gate pattern of the dynamic array assists with gate etching uniformity (microloading). Additionally, the regular architecture of the dynamic array combined with the maximally filled interconnect tracks allows the designer to analyze the capacitive coupling effects associated with the maximally filled tracks during the design phase and prior to fabrication.

Because the dynamic array sets the size and spacing of the linearly shaped features, i.e., tracks and contacts, in each mask layer, the design of the dynamic array can be optimized for the maximum capability of the manufacturing equipment and processes. That is to say, because the dynamic array is restricted to the regular architecture for each layer above diffusion, the manufacturer is capable of optimizing the manufacturing process for the specific characteristics of the regular architecture. It should be appreciated that with the dynamic array, the manufacturer does not have to be concerned with accommodating the manufacture of a widely varying set of arbitrarily-shaped layout features as is present in conventional unconstrained layouts.

An example of how the capability of manufacturing equipment can be optimized is provided as follows. Consider that a 90 nm process has a metal 2 pitch of 280 nm. This metal 2 pitch of 280 nm is not set by the maximum capability of equipment. Rather, this metal 2 pitch of 280 nm is set by the lithography of the vias. With the via lithography issues removed, the maximum capability of the equipment allows for a metal 2 pitch of about 220 nm. Thus, the design rules for metal 2 pitch include about 25% margin to account for the light interaction unpredictability in the via lithography.

The regular architecture implemented within the dynamic array allows the light interaction unpredictability in the via lithography to be removed, thus allowing for a reduction in the metal 2 pitch margin. Such a reduction in the metal 2 pitch margin allows for a more dense design, i.e., allows for optimization of chip area utilization. Additionally, with the restricted, i.e., regular, topology afforded by the dynamic array, the margin in the design rules can be reduced. Moreover, not only can the excess margin beyond the capability of the process be reduced, the restricted topology afforded by the dynamic array also allows the number of required design rules to be substantially reduced. For example, a typical design rule set for an unconstrained topology could have more than 600 design rules. A design rule set for use with the dynamic array may have about 45 design rules. Therefore, the effort required to analyze and verify the design against the design rules is decreased by more than a factor of ten with the restricted topology of the dynamic array.

When dealing with line end-to-line end gaps (i.e., track segment-to-track segment gaps) in a given track of a mask layer in the dynamic array, a limited number of light interactions exist. This limited number of light interactions can be identified, predicted, and accurately compensated for ahead of time, dramatically reducing or completely eliminating the requirement for OPC/RET. The compensation for light interactions at line end-to-line end gaps represents a lithographic modification of the as-drawn feature, as opposed to a correction based on modeling of interactions, e.g., OPC/RET, associated with the as-drawn feature.

Also, with the dynamic array, changes to the as-drawn layout are only made where needed. In contrast, OPC is performed over an entire layout in a conventional design flow. In one embodiment, a correction model can be implemented as part of the layout generation for the dynamic array. For example, due to the limited number of possible line end gap interactions, a router can be programmed to insert a line break having characteristics defined as a function of its surroundings, i.e., as a function of its particular line end gap light interactions. It should be further appreci-

ated that the regular architecture of the dynamic array allows the line ends to be adjusted by changing vertices rather than by adding vertices. Thus, in contrast with unconstrained topologies that rely on the OPC process, the dynamic array significantly reduces the cost and risk of mask production. Also, because the line end gap interactions in the dynamic array can be accurately predicted in the design phase, compensation for the predicted line end gap interactions during the design phase does not increase risk of design failure.

In conventional unconstrained topologies, designers are required to have knowledge of the physics associated with the manufacturing process due to the presence of design dependent failures. With the grid-based system of the dynamic array as disclosed herein, the logical design can be separated from the physical design. More specifically, with the regular architecture of the dynamic array, the limited number of light interactions to be evaluated within the dynamic array, and the design independent nature of the dynamic array, designs can be represented using a grid point based netlist, as opposed to a physical netlist.

With the dynamic array, the design is not required to be represented in terms of physical information. Rather, the design can be represented as a symbolic layout. Thus, the designer can represent the design from a pure logic perspective without having to represent physical characteristics, e.g., sizes, of the design. It should be understood that the grid-based netlist, when translated to physical, matches the optimum design rules exactly for the dynamic array platform. When the grid-based dynamic array moves to a new technology, e.g., smaller technology, a grid-based netlist can be moved directly to the new technology because there is no physical data in the design representation. In one embodiment, the grid-based dynamic array system includes a rules database, a grid-based (symbolic) netlist, and the dynamic array architecture.

It should be appreciated that the grid-based dynamic array eliminates topology related failures associated with conventional unconstrained architectures. Also, because the manufacturability of the grid-based dynamic array is design independent, the yield of the design implemented on the dynamic array is independent of the design. Therefore, because the validity and yield of the dynamic array is preverified, the grid-based netlist can be implemented on the dynamic array with preverified yield performance.

FIG. **14** is an illustration showing a semiconductor chip structure **1400**, in accordance with one embodiment of the present invention. The semiconductor chip structure **1400** represents an exemplary portion of a semiconductor chip, including a diffusion region **1401** having a number of conductive lines **1403**A-**1403**G defined thereover. The diffusion region **1401** is defined in a substrate **1405**, to define an active region for at least one transistor device. The diffusion region **1401** can be defined to cover an area of arbitrary shape relative to the substrate **1405** surface.

The conductive lines **1403**A-**1403**G are arranged to extend over the substrate **1405** in a common direction **1407**. It should also be appreciated that each of the number of conductive lines **1403**A-**1403**G are restricted to extending over the diffusion region **1401** in the common direction **1407**. In one embodiment, the conductive lines **1403**A-**1403**G defined immediately over the substrate **1405** are polysilicon lines. In one embodiment, each of the conductive lines **1403**A-**1403**G is defined to have essentially the same width **1409** in a direction perpendicular to the common direction **1407** of extension. In another embodiment, some of the conductive lines **1403**A-**1403**G are defined to have different widths relative to the other conductive lines. However, regardless of the width of the conductive lines **1403**A-**1403**G, each of the conductive lines **1403**A-**1403**G is spaced apart from adjacent conductive lines according to essentially the same center-to-center pitch **1411**.

As shown in FIG. **14**, some of the conductive lines (**1403**B-**1403**E) extend over the diffusion region **1401**, and other conductive lines (**1403**A, **1403**F, **1403**G) extend over non-diffusion portions the substrate **1405**. It should be appreciated that the conductive lines **1403**A-**1403**G maintain their width **1409** and pitch **1411** regardless of whether they are defined over diffusion region **1401** or not. Also, it should be appreciated that the conductive lines **1403**A-**1403**G maintain essentially the same length **1413** regardless of whether they are defined over diffusion region **1401** or not, thereby maximizing lithographic reinforcement between the conductive lines **1403**A-**1403**G across the substrate. In this manner, some of the conductive lines, e.g., **1403**D, defined over the diffusion region **1401** include a necessary active portion **1415**, and one or more uniformity extending portions **1417**.

It should be appreciated that the semiconductor chip structure **1400** represents a portion of the dynamic array described above with respect to FIGS. **2**-**13**D. Therefore, it should be understood that the uniformity extending portions **1417** of the conductive lines (**1403**B-**1403**E) are present to provide lithographic reinforcement of neighboring conductive lines **1403**A-**1403**G. Also, although they may not be required for circuit operation, each of conductive lines **1403**A, **1403**F, and **1403**G are present to provide lithographic reinforcement of neighboring conductive lines **1403**A-**1403**G.

The concept of the necessary active portion **1415** and the uniformity extending portions **1417** also applies to higher level interconnect layers. As previously described with regard to the dynamic array architecture, adjacent interconnect layers traverse over the substrate in transverse directions, e.g., perpendicular or diagonal directions, to enable routing/connectivity required by the logic device implemented within the dynamic array. As with the conductive lines **1403**A-**1403**G, each of the conductive lines within an interconnect layer may include a required portion (necessary active portion) to enable required routing/connectivity, and a non-required portion (uniformity extending portion) to provide lithographic reinforcement to neighboring conductive lines. Also, as with the conductive lines **1403**A-**1403**G, the conductive lines within an interconnect layer extend in a common direction over the substrate, have essentially the same width, and are spaced apart from each other according to an essentially constant pitch.

In one embodiment, conductive lines within an interconnect layer follow essentially the same ratio between line width and line spacing. For example, at 90 nm the metal 4 pitch is 280 nm with a line width and line spacing equal to 140 nm. Larger conductive lines can be printed on a larger line pitch if the line width is equal to the line spacing.

FIG. **14**A shows an annotated version of FIG. **14**. The features depicted in FIG. **14**A are exactly the same as the features depicted in FIG. **14**. FIG. **14**A shows each of the conductive lines **1403**B and **1403**C to have a uniformity extending portion **14***a***01** as measured in the common direction **1407**. FIG. **14**A shows each of the conductive lines **1403**D and **1403**E to have a uniformity extending portion **14***a***03** as measured in the common direction **1407**. FIG. **14**A shows each of the conductive lines **1403**B, **1403**C, **1403**D, and **1403**E to have a uniformity extending portion **14***a***05** as measured in the common direction **1407**. FIG. **15** shows an

example layout architecture defined in accordance with one embodiment of the present invention. The layout architecture follows a grid pattern and is based upon a horizontal grid and a vertical grid. The horizontal grid is set by the poly gate pitch. The vertical pitch is set by the metal 1/metal 3 pitch. All of the rectangular shapes should be centered on a grid point. The layout architecture minimizes the use of bends to eliminate unpredictable lithographic interactions. Bends are allowed on the diffusion layer to control transistor device sizes. Other layers should be rectangular in shape and fixed in one dimension.

FIG. **15**A shows an annotated version of FIG. **15**. The features depicted in FIG. **15**A are exactly the same as the features depicted in FIG. **15**. FIG. **15**A shows a first electrical connection **15***a***01** (as denoted by the heavy solid black line). FIG. **15**A shows a second electrical connection **15***a***03** (as denoted by the heavy dashed black line).

The invention described herein can be embodied as computer readable code on a computer readable medium. The computer readable medium is any data storage device that can store data which can be thereafter be read by a computer system. Examples of the computer readable medium include hard drives, network attached storage (NAS), read-only memory, random-access memory, CD-ROMs, CD-Rs, CD-RWs, magnetic tapes, and other optical and non-optical data storage devices. The computer readable medium can also be distributed over a network coupled computer systems so that the computer readable code is stored and executed in a distributed fashion. Additionally, a graphical user interface (GUI) implemented as computer readable code on a computer readable medium can be developed to provide a user interface for performing any embodiment of the present invention.

While this invention has been described in terms of several embodiments, it will be appreciated that those skilled in the art upon reading the preceding specifications and studying the drawings will realize various alterations, additions, permutations and equivalents thereof. Therefore, it is intended that the present invention includes all such alterations, additions, permutations, and equivalents as fall within the true spirit and scope of the invention.

What is claimed is:

1. A semiconductor chip, comprising:

a region including a plurality of transistors, each of the plurality of transistors in the region forming part of circuitry associated with execution of one or more logic functions, the region including at least eight conductive structures formed within the semiconductor chip, some of the at least eight conductive structures forming at least one transistor gate electrode,

each of the at least eight conductive structures respectively having a corresponding top surface, wherein an entirety of a periphery of the corresponding top surface is defined by a corresponding first end, a corresponding second end, a corresponding first edge, and a corresponding second edge, such that a total distance along the entirety of the periphery of the corresponding top surface is equal to a sum of a total distance along the corresponding first edge and a total distance along the corresponding second edge and a total distance along the corresponding first end and a total distance along the corresponding second end,

wherein the total distance along the corresponding first edge is greater than two times the total distance along the corresponding first end,

wherein the total distance along the corresponding first edge is greater than two times the total distance along the corresponding second end,

wherein the total distance along the corresponding second edge is greater than two times the total distance along the corresponding first end,

wherein the total distance along the corresponding second edge is greater than two times the total distance along the corresponding second end,

wherein the corresponding first end extends from the corresponding first edge to the corresponding second edge and is located principally within a space between the corresponding first and second edges,

wherein the corresponding second end extends from the corresponding first edge to the corresponding second edge and is located principally within the space between the corresponding first and second edges,

the top surfaces of the at least eight conductive structures co-planar with each other,

each of the at least eight conductive structures having a corresponding lengthwise centerline oriented in a first direction along its top surface and extending from its first end to its second end,

each of the at least eight conductive structures having a length as measured along its lengthwise centerline from its first end to its second end,

wherein the first edge of each of the at least eight conductive structures is substantially straight,

wherein the second edge of each of the at least eight conductive structures is substantially straight,

each of the at least eight conductive structures having both its first edge and its second edge oriented substantially parallel to its lengthwise centerline,

each of the at least eight conductive structures having a width measured in a second direction perpendicular to the first direction at a midpoint of its lengthwise centerline,

each of the first direction and the second direction oriented substantially parallel to the co-planar top surfaces of the at least eight conductive structures,

wherein the at least eight conductive structures are positioned in a side-by-side manner such that each of the at least eight conductive structures is positioned to have at least a portion of its length beside at least a portion of the length of another of the at least eight conductive structures,

wherein the width of each of the at least eight conductive structures is less than 45 nanometers, the region having a size of about 965 nanometers as measured in the second direction, each of the at least eight conductive structures positioned such that a distance as measured in the second direction between its lengthwise centerline and the lengthwise centerline of at least one other of the at least eight conductive structures is substantially equal to a first pitch that is less than or equal to about 193 nanometers,

the region including a first transistor of a first transistor type, a second transistor of the first transistor type, a first transistor of a second transistor type, and a second transistor of the second transistor type,

wherein each transistor of the first transistor type having its gate electrode formed by any of the at least eight conductive structures is included in a first collection of transistors, and wherein each transistor of the second transistor type having its gate electrode formed by any of the at least eight conductive structures is included in a second collection of transistors, wherein the first and

second collections of transistors are separated from each other by an inner sub-region of the region, wherein the inner sub-region does not include a source or a drain of any transistor,

the first transistor of the first transistor type having a gate electrode formed by a portion of a first conductive structure of the at least eight conductive structures, wherein any transistor having its gate electrode formed by the first conductive structure is of the first transistor type,

the second transistor of the first transistor type having a gate electrode formed by a portion of a second conductive structure of the at least eight conductive structures, the first transistor of the second transistor type having a gate electrode formed by another portion of the second conductive structure, the second conductive structure positioned such that its lengthwise centerline is separated from the lengthwise centerline of the first conductive structure by the first pitch as measured in the second direction,

the second transistor of the second transistor type having a gate electrode formed by one of the at least eight conductive structures, the conductive structure that forms the gate electrode of the second transistor of the second transistor type positioned such that its lengthwise centerline is separated from the lengthwise centerline of the second conductive structure by the first pitch as measured in the second direction, wherein any transistor having its gate electrode formed by the conductive structure that forms the gate electrode of the second transistor of the second transistor type is of the second transistor type,

the first conductive structure having a total length as measured in the first direction that is greater than one-half of a total length of the second conductive structure as measured in the first direction,

the second conductive structure having at least one end substantially positioned at a first reference line oriented in the second direction, and the conductive structure that forms the gate electrode of the second transistor of the second transistor type also having at least one end substantially positioned at the first reference line.

2. The semiconductor chip as recited in claim **1**, wherein the region includes a first interconnect conductive structure positioned within either of a first interconnect level, a second interconnect level, a third interconnect level, or a fourth interconnect level,

the first interconnect conductive structure having a top surface, an entirety of a periphery of the top surface of the first interconnect conductive structure defined by a first end of the first interconnect conductive structure, a second end of the first interconnect conductive structure, a first edge of the first interconnect conductive structure, and a second edge of the first interconnect conductive structure, such that a total distance along the entirety of the periphery of the top surface of the first interconnect conductive structure is equal to a sum of a total distance along the first edge of the first interconnect conductive structure and a total distance along the second edge of the first interconnect conductive structure and a total distance along the first end of the first interconnect conductive structure and a total distance along the second end of the first interconnect conductive structure,

wherein the total distance along the first edge of the first interconnect conductive structure is greater than two times the total distance along the first end of the first interconnect conductive structure,

wherein the total distance along the first edge of the first interconnect conductive structure is greater than two times the total distance along the second end of the first interconnect conductive structure,

wherein the total distance along the second edge of the first interconnect conductive structure is greater than two times the total distance along the first end of the first interconnect conductive structure,

wherein the total distance along the second edge of the first interconnect conductive structure is greater than two times the total distance along the second end of the first interconnect conductive structure,

wherein the first end of the first interconnect conductive structure extends from the first edge of the first interconnect conductive structure to the second edge of the first interconnect conductive structure and is located principally within a space between the first and second edges of the first interconnect conductive structure,

wherein the second end of the first interconnect conductive structure extends from the first edge of the first interconnect conductive structure to the second edge of the first interconnect conductive structure and is located principally within the space between the first and second edges of the first interconnect conductive structure,

the first interconnect conductive structure having a lengthwise centerline oriented in the first direction along its top surface and extending from its first end to its second end,

wherein the first edge of the first interconnect conductive structure is substantially straight and is oriented substantially parallel to the lengthwise centerline of the first interconnect conductive structure,

wherein the second edge of the first interconnect conductive structure is substantially straight and is oriented substantially parallel to the lengthwise centerline of the first interconnect conductive structure,

wherein the first interconnect conductive structure has a length measured along its lengthwise centerline from its first end to its second end,

wherein the first interconnect conductive structure has a width measured in the second direction perpendicular to the first direction at a midpoint of the lengthwise centerline of the first interconnect conductive structure,

wherein the first interconnect level is formed at a vertical position within the semiconductor chip above the at least eight conductive structures, wherein the first interconnect level is separated from the co-planar top surfaces of the at least eight conductive structures by at least one dielectric material,

wherein the second interconnect level is formed at a vertical position within the semiconductor chip above the first interconnect level,

wherein the third interconnect level is formed at a vertical position within the semiconductor chip above the second interconnect level, and

wherein the fourth interconnect level is formed at a vertical position within the semiconductor chip above the third interconnect level.

3. The semiconductor chip as recited in claim **2**, wherein the region includes a second interconnect conductive structure positioned next to and spaced apart from the first interconnect conductive structure in a same interconnect level as the first interconnect conductive structure,

the second interconnect conductive structure having a top surface, an entirety of a periphery of the top surface of the second interconnect conductive structure defined by a first end of the second interconnect conductive structure, a second end of the second interconnect conductive structure, a first edge of the second interconnect conductive structure, and a second edge of the second interconnect conductive structure, such that a total distance along the entirety of the periphery of the top surface of the second interconnect conductive structure is equal to a sum of a total distance along the first edge of the second interconnect conductive structure and a total distance along the second edge of the second interconnect conductive structure and a total distance along the first end of the second interconnect conductive structure and a total distance along the second end of the second interconnect conductive structure,

wherein the total distance along the first edge of the second interconnect conductive structure is greater than two times the total distance along the first end of the second interconnect conductive structure,

wherein the total distance along the first edge of the second interconnect conductive structure is greater than two times the total distance along the second end of the second interconnect conductive structure,

wherein the total distance along the second edge of the second interconnect conductive structure is greater than two times the total distance along the first end of the second interconnect conductive structure,

wherein the total distance along the second edge of the second interconnect conductive structure is greater than two times the total distance along the second end of the second interconnect conductive structure,

wherein the first end of the second interconnect conductive structure extends from the first edge of the second interconnect conductive structure to the second edge of the second interconnect conductive structure and is located principally within a space between the first and second edges of the second interconnect conductive structure,

wherein the second end of the second interconnect conductive structure extends from the first edge of the second interconnect conductive structure to the second edge of the second interconnect conductive structure and is located principally within the space between the first and second edges of the second interconnect conductive structure,

the second interconnect conductive structure having a lengthwise centerline oriented in the first direction along its top surface and extending from its first end to its second end,

wherein the first edge of the second interconnect conductive structure is substantially straight and is oriented substantially parallel to the lengthwise centerline of the second interconnect conductive structure,

wherein the second edge of the second interconnect conductive structure is substantially straight and is oriented substantially parallel to the lengthwise centerline of the second interconnect conductive structure,

wherein the second interconnect conductive structure has a length measured along its lengthwise centerline from its first end to its second end,

wherein the second interconnect conductive structure has a width measured in the second direction perpendicular to the first direction at a midpoint of the lengthwise centerline of the second interconnect conductive structure.

4. The semiconductor chip as recited in claim **3**, wherein the first and second interconnect conductive structures are positioned such that a distance as measured in the second direction between their lengthwise centerlines is substantially equal to a second pitch, wherein the second pitch is a fractional multiple of the first pitch.

5. The semiconductor chip as recited in claim **4**, wherein the second pitch is less than or equal to the first pitch.

6. The semiconductor chip as recited in claim **5**, wherein at least one of the at least eight conductive structures within the region does not form a gate electrode of any transistor and has a width as measured in the second direction that is substantially equal to a width as measured in the second direction of another of the at least eight conductive structures.

7. The semiconductor chip as recited in claim **6**, wherein the first and second interconnect conductive structures are positioned within either of the first interconnect level, the second interconnect level, or the third interconnect level.

8. The semiconductor chip as recited in claim **1**, wherein the region includes a first interconnect conductive structure positioned within either of a first interconnect level, a second interconnect level, a third interconnect level, or a fourth interconnect level,

the first interconnect conductive structure having a top surface, an entirety of a periphery of the top surface of the first interconnect conductive structure defined by a first end of the first interconnect conductive structure, a second end of the first interconnect conductive structure, a first edge of the first interconnect conductive structure, and a second edge of the first interconnect conductive structure, such that a total distance along the entirety of the periphery of the top surface of the first interconnect conductive structure is equal to a sum of a total distance along the first edge of the first interconnect conductive structure and a total distance along the second edge of the first interconnect conductive structure and a total distance along the first end of the first interconnect conductive structure and a total distance along the second end of the first interconnect conductive structure,

wherein the total distance along the first edge of the first interconnect conductive structure is greater than two times the total distance along the first end of the first interconnect conductive structure,

wherein the total distance along the first edge of the first interconnect conductive structure is greater than two times the total distance along the second end of the first interconnect conductive structure,

wherein the total distance along the second edge of the first interconnect conductive structure is greater than two times the total distance along the first end of the first interconnect conductive structure,

wherein the total distance along the second edge of the first interconnect conductive structure is greater than two times the total distance along the second end of the first interconnect conductive structure,

wherein the first end of the first interconnect conductive structure extends from the first edge of the first interconnect conductive structure to the second edge of the first interconnect conductive structure and is located principally within a space between the first and second edges of the first interconnect conductive structure,

wherein the second end of the first interconnect conductive structure extends from the first edge of the first interconnect conductive structure to the second edge of the first interconnect conductive structure and is located

principally within the space between the first and second edges of the first interconnect conductive structure,

the first interconnect conductive structure having a lengthwise centerline oriented in the second direction along its top surface and extending from its first end to its second end,

wherein the first edge of the first interconnect conductive structure is substantially straight and is oriented substantially parallel to the lengthwise centerline of the first interconnect conductive structure,

wherein the second edge of the first interconnect conductive structure is substantially straight and is oriented substantially parallel to the lengthwise centerline of the first interconnect conductive structure,

wherein the first interconnect conductive structure has a length measured along its lengthwise centerline from its first end to its second end,

wherein the first interconnect conductive structure has a width measured in the first direction perpendicular to the second direction at a midpoint of the lengthwise centerline of the first interconnect conductive structure,

wherein the first interconnect level is formed at a vertical position within the semiconductor chip above the at least eight conductive structures, wherein the first interconnect level is separated from the co-planar top surfaces of the at least eight conductive structures by at least one dielectric material,

wherein the second interconnect level is formed at a vertical position within the semiconductor chip above the first interconnect level,

wherein the third interconnect level is formed at a vertical position within the semiconductor chip above the second interconnect level, and

wherein the fourth interconnect level is formed at a vertical position within the semiconductor chip above the third interconnect level.

9. The semiconductor chip as recited in claim **8**, wherein the region includes a second interconnect conductive structure positioned in a same interconnect level as the first interconnect conductive structure,

the second interconnect conductive structure having a top surface, an entirety of a periphery of the top surface of the second interconnect conductive structure defined by a first end of the second interconnect conductive structure, a second end of the second interconnect conductive structure, a first edge of the second interconnect conductive structure, and a second edge of the second interconnect conductive structure, such that a total distance along the entirety of the periphery of the top surface of the second interconnect conductive structure is equal to a sum of a total distance along the first edge of the second interconnect conductive structure and a total distance along the second edge of the second interconnect conductive structure and a total distance along the first end of the second interconnect conductive structure and a total distance along the second end of the second interconnect conductive structure,

wherein the total distance along the first edge of the second interconnect conductive structure is greater than two times the total distance along the first end of the second interconnect conductive structure,

wherein the total distance along the first edge of the second interconnect conductive structure is greater than two times the total distance along the second end of the second interconnect conductive structure,

wherein the total distance along the second edge of the second interconnect conductive structure is greater than two times the total distance along the first end of the second interconnect conductive structure,

wherein the total distance along the second edge of the second interconnect conductive structure is greater than two times the total distance along the second end of the second interconnect conductive structure,

wherein the first end of the second interconnect conductive structure extends from the first edge of the second interconnect conductive structure to the second edge of the second interconnect conductive structure and is located principally within a space between the first and second edges of the second interconnect conductive structure,

wherein the second end of the second interconnect conductive structure extends from the first edge of the second interconnect conductive structure to the second edge of the second interconnect conductive structure and is located principally within the space between the first and second edges of the second interconnect conductive structure,

the second interconnect conductive structure having a lengthwise centerline oriented in the second direction along its top surface and extending from its first end to its second end,

wherein the first edge of the second interconnect conductive structure is substantially straight and is oriented substantially parallel to the lengthwise centerline of the second interconnect conductive structure,

wherein the second edge of the second interconnect conductive structure is substantially straight and is oriented substantially parallel to the lengthwise centerline of the second interconnect conductive structure,

wherein the second interconnect conductive structure has a length measured along its lengthwise centerline from its first end to its second end,

wherein the second interconnect conductive structure has a width measured in the first direction perpendicular to the second direction at a midpoint of the lengthwise centerline of the second interconnect conductive structure,

wherein the first and second interconnect conductive structures are positioned next to and spaced apart from each other such that a distance as measured in the first direction between their lengthwise centerlines is substantially equal to a second pitch.

10. The semiconductor chip as recited in claim **9**, wherein the region includes a third interconnect conductive structure positioned in the same interconnect level as the first and second interconnect conductive structures,

the third interconnect conductive structure having a top surface, an entirety of a periphery of the top surface of the third interconnect conductive structure defined by a first end of the third interconnect conductive structure, a second end of the third interconnect conductive structure, a first edge of the third interconnect conductive structure, and a second edge of the third interconnect conductive structure, such that a total distance along the entirety of the periphery of the top surface of the third interconnect conductive structure is equal to a sum of a total distance along the first edge of the third interconnect conductive structure and a total distance along the second edge of the third interconnect conductive structure and a total distance along the first end of the third interconnect conductive structure and a

total distance along the second end of the third interconnect conductive structure,

wherein the total distance along the first edge of the third interconnect conductive structure is greater than two times the total distance along the first end of the third interconnect conductive structure,

wherein the total distance along the first edge of the third interconnect conductive structure is greater than two times the total distance along the second end of the third interconnect conductive structure,

wherein the total distance along the second edge of the third interconnect conductive structure is greater than two times the total distance along the first end of the third interconnect conductive structure,

wherein the total distance along the second edge of the third interconnect conductive structure is greater than two times the total distance along the second end of the third interconnect conductive structure,

wherein the first end of the third interconnect conductive structure extends from the first edge of the third interconnect conductive structure to the second edge of the third interconnect conductive structure and is located principally within a space between the first and second edges of the third interconnect conductive structure,

wherein the second end of the third interconnect conductive structure extends from the first edge of the third interconnect conductive structure to the second edge of the third interconnect conductive structure and is located principally within the space between the first and second edges of the third interconnect conductive structure,

the third interconnect conductive structure having a lengthwise centerline oriented in the second direction along its top surface and extending from its first end to its second end,

wherein the first edge of the third interconnect conductive structure is substantially straight and is oriented substantially parallel to the lengthwise centerline of the third interconnect conductive structure,

wherein the second edge of the third interconnect conductive structure is substantially straight and is oriented substantially parallel to the lengthwise centerline of the third interconnect conductive structure,

wherein the third interconnect conductive structure has a length measured along its lengthwise centerline from its first end to its second end,

wherein the third interconnect conductive structure has a width measured in the first direction perpendicular to the second direction at a midpoint of the lengthwise centerline of the third interconnect conductive structure,

wherein the region includes a fourth interconnect conductive structure positioned in the same interconnect level as the first, second, and third interconnect conductive structures,

the fourth interconnect conductive structure having a top surface, an entirety of a periphery of the top surface of the fourth interconnect conductive structure defined by a first end of the fourth interconnect conductive structure, a second end of the fourth interconnect conductive structure, a first edge of the fourth interconnect conductive structure, and a second edge of the fourth interconnect conductive structure, such that a total distance along the entirety of the periphery of the top surface of the fourth interconnect conductive structure is equal to a sum of a total distance along the first edge of the fourth interconnect conductive structure and a total distance along the second edge of the fourth interconnect conductive structure and a total distance along the first end of the fourth interconnect conductive structure and a total distance along the second end of the fourth interconnect conductive structure,

wherein the total distance along the first edge of the fourth interconnect conductive structure is greater than two times the total distance along the first end of the fourth interconnect conductive structure,

wherein the total distance along the first edge of the fourth interconnect conductive structure is greater than two times the total distance along the second end of the fourth interconnect conductive structure,

wherein the total distance along the second edge of the fourth interconnect conductive structure is greater than two times the total distance along the first end of the fourth interconnect conductive structure,

wherein the total distance along the second edge of the fourth interconnect conductive structure is greater than two times the total distance along the second end of the fourth interconnect conductive structure,

wherein the first end of the fourth interconnect conductive structure extends from the first edge of the fourth interconnect conductive structure to the second edge of the fourth interconnect conductive structure and is located principally within a space between the first and second edges of the fourth interconnect conductive structure,

wherein the second end of the fourth interconnect conductive structure extends from the first edge of the fourth interconnect conductive structure to the second edge of the fourth interconnect conductive structure and is located principally within the space between the first and second edges of the fourth interconnect conductive structure,

the fourth interconnect conductive structure having a lengthwise centerline oriented in the second direction along its top surface and extending from its first end to its second end,

wherein the first edge of the fourth interconnect conductive structure is substantially straight and is oriented substantially parallel to the lengthwise centerline of the fourth interconnect conductive structure,

wherein the second edge of the fourth interconnect conductive structure is substantially straight and is oriented substantially parallel to the lengthwise centerline of the fourth interconnect conductive structure,

wherein the fourth interconnect conductive structure has a length measured along its lengthwise centerline from its first end to its second end,

wherein the fourth interconnect conductive structure has a width measured in the first direction perpendicular to the second direction at a midpoint of the lengthwise centerline of the fourth interconnect conductive structure,

wherein the third and fourth interconnect conductive structures are positioned next to and spaced apart from each other such that a distance as measured in the first direction between their lengthwise centerlines is substantially equal to the second pitch.

11. The semiconductor chip as recited in claim **10**, wherein at least one of the at least eight conductive structures within the region does not form a gate electrode of any transistor and has a width as measured in the second direction that is substantially equal to a width as measured in the second direction of another of the at least eight conductive structures.

12. The semiconductor chip as recited in claim 11, wherein the first, second, and third interconnect conductive structures are positioned within either of the first interconnect level, the second interconnect level, or the third interconnect level.

13. The semiconductor chip as recited in claim 1, wherein at least one of the at least eight conductive structures is positioned at the first pitch away from the second conductive structure such that its lengthwise centerline is separated from the lengthwise centerline of the second conductive structure by the first pitch as measured in the second direction and such that at least a portion of its length is next to at least a portion of the length of the second conductive structure,

wherein a total length as measured in the first direction of the at least one of the at least eight conductive structures that is positioned at the first pitch away from the second conductive structure is substantially equal to the total length of the second conductive structure as measured in the first direction,

wherein the region includes a third conductive structure of the at least eight conductive structures, the third conductive structure positioned so that at least a portion of its length is next to at least a portion of the length of the at least one of the at least eight conductive structures that is positioned at the first pitch away from the second conductive structure, the third conductive structure positioned such that a distance as measured in the second direction between its lengthwise centerline and the lengthwise centerline of the at least one of the at least eight conductive structures that is positioned at the first pitch away from the second conductive structure is substantially equal to the first pitch, and

wherein a total length of the third conductive structure as measured in the first direction is substantially equal to the total length of the second conductive structure as measured in the first direction.

14. The semiconductor chip as recited in claim 13, wherein the at least one of the at least eight conductive structures that is positioned at the first pitch away from the second conductive structure is the conductive structure that forms the gate electrode of the second transistor of the second transistor type.

15. The semiconductor chip as recited in claim 14, wherein the third conductive structure forms at least one gate electrode of at least one transistor.

16. The semiconductor chip as recited in claim 1, wherein the region includes a third transistor of the first transistor type, a fourth transistor of the first transistor type, a third transistor of the second transistor type, and a fourth transistor of the second transistor type,

the third transistor of the first transistor type having a gate electrode formed by a portion of a third conductive structure of the at least eight conductive structures, the third transistor of the second transistor type having a gate electrode formed by another portion of the third conductive structure,

the fourth transistor of the first transistor type having a gate electrode formed by a portion of a fourth conductive structure of the at least eight conductive structures, the fourth transistor of the second transistor type having a gate electrode formed by another portion of the fourth conductive structure.

17. The semiconductor chip as recited in claim 16, wherein the first transistor of the first transistor type has a first diffusion terminal physically and electrically connected to a first diffusion terminal of the second transistor of the first transistor type, and

wherein the first transistor of the second transistor type has a first diffusion terminal physically and electrically connected to a first diffusion terminal of the second transistor of the second transistor type.

18. The semiconductor chip as recited in claim 17, wherein the region includes a fifth transistor of the first transistor type and a fifth transistor of the second transistor type,

the fifth transistor of the first transistor type having a gate electrode formed by a portion of a fifth conductive structure of the at least eight conductive structures, wherein any transistor having its gate electrode formed by the fifth conductive structure is of the first transistor type,

the fifth transistor of the second transistor type having a gate electrode formed by a portion of a sixth conductive structure of the at least eight conductive structures, wherein any transistor having its gate electrode formed by the sixth conductive structure is of the second transistor type.

19. The semiconductor chip as recited in claim 18,

wherein the lengthwise centerline of the first conductive structure is substantially aligned with the lengthwise centerline of the conductive structure that forms the gate electrode of the second transistor of the second transistor type,

the lengthwise centerline of the fifth conductive structure substantially aligned with the lengthwise centerline of the sixth conductive structure,

the gate electrode of the second transistor of the second transistor type electrically connected to the gate electrode of the fifth transistor of the first transistor type,

the gate electrode of the first transistor of the first transistor type electrically connected to the gate electrode of the fifth transistor of the second transistor type,

the first transistor of the first transistor type having a second diffusion terminal physically and electrically connected to a first diffusion terminal of the fifth transistor of the first transistor type, and

the second transistor of the second transistor type having a second diffusion terminal physically and electrically connected to a first diffusion terminal of the fifth transistor of the second transistor type.

20. The semiconductor chip as recited in claim 19, wherein a first electrical connection electrically connects the gate electrode of the second transistor of the second transistor type to the gate electrode of the fifth transistor of the first transistor type, the first electrical connection including at least one interconnect conductive structure positioned within either of a first interconnect level, a second interconnect level, or a third interconnect level,

the at least one interconnect conductive structure of the first electrical connection having a top surface, an entirety of a periphery of the top surface of the at least one interconnect conductive structure of the first electrical connection defined by a first end of the at least one interconnect conductive structure of the first electrical connection, a second end of the at least one interconnect conductive structure of the first electrical connection, a first edge of the at least one interconnect conductive structure of the first electrical connection, and a second edge of the at least one interconnect conductive structure of the first electrical connection, such that a total distance along the entirety of the

periphery of the top surface of the at least one interconnect conductive structure of the first electrical connection is equal to a sum of a total distance along the first edge of the at least one interconnect conductive structure of the first electrical connection and a total distance along the second edge of the at least one interconnect conductive structure of the first electrical connection and a total distance along the first end of the at least one interconnect conductive structure of the first electrical connection and a total distance along the second end of the at least one interconnect conductive structure of the first electrical connection,

wherein the total distance along the first edge of the at least one interconnect conductive structure of the first electrical connection is greater than two times the total distance along the first end of the at least one interconnect conductive structure of the first electrical connection,

wherein the total distance along the first edge of the at least one interconnect conductive structure of the first electrical connection is greater than two times the total distance along the second end of the at least one interconnect conductive structure of the first electrical connection,

wherein the total distance along the second edge of the at least one interconnect conductive structure of the first electrical connection is greater than two times the total distance along the first end of the at least one interconnect conductive structure of the first electrical connection,

wherein the total distance along the second edge of the at least one interconnect conductive structure of the first electrical connection is greater than two times the total distance along the second end of the at least one interconnect conductive structure of the first electrical connection,

wherein the first end of the at least one interconnect conductive structure of the first electrical connection extends from the first edge of the at least one interconnect conductive structure of the first electrical connection to the second edge of the at least one interconnect conductive structure of the first electrical connection, and

wherein the first end of the at least one interconnect conductive structure of the first electrical connection is located principally within the space between the first and second edges of the at least one interconnect conductive structure of the first electrical connection,

wherein the second end of the at least one interconnect conductive structure of the first electrical connection extends from the first edge of the at least one interconnect conductive structure of the first electrical connection to the second edge of the at least one interconnect conductive structure of the first electrical connection, and

wherein the second end of the at least one interconnect conductive structure of the first electrical connection is located principally within the space between the first and second edges of the at least one interconnect conductive structure of the first electrical connection,

the at least one interconnect conductive structure of the first electrical connection having a lengthwise centerline oriented in only one of the first direction and the second direction, the lengthwise centerline of the at least one interconnect conductive structure of the first electrical connection extending along the top surface of the at least one interconnect conductive structure of the first electrical connection and between the first and second ends of the at least one interconnect conductive structure of the first electrical connection,

wherein the first edge of the at least one interconnect conductive structure of the first electrical connection is substantially straight and is oriented substantially parallel to the lengthwise centerline of the at least one interconnect conductive structure of the first electrical connection,

wherein the second edge of the at least one interconnect conductive structure of the first electrical connection is substantially straight and is oriented substantially parallel to the lengthwise centerline of the at least one interconnect conductive structure of the first electrical connection,

wherein the at least one interconnect conductive structure of the first electrical connection has a length measured along its lengthwise centerline from its first end to its second end,

wherein the at least one interconnect conductive structure of the first electrical connection has a width measured in a direction perpendicular to its lengthwise centerline at a midpoint of its lengthwise centerline,

wherein a second electrical connection electrically connects the gate electrode of the first transistor of the first transistor type to the gate electrode of the fifth transistor of the second transistor type, the second electrical connection including at least one interconnect conductive structure positioned within either the first interconnect level, the second interconnect level, or the third interconnect level,

the at least one interconnect conductive structure of the second electrical connection having a top surface, an entirety of a periphery of the top surface of the at least one interconnect conductive structure of the second electrical connection defined by a first end of the at least one interconnect conductive structure of the second electrical connection, a second end of the at least one interconnect conductive structure of the second electrical connection, a first edge of the at least one interconnect conductive structure of the second electrical connection, and a second edge of the at least one interconnect conductive structure of the second electrical connection, such that a total distance along the entirety of the periphery of the top surface of the at least one interconnect conductive structure of the second electrical connection is equal to a sum of a total distance along the first edge of the at least one interconnect conductive structure of the second electrical connection and a total distance along the second edge of the at least one interconnect conductive structure of the second electrical connection and a total distance along the first end of the at least one interconnect conductive structure of the second electrical connection and a total distance along the second end of the at least one interconnect conductive structure of the second electrical connection,

wherein the total distance along the first edge of the at least one interconnect conductive structure of the second electrical connection is greater than two times the total distance along the first end of the at least one interconnect conductive structure of the second electrical connection,

wherein the total distance along the first edge of the at least one interconnect conductive structure of the second electrical connection is greater than two times the

total distance along the second end of the at least one interconnect conductive structure of the second electrical connection,

wherein the total distance along the second edge of the at least one interconnect conductive structure of the second electrical connection is greater than two times the total distance along the first end of the at least one interconnect conductive structure of the second electrical connection,

wherein the total distance along the second edge of the at least one interconnect conductive structure of the second electrical connection is greater than two times the total distance along the second end of the at least one interconnect conductive structure of the second electrical connection,

wherein the first end of the at least one interconnect conductive structure of the second electrical connection extends from the first edge of the at least one interconnect conductive structure of the second electrical connection to the second edge of the at least one interconnect conductive structure of the second electrical connection, and

wherein the first end of the at least one interconnect conductive structure of the second electrical connection is located principally within the space between the first and second edges of the at least one interconnect conductive structure of the second electrical connection,

wherein the second end of the at least one interconnect conductive structure of the second electrical connection extends from the first edge of the at least one interconnect conductive structure of the second electrical connection to the second edge of the at least one interconnect conductive structure of the second electrical connection, and

wherein the second end of the at least one interconnect conductive structure of the second electrical connection is located principally within the space between the first and second edges of the at least one interconnect conductive structure of the second electrical connection,

the at least one interconnect conductive structure of the second electrical connection having a lengthwise centerline oriented in only one of the first direction and the second direction, the lengthwise centerline of the at least one interconnect conductive structure of the second electrical connection extending along the top surface of the at least one interconnect conductive structure of the second electrical connection and between the first and second ends of the at least one interconnect conductive structure of the second electrical connection,

wherein the first edge of the at least one interconnect conductive structure of the second electrical connection is substantially straight and is oriented substantially parallel to the lengthwise centerline of the at least one interconnect conductive structure of the second electrical connection,

wherein the second edge of the at least one interconnect conductive structure of the second electrical connection is substantially straight and is oriented substantially parallel to the lengthwise centerline of the at least one interconnect conductive structure of the second electrical connection,

wherein the at least one interconnect conductive structure of the second electrical connection has a length measured along its lengthwise centerline from its first end to its second end,

wherein the at least one interconnect conductive structure of the second electrical connection has a width measured in a direction perpendicular to its lengthwise centerline at a midpoint of its lengthwise centerline,

wherein the first interconnect level is formed at a vertical position within the semiconductor chip above the at least eight conductive structures, wherein the first interconnect level is separated from the co-planar top surfaces of the at least eight conductive structures by at least one dielectric material,

wherein the second interconnect level is formed at a vertical position within the semiconductor chip above the first interconnect level, and

wherein the third interconnect level is formed at a vertical position within the semiconductor chip above the second interconnect level.

21. The semiconductor chip as recited in claim **17**, wherein a total length of the third conductive structure as measured in the first direction is substantially equal to the total length of the second conductive structure as measured in the first direction, and

wherein a total length of the fourth conductive structure as measured in the first direction is substantially equal to the total length of the second conductive structure as measured in the first direction.

22. The semiconductor chip as recited in claim **21**, wherein at least one of the at least eight conductive structures within the region is a non-gate forming conductive structure that does not form a gate electrode of any transistor,

the non-gate forming conductive structure positioned between at least two other gate forming conductive structures of the at least eight conductive structures, each of the at least two other gate forming conductive structures forming at least one gate electrode of at least one transistor,

the non-gate forming conductive structure positioned such that its lengthwise centerline is separated from the lengthwise centerlines of each of the at least two other gate forming conductive structures by the first pitch as measured in the second direction,

the non-gate forming conductive structure having a width as measured in the second direction that is substantially equal to a width as measured in the second direction of at least one of the at least two other gate forming conductive structures.

23. The semiconductor chip as recited in claim **17**, wherein the region includes a first connection forming conductive structure positioned to physically join to the top surface of the first conductive structure of the at least eight conductive structures, wherein the first connection forming conductive structure is positioned a first connection distance away from a nearest gate electrode forming portion of the first conductive structure, the first connection distance measured in the first direction between closest located portions of the first connection forming conductive structure and the nearest gate electrode forming portion of the first conductive structure,

wherein the region includes a second connection forming conductive structure positioned to physically join to the top surface of the second conductive structure of the at least eight conductive structures,

wherein the region includes a third connection forming conductive structure positioned to physically join to the top surface of the third conductive structure of the at least eight conductive structures,

wherein the region includes a fourth connection forming conductive structure positioned to physically join to the top surface of the fourth conductive structure of the at least eight conductive structures,

wherein the region includes a fifth connection forming conductive structure positioned to physically join to the top surface of the conductive structure that forms the gate electrode of the second transistor of the second transistor type, wherein the fifth connection forming conductive structure is positioned a second connection distance away from a nearest gate electrode forming portion of the conductive structure that forms the gate electrode of the second transistor of the second transistor type, the fifth connection distance measured in the first direction between closest located portions of the fifth connection forming conductive structure and the nearest gate electrode forming portion of the conductive structure that forms the gate electrode of the second transistor of the second transistor type, the second connection distance being different from the first connection distance.

24. The semiconductor chip as recited in claim **23**, wherein at least two of the at least eight conductive structures have different total lengths as measured in the first direction.

25. The semiconductor chip as recited in claim **24**, wherein at least one of the at least eight conductive structures within the region is a non-gate forming conductive structure that does not form a gate electrode of any transistor,

the non-gate forming conductive structure positioned between at least two other gate forming conductive structures of the at least eight conductive structures, each of the at least two other gate forming conductive structures forming at least one gate electrode of at least one transistor,

the non-gate forming conductive structure positioned such that its lengthwise centerline is separated from the lengthwise centerlines of each of the at least two other gate forming conductive structures by the first pitch as measured in the second direction,

the non-gate forming conductive structure having a width as measured in the second direction that is substantially equal to a width as measured in the second direction of at least one of the at least two other gate forming conductive structures.

26. The semiconductor chip as recited in claim **25**, wherein the first connection forming conductive structure is substantially centered in the second direction on the first conductive structure of the at least eight conductive structures, the first connection forming conductive structure formed to extend in a vertical direction substantially perpendicular to the substrate of the semiconductor chip from the top surface of the first conductive structure through a dielectric material to contact at least one interconnect conductive structure,

wherein the second connection forming conductive structure is substantially centered in the second direction on the second conductive structure of the at least eight conductive structures, the second connection forming conductive structure formed to extend in the vertical direction substantially perpendicular to the substrate of the semiconductor chip from the top surface of the second conductive structure through the dielectric material to contact at least one interconnect conductive structure,

wherein the third connection forming conductive structure is substantially centered in the second direction on the third conductive structure of the at least eight conductive structures, the third connection forming conductive structure formed to extend in the vertical direction substantially perpendicular to the substrate of the semiconductor chip from the top surface of the third conductive structure through the dielectric material to contact at least one interconnect conductive structure,

wherein the fourth connection forming conductive structure is substantially centered in the second direction on the fourth conductive structure of the at least eight conductive structures, the fourth connection forming conductive structure formed to extend in the vertical direction substantially perpendicular to the substrate of the semiconductor chip from the top surface of the fourth conductive structure through the dielectric material to contact at least one interconnect conductive structure, and

wherein the fifth connection forming conductive structure is substantially centered in the second direction on the conductive structure that forms the gate electrode of the second transistor of the second transistor type, the fifth connection forming conductive structure formed to extend in the vertical direction substantially perpendicular to the substrate of the semiconductor chip from the top surface of the conductive structure that forms the gate electrode of the second transistor of the second transistor type through the dielectric material to contact at least one interconnect conductive structure.

27. The semiconductor chip as recited in claim **1**, wherein at least one of the at least eight conductive structures within the region is a non-gate forming conductive structure that does not form a gate electrode of any transistor,

the non-gate forming conductive structure positioned between at least two other gate forming conductive structures of the at least eight conductive structures, each of the at least two other gate forming conductive structures forming at least one gate electrode of at least one transistor,

the non-gate forming conductive structure having a width as measured in the second direction that is substantially equal to a width as measured in the second direction of at least one other of the at least eight conductive structures within the region.

28. The semiconductor chip as recited in claim **1**, wherein the region includes a first gate contact positioned to physically contact the top surface of the first conductive structure of the at least eight conductive structures, the first gate contact formed to extend in a vertical direction substantially perpendicular to the substrate of the semiconductor chip from the top surface of the first conductive structure through a dielectric material to contact at least one interconnect conductive structure,

wherein the region includes a second gate contact positioned to physically contact the top surface of the second conductive structure of the at least eight conductive structures, the second gate contact formed to extend in the vertical direction substantially perpendicular to the substrate of the semiconductor chip from the top surface of the second conductive structure through the dielectric material to contact at least one interconnect conductive structure,

wherein the region includes a third gate contact positioned to physically contact the top surface of the conductive structure that forms the gate electrode of the second transistor of the second transistor type, the third gate contact formed to extend in the vertical direction substantially perpendicular to the substrate of the semiconductor chip from the top surface of the conductive structure that forms the gate electrode of the second transistor of the second transistor type and through the dielectric material to contact at least one interconnect conductive structure.

29. A method for manufacturing an integrated circuit within a semiconductor chip, comprising:

forming a region within the semiconductor chip that includes a plurality of transistors, each of the plurality of transistors in the region forming part of circuitry associated with execution of one or more logic functions,

the region including at least eight conductive structures, some of the at least eight conductive structures forming at least one transistor gate electrode,

each of the at least eight conductive structures respectively having a corresponding top surface, wherein an entirety of a periphery of the corresponding top surface is defined by a corresponding first end, a corresponding second end, a corresponding first edge, and a corresponding second edge, such that a total distance along the entirety of the periphery of the corresponding top surface is equal to a sum of a total distance along the corresponding first edge and a total distance along the corresponding second edge and a total distance along the corresponding first end and a total distance along the corresponding second end,

wherein the total distance along the corresponding first edge is greater than two times the total distance along the corresponding first end,

wherein the total distance along the corresponding first edge is greater than two times the total distance along the corresponding second end,

wherein the total distance along the corresponding second edge is greater than two times the total distance along the corresponding first end,

wherein the total distance along the corresponding second edge is greater than two times the total distance along the corresponding second end,

wherein the corresponding first end extends from the corresponding first edge to the corresponding second edge and is located principally within a space between the corresponding first and second edges,

wherein the corresponding second end extends from the corresponding first edge to the corresponding second edge and is located principally within the space between the corresponding first and second edges,

the top surfaces of the at least eight conductive structures co-planar with each other,

each of the at least eight conductive structures having a corresponding lengthwise centerline oriented in a first direction along its top surface and extending from its first end to its second end,

each of the at least eight conductive structures having a length as measured along its lengthwise centerline from its first end to its second end,

wherein the first edge of each of the at least eight conductive structures is substantially straight,

wherein the second edge of each of the at least eight conductive structures is substantially straight,

each of the at least eight conductive structures having both its first edge and its second edge oriented substantially parallel to its lengthwise centerline,

each of the at least eight conductive structures having a width measured in a second direction perpendicular to the first direction at a midpoint of its lengthwise centerline,

each of the first direction and the second direction oriented substantially parallel to the co-planar top surfaces of the at least eight conductive structures,

the at least eight conductive structures positioned in a side-by-side manner such that each of the at least eight conductive structures is positioned to have at least a portion of its length located beside at least a portion of the length of another of the at least eight conductive structures,

wherein the width of each of the at least eight conductive structures is less than 45 nanometers, the region having a size of about 965 nanometers as measured in the second direction, each of the at least eight conductive structures positioned such that a distance as measured in the second direction between its lengthwise centerline and the lengthwise centerline of at least one other of the at least eight conductive structures is substantially equal to a first pitch that is less than or equal to about 193 nanometers,

the region including a first transistor of a first transistor type, a second transistor of the first transistor type, a first transistor of a second transistor type, and a second transistor of the second transistor type,

wherein each transistor of the first transistor type having its gate electrode formed by any of the at least eight conductive structures is included in a first collection of transistors, and wherein each transistor of the second transistor type having its gate electrode formed by any of the at least eight conductive structures is included in a second collection of transistors, wherein the first and second collections of transistors are separated from each other by an inner sub-region of the region, wherein the inner sub-region does not include a source or a drain of any transistor,

the first transistor of the first transistor type having a gate electrode formed by a portion of a first conductive structure of the at least eight conductive structures, wherein any transistor having its gate electrode formed by the first conductive structure is of the first transistor type,

the second transistor of the first transistor type having a gate electrode formed by a portion of a second conductive structure of the at least eight conductive structures, the first transistor of the second transistor type having a gate electrode formed by another portion of the second conductive structure, the second conductive structure positioned such that its lengthwise centerline is separated from the lengthwise centerline of the first conductive structure by the first pitch as measured in the second direction,

the second transistor of the second transistor type having a gate electrode formed by one of the at least eight conductive structures, the conductive structure that forms the gate electrode of the second transistor of the second transistor type positioned such that its lengthwise centerline is separated from the lengthwise centerline of the second conductive structure by the first pitch as measured in the second direction, wherein any transistor having its gate electrode formed by the

conductive structure that forms the gate electrode of the second transistor of the second transistor type is of the second transistor type,

the first conductive structure having a total length as measured in the first direction that is greater than one-half of a total length of the second conductive structure as measured in the first direction,

the second conductive structure having at least one end substantially positioned at a first reference line oriented in the second direction, and the conductive structure that forms the gate electrode of the second transistor of the second transistor type also having at least one end substantially positioned at the first reference line.

30. The method of claim **29**, wherein the region is formed to include a first interconnect conductive structure positioned within either of a first interconnect level, a second interconnect level, a third interconnect level, or a fourth interconnect level,

the first interconnect conductive structure having a top surface, an entirety of a periphery of the top surface of the first interconnect conductive structure defined by a first end of the first interconnect conductive structure, a second end of the first interconnect conductive structure, a first edge of the first interconnect conductive structure, and a second edge of the first interconnect conductive structure, such that a total distance along the entirety of the periphery of the top surface of the first interconnect conductive structure is equal to a sum of a total distance along the first edge of the first interconnect conductive structure and a total distance along the second edge of the first interconnect conductive structure and a total distance along the first end of the first interconnect conductive structure and a total distance along the second end of the first interconnect conductive structure,

wherein the total distance along the first edge of the first interconnect conductive structure is greater than two times the total distance along the first end of the first interconnect conductive structure,

wherein the total distance along the first edge of the first interconnect conductive structure is greater than two times the total distance along the second end of the first interconnect conductive structure,

wherein the total distance along the second edge of the first interconnect conductive structure is greater than two times the total distance along the first end of the first interconnect conductive structure,

wherein the total distance along the second edge of the first interconnect conductive structure is greater than two times the total distance along the second end of the first interconnect conductive structure,

wherein the first end of the first interconnect conductive structure extends from the first edge of the first interconnect conductive structure to the second edge of the first interconnect conductive structure and is located principally within a space between the first and second edges of the first interconnect conductive structure,

wherein the second end of the first interconnect conductive structure extends from the first edge of the first interconnect conductive structure to the second edge of the first interconnect conductive structure and is located principally within the space between the first and second edges of the first interconnect conductive structure,

the first interconnect conductive structure having a lengthwise centerline oriented in the first direction along its top surface and extending from its first end to its second end,

wherein the first edge of the first interconnect conductive structure is substantially straight and is oriented substantially parallel to the lengthwise centerline of the first interconnect conductive structure,

wherein the second edge of the first interconnect conductive structure is substantially straight and is oriented substantially parallel to the lengthwise centerline of the first interconnect conductive structure,

wherein the first interconnect conductive structure has a length measured along its lengthwise centerline from its first end to its second end,

wherein the first interconnect conductive structure has a width measured in the second direction perpendicular to the first direction at a midpoint of the lengthwise centerline of the first interconnect conductive structure,

wherein the first interconnect level is formed at a vertical position within the semiconductor chip above the at least eight conductive structures, wherein the first interconnect level is separated from the co-planar top surfaces of the at least eight conductive structures by at least one dielectric material,

wherein the second interconnect level is formed at a vertical position within the semiconductor chip above the first interconnect level,

wherein the third interconnect level is formed at a vertical position within the semiconductor chip above the second interconnect level, and

wherein the fourth interconnect level is formed at a vertical position within the semiconductor chip above the third interconnect level,

wherein the region is formed to include a second interconnect conductive structure positioned next to and spaced apart from the first interconnect conductive structure in a same interconnect level as the first interconnect conductive structure,

the second interconnect conductive structure having a top surface, an entirety of a periphery of the top surface of the second interconnect conductive structure defined by a first end of the second interconnect conductive structure, a second end of the second interconnect conductive structure, a first edge of the second interconnect conductive structure, and a second edge of the second interconnect conductive structure, such that a total distance along the entirety of the periphery of the top surface of the second interconnect conductive structure is equal to a sum of a total distance along the first edge of the second interconnect conductive structure and a total distance along the second edge of the second interconnect conductive structure and a total distance along the first end of the second interconnect conductive structure and a total distance along the second end of the second interconnect conductive structure,

wherein the total distance along the first edge of the second interconnect conductive structure is greater than two times the total distance along the first end of the second interconnect conductive structure,

wherein the total distance along the first edge of the second interconnect conductive structure is greater than two times the total distance along the second end of the second interconnect conductive structure,

wherein the total distance along the second edge of the second interconnect conductive structure is greater than

two times the total distance along the first end of the second interconnect conductive structure,

wherein the total distance along the second edge of the second interconnect conductive structure is greater than two times the total distance along the second end of the second interconnect conductive structure,

wherein the first end of the second interconnect conductive structure extends from the first edge of the second interconnect conductive structure to the second edge of the second interconnect conductive structure and is located principally within a space between the first and second edges of the second interconnect conductive structure,

wherein the second end of the second interconnect conductive structure extends from the first edge of the second interconnect conductive structure to the second edge of the second interconnect conductive structure and is located principally within the space between the first and second edges of the second interconnect conductive structure,

the second interconnect conductive structure having a lengthwise centerline oriented in the first direction along its top surface and extending from its first end to its second end,

wherein the first edge of the second interconnect conductive structure is substantially straight and is oriented substantially parallel to the lengthwise centerline of the second interconnect conductive structure,

wherein the second edge of the second interconnect conductive structure is substantially straight and is oriented substantially parallel to the lengthwise centerline of the second interconnect conductive structure,

wherein the second interconnect conductive structure has a length measured along its lengthwise centerline from its first end to its second end,

wherein the second interconnect conductive structure has a width measured in the second direction perpendicular to the first direction at a midpoint of the lengthwise centerline of the second interconnect conductive structure,

wherein the first and second interconnect conductive structures are positioned such that a distance as measured in the second direction between their lengthwise centerlines is substantially equal to a second pitch, wherein the second pitch is a fractional multiple of the first pitch.

* * * * *