US 20160158606A1

(19) United States

(12) Patent Application Publication

Parsons et al.

(10) Pub. No.: US 2016/0158606 A1

(43) Pub. Date: Jun. 9, 2016

(54) **GOLF CLUB HEADS AND METHODS TO MANUFACTURE GOLF CLUB HEADS**

(71) Applicant: **Parsons Xtreme Golf, LLC**, Scottsdale, AZ (US)

(72) Inventors: **Robert R. Parsons**, Scottsdale, AZ (US); **Michael R. Nicolette**, Scottsdale, AZ (US); **Bradley D. Schweigert**, Scottsdale, AZ (US)

(21) Appl. No.: **15/043,090**

(22) Filed: **Feb. 12, 2016**

Related U.S. Application Data

(63) Continuation-in-part of application No. 14/589,277, filed on Jan. 5, 2015, which is a continuation of application No. 14/498,603, filed on Sep. 26, 2014, now Pat. No. 9,199,143, Continuation-in-part of application No. 14/711,596, filed on May 13, 2015, which is a continuation-in-part of application No. 14/589,277, filed on Jan. 5, 2015, which is a continuation of application No. 14/513,073, filed on Oct. 13, 2014, now Pat. No. 8,961,336, which is a continuation of application No. 14/498,603, filed on Sep. 26, 2014, now Pat. No. 9,199,143, Continuation-in-part of application No. 29/515,013, filed on Jan. 20, 2015, which is a continuation-in-part of application No. 29/501,006, filed on Aug. 29, 2014, now Pat. No. Des. 722,352, Continuation-in-part of application No. 29/547,678, filed on Dec. 7, 2015, which is a continuation-in-part of application No. 29/540,066, filed on Sep. 21, 2015, now Pat. No. Des. 746,926, which is a continuation-in-part of application No. 29/537,413, filed on Aug. 25, 2015.

(60) Provisional application No. 62/118,403, filed on Feb. 19, 2015, provisional application No. 62/159,856, filed on May 11, 2015, provisional application No. 62/209,780, filed on Aug. 25, 2015, provisional application No. 62/277,636, filed on Jan. 12, 2016, provisional application No. 62/041,538, filed on Aug. 25, 2014, provisional application No. 62/041,538, filed on Aug. 25, 2014.

Publication Classification

(51) **Int. Cl.**
A63B 53/04 (2006.01)

(52) **U.S. Cl.**
CPC ***A63B 53/047*** (2013.01); *A63B 2053/0491* (2013.01); *A63B 2053/0408* (2013.01)

(57) **ABSTRACT**

Embodiments of golf club heads and methods to manufacture golf club heads are generally described herein. In one example, a golf club head may include a body portion with a toe portion, a heel portion, a top portion, a sole portion, a back portion, and a front portion. The golf club head may include an interior cavity. The interior cavity may be filled with an elastic polymer material. Other examples and embodiments may be described and claimed.

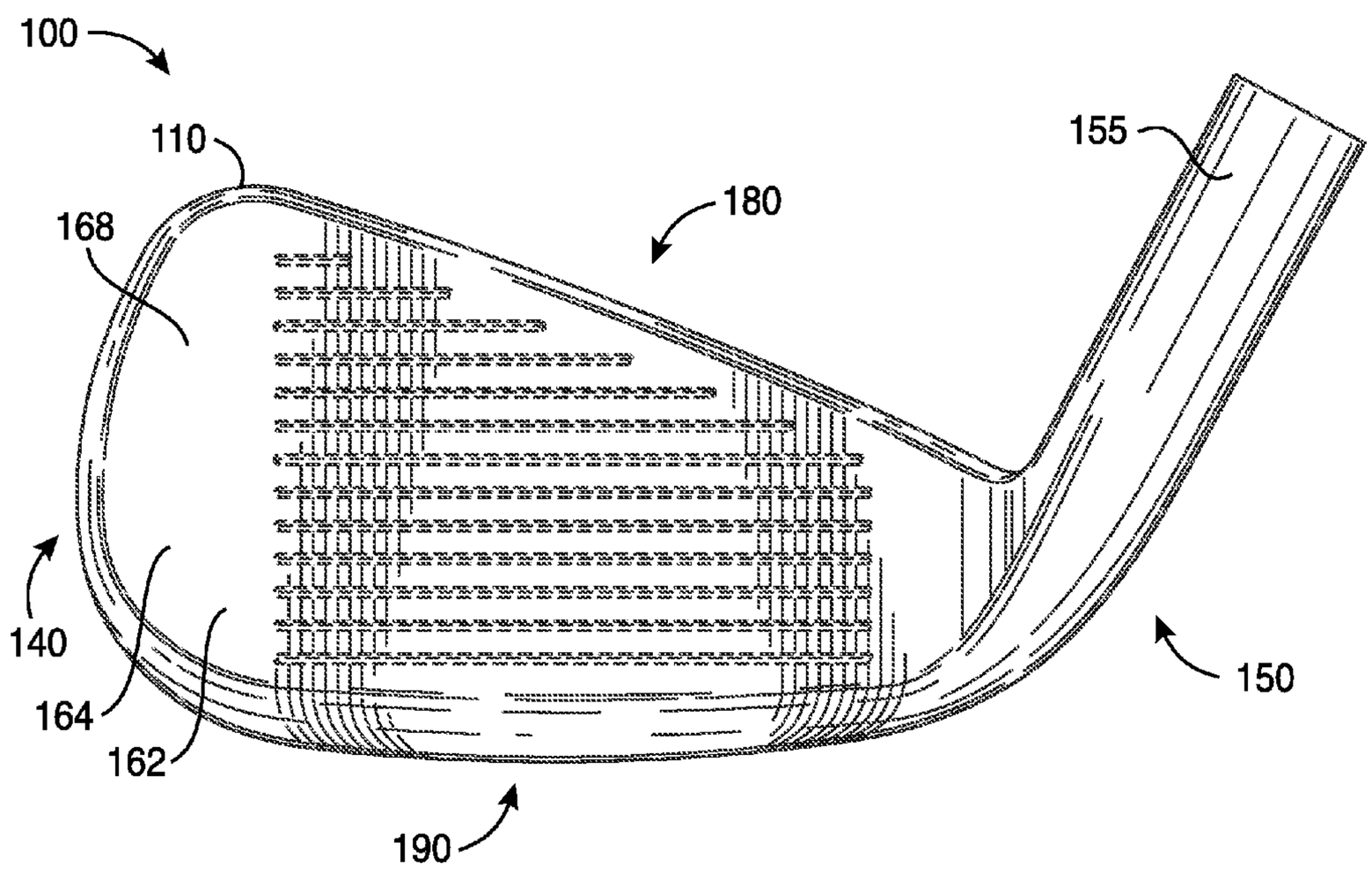

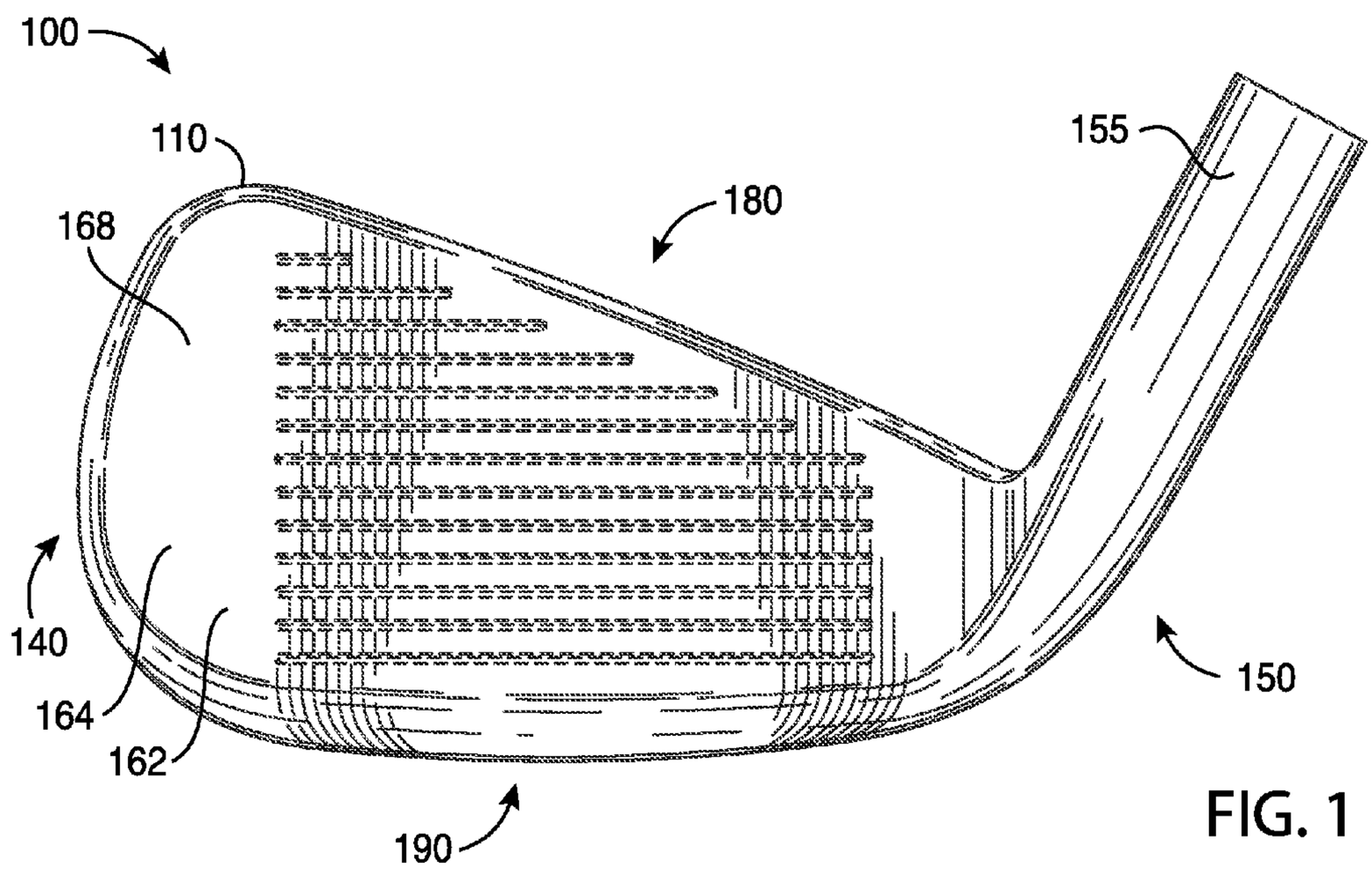
100
110
168
180
155
140
164
162
150
190

FIG. 1

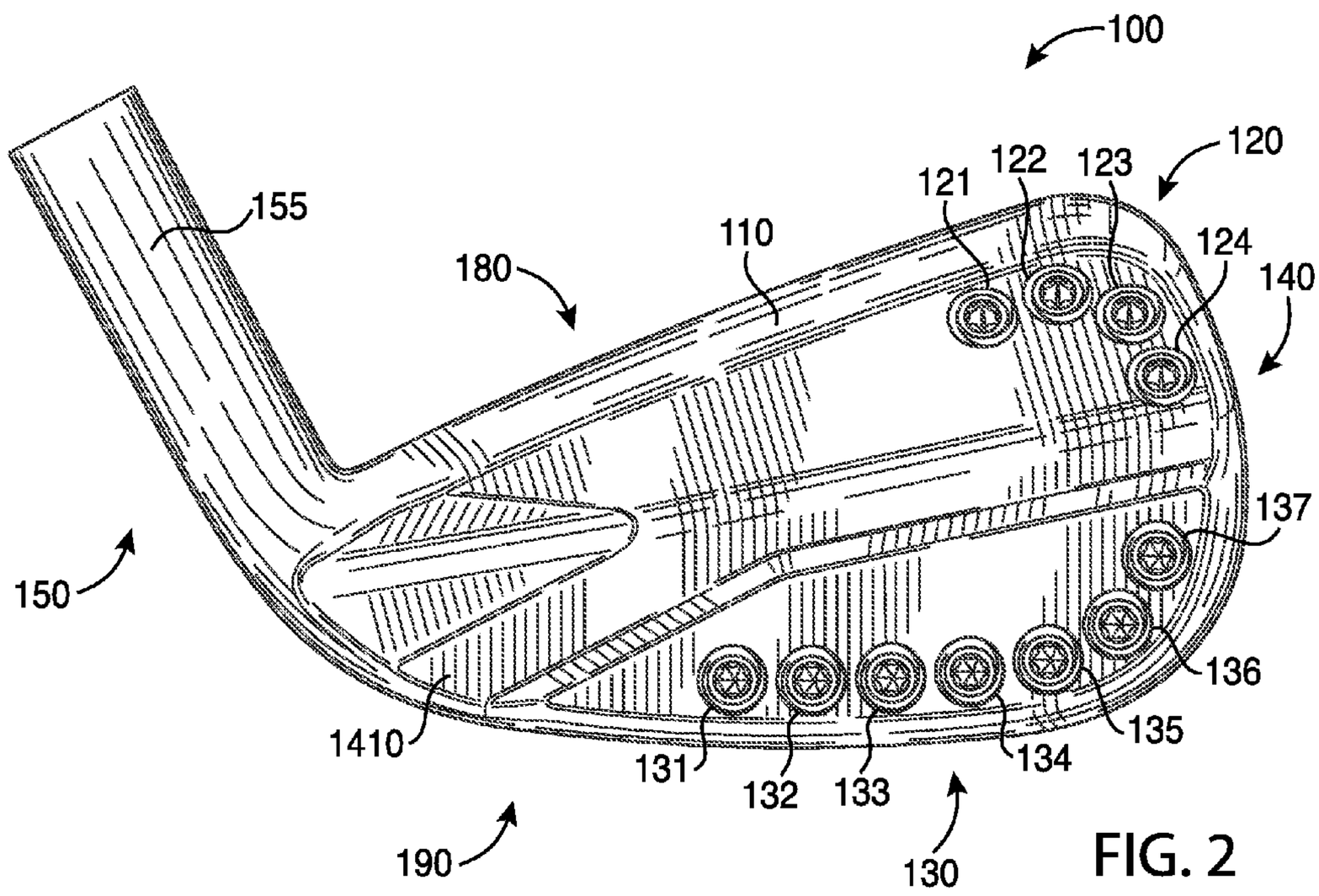
100
120
121
122
123
124
140
155
110
180
137
150
136
135
134
1410
131
132
133
190
130

FIG. 2

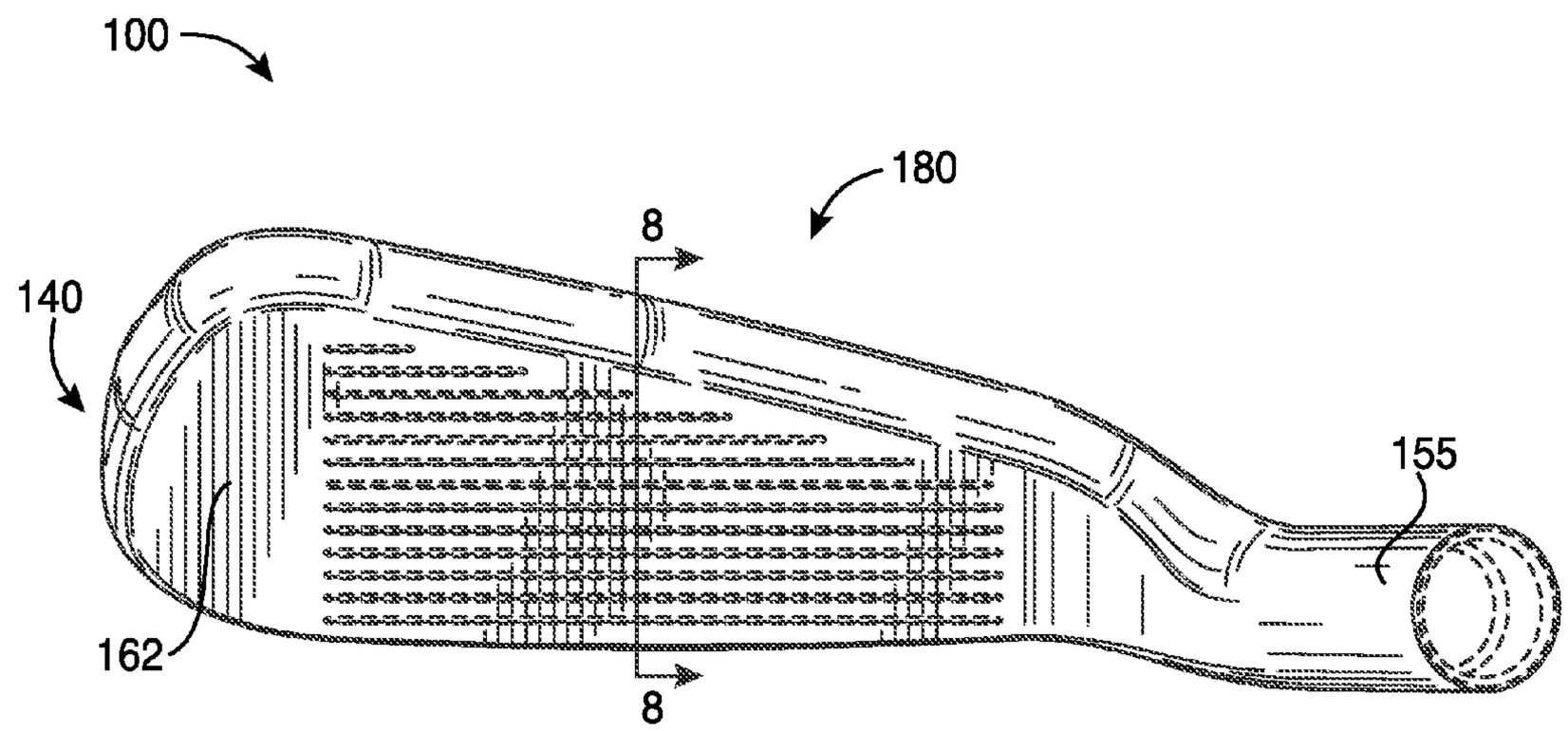

FIG. 3

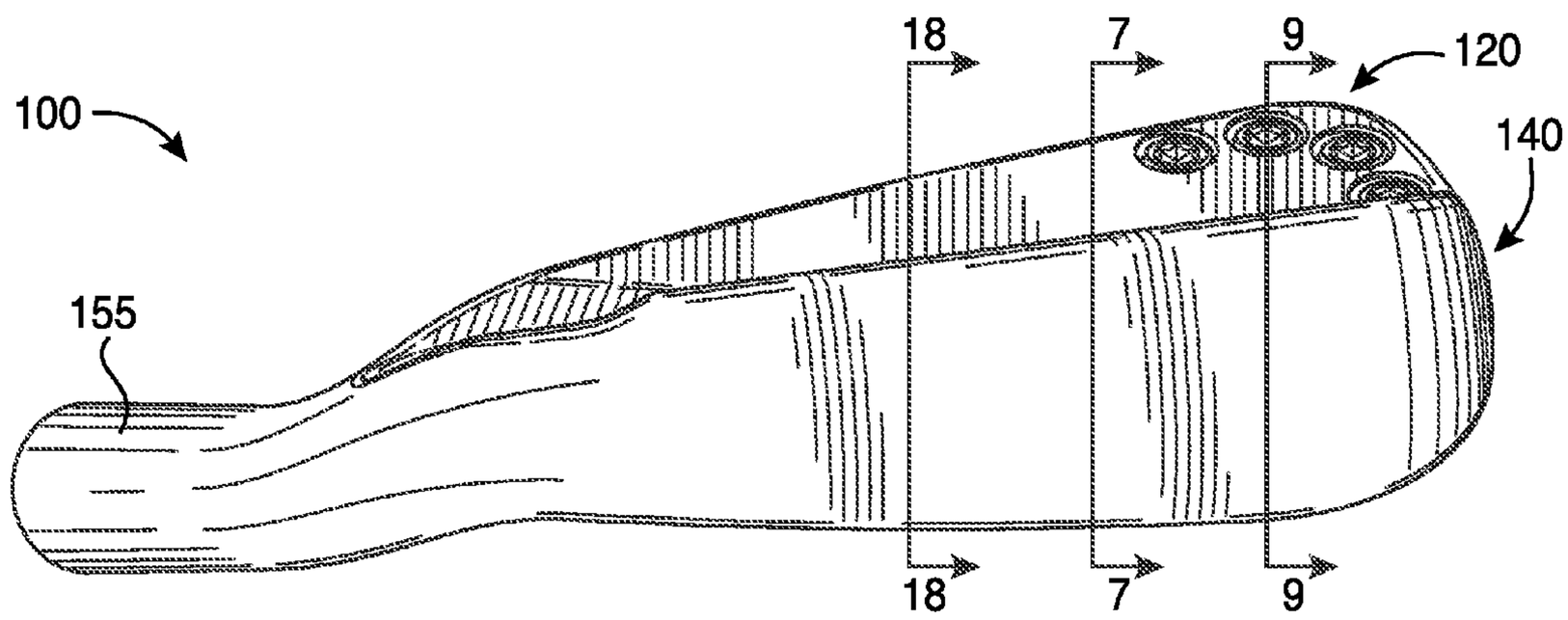

FIG. 4

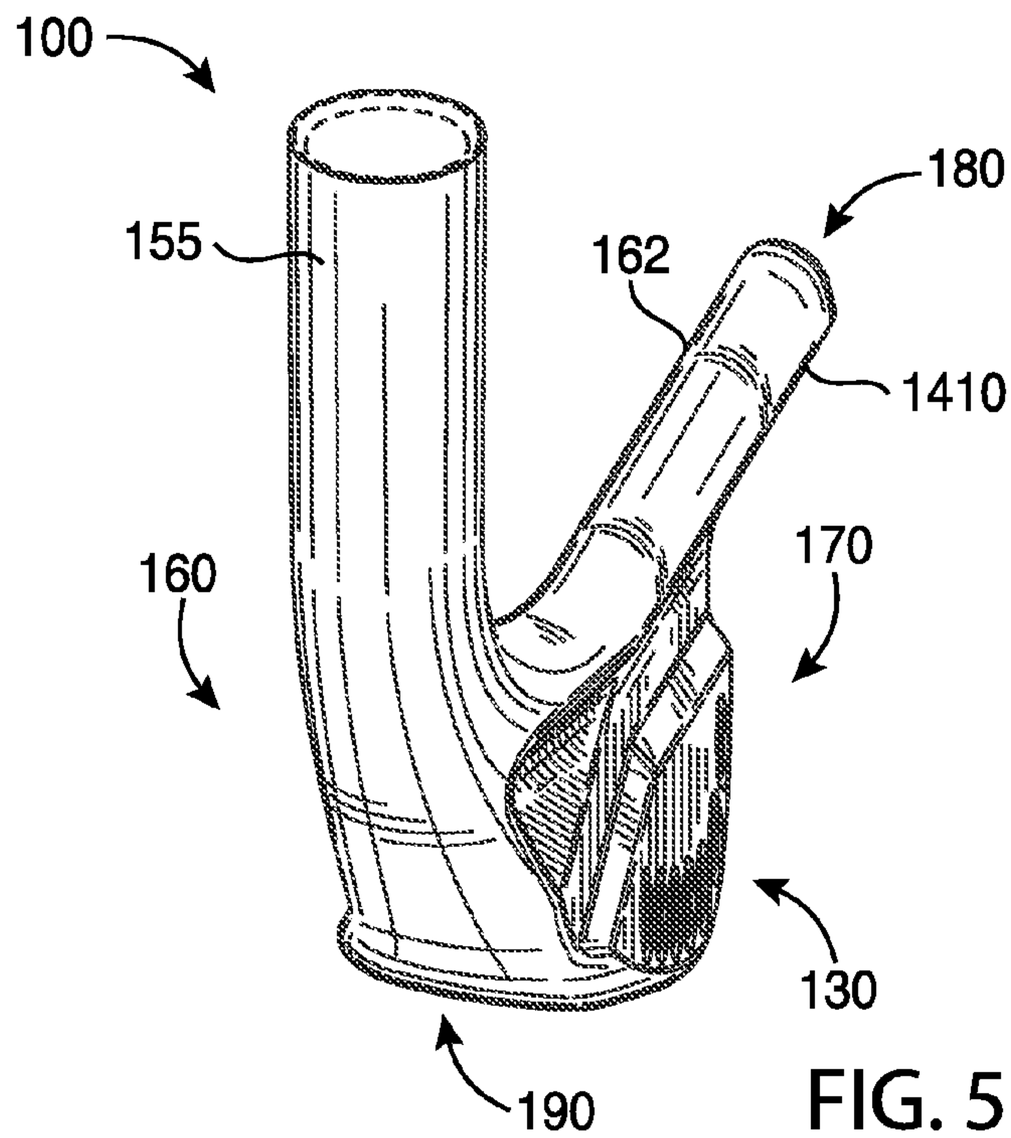
100
180
155
162
1410
170
160
130
190

FIG. 5

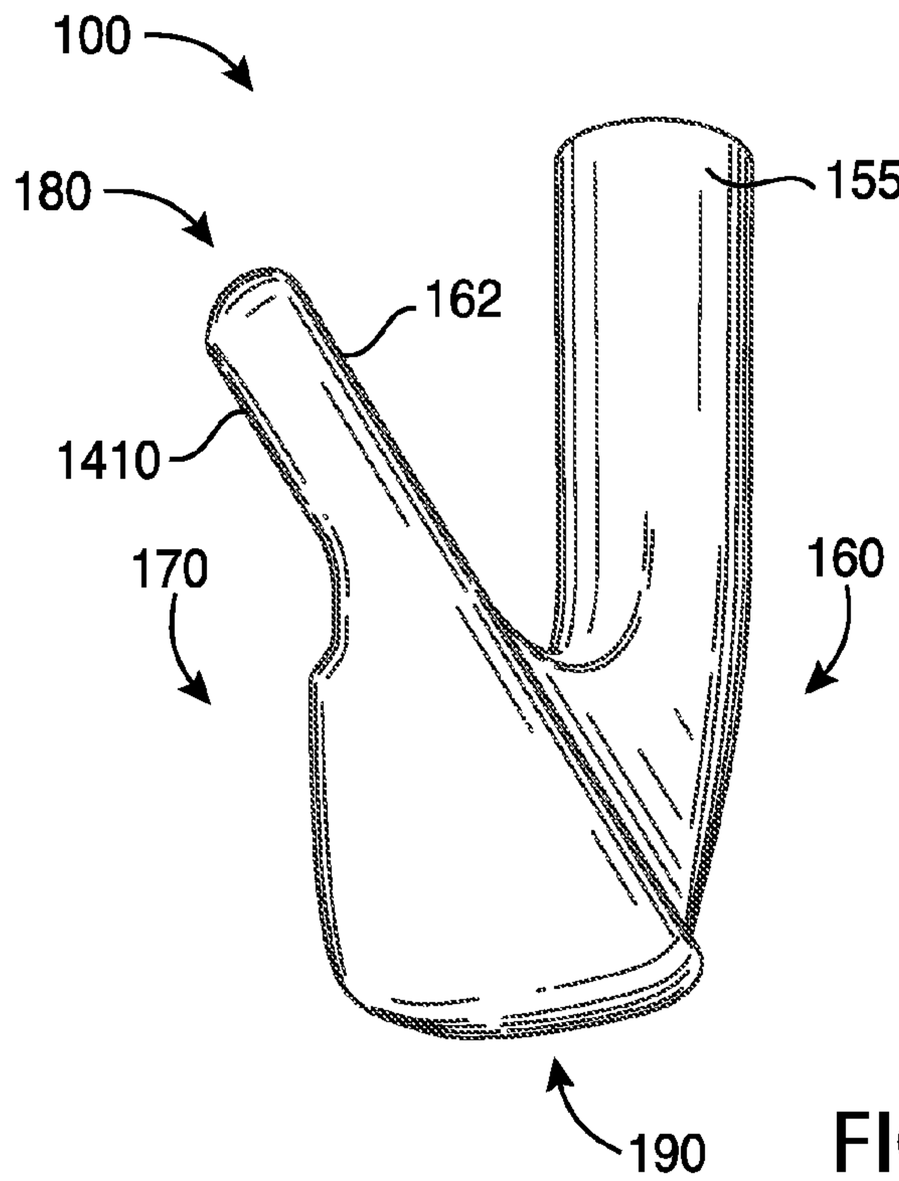
100
180
155
162
1410
170
160
190

FIG. 6

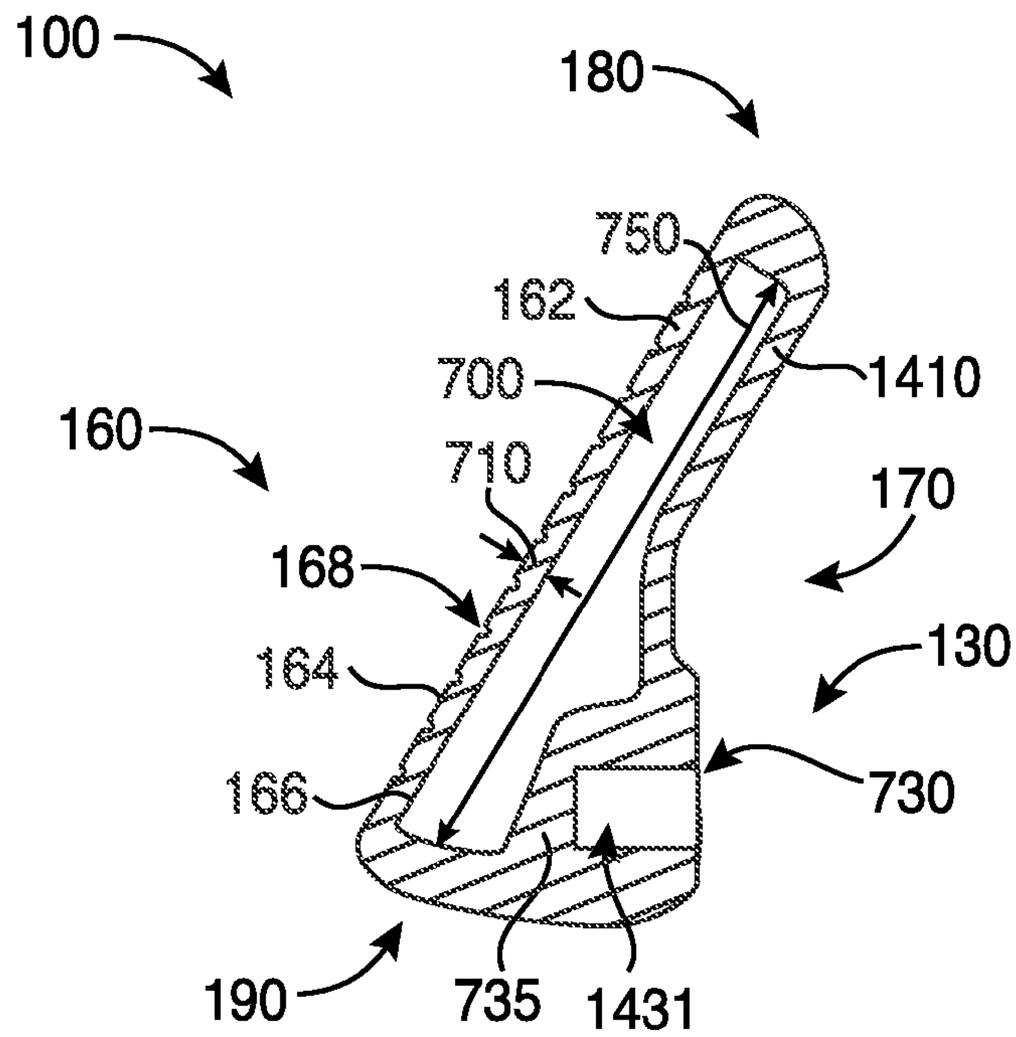
100
180
750
162
1410
700
160
710
170
168
130
164
730
166
190
735
1431

FIG. 7

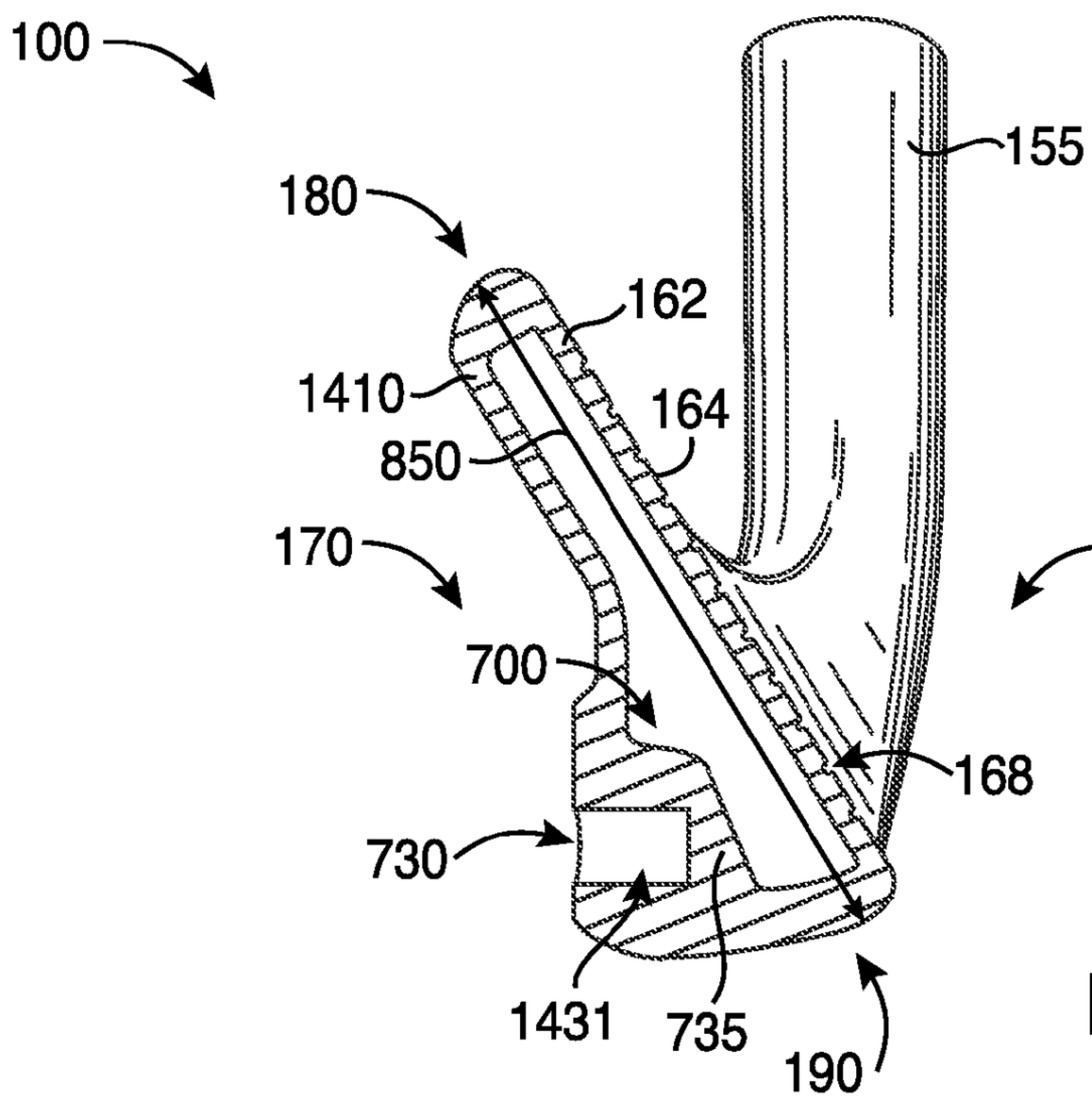
100
155
180
162
1410
164
850
170
160
700
168
730
1431
735
190

FIG. 8

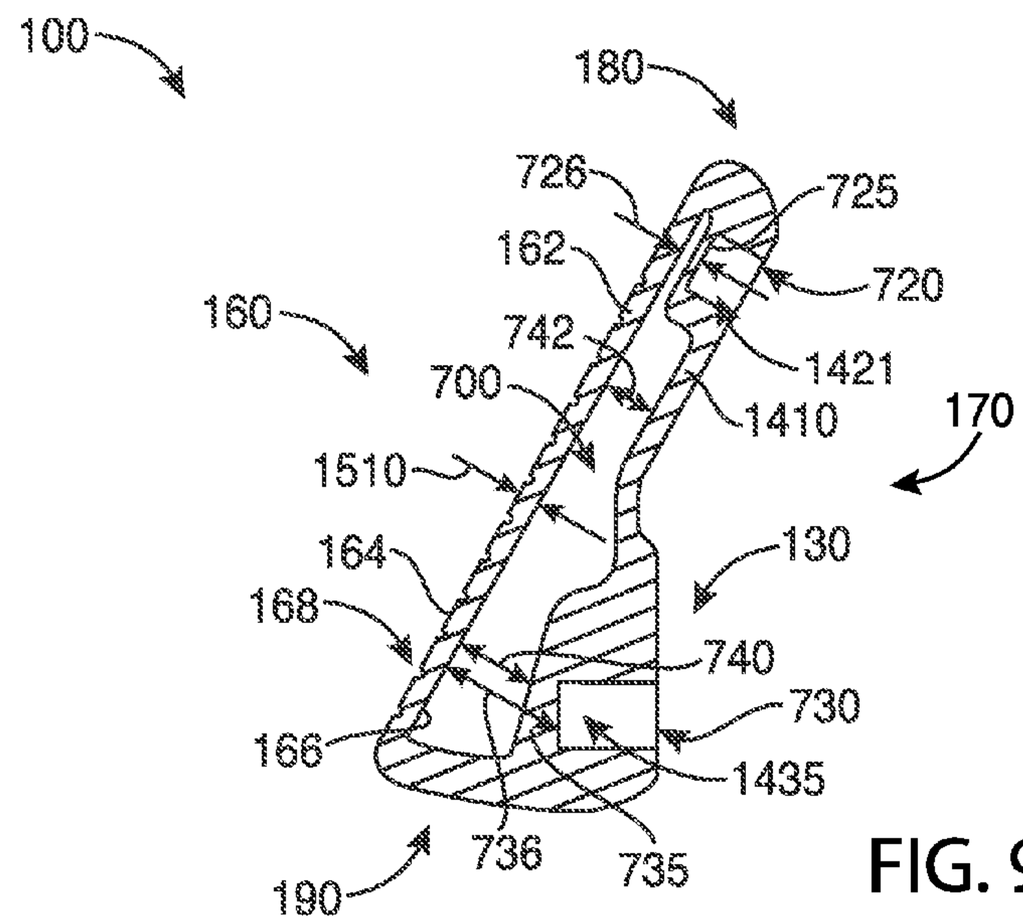
100
180
726
725
162
720
160
742
1421
700
1410
170
1510
130
164
168
740
730
166
1435
736
735
190

FIG. 9

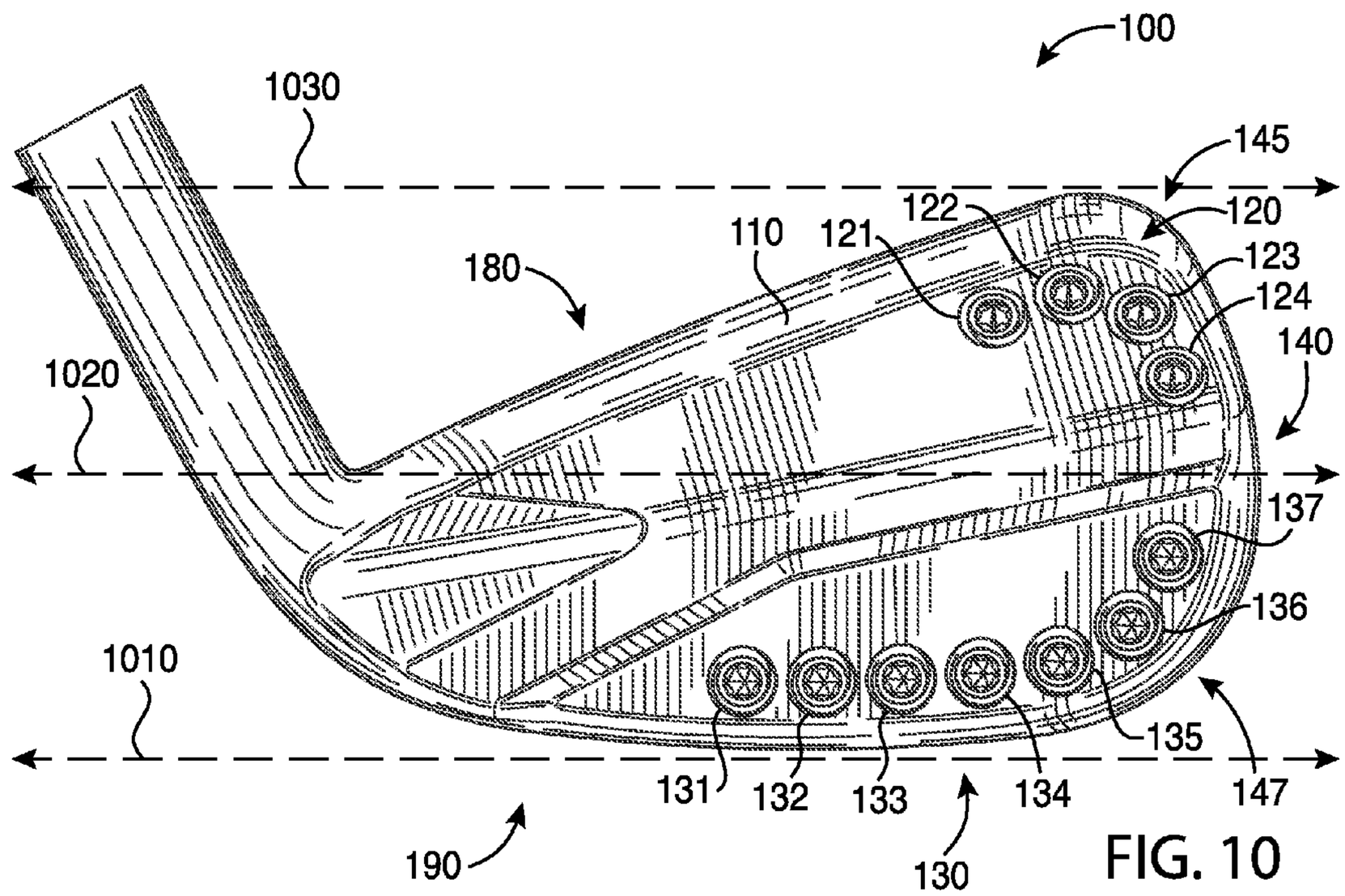
100
1030
145
122
120
110
121
123
180
124
140
1020
137
136
1010
135
131
132
133
134
147
190
130

FIG. 10

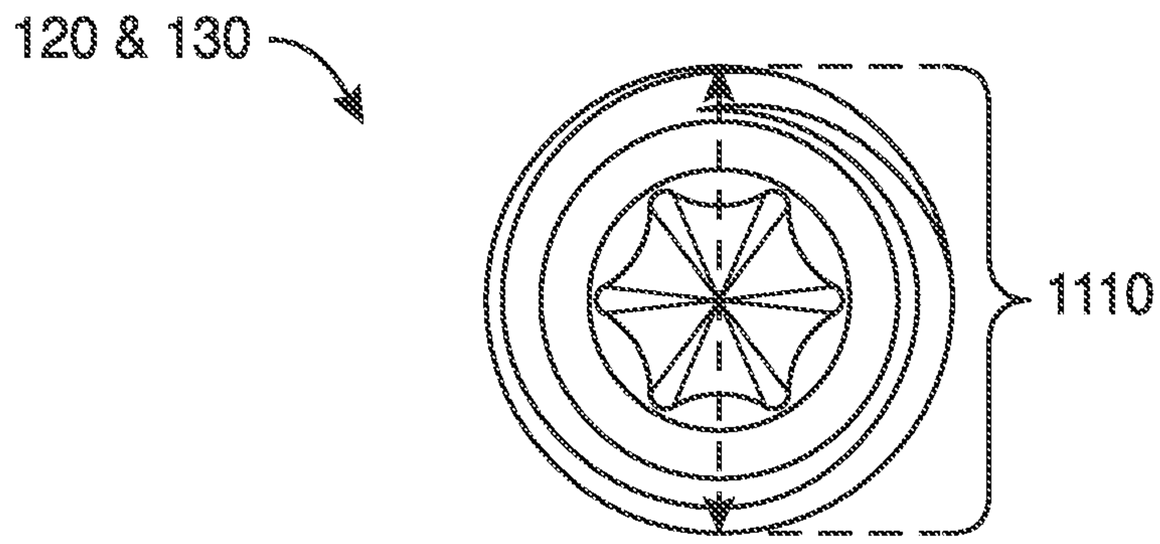

FIG. 11

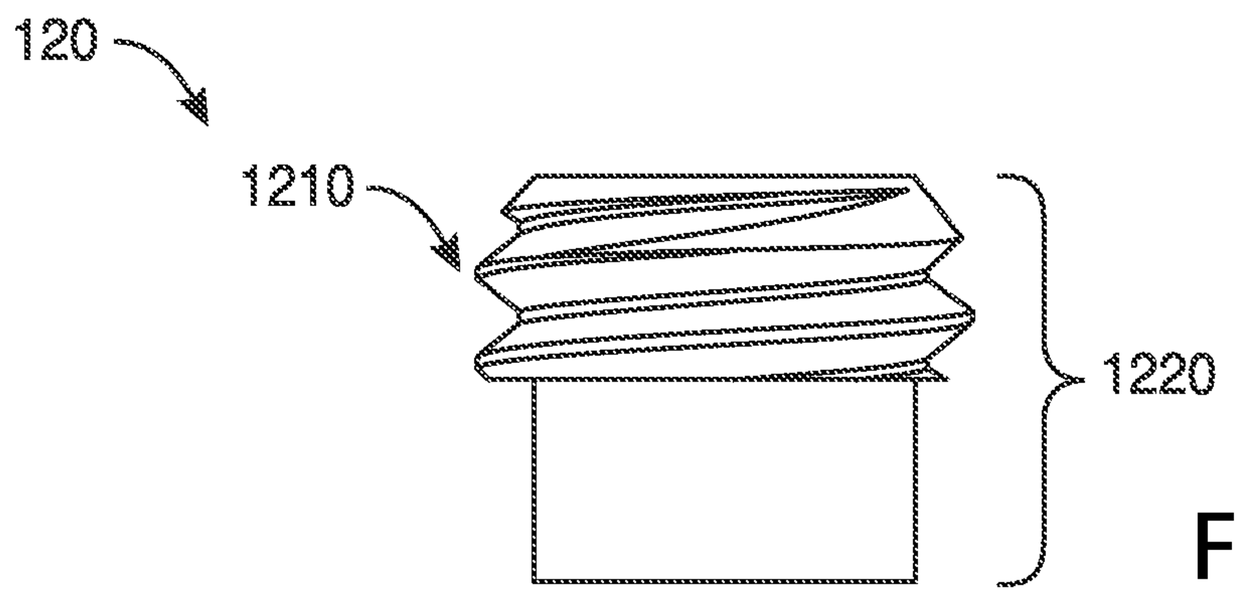

FIG. 12

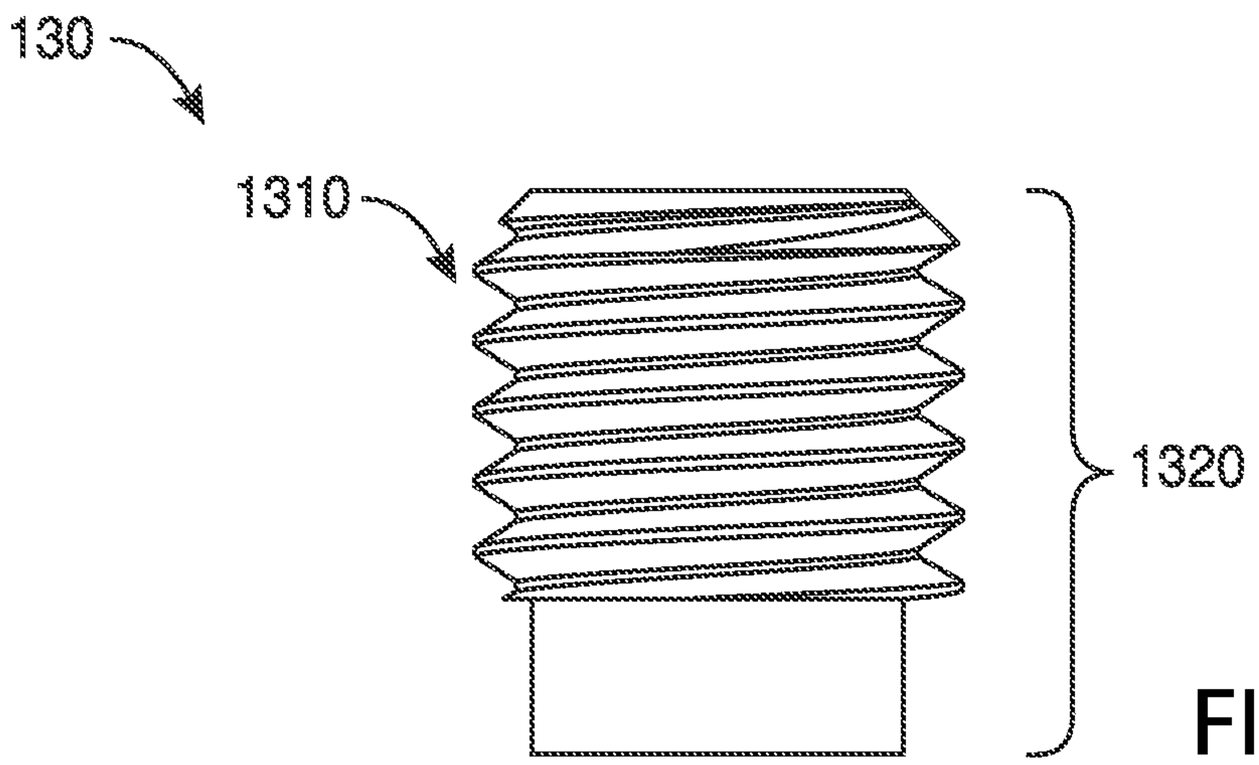

FIG. 13

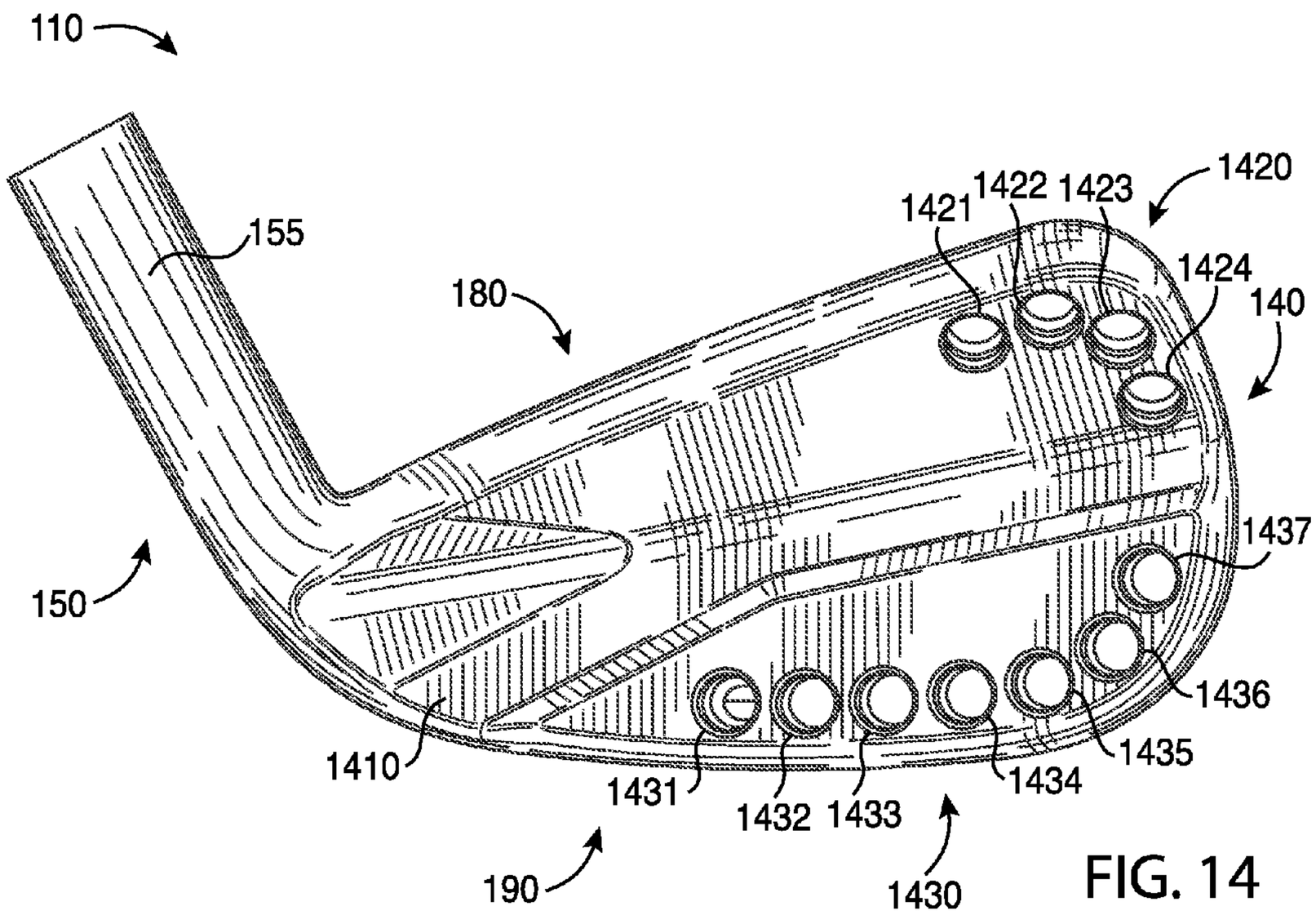
110
155
180
1421
1422
1423
1420
1424
140
150
1437
1436
1435
1434
1410
1431
1432
1433
190
1430

FIG. 14

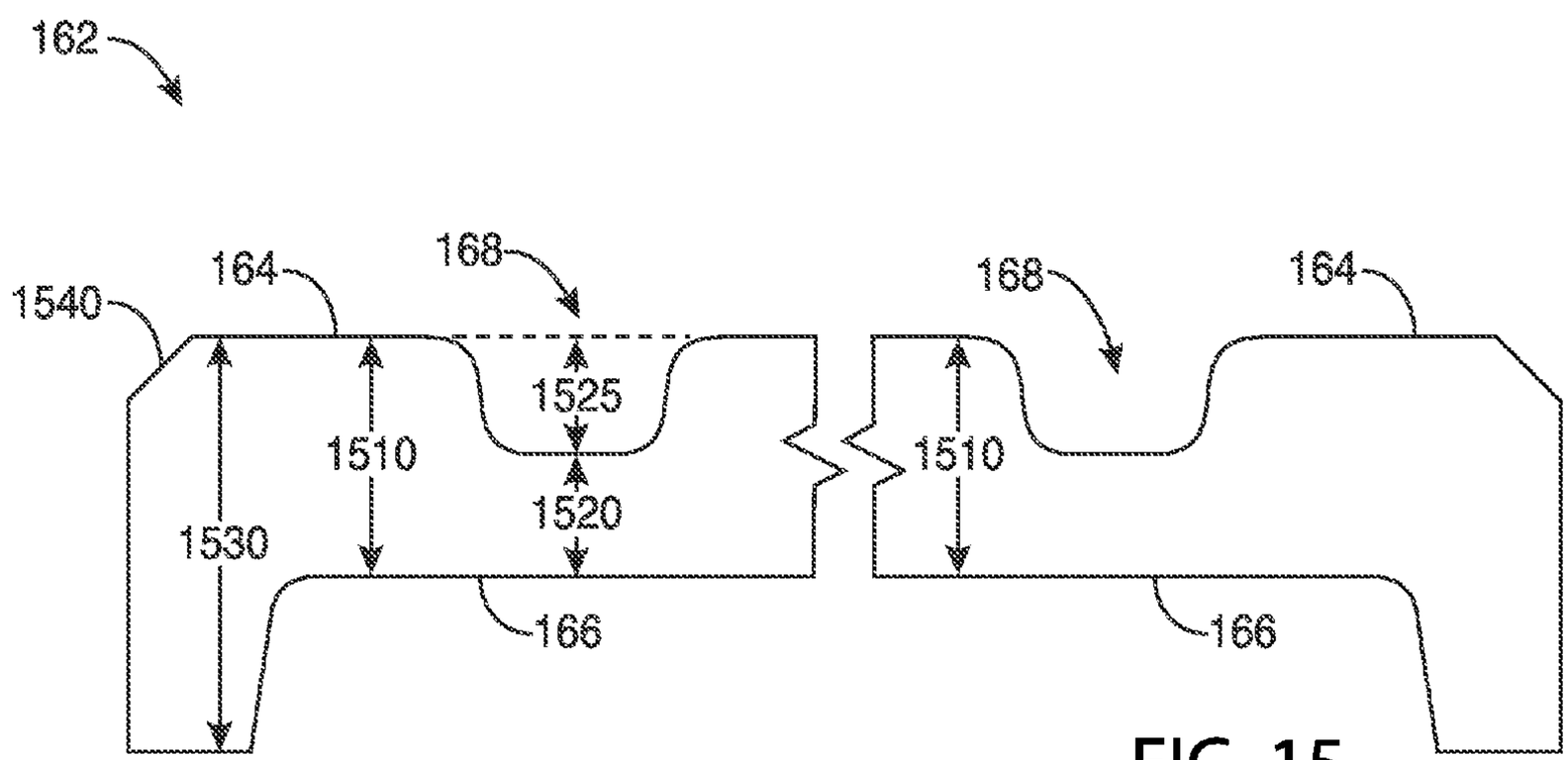
162
164
168
1540
1525
1510
1520
1530
166
168
164
1510
166

FIG. 15

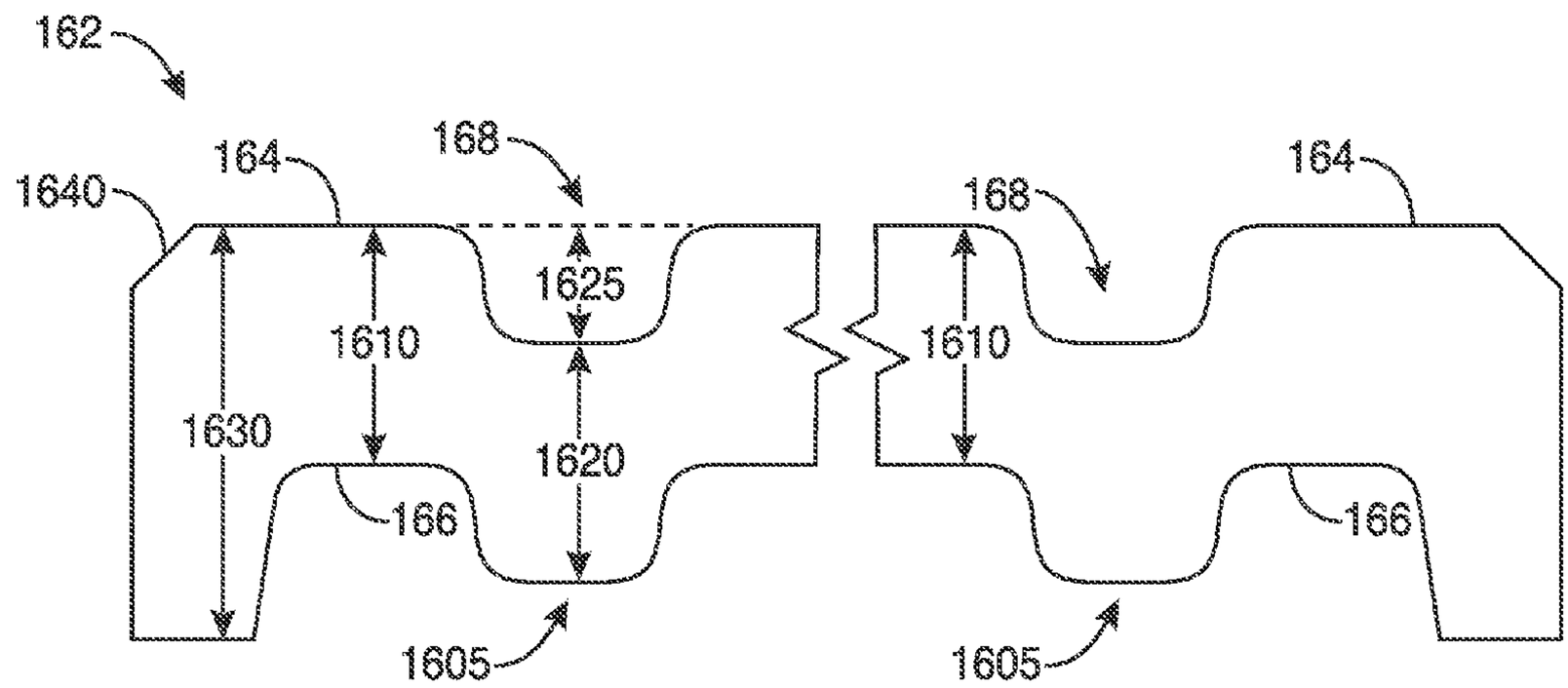
162
164
168
1640
1625
1610
1630
1620
166
1605
168
164
1610
166
1605

FIG. 16

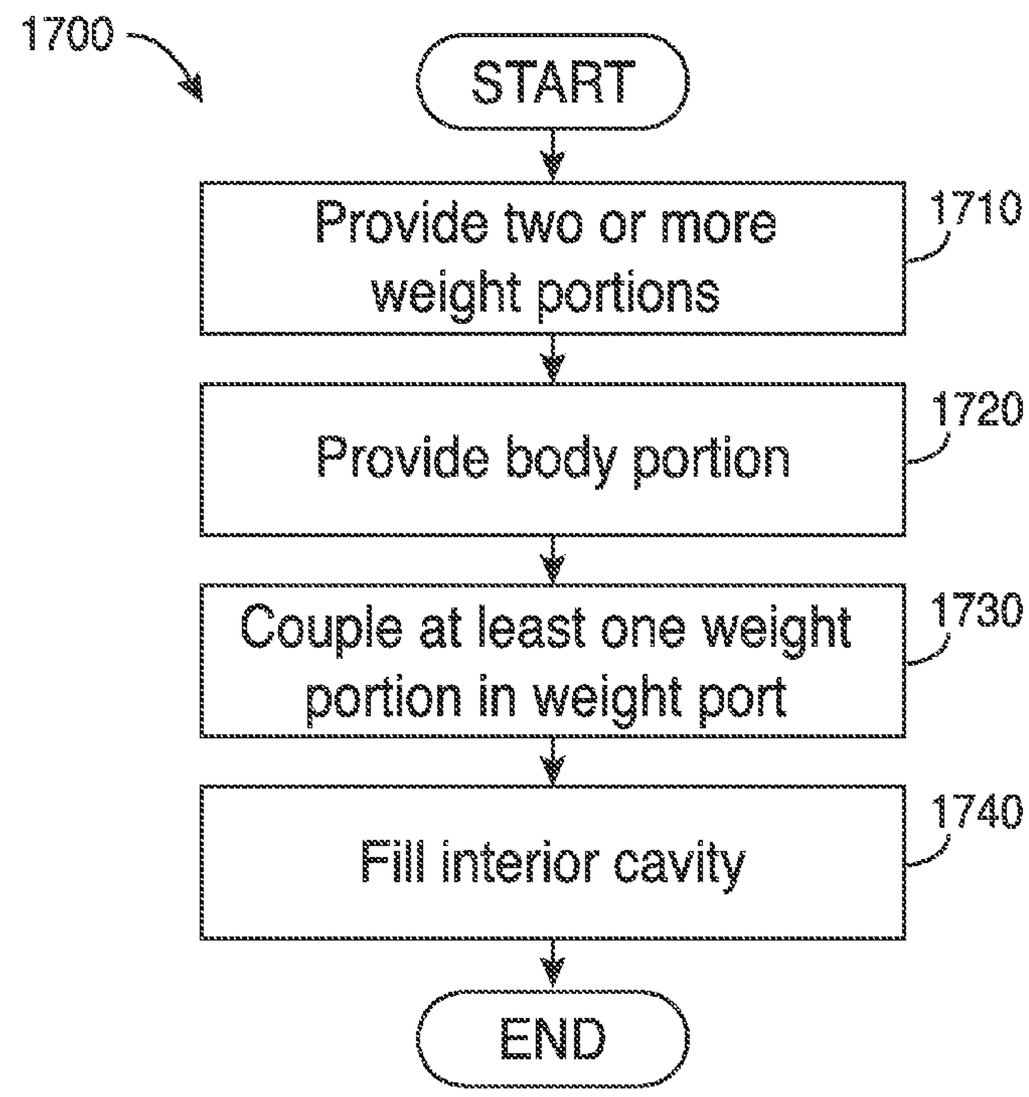
1700
START
Provide two or more weight portions
1710
Provide body portion
1720
Couple at least one weight portion in weight port
1730
Fill interior cavity
1740
END

FIG. 17

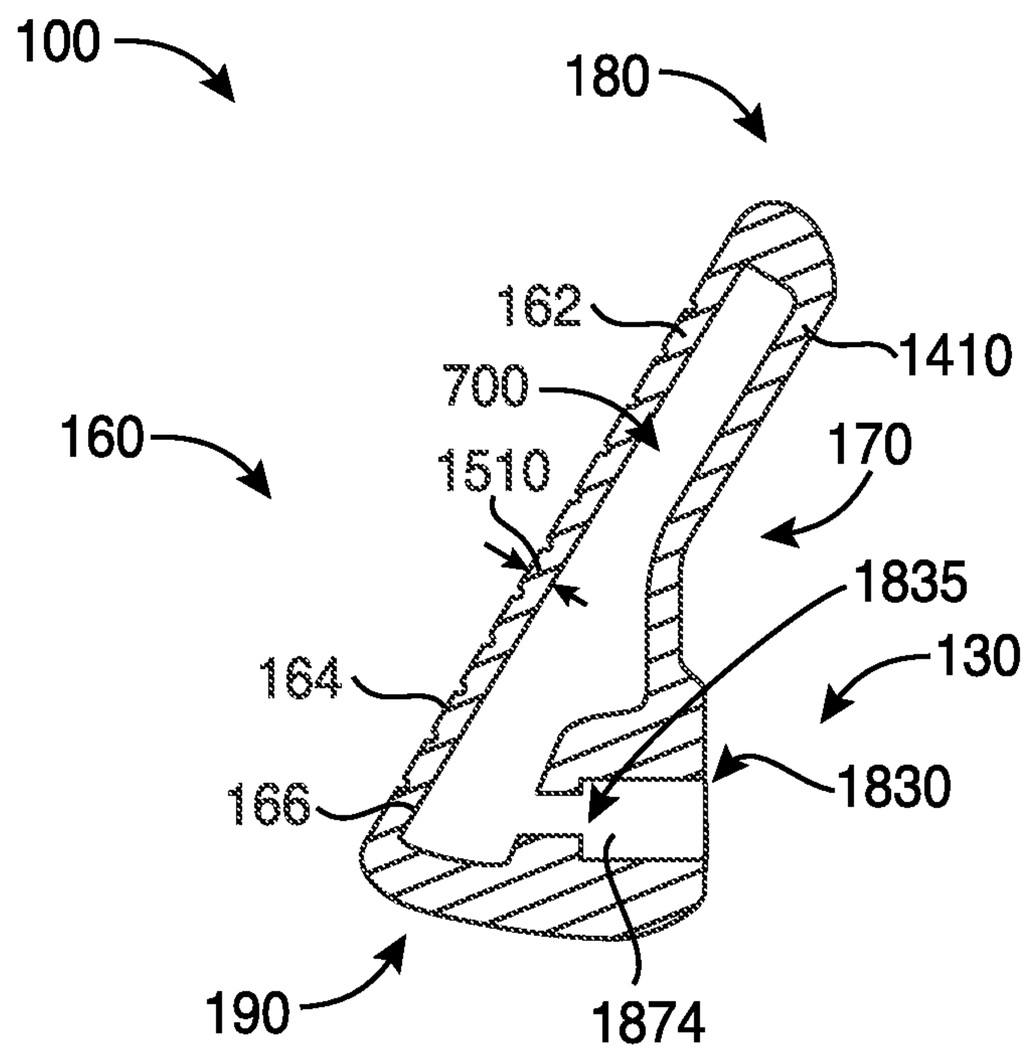
100
180
162
1410
700
160
1510
170
1835
164
130
166
1830
190
1874

FIG. 18

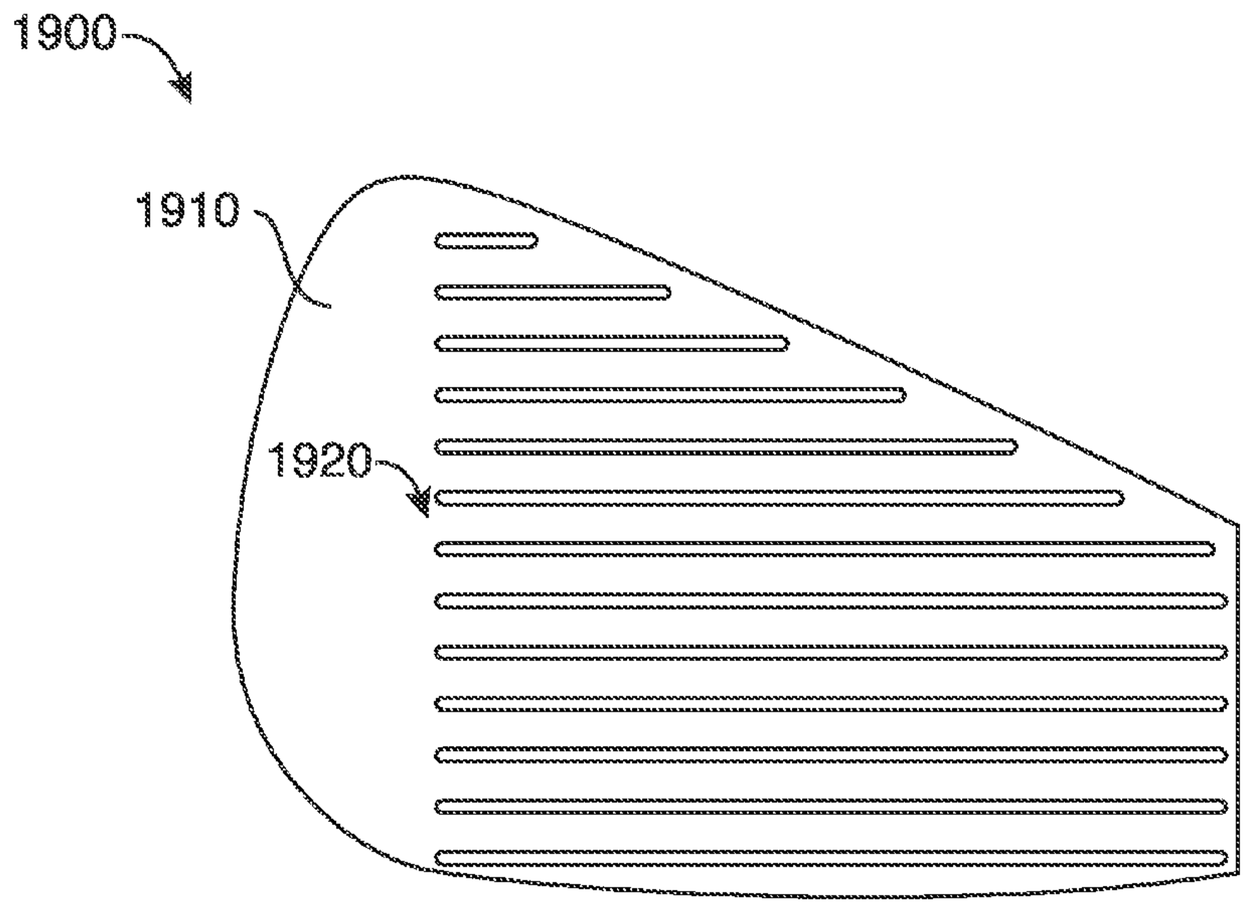

FIG. 19

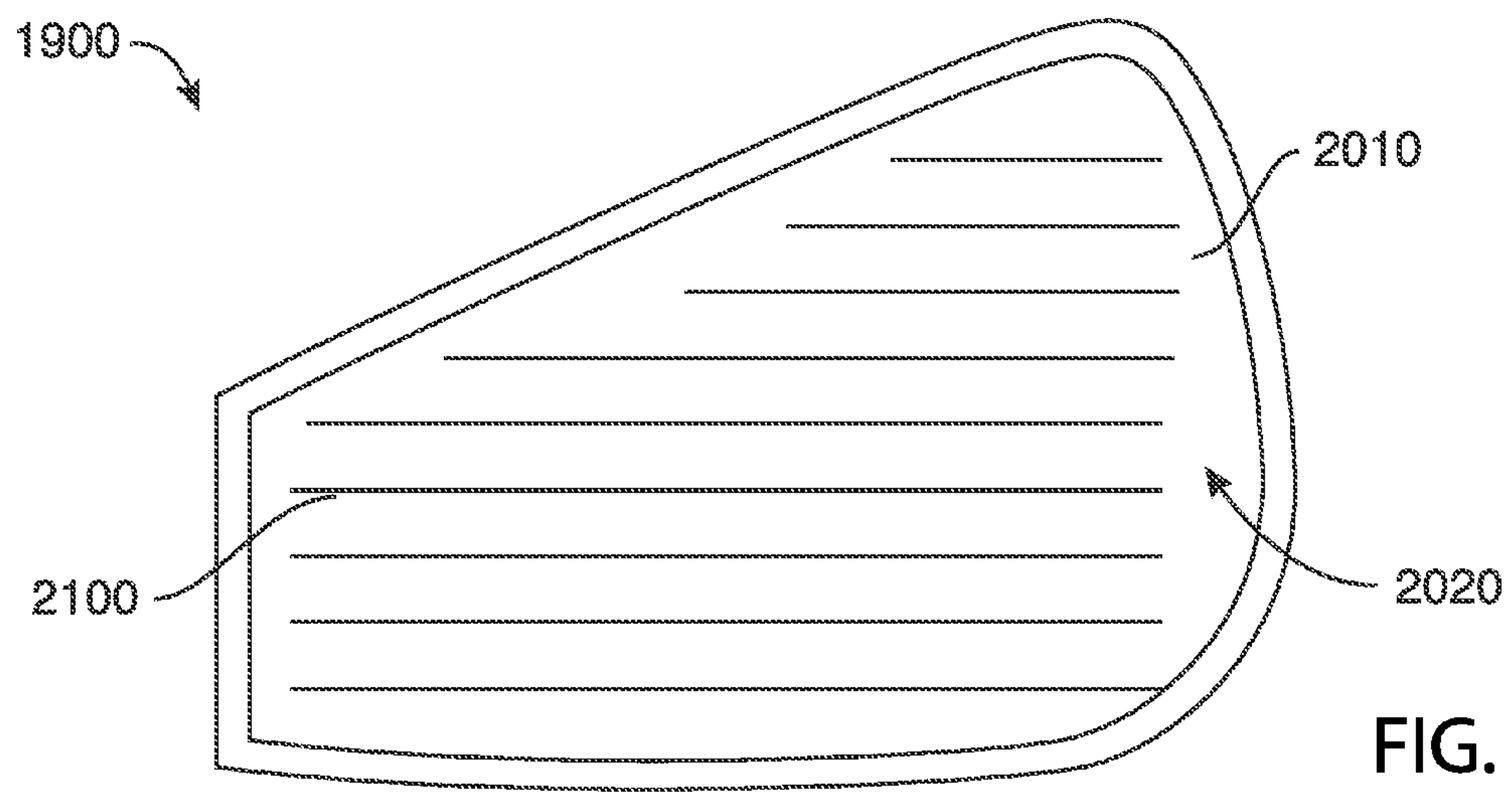

FIG. 20

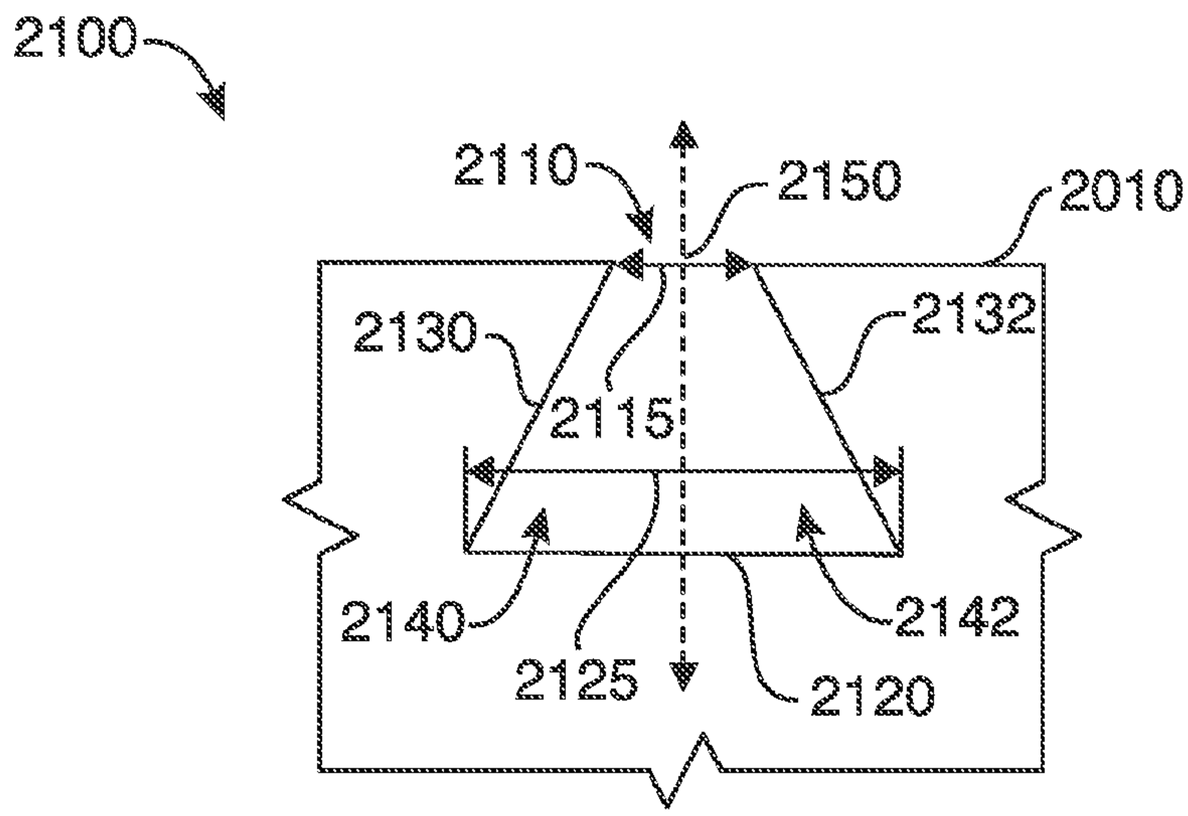

FIG. 21

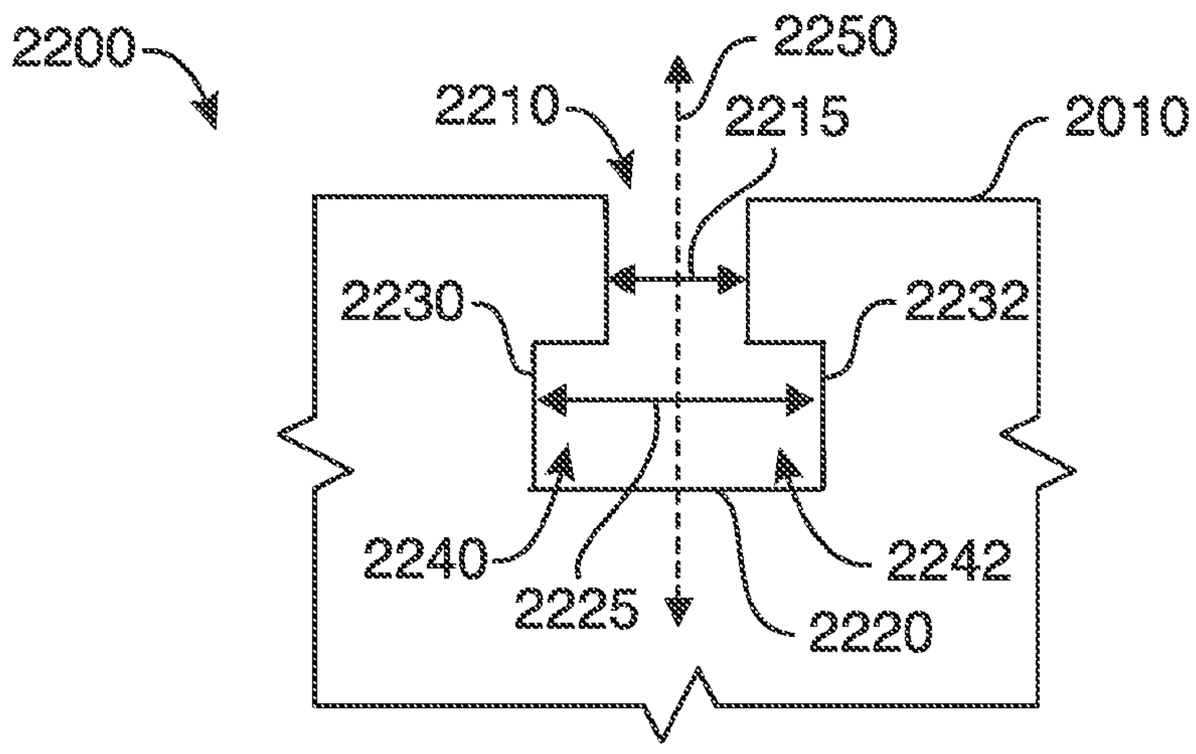

FIG. 22

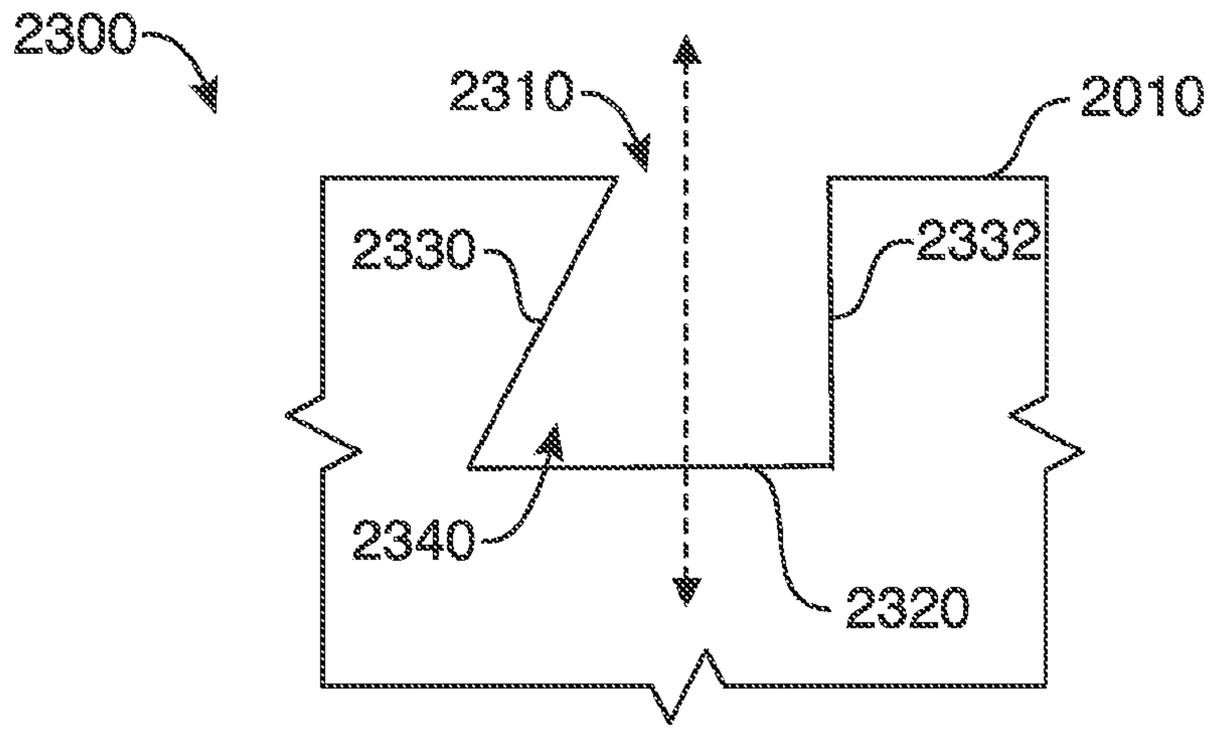

FIG. 23

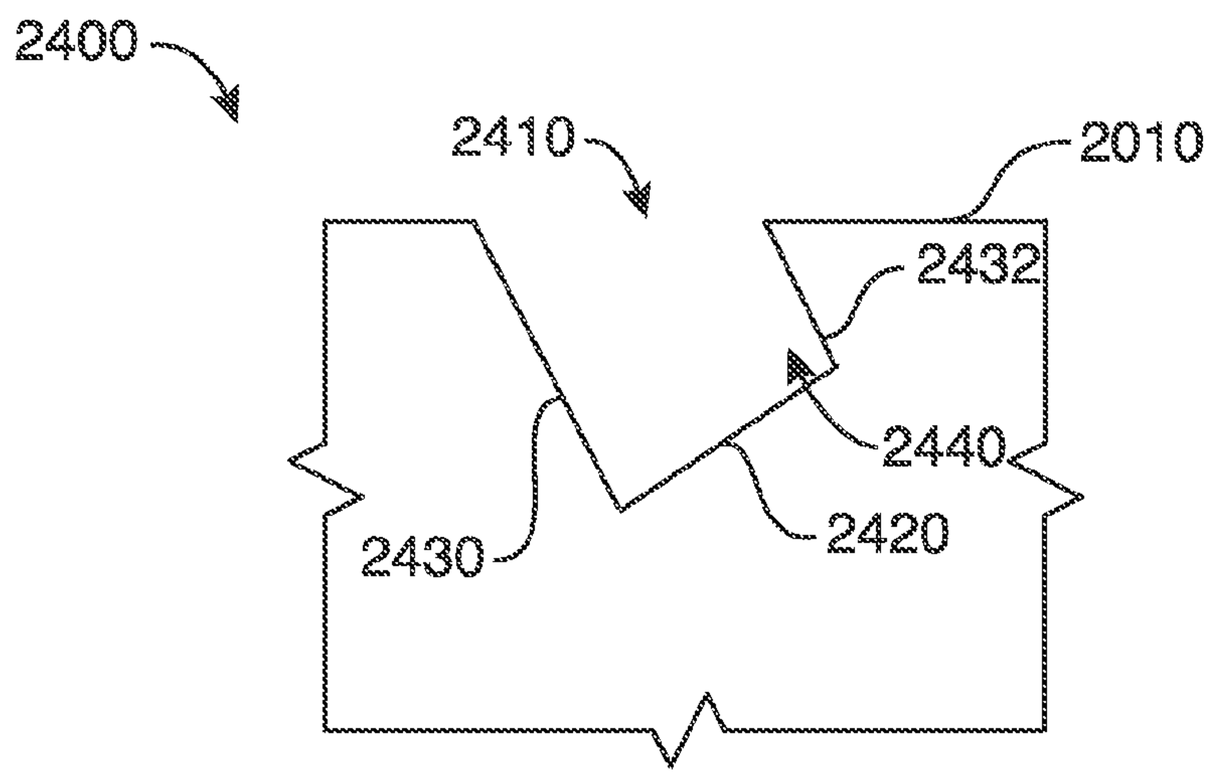

FIG. 24

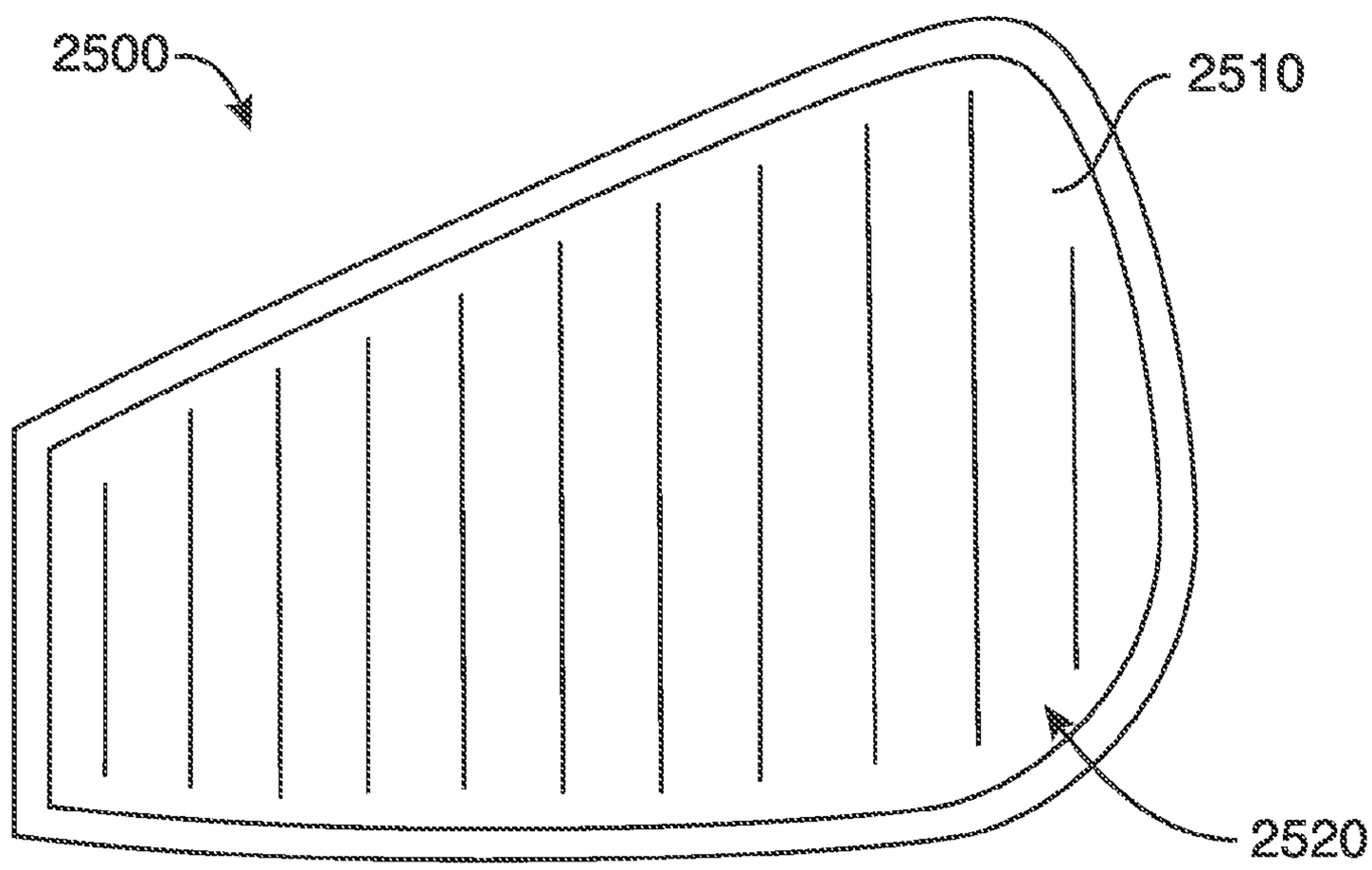

FIG. 25

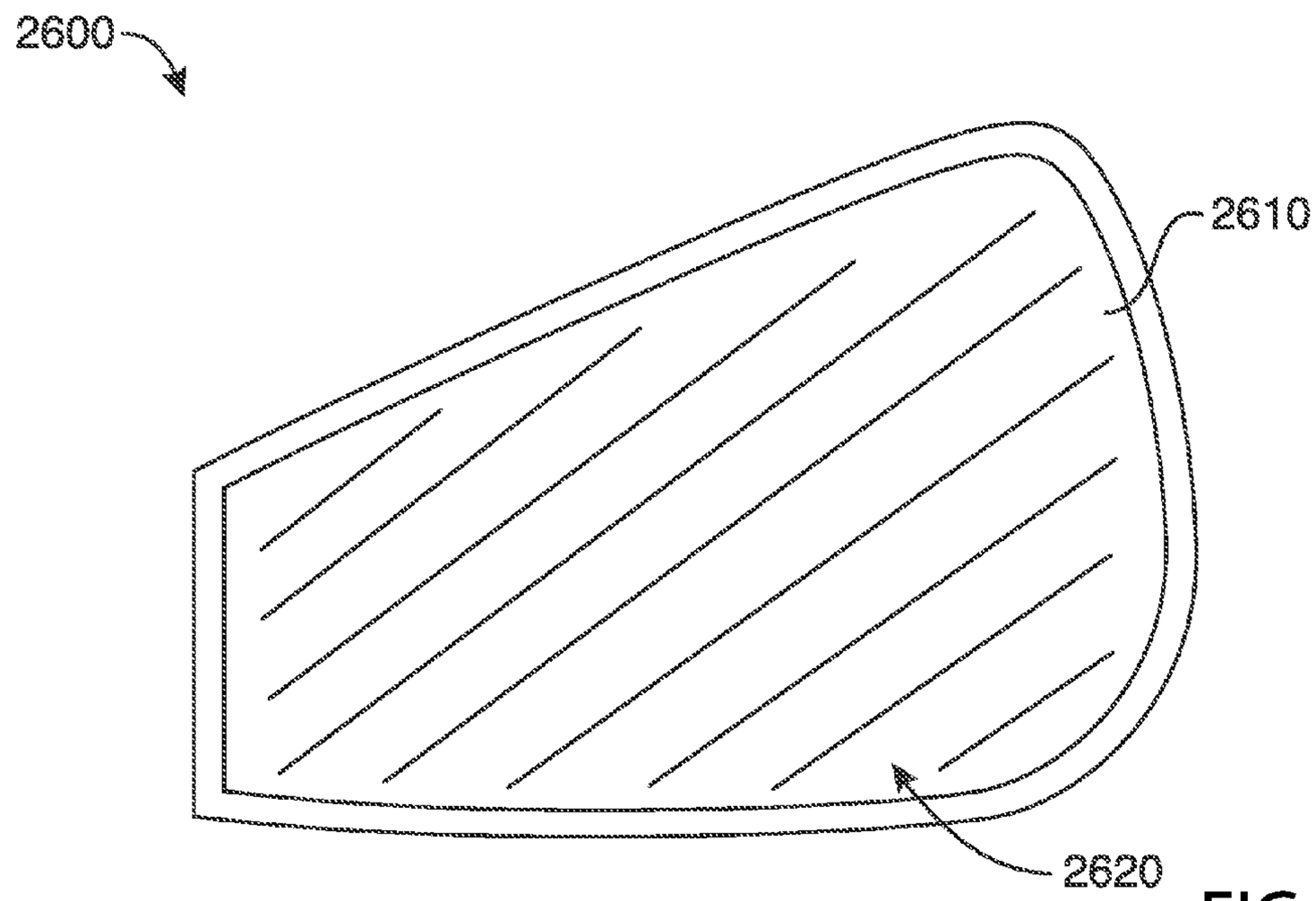

FIG. 26

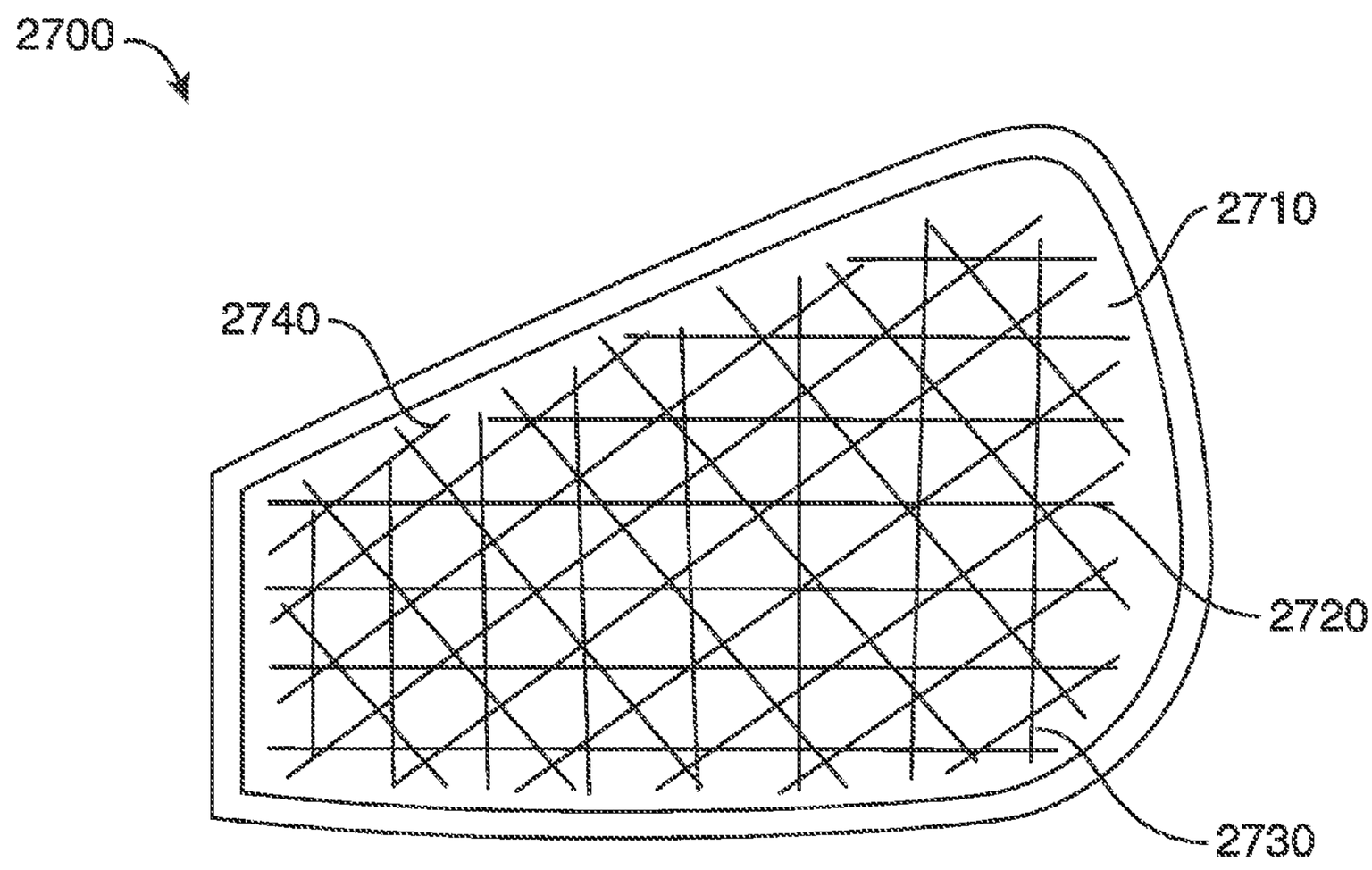

FIG. 27

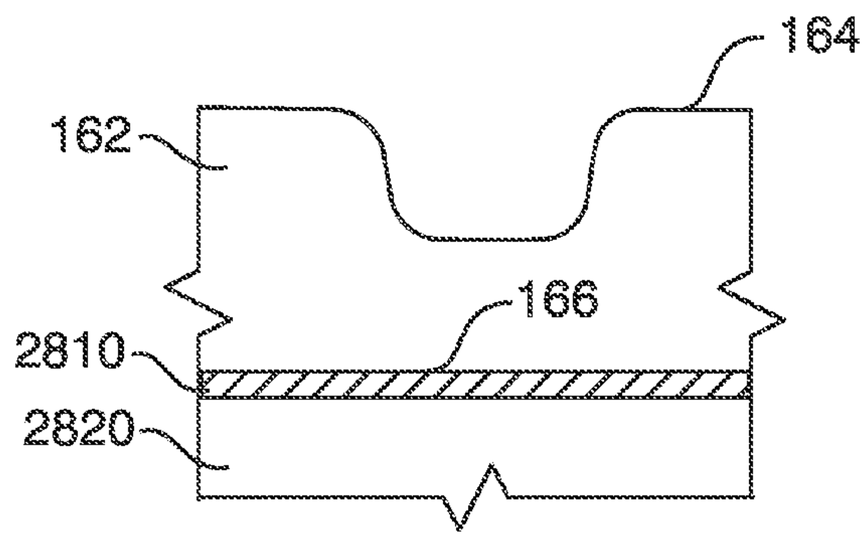

FIG. 28

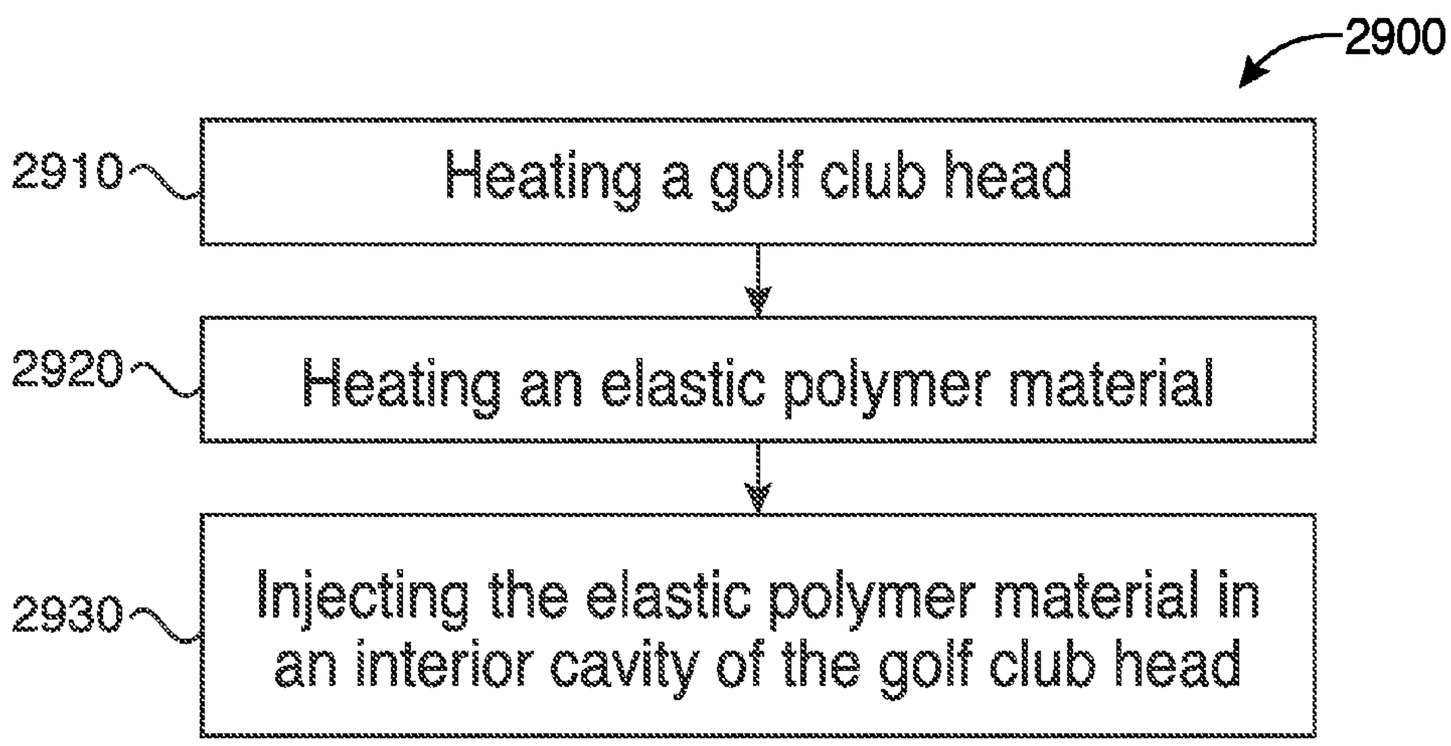

FIG. 29

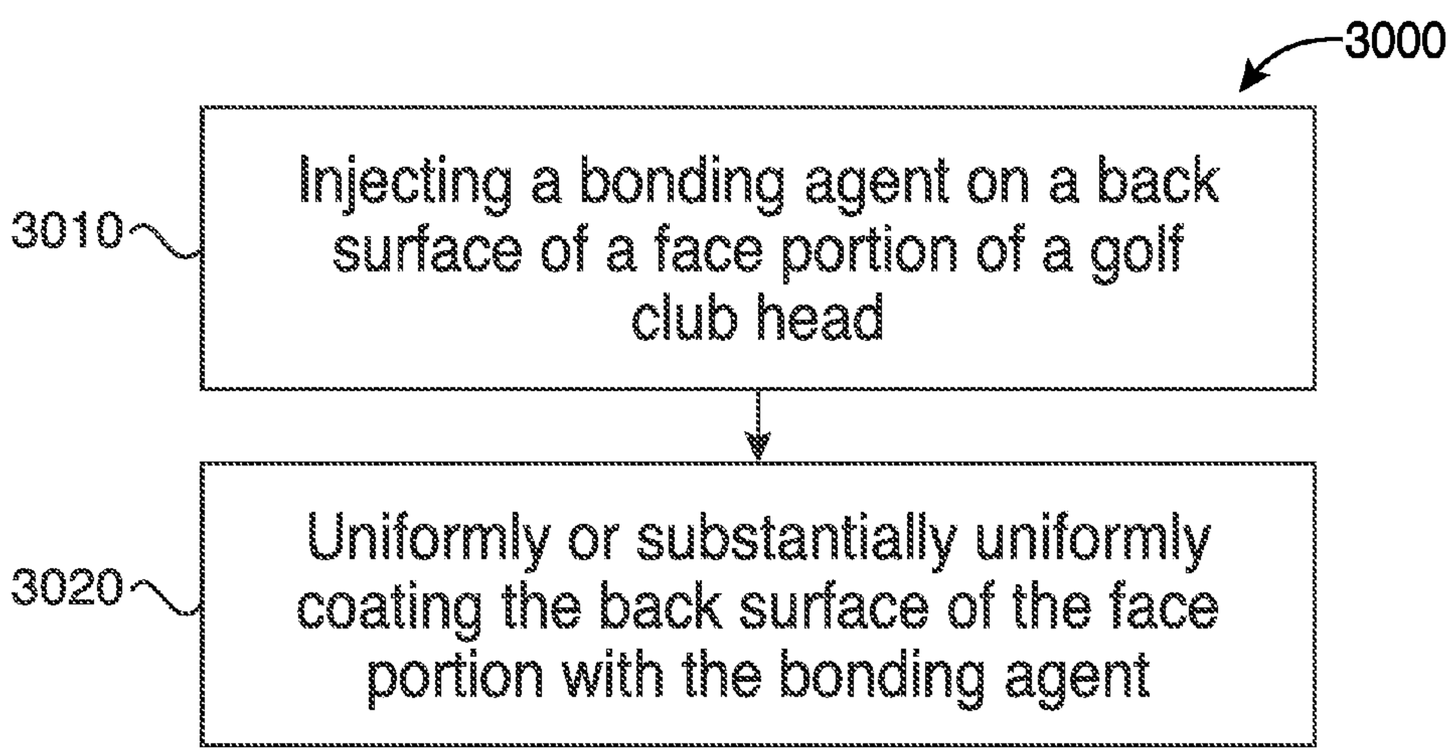

FIG. 30

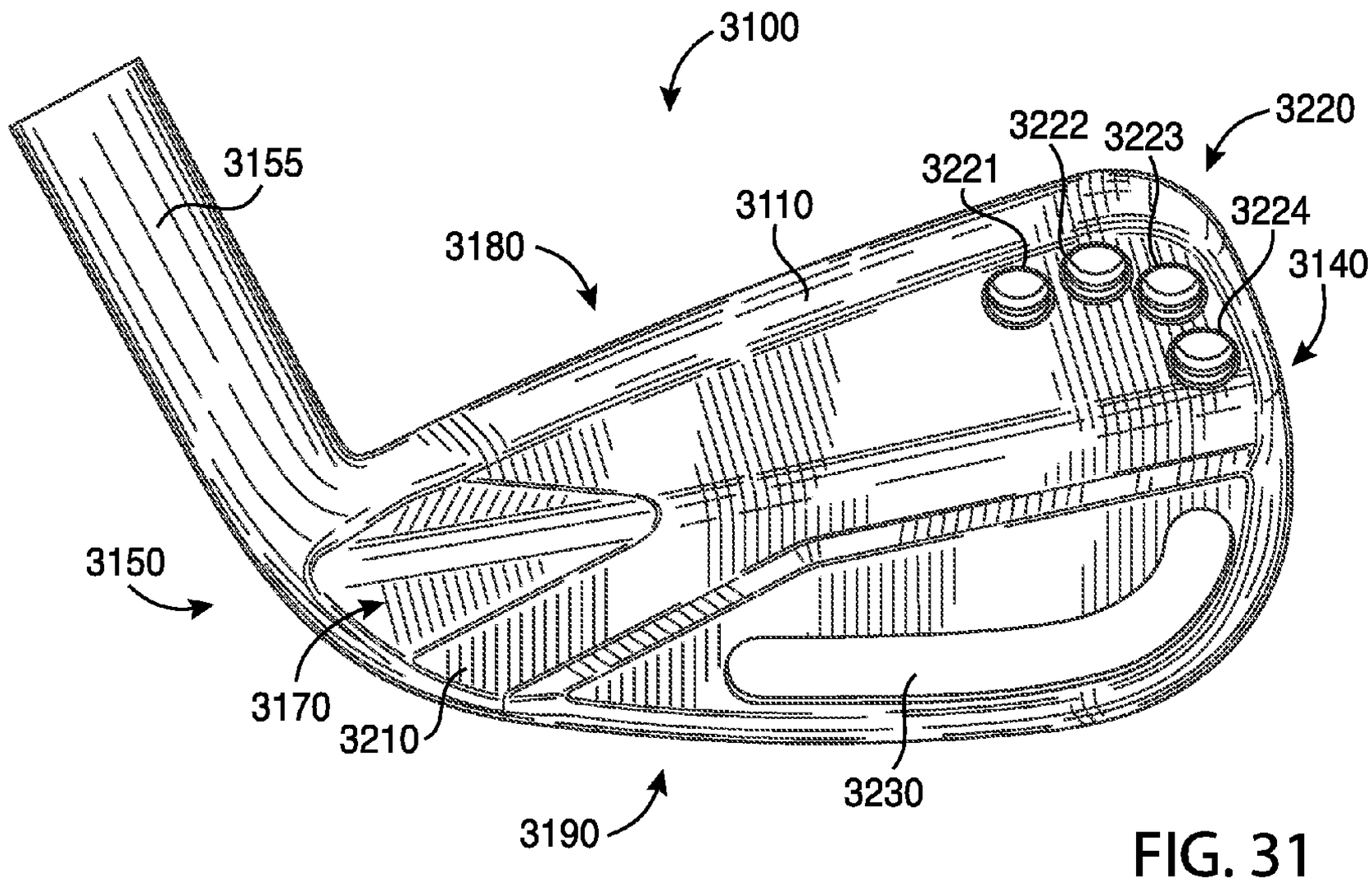
3100
3155
3220
3222
3223
3221
3110
3224
3180
3140
3150
3170
3210
3230
3190

FIG. 31

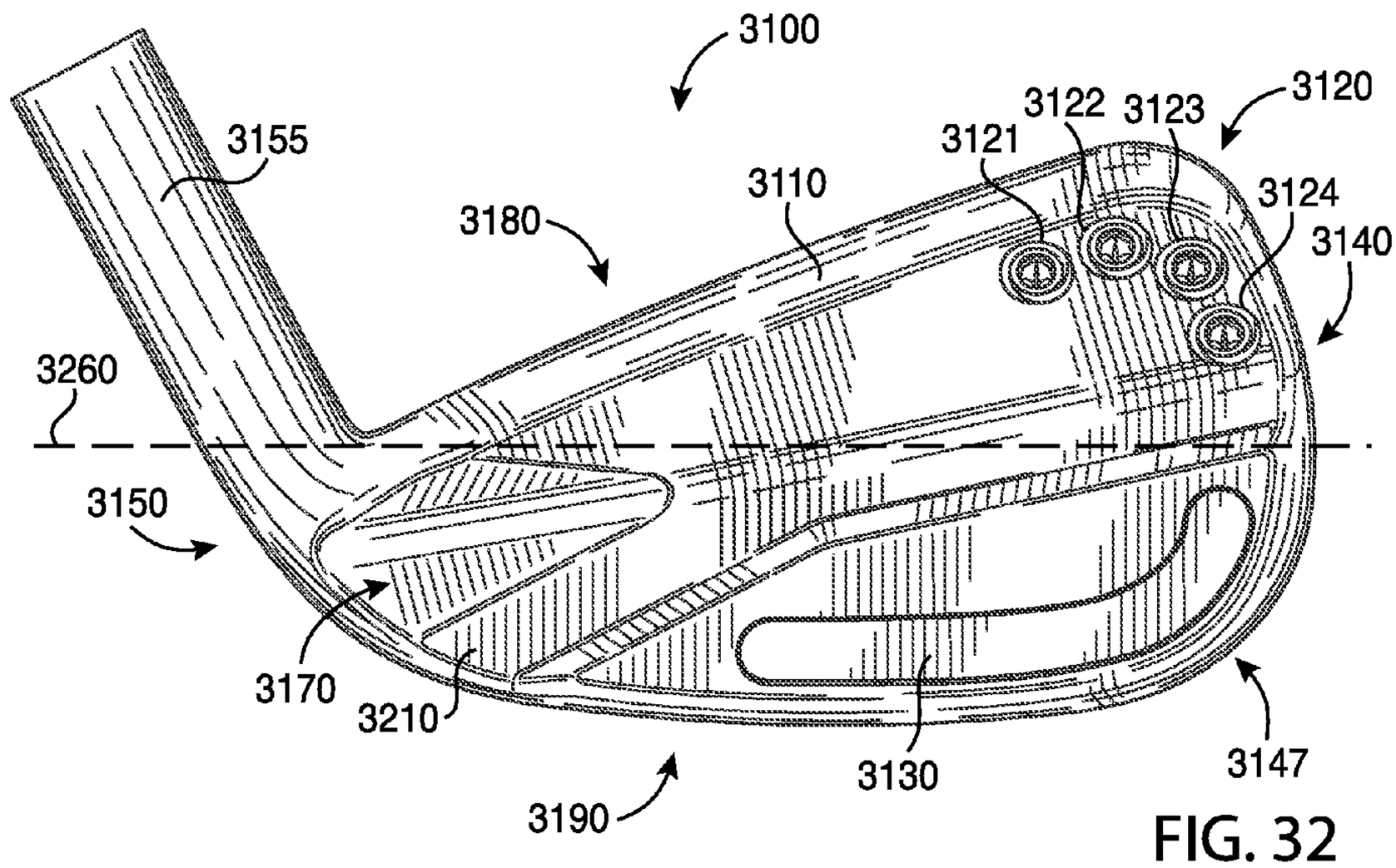
3100
3155
3120
3122
3123
3121
3110
3124
3180
3140
3260
3150
3170
3210
3130
3147
3190

FIG. 32

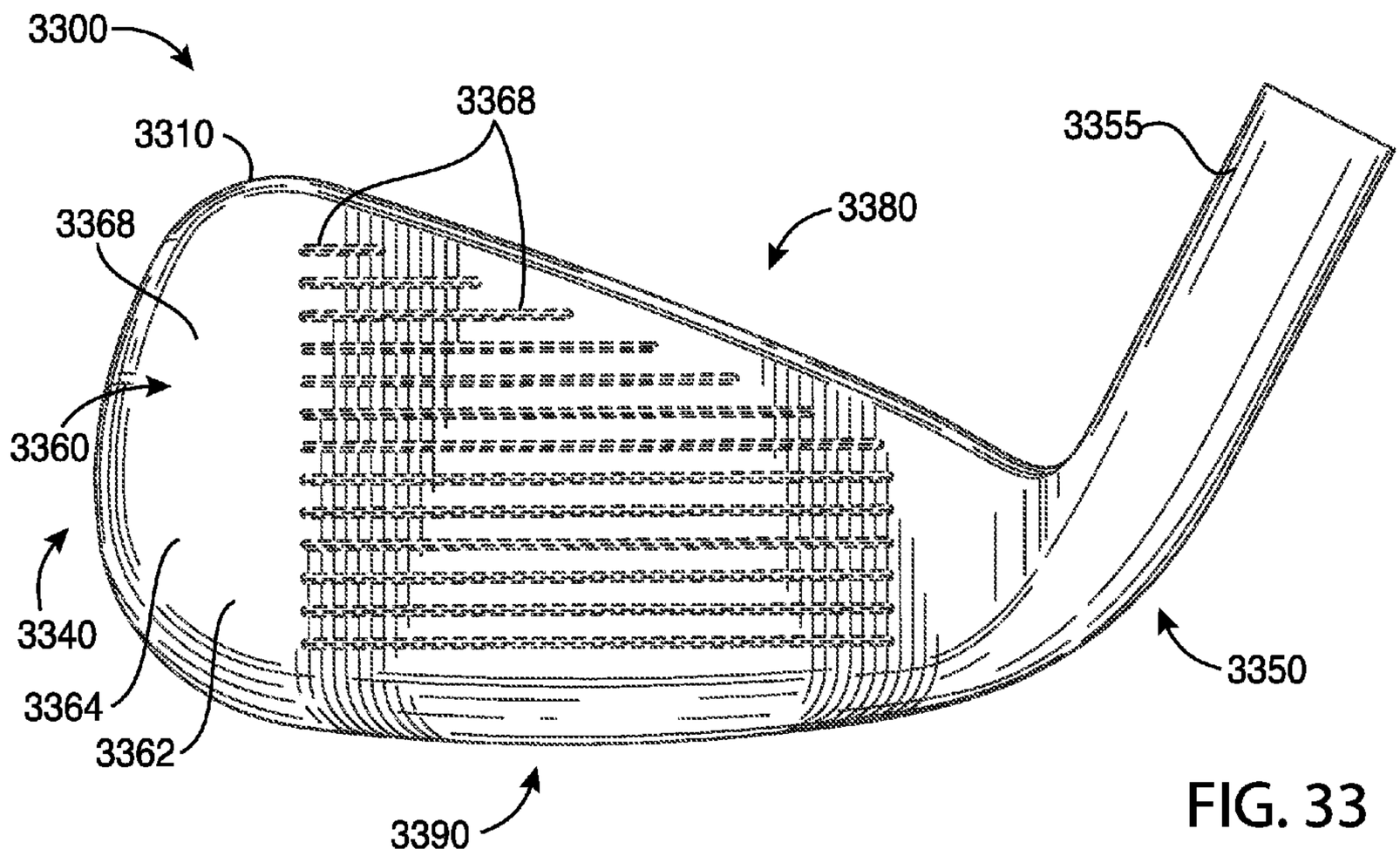
3300
3310
3368
3368
3355
3380
3360
3340
3364
3362
3350
3390

FIG. 33

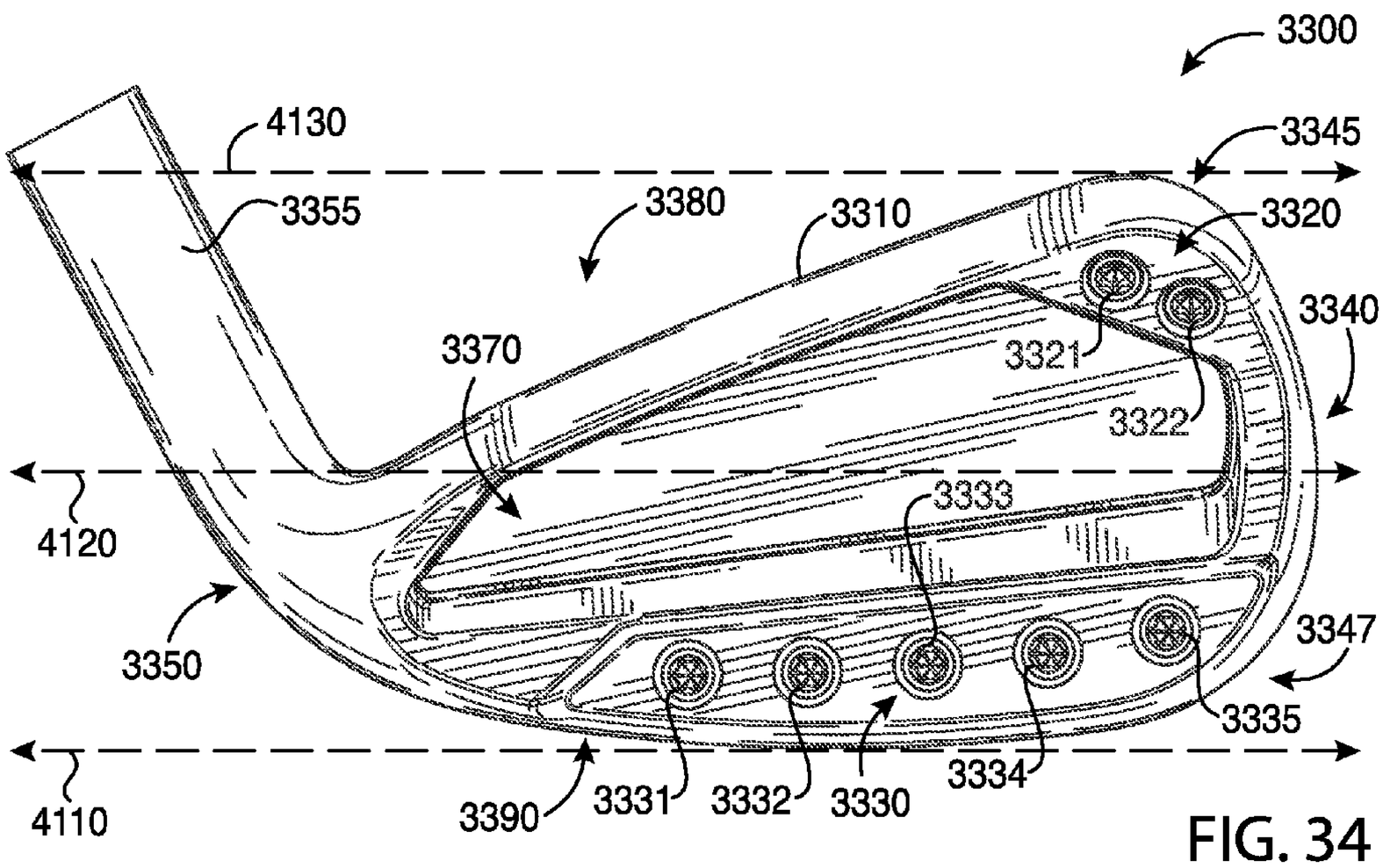
3300
4130
3345
3355
3380
3310
3320
3340
3370
3321
3322
4120
3333
3350
3347
3335
4110
3390
3331
3332
3330
3334

FIG. 34

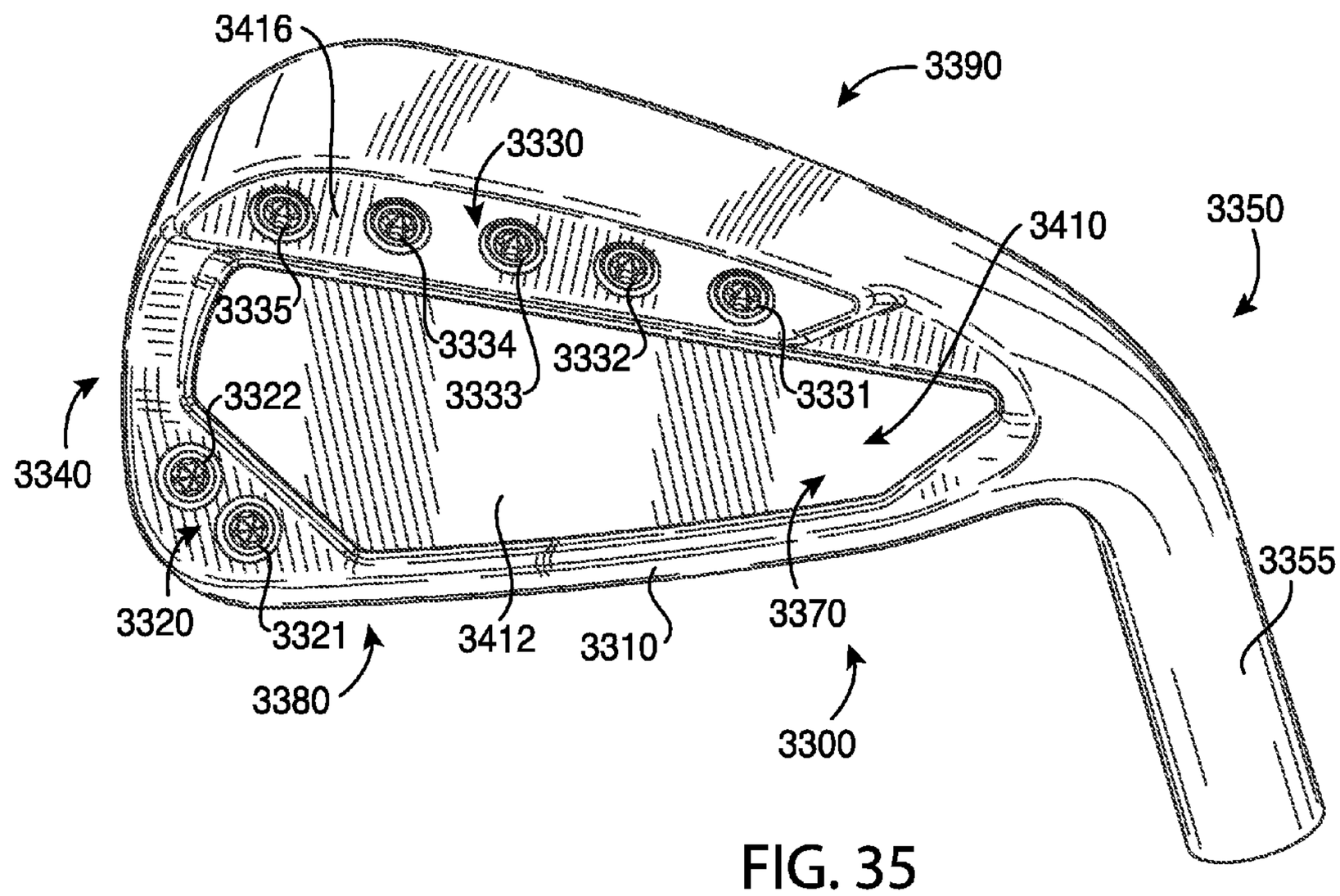
3416
3390
3330
3410
3350
3335
3334
3332
3333
3331
3322
3340
3320
3321
3412
3310
3370
3355
3380
3300

FIG. 35

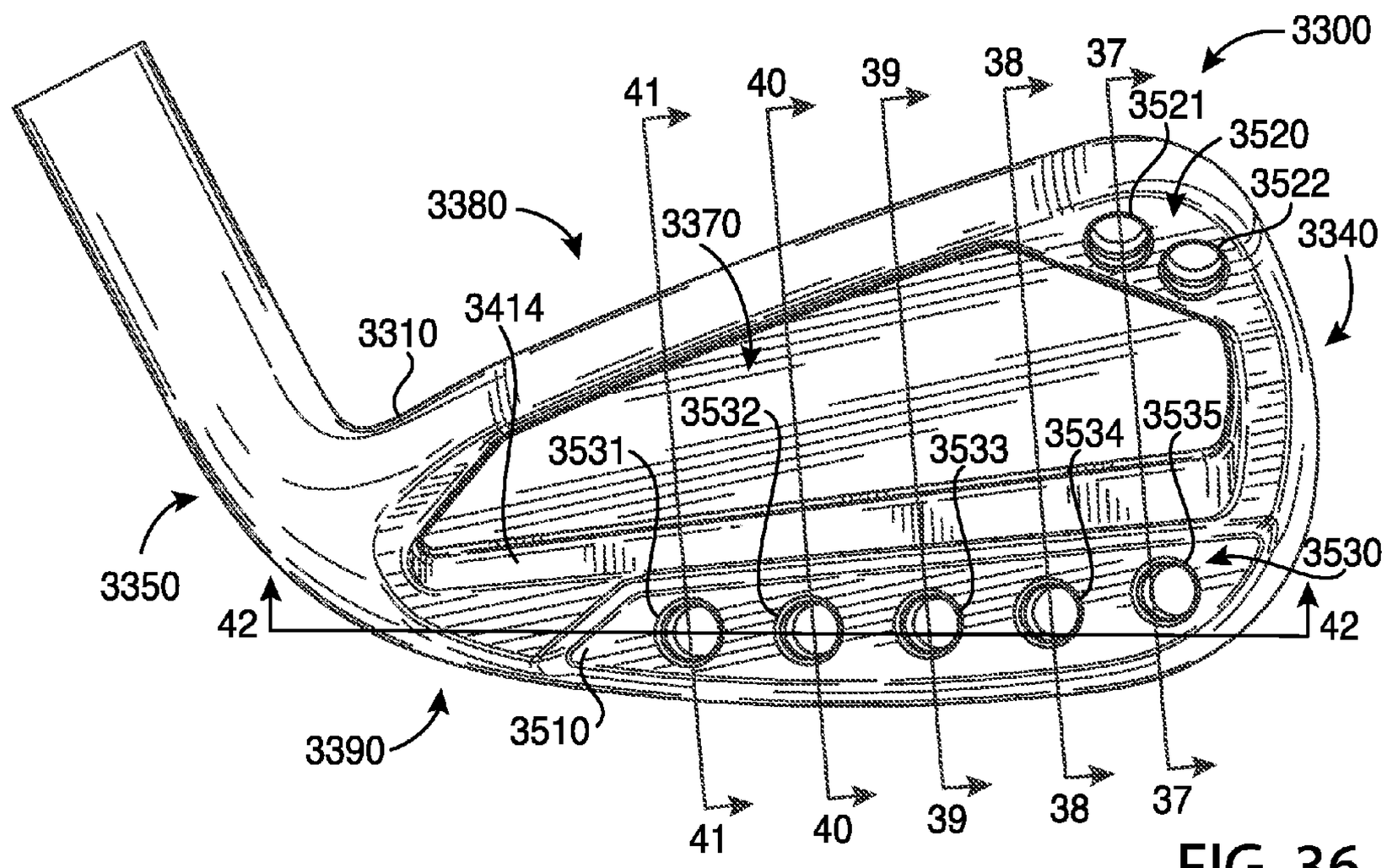
3300
41
40
39
38
37
3521
3520
3522
3340
3380
3370
3414
3310
3532
3531
3533
3534
3535
3530
3350
42
42
3510
3390
41
40
39
38
37

FIG. 36

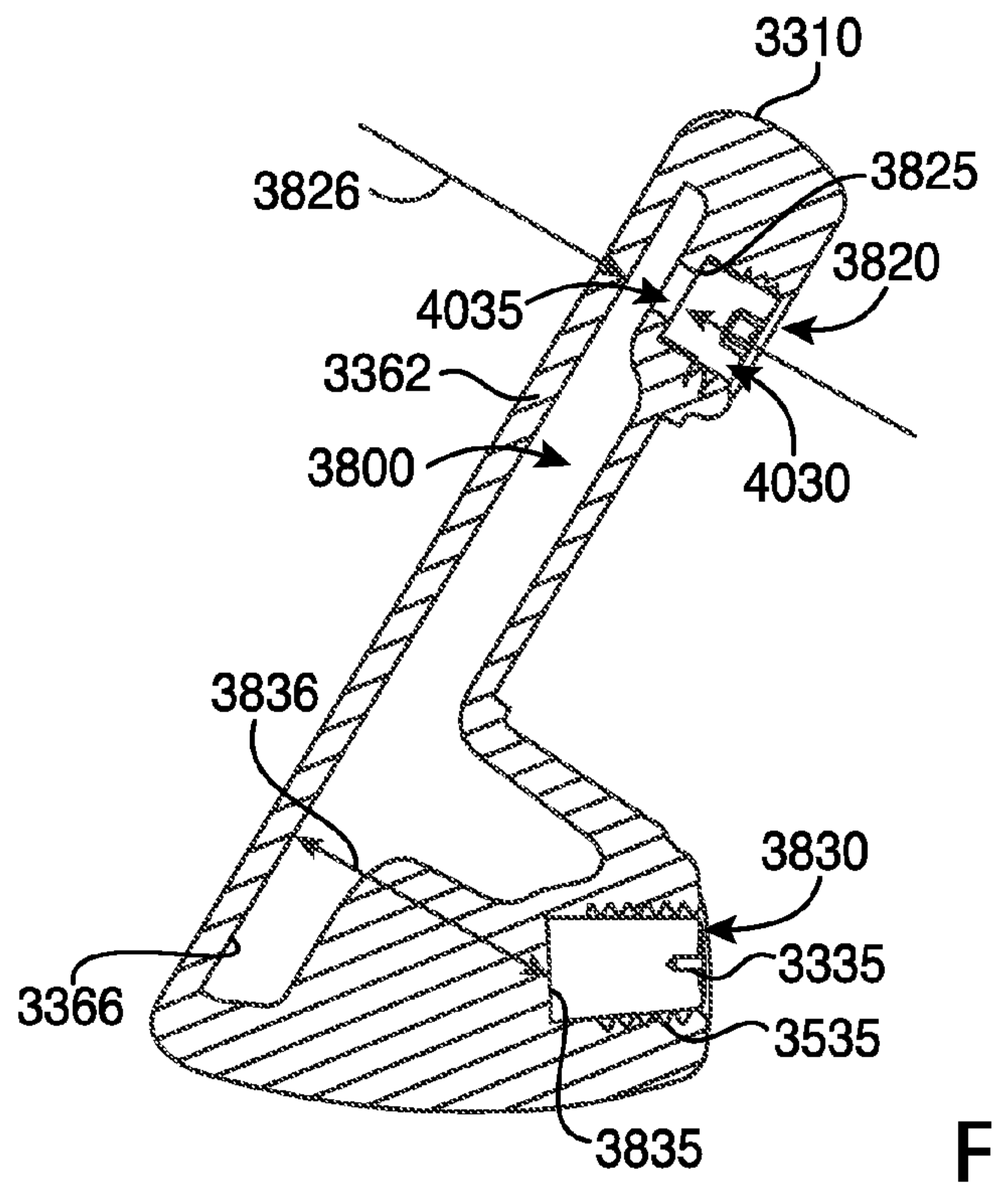
3310
3826
3825
3820
4035
3362
3800
4030
3836
3830
3335
3366
3535
3835

FIG. 37

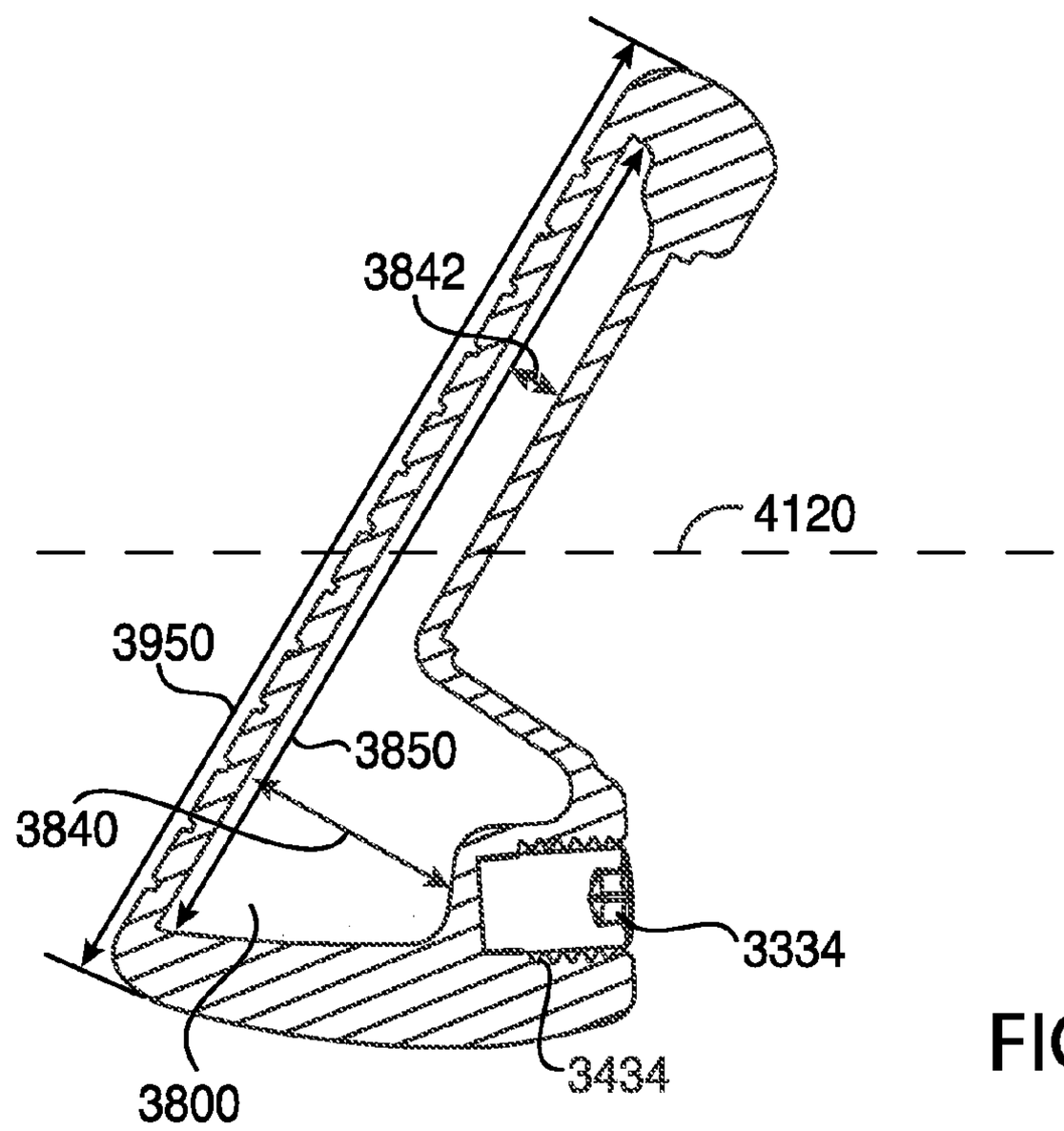
3842
4120
3950
3850
3840
3334
3800
3434

FIG. 38

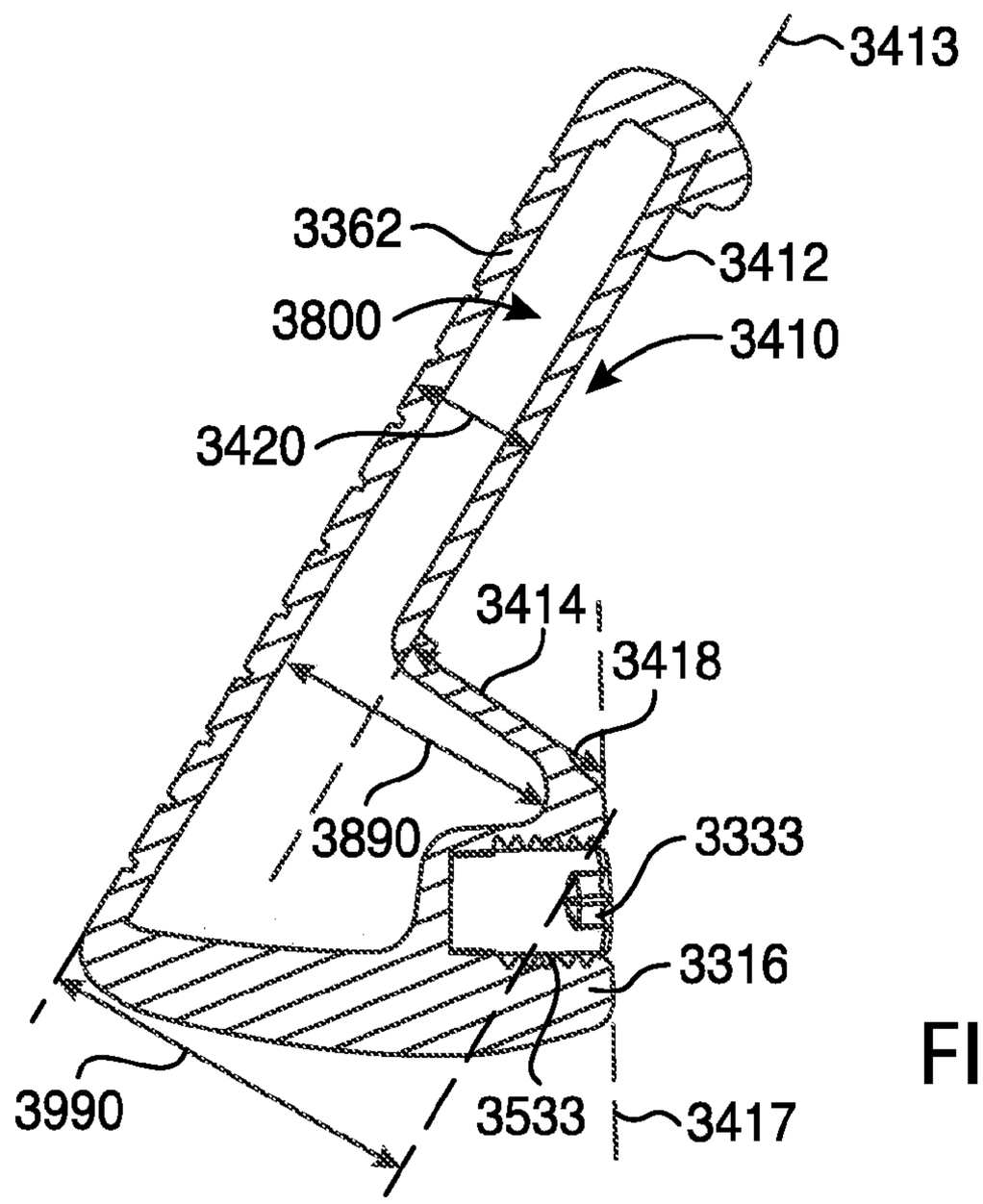
3413
3362
3412
3800
3410
3420
3414
3418
3890
3333
3316
3990
3533
3417

FIG. 39

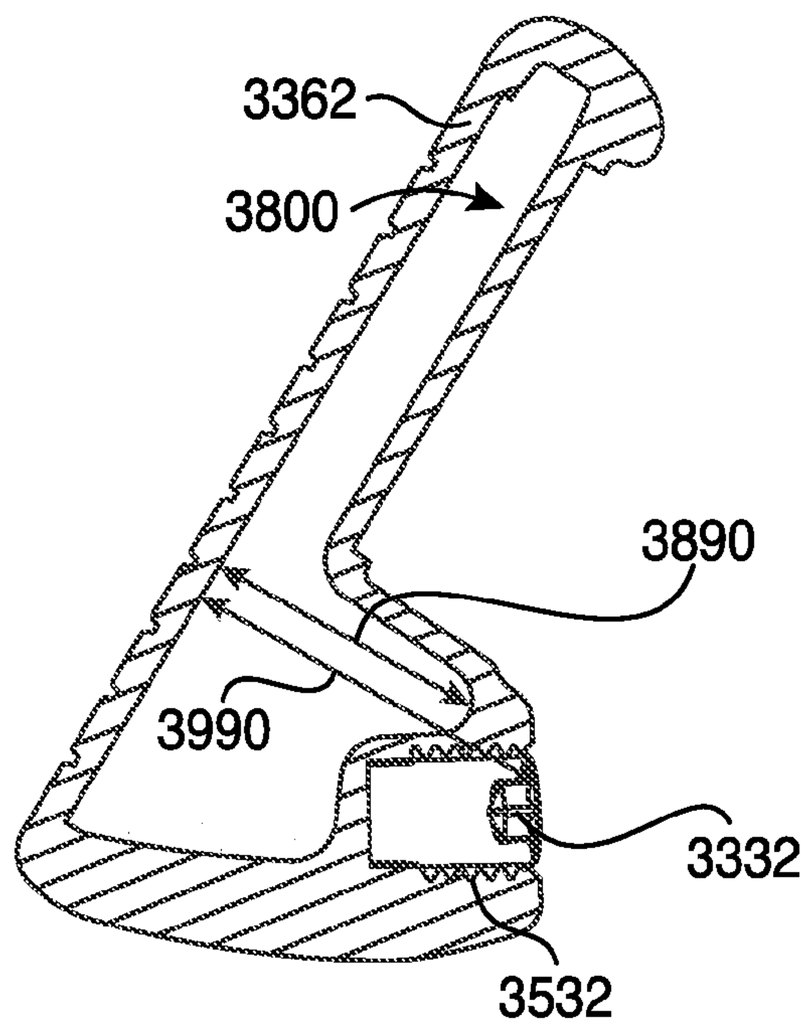
3362
3800
3890
3990
3332
3532

FIG. 40

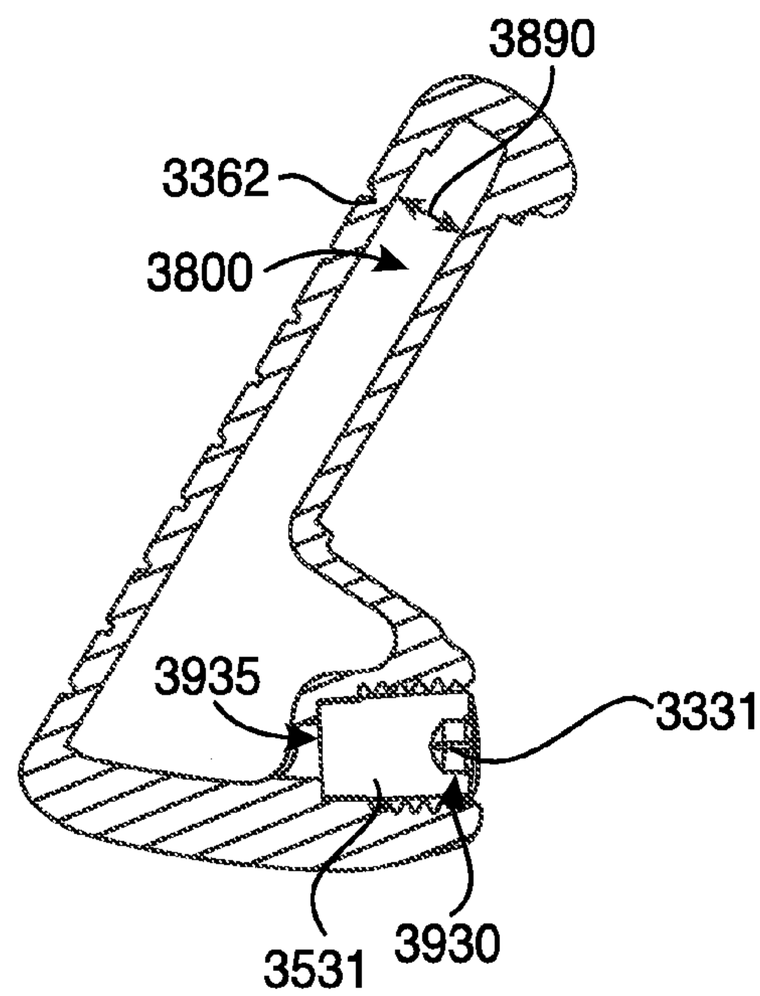
3890
3362
3800
3935
3331
3531
3930

FIG. 41

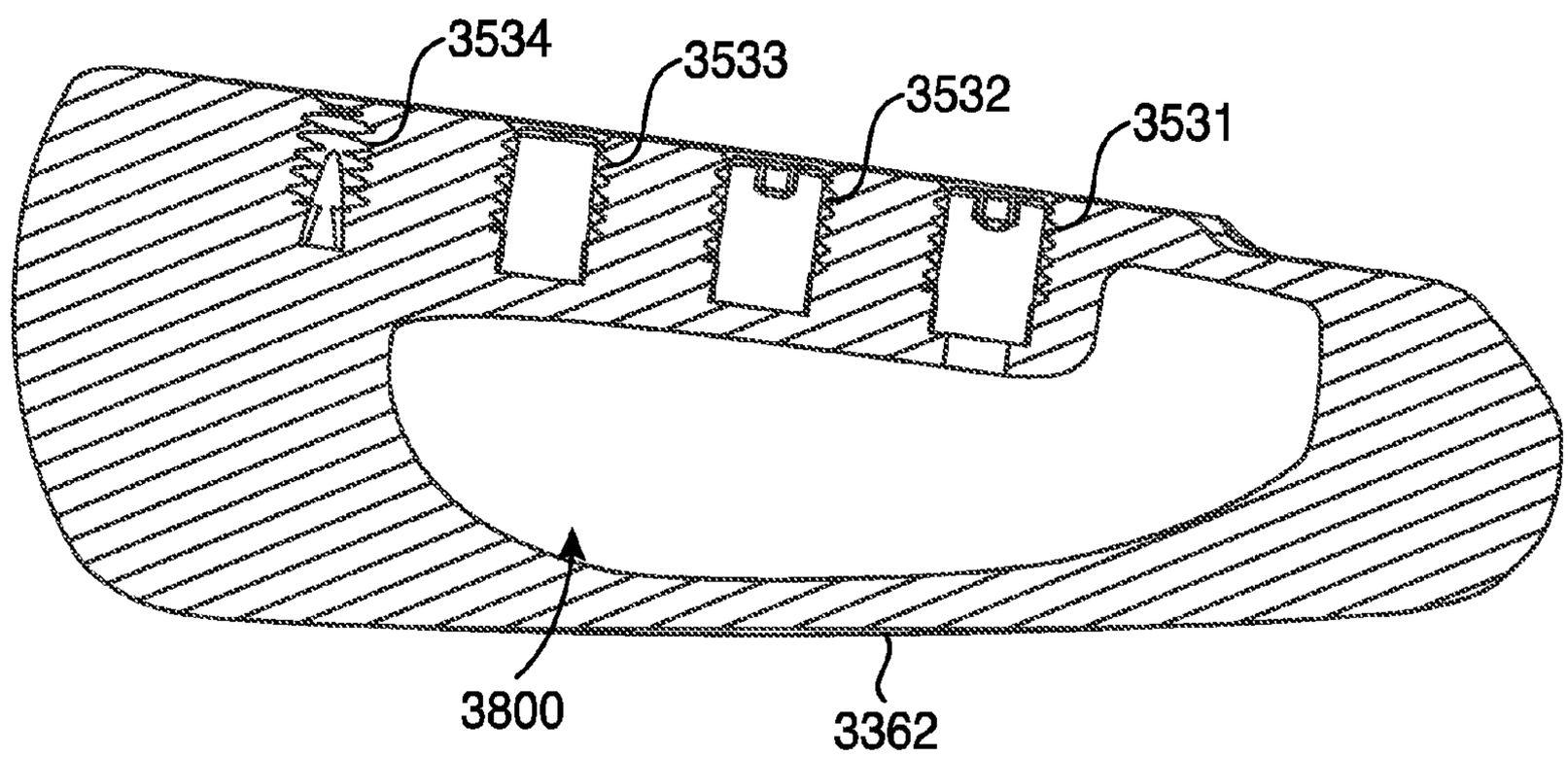
3534
3533
3532
3531
3800
3362

FIG. 42

GOLF CLUB HEADS AND METHODS TO MANUFACTURE GOLF CLUB HEADS

CROSS REFERENCE

[0001] This application claims the benefit of U.S. Provisional application No. U.S. Provisional Application No. 62/118,403, filed Feb. 19, 2015, U.S. Provisional Application No. 62/159,856, filed May 11, 2015, U.S. Provisional Application No. 62/209,780, filed Aug. 25, 2015, and U.S. Provisional Application No. 62/277,636, filed Jan. 12, 2016. This application is a continuation-in-part application of U.S. Non-Provisional application Ser. No. 14/589,277, filed on Jan. 5, 2015, which is a continuation application of U.S. Non-Provisional application Ser. No. 14/498,603, filed on Sep. 26, 2014, which claims the benefit of U.S. Provisional Application No. 62/041,538 filed Aug. 25, 2014. This application is also a continuation-in-part of U.S. Non-Provisional application Ser. No. 14/711,596, filed May 13, 2015, which is a continuation-in-part application of U.S. Non-Provisional application Ser. No. 14/589,277, filed Jan. 5, 2015, which is a continuation application of U.S. Non-Provisional application Ser. No. 14/513,073, filed Oct. 13, 2014, which is a continuation application of U.S. Non-Provisional application Ser. No. 14/498,603, filed Sep. 26, 2014, which claims the benefit of U.S. Provisional Application No. 62/041,538, filed Aug. 25, 2014. This application is also a continuation-in-part application of U.S. Application Ser. No. 29/515,013, filed Jan. 20, 2015, which is a continuation-in-part application of U.S. Application Ser. No. 29/501,006 filed Aug. 29, 2014. This application is also a continuation-in-part application of U.S. Application Ser. No. 29/547,678, filed Dec. 7, 2015, which is a continuation-in-part application of U.S. Application Ser. No. 29/540,066, filed on Sep. 21, 2015, which is a continuation-in-part application of U.S. Ser. No. 29/537,413, filed Aug. 25, 2015. The disclosures of the referenced applications are incorporated herein by reference.

COPYRIGHT AUTHORIZATION

[0002] The present disclosure may be subject to copyright protection. The copyright owner has no objection to the facsimile reproduction by anyone of the present disclosure and its related documents, as they appear in the Patent and Trademark Office patent files or records, but otherwise reserves all applicable copyrights.

FIELD

[0003] The present disclosure generally relates to golf equipment, and more particularly, to golf club heads and methods to manufacturing golf club heads.

BACKGROUND

[0004] Various materials (e.g., steel-based materials, titanium-based materials, tungsten-based materials, etc.) may be used to manufacture golf club heads. By using multiple materials to manufacture golf club heads, the position of the center of gravity (CG) and/or the moment of inertia (MOI) of the golf club heads may be optimized to produce certain trajectory and spin rate of a golf ball.

BRIEF DESCRIPTION OF THE DRAWINGS

[0005] FIG. **1** depicts a front view of a golf club head according to an embodiment of the apparatus, methods, and articles of manufacture described herein.

[0006] FIG. **2** depicts a rear view of the example golf club head of FIG. **1**.

[0007] FIG. **3** depicts a top view of the example golf club head of FIG. **1**.

[0008] FIG. **4** depicts a bottom view of the example golf club head of FIG. **1**.

[0009] FIG. **5** depicts a left view of the example golf club head of FIG. **1**.

[0010] FIG. **6** depicts a right view of the example golf club head of FIG. **1**.

[0011] FIG. **7** depicts a cross-sectional view of the example golf club head of FIG. **1** along line **7-7**.

[0012] FIG. **8** depicts a cross-sectional view of the example golf club head of FIG. **1** along line **8-8**.

[0013] FIG. **9** depicts a cross-sectional view of the example golf club head of FIG. **1** along line **9-9**.

[0014] FIG. **10** depicts another rear view of the example golf club head of FIG. **1**.

[0015] FIG. **11** depicts a top view of a weight portion associated with the example golf club head of FIG. **1**.

[0016] FIG. **12** depicts a side view of a weight portion associated with the example golf club head of FIG. **1**.

[0017] FIG. **13** depicts a side view of another weight portion associated with the example golf club head of FIG. **1**.

[0018] FIG. **14** depicts a rear view of a body portion of the example golf club head of FIG. **1**.

[0019] FIG. **15** depicts a cross-sectional view of a face portion of the example golf club head of FIG. **1**.

[0020] FIG. **16** depicts a cross-sectional view of another face portion of the example golf club head of FIG. **1**.

[0021] FIG. **17** depicts one manner in which the example golf club head described herein may be manufactured.

[0022] FIG. **18** depicts another cross-sectional view of the example golf club head of FIG. **4** along line **18-18**.

[0023] FIG. **19** depicts a front view of a face portion of the example golf club head of FIG. **1**.

[0024] FIG. **20** depicts a back view of the face portion of FIG. **19**.

[0025] FIG. **21** depicts a cross-sectional view of an example channel of the face portion of FIG. **19**.

[0026] FIG. **22** depicts a cross-sectional view of another example channel of the face portion of FIG. **19**.

[0027] FIG. **23** depicts a cross-sectional view of yet another example channel of the face portion of FIG. **19**.

[0028] FIG. **24** depicts a cross-sectional view of yet another example channel of the face portion of FIG. **19**.

[0029] FIG. **25** depicts a back view of another example face portion of the example golf club head of FIG. **1**.

[0030] FIG. **26** depicts a back view of yet another example face portion of the example golf club head of FIG. **1**.

[0031] FIG. **27** depicts a back view of yet another example face portion of the example golf club head of FIG. **1**.

[0032] FIG. **28** depicts a cross-sectional view of the example golf club head of FIG. **1**.

[0033] FIG. **29** depicts another manner in which an example golf club head described herein may be manufactured.

[0034] FIG. **30** depicts yet another manner in which an example golf club head described herein may be manufactured.

[0035] FIG. **31** depicts a rear view of a golf club head according to an embodiment of the apparatus, methods, and articles of manufacture described herein.

[0036] FIG. **32** depicts a rear view of the golf club head of FIG. **31**.

[0037] FIG. **33** depicts a front view of a golf club head according to an embodiment of the apparatus, methods, and articles of manufacture described herein.

[0038] FIG. **34** depicts a rear view of the example golf club head of FIG. **33**.

[0039] FIG. **35** depicts a rear perspective view of the example golf club head of FIG. **33**.

[0040] FIG. **36** depicts a rear view of the example golf club head of FIG. **33**.

[0041] FIG. **37** depicts a cross-sectional view of the example golf club head of FIG. **33** along line **37-37** of FIG. **36**.

[0042] FIG. **38** depicts a cross-sectional view of the example golf club head of FIG. **33** along line **38-38** of FIG. **36**.

[0043] FIG. **39** depicts a cross-sectional view of the example golf club head of FIG. **33** along line **39-39** of FIG. **36**.

[0044] FIG. **40** depicts a cross-sectional view of the example golf club head of FIG. **33** along line **40-40** of FIG. **36**.

[0045] FIG. **41** depicts a cross-sectional view of the example golf club head of FIG. **33** along line **41-41** of FIG. **36**.

[0046] FIG. **42** depicts a cross-sectional view of the example golf club head of FIG. **33** along line **42-42** of FIG. **36**.

[0047] For simplicity and clarity of illustration, the drawing figures illustrate the general manner of construction, and descriptions and details of well-known features and techniques may be omitted to avoid unnecessarily obscuring the present disclosure. Additionally, elements in the drawing figures may not be depicted to scale. For example, the dimensions of some of the elements in the figures may be exaggerated relative to other elements to help improve understanding of embodiments of the present disclosure.

DESCRIPTION

[0048] In general, golf club heads and methods to manufacture golf club heads are described herein. The apparatus, methods, and articles of manufacture described herein are not limited in this regard.

[0049] In the example of FIGS. **1-14**, a golf club head **100** may include a body portion **110** (FIG. **14**), and two or more weight portions, generally shown as a first set of weight portions **120** (e.g., shown as weight portions **121**, **122**, **123**, and **124**) and a second set of weight portions **130** (e.g., shown as weight portions **131**, **132**, **133**, **134**, **135**, **136**, and **137**). The body portion **110** may include a toe portion **140**, a heel portion **150**, a front portion **160**, a back portion **170**, a top portion **180**, and a sole portion **190**. The body portion **110** may be made of a first material whereas the first and second sets of weight portions **120** and **130**, respectively, may be made of a second material. The first and second materials may be similar or different materials. For example, the body portion **110** may be partially or entirely made of a steel-based material (e.g., 17-4 PH stainless steel, Nitronic® 50 stainless steel, maraging steel or other types of stainless steel), a titanium-based material, an aluminum-based material (e.g., a high-strength aluminum alloy or a composite aluminum alloy coated with a high-strength alloy), any combination thereof, and/or other suitable types of materials. The first and second sets of weight portions **120** and **130**, respectively, may be partially or entirely made of a high-density material such as a tungsten-based material or other suitable types of materials. Alternatively, the body portion **110** and/or the first and second sets of weight portions **120** and **130**, respectively, may be partially or entirely made of a non-metal material (e.g., composite, plastic, etc.). The apparatus, methods, and articles of manufacture are not limited in this regard.

[0050] The golf club head **100** may be an iron-type golf club head (e.g., a 1-iron, a 2-iron, a 3-iron, a 4-iron, a 5-iron, a 6-iron, a 7-iron, an 8-iron, a 9-iron, etc.) or a wedge-type golf club head (e.g., a pitching wedge, a lob wedge, a sand wedge, an n-degree wedge such as 44 degrees (°), 48°, 52°, 56°, 60°, etc.). Although FIGS. **1-10** may depict a particular type of club head, the apparatus, methods, and articles of manufacture described herein may be applicable to other types of club heads (e.g., a driver-type club head, a fairway wood-type club head, a hybrid-type club head, a putter-type club head, etc.). The apparatus, methods, and articles of manufacture described herein are not limited in this regard.

[0051] The toe portion **140** and the heel portion **150** may be on opposite ends of the body portion **110**. The heel portion **150** may include a hosel portion **155** configured to receive a shaft (not shown) with a grip (not shown) on one end and the golf club head **100** on the opposite end of the shaft to form a golf club.

[0052] The front portion **160** may include a face portion **162** (e.g., a strike face). The face portion **162** may include a front surface **164** and a back surface **166**. The front surface **164** may include one or more grooves **168** extending between the toe portion **140** and the heel portion **150**. While the figures may depict a particular number of grooves, the apparatus, methods, and articles of manufacture described herein may include more or less grooves. The face portion **162** may be used to impact a golf ball (not shown). The face portion **162** may be an integral portion of the body portion **110**. Alternatively, the face portion **162** may be a separate piece or an insert coupled to the body portion **110** via various manufacturing methods and/or processes (e.g., a bonding process such as adhesive, a welding process such as laser welding, a brazing process, a soldering process, a fusing process, a mechanical locking or connecting method, any combination thereof, or other suitable types of manufacturing methods and/or processes). The face portion **162** may be associated with a loft plane that defines the loft angle of the golf club head **100**. The loft angle may vary based on the type of golf club (e.g., a long iron, a middle iron, a short iron, a wedge, etc.). In one example, the loft angle may be between five degrees and seventy-five degrees. In another example, the loft angle may be between twenty degrees and sixty degrees. The apparatus, methods, and articles of manufacture described herein are not limited in this regard.

[0053] As illustrated in FIG. **14**, the back portion **170** may include a back wall portion **1410** with one or more exterior weight ports along a periphery of the back portion **170**, generally shown as a first set of exterior weight ports **1420** (e.g., shown as weight ports **1421**, **1422**, **1423**, and **1424**) and a second set of exterior weight ports **1430** (e.g., shown as weight ports **1431**, **1432**, **1433**, **1434**, **1435**, **1436**, and **1437**). Each exterior weight port may be associated with a port diameter. In one example, the port diameter may be about 0.25 inch (6.35 millimeters). Any two adjacent exterior weight ports of the first set of exterior weight ports **1420** may be separated by less than the port diameter. In a similar

manner, any two adjacent exterior weight ports of the second set of exterior weight ports **1430** may be separated by less than the port diameter. The first and second exterior weight ports **1420** and **1430** may be exterior weight ports configured to receive one or more weight portions. In particular, each weight portion of the first set **120** (e.g., shown as weight portions **121**, **122**, **123**, and **124**) may be disposed in a weight port located at or proximate to the toe portion **140** and/or the top portion **180** on the back portion **170**. For example, the weight portion **121** may be partially or entirely disposed in the weight port **1421**. In another example, the weight portion **122** may be disposed in a weight port **1422** located in a transition region between the top portion **180** and the toe portion **140** (e.g., a top-and-toe transition region). Each weight portion of the second set **130** (e.g., shown as weight portions **131**, **132**, **133**, **134**, **135**, **136**, and **137**) may be disposed in a weight port located at or proximate to the toe portion **140** and/or the sole portion **190** on the back portion **170**. For example, the weight portion **135** may be partially or entirely disposed in the weight port **1435**. In another example, the weight portion **136** may be disposed in a weight port **1436** located in a transition region between the sole portion **190** and the toe portion **140** (e.g., a sole-and-toe transition region). As described in detail below, the first and second sets of weight portions **120** and **130**, respectively, may be coupled to the back portion **170** of the body portion **110** with various manufacturing methods and/or processes (e.g., a bonding process, a welding process, a brazing process, a mechanical locking method, any combination thereof, or other suitable manufacturing methods and/or processes).

[0054] Alternatively, the golf club head **100** may not include (i) the first set of weight portions **120**, (ii) the second set of weight portions **130**, or (iii) both the first and second sets of weight portions **120** and **130**. In particular, the back portion **170** of the body portion **110** may not include weight ports at or proximate to the top portion **170** and/or the sole portion **190**. For example, the mass of the first set of weight portions **120** (e.g., 3 grams) and/or the mass of the second set of weight portions **130** (e.g., 16.8 grams) may be integral part(s) the body portion **110** instead of separate weight portion(s). The apparatus, methods, and articles of manufacture described herein are not limited in this regard.

[0055] The first and second sets of weight portions **120** and **130**, respectively, may have similar or different physical properties (e.g., color, shape, size, density, mass, volume, etc.). As a result, the first and second sets of weight portions **120** and **130**, respectively, may contribute to the ornamental design of the golf club head **100**. In the illustrated example as shown in FIG. **11**, each of the weight portions of the first and second sets **120** and **130**, respectively, may have a cylindrical shape (e.g., a circular cross section). Alternatively, each of the weight portions of the first set **120** may have a first shape (e.g., a cylindrical shape) whereas each of the weight portions of the second set **130** may have a second shape (e.g., a cubical shape). In another example, the first set of weight portions **120** may include two or more weight portions with different shapes (e.g., the weight portion **121** may be a first shape whereas the weight portion **122** may be a second shape different from the first shape). Likewise, the second set of weight portions **130** may also include two or more weight portions with different shapes (e.g., the weight portion **131** may be a first shape whereas the weight portion **132** may be a second shape different from the first shape). Although the above examples may describe weight portions having a particular shape, the apparatus, methods, and articles of manufacture described herein may include weight portions of other suitable shapes (e.g., a portion of or a whole sphere, cube, cone, cylinder, pyramid, cuboidal, prism, frustum, or other suitable geometric shape). While the above examples and figures may depict multiple weight portions as a set of weight portions, each set of the first and second sets of weight portions **120** and **130**, respectively, may be a single piece of weight portion. In one example, the first set of weight portions **120** may be a single piece of weight portion instead of a series of four separate weight portions. In another example, the second set of weight portions **130** may be a single piece of weight portion instead of a series of seven separate weight portions. The apparatus, methods, and articles of manufacture described herein are not limited in this regard.

[0056] Referring to FIGS. **12** and **13**, for example, the first and second sets of weight portions **120** and **130**, respectively, may include threads, generally shown as **1210** and **1310**, respectively, to engage with correspondingly configured threads in the weight ports to secure in the weight ports of the back portion **170** (generally shown as **1420** and **1430** in FIG. **14**). For example, each weight portion of the first and second sets of weight portions **120** and **130**, respectively, may be a screw. The first and second sets of weight portions **120** and **130**, respectively, may not be readily removable from the body portion **110** with or without a tool. Alternatively, the first and second sets of weight portions **120** and **130**, respectively, may be readily removable (e.g., with a tool) so that a relatively heavier or lighter weight portion may replace one or more of the weight portions of the first and second sets **120** and **130**, respectively. In another example, the first and second sets of weight portions **120** and **130**, respectively, may be secured in the weight ports of the back portion **170** with epoxy or adhesive so that the first and second sets of weight portions **120** and **130**, respectively, may not be readily removable. In yet another example, the first and second sets of weight portions **120** and **130**, respectively, may be secured in the weight ports of the back portion **170** with both epoxy and threads so that the first and second sets of weight portions **120** and **130**, respectively, may not be readily removable. The apparatus, methods, and articles of manufacture described herein are not limited in this regard.

[0057] As mentioned above, the first and second sets of weight portions **120** and **130**, respectively, may be similar in some physical properties but different in other physical properties. As illustrated in FIGS. **11-13**, for example, each of the weight portions of the first and second sets **120** and **130**, respectively, may have a diameter **1110** of about 0.25 inch (6.35 millimeters) but the first and second sets of weight portions **120** and **130**, respectively, may be different in height. In particular, each of the weight portions of the first set **120** may be associated with a first height **1220** (FIG. **12**), and each of the weight portion of the second set **130** may be associated with a second height **1320** (FIG. **13**). The first height **1220** may be relatively shorter than the second height **1320**. In one example, the first height **1220** may be about 0.125 inch (3.175 millimeters) whereas the second height **1320** may be about 0.3 inch (7.62 millimeters). In another example, the first height **1220** may be about 0.16 inch (4.064 millimeters) whereas the second height **1320** may be about 0.4 inch (10.16 millimeters). Alternatively, the first height **1220** may be equal to or greater than the second height **1320**. The apparatus, methods, and articles of manufacture described herein are not limited in this regard.

[0058] Referring back to FIG. **10**, for example, the golf club head **100** may be associated with a ground plane **1010**, a horizontal midplane **1020**, and a top plane **1030**. In particular, the ground plane **1010** may be a tangential plane to the sole portion **190** of the golf club head **100** when the golf club head **100** is at an address position (e.g., the golf club head **100** is aligned to strike a golf ball). A top plane **1030** may be a tangential plane to the top portion of the **180** of the golf club head **100** when the golf club head **100** is at the address position. The ground and top planes **1010** and **1030**, respectively, may be substantially parallel to each other. The horizontal midplane **1020** may be vertically halfway between the ground and top planes **1010** and **1030**, respectively.

[0059] To provide optimal perimeter weighting for the golf club head **100**, the first set of weight portions **120** (e.g., weight portions **121**, **122**, **123**, and **124**) may be configured to counter-balance the weight of the hosel **155**. For example, as shown in FIG. **10**, the first set of weight portions **120** (e.g., weight portions **121**, **122**, **123** and **124**) may be located near the periphery of the body portion **110** and extend from the top portion to a transition region **145** between the top portion **180** and the toe portion **140**, and from the transition region **145** to the toe portion **140**. In other words, the first set of weight portions **120** may be located on the golf club head **100** at a generally opposite location relative to the hosel **155**. According to one example, at least a portion of the first set of weight portions **120** may be located near the periphery of the body portion **110** and extend through the transition region **145**. According to another example, at least a portion of the first set of weight portions **120** may extend near the periphery of the body portion **110** and extend along a portion of the top portion **180**. According to another example, at least a portion of the first set of weight portions **120** may extend near the periphery of the body portion **110** and extend along a portion of the toe portion **140**. The first set of weight portions **120** may be above the horizontal midplane **1020** of the golf club head **100**. At least a portion of the first set of weight portions **120** may be near the toe portion **140** to increase the moment of inertia of the golf club head **100** about a vertical axis of the golf club head **100** that extends through the center of gravity of the golf club head **100**. Accordingly, the first set of weight portions **120** may be near the periphery of the body portion **110** and extend through the top portion **180**, the toe portion **140** and/or the transition region **145** to counter-balance the weight of the hosel **155** and/or increase the moment of inertia of the golf club head **100**. The locations of the first set of weight portions **120** (i.e., the locations of the first set of exterior weight ports **1420**) and the physical properties and materials of construction of the weight portions of the first set of weight portions **120** may be determined to optimally affect the weight, weight distribution, center of gravity, moment of inertia characteristics, structural integrity and/or or other static and/or dynamic characteristics of the golf club head **100**. The apparatus, methods, and articles of manufacture described herein are not limited in this regard.

[0060] The second set of weight portions **130** (e.g., weight portions **131**, **132**, **133**, **134**, **135**, **136**, and **137**) may be configured to place the center of gravity of the golf club head **100** at an optimal location and optimize the moment of inertia of the golf club head about a vertical axis that extends through the center of gravity of the golf club head **100**. Referring to FIG. **10**, all or a substantial portion of the second set of weight portions **130** may be generally near the sole portion **190**. For example, the second set of weight portions **130** (e.g., weight portions **131**, **132**, **133**, **134**, **135**, **136**, and **137**) may be near the periphery of the body portion **110** and extend from the sole portion **190** to the toe portion **140**. As shown in the example of FIG. **10**, the weight portions **131**, **132**, **133**, and **134** may be located near the periphery of the body portion **110** and extend along the sole portion **190** to lower the center of gravity of the golf club head **100**. The weight portions **135**, **136** and **137** may be located near the periphery of the body portion **110** and extend from the sole portion **190** to the toe portion **140** through a transition region **147** between the sole portion **190** and the toe portion **140** to lower the center of gravity and increase the moment of inertia of the golf club head **100** about a vertical axis that extends through the center of gravity. To lower the center of gravity of the golf club head **100**, all or a portion of the second set of weight portions **130** may be located closer to the sole portion **190** than to the horizontal midplane **1020**. For example, the weight portions **131**, **132**, **133**, **134**, **135**, and **136** may be closer to the sole portion **190** than to the horizontal midplane **1020**. The locations of the second set of weight portions **130** (i.e., the locations of the second set of exterior weight ports **1430**) and the physical properties and materials of construction of the weight portions of the second set of weight portions **130** may be determined to optimally affect the weight, weight distribution, center of gravity, moment of inertia characteristics, structural integrity and/or or other static and/or dynamic characteristics of the golf club head **100**. The apparatus, methods, and articles of manufacture described herein are not limited in this regard.

[0061] Turning to FIGS. **7-9**, for example, the first and second sets of weight portions **120** and **130**, respectively, may be located away from the back surface **166** of the face portion **162** (e.g., not directly coupled to each other). That is, the first and second sets of weight portions **120** and **130**, respectively, and the back surface **166** may be partially or entirely separated by an interior cavity **700** of the body portion **110**. As shown in FIG. **14**, for example, each exterior weight port of the first and second sets of exterior weight ports **1420** and **1430** may include an opening (e.g., generally shown as **720** and **730**) and a port wall (e.g., generally shown as **725** and **735**). The port walls **725** and **735** may be integral portions of the back wall portion **1410** (e.g., a section of the back wall portion **1410**). Each of the openings **720** and **730** may be configured to receive a weight portion such as weight portions **121** and **135**, respectively. The opening **720** may be located at one end of the weight port **1421**, and the port wall **725** may be located or proximate to at an opposite end of the weight port **1421**. In a similar manner, the opening **730** may be located at one end of the weight port **1435**, and the port wall **735** may be located at or proximate to an opposite end of the weight port **1435**. The port walls **725** and **735** may be separated from the face portion **162** (e.g., separated by the interior cavity **700**). The port wall **725** may have a distance **726** from the back surface **166** of the face portion **162** as shown in FIG. **9**. The port wall **735** may have a distance **736** from the back surface **166** of the face portion **162**. The distances **726** and **736** may be determined to optimize the location of the center of gravity of the golf club head **100** when the first and second sets of weight ports **1420** and **1430**, respectively, receive weight portions as described herein. According to one example, the distance **736** may be greater than the distance **726** so that the center of gravity of the golf club head **100** is moved toward the back portion **170**. As a result, a width **740** of a portion of the interior cavity **700** below the horizontal midplane **1020** may be

greater than a width **742** of the interior cavity **700** above the horizontal midplane **1020**. The apparatus, methods, and articles of manufacture described herein are not limited in this regard.

[0062] As discussed herein, the center of gravity (CG) of the golf club head **100** may be relatively farther back away from the face portion **162** and relatively lower towards a ground plane (e.g., one shown as **1010** in FIG. **10**) with all or a substantial portion of the second set of weight portions **130** being closer to the sole portion **190** than to the horizontal midplane **1020** and the first and second sets of weight portions **120** and **130**, respectively being away from the back surface **166** than if the second set of weight portions **130** were directly coupled to the back surface **166**. The locations of the first and second sets of weight ports **1420** and **1430** and the physical properties and materials of construction of the weight portions of the first and second sets of weight portions **120** and **130**, respectively, may be determined to optimally affect the weight, weight distribution, center of gravity, moment of inertia characteristics, structural integrity and/or or other static and/or dynamic characteristics of the golf club head **100**. The apparatus, methods, and articles of manufacture described herein are not limited in this regard.

[0063] While the figures may depict weight ports with a particular cross-section shape, the apparatus, methods, and articles of manufacture described herein may include weight ports with other suitable cross-section shapes. In one example, the weight ports of the first and/or second sets of weight ports **1420** and **1430** may have U-like cross-section shape. In another example, the weight ports of the first and/or second set of weight ports **1420** and **1430** may have V-like cross-section shape. One or more of the weight ports associated with the first set of weight portions **120** may have a different cross-section shape than one or more weight ports associated with the second set of weight portions **130**. For example, the weight port **1421** may have a U-like cross-section shape whereas the weight port **1435** may have a V-like cross-section shape. Further, two or more weight ports associated with the first set of weight portions **120** may have different cross-section shapes. In a similar manner, two or more weight ports associated with the second set of weight portions **130** may have different cross-section shapes. The apparatus, methods, and articles of manufacture described herein are not limited in this regard.

[0064] The first and second sets of weight portions **120** and **130**, respectively, may be similar in mass (e.g., all of the weight portions of the first and second sets **120** and **130**, respectively, weigh about the same). Alternatively, the first and second sets of weight portions **120** and **130**, respectively, may be different in mass individually or as an entire set. In particular, each of the weight portions of the first set **120** (e.g., shown as **121**, **122**, **123**, and **124**) may have relatively less mass than any of the weight portions of the second set **130** (e.g., shown as **131**, **132**, **133**, **134**, **135**, **136**, and **137**). For example, the second set of weight portions **130** may account for more than 50% of the total mass from exterior weight portions of the golf club head **100**. As a result, the golf club head **100** may be configured to have at least 50% of the total mass from exterior weight portions disposed below the horizontal midplane **1020**. The apparatus, methods, and articles of manufacture described herein are not limited in this regard.

[0065] In one example, the golf club head **100** may have a mass in the range of about 220 grams to about 330 grams based on the type of golf club (e.g., a 4-iron versus a lob wedge). The body portion **110** may have a mass in the range of about 200 grams to about 310 grams with the first and second sets of weight portions **120** and **130**, respectively, having a mass of about 20 grams (e.g., a total mass from exterior weight portions). Each of the weight portions of the first set **120** may have a mass of about one gram (1.0 g) whereas each of the weight portions of the second set **130** may have a mass of about 2.4 grams. The sum of the mass of the first set of weight portions **120** may be about 3 grams whereas the sum of the mass of the first set of weight portions **130** may be about 16.8 grams. The total mass of the second set of weight portions **130** may weigh more than five times as much as the total mass of the first set of weight portions **120** (e.g., a total mass of the second set of weight portions **130** of about 16.8 grams versus a total mass of the first set of weight portions **120** of about 3 grams). The golf club head **100** may have a total mass of 19.8 grams from the first and second sets of weight portions **120** and **130**, respectively (e.g., sum of 3 grams from the first set of weight portions **120** and 16.8 grams from the second set of weight portions **130**). Accordingly, the first set of weight portions **120** may account for about 15% of the total mass from exterior weight portions of the golf club head **100** whereas the second set of weight portions **130** may be account for about 85% of the total mass from exterior weight portions of the golf club head **100**. The apparatus, methods, and articles of manufacture described herein are not limited in this regard.

[0066] By coupling the first and second sets of weight portions **120** and **130**, respectively, to the body portion **110** (e.g., securing the first and second sets of weight portions **120** and **130** in the weight ports on the back portion **170**), the location of the center of gravity (CG) and the moment of inertia (MOI) of the golf club head **100** may be optimized. In particular, as described herein, the first and second sets of weight portions **120** and **130**, respectively, may lower the location of the CG towards the sole portion **190** and further back away from the face portion **162**. Further, the MOI may be higher as measured about a vertical axis extending through the CG (e.g., perpendicular to the ground plane **1010**). The MOI may also be higher as measured about a horizontal axis extending through the CG (e.g., extending towards the toe and heel portions **150** and **160**, respectively, of the golf club head **100**). As a result, the club head **100** may provide a relatively higher launch angle and a relatively lower spin rate than a golf club head without the first and second sets of weight portions **120** and **130**, respectively. The apparatus, methods, and articles of manufacture described herein are not limited in this regard.

[0067] Alternatively, two or more weight portions in the same set may be different in mass. In one example, the weight portion **121** of the first set **120** may have a relatively lower mass than the weight portion **122** of the first set **120**. In another example, the weight portion **131** of the second set **130** may have a relatively lower mass than the weight portion **135** of the second set **130**. With relatively greater mass at the top-and-toe transition region and/or the sole-and-toe transition region, more weight may be distributed away from the center of gravity (CG) of the golf club head **100** to increase the moment of inertia (MOI) about the vertical axis through the CG.

[0068] Although the figures may depict the weight portions as separate and individual parts, each set of the first and second sets of weight portions **120** and **130**, respectively, may be a single piece of weight portion. In one example, all of the weight portions of the first set **120** (e.g., shown as **121**, **122**,

123, and **124**) may be combined into a single piece of weight portion (e.g., a first weight portion). In a similar manner, all of the weight portions of the second set **130** (e.g., **131**, **132**, **133**, **134**, **135**, **136**, and **137**) may be combined into a single piece of weight portion as well (e.g., a second weight portion). In this example, the golf club head **100** may have only two weight portions. While the figures may depict a particular number of weight portions, the apparatus, methods, and articles of manufacture described herein may include more or less number of weight portions. In one example, the first set of weight portions **120** may include two separate weight portions instead of three separate weight portions as shown in the figures. In another example, the second set of weight portions **130** may include five separate weight portions instead of seven separate weight portions a shown in the figures. Alternatively as mentioned above, the apparatus, methods, and articles of manufacture described herein may not include any separate weight portions (e.g., the body portion **110** may be manufactured to include the mass of the separate weight portions as integral part(s) of the body portion **110**). The apparatus, methods, and articles of manufacture described herein are not limited in this regard.

[0069] Referring back to FIGS. **7-9**, for example, the body portion **110** may be a hollow body including the interior cavity **700** extending between the front portion **160** and the back portion **170**. Further, the interior cavity **700** may extend between the top portion **180** and the sole portion **190**. The interior cavity **700** may be associated with a cavity height **750** (H_C), and the body portion **110** may be associated with a body height **850** (H_B). While the cavity height **750** and the body height **850** may vary between the toe and heel portions **140** and **150**, the cavity height **750** may be at least 50% of a body height **850** ($H_C>0.5*H_B$). For example, the cavity height **750** may vary between 70-85% of the body height **850**. With the cavity height **750** of the interior cavity **700** being greater than 50% of the body height **850**, the golf club head **100** may produce relatively more consistent feel, sound, and/or result when the golf club head **100** strikes a golf ball via the face portion **162** than a golf club head with a cavity height of less than 50% of the body height. The apparatus, methods, and articles of manufacture described herein are not limited in this regard.

[0070] In one example, the interior cavity **700** may be unfilled (i.e., empty space). The body portion **100** with the interior cavity **700** may weight about 100 grams less than the body portion **100** without the interior cavity **700**. Alternatively, the interior cavity **700** may be partially or entirely filled with an elastic polymer or elastomer material (e.g., a viscoelastic urethane polymer material such as Sorbothane® material manufactured by Sorbothane, Inc., Kent, Ohio), a thermoplastic elastomer material (TPE), a thermoplastic polyurethane material (TPU), and/or other suitable types of materials to absorb shock, isolate vibration, and/or dampen noise. For example, at least 50% of the interior cavity **700** may be filled with a TPE material to absorb shock, isolate vibration, and/or dampen noise when the golf club head **100** strikes a golf ball via the face portion **162**.

[0071] In another example, the interior cavity **700** may be partially or entirely filled with a polymer material such as an ethylene copolymer material to absorb shock, isolate vibration, and/or dampen noise when the golf club head **100** strikes a golf ball via the face portion **162**. In particular, at least 50% of the interior cavity **700** may be filled with a high density ethylene copolymer ionomer, a fatty acid modified ethylene copolymer ionomer, a highly amorphous ethylene copolymer ionomer, an ionomer of ethylene acid acrylate terpolymer, an ethylene copolymer comprising a magnesium ionomer, an injection moldable ethylene copolymer that may be used in conventional injection molding equipment to create various shapes, an ethylene copolymer that can be used in conventional extrusion equipment to create various shapes, and/or an ethylene copolymer having high compression and low resilience similar to thermoset polybutadiene rubbers. For example, the ethylene copolymer may include any of the ethylene copolymers associated with DuPont™ High-Performance Resin (HPF) family of materials (e.g., DuPont™ HPF AD1172, DuPont™ HPF AD1035, DuPont® HPF 1000 and DuPont™ HPF 2000), which are manufactured by E.I. du Pont de Nemours and Company of Wilmington, Del. The DuPont™ HPF family of ethylene copolymers are injection moldable and may be used with conventional injection molding equipment and molds, provide low compression, and provide high resilience. The apparatus, methods, and articles of manufacture described herein are not limited in this regard.

[0072] Turning to FIG. **15**, for example, the face portion **162** may include a first thickness **1510** (T_1), and a second thickness **1520** (T_2). The first thickness **1510** may be a thickness of a section of the face portion **162** adjacent to a groove **168** whereas the second thickness **1520** may be a thickness of a section of the face portion **162** below the groove **168**. For example, the first thickness **1510** may be a maximum distance between the front surface **164** and the back surface **166**. The second thickness **1520** may be based on the groove **168**. In particular, the groove **168** may have a groove depth **1525** (D_{groove}). The second thickness **1520** may be a maximum distance between the bottom of the groove **168** and the back surface **166**. The sum of the second thickness **1520** and the groove depth **1525** may be substantially equal to the first thickness **1510** (e.g., $T_2+D_{groove}=T_1$). Accordingly, the second thickness **1520** may be less than the first thickness **1510** (e.g., $T_2<T_1$).

[0073] To lower and/or move the CG of the golf club head **100** further back, weight from the front portion **160** of the golf club head **100** may be removed by using a relatively thinner face portion **162**. For example, the first thickness **1510** may be about 0.075 inch (1.905 millimeters) (e.g., T_1=0.075 inch). With the support of the back wall portion **1410** to form the interior cavity **700** and filling at least a portion of the interior cavity **700** with an elastic polymer material, the face portion **162** may be relatively thinner (e.g., T_1<0.075 inch) without degrading the structural integrity, sound, and/or feel of the golf club head **100**. In one example, the first thickness **1510** may be less than or equal to 0.060 inch (1.524 millimeters) (e.g., T**1**≤0.060 inch). In another example, the first thickness **1510** may be less than or equal to 0.040 inch (1.016 millimeters) (e.g., T_1≤0.040 inch). Based on the type of material(s) used to form the face portion **162** and/or the body portion **110**, the face portion **162** may be even thinner with the first thickness **1510** being less than or equal to 0.030 inch (0.762 millimeters) (e.g., T_1≤0.030 inch). The groove depth **1525** may be greater than or equal to the second thickness **1520** (e.g., $D_{groove}\geq T_2$). In one example, the groove depth **1525** may be about 0.020 inch (0.508 millimeters) (e.g., D_{groove}=0.020 inch). Accordingly, the second thickness **1520** may be about 0.010 inch (0.254 millimeters) (e.g., T_2=0.010 inch). In another example, the groove depth **1525** may be about 0.015 inch (0.381 millimeters), and the second thickness **1520** may be about 0.015 inch (e.g., $D_{groove}=T_2$=0.015 inch). Alterna-

tively, the groove depth **1525** may be less than the second thickness **1520** (e.g., $D_{groove}<T_2$). Without the support of the back wall portion **1410** and the elastic polymer material to fill in the interior cavity **700**, a golf club head may not be able to withstand multiple impacts by a golf ball on a face portion. In contrast to the golf club head **100** as described herein, a golf club head with a relatively thin face portion but without the support of the back wall portion **1410** and the elastic polymer material to fill in the interior cavity **700** (e.g., a cavity-back golf club head) may produce unpleasant sound (e.g., a tinny sound) and/or feel during impact with a golf ball. The apparatus, methods, and articles of manufacture described herein are not limited in this regard.

[0074] Based on manufacturing processes and methods used to form the golf club head **100**, the face portion **162** may include additional material at or proximate to a periphery of the face portion **162**. Accordingly, the face portion **162** may also include a third thickness **1530**, and a chamfer portion **1540**. The third thickness **1530** may be greater than either the first thickness **1510** or the second thickness **1520** (e.g., $T_3>T_1>T_2$). In particular, the face portion **162** may be coupled to the body portion **110** by a welding process. For example, the first thickness **1510** may be about 0.030 inch (0.762 millimeters), the second thickness **1520** may be about 0.015 inch (0.381 millimeters), and the third thickness **1530** may be about 0.050 inch (1.27 millimeters). Accordingly, the chamfer portion **1540** may accommodate some of the additional material when the face portion **162** is welded to the body portion **110**.

[0075] As illustrated in FIG. **16**, for example, the face portion **162** may include a reinforcement section, generally shown as **1605**, below one or more grooves **168**. In one example, the face portion **162** may include a reinforcement section **1605** below each groove. Alternatively, face portion **162** may include the reinforcement section **1605** below some grooves (e.g., every other groove) or below only one groove. The face portion **162** may include a first thickness **1610**, a second thickness **1620**, a third thickness **1630**, and a chamfer portion **1640**. The groove **168** may have a groove depth **1625**. The reinforcement section **168** may define the second thickness **1620**. The first and second thicknesses **1610** and **1620**, respectively, may be substantially equal to each other (e.g., $T_1=T_2$). In one example, the first and second thicknesses **1610** and **1620**, respectively, may be about 0.030 inch (0.762 millimeters) (e.g., $T_1=T_2=0.030$ inch). The groove depth **1625** may be about 0.015 inch (0.381 millimeters), and the third thickness **1630** may be about 0.050 inch (1.27 millimeters). The groove **168** may also have a groove width. The width of the reinforcement section **1605** may be greater than or equal to the groove width. The apparatus, methods, and articles of manufacture described herein are not limited in this regard.

[0076] Alternatively, the face portion **162** may vary in thickness at and/or between the top portion **180** and the sole portion **190**. In one example, the face portion **162** may be relatively thicker at or proximate to the top portion **180** than at or proximate to the sole portion **190** (e.g., thickness of the face portion **162** may taper from the top portion **180** towards the sole portion **190**). In another example, the face portion **162** may be relatively thicker at or proximate to the sole portion **190** than at or proximate to the top portion **180** (e.g., thickness of the face portion **162** may taper from the sole portion **190** towards the top portion **180**). In yet another example, the face portion **162** may be relatively thicker between the top portion **180** and the sole portion **190** than at or proximate to the top portion **180** and the sole portion **190** (e.g., thickness of the face portion **162** may have a bell-shaped contour). The apparatus, methods, and articles of manufacture described herein are not limited in this regard.

[0077] Different from other golf club head designs, the interior cavity **700** of the body portion **110** and the location of the first and second sets of weight portions **120** and **130**, respectively, along the perimeter of the golf club head **100** may result in a golf ball traveling away from the face portion **162** at a relatively higher ball launch angle and a relatively lower spin rate. As a result, the golf ball may travel farther (i.e., greater total distance, which includes carry and roll distances).

[0078] FIG. **17** depicts one manner in which the example golf club head described herein may be manufactured. In the example of FIG. **17**, the process **1700** may begin with providing two or more weight portions, generally shown as the first and second sets of weight portions **120** and **130**, respectively (block **1710**). The first and second sets of weight portions **120** and **130**, respectively, may be made of a first material such as a tungsten-based material. In one example, the weight portions of the first and second sets **120** and **130**, respectively, may be tungsten-alloy screws.

[0079] The process **1700** may provide a body portion **110** having the face portion **162**, the interior cavity **700**, and the back portion **170** with two or more exterior weight ports, generally shown as **1420** and **1430** (block **1720**). The body portion **110** may be made of a second material, which is different than the first material. The body portion **110** may be manufacture using an investment casting process, a billet forging process, a stamping process, a computer numerically controlled (CNC) machining process, a die casting process, any combination thereof, or other suitable manufacturing processes. In one example, the body portion **110** may be made of 17-4 PH stainless steel using a casting process. In another example, the body portion **110** may be made of other suitable type of stainless steel (e.g., Nitronic® 50 stainless steel manufactured by AK Steel Corporation, West Chester, Ohio) using a forging process. By using Nitronic® 50 stainless steel to manufacture the body portion **110**, the golf club head **100** may be relatively stronger and/or more resistant to corrosion than golf club heads made from other types of steel. Each weight port of the body portion **110** may include an opening and a port wall. For example, the weight port **1421** may include the opening **720** and the port wall **725** with the opening **720** and the port wall **725** being on opposite ends of each other. The interior cavity **700** may separate the port wall **725** of the weight port **1421** and the back surface **166** of the face portion **162**. In a similar manner, the weight port **1835** may include the opening **730** and the port wall **735** with the opening **730** and the port wall **735** being on opposite ends of each other. The interior cavity **700** may separate the port wall **735** of the weight port **1435** and the back surface **166** of the face portion **162**.

[0080] The process **1700** may couple each of the first and second sets of weight portions **120** and **130** into one of the two or more exterior weight ports (blocks **1730**). In one example, the process **1700** may insert and secure the weight portion **121** in the exterior weight port **1421**, and the weight portion **135** in the exterior weight portion **1435**. The process **1700** may use various manufacturing methods and/or processes to secure the first and second sets of weight portions **120** and **130**, respectively, in the exterior weight ports such as the weight

ports **1421** and **1435** (e.g., epoxy, welding, brazing, mechanical lock(s), any combination thereof, etc.).

[0081] The process **1700** may partially or entirely fill the interior cavity **700** with an elastic polymer material (e.g., Sorbothane® material) or a polymer material (e.g., an ethylene copolymer material such as DuPont™ HPF family of materials) (block **1740**). In one example, at least 50% of the interior cavity **700** may be filled with the elastic polymer material. As mentioned above, the elastic polymer material may absorb shock, isolate vibration, and/or dampen noise in response to the golf club head **100** striking a golf ball. In addition or alternatively, the interior cavity **700** may be filled with a thermoplastic elastomer material and/or a thermoplastic polyurethane material. As illustrated in FIG. **18**, for example, the golf club head **100** may include one or more weight ports (e.g., one shown as **1431** in FIG. **14**) with a first opening **1830** and a second opening **1835**. The second opening **1835** may be used to access the interior cavity **700**. In one example, the process **1700** (FIG. **17**) may fill the interior cavity **700** with an elastic polymer material by injecting the elastic polymer material into the interior cavity **700** from the first opening **1830** via the second opening **1835**. The first and second openings **1830** and **1835**, respectively, may be same or different in size and/or shape. While the above example may describe and depict a particular weight port with a second opening, any other weight ports of the golf club head **100** may include a second opening (e.g., the weight port **720**). The apparatus, methods, and articles of manufacture described herein are not limited in this regard.

[0082] Referring back to FIG. **17**, the example process **1700** is merely provided and described in conjunction with other figures as an example of one way to manufacture the golf club head **100**. While a particular order of actions is illustrated in FIG. **17**, these actions may be performed in other temporal sequences. For example, two or more actions depicted in FIG. **17** may be performed sequentially, concurrently, or simultaneously. In one example, blocks **1710**, **1720**, **1730**, and/or **1740** may be performed simultaneously or concurrently. Although FIG. **17** depicts a particular number of blocks, the process may not perform one or more blocks. In one example, the interior cavity **700** may not be filled (i.e., block **1740** may not be performed). The apparatus, methods, and articles of manufacture described herein are not limited in this regard.

[0083] Referring back to FIGS. **1-14**, the face portion **162** may include a non-smooth back surface to improve adhesion and/or mitigate delamination between the face portion **162** and the elastic polymer material used to fill the interior cavity **700** (e.g., FIG. **7**). Various methods and/or processes such as an abrasive blasting process (e.g., a bead blasting process, a sand blasting process, other suitable blasting process, or any combination thereof) and/or a milling (machining) process may be used to form the back surface **166** into a non-smooth surface. For example, the back surface **166** may have with a surface roughness (Ra) ranging from 0.5 to 250 pin (0.012 to 6.3 μm). The apparatus, methods, and articles of manufacture are not limited in this regard.

[0084] As illustrated in FIGS. **19-21**, for example, a face portion **1900** may include the front surface **1910**, and the back surface **2010**. The front surface **1910** may include one or more grooves, generally shown as **1920**, extending longitudinally across the front surface **1910** (e.g., extending between the toe portion **140** and the heel portion **150** of FIG. **1**). The front surface **1910** may be used to impact a golf ball (not shown).

[0085] The back surface **2010** may also include one or more channels, generally shown as **2020**. The channels **2020** may extend longitudinally across the back surface **2010**. The channels **2020** may be parallel or substantially parallel to each other. The channels **2020** may engage with the elastic polymer material used to fill the interior cavity **700**, and serve as a mechanical locking mechanism between the face portion **1900** and the elastic polymer material. In particular, a channel **2100** may include an opening **2110**, a bottom section **2120**, and two sidewalls, generally shown as **2130** and **2132**. The bottom section **2120** may be parallel or substantially parallel to the back surface **2010**. The two sidewalls **2130** and **2132** may be converging sidewalls (i.e., the two sidewalls **2130** and **2132** may not be parallel to each other). The bottom section **2120** and the sidewalls **2130** and **2132** may form two undercut portions, generally shown as **2140** and **2142**. That is, a width **2115** at the opening **2110** may be less than a width **2125** of the bottom section **2120**. A cross section of the channel **2100** may be symmetrical about an axis **2150**. While FIG. **21** may depict flat or substantially flat sidewalls, the two sidewalls **2130** and **2132** may be curved (e.g., convex relative to each other).

[0086] Instead of flat or substantially flat sidewalls as shown in FIG. **21**, a channel may include other types of sidewalls. As illustrated in FIG. **22**, for example, a channel **2200** may include an opening **2210**, a bottom section **2220**, and two sidewalls, generally shown as **2230** and **2232**. The bottom section **2220** may be parallel or substantially parallel to the back surface **2010**. The two sidewalls **2230** and **2232** may be stepped sidewalls. The bottom section **2220** and the sidewalls **2230** and **2232** may form two undercut portions, generally shown as **2240** and **2242**. That is, a width **2215** at the opening **2210** may be less than a width **2225** of the bottom section **2220**. A cross section of the channel **2200** may be symmetrical about an axis **2250**.

[0087] Instead of being symmetrical as shown in FIGS. **21** and **22**, a channel may be asymmetrical. As illustrated in FIG. **23**, for another example, a channel **2300** may include an opening **2310**, a bottom section **2320**, and two sidewalls, generally shown as **2330** and **2332**. The bottom section **2320** may be parallel or substantially parallel to the back surface **2010**. The bottom section **2320** and the sidewall **2330** may form an undercut portion **2340**.

[0088] Referring to FIG. **24**, for example, a channel **2400** may include an opening **2410**, a bottom section **2420**, and two sidewalls, generally shown as **2430** and **2432**. The bottom section **2420** may not be parallel or substantially parallel to the back surface **2010**. The two sidewalls **2430** and **2432** may be parallel or substantially parallel to each other but one sidewall may be longer than the other sidewall. The bottom section **2420** and the sidewall **2432** may form an undercut portion **2440**.

[0089] In the example as shown in FIG. **25**, a face portion **2500** may include a back surface **2510** with one or more channels, generally shown as **2520**, extending laterally across the back surface **2510** (e.g., extending between the top portion **180** and the sole portion **190** of FIG. **1**). In another example as depicted in FIG. **26**, a face portion **2600** may include a back surface **2610** with one or more channels, generally shown as **2620**, extending diagonally across the back surface **2610**. Alternatively, a face portion may include a combination of channels extending in different directions across a back surface of the face portion (e.g., extending longitudinally, laterally, and/or diagonally). Turning to FIG. **27**, for yet another example, a face portion **2700** may include

a back surface **2710** with one or more channels, generally shown as **2720**, **2730**, and **2740**, extending in different directions across the back surface **2710**. In particular, the face portion **2700** may include a plurality of channels **2720** extending longitudinally across the back surface **2710**, a plurality of channels **2730** extending laterally across the back surface **2710**, and a plurality of channels **2740** extending diagonally across the back surface **2710**.

[0090] In addition or alternatively, the golf club head **100** may include a bonding agent to improve adhesion and/or mitigate delamination between the face portion **162** and the elastic polymer material used to fill the interior cavity **700** of the golf club head **100** (e.g., FIG. **7**). Referring to FIG. **28**, for example, the golf club head **100** may include the face portion **162**, a bonding portion **2810**, and an elastic polymer material **2820**. In one example, the bonding portion **2810** may be low-viscosity, organic, solvent-based solutions and/or dispersions of polymers and other reactive chemicals such as MEGUM™, ROBOND™, and/or THIXON™ materials manufactured by the Dow Chemical Company, Auburn Hills, Mich. In another example, the bonding portion **2810** may be LOCTITE® materials manufactured by Henkel Corporation, Rocky Hill, Conn. The bonding portion **2810** may be applied to the back surface **166** to bond the elastic polymer material **2820** to the face portion **162** (e.g., extending between the back surface **166** and the elastic polymer material **2820**). For example, the bonding portion **2810** may be applied when the interior cavity **700** is filled with the elastic polymer material **2820** via an injection-molding process. The apparatus, methods, and articles of manufacture are not limited in this regard.

[0091] FIG. **29** depicts one manner in which the interior cavity **700** of the golf club head **100** or any of the golf club heads described herein is partially or entirely filled with an elastic polymer material or an elastomer material. The process **2900** may begin with heating the golf club head **100** to a certain temperature (block **2910**). In one example, the golf club head **100** may be heated to a temperature ranging between 150° C. to 250° C., which may depend on factors such as the vaporization temperature of the elastic polymer material to be injected in the interior cavity **700**. The elastic polymer material may then be heated to a certain temperature (block **2920**). The elastic polymer material may be a non-foaming and injection-moldable thermoplastic elastomer (TPE) material. Accordingly, the elastic polymer material may be heated to reach a liquid or a flowing state prior to being injected into the interior cavity **700**. The temperature to which the elastic polymer material may be heated may depend on the type of elastic polymer material used to partially or fully fill the interior cavity **700**. The heated elastic polymer material may be injected into the interior cavity **700** to partially or fully fill the interior cavity **700** (block **2930**). The elastic polymer material may be injected into the interior cavity **700** from one or more of the weight ports described herein (e.g., one or more weight ports of the first and second sets of weight ports **1420** and **1430**, respectively, shown in FIG. **14**). One or more other weight ports may allow the air inside the interior cavity **700** displaced by the elastic polymer material to vent from the interior cavity **700**. In one example, the golf club head **100** may be oriented horizontally as shown in FIG. **14** during the injection molding process. The elastic polymer material may be injected into the interior cavity **700** from weight ports **1431** and **1432**. The weight ports **1421**, **1422** and/or **1423** may serve as air ports for venting the displaced air from the interior cavity **700**. Thus, regardless of the orientation of the golf club head **100** during the injection molding process, the elastic polymer material may be injected into the interior cavity **700** from one or more lower positioned weight ports while one or more upper positioned weight ports may serve as air vents. The mold (i.e., the golf club head **100**) may then be cooled passively (e.g., at room temperature) or actively so that the elastic polymer material reaches a solid state and adheres to the back surface **166** of the face portion **162**. The elastic polymer material may directly adhere to the back surface **166** of the face portion **162**. Alternatively, the elastic polymer material may adhere to the back surface **166** of the face portion **162** with the aid of the one or more structures on the back surface **166** and/or a bonding agent described herein (e.g., the bonding portion **2810** shown in FIG. **28**). The apparatus, methods, and articles of manufacture described herein are not limited in this regard.

[0092] As discussed above, the elastic polymer material may be heated to a liquid state (i.e., non-foaming) and solidifies after being injection molded in the interior cavity **700**. An elastic polymer material with a low modulus of elasticity may provide vibration and noise dampening for the face portion **162** when the face portion **162** impacts a golf ball. For example, an elastic polymer material that foams when heated may provide vibration and noise dampening. However, such a foaming elastic polymer material may not have sufficient rigidity to provide structural support to a relatively thin face portion because of possible excessive deflection and/or compression of the elastic polymer material when absorbing the impact of a golf ball. In one example, the elastic polymer material that is injection molded in the interior cavity **700** may have a relatively high modulus of elasticity to provide structural support to the face portion **162** and yet elastically deflect to absorb the impact forces experienced by the face portion **162** when striking a golf ball. Thus, a non-foaming and injection moldable elastic polymer material with a relatively high modulus of elasticity may be used for partially or fully filling the interior cavity **700** to provide structural support and reinforcement for the face portion **162** in addition to providing vibration and noise dampening. That is, the non-foaming and injection moldable elastic polymer material may be a structural support portion for the face portion **162**. The apparatus, methods, and articles of manufacture are not limited in this regard.

[0093] FIG. **30** depicts one manner in which a bonding agent as described herein may be applied to a golf club head prior to partially of fully injecting an elastic polymer in the interior cavity **700**. In the example of FIG. **30**, the process **3000** may begin with injecting a bonding agent on the back surface **166** of the face portion **162** (block **3010**). The bonding agent may be injected on the back surface **166** prior to or after heating the golf club head as described above depending on the properties of the bonding agent. The bonding agent may be injected through one or more of the first set of weight ports **1420** and/or the second set of weight ports **1430**. The bonding agent may be injected on the back surface **166** through several or all of the first set of weight ports **1420** and the second set of weight ports **1430**. For example, an injection instrument such as a nozzle or a needle may be inserted into each weight port until the tip or outlet of the instrument is near the back surface **166**. The bonding agent may then be injected on the back surface **166** from the outlet of the instrument. Additionally, the instrument may be moved, rotated and/or swiveled while inside the interior cavity **700** so that the bonding agent is injected onto an area of the back surface **166** surrounding the

instrument. For example, the outlet of the injection instrument may be moved in a circular pattern while inside a weight port to inject the bonding agent in a corresponding circular pattern on the back surface **166**. Each of the first set of weight ports **1420** and the second set of weight ports **1430** may be utilized to inject a bonding agent on the back surface **166**. However, utilizing all of first weight ports **1420** and/or the second set of weight ports **1430** may not be necessary. For example, using every other adjacent weight port may be sufficient to inject a bonding agent on the entire back surface **166**. In another example, weight ports **1421**, **1422** **1431**, **1433** and **1436** may be used to inject the bonding agent on the back surface **166**. The apparatus, methods, and articles of manufacture are not limited in this regard.

[0094] The process **3000** may also include spreading the bonding agent on the back surface **166** (block **3020**) after injection of the bonding agent onto the back surface **166** so that a generally uniform coating of the bonding agent is provided on the back surface **166**. According to one example, the bonding agent may be spread on the back surface **166** by injecting air into the interior cavity **700** through one or more of the first set of weight ports **1420** and the second set of weight ports **1430**. The air may be injected into the interior cavity **700** and on the back surface **166** by inserting an air nozzle into one or more of the first set of weight ports **1420** and the second set of weight ports **1430**. According to one example, the air nozzle may be moved, rotated and/or swiveled at a certain distance from the back surface **166** so as to uniformly blow air onto the bonding agent to spread the bonding agent on the back surface **166** for a uniform coating or a substantially uniform coating of the bonding agent on the back surface **166**. The apparatus, methods, and articles of manufacture are not limited in this regard.

[0095] The process **3000** may include a single step of injecting and uniformly or substantially uniformly coating the back surface **166** with the bonding agent. In one example, the bonding agent may be injected on the back surface **166** by being converted into fine particles or droplets (i.e., atomized) and sprayed on the back surface **166**. Accordingly, the back surface **166** may be uniformly or substantially uniformly coated with the bonding agent in one step. A substantially uniform coating of the back surface **166** with the bonding agent may be defined as a coating having slight non-uniformities due to the injection process or the manufacturing process. However, such slight non-uniformities may not affect the bonding of the filler material to the back surface **166** with the bonding agent as described herein. For example, spraying the bonding agent on the back surface **166** may result in overlapping regions of the bonding agent having a slightly greater coating thickness than other regions of the bonding agent on the back surface **166**. The apparatus, methods, and articles of manufacture are not limited in this regard.

[0096] As described herein, any two or more of the weight portions may be configured as a single weight portion. In the example of FIGS. **31** and **32**, a golf club head **3100** may include a body portion **3110** and two or more weight portions, generally shown as a first set of weight portions **3120** (e.g., shown as weight portions **3121**, **3122**, **3123**, and **3124**) and a second weight portion **3130**. The body portion **3110** may include a toe portion **3140**, a heel portion **3150**, a front portion (not shown), a back portion **3170**, a top portion **3180**, and a sole portion **3190**. The front portion may be similar in many respects to the front portion **160** of the golf club head **100**. Accordingly, details of the front portion of the golf club head **3100** are not provided.

[0097] The body portion **3110** may be made of a first material whereas the first set of weight portions **3120** and the second weight portion **3130** may be made of a second material. The first and second materials may be similar or different materials. For example, the body portion **3110** may be partially or entirely made of a steel-based material (e.g., 17-4 PH stainless steel, Nitronic® 50 stainless steel, maraging steel or other types of stainless steel), a titanium-based material, an aluminum-based material (e.g., a high-strength aluminum alloy or a composite aluminum alloy coated with a high-strength alloy), any combination thereof, and/or other suitable types of materials. The first set of weight portions **3120** and the second weight portion **3130** may be partially or entirely made of a high-density material such as a tungsten-based material or other suitable types of materials. Alternatively, the body portion **3110** and/or the first set of weight portions **3120** and the second weight portion **3130** may be partially or entirely made of a non-metal material (e.g., composite, plastic, etc.). The apparatus, methods, and articles of manufacture are not limited in this regard.

[0098] The golf club head **3100** may be an iron-type golf club head (e.g., a 1-iron, a 2-iron, a 3-iron, a 4-iron, a 5-iron, a 6-iron, a 7-iron, an 8-iron, a 9-iron, etc.) or a wedge-type golf club head (e.g., a pitching wedge, a lob wedge, a sand wedge, an n-degree wedge such as 44 degrees (°), 48°, 52°, 56°, 60°, etc.). Although FIGS. **31** and **32** may depict a particular type of club head, the apparatus, methods, and articles of manufacture described herein may be applicable to other types of club heads (e.g., a driver-type club head, a fairway wood-type club head, a hybrid-type club head, a putter-type club head, etc.). The apparatus, methods, and articles of manufacture described herein are not limited in this regard.

[0099] The toe portion **3140** and the heel portion **3150** may be on opposite ends of the body portion **3110**. The heel portion **3150** may include a hosel portion **3155** configured to receive a shaft (not shown) with a grip (not shown) on one end and the golf club head **3100** on the opposite end of the shaft to form a golf club.

[0100] The back portion **3170** may include a back wall portion **3210** with one or more exterior weight ports along a periphery of the back portion **3170**, generally shown as a first set of exterior weight ports **3220** (e.g., shown as weight ports **3221**, **3222**, **3223**, and **3224**) and a second weight port **3230**. Each exterior weight port of the first set of weight ports **3220** may be associated with a port diameter. In one example, the port diameter may be about 0.25 inch (6.35 millimeters). Any two adjacent exterior weight ports of the first set of exterior weight ports **3220** may be separated by less than the port diameter. The first set of weight ports **3220** and the second weight port **3230** may be exterior weight ports configured to receive one or more weight portions.

[0101] Each weight portion of the first set of weight portions **3120** (e.g., shown as weight portions **3121**, **3122**, **3123**, and **3124**) may be disposed in a weight port of the first set of weight ports **3220** (e.g., shown as weight ports **3221**, **3222**, **3223**, and **3224**) located at or proximate to the toe portion **3140** and/or the top portion **3180** on the back portion **3170**. For example, the weight portion **3121** may be partially or entirely disposed in the weight port **3221**. In another example, the weight portion **3122** may be disposed in a weight port **3222** located in a transition region between the top portion

3180 and the toe portion **3140** (e.g., a top-and-toe transition region). The configuration of the first set of weight ports **3220** and the first set of weight portions **3120** is similar to many respects to the golf club head **100**. Accordingly, a detailed description of the configuration of the first set of weight ports **3220** and the first set of weight portions **3120** is not provided.

[0102] The second weight port **3230** may be a recess extending from the toe portion **3140** or a location proximate to the toe portion **3140** to the sole portion or a location proximate to the sole portion **3190** and through the transition region between the toe portion **3140** and the sole portion **3190**. Accordingly, as shown in FIG. **31**, the second weight port **3230** may resemble an L-shaped recess. The second weight portion **3130** may resemble the shape of the second weight port **3230** and may be configured to be disposed in the second weight port **3230**. The second weight portion **3130** may be partially or fully disposed in the weight port **3230**. The second weight portion **3130** may have any shape such as oval, rectangular, triangular, or any geometric or non-geometric shape. The second weight port **3230** may be shaped similar to the second weight portion **3130**. However, portions of the second weight portion **3130** that are inserted in the second weight port **3230** may have similar shapes as the weight port **3230**. As described in detail herein, any of the weight portions described herein, including the weight portions **3120** and the second weight portion **3130** may be coupled to the back portion **3170** of the body portion **3110** with various manufacturing methods and/or processes (e.g., a bonding process, a welding process, a brazing process, a mechanical locking method, any combination thereof, or other suitable manufacturing methods and/or processes).

[0103] The second weight portion **3130** may be configured to place the center of gravity of the golf club head **100** at an optimal location and optimize the moment of inertia of the golf club head about a vertical axis that extends through the center of gravity of the golf club head **3100**. All or a substantial portion of the second weight portion **3130** may be generally near the sole portion **3190**. For example, the second weight portion **3130** may be near the periphery of the body portion **3110** and extend from the sole portion **3190** to the toe portion **3190**. As shown in the example of FIG. **32**, the second weight portion **3130** may be located near the periphery of the body portion **3110** and partially or substantially extend along the sole portion **3190** to lower the center of gravity of the golf club head **3100**. A portion of the second weight portion **3130** may be located near the periphery of the body portion **3110** and extend from the sole portion **3190** to the toe portion **3140** through a transition region **3147** between the sole portion **3190** and the toe portion **3140** to lower the center of gravity and increase the moment of inertia of the golf club head **3100** about a vertical axis that extends through the center of gravity. To lower the center of gravity of the golf club head **3100**, all or a portion of the second weight portion **3130** may be located closer to the sole portion **3190** than to a horizontal midplane **3260** of the golf club head **3100**. The location of the second weight portion **3130** (i.e., the location of the weight port **3230**) and the physical properties and materials of construction of the weight portions of the second weight port **3130** may be determined to optimally affect the weight, weight distribution, center of gravity, moment of inertia characteristics, structural integrity and/or or other static and/or dynamic characteristics of the golf club head **3100**. The apparatus, methods, and articles of manufacture described herein are not limited in this regard.

[0104] The weight portions of the first set of weight portions **3120** may have similar or different physical properties (e.g., color, shape, size, density, mass, volume, etc.). In the illustrated example as shown in FIG. **32**, each of the weight portions of the first set of weight portions **3120** may have a cylindrical shape (e.g., a circular cross section). Alternatively, each of the weight portions of the first set of weight portions **3120** may have different shapes. Although the above examples may describe weight portions having a particular shape, the apparatus, methods, and articles of manufacture described herein may include weight portions of other suitable shapes (e.g., a portion of or a whole sphere, cube, cone, cylinder, pyramid, cuboidal, prism, frustum, or other suitable geometric shape). The apparatus, methods, and articles of manufacture described herein are not limited in this regard.

[0105] In the example of FIGS. **33-42**, a golf club head **3300** may include a body portion **3310**, and two or more weight portions, generally shown as a first set of weight portions **3320** (e.g., shown as weight portions **3321** and **3322**) and a second set of weight portions **3330** (e.g., shown as weight portions **3331**, **3332**, **3333**, **3334** and **3335**). The body portion **3310** may include a toe portion **3340**, a heel portion **3350**, a front portion **3360**, a back portion **3370**, a top portion **3380**, and a sole portion **3390**. The heel portion **3350** may include a hosel portion **3355** configured to receive a shaft (not shown) with a grip (not shown) on one end and the golf club head **3300** on the opposite end of the shaft to form a golf club.

[0106] The body portion **3310** may be made of a first material whereas the first and second sets of weight portions **3320** and **3330**, respectively, may be made of a second material. The first and second materials may be similar or different materials. The materials from which the golf club head **3300**, weight portions **3320** and/or weight portions **3330** are constructed may be similar in many respects to any of the golf club heads and the weight portions described herein such as the golf club head **100**. Accordingly, a detailed description of the materials of construction of the golf club head **3300**, weight portions **3320** and/or weight **3330** are not described in detail. The apparatus, methods, and articles of manufacture are not limited in this regard.

[0107] The golf club head **3300** may be an iron-type golf club head (e.g., a 1-iron, a 2-iron, a 3-iron, a 4-iron, a 5-iron, a 6-iron, a 7-iron, an 8-iron, a 9-iron, etc.) or a wedge-type golf club head (e.g., a pitching wedge, a lob wedge, a sand wedge, an n-degree wedge such as 44 degrees (°), 48°, 52°, 56°, 60°, etc.). Although FIGS. **33-42** may depict a particular type of club head, the apparatus, methods, and articles of manufacture described herein may be applicable to other types of club heads (e.g., a driver-type club head, a fairway wood-type club head, a hybrid-type club head, a putter-type club head, etc.). The apparatus, methods, and articles of manufacture described herein are not limited in this regard.

[0108] The front portion **3360** may include a face portion **3362** (e.g., a strike face). The face portion **3362** may include a front surface **3364** and a back surface **3366** (shown in FIG. **37**). The front surface **3364** may include one or more grooves **3368** extending between the toe portion **3340** and the heel portion **3350**. While the figures may depict a particular number of grooves, the apparatus, methods, and articles of manufacture described herein may include more or less grooves. The face portion **3362** may be used to impact a golf ball (not shown). The face portion **3362** may be an integral portion of the body portion **3310**. Alternatively, the face portion **3362** may be a separate piece or an insert coupled to the body

portion **3310** via various manufacturing methods and/or processes (e.g., a bonding process such as adhesive, a welding process such as laser welding, a brazing process, a soldering process, a fusing process, a mechanical locking or connecting method, any combination thereof, or other suitable types of manufacturing methods and/or processes). The face portion **3362** may be associated with a loft plane that defines the loft angle of the golf club head **3300**. The loft angle may vary based on the type of golf club (e.g., a long iron, a middle iron, a short iron, a wedge, etc.). In one example, the loft angle may be between five degrees and seventy-five degrees. In another example, the loft angle may be between twenty degrees and sixty degrees. The apparatus, methods, and articles of manufacture described herein are not limited in this regard.

[0109] As illustrated in FIG. **36**, the back portion **3370** may include a back wall portion **3510** with one or more exterior weight ports along a periphery of the back portion **3370**, generally shown as a first set of exterior weight ports **3520** (e.g., shown as weight ports **3521** and **3522**) and a second set of exterior weight ports **3530** (e.g., shown as weight ports **3531**, **3532**, **3533**, **3534** and **3535**). Each exterior weight port may be defined by an opening in the back wall portion **3510**. Each exterior weight port may be associated with a port diameter. In one example, the port diameter may be about 0.25 inch (6.35 millimeters). The weight ports of the first set of exterior weight ports **3520** may be separated by less than the port diameter or the port diameter of any of the two adjacent weight ports of the first set of exterior weight ports **3520**. In a similar manner, any two adjacent exterior weight ports of the second set of exterior weight ports **3530** may be separated by less than the port diameter or the port diameter of any of the two adjacent weight ports of the second set of exterior weight ports **3530**. The first and second exterior weight ports **3520** and **3530**, respectively, may be exterior weight ports configured to receive one or more weight portions. In particular, each weight portion of the first set of weight portions **3320** (e.g., shown as weight portions **3321** and **3322**) may be disposed in a weight port located at or proximate to the toe portion **3340** and/or the top portion **3380** on the back portion **3370**. For example, the weight portion **3321** may be partially or entirely disposed in the weight port **3521**. In another example, the weight portion **3322** may be disposed in the weight port **3522** located in a transition region between the top portion **3380** and the toe portion **3340** (e.g., a top-and-toe transition region). Each weight portion of the second set of weight portions **3330** (e.g., shown as weight portions **3331**, **3332**, **3333**, **3334** and **3335**) may be disposed in a weight port located at or proximate to the toe portion **3340** and/or the sole portion **3390** on the back portion **3370**. For example, the weight portion **3333** may be partially or entirely disposed in the weight port **3533**. In another example, the weight portion **3335** may be disposed in a weight port **3535** located in a transition region between the sole portion **3390** and the toe portion **3340** (e.g., a sole-and-toe transition region). In another example, any of the weight portions of the first set of weight portions **3320** and the second set of weight portions **3330** may disposed in any of the weight ports of the first set of weight ports **3520** and the second set of weight ports **3530**. As described in detail herein, the first and second sets of weight portions **3320** and **3330**, respectively, may be coupled to the back portion **3370** of the body portion **3310** with various manufacturing methods and/or processes (e.g., a bonding process, a welding process, a brazing process, a mechanical locking method, any combination thereof, or other suitable manufacturing methods and/or processes).

[0110] Alternatively, the golf club head **3300** may not include (i) the first set of weight portions **3320**, (ii) the second set of weight portions **3330**, or (iii) both the first and second sets of weight portions **3320** and **3330**. In particular, the back portion **3370** of the body portion **3310** may not include weight ports at or proximate to the top portion **3370** and/or the sole portion **3390**. For example, the mass of the first set of weight portions **3320** (e.g., 3 grams) and/or the mass of the second set of weight portions **3330** (e.g., 16.8 grams) may be integral part(s) the body portion **3310** instead of separate weight portion(s). The apparatus, methods, and articles of manufacture described herein are not limited in this regard.

[0111] The first and second sets of weight portions **3320** and **3330**, respectively, may have similar or different physical properties (e.g., color, shape, size, density, mass, volume, etc.). As a result, the first and second sets of weight portions **3320** and **3330**, respectively, may contribute to the ornamental design of the golf club head **3300**. The physical properties of the first and second sets of weight portions **3320** and **3330** may be similar in many respect to any of the weight portions described herein, such as the weight portions shown in the example of FIG. **11**. Furthermore, the devices and/or methods by which the first and second set of weight portions **3320** and **3330** are coupled to the golf club head **3300** may be similar in many respect to any of the weight portions described herein, such as the weight portions shown in the example of FIGS. **12** and **13**. Accordingly, a detailed description of the physical properties of the first and second sets of weight portions **3320** and **3330**, and the devices and/or methods by which the first and second sets of weight portions **3320** and **3330** are coupled to the golf club head **3300** are not described in detail herein. The apparatus, methods, and articles of manufacture described herein are not limited in this regard.

[0112] As illustrated in FIG. **34**, golf club head **3300** may be associated with a ground plane **4110**, a horizontal midplane **4120**, and a top plane **4130**. In particular, the ground plane **4110** may be a plane that may be substantially parallel with the ground and be tangential to the sole portion **3390** of the golf club head **3300** when the golf club head **3300** is at an address position (e.g., the golf club head **3300** is aligned to strike a golf ball). A top plane **4130** may be a tangential plane to the top portion of the **3380** of the golf club head **3300** when the golf club head **3300** is at the address position. The ground and top planes **4110** and **4130**, respectively, may be substantially parallel to each other. The horizontal midplane **4120** may be located at half the vertical distance between the ground and top planes **4110** and **4130**, respectively.

[0113] To provide optimal perimeter weighting for the golf club head **3300**, the first set of weight portions **3320** (e.g., weight portions **3321** and **3322**) may be configured to counter-balance the weight of the hosel **3355** and/or increase the moment of inertia of the golf club head **3300** about a vertical axis of the golf club head **3300** that extends through the center of gravity of the golf club head **3300**. For example, as shown in FIG. **34**, the first set of weight portions **3320** (e.g., weight portions **3321** and **3322**) may be located near the periphery of the body portion **3310** and extend in a transition region **3345** between the top portion **3380** and the toe portion **3340**. In another example, the first set of weight portions **3320** (e.g., weight portions **3321** and **3322**) may be located near the periphery of the body portion **3310** and extend proximate to the toe portion **3340**. The locations of the first set of weight

portions **3320** (i.e., the locations of the first set of weight ports **3520**) and the physical properties and materials of construction of the weight portions of the first set of weight portions **3320** may be determined to optimally affect the weight, weight distribution, center of gravity, moment of inertia characteristics, structural integrity and/or or other static and/or dynamic characteristics of the golf club head **3300**. The apparatus, methods, and articles of manufacture described herein are not limited in this regard.

[0114] The second set of weight portions **3330** (e.g., weight portions **3331**, **3332**, **3333**, **3334** and **3335**) may be configured to place the center of gravity of the golf club head **3300** at an optimal location and/or optimize the moment of inertia of the golf club head about a vertical axis that extends through the center of gravity of the golf club head **3300**. Referring to FIG. **34**, all or a substantial portion of the second set of weight portions **3330** may be near the sole portion **3390**. For example, the second set of weight portions **3330** (e.g., weight portions **3331**, **3332**, **3333**, **3334** and **3335**) may extend at or near the sole portion **3390** between the toe portion **3340** and the heel portion **3350** to lower the center of gravity of the golf club head **100**. The weight portions **3334** and **3335** may be located closer to the toe portion **3340** than to the heel portion **3350** and/or at or near a transition region **3347** between the sole portion **3390** and the toe portion **3340** to increase the moment of inertia of the golf club head **3300** about a vertical axis that extends through the center of gravity. Some of the weight portions of the second set of weight portions **3330** may be located at the toe portion. To lower the center of gravity of the golf club head **3300**, all or a portion of the second set of weight portions **3330** may be located closer to the sole portion **3390** than to the horizontal midplane **4120**. The locations of the second set of weight portions **3330** (i.e., the locations of the second set of weight ports **3530**) and the physical properties and materials of construction of the weight portions of the second set of weight portions **3330** may be determined to optimally affect the weight, weight distribution, center of gravity, moment of inertia characteristics, structural integrity and/or or other static and/or dynamic characteristics of the golf club head **3300**. The apparatus, methods, and articles of manufacture described herein are not limited in this regard.

[0115] Turning to FIG. **37**, for example, the first and second sets of weight portions **3320** and **3330**, respectively, may be located away from the back surface **3366** of the face portion **3362** (e.g., not directly coupled to each other). That is, the first and second sets of weight portions **3320** and **3330**, respectively, and the back surface **3366** may be partially or entirely separated by an interior cavity **3800** of the body portion **3300**. For example, each exterior weight port of the first and second sets of exterior weight ports **3320** and **3330** may include an opening (e.g., generally shown as **3820** and **3830**) and a port wall (e.g., generally shown as **3825** and **3835**). The port walls **3825** and **3835** may be integral portions of the back wall portion **3510** (e.g., a section of the back wall portion **3510**). Each of the openings **3820** and **3830** may be configured to receive a weight portion such as weight portions **3321** and **3335**, respectively. The opening **3820** may be located at one end of the weight port **3521**, and the port wall **3825** may be located or proximate to at an opposite end of the weight port **3521**. In a similar manner, the opening **3830** may be located at one end of the weight port **3535**, and the port wall **3835** may be located at or proximate to an opposite end of the weight port **3535**. The port walls **3825** and **3835** may be separated from the face portion **3362** (e.g., separated by the interior cavity **3800**). Each port wall of the first set of weight ports **3520**, such as the port wall **3825** may have a distance **3826** from the back surface **3366** of the face portion **3362** as shown in FIG. **37**. Each port wall of the second set of weight ports **3530**, such as the port wall **3835** may have a distance **3836** from the back surface **3366** of the face portion **3362**. The distances **3826** and **3836** may be determined to optimize the location of the center of gravity of the golf club head **3300** when the first and second sets of weight ports **3520** and **3530**, respectively, receive weight portions as described herein. According to one example, the distance **3836** may be greater than the distance **3826** so that the center of gravity of the golf club head **3300** is moved toward the back portion **3370** and/or lowered toward the sole portion **3390**. According to one example, the distance **3836** may be greater than the distance **3826** by a factor ranging from about 1.5 to about 4. In other words, the distance **3836** may be about 1.5 times to about 4 times greater than the distance **3826**. As a result, a width **3840** (shown in FIG. **38**) of a portion of the interior cavity **3800** below the horizontal midplane **4120** may be greater than a width **3842** of the interior cavity **3800** above the horizontal midplane **4120**. The apparatus, methods, and articles of manufacture described herein are not limited in this regard.

[0116] As discussed herein, the center of gravity (CG) of the golf club head **3300** may be relatively farther back from the face portion **3362** and relatively lower towards a ground plane (e.g., one shown as **4110** in FIG. **34**) as compared to a golf club without a width **3840** of a portion of the interior cavity **3800** being greater than a width **3842** of the interior cavity **3800** as described herein, with all or a substantial portion of the second set of weight portions **3330** being closer to the sole portion **3390** than to the horizontal midplane **4120**, and the first and second sets of weight portions **3320** and **3330**, respectively, being away from the back surface **3366** than if the second set of weight portions **3330** were directly coupled to the back surface **3366**. The locations of the first and second sets of weight ports **3520** and **3530** and the physical properties and materials of construction of the weight portions of the first and second sets of weight portions **3320** and **3330**, respectively, may be determined to optimally affect the weight, weight distribution, center of gravity, moment of inertia characteristics, structural integrity and/or or other static and/or dynamic characteristics of the golf club head **3300**. The apparatus, methods, and articles of manufacture described herein are not limited in this regard.

[0117] While the figures may depict weight ports with a particular cross-section shape, the apparatus, methods, and articles of manufacture described herein may include weight ports with other suitable cross-section shapes. The weight ports of the first and/or second sets of weight ports **3520** and **3530** may have cross-sectional shapes that are similar to the cross-sectional shapes of any of the weight ports described herein. Accordingly, the detailed description of the cross-sectional shapes of the weight ports **3520** and **3530** are not described in detail. The apparatus, methods, and articles of manufacture described herein are not limited in this regard.

[0118] The first and second sets of weight portions **3320** and **3330**, respectively, may be similar in mass (e.g., all of the weight portions of the first and second sets **3320** and **3330**, respectively, weigh about the same). Alternatively, the first and second sets of weight portions **3320** and **3330**, respectively, may be different in mass individually or as an entire set. In particular, each of the weight portions of the first set **3320** (e.g., shown as **3321** and **3322**) may have relatively less mass

than any of the weight portions of the second set **3330** (e.g., shown as **3331**, **3332**, **3333**, **3334** and **3335**). For example, the second set of weight portions **3330** may account for more than 50% of the total mass from exterior weight portions of the golf club head **3300**. As a result, the golf club head **3300** may be configured to have at least 50% of the total mass from exterior weight portions disposed below the horizontal midplane **4120**. In one example, the total mass from exterior weight portions may be greater below the horizontal midplane **4120** that the total mass from exterior weight portions above the horizontal midplane **4120**. The apparatus, methods, and articles of manufacture described herein are not limited in this regard.

[0119] In one example, the golf club head **3300** may have a mass in the range of about 220 grams to about 330 grams based on the type of golf club (e.g., a 4-iron versus a lob wedge). The body portion **3310** may have a mass in the range of about 200 grams to about 310 grams with the first and second sets of weight portions **3320** and **3330**, respectively, having a mass of about 20 grams (e.g., a total mass from exterior weight portions). Each of the weight portions of the first set **3320** may have a mass of about one gram (1.0 g) whereas each of the weight portions of the second set **3330** may have a mass of about 2.4 grams. The sum of the mass of the first set of weight portions **3320** may be about 3 grams whereas the sum of the mass of the first set of weight portions **3330** may be about 16.8 grams. The total mass of the second set of weight portions **3330** may weigh more than five times as much as the total mass of the first set of weight portions **3320** (e.g., a total mass of the second set of weight portions **3330** of about 16.8 grams versus a total mass of the first set of weight portions **3320** of about 3 grams). The golf club head **3300** may have a total mass of 19.8 grams from the first and second sets of weight portions **3320** and **3330**, respectively (e.g., sum of 3 grams from the first set of weight portions **3320** and 16.8 grams from the second set of weight portions **3330**). Accordingly, the first set of weight portions **3320** may account for about 15% of the total mass from exterior weight portions of the golf club head **3300** whereas the second set of weight portions **3330** may be account for about 85% of the total mass from exterior weight portions of the golf club head **3300**. The apparatus, methods, and articles of manufacture described herein are not limited in this regard.

[0120] By coupling the first and second sets of weight portions **3320** and **3330**, respectively, to the body portion **3310** (e.g., securing the first and second sets of weight portions **3320** and **3330** in the weight ports on the back portion **3370**), the location of the center of gravity (CG) and the moment of inertia (MOI) of the golf club head **3300** may be optimized. In particular, the first and second sets of weight portions **3320** and **3330**, respectively, may lower the location of the CG towards the sole portion **3390** and further back away from the face portion **3362**. Further, the MOI may be higher as measured about a vertical axis extending through the CG (e.g., perpendicular to the ground plane **4110**). The MOI may also be higher as measured about a horizontal axis extending through the CG (e.g., extending towards the toe and heel portions **3350** and **3360**, respectively, of the golf club head **3300**). As a result, the club head **3300** may provide a relatively higher launch angle and a relatively lower spin rate than a golf club head without the first and second sets of weight portions **3320** and **3330**, respectively. The apparatus, methods, and articles of manufacture described herein are not limited in this regard.

[0121] Alternatively, two or more weight portions in the same set may be different in mass. In one example, the weight portion **3321** of the first set **3320** may have a relatively lower mass than the weight portion **3322** of the first set **3320**. In another example, the weight portion **3331** of the second set **3330** may have a relatively lower mass than the weight portion **3335** of the second set **3330**. With relatively greater mass at the top-and-toe transition region and/or the sole-and-toe transition region, more weight may be distributed away from the center of gravity (CG) of the golf club head **3300** to increase the moment of inertia (MOI) about the vertical axis through the CG.

[0122] Although the figures may depict the weight portions as separate and individual parts, each set of the first and second sets of weight portions **3320** and **3330**, respectively, may be a single piece of weight portion. In one example, all of the weight portions of the first set **3320** (e.g., shown as **3321** and **3322**) may be combined into a single piece of weight portion (e.g., a first weight portion). In a similar manner, all of the weight portions of the second set **3330** (e.g., **3331**, **3332**, **3333**, **3334** and **3335**) may be combined into a single piece of weight portion as well (e.g., a second weight portion) similar to the example of FIG. **32**. While the figures may depict a particular number of weight portions, the apparatus, methods, and articles of manufacture described herein may include more or less number of weight portions. The apparatus, methods, and articles of manufacture described herein are not limited in this regard.

[0123] The body portion **3310** may be a hollow body including the interior cavity **3800** extending between the front portion **3360** and the back portion **3370**. Further, the interior cavity **3800** may extend between the top portion **3380** and the sole portion **3390**. The interior cavity **3800** may be associated with a cavity height **3850** (H_C), and the body portion **3310** may be associated with a body height **3950** (H_B). While the cavity height **3850** and the body height **3950** may vary between the toe and heel portions **3340** and **3350**, and the top and sole portions **3370** and **3390**, the cavity height **3850** may be at least 50% of a body height **3950** ($H_C>0.5*H_B$). For example, the cavity height **3850** may vary between 70%-85% of the body height **3950**. With the cavity height **3850** of the interior cavity **3800** being greater than 50% of the body height **3950**, the golf club head **3300** may produce relatively more consistent feel, sound, and/or result when the golf club head **3300** strikes a golf ball via the face portion **3362** than a golf club head with a cavity height of less than 50% of the body height. The apparatus, methods, and articles of manufacture described herein are not limited in this regard.

[0124] The interior cavity **3800** may be associated with a cavity width **3840** (W_C), and the body portion **3310** may be associated with a body width **3990** (W_B). The cavity width **3840** and the body width **3990** may vary between the top portion **3380** and the sole portion **3390** and between the toe portion **3340** and the heel portion **3350**. The cavity width **3840** may be at least 50% of a body width **3990** ($W_C>0.5*W_B$) at certain regions on the body portion **3310** between the top and sole portions **3370** and **3390** and between the toe and heel portions **3340** and **3350**. According to another example, the cavity width **3840** may vary between about 40%-60% of a body width **3990** at certain regions between the top and sole portions **3380** and **3390**. According to another example, the cavity width **3840** may vary between about 30%-70% of a body width **3990** at certain regions between the top and sole portions **3380** and **3390**. According to another

example, the cavity width **3840** may vary between about 20%-80% of a body width **3990** at certain regions between the top and sole portions **3380**. For example, the cavity width **3840** may vary between about 20%-80% of the body width **3990** at or below the horizontal midplane **4120**. With the cavity width **3890** of the interior cavity **3800** that may vary between about 20% or more to about 80% or less of the body width **3990** at or below the horizontal midplane **4120**, a substantial portion of the mass of the golf club head **3300** may be moved lower and farther back as compared to a golf club head with a cavity width of less than about 20% of the body width. Further, the golf club head **3300** may produce relatively more consistent feel, sound, and/or result when the golf club head **3300** strikes a golf ball via the face portion **3362** than a golf club head with a cavity width of less than about 20% of the body width. The apparatus, methods, and articles of manufacture described herein are not limited in this regard.

[0125] To provide an inner cavity **3800** having cavity a width **3840** that may vary between about 20%-80% of a body width **3990** at or below the horizontal midplane **4120**, to lower the CG of the golf club head **3300**, and/or to move the CG of the golf club head **3300** farther back relative to the face portion **3360**, the back portion **3370** may have a recessed portion **3410** (shown in FIGS. **35**, **36** and **39**) that may extend between a location near the horizontal midplane **4120** and a location at or near the top portion **3380**. The recessed portion **3410** may be defined by an upper wall **3412** of the back portion **3370** and a ledge portion **3414**. The upper wall **3412** of the back portion **3370** may extend from a location at or near the horizontal midplane **4120** to a location at or near the top portion **3380**. The ledge portion **3414** may extend from the upper wall **3412** of the back portion **3370** to a lower wall **3416** of the back portion **3370**. The lower wall **3416** of the back portion **3370** may extend from a location at or near the horizontal midplane **4120** to a location at or near the bottom portion **3380**. The ledge portion **3414** may extends from the upper wall **3412** in a direction away from the face portion **3360**. Accordingly, the ledge portion **3414** facilitates a transition from the upper wall **3412** to the lower wall **3416** by which the width of the body portion **3310** is substantially increased at or near the horizontal midplane **4120** as compared to the width of the body portion **3310** above the horizontal midplane. The ledge portion **3414** may have a ledge portion width **3418** (shown in FIG. **39**) that is greater than an upper body width **3420** of the body portion **3310**. In one example, the ledge portion width **3418** may be defined as a width of a surface on the back portion **3370** that extends between a plane **3413** generally defining the upper wall **3412** of the back portion **3370** and a plane **3417** generally defining the lower wall **3416** of the back portion **3370**. The upper body width **3420** may be defined as a width of the body portion **3310** at or above the horizontal midplane **4120**. According to one example, the ledge portion width **3418** may be wider than the upper body width **3420** by a factor of between about 0.5 to about 1.0. According to another example, the ledge portion width **3418** may be wider than the upper body width **3420** by a factor of about 1.5. According to another example, the ledge portion width **3418** may be wider than the upper body width **3420** by a factor of about 3.0. Accordingly, a golf club according to the examples described herein may have a ledge portion width **3418** that is wider than the upper body width **3420** by a factor of greater than or equal to about 0.5 to less than or equal to about 3.0. Accordingly, the body width **3990** at, near or below the horizontal midplane **4120** may be substantially greater than the upper body width **3420**, which may provide for a cavity width **3840** that may be around 20% to 80% of the body width **3990** at, near or below the horizontal midplane **4120**. Further, the recessed portion **3410** allows the golf club head **3300** to generally have a greater mass below the horizontal midplane **4120** than above the horizontal plane **4120**. In other words, the mass that is removed from the golf club head **3300** to define the recessed portion **3410** may be moved to aft or back portions of the body portion **3310** that are around and below the horizontal midplane **4120**.

[0126] To generally maintain a cavity width **3840** that may be around 20%-80% of the body width **3990**, the cavity width **3840** may be greater near the sole portion **3390** or below the horizontal midplane **4120** than near the top portion **3380** or above the horizontal midplane **4120**. According to one example, the cavity width **3840** may generally vary according to a variation in the body width **3990** at certain regions of the body portion **3310** between the top portion **3380** and the sole portion **3390** and between the toe portion **3340** and the heel portion **3350**. For example, as shown in FIG. **40**, the cavity width **3840** may generally vary according to the body width **3990** in certain regions of the body portion **3310** between the top portion **3380** and the sole portion **3390**. The apparatus, methods, and articles of manufacture described herein are not limited in this regard.

[0127] In one example, the interior cavity **3800** may be unfilled (i.e., empty space). The body portion **3300** with the interior cavity **3800** may weight about 100 grams less than the body portion **3300** without the interior cavity **3800**. Alternatively, the interior cavity **3800** may be partially or entirely filled with an elastic polymer or elastomer material (e.g., a viscoelastic urethane polymer material such as Sorbothane® material manufactured by Sorbothane, Inc., Kent, Ohio), a thermoplastic elastomer material (TPE), a thermoplastic polyurethane material (TPU), and/or other suitable types of materials to absorb shock, isolate vibration, and/or dampen noise. For example, at least 50% of the interior cavity **3800** may be filled with a TPE material to absorb shock, isolate vibration, and/or dampen noise when the golf club head **3300** strikes a golf ball via the face portion **3362**.

[0128] In another example, the interior cavity **3800** may be partially or entirely filled with a polymer material such as an ethylene copolymer material to absorb shock, isolate vibration, and/or dampen noise when the golf club head **3300** strikes a golf ball via the face portion **3362**. In particular, at least 50% of the interior cavity **3800** may be filled with a high density ethylene copolymer ionomer, a fatty acid modified ethylene copolymer ionomer, a highly amorphous ethylene copolymer ionomer, an ionomer of ethylene acid acrylate terpolymer, an ethylene copolymer comprising a magnesium ionomer, an injection moldable ethylene copolymer that may be used in conventional injection molding equipment to create various shapes, an ethylene copolymer that can be used in conventional extrusion equipment to create various shapes, and/or an ethylene copolymer having high compression and low resilience similar to thermoset polybutadiene rubbers. For example, the ethylene copolymer may include any of the ethylene copolymers associated with DuPont™ High-Performance Resin (HPF) family of materials (e.g., DuPont™ HPF AD1172, DuPont™ HPF AD1035, DuPont® HPF 1000 and DuPont™ HPF 2000), which are manufactured by E.I. du Pont de Nemours and Company of Wilmington, Del. The DuPont™ HPF family of ethylene copolymers are injection moldable and may be used with conventional injection mold-

ing equipment and molds, provide low compression, and provide high resilience. The apparatus, methods, and articles of manufacture described herein are not limited in this regard.

[0129] As described herein, the cavity width **3840** may vary between about 20%-80% of a body width **3990** at or below the horizontal midplane **4120**. According to one example, at least 50% of the elastic polymer or elastomer material partially or filling the interior cavity **3800** may be located below the horizontal midplane **4120** of the golf club head **3300**. Accordingly, the center of gravity of the golf club head **3300** may be further lowered and moved farther back as compared to a golf club head with a cavity width of less than about 20% of the body width and that is partially or fully filled with an elastic polymer or elastomer material. Further, the golf club head **3300** may produce relatively more consistent feel, sound, and/or result when the golf club head **3300** strikes a golf ball via the face portion **3362** as compared to a golf club head with a cavity width of less than about 20% of the body width that is partially or fully filled with an elastic polymer material.

[0130] The thickness of the face portion **3362** may vary between the top portion **3380** and the sole portion and between the toe portion **3340** and the heel portion as discussed in detail herein and shown in the examples of FIGS. **15** and **16**. According, a detailed description of the variation in the thickness of the face portion **3362** is not provided. The apparatus, methods, and articles of manufacture described herein are not limited in this regard.

[0131] Different from other golf club head designs, the interior cavity **3800** of the body portion **3310** and the location of the first and second sets of weight portions **3320** and **3330**, respectively, along the perimeter of the golf club head **3300** may result in a golf ball traveling away from the face portion **3362** at a relatively higher ball launch angle and a relatively lower spin rate. As a result, the golf ball may travel farther (i.e., greater total distance, which includes carry and roll distances).

[0132] The golf club head **3300** may be manufactured by any of the methods described herein and illustrated in FIG. **17**. Accordingly, a detailed description of the method of manufacturing the golf club head **3300** is not provided.

[0133] As illustrated in FIGS. **37** and **41**, for example, the golf club head **3300** may include one or more weight ports (e.g., one shown as weight ports **3521** and **3531**) that may open to the to the cavity **3800**. The weight port **3531** may include a first opening **3930** and a second opening **3935**. The second opening **3935** may be used to access the interior cavity **3800**. In one example, the process **1700** (FIG. **17**) may fill the interior cavity **3800** with an elastic polymer material by injecting the elastic polymer material into the interior cavity **3800** from the first opening **3930** via the second opening **3935**. The first and second openings **3930** and **3935**, respectively, may be same or different in size and/or shape. The weight port **3521** may include a first opening **4030** and a second opening **4035**. The second opening **4035** may be used to access the interior cavity **3800**. In one example, the process **1700** (FIG. **17**) may fill the interior cavity **3800** with an elastic polymer material by injecting the elastic polymer material into the interior cavity **3800** from the weight port **3531**. As the elastic polymer fills the interior cavity **3800**, the air inside the interior cavity **3800** that is displaced by the elastic polymer material may exit the interior cavity from the weight port **3521** through the second opening **4035** and then the first opening **4030**. After the cavity is partially or fully filled with the elastic polymer material, the weight ports **3531** and **3521** may be closed by inserting and securing weight portions therein as described in detail herein. Alternatively, the elastic polymer material may be injected into the interior cavity **3800** from the weight port **3521**. Accordingly, the weight port **3531** may function as an exit port for the displaced air inside the interior cavity **3800**. While the above example may describe and depict particular weight ports with second openings, any other weight ports of the golf club head **4200** may include a second opening (e.g., the weight port **3532**). The apparatus, methods, and articles of manufacture described herein are not limited in this regard.

[0134] While the above examples may described an iron-type or a wedge-type golf club head, the apparatus, methods, and articles of manufacture described herein may be applicable to other types of golf club heads.

[0135] The terms "and" and "or" may have both conjunctive and disjunctive meanings. The terms "a" and "an" are defined as one or more unless this disclosure indicates otherwise. The term "coupled" and any variation thereof refer to directly or indirectly connecting two or more elements chemically, mechanically, and/or otherwise. The phrase "removably connected" is defined such that two elements that are "removably connected" may be separated from each other without breaking or destroying the utility of either element.

[0136] The term "substantially" when used to describe a characteristic, parameter, property, or value of an element may represent deviations or variations that do not diminish the characteristic, parameter, property, or value that the element may be intended to provide. Deviations or variations in a characteristic, parameter, property, or value of an element may be based on, for example, tolerances, measurement errors, measurement accuracy limitations and other factors. The term "proximate" is synonymous with terms such as "adjacent," "close," "immediate," "nearby", "neighboring", etc., and such terms may be used interchangeably as appearing in this disclosure.

[0137] The apparatus, methods, and articles of manufacture described herein may be implemented in a variety of embodiments, and the foregoing description of some of these embodiments does not necessarily represent a complete description of all possible embodiments. Instead, the description of the drawings, and the drawings themselves, disclose at least one embodiment, and may disclosure alternative embodiments.

[0138] As the rules of golf may change from time to time (e.g., new regulations may be adopted or old rules may be eliminated or modified by golf standard organizations and/or governing bodies such as the United States Golf Association (USGA), the Royal and Ancient Golf Club of St. Andrews (R&A), etc.), golf equipment related to the apparatus, methods, and articles of manufacture described herein may be conforming or non-conforming to the rules of golf at any particular time. Accordingly, golf equipment related to the apparatus, methods, and articles of manufacture described herein may be advertised, offered for sale, and/or sold as conforming or non-conforming golf equipment. The apparatus, methods, and articles of manufacture described herein are not limited in this regard.

[0139] Although certain example apparatus, methods, and articles of manufacture have been described herein, the scope of coverage of this disclosure is not limited thereto. On the contrary, this disclosure covers all apparatus, methods, and

articles of articles of manufacture fairly falling within the scope of the appended claims either literally or under the doctrine of equivalents.

What is claimed is:

1. A golf club head comprising:

a plurality of weight portions being associated with a total weight portion mass;

a hollow body portion having a face portion, a toe portion, a top portion, a sole portion, a back portion, and an interior cavity extending between the top and sole portions;

a plurality of exterior weight ports along a periphery of the back portion, the plurality of weight ports including a first set of exterior weight ports with at least one weight port located above a horizontal midplane of the golf club head, and a second set of exterior weight ports with at least one weight port located below the horizontal midplane of the golf club head, each weight port of the plurality of weight ports configured to receive a weight portion of the plurality of weight portions,

wherein a width of the interior cavity below the horizontal midplane is greater than or equal to 20% of a width of the body portion below the horizontal midplane, and

wherein more than 50% of the total weight portion mass is located below the horizontal midplane of the golf club head.

2. A golf club head as defined in claim **1**, wherein the width of the interior cavity below the horizontal midplane is less than or equal to 80% of a width of the body below the horizontal midplane.

3. A golf club head as defined in claim **1**, wherein each of the plurality of exterior weight ports is associated with a port diameter, wherein any two adjacent exterior weight ports of the first set of exterior weight ports are separated by less than the port diameter, and wherein any two adjacent weight ports of the second set of exterior weight ports are separated by less than the port diameter.

4. A golf club head as defined in claim **1**, wherein the interior cavity is partially or entirely filled with an elastic polymer material.

5. A golf club head as defined in claim **1**, wherein the first set of exterior weight ports comprises at least two exterior weight ports.

6. A golf club head as defined in claim **1**, wherein the second set of exterior weight ports comprises a plurality of weight ports below the horizontal midplane and extending proximate to a periphery of the body portion between the toe portion and the heel portion.

7. A golf club head as defined in claim **1**, wherein the face portion comprises a thickness of less than 1.5 millimeters (0.06 inch).

8. An iron-type golf club head comprising:

a hollow body portion having a face portion, a toe portion, a top portion, a sole portion, a back portion, and an interior cavity extending between the top and sole portions;

an elastic polymer material injection molded in the interior cavity through an opening on the back portion to structurally support the face portion during impact with a golf ball,

a first set of weight portions coupled to the hollow body portion at a location above a horizontal midplane of the golf club head, the first set of weight portions being associated with a first total mass; and

a second set of weight portions coupled the hollow body portion at a location below a horizontal midplane of the golf club head, the second set of weight portions being associated with a second total mass greater than the total first mass;

wherein at least 50% of the elastic polymer material in the interior cavity is below the horizontal midplane of the golf club head.

9. An iron-type golf club head as defined in claim **8**, comprising a bonding portion configured to couple the elastic polymer material to the face portion.

10. An iron-type golf club head as defined in claim **8**, wherein the interior cavity comprises a cavity having at least 50% filled with a thermoplastic elastomer material.

11. An iron-type golf club head as defined in claim **8**, wherein the interior cavity is configured to separate the face portion and the first and second sets of weight portions.

12. An iron-type golf club head as defined in claim **813**, wherein the face portion comprises a thickness of less than or equal to 1.5 millimeters (0.06 inch).

13. An iron-type golf club head comprising:

a hollow body portion having a face portion, a toe portion, a top portion, a sole portion, a back portion, and an interior cavity extending between the top and sole portions, the back portion comprising:

an upper back wall portion above a horizontal midplane of the body portion, a width of the body portion above the horizontal midplane being defined by a distance between the upper back wall portion and the face portion,

a lower back wall portion below the horizontal midplane, a width of the body portion below the horizontal midplane being defined by a distance between the lower back wall portion and the face portion, and

a ledge portion extending between the upper back wall portion and the lower back wall portion in a direction from the face portion to the back portion,

a first set of weight portions coupled to the hollow body portion above the horizontal midplane of the body portion, the first set of weight portions being associated with a first total mass; and

a second set of weight portions coupled to the hollow body portion below the horizontal midplane of the body portion, the second set of weight portions being associated with a second total mass greater than the first total mass,

wherein the interior cavity is between the first set of weight portions and the face portion above the horizontal midplane and between the second set of weight portions and the face portion below the horizontal midplane,

wherein a width of the ledge portion is greater than a width of the body portion above the horizontal midplane by at least a factor of 1.0.

14. An iron-type golf club head as defined in claim **13**, wherein a width of the ledge portion is greater than the width of the body portion above the horizontal midplane by a factor of greater than 1.0 and less than 3.0.

15. An iron-type golf club head as defined in claim **13**, wherein each weight portion of the first set of weight portions is associated with a first mass and each weight portion of the second set of weight portions is associated with a second mass, and wherein the first mass is relatively less than the second mass.

16. An iron-type golf club head as defined in claim **13**, wherein the interior cavity comprises a cavity having at least 50% filled with a thermoplastic elastomer material.

17. An iron-type golf club head as defined in claim **13**, wherein the interior cavity comprises a cavity having at least 50% filled with a thermoplastic elastomer material, and a bonding portion configured to couple the thermoplastic elastomer material to the face portion.

18. An iron-type golf club head as defined in claim **13**, wherein the interior cavity is filled with a thermoplastic elastomer material, and wherein at least 50% of the thermoplastic elastomer material in the interior cavity is below the horizontal midplane of the body portion.

19. An iron-type golf club head as defined in claim **13**, wherein the face portion comprises a thickness of less than 1.5 millimeters (0.06 inch).

20. An iron-type golf club head as defined in claim **13**, wherein the first set of weight portions comprises at least two weight portions extending proximate to the top portion and the periphery of the body portion, and wherein the second set of weight portions comprises a plurality of weight portions extending proximate to the sole portion and a periphery of the body portion between the toe portion and the heel portion.

* * * * *