US009649111B2

(12) **United States Patent**
Shelton, IV et al.

(10) **Patent No.: US 9,649,111 B2**
(45) **Date of Patent: May 16, 2017**

(54) **REPLACEABLE CLIP CARTRIDGE FOR A CLIP APPLIER**

(75) Inventors: **Frederick E. Shelton, IV**, Hillsboro, OH (US); **Chester O. Baxter, III**, Loveland, OH (US)

(73) Assignee: **Ethicon Endo-Surgery, LLC**, Guaynabo, PR (US)

(*) Notice: Subject to any disclaimer, the term of this patent is extended or adjusted under 35 U.S.C. 154(b) by 750 days.

(21) Appl. No.: **13/536,379**

(22) Filed: **Jun. 28, 2012**

(65) **Prior Publication Data**

US 2014/0005694 A1 Jan. 2, 2014

(51) **Int. Cl.**

A61B 17/10	(2006.01)
A61B 34/30	(2016.01)
A61B 17/128	(2006.01)
A61B 17/08	(2006.01)
A61B 17/068	(2006.01)
A61B 17/00	(2006.01)

(52) **U.S. Cl.**

CPC ***A61B 17/105*** (2013.01); ***A61B 17/0682*** (2013.01); ***A61B 17/083*** (2013.01); ***A61B 17/1285*** (2013.01); ***A61B 34/30*** (2016.02); *A61B 2017/0046* (2013.01); *A61B 2017/00398* (2013.01); *A61B 2017/00477* (2013.01); *A61B 2017/0688* (2013.01); *A61B 2017/081* (2013.01)

(58) **Field of Classification Search**

CPC A61B 17/128; A61B 17/1285

See application file for complete search history.

(56) **References Cited**

U.S. PATENT DOCUMENTS

66,052	A	6/1867	Smith
662,587	A	11/1900	Blake
670,748	A	3/1901	Weddeler
951,393	A	3/1910	Hahn
1,306,107	A	6/1919	Elliott
1,314,601	A	9/1919	McCaskey
1,677,337	A	7/1928	Grove
1,794,907	A	3/1931	Kelly
2,037,727	A	4/1936	La Chapelle
2,132,295	A	10/1938	Hawkins
2,161,632	A	6/1939	Nattenheimer

(Continued)

FOREIGN PATENT DOCUMENTS

AU	2008207624	A1	3/2009
AU	2010214687	A1	9/2010

(Continued)

OTHER PUBLICATIONS

International Search Report for PCT/US2013/047060, dated Oct. 14, 2013 (6 pages).

(Continued)

Primary Examiner — Todd J Scherbel

(57) **ABSTRACT**

A surgical device for clipping tissue can include a replaceable cartridge comprising a stack of clips contained therein and a firing drive configured to reciprocatingly eject, or deploy, the clips from the cartridge. The cartridge and/or the surgical device can include a firing chamber wherein the clips can be sequentially pushed into the firing chamber along a supply axis. The firing drive can include a firing member which is moved along a firing axis to deploy a clip positioned in the firing chamber wherein the supply axis can be transverse to the firing axis.

21 Claims, 22 Drawing Sheets

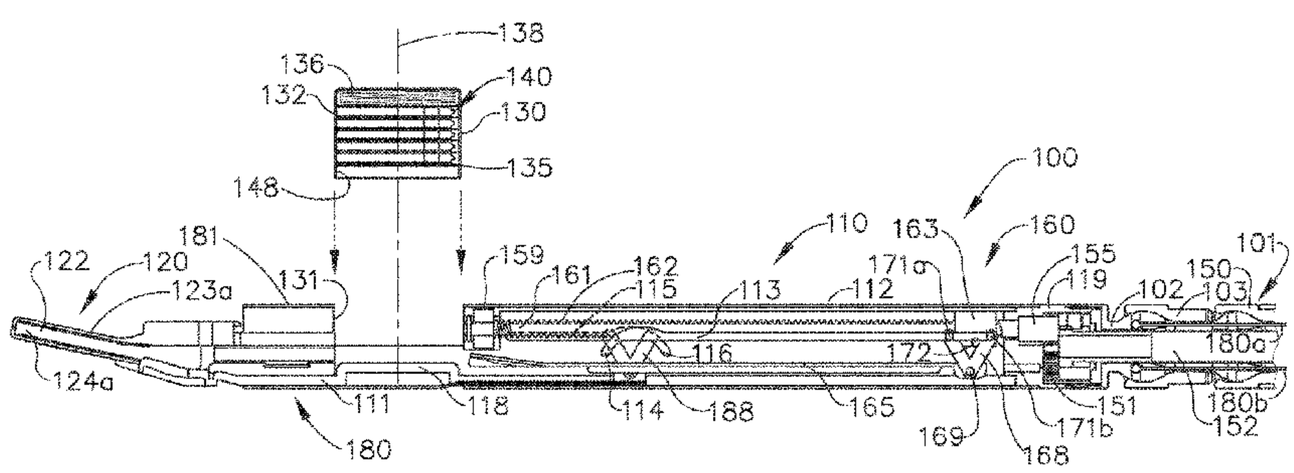

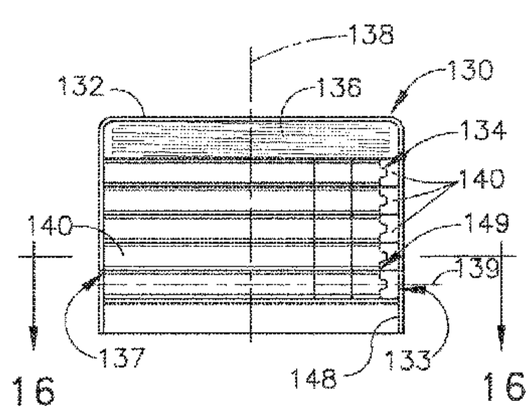

(56) **References Cited**

U.S. PATENT DOCUMENTS

2,211,117 A 8/1940 Hess
2,214,870 A 9/1940 West
2,318,379 A 5/1943 Davis et al.
2,441,096 A 5/1948 Happe
2,526,902 A 10/1950 Rublee
2,578,686 A 12/1951 Fish
2,674,149 A 4/1954 Benson
2,711,461 A 6/1955 Happe
2,804,848 A 9/1957 O'Farrell et al.
2,808,482 A 10/1957 Zanichkowsky et al.
2,853,074 A 9/1958 Olson
2,959,974 A 11/1960 Emrick
3,032,769 A 5/1962 Palmer
3,075,062 A 1/1963 Iaccarino
3,078,465 A 2/1963 Bobrov
3,079,606 A 3/1963 Bobrov et al.
3,166,072 A 1/1965 Sullivan, Jr.
3,196,869 A 7/1965 Scholl
3,266,494 A 8/1966 Brownrigg et al.
3,269,630 A 8/1966 Fleischer
3,275,211 A 9/1966 Hirsch et al.
3,317,103 A 5/1967 Cullen et al.
3,317,105 A 5/1967 Astafjev et al.
3,357,296 A 12/1967 Lefever
3,490,675 A 1/1970 Green et al.
3,494,533 A 2/1970 Green et al.
3,499,591 A 3/1970 Green
3,503,396 A 3/1970 Pierie et al.
3,551,987 A 1/1971 Wilkinson
3,568,675 A 3/1971 Harvey
3,572,159 A 3/1971 Tschanz
3,598,943 A 8/1971 Barrett
3,608,549 A 9/1971 Merrill
3,640,317 A 2/1972 Panfili
3,643,851 A 2/1972 Green et al.
3,661,666 A 5/1972 Foster et al.
3,662,939 A 5/1972 Bryan
3,695,646 A 10/1972 Mommsen
3,709,221 A 1/1973 Riely
3,717,294 A 2/1973 Green
3,734,207 A 5/1973 Fishbein
3,740,994 A 6/1973 DeCarlo, Jr.
3,744,495 A 7/1973 Johnson
3,746,002 A 7/1973 Haller
3,751,902 A 8/1973 Kingsbury et al.
3,819,100 A 6/1974 Noiles et al.
3,821,919 A 7/1974 Knohl
3,841,474 A 10/1974 Maier
3,851,196 A 11/1974 Hinds
3,885,491 A 5/1975 Curtis
3,892,228 A 7/1975 Mitsui
3,894,174 A 7/1975 Cartun
3,940,844 A 3/1976 Colby et al.
3,955,581 A 5/1976 Spasiano et al.
RE28,932 E 8/1976 Noiles et al.
3,981,051 A 9/1976 Brumlik
4,054,108 A 10/1977 Gill
4,060,089 A 11/1977 Noiles
4,106,446 A 8/1978 Yamada et al.
4,111,206 A 9/1978 Vishnevsky et al.
4,129,059 A 12/1978 Van Eck
4,169,990 A 10/1979 Lerdman
4,180,285 A 12/1979 Reneau
4,198,734 A 4/1980 Brumlik
4,198,982 A 4/1980 Fortner et al.
4,207,898 A 6/1980 Becht
4,213,562 A 7/1980 Garrett et al.
4,226,242 A * 10/1980 Jarvik 606/143
4,244,372 A 1/1981 Kapitanov et al.
4,250,436 A 2/1981 Weissman
4,261,244 A 4/1981 Becht et al.
4,272,002 A 6/1981 Moshofsky
4,272,662 A 6/1981 Simpson
4,274,304 A 6/1981 Curtiss
4,275,813 A 6/1981 Noiles
4,289,133 A 9/1981 Rothfuss
4,296,654 A 10/1981 Mercer
4,304,236 A 12/1981 Conta et al.
4,305,539 A 12/1981 Korolkov et al.
4,312,685 A 1/1982 Riedl
4,317,451 A 3/1982 Cerwin et al.
4,321,002 A 3/1982 Froehlich
4,328,839 A 5/1982 Lyons et al.
4,331,277 A 5/1982 Green
4,340,331 A 7/1982 Savino
4,347,450 A 8/1982 Colligan
4,349,028 A 9/1982 Green
4,353,371 A 10/1982 Cosman
4,379,457 A 4/1983 Gravener et al.
4,380,312 A 4/1983 Landrus
4,382,326 A 5/1983 Rabuse
4,383,634 A 5/1983 Green
4,393,728 A 7/1983 Larson et al.
4,396,139 A 8/1983 Hall et al.
4,397,311 A 8/1983 Kanshin et al.
4,402,445 A 9/1983 Green
4,408,692 A 10/1983 Siegel et al.
4,409,057 A 10/1983 Molenda et al.
4,415,112 A 11/1983 Green
4,416,276 A 11/1983 Newton et al.
4,428,376 A 1/1984 Mericle
4,429,695 A 2/1984 Green
4,434,796 A 3/1984 Karapetian et al.
4,438,659 A 3/1984 Desplats
4,442,964 A 4/1984 Becht
4,448,194 A 5/1984 DiGiovanni et al.
4,451,743 A 5/1984 Suzuki et al.
4,454,887 A 6/1984 Krüger
4,467,805 A 8/1984 Fukuda
4,473,077 A 9/1984 Noiles et al.
4,475,679 A 10/1984 Fleury, Jr.
4,485,816 A 12/1984 Krumme
4,486,928 A 12/1984 Tucker et al.
4,488,523 A 12/1984 Shichman
4,489,875 A 12/1984 Crawford et al.
4,499,895 A 2/1985 Takayama
4,500,024 A 2/1985 DiGiovanni et al.
4,505,272 A 3/1985 Utyamyshev et al.
4,505,273 A 3/1985 Braun et al.
4,505,414 A 3/1985 Filipi
4,506,671 A 3/1985 Green
4,520,817 A 6/1985 Green
4,522,327 A 6/1985 Korthoff et al.
4,526,174 A 7/1985 Froehlich
4,527,724 A 7/1985 Chow et al.
4,530,453 A 7/1985 Green
4,531,522 A 7/1985 Bedi et al.
4,532,927 A 8/1985 Miksza, Jr.
4,548,202 A 10/1985 Duncan
4,565,109 A 1/1986 Tsay
4,565,189 A 1/1986 Mabuchi
4,566,620 A 1/1986 Green et al.
4,569,469 A 2/1986 Mongeon et al.
4,571,213 A 2/1986 Ishimoto
4,573,468 A 3/1986 Conta et al.
4,573,469 A 3/1986 Golden et al.
4,573,622 A 3/1986 Green et al.
4,576,167 A 3/1986 Noiles et al.
4,580,712 A 4/1986 Green
4,585,153 A 4/1986 Failla et al.
4,589,416 A 5/1986 Green
4,591,085 A 5/1986 Di Giovanni
4,597,753 A 7/1986 Turley
4,600,037 A 7/1986 Hatten
4,604,786 A 8/1986 Howie, Jr.
4,605,001 A 8/1986 Rothfuss et al.
4,605,004 A 8/1986 Di Giovanni et al.
4,606,343 A 8/1986 Conta et al.
4,607,638 A 8/1986 Crainich
4,608,981 A 9/1986 Rothfuss et al.
4,610,250 A 9/1986 Green
4,610,383 A 9/1986 Rothfuss et al.
4,619,262 A 10/1986 Taylor
4,619,391 A 10/1986 Sharkany et al.

(56) **References Cited**

U.S. PATENT DOCUMENTS

4,628,459 A 12/1986 Shinohara et al.
4,629,107 A 12/1986 Fedotov et al.
4,632,290 A 12/1986 Green et al.
4,633,874 A 1/1987 Chow et al.
4,634,419 A 1/1987 Kreizman et al.
4,641,076 A 2/1987 Linden
4,643,731 A 2/1987 Eckenhoff
4,646,722 A 3/1987 Silverstein et al.
4,655,222 A 4/1987 Florez et al.
4,662,555 A 5/1987 Thornton
4,663,874 A 5/1987 Sano et al.
4,664,305 A 5/1987 Blake, III et al.
4,665,916 A 5/1987 Green
4,667,674 A 5/1987 Korthoff et al.
4,669,647 A 6/1987 Storace
4,671,445 A 6/1987 Barker et al.
4,676,245 A 6/1987 Fukuda
4,684,051 A 8/1987 Akopov et al.
4,693,248 A 9/1987 Failla
4,700,703 A 10/1987 Resnick et al.
4,708,141 A 11/1987 Inoue et al.
4,709,120 A 11/1987 Pearson
4,715,520 A 12/1987 Roehr, Jr. et al.
4,719,917 A 1/1988 Barrows et al.
4,727,308 A 2/1988 Huljak et al.
4,728,020 A 3/1988 Green et al.
4,728,876 A 3/1988 Mongeon et al.
4,729,260 A 3/1988 Dudden
4,730,726 A 3/1988 Holzwarth
4,741,336 A 5/1988 Failla et al.
4,743,214 A 5/1988 Tai-Cheng
4,747,820 A 5/1988 Hornlein et al.
4,750,902 A 6/1988 Wuchinich et al.
4,752,024 A 6/1988 Green et al.
4,754,909 A 7/1988 Barker et al.
4,767,044 A 8/1988 Green
4,773,420 A 9/1988 Green
4,777,780 A 10/1988 Holzwarth
4,787,387 A 11/1988 Burbank, III et al.
4,790,225 A 12/1988 Moody et al.
4,805,617 A 2/1989 Bedi et al.
4,805,823 A 2/1989 Rothfuss
4,809,695 A 3/1989 Gwathmey et al.
4,815,460 A 3/1989 Porat et al.
4,817,847 A 4/1989 Redtenbacher et al.
4,819,853 A 4/1989 Green
4,821,939 A 4/1989 Green
4,827,911 A 5/1989 Broadwin et al.
4,830,855 A 5/1989 Stewart
4,834,720 A 5/1989 Blinkhorn
4,844,068 A 7/1989 Arata et al.
4,848,637 A 7/1989 Pruitt
4,865,030 A 9/1989 Polyak
4,869,414 A 9/1989 Green et al.
4,869,415 A 9/1989 Fox
4,873,977 A 10/1989 Avant et al.
4,880,015 A 11/1989 Nierman
4,890,613 A 1/1990 Golden et al.
4,892,244 A 1/1990 Fox et al.
4,893,622 A 1/1990 Green et al.
4,896,678 A 1/1990 Ogawa
4,900,303 A 2/1990 Lemelson
4,903,697 A 2/1990 Resnick et al.
4,915,100 A 4/1990 Green
4,930,503 A 6/1990 Pruitt
4,930,674 A 6/1990 Barak
4,931,047 A 6/1990 Broadwin et al.
4,932,960 A 6/1990 Green et al.
4,938,408 A 7/1990 Bedi et al.
4,941,623 A 7/1990 Pruitt
4,944,443 A 7/1990 Oddsen et al.
4,955,959 A 9/1990 Tompkins et al.
4,965,709 A 10/1990 Ngo
4,973,274 A 11/1990 Hirukawa
4,978,049 A 12/1990 Green
4,978,333 A 12/1990 Broadwin et al.
4,986,808 A 1/1991 Broadwin et al.
4,988,334 A 1/1991 Hornlein et al.
5,002,543 A 3/1991 Bradshaw et al.
5,002,553 A 3/1991 Shiber
5,005,754 A 4/1991 Van Overloop
5,009,661 A 4/1991 Michelson
5,014,899 A 5/1991 Presty et al.
5,015,227 A 5/1991 Broadwin et al.
5,018,515 A 5/1991 Gilman
5,018,657 A 5/1991 Pedlick et al.
5,024,671 A 6/1991 Tu et al.
5,027,834 A 7/1991 Pruitt
5,031,814 A 7/1991 Tompkins et al.
5,035,040 A 7/1991 Kerrigan et al.
5,038,109 A 8/1991 Goble et al.
5,040,715 A 8/1991 Green et al.
5,042,707 A 8/1991 Taheri
5,061,269 A 10/1991 Muller
5,062,563 A 11/1991 Green et al.
5,065,929 A 11/1991 Schulze et al.
5,071,052 A 12/1991 Rodak et al.
5,071,430 A 12/1991 de Salis et al.
5,074,454 A 12/1991 Peters
5,079,006 A 1/1992 Urquhart
5,080,556 A 1/1992 Carreno
5,083,695 A 1/1992 Foslien et al.
5,084,057 A 1/1992 Green et al.
5,088,979 A 2/1992 Filipi et al.
5,088,997 A 2/1992 Delahuerga et al.
5,094,247 A 3/1992 Hernandez et al.
5,100,420 A 3/1992 Green et al.
5,104,025 A 4/1992 Main et al.
5,104,397 A 4/1992 Vasconcelos et al.
5,106,008 A 4/1992 Tompkins et al.
5,108,368 A 4/1992 Hammerslag et al.
5,111,987 A 5/1992 Moeinzadeh et al.
5,116,349 A 5/1992 Aranyi
5,122,156 A 6/1992 Granger et al.
5,129,570 A 7/1992 Schulze et al.
5,137,198 A 8/1992 Nobis et al.
5,139,513 A 8/1992 Segato
5,141,144 A 8/1992 Foslien et al.
5,142,932 A 9/1992 Moya et al.
5,155,941 A 10/1992 Takahashi et al.
5,156,315 A 10/1992 Green et al.
5,156,609 A 10/1992 Nakao et al.
5,156,614 A 10/1992 Green et al.
5,158,567 A 10/1992 Green
D330,699 S 11/1992 Gill
5,163,598 A 11/1992 Peters et al.
5,171,247 A 12/1992 Hughett et al.
5,171,249 A 12/1992 Stefanchik et al.
5,171,253 A 12/1992 Klieman et al.
5,188,111 A 2/1993 Yates et al.
5,190,517 A 3/1993 Zieve et al.
5,190,544 A 3/1993 Chapman et al.
5,192,288 A 3/1993 Thompson et al.
5,195,968 A 3/1993 Lundquist et al.
5,197,648 A 3/1993 Gingold
5,197,649 A 3/1993 Bessler et al.
5,197,966 A 3/1993 Sommerkamp
5,200,280 A 4/1993 Karasa
5,205,459 A 4/1993 Brinkerhoff et al.
5,207,697 A 5/1993 Carusillo et al.
5,209,747 A 5/1993 Knoepfler
5,211,649 A 5/1993 Kohler et al.
5,211,655 A 5/1993 Hasson
5,217,457 A 6/1993 Delahuerga et al.
5,217,478 A 6/1993 Rexroth
5,219,111 A 6/1993 Bilotti et al.
5,221,036 A 6/1993 Takase
5,221,281 A 6/1993 Klicek
5,222,963 A 6/1993 Brinkerhoff et al.
5,222,975 A 6/1993 Crainich
5,222,976 A 6/1993 Yoon
5,223,675 A 6/1993 Taft
5,234,447 A 8/1993 Kaster et al.
5,236,440 A 8/1993 Hlavacek

(56) **References Cited**

U.S. PATENT DOCUMENTS

5,239,981	A	8/1993	Anapliotis
5,240,163	A	8/1993	Stein et al.
5,242,457	A	9/1993	Akopov et al.
5,244,462	A	9/1993	Delahuerga et al.
5,246,156	A	9/1993	Rothfuss et al.
5,246,443	A	9/1993	Mai
5,253,793	A	10/1993	Green et al.
5,258,009	A	11/1993	Conners
5,258,012	A	11/1993	Luscombe et al.
5,259,366	A	11/1993	Reydel et al.
5,260,637	A	11/1993	Pizzi
5,263,629	A	11/1993	Trumbull et al.
5,263,973	A	11/1993	Cook
5,264,218	A	11/1993	Rogozinski
5,268,622	A	12/1993	Philipp
5,271,543	A	12/1993	Grant et al.
5,271,544	A	12/1993	Fox et al.
RE34,519	E	1/1994	Fox et al.
5,275,323	A	1/1994	Schulze et al.
5,275,608	A	1/1994	Forman et al.
5,279,416	A	1/1994	Malec et al.
5,281,216	A	1/1994	Klicek
5,282,806	A	2/1994	Haber et al.
5,282,829	A	2/1994	Hermes
5,284,128	A	2/1994	Hart
5,285,945	A	2/1994	Brinkerhoff et al.
5,289,963	A	3/1994	McGarry et al.
5,290,271	A	3/1994	Jernberg
5,292,053	A	3/1994	Bilotti et al.
5,297,714	A	3/1994	Kramer
5,304,204	A	4/1994	Bregen
5,307,976	A	5/1994	Olson et al.
5,309,927	A	5/1994	Welch
5,312,023	A	5/1994	Green et al.
5,312,024	A	5/1994	Grant et al.
5,312,329	A	5/1994	Beaty et al.
5,314,424	A	5/1994	Nicholas
5,314,445	A	5/1994	Heidmueller et al.
5,314,466	A	5/1994	Stern et al.
5,318,221	A	6/1994	Green et al.
5,330,487	A	7/1994	Thornton et al.
5,330,502	A	7/1994	Hassler et al.
5,332,142	A	7/1994	Robinson et al.
5,333,422	A	8/1994	Warren et al.
5,333,772	A	8/1994	Rothfuss et al.
5,334,183	A	8/1994	Wuchinich
5,336,232	A	8/1994	Green et al.
5,339,799	A	8/1994	Kami et al.
5,341,724	A	8/1994	Vatel
5,341,810	A	8/1994	Dardel
5,342,381	A	8/1994	Tidemand
5,342,395	A	8/1994	Jarrett et al.
5,342,396	A	8/1994	Cook
5,344,060	A	9/1994	Gravener et al.
5,346,504	A	9/1994	Ortiz et al.
5,348,259	A	9/1994	Blanco et al.
5,350,388	A	9/1994	Epstein
5,350,391	A	9/1994	Iacovelli
5,350,400	A	9/1994	Esposito et al.
5,352,229	A	10/1994	Goble et al.
5,352,235	A	10/1994	Koros et al.
5,352,238	A	10/1994	Green et al.
5,354,303	A	10/1994	Spaeth et al.
5,356,006	A	10/1994	Alpern et al.
5,358,506	A	10/1994	Green et al.
5,358,510	A	10/1994	Luscombe et al.
5,359,231	A	10/1994	Flowers et al.
D352,780	S	11/1994	Glaeser et al.
5,360,305	A	11/1994	Kerrigan
5,360,428	A	11/1994	Hutchinson, Jr.
5,364,001	A	11/1994	Bryan
5,364,003	A	11/1994	Williamson, IV
5,366,133	A	11/1994	Geiste
5,366,134	A	11/1994	Green et al.
5,366,479	A	11/1994	McGarry et al.
5,368,015	A	11/1994	Wilk
5,368,592	A	11/1994	Stern et al.
5,370,645	A	12/1994	Klicek et al.
5,372,124	A	12/1994	Takayama et al.
5,372,596	A	12/1994	Klicek et al.
5,372,602	A	12/1994	Burke
5,374,277	A	12/1994	Hassler
5,376,095	A	12/1994	Ortiz
5,379,933	A	1/1995	Green et al.
5,381,649	A	1/1995	Webb
5,381,782	A	1/1995	DeLaRama et al.
5,382,247	A	1/1995	Cimino et al.
5,383,880	A	1/1995	Hooven
5,383,881	A	1/1995	Green et al.
5,383,888	A	1/1995	Zvenyatsky et al.
5,383,895	A	1/1995	Holmes et al.
5,389,098	A	2/1995	Tsuruta et al.
5,389,104	A	2/1995	Hahnen et al.
5,391,180	A	2/1995	Tovey et al.
5,392,979	A	2/1995	Green et al.
5,395,030	A	3/1995	Kuramoto et al.
5,395,033	A	3/1995	Byrne et al.
5,395,034	A	3/1995	Allen et al.
5,395,312	A	3/1995	Desai
5,395,384	A	3/1995	Duthoit
5,397,046	A	3/1995	Savage et al.
5,397,324	A	3/1995	Carroll et al.
5,403,312	A	4/1995	Yates et al.
5,405,072	A	4/1995	Zlock et al.
5,405,073	A	4/1995	Porter
5,405,344	A	4/1995	Williamson et al.
5,405,360	A	4/1995	Tovey
5,407,293	A	4/1995	Crainich
5,409,498	A	4/1995	Braddock et al.
5,411,508	A	5/1995	Bessler et al.
5,413,107	A	5/1995	Oakley et al.
5,413,267	A	5/1995	Solyntjes et al.
5,413,268	A	5/1995	Green et al.
5,413,272	A	5/1995	Green et al.
5,413,573	A	5/1995	Koivukangas
5,415,334	A	5/1995	Williamson, IV et al.
5,415,335	A	5/1995	Knodell, Jr.
5,417,203	A	5/1995	Tovey et al.
5,417,361	A	5/1995	Williamson, IV
5,421,829	A	6/1995	Olichney et al.
5,422,567	A	6/1995	Matsunaga
5,423,471	A	6/1995	Mastri et al.
5,423,809	A	6/1995	Klicek
5,425,745	A	6/1995	Green et al.
5,431,322	A	7/1995	Green et al.
5,431,654	A	7/1995	Nic
5,431,668	A	7/1995	Burbank, III et al.
5,433,721	A	7/1995	Hooven et al.
5,437,681	A	8/1995	Meade et al.
5,438,302	A	8/1995	Goble
5,439,155	A	8/1995	Viola
5,439,156	A	8/1995	Grant et al.
5,439,479	A	8/1995	Schichman et al.
5,441,191	A	8/1995	Linden
5,441,193	A	8/1995	Gravener
5,441,483	A	8/1995	Avitall
5,441,494	A	8/1995	Ortiz
5,444,113	A	8/1995	Sinclair et al.
5,445,155	A	8/1995	Sieben
5,445,304	A	8/1995	Plyley et al.
5,445,644	A	8/1995	Pietrafitta et al.
5,447,417	A	9/1995	Kuhl et al.
5,447,513	A	9/1995	Davison et al.
5,449,355	A	9/1995	Rhum et al.
5,449,365	A	9/1995	Green et al.
5,449,370	A	9/1995	Vaitekunas
5,452,836	A	9/1995	Huitema et al.
5,452,837	A	9/1995	Williamson, IV et al.
5,454,378	A	10/1995	Palmer et al.
5,454,827	A	10/1995	Aust et al.
5,456,401	A	10/1995	Green et al.
5,458,579	A	10/1995	Chodorow et al.
5,462,215	A	10/1995	Viola et al.
5,464,013	A	11/1995	Lemelson

(56) **References Cited**

U.S. PATENT DOCUMENTS

5,464,144	A	11/1995	Guy et al.
5,464,300	A	11/1995	Crainich
5,465,894	A	11/1995	Clark et al.
5,465,895	A	11/1995	Knodel et al.
5,465,896	A	11/1995	Allen et al.
5,466,020	A	11/1995	Page et al.
5,467,911	A	11/1995	Tsuruta et al.
5,468,253	A	11/1995	Bezwada et al.
5,470,006	A	11/1995	Rodak
5,470,007	A	11/1995	Plyley et al.
5,470,009	A	11/1995	Rodak
5,470,010	A	11/1995	Rothfuss et al.
5,472,132	A	12/1995	Savage et al.
5,472,442	A	12/1995	Klicek
5,473,204	A	12/1995	Temple
5,474,057	A	12/1995	Makower et al.
5,474,566	A	12/1995	Alesi et al.
5,476,206	A	12/1995	Green et al.
5,476,479	A	12/1995	Green et al.
5,478,003	A	12/1995	Green et al.
5,478,354	A	12/1995	Tovey et al.
5,480,089	A	1/1996	Blewett
5,480,409	A	1/1996	Riza
5,482,197	A	1/1996	Green et al.
5,484,095	A	1/1996	Green et al.
5,484,398	A	1/1996	Stoddard
5,484,451	A	1/1996	Akopov et al.
5,485,947	A	1/1996	Olson et al.
5,485,952	A	1/1996	Fontayne
5,487,499	A	1/1996	Sorrentino et al.
5,487,500	A	1/1996	Knodel et al.
5,489,058	A	2/1996	Plyley et al.
5,489,256	A	2/1996	Adair
5,496,312	A	3/1996	Klicek
5,496,317	A	3/1996	Goble et al.
5,497,933	A	3/1996	DeFonzo et al.
5,501,654	A	3/1996	Failla et al.
5,503,320	A	4/1996	Webster et al.
5,503,635	A	4/1996	Sauer et al.
5,503,638	A	4/1996	Cooper et al.
5,505,363	A	4/1996	Green et al.
5,507,426	A	4/1996	Young et al.
5,509,596	A	4/1996	Green et al.
5,509,916	A	4/1996	Taylor
5,511,564	A	4/1996	Wilk
5,514,129	A	5/1996	Smith
5,514,157	A	5/1996	Nicholas et al.
5,518,163	A	5/1996	Hooven
5,518,164	A	5/1996	Hooven
5,520,678	A	5/1996	Heckele et al.
5,520,700	A	5/1996	Beyar et al.
5,522,817	A	6/1996	Sander et al.
5,527,320	A	6/1996	Carruthers et al.
5,529,235	A	6/1996	Boiarski et al.
D372,086	S	7/1996	Grasso et al.
5,531,305	A	7/1996	Roberts et al.
5,531,744	A	7/1996	Nardella et al.
5,533,521	A	7/1996	Granger
5,533,581	A	7/1996	Barth et al.
5,533,661	A	7/1996	Main et al.
5,535,934	A	7/1996	Boiarski et al.
5,535,935	A	7/1996	Vidal et al.
5,535,937	A	7/1996	Boiarski et al.
5,540,375	A	7/1996	Bolanos et al.
5,541,376	A	7/1996	Ladtkow et al.
5,542,594	A	8/1996	McKean et al.
5,542,949	A	8/1996	Yoon
5,543,119	A	8/1996	Sutter et al.
5,547,117	A	8/1996	Hamblin et al.
5,549,621	A	8/1996	Bessler et al.
5,549,627	A	8/1996	Kieturakis
5,549,628	A	8/1996	Cooper et al.
5,549,637	A	8/1996	Crainich
5,551,622	A	9/1996	Yoon
5,553,675	A	9/1996	Pitzen et al.
5,553,765	A	9/1996	Knodel et al.
5,554,148	A	9/1996	Aebischer et al.
5,554,169	A	9/1996	Green et al.
5,556,416	A	9/1996	Clark et al.
5,558,665	A	9/1996	Kieturakis
5,558,671	A	9/1996	Yates
5,560,530	A	10/1996	Bolanos et al.
5,560,532	A	10/1996	DeFonzo et al.
5,562,239	A	10/1996	Boiarski et al.
5,562,241	A	10/1996	Knodel et al.
5,562,682	A	10/1996	Oberlin et al.
5,562,690	A	10/1996	Green et al.
5,562,701	A	10/1996	Huitema et al.
5,562,702	A	10/1996	Huitema et al.
5,564,615	A	10/1996	Bishop et al.
5,569,161	A	10/1996	Ebling et al.
5,569,270	A	10/1996	Weng
5,569,284	A	10/1996	Young et al.
5,571,090	A	11/1996	Sherts
5,571,100	A	11/1996	Goble et al.
5,571,116	A	11/1996	Bolanos et al.
5,571,285	A	11/1996	Chow et al.
5,573,543	A	11/1996	Akopov et al.
5,574,431	A	11/1996	McKeown et al.
5,575,054	A	11/1996	Klinzing et al.
5,575,789	A	11/1996	Bell et al.
5,575,799	A	11/1996	Bolanos et al.
5,575,803	A	11/1996	Cooper et al.
5,575,805	A	11/1996	Li
5,577,654	A	11/1996	Bishop
5,579,978	A	12/1996	Green et al.
5,580,067	A	12/1996	Hamblin et al.
5,582,611	A	12/1996	Tsuruta et al.
5,582,617	A	12/1996	Klieman et al.
5,584,425	A	12/1996	Savage et al.
5,586,711	A	12/1996	Plyley et al.
5,588,579	A	12/1996	Schnut et al.
5,588,580	A	12/1996	Paul et al.
5,588,581	A	12/1996	Conlon et al.
5,591,170	A	1/1997	Spievack et al.
5,591,187	A	1/1997	Dekel
5,597,107	A	1/1997	Knodel et al.
5,599,151	A	2/1997	Daum et al.
5,599,279	A	2/1997	Slotman et al.
5,599,344	A	2/1997	Paterson
5,599,350	A	2/1997	Schulze et al.
5,599,852	A	2/1997	Scopelianos et al.
5,601,224	A	2/1997	Bishop et al.
5,603,443	A	2/1997	Clark et al.
5,605,272	A	2/1997	Witt et al.
5,605,273	A	2/1997	Hamblin et al.
5,607,094	A	3/1997	Clark et al.
5,607,095	A	3/1997	Smith et al.
5,607,433	A	3/1997	Polla et al.
5,607,450	A	3/1997	Zvenyatsky et al.
5,609,285	A	3/1997	Grant et al.
5,609,601	A	3/1997	Kolesa et al.
5,611,709	A	3/1997	McAnulty
5,613,966	A	3/1997	Makower et al.
5,615,820	A	4/1997	Viola
5,618,294	A	4/1997	Aust et al.
5,618,303	A	4/1997	Marlow et al.
5,618,307	A	4/1997	Donlon et al.
5,619,992	A	4/1997	Guthrie et al.
5,620,289	A	4/1997	Curry
5,620,452	A	4/1997	Yoon
5,624,398	A	4/1997	Smith et al.
5,624,452	A	4/1997	Yates
5,626,587	A	5/1997	Bishop et al.
5,626,595	A	5/1997	Sklar et al.
5,628,446	A	5/1997	Geiste et al.
5,628,743	A	5/1997	Cimino
5,628,745	A	5/1997	Bek
5,630,539	A	5/1997	Plyley et al.
5,630,540	A	5/1997	Blewett
5,630,541	A	5/1997	Williamson, IV et al.
5,630,782	A	5/1997	Adair
5,632,432	A	5/1997	Schulze et al.
5,632,433	A	5/1997	Grant et al.

(56) **References Cited**

U.S. PATENT DOCUMENTS

5,634,584 A 6/1997 Okorocha et al.
5,636,779 A 6/1997 Palmer
5,636,780 A 6/1997 Green et al.
5,639,008 A 6/1997 Gallagher et al.
5,643,291 A * 7/1997 Pier et al. 606/143
5,645,209 A 7/1997 Green et al.
5,647,526 A 7/1997 Green et al.
5,647,869 A 7/1997 Goble et al.
5,649,937 A 7/1997 Bito et al.
5,649,956 A 7/1997 Jensen et al.
5,651,491 A 7/1997 Heaton et al.
5,653,373 A 8/1997 Green et al.
5,653,374 A 8/1997 Young et al.
5,653,677 A 8/1997 Okada et al.
5,653,721 A 8/1997 Knodel et al.
5,655,698 A 8/1997 Yoon
5,657,921 A 8/1997 Young et al.
5,658,281 A 8/1997 Heard
5,658,300 A 8/1997 Bito et al.
5,658,307 A 8/1997 Exconde
5,662,258 A 9/1997 Knodel et al.
5,662,260 A 9/1997 Yoon
5,662,662 A 9/1997 Bishop et al.
5,665,085 A 9/1997 Nardella
5,667,517 A 9/1997 Hooven
5,667,526 A 9/1997 Levin
5,667,527 A 9/1997 Cook
5,669,544 A 9/1997 Schulze et al.
5,669,904 A 9/1997 Platt, Jr. et al.
5,669,907 A 9/1997 Platt, Jr. et al.
5,669,918 A 9/1997 Balazs et al.
5,673,840 A 10/1997 Schulze et al.
5,673,841 A 10/1997 Schulze et al.
5,673,842 A 10/1997 Bittner et al.
5,674,286 A 10/1997 D'Alessio et al.
5,678,748 A 10/1997 Plyley et al.
5,680,981 A 10/1997 Mililli et al.
5,680,982 A 10/1997 Schulze et al.
5,680,983 A 10/1997 Plyley et al.
5,683,349 A 11/1997 Makower et al.
5,685,474 A 11/1997 Seeber
5,686,090 A 11/1997 Schilder et al.
5,688,270 A 11/1997 Yates et al.
5,690,269 A 11/1997 Bolanos et al.
5,692,668 A 12/1997 Schulze et al.
5,693,020 A 12/1997 Rauh
5,693,042 A 12/1997 Boiarski et al.
5,693,051 A 12/1997 Schulze et al.
5,695,494 A 12/1997 Becker
5,695,502 A 12/1997 Pier et al.
5,695,504 A 12/1997 Gifford, III et al.
5,695,524 A 12/1997 Kelley et al.
5,697,542 A 12/1997 Knodel et al.
5,697,543 A 12/1997 Burdorff
5,697,943 A 12/1997 Sauer et al.
5,700,270 A 12/1997 Peyser et al.
5,702,387 A 12/1997 Arts et al.
5,702,408 A 12/1997 Wales et al.
5,702,409 A 12/1997 Rayburn et al.
5,704,087 A 1/1998 Strub
5,704,534 A 1/1998 Huitema et al.
5,706,997 A 1/1998 Green et al.
5,706,998 A 1/1998 Plyley et al.
5,707,392 A 1/1998 Kortenbach
5,709,334 A 1/1998 Sorrentino et al.
5,709,680 A 1/1998 Yates et al.
5,709,706 A 1/1998 Kienzle et al.
5,711,472 A 1/1998 Bryan
5,713,128 A 2/1998 Schrenk et al.
5,713,505 A 2/1998 Huitema
5,713,895 A 2/1998 Lontine et al.
5,713,896 A 2/1998 Nardella
5,713,920 A 2/1998 Bezwada et al.
5,715,987 A 2/1998 Kelley et al.
5,715,988 A 2/1998 Palmer
5,716,366 A 2/1998 Yates
5,718,359 A 2/1998 Palmer et al.
5,718,360 A 2/1998 Green et al.
5,718,548 A 2/1998 Costellessa
5,720,744 A 2/1998 Eggleston et al.
D393,067 S 3/1998 Geary et al.
5,725,536 A 3/1998 Oberlin et al.
5,725,554 A 3/1998 Simon et al.
5,728,110 A 3/1998 Vidal et al.
5,728,121 A 3/1998 Bimbo et al.
5,730,758 A 3/1998 Allgeyer
5,732,821 A 3/1998 Stone et al.
5,732,871 A 3/1998 Clark et al.
5,732,872 A 3/1998 Bolduc et al.
5,733,308 A 3/1998 Daugherty et al.
5,735,445 A 4/1998 Vidal et al.
5,735,848 A 4/1998 Yates et al.
5,735,874 A 4/1998 Measamer et al.
5,738,474 A 4/1998 Blewett
5,738,648 A 4/1998 Lands et al.
5,743,456 A 4/1998 Jones et al.
5,747,953 A 5/1998 Philipp
5,749,889 A 5/1998 Bacich et al.
5,749,893 A 5/1998 Vidal et al.
5,752,644 A 5/1998 Bolanos et al.
5,752,965 A 5/1998 Francis et al.
5,755,717 A 5/1998 Yates et al.
5,758,814 A 6/1998 Gallagher et al.
5,762,255 A 6/1998 Chrisman et al.
5,762,256 A 6/1998 Mastri et al.
5,766,188 A 6/1998 Igaki
5,766,205 A 6/1998 Zvenyatsky et al.
5,769,892 A 6/1998 Kingwell
5,772,379 A 6/1998 Evensen
5,772,578 A 6/1998 Heimberger et al.
5,772,659 A 6/1998 Becker et al.
5,776,130 A 7/1998 Buysse et al.
5,778,939 A 7/1998 Hok-Yin
5,779,130 A 7/1998 Alesi et al.
5,779,131 A 7/1998 Knodel et al.
5,779,132 A 7/1998 Knodel et al.
5,782,396 A 7/1998 Mastri et al.
5,782,397 A 7/1998 Koukline
5,782,749 A 7/1998 Riza
5,782,859 A 7/1998 Nicholas et al.
5,784,934 A 7/1998 Izumisawa
5,785,232 A 7/1998 Vidal et al.
5,785,647 A 7/1998 Tompkins et al.
5,787,897 A 8/1998 Kieturakis
5,792,135 A 8/1998 Madhani et al.
5,792,165 A 8/1998 Klieman et al.
5,794,834 A 8/1998 Hamblin et al.
5,796,188 A 8/1998 Bays
5,797,536 A 8/1998 Smith et al.
5,797,537 A 8/1998 Oberlin et al.
5,797,538 A 8/1998 Heaton et al.
5,797,906 A 8/1998 Rhum et al.
5,797,959 A 8/1998 Castro et al.
5,799,857 A 9/1998 Robertson et al.
5,800,379 A 9/1998 Edwards
5,800,423 A 9/1998 Jensen
5,806,676 A 9/1998 Wasgien
5,807,376 A 9/1998 Viola et al.
5,807,378 A 9/1998 Jensen et al.
5,807,393 A 9/1998 Williamson, IV et al.
5,809,441 A 9/1998 McKee
5,810,721 A 9/1998 Mueller et al.
5,810,811 A 9/1998 Yates et al.
5,810,846 A 9/1998 Virnich et al.
5,810,855 A 9/1998 Rayburn et al.
5,813,813 A 9/1998 Daum et al.
5,814,055 A 9/1998 Knodel et al.
5,814,057 A 9/1998 Oi et al.
5,816,471 A 10/1998 Plyley et al.
5,817,084 A 10/1998 Jensen
5,817,091 A 10/1998 Nardella et al.
5,817,093 A 10/1998 Williamson, IV et al.
5,817,109 A 10/1998 McGarry et al.
5,817,119 A 10/1998 Klieman et al.

(56) **References Cited**

U.S. PATENT DOCUMENTS

5,820,009 A 10/1998 Melling et al.
5,823,066 A 10/1998 Huitema et al.
5,826,776 A 10/1998 Schulze et al.
5,827,271 A 10/1998 Buysse et al.
5,827,298 A 10/1998 Hart et al.
5,829,662 A 11/1998 Allen et al.
5,833,690 A 11/1998 Yates et al.
5,833,695 A 11/1998 Yoon
5,833,696 A 11/1998 Whitfield et al.
5,836,503 A 11/1998 Ehrenfels et al.
5,836,960 A 11/1998 Kolesa et al.
5,839,639 A 11/1998 Sauer et al.
5,843,021 A 12/1998 Edwards et al.
5,843,096 A 12/1998 Igaki et al.
5,843,122 A 12/1998 Riza
5,843,132 A 12/1998 Ilvento
5,843,169 A 12/1998 Taheri
5,846,254 A 12/1998 Schulze et al.
5,849,011 A 12/1998 Jones et al.
5,849,023 A 12/1998 Mericle
5,855,311 A 1/1999 Hamblin et al.
5,855,583 A 1/1999 Wang et al.
5,860,581 A 1/1999 Robertson et al.
5,860,975 A 1/1999 Goble et al.
5,865,361 A 2/1999 Milliman et al.
5,868,760 A 2/1999 McGuckin, Jr.
5,871,135 A 2/1999 Williamson, IV et al.
5,873,885 A 2/1999 Weidenbenner
5,876,401 A 3/1999 Schulze et al.
5,878,193 A 3/1999 Wang et al.
5,878,937 A 3/1999 Green et al.
5,878,938 A 3/1999 Bittner et al.
5,891,160 A 4/1999 Williamson, IV et al.
5,893,506 A 4/1999 Powell
5,893,835 A 4/1999 Witt et al.
5,893,878 A 4/1999 Pierce
5,894,979 A 4/1999 Powell
5,897,552 A 4/1999 Edwards et al.
5,897,562 A 4/1999 Bolanos et al.
5,899,914 A 5/1999 Zirps et al.
5,901,895 A 5/1999 Heaton et al.
5,902,312 A 5/1999 Frater et al.
5,904,647 A 5/1999 Ouchi
5,904,693 A 5/1999 Dicesare et al.
5,906,625 A 5/1999 Bito et al.
5,908,402 A 6/1999 Blythe
5,908,427 A 6/1999 McKean et al.
5,911,353 A 6/1999 Bolanos et al.
5,915,616 A 6/1999 Viola et al.
5,916,225 A 6/1999 Kugel
5,918,791 A 7/1999 Sorrentino et al.
5,919,198 A 7/1999 Graves, Jr. et al.
5,921,956 A 7/1999 Grinberg et al.
5,928,256 A 7/1999 Riza
5,931,847 A 8/1999 Bittner et al.
5,931,853 A 8/1999 McEwen et al.
5,937,951 A 8/1999 Izuchukwu et al.
5,938,667 A 8/1999 Peyser et al.
5,941,442 A 8/1999 Geiste et al.
5,944,172 A 8/1999 Hannula
5,944,715 A 8/1999 Goble et al.
5,947,984 A 9/1999 Whipple
5,948,030 A 9/1999 Miller et al.
5,951,516 A 9/1999 Bunyan
5,951,552 A 9/1999 Long et al.
5,951,574 A 9/1999 Stefanchik et al.
5,951,581 A 9/1999 Saadat et al.
5,954,259 A 9/1999 Viola et al.
5,964,394 A 10/1999 Robertson
5,964,774 A 10/1999 McKean et al.
5,971,916 A 10/1999 Koren
5,973,221 A 10/1999 Collyer et al.
5,984,949 A 11/1999 Levin
5,988,479 A 11/1999 Palmer
5,997,528 A 12/1999 Bisch et al.
5,997,552 A 12/1999 Person et al.
6,003,517 A 12/1999 Sheffield et al.
6,004,319 A 12/1999 Goble et al.
6,004,335 A 12/1999 Vaitekunas et al.
6,010,054 A 1/2000 Johnson et al.
6,010,513 A 1/2000 Törmälä et al.
6,012,494 A 1/2000 Balazs
6,013,076 A 1/2000 Goble et al.
6,015,406 A 1/2000 Goble et al.
6,017,322 A 1/2000 Snoke et al.
6,017,354 A 1/2000 Culp et al.
6,017,356 A 1/2000 Frederick et al.
6,022,352 A 2/2000 Vandewalle
6,024,741 A 2/2000 Williamson, IV et al.
6,024,748 A 2/2000 Manzo et al.
6,027,501 A 2/2000 Goble et al.
6,032,849 A 3/2000 Mastri et al.
6,033,378 A 3/2000 Lundquist et al.
6,033,399 A 3/2000 Gines
6,033,427 A 3/2000 Lee
6,037,724 A 3/2000 Buss et al.
6,039,733 A 3/2000 Buysse et al.
6,039,734 A 3/2000 Goble
6,042,601 A 3/2000 Smith
6,045,560 A 4/2000 McKean et al.
6,047,861 A 4/2000 Vidal et al.
6,050,472 A 4/2000 Shibata
6,050,990 A 4/2000 Tankovich et al.
6,050,996 A 4/2000 Schmaltz et al.
6,053,390 A 4/2000 Green et al.
6,053,922 A 4/2000 Krause et al.
RE36,720 E 5/2000 Green et al.
6,056,735 A 5/2000 Okada et al.
6,056,746 A 5/2000 Goble et al.
6,062,360 A 5/2000 Shields
6,063,097 A 5/2000 Oi et al.
6,063,098 A 5/2000 Houser et al.
6,065,919 A 5/2000 Peck
6,066,132 A 5/2000 Chen et al.
6,068,627 A 5/2000 Orszulak et al.
6,071,233 A 6/2000 Ishikawa et al.
6,074,386 A 6/2000 Goble et al.
6,074,401 A 6/2000 Gardiner et al.
6,077,286 A 6/2000 Cuschieri et al.
6,079,606 A 6/2000 Milliman et al.
6,080,181 A 6/2000 Jensen et al.
6,082,577 A 7/2000 Coates et al.
6,083,191 A 7/2000 Rose
6,083,234 A 7/2000 Nicholas et al.
6,083,242 A 7/2000 Cook
6,086,544 A 7/2000 Hibner et al.
6,086,600 A 7/2000 Kortenbach
6,090,106 A 7/2000 Goble et al.
6,093,186 A 7/2000 Goble
6,099,537 A 8/2000 Sugai et al.
6,099,551 A 8/2000 Gabbay
6,102,271 A 8/2000 Longo et al.
6,109,500 A 8/2000 Alli et al.
6,117,148 A 9/2000 Ravo et al.
6,117,158 A 9/2000 Measamer et al.
6,119,913 A 9/2000 Adams et al.
6,120,433 A 9/2000 Mizuno et al.
6,123,241 A 9/2000 Walter et al.
H1904 H 10/2000 Yates et al.
6,126,058 A 10/2000 Adams et al.
6,126,670 A 10/2000 Walker et al.
6,131,789 A 10/2000 Schulze et al.
6,131,790 A 10/2000 Piraka
6,132,368 A 10/2000 Cooper
6,139,546 A 10/2000 Koenig et al.
6,149,660 A 11/2000 Laufer et al.
6,152,935 A 11/2000 Kammerer et al.
6,155,473 A 12/2000 Tompkins et al.
6,156,056 A 12/2000 Kearns et al.
6,159,146 A 12/2000 El Gazayerli
6,159,200 A 12/2000 Verdura et al.
6,159,224 A 12/2000 Yoon
6,162,208 A 12/2000 Hipps
6,165,175 A 12/2000 Wampler et al.

(56) **References Cited**

U.S. PATENT DOCUMENTS

6,165,184	A	12/2000	Verdura et al.
6,165,188	A	12/2000	Saadat et al.
6,168,605	B1	1/2001	Measamer et al.
6,171,316	B1	1/2001	Kovac et al.
6,171,330	B1	1/2001	Benchetrit
6,174,308	B1	1/2001	Goble et al.
6,174,309	B1	1/2001	Wrublewski et al.
6,179,195	B1	1/2001	Adams et al.
6,179,776	B1	1/2001	Adams et al.
6,181,105	B1	1/2001	Cutolo et al.
6,182,673	B1	2/2001	Kindermann et al.
6,187,003	B1	2/2001	Buysse et al.
6,190,386	B1	2/2001	Rydell
6,193,129	B1	2/2001	Bittner et al.
6,197,042	B1	3/2001	Ginn et al.
6,200,330	B1	3/2001	Benderev et al.
6,202,914	B1	3/2001	Geiste et al.
6,206,897	B1	3/2001	Jamiolkowski et al.
6,206,904	B1	3/2001	Ouchi
6,210,403	B1	4/2001	Klicek
6,213,999	B1	4/2001	Platt, Jr. et al.
6,214,028	B1	4/2001	Yoon et al.
6,220,368	B1	4/2001	Ark et al.
6,223,100	B1	4/2001	Green
6,223,835	B1	5/2001	Habedank et al.
6,224,617	B1	5/2001	Saadat et al.
6,228,081	B1	5/2001	Goble
6,228,083	B1	5/2001	Lands et al.
6,228,084	B1	5/2001	Kirwan, Jr.
6,231,565	B1	5/2001	Tovey et al.
6,234,178	B1	5/2001	Goble et al.
6,241,139	B1	6/2001	Milliman et al.
6,241,140	B1	6/2001	Adams et al.
6,241,723	B1	6/2001	Heim et al.
6,245,084	B1	6/2001	Mark et al.
6,248,117	B1	6/2001	Blatter
6,249,076	B1	6/2001	Madden et al.
6,250,532	B1	6/2001	Green et al.
6,258,107	B1	7/2001	Balázs et al.
6,261,286	B1	7/2001	Goble et al.
6,264,086	B1	7/2001	McGuckin, Jr.
6,264,087	B1	7/2001	Whitman
6,270,508	B1	8/2001	Klieman et al.
6,273,876	B1	8/2001	Klima et al.
6,273,897	B1	8/2001	Dalessandro et al.
6,277,114	B1	8/2001	Bullivant et al.
6,293,942	B1	9/2001	Goble et al.
6,296,640	B1	10/2001	Wampler et al.
6,302,311	B1	10/2001	Adams et al.
6,305,891	B1	10/2001	Burlingame
6,306,134	B1	10/2001	Goble et al.
6,306,149	B1	10/2001	Meade
6,309,403	B1	10/2001	Minor et al.
6,315,184	B1	11/2001	Whitman
6,320,123	B1	11/2001	Reimers
6,322,494	B1	11/2001	Bullivant et al.
6,324,339	B1	11/2001	Hudson et al.
6,325,799	B1	12/2001	Goble
6,325,810	B1	12/2001	Hamilton et al.
6,330,965	B1	12/2001	Milliman et al.
6,331,181	B1	12/2001	Tierney et al.
6,331,761	B1	12/2001	Kumar et al.
6,333,029	B1	12/2001	Vyakarnam et al.
6,334,860	B1	1/2002	Dorn
6,334,861	B1	1/2002	Chandler et al.
6,336,926	B1	1/2002	Goble
6,338,737	B1	1/2002	Toledano
6,343,731	B1	2/2002	Adams et al.
6,346,077	B1	2/2002	Taylor et al.
6,352,503	B1	3/2002	Matsui et al.
6,352,532	B1	3/2002	Kramer et al.
6,355,699	B1	3/2002	Vyakarnam et al.
6,356,072	B1	3/2002	Chass
6,358,224	B1	3/2002	Tims et al.
6,364,877	B1	4/2002	Goble et al.
6,364,888	B1	4/2002	Niemeyer et al.
6,370,981	B2	4/2002	Watarai
6,373,152	B1	4/2002	Wang et al.
6,383,201	B1	5/2002	Dong
6,387,113	B1	5/2002	Hawkins et al.
6,387,114	B2	5/2002	Adams
6,391,038	B2	5/2002	Vargas et al.
6,398,781	B1	6/2002	Goble et al.
6,398,797	B2	6/2002	Bombard et al.
6,402,766	B2	6/2002	Bowman et al.
6,406,440	B1	6/2002	Stefanchik
6,406,472	B1	6/2002	Jensen
6,409,724	B1	6/2002	Penny et al.
H2037	H	7/2002	Yates et al.
6,413,274	B1	7/2002	Pedros
6,416,486	B1	7/2002	Wampler
6,416,509	B1	7/2002	Goble et al.
6,419,695	B1	7/2002	Gabbay
6,423,079	B1	7/2002	Blake, III
RE37,814	E	8/2002	Allgeyer
6,428,070	B1	8/2002	Takanashi et al.
6,429,611	B1	8/2002	Li
6,436,097	B1	8/2002	Nardella
6,436,107	B1	8/2002	Wang et al.
6,436,110	B2	8/2002	Bowman et al.
6,436,122	B1	8/2002	Frank et al.
6,439,439	B1	8/2002	Rickard et al.
6,439,446	B1	8/2002	Perry et al.
6,440,146	B2	8/2002	Nicholas et al.
6,443,973	B1	9/2002	Whitman
6,447,518	B1	9/2002	Krause et al.
6,450,391	B1	9/2002	Kayan et al.
6,450,989	B2	9/2002	Dubrul et al.
6,454,781	B1	9/2002	Witt et al.
6,468,275	B1	10/2002	Wampler et al.
6,471,106	B1	10/2002	Reining
6,478,210	B2	11/2002	Adams et al.
6,482,200	B2	11/2002	Shippert
6,485,490	B2	11/2002	Wampler et al.
6,485,667	B1	11/2002	Tan
6,488,196	B1	12/2002	Fenton, Jr.
6,488,197	B1	12/2002	Whitman
6,491,201	B1	12/2002	Whitman
6,491,690	B1	12/2002	Goble et al.
6,491,701	B2	12/2002	Tierney et al.
6,492,785	B1	12/2002	Kasten et al.
6,494,896	B1	12/2002	D'Alessio et al.
6,500,176	B1	12/2002	Truckai et al.
6,500,194	B2	12/2002	Benderev et al.
6,503,257	B2	1/2003	Grant et al.
6,503,259	B2	1/2003	Huxel et al.
6,505,768	B2	1/2003	Whitman
6,510,854	B2	1/2003	Goble
6,511,468	B1	1/2003	Cragg et al.
6,512,360	B1	1/2003	Goto et al.
6,517,528	B1	2/2003	Pantages et al.
6,517,535	B2	2/2003	Edwards
6,517,565	B1	2/2003	Whitman et al.
6,517,566	B1	2/2003	Hovland et al.
6,522,101	B2	2/2003	Malackowski
6,527,782	B2	3/2003	Hogg et al.
6,527,785	B2	3/2003	Sancoff et al.
6,533,157	B1	3/2003	Whitman
6,533,784	B2	3/2003	Truckai et al.
6,535,764	B2	3/2003	Imran et al.
6,543,456	B1	4/2003	Freeman
6,545,384	B1	4/2003	Pelrine et al.
6,547,786	B1	4/2003	Goble
6,550,546	B2	4/2003	Thurler et al.
6,551,333	B2	4/2003	Kuhns et al.
6,554,861	B2	4/2003	Knox et al.
6,555,770	B2	4/2003	Kawase
6,558,379	B1	5/2003	Batchelor et al.
6,565,560	B1	5/2003	Goble et al.
6,569,085	B2	5/2003	Kortenbach et al.
6,569,171	B2	5/2003	DeGuillebon et al.
6,578,751	B2	6/2003	Hartwick
6,582,427	B1	6/2003	Goble et al.
6,582,441	B1	6/2003	He et al.

(56) **References Cited**

U.S. PATENT DOCUMENTS

6,583,533 B2 6/2003 Pelrine et al.
6,585,144 B2 7/2003 Adams et al.
6,588,643 B2 7/2003 Bolduc et al.
6,589,164 B1 7/2003 Flaherty
6,592,538 B1 7/2003 Hotchkiss et al.
6,592,597 B2 7/2003 Grant et al.
6,596,296 B1 7/2003 Nelson et al.
6,596,304 B1 7/2003 Bayon et al.
6,596,432 B2 7/2003 Kawakami et al.
D478,665 S 8/2003 Isaacs et al.
D478,986 S 8/2003 Johnston et al.
6,601,749 B2 8/2003 Sullivan et al.
6,602,252 B2 8/2003 Mollenauer
6,602,262 B2 8/2003 Griego et al.
6,605,078 B2 8/2003 Adams
6,605,669 B2 8/2003 Awokola et al.
6,607,475 B2 8/2003 Doyle et al.
6,613,069 B2 9/2003 Boyd et al.
6,616,686 B2 9/2003 Coleman et al.
6,619,529 B2 9/2003 Green et al.
6,620,166 B1 9/2003 Wenstrom, Jr. et al.
6,626,834 B2 9/2003 Dunne et al.
6,629,630 B2 10/2003 Adams
6,629,974 B2 10/2003 Penny et al.
6,629,988 B2 10/2003 Weadock
6,636,412 B2 10/2003 Smith
6,638,108 B2 10/2003 Tachi
6,638,285 B2 10/2003 Gabbay
6,638,297 B1 10/2003 Huitema
RE38,335 E 11/2003 Aust et al.
6,641,528 B2 11/2003 Torii
6,644,532 B2 11/2003 Green et al.
6,645,201 B1 11/2003 Utley et al.
6,646,307 B1 11/2003 Yu et al.
6,648,816 B2 11/2003 Irion et al.
6,652,595 B1 11/2003 Nicolo
D484,243 S 12/2003 Ryan et al.
D484,595 S 12/2003 Ryan et al.
D484,596 S 12/2003 Ryan et al.
6,656,177 B2 12/2003 Truckai et al.
6,656,193 B2 12/2003 Grant et al.
6,663,641 B1 12/2003 Kovac et al.
6,666,854 B1 12/2003 Lange
6,666,875 B1 12/2003 Sakurai et al.
6,667,825 B2 12/2003 Lu et al.
6,669,073 B2 12/2003 Milliman et al.
6,671,185 B2 12/2003 Duval
D484,977 S 1/2004 Ryan et al.
6,676,660 B2 1/2004 Wampler et al.
6,679,269 B2 1/2004 Swanson
6,679,410 B2 1/2004 Würsch et al.
6,681,978 B2 1/2004 Geiste et al.
6,681,979 B2 1/2004 Whitman
6,682,527 B2 1/2004 Strul
6,682,528 B2 1/2004 Frazier et al.
6,685,727 B2 2/2004 Fisher et al.
6,689,153 B1 2/2004 Skiba
6,692,507 B2 2/2004 Pugsley et al.
6,695,198 B2 2/2004 Adams et al.
6,695,199 B2 2/2004 Whitman
6,698,643 B2 3/2004 Whitman
6,699,235 B2 3/2004 Wallace et al.
6,704,210 B1 3/2004 Myers
6,705,503 B1 3/2004 Pedicini et al.
6,709,445 B2 3/2004 Boebel et al.
6,712,773 B1 3/2004 Viola
6,716,223 B2 4/2004 Leopold et al.
6,716,232 B1 4/2004 Vidal et al.
6,716,233 B1 4/2004 Whitman
6,722,552 B2 4/2004 Fenton, Jr.
6,723,087 B2 4/2004 O'Neill et al.
6,723,091 B2 4/2004 Goble et al.
6,726,697 B2 4/2004 Nicholas et al.
6,729,119 B2 5/2004 Schnipke et al.
6,736,825 B2 5/2004 Blatter et al.
6,736,854 B2 5/2004 Vadurro et al.
6,740,030 B2 5/2004 Martone et al.
6,747,121 B2 6/2004 Gogolewski
6,749,560 B1 6/2004 Konstorum et al.
6,752,768 B2 6/2004 Burdorff et al.
6,752,816 B2 6/2004 Culp et al.
6,755,195 B1 6/2004 Lemke et al.
6,755,338 B2 6/2004 Hahnen et al.
6,758,846 B2 7/2004 Goble et al.
6,761,685 B2 7/2004 Adams et al.
6,762,339 B1 7/2004 Klun et al.
6,767,352 B2 7/2004 Field et al.
6,767,356 B2 7/2004 Kanner et al.
6,769,590 B2 8/2004 Vresh et al.
6,769,594 B2 8/2004 Orban, III
6,770,027 B2 8/2004 Banik et al.
6,770,072 B1 8/2004 Truckai et al.
6,773,409 B2 8/2004 Truckai et al.
6,773,438 B1 8/2004 Knodel et al.
6,777,838 B2 8/2004 Miekka et al.
6,780,151 B2 8/2004 Grabover et al.
6,780,180 B1 8/2004 Goble et al.
6,783,524 B2 8/2004 Anderson et al.
6,786,382 B1 9/2004 Hoffman
6,786,864 B2 9/2004 Matsuura et al.
6,786,896 B1 9/2004 Madani et al.
6,790,173 B2 9/2004 Saadat et al.
6,793,652 B1 9/2004 Whitman et al.
6,793,661 B2 9/2004 Hamilton et al.
6,793,663 B2 * 9/2004 Kneifel et al. 606/143
6,802,843 B2 10/2004 Truckai et al.
6,805,273 B2 10/2004 Bilotti et al.
6,806,808 B1 10/2004 Watters et al.
6,808,525 B2 10/2004 Latterell et al.
6,814,741 B2 11/2004 Bowman et al.
6,817,508 B1 11/2004 Racenet et al.
6,817,509 B2 11/2004 Geiste et al.
6,817,974 B2 11/2004 Cooper et al.
6,818,018 B1 11/2004 Sawhney
6,820,791 B2 11/2004 Adams
6,821,273 B2 11/2004 Mollenauer
6,821,282 B2 11/2004 Perry et al.
6,821,284 B2 11/2004 Sturtz et al.
6,827,246 B2 12/2004 Sullivan et al.
6,827,712 B2 12/2004 Tovey et al.
6,827,725 B2 12/2004 Batchelor et al.
6,828,902 B2 12/2004 Casden
6,830,174 B2 12/2004 Hillstead et al.
6,831,629 B2 12/2004 Nishino et al.
6,832,998 B2 12/2004 Goble
6,834,001 B2 12/2004 Myono
6,835,173 B2 12/2004 Couvillon, Jr.
6,835,199 B2 12/2004 McGuckin, Jr. et al.
6,835,336 B2 12/2004 Watt
6,837,846 B2 1/2005 Jaffe et al.
6,838,493 B2 1/2005 Williams et al.
6,840,423 B2 1/2005 Adams et al.
6,843,403 B2 1/2005 Whitman
6,843,789 B2 1/2005 Goble
6,843,793 B2 1/2005 Brock et al.
6,846,307 B2 1/2005 Whitman et al.
6,846,308 B2 1/2005 Whitman et al.
6,846,309 B2 1/2005 Whitman et al.
6,849,071 B2 2/2005 Whitman et al.
6,850,817 B1 2/2005 Green
6,858,005 B2 2/2005 Ohline et al.
RE38,708 E 3/2005 Bolanos et al.
6,861,142 B1 3/2005 Wilkie et al.
6,863,694 B1 3/2005 Boyce et al.
6,866,178 B2 3/2005 Adams et al.
6,866,671 B2 3/2005 Tierney et al.
6,867,248 B1 3/2005 Martin et al.
6,869,435 B2 3/2005 Blake, III
6,872,214 B2 3/2005 Sonnenschein et al.
6,874,669 B2 4/2005 Adams et al.
6,877,647 B2 4/2005 Green et al.
6,878,106 B1 4/2005 Herrmann
6,889,116 B2 5/2005 Jinno
6,893,435 B2 5/2005 Goble

(56) **References Cited**

U.S. PATENT DOCUMENTS

6,905,057 B2 6/2005 Swayze et al.
6,905,497 B2 6/2005 Truckai et al.
6,908,472 B2 6/2005 Wiener et al.
6,911,033 B2 6/2005 de Guillebon et al.
6,913,579 B2 7/2005 Truckai et al.
6,913,608 B2 7/2005 Liddicoat et al.
6,913,613 B2 7/2005 Schwarz et al.
6,921,397 B2 7/2005 Corcoran et al.
6,921,412 B1 7/2005 Black et al.
6,923,093 B2 8/2005 Ullah
6,923,803 B2 8/2005 Goble
6,926,716 B2 8/2005 Baker et al.
6,929,641 B2 8/2005 Goble et al.
6,929,644 B2 8/2005 Truckai et al.
6,931,830 B2 8/2005 Liao
6,932,218 B2 8/2005 Kosann et al.
6,932,810 B2 8/2005 Ryan
6,936,042 B2 8/2005 Wallace et al.
6,939,358 B2 9/2005 Palacios et al.
6,942,662 B2 9/2005 Goble et al.
6,945,444 B2 9/2005 Gresham et al.
6,945,981 B2 9/2005 Donofrio et al.
6,953,138 B1 10/2005 Dworak et al.
6,953,139 B2 10/2005 Milliman et al.
6,958,035 B2 10/2005 Friedman et al.
6,959,851 B2 11/2005 Heinrich
6,959,852 B2 11/2005 Shelton, IV et al.
6,960,107 B1 11/2005 Schaub et al.
6,960,163 B2 11/2005 Ewers et al.
6,960,220 B2 11/2005 Marino et al.
6,964,363 B2 11/2005 Wales et al.
6,966,907 B2 11/2005 Goble
6,966,909 B2 11/2005 Marshall et al.
6,971,988 B2 12/2005 Orban, III
6,972,199 B2 12/2005 Lebouitz et al.
6,974,462 B2 12/2005 Sater
6,978,921 B2 12/2005 Shelton, IV et al.
6,978,922 B2 12/2005 Bilotti et al.
6,981,628 B2 1/2006 Wales
6,981,941 B2 1/2006 Whitman et al.
6,981,978 B2 1/2006 Gannoe
6,984,203 B2 1/2006 Tartaglia et al.
6,984,231 B2 1/2006 Goble et al.
6,986,451 B1 1/2006 Mastri et al.
6,988,649 B2 1/2006 Shelton, IV et al.
6,988,650 B2 1/2006 Schwemberger et al.
6,990,796 B2 1/2006 Schnipke et al.
6,994,708 B2 2/2006 Manzo
6,995,729 B2 2/2006 Govari et al.
6,997,931 B2 2/2006 Sauer et al.
7,000,818 B2 2/2006 Shelton, IV et al.
7,000,819 B2 2/2006 Swayze et al.
7,001,380 B2 2/2006 Goble
7,001,408 B2 2/2006 Knodel et al.
7,008,435 B2 3/2006 Cummins
7,009,039 B2 3/2006 Yayon et al.
7,011,657 B2 3/2006 Truckai et al.
7,018,357 B2 3/2006 Emmons
7,018,390 B2 3/2006 Turovskiy et al.
7,025,743 B2 4/2006 Mann et al.
7,029,435 B2 4/2006 Nakao
7,032,798 B2 4/2006 Whitman et al.
7,032,799 B2 4/2006 Viola et al.
7,033,356 B2 4/2006 Latterell et al.
7,036,680 B1 5/2006 Flannery
7,037,344 B2 5/2006 Kagan et al.
7,041,102 B2 5/2006 Truckai et al.
7,041,868 B2 5/2006 Greene et al.
7,043,852 B2 5/2006 Hayashida et al.
7,044,352 B2 5/2006 Shelton, IV et al.
7,044,353 B2 5/2006 Mastri et al.
7,048,687 B1 5/2006 Reuss et al.
7,048,745 B2 5/2006 Tierney et al.
7,052,494 B2 5/2006 Goble et al.
7,052,499 B2 5/2006 Steger et al.
7,055,730 B2 6/2006 Ehrenfels et al.
7,055,731 B2 6/2006 Shelton, IV et al.
7,056,284 B2 6/2006 Martone et al.
7,056,330 B2 6/2006 Gayton
7,059,331 B2 6/2006 Adams et al.
7,059,508 B2 6/2006 Shelton, IV et al.
7,063,671 B2 6/2006 Couvillon, Jr.
7,063,712 B2 6/2006 Vargas et al.
7,066,879 B2 6/2006 Fowler et al.
7,066,944 B2 6/2006 Laufer et al.
7,067,038 B2 6/2006 Trokhan et al.
7,070,083 B2 7/2006 Jankowski
7,070,559 B2 7/2006 Adams et al.
7,070,597 B2 7/2006 Truckai et al.
7,071,287 B2 7/2006 Rhine et al.
7,075,770 B1 7/2006 Smith
7,077,856 B2 7/2006 Whitman
7,080,769 B2 7/2006 Vresh et al.
7,081,114 B2 7/2006 Rashidi
7,083,073 B2 8/2006 Yoshie et al.
7,083,075 B2 8/2006 Swayze et al.
7,083,571 B2 8/2006 Wang et al.
7,083,615 B2 8/2006 Peterson et al.
7,083,619 B2 8/2006 Truckai et al.
7,083,620 B2 8/2006 Jahns et al.
7,087,054 B2 8/2006 Truckai et al.
7,087,071 B2 8/2006 Nicholas et al.
7,090,637 B2 8/2006 Danitz et al.
7,090,673 B2 8/2006 Dycus et al.
7,090,683 B2 8/2006 Brock et al.
7,090,684 B2 8/2006 McGuckin, Jr. et al.
7,094,202 B2 8/2006 Nobis et al.
7,094,247 B2 8/2006 Monassevitch et al.
7,097,089 B2 8/2006 Marczyk
7,097,644 B2 8/2006 Long
7,097,650 B2 8/2006 Weller et al.
7,098,794 B2 8/2006 Lindsay et al.
7,104,741 B2 9/2006 Krohn
7,108,695 B2 9/2006 Witt et al.
7,108,701 B2 9/2006 Evens et al.
7,108,709 B2 9/2006 Cummins
7,111,769 B2 9/2006 Wales et al.
7,112,214 B2 9/2006 Peterson et al.
RE39,358 E 10/2006 Goble
7,114,642 B2 10/2006 Whitman
7,118,582 B1 10/2006 Wang et al.
7,121,446 B2 10/2006 Arad et al.
7,122,028 B2 10/2006 Looper et al.
7,125,409 B2 10/2006 Truckai et al.
7,126,303 B2 10/2006 Farritor et al.
7,128,253 B2 10/2006 Mastri et al.
7,128,254 B2 10/2006 Shelton, IV et al.
7,128,748 B2 10/2006 Mooradian et al.
7,131,445 B2 11/2006 Amoah
7,133,601 B2 11/2006 Phillips et al.
7,134,587 B2 11/2006 Schwemberger et al.
7,137,981 B2 11/2006 Long
7,140,527 B2 11/2006 Ehrenfels et al.
7,140,528 B2 11/2006 Shelton, IV
7,143,923 B2 12/2006 Shelton, IV et al.
7,143,924 B2 12/2006 Scirica et al.
7,143,925 B2 12/2006 Shelton, IV et al.
7,143,926 B2 12/2006 Shelton, IV et al.
7,147,138 B2 12/2006 Shelton, IV
7,147,139 B2 12/2006 Schwemberger et al.
7,147,140 B2 12/2006 Wukusick et al.
7,147,637 B2 12/2006 Goble
7,147,650 B2 12/2006 Lee
7,150,748 B2 12/2006 Ebbutt et al.
7,153,300 B2 12/2006 Goble
7,156,863 B2 1/2007 Sonnenschein et al.
7,159,750 B2 1/2007 Racenet et al.
7,160,299 B2 1/2007 Baily
7,161,036 B2 1/2007 Oikawa et al.
7,168,604 B2 1/2007 Milliman et al.
7,172,104 B2 2/2007 Scirica et al.
7,172,593 B2 2/2007 Trieu et al.
7,179,223 B2 2/2007 Motoki et al.
7,179,267 B2 2/2007 Nolan et al.

(56) **References Cited**

U.S. PATENT DOCUMENTS

7,182,239	B1	2/2007	Myers
7,182,763	B2	2/2007	Nardella
7,183,737	B2	2/2007	Kitagawa
7,188,758	B2	3/2007	Viola et al.
7,189,207	B2	3/2007	Viola
7,195,627	B2	3/2007	Amoah et al.
7,199,537	B2	4/2007	Okamura et al.
7,204,835	B2	4/2007	Latterell et al.
7,207,233	B2	4/2007	Wadge
7,207,471	B2	4/2007	Heinrich et al.
7,207,472	B2	4/2007	Wukusick et al.
7,207,556	B2	4/2007	Saitoh et al.
7,208,005	B2	4/2007	Frecker et al.
7,210,609	B2	5/2007	Leiboff et al.
7,211,081	B2	5/2007	Goble
7,211,084	B2	5/2007	Goble et al.
7,211,092	B2	5/2007	Hughett
7,213,736	B2	5/2007	Wales et al.
7,214,224	B2	5/2007	Goble
7,217,285	B2	5/2007	Vargas et al.
7,220,260	B2	5/2007	Fleming et al.
7,220,272	B2	5/2007	Weadock
7,225,963	B2	6/2007	Scirica
7,225,964	B2	6/2007	Mastri et al.
7,234,624	B2	6/2007	Gresham et al.
7,235,089	B1	6/2007	McGuckin, Jr.
7,235,302	B2	6/2007	Jing et al.
7,237,708	B1	7/2007	Guy et al.
7,238,195	B2	7/2007	Viola
7,241,288	B2	7/2007	Braun
7,246,734	B2	7/2007	Shelton, IV
7,247,161	B2	7/2007	Johnston et al.
7,252,660	B2	8/2007	Kunz
7,255,696	B2	8/2007	Goble et al.
7,256,695	B2	8/2007	Hamel et al.
7,258,262	B2	8/2007	Mastri et al.
7,258,546	B2	8/2007	Beier et al.
7,260,431	B2	8/2007	Libbus et al.
7,265,374	B2	9/2007	Lee et al.
7,267,679	B2	9/2007	McGuckin, Jr. et al.
7,273,483	B2	9/2007	Wiener et al.
7,278,562	B2	10/2007	Mastri et al.
7,278,563	B1	10/2007	Green
7,278,949	B2	10/2007	Bader
7,278,994	B2	10/2007	Goble
7,282,048	B2	10/2007	Goble et al.
7,287,682	B1	10/2007	Ezzat et al.
7,293,685	B2	11/2007	Ehrenfels et al.
7,295,907	B2	11/2007	Lu et al.
7,296,722	B2	11/2007	Ivanko
7,296,724	B2	11/2007	Green et al.
7,297,149	B2	11/2007	Vitali et al.
7,300,450	B2	11/2007	Vleugels et al.
7,303,106	B2	12/2007	Milliman et al.
7,303,107	B2	12/2007	Milliman et al.
7,303,108	B2	12/2007	Shelton, IV
7,303,502	B2	12/2007	Thompson
7,303,556	B2	12/2007	Metzger
7,306,597	B2	12/2007	Manzo
7,308,998	B2	12/2007	Mastri et al.
7,322,975	B2	1/2008	Goble et al.
7,322,994	B2	1/2008	Nicholas et al.
7,324,572	B2	1/2008	Chang
7,326,203	B2	2/2008	Papineau et al.
7,326,213	B2	2/2008	Benderev et al.
7,328,828	B2	2/2008	Ortiz et al.
7,328,829	B2	2/2008	Arad et al.
7,330,004	B2	2/2008	DeJonge et al.
7,331,340	B2	2/2008	Barney
7,334,717	B2	2/2008	Rethy et al.
7,334,718	B2	2/2008	McAlister et al.
7,335,199	B2	2/2008	Goble et al.
7,336,048	B2	2/2008	Lohr
7,336,184	B2	2/2008	Smith et al.
7,338,513	B2	3/2008	Lee et al.
7,341,591	B2	3/2008	Grinberg
7,343,920	B2	3/2008	Toby et al.
7,344,532	B2	3/2008	Goble et al.
7,348,763	B1	3/2008	Reinhart et al.
RE40,237	E	4/2008	Bilotti et al.
7,351,258	B2	4/2008	Ricotta et al.
7,354,447	B2	4/2008	Shelton, IV et al.
7,354,502	B2	4/2008	Polat et al.
7,357,287	B2	4/2008	Shelton, IV et al.
7,357,806	B2	4/2008	Rivera et al.
7,361,195	B2	4/2008	Schwartz et al.
7,364,060	B2	4/2008	Milliman
7,364,061	B2	4/2008	Swayze et al.
7,377,918	B2	5/2008	Amoah
7,377,928	B2	5/2008	Zubik et al.
7,380,695	B2	6/2008	Doll et al.
7,380,696	B2	6/2008	Shelton, IV et al.
7,386,730	B2	6/2008	Uchikubo
7,388,217	B2	6/2008	Buschbeck et al.
7,391,173	B2	6/2008	Schena
7,396,356	B2	7/2008	Mollenauer
7,397,364	B2	7/2008	Govari
7,398,907	B2	7/2008	Racenet et al.
7,398,908	B2	7/2008	Holsten et al.
7,400,752	B2	7/2008	Zacharias
7,401,721	B2	7/2008	Holsten et al.
7,404,508	B2	7/2008	Smith et al.
7,404,509	B2	7/2008	Ortiz et al.
7,404,822	B2	7/2008	Viart et al.
7,407,074	B2	8/2008	Ortiz et al.
7,407,075	B2	8/2008	Holsten et al.
7,407,076	B2	8/2008	Racenet et al.
7,407,077	B2	8/2008	Ortiz et al.
7,407,078	B2	8/2008	Shelton, IV et al.
7,410,086	B2	8/2008	Ortiz et al.
7,413,563	B2	8/2008	Corcoran et al.
7,416,101	B2	8/2008	Shelton, IV et al.
7,418,078	B2	8/2008	Blanz et al.
RE40,514	E	9/2008	Mastri et al.
7,419,080	B2	9/2008	Smith et al.
7,419,081	B2	9/2008	Ehrenfels et al.
7,419,495	B2	9/2008	Menn et al.
7,422,136	B1	9/2008	Marczyk
7,422,139	B2	9/2008	Shelton, IV et al.
7,424,965	B2	9/2008	Racenet et al.
7,427,607	B2	9/2008	Suzuki
7,431,188	B1	10/2008	Marczyk
7,431,189	B2	10/2008	Shelton, IV et al.
7,431,694	B2	10/2008	Stefanchik et al.
7,431,730	B2	10/2008	Viola
7,434,715	B2	10/2008	Shelton, IV et al.
7,434,717	B2	10/2008	Shelton, IV et al.
7,438,209	B1	10/2008	Hess et al.
7,438,718	B2	10/2008	Milliman et al.
7,439,354	B2	10/2008	Lenges et al.
7,441,684	B2	10/2008	Shelton, IV et al.
7,441,685	B1	10/2008	Boudreaux
7,442,201	B2	10/2008	Pugsley et al.
7,448,525	B2	11/2008	Shelton, IV et al.
7,451,904	B2	11/2008	Shelton, IV
7,455,208	B2	11/2008	Wales et al.
7,455,676	B2	11/2008	Holsten et al.
7,455,682	B2	11/2008	Viola
7,461,767	B2	12/2008	Viola et al.
7,462,187	B2	12/2008	Johnston et al.
7,464,846	B2	12/2008	Shelton, IV et al.
7,464,847	B2	12/2008	Viola et al.
7,464,849	B2	12/2008	Shelton, IV et al.
7,467,740	B2	12/2008	Shelton, IV et al.
7,467,849	B2	12/2008	Silverbrook et al.
7,472,814	B2	1/2009	Mastri et al.
7,472,815	B2	1/2009	Shelton, IV et al.
7,472,816	B2	1/2009	Holsten et al.
7,473,253	B2	1/2009	Dycus et al.
7,473,263	B2	1/2009	Johnston et al.
7,479,608	B2	1/2009	Smith
7,481,347	B2	1/2009	Roy
7,481,348	B2	1/2009	Marczyk
7,481,349	B2	1/2009	Holsten et al.

(56) **References Cited**

U.S. PATENT DOCUMENTS

7,481,824	B2	1/2009	Boudreaux et al.
7,485,133	B2	2/2009	Cannon et al.
7,485,142	B2	2/2009	Milo
7,487,899	B2	2/2009	Shelton, IV et al.
7,490,749	B2	2/2009	Schall et al.
7,494,039	B2	2/2009	Racenet et al.
7,494,499	B2	2/2009	Nagase et al.
7,500,979	B2	3/2009	Hueil et al.
7,501,198	B2	3/2009	Barlev et al.
7,503,474	B2	3/2009	Hillstead et al.
7,506,790	B2	3/2009	Shelton, IV
7,506,791	B2	3/2009	Omaits et al.
7,507,202	B2	3/2009	Schoellhorn
7,510,107	B2	3/2009	Timm et al.
7,510,566	B2	3/2009	Jacobs et al.
7,513,408	B2	4/2009	Shelton, IV et al.
7,517,356	B2	4/2009	Heinrich
7,524,320	B2	4/2009	Tierney et al.
7,530,984	B2	5/2009	Sonnenschein et al.
7,530,985	B2	5/2009	Takemoto et al.
7,533,906	B2	5/2009	Luettgen et al.
7,534,259	B2	5/2009	Lashinski et al.
7,546,939	B2	6/2009	Adams et al.
7,546,940	B2	6/2009	Milliman et al.
7,547,312	B2	6/2009	Bauman et al.
7,549,563	B2	6/2009	Mather et al.
7,549,564	B2	6/2009	Boudreaux
7,549,998	B2	6/2009	Braun
7,552,854	B2	6/2009	Wixey et al.
7,556,185	B2	7/2009	Viola
7,556,186	B2	7/2009	Milliman
7,556,647	B2	7/2009	Drews et al.
7,559,449	B2	7/2009	Viola
7,559,450	B2	7/2009	Wales et al.
7,559,452	B2	7/2009	Wales et al.
7,559,937	B2	7/2009	de la Torre et al.
7,563,862	B2	7/2009	Sieg et al.
7,565,993	B2	7/2009	Milliman et al.
7,566,300	B2	7/2009	Devierre et al.
7,567,045	B2	7/2009	Fristedt
7,568,603	B2	8/2009	Shelton, IV et al.
7,568,604	B2	8/2009	Ehrenfels et al.
7,568,619	B2	8/2009	Todd et al.
7,575,144	B2	8/2009	Ortiz et al.
7,588,174	B2	9/2009	Holsten et al.
7,588,175	B2	9/2009	Timm et al.
7,588,176	B2	9/2009	Timm et al.
7,588,177	B2	9/2009	Racenet
7,591,783	B2	9/2009	Boulais et al.
7,597,229	B2	10/2009	Boudreaux et al.
7,597,230	B2	10/2009	Racenet et al.
7,600,663	B2	10/2009	Green
7,604,150	B2	10/2009	Boudreaux
7,604,151	B2	10/2009	Hess et al.
7,607,557	B2	10/2009	Shelton, IV et al.
7,611,038	B2	11/2009	Racenet et al.
7,611,474	B2	11/2009	Hibner et al.
7,615,003	B2	11/2009	Stefanchik et al.
7,615,067	B2	11/2009	Lee et al.
7,617,961	B2	11/2009	Viola
7,624,902	B2	12/2009	Marczyk et al.
7,624,903	B2	12/2009	Green et al.
7,625,370	B2	12/2009	Hart et al.
7,631,793	B2	12/2009	Rethy et al.
7,631,794	B2	12/2009	Rethy et al.
7,635,074	B2	12/2009	Olson et al.
7,637,409	B2	12/2009	Marczyk
7,637,410	B2	12/2009	Marczyk
7,638,958	B2	12/2009	Philipp et al.
7,641,091	B2	1/2010	Olson et al.
7,641,092	B2	1/2010	Kruszynski et al.
7,641,093	B2	1/2010	Doll et al.
7,641,095	B2	1/2010	Viola
7,644,783	B2	1/2010	Roberts et al.
7,644,848	B2	1/2010	Swayze et al.
7,645,230	B2	1/2010	Mikkaichi et al.
7,648,519	B2	1/2010	Lee et al.
7,651,017	B2	1/2010	Ortiz et al.
7,651,498	B2	1/2010	Shifrin et al.
7,654,431	B2	2/2010	Hueil et al.
7,655,288	B2	2/2010	Bauman et al.
7,656,131	B2	2/2010	Embrey et al.
7,658,311	B2	2/2010	Boudreaux
7,658,312	B2	2/2010	Vidal et al.
7,659,219	B2	2/2010	Biran et al.
7,662,161	B2	2/2010	Briganti et al.
7,665,646	B2	2/2010	Prommersberger
7,665,647	B2	2/2010	Shelton, IV et al.
7,669,746	B2	3/2010	Shelton, IV
7,669,747	B2	3/2010	Weisenburgh, II et al.
7,670,334	B2	3/2010	Hueil et al.
7,673,780	B2	3/2010	Shelton, IV et al.
7,673,781	B2	3/2010	Swayze et al.
7,673,782	B2	3/2010	Hess et al.
7,673,783	B2	3/2010	Morgan et al.
7,674,253	B2	3/2010	Fisher et al.
7,674,255	B2	3/2010	Braun
7,674,263	B2	3/2010	Ryan
7,674,270	B2	3/2010	Layer
7,682,307	B2	3/2010	Danitz et al.
7,686,201	B2	3/2010	Csiky
7,686,826	B2	3/2010	Lee et al.
7,688,028	B2	3/2010	Phillips et al.
7,691,098	B2	4/2010	Wallace et al.
7,691,106	B2	4/2010	Schenberger et al.
7,694,865	B2	4/2010	Scirica
7,695,485	B2	4/2010	Whitman et al.
7,699,204	B2	4/2010	Viola
7,699,835	B2	4/2010	Lee et al.
7,699,844	B2	4/2010	Utley et al.
7,699,846	B2	4/2010	Ryan
7,699,856	B2	4/2010	Van Wyk et al.
7,699,859	B2	4/2010	Bombard et al.
7,699,860	B2	4/2010	Huitema et al.
7,703,653	B2	4/2010	Shah et al.
7,708,180	B2	5/2010	Murray et al.
7,708,181	B2	5/2010	Cole et al.
7,708,758	B2	5/2010	Lee et al.
7,714,239	B2	5/2010	Smith
7,717,312	B2	5/2010	Beetel
7,717,313	B2	5/2010	Criscuolo et al.
7,717,846	B2	5/2010	Zirps et al.
7,718,180	B2	5/2010	Karp
7,718,556	B2	5/2010	Matsuda et al.
7,721,930	B2	5/2010	McKenna et al.
7,721,931	B2	5/2010	Shelton, IV et al.
7,721,933	B2	5/2010	Ehrenfels et al.
7,721,934	B2	5/2010	Shelton, IV et al.
7,721,936	B2	5/2010	Shalton, IV et al.
7,722,527	B2	5/2010	Bouchier et al.
7,722,607	B2	5/2010	Dumbauld et al.
7,722,610	B2	5/2010	Viola et al.
7,726,537	B2	6/2010	Olson et al.
7,726,538	B2	6/2010	Holsten et al.
7,726,539	B2	6/2010	Holsten et al.
7,731,072	B2	6/2010	Timm et al.
7,731,073	B2	6/2010	Wixey et al.
7,731,724	B2	6/2010	Huitema et al.
7,735,703	B2	6/2010	Morgan et al.
7,736,374	B2	6/2010	Vaughan et al.
7,738,971	B2	6/2010	Swayze et al.
7,740,159	B2	6/2010	Shelton, IV et al.
7,743,960	B2	6/2010	Whitman et al.
7,744,624	B2	6/2010	Bettuchi
7,744,627	B2	6/2010	Orban, III et al.
7,744,628	B2	6/2010	Viola
7,748,587	B2	7/2010	Haramiishi et al.
7,749,204	B2	7/2010	Dhanaraj et al.
7,751,870	B2	7/2010	Whitman
7,753,245	B2	7/2010	Boudreaux et al.
7,753,904	B2	7/2010	Shelton, IV et al.
7,758,612	B2	7/2010	Shipp
7,766,209	B2	8/2010	Baxter, III et al.
7,766,210	B2	8/2010	Shelton, IV et al.

(56) **References Cited**

U.S. PATENT DOCUMENTS

7,766,821	B2	8/2010	Brunnen et al.
7,766,894	B2	8/2010	Weitzner et al.
7,770,773	B2	8/2010	Whitman et al.
7,770,774	B2	8/2010	Mastri et al.
7,770,775	B2	8/2010	Shelton, IV et al.
7,770,776	B2	8/2010	Chen et al.
7,771,396	B2	8/2010	Stefanchik et al.
7,772,720	B2	8/2010	McGee et al.
7,776,060	B2	8/2010	Mooradian et al.
7,778,004	B2	8/2010	Nerheim et al.
7,780,054	B2	8/2010	Wales
7,780,055	B2	8/2010	Scirica et al.
7,780,663	B2	8/2010	Yates et al.
7,780,685	B2	8/2010	Hunt et al.
7,784,662	B2	8/2010	Wales et al.
7,784,663	B2	8/2010	Shelton, IV
7,789,875	B2	9/2010	Brock et al.
7,789,883	B2	9/2010	Takashino et al.
7,789,889	B2	9/2010	Zubik et al.
7,793,812	B2	9/2010	Moore et al.
7,794,475	B2	9/2010	Hess et al.
7,798,386	B2	9/2010	Schall et al.
7,799,039	B2	9/2010	Shelton, IV et al.
7,799,044	B2	9/2010	Johnston et al.
7,799,965	B2	9/2010	Patel et al.
7,803,151	B2	9/2010	Whitman
7,806,891	B2	10/2010	Nowlin et al.
7,810,690	B2	10/2010	Bilotti et al.
7,810,691	B2	10/2010	Boyden et al.
7,810,692	B2	10/2010	Hall et al.
7,810,693	B2	10/2010	Broehl et al.
7,815,092	B2	10/2010	Whitman et al.
7,815,565	B2	10/2010	Stefanchik et al.
7,819,296	B2	10/2010	Hueil et al.
7,819,297	B2	10/2010	Doll et al.
7,819,298	B2	10/2010	Hall et al.
7,819,299	B2	10/2010	Shelton, IV et al.
7,819,886	B2	10/2010	Whitfield et al.
7,823,592	B2	11/2010	Bettuchi et al.
7,824,401	B2	11/2010	Manzo et al.
7,824,426	B2	11/2010	Racenet et al.
7,828,189	B2	11/2010	Holsten et al.
7,828,794	B2	11/2010	Sartor
7,828,808	B2	11/2010	Hinman et al.
7,832,408	B2	11/2010	Shelton, IV et al.
7,832,611	B2	11/2010	Boyden et al.
7,832,612	B2	11/2010	Baxter, III et al.
7,833,234	B2	11/2010	Bailly et al.
7,836,400	B2	11/2010	May et al.
7,837,079	B2	11/2010	Holsten et al.
7,837,080	B2	11/2010	Schwemberger
7,837,081	B2	11/2010	Holsten et al.
7,837,694	B2	11/2010	Tethrake et al.
7,838,789	B2	11/2010	Stoffers et al.
7,841,503	B2	11/2010	Sonnenschein et al.
7,842,025	B2	11/2010	Coleman et al.
7,842,028	B2	11/2010	Lee
7,845,533	B2	12/2010	Marczyk et al.
7,845,534	B2	12/2010	Viola et al.
7,845,535	B2	12/2010	Scircia
7,845,536	B2	12/2010	Viola et al.
7,845,537	B2	12/2010	Shelton, IV et al.
7,846,149	B2	12/2010	Jankowski
7,850,642	B2	12/2010	Moll et al.
7,850,982	B2	12/2010	Stopek et al.
7,854,736	B2	12/2010	Ryan
7,857,183	B2	12/2010	Shelton, IV
7,857,185	B2	12/2010	Swayze et al.
7,857,186	B2	12/2010	Baxter, III et al.
7,857,813	B2	12/2010	Schmitz et al.
7,861,906	B2	1/2011	Doll et al.
7,862,579	B2	1/2011	Ortiz et al.
7,866,525	B2	1/2011	Scirica
7,866,527	B2	1/2011	Hall et al.
7,866,528	B2	1/2011	Olson et al.
7,870,989	B2	1/2011	Viola et al.
7,871,418	B2	1/2011	Thompson et al.
7,879,070	B2	2/2011	Ortiz et al.
7,883,465	B2	2/2011	Donofrio et al.
7,886,951	B2	2/2011	Hessler
7,886,952	B2	2/2011	Scirica et al.
7,887,530	B2	2/2011	Zemlok et al.
7,887,535	B2	2/2011	Lands et al.
7,891,531	B1	2/2011	Ward
7,891,532	B2	2/2011	Mastri et al.
7,893,586	B2	2/2011	West et al.
7,896,214	B2	3/2011	Farascioni
7,896,215	B2	3/2011	Adams et al.
7,896,877	B2	3/2011	Hall et al.
7,896,895	B2	3/2011	Boudreaux et al.
7,900,805	B2	3/2011	Shelton, IV et al.
7,905,380	B2	3/2011	Shelton, IV et al.
7,905,381	B2	3/2011	Baxter, III et al.
7,905,889	B2	3/2011	Catanese, III et al.
7,905,902	B2	3/2011	Huitema et al.
7,909,191	B2	3/2011	Baker et al.
7,909,220	B2	3/2011	Viola
7,909,221	B2	3/2011	Viola et al.
7,913,891	B2	3/2011	Doll et al.
7,913,893	B2	3/2011	Mastri et al.
7,914,543	B2	3/2011	Roth et al.
7,914,551	B2	3/2011	Ortiz et al.
7,918,230	B2	4/2011	Whitman et al.
7,918,376	B1	4/2011	Knodel et al.
7,918,377	B2	4/2011	Measamer et al.
7,918,848	B2	4/2011	Lau et al.
7,922,061	B2	4/2011	Shelton, IV et al.
7,922,063	B2	4/2011	Zemlok et al.
7,922,743	B2	4/2011	Heinrich et al.
7,926,691	B2	4/2011	Viola et al.
7,927,328	B2	4/2011	Orszulak et al.
7,928,281	B2	4/2011	Augustine
7,931,660	B2	4/2011	Aranyi et al.
7,931,695	B2	4/2011	Ringeisen
7,934,630	B2	5/2011	Shelton, IV et al.
7,934,631	B2	5/2011	Balbierz et al.
7,935,773	B2	5/2011	Hadba et al.
7,938,307	B2	5/2011	Bettuchi
7,941,865	B2	5/2011	Seman, Jr. et al.
7,942,303	B2	5/2011	Shah
7,942,890	B2	5/2011	D'Agostino et al.
7,944,175	B2	5/2011	Mori et al.
7,950,560	B2	5/2011	Zemlok et al.
7,950,561	B2	5/2011	Aranyi
7,951,071	B2	5/2011	Whitman et al.
7,951,166	B2	5/2011	Orban et al.
7,954,682	B2	6/2011	Giordano et al.
7,954,684	B2	6/2011	Boudreaux
7,954,686	B2	6/2011	Baxter, III et al.
7,954,687	B2	6/2011	Zemlok et al.
7,955,257	B2	6/2011	Frasier et al.
7,959,050	B2	6/2011	Smith et al.
7,959,051	B2	6/2011	Smith et al.
7,959,052	B2	6/2011	Sonnenschein et al.
7,963,432	B2	6/2011	Knodel et al.
7,963,433	B2	6/2011	Whitman et al.
7,963,963	B2	6/2011	Francischelli et al.
7,963,964	B2	6/2011	Santilli et al.
7,966,799	B2	6/2011	Morgan et al.
7,967,178	B2	6/2011	Scirica et al.
7,967,179	B2	6/2011	Olson et al.
7,967,180	B2	6/2011	Scirica
7,967,181	B2	6/2011	Viola et al.
7,967,839	B2	6/2011	Flock et al.
7,972,298	B2	7/2011	Wallace et al.
7,980,443	B2	7/2011	Scheib et al.
7,988,026	B2	8/2011	Knodel et al.
7,988,027	B2	8/2011	Olson et al.
7,988,028	B2	8/2011	Farascioni et al.
7,992,757	B2	8/2011	Wheeler et al.
7,997,469	B2	8/2011	Olson et al.
8,002,696	B2	8/2011	Suzuki
8,002,784	B2	8/2011	Jinno et al.
8,002,785	B2	8/2011	Weiss et al.

(56) **References Cited**

U.S. PATENT DOCUMENTS

8,002,795	B2	8/2011	Beetel
8,006,365	B2	8/2011	Levin et al.
8,006,885	B2	8/2011	Marczyk
8,006,889	B2	8/2011	Adams et al.
8,011,550	B2	9/2011	Aranyi et al.
8,011,551	B2	9/2011	Marczyk et al.
8,011,553	B2	9/2011	Mastri et al.
8,011,555	B2	9/2011	Tarinelli et al.
8,016,176	B2	9/2011	Kasvikis et al.
8,016,177	B2	9/2011	Bettuchi et al.
8,016,178	B2	9/2011	Olson et al.
8,016,855	B2	9/2011	Whitman et al.
8,016,858	B2	9/2011	Whitman
8,016,881	B2	9/2011	Furst
8,020,742	B2	9/2011	Marczyk
8,020,743	B2	9/2011	Shelton, IV
8,025,199	B2	9/2011	Whitman et al.
8,028,883	B2	10/2011	Stopek
8,028,884	B2	10/2011	Sniffin et al.
8,028,885	B2	10/2011	Smith et al.
8,034,077	B2	10/2011	Smith et al.
8,034,363	B2	10/2011	Li et al.
8,037,591	B2	10/2011	Spivey et al.
8,038,045	B2	10/2011	Bettuchi et al.
8,038,046	B2	10/2011	Smith et al.
8,038,686	B2	10/2011	Huitema et al.
8,043,207	B2	10/2011	Adams
8,043,328	B2	10/2011	Hahnen et al.
8,047,236	B2	11/2011	Perry
8,048,503	B2	11/2011	Farnsworth et al.
8,056,787	B2	11/2011	Boudreaux et al.
8,056,788	B2	11/2011	Mastri et al.
8,057,508	B2	11/2011	Shelton, IV
8,058,771	B2	11/2011	Giordano et al.
8,061,576	B2	11/2011	Cappola
8,062,330	B2	11/2011	Prommersberger et al.
8,066,167	B2	11/2011	Measamer et al.
8,066,168	B2	11/2011	Vidal et al.
D650,074	S	12/2011	Hunt et al.
8,070,743	B2	12/2011	Kagan et al.
8,075,571	B2	12/2011	Vitali et al.
8,083,118	B2	12/2011	Milliman et al.
8,083,119	B2	12/2011	Prommersberger
8,083,120	B2	12/2011	Shelton, IV et al.
8,084,001	B2	12/2011	Burns et al.
8,091,756	B2	1/2012	Viola
8,092,443	B2	1/2012	Bischoff
8,092,932	B2	1/2012	Phillips et al.
8,096,458	B2	1/2012	Hessler
8,097,017	B2	1/2012	Viola
8,100,310	B2	1/2012	Zemlok
8,100,872	B2	1/2012	Patel
8,105,350	B2	1/2012	Lee et al.
8,108,072	B2	1/2012	Zhao et al.
8,109,426	B2	2/2012	Milliman et al.
8,110,208	B1	2/2012	Hen
8,113,405	B2	2/2012	Milliman
8,113,410	B2	2/2012	Hall et al.
8,114,100	B2	2/2012	Smith et al.
8,123,103	B2	2/2012	Milliman
8,123,766	B2	2/2012	Bauman et al.
8,123,767	B2	2/2012	Bauman et al.
8,127,975	B2	3/2012	Olson et al.
8,127,976	B2	3/2012	Scirica et al.
8,128,624	B2	3/2012	Couture et al.
8,128,645	B2	3/2012	Sonnenschein et al.
8,132,703	B2	3/2012	Milliman et al.
8,132,706	B2	3/2012	Marczyk et al.
8,136,712	B2	3/2012	Zingman
8,136,713	B2	3/2012	Hathaway et al.
8,140,417	B2	3/2012	Shibata
8,141,762	B2	3/2012	Bedi et al.
8,141,763	B2	3/2012	Milliman
8,146,790	B2	4/2012	Milliman
8,147,485	B2	4/2012	Wham et al.
8,152,041	B2	4/2012	Kostrzewski
8,157,145	B2	4/2012	Shelton, IV et al.
8,157,148	B2	4/2012	Scirica
8,157,151	B2	4/2012	Ingmanson et al.
8,157,152	B2	4/2012	Holsten et al.
8,157,153	B2	4/2012	Shelton, IV et al.
8,157,793	B2	4/2012	Omori et al.
8,161,977	B2	4/2012	Shelton, IV et al.
8,162,138	B2	4/2012	Bettenhausen et al.
8,162,197	B2	4/2012	Mastri et al.
8,167,185	B2	5/2012	Shelton, IV et al.
8,167,895	B2	5/2012	D'Agostino et al.
8,167,898	B1	5/2012	Schaller et al.
8,170,241	B2	5/2012	Roe et al.
8,172,120	B2	5/2012	Boyden et al.
8,172,122	B2	5/2012	Kasvikis et al.
8,172,124	B2	5/2012	Shelton, IV et al.
8,177,797	B2	5/2012	Shimoji et al.
8,180,458	B2	5/2012	Kane et al.
8,181,840	B2	5/2012	Milliman
8,186,555	B2	5/2012	Shelton, IV et al.
8,186,560	B2	5/2012	Hess et al.
8,191,752	B2	6/2012	Scirica
8,192,460	B2	6/2012	Orban, III et al.
8,196,795	B2	6/2012	Moore et al.
8,196,796	B2	6/2012	Shelton, IV et al.
8,201,720	B2	6/2012	Hessler
8,201,721	B2	6/2012	Zemlok et al.
8,205,779	B2	6/2012	Ma
8,205,780	B2	6/2012	Sorrentino et al.
8,205,781	B2	6/2012	Baxter, III et al.
8,210,411	B2	7/2012	Yates et al.
8,210,414	B2	7/2012	Bettuchi et al.
8,210,415	B2	7/2012	Ward
8,210,416	B2	7/2012	Milliman et al.
8,211,125	B2	7/2012	Spivey
8,214,019	B2	7/2012	Govari et al.
8,215,531	B2	7/2012	Shelton, IV et al.
8,215,533	B2	7/2012	Viola et al.
8,220,468	B2	7/2012	Cooper et al.
8,220,688	B2	7/2012	Laurent et al.
8,220,690	B2	7/2012	Hess et al.
8,221,424	B2	7/2012	Cha
8,225,799	B2	7/2012	Bettuchi
8,226,715	B2	7/2012	Hwang et al.
8,227,946	B2	7/2012	Kim
8,231,040	B2	7/2012	Zemlok et al.
8,231,041	B2	7/2012	Marczyk et al.
8,231,042	B2	7/2012	Hessler et al.
8,231,043	B2	7/2012	Tarinelli et al.
8,236,010	B2	8/2012	Ortiz et al.
8,241,271	B2	8/2012	Millman et al.
8,241,308	B2	8/2012	Kortenbach et al.
8,241,322	B2	8/2012	Whitman et al.
8,245,594	B2	8/2012	Rogers et al.
8,245,898	B2	8/2012	Smith et al.
8,245,899	B2	8/2012	Swensgard et al.
8,245,900	B2	8/2012	Scirica
8,245,901	B2	8/2012	Stopek
8,246,637	B2	8/2012	Viola et al.
8,256,654	B2	9/2012	Bettuchi et al.
8,256,655	B2	9/2012	Sniffin et al.
8,257,251	B2	9/2012	Shelton, IV et al.
8,257,356	B2	9/2012	Bleich et al.
8,257,391	B2	9/2012	Orban, III et al.
8,262,655	B2	9/2012	Ghabrial et al.
8,267,300	B2	9/2012	Boudreaux
8,267,924	B2	9/2012	Zemlok et al.
8,267,946	B2	9/2012	Whitfield et al.
8,267,951	B2	9/2012	Whayne et al.
8,269,121	B2	9/2012	Smith
8,272,553	B2	9/2012	Mastri et al.
8,272,554	B2	9/2012	Whitman et al.
8,273,404	B2	9/2012	Dave et al.
8,276,801	B2	10/2012	Zemlok et al.
8,276,802	B2	10/2012	Kostrzewski
8,281,973	B2	10/2012	Wenchell et al.
8,281,974	B2	10/2012	Hessler et al.
8,286,845	B2	10/2012	Perry et al.

(56) **References Cited**

U.S. PATENT DOCUMENTS

8,287,561	B2	10/2012	Nunez et al.
8,292,151	B2	10/2012	Viola
8,292,155	B2	10/2012	Shelton, IV et al.
8,292,157	B2	10/2012	Smith et al.
8,292,888	B2	10/2012	Whitman
8,298,161	B2	10/2012	Vargas
8,298,677	B2	10/2012	Wiesner et al.
8,302,323	B2	11/2012	Fortier et al.
8,308,040	B2	11/2012	Huang et al.
8,308,042	B2	11/2012	Aranyi
8,308,046	B2	11/2012	Prommersberger
8,308,659	B2	11/2012	Scheibe et al.
8,313,496	B2	11/2012	Sauer et al.
8,313,509	B2	11/2012	Kostrzewski
8,317,070	B2	11/2012	Hueil et al.
8,317,071	B1	11/2012	Knodel
8,317,074	B2	11/2012	Ortiz et al.
8,317,790	B2	11/2012	Bell et al.
8,319,002	B2	11/2012	Daniels et al.
8,322,455	B2	12/2012	Shelton, IV et al.
8,322,589	B2	12/2012	Boudreaux
8,322,590	B2	12/2012	Patel et al.
8,323,789	B2	12/2012	Rozhin et al.
8,328,061	B2	12/2012	Kasvikis
8,328,062	B2	12/2012	Viola
8,328,063	B2	12/2012	Milliman et al.
8,328,064	B2	12/2012	Racenet et al.
8,328,802	B2	12/2012	Deville et al.
8,328,823	B2	12/2012	Aranyi et al.
8,333,313	B2	12/2012	Boudreaux et al.
8,333,764	B2	12/2012	Francischelli et al.
8,336,753	B2	12/2012	Olson et al.
8,336,754	B2	12/2012	Cappola et al.
8,348,123	B2	1/2013	Scirica et al.
8,348,127	B2	1/2013	Marczyk
8,348,129	B2	1/2013	Bedi et al.
8,348,130	B2	1/2013	Shah et al.
8,348,131	B2	1/2013	Omaits et al.
8,348,972	B2	1/2013	Soltz et al.
8,353,437	B2	1/2013	Boudreaux
8,353,438	B2	1/2013	Baxter, III et al.
8,353,439	B2	1/2013	Baxter, III et al.
8,357,144	B2	1/2013	Whitman et al.
8,360,296	B2	1/2013	Zingman
8,360,297	B2	1/2013	Shelton, IV et al.
8,360,298	B2	1/2013	Farascioni et al.
8,360,299	B2	1/2013	Zemlok et al.
8,361,501	B2	1/2013	DiTizio et al.
8,365,973	B1	2/2013	White et al.
8,365,975	B1	2/2013	Manoux et al.
8,365,976	B2	2/2013	Hess et al.
8,366,559	B2	2/2013	Papenfuss et al.
8,371,491	B2	2/2013	Huitema et al.
8,371,492	B2	2/2013	Aranyi et al.
8,371,493	B2	2/2013	Aranyi et al.
8,372,094	B2	2/2013	Bettuchi et al.
8,376,865	B2	2/2013	Forster et al.
8,377,044	B2	2/2013	Coe et al.
8,393,513	B2	3/2013	Jankowski
8,393,514	B2	3/2013	Shelton, IV et al.
8,397,971	B2	3/2013	Yates et al.
8,398,673	B2	3/2013	Hinchliffe et al.
8,403,138	B2	3/2013	Weisshaupt et al.
8,403,198	B2	3/2013	Sorrentino et al.
8,403,945	B2	3/2013	Whitfield et al.
8,408,439	B2	4/2013	Huang et al.
8,408,442	B2	4/2013	Racenet et al.
8,409,079	B2	4/2013	Oakamoto et al.
8,409,174	B2	4/2013	Omori
8,409,222	B2	4/2013	Whitfield et al.
8,413,870	B2	4/2013	Pastorelli et al.
8,413,871	B2	4/2013	Racenet et al.
8,413,872	B2	4/2013	Patel
8,414,577	B2	4/2013	Boudreaux et al.
8,418,909	B2	4/2013	Kostrzewski
8,424,737	B2	4/2013	Scirica
8,424,739	B2	4/2013	Racenet et al.
8,424,740	B2	4/2013	Shelton, IV et al.
8,424,741	B2	4/2013	Mcguckin, Jr. et al.
8,425,600	B2	4/2013	Maxwell
8,430,292	B2	4/2013	Patel et al.
8,430,898	B2	4/2013	Wiener et al.
8,439,246	B1	5/2013	Knodel et al.
8,444,036	B2	5/2013	Shelton, IV
8,444,549	B2	5/2013	Viola et al.
8,453,904	B2	6/2013	Eskaros et al.
8,453,907	B2	6/2013	Laurent et al.
8,453,908	B2	6/2013	Bedi et al.
8,453,912	B2	6/2013	Mastri et al.
8,453,914	B2	6/2013	Laurent et al.
8,454,628	B2	6/2013	Smith et al.
8,457,757	B2	6/2013	Cauller et al.
8,459,520	B2	6/2013	Giordano et al.
8,459,525	B2	6/2013	Yates et al.
8,464,922	B2	6/2013	Marczyk
8,464,923	B2	6/2013	Shelton, IV
8,464,924	B2	6/2013	Gresham et al.
8,464,925	B2	6/2013	Hull et al.
8,474,677	B2	7/2013	Woodard, Jr. et al.
8,475,453	B2	7/2013	Marczyk et al.
8,475,474	B2	7/2013	Bombard et al.
8,479,969	B2	7/2013	Shelton, IV
8,480,703	B2	7/2013	Nicholas et al.
8,485,412	B2	7/2013	Shelton, IV et al.
8,485,413	B2	7/2013	Scheib et al.
8,490,853	B2	7/2013	Criscuolo et al.
8,496,156	B2	7/2013	Sniffin et al.
8,496,683	B2	7/2013	Prommersberger et al.
8,499,993	B2	8/2013	Shelton, IV et al.
8,500,762	B2	8/2013	Sholev et al.
8,506,557	B2	8/2013	Zemlok et al.
8,506,581	B2	8/2013	Wingardner, III et al.
8,512,359	B2	8/2013	Whitman et al.
8,517,239	B2	8/2013	Scheib et al.
8,517,241	B2	8/2013	Nicholas et al.
8,517,243	B2	8/2013	Giordano et al.
8,517,244	B2	8/2013	Shelton, IV et al.
8,521,273	B2	8/2013	Kliman
8,523,881	B2	9/2013	Cabiri et al.
8,529,588	B2	9/2013	Ahlberg et al.
8,529,600	B2	9/2013	Woodard, Jr. et al.
8,529,819	B2	9/2013	Ostapoff et al.
8,534,528	B2	9/2013	Shelton, IV
8,535,304	B2	9/2013	Sklar et al.
8,540,128	B2	9/2013	Shelton, IV et al.
8,540,129	B2	9/2013	Baxter, III et al.
8,540,130	B2	9/2013	Moore et al.
8,540,131	B2	9/2013	Swayze
8,540,133	B2	9/2013	Bedi et al.
8,540,733	B2	9/2013	Whitman et al.
8,551,076	B2	10/2013	Duval et al.
8,556,151	B2	10/2013	Viola
8,556,918	B2	10/2013	Bauman et al.
8,561,870	B2	10/2013	Baxter, III et al.
8,561,873	B2	10/2013	Ingmanson et al.
8,567,656	B2	10/2013	Shelton, IV et al.
8,573,461	B2	11/2013	Shelton, IV et al.
8,573,465	B2	11/2013	Shelton, IV et al.
8,579,176	B2	11/2013	Smith et al.
8,579,937	B2	11/2013	Gresham
8,584,919	B2	11/2013	Hueil et al.
8,585,721	B2	11/2013	Kirsch
8,590,762	B2	11/2013	Hess et al.
8,602,287	B2	12/2013	Yates et al.
8,602,288	B2	12/2013	Shelton, IV et al.
8,603,135	B2	12/2013	Mueller
8,608,044	B2	12/2013	Hueil et al.
8,608,045	B2	12/2013	Smith et al.
8,608,046	B2	12/2013	Laurent et al.
8,608,745	B2	12/2013	Guzman et al.
8,613,383	B2	12/2013	Beckman et al.
8,616,431	B2	12/2013	Timm et al.
8,622,274	B2	1/2014	Yates et al.
8,622,275	B2	1/2014	Baxter, III et al.

(56) **References Cited**

U.S. PATENT DOCUMENTS

8,628,518	B2	1/2014	Blumenkranz et al.
8,631,987	B2	1/2014	Shelton, IV et al.
8,632,462	B2	1/2014	Yoo et al.
8,632,525	B2	1/2014	Kerr et al.
8,632,535	B2	1/2014	Shelton, IV et al.
8,632,563	B2	1/2014	Nagase et al.
8,636,187	B2	1/2014	Hueil et al.
8,636,736	B2	1/2014	Yates et al.
8,647,258	B2	2/2014	Aranyi et al.
8,652,120	B2	2/2014	Giordano et al.
8,652,151	B2	2/2014	Lehman et al.
8,657,174	B2	2/2014	Yates et al.
8,657,176	B2	2/2014	Shelton, IV et al.
8,657,177	B2	2/2014	Scirica et al.
8,657,178	B2	2/2014	Hueil et al.
8,662,370	B2	3/2014	Takei
8,663,192	B2	3/2014	Hester et al.
8,668,129	B2	3/2014	Olson
8,668,130	B2	3/2014	Hess et al.
8,672,206	B2	3/2014	Aranyi et al.
8,672,207	B2	3/2014	Shelton, IV et al.
8,672,208	B2	3/2014	Hess et al.
8,678,263	B2	3/2014	Viola
8,679,093	B2	3/2014	Farra
8,679,137	B2	3/2014	Bauman et al.
8,679,454	B2	3/2014	Guire et al.
8,684,250	B2	4/2014	Bettuchi et al.
8,684,253	B2	4/2014	Giordano et al.
8,685,020	B2	4/2014	Weizman et al.
8,695,866	B2	4/2014	Leimbach et al.
8,696,665	B2	4/2014	Hunt et al.
8,701,958	B2	4/2014	Shelton, IV et al.
8,701,959	B2	4/2014	Shah
8,708,213	B2	4/2014	Shelton, IV et al.
8,720,766	B2	5/2014	Hess et al.
8,721,666	B2	5/2014	Schroeder et al.
8,727,197	B2	5/2014	Hess et al.
8,733,613	B2	5/2014	Huitema et al.
8,733,614	B2	5/2014	Ross et al.
8,734,478	B2	5/2014	Widenhouse et al.
8,740,034	B2	6/2014	Morgan et al.
8,740,037	B2	6/2014	Shelton, IV et al.
8,740,038	B2	6/2014	Shelton, IV et al.
8,746,529	B2	6/2014	Shelton, IV et al.
8,746,530	B2	6/2014	Giordano et al.
8,746,535	B2	6/2014	Shelton, IV et al.
8,747,238	B2	6/2014	Shelton, IV et al.
8,752,699	B2	6/2014	Morgan et al.
8,752,747	B2	6/2014	Shelton, IV et al.
8,752,749	B2	6/2014	Moore et al.
8,757,465	B2	6/2014	Woodard, Jr. et al.
8,758,235	B2	6/2014	Jaworek
8,758,391	B2	6/2014	Swayze et al.
8,758,438	B2	6/2014	Boyce et al.
8,763,875	B2	7/2014	Morgan et al.
8,763,877	B2	7/2014	Schall et al.
8,763,879	B2	7/2014	Shelton, IV et al.
8,777,004	B2	7/2014	Shelton, IV et al.
8,783,541	B2	7/2014	Shelton, IV et al.
8,783,542	B2	7/2014	Riestenberg et al.
8,783,543	B2	7/2014	Shelton, IV et al.
8,784,404	B2	7/2014	Doyle et al.
8,789,739	B2	7/2014	Swensgard
8,789,740	B2	7/2014	Baxter, III et al.
8,789,741	B2	7/2014	Baxter, III et al.
8,794,496	B2	8/2014	Scirica
8,794,497	B2	8/2014	Zingman
8,795,276	B2	8/2014	Dietz et al.
8,800,838	B2	8/2014	Shelton, IV
8,800,841	B2	8/2014	Ellerhorst et al.
8,801,734	B2	8/2014	Shelton, IV et al.
8,801,735	B2	8/2014	Shelton, IV et al.
8,814,024	B2	8/2014	Woodard, Jr. et al.
8,820,603	B2	9/2014	Shelton, IV et al.
8,820,605	B2	9/2014	Shelton, IV
8,827,133	B2	9/2014	Shelton, IV et al.
8,827,903	B2	9/2014	Shelton, IV et al.
8,833,632	B2	9/2014	Swensgard
8,840,003	B2	9/2014	Morgan et al.
8,840,603	B2	9/2014	Shelton, IV et al.
8,844,789	B2	9/2014	Shelton, IV et al.
8,851,354	B2	10/2014	Swensgard et al.
8,857,693	B2	10/2014	Schuckmann et al.
8,857,694	B2	10/2014	Shelton, IV et al.
8,858,571	B2	10/2014	Shelton, IV et al.
8,858,590	B2	10/2014	Shelton, IV et al.
8,864,007	B2	10/2014	Widenhouse et al.
8,864,009	B2	10/2014	Shelton, IV et al.
8,875,971	B2	11/2014	Hall et al.
8,875,972	B2	11/2014	Weisenburgh, II et al.
8,893,946	B2	11/2014	Boudreaux et al.
8,893,949	B2	11/2014	Shelton, IV et al.
8,899,463	B2	12/2014	Schall et al.
8,899,464	B2	12/2014	Hueil et al.
8,899,465	B2	12/2014	Shelton, IV et al.
8,899,466	B2	12/2014	Baxter, III et al.
8,911,426	B2	12/2014	Coppeta et al.
8,911,471	B2	12/2014	Spivey et al.
8,925,782	B2	1/2015	Shelton, IV
8,925,788	B2	1/2015	Hess et al.
8,926,598	B2	1/2015	Mollere et al.
8,931,682	B2	1/2015	Timm et al.
8,936,614	B2	1/2015	Allen, IV
8,939,343	B2	1/2015	Milliman et al.
8,960,520	B2	2/2015	McCuen
8,960,521	B2	2/2015	Kostrzewski
8,967,443	B2	3/2015	McCuen
8,967,446	B2	3/2015	Beardsley et al.
8,973,803	B2	3/2015	Hall et al.
8,973,804	B2	3/2015	Hess et al.
8,978,954	B2	3/2015	Shelton, IV et al.
8,978,955	B2	3/2015	Aronhalt et al.
8,978,956	B2	3/2015	Schall et al.
8,979,890	B2	3/2015	Boudreaux
8,982,195	B2	3/2015	Claus et al.
8,991,676	B2	3/2015	Hess et al.
8,991,677	B2	3/2015	Moore et al.
8,992,422	B2	3/2015	Spivey et al.
8,996,165	B2	3/2015	Wang et al.
8,998,058	B2	4/2015	Moore et al.
9,005,230	B2	4/2015	Yates et al.
9,016,542	B2	4/2015	Shelton, IV et al.
9,028,494	B2	5/2015	Shelton, IV et al.
9,028,495	B2	5/2015	Mueller et al.
9,028,519	B2	5/2015	Yates et al.
9,033,203	B2	5/2015	Woodard, Jr. et al.
9,033,204	B2	5/2015	Shelton, IV et al.
9,038,881	B1	5/2015	Schaller et al.
9,044,227	B2	6/2015	Shelton, IV et al.
9,044,228	B2	6/2015	Woodard, Jr. et al.
9,044,230	B2	6/2015	Morgan et al.
9,050,083	B2	6/2015	Yates et al.
9,050,084	B2	6/2015	Schmid et al.
9,055,941	B2	6/2015	Schmid et al.
9,060,770	B2	6/2015	Shelton, IV et al.
9,072,515	B2	7/2015	Hall et al.
9,072,535	B2	7/2015	Shelton, IV et al.
9,072,536	B2	7/2015	Shelton, IV et al.
9,078,653	B2	7/2015	Leimbach et al.
9,084,601	B2	7/2015	Moore et al.
9,095,339	B2	8/2015	Moore et al.
9,096,033	B2	8/2015	Holop et al.
9,101,358	B2	8/2015	Kerr et al.
9,101,385	B2	8/2015	Shelton, IV et al.
9,107,663	B2	8/2015	Swensgard
9,113,862	B2	8/2015	Morgan et al.
9,113,864	B2	8/2015	Morgan et al.
9,113,865	B2	8/2015	Shelton, IV et al.
9,113,874	B2	8/2015	Shelton, IV et al.
9,113,883	B2	8/2015	Aronhalt et al.
9,113,884	B2	8/2015	Shelton, IV et al.
9,119,957	B2	9/2015	Gantz et al.
2001/0025183	A1	9/2001	Shahidi
2001/0044637	A1	11/2001	Jacobs et al.

(56) **References Cited**

U.S. PATENT DOCUMENTS

2002/0022836	A1	2/2002	Goble et al.
2002/0029036	A1	3/2002	Goble et al.
2002/0095175	A1	7/2002	Brock et al.
2002/0103494	A1	8/2002	Pacey
2002/0117534	A1	8/2002	Green et al.
2002/0127265	A1	9/2002	Bowman et al.
2002/0128552	A1	9/2002	Nowlin et al.
2002/0134811	A1	9/2002	Napier et al.
2002/0143340	A1	10/2002	Kaneko
2002/0165541	A1	11/2002	Whitman
2002/0193808	A1	12/2002	Belef et al.
2003/0023316	A1	1/2003	Brown et al.
2003/0078647	A1	4/2003	Vallana et al.
2003/0084983	A1	5/2003	Rangachari et al.
2003/0093103	A1	5/2003	Malackowski et al.
2003/0096158	A1	5/2003	Takano et al.
2003/0105478	A1	6/2003	Whitman et al.
2003/0130677	A1	7/2003	Whitman et al.
2003/0139741	A1	7/2003	Goble et al.
2003/0153908	A1	8/2003	Goble et al.
2003/0163085	A1	8/2003	Tanner et al.
2003/0181900	A1	9/2003	Long
2003/0195387	A1	10/2003	Kortenbach et al.
2003/0205029	A1	11/2003	Chapolini et al.
2003/0216732	A1	11/2003	Truckai et al.
2003/0220660	A1	11/2003	Kortenbach et al.
2003/0236505	A1	12/2003	Bonadio et al.
2004/0002726	A1	1/2004	Nunez et al.
2004/0006335	A1	1/2004	Garrison
2004/0006340	A1	1/2004	Latterell et al.
2004/0006372	A1	1/2004	Racenet et al.
2004/0006861	A1	1/2004	Haytayan
2004/0030333	A1	2/2004	Goble
2004/0034357	A1	2/2004	Beane et al.
2004/0034369	A1	2/2004	Sauer et al.
2004/0044364	A1	3/2004	DeVries et al.
2004/0068161	A1	4/2004	Couvillon, Jr.
2004/0068224	A1	4/2004	Couvillon, Jr. et al.
2004/0068307	A1	4/2004	Goble
2004/0070369	A1	4/2004	Sakakibara
2004/0073222	A1	4/2004	Koseki
2004/0078037	A1	4/2004	Batchelor et al.
2004/0093024	A1	5/2004	Lousararian et al.
2004/0094597	A1	5/2004	Whitman et al.
2004/0097987	A1	5/2004	Pugsley et al.
2004/0098040	A1	5/2004	Taniguchi et al.
2004/0101822	A1	5/2004	Weisner et al.
2004/0102783	A1	5/2004	Sutterlin, III et al.
2004/0108357	A1	6/2004	Milliman et al.
2004/0110439	A1	6/2004	Chaikof et al.
2004/0111081	A1	6/2004	Whitman et al.
2004/0115022	A1	6/2004	Albertson et al.
2004/0116952	A1	6/2004	Sakurai et al.
2004/0147909	A1	7/2004	Johnston et al.
2004/0164123	A1	8/2004	Racenet et al.
2004/0167572	A1	8/2004	Roth et al.
2004/0173659	A1	9/2004	Green et al.
2004/0181219	A1	9/2004	Goble et al.
2004/0186470	A1	9/2004	Goble et al.
2004/0193189	A1	9/2004	Kortenbach et al.
2004/0199181	A1	10/2004	Knodel et al.
2004/0222268	A1	11/2004	Bilotti et al.
2004/0225186	A1	11/2004	Horne, Jr. et al.
2004/0230214	A1	11/2004	Donofrio et al.
2004/0232201	A1	11/2004	Wenchell et al.
2004/0236352	A1	11/2004	Wang et al.
2004/0243147	A1	12/2004	Lipow
2004/0243151	A1	12/2004	Demmy et al.
2004/0243163	A1	12/2004	Casiano et al.
2004/0243176	A1	12/2004	Hahnen et al.
2004/0247415	A1	12/2004	Mangone, Jr.
2004/0254566	A1	12/2004	Plicchi et al.
2004/0254608	A1	12/2004	Huitema et al.
2004/0260315	A1	12/2004	Dell et al.
2004/0267310	A1	12/2004	Racenet et al.
2005/0010213	A1	1/2005	Stad et al.
2005/0032511	A1	2/2005	Malone et al.
2005/0033357	A1	2/2005	Braun
2005/0054946	A1	3/2005	Krzyzanowski
2005/0059997	A1	3/2005	Bauman et al.
2005/0070929	A1	3/2005	Dalessandro et al.
2005/0075561	A1	4/2005	Golden
2005/0080454	A1	4/2005	Drews et al.
2005/0085693	A1	4/2005	Belson et al.
2005/0090817	A1	4/2005	Phan
2005/0096683	A1	5/2005	Ellins et al.
2005/0103819	A1	5/2005	Racenet et al.
2005/0107814	A1	5/2005	Johnston et al.
2005/0107824	A1	5/2005	Hillstead et al.
2005/0113820	A1	5/2005	Goble et al.
2005/0119525	A1	6/2005	Takemoto
2005/0119669	A1	6/2005	Demmy
2005/0124855	A1	6/2005	Jaffe et al.
2005/0125009	A1	6/2005	Perry et al.
2005/0125897	A1	6/2005	Wyslucha et al.
2005/0131173	A1	6/2005	McDaniel et al.
2005/0131211	A1	6/2005	Bayley et al.
2005/0131390	A1	6/2005	Heinrich et al.
2005/0131436	A1	6/2005	Johnston et al.
2005/0131437	A1	6/2005	Johnston et al.
2005/0131457	A1	6/2005	Douglas et al.
2005/0137454	A1	6/2005	Saadat et al.
2005/0137455	A1	6/2005	Ewers et al.
2005/0143759	A1	6/2005	Kelly
2005/0143769	A1	6/2005	White et al.
2005/0145675	A1	7/2005	Hartwick et al.
2005/0154258	A1	7/2005	Tartaglia et al.
2005/0154406	A1	7/2005	Bombard et al.
2005/0165419	A1	7/2005	Sauer et al.
2005/0165435	A1	7/2005	Johnston et al.
2005/0169974	A1	8/2005	Tenerz et al.
2005/0171522	A1	8/2005	Christopherson
2005/0177181	A1	8/2005	Kagan et al.
2005/0182298	A1	8/2005	Ikeda et al.
2005/0187545	A1	8/2005	Hooven et al.
2005/0187572	A1	8/2005	Johnston et al.
2005/0187576	A1	8/2005	Whitman et al.
2005/0189397	A1	9/2005	Jankowski
2005/0192609	A1	9/2005	Whitman et al.
2005/0192628	A1	9/2005	Viola
2005/0203550	A1	9/2005	Laufer et al.
2005/0216055	A1	9/2005	Scirica et al.
2005/0228224	A1	10/2005	Okada et al.
2005/0240178	A1	10/2005	Morley et al.
2005/0240222	A1	10/2005	Shipp
2005/0245965	A1	11/2005	Orban III et al.
2005/0251128	A1	11/2005	Amoah
2005/0256452	A1	11/2005	DeMarchi et al.
2005/0256522	A1	11/2005	Francischelli et al.
2005/0261676	A1	11/2005	Hall et al.
2005/0261677	A1	11/2005	Hall et al.
2005/0263563	A1	12/2005	Racenet et al.
2005/0267455	A1	12/2005	Eggers et al.
2005/0274768	A1	12/2005	Cummins et al.
2005/0283188	A1	12/2005	Loshakove et al.
2006/0004407	A1	1/2006	Hiles et al.
2006/0008787	A1	1/2006	Hayman et al.
2006/0011699	A1	1/2006	Olson et al.
2006/0015009	A1	1/2006	Jaffe et al.
2006/0020247	A1	1/2006	Kagan et al.
2006/0020258	A1	1/2006	Strauss et al.
2006/0020336	A1	1/2006	Liddicoat
2006/0025811	A1	2/2006	Shelton, IV
2006/0025812	A1	2/2006	Shelton, IV
2006/0025813	A1	2/2006	Shelton et al.
2006/0041188	A1	2/2006	Dirusso et al.
2006/0047275	A1	3/2006	Goble
2006/0047303	A1	3/2006	Ortiz et al.
2006/0047307	A1	3/2006	Ortiz et al.
2006/0049229	A1	3/2006	Milliman et al.
2006/0052825	A1	3/2006	Ransick et al.
2006/0060630	A1	3/2006	Shelton, IV et al.
2006/0064086	A1	3/2006	Odom
2006/0079115	A1	4/2006	Aranyi et al.

(56) **References Cited**

U.S. PATENT DOCUMENTS

2006/0079735	A1	4/2006	Martone et al.
2006/0085031	A1	4/2006	Bettuchi
2006/0085033	A1	4/2006	Criscuolo et al.
2006/0086032	A1	4/2006	Valencic et al.
2006/0087746	A1	4/2006	Lipow
2006/0089535	A1	4/2006	Raz et al.
2006/0100643	A1	5/2006	Laufer et al.
2006/0108393	A1	5/2006	Heinrich et al.
2006/0111711	A1	5/2006	Goble
2006/0111723	A1	5/2006	Chapolini et al.
2006/0122636	A1	6/2006	Bailly et al.
2006/0142772	A1	6/2006	Ralph et al.
2006/0149163	A1	7/2006	Hibner et al.
2006/0161185	A1	7/2006	Saadat et al.
2006/0167471	A1	7/2006	Phillips
2006/0173470	A1	8/2006	Oray et al.
2006/0178556	A1	8/2006	Hasser et al.
2006/0180634	A1	8/2006	Shelton, IV et al.
2006/0185682	A1	8/2006	Marczyk
2006/0200123	A1	9/2006	Ryan
2006/0201989	A1	9/2006	Ojeda
2006/0212069	A1	9/2006	Shelton, IV
2006/0217729	A1	9/2006	Eskridge et al.
2006/0226196	A1	10/2006	Hueil et al.
2006/0235368	A1	10/2006	Oz
2006/0235469	A1	10/2006	Viola
2006/0241655	A1	10/2006	Viola
2006/0241692	A1	10/2006	McGuckin, Jr. et al.
2006/0244460	A1	11/2006	Weaver
2006/0252993	A1	11/2006	Freed et al.
2006/0253069	A1	11/2006	Li et al.
2006/0258904	A1	11/2006	Stefanchik et al.
2006/0258910	A1	11/2006	Stefanchik et al.
2006/0259073	A1	11/2006	Miyamoto et al.
2006/0264927	A1	11/2006	Ryan
2006/0264929	A1	11/2006	Goble et al.
2006/0271042	A1	11/2006	Latterell et al.
2006/0271102	A1	11/2006	Bosshard et al.
2006/0278680	A1	12/2006	Viola et al.
2006/0278681	A1	12/2006	Viola et al.
2006/0284730	A1	12/2006	Schmid et al.
2006/0287576	A1	12/2006	Tsuji et al.
2006/0289602	A1	12/2006	Wales et al.
2006/0291981	A1	12/2006	Viola et al.
2007/0010838	A1	1/2007	Shelton, IV et al.
2007/0023476	A1	2/2007	Whitman et al.
2007/0023477	A1	2/2007	Whitman et al.
2007/0026039	A1	2/2007	Drumheller et al.
2007/0026040	A1	2/2007	Crawley et al.
2007/0027468	A1	2/2007	Wales et al.
2007/0027472	A1	2/2007	Hiles et al.
2007/0027551	A1	2/2007	Farnsworth et al.
2007/0034668	A1	2/2007	Holsten et al.
2007/0049966	A1	3/2007	Bonadio et al.
2007/0051375	A1	3/2007	Milliman
2007/0055219	A1	3/2007	Whitman et al.
2007/0066981	A1	3/2007	Meagher
2007/0070574	A1	3/2007	Nerheim et al.
2007/0073341	A1	3/2007	Smith
2007/0078484	A1	4/2007	Talarico et al.
2007/0083193	A1	4/2007	Werneth et al.
2007/0084897	A1	4/2007	Shelton, IV et al.
2007/0093869	A1	4/2007	Bloom et al.
2007/0102472	A1	5/2007	Shelton, IV
2007/0106113	A1	5/2007	Ravo
2007/0106317	A1	5/2007	Shelton, IV et al.
2007/0118175	A1	5/2007	Butler et al.
2007/0129605	A1	6/2007	Schaaf
2007/0135686	A1	6/2007	Pruitt, Jr. et al.
2007/0135803	A1	6/2007	Belson
2007/0155010	A1	7/2007	Farnsworth et al.
2007/0158358	A1	7/2007	Mason, II et al.
2007/0170225	A1	7/2007	Shelton, IV et al.
2007/0173687	A1	7/2007	Shima et al.
2007/0173806	A1	7/2007	Orszulak et al.
2007/0173813	A1	7/2007	Odom
2007/0175950	A1	8/2007	Shelton, IV et al.
2007/0175951	A1	8/2007	Shelton, IV et al.
2007/0175955	A1	8/2007	Shelton, IV et al.
2007/0179528	A1	8/2007	Soltz et al.
2007/0181632	A1	8/2007	Milliman
2007/0190110	A1	8/2007	Pameijer et al.
2007/0191868	A1	8/2007	Theroux et al.
2007/0194079	A1	8/2007	Hueil et al.
2007/0194082	A1	8/2007	Morgan et al.
2007/0203510	A1	8/2007	Bettuchi
2007/0213750	A1	9/2007	Weadock
2007/0219571	A1	9/2007	Balbierz et al.
2007/0221700	A1	9/2007	Ortiz et al.
2007/0225562	A1	9/2007	Spivey et al.
2007/0233163	A1	10/2007	Bombard et al.
2007/0239028	A1	10/2007	Houser et al.
2007/0243227	A1	10/2007	Gertner
2007/0244471	A1	10/2007	Malackowski
2007/0246505	A1	10/2007	Pace-Floridia et al.
2007/0249999	A1	10/2007	Sklar et al.
2007/0260278	A1	11/2007	Wheeler et al.
2007/0270784	A1	11/2007	Smith et al.
2007/0270884	A1	11/2007	Smith et al.
2007/0275035	A1	11/2007	Herman et al.
2007/0276409	A1	11/2007	Ortiz et al.
2007/0279011	A1	12/2007	Jones et al.
2007/0286892	A1	12/2007	Herzberg et al.
2007/0287993	A1	12/2007	Hinman et al.
2007/0288044	A1	12/2007	Jinno et al.
2007/0299427	A1	12/2007	Yeung et al.
2008/0003196	A1	1/2008	Jonn et al.
2008/0015598	A1	1/2008	Prommersberger
2008/0029570	A1	2/2008	Shelton et al.
2008/0029573	A1	2/2008	Shelton et al.
2008/0029574	A1	2/2008	Shelton et al.
2008/0029575	A1	2/2008	Shelton et al.
2008/0030170	A1	2/2008	Dacquay et al.
2008/0035701	A1	2/2008	Racenet et al.
2008/0041916	A1	2/2008	Milliman et al.
2008/0041917	A1	2/2008	Racenet et al.
2008/0051833	A1	2/2008	Gramuglia et al.
2008/0078802	A1	4/2008	Hess et al.
2008/0082114	A1	4/2008	McKenna et al.
2008/0082125	A1	4/2008	Murray et al.
2008/0082126	A1	4/2008	Murray et al.
2008/0083808	A1	4/2008	Scirica
2008/0083813	A1	4/2008	Zemlok et al.
2008/0085296	A1	4/2008	Powell et al.
2008/0086078	A1	4/2008	Powell et al.
2008/0091072	A1	4/2008	Omori et al.
2008/0114315	A1	5/2008	Voegele et al.
2008/0114385	A1	5/2008	Byrum et al.
2008/0128469	A1	6/2008	Dalessandro et al.
2008/0129253	A1	6/2008	Shiue et al.
2008/0140115	A1	6/2008	Stopek
2008/0154299	A1	6/2008	Linvneh
2008/0169328	A1	7/2008	Shelton
2008/0169332	A1	7/2008	Shelton et al.
2008/0169333	A1	7/2008	Shelton et al.
2008/0172087	A1	7/2008	Fuchs et al.
2008/0172088	A1	7/2008	Smith et al.
2008/0183193	A1	7/2008	Omori et al.
2008/0185419	A1	8/2008	Smith et al.
2008/0190989	A1	8/2008	Crews et al.
2008/0197167	A1	8/2008	Viola et al.
2008/0200762	A1	8/2008	Stokes et al.
2008/0200835	A1	8/2008	Monson et al.
2008/0200933	A1	8/2008	Bakos et al.
2008/0200949	A1	8/2008	Hiles et al.
2008/0228029	A1	9/2008	Mikkaichi et al.
2008/0245841	A1	10/2008	Smith et al.
2008/0251568	A1	10/2008	Zemlok et al.
2008/0251569	A1	10/2008	Smith et al.
2008/0255413	A1	10/2008	Zemlok et al.
2008/0255607	A1	10/2008	Zemlok
2008/0262654	A1	10/2008	Omori et al.
2008/0283570	A1	11/2008	Boyden et al.
2008/0287944	A1	11/2008	Pearson et al.

(56) **References Cited**

U.S. PATENT DOCUMENTS

2008/0287988	A1	11/2008	Smith et al.
2008/0290134	A1	11/2008	Bettuchi et al.
2008/0294179	A1	11/2008	Balbierz et al.
2008/0296346	A1	12/2008	Shelton, IV et al.
2008/0297287	A1	12/2008	Shachar et al.
2008/0308602	A1	12/2008	Timm et al.
2008/0308603	A1	12/2008	Shelton, IV et al.
2008/0308608	A1	12/2008	Prommersberger
2008/0314960	A1	12/2008	Marczyk et al.
2008/0315829	A1	12/2008	Jones et al.
2009/0001121	A1	1/2009	Hess et al.
2009/0001122	A1	1/2009	Prommersberger et al.
2009/0001130	A1	1/2009	Hess et al.
2009/0004455	A1	1/2009	Gravagna et al.
2009/0005809	A1	1/2009	Hess et al.
2009/0012534	A1	1/2009	Madhani et al.
2009/0018553	A1	1/2009	McLean et al.
2009/0020958	A1	1/2009	Soul
2009/0047329	A1	2/2009	Stucky et al.
2009/0048589	A1	2/2009	Takashino et al.
2009/0048612	A1	2/2009	Farritor et al.
2009/0054908	A1	2/2009	Zand et al.
2009/0076506	A1	3/2009	Baker
2009/0078736	A1	3/2009	Van Lue
2009/0082789	A1	3/2009	Milliman et al.
2009/0088774	A1	4/2009	Swarup et al.
2009/0090763	A1	4/2009	Zemlok et al.
2009/0092651	A1	4/2009	Shah et al.
2009/0093728	A1	4/2009	Hyde et al.
2009/0099579	A1	4/2009	Nentwick et al.
2009/0099876	A1	4/2009	Whitman
2009/0108048	A1	4/2009	Zemlok et al.
2009/0112229	A1	4/2009	Omori et al.
2009/0114701	A1	5/2009	Zemlok et al.
2009/0119011	A1	5/2009	Kondo et al.
2009/0137952	A1	5/2009	Ramamurthy et al.
2009/0143805	A1	6/2009	Palmer et al.
2009/0143855	A1	6/2009	Weber et al.
2009/0149871	A9	6/2009	Kagan et al.
2009/0157067	A1	6/2009	Kane et al.
2009/0157087	A1	6/2009	Wei et al.
2009/0171147	A1	7/2009	Lee et al.
2009/0177226	A1	7/2009	Reinprecht et al.
2009/0188964	A1	7/2009	Orlov
2009/0198272	A1	8/2009	Kerver et al.
2009/0204108	A1	8/2009	Steffen
2009/0206125	A1	8/2009	Huitema et al.
2009/0206126	A1	8/2009	Huitema et al.
2009/0206131	A1	8/2009	Weisenburgh, II et al.
2009/0206133	A1	8/2009	Morgan et al.
2009/0206137	A1	8/2009	Hall et al.
2009/0206139	A1	8/2009	Hall et al.
2009/0206141	A1	8/2009	Huitema et al.
2009/0206142	A1	8/2009	Huitema et al.
2009/0213685	A1	8/2009	Mak et al.
2009/0242610	A1	10/2009	Shelton, IV et al.
2009/0247901	A1	10/2009	Zimmer
2009/0248038	A1	10/2009	Blumenkranz et al.
2009/0255974	A1	10/2009	Viola
2009/0255975	A1	10/2009	Zemlok et al.
2009/0255976	A1	10/2009	Marczyk et al.
2009/0255977	A1	10/2009	Zemlok
2009/0255978	A1	10/2009	Viola et al.
2009/0264904	A1*	10/2009	Aldrich et al. 606/143
2009/0270895	A1	10/2009	Churchill et al.
2009/0277949	A1	11/2009	Viola et al.
2009/0292283	A1	11/2009	Odom
2009/0308907	A1	12/2009	Nalagatla et al.
2010/0010511	A1	1/2010	Harris et al.
2010/0012704	A1	1/2010	Tarinelli Racenet et al.
2010/0016852	A1	1/2010	Manzo et al.
2010/0016888	A1	1/2010	Calabrese et al.
2010/0023024	A1	1/2010	Zeiner et al.
2010/0036370	A1	2/2010	Mirel et al.
2010/0049084	A1	2/2010	Nock et al.
2010/0057087	A1	3/2010	Cha
2010/0057107	A1	3/2010	Sorrentino et al.
2010/0069942	A1	3/2010	Shelton, IV
2010/0072254	A1	3/2010	Aranyi et al.
2010/0076483	A1	3/2010	Imuta
2010/0076489	A1	3/2010	Stopek et al.
2010/0087840	A1	4/2010	Ebersole et al.
2010/0094289	A1	4/2010	Taylor et al.
2010/0096431	A1	4/2010	Smith et al.
2010/0100124	A1	4/2010	Calabrese et al.
2010/0108740	A1	5/2010	Pastorelli et al.
2010/0108741	A1	5/2010	Hessler et al.
2010/0133317	A1	6/2010	Shelton, IV et al.
2010/0145146	A1	6/2010	Melder
2010/0147921	A1	6/2010	Olson
2010/0147922	A1	6/2010	Olson
2010/0147923	A1	6/2010	D'Agostino et al.
2010/0163598	A1	7/2010	Belzer
2010/0179022	A1	7/2010	Shirokoshi
2010/0179540	A1	7/2010	Marczyk et al.
2010/0186219	A1	7/2010	Smith
2010/0193566	A1	8/2010	Schieb et al.
2010/0200637	A1	8/2010	Beetel
2010/0204717	A1	8/2010	Knodel
2010/0222901	A1	9/2010	Swayze et al.
2010/0230465	A1	9/2010	Smith et al.
2010/0243707	A1	9/2010	Olson et al.
2010/0243708	A1	9/2010	Aranyi et al.
2010/0249519	A1	9/2010	Park et al.
2010/0258611	A1	10/2010	Smith et al.
2010/0267662	A1	10/2010	Fielder et al.
2010/0268030	A1	10/2010	Viola et al.
2010/0274160	A1	10/2010	Yachi et al.
2010/0276471	A1	11/2010	Whitman
2010/0292540	A1	11/2010	Hess et al.
2010/0294827	A1	11/2010	Boyden et al.
2010/0298636	A1	11/2010	Castro et al.
2010/0305552	A1	12/2010	Shelton, IV et al.
2010/0312261	A1	12/2010	Suzuki et al.
2010/0320252	A1	12/2010	Viola et al.
2010/0331856	A1	12/2010	Carlson et al.
2010/0331880	A1	12/2010	Stopek
2011/0003528	A1	1/2011	Lam
2011/0006101	A1	1/2011	Hall et al.
2011/0011916	A1	1/2011	Levine
2011/0017799	A1	1/2011	Whitman et al.
2011/0017801	A1	1/2011	Zemlok et al.
2011/0022032	A1	1/2011	Zemlok et al.
2011/0024477	A1	2/2011	Hall et al.
2011/0024478	A1	2/2011	Shelton, IV
2011/0024479	A1	2/2011	Swensgard et al.
2011/0034918	A1	2/2011	Reschke
2011/0036887	A1	2/2011	Zemlok et al.
2011/0036890	A1	2/2011	Ma
2011/0036891	A1	2/2011	Zemlok et al.
2011/0045047	A1	2/2011	Bennett et al.
2011/0046667	A1	2/2011	Culligan et al.
2011/0060363	A1	3/2011	Hess et al.
2011/0084112	A1	4/2011	Kostrzewski
2011/0087276	A1	4/2011	Bedi et al.
2011/0087279	A1	4/2011	Shah et al.
2011/0095068	A1	4/2011	Patel
2011/0101065	A1	5/2011	Milliman
2011/0114697	A1	5/2011	Baxter, III et al.
2011/0118754	A1	5/2011	Dachs, II et al.
2011/0118778	A1	5/2011	Burbank
2011/0125176	A1	5/2011	Yates et al.
2011/0144430	A1	6/2011	Spivey et al.
2011/0144640	A1	6/2011	Heinrich et al.
2011/0147433	A1	6/2011	Shelton, IV et al.
2011/0155786	A1	6/2011	Shelton, IV
2011/0155787	A1	6/2011	Baxter, III et al.
2011/0163146	A1	7/2011	Ortiz et al.
2011/0174099	A1	7/2011	Ross et al.
2011/0174861	A1	7/2011	Shelton, IV et al.
2011/0178536	A1	7/2011	Kostrzewski
2011/0184459	A1	7/2011	Malkowski et al.
2011/0192882	A1	8/2011	Hess et al.
2011/0210156	A1	9/2011	Smith et al.

(56) **References Cited**

U.S. PATENT DOCUMENTS

2011/0253765 A1 10/2011 Nicholas et al.
2011/0264119 A1 10/2011 Bayon et al.
2011/0275901 A1 11/2011 Shelton, IV
2011/0276083 A1 11/2011 Shelton, IV et al.
2011/0278343 A1 11/2011 Knodel et al.
2011/0282446 A1 11/2011 Schulte et al.
2011/0288573 A1 11/2011 Yates et al.
2011/0290851 A1 12/2011 Shelton, IV
2011/0290856 A1 12/2011 Shelton, IV et al.
2011/0293690 A1 12/2011 Griffin et al.
2011/0295269 A1 12/2011 Swensgard et al.
2011/0295295 A1 12/2011 Shelton, IV et al.
2011/0313894 A1 12/2011 Dye et al.
2011/0315413 A1 12/2011 Fisher et al.
2012/0004636 A1 1/2012 Lo
2012/0018326 A1 1/2012 Racenet et al.
2012/0022523 A1 1/2012 Smith et al.
2012/0022630 A1 1/2012 Wübbeling
2012/0029272 A1 2/2012 Shelton, IV et al.
2012/0046692 A1 2/2012 Smith et al.
2012/0071711 A1 3/2012 Shelton, IV et al.
2012/0074200 A1 3/2012 Schmid et al.
2012/0080336 A1 4/2012 Shelton, IV et al.
2012/0080338 A1 4/2012 Shelton, IV et al.
2012/0080340 A1 4/2012 Shelton, IV et al.
2012/0080344 A1 4/2012 Shelton, IV
2012/0080475 A1 4/2012 Smith et al.
2012/0080478 A1 4/2012 Morgan et al.
2012/0080488 A1 4/2012 Shelton, IV et al.
2012/0080498 A1 4/2012 Shelton, IV et al.
2012/0083835 A1 4/2012 Shelton, IV et al.
2012/0089131 A1 4/2012 Zemlok et al.
2012/0110810 A1 5/2012 Houser et al.
2012/0116395 A1 5/2012 Madan et al.
2012/0125792 A1 5/2012 Cassivi
2012/0138658 A1 6/2012 Ullrich et al.
2012/0150192 A1 6/2012 Dachs, II et al.
2012/0175398 A1 7/2012 Sandborn et al.
2012/0187179 A1 7/2012 Gleiman
2012/0199632 A1 8/2012 Spivey et al.
2012/0209289 A1 8/2012 Duque et al.
2012/0223123 A1 9/2012 Baxter, III et al.
2012/0234892 A1 9/2012 Aronhalt et al.
2012/0234895 A1 9/2012 O'Connor et al.
2012/0234897 A1 9/2012 Shelton, IV et al.
2012/0234899 A1 9/2012 Scheib et al.
2012/0238823 A1 9/2012 Hagerty et al.
2012/0238824 A1 9/2012 Widenhouse et al.
2012/0241491 A1 9/2012 Aldridge et al.
2012/0241492 A1 9/2012 Shelton, IV et al.
2012/0241493 A1 9/2012 Baxter, III et al.
2012/0241496 A1 9/2012 Mandakolathur Vasudevan et al.
2012/0241497 A1 9/2012 Mandakolathur Vasudevan et al.
2012/0241498 A1 9/2012 Gonzalez et al.
2012/0241499 A1 9/2012 Baxter, III et al.
2012/0241500 A1 9/2012 Timmer et al.
2012/0241501 A1 9/2012 Swayze et al.
2012/0241502 A1 9/2012 Aldridge et al.
2012/0241503 A1 9/2012 Baxter, III et al.
2012/0241505 A1 9/2012 Alexander, III et al.
2012/0248169 A1 10/2012 Widenhouse et al.
2012/0253298 A1 10/2012 Henderson et al.
2012/0253329 A1 10/2012 Zemlok et al.
2012/0265176 A1 10/2012 Braun
2012/0271285 A1 10/2012 Sholev et al.
2012/0273550 A1 11/2012 Scirica
2012/0283707 A1 11/2012 Giordano et al.
2012/0283748 A1 11/2012 Ortiz et al.
2012/0286021 A1 11/2012 Kostrzewski et al.
2012/0289979 A1 11/2012 Eskaros et al.
2012/0292367 A1 11/2012 Morgan et al.
2012/0296333 A1 11/2012 Twomey
2012/0298722 A1 11/2012 Hess et al.
2012/0310255 A1 12/2012 Brisson et al.
2012/0310256 A1 12/2012 Brisson
2012/0312860 A1 12/2012 Ming et al.
2012/0318842 A1 12/2012 Anim et al.
2012/0318843 A1 12/2012 Henderson et al.
2012/0318844 A1 12/2012 Shelton, IV et al.
2012/0325892 A1 12/2012 Kostrzewski
2013/0012983 A1 1/2013 Kleyman
2013/0018361 A1 1/2013 Bryant
2013/0020375 A1 1/2013 Shelton, IV et al.
2013/0020376 A1 1/2013 Shelton, IV et al.
2013/0023861 A1 1/2013 Shelton, IV et al.
2013/0026208 A1 1/2013 Shelton, IV et al.
2013/0026210 A1 1/2013 Shelton, IV et al.
2013/0032626 A1 2/2013 Smith et al.
2013/0037596 A1 2/2013 Bear et al.
2013/0048697 A1 2/2013 Shelton, IV et al.
2013/0056518 A1 3/2013 Swensgard
2013/0062391 A1 3/2013 Boudreaux et al.
2013/0075446 A1 3/2013 Wang et al.
2013/0075449 A1 3/2013 Schmid et al.
2013/0079814 A1 3/2013 Hess et al.
2013/0087597 A1 4/2013 Shelton, IV et al.
2013/0087599 A1 4/2013 Krumanaker et al.
2013/0087602 A1 4/2013 Olson et al.
2013/0098970 A1 4/2013 Racenet et al.
2013/0103024 A1 4/2013 Monson et al.
2013/0116668 A1 5/2013 Shelton, IV et al.
2013/0116669 A1 5/2013 Shelton, IV et al.
2013/0119108 A1 5/2013 Altman et al.
2013/0123822 A1 5/2013 Wellman et al.
2013/0126582 A1 5/2013 Shelton, IV et al.
2013/0131651 A1 5/2013 Strobl et al.
2013/0146641 A1 6/2013 Shelton, IV et al.
2013/0146642 A1 6/2013 Shelton, IV et al.
2013/0146643 A1 6/2013 Schmid et al.
2013/0150832 A1 6/2013 Belson et al.
2013/0153633 A1 6/2013 Casasanta, Jr. et al.
2013/0153634 A1 6/2013 Carter et al.
2013/0153636 A1 6/2013 Shelton, IV et al.
2013/0153638 A1 6/2013 Carter et al.
2013/0153641 A1 6/2013 Shelton, IV et al.
2013/0161374 A1 6/2013 Swayze et al.
2013/0161375 A1 6/2013 Huitema et al.
2013/0168431 A1 7/2013 Zemlok et al.
2013/0168435 A1 7/2013 Huang et al.
2013/0172929 A1 7/2013 Hess et al.
2013/0175317 A1 7/2013 Yates et al.
2013/0175322 A1 7/2013 Yates et al.
2013/0181033 A1 7/2013 Shelton, IV et al.
2013/0181034 A1 7/2013 Shelton, IV et al.
2013/0184718 A1 7/2013 Smith et al.
2013/0184719 A1 7/2013 Shelton, IV et al.
2013/0186932 A1 7/2013 Shelton, IV et al.
2013/0186933 A1 7/2013 Shelton, IV et al.
2013/0186934 A1 7/2013 Shelton, IV et al.
2013/0186936 A1 7/2013 Shelton, IV
2013/0190733 A1 7/2013 Giordano et al.
2013/0190757 A1 7/2013 Yates et al.
2013/0193188 A1 8/2013 Shelton, IV et al.
2013/0193189 A1 8/2013 Swensgard et al.
2013/0197556 A1 8/2013 Shelton, IV et al.
2013/0214025 A1 8/2013 Zemlok et al.
2013/0214030 A1 8/2013 Aronhalt et al.
2013/0221059 A1 8/2013 Racenet et al.
2013/0221063 A1 8/2013 Aronhalt et al.
2013/0221064 A1 8/2013 Aronhalt et al.
2013/0221065 A1 8/2013 Aronhalt et al.
2013/0233906 A1 9/2013 Hess et al.
2013/0233908 A1 9/2013 Knodel et al.
2013/0248576 A1 9/2013 Laurent et al.
2013/0256365 A1 10/2013 Shelton, IV et al.
2013/0256366 A1 10/2013 Shelton, IV et al.
2013/0256367 A1 10/2013 Scheib et al.
2013/0256368 A1 10/2013 Timm et al.
2013/0256369 A1 10/2013 Schmid et al.
2013/0256371 A1 10/2013 Shelton, IV et al.
2013/0256372 A1 10/2013 Baxter, III et al.
2013/0256373 A1 10/2013 Schmid et al.
2013/0256374 A1 10/2013 Shelton, IV et al.
2013/0256375 A1 10/2013 Shelton, IV et al.

(56) **References Cited**

U.S. PATENT DOCUMENTS

2013/0256376	A1	10/2013	Barton et al.
2013/0256377	A1	10/2013	Schmid et al.
2013/0256378	A1	10/2013	Schmid et al.
2013/0256379	A1	10/2013	Schmid et al.
2013/0256380	A1	10/2013	Schmid et al.
2013/0256382	A1	10/2013	Swayze et al.
2013/0256383	A1	10/2013	Aronhalt et al.
2013/0261648	A1	10/2013	Laurent et al.
2013/0270322	A1	10/2013	Scheib et al.
2013/0277412	A1	10/2013	Gresham et al.
2013/0310873	A1	11/2013	Stopek (nee Prommersberger) et al.
2013/0313303	A1	11/2013	Shelton, IV et al.
2013/0313304	A1	11/2013	Shelton, IV et al.
2013/0313306	A1	11/2013	Shelton, IV et al.
2013/0319706	A1	12/2013	Nicholas et al.
2013/0324981	A1	12/2013	Smith et al.
2013/0324982	A1	12/2013	Smith et al.
2013/0327809	A1	12/2013	Shelton, IV et al.
2013/0327810	A1	12/2013	Swayze et al.
2013/0334283	A1	12/2013	Swayze et al.
2013/0334284	A1	12/2013	Swayze et al.
2013/0334285	A1	12/2013	Swayze et al.
2013/0334286	A1	12/2013	Swayze et al.
2013/0334287	A1	12/2013	Shelton, IV
2013/0334288	A1	12/2013	Shelton, IV
2013/0341374	A1	12/2013	Shelton, IV et al.
2014/0001231	A1	1/2014	Shelton, IV et al.
2014/0001234	A1	1/2014	Shelton, IV et al.
2014/0001235	A1	1/2014	Shelton, IV
2014/0001236	A1	1/2014	Shelton, IV et al.
2014/0001237	A1	1/2014	Shelton, IV et al.
2014/0001238	A1	1/2014	Shelton, IV et al.
2014/0001239	A1	1/2014	Shelton, IV et al.
2014/0001240	A1	1/2014	Shelton, IV et al.
2014/0005640	A1	1/2014	Shelton, IV et al.
2014/0005653	A1	1/2014	Shelton, IV et al.
2014/0005662	A1	1/2014	Shelton, IV
2014/0005678	A1	1/2014	Shelton, IV et al.
2014/0005679	A1	1/2014	Shelton, IV et al.
2014/0005693	A1*	1/2014	Shelton et al. 606/143
2014/0005695	A1*	1/2014	Shelton, IV 606/143
2014/0005702	A1	1/2014	Timm et al.
2014/0005703	A1	1/2014	Stulen et al.
2014/0005708	A1	1/2014	Shelton, IV
2014/0005718	A1	1/2014	Shelton, IV et al.
2014/0008414	A1	1/2014	Shelton, IV et al.
2014/0012237	A1	1/2014	Pribanic et al.
2014/0014705	A1	1/2014	Baxter, III
2014/0015782	A1	1/2014	Kim et al.
2014/0042205	A1	2/2014	Baxter, III et al.
2014/0048582	A1	2/2014	Shelton, IV et al.
2014/0061279	A1	3/2014	Laurent et al.
2014/0097227	A1	4/2014	Aronhalt et al.
2014/0103093	A1	4/2014	Koch, Jr. et al.
2014/0107640	A1	4/2014	Yates et al.
2014/0110455	A1	4/2014	Ingmanson et al.
2014/0128850	A1	5/2014	Kerr et al.
2014/0151431	A1	6/2014	Hodgkinson et al.
2014/0151433	A1	6/2014	Shelton, IV et al.
2014/0151434	A1	6/2014	Shelton, IV et al.
2014/0166722	A1	6/2014	Hess et al.
2014/0166724	A1	6/2014	Schellin et al.
2014/0166725	A1	6/2014	Schellin et al.
2014/0166726	A1	6/2014	Schellin et al.
2014/0171966	A1	6/2014	Giordano et al.
2014/0175152	A1	6/2014	Hess et al.
2014/0175154	A1	6/2014	Shelton, IV et al.
2014/0175155	A1	6/2014	Shelton, IV et al.
2014/0191014	A1	7/2014	Shelton, IV
2014/0191015	A1	7/2014	Shelton, IV
2014/0205637	A1	7/2014	Widenhouse et al.
2014/0207166	A1	7/2014	Shelton, IV et al.
2014/0224686	A1	8/2014	Aronhalt et al.
2014/0224857	A1	8/2014	Schmid
2014/0236184	A1	8/2014	Leimbach et al.
2014/0239036	A1	8/2014	Zerkle et al.
2014/0243865	A1	8/2014	Swayze et al.
2014/0246471	A1	9/2014	Jaworek et al.
2014/0246472	A1	9/2014	Kimsey et al.
2014/0246473	A1	9/2014	Auld
2014/0246474	A1	9/2014	Hall et al.
2014/0246475	A1	9/2014	Hall et al.
2014/0246476	A1	9/2014	Hall et al.
2014/0246477	A1	9/2014	Koch, Jr. et al.
2014/0246478	A1	9/2014	Baber et al.
2014/0246479	A1	9/2014	Baber et al.
2014/0249557	A1	9/2014	Koch, Jr. et al.
2014/0252066	A1	9/2014	Shelton, IV et al.
2014/0252068	A1	9/2014	Shelton, IV et al.
2014/0259591	A1	9/2014	Shelton, IV et al.
2014/0263537	A1	9/2014	Leimbach et al.
2014/0263538	A1	9/2014	Leimbach et al.
2014/0263539	A1	9/2014	Leimbach et al.
2014/0263541	A1	9/2014	Leimbach et al.
2014/0263542	A1	9/2014	Leimbach et al.
2014/0263543	A1	9/2014	Leimbach et al.
2014/0263551	A1	9/2014	Hall et al.
2014/0263552	A1	9/2014	Hall et al.
2014/0263553	A1	9/2014	Leimbach et al.
2014/0263554	A1	9/2014	Leimbach et al.
2014/0263558	A1	9/2014	Hausen et al.
2014/0263562	A1	9/2014	Patel et al.
2014/0263564	A1	9/2014	Leimbach et al.
2014/0263565	A1	9/2014	Lytle, IV et al.
2014/0263571	A1	9/2014	Morgan et al.
2014/0263572	A1	9/2014	Shelton, IV et al.
2014/0277017	A1	9/2014	Leimbach et al.
2014/0284371	A1	9/2014	Morgan et al.
2014/0284373	A1	9/2014	Shelton, IV et al.
2014/0291378	A1	10/2014	Shelton, IV et al.
2014/0291379	A1	10/2014	Schellin et al.
2014/0291380	A1	10/2014	Weaner et al.
2014/0291381	A1	10/2014	Weaner et al.
2014/0291382	A1	10/2014	Lloyd et al.
2014/0291383	A1	10/2014	Spivey et al.
2014/0296873	A1	10/2014	Morgan et al.
2014/0296874	A1	10/2014	Morgan et al.
2014/0299648	A1	10/2014	Shelton, IV et al.
2014/0303645	A1	10/2014	Morgan et al.
2014/0303646	A1	10/2014	Morgan et al.
2014/0305987	A1	10/2014	Parihar et al.
2014/0305988	A1	10/2014	Boudreaux et al.
2014/0305989	A1	10/2014	Parihar et al.
2014/0305990	A1	10/2014	Shelton, IV et al.
2014/0305991	A1	10/2014	Parihar et al.
2014/0305992	A1	10/2014	Kimsey et al.
2014/0305993	A1	10/2014	Timm et al.
2014/0305994	A1	10/2014	Parihar et al.
2014/0305995	A1	10/2014	Shelton, IV et al.
2014/0309665	A1	10/2014	Parihar et al.
2014/0309666	A1	10/2014	Shelton, IV et al.
2014/0326777	A1	11/2014	Zingman
2014/0330161	A1	11/2014	Swayze et al.
2014/0339286	A1	11/2014	Motooka et al.
2014/0352463	A1	12/2014	Parihar
2014/0353358	A1	12/2014	Shelton, IV et al.
2014/0353359	A1	12/2014	Hall et al.
2014/0367447	A1	12/2014	Woodard, Jr. et al.
2015/0008248	A1	1/2015	Giordano et al.
2015/0034696	A1	2/2015	Shelton, IV et al.
2015/0038986	A1	2/2015	Swensgard et al.
2015/0041518	A1	2/2015	Shelton, IV et al.
2015/0053737	A1	2/2015	Leimbach et al.
2015/0053738	A1	2/2015	Morgan et al.
2015/0053739	A1	2/2015	Morgan et al.
2015/0053740	A1	2/2015	Shelton, IV
2015/0053741	A1	2/2015	Shelton, IV et al.
2015/0053742	A1	2/2015	Shelton, IV et al.
2015/0053743	A1	2/2015	Yates et al.
2015/0053744	A1	2/2015	Swayze et al.
2015/0053745	A1	2/2015	Yates et al.
2015/0053746	A1	2/2015	Shelton, IV et al.
2015/0053748	A1	2/2015	Yates et al.

(56) **References Cited**

U.S. PATENT DOCUMENTS

2015/0053749	A1	2/2015	Shelton, IV et al.
2015/0054753	A1	2/2015	Morgan et al.
2015/0060518	A1	3/2015	Shelton, IV et al.
2015/0060519	A1	3/2015	Shelton, IV et al.
2015/0060520	A1	3/2015	Shelton, IV et al.
2015/0060521	A1	3/2015	Weisenburgh, II et al.
2015/0076207	A1	3/2015	Boudreaux et al.
2015/0076208	A1	3/2015	Shelton, IV
2015/0076209	A1	3/2015	Shelton, IV et al.
2015/0076210	A1	3/2015	Shelton, IV et al.
2015/0076212	A1	3/2015	Shelton, IV
2015/0080868	A1	3/2015	Kerr
2015/0083780	A1	3/2015	Shelton, IV et al.
2015/0083781	A1	3/2015	Giordano et al.
2015/0083782	A1	3/2015	Scheib et al.
2015/0083783	A1	3/2015	Shelton, IV et al.
2015/0090759	A1	4/2015	Spivey et al.
2015/0090760	A1	4/2015	Giordano et al.
2015/0090761	A1	4/2015	Giordano et al.
2015/0090762	A1	4/2015	Giordano et al.
2015/0090763	A1	4/2015	Murray et al.
2015/0090765	A1	4/2015	Hess et al.
2015/0108199	A1	4/2015	Shelton, IV et al.
2015/0122869	A1	5/2015	Aronhalt et al.
2015/0136830	A1	5/2015	Baxter, III et al.
2015/0136831	A1	5/2015	Baxter, III et al.
2015/0136832	A1	5/2015	Baxter, III et al.
2015/0136833	A1	5/2015	Shelton, IV et al.
2015/0136835	A1	5/2015	Shelton, IV et al.
2015/0144678	A1	5/2015	Hall et al.
2015/0173744	A1	6/2015	Shelton, IV et al.
2015/0173745	A1	6/2015	Baxter, III et al.
2015/0173746	A1	6/2015	Baxter, III et al.
2015/0173747	A1	6/2015	Baxter, III et al.
2015/0173749	A1	6/2015	Shelton, IV et al.
2015/0173750	A1	6/2015	Shelton, IV et al.
2015/0173751	A1	6/2015	Shelton, IV et al.
2015/0173755	A1	6/2015	Baxter, III et al.
2015/0173756	A1	6/2015	Baxter, III et al.
2015/0173760	A1	6/2015	Shelton, IV et al.
2015/0173761	A1	6/2015	Shelton, IV et al.
2015/0173762	A1	6/2015	Shelton, IV et al.
2015/0173789	A1	6/2015	Baxter, III et al.
2015/0182220	A1	7/2015	Yates et al.
2015/0182222	A1	7/2015	Swayze et al.
2015/0196295	A1	7/2015	Shelton, IV et al.
2015/0196296	A1	7/2015	Swayze et al.
2015/0196299	A1	7/2015	Swayze et al.
2015/0196347	A1	7/2015	Yates et al.
2015/0196348	A1	7/2015	Yates et al.
2015/0201932	A1	7/2015	Swayze et al.
2015/0201935	A1	7/2015	Weisenburgh, II et al.
2015/0201936	A1	7/2015	Swayze et al.
2015/0201937	A1	7/2015	Swayze et al.
2015/0201938	A1	7/2015	Swayze et al.
2015/0201939	A1	7/2015	Swayze et al.
2015/0201940	A1	7/2015	Swayze et al.
2015/0201941	A1	7/2015	Swayze et al.
2015/0209031	A1	7/2015	Shelton, IV et al.
2015/0209038	A1	7/2015	Shelton, IV et al.
2015/0209039	A1	7/2015	Shelton, IV et al.
2015/0223809	A1	8/2015	Scheib et al.
2015/0223816	A1	8/2015	Morgan et al.
2015/0230783	A1	8/2015	Shelton, IV et al.
2015/0230784	A1	8/2015	Shelton, IV et al.
2015/0231409	A1	8/2015	Racenet et al.
2015/0238185	A1	8/2015	Schellin et al.
2015/0238186	A1	8/2015	Aronhalt et al.
2015/0238187	A1	8/2015	Schellin et al.
2015/0238188	A1	8/2015	Vendely et al.
2015/0238191	A1	8/2015	Schellin et al.
2015/0239180	A1	8/2015	Schellin et al.

FOREIGN PATENT DOCUMENTS

AU	2012200178	B2	7/2013
CA	2458946	A1	3/2003
CA	2477181	A1	4/2004
CA	2512960	A1	1/2006
CA	2514274	A1	1/2006
CA	2639177	A1	2/2009
CN	2488482	Y	5/2002
CN	1424891	A	6/2003
CN	1523725	A	8/2004
CN	1634601	A	7/2005
CN	2716900	Y	8/2005
CN	2738962	Y	11/2005
CN	1726874	A	2/2006
CN	1868411	A	11/2006
CN	1915180	A	2/2007
CN	1960679	A	5/2007
CN	101011286	A	8/2007
CN	101095621	A	1/2008
CN	101541251	A	9/2009
CN	101675898	A	3/2010
CN	101683280	A	3/2010
CN	102188270	A	9/2011
CN	101534723	B	1/2012
CN	101023879	B	3/2013
CN	101401736	B	6/2013
DE	273689	C	5/1914
DE	1775926	A	1/1972
DE	3036217	A1	4/1982
DE	3212828	A1	11/1982
DE	3210466	A1	9/1983
DE	3709067	A1	9/1988
DE	9412228	U	9/1994
DE	19509116	A1	9/1996
DE	19851291	A1	1/2000
DE	19924311	A1	11/2000
DE	69328576	T2	1/2001
DE	20016423	U1	2/2001
DE	10052679	A1	5/2001
DE	20112837	U1	10/2001
DE	20121753	U1	4/2003
DE	10314072	A1	10/2004
DE	202007003114	U1	6/2007
EP	0000756	A1	2/1979
EP	0122046	A1	10/1984
EP	0070230	B1	10/1985
EP	0156774	A2	10/1985
EP	0033548	B1	5/1986
EP	0077262	B1	8/1986
EP	0129442	B1	11/1987
EP	0276104	A2	7/1988
EP	0379721	B1	8/1990
EP	0178940	B1	1/1991
EP	0178941	B1	1/1991
EP	0169044	B1	6/1991
EP	0248844	B1	1/1993
EP	0539762	A1	5/1993
EP	0545029	A1	6/1993
EP	0277959	B1	10/1993
EP	0591946	A1	10/1993
EP	0233940	B1	11/1993
EP	0261230	B1	11/1993
EP	0639349	A2	2/1994
EP	0324636	B1	3/1994
EP	0593920	A1	4/1994
EP	0594148	A1	4/1994
EP	0427949	B1	6/1994
EP	0523174	B1	6/1994
EP	0600182	A2	6/1994
EP	0310431	B1	11/1994
EP	0375302	B1	11/1994
EP	0376562	B1	11/1994
EP	0630612	A1	12/1994
EP	0634144	A1	1/1995
EP	0646356	A2	4/1995
EP	0646357	A1	4/1995
EP	0505036	B1	5/1995
EP	0653189	A2	5/1995

(56) **References Cited**

FOREIGN PATENT DOCUMENTS

EP	0669104	A1	8/1995
EP	0387980	B1	10/1995
EP	0511470	B1	10/1995
EP	0674876	A2	10/1995
EP	0679367	A2	11/1995
EP	0392547	B1	12/1995
EP	0685204	A1	12/1995
EP	0364216	B1	1/1996
EP	0699418	A1	3/1996
EP	0702937	A1	3/1996
EP	0488768	B1	4/1996
EP	0705571	A1	4/1996
EP	0711611	A2	5/1996
EP	0484677	B2	6/1996
EP	0541987	B1	7/1996
EP	0667119	B1	7/1996
EP	0737446	A1	10/1996
EP	0748614	A1	12/1996
EP	0708618	B1	3/1997
EP	0770355	A1	5/1997
EP	0503662	B1	6/1997
EP	0447121	B1	7/1997
EP	0621009	B1	7/1997
EP	0625077	B1	7/1997
EP	0633749	B1	8/1997
EP	0710090	B1	8/1997
EP	0578425	B1	9/1997
EP	0625335	B1	11/1997
EP	0552423	B1	1/1998
EP	0592244	B1	1/1998
EP	0648476	B1	1/1998
EP	0649290	B1	3/1998
EP	0598618	B1	9/1998
EP	0676173	B1	9/1998
EP	0678007	B1	9/1998
EP	0869104	A1	10/1998
EP	0603472	B1	11/1998
EP	0605351	B1	11/1998
EP	0878169	A1	11/1998
EP	0879742	A1	11/1998
EP	0695144	B1	12/1998
EP	0722296	B1	12/1998
EP	0760230	B1	2/1999
EP	0623316	B1	3/1999
EP	0650701	B1	3/1999
EP	0537572	B1	6/1999
EP	0923907	A1	6/1999
EP	0640317	A1	9/1999
EP	0843906	B1	3/2000
EP	0552050	B1	5/2000
EP	0833592	B1	5/2000
EP	0832605	B1	6/2000
EP	0830094	B1	9/2000
EP	1034747	A1	9/2000
EP	1034748	A1	9/2000
EP	0694290	B1	11/2000
EP	1050278	A1	11/2000
EP	1053719	A1	11/2000
EP	1053720	A1	11/2000
EP	1055399	A1	11/2000
EP	1055400	A1	11/2000
EP	1058177	A1	12/2000
EP	1080694	A1	3/2001
EP	1090592	A1	4/2001
EP	1095627	A1	5/2001
EP	1256318	B1	5/2001
EP	0806914	B1	9/2001
EP	0768840	B1	12/2001
EP	0908152	B1	1/2002
EP	0717959	B1	2/2002
EP	0872213	B1	5/2002
EP	0862386	B1	6/2002
EP	0949886	B1	9/2002
EP	1238634	A2	9/2002
EP	0858295	B1	12/2002
EP	0656188	B1	1/2003
EP	0717960	B1	2/2003
EP	1284120	A1	2/2003
EP	1287788	A1	3/2003
EP	0717966	B1	4/2003
EP	0869742	B1	5/2003
EP	0829235	B1	6/2003
EP	0887046	B1	7/2003
EP	1323384	A2	7/2003
EP	0852480	B1	8/2003
EP	0891154	B1	9/2003
EP	0813843	B1	10/2003
EP	0873089	B1	10/2003
EP	0856326	B1	11/2003
EP	1374788	A1	1/2004
EP	0741996	B1	2/2004
EP	0814712	B1	2/2004
EP	1402837	A1	3/2004
EP	0705570	B1	4/2004
EP	0959784	B1	4/2004
EP	1407719	A2	4/2004
EP	1086713	B1	5/2004
EP	0996378	B1	6/2004
EP	1426012	A1	6/2004
EP	0833593	B2	7/2004
EP	1442694	A1	8/2004
EP	0888749	B1	9/2004
EP	0959786	B1	9/2004
EP	1459695	A1	9/2004
EP	1254636	B1	10/2004
EP	1473819	A1	11/2004
EP	1477119	A1	11/2004
EP	1479345	A1	11/2004
EP	1479347	A1	11/2004
EP	1479348	A1	11/2004
EP	0754437	B2	12/2004
EP	1025807	B1	12/2004
EP	1001710	B1	1/2005
EP	1496805	A2	1/2005
EP	1520521	A1	4/2005
EP	1520522	A1	4/2005
EP	1520523	A1	4/2005
EP	1520525	A1	4/2005
EP	1522264	A1	4/2005
EP	1523942	A2	4/2005
EP	1550408	A1	7/2005
EP	1557129	A1	7/2005
EP	1064883	B1	8/2005
EP	1067876	B1	8/2005
EP	0870473	B1	9/2005
EP	1157666	B1	9/2005
EP	0880338	B1	10/2005
EP	1158917	B1	11/2005
EP	1344498	B1	11/2005
EP	0906764	B1	12/2005
EP	1330989	B1	12/2005
EP	0771176	B2	1/2006
EP	1621138	A2	2/2006
EP	1621139	A2	2/2006
EP	1621141	A2	2/2006
EP	1621145	A2	2/2006
EP	1621151	A2	2/2006
EP	1034746	B1	3/2006
EP	1201196	B1	3/2006
EP	1632191	A2	3/2006
EP	1647231	A1	4/2006
EP	1065981	B1	5/2006
EP	1082944	B1	5/2006
EP	1230899	B1	5/2006
EP	1652481	A2	5/2006
EP	1382303	B1	6/2006
EP	1253866	B1	7/2006
EP	1032318	B1	8/2006
EP	1045672	B1	8/2006
EP	1617768	B1	8/2006
EP	1693015	A2	8/2006
EP	1400214	B1	9/2006
EP	1702567	A2	9/2006
EP	1129665	B1	11/2006

(56) **References Cited**

FOREIGN PATENT DOCUMENTS

EP	1400206	B1	11/2006
EP	1721568	A1	11/2006
EP	1256317	B1	12/2006
EP	1285633	B1	12/2006
EP	1728473	A1	12/2006
EP	1728475	A2	12/2006
EP	1736105	A1	12/2006
EP	1011494	B1	1/2007
EP	1479346	B1	1/2007
EP	1484024	B1	1/2007
EP	1749485	A1	2/2007
EP	1754445	A2	2/2007
EP	1759812	A1	3/2007
EP	1767157	A1	3/2007
EP	1767163	A1	3/2007
EP	1769756	A1	4/2007
EP	1769758	A1	4/2007
EP	1581128	B1	5/2007
EP	1780825	A1	5/2007
EP	1785097	A2	5/2007
EP	1790293	A2	5/2007
EP	1790294	A1	5/2007
EP	1563793	B1	6/2007
EP	1800610	A1	6/2007
EP	1300117	B1	8/2007
EP	1813199	A1	8/2007
EP	1813200	A2	8/2007
EP	1813201	A1	8/2007
EP	1813202	A1	8/2007
EP	1813203	A2	8/2007
EP	1813207	A1	8/2007
EP	1813209	A1	8/2007
EP	1815950	A1	8/2007
EP	1330991	B1	9/2007
EP	1806103	B1	9/2007
EP	1837041	A1	9/2007
EP	0922435	B1	10/2007
EP	1487359	B1	10/2007
EP	1599146	B1	10/2007
EP	1839596	A1	10/2007
EP	2110083	A2	10/2007
EP	1679096	B1	11/2007
EP	1857057	A2	11/2007
EP	1402821	B1	12/2007
EP	1872727	A1	1/2008
EP	1550410	B1	2/2008
EP	1671593	B1	2/2008
EP	1897502	A1	3/2008
EP	1611856	B1	4/2008
EP	1908417	A2	4/2008
EP	1330201	B1	6/2008
EP	1702568	B1	7/2008
EP	1943955	A2	7/2008
EP	1943957	A2	7/2008
EP	1943959	A1	7/2008
EP	1943962	A2	7/2008
EP	1943964	A1	7/2008
EP	1943976	A2	7/2008
EP	1593337	B1	8/2008
EP	1970014	A1	9/2008
EP	1974678	A2	10/2008
EP	1980213	A2	10/2008
EP	1759645	B1	11/2008
EP	1987780	A2	11/2008
EP	1990014	A2	11/2008
EP	1552795	B1	12/2008
EP	1693008	B1	12/2008
EP	1759640	B1	12/2008
EP	1997439	A2	12/2008
EP	2000102	A2	12/2008
EP	2005894	A2	12/2008
EP	2005901	A1	12/2008
EP	2008595	A2	12/2008
EP	1736104	B1	3/2009
EP	1749486	B1	3/2009
EP	1782743	B1	3/2009
EP	2039302	A2	3/2009
EP	2039308	A2	3/2009
EP	2039316	A2	3/2009
EP	1721576	B1	4/2009
EP	1733686	B1	4/2009
EP	2044890	A1	4/2009
EP	2055243	A2	5/2009
EP	1550409	B1	6/2009
EP	1550413	B1	6/2009
EP	1719461	B1	6/2009
EP	1834594	B1	6/2009
EP	1709911	B1	7/2009
EP	2077093	A2	7/2009
EP	1745748	B1	8/2009
EP	2090231	A1	8/2009
EP	2090237	A1	8/2009
EP	2090241	A1	8/2009
EP	2090244	B1	8/2009
EP	2090245	A1	8/2009
EP	2090254	A1	8/2009
EP	2090256	A2	8/2009
EP	2095777	A2	9/2009
EP	2098170	A2	9/2009
EP	2110082	A1	10/2009
EP	2110084	A2	10/2009
EP	2111803	A2	10/2009
EP	1762190	B8	11/2009
EP	1813208	B1	11/2009
EP	1908426	B1	11/2009
EP	2116195	A1	11/2009
EP	2116197	A2	11/2009
EP	1607050	B1	12/2009
EP	1815804	B1	12/2009
EP	1875870	B1	12/2009
EP	1878395	B1	1/2010
EP	2151204	A1	2/2010
EP	1813211	B1	3/2010
EP	2165656	A2	3/2010
EP	2165660	A2	3/2010
EP	1566150	B1	4/2010
EP	1813206	B1	4/2010
EP	1769754	B1	6/2010
EP	1854416	B1	6/2010
EP	1911408	B1	6/2010
EP	2198787	A1	6/2010
EP	1647286	B1	9/2010
EP	1825821	B1	9/2010
EP	1535565	B1	10/2010
EP	1702570	B1	10/2010
EP	1785098	B1	10/2010
EP	2005896	B1	10/2010
EP	2030578	B1	11/2010
EP	2036505	B1	11/2010
EP	2245993	A2	11/2010
EP	1627605	B1	12/2010
EP	2027811	B1	12/2010
EP	2130498	B1	12/2010
EP	2263568	A2	12/2010
EP	1994890	B1	1/2011
EP	2005900	B1	1/2011
EP	2286738	A2	2/2011
EP	1690502	B1	3/2011
EP	2292153	A1	3/2011
EP	1769755	B1	4/2011
EP	2090240	B1	4/2011
EP	2305135	A1	4/2011
EP	2308388	A1	4/2011
EP	2314254	A2	4/2011
EP	2316345	A1	5/2011
EP	2316366	A2	5/2011
EP	1813205	B1	6/2011
EP	2090243	B1	6/2011
EP	2329773	A1	6/2011
EP	2090239	B1	7/2011
EP	2340771	A2	7/2011
EP	2353545	A1	8/2011
EP	2361562	A1	8/2011
EP	1836986	B1	11/2011

(56) **References Cited**

FOREIGN PATENT DOCUMENTS

EP	1908414	B1	11/2011
EP	2153781	B1	11/2011
EP	2389928	A2	11/2011
EP	1847225	B1	12/2011
EP	2399538	A2	12/2011
EP	1785102	B1	1/2012
EP	2090253	B1	3/2012
EP	2430986	A2	3/2012
EP	2446834	A1	5/2012
EP	2455007	A2	5/2012
EP	2457519	A1	5/2012
EP	2462878	A1	6/2012
EP	2462880	A2	6/2012
EP	1813204	B1	7/2012
EP	2189121	B1	7/2012
EP	2005895	B1	8/2012
EP	2090248	B1	8/2012
EP	2481359	A1	8/2012
EP	1935351	B1	9/2012
EP	2497431	A1	9/2012
EP	1616549	B1	10/2012
EP	2030579	B1	10/2012
EP	2090252	B1	10/2012
EP	2517637	A1	10/2012
EP	2517638	A1	10/2012
EP	2517642	A2	10/2012
EP	2517645	A2	10/2012
EP	2517649	A2	10/2012
EP	2517651	A2	10/2012
EP	1884206	B1	3/2013
EP	2090238	B1	4/2013
EP	1982657	B1	7/2013
EP	2614782	A2	7/2013
EP	2090234	B1	9/2013
EP	2633830	A1	9/2013
EP	2644124	A1	10/2013
EP	2644209	A2	10/2013
EP	2649948	A1	10/2013
EP	2700367	A1	2/2014
EP	1772105	B1	5/2014
EP	2446835	B1	1/2015
ES	2396594	T3	2/2013
FR	459743	A	11/1913
FR	999646	A	2/1952
FR	1112936	A	3/1956
FR	2598905	A1	11/1987
FR	2765794	A	1/1999
FR	2815842		10/2000
GB	939929	A	10/1963
GB	1210522	A	10/1970
GB	1217159	A	12/1970
GB	1339394	A	12/1973
GB	2024012	A	1/1980
GB	2109241	A	6/1983
GB	2272159	A	5/1994
GB	2284242	A	5/1995
GB	2286435	A	8/1995
GB	2336214	A	10/1999
GB	2425903	A	11/2006
GB	2423199	B	5/2009
GR	93100110	A	11/1993
JP	50-33988	U	4/1975
JP	S 58500053	A	1/1983
JP	S 59-174920	A	3/1984
JP	60-100955	A	6/1985
JP	61-98249	A	5/1986
JP	S 61502036	A	9/1986
JP	S 62-170011	U	10/1987
JP	S 63-59764	A	3/1988
JP	S 63-147449	A	6/1988
JP	63-203149		8/1988
JP	H 02-279149	A	11/1990
JP	3-12126	A	1/1991
JP	H 04-215747	A	8/1992
JP	H 05-084252	A	4/1993
JP	H 05-123325	A	5/1993
JP	5-212039	A	8/1993
JP	6007357	A	1/1994
JP	H 6-30945	A	2/1994
JP	H 06-54857	A	3/1994
JP	H 06-26812	U	4/1994
JP	H 6-121798	A	5/1994
JP	H 6-125913	A	5/1994
JP	H 06-197901	A	7/1994
JP	H 06-237937	A	8/1994
JP	H 06-327684	A	11/1994
JP	7-31623	A	2/1995
JP	7051273	A	2/1995
JP	H 7-47070	A	2/1995
JP	7-124166	A	5/1995
JP	H 7-163574	A	6/1995
JP	07-171163		7/1995
JP	7-255735	A	10/1995
JP	H 7-285089	A	10/1995
JP	8-33642	A	2/1996
JP	8033641	A	2/1996
JP	8-164141	A	6/1996
JP	H 08-182684	A	7/1996
JP	H 08-507708	A	8/1996
JP	8229050	A	9/1996
JP	H 8-336540	A	12/1996
JP	H 08-336544	A	12/1996
JP	H 09-501081	A	2/1997
JP	H 09-501577	A	2/1997
JP	H 09-164144	A	6/1997
JP	H 10-113352	A	5/1998
JP	H 10-118090	A	5/1998
JP	10-512469	A	12/1998
JP	2000-14632	A	1/2000
JP	2000033071	A	2/2000
JP	2000-112002	A	4/2000
JP	2000-166932	A	6/2000
JP	2000171730	A	6/2000
JP	2000287987	A	10/2000
JP	2000325303	A	11/2000
JP	2001-046384	A	2/2001
JP	2001-87272	A	4/2001
JP	2001-514541	A	9/2001
JP	2001-276091	A	10/2001
JP	2001-517473	A	10/2001
JP	2001286477	A	10/2001
JP	2002-51974	A	2/2002
JP	2002-085415	A	3/2002
JP	2002143078	A	5/2002
JP	2002-204801	A	7/2002
JP	2002-528161	A	9/2002
JP	2002-314298	A	10/2002
JP	2002369820	A	12/2002
JP	2003-500153	A	1/2003
JP	2003000603	A	1/2003
JP	2003-504104	A	2/2003
JP	2003-135473	A	5/2003
JP	2003-148903	A	5/2003
JP	2003-164066	A	6/2003
JP	2003-521301	A	7/2003
JP	2003-523251	A	8/2003
JP	2003-523254	A	8/2003
JP	2004-147701	A	5/2004
JP	2004-162035	A	6/2004
JP	2004-229976	A	8/2004
JP	2004-524076	A	8/2004
JP	2004-531280	A	10/2004
JP	2004-532084	A	10/2004
JP	2004-532676	A	10/2004
JP	2004-329624	A	11/2004
JP	2004-337617	A	12/2004
JP	2004-344663		12/2004
JP	2005-028147	A	2/2005
JP	2005-28148	A	2/2005
JP	2005-028149	A	2/2005
JP	2005-505309	A	2/2005
JP	2005505322	T	2/2005
JP	2005-80702	A	3/2005
JP	2005-103280	A	4/2005

(56) **References Cited**

FOREIGN PATENT DOCUMENTS

JP	2005-103281	A	4/2005
JP	2005-511131	A	4/2005
JP	2005103293	A	4/2005
JP	2005131163	A	5/2005
JP	2005131164	A	5/2005
JP	2005131173	A	5/2005
JP	2005131211	A	5/2005
JP	2005131212	A	5/2005
JP	2005-137919	A	6/2005
JP	2005-144183	A	6/2005
JP	2005-516714	A	6/2005
JP	2005137423	A	6/2005
JP	2005152416	A	6/2005
JP	2005-521109	A	7/2005
JP	2005-523105	A	8/2005
JP	4461008	B2	8/2005
JP	2005524474	A	8/2005
JP	2005-296412	A	10/2005
JP	2005-328882	A	12/2005
JP	2005-335432	A	12/2005
JP	2005-342267	A	12/2005
JP	2006-034975	A	2/2006
JP	2006-34977	A	2/2006
JP	2006-034978	A	2/2006
JP	2006-034980	A	2/2006
JP	2006-506106	A	2/2006
JP	2006-510879	A	3/2006
JP	2006-187649	A	7/2006
JP	2006-218297	A	8/2006
JP	2006-223872	A	8/2006
JP	2006-281405	A	10/2006
JP	2006-334417	A	12/2006
JP	2006-346445	A	12/2006
JP	2007-61628	A	3/2007
JP	2007-098130	A	4/2007
JP	2007-105481	A	4/2007
JP	3906843	B2	4/2007
JP	2007-117725	A	5/2007
JP	2007-130471	A	5/2007
JP	2007-222615	A	6/2007
JP	3934161	B2	6/2007
JP	2007-203051	A	8/2007
JP	2007-203057	A	8/2007
JP	2007-524435	A	8/2007
JP	2007-229448	A	9/2007
JP	4001860	B2	10/2007
JP	2007-325922	A	12/2007
JP	2008-68073	A	3/2008
JP	2008-206967	A	9/2008
JP	2008-212637	A	9/2008
JP	2008-212638	A	9/2008
JP	2008-259860	A	10/2008
JP	2008-264535	A	11/2008
JP	2008-283459	A	11/2008
JP	2009-502351	A	1/2009
JP	2009-506799	A	2/2009
JP	2009-507526	A	2/2009
JP	2009-72599	A	4/2009
JP	2009-090113	A	4/2009
JP	2009-106752	A	5/2009
JP	2009-189836	A	8/2009
JP	2009-189838	A	8/2009
JP	2009-539420	A	11/2009
JP	2010-505524	A	2/2010
JP	2010-098844	A	4/2010
JP	4549018	B2	9/2010
JP	4783373	B2	7/2011
JP	5140421	B2	2/2013
JP	5162595	B2	3/2013
JP	2013-128791	A	7/2013
JP	5333899	B2	11/2013
KR	20110003229	A	1/2011
RU	1814161	A1	5/1993
RU	2008830	C1	3/1994
RU	2052979	C1	1/1996
RU	2098025	C1	12/1997
RU	1377053	A1	2/1998
RU	2141279	C1	11/1999
RU	2144791	C1	1/2000
RU	2181566	C2	4/2002
RU	2187249	C2	8/2002
RU	2189091	C2	9/2002
RU	32984	U1	10/2003
RU	2225170	C2	3/2004
RU	42750	U1	12/2004
RU	61114	U1	2/2007
SU	189517	A	1/1967
SU	328636	A	9/1972
SU	674747	A1	7/1979
SU	886900	A1	12/1981
SU	1009439	A	4/1983
SU	1022703	A1	6/1983
SU	1333319	A2	8/1987
SU	1509051	A1	9/1989
SU	1561964	A1	5/1990
SU	1708312	A1	1/1992
SU	1722476	A1	3/1992
SU	1752361	A1	8/1992
WO	WO 82/02824	A1	9/1982
WO	WO 86/02254	A1	4/1986
WO	WO 91/15157	A1	10/1991
WO	WO 92/20295	A1	11/1992
WO	WO 92/21300	A1	12/1992
WO	WO 93/08755	A1	5/1993
WO	WO 93/13718	A1	7/1993
WO	WO 93/14690	A1	8/1993
WO	WO 93/15648	A1	8/1993
WO	WO 93/15850	A1	8/1993
WO	WO 93/19681	A1	10/1993
WO	WO 94/00060	A1	1/1994
WO	WO 94/11057	A1	5/1994
WO	WO 94/12108	A1	6/1994
WO	WO 94/18893	A1	9/1994
WO	WO 94/20030	A1	9/1994
WO	WO 94/22378	A1	10/1994
WO	WO 94/23659	A1	10/1994
WO	WO 94/24943	A1	11/1994
WO	WO 94/24947	A1	11/1994
WO	WO 95/02369	A1	1/1995
WO	WO 95/03743	A1	2/1995
WO	WO 95/06817	A1	3/1995
WO	WO 95/09576	A1	4/1995
WO	WO 95/09577	A1	4/1995
WO	WO 95/14436	A1	6/1995
WO	WO 95/17855	A1	7/1995
WO	WO 95/18383	A1	7/1995
WO	WO 95/18572	A1	7/1995
WO	WO 95/19739	A1	7/1995
WO	WO 95/20360	A1	8/1995
WO	WO 95/23557	A1	9/1995
WO	WO 95/24865	A1	9/1995
WO	WO 95/25471	A3	9/1995
WO	WO 95/26562	A1	10/1995
WO	WO 95/29639	A1	11/1995
WO	WO 96/04858	A1	2/1996
WO	WO 96/18344	A2	6/1996
WO	WO 96/19151	A1	6/1996
WO	WO 96/19152	A1	6/1996
WO	WO 96/20652	A1	7/1996
WO	WO 96/21119	A1	7/1996
WO	WO 96/22055	A1	7/1996
WO	WO 96/23448	A1	8/1996
WO	WO 96/24301	A1	8/1996
WO	WO 96/27337	A1	9/1996
WO	WO 96/31155	A1	10/1996
WO	WO 96/35464	A1	11/1996
WO	WO 96/39085	A1	12/1996
WO	WO 96/39086	A1	12/1996
WO	WO 96/39087	A1	12/1996
WO	WO 96/39088	A1	12/1996
WO	WO 96/39089	A1	12/1996
WO	WO 97/00646	A1	1/1997
WO	WO 97/00647	A1	1/1997
WO	WO 97/01989	A1	1/1997

(56) **References Cited**

FOREIGN PATENT DOCUMENTS

WO	WO 97/06582	A1	2/1997
WO	WO 97/10763	A1	3/1997
WO	WO 97/10764	A1	3/1997
WO	WO 97/11648	A2	4/1997
WO	WO 97/11649	A1	4/1997
WO	WO 97/15237	A1	5/1997
WO	WO 97/24073	A1	7/1997
WO	WO 97/24993	A1	7/1997
WO	WO 97/30644	A1	8/1997
WO	WO 97/34533	A1	9/1997
WO	WO 97/37598	A1	10/1997
WO	WO 97/39688	A2	10/1997
WO	WO 98/01080	A1	1/1998
WO	WO 98/17180	A1	4/1998
WO	WO 98/22154	A2	5/1998
WO	WO 98/27880	A1	7/1998
WO	WO 98/30153	A1	7/1998
WO	WO 98/47436	A1	10/1998
WO	WO 98/58589	A1	12/1998
WO	WO 99/02090	A1	1/1999
WO	WO 99/03407	A1	1/1999
WO	WO 99/03408	A1	1/1999
WO	WO 99/03409	A1	1/1999
WO	WO 99/12483	A1	3/1999
WO	WO 99/12487	A1	3/1999
WO	WO 99/12488	A1	3/1999
WO	WO 99/15086	A1	4/1999
WO	WO 99/15091	A1	4/1999
WO	WO 99/23933	A2	5/1999
WO	WO 99/23959	A1	5/1999
WO	WO 99/25261	A1	5/1999
WO	WO 99/29244	A1	6/1999
WO	WO 99/34744	A1	7/1999
WO	WO 99/45849	A1	9/1999
WO	WO 99/48430	A1	9/1999
WO	WO 99/51158	A1	10/1999
WO	WO 00/24322	A1	5/2000
WO	WO 00/24330	A1	5/2000
WO	WO 00/41638	A1	7/2000
WO	WO 00/48506	A1	8/2000
WO	WO 00/53112	A2	9/2000
WO	WO 00/54653	A1	9/2000
WO	WO 00/57796	A1	10/2000
WO	WO 00/64365	A1	11/2000
WO	WO 00/72762	A1	12/2000
WO	WO 00/72765	A1	12/2000
WO	WO 00/78222	A1	12/2000
WO	WO 01/03587	A1	1/2001
WO	WO 01/05702	A1	1/2001
WO	WO 01/10482	A1	2/2001
WO	WO 01/35845	A1	5/2001
WO	WO 01/54594	A1	8/2001
WO	WO 01/58371	A1	8/2001
WO	WO 01/62158	A2	8/2001
WO	WO 01/62161	A1	8/2001
WO	WO 01/62162	A1	8/2001
WO	WO 01/62163	A1	8/2001
WO	WO 01/62164	A2	8/2001
WO	WO 01/62169	A2	8/2001
WO	WO 01/78605	A2	10/2001
WO	WO 01/80757	A2	11/2001
WO	WO 01/91646	A1	12/2001
WO	WO 02/00121	A1	1/2002
WO	WO 02/07608	A2	1/2002
WO	WO 02/07618	A1	1/2002
WO	WO 02/17799	A1	3/2002
WO	WO 02/19920	A1	3/2002
WO	WO 02/19932	A1	3/2002
WO	WO 02/26143	A1	4/2002
WO	WO 02/30297	A2	4/2002
WO	WO 02/32322	A2	4/2002
WO	WO 02/36028	A1	5/2002
WO	WO 02/43571	A2	6/2002
WO	WO 02/058568	A1	8/2002
WO	WO 02/060328	A1	8/2002
WO	WO 02/065933	A2	8/2002
WO	WO 02/067785	A2	9/2002
WO	WO 02/080781	A2	10/2002
WO	WO 02/085218	A2	10/2002
WO	WO 02/087586	A1	11/2002
WO	WO 02/098302	A1	12/2002
WO	WO 03/000138	A2	1/2003
WO	WO 03/001329	A2	1/2003
WO	WO 03/001986	A2	1/2003
WO	WO 03/013363	A1	2/2003
WO	WO 03/013372	A2	2/2003
WO	WO 03/015604	A2	2/2003
WO	WO 03/020106	A2	3/2003
WO	WO 03/020139	A2	3/2003
WO	WO 03/024339	A1	3/2003
WO	WO 03/079909	A3	3/2003
WO	WO 03/030743	A2	4/2003
WO	WO 03/037193	A1	5/2003
WO	WO 03/047436	A3	6/2003
WO	WO 03/055402	A1	7/2003
WO	WO 03/057048	A1	7/2003
WO	WO 03/057058	A1	7/2003
WO	WO 03/063694	A1	8/2003
WO	WO 03/077769	A1	9/2003
WO	WO 03/079911	A1	10/2003
WO	WO 03/082126	A1	10/2003
WO	WO 03/086206	A1	10/2003
WO	WO 03/088845	A2	10/2003
WO	WO 03/090630	A2	11/2003
WO	WO 03/094743	A1	11/2003
WO	WO 03/094745	A1	11/2003
WO	WO 03/094746	A1	11/2003
WO	WO 03/094747	A1	11/2003
WO	WO 03/101313	A1	12/2003
WO	WO 03/105698	A2	12/2003
WO	WO 03/105702	A2	12/2003
WO	WO 2004/006980	A2	1/2004
WO	WO 2004/011037	A2	2/2004
WO	WO 2004/014238	A2	2/2004
WO	WO 2004/019769	A1	3/2004
WO	WO 2004/019803	A1	3/2004
WO	WO 2004/021868	A2	3/2004
WO	WO 2004/028585	A2	4/2004
WO	WO 2004/030554	A1	4/2004
WO	WO 2004/032754	A2	4/2004
WO	WO 2004/032760	A2	4/2004
WO	WO 2004/032762	A1	4/2004
WO	WO 2004/032763	A2	4/2004
WO	WO 2004/032783	A1	4/2004
WO	WO 2004/034875	A2	4/2004
WO	WO 2004/047626	A1	6/2004
WO	WO 2004/047653	A2	6/2004
WO	WO 2004/049956	A2	6/2004
WO	WO 2004/050971	A2	6/2004
WO	WO 2004/052426	A2	6/2004
WO	WO 2004/056276	A1	7/2004
WO	WO 2004/056277	A1	7/2004
WO	WO 2004/062516	A1	7/2004
WO	WO 2004/064600	A2	8/2004
WO	WO 2004/078050	A2	9/2004
WO	WO 2004/078051	A2	9/2004
WO	WO 2004/078236	A2	9/2004
WO	WO 2004/086987	A1	10/2004
WO	WO 2004/096015	A2	11/2004
WO	WO 2004/096057	A2	11/2004
WO	WO 2004/103157	A2	12/2004
WO	WO 2004/105593	A1	12/2004
WO	WO 2004/105621	A1	12/2004
WO	WO 2004/112618	A2	12/2004
WO	WO 2004/112652	A2	12/2004
WO	WO 2005/027983	A2	3/2005
WO	WO 2005/037329	A2	4/2005
WO	WO 2005/042041	A1	5/2005
WO	WO 2005/044078	A2	5/2005
WO	WO 2005/055846	A1	6/2005
WO	WO 2005/072634	A2	8/2005
WO	WO 2005/078892	A1	8/2005
WO	WO 2005/079675	A2	9/2005
WO	WO 2005/087128	A1	9/2005

(56) **References Cited**

FOREIGN PATENT DOCUMENTS

WO	WO 2005/096954	A2	10/2005
WO	WO 2005/112806	A2	12/2005
WO	WO 2005/112808	A1	12/2005
WO	WO 2005/115251	A1	12/2005
WO	WO 2005/115253	A2	12/2005
WO	WO 2005/117735	A1	12/2005
WO	WO 2005/122936	A1	12/2005
WO	WO 2006/023486	A1	3/2006
WO	WO 2006/023578	A2	3/2006
WO	WO 2006/027014	A1	3/2006
WO	WO 2006/028314	A1	3/2006
WO	WO 2006/044490	A2	4/2006
WO	WO 2006/044581	A2	4/2006
WO	WO 2006/044810	A2	4/2006
WO	WO 2006/051252	A1	5/2006
WO	WO 2006/059067	A1	6/2006
WO	WO 2006/083748	A1	8/2006
WO	WO 2006/085389	A1	8/2006
WO	WO 2006/092563	A1	9/2006
WO	WO 2006/092565	A1	9/2006
WO	WO 2006/115958	A1	11/2006
WO	WO 2006/125940	A1	11/2006
WO	WO 2006/132992	A2	12/2006
WO	WO 2007/002180	A2	1/2007
WO	WO 2007/016290	A2	2/2007
WO	WO 2007/018898	A2	2/2007
WO	WO 2007/059233	A2	5/2007
WO	WO 2007/089603	A2	8/2007
WO	WO 2007/098220	A2	8/2007
WO	WO 2007/121579	A1	11/2007
WO	WO 2007/131110	A2	11/2007
WO	WO 2007/137304	A2	11/2007
WO	WO 2007/139734	A2	12/2007
WO	WO 2007/142625	A2	12/2007
WO	WO 2007/145825	A2	12/2007
WO	WO 2007/146987	A2	12/2007
WO	WO 2007/147439	A1	12/2007
WO	WO 2008/020964	A2	2/2008
WO	WO 2008/021969	A2	2/2008
WO	WO 2008/039249	A1	4/2008
WO	WO 2008/039270	A1	4/2008
WO	WO 2008/045383	A2	4/2008
WO	WO 2008/057281	A2	5/2008
WO	WO 2008/070763	A1	6/2008
WO	WO 2008/089404	A2	7/2008
WO	WO 2008/101080	A1	8/2008
WO	WO 2008/101228	A2	8/2008
WO	WO 2008/103797	A2	8/2008
WO	WO 2008/109125	A1	9/2008
WO	WO 2008/124748	A1	10/2008
WO	WO 2009/022614	A1	2/2009
WO	WO 2009/023851	A1	2/2009
WO	WO 2009/033057	A2	3/2009
WO	WO 2009/039506	A1	3/2009
WO	WO 2009/046394	A1	4/2009
WO	WO 2009/067649	A2	5/2009
WO	WO 2009/091497	A2	7/2009
WO	WO 2009/120944	A2	10/2009
WO	WO 2009/137761	A2	11/2009
WO	WO 2009/143092	A1	11/2009
WO	WO 2009/143331	A1	11/2009
WO	WO 2009/150650	A2	12/2009
WO	WO 2010/028332	A2	3/2010
WO	WO 2010/030434	A1	3/2010
WO	WO 2010/050771	A2	5/2010
WO	WO 2010/054404	A1	5/2010
WO	WO 2010/063795	A1	6/2010
WO	WO 2010/093333	A1	8/2010
WO	WO 2010/098871	A2	9/2010
WO	WO 2011/008672	A2	1/2011
WO	WO 2011/044343	A2	4/2011
WO	WO 2011/060311	A2	5/2011
WO	WO 2011/127137	A1	10/2011
WO	WO 2012/006306	A2	1/2012
WO	WO 2012/021671	A1	2/2012
WO	WO 2012/040438	A1	3/2012
WO	WO 2012/044551	A1	4/2012
WO	WO 2012/044554	A1	4/2012
WO	WO 2012/044597	A1	4/2012
WO	WO 2012/044606	A2	4/2012
WO	WO 2012/044820	A1	4/2012
WO	WO 2012/044844	A2	4/2012
WO	WO 2012/044853	A1	4/2012
WO	WO 2012/058213	A2	5/2012
WO	WO 2012/068156	A2	5/2012
WO	WO 2012/148667	A2	11/2012
WO	WO 2012/148703	A2	11/2012
WO	WO 2013/043707	A2	3/2013
WO	WO 2013/043717	A1	3/2013
WO	WO 2013/043721	A2	3/2013
WO	WO 2013/148762	A2	10/2013
WO	WO 2013/167427	A1	11/2013

OTHER PUBLICATIONS

International Preliminary Report on Patentability for PCT/US2013/047060, dated Dec. 31, 2014 (7 pages).

Disclosed Anonymously, "Motor-Driven Surgical Stapler Improvements," Research Disclosure Database No. 526041, Published: Feb. 2008.

C.C. Thompson et al., "Peroral Endoscopic Reduction of Dilated Gastrojejunal Anastomosis After Roux-en-Y Gastric Bypass: A Possible New Option for Patients with Weight Regain," Surg Endosc (2006) vol. 20, pp. 1744-1748.

B.R. Coolman, DVM, MS et al., "Comparison of Skin Staples With Sutures for Anastomosis of the Small Intestine in Dogs," Abstract; http://www.blackwell-synergy.com/doi/abs/10.1053/jvet.2000.7539?cookieSet=1&journalCode=vsu which redirects to http://www3.interscience.wiley.com/journal/119040681/abstract?CRETRY=1&SRETRY=0; [online] accessed: Sep. 22, 2008 (2 pages).

The Sodem Aseptic Battery Transfer Kit, Sodem Systems, (2000), 3 pages.

"Biomedical Coatings," Fort Wayne Metals, Research Products Corporation, obtained online at www.fwmetals.com on Jun. 21, 2010 (1 page).

Van Meer et al., "A Disposable Plastic Compact Wrist for Smart Minimally Invasive Surgical Tools," LAAS/CNRS (Aug. 2005).

Breedveld et al., "A New, Easily Miniaturized Sterrable Endoscope," IEEE Engineering in Medicine and Biology Magazine (Nov./Dec. 2005).

D. Tuite, Ed., "Get the Lowdown on Ultracapacitors," Nov. 15, 2007; [online] URL: http://electronicdesign.com/Articles/Print.cfm?ArticleID=17465, accessed Jan. 15, 2008 (5 pages).

Datasheet for Panasonic TK Relays Ultra Low Profile 2 A Polarized Relay, Copyright Matsushita Electric Works, Ltd. (Known of at least as early as Aug. 17, 2010), 5 pages.

ASTM procedure D2240-00, "Standard Test Method for Rubber Property-Durometer Hardness," (Published Aug. 2000).

ASTM procedure D2240-05, "Standard Test Method for Rubber Property-Durometer Hardness," (Published Apr. 2010).

Covidien Brochure, "Endo GIA™ Reloads with Tri-Staple™ Technology," (2010), 1 page.

Covidien Brochure, "Endo GIA™ Reloads with Tri-Staple™ Technology and Endo GIA™ Ultra Universal Staplers," (2010), 2 pages.

Covidien Brochure, "Endo GIA™ Black Reload with Tri-Staple™ Technology," (2012), 2 pages.

Covidien Brochure, "Endo GIA™ Curved Tip Reload with Tri-Stapler™ Technology," (2012), 2 pages.

Covidien Brochure, "Endo GIA™ Reloads with Tri-Stapler™ Technology," (2010), 2 pages.

Covidien Brochure, "Endo GIA™ Ultra Universal Stapler," (2010), 2 pages.

Miyata et al., "Biomolecule-Sensitive Hydrogels," Advanced Drug Delivery Reviews, 54 (2002) pp. 79-98.

Jeong et al., "Thermosensitive Sol-Gel Reversible Hydrogels," Advanced Drug Delivery Reviews, 54 (2002) pp. 37-51.

(56) **References Cited**

OTHER PUBLICATIONS

Byrne et al., "Molecular Imprinting Within Hydrogels," Advanced Drug Delivery Reviews, 54 (2002) pp. 149-161.
Qiu et al., "Environment-Sensitive Hydrogels for Drug Delivery," Advanced Drug Delivery Reviews, 53 (2001) pp. 321-339.
Hoffman, "Hydrogels for Biomedical Applications," Advanced Drug Delivery Reviews, 43 (2002) pp. 3-12.
Hoffman, "Hydrogels for Biomedical Applications," Advanced Drug Delivery Reviews, 54 (2002) pp. 3-12.
Peppas, "Physiologically Responsive Hydrogels," Journal of Bioactive and Compatible Polymers, vol. 6 (Jul. 1991) pp. 241-246.
Ebara, "Carbohydrate-Derived Hydrogels and Microgels," Engineered Carbohydrate-Based Materials for Biomedical Applications: Polymers, Surfaes, Dendrimers, Nanoparticles, and Hydrogels, Edited by Ravin Narain, 2011, pp. 337-345.
Peppas, Editor "Hydrogels in Medicine and Pharmacy," vol. I, Fundamentals, CRC Press, 1986.
Matsuda, "Thermodynamics of Formation of Porous Polymeric Membrane from Solutions," Polymer Journal, vol. 23, No. 5, pp. 435-444 (1991).
Young, "Microcellular foams via phase separation," Journal of Vacuum Science & Technology A 4(3), (May/Jun. 1986).
Chen et al., "Elastomeric Biomaterials for Tissue Engineering," Progress in Polymer Science 38 (2013), pp. 584-671.
Pitt et al., "Attachment of Hyaluronan to Metallic Surfaces," J. Biomed. Mater. Res. 68A: pp. 95-106, 2004.
Schellhammer et al., "Poly-Lactic-Acid for Coating of Endovascular Stents: Preliminary Results in Canine Experimental Av-Fistulae," Mat.-wiss. u. Werkstofftech., 32, pp. 193-199 (2001).
Solorio et al., "Gelatin Microspheres Crosslinked with Genipin for Local Delivery of Growth Factors," J. Tissue Eng. Regen. Med. (2010), 4(7): pp. 514-523.
http://ninpgan.net/publications/51-100/89.pdf; 2004, Ning Pan, On Uniqueness of Fibrous Materials, Design & Nature II. Eds: Colins, M. and Brebbia, C. WIT Press, Boston, 493-504.
Covidien iDrive™ Ultra in Service Reference Card, "iDrive™ Ultra Powered Stapling Device," (4 pages).
Covidien iDrive™ Ultra Powered Stapling System ibrochure, "The Power of iDrive™ Ultra Powered Stapling System and Tri-Staple™ Technology," (23 pages).
Seils et al., Covidien Summary: Clinical Study "UCONN Biodynamics: Final Report on Results," (2 pages).
Covidien "iDrive™ Ultra Powered Stapling System, A Guide for Surgeons," (6 pages).
Covidien "iDrive™ Ultra Powered Stapling System, Cleaning and Sterilization Guide," (2 pages).
Covidien brochure "iDrive™ Ultra Powered Stapling System," (6 pages).
U.S. Appl. No. 14/559,172, filed Dec. 3, 2014.
U.S. Appl. No. 14/559,188, filed Dec. 3, 2014.
U.S. Appl. No. 14/559,224, filed Dec. 3, 2014.
U.S. Appl. No. 14/745,858, filed Jun. 22, 2015.
U.S. Appl. No. 14/755,151, filed Jun. 30, 2015.
U.S. Appl. No. 14/847,804, filed Sep. 8, 2015.
U.S. Appl. No. 14/848,591, filed Sep. 9, 2015.
U.S. Appl. No. 14/850,570, filed Sep. 10, 2015.
U.S. Appl. No. 12/031,573, filed Feb. 14, 2008.
U.S. Appl. No. 14/498,070, filed Sep. 26, 2014.
U.S. Appl. No. 14/498,087, filed Sep. 26, 2014.
U.S. Appl. No. 14/498,105, filed Sep. 26, 2014.
U.S. Appl. No. 14/498,107, filed Sep. 26, 2014.
U.S. Appl. No. 14/498,121, filed Sep. 26, 2014.
U.S. Appl. No. 14/498,145, filed Sep. 26, 2014.
U.S. Appl. No. 14/318,996, filed Jun. 30, 2014.
U.S. Appl. No. 14/319,006, filed Jun. 30, 2014.
U.S. Appl. No. 14/319,014, filed Jun. 30, 2014.
U.S. Appl. No. 14/318,991, filed Jun. 30, 2014.
U.S. Appl. No. 14/319,004, filed Jun. 30, 2014.
U.S. Appl. No. 14/319,008, filed Jun. 30, 2014.
U.S. Appl. No. 14/318,997, filed Jun. 30, 2014.
U.S. Appl. No. 14/319,002, filed Jun. 30, 2014.
U.S. Appl. No. 14/319,013, filed Jun. 30, 2014.
U.S. Appl. No. 14/319,016, filed Jun. 30, 2014.
U.S. Appl. No. 14/138,481, filed Dec. 23, 2013.
U.S. Appl. No. 14/226,142, filed Mar. 26, 2014.
U.S. Appl. No. 14/226,106, filed Mar. 26, 2014.
U.S. Appl. No. 14/226,099, filed Mar. 26, 2014.
U.S. Appl. No. 14/226,094, filed Mar. 26, 2014.
U.S. Appl. No. 14/226,117, filed Mar. 26, 2014.
U.S. Appl. No. 14/226,075, filed Mar. 26, 2014.
U.S. Appl. No. 14/226,093, filed Mar. 26, 2014.
U.S. Appl. No. 14/226,116, filed Mar. 26, 2014.
U.S. Appl. No. 14/226,071, filed Mar. 26, 2014.
U.S. Appl. No. 14/226,097, filed Mar. 26, 2014.
U.S. Appl. No. 14/226,126, filed Mar. 26, 2014.
U.S. Appl. No. 14/226,133, filed Mar. 26, 2014.
U.S. Appl. No. 14/226,081, filed Mar. 26, 2014.
U.S. Appl. No. 14/226,076, filed Mar. 26, 2014.
U.S. Appl. No. 14/226,111, filed Mar. 26, 2014.
U.S. Appl. No. 14/226,125, filed Mar. 26, 2014.
European Examination Report for Application No. 13737475.7, dated Aug. 19, 2016 (5 pages).

* cited by examiner

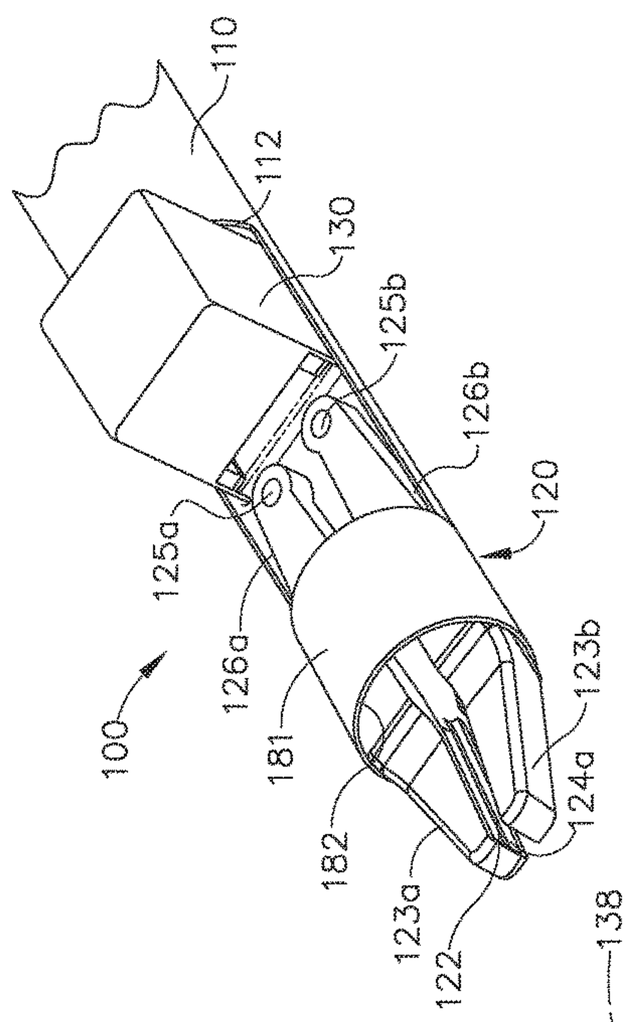
100
110
112
130
125b
126b
120
125a
126a
181
123b
124a
182
123a
122

FIG. 1

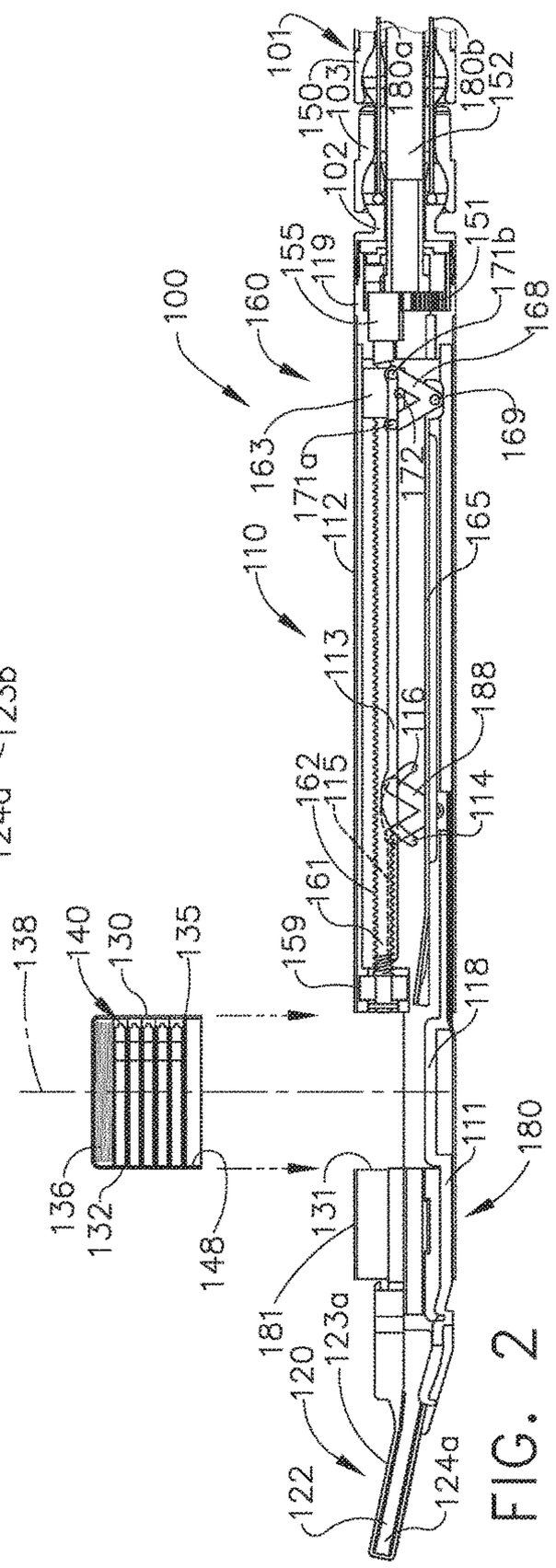
101
150
103
102
180a
180b
152
151
171b
168
155
119
160
100
163
171a
169
172
112
110
165
113
116
188
162
115
114
161
159
118
138
140
130
135
136
132
148
131
111
180
181
120
123a
122
124a

FIG. 2

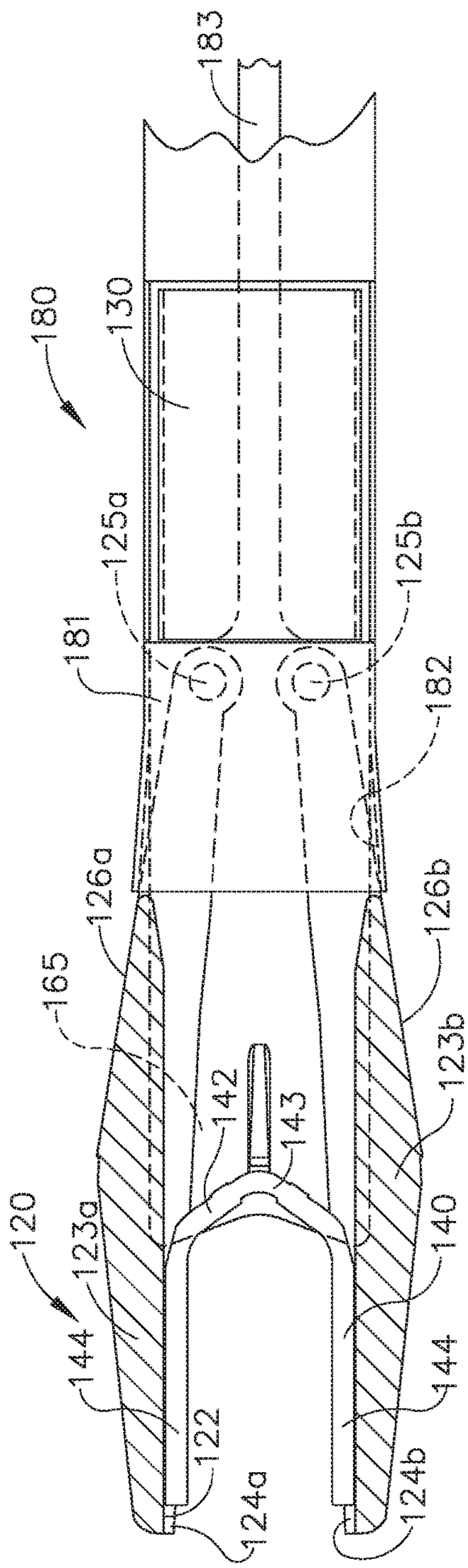
183
180
130
125a
125b
181
182
126a
126b
165
142
143
123b
120
123a
140
144
122
124a
124b

FIG. 3

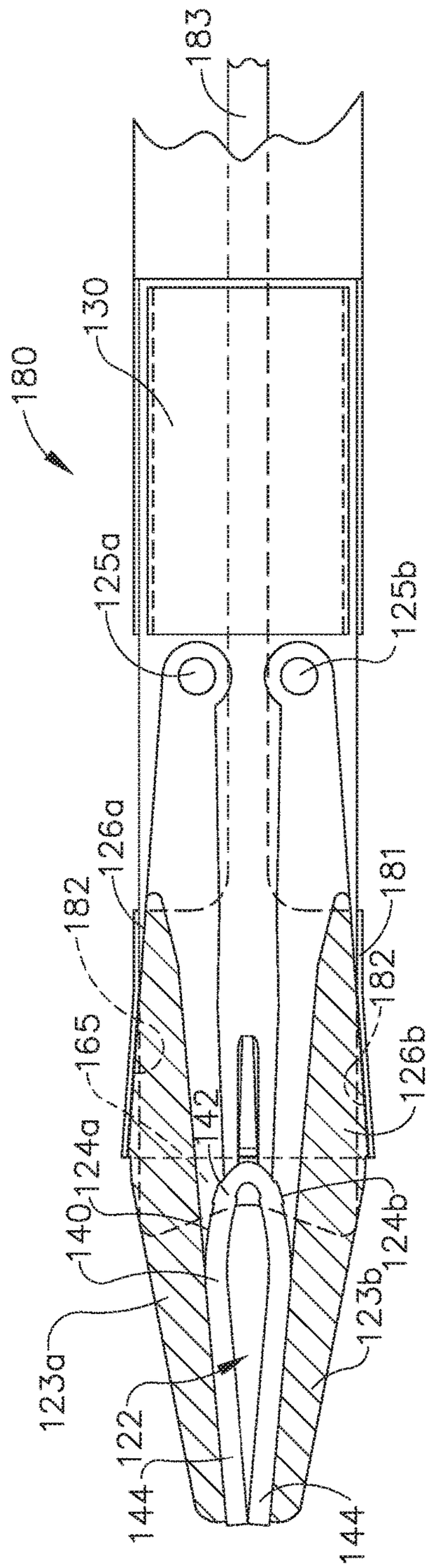
183
180
130
125a
125b
126a
182
181
165
142
126b
124a
140
124b
123b
123a
122
144

FIG. 4

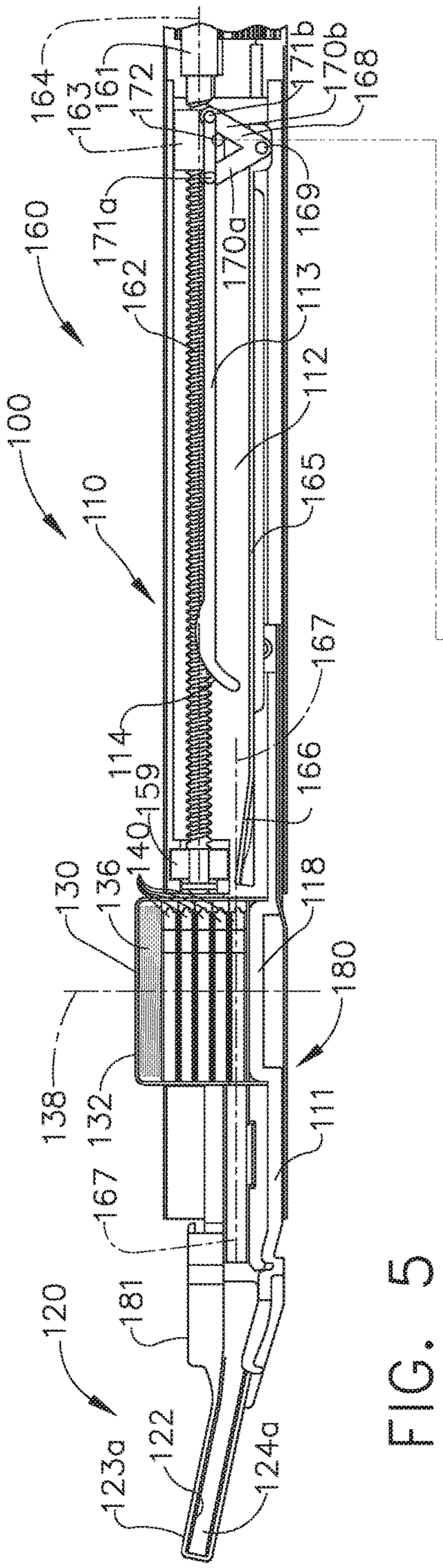
100
110
160
162
163
161
164
172
171a
171b
170a
170b
168
169
113
112
165
167
114
159
166
140
130
136
118
180
138
132
111
181
120
122
123a
124a

FIG. 5

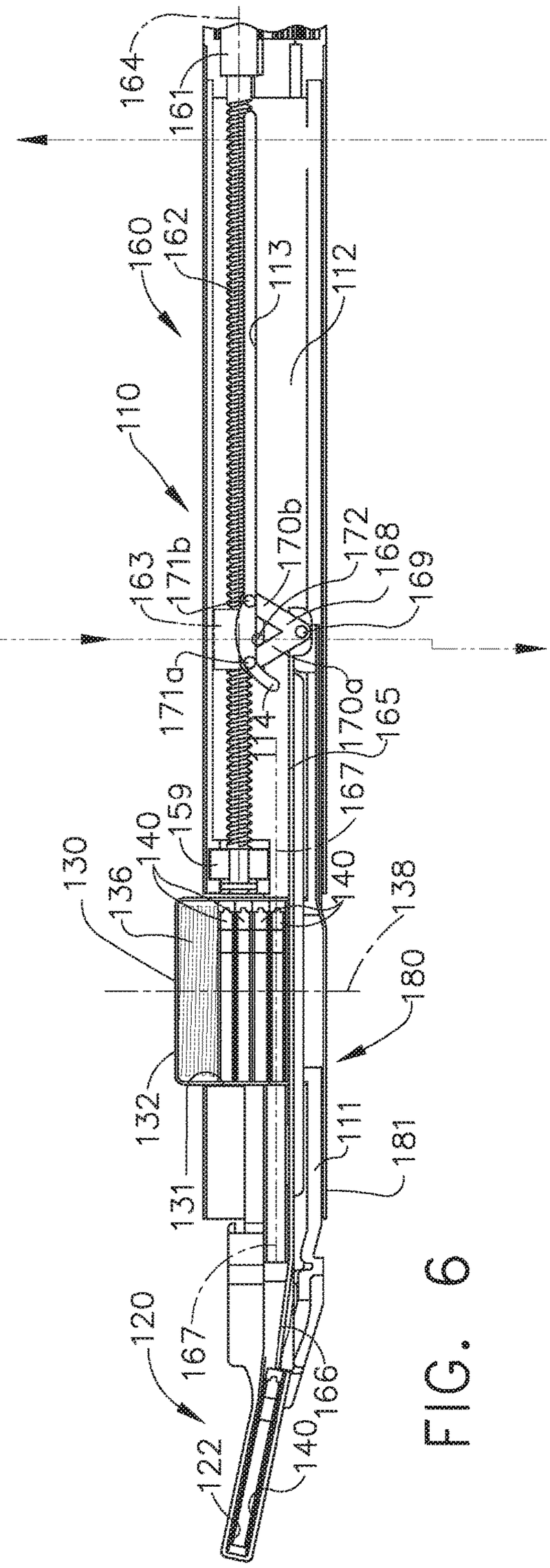
164
161
160
162
113
112
110
163
171b
170b
172
168
169
171a
170a
165
114
167
159
140
130
136
138
180
132
111
181
131
120
122
166

FIG. 6

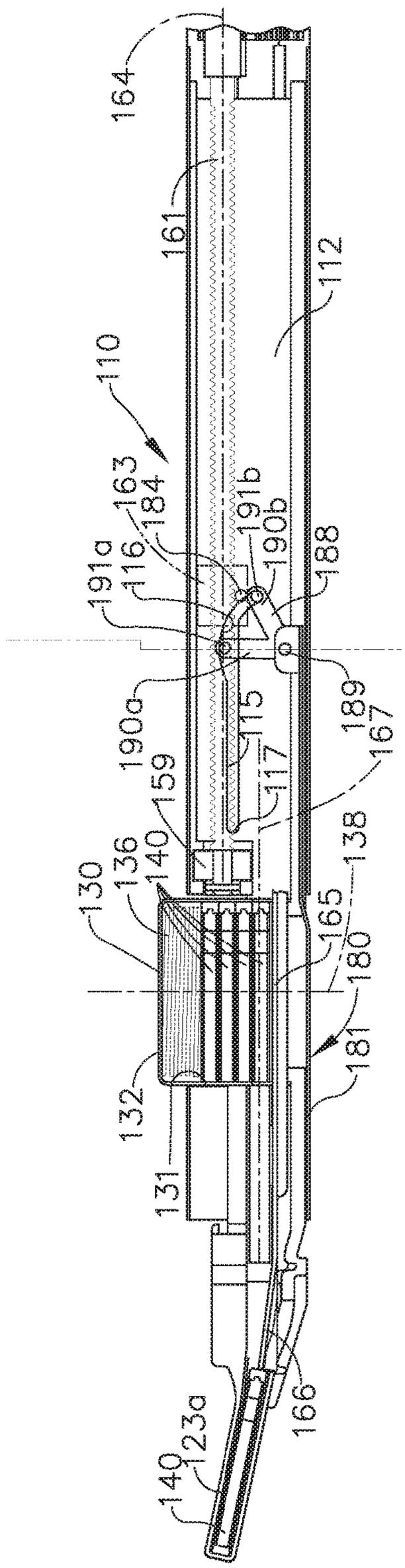
164
161
112
110
163
184
191b
190b
191a
116
188
189
190a
115
167
117
159
138
140
136
130
165
180
181
132
131
166
123a
140

FIG. 7

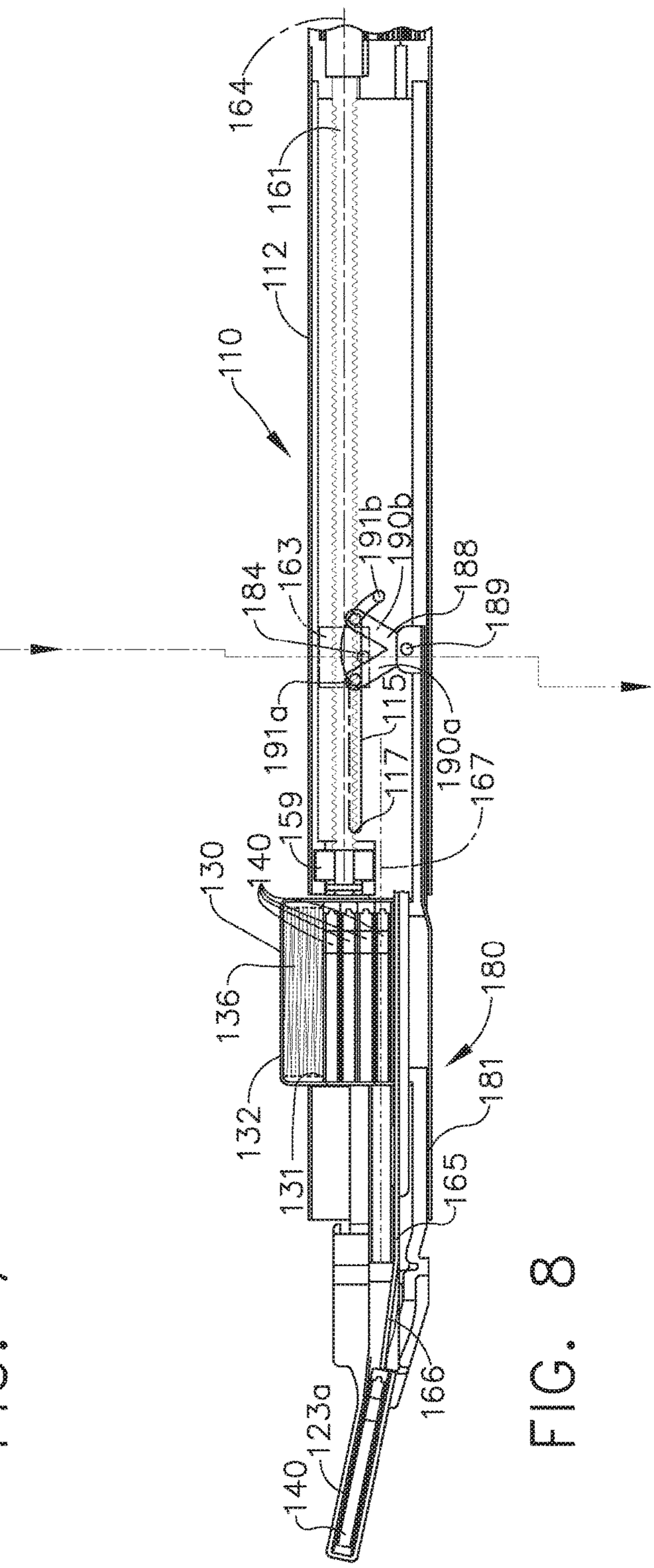
164
161
112
110
191b
190b
184
163
188
189
191a
115
190a
117
167
159
140
130
136
180
181
132
131
165
166
123a
140

FIG. 8

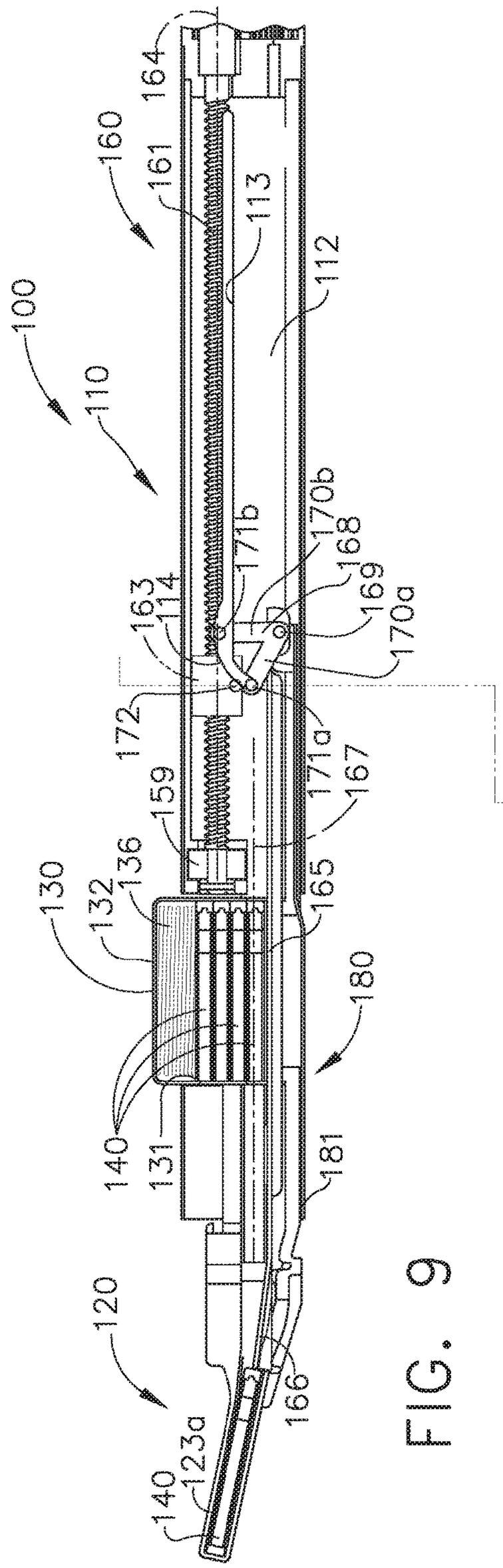
100
110
160
161
164
113
112
163
114
171b
170b
168
169
170a
172
171a
167
159
136
132
130
165
180
140
131
181
120
166
123a
140

FIG. 9

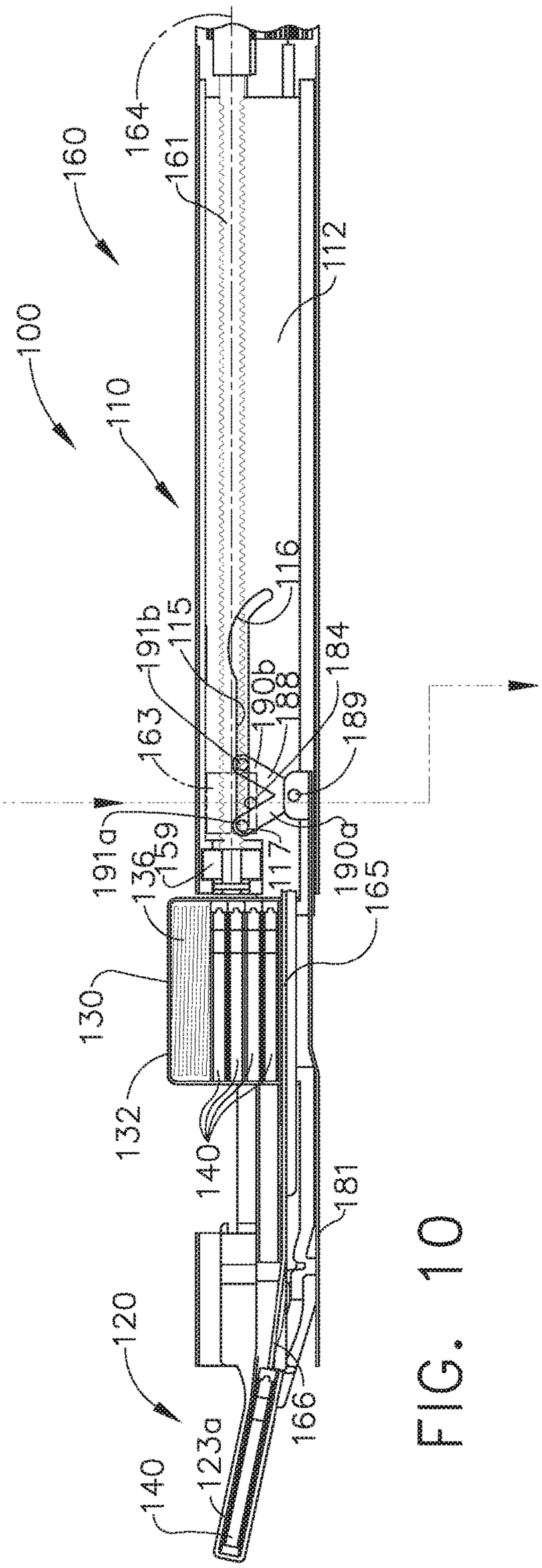
100
110
160
161
164
112
116
115
191b
163
190b
188
184
189
191a
159
136
117
190a
165
130
132
140
181
120
166
123a
140

FIG. 10

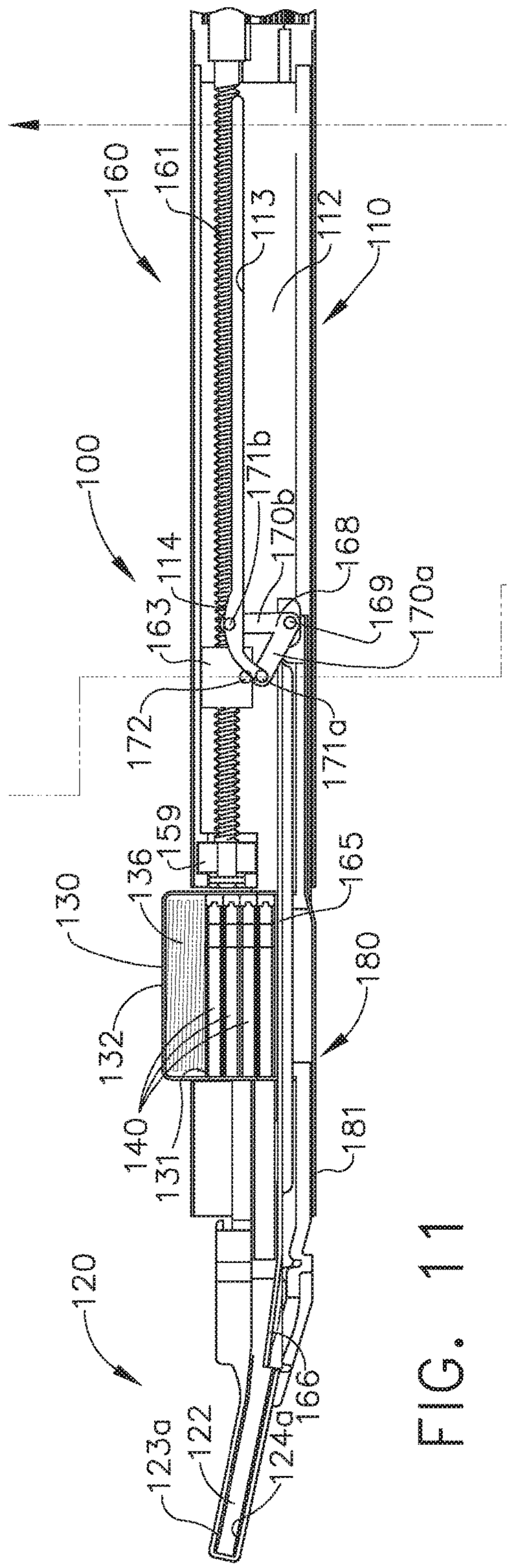
160
161
113
112
110
100
171b
170b
168
114
163
169
170a
172
171a
159
136
165
130
132
180
140
131
181
120
166
122
123a
124a

FIG. 11

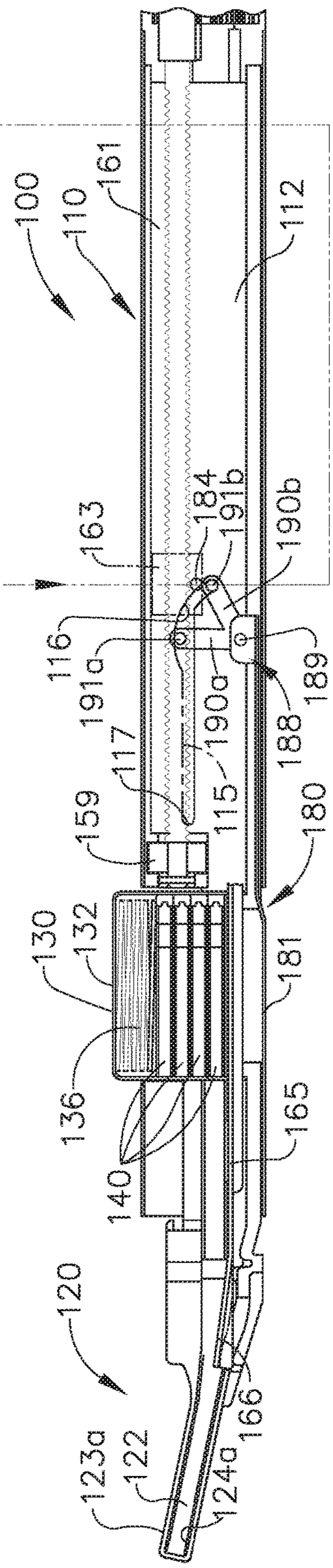
100
110
161
112
184
191b
190b
163
116
191a
190a
189
188
117
115
159
180
130
132
181
136
165
140
120
166
122
123a
124a

FIG. 12

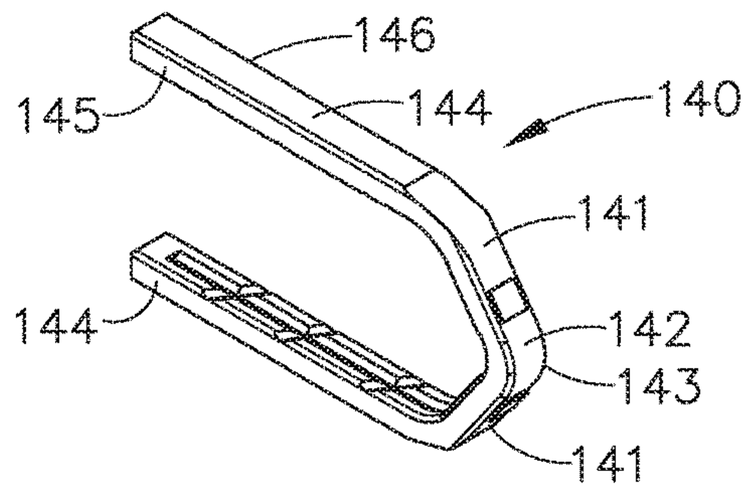

FIG. 13

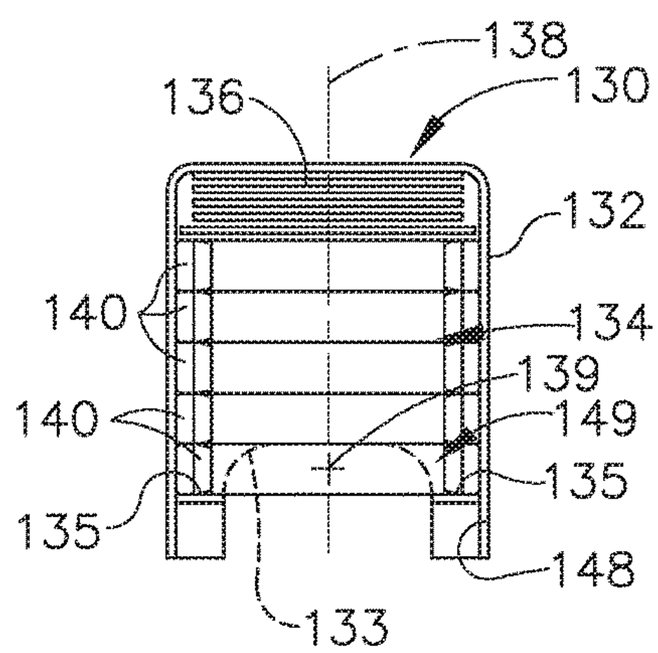

FIG. 14

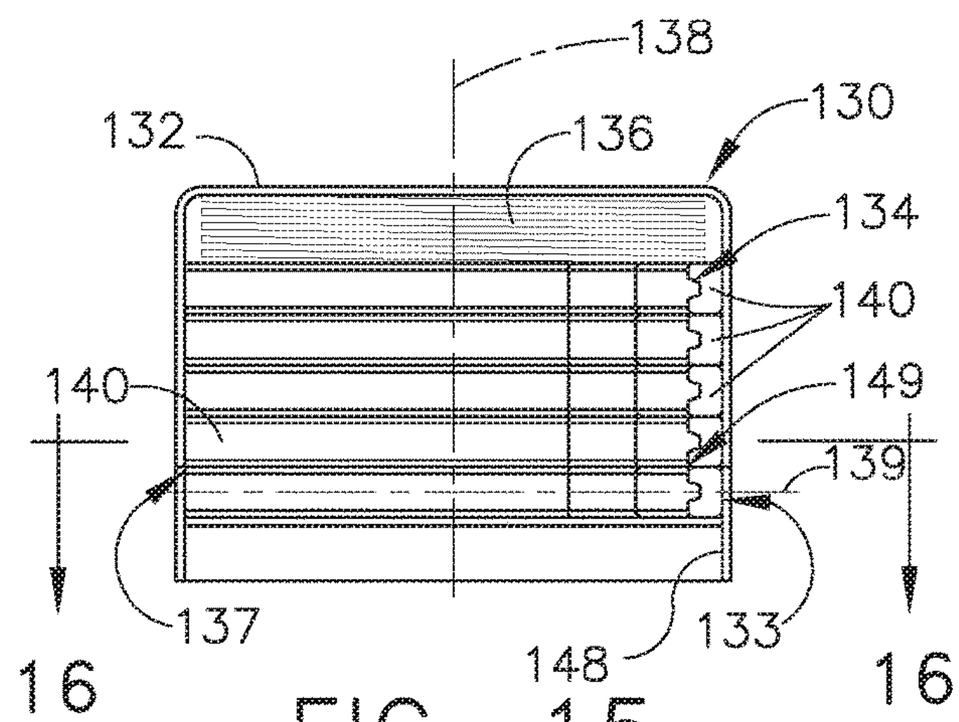

FIG. 15

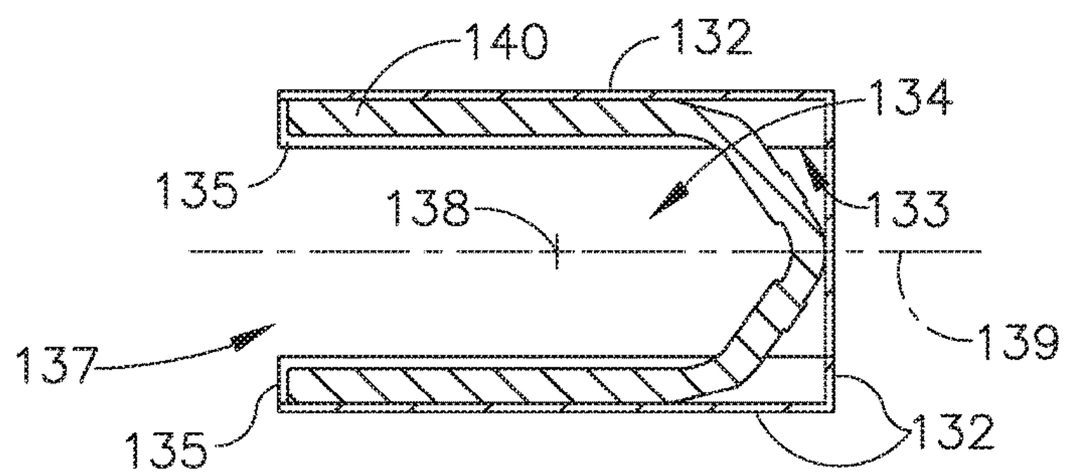

FIG. 16

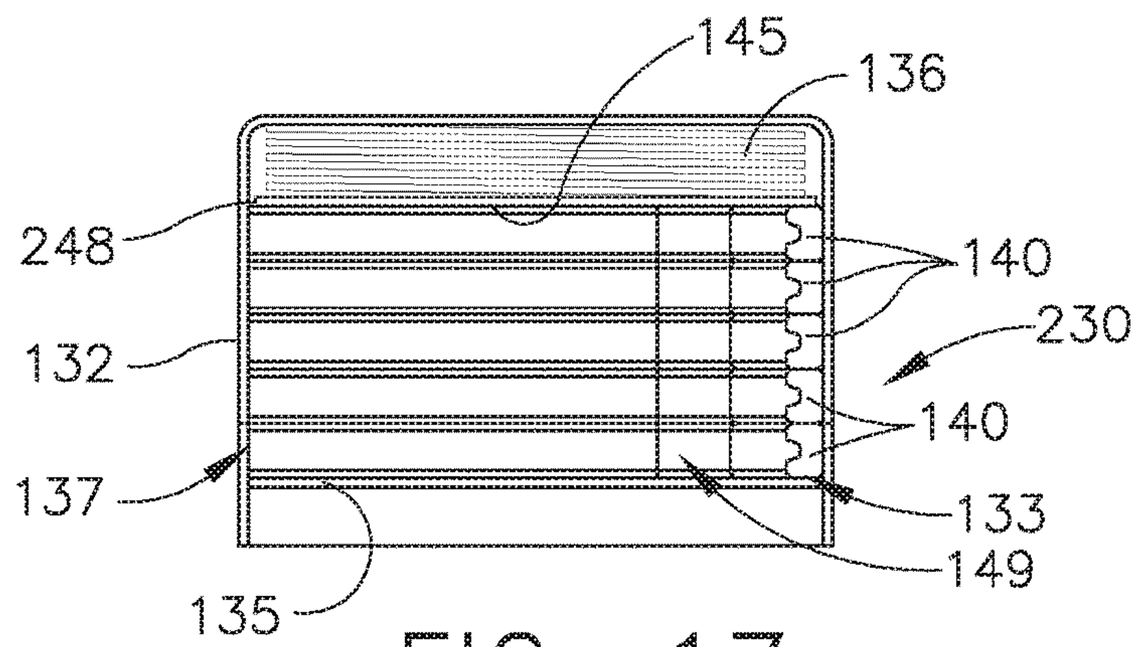

FIG. 17

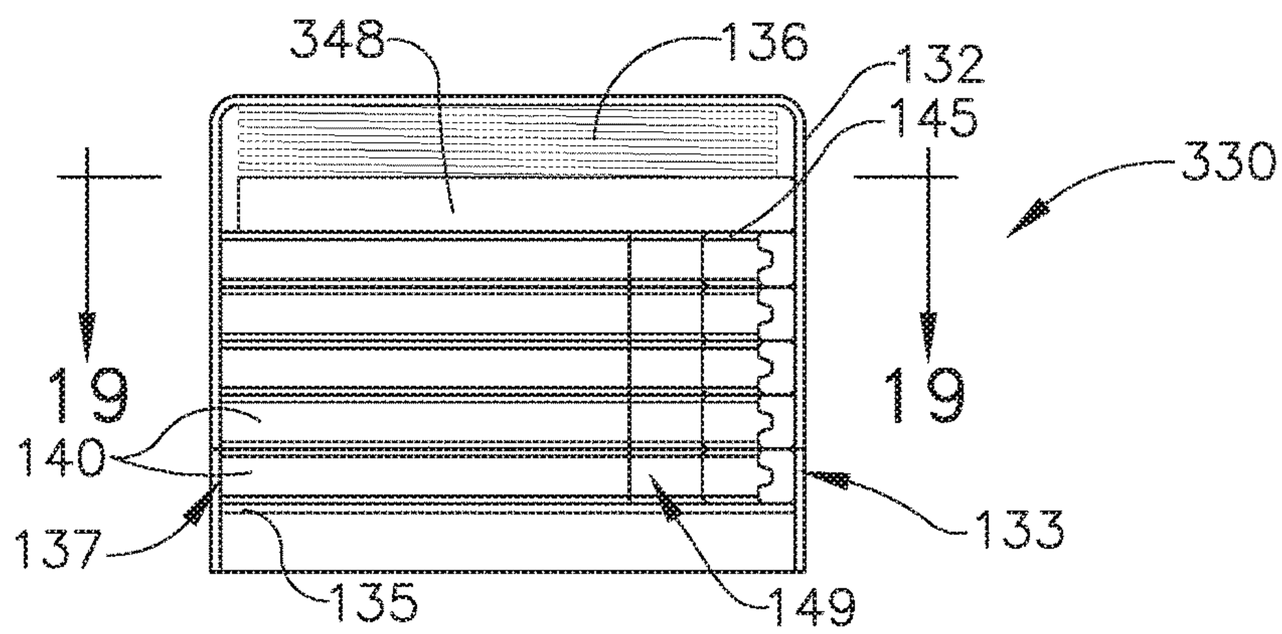

FIG. 18

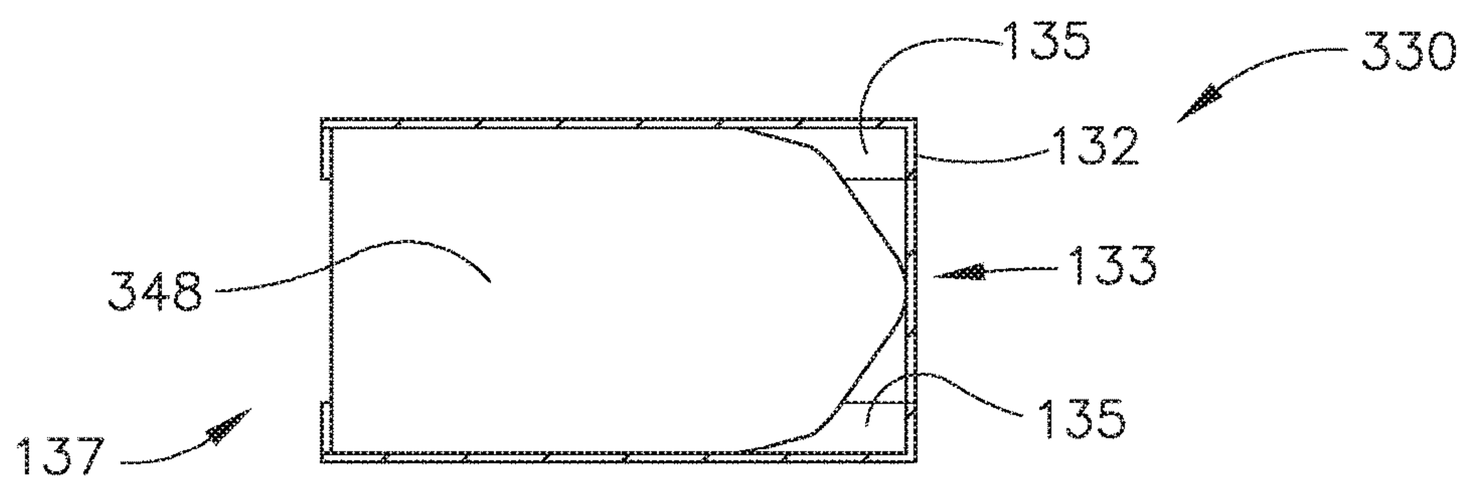

FIG. 19

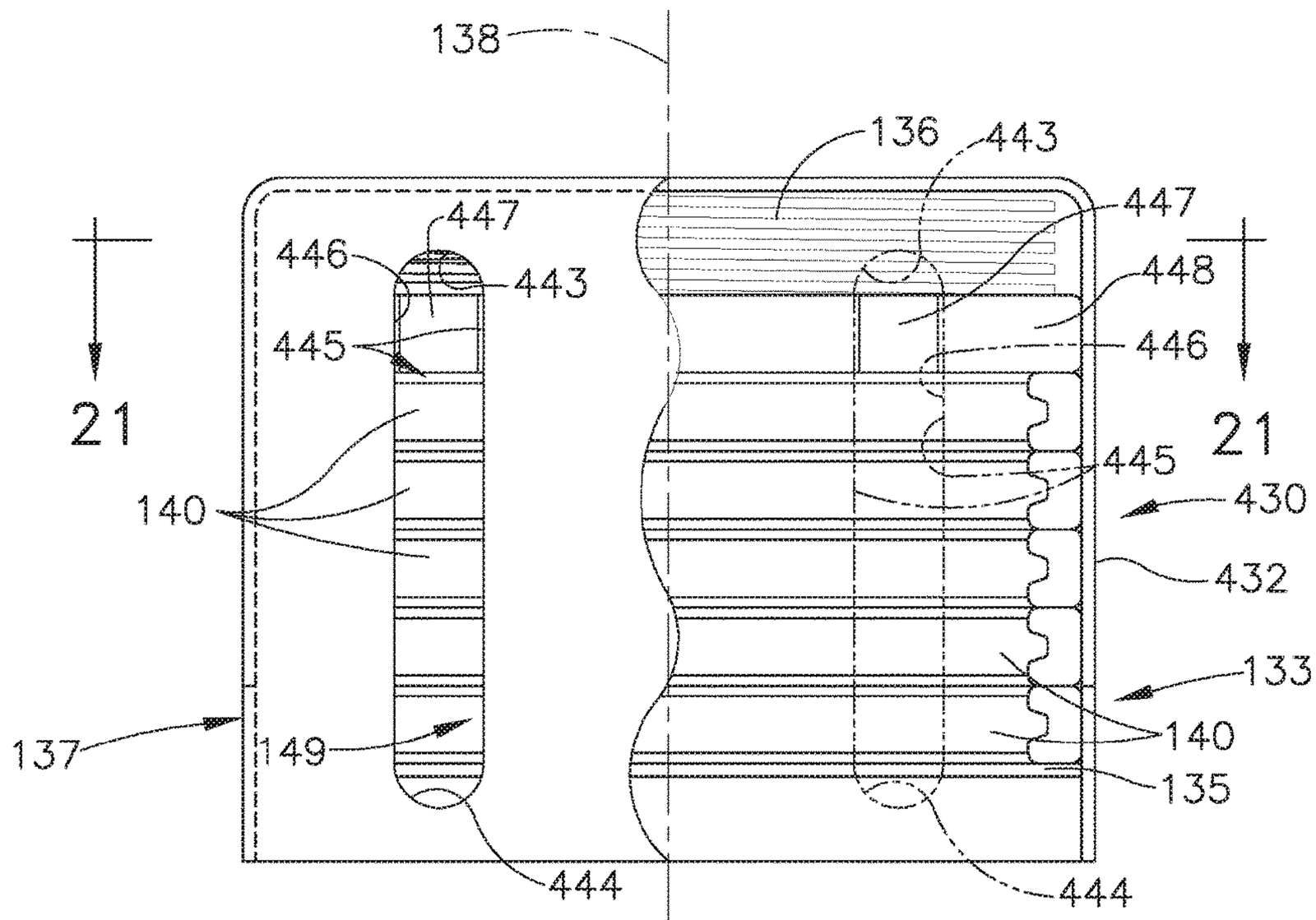
138
136
443
447
446
443
447
448
445
446
21
21
445
140
430
432
133
137
149
140
135
444
444

FIG. 20

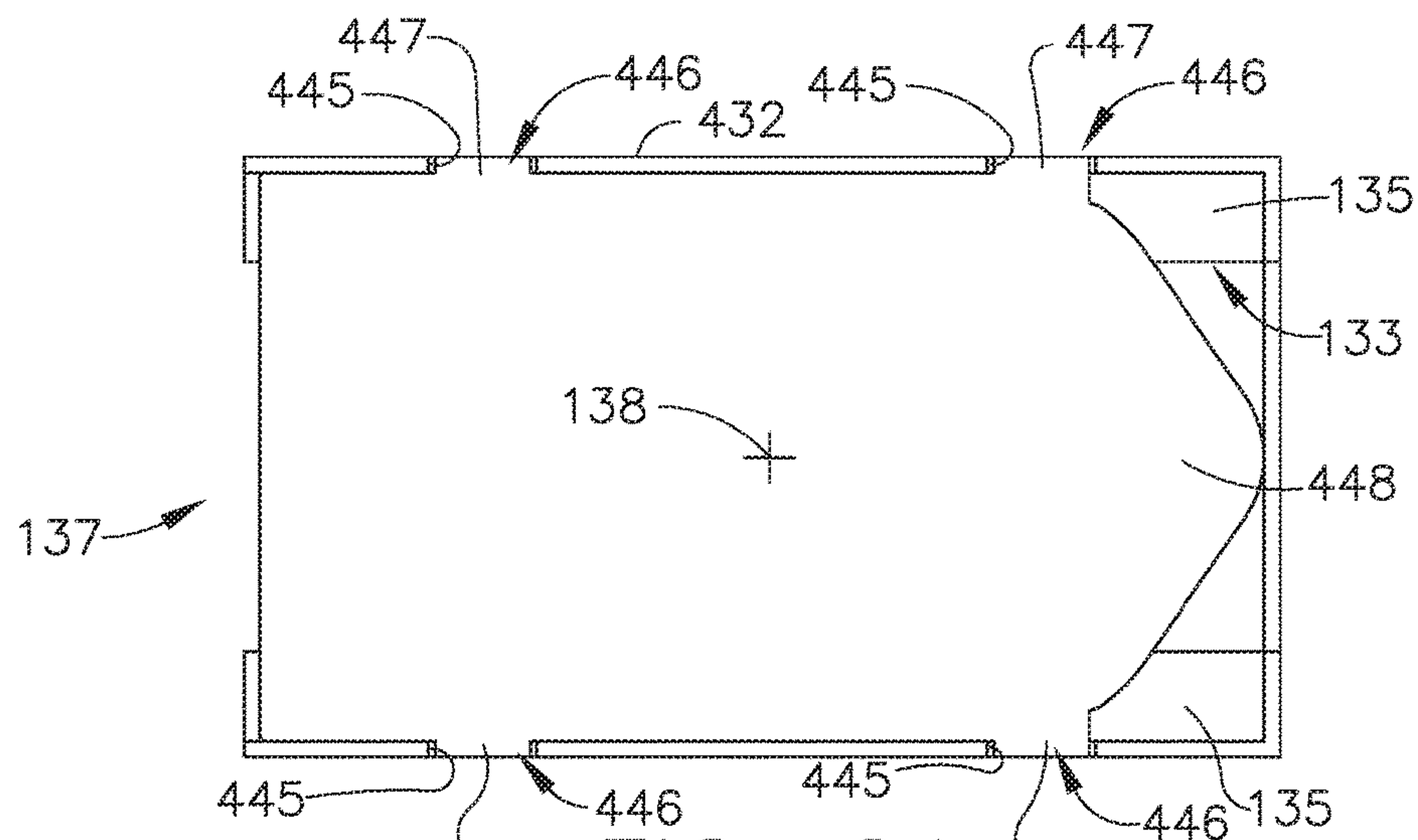
447
445
446
432
445
447
446
135
133
138
448
137
445
446
445
446
135
447
447

FIG. 21

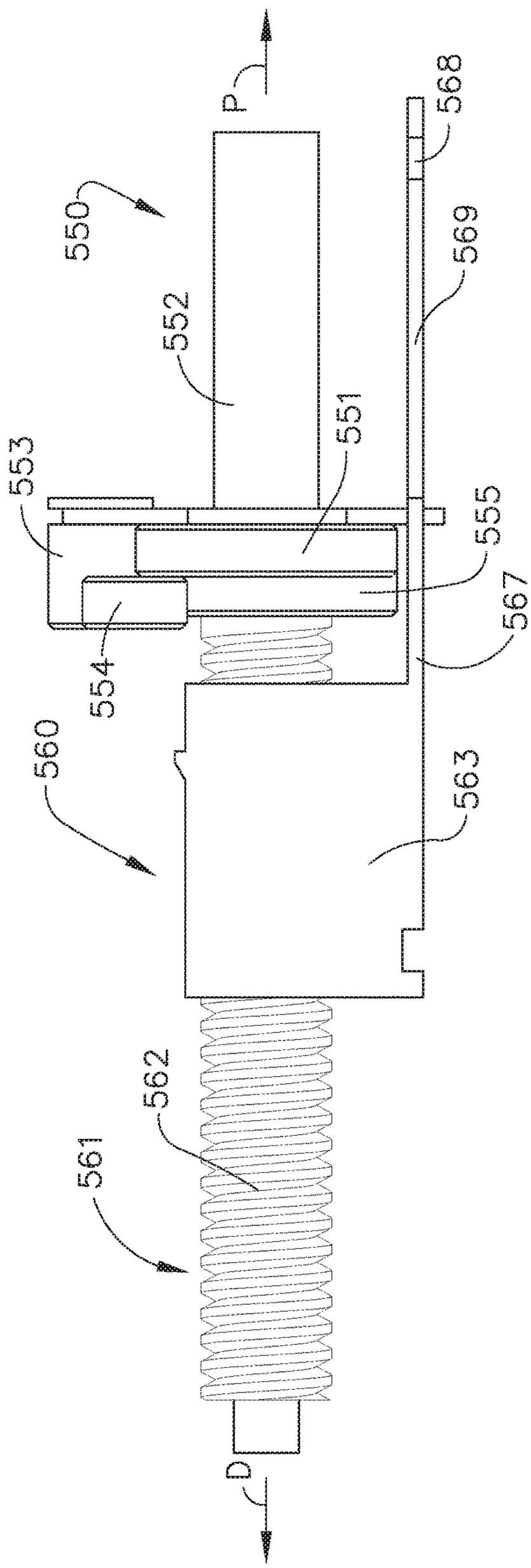

FIG. 22

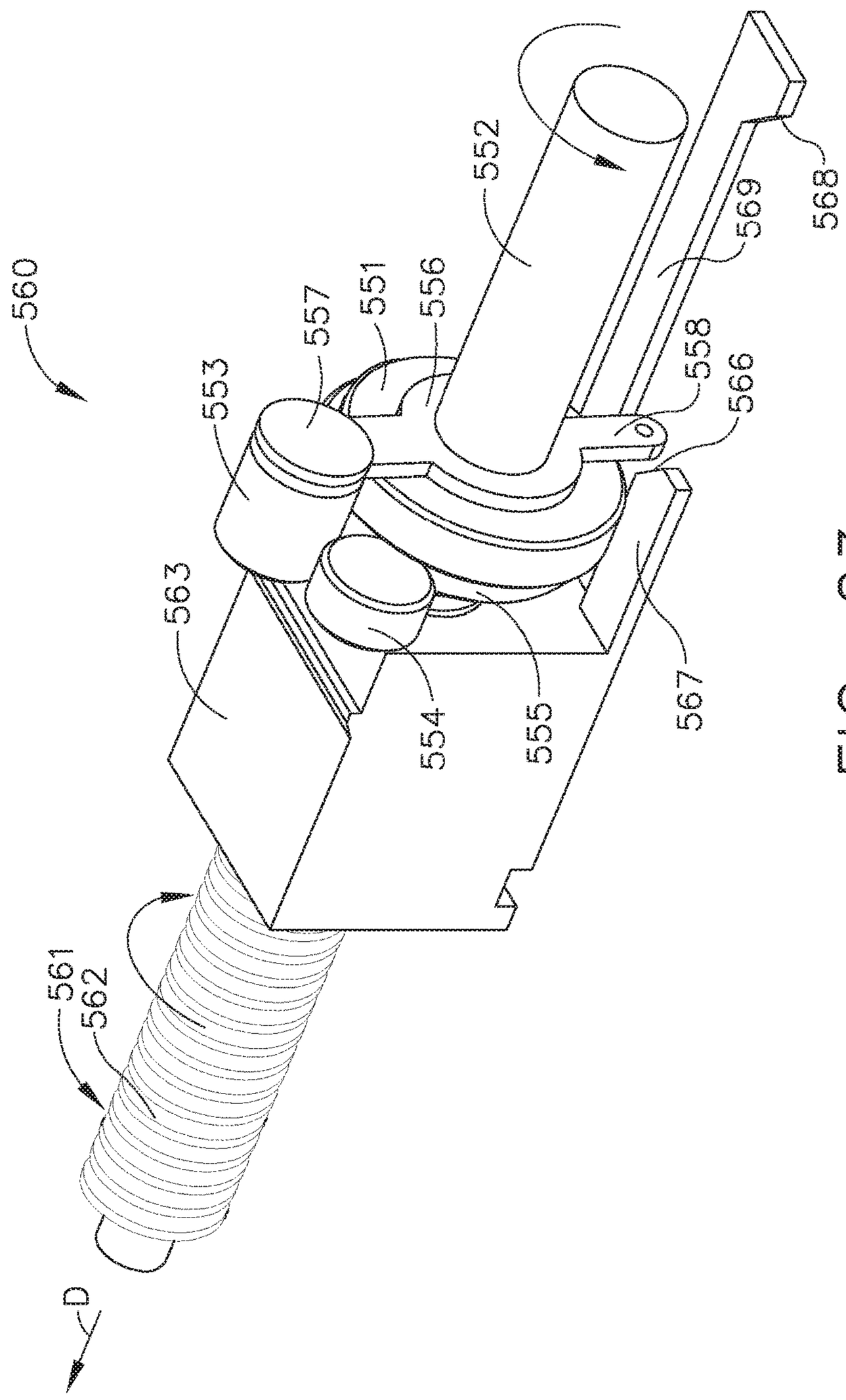

FIG. 23

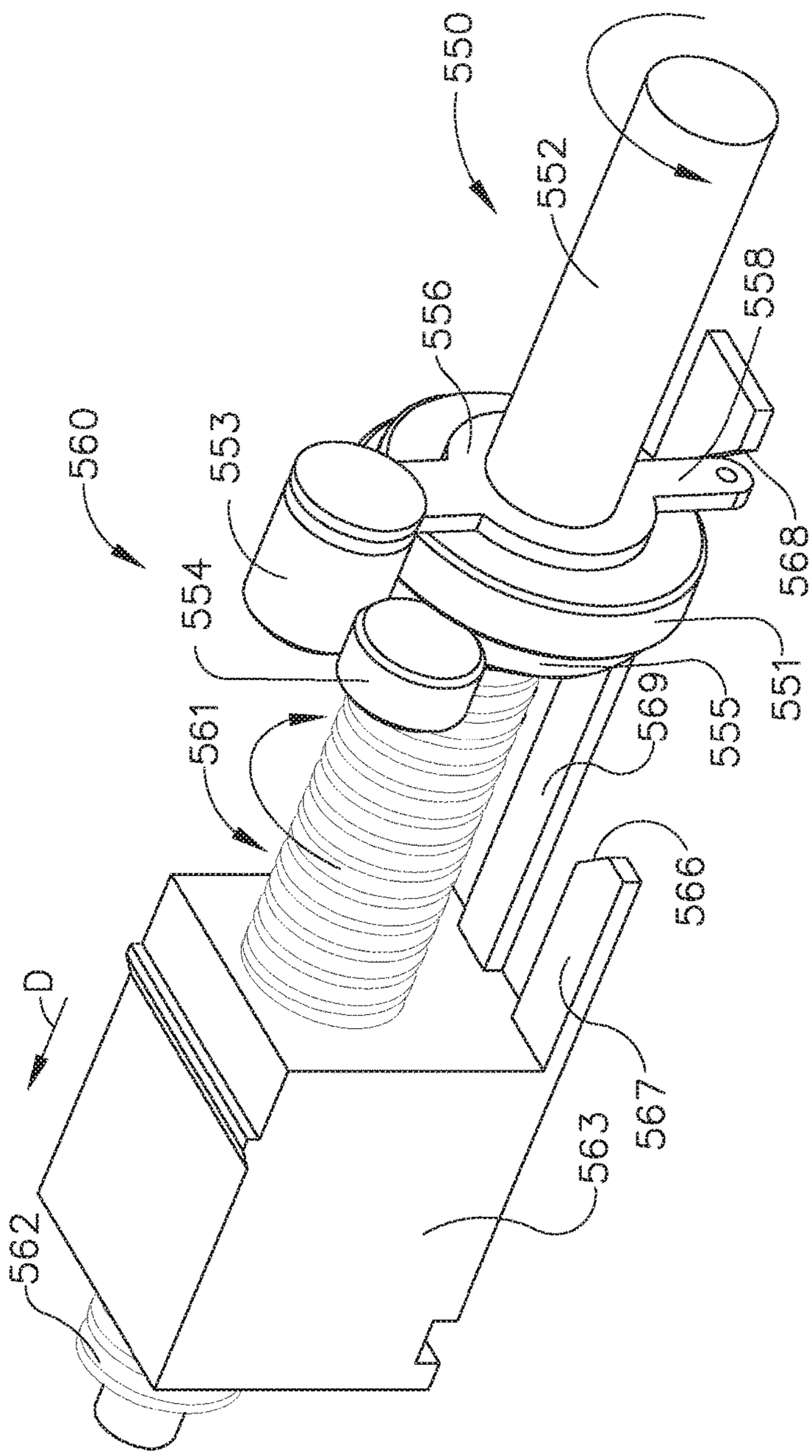

FIG. 24

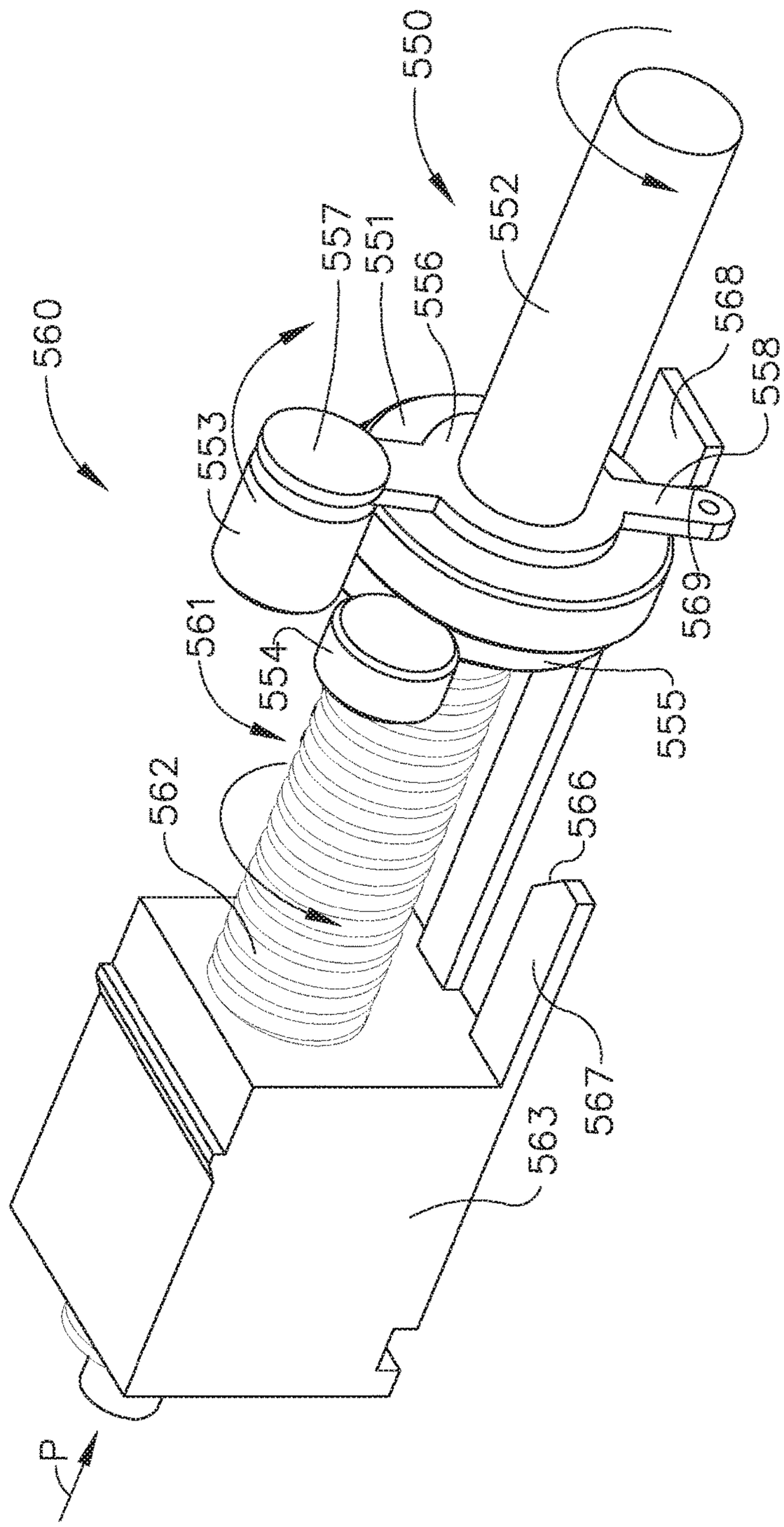
550
552
557
551
556
560
553
568
558
569
561
554
555
562
566
567
563
P

FIG. 25

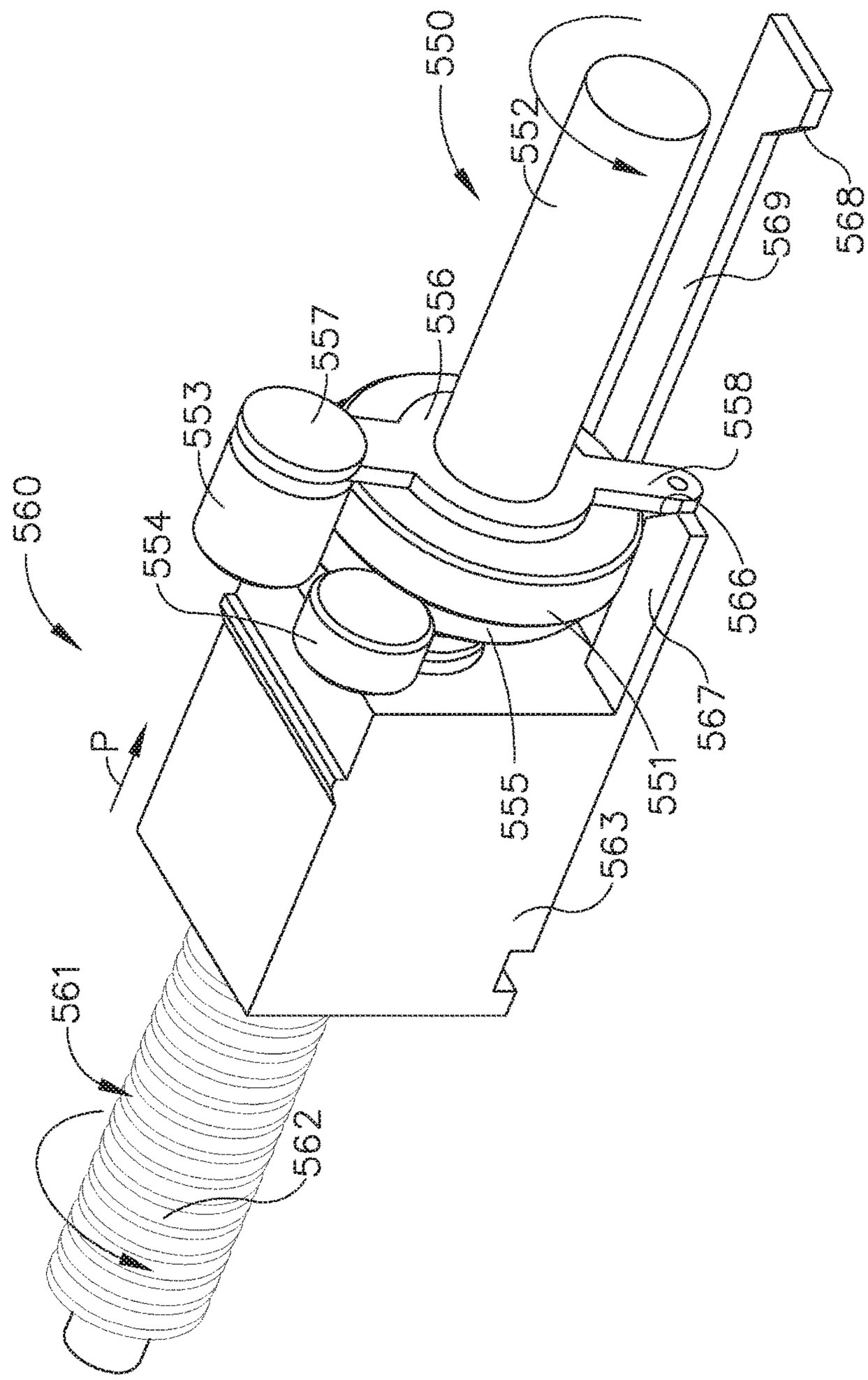
550
552
568
569
556
557
553
558
560
554
566
567
P
555
551
563
561
562

FIG. 26

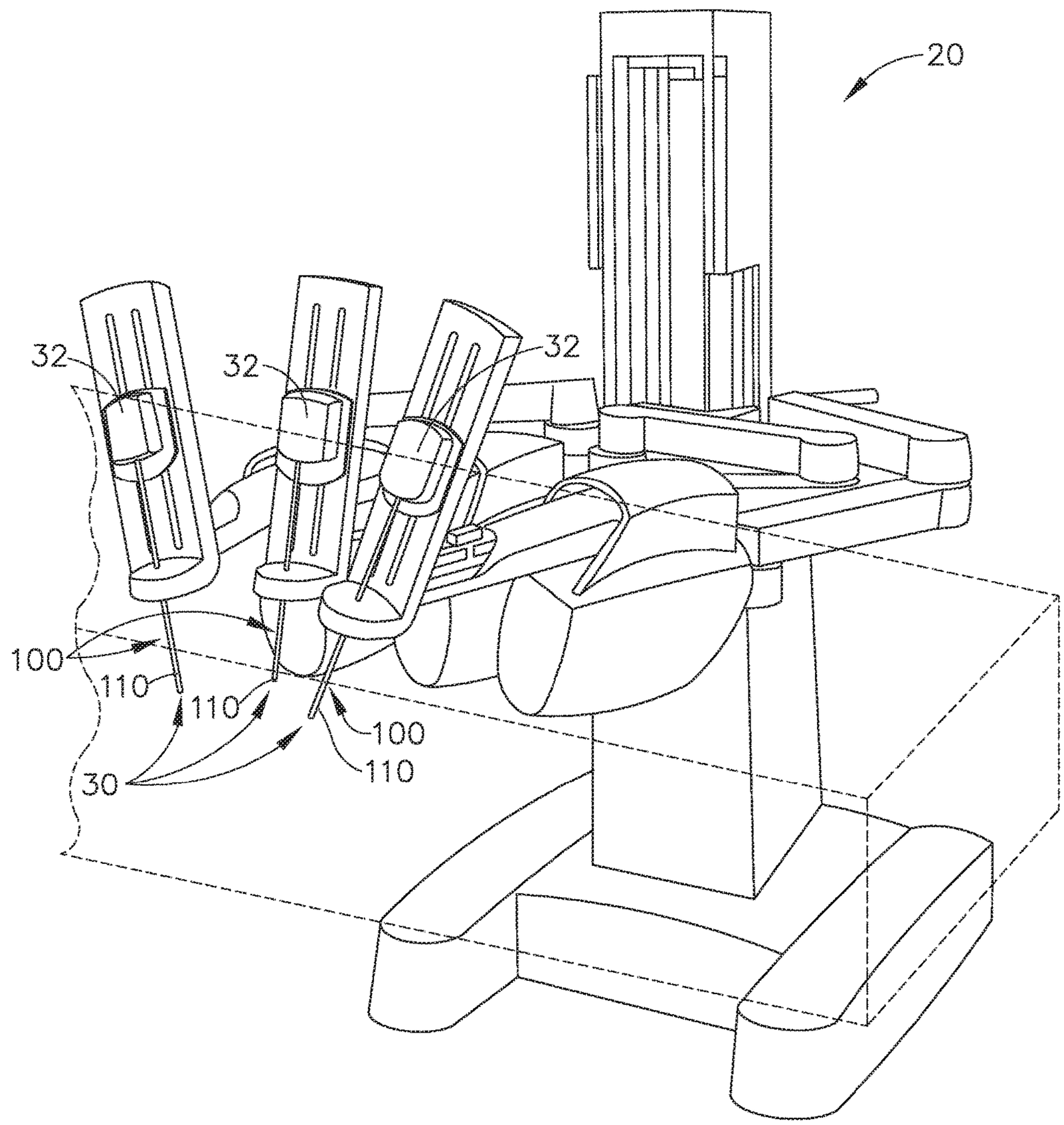

FIG. 27

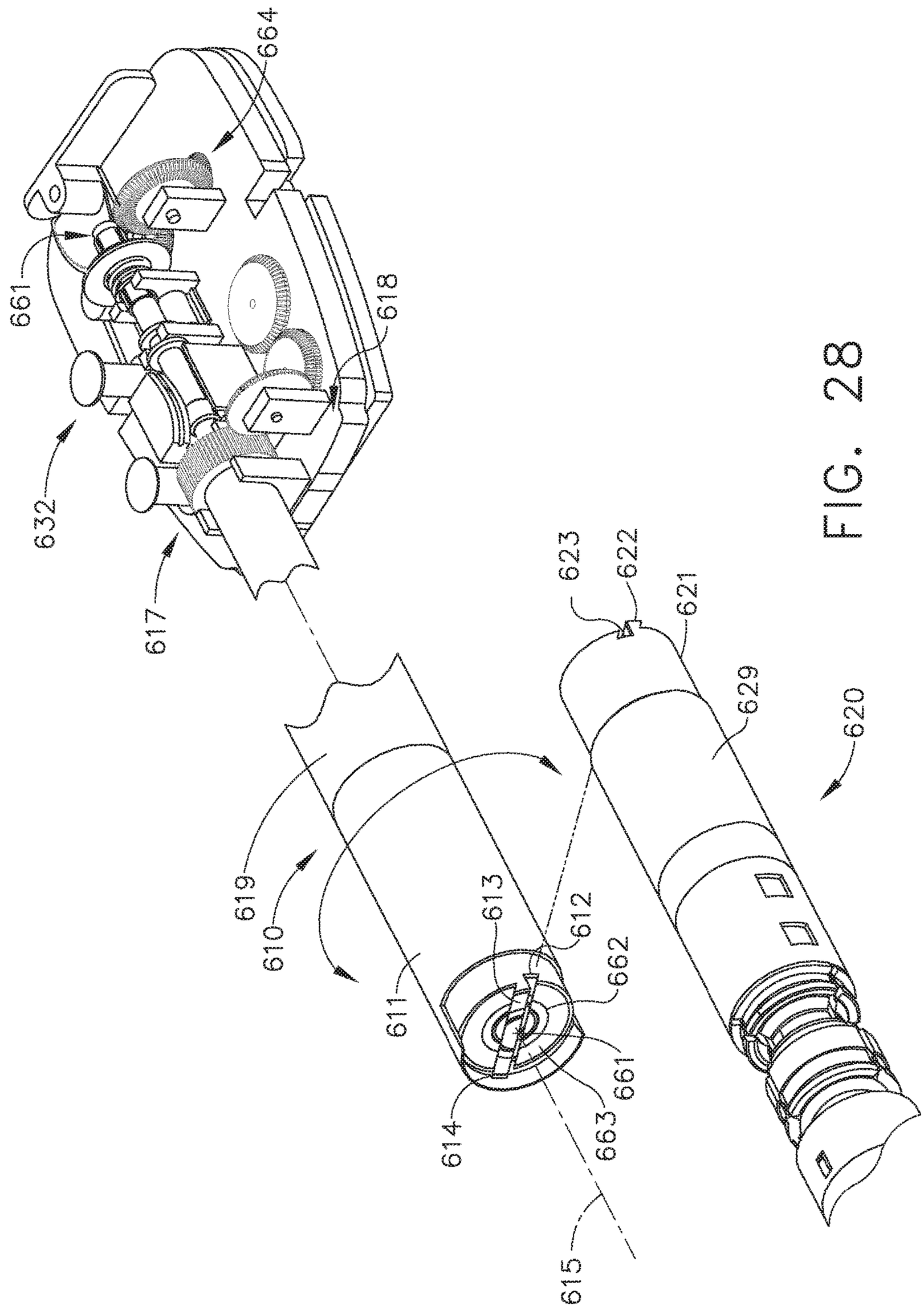
664
661
618
632
617
623
622
621
629
620
619
610
613
612
611
662
661
614
663
615

FIG. 28

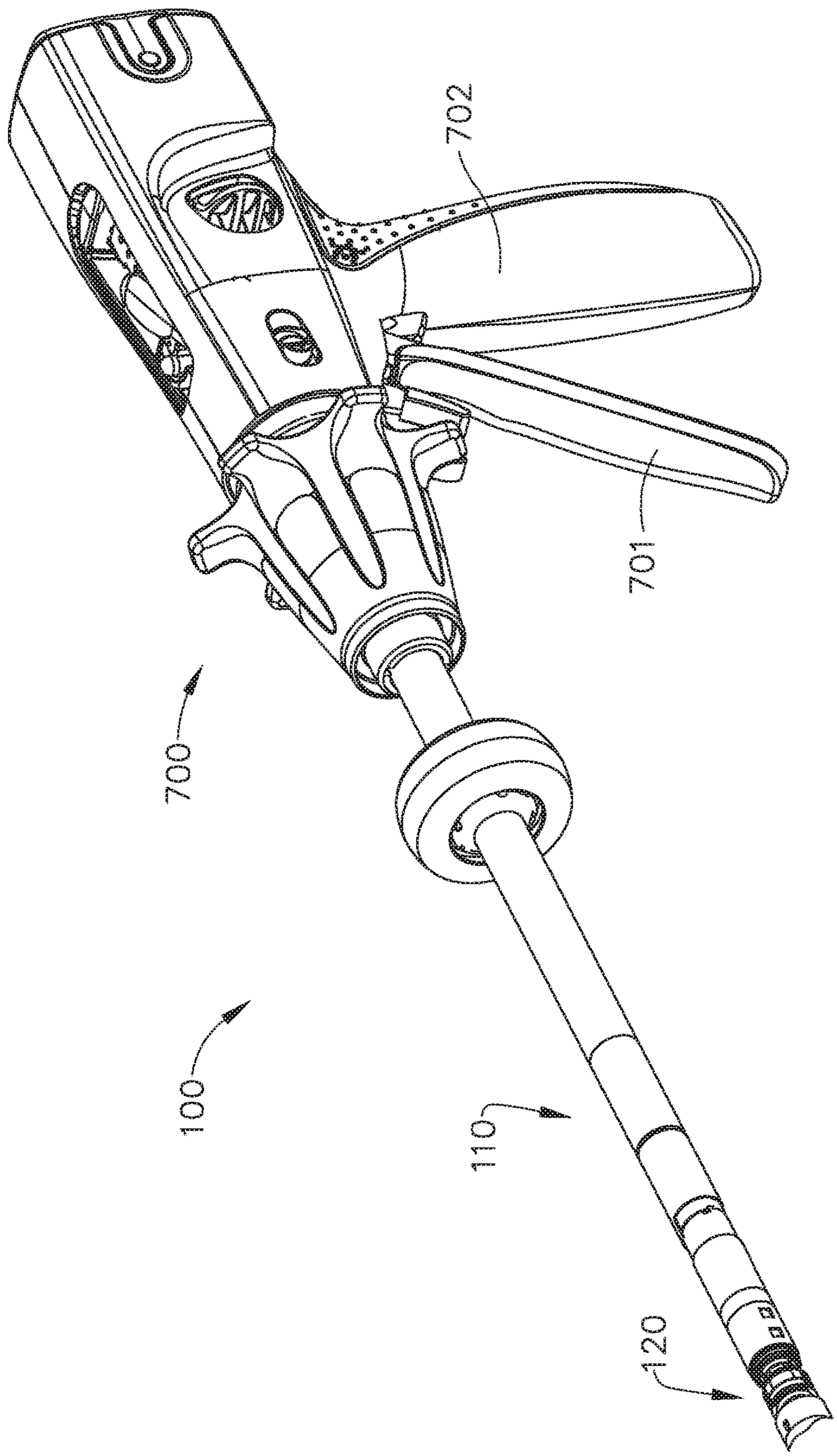

FIG. 29

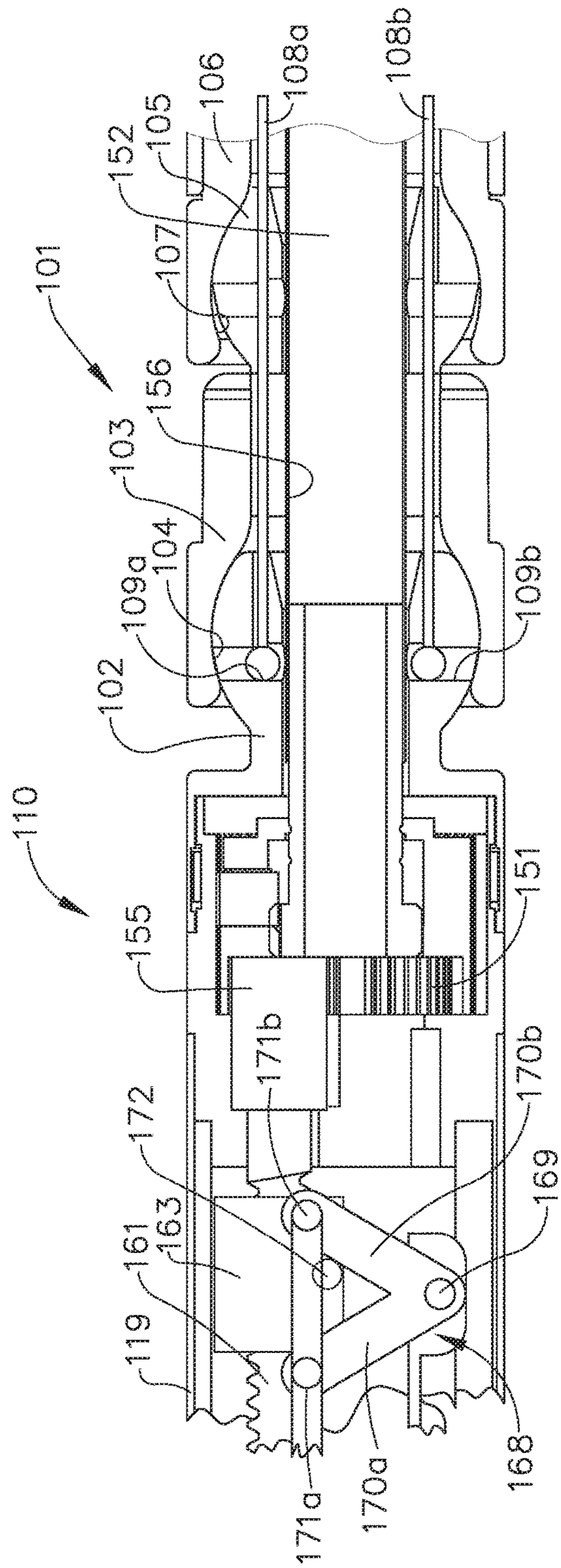
101
102
103
104
105
106
107
108a
108b
109a
109b
110
119
151
152
155
156
161
163
168
169
170a
170b
171a
171b
172

FIG. 30

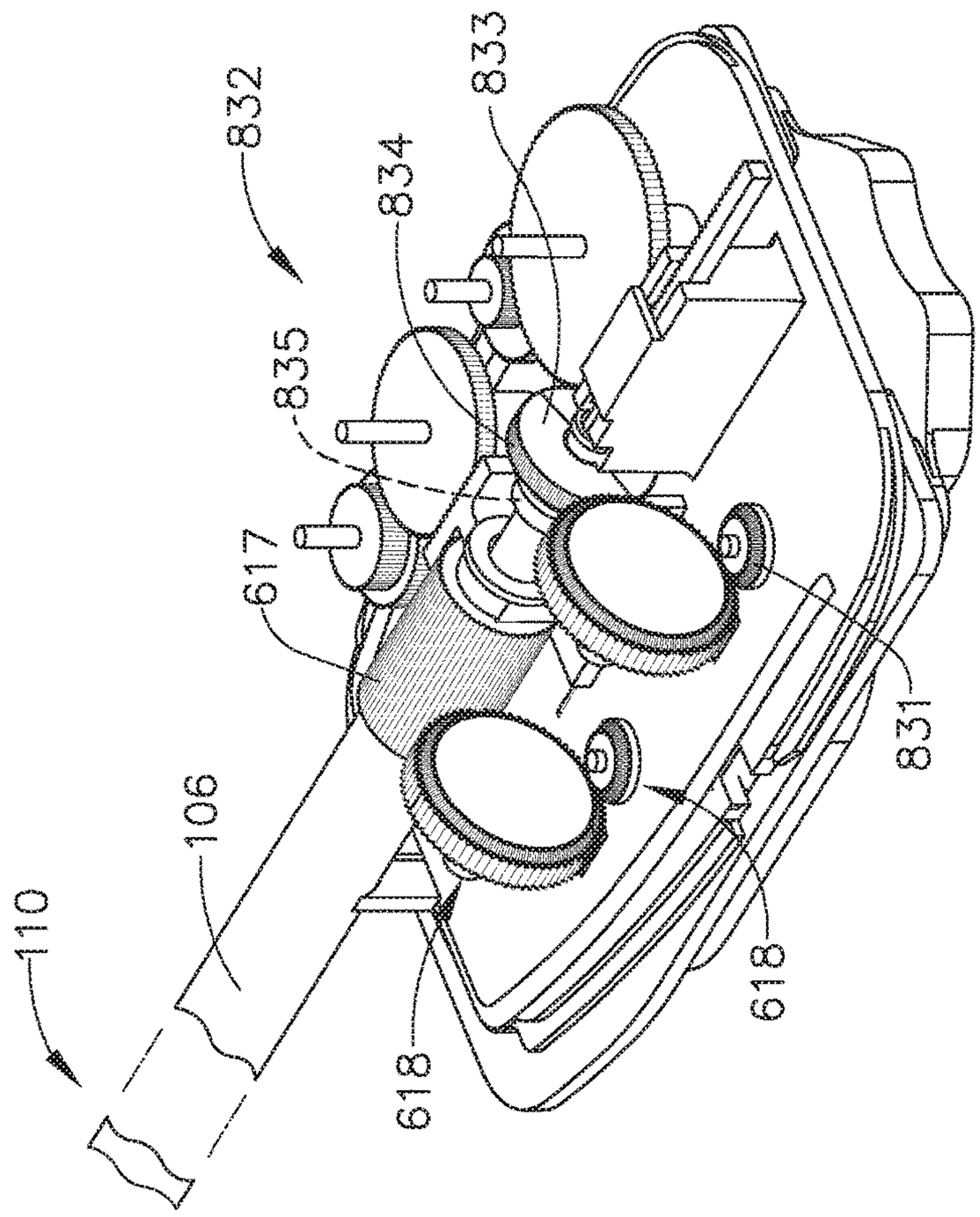

FIG. 31

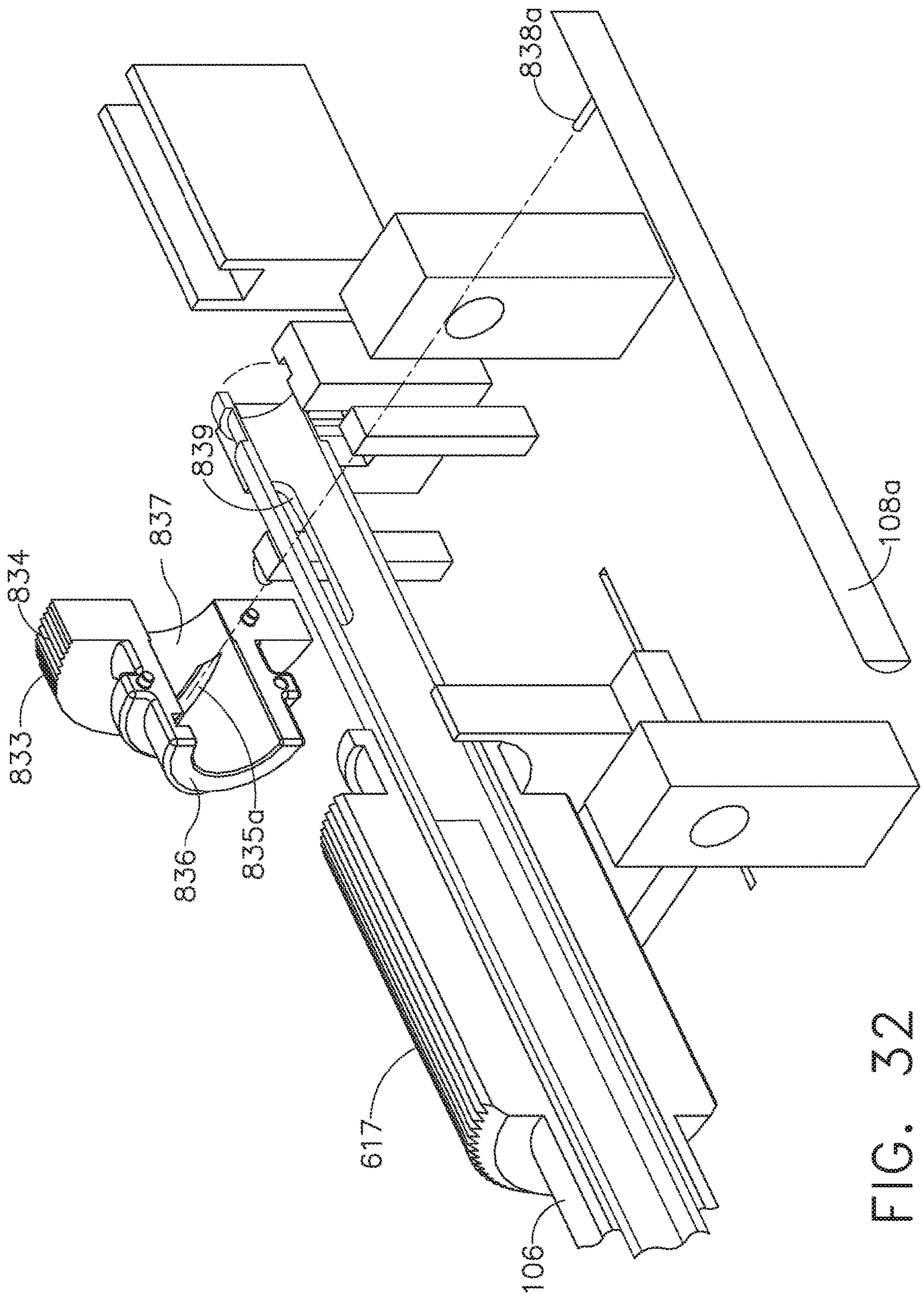

FIG. 32

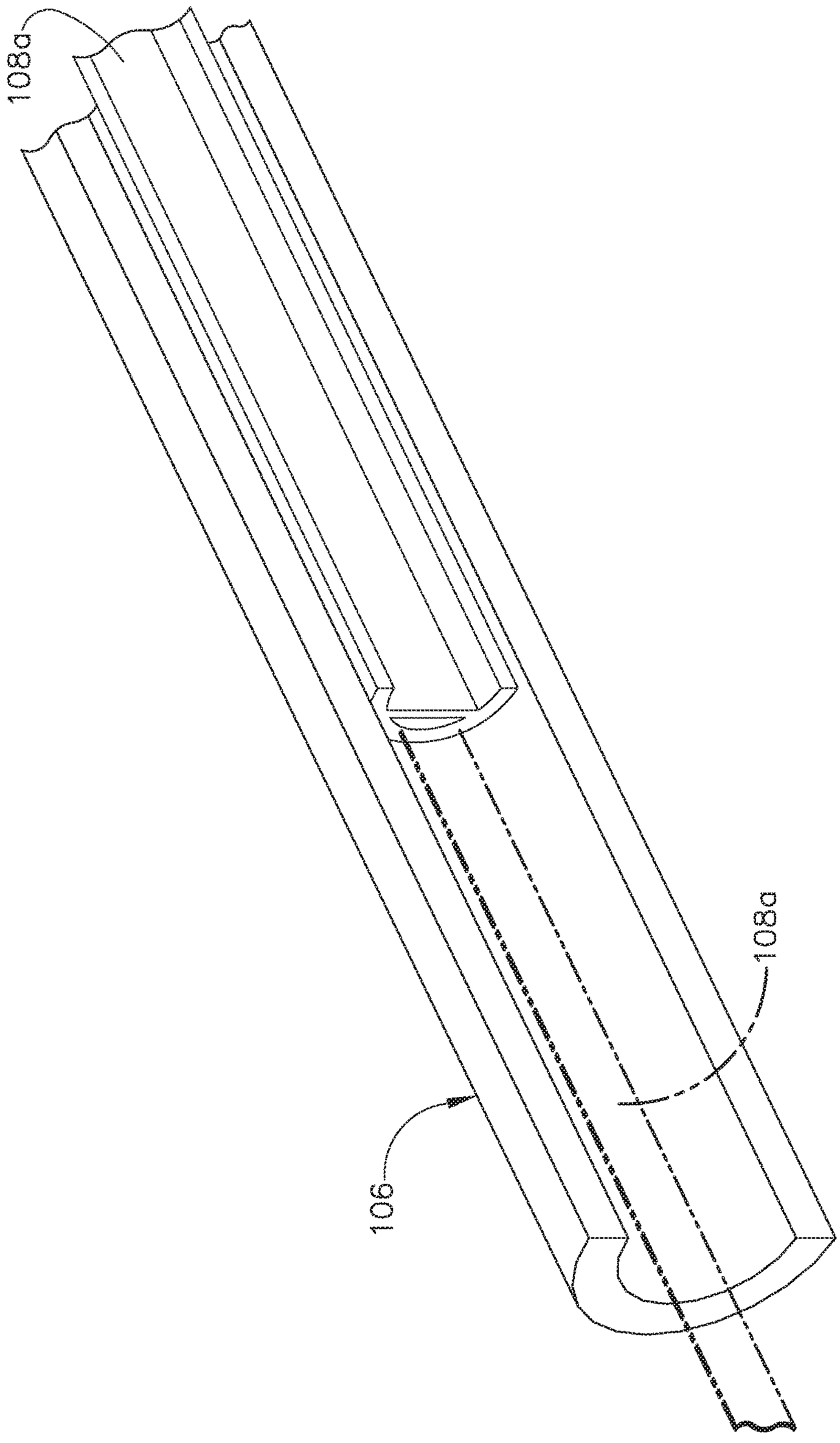

FIG. 33

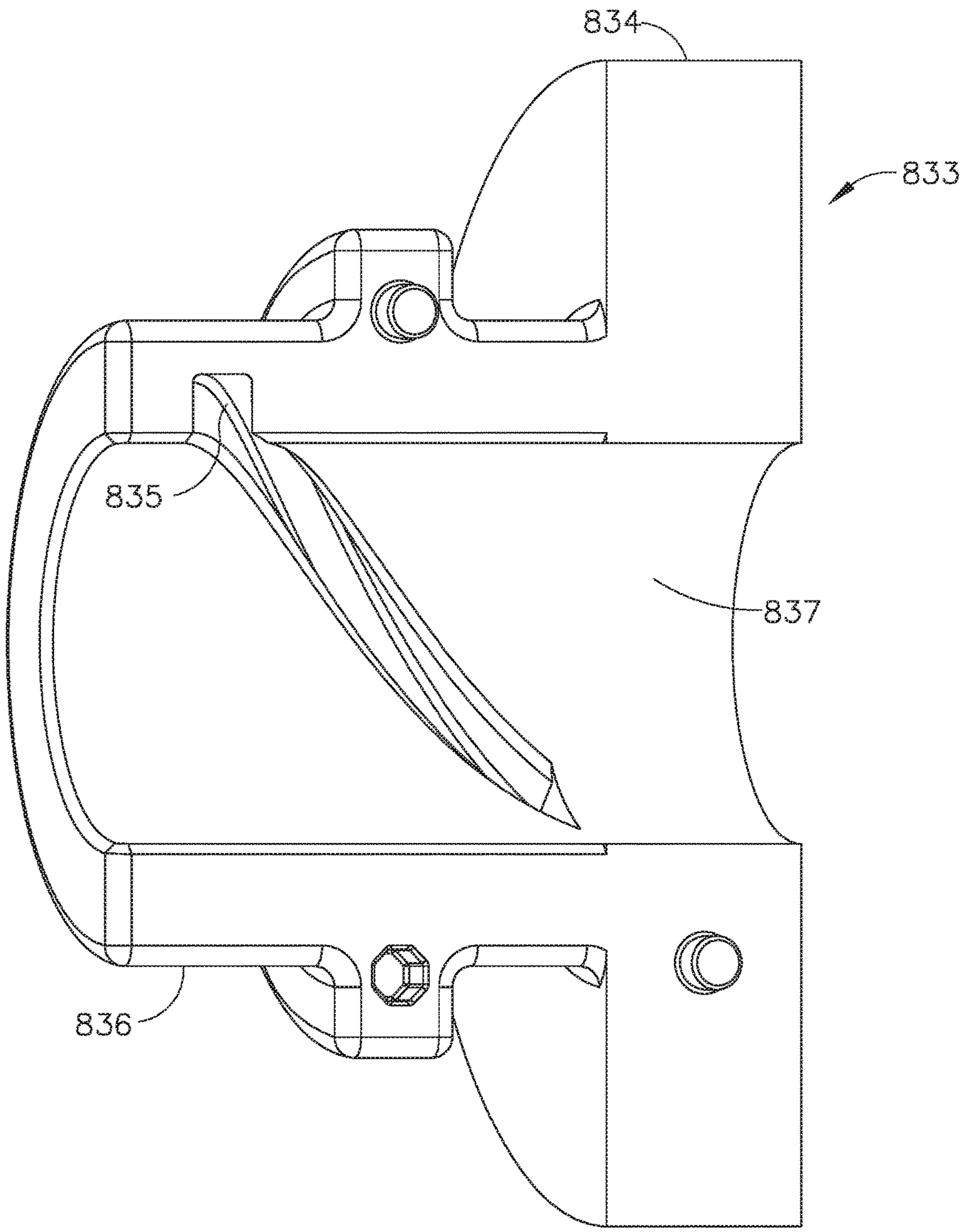

FIG. 34

REPLACEABLE CLIP CARTRIDGE FOR A CLIP APPLIER

BACKGROUND

A variety of fasteners can be utilized to treat, clamp, fasten, secure, and/or hold tissue. Clips can be positioned relative to tissue located within a surgical site in a patient and then deformed to apply a clamping force, for example, to the tissue.

BRIEF DESCRIPTION OF THE DRAWINGS

The features and advantages of this invention, and the manner of attaining them, will become more apparent and the invention itself will be better understood by reference to the following description of exemplary embodiments of the invention taken in conjunction with the accompanying drawings, wherein:

FIG. **1** is a partial perspective view of a clip applier;

FIG. **2** is a cross-sectional view of an end effector of the clip applier of FIG. **1** comprising a removable clip cartridge, a reciprocating firing drive for sequentially advancing the clips, a receiver for receiving the clips, and a crimping drive for deforming the clips;

FIG. **3** is a partial cross-sectional view of the clip applier of FIG. **1** in an open configuration;

FIG. **4** is a partial cross-sectional view of the clip applier of FIG. **1** in a closed configuration;

FIG. **5** is a cross-sectional view of the end effector of FIG. **2** in an unfired condition;

FIG. **6** is a cross-sectional view of the end effector of FIG. **2** illustrating the firing drive in a partially fired condition in which a firing member of the firing drive has advanced a clip into the receiver;

FIG. **7** is a cross-sectional view of the end effector of FIG. **2** illustrating the firing drive coming into engagement with the crimping drive;

FIG. **8** is a cross-sectional view of the end effector of FIG. **2** illustrating the crimping drive in an at least partially fired condition;

FIG. **9** is a cross-sectional view of the end effector of FIG. **2** illustrating the firing drive becoming disengaged from the firing member;

FIG. **10** is a cross-sectional view of the end effector of FIG. **2** illustrating the crimping drive in its fully fired condition;

FIG. **11** is a cross-sectional view of the firing drive of the end effector of FIG. **2** in a partially retracted position in which the firing drive is being re-engaged with the firing member;

FIG. **12** is a cross-sectional view of the firing drive of the end effector of FIG. **2** being disengaged from the crimping drive;

FIG. **13** is a perspective view of a clip illustrated in FIGS. **2-12**;

FIG. **14** is a front view of a cartridge illustrated in FIGS. **1-12** comprising a plurality of clips with portions of the cartridge removed to illustrate the clips stored in the cartridge;

FIG. **15** is a side view of the cartridge of FIG. **14** illustrated with portions removed to illustrate the clips stored in the cartridge;

FIG. **16** is a cross-sectional plan view of the cartridge of FIG. **14** taken along line **16-16** in FIG. **15**;

FIG. **17** is a side view of an alternative cartridge usable in connection with the clip applier of FIGS. **1-12** or any other suitable clip applier, wherein the cartridge is illustrated with portions removed to illustrate a biasing member and a pusher plate positioned intermediate the biasing member and the clips contained therein;

FIG. **18** is a side view of a cartridge in accordance with at least one alternative embodiment illustrated with portions removed to illustrate a biasing member and a lockout plate positioned intermediate the biasing member and the clips contained therein;

FIG. **19** is a cross-sectional plan view of the cartridge of FIG. **18** taken along line **19-19** in FIG. **18**;

FIG. **20** is a side view of a further alternative cartridge usable in connection with the clip applier of FIGS. **1-12** or any other suitable clip applier, wherein the cartridge can comprise a housing illustrated with portions removed to illustrate a lockout plate comprising guides which are configured to co-operate with guides defined in the cartridge housing;

FIG. **21** is a cross-sectional plan view of the cartridge of FIG. **20** taken along line **21-21** in FIG. **20**;

FIG. **22** is an elevational view of a firing drive comprising a rotary input, a rotary output, a firing nut engaged with the rotary output, and a transmission in a firing configuration in accordance with at least one embodiment;

FIG. **23** is a perspective view of the firing drive of FIG. **22** illustrating the firing nut in an unfired position;

FIG. **24** is a perspective view of the firing drive of FIG. **22** illustrating the firing nut advanced along the rotary output and a cam extending from the firing nut;

FIG. **25** is a perspective view of the firing drive of FIG. **22** illustrating the cam of the firing nut engaged with the transmission of the firing drive and the transmission in a reverse configuration;

FIG. **26** is a perspective view of the firing drive of FIG. **22** illustrating firing nut in a retracted position and a second cam extending from the firing nut engaged with the transmission to shift the transmission from its reverse configuration to its firing configuration;

FIG. **27** is a perspective view of a robotic surgical instrument system operably supporting a plurality of surgical tools usable with the clip applier of FIGS. **2-12** or any other suitable clip applier;

FIG. **28** is a perspective view of a surgical tool including an actuator module, a shaft extending from the actuator module, and a replaceable end effector;

FIG. **29** is a perspective view of a handle actuator usable with the clip applier of FIGS. **2-12** or any other suitable clip applier;

FIG. **30** is a cross-sectional view of the articulation joint illustrated in FIG. **2**;

FIG. **31** is a rear perspective view of an alternative actuator module that may be used in place of the actuator module of FIG. **28** with at least a portion of its housing removed;

FIG. **32** is an exploded view of a portion of the actuator module of FIG. **31**;

FIG. **33** is a partial sectional view of the actuator module of FIG. **31**; and

FIG. **34** is a cross-sectional view of an articulation actuator of the actuator module of FIG. **31**.

DETAILED DESCRIPTION

Applicant of the present application also owns the following patent applications that have been filed on even date herewith and which are each herein incorporated by reference in their respective entireties:

U.S. patent application Ser. No. 13/536,271, entitled "Flexible Drive Member," now U.S. Patent Application Publication No. 2014/0005708.

U.S. patent application Ser. No. 13/536,288, entitled "Multi-Functional Powered Surgical Device with External Dissection Features," now U.S. Patent Application Publication No. 2014/0005718.

U.S. patent application Ser. No. 13/536,277, entitled "Coupling Arrangements for Attaching Surgical End Effectors to Drive Systems Therefor," now U.S. Patent Application Publication No. 2014/0001234.

U.S. patent application Ser. No. 13/536,295, entitled "Rotary Actuatable Closure Arrangement for Surgical End Effector," now U.S. Patent Application Publication No. 2014/0005676.

U.S. patent application Ser. No. 13/536,326, entitled "Surgical End Effectors Having Angled Tissue-Contacting Surfaces," now U.S. Patent Application Publication No. 2014/0005653.

U.S. patent application Ser. No. 13/536,303, entitled "Interchangeable End Effector Coupling Arrangement," now U.S. Patent Application Publication No. 2014/0005661.

U.S. patent application Ser. No. 13/536,393, entitled "Surgical End Effector Jaw and Electrode Configurations," now U.S. Patent Application Publication No. 2014/0005640.

U.S. patent application Ser. No. 13/536,362, entitled "Multi-Axis Articulating and Rotating Surgical Tools," now U.S. Patent Application Publication No. 2014/0005662.

U.S. patent application Ser. No. 13/536,284, entitled "Differential Locking Arrangements for Rotary Powered Surgical Instruments," now U.S. Patent Application Publication No. 2014/0000411.

U.S. patent application Ser. No. 13/536,374, entitled "Interchangeable Clip Applier," now U.S. Patent Application Publication No. 2014/0005693.

U.S. patent application Ser. No. 13/536,292, entitled "Firing System Lockout Arrangements for Surgical Instruments," now U.S. Patent Application Publication No. 2014/0001231.

U.S. patent application Ser. No. 13/536,301, entitled "Rotary Drive Shaft Assemblies for Surgical Instruments with Articulatable End Effectors," now U.S. Patent Application Publication No. 2014/0005677.

U.S. patent application Ser. No. 13/536,313, entitled "Rotary Drive Arrangements for Surgical Instruments," now U.S. Patent Application Publication No. 2014/0005678.

U.S. patent application Ser. No. 13/536,323, entitled "Robotically Powered Surgical Device With Manually-Actuatable Reversing System," now U.S. Patent Application Publication No. 2014/0001235.

U.S. patent application Ser. No. 13/536,386, entitled "Empty Clip Cartridge Lockout," now U.S. Patent Application Publication No. 2014/0005695.

U.S. patent application Ser. No. 13/536,360, entitled "Surgical Instrument System Including Replaceable End Effectors," now U.S. Patent Application Publication No. 2014/0005679.

U.S. patent application Ser. No. 13/536,335, entitled "Rotary Support Joint Assemblies for Coupling a First Portion of a Surgical Instrument to a Second Portion of a Surgical Instrument," now U.S. Patent Application Publication No. 2014/0001236.

U.S. patent application Ser. No. 13/536,417, entitled "Electrode Connections for Rotary Driven Surgical Tools," now U.S. Patent Application Publication No. 2014/0005680.

Applicant also owns the following patent applications that are each incorporated by reference in their respective entireties:

U.S. patent application Ser. No. 13/118,259, entitled "Surgical Instrument With Wireless Communication Between a Control Unit of a Robotic System and Remote Sensor", now U.S. Pat. No. 8,684,253;

U.S. patent application Ser. No. 13/118,210, entitled "Robotically-Controlled Disposable Motor Driven Loading Unit", U.S. Patent Application Publication No. 2011-0290855 A1,

U.S. patent application Ser. No. 13/118,194, entitled "Robotically-Controlled Endoscopic Accessory Channel", U.S. Patent Application Publication No. 2011-0295242;

U.S. patent application Ser. No. 13/118,253, entitled "Robotically-Controlled Motorized Surgical Instrument", U.S. Patent Application Publication No. 2011-0295269 A1;

U.S. patent application Ser. No. 13/118,278, entitled "Robotically-Controlled Surgical Stapling Devices That Produce Formed Staples Having Different Lengths", U.S. Patent Application Publication No. 2011-0290851 A1;

U.S. patent application Ser. No. 13/118,190, entitled "Robotically-Controlled Motorized Surgical Cutting and Fastening Instrument", U.S. Patent Application Publication No. 2011-0288573 A1

U.S. patent application Ser. No. 13/118,223, entitled "Robotically-Controlled Shaft Based Rotary Drive Systems For Surgical Instruments", U.S. Patent Application Publication No. 2011-0290854 A1;

U.S. patent application Ser. No. 13/118,263, entitled "Robotically-Controlled Surgical Instrument Having Recording Capabilities", U.S. Patent Application Publication No. 2011-0295295 A1;

U.S. patent application Ser. No. 13/118,272, entitled "Robotically-Controlled Surgical Instrument With Force Feedback Capabilities", U.S. Patent Application Publication No. 2011-0290856 A1;

U.S. patent application Ser. No. 13/118,246, entitled "Robotically-Driven Surgical Instrument With E-Beam Driver", U.S. Patent Application Publication No. 2011-0290853 A1; and

U.S. patent application Ser. No. 13/118,241, entitled "Surgical Stapling Instruments With Rotatable Staple Deployment Arrangements", now U.S. Patent Application Publication No. 2012/0298719.

Certain exemplary embodiments will now be described to provide an overall understanding of the principles of the structure, function, manufacture, and use of the devices and methods disclosed herein. One or more examples of these exemplary embodiments are illustrated in the accompanying drawings. Those of ordinary skill in the art will understand that the devices and methods specifically described herein and illustrated in the accompanying drawings are non-limiting exemplary embodiments and that the scope of the various exemplary embodiments of the present invention is defined solely by the claims. The features illustrated or described in connection with one exemplary embodiment may be combined with the features of other exemplary embodiments. Such modifications and variations are intended to be included within the scope of the present invention.

Uses of the phrases "in various exemplary embodiments," "in some exemplary embodiments," "in one embodiment", or "in an embodiment", or the like, throughout the specification are not necessarily all referring to the same embodiment. Furthermore, the particular features, structures, or characteristics of one or more exemplary embodiments may

be combined in any suitable manner in one or more other exemplary embodiments. Such modifications and variations are intended to be included within the scope of the present invention.

During various surgical procedures, a surgeon, or other clinician, may apply a clip to a patient's tissue in order to achieve various effects and/or therapeutic results. Referring to FIG. **1**, a surgical instrument, such as a clip applier **100**, for example, can be configured to apply one or more clips to tissue located within a surgical site in the patient. Generally, referring now to FIG. **13**, the clip applier **100** can be structured and arranged to position a clip **140** relative to the tissue in order to compress the tissue within the clip **140**. The clip applier **100** can be configured to deform the clip **140** as illustrated in FIGS. **3** and **4**, for example, and as described in greater detail further below. Each clip **140** can comprise a base **142** and opposing legs **144** extending from the base **142**. The base **142** and the legs **144** can comprise any suitable shape and can define a substantially U-shaped configuration and/or a substantially V-shaped configuration, for example. The base **142** can comprise angled portions **141** which are connected together by a joint **143**. In use, the legs **144** of the clip **140** can be positioned on opposite sides of the tissue wherein the legs **144** can be pushed toward one another to compress the tissue positioned between the legs **144**. The joint **143** can be configured to permit the angled portions **141** of the base **142**, and the legs **144** extending therefrom, to deform inwardly. In various circumstances, the clip **140** can be configured to yield, or deform plastically, when the clip **140** is sufficiently compressed, although some amount of elastic deformation, or spring-back, may occur within the deformed clip **140**.

Referring now to FIGS. **1** and **2**, the clip applier **100** can include a shaft **110**, an end effector **120**, and a replaceable clip cartridge, or magazine, **130**. Referring to FIGS. **14-16**, the clip cartridge **130** can comprise a housing **132** and a plurality of clips **140** positioned within the housing **132**. The housing **132** can define a storage chamber **134** in which the clips **140** can be stacked. The storage chamber **134** can comprise sidewalls which extend around, or at least substantially around, the perimeter of the clips **140**. Referring again to FIG. **13**, each clip **140** can comprise opposing faces, such as a top face **145** and a bottom face **146** on opposite sides of the clip **140** wherein, when the clips **140** are stacked in the housing **132**, the top face **145** of a clip **140** can be positioned against the bottom face **146** of an adjacent clip **140** and wherein the bottom face **146** of the clip **140** can be positioned against the top face **145** of another adjacent clip **140**. In various circumstances, the bottom faces **146** of the clips **140** can face downwardly toward one or more support shelves, or platforms, **135** defined in the housing **132** while the top faces **145** of the clips **140** can face upwardly away from the support shelves **135**. The top faces **145** and the bottom faces **146** of the clips **140** may be identical, or at least substantially identical, in some cases, while, in other cases, the top faces **145** and the bottom faces **146** may be different. The stack of clips **140** depicted in FIGS. **14-16** comprises five clips **140**, for example; however, other embodiments are envisioned in which the stack of clips **140** can include more than five clips **140** or less than five clips **140**. In any event, the clip cartridge **130** can further comprise at least one biasing member, such as biasing member **136**, for example, positioned intermediate the housing **132** and the top clip **140** in the stack of clips **140**. As described in greater detail below, the biasing member **136** can be configured to bias the bottom clip **140** in the stack of clips **140** or, more particularly, the bottom face **146** of the bottom clip **140**, against the support shelves **135** defined in the housing **132**. The biasing member **136** can comprise a spring, and/or any suitable compressed elastic element, for example, which can be configured to apply a biasing force to the clips **140**, or at least apply a biasing force to the top clip **140** which is transmitted downwardly through the stack of clips **140**.

When a clip **140** is positioned against the support shelves **135** as described above, the clip **140** can be supported in a firing position in which the clip **140** can be advanced and ejected from the cartridge **130**. In various circumstances, the support shelves **135** can define at least a portion of a firing chamber **149** in which the clips **140** can be sequentially positioned in the firing position. In some cases, the firing chamber **149** can be entirely defined within the cartridge **130** or, in other cases, the firing chamber **149** can be defined within and/or between the shaft **110** and the cartridge **130**. In any event, as described in greater detail further below, the clip applier **100** can comprise a firing drive which can advance a firing member into the cartridge **130** and push the clip **140** from its firing position positioned against the support shelves **135** to a fired position in which it is received within the end effector **120** of the clip applier **100**. Referring primarily to FIGS. **14-16**, the housing **132** of the cartridge **130** can comprise a proximal opening, or window, **133** which can be aligned, or at least substantially aligned, with the support shelves **135** such that the firing member can enter into the cartridge **130** through the proximal opening **133** and advance a clip **140** distally out of the cartridge **130**. In at least one such embodiment, the housing **132** can further comprise a distal, or discharge, opening, or window, **137** which is also aligned with the support shelves **135** such that the clip **140** can be advanced, or fired, distally along a firing axis **139** extending through the proximal opening **133**, the firing chamber **149**, and the distal opening **137**, for example.

In order to advance a clip **140** out of the cartridge **130**, further to the above, the firing member of the firing drive can be advanced into to the cartridge housing **132** and, in various circumstances, into the firing chamber **149**. As disclosed in greater detail further below, the firing member can pass entirely through the cartridge **130** in order to advance the clip **140** into its fired position within the end effector **120**. After the clip **140** positioned in the firing chamber **149** has been advanced distally by the firing member, as outlined above, the firing member can be retracted sufficiently such that the biasing member **136** can position another clip **140** against the support shelves **135**. In various circumstances, the biasing member **136** can bias a clip **140** against the firing member while the firing member is positioned within the housing **132**. Such a clip **140** can be referred to as a queued clip. After the firing member has been sufficiently retracted and slid out from underneath the queued clip **140**, the biasing member **136** can then bias the clip **140** against the support shelves **135** where it is staged for the next stroke of the reciprocating firing member. Referring primarily to FIGS. **2** and **14-16**, the cartridge **130** can be configured to supply the clips **140** to the firing chamber **149** along a predetermined path, such as supply axis **138**, for example. The supply axis **138** can be transverse to the firing axis **139** such that the clips **140** are fed into the firing chamber **149** in a direction which is different than the direction in which the firing member passes through the firing chamber **149**. In at least one such embodiment, the supply axis **138** can be perpendicular, or at least substantially perpendicular, to the firing axis **139**, for example.

Referring again to FIG. **2**, the shaft **110** can comprise a cartridge, or magazine, aperture **131** which can be sized and configured to receive a clip cartridge **130**, for example,

therein. The cartridge aperture **131** can be sized and configured such that the housing **132** of the cartridge **130** is closely received within the cartridge aperture **131**. The sidewalls which define the cartridge aperture **131** can limit, or at least substantially limit, the lateral movement of the cartridge **130** relative to the shaft **110**. The shaft **110** and/or the cartridge **130** can further comprise one or more locks which can be configured to releasably hold the cartridge **130** in the cartridge aperture **131**. As illustrated in FIG. **2**, the cartridge **130** can be loaded into the cartridge aperture **131** along an axis which is, in at least one embodiment, parallel to or collinear with the supply axis **138**. As also illustrated in FIG. **2**, the shaft **110** can further comprise a pad or seat **118** extending from the sidewall **111** of the shaft **110** wherein the pad **118** can be configured to be received within and/or engaged with the housing **132** of the cartridge **130**. The pad **118** can be sized and configured to be closely received within a recess **148** defined in the cartridge housing such that the pad **118** can limit, or at least substantially limit, the lateral movement of the cartridge **130** relative to the shaft **110**. The pad **118** can be sized and configured to align the cartridge **130** within the shaft **110** and/or support the cartridge housing **132**.

Once the clip cartridge **130** has been positioned and seated within the shaft aperture **131**, referring now to FIGS. **5** and **6**, a firing drive **160** of the clip applier **100** can be actuated to advance the clips **140** from the clip cartridge **130** as described above. The firing drive **160** can comprise a rotary drive input such as a drive screw **161**, for example, and a displaceable firing nut **163** operably engaged with the drive screw **161**. The drive screw **161** can comprise at least one drive thread **162** which can be threadably engaged with a threaded aperture extending through the firing nut **163**. In various embodiments, the clip applier **100** can further include an electric motor, for example, operably coupled with the drive screw **161**. In various instances, the drive screw **161** can be operably coupled with the motor of a surgical instrument system comprising a hand-held instrument or a robotic arm, for example. In any event, the movement of the firing nut **163** within the shaft **110** can be constrained such that the firing nut **163** moves along a longitudinal axis **164** when the drive screw **161** is rotated about the longitudinal axis **164** by the motor. For instance, when the drive screw **161** is rotated in a first direction by the motor, the drive screw **161** can advance the firing nut **163** distally toward the end effector **120**, as illustrated in FIG. **6**. When the drive screw **161** is rotated in a direction opposite the first direction by the motor, the drive screw **161** can retract the firing nut **163** proximally away from the end effector **120**. The shaft **110** can comprise one or more bearings which can be configured to rotatably support the drive screw **161**. For instance, a bearing **159** can be configured to rotatably support the distal end of the drive screw **161**, for example, as illustrated in FIGS. **5** and **6**.

The firing drive **160** can further comprise a firing member **165** extending from the firing nut **163** which can be advanced distally and retracted proximally with the firing nut **163**, as described in greater detail further below. Upon comparing FIGS. **5** and **6**, the reader will note that the firing nut **163** and the firing member **165** have been advanced from a proximal, unfired position, illustrated in FIG. **5**, to a distal, fired position, illustrated in FIG. **6**, in which the firing member **165** has advanced a clip **140** from the clip cartridge **130** into the end effector **120**. Referring primarily to FIG. **5**, the clip cartridge **130** is illustrated as comprising a plurality of clips **140** stored therein wherein one of the clips **140** is positioned in a firing position, as described above. As illustrated in FIGS. **5** and **6**, the firing member **165** can include a distal portion **166** which can be advanced into the staple cartridge **130** along a firing axis **167** and engage the clip **140** positioned in the firing position when the firing member **165** and the firing nut **163** are advanced distally. In some cases, the firing member **165** can comprise a linear member while, in other cases, the distal end **166** of the firing member **165** can extend upwardly from the firing member **165**, for example. Further to the above, the firing member **165** can advance the clip **140** distally out of the clip cartridge **130** along the firing axis **167** and into a receiving cavity **122** defined in the end effector **120**.

In various cases, the firing member **165** can be attached to and extend distally from the firing nut **163** while, in other cases, the firing member **165** and the firing nut **163** can be operably connected to one another by a firing actuator **168**. The firing actuator **168** can be pivotably mounted to the firing member **165** at a pivot **169** and can include a distal arm **170***a* and a proximal arm **170***b* which can be engaged with a longitudinal slot **113** defined in the housing **112** of the shaft **110**. In at least one such embodiment, each of the arms **170***a*, **170***b* can include a projection, such as projections **171***a* and **171***b*, respectively, extending therefrom which can be configured to slide within the longitudinal slot **113**. Further to the above, the firing nut **163** can further include a firing pin **172** extending therefrom which can be configured to engage the distal arm **170***a* in order to advance the actuator **168** and the firing member **165** distally, as described above. In use, referring again to the progression illustrated in FIGS. **5** and **6**, the firing nut **163** can be advanced distally by the drive screw **161** wherein the firing pin **172**, which is positioned intermediate the distal arm **170***a* and the proximal arm **170***b*, can contact the distal arm **170***a* and drive the actuator **168** and the firing member **165** distally. As the actuator **168** is advanced distally, the actuator **168** may be prevented from rotating about the pivot pin **169** as one or both of the projections **171***a* and **171***b* sliding in the shaft slot **113** can be prevented from being moved laterally relative to the longitudinal shaft slot **113** until the actuator **168** reaches the position illustrated in FIG. **6**.

When the actuator **168** has reached the position illustrated in FIG. **6**, the distal projection **171***a* can enter into a distal slot portion **114** of the longitudinal slot **113** which can be configured to pivot the actuator **168** downwardly, or permit the actuator **168** to be pivoted downwardly, as illustrated in FIG. **9**. In at least one such embodiment, the distal projection **171***a* can come into contact with the sidewall of the distal slot portion **114** which can guide the distal projection **171***a* downwardly and pivot the actuator **168** about the pivot **169** as the actuator **168** is advanced forward by the firing nut **163**. In such a pivoted position, the firing pin **172** extending from the firing nut **163** may no longer be engaged with the distal arm **170***a* of the actuator **168** wherein, subsequently, the firing nut **163** may move distally independently of the actuator **168** thereby leaving behind the actuator **168** and the firing member **165**. Stated another way, the distal end **114** of the longitudinal shaft slot **113** may deactivate the firing member **165** wherein, at such point, the position of the firing member **165** may represent the fully-fired or distal-most position of the firing member **165**. In such a position, the clip **140** has been fully advanced into the receiving cavity, or receiver, **122**. Furthermore, in such a position, the next clip **140** to be advanced into the receiving cavity **122** may be biased against the top surface of the firing member **165**, further to the above.

Once a clip **140** has been positioned within the receiving cavity **122**, further to the above, the clip **140** can be

deformed by a crimping drive **180**, for example. Referring now to FIGS. **3** and **4**, the end effector **120** of the clip applier **100** can further comprise a first jaw **123***a* and a second jaw **123***b* wherein the first jaw **123***a* and the second jaw **123***b* can at least partially define the receiving chamber **122**. As illustrated in FIGS. **3** and **4**, the first jaw **123***a* can comprise a first channel **124***a* and the second jaw **123***b* can comprise a second channel **124***b* which can each be configured to receive and support at least a portion of a clip **140** therein. The first jaw **123***a* can be pivotably coupled to a frame **111** of the shaft **110** by a pin **125***a* and the second jaw **123***b* can be pivotably coupled to the frame **111** by a pin **125***b*. In use, the crimping drive **180** can be configured to rotate the first jaw **123***a* toward the second jaw **123***b* and/or rotate the second jaw **123***b* toward the first jaw **123***a* in order to compress the clip **140** positioned therebetween. In at least one such embodiment, the crimping drive **180** can comprise a cam actuator **181** which can be configured to engage a first cam surface **126***a* defined on the first jaw **123***a* and a second cam surface **126***b* on the second jaw **123***b* in order to pivot the first jaw **123***a* and the second jaw **123***b* toward one another. The cam actuator **181** can comprise a collar which at least partially surrounds the first jaw **123***a* and the second jaw **123***b*. In at least one such embodiment, the collar can comprise an inner cam surface **182** which can be contoured to contact the cam surfaces **126***a*, **126***b* of the jaws **123***a*, **123***b* and drive them inwardly toward one another. In various circumstances, the clip **140** positioned within the receiving chamber **122** defined in the end effector **120** can be positioned relative to tissue before the crimping drive **180** is actuated. In some circumstances, the crimping drive **180** can be at least partially actuated prior to positioning the clip **140** relative to the tissue in order to at least partially compress the clip **140**. In certain instances, the clip **140** and the receiving chamber **122** can be sized and configured such that the clip **140** can be biased or flexed inwardly when the end effector **120** is in its unactuated state, as illustrated in FIG. **3**. In various instances, the crimping first jaw **123***a* and the second jaw **123***b* can be actuated to elastically crimp and/or permanently crimp the clip **140** positioned therebetween.

Further to the above, the firing nut **163** can be configured to actuate the crimping drive **180**. More particularly, referring now to FIG. **7**, the crimping drive **180** can comprise a crimping actuator **188** operably coupled with the cam actuator **181** wherein the crimping actuator **188** can be selectively engaged by the firing nut **163** as the firing nut **163** is advanced distally as described above. In at least one such embodiment, the firing nut **163** can further comprise a second firing pin, such as firing pin **184**, for example, extending therefrom which can be configured to engage the crimping actuator **188** as the firing nut **163** is advancing the firing actuator **168**. Referring again to FIG. **7**, the crimping actuator **188** is positioned in an unactuated position and, when the firing nut **163** is advanced sufficiently to engage a distal arm **190***a* of the crimping actuator **188**, the firing nut **163** can rotate the crimping actuator **188** upwardly into an actuated position as illustrated in FIG. **8**. As also illustrated in FIG. **8**, the distal arm **190***a* and a proximal arm **190***b* can each comprise a projection, such as projections **191***a* and **191***b*, respectively, extending therefrom which can be positioned within a second longitudinal slot defined in shaft **110**, such as slot **115**, for example. As the crimping actuator **188** is rotated upwardly from its unactuated position about a pivot **189**, the projections **191***a* and **191***b* can move from the proximal curved end **116** of the longitudinal slot **115** into a portion of the longitudinal slot **115** which is substantially linear. Similar to the above, the sidewalls of the longitudinal slot **115** can be configured to confine the movement of the crimping actuator **188** along a longitudinal path and can be configured to limit or prevent the rotation of the crimping actuator **188** once the crimping actuator **188** has been rotated upwardly into an at least partially actuated position, as discussed above. As the reader will understand, the firing pin **172** of the firing drive **160** and the firing pin **184** of the crimping drive **180** both extend from the firing nut **163**. For the sake of expediency and demonstration, the firing pins **172** and **184** are illustrated as extending from the same side of the firing nut **163**; however, it is envisioned that the firing pin **172** can extend from a first lateral side of the firing nut **163** while the firing pin **184** can extend from the other lateral side of the firing nut **163**. In such circumstances, the firing actuator **168** can be positioned alongside the first lateral side of the drive screw **161** and the crimping actuator **188** can be positioned alongside the opposite lateral side of the drive screw **161**. Correspondingly, the longitudinal slot **113** can be defined in a first lateral side of the shaft housing **112** while the longitudinal slot **115** can be defined in the opposite lateral side of the shaft housing **112**.

Further to the above, the cam actuator **181** can be operably coupled with crimping actuator **188** such that, when the crimping actuator **188** is advanced distally by the firing nut **163**, the cam actuator **181** can be advanced distally, as illustrated in FIGS. **8** and **10**, until the distal projection **191***a* extending from the distal arm **190***a* reaches the distal end **117** of the longitudinal slot **115**. In such a distal position, the cam actuator **181** may be in a fully advanced position and the clip **140** positioned within the receiving chamber **122** can be in a fully deformed or crimped configuration. Thereafter, the cam actuator **181** can be retracted and the end effector **120** can be reopened. More particularly, the drive screw **161** can be rotated in an opposite direction in order to move the firing nut **163** proximally and retract the cam actuator **181** wherein, in certain instances, the end effector **120** can further include a biasing member which can be configured to bias the first jaw **123** and the second jaw **123***b* from the closed, or fired, position illustrated in FIG. **4** into the open, or unfired, position illustrated in FIG. **3**. As the firing nut **163** is retracted from its position illustrated in FIG. **10**, the firing pin **184** extending from the firing nut **163** can engage the proximal arm **190***b* of the crimping actuator **188** and move the crimping actuator **188**, and the cam actuator **181** extending therefrom, proximally as illustrated in FIG. **12**. Similar to the above, the proximal projection **191***b* extending from the proximal arm **190***b* of the crimping actuator **188** can be configured to contact the sidewall of the curved proximal end **116** wherein the sidewall can guide the crimping actuator **188** downwardly and rotate the crimping actuator **188** about the pivot **189**. At such point, the firing pin **184** may no longer be engaged with the crimping actuator **188**, the cam actuator **181** may be fully retracted, and the firing nut **163** may continue to be retracted proximally relative to the crimping actuator **188**.

Further to the above, referring now to FIG. **11**, the firing nut **163** can be configured to re-engage the firing actuator **168** as the firing nut **163** is being retracted proximally. As discussed above, the firing actuator **168** is rotated downwardly when the firing actuator **168** reaches the distal end **114** of the longitudinal slot **113** and, as a result, the firing actuator **168** may still be in its downwardly rotated position when the firing nut **163** is retracted proximally to re-engage the firing actuator **168**. As illustrated in FIG. **11**, the firing pin **172** extending from the firing nut **163** can engage the proximal arm **170***b* of the firing actuator **168** and, as the firing nut **163** is further retracted, the firing nut **163** can

rotate the firing actuator **168** upwardly such that the projections **171***a* and **171***b* extending from the arms **170***a* and **170***b*, respectively, can re-enter the longitudinal portion of the longitudinal slot **113**. Thereafter, the firing nut **163** and can be retracted until the firing actuator **168** and the firing member **165** extending therefrom have been returned to their starting, or unfired, positions illustrated in FIG. **5**. In such circumstances, the firing member **165** can be withdrawn from the clip cartridge **130** as the firing member **165** is retracted proximally by the firing nut **163** such that a new clip **140** can be biased into the firing chamber of the clip cartridge **130** by the biasing member **136**. Once the firing member **165** and the firing actuator **168** have been retracted to their starting positions and the next clip **140** has been positioned within the firing chamber, the firing drive **160** can be actuated once again in order to move the firing nut **163** and the firing member **165** distally to advance the next clip **140** into the end effector **120**. Likewise, the firing nut **163** can re-actuate the crimping drive **180** as the firing nut **163** is moved distally once again in order to deform the next clip **140**. Thereafter, the firing nut **163** can retracted in order to re-set the crimping drive **180** and the firing drive **160** once again. This process can be repeated until a sufficient number of clips **140** have been applied to the targeted tissue and/or until the clips **140** contained within the clip cartridge **130** have been depleted. In the event that additional clips **140** are needed, the expended clip cartridge **130** can be removed from the shaft **110** and a replacement clip cartridge **130** containing additional clips **140** can be inserted into the shaft **110**. In some circumstances, an at least partially depleted clip cartridge **130** can be replaced with an identical, or at least nearly identical, replacement clip cartridge **130** while, in other circumstances, the clip cartridge **130** can be replaced with a clip cartridge having more than or less than five clips **140** contained therein and/or a clip cartridge having clips other than clips **140** contained therein, for example.

Referring again to FIGS. **6-9**, the firing nut **163** of the illustrated embodiment can be configured to become disengaged from the firing actuator **168** at the same time that the firing nut **163** becomes engaged with the crimping actuator **188**. Stated another way, the firing drive **160** can be deactivated at the same time that the crimping drive **180** is activated. In various circumstances, such timing can be achieved when the distal end **114** of the longitudinal slot **113** is aligned, or at least substantially aligned, with the proximal end **116** of the second longitudinal slot **115**, for example. In the illustrated embodiment and/or any other suitable embodiment, a lag can exist between the deactivation of the firing drive **160** and the activation of the crimping drive **180**. Such a lag between the end of the firing stroke of the firing member **165** and the beginning of the firing stroke of the cam actuator **181** can be created, in some circumstances, to assure that the clip **140** has been positioned in its fully-seated position within the receiving chamber **122** before the clip **140** is deformed by the cam actuator **181**. In various circumstances, such a lag can be created when the distal end **114** of the longitudinal slot **113** is positioned proximally with respect to the proximal end **116** of the second longitudinal slot **115**, for example. In the illustrated embodiment and/or any other suitable embodiment, the deactivation of the firing drive **160** may occur after the activation of the crimping drive **180**. Such an overlap between the end of the firing stroke of the firing member **165** and the beginning of the firing stroke of the cam actuator **181** can be created, in some circumstances, to apply at least some inward pressure on the clip **140** as it is moved into its fully-seated position within the receiving chamber **122** so as to reduce or eliminate relative movement between the clip **140** and the sidewalls of the receiving chamber **122**, for example. In various circumstances, such an overlap can be created when the distal end **114** of the longitudinal slot **113** is positioned distally with respect to the proximal end **116** of the second longitudinal slot **115**, for example.

In the illustrated embodiment of FIG. **1** and/or any other suitable embodiment, turning now to FIG. **17**, a clip cartridge, such as clip cartridge **230**, for example, can comprise a pusher plate **248** positioned intermediate the biasing member **136** and the top-most clip **140** stacked within the clip cartridge **230**. The pusher plate **248** can be rigid, or at least substantially rigid, and can comprise a first bearing surface against which the biasing member **136** can apply a biasing force. The pusher plate **248** can also comprise a second bearing surface which can transmit the biasing force to the top surface **145** of the top-most clip **140**. The pusher plate **248** can be comprised of a sheet of stainless steel material, for example, although the pusher plate **248** can comprise any suitable shape and can be comprised of any suitable material. In certain instances, the pusher plate **248** may not be attached to the biasing member **136** while, in other instances, the pusher plate **248** can be affixed to the biasing member **136** such that the pusher plate **248** does not become dislodged from the cartridge housing **132**. In various circumstances, the pusher plate **248** can be sized and configured such that it cannot pass through the proximal opening **133** and/or the distal opening **137** defined in the cartridge housing **132**.

In the illustrated embodiment of FIG. **1** and/or any other suitable embodiment, turning now to FIGS. **18** and **19**, a clip cartridge, such as clip cartridge **330**, for example, can comprise a lockout member which can be positioned within the firing chamber **149** of the clip cartridge **330** after all of the clips **140** contained within the clip cartridge **330** have been ejected from the cartridge **330**. The lockout member can comprise a lockout plate **348** which can be positioned intermediate the biasing member **136** and the top surface **145** of the top-most clip **140** contained within the clip cartridge **330**. In use, further to the above, the clips **140** can be sequentially positioned in the firing chamber **149** of the clip cartridge **130** and then advanced distally out of the clip housing **132** wherein, after the last clip **140** has been advanced out of the clip housing **132** and the firing member **165** has been withdrawn from the clip cartridge **130**, the biasing member **136** can bias the lockout plate **348** against the shelves **135**. In such a position, the lockout plate **348** can be aligned with the proximal opening **133** and the distal opening **137** such that the firing member **165** cannot enter, or at least substantially enter, the clip cartridge **130**. In such circumstances, the lockout plate **348** can block the firing member **165** from entering into and passing through the housing **132** and, as a result, prevent the inadvertent firing of the clip applier **100** after the clip cartridge **130** has run out of clips. In the event that the operator of the clip applier **100** were to actuate the firing drive **160** and attempt to advance the firing member **165** into the spent clip cartridge **130**, the firing member **165** would contact and abut the lockout plate **348** wherein, in such circumstances, a compressive load can be created within the firing member **165**. The clip applier **100** can further include a clutch which can be configured to slip and operably disconnect the motor from the drive screw **161** when the compressive load created within the firing member **165** exceeds a certain or predetermined amount. In addition to or in lieu of a clutch, the motor and/or motor controller of the clip applier **100** which operates the firing

drive **160**, for example, can comprise a load sensor configured to detect the load generated within the firing member **165** and, when the load created within the firing member **165** exceeds a certain or predetermined amount, the voltage and/or current supplied to the motor can be switched off and/or reduced. In any event, the lockout plate **348** can be sized and configured such that the lockout plate **348** cannot be dislodged through the distal opening **137** and/or the proximal opening **133** when the firing member **165** contacts the lockout plate **348**. In order to use the clip applier **100** once again, the operator of the clip applier **100** can remove the spent cartridge **330** from the shaft **110** and insert a new clip cartridge **330**, for example, into the shaft **110**. At such point, a clip **140** may be positioned within the firing chamber **149** of the new clip cartridge **330** and the firing member **165** can be advanced distally into the new clip cartridge **330** to deploy the clip **140** as described above.

In the illustrated embodiment of FIG. **1** and/or any other suitable embodiment, referring now to FIGS. **20** and **21**, a clip cartridge, such as clip cartridge **430**, for example, can comprise guides which can be configured to limit or confine the movement of a lockout member within the clip cartridge **430**. Similar to the above, the lockout member can comprise a lockout plate **448**, for example, which can be positioned intermediate the biasing member **136** and the top surface **145** of the top-most clip **140** contained within the housing **432** of the clip cartridge **430**. In use, similar to the above, the lockout plate **448** can be progressively pushed downwardly into the firing chamber **149** as the clips **140** are sequentially ejected from the clip cartridge **430**. The lockout plate **448** can be sized and configured such that it is closely received within the cartridge housing **432** and such that relative lateral movement between the lockout plate **448** and the housing **432** can be limited in order to reduce, or prevent, the possibility of the lockout plate **448** becoming misaligned within the clip cartridge **430**. In the event that the lockout plate **448** were to become misaligned within the clip cartridge **430**, the lockout plate **448** may bind within the housing **432** and prevent the biasing member **136** from applying an appropriate biasing force to the stack of clips **140**, for example. As illustrated in FIGS. **20** and **21**, the lockout plate **438** can further comprise guide members **447** extending therefrom which can be received within guide slots **446** defined in the cartridge housing **432**. The guide members **447** and the guide slots **446** can be sized and configured such that the guide members **447** are closely received within the guide slots **446** and such that relative lateral movement between the lockout plate **438** and the cartridge housing **432** can be limited. Each of the guide slots **446** can be defined by opposing sidewalls **445** which can define a distance therebetween which is equal to or slightly larger than the width of the guide member **447** positioned therein such that the guide member **447** can slide between the opposing sidewalls **445** between the top **443** and the bottom **444** of the guide slot **446**. Thus, while the guide members **447** and the guide slots **446** can be configured to limit lateral movement therebetween, as outlined above, the guide members **447** and the guide slots **446** can be configured to permit relative movement between the lockout plate **438** and the cartridge housing **432** along a predetermined path parallel to or collinear with the supply axis **138**, for example. When the lockout plate **438** is pushed into the firing chamber **149** by the biasing member **136**, the lockout plate **438** can inhibit the advancement of the firing member **165** and the operation of the clip applier **100**, as outlined above, until the spent clip cartridge **430** is replaced with another suitable clip cartridge.

In the illustrated embodiment of FIG. **1** and/or any other suitable embodiment, as discussed above, the drive screw **161** can be rotated in a first direction to advance the firing nut **163** distally and rotated in a second, or reverse, direction to retract the firing nut **163** proximally. In order to rotate the drive screw **161** in the first and second directions, the electric motor operably coupled with the drive screw **161** can be operated in corresponding first and second directions. In the illustrated embodiment of FIG. **1** and/or any other suitable embodiment, a clip applier can utilize a motor which is operated in only a first direction wherein the rotation of the motor in such a single direction can be utilized to advance a firing nut distally and retract the firing nut proximally. Turning now to FIGS. **22-26**, the output of an electric motor can be transmitted to a drive system **560** via a transmission system **550**. The transmission system **550** can comprise an input shaft **552** which is operated in a single direction wherein the transmission system **550** can be switchable or shiftable between a first state, or configuration, in which the transmission system **550** rotates a drive screw **561** of the drive system **560** in a first direction and a second state, of configuration, in which the transmission system **550** rotates the drive screw **561** in a second, or opposite, direction. The first state of the transmission system **550** is depicted in FIGS. **22-24** and the second state of the transmission system **550** is depicted in FIGS. **25** and **26**.

Referring again to FIGS. **22-24**, the input shaft **552** can comprise an input gear **551** mounted thereto which is operably coupled, or meshingly engaged, with a shifter gear **553** such that the rotation of the input shaft **552** is transmitted to the shifter gear **553**. With regard to all of the gears discussed herein, gears which are operably coupled or meshingly engaged with one another can comprise any suitable arrangement of teeth, for example, which can transmit the rotation of one gear to the other. When the input shaft **552** is rotated in the first direction, the shifter gear **553** is rotated in the second, or opposite, direction. In the first state of the transmission system, the shifter gear **553** is in a first position in which the shifter gear **553** is operably coupled with an intermediate gear **554** wherein, when the shifter gear **553** is rotated in the second direction by the input gear **551**, as discussed above, the intermediate gear **554** is rotated in the first direction. Although not illustrated, the intermediate gear **554** can be rotatably supported within the shaft **110** of the clip applier **100**, for example. The intermediate gear **554** can also be operably coupled with an output gear **555** mounted to the drive screw **561** such that the rotation of the intermediate gear **554** can be transmitted to the output gear **555**. When the intermediate gear **554** is driven in the first direction by the shifter gear **553**, as described above, the intermediate gear **554** can drive the output gear **555** and the drive screw **561** in the second direction. Similar to the above, the firing nut **563** can be operably coupled with the drive screw **561** and suitably constrained within the shaft **110** such that, when the drive screw **561** is rotated in the second direction, the firing nut **563** is advanced distally as indicated by the arrow D.

Similar to the above, the firing nut **563** can be advanced to its distal-most position, illustrated in FIG. **24**, in order to advance a clip **140** from the clip cartridge **130** into the end effector **120** and crimp the clip **140** as described above. As illustrated in FIGS. **23** and **24**, the firing nut **563** can further comprise a cam bar **569** extending therefrom which can be configured to shift the transmission system **550** from its first state to its second state. Upon comparing FIG. **24** and FIG. **25**, the reader will note that the shifter gear **553** is movable between a first position in which the transmission system

550 is in its first state and a second position in which the transmission system 550 is in its second state. More particularly, the shifter gear 553 is mounted to a shifter 556 which is rotatable about the input shaft 552 such that the shifter gear 553 can be rotated from its first position in which the shifter gear 553 is operably engaged with the input gear 551 and the intermediate gear 554 and its second position in which the shifter gear 553 is operably disengaged from the intermediate gear 554. Although the shifter gear 553 is operably disengaged from the intermediate gear 554 when the shifter gear 553 is in its second position, the shifter gear 553 can be operably coupled with the input gear 551 and the output gear 555 in order to transmit rotary motion from the input shaft 552 to the drive screw 561. As illustrated in FIGS. 24 and 25, the shifter 556 can comprise a central aperture through which the input shaft 552 can extend; however, the shifter 556 may not be operably engaged with the input shaft 552 and, as a result, the rotation of the input shaft 552 may not rotate the shifter 556 and, likewise, the rotation of the shifter 556 may not rotate the input shaft 552. In any event, the shifter 556 can further comprise a cam follower 558 extending therefrom which can be engaged by a cam 568 defined on the cam bar 569 as the firing nut 563 is advanced distally. When the cam 568 engages the cam follower 558, the cam 568 can rotate the shifter 556 and the shifter gear 553 between its first position and its second position as described above.

When the shifter gear 553 is in its second position and the transmission system 550 is in its second state, as described above, the input shaft 552 and the drive screw 561 can both be rotated in the first direction. More particularly, the input shaft 552, when rotated in the first direction, can rotate the input gear 551 in the first direction and, as the shifter gear 553 is directly engaged with the input gear 551, the shifter gear 553 will be rotated in the second direction. The reader will note that the shifter gear 553 rotates in the second direction when the transmission system 550 is in its second state as compared to the first, or opposite, direction when the transmission system 550 is in its first state. Upon comparing FIGS. 24 and 25, further to the above, the reader will appreciate that the intermediate gear 554 is no longer operably positioned intermediate the input gear 551 and the shifter gear 553 when the transmission system 550 is in its second state thereby accounting for the different directions of rotation. As the shifter gear 553 is operably engaged with the input gear 551 and the output gear 555 when the shifter gear 553 is in its second position, the shifter gear 553 can rotate the output gear 555, and the drive screw 561 coupled to the output gear 555, in the first direction. When the drive screw 561 is rotated in the first direction, as illustrated in FIGS. 25 and 26, the firing nut 563 can be retracted proximally to permit the end effector 120 to be reopened and to retract the firing member 165. Referring primarily to FIG. 26, the firing nut 563 can further comprise a second cam bar 567 extending therefrom comprising a cam 566 which can be configured to contact the cam follower 558 of the shifter 556 as the firing nut 563 is retracted proximally into its fully-retracted position. In such circumstances, the cam 566 can push the shifter 556 back into its first position and into operative engagement with the intermediate gear 554 such that the transmission system 550 can be reset into its first state and the clip applier 100 can be actuated once again.

As discussed above, the firing drive of the clip applier 100 can be operated by a surgical instrument system comprising an electric motor. A robotic surgical instrument system 20 is illustrated in FIG. 27 and can comprise a plurality of movable arms 30. Each arm 30 can comprise an actuator module 32 comprising an electric motor configured to supply the rotary motion to the shaft 110 of a clip applier 100, and/or any other suitable surgical instrument. Referring now to FIG. 28, an end effector 620 may be selectively engageable with and disengageable from an actuator shaft 610 of a clip applier wherein the end effector 620 can comprise a proximal end 621 which can be coupled to a distal end 611 of the shaft 610. The proximal end 621 of the end effector 620 can comprise an outer housing 629, a frame extending through the outer housing 629, an outer drive shaft extending through the frame, and an inner drive shaft extending through the outer drive shaft. Similarly, the distal end 611 of the shaft 610 can comprise an outer housing 619, a frame 663 extending through the outer housing 619, an outer drive shaft 662 extending through the frame 663, and an inner drive shaft 661 extending through the outer drive shaft 662. With regard to the distal end 611 of the shaft 610, the frame 663, the outer drive shaft 662, and the inner drive shaft 661 can each comprise a portion of a tongue connector 613 extending therefrom and a portion of a connector groove 612 defined therein, wherein the tongue connector 613 can be configured to be received within a tongue groove 623 defined in the proximal end 621 of the end effector 620, and wherein the tongue groove 612 can be configured to receive a tongue connector 622 extending from the proximal end 621 of the end effector 620. Similar to the tongue connector 613 which extends across the frame 663, the outer drive shaft 662, and the inner drive shaft 661 of the distal shaft end 611, the tongue connector 622 can extend across the frame, the outer drive shaft, and the inner drive shaft of the proximal end 621 of the end effector 620. Also, similar to the tongue groove 612 which extends across the frame 663, the outer drive shaft 662, and the inner drive shaft 661 of the distal shaft end 611, the tongue groove 623 can extend across the frame, the outer drive shaft, and the inner drive shaft of the proximal end 621 of the end effector 620. In the configuration depicted in FIG. 28, the tongue connector 622 of the end effector 620 can be slid laterally into the tongue groove 612 of the shaft 610 at the same time that the tongue connector 613 of the shaft 610 is slid laterally into the tongue groove 623 of the end effector 620. Owing to such assembly, the frame of the end effector 620 can be securely coupled to the frame 663 of the shaft 610, the outer drive shaft of the end effector 620 can be operably coupled to the outer drive shaft 662 of the shaft 110, and the inner drive shaft of the end effector 620 can be operable coupled to the inner drive shaft 661 of the shaft 110. The reader will note that the portions of the tongue connector 612 are aligned with one another, the portions of the tongue groove 613 are aligned with one another, the portions of the tongue groove 622 are aligned with one another, and the portions of the tongue connector 623 are aligned with one another when the end effector 620 is assembled to the shaft 610. Once assembled, the outer drive shaft 662 of the shaft 110 can rotate the outer drive shaft of the end effector 620, and the inner drive shaft 661 of the shaft 610 can rotate the inner drive shaft of the end effector 620. When the outer drive shaft 662 and/or the inner drive shaft 661 are rotated, the portions of the tongue connector 612, the portions of the tongue groove 613, the portions of the tongue groove 622, and the portions of the tongue connector 623 may no longer be aligned. In order to remove the end effector 620 from the shaft 610, the inner drive shaft 661 and/or the outer drive shaft 662 can be rotated into one or more positions in which the tongue connectors 612 and 623 and the tongue grooves 613 and 622 are sufficiently aligned.

Referring again to FIG. **28**, the outer housing **619** of the shaft **610** can further comprise a stop **614** which can be configured to limit the lateral movement of the end effector **620** as the end effector **620** is being slid transversely onto the distal end **611** of the shaft **610**. The stop **614** can provide a datum from which the inner drive shaft of the end effector **620** and the inner drive shaft **661** of the shaft **610** are aligned along longitudinal axis **615**, the outer drive shaft of the end effector **620** and the other drive shaft **662** of the shaft **610** are aligned along longitudinal axis **615**, and/or the frame of the end effector **620** and the frame **663** of the shaft **610** are aligned along the longitudinal axis **615**. Further to the above, the inner drive shaft **661** can extend into an actuator module **632** which can comprise an electric motor and/or gear train **664** operably coupled with the inner drive shaft **661** configured to rotate the inner drive shaft **661**. Furthermore, the actuator module **632** can comprise a second electric motor and gear train operably engaged with the second drive shaft **662** configured to drive the second drive shaft **662**. As described in greater detail below, a second electric motor can be utilized to articulate the end effector **620**. Also, further to the above, the outer housing **619** and/or the frame **663** of the shaft **610** can further comprise a gear **617** mounted thereto which is operably engaged with an electric motor and gear train **618** which can be configured to rotate the shaft **610** and the end effector **620** about the longitudinal axis **615**. For instance, if the electric motor and gear train **618** are operated in a first direction, the shaft **610** and the end effector **620** can be rotated about the axis **615** in a clockwise direction while, if the electric motor and gear train **618** are operated in a second direction, the shaft **610** and the end effector **620** can be rotated about the axis **615** in a counter-clockwise direction in order to position and orient the end effector **620**.

As discussed above, the end effector **620** can be selectively attached to and detached from the shaft **610**. The reader will note that the principles discussed in connection with the end effector **620** and shaft **610** can be equally applied to the end effector **120** and the shaft **110** of the embodiment disclosed in FIG. **1**, among others. That said, referring again to FIG. **27**, one of the robotic arms **30** can be selectively engaged with an end effector **120** of a clip applier or, alternatively, any other suitable end effector, such as the end effector of a surgical stapler, for example. In such circumstances, an end effector **120** can be selectively interchanged with another end effector and, as a result, a single robotic arm **30** can be utilized to perform more than one function. Stated another way, the clip applier **100** can comprise a replaceable loading unit which can be replaced by, or interchanged with, another clip applier loading unit and/or any other suitable replaceable loading unit. Turning now to FIG. **29**, the end effector **120** and the shaft **110** of the clip applier **100** can be utilized with a surgical instrument system comprising a handle **700**. The handle **700** can comprise an actuator **701** which can be operated, or squeezed toward grip **702**, in order to apply a rotary motion to the drive screw **161** as described above. In some cases, the rotation of the actuator **701** can be mechanically transmitted to the drive screw **161** while, in other cases, the actuator **701** can operate a motor operably coupled to the drive screw **161**.

Further to the above, the end effector **120** and the shaft **110** of the clip applier **100** can be aligned along a longitudinal axis of the clip applier **100**. Turning now to FIG. **30**, the end effector **120** and/or the shaft **110** can further comprise an articulation joint **101** which can be configured to permit the end effector **120** to be articulated relative to the longitudinal axis of the clip applier **100**. The shaft **110** can comprise an outer housing, or frame portion, **119** which can comprise a proximal end **102** and can comprise a distal portion of the articulation joint **101**. The proximal end **102** can comprise a spherical, or an at least substantially spherical, end **102**, for example, which can be received within a spherical, or an at least substantially spherical, cavity **104** defined in an articulation joint member **103**. The articulation joint member **103** can also comprise a spherical, or at least substantially spherical, end **105**, for example, which can be received within a spherical, or an at least substantially spherical, cavity **107** defined in a shaft frame portion **106**. The proximal end **102** of the shaft **110** can be at least partially captured within the cavity **104** such that the proximal end **102** cannot be readily removed from the cavity **104**. That said, the proximal end **102** and the cavity **104** can be sized and configured to permit the proximal end **102** to be rotated in any suitable direction within the cavity **104**. As also illustrated in FIG. **30**, the clip applier **100** can further comprise articulation controls **108*a*** and **108*b***, for example, which can extend through the articulation joint **101** and can comprise distal ends mounted within mounting apertures **109*a*** and **109*b***, respectively, defined within the proximal end **102** of the shaft housing **119**. In use, the articulation controls **108*a*** and **108*b*** can be pushed and/or pulled in order to move the proximal end **102** within the cavity **104**. Further to the above, the end **105** of the articulation joint member **103** can be at least partially captured within the cavity **107** defined in the shaft frame portion **106** such that the end **105** cannot be readily removed from the cavity **107**. That said, the end **105** and the cavity **107** can be sized and configured to permit the end **105** to be rotated in any suitable direction within the cavity **107** when the shaft end **102** is pushed and/or pulled by the actuators **108*a*** and **108*b*** as described above.

Further to the above, referring again to FIG. **30**, the drive screw **161** can be rotated by an input shaft, such as input shaft **152**, for example. The input shaft **152** can extend through an aperture **156** defined within the shaft frame portion **106**, the articulation joint member **103**, and the proximal end **102** of the shaft housing **119**. The input shaft **152** can comprise an input gear **151** mounted to the distal end thereof which can be operably coupled with an output gear **155** mounted to the proximal end of the drive screw **161**. In use, the input shaft **152** can be rotated by the electric motor, described above, wherein the input shaft **152** can rotate the drive screw **161**. As outlined above, the articulation joint **101** can be configured to permit the end effector **120** and at least a portion of the shaft **110** to be articulated relative to a longitudinal axis defined by the clip applier **100**. In order to accommodate such movement, at least the portion of the input shaft **152** extending through the articulation joint **101** can be sufficiently flexible.

Turning now to FIGS. **31-35**, the articulation actuators **108*a*** and **108*b*** can be operated by an actuator module such as module **832**, for example. Referring primarily to FIG. **31**, the actuator module **832** can comprise a rotatable articulation driver **833** which can be configured to push and pull the articulation actuators **108*a*** and **108*b***. The articulation driver **833** can comprise a cylindrical, or an at least substantially cylindrical, collar **835** including an aperture **837** which can be configured to receive at least a portion of the shaft frame **106** therein in order to rotatably support the collar **835**. The articulation driver **833** can further comprise an input gear portion **834** which can be operably coupled with an electric motor and gear train **831** of the module **832** wherein, when the electric motor and gear train **831** are actuated, the articulation driver **833** can be rotated about the shaft frame **106**. Referring primarily to FIGS. **32** and **34**, the articulation

driver **833** can further comprise two cam slots defined in the sidewall of the collar aperture **837**, although the reader will note that only one cam slot **835***a* is illustrated in the provided views. The cam slot **835***a* is configured to receive a cam follower **838***a* extending from the articulation driver **108***a* wherein the cam follower **838***a* is configured to slide within the cam slot **835***a*. When the articulation driver **833** is rotated, the helical contour of the cam slot **835***a*, for example, can be configured to push the cam follower **838***a* distally or pull the cam follower **838** proximally, depending on the direction in which the articulation driver **833** is rotated. As a result of the proximal or distal movement of the cam follower **838**, the cam actuator **108***a* can be moved proximally or distally, respectively. While not illustrated, the articulation driver **108***b* can comprise a cam follower, similar to the cam follower **838***a*, which can be configured to slide within the other cam slot discussed above. The other cam slot can be configured such that, when the articulation actuator **108***a* is driven distally by the articulation driver **833** when the articulation driver **833** is rotated in a first direction, the articulation actuator **108***b* can be pulled proximally. Similarly, the other cam slot can be configured such that, when the articulation actuator **108***a* is pulled proximally by the articulation driver **833** when the articulation driver **833** is rotated in a second direction, the articulation actuator **108***b* can be driven distally. Referring primarily to FIG. **32**, the shaft frame portion **106** can comprise clearance slots **839** defined therein through which the cam actuators **838** can extend. Although the above features have been discussed in connection with an actuator module **832**, such features could be used in connection with the other actuator modules disclosed herein.

EXAMPLES

A clip applier loading unit can comprise a shaft including a distal end, a proximal end, and a frame comprising a frame connector configured to be releasably attached to a frame of an actuator. The clip applier loading unit can further comprise a plurality of clips and an end effector extending from the distal end of the shaft, wherein the end effector comprises a first jaw, a movable second jaw, and a receiver defined between the first jaw and the second jaw. The receiver is configured to receive a clip, wherein the second jaw is movable toward the first jaw to deform the clip positioned in the receiver. The clip applier loading unit can further comprise a firing drive comprising a distal portion configured to advance a clip into the receiver and a proximal portion comprising a drive connector configured to be releasably attached to a driver of the actuator.

A clip applier loading unit can comprise a shaft comprising a distal end, a proximal end, a frame comprising a frame connector configured to be releasably attachable to and detachable from a frame of an actuator unit, and a bearing. The clip applier loading unit can further comprise a plurality of clips and an end effector extending from the distal end of the shaft, wherein the end effector comprises a first jaw, a second jaw movable relative to the first jaw, and a receiver defined between the first jaw and the second jaw, wherein the receiver is configured to receive a clip. The clip applier loading unit can further comprise a reciprocating rotary firing drive comprising a rotatable driver comprising a thread, wherein the rotatable driver is rotatably supported by the bearing, and, in addition, a firing nut threadably engaged with the thread of the rotatable driver, wherein the firing nut is advanceable toward the distal end when the driver is rotated in a first direction, wherein the firing nut is retractable away from the distal end when the driver is rotated in a second direction opposite the first direction, and wherein the firing nut is configured to advance a clip into the receiver when the firing nut is advanced toward the distal end.

A clip applier loading unit comprising a shaft including a distal end, a proximal end, a frame, and connection means for releasably attaching the frame to an actuator. The clip applier can further comprise a plurality of clips and an end effector extending from the distal end of the shaft, wherein the end effector comprises a first jaw, a movable second jaw, and a receiver defined between the first jaw and the second jaw, wherein the receiver is configured to receive a clip, and wherein the second jaw is movable toward the first jaw to deform a clip positioned in the receiver. The clip applier loading unit can further comprise firing means for advancing a clip into the receiver.

A clip applier for clipping tissue can comprise a shaft including a distal portion, a distal opening defined in the distal portion, and a magazine opening. The clip applier can further comprise a magazine assembly removably positionable in the magazine opening, wherein the magazine assembly comprises a housing, a storage chamber defined in the housing, a firing platform, a plurality of clips removably positioned within the storage chamber, and a biasing member configured to bias the clips toward the firing platform. The clip applier can further comprise a firing drive configured to advance a clip from the magazine through the distal opening.

A magazine assembly for use with a clip applier can comprise a housing, a storage chamber defined in the housing, a firing platform, a plurality of clips removably positioned within the storage chamber, and a biasing member configured to bias the clips toward the firing platform.

A clip applier surgical instrument can comprise a shaft including a distal portion and a cartridge receptacle, and a cartridge assembly removably positionable in the cartridge receptacle. The cartridge assembly can comprise a housing, a storage chamber defined in the housing, a discharge opening, a stack of clips removably positioned within the storage chamber, wherein the stack of clips comprises a plurality of clips stacked on top of one another, and a biasing member configured to align a clip with the discharge opening. The clip applier surgical instrument can further comprise a firing drive configured to advance a clip from the magazine through the discharge opening.

A cartridge assembly for use with a clip applier can comprise a housing, a storage chamber defined in the housing, a discharge opening, a stack of clips removably positioned within the storage chamber, wherein the stack of clips comprises a plurality of clips stacked on top of one another, and a biasing member configured to align a clip with the discharge opening.

A surgical device for applying clips can comprise a shaft including a distal portion, a loading port defined in the distal portion, and a discharge opening. The surgical device can further comprise a clip cartridge removably positionable in the loading port, wherein the clip cartridge comprises a stack of clips, a biasing member configured to align a clip with the discharge opening, and a firing drive configured to advance a clip from the clip cartridge through the discharge opening.

A clip cartridge removably for use with a clip applier can be positionable in a loading port of the clip applier, wherein the clip cartridge can comprise a stack of clips and a biasing member configured to align a clip with a discharge opening.

A surgical device for applying clips can comprise a shaft, supply means for supplying a plurality of clips along a supply axis, and firing means for advancing a clip from a

pre-fired position to a fired position along a firing axis, wherein the supply axis is transverse to the firing axis.

A clip applier for clipping tissue comprising a shaft, a firing chamber, an end effector extending from the shaft, wherein the end effector comprises a crimping chamber, and a magazine assembly comprising a housing, a storage chamber defined in the housing, a plurality of clips removably positioned within the storage chamber, and a biasing member configured to sequentially bias the clips from the storage chamber into the firing chamber. The clip applier can further comprise a reciprocating firing drive configured to advance a clip positioned in the firing chamber into the crimping chamber, and a lockout plate positioned intermediate the biasing member and the plurality of clips, wherein the biasing member is configured to bias the lockout plate into the firing chamber after all of the plurality of the clips have been advanced into the crimping chamber, and wherein the lockout plate is configured to block the firing drive.

A magazine assembly for use with a clip applier can comprise a housing, a storage chamber defined in the housing, a plurality of clips removably positioned within the storage chamber, and a biasing member configured to sequentially bias the clips from the storage chamber into the firing chamber. The magazine assembly can further comprise a lockout plate positioned intermediate the biasing member and the plurality of clips, wherein the biasing member is configured to bias the lockout plate into the firing chamber after all of the plurality of the clips have been advanced from the housing, and wherein the lockout plate is configured to block a firing drive from entering the firing chamber.

A surgical device for applying clips can comprise a shaft, an end effector comprising a receiver, and a cartridge comprising a housing, a storage chamber defined in the housing, a stack of clips removably positioned within the storage chamber, a firing platform, and a biasing member configured to sequentially bias the clips from the storage chamber onto the firing platform. The surgical device can further comprise a reciprocating firing drive configured to advance a clip positioned on the firing platform into the receiver, and a lockout member positioned intermediate the biasing member and the stack of clips, wherein the biasing member is configured to bias the lockout member against the firing platform after all of the clips have been advanced into the receiver, and wherein the lockout member is configured to block the firing drive.

A cartridge for use with a clip applier can comprise a housing, a storage chamber defined in the housing, a stack of clips removably positioned within the storage chamber, a firing platform, and a biasing member configured to sequentially bias the clips from the storage chamber onto the firing platform. The cartridge can further comprise a lockout member positioned intermediate the biasing member and the stack of clips, wherein the biasing member is configured to bias the lockout member against the firing platform after all of the clips have been advanced out of the housing, and wherein the lockout member is configured to block a firing drive from passing through the housing.

A surgical device for clipping tissue can comprise a shaft, an end effector comprising a receiver, and a cartridge comprising a housing, a storage chamber defined in the housing, a stack of clips removably positioned within the storage chamber, a firing chamber, and a biasing member configured to sequentially bias the clips from the storage chamber into the firing chamber. The surgical device can further comprise a reciprocating firing drive configured to advance a clip positioned in the firing chamber into the receiver during a firing stroke, and blocking means for inhibiting the firing drive from completing a firing stroke after all of the clips have been advanced into the receiver.

A cartridge for use with a clip applier can comprise a housing, a storage chamber defined in the housing, a stack of clips removably positioned within the storage chamber, a firing chamber, and a biasing member configured to sequentially bias the clips from the storage chamber into the firing chamber. The cartridge can further comprise blocking means for inhibiting a firing drive from completing a firing stroke after all of the clips have been advanced from the housing.

The devices disclosed herein can be designed to be disposed of after a single use, or they can be designed to be used multiple times. In either case, however, the device can be reconditioned for reuse after at least one use. Reconditioning can include any combination of the steps of disassembly of the device, followed by cleaning or replacement of particular pieces, and subsequent reassembly. In particular, the device can be disassembled, and any number of the particular pieces or parts of the device can be selectively replaced or removed in any combination. Upon cleaning and/or replacement of particular parts, the device can be reassembled for subsequent use either at a reconditioning facility, or by a surgical team immediately prior to a surgical procedure. Those skilled in the art will appreciate that reconditioning of a device can utilize a variety of techniques for disassembly, cleaning/replacement, and reassembly. Use of such techniques, and the resulting reconditioned device, are all within the scope of the present application.

Although the present invention has been described herein in connection with certain disclosed exemplary embodiments, many modifications and variations to those exemplary embodiments may be implemented. For example, different types of end effectors may be employed. Also, where materials are disclosed for certain components, other materials may be used. The foregoing description and following claims are intended to cover all such modification and variations.

The entire disclosures of U.S. Pat. No. 8,075,571, entitled SURGICAL CLIP APPLIER METHODS, which issued on Dec. 13, 2011; U.S. Pat. No. 8,038,686, entitled CLIP APPLIER CONFIGURED TO PREVENT CLIP FALL-OUT, which issued on Oct. 18, 2011; and U.S. Pat. No. 7,699,860, entitled SURGICAL CLIP, which issued on Apr. 20, 2010, are hereby incorporated by reference herein.

Any patent, publication, or other disclosure material, in whole or in part, that is said to be incorporated by reference herein is incorporated herein only to the extent that the incorporated materials does not conflict with existing definitions, statements, or other disclosure material set forth in this disclosure. As such, and to the extent necessary, the disclosure as explicitly set forth herein supersedes any conflicting material incorporated herein by reference. Any material, or portion thereof, that is said to be incorporated by reference herein, but which conflicts with existing definitions, statements, or other disclosure material set forth herein will only be incorporated to the extent that no conflict arises between that incorporated material and the existing disclosure material.

The invention claimed is:

1. A clip applier for clipping tissue, comprising:

a shaft, wherein said shaft defines a longitudinal axis, said shaft comprising:

a distal portion;

a distal opening defined in said distal portion; and

a magazine opening;

a magazine assembly removably positionable in said magazine opening, wherein said magazine assembly comprises:

a housing comprising an enclosing wall;

a storage chamber defined in said housing;

a firing platform;

a stack of clips removably positioned within said storage chamber, wherein each said clip comprises a drive end positioned adjacent to a drive end of another said clip, wherein each said clip comprises a biasing face, and wherein said stack of clips is stacked transverse to said longitudinal axis; and

a biasing member configured to bias said clips toward said firing platform, wherein said biasing member is positioned intermediate said enclosing wall and said biasing faces of said clips, and wherein said biasing member is entirely contained within said storage chamber of said housing; and

a firing drive configured to advance a said clip from said magazine assembly through said distal opening, wherein said firing drive is configured to sequentially engage said drive ends of said clips.

2. The clip applier of claim **1**, wherein said shaft further comprises:

a proximal portion; and

an articulation joint rotatably connecting said proximal portion and said distal portion of said shaft.

3. The clip applier of claim **1**, wherein said magazine assembly further comprises a pusher plate positioned intermediate said biasing member and said stack of clips.

4. The clip applier of claim **1**, wherein said housing further comprises a proximal housing wall including a proximal opening, and wherein said proximal opening is configured to receive said firing drive.

5. The clip applier of claim **4**, further comprising a lockout plate positioned intermediate said biasing member and said stack of clips, wherein said biasing member is configured to bias said lockout plate into alignment with said proximal opening to block said firing drive from entering into said storage chamber after said clips have been ejected from said magazine assembly.

6. The clip applier of claim **5**, wherein said lockout plate comprises a plurality of guides, and wherein said housing further comprises a plurality of co-operating guides configured to co-operate with said lockout plate guides to define the movement of said lockout plate along a predetermined path.

7. The clip applier of claim **5**, wherein said housing further comprises a distal housing wall including a distal opening, wherein said firing platform comprises a shelf, wherein said biasing member is configured to bias a said clip against said shelf, and wherein said shelf is aligned with said distal opening of said distal housing wall.

8. The clip applier of claim **1**, further comprising a first jaw and a second jaw positioned relative to said distal opening, wherein said first jaw is movable toward said second jaw to deform a said clip positioned intermediate said first jaw and said second jaw.

9. The clip applier of claim **8**, further comprising a crimping drive configured to move said first jaw toward said second jaw, wherein said crimping drive is configured to be actuated in sequence with said firing drive.

10. The clip applier of claim **1**, further comprising means for blocking said firing drive after said clips have been ejected from said magazine assembly.

11. The clip applier of claim **1**, wherein said firing drive is configured to enter into said housing along a firing axis, wherein said biasing member is configured to bias a said clip into a firing position along a supply axis, and wherein said supply axis is transverse to said firing axis.

12. The clip applier of claim **11**, wherein said supply axis is perpendicular to said firing axis.

13. The clip applier of claim **1**, further comprising a cartridge lock configured to releasably hold said magazine assembly in said magazine opening.

14. A clip applier surgical instrument, comprising:

a shaft, wherein said shaft defines a longitudinal axis, said shaft comprising:

a distal portion; and

a cartridge receptacle;

a cartridge assembly removably positionable in said cartridge receptacle, wherein said cartridge assembly comprises:

a housing comprising an enclosing wall;

a storage chamber defined in said housing;

a discharge opening;

a stack of clips removably positioned within said storage chamber, wherein said stack of clips comprises a plurality of clips stacked on top of one another along a stack axis which is transverse to said longitudinal axis; and

a biasing member configured to align a said clip with said discharge opening, wherein said biasing member is positioned intermediate said enclosing wall and said stack of clips, and wherein said biasing member is entirely contained within said storage chamber of said housing; and

a firing drive configured to advance a said clip from said cartridge assembly through said discharge opening.

15. The clip applier surgical instrument of claim **14**, wherein said shaft further comprises:

a proximal portion; and

an articulation joint rotatably connecting said proximal portion and said distal portion of said shaft.

16. The clip applier surgical instrument of claim **14**, further comprising a lockout plate positioned intermediate said biasing member and said stack of clips, wherein said housing further comprises a proximal housing wall including a proximal opening, wherein said proximal opening is configured to receive said firing drive, and wherein said biasing member is configured to bias said lockout plate into alignment with said proximal opening to block said firing drive from entering into said storage chamber after said plurality of clips have been ejected from said cartridge assembly.

17. The clip applier surgical instrument of claim **16**, wherein said lockout plate comprises a plurality of guides, and wherein said housing further comprises a plurality of co-operating guides configured to co-operate with said lockout plate guides to define the movement of said lockout plate along a predetermined path.

18. The clip applier surgical instrument of claim **16**, wherein said housing further comprises a shelf, wherein said biasing member is configured to bias a said clip against said shelf, and wherein said shelf is aligned with said discharge opening.

19. The clip applier surgical instrument of claim **14**, wherein said firing drive is configured to enter into said housing along a firing axis, wherein said biasing member is configured to bias a said clip into a firing position along a supply axis, and wherein said supply axis is transverse to said firing axis.

20. A surgical device for applying clips, comprising:

a shaft, wherein said shaft defines a longitudinal axis, said shaft comprising:

a distal portion;

a loading port defined in said distal portion; and

a discharge opening;

a clip cartridge removably positionable in said loading port, wherein said clip cartridge comprises:

a housing;

a stack of clips, wherein said stack of clips are stacked in a direction which is transverse to said longitudinal axis;

a biasing member configured to align a said clip with said discharge opening, wherein said biasing member is entirely contained within said housing; and

a firing drive configured to advance a said clip from said clip cartridge through said discharge opening.

21. A clip applier for clipping tissue, comprising:

a shaft, wherein said shaft defines a longitudinal axis, said shaft comprising:

a distal portion;

a receiving cavity defined in said distal portion; and

a cartridge aperture;

a cartridge assembly removably positionable in said cartridge aperture, wherein said cartridge assembly comprises:

a housing comprising an enclosing wall;

a storage chamber defined in said housing;

a plate positioned parallel to said enclosing wall;

a firing platform;

a stack of clips removably positioned within said storage chamber, wherein said stack of clips is stacked along a stack axis which is transverse to said longitudinal axis; and

a biasing member positioned intermediate said enclosing wall and said plate, wherein said biasing member applies a biasing force to said enclosing wall and said plate to bias said stack of clips against said firing platform, and wherein said biasing member is entirely contained within said storage chamber of said housing; and

a firing drive configured to advance a said clip from said cartridge assembly to said receiving cavity.

* * * * *