US009802007B2

(12) **United States Patent**
Castle et al.

(10) **Patent No.: US 9,802,007 B2**
(45) **Date of Patent: Oct. 31, 2017**

(54) **METHODS AND APPARATUS FOR LANCET ACTUATION**

(71) Applicant: **Sanofi-Aventis Deutschland GmbH**, Franfurt am Main (DE)

(72) Inventors: **Mark Castle**, Pleasanton, CA (US); **Rodney Kugizaki**, Tuscon, AZ (US); **Robert Englert**, Pleasanton, CA (US); **Thomas Shoup**, Los Altos, CA (US); **Dominique M. Freeman**, La Honda, CA (US)

(73) Assignee: **Sanofi-Aventis Deutschland GmbH**, Frankfurt am Main (DE)

(*) Notice: Subject to any disclaimer, the term of this patent is extended or adjusted under 35 U.S.C. 154(b) by 0 days.

(21) Appl. No.: **14/082,434**

(22) Filed: **Nov. 18, 2013**

(65) **Prior Publication Data**

US 2014/0142543 A1 May 22, 2014

Related U.S. Application Data

(60) Continuation of application No. 13/151,613, filed on Jun. 2, 2011, and a continuation-in-part of application

(Continued)

(51) **Int. Cl.**
A61B 5/00 (2006.01)
A61M 5/46 (2006.01)

(Continued)

(52) **U.S. Cl.**
CPC ***A61M 5/46*** (2013.01); ***A61B 5/157*** (2013.01); ***A61B 5/15019*** (2013.01); ***A61B 5/1519*** (2013.01); ***A61B 5/150022*** (2013.01); ***A61B 5/15029*** (2013.01); ***A61B 5/150083*** (2013.01); ***A61B 5/150091*** (2013.01); ***A61B 5/150099*** (2013.01); ***A61B 5/15113*** (2013.01);

(Continued)

(58) **Field of Classification Search**
CPC A61B 5/00
USPC 600/573, 583; 606/181, 182
See application file for complete search history.

(56) **References Cited**

U.S. PATENT DOCUMENTS

55,620	A	6/1866	Capewell
1,135,465	A	4/1915	Pollock

(Continued)

FOREIGN PATENT DOCUMENTS

CN	1946340	A	4/2007
DE	2206674	A1	8/1972

(Continued)

OTHER PUBLICATIONS

Bott et al., "Chronocoulometry", Current Separations, 20:4 (2004) pp. 121-126.

(Continued)

Primary Examiner — Jeffrey G Hoekstra
Assistant Examiner — May Abouelela
(74) *Attorney, Agent, or Firm* — Paul Davis; Beyer Law Group LLP

(57) **ABSTRACT**

A lancet driver is provided wherein the driver exerts a driving force on a lancet during a lancing cycle and is used on a tissue site. The driver comprises of a drive force generator for advancing the lancet along a path into the tissue site, and a manual switch for a user interface input.

16 Claims, 60 Drawing Sheets

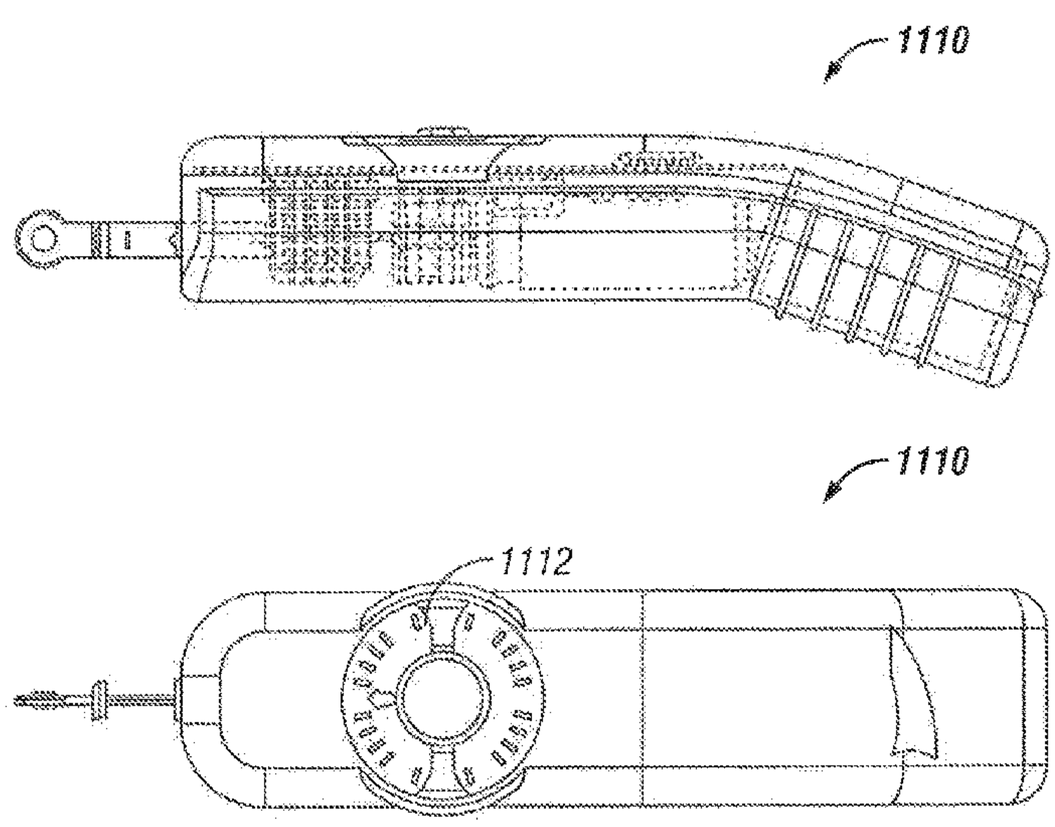

Related U.S. Application Data

No. 12/942,246, filed on Nov. 9, 2010, which is a continuation-in-part of application No. 12/143,373, filed on Jun. 20, 2008, now Pat. No. 7,862,520, which is a continuation of application No. 11/764,299, filed on Jun. 18, 2007, now Pat. No. 7,981,056, which is a division of application No. 11/687,028, filed on Mar. 16, 2007, now Pat. No. 8,414,503, which is a division of application No. 10/237,261, filed on Sep. 5, 2002, now Pat. No. 7,344,507, which is a continuation-in-part of application No. 10/127,395, filed on Apr. 19, 2002, now Pat. No. 7,025,774.

(60) Provisional application No. 61/350,625, filed on Jun. 2, 2010, provisional application No. 61/351,013, filed on Jun. 3, 2010, provisional application No. 60/298,055, filed on Jun. 12, 2001, provisional application No. 60/298,126, filed on Jun. 12, 2001, provisional application No. 60/297,861, filed on Jun. 12, 2001, provisional application No. 60/298,001, filed on Jun. 12, 2001, provisional application No. 60/298,056, filed on Jun. 12, 2001, provisional application No. 60/297,860, filed on Jun. 12, 2001.

(51) **Int. Cl.**

A61B 5/15	(2006.01)
A61B 5/157	(2006.01)
A61M 5/145	(2006.01)
A61M 5/172	(2006.01)
A61M 5/20	(2006.01)
A61M 5/32	(2006.01)
A61B 5/151	(2006.01)

(52) **U.S. Cl.**

CPC ***A61B 5/15123*** (2013.01); ***A61B 5/150137*** (2013.01); ***A61B 5/150152*** (2013.01); ***A61B 5/15153*** (2013.01); ***A61B 5/15155*** (2013.01); ***A61B 5/15163*** (2013.01); ***A61B 5/150167*** (2013.01); ***A61B 5/15169*** (2013.01); ***A61B 5/15171*** (2013.01); ***A61B 5/15178*** (2013.01); ***A61B 5/15192*** (2013.01); ***A61B 5/15194*** (2013.01); ***A61B 5/150267*** (2013.01); ***A61B 5/150282*** (2013.01); ***A61B 5/150427*** (2013.01); ***A61B 5/150572*** (2013.01); ***A61B 5/150809*** (2013.01); ***A61B 5/150816*** (2013.01); ***A61B 5/150824*** (2013.01); ***A61B 5/150946*** (2013.01); ***A61B 5/150954*** (2013.01); ***A61M 5/145*** (2013.01); ***A61M 5/172*** (2013.01); ***A61M 5/20*** (2013.01); ***A61M 5/3287*** (2013.01); ***A61M 5/3295*** (2013.01); *A61B 5/15016* (2013.01); *A61B 5/15109* (2013.01); *A61B 5/150175* (2013.01); *A61B 5/15176* (2013.01); *A61B 5/15184* (2013.01); *A61B 5/15186* (2013.01); *A61B 5/150259* (2013.01); *A61B 5/150748* (2013.01); *A61M 2005/206* (2013.01); *A61M 2205/33* (2013.01); *A61M 2205/50* (2013.01)

(56) **References Cited**

U.S. PATENT DOCUMENTS

1,733,847	A	10/1929	Wilmot
2,258,857	A	10/1941	McCann
2,628,319	A	2/1953	Vang
2,714,890	A	8/1955	Vang
2,763,935	A	9/1956	Whaley et al.
2,801,633	A	8/1957	Ehrlich
2,880,876	A	4/1959	Dujardin
3,030,959	A	4/1962	Grunert
3,046,987	A	7/1962	Ehrlich
3,063,451	A	11/1962	Kowalk
3,086,288	A	4/1963	Balamuth et al.
3,090,384	A	5/1963	Baldwin et al.
3,208,452	A	9/1965	Stern
3,358,689	A	12/1967	Higgins
3,412,729	A	11/1968	Smith, Jr.
3,424,154	A	1/1969	Kinsley
3,448,307	A	6/1969	Duris
3,494,358	A	2/1970	Fehlis et al.
3,607,097	A	9/1971	Auphan et al.
3,620,209	A	11/1971	Harvey Kravitz
3,626,929	A	12/1971	Sanz et al.
3,628,026	A	12/1971	Cronin
3,665,672	A	5/1972	Speelman
3,673,475	A	6/1972	Britton, Jr.
3,712,292	A	1/1973	Zentmeyer, Jr.
3,712,293	A	1/1973	Mielke, Jr.
3,734,812	A	5/1973	Yazawa
3,742,954	A	7/1973	Strickland
3,780,960	A	12/1973	Tokuno et al.
3,832,776	A	9/1974	Sawyer
3,836,148	A	9/1974	Manning
3,851,543	A	12/1974	Krom
3,853,010	A	12/1974	Christen et al.
3,924,818	A	12/1975	Pfeifle
3,938,526	A	2/1976	Anderson et al.
3,971,365	A	7/1976	Smith
4,057,394	A	11/1977	Genshaw
4,077,406	A	3/1978	Sandhage et al.
4,109,655	A	8/1978	Chacornac
4,139,011	A	2/1979	Benoit et al.
4,154,228	A	5/1979	Feldstein et al.
4,168,130	A	9/1979	Barth et al.
4,184,486	A	1/1980	Papa
4,190,420	A	2/1980	Covington et al.
4,191,193	A	3/1980	Seo
4,193,690	A	3/1980	Levenson et al.
4,203,446	A	5/1980	Hofert et al.
4,207,870	A	6/1980	Eldridge
4,223,674	A	9/1980	Fluent et al.
4,224,949	A	9/1980	Scott et al.
4,240,439	A	12/1980	Abe et al.
4,254,083	A	3/1981	Columbus
4,258,001	A	3/1981	Pierce et al.
4,259,653	A	3/1981	McGonigal
4,299,230	A	11/1981	Kubota
4,301,412	A	11/1981	Hill et al.
4,321,397	A	3/1982	Nix et al.
4,338,174	A	7/1982	Tamura
4,350,762	A	9/1982	De Luca et al.
4,356,826	A	11/1982	Kubota
4,360,016	A	11/1982	Sarrine
4,388,922	A	6/1983	Telang
4,392,933	A	7/1983	Nakamura et al.
4,394,512	A	7/1983	Batz
4,397,556	A	8/1983	Muller
4,407,008	A	9/1983	Schmidt et al.
4,411,266	A	10/1983	Cosman
4,414,975	A	11/1983	Ryder et al.
4,418,037	A	11/1983	Katsuyama et al.
4,420,564	A	12/1983	Tsuji et al.
4,425,039	A	1/1984	Grant
4,426,884	A	1/1984	Polchaninoff
4,440,301	A	4/1984	Intengan
4,442,836	A	4/1984	Meinecke et al.
4,442,972	A	4/1984	Sahay et al.
4,449,529	A	5/1984	Burns et al.
4,462,405	A	7/1984	Ehrlich
4,469,110	A	9/1984	Slama
4,490,139	A	12/1984	Huizenga et al.
4,517,978	A	5/1985	Levin et al.
4,518,384	A	5/1985	Tarello et al.
4,523,994	A	6/1985	Shono et al.
4,525,164	A	6/1985	Loeb et al.
4,535,769	A	8/1985	Burns
4,535,773	A	8/1985	Yoon

(56) **References Cited**

U.S. PATENT DOCUMENTS

4,537,197 A 8/1985 Hulka
4,539,988 A 9/1985 Shirley et al.
4,545,382 A 10/1985 Higgins et al.
4,553,541 A 11/1985 Burns
4,561,445 A 12/1985 Berke et al.
4,577,630 A 3/1986 Nitzsche et al.
4,580,564 A 4/1986 Andersen
4,580,565 A 4/1986 Cornell et al.
4,586,819 A 5/1986 Tochigi et al.
4,586,926 A 5/1986 Osborne
4,590,411 A 5/1986 Kelly
4,600,014 A 7/1986 Beraha
4,603,209 A 7/1986 Tsien et al.
4,608,997 A 9/1986 Conway
4,615,340 A 10/1986 Cronenberg et al.
4,616,649 A 10/1986 Burns
4,622,974 A 11/1986 Coleman et al.
4,624,253 A 11/1986 Burns
4,627,445 A * 12/1986 Garcia et al. 600/583
4,637,393 A 1/1987 Ray
4,637,403 A * 1/1987 Garcia et al. 600/583
4,643,189 A 2/1987 Mintz
4,648,408 A 3/1987 Hutcheson et al.
4,648,714 A 3/1987 Benner et al.
4,653,511 A 3/1987 Goch et al.
4,653,513 A 3/1987 Dombrowski
4,655,225 A 4/1987 Dahne et al.
4,661,768 A 4/1987 Carusillo
4,666,438 A 5/1987 Raulerson
4,676,244 A 6/1987 Enstrom
4,677,979 A 7/1987 Burns
4,678,277 A 7/1987 Delhaye et al.
4,682,892 A 7/1987 Chawla
4,695,273 A * 9/1987 Brown 604/173
4,702,594 A 10/1987 Grant
4,711,245 A 12/1987 Higgins et al.
4,712,460 A 12/1987 Allen et al.
4,712,548 A 12/1987 Enstrom
4,714,462 A 12/1987 DiDomenico
4,715,374 A 12/1987 Maggio
4,731,330 A 3/1988 Hill et al.
4,731,726 A 3/1988 Allen, III
4,734,360 A 3/1988 Phillips
4,735,203 A 4/1988 Ryder et al.
4,737,458 A 4/1988 Batz et al.
4,750,489 A 6/1988 Berkman et al.
4,753,776 A 6/1988 Hillman et al.
4,756,884 A 7/1988 Hillman et al.
4,757,022 A 7/1988 Shults et al.
4,758,323 A 7/1988 Davis et al.
4,774,192 A 9/1988 Terminiello et al.
4,784,486 A 11/1988 Van Wagenen et al.
4,787,398 A * 11/1988 Garcia et al. 600/583
4,790,979 A 12/1988 Terminiello et al.
4,797,283 A 1/1989 Allen et al.
4,814,661 A 3/1989 Ratzlaff et al.
4,817,603 A 4/1989 Turner et al.
4,818,493 A 4/1989 Coville et al.
4,820,010 A 4/1989 Scifres et al.
4,823,806 A 4/1989 Bajada
RE32,922 E 5/1989 Levin et al.
4,825,711 A 5/1989 Jensen et al.
4,827,763 A 5/1989 Bourland et al.
4,829,011 A 5/1989 Gibbons
4,840,893 A 6/1989 Hill et al.
4,844,095 A 7/1989 Chiodo et al.
4,845,392 A 7/1989 Mumbower
4,850,973 A 7/1989 Jordan et al.
4,868,129 A 9/1989 Gibbons et al.
4,869,249 A 9/1989 Crossman et al.
4,869,265 A 9/1989 McEwen
4,873,993 A 10/1989 Meserol et al.
4,877,026 A 10/1989 de Laforcade
4,883,055 A 11/1989 Merrick
4,883,068 A 11/1989 Dechow
4,886,499 A * 12/1989 Cirelli et al. 604/131
4,889,529 A 12/1989 Haindl
4,892,097 A 1/1990 Ranalletta et al.
4,895,147 A 1/1990 Bodicky et al.
4,895,156 A 1/1990 Schulze
4,900,666 A 2/1990 Phillips
4,920,977 A 5/1990 Haynes
4,924,879 A * 5/1990 O'Brien 600/583
4,935,346 A 6/1990 Phillips et al.
4,938,218 A 7/1990 Goodman et al.
4,940,468 A 7/1990 Petillo
4,944,304 A 7/1990 Nishina
4,946,795 A 8/1990 Gibbons et al.
4,948,961 A 8/1990 Hillman et al.
4,952,373 A 8/1990 Sugarman et al.
4,953,552 A 9/1990 DeMarzo
4,953,976 A 9/1990 Adler-Golden et al.
4,963,498 A 10/1990 Hillman et al.
4,966,581 A 10/1990 Landau
4,966,646 A 10/1990 Zdeblick
4,975,581 A 12/1990 Robinson et al.
4,976,724 A 12/1990 Nieto et al.
4,977,910 A 12/1990 Miyahara et al.
4,983,178 A 1/1991 Schnell
4,984,085 A 1/1991 Landowski
4,990,154 A 2/1991 Brown et al.
4,995,402 A * 2/1991 Smith A61B 5/150022 206/569
4,999,582 A 3/1991 Parks et al.
5,001,054 A 3/1991 Wagner
5,001,873 A 3/1991 Rufin
5,004,923 A 4/1991 Hillman et al.
5,010,772 A 4/1991 Bourland et al.
5,010,774 A 4/1991 Kikuo et al.
5,014,718 A 5/1991 Mitchen
5,019,974 A 5/1991 Beckers
5,026,388 A 6/1991 Ingalz
D318,331 S 7/1991 Phillips et al.
5,028,142 A 7/1991 Ostoich et al.
5,029,583 A 7/1991 Meserol et al.
5,035,704 A 7/1991 Lambert et al.
5,039,617 A 8/1991 McDonald et al.
5,043,143 A 8/1991 Shaw et al.
5,046,496 A 9/1991 Betts et al.
5,047,044 A 9/1991 Smith et al.
5,049,373 A 9/1991 Ballou
5,049,487 A 9/1991 Phillips et al.
5,054,487 A 10/1991 Clarke
5,054,499 A 10/1991 Swierczek
5,057,082 A 10/1991 Burchette, Jr.
5,057,277 A 10/1991 Mauze et al.
5,059,394 A 10/1991 Phillips et al.
5,059,789 A 10/1991 Salcudean
5,060,174 A 10/1991 Gross
5,062,898 A 11/1991 McDermott et al.
5,064,411 A 11/1991 Gordon, III
5,070,874 A 12/1991 Barnes et al.
5,070,886 A 12/1991 Mitchen et al.
5,073,500 A 12/1991 Saito et al.
5,074,872 A 12/1991 Brown et al.
5,077,017 A 12/1991 Gorin et al.
5,077,199 A 12/1991 Basagni et al.
5,080,865 A 1/1992 Leiner et al.
5,086,229 A 2/1992 Rosenthal et al.
5,092,842 A 3/1992 Bechtold et al.
5,094,943 A 3/1992 Siedel et al.
5,096,669 A 3/1992 Lauks et al.
5,097,810 A 3/1992 Fishman et al.
5,100,427 A 3/1992 Crossman et al.
5,100,428 A 3/1992 Mumford
5,104,380 A 4/1992 Holman et al.
5,104,382 A 4/1992 Brinkerhoff et al.
5,104,813 A 4/1992 Besemer et al.
5,107,764 A 4/1992 Gasparrini
5,108,889 A * 4/1992 Smith et al. 435/4
5,132,801 A 7/1992 Yamano
5,133,730 A * 7/1992 Biro A61B 5/1411 606/182
5,135,719 A 8/1992 Hillman et al.

(56) **References Cited**

U.S. PATENT DOCUMENTS

5,140,161 A 8/1992 Hillman et al.
5,144,139 A 9/1992 Hillman et al.
5,145,565 A 9/1992 Kater et al.
5,146,091 A 9/1992 Knudson
5,152,296 A 10/1992 Simons
5,152,775 A 10/1992 Ruppert
5,153,671 A 10/1992 Miles
5,156,611 A 10/1992 Haynes et al.
5,162,525 A 11/1992 Masilamani et al.
5,163,442 A 11/1992 Ono
5,164,598 A 11/1992 Hillman et al.
5,167,619 A 12/1992 Wuchinich
5,170,364 A 12/1992 Gross et al.
5,174,726 A 12/1992 Findlay
D332,490 S 1/1993 Brown et al.
5,178,142 A 1/1993 Harjunmaa et al.
5,179,005 A 1/1993 Phillips et al.
5,181,910 A 1/1993 Scanlon
5,181,914 A 1/1993 Zook
5,183,042 A 2/1993 Harjunmaa et al.
5,188,118 A 2/1993 Terwilliger
5,189,751 A 3/1993 Giuliani et al.
5,194,391 A 3/1993 Nauze et al.
5,196,025 A 3/1993 Ranalletta et al.
5,201,324 A 4/1993 Swierczek
5,208,163 A 5/1993 Charlton et al.
5,209,028 A 5/1993 McDermott et al.
5,211,652 A 5/1993 Derbyshire
5,212,879 A 5/1993 Biro et al.
5,215,587 A 6/1993 McConnellogue et al.
5,216,597 A 6/1993 Beckers
5,217,476 A 6/1993 Wishinsky
5,217,480 A 6/1993 Haber et al.
5,218,966 A 6/1993 Yamasawa
5,222,504 A 6/1993 Solomon
5,228,972 A 7/1993 Osaka et al.
5,231,993 A 8/1993 Haber et al.
5,241,969 A 9/1993 Carson et al.
5,247,932 A 9/1993 Chung et al.
5,249,583 A * 10/1993 Mallaby 600/567
5,250,066 A 10/1993 Lambert
5,251,126 A 10/1993 Kahn et al.
5,253,656 A 10/1993 Rincoe et al.
5,256,998 A 10/1993 Becker et al.
5,266,359 A 11/1993 Spielvogel
D342,573 S 12/1993 Cerola
5,267,974 A 12/1993 Lambert
5,277,181 A 1/1994 Mendelson et al.
5,279,294 A * 1/1994 Anderson et al. 600/322
5,279,791 A 1/1994 Aldrich et al.
5,282,822 A 2/1994 Macors et al.
5,294,261 A 3/1994 McDermott et al.
5,296,378 A 3/1994 Sakata et al.
5,300,779 A 4/1994 Hillman et al.
5,304,192 A 4/1994 Crouse
5,304,193 A 4/1994 Zhadanov
5,304,347 A 4/1994 Mann et al.
5,304,468 A 4/1994 Phillips et al.
5,306,623 A 4/1994 Kiser et al.
5,307,263 A 4/1994 Brown
5,312,590 A 5/1994 Gunasingham
5,314,441 A 5/1994 Cusack et al.
5,314,442 A 5/1994 Morita
5,315,793 A 5/1994 Peterson et al.
5,316,012 A 5/1994 Siegal
5,318,583 A 6/1994 Rabenau et al.
5,318,584 A 6/1994 Lange et al.
5,320,607 A 6/1994 Ishibashi
5,320,808 A 6/1994 Holen et al.
5,324,302 A 6/1994 Crouse
5,324,303 A * 6/1994 Strong et al. 606/181
5,330,634 A 7/1994 Wong et al.
5,341,206 A 8/1994 Pittaro et al.
5,342,382 A 8/1994 Brinkerhoff et al.
5,344,703 A 9/1994 Kovar et al.
5,350,392 A 9/1994 Purcell et al.
5,352,351 A 10/1994 White et al.
5,354,287 A 10/1994 Wacks
5,356,420 A 10/1994 Czernecki et al.
5,360,410 A 11/1994 Wacks
5,365,699 A 11/1994 Armstrong et al.
5,366,469 A 11/1994 Steg et al.
5,366,470 A 11/1994 Ramel
5,368,047 A * 11/1994 Suzuki et al. 600/578
5,370,509 A 12/1994 Golding et al.
5,371,687 A 12/1994 Holmes, II et al.
5,372,135 A 12/1994 Mendelson et al.
5,375,397 A 12/1994 Ferrand et al.
5,383,885 A 1/1995 Bland
5,390,450 A 2/1995 Goenka
5,395,339 A 3/1995 Talonn et al.
5,395,387 A 3/1995 Burns
5,397,334 A 3/1995 Schenk et al.
5,402,798 A 4/1995 Swierczek et al.
5,405,283 A 4/1995 Goenka
5,405,510 A 4/1995 Betts et al.
5,405,511 A 4/1995 White et al.
5,409,664 A 4/1995 Allen
5,410,474 A 4/1995 Fox
5,415,169 A 5/1995 Siczek et al.
5,418,142 A 5/1995 Kiser et al.
5,423,847 A 6/1995 Strong et al.
5,424,545 A 6/1995 Block et al.
5,426,032 A 6/1995 Phillips et al.
5,438,271 A 8/1995 White et al.
D362,719 S 9/1995 Kaplan
5,453,360 A 9/1995 Yu
5,454,828 A 10/1995 Schraga
5,456,875 A 10/1995 Lambert
5,459,325 A 10/1995 Hueton et al.
5,460,182 A 10/1995 Goodman et al.
5,462,533 A 10/1995 Daugherty
5,464,418 A 11/1995 Schraga
5,465,722 A 11/1995 Fort et al.
5,471,102 A 11/1995 Becker et al.
5,472,427 A 12/1995 Rammler
5,474,084 A 12/1995 Cunniff
5,476,474 A 12/1995 Davis et al.
5,480,387 A 1/1996 Gabriel et al.
5,487,748 A 1/1996 Marshall et al.
D367,109 S 2/1996 Ryner et al.
5,490,505 A 2/1996 Diab et al.
5,496,274 A 3/1996 Graves et al.
5,496,453 A 3/1996 Uenoyama et al.
5,498,542 A 3/1996 Corey et al.
5,501,836 A 3/1996 Myerson
5,501,893 A 3/1996 Laermer et al.
5,507,288 A 4/1996 Bocker et al.
5,507,629 A 4/1996 Jarvik
5,508,171 A 4/1996 Walling et al.
5,509,410 A 4/1996 Hill et al.
5,510,266 A 4/1996 Bonner et al.
5,512,159 A 4/1996 Yoshioka et al.
5,514,152 A 5/1996 Smith
5,515,170 A 5/1996 Matzinger et al.
5,518,006 A 5/1996 Mawhirt et al.
D371,198 S 6/1996 Savage et al.
5,524,636 A 6/1996 Sarvazyan et al.
5,525,511 A 6/1996 D'Costa
5,525,518 A 6/1996 Lundsgaard et al.
5,526,120 A 6/1996 Jina et al.
5,527,333 A 6/1996 Nikkels et al.
5,527,334 A 6/1996 Kanner et al.
5,529,074 A 6/1996 Greenfield
5,540,676 A 7/1996 Freiberg
5,540,709 A 7/1996 Ramel
5,543,326 A 8/1996 Heller et al.
5,545,174 A 8/1996 Schenk et al.
5,545,291 A 8/1996 Smith et al.
5,547,702 A 8/1996 Gleisner
D373,419 S 9/1996 Muramatsu et al.
5,554,153 A 9/1996 Costello et al.
5,554,166 A 9/1996 Lange et al.
5,558,834 A 9/1996 Chu et al.

(56) **References Cited**

U.S. PATENT DOCUMENTS

5,562,384 A 10/1996 Alvite et al.
5,562,607 A * 10/1996 Gyory A61N 1/0436 439/188
5,562,696 A 10/1996 Nobles et al.
5,563,031 A 10/1996 Yu
5,563,042 A 10/1996 Phillips et al.
5,569,286 A 10/1996 Peckham et al.
5,569,287 A 10/1996 Tezuka et al.
5,571,132 A 11/1996 Mawhirt et al.
5,575,284 A 11/1996 Athan et al.
5,575,403 A 11/1996 Charlton et al.
5,575,895 A 11/1996 Ikeda et al.
5,582,697 A 12/1996 Ikeda et al.
5,584,846 A 12/1996 Mawhirt et al.
5,591,139 A 1/1997 Lin et al.
5,593,390 A * 1/1997 Castellano G06F 19/3468 128/DIG. 1
5,593,852 A 1/1997 Heller et al.
5,599,501 A 2/1997 Carey et al.
5,605,837 A 2/1997 Karimi et al.
D378,612 S 3/1997 Clark et al.
5,608,006 A 3/1997 Myerson
5,609,749 A 3/1997 Yamauchi et al.
5,611,809 A 3/1997 Marshall et al.
5,611,810 A 3/1997 Arnold et al.
5,613,978 A 3/1997 Harding
5,616,135 A 4/1997 Thorne et al.
5,617,851 A 4/1997 Lipkovker
5,618,297 A 4/1997 Hart et al.
5,620,579 A 4/1997 Genshaw et al.
5,620,863 A 4/1997 Tomasco et al.
5,624,458 A 4/1997 Lipscher
5,624,459 A 4/1997 Kortenbach et al.
5,624,537 A 4/1997 Turner et al.
D379,516 S 5/1997 Rutter
5,628,764 A 5/1997 Schraga
5,628,765 A 5/1997 Morita
5,628,890 A 5/1997 Carter et al.
5,628,961 A 5/1997 Davis et al.
5,630,828 A 5/1997 Mawhirt et al.
5,630,986 A 5/1997 Charlton et al.
5,632,410 A 5/1997 Moulton et al.
5,640,954 A 6/1997 Pfeiffer et al.
D381,591 S 7/1997 Rice et al.
5,643,306 A 7/1997 Schraga
5,643,308 A 7/1997 Markman
5,645,555 A 7/1997 Davis et al.
5,647,851 A 7/1997 Pokras
5,650,062 A 7/1997 Ikeda et al.
5,653,863 A 8/1997 Genshaw et al.
5,657,760 A 8/1997 Ying et al.
5,658,444 A 8/1997 Black et al.
5,660,791 A 8/1997 Brenneman et al.
D383,550 S 9/1997 Larson et al.
5,662,127 A 9/1997 De Vaughn
5,662,672 A 9/1997 Pambianchi et al.
5,666,966 A 9/1997 Horie et al.
5,676,143 A 10/1997 Simonsen et al.
5,678,306 A 10/1997 Bozeman, Jr. et al.
5,680,858 A 10/1997 Hansen et al.
5,680,872 A 10/1997 Sesekura et al.
5,682,233 A 10/1997 Brinda
5,682,884 A 11/1997 Hill et al.
5,683,562 A 11/1997 Schaffar et al.
5,691,898 A 11/1997 Rosenberg et al.
5,692,514 A 12/1997 Bowman
5,695,947 A 12/1997 Guo et al.
5,700,695 A 12/1997 Yassinzadeh et al.
5,705,045 A 1/1998 Park et al.
5,707,384 A 1/1998 Kim
5,708,247 A 1/1998 McAleer et al.
5,709,668 A 1/1998 Wacks
5,709,699 A 1/1998 Warner
5,710,011 A 1/1998 Forrow et al.
5,714,123 A 2/1998 Sohrab
5,714,390 A 2/1998 Hallowitz et al.
5,719,034 A 2/1998 Kiser et al.
5,720,862 A 2/1998 Hamamoto et al.
5,720,924 A 2/1998 Eikmeier et al.
D392,391 S 3/1998 Douglas et al.
D392,740 S 3/1998 Yung et al.
5,723,284 A 3/1998 Ye
5,727,548 A 3/1998 Hill et al.
5,729,905 A 3/1998 Mathiasmeier et al.
5,730,753 A 3/1998 Morita
5,733,085 A 3/1998 Shida et al.
5,733,300 A 3/1998 Pambianchi et al.
D393,716 S 4/1998 Brenneman et al.
D393,717 S 4/1998 Brenneman et al.
5,735,868 A 4/1998 Lee
5,736,103 A 4/1998 Pugh
5,738,244 A 4/1998 Charlton et al.
5,741,228 A 4/1998 Lambrecht et al.
5,741,634 A 4/1998 Nozoe et al.
RE35,803 E * 5/1998 Lange et al. 606/182
5,746,217 A 5/1998 Erickson et al.
5,746,761 A 5/1998 Turchin
5,746,898 A 5/1998 Preidel
5,753,429 A 5/1998 Pugh
5,753,452 A 5/1998 Smith
5,755,228 A 5/1998 Wilson et al.
5,755,733 A 5/1998 Morita
5,758,643 A 6/1998 Wong et al.
5,759,364 A 6/1998 Charlton et al.
5,762,770 A 6/1998 Pritchard et al.
5,770,086 A 6/1998 Indriksons et al.
5,770,369 A 6/1998 Meade et al.
5,772,586 A 6/1998 Heinonen et al.
5,772,677 A 6/1998 Mawhirt et al.
5,773,270 A 6/1998 D'Orazio et al.
5,776,157 A 7/1998 Thorne et al.
5,776,719 A 7/1998 Douglas et al.
5,779,365 A 7/1998 Takaki
5,780,304 A 7/1998 Matzinger et al.
5,782,770 A 7/1998 Mooradian et al.
5,782,852 A 7/1998 Foggia et al.
5,788,651 A 8/1998 Weilandt
5,788,652 A 8/1998 Rahn
5,789,255 A 8/1998 Yu
5,794,219 A 8/1998 Brown
5,795,725 A 8/1998 Buechler et al.
5,795,774 A 8/1998 Matsumoto et al.
5,797,940 A 8/1998 Mawhirt et al.
5,797,942 A 8/1998 Schraga
5,798,030 A 8/1998 Raguse et al.
5,798,031 A 8/1998 Charlton et al.
5,800,781 A 9/1998 Gavin et al.
5,801,057 A 9/1998 Smart et al.
5,807,375 A 9/1998 Gross et al.
5,810,199 A 9/1998 Charlton et al.
D399,566 S 10/1998 Sohrab et al.
5,820,551 A 10/1998 Hill et al.
5,822,715 A 10/1998 Worthington et al.
5,823,973 A 10/1998 Racchini et al.
5,824,491 A 10/1998 Priest et al.
5,827,181 A 10/1998 Dias et al.
5,828,943 A 10/1998 Brown
5,829,589 A 11/1998 Nguyen et al.
5,830,219 A 11/1998 Bird et al.
5,832,448 A 11/1998 Brown
5,840,020 A 11/1998 Heinonen et al.
5,840,171 A 11/1998 Birch et al.
5,843,691 A 12/1998 Douglas et al.
5,843,692 A 12/1998 Phillips et al.
5,846,216 A 12/1998 Gonzales et al.
5,846,486 A 12/1998 Pugh
5,846,490 A 12/1998 Yokota et al.
5,849,174 A 12/1998 Sanghera et al.
5,853,373 A 12/1998 Griffith et al.
5,854,074 A 12/1998 Charlton et al.
D403,975 S 1/1999 Douglas et al.
5,855,377 A 1/1999 Murphy
5,855,801 A 1/1999 Lin et al.
5,856,174 A 1/1999 Lipshutz et al.

(56) **References Cited**

U.S. PATENT DOCUMENTS

5,856,195 A 1/1999 Charlton et al.
5,857,967 A 1/1999 Frid et al.
5,857,983 A 1/1999 Douglas et al.
5,858,804 A 1/1999 Zanzucchi et al.
5,860,922 A 1/1999 Gordon et al.
5,863,800 A 1/1999 Eikmeier et al.
5,866,353 A 2/1999 Berneth et al.
5,868,135 A 2/1999 Kaufman et al.
5,869,972 A 2/1999 Birch et al.
5,871,494 A * 2/1999 Simons A61B 5/1411 604/137
5,872,713 A 2/1999 Douglas et al.
5,873,856 A * 2/1999 Hjertman et al. 604/117
5,873,887 A 2/1999 King et al.
5,876,351 A 3/1999 Rohde
5,876,957 A 3/1999 Douglas et al.
5,879,163 A 3/1999 Brown et al.
5,879,310 A 3/1999 Sopp et al.
5,879,311 A 3/1999 Duchon et al.
5,879,373 A 3/1999 Roper et al.
5,880,829 A 3/1999 Kauhaniemi et al.
5,882,494 A 3/1999 Van Antwerp
5,885,211 A * 3/1999 Eppstein et al. 600/309
5,886,056 A 3/1999 Hershkowitz et al.
5,887,133 A 3/1999 Brown et al.
5,890,128 A 3/1999 Diaz et al.
RE36,191 E 4/1999 Solomon
5,891,053 A 4/1999 Sesekura
5,892,569 A 4/1999 Van de Velde
5,893,848 A 4/1999 Negus et al.
5,893,870 A 4/1999 Talen et al.
5,897,493 A 4/1999 Brown
5,897,569 A 4/1999 Kellogg et al.
5,899,855 A 5/1999 Brown
5,899,915 A 5/1999 Saadat
5,900,130 A 5/1999 Benvegnu et al.
5,902,731 A 5/1999 Ouyang et al.
5,906,921 A 5/1999 Ikeda et al.
D411,619 S 6/1999 Duchon
5,908,416 A 6/1999 Costello et al.
5,911,937 A 6/1999 Hekal
5,912,134 A 6/1999 Shartle
5,913,310 A 6/1999 Brown
5,916,156 A 6/1999 Hildenbrand et al.
5,916,229 A 6/1999 Evans
5,916,230 A 6/1999 Brenneman et al.
5,918,603 A 7/1999 Brown
5,919,711 A 7/1999 Boyd et al.
5,921,963 A 7/1999 Erez et al.
5,922,188 A 7/1999 Ikeda et al.
5,922,530 A 7/1999 Yu
5,922,591 A 7/1999 Anderson et al.
RE36,268 E 8/1999 Szuminsky et al.
5,931,794 A 8/1999 Pitesky
5,933,136 A 8/1999 Brown
5,935,075 A 8/1999 Casscells et al.
5,938,635 A 8/1999 Kuhle
5,938,679 A 8/1999 Freeman et al.
5,940,153 A 8/1999 Castaneda et al.
5,942,102 A 8/1999 Hodges et al.
5,942,189 A 8/1999 Wolfbeis et al.
5,947,957 A 9/1999 Morris
5,951,300 A 9/1999 Brown
5,951,492 A 9/1999 Douglas et al.
5,951,493 A 9/1999 Douglas et al.
5,951,582 A 9/1999 Thorne et al.
5,951,836 A 9/1999 McAleer et al.
5,954,738 A 9/1999 LeVaughn et al.
5,956,501 A 9/1999 Brown
5,957,846 A 9/1999 Chiang et al.
5,958,199 A 9/1999 Miyamoto et al.
5,959,098 A 9/1999 Goldberg et al.
5,960,403 A 9/1999 Brown
5,961,451 A 10/1999 Reber et al.
5,964,718 A 10/1999 Duchon et al.
5,965,380 A 10/1999 Heller et al.
5,968,063 A 10/1999 Chu et al.
5,968,760 A 10/1999 Phillips et al.
5,968,836 A 10/1999 Matzinger et al.
5,971,941 A 10/1999 Simons et al.
5,972,199 A 10/1999 Heller et al.
5,972,294 A 10/1999 Smith et al.
5,972,715 A 10/1999 Celentano et al.
5,974,124 A 10/1999 Schlueter, Jr. et al.
5,976,085 A 11/1999 Kimball et al.
5,983,193 A 11/1999 Heinonen et al.
5,985,116 A 11/1999 Ikeda et al.
5,985,559 A 11/1999 Brown
5,986,754 A 11/1999 Harding
5,993,400 A 11/1999 Rincoe et al.
5,993,434 A 11/1999 Dev et al.
D417,504 S 12/1999 Love et al.
5,997,476 A 12/1999 Brown
5,997,509 A 12/1999 Rosengart et al.
5,997,561 A 12/1999 Bocker et al.
5,997,817 A 12/1999 Crismore et al.
5,997,818 A 12/1999 Hacker et al.
6,001,067 A 12/1999 Shults et al.
6,007,497 A 12/1999 Huitema
D418,602 S 1/2000 Prokop et al.
6,014,577 A 1/2000 Henning et al.
6,015,392 A 1/2000 Douglas et al.
6,018,289 A 1/2000 Sekura et al.
6,020,110 A 2/2000 Williams et al.
6,022,324 A 2/2000 Skinner
6,022,366 A 2/2000 Schraga
6,022,748 A 2/2000 Charych et al.
6,023,629 A 2/2000 Tamada
6,023,686 A 2/2000 Brown
6,027,459 A * 2/2000 Shain et al. 600/573
6,030,399 A 2/2000 Ignotz et al.
6,030,827 A 2/2000 Davis et al.
6,030,967 A 2/2000 Marui et al.
6,032,059 A 2/2000 Henning et al.
6,032,119 A 2/2000 Brown et al.
6,033,421 A 3/2000 Theiss et al.
6,033,866 A 3/2000 Guo et al.
6,036,924 A 3/2000 Simons et al.
6,037,178 A 3/2000 Leiner et al.
6,041,253 A 3/2000 Kost et al.
6,045,567 A 4/2000 Taylor et al.
6,046,055 A 4/2000 Wolfbeis et al.
6,048,352 A * 4/2000 Douglas et al. 606/181
D424,696 S 5/2000 Ray et al.
6,056,701 A 5/2000 Duchon et al.
6,059,736 A * 5/2000 Tapper A61N 1/0436 600/573
6,059,815 A 5/2000 Lee et al.
6,060,327 A 5/2000 Keen
6,061,128 A 5/2000 Zweig et al.
6,063,039 A 5/2000 Cunningham et al.
6,066,103 A 5/2000 Duchon et al.
6,066,243 A 5/2000 Anderson et al.
6,066,296 A 5/2000 Brady et al.
6,067,463 A 5/2000 Jeng et al.
6,068,615 A 5/2000 Brown et al.
D426,638 S 6/2000 Ray et al.
6,070,761 A 6/2000 Bloom et al.
6,071,249 A 6/2000 Cunningham et al.
6,071,250 A 6/2000 Douglas et al.
6,071,251 A 6/2000 Cunningham et al.
6,071,294 A * 6/2000 Simons et al. 606/181
6,071,391 A 6/2000 Gotoh et al.
6,074,360 A 6/2000 Haar et al.
6,077,408 A 6/2000 Miyamoto et al.
6,080,106 A 6/2000 Lloyd et al.
6,080,172 A 6/2000 Fujiwara et al.
D428,150 S 7/2000 Ruf et al.
6,083,196 A 7/2000 Trautman et al.
6,083,710 A 7/2000 Heller et al.
6,084,660 A 7/2000 Shartle
6,085,576 A 7/2000 Sunshine et al.
6,086,544 A 7/2000 Hibner et al.
6,086,545 A 7/2000 Roe et al.

(56) **References Cited**

U.S. PATENT DOCUMENTS

6,086,562 A 7/2000 Jacobsen et al.
6,090,078 A 7/2000 Erskine
6,091,975 A 7/2000 Daddona et al.
6,093,146 A 7/2000 Filangeri
6,093,156 A 7/2000 Cunningham et al.
D428,993 S 8/2000 Lubs
6,099,484 A 8/2000 Douglas et al.
6,099,802 A 8/2000 Pugh
6,100,107 A 8/2000 Lei et al.
6,101,478 A 8/2000 Brown
6,102,933 A 8/2000 Lee et al.
6,103,033 A 8/2000 Say et al.
6,103,509 A 8/2000 Sode
6,104,940 A 8/2000 Watanabe et al.
6,106,751 A 8/2000 Talbot et al.
6,107,083 A 8/2000 Collins et al.
6,113,578 A 9/2000 Brown
6,117,115 A 9/2000 Hill et al.
6,117,630 A 9/2000 Reber et al.
6,118,126 A 9/2000 Zanzucchi
6,119,033 A 9/2000 Spigelman et al.
6,120,462 A 9/2000 Hibner et al.
6,120,676 A 9/2000 Heller et al.
6,121,009 A 9/2000 Heller et al.
6,122,536 A 9/2000 Sun et al.
6,126,804 A 10/2000 Andresen
6,126,899 A 10/2000 Woudenberg et al.
6,129,823 A 10/2000 Hughes et al.
6,132,449 A 10/2000 Lum et al.
6,133,837 A 10/2000 Riley
6,134,461 A * 10/2000 Say A61B 5/14532 600/309
6,136,013 A 10/2000 Marshall et al.
6,139,562 A 10/2000 Mauze et al.
6,143,164 A 11/2000 Heller et al.
6,144,837 A 11/2000 Quy
6,144,976 A 11/2000 Silva et al.
6,149,203 A 11/2000 Hanlon
6,151,586 A 11/2000 Brown
6,152,875 A 11/2000 Hakamata
6,152,942 A 11/2000 Brenneman et al.
6,153,069 A 11/2000 Pottgen et al.
RE36,991 E 12/2000 Yamamoto et al.
6,155,267 A 12/2000 Nelson
6,155,992 A 12/2000 Henning et al.
6,156,051 A 12/2000 Schraga
6,157,442 A 12/2000 Raskas
6,159,147 A 12/2000 Lichter et al.
6,159,424 A 12/2000 Kauhaniemi et al.
6,161,095 A 12/2000 Brown
6,162,397 A 12/2000 Jurik et al.
6,162,611 A 12/2000 Heller et al.
6,167,362 A 12/2000 Brown et al.
6,167,386 A 12/2000 Brown
6,168,563 B1 1/2001 Brown
6,168,957 B1 1/2001 Matzinger et al.
6,171,325 B1 1/2001 Mauze et al.
6,172,743 B1 1/2001 Kley et al.
6,175,752 B1 1/2001 Say et al.
6,176,847 B1 1/2001 Humphreys, Jr. et al.
6,176,865 B1 1/2001 Mauze et al.
6,177,000 B1 1/2001 Peterson
6,177,931 B1 1/2001 Alexander et al.
6,183,489 B1 2/2001 Douglas et al.
6,186,145 B1 2/2001 Brown
6,190,612 B1 2/2001 Berger et al.
6,191,852 B1 2/2001 Paffhausen et al.
6,192,891 B1 2/2001 Gravel et al.
6,193,673 B1 2/2001 Viola et al.
6,193,873 B1 2/2001 Ohara et al.
6,194,900 B1 2/2001 Freeman et al.
6,197,040 B1 3/2001 LeVaughn et al.
6,197,257 B1 3/2001 Raskas
6,200,289 B1 * 3/2001 Hochman A61M 5/1456 128/DIG. 12
6,200,773 B1 3/2001 Ouyang et al.
6,203,504 B1 3/2001 Latterell et al.
6,206,841 B1 3/2001 Cunningham et al.
6,210,133 B1 4/2001 Aboul-Hosn et al.
6,210,272 B1 4/2001 Brown
6,210,369 B1 4/2001 Wilmot et al.
6,210,420 B1 4/2001 Mauze et al.
6,210,421 B1 4/2001 Bocker et al.
6,212,417 B1 4/2001 Ikeda et al.
6,214,626 B1 4/2001 Meller et al.
6,214,804 B1 4/2001 Felgner et al.
6,218,571 B1 4/2001 Zheng et al.
6,219,574 B1 * 4/2001 Cormier et al. 604/20
6,221,023 B1 4/2001 Matsuba et al.
6,221,238 B1 4/2001 Grundig et al.
6,224,617 B1 5/2001 Saadat et al.
6,225,078 B1 5/2001 Ikeda et al.
6,228,100 B1 5/2001 Schraga
6,230,051 B1 5/2001 Cormier et al.
6,230,501 B1 5/2001 Bailey, Sr. et al.
6,231,531 B1 5/2001 Lum et al.
6,233,471 B1 5/2001 Berner et al.
6,233,539 B1 5/2001 Brown
6,234,772 B1 5/2001 Wampler et al.
6,240,393 B1 5/2001 Brown
D444,235 S 6/2001 Roberts et al.
6,241,862 B1 6/2001 McAleer et al.
6,242,207 B1 6/2001 Douglas et al.
6,245,060 B1 6/2001 Loomis et al.
6,245,215 B1 6/2001 Douglas et al.
6,246,992 B1 6/2001 Brown
6,248,065 B1 6/2001 Brown
6,251,083 B1 6/2001 Yum et al.
6,251,121 B1 6/2001 Saadat
6,251,260 B1 6/2001 Heller et al.
6,251,344 B1 6/2001 Goldstein
D444,557 S 7/2001 Levaughn et al.
6,254,831 B1 7/2001 Barnard et al.
6,256,533 B1 * 7/2001 Yuzhakov et al. 604/21
6,258,111 B1 7/2001 Ross et al.
6,258,229 B1 7/2001 Winarta et al.
6,258,254 B1 7/2001 Miyamoto et al.
6,261,241 B1 7/2001 Burbank et al.
6,261,245 B1 7/2001 Kawai et al.
6,261,519 B1 7/2001 Harding et al.
6,264,635 B1 7/2001 Wampler et al.
6,268,161 B1 7/2001 Han et al.
6,268,162 B1 7/2001 Phillips et al.
6,269,314 B1 7/2001 Iitawaki et al.
6,270,455 B1 8/2001 Brown
6,270,637 B1 8/2001 Crismore et al.
6,272,359 B1 8/2001 Kivela et al.
6,272,364 B1 8/2001 Kurnik
6,275,717 B1 8/2001 Gross et al.
6,280,254 B1 8/2001 Wu et al.
6,281,006 B1 8/2001 Heller et al.
6,283,926 B1 9/2001 Cunningham et al.
6,283,982 B1 9/2001 Levaughn et al.
6,284,478 B1 9/2001 Heller et al.
6,285,448 B1 9/2001 Kuenstner
6,289,254 B1 9/2001 Shimizu et al.
6,290,683 B1 9/2001 Erez et al.
6,294,897 B1 9/2001 Champlin
6,295,506 B1 9/2001 Heinonen et al.
6,299,578 B1 10/2001 Kurnik et al.
6,299,596 B1 10/2001 Ding
6,299,757 B1 10/2001 Feldman et al.
6,302,844 B1 10/2001 Walker et al.
6,302,855 B1 10/2001 Lav et al.
6,305,804 B1 10/2001 Rice et al.
6,306,104 B1 10/2001 Cunningham et al.
6,306,152 B1 10/2001 Verdonk et al.
6,306,347 B1 10/2001 Mason et al.
6,309,351 B1 10/2001 Kurnik et al.
6,309,370 B1 10/2001 Haim et al.
6,309,535 B1 10/2001 Williams et al.
6,312,612 B1 11/2001 Sherman et al.
6,315,738 B1 11/2001 Nishikawa et al.
6,318,970 B1 11/2001 Backhouse

(56) **References Cited**

U.S. PATENT DOCUMENTS

6,319,210 B1 11/2001 Douglas et al.
6,322,574 B1 11/2001 Lloyd et al.
6,322,808 B1 11/2001 Trautman et al.
6,322,963 B1 11/2001 Bauer
6,329,161 B1 12/2001 Heller et al.
6,330,426 B2 12/2001 Brown et al.
6,331,163 B1 12/2001 Kaplan
6,332,871 B1 12/2001 Douglas et al.
6,334,363 B1 1/2002 Testud et al.
6,334,778 B1 1/2002 Brown
6,334,856 B1 1/2002 Allen et al.
6,335,203 B1 1/2002 Patel et al.
6,336,900 B1 1/2002 Alleckson et al.
6,338,790 B1 1/2002 Feldman et al.
6,346,120 B1 2/2002 Yamazaki et al.
6,349,229 B1 2/2002 Watanabe et al.
6,350,273 B1 2/2002 Minagawa et al.
6,350,451 B1 2/2002 Horn et al.
6,352,514 B1 3/2002 Douglas et al.
6,352,523 B1 3/2002 Brown et al.
6,353,753 B1 3/2002 Flock et al.
6,358,196 B1 3/2002 Rayman
6,364,889 B1 * 4/2002 Kheiri et al. 606/181
6,364,890 B1 4/2002 Lum et al.
6,368,273 B1 4/2002 Brown
6,375,469 B1 4/2002 Brown
6,375,626 B1 4/2002 Allen et al.
6,375,627 B1 4/2002 Mauze et al.
6,379,301 B1 4/2002 Worthington et al.
6,379,317 B1 4/2002 Kintzig et al.
6,379,324 B1 * 4/2002 Gartstein et al. 604/22
6,379,969 B1 4/2002 Mauze et al.
6,381,577 B1 4/2002 Brown
D456,910 S 5/2002 Clark et al.
6,387,709 B1 5/2002 Mason et al.
6,391,005 B1 5/2002 Lum et al.
6,395,227 B1 5/2002 Kiser et al.
6,398,522 B2 6/2002 Skill
6,398,562 B1 6/2002 Butler et al.
6,399,394 B1 6/2002 Dahm et al.
6,402,701 B1 6/2002 Kaplan et al.
6,402,704 B1 6/2002 McMorrow
6,409,740 B1 * 6/2002 Kuhr et al. 606/182
6,413,410 B1 7/2002 Hodges et al.
6,413,411 B1 7/2002 Pottgen et al.
6,415,821 B2 7/2002 Kamholz et al.
6,419,661 B1 * 7/2002 Kuhr et al. 604/207
6,420,128 B1 7/2002 Ouyang et al.
6,421,633 B1 7/2002 Heinonen et al.
6,423,014 B1 7/2002 Churchill et al.
6,428,664 B1 8/2002 Bhullar et al.
6,436,055 B1 8/2002 Roe
6,436,256 B1 8/2002 Williams et al.
6,436,721 B1 8/2002 Kuo et al.
6,440,645 B1 8/2002 Yon-Hin et al.
6,444,115 B1 9/2002 Hodges et al.
6,447,119 B1 9/2002 Stewart et al.
6,447,265 B1 9/2002 Antaki et al.
6,451,040 B1 9/2002 Purcell
6,453,810 B1 9/2002 Rossmeisl et al.
6,458,258 B2 10/2002 Taniike et al.
6,461,496 B1 10/2002 Feldman et al.
6,462,162 B2 10/2002 Van Antwerp et al.
6,464,649 B1 10/2002 Duchon et al.
6,471,903 B2 10/2002 Sherman et al.
6,472,220 B1 10/2002 Simons et al.
6,475,360 B1 11/2002 Hodges et al.
6,475,372 B1 11/2002 Ohara et al.
6,475,436 B1 11/2002 Schabbach et al.
6,475,750 B1 11/2002 Han et al.
6,477,394 B2 11/2002 Rice et al.
6,477,424 B1 11/2002 Thompson et al.
6,484,046 B1 11/2002 Say et al.
6,485,439 B1 11/2002 Roe et al.
6,485,461 B1 11/2002 Mason et al.
6,485,923 B1 11/2002 Yani et al.
6,488,827 B1 12/2002 Shartle
6,488,872 B1 12/2002 Beebe et al.
6,488,891 B2 12/2002 Mason et al.
6,489,133 B2 12/2002 Phillips et al.
6,491,709 B2 12/2002 Sharma et al.
6,491,870 B2 12/2002 Patel et al.
6,494,830 B1 12/2002 Wessel
6,497,845 B1 12/2002 Sacherer
6,501,404 B2 12/2002 Walker
6,501,976 B1 12/2002 Sohrab
6,503,209 B2 1/2003 Hakky et al.
6,503,210 B1 1/2003 Hirao et al.
6,503,231 B1 1/2003 Prausnitz et al.
6,503,381 B1 1/2003 Gotoh et al.
6,506,165 B1 1/2003 Sweeney
6,506,168 B1 * 1/2003 Fathallah et al. 600/578
6,506,575 B1 1/2003 Knappe et al.
6,508,785 B1 1/2003 Eppstein
6,512,986 B1 1/2003 Harmon
6,514,270 B1 2/2003 Schraga
6,514,460 B1 2/2003 Fendrock
6,519,241 B1 2/2003 Theimer
6,520,326 B2 2/2003 McIvor et al.
6,521,110 B1 2/2003 Hodges et al.
6,521,182 B1 2/2003 Shartle et al.
6,527,521 B2 3/2003 Noda
6,527,716 B1 * 3/2003 Eppstein 600/309
6,527,778 B2 3/2003 Athanasiou et al.
6,529,377 B1 3/2003 Nelson et al.
6,530,892 B1 3/2003 Kelly
6,530,937 B1 3/2003 Schraga
6,531,322 B1 3/2003 Jurik et al.
6,533,949 B1 3/2003 Yeshurun et al.
6,537,207 B1 3/2003 Rice et al.
6,537,242 B1 * 3/2003 Palmer 604/22
6,537,264 B1 3/2003 Cormier et al.
6,537,292 B1 3/2003 Lee
6,540,672 B1 4/2003 Simonsen et al.
6,540,675 B2 4/2003 Aceti et al.
6,540,762 B1 4/2003 Bertling
6,540,891 B1 4/2003 Stewart et al.
6,541,266 B2 4/2003 Modzelewski et al.
6,547,954 B2 4/2003 Ikeda et al.
6,549,796 B2 4/2003 Sohrab
6,551,494 B1 4/2003 Heller et al.
6,553,244 B2 4/2003 Lesho et al.
6,554,381 B2 4/2003 Locher et al.
6,555,061 B1 4/2003 Leong et al.
D475,136 S 5/2003 Taniguchi
6,558,320 B1 5/2003 Causey, III et al.
6,558,361 B1 5/2003 Yeshurun
6,558,402 B1 5/2003 Chelak et al.
6,558,528 B1 5/2003 Matzinger
6,560,471 B1 5/2003 Heller et al.
6,561,978 B1 5/2003 Conn et al.
6,561,989 B2 5/2003 Whitson
6,562,210 B1 5/2003 Bhullar et al.
6,565,509 B1 5/2003 Say et al.
6,565,808 B2 5/2003 Hudak et al.
6,569,157 B1 5/2003 Shain et al.
6,571,651 B1 6/2003 Hodges
6,572,566 B2 6/2003 Effenhauser
6,572,822 B2 6/2003 Jurik et al.
6,574,490 B2 6/2003 Abbink et al.
6,575,905 B2 6/2003 Knobbe et al.
6,576,101 B1 6/2003 Heller et al.
6,576,117 B1 6/2003 Iketaki et al.
6,576,416 B2 6/2003 Haviland et al.
6,579,690 B1 6/2003 Bonnecaze et al.
6,582,573 B2 6/2003 Douglas et al.
6,584,338 B1 6/2003 Van Muiswinkel
D477,670 S 7/2003 Jurik et al.
6,586,199 B2 7/2003 Ouyang et al.
6,587,705 B1 7/2003 Kim et al.
6,589,260 B1 7/2003 Schmelzeisen-Redeker et al.
6,589,261 B1 7/2003 Abulhaj et al.
6,591,124 B2 * 7/2003 Sherman et al. 600/345
6,591,125 B1 7/2003 Buse et al.

(56) **References Cited**

U.S. PATENT DOCUMENTS

6,592,744 B1 7/2003 Hodges et al.
6,592,745 B1 7/2003 Feldman et al.
6,595,919 B2 7/2003 Berner et al.
6,599,281 B1 * 7/2003 Struys et al. 604/503
6,599,407 B2 7/2003 Taniike et al.
6,599,693 B1 7/2003 Webb
6,599,769 B2 7/2003 Kondo et al.
6,601,534 B2 8/2003 Hebrank
6,602,205 B1 8/2003 Erickson et al.
6,602,268 B2 8/2003 Kuhr et al.
6,602,678 B2 8/2003 Kwon et al.
6,604,050 B2 8/2003 Trippel et al.
6,607,362 B2 8/2003 Lum
6,607,494 B1 8/2003 Fowler
6,607,658 B1 8/2003 Heller et al.
6,612,111 B1 9/2003 Hodges et al.
6,616,616 B2 9/2003 Fritz et al.
6,616,819 B1 9/2003 Liamos et al.
6,618,934 B1 9/2003 Feldman et al.
6,620,112 B2 9/2003 Klitmose
6,620,310 B1 9/2003 Ohara et al.
6,623,501 B2 9/2003 Heller et al.
6,626,851 B2 9/2003 Hirao et al.
6,632,349 B1 10/2003 Hodges et al.
6,635,222 B2 10/2003 Kent
6,638,415 B1 10/2003 Hodges et al.
6,638,772 B1 10/2003 Douglas et al.
6,641,533 B2 11/2003 Causey, III et al.
6,645,142 B2 11/2003 Braig et al.
6,645,219 B2 11/2003 Roe
6,645,368 B1 11/2003 Beaty et al.
6,649,416 B1 11/2003 Kauer et al.
6,650,915 B2 11/2003 Routt et al.
6,652,720 B1 11/2003 Mansouri et al.
6,652,734 B1 11/2003 Hodges et al.
6,652,814 B1 11/2003 House et al.
D484,600 S 12/2003 Kaar et al.
6,656,428 B1 12/2003 Clark et al.
6,656,697 B1 12/2003 Ouyang et al.
6,656,702 B1 12/2003 Yugawa et al.
6,659,966 B2 12/2003 Essenpreis
6,660,018 B2 12/2003 Lum et al.
6,662,439 B1 12/2003 Bhullar
6,669,669 B2 12/2003 Flaherty et al.
6,671,527 B2 12/2003 Petersson et al.
D484,980 S 1/2004 Hartwein et al.
6,673,617 B2 1/2004 Patel
6,676,995 B2 1/2004 Dick et al.
6,679,841 B2 1/2004 Bojan et al.
6,679,852 B1 1/2004 Schmelzeisen-Redeker et al.
6,682,933 B2 1/2004 Patel et al.
6,689,411 B2 2/2004 Dick et al.
6,706,000 B2 3/2004 Perez et al.
6,706,049 B2 3/2004 Moerman
6,706,159 B2 3/2004 Moerman et al.
6,706,232 B2 3/2004 Hasegawa et al.
6,709,692 B2 3/2004 Sudor
6,713,660 B1 3/2004 Roe et al.
6,716,577 B1 4/2004 Yu et al.
6,719,887 B2 4/2004 Hasegawa et al.
6,719,923 B2 4/2004 Stiene et al.
6,721,586 B2 4/2004 Kiser et al.
6,723,046 B2 4/2004 Lichtenstein et al.
6,723,111 B2 4/2004 Abulhaj et al.
6,723,371 B2 4/2004 Chih-hui
6,723,500 B2 4/2004 Yu
6,726,818 B2 4/2004 Cui et al.
6,729,546 B2 5/2004 Roustaei
6,730,494 B1 5/2004 Toranto et al.
6,731,966 B1 5/2004 Spigelman et al.
6,733,493 B2 5/2004 Gruzdev et al.
6,736,777 B2 5/2004 Kim et al.
6,738,654 B2 5/2004 Sohrab
6,740,215 B1 5/2004 Nakaminami et al.
6,743,211 B1 6/2004 Prausnitz et al.
6,743,597 B1 6/2004 Guo et al.
6,743,635 B2 6/2004 Neel et al.
6,746,872 B2 6/2004 Zheng et al.
6,749,618 B2 6/2004 Levaughn et al.
6,749,740 B2 6/2004 Liamos et al.
6,749,792 B2 6/2004 Olson
6,749,887 B1 6/2004 Dick et al.
6,751,491 B2 6/2004 Lew et al.
6,752,817 B2 6/2004 Flora et al.
6,753,187 B2 6/2004 Cizdziel et al.
6,759,190 B2 7/2004 Lin et al.
6,764,496 B2 7/2004 Schraga
6,764,581 B1 7/2004 Forrow et al.
6,767,441 B1 7/2004 Cai et al.
6,773,671 B1 8/2004 Lewis et al.
6,776,888 B2 8/2004 Yamamoto et al.
6,780,645 B2 8/2004 Hayter et al.
6,780,647 B2 8/2004 Fujiwara et al.
6,783,502 B2 8/2004 Orloff et al.
6,783,537 B1 8/2004 Kuhr et al.
6,784,274 B2 8/2004 Van Antwerp et al.
6,786,874 B2 9/2004 Grace et al.
6,787,013 B2 9/2004 Chang et al.
6,787,109 B2 9/2004 Haar et al.
6,790,327 B2 9/2004 Ikeda et al.
6,790,599 B1 9/2004 Madou
6,792,791 B2 9/2004 Sato et al.
6,793,632 B2 9/2004 Sohrab
6,793,633 B2 9/2004 Douglas et al.
6,793,802 B2 9/2004 Lee et al.
6,797,150 B2 9/2004 Kermani et al.
6,800,488 B2 10/2004 Khan et al.
6,801,041 B2 10/2004 Karinka et al.
6,801,804 B2 10/2004 Miller et al.
6,802,199 B2 10/2004 Hilgers et al.
6,802,811 B1 10/2004 Slepian
6,802,957 B2 10/2004 Jung et al.
6,805,780 B1 10/2004 Ryu et al.
6,808,499 B1 10/2004 Churchill et al.
6,808,908 B2 10/2004 Yao et al.
6,808,937 B2 10/2004 Ligler et al.
6,809,807 B1 10/2004 Erickson et al.
6,811,406 B2 11/2004 Grube
6,811,557 B2 11/2004 Schraga
6,811,659 B2 11/2004 Vachon et al.
6,811,753 B2 11/2004 Hirao et al.
6,811,792 B2 11/2004 Roser et al.
6,812,031 B1 11/2004 Carlsson
6,814,843 B1 11/2004 Bhullar et al.
6,814,844 B2 11/2004 Bhullar et al.
6,814,845 B2 11/2004 Wilson et al.
6,815,186 B2 11/2004 Clark, Jr.
6,816,742 B2 11/2004 Kim et al.
6,818,180 B2 11/2004 Douglas et al.
6,821,483 B2 11/2004 Phillips et al.
6,823,750 B2 11/2004 Hodges
6,825,047 B1 11/2004 Woudenberg et al.
6,827,250 B2 12/2004 Uhland et al.
6,827,829 B2 12/2004 Kawanaka et al.
6,829,507 B1 12/2004 Lidman et al.
6,830,551 B1 12/2004 Uchigaki et al.
6,830,668 B2 12/2004 Musho et al.
6,830,669 B2 12/2004 Miyazaki et al.
6,830,934 B1 12/2004 Harding et al.
6,833,540 B2 12/2004 MacKenzie et al.
6,835,184 B1 12/2004 Sage et al.
6,835,553 B2 12/2004 Han et al.
6,835,570 B2 12/2004 Patel
6,837,858 B2 1/2005 Cunningham et al.
6,837,976 B2 1/2005 Cai et al.
6,837,988 B2 1/2005 Leong et al.
6,840,912 B2 1/2005 Kloepfer et al.
6,841,052 B2 1/2005 Musho et al.
6,843,254 B2 1/2005 Tapper
6,843,902 B1 1/2005 Penner et al.
6,847,451 B2 1/2005 Pugh
6,849,052 B2 2/2005 Uchigaki et al.
6,849,168 B2 2/2005 Crumly et al.
6,849,216 B2 2/2005 Rappin et al.

(56) **References Cited**

U.S. PATENT DOCUMENTS

6,849,456 B2 2/2005 Patel et al.
6,850,790 B2 2/2005 Berner et al.
6,852,119 B1 2/2005 Abulhaj et al.
6,852,212 B2 2/2005 Maxwell et al.
6,852,500 B1 2/2005 Hoss et al.
6,853,854 B1 2/2005 Proniewicz et al.
6,855,243 B2 2/2005 Khan
6,856,125 B2 2/2005 Kermani
6,856,928 B2 2/2005 Harmon
6,858,015 B2 2/2005 List
6,858,401 B2 2/2005 Phillips et al.
6,859,738 B2 2/2005 Bush et al.
6,862,466 B2 3/2005 Ackerman
6,862,534 B2 3/2005 Sterling et al.
6,863,800 B2 3/2005 Karinka et al.
6,863,801 B2 3/2005 Hodges et al.
6,865,408 B1 3/2005 Abbink et al.
6,866,641 B2 3/2005 Marshall
6,866,675 B2 3/2005 Perez et al.
6,866,758 B2 3/2005 Bhullar et al.
6,866,822 B1 3/2005 House et al.
6,869,418 B2 3/2005 Marano-Ford
6,872,200 B2 3/2005 Mann et al.
6,872,297 B2 3/2005 Mansouri et al.
6,872,298 B2 3/2005 Kermani
6,872,299 B2 3/2005 Kermani et al.
6,872,358 B2 3/2005 Hagen et al.
6,875,208 B2 4/2005 Santini, Jr. et al.
6,875,223 B2 4/2005 Argauer
6,875,327 B1 4/2005 Miyazaki et al.
6,875,613 B2 4/2005 Shartle et al.
6,878,120 B2 4/2005 Roe et al.
6,878,251 B2 4/2005 Hodges et al.
6,878,255 B1 4/2005 Wang et al.
6,878,262 B2 4/2005 Taniike et al.
6,880,968 B1 4/2005 Haar
6,881,203 B2 4/2005 Delmore et al.
6,881,322 B2 4/2005 Tokunaga et al.
6,881,378 B1 4/2005 Zimmer et al.
6,881,541 B2 4/2005 Petersen et al.
6,881,550 B2 4/2005 Phillips et al.
6,881,551 B2 4/2005 Heller et al.
6,881,578 B2 4/2005 Otake
6,882,940 B2 4/2005 Potts et al.
6,884,592 B2 4/2005 Matzinger et al.
6,885,196 B2 4/2005 Taniike et al.
6,885,883 B2 4/2005 Parris et al.
6,887,202 B2 5/2005 Currie et al.
6,887,239 B2 5/2005 Elstrom et al.
6,887,253 B2 5/2005 Schraga
6,887,426 B2 5/2005 Phillips et al.
6,887,709 B2 5/2005 Leong
6,889,069 B2 5/2005 Routt et al.
6,890,319 B1 5/2005 Crocker
6,890,421 B2 5/2005 Ohara et al.
6,890,484 B2 5/2005 Bautista et al.
6,891,936 B2 5/2005 Kai et al.
6,892,085 B2 5/2005 McIvor et al.
6,893,396 B2 5/2005 Schulze et al.
6,893,545 B2 5/2005 Gotoh et al.
6,893,552 B1 5/2005 Wang et al.
6,895,263 B2 5/2005 Shin et al.
6,895,264 B2 5/2005 Rice et al.
6,895,265 B2 5/2005 Silver
6,896,793 B2 5/2005 Erdosy et al.
6,897,788 B2 5/2005 Khair et al.
6,902,905 B2 6/2005 Burson et al.
6,904,301 B2 6/2005 Raskas
6,905,733 B2 6/2005 Russell et al.
6,908,008 B2 6/2005 Pugh
6,908,535 B2 6/2005 Rankin et al.
6,908,591 B2 6/2005 MacPhee et al.
6,908,593 B1 6/2005 Shartle
6,911,130 B2 6/2005 Brenneman et al.
6,911,131 B2 6/2005 Miyazaki et al.
6,911,621 B2 6/2005 Bhullar et al.
6,911,937 B1 6/2005 Sparrow et al.
6,913,210 B2 7/2005 Baasch et al.
6,913,668 B2 7/2005 Matzinger
6,916,410 B2 7/2005 Katsuki et al.
6,918,874 B1 * 7/2005 Hatch et al. 600/365
6,918,901 B1 7/2005 Theeuwes et al.
6,918,918 B1 7/2005 Schraga
6,922,576 B2 7/2005 Raskas
6,922,578 B2 7/2005 Eppstein et al.
6,923,764 B2 8/2005 Aceti et al.
6,923,894 B2 8/2005 Huang et al.
6,923,936 B2 8/2005 Swanson et al.
6,924,093 B2 8/2005 Haviland et al.
6,925,317 B1 8/2005 Samuels et al.
6,925,393 B1 8/2005 Kalatz et al.
6,929,631 B1 8/2005 Brugger et al.
6,929,649 B2 8/2005 Pugh
6,929,650 B2 8/2005 Fukuzawa et al.
6,931,327 B2 8/2005 Goode, Jr. et al.
6,931,328 B2 8/2005 Braig et al.
RE38,803 E 9/2005 Rodgers, Jr.
6,939,310 B2 9/2005 Matzinger et al.
6,939,312 B2 9/2005 Hodges et al.
6,939,450 B2 9/2005 Karinka et al.
6,939,685 B2 9/2005 Ouyang et al.
6,940,591 B2 9/2005 Sopp et al.
6,942,518 B2 9/2005 Liamos et al.
6,942,769 B2 9/2005 Cheng et al.
6,942,770 B2 9/2005 Cai et al.
6,944,486 B2 9/2005 Braig et al.
6,945,943 B2 9/2005 Pugh
6,946,067 B2 9/2005 Hodges et al.
6,946,098 B2 9/2005 Miekka et al.
6,946,299 B2 9/2005 Neel et al.
6,949,111 B2 9/2005 Schraga
6,949,221 B2 9/2005 Kiser et al.
6,951,631 B1 10/2005 Catt et al.
6,951,728 B2 10/2005 Qian et al.
6,952,603 B2 10/2005 Gerber et al.
6,952,604 B2 10/2005 DeNuzzio et al.
6,953,693 B2 10/2005 Neel et al.
6,954,662 B2 10/2005 Freger et al.
6,958,072 B2 10/2005 Schraga
6,958,129 B2 10/2005 Galen et al.
6,958,809 B2 10/2005 Sterling et al.
6,959,211 B2 10/2005 Rule et al.
6,959,247 B2 10/2005 Neel et al.
6,960,287 B2 11/2005 Charlton
6,960,289 B2 11/2005 Hodges et al.
6,960,323 B2 11/2005 Guo et al.
6,964,871 B2 11/2005 Bell et al.
6,965,791 B1 11/2005 Hitchcock et al.
6,966,880 B2 11/2005 Boecker et al.
6,966,977 B2 11/2005 Hasegawa et al.
6,967,105 B2 11/2005 Nomura et al.
6,968,375 B1 11/2005 Brown
6,969,359 B2 11/2005 Duchon et al.
6,969,450 B2 11/2005 Taniike et al.
6,969,451 B2 11/2005 Shin et al.
6,973,706 B2 12/2005 Say et al.
6,975,893 B2 12/2005 Say et al.
6,977,032 B2 12/2005 Hasegawa et al.
6,977,722 B2 12/2005 Wohlstadter et al.
6,979,544 B2 12/2005 Keen
6,979,571 B2 12/2005 Modzelewski et al.
6,982,027 B2 1/2006 Yagi
6,982,431 B2 1/2006 Modlin et al.
6,983,176 B2 1/2006 Gardner et al.
6,983,177 B2 1/2006 Rule et al.
6,984,307 B2 1/2006 Zweig
6,986,777 B2 1/2006 Kim
6,986,869 B2 1/2006 Tuohy et al.
6,988,996 B2 1/2006 Roe et al.
6,989,243 B2 1/2006 Yani et al.
6,989,891 B2 1/2006 Braig et al.
6,990,365 B1 1/2006 Parker et al.
6,990,366 B2 1/2006 Say et al.
6,990,367 B2 1/2006 Kiser et al.

(56) **References Cited**

U.S. PATENT DOCUMENTS

6,990,849 B2 1/2006 Bohm et al.
6,991,918 B2 1/2006 Keith
6,991,940 B2 1/2006 Carroll et al.
6,994,825 B2 2/2006 Haviland et al.
6,997,317 B2 2/2006 Catelli
6,997,343 B2 2/2006 May et al.
6,997,344 B2 2/2006 Brown et al.
6,997,936 B2 2/2006 Marshall
6,998,247 B2 2/2006 Monfre et al.
6,998,248 B2 2/2006 Yani et al.
6,999,810 B2 2/2006 Berner et al.
7,001,343 B2 2/2006 Erickson et al.
7,001,344 B2 2/2006 Freeman et al.
7,003,337 B2 2/2006 Harjunmaa et al.
7,003,340 B2 2/2006 Say et al.
7,003,341 B2 2/2006 Say et al.
7,004,928 B2 * 2/2006 Aceti A61B 5/1411 600/575
7,005,048 B1 2/2006 Watanabe et al.
7,005,273 B2 2/2006 Heller
7,005,459 B2 2/2006 Hekal
7,005,857 B2 2/2006 Stiene et al.
7,006,857 B2 2/2006 Braig et al.
7,006,858 B2 2/2006 Silver et al.
7,008,384 B2 3/2006 Tapper
7,010,432 B2 3/2006 Kermani
7,011,630 B2 3/2006 Desai et al.
7,011,954 B2 3/2006 Ouyang et al.
7,014,615 B2 3/2006 Erickson et al.
7,015,262 B2 3/2006 Leong
7,016,713 B2 3/2006 Gardner et al.
7,018,568 B2 3/2006 Tierney
7,018,848 B2 3/2006 Douglas et al.
7,022,217 B2 4/2006 Hodges et al.
7,022,218 B2 4/2006 Taniike et al.
7,022,286 B2 4/2006 Lemke et al.
7,024,236 B2 4/2006 Ford et al.
7,024,248 B2 4/2006 Penner et al.
7,024,399 B2 4/2006 Sumner, II et al.
7,025,425 B2 4/2006 Kovatchev et al.
7,025,716 B1 * 4/2006 Meloul A61N 5/1002 600/3
7,025,774 B2 4/2006 Freeman et al.
7,027,848 B2 4/2006 Robinson et al.
7,029,444 B2 4/2006 Shin et al.
7,033,322 B2 4/2006 Silver
7,033,371 B2 4/2006 Alden et al.
7,039,560 B2 5/2006 Kawatahara et al.
7,041,057 B1 5/2006 Faupel et al.
7,041,063 B2 5/2006 Abreu
7,041,068 B2 * 5/2006 Freeman et al. 600/583
7,041,210 B2 5/2006 Hodges et al.
7,041,254 B2 5/2006 Haviland et al.
7,041,468 B2 5/2006 Drucker et al.
7,043,287 B1 5/2006 Khalil et al.
7,043,821 B2 5/2006 Hodges
7,044,911 B2 5/2006 Drinan et al.
7,045,046 B2 5/2006 Chambers et al.
7,045,054 B1 5/2006 Buck et al.
7,045,097 B2 5/2006 Kovacs
7,045,310 B2 5/2006 Buck, Jr. et al.
7,045,361 B2 5/2006 Heiss et al.
7,047,070 B2 5/2006 Wilkinson et al.
7,047,795 B2 5/2006 Sato
7,049,087 B2 5/2006 Jenny et al.
7,049,130 B2 5/2006 Carroll et al.
7,050,843 B2 5/2006 Shartle et al.
7,051,495 B2 5/2006 Lang et al.
7,052,268 B2 5/2006 Powell et al.
7,052,591 B2 5/2006 Gao et al.
7,052,652 B2 5/2006 Zanzucchi et al.
7,052,864 B2 5/2006 Durkop et al.
7,054,682 B2 5/2006 Young et al.
7,054,759 B2 5/2006 Fukunaga et al.
D522,656 S 6/2006 Orr et al.
D523,555 S 6/2006 Loerwald et al.
7,056,425 B2 6/2006 Hasegawa et al.
7,056,495 B2 6/2006 Roser et al.
7,058,437 B2 6/2006 Buse et al.
7,059,352 B2 6/2006 Bohm
7,060,059 B2 6/2006 Keith et al.
7,060,168 B2 6/2006 Taniike et al.
7,060,192 B2 6/2006 Yuzhakov et al.
7,061,593 B2 6/2006 Braig et al.
7,063,234 B2 6/2006 Giraud
7,063,774 B2 6/2006 Bhullar et al.
7,063,775 B2 6/2006 Yamaoka
7,063,776 B2 6/2006 Huang
7,066,884 B2 6/2006 Custer et al.
7,066,885 B2 6/2006 Erickson et al.
7,070,564 B2 7/2006 Matzinger et al.
7,070,680 B2 7/2006 Bae et al.
7,073,246 B2 7/2006 Bhullar et al.
7,074,307 B2 7/2006 Simpson et al.
7,074,308 B2 7/2006 Mao et al.
7,077,328 B2 7/2006 Krishnaswamy et al.
7,077,828 B2 7/2006 Kuhr et al.
7,078,480 B2 7/2006 Nagel et al.
7,079,252 B1 7/2006 Debreczeny et al.
7,081,188 B1 7/2006 Cho
7,083,712 B2 8/2006 Morita et al.
7,086,277 B2 8/2006 Tess et al.
7,087,149 B1 8/2006 Muguruma et al.
7,090,764 B2 8/2006 Iyengar et al.
7,096,053 B2 8/2006 Loeb et al.
7,096,124 B2 8/2006 Sterling et al.
7,097,631 B2 8/2006 Trautman et al.
7,098,038 B2 8/2006 Fukuoka et al.
7,103,578 B2 9/2006 Beck et al.
7,105,006 B2 9/2006 Shraga
7,107,253 B1 9/2006 Sumner, II et al.
7,108,680 B2 9/2006 Rohr et al.
7,108,778 B2 9/2006 Simpson et al.
7,109,271 B2 9/2006 Liu et al.
7,110,112 B2 9/2006 Uchida et al.
7,110,803 B2 9/2006 Shults et al.
7,112,265 B1 9/2006 McAleer et al.
7,112,451 B2 9/2006 Takahashi et al.
7,113,172 B2 9/2006 Hohl et al.
7,115,362 B2 10/2006 Douglas et al.
7,118,351 B2 10/2006 Effenhauser et al.
7,118,667 B2 10/2006 Lee
7,118,668 B1 10/2006 Edelbrock et al.
7,118,916 B2 10/2006 Matzinger
7,118,919 B2 10/2006 Yatscoff et al.
7,120,483 B2 10/2006 Russell et al.
7,122,102 B2 10/2006 Wogoman
7,122,110 B2 10/2006 Deng et al.
7,122,111 B2 10/2006 Tokunaga et al.
7,125,481 B2 10/2006 Musho et al.
7,129,038 B2 10/2006 Gopalan et al.
RE39,390 E 11/2006 Hasegawa et al.
D531,725 S 11/2006 Loerwald et al.
7,131,342 B2 11/2006 Hodges
7,131,984 B2 11/2006 Sato et al.
7,132,041 B2 11/2006 Deng et al.
7,133,710 B2 11/2006 Acosta et al.
7,134,550 B2 11/2006 Groth
7,134,999 B2 11/2006 Brauker et al.
7,135,100 B1 11/2006 Lau et al.
7,137,957 B2 11/2006 Erickson et al.
7,138,041 B2 11/2006 Su et al.
7,138,089 B2 11/2006 Aitken et al.
7,141,034 B2 11/2006 Eppstein et al.
7,141,058 B2 11/2006 Briggs et al.
7,144,404 B2 12/2006 Whitson et al.
7,144,485 B2 12/2006 Hsu et al.
7,144,495 B2 12/2006 Teodorczyk et al.
7,144,496 B2 12/2006 Meserol et al.
7,144,709 B2 12/2006 Ouyang et al.
7,147,825 B2 12/2006 Matsuda et al.
7,150,755 B2 12/2006 Levaughn et al.
7,150,975 B2 12/2006 Tamada et al.
7,150,995 B2 12/2006 Xie et al.

(56) **References Cited**

U.S. PATENT DOCUMENTS

7,153,696	B2	12/2006	Fukuoka et al.
7,155,371	B2	12/2006	Kawatahara et al.
7,156,117	B2	1/2007	Bohm
7,156,810	B2	1/2007	Cho et al.
7,157,723	B2	1/2007	Colvin et al.
7,160,251	B2	1/2007	Neel et al.
7,160,313	B2	1/2007	Galloway et al.
7,160,678	B1	1/2007	Kayyem et al.
7,162,289	B2	1/2007	Shah et al.
7,163,616	B2	1/2007	Vreeke et al.
7,166,074	B2	1/2007	Reghabi et al.
7,166,208	B2	1/2007	Zweig
7,167,734	B2	1/2007	Khalil et al.
7,167,735	B2	1/2007	Uchida et al.
7,167,818	B2	1/2007	Brown
7,169,116	B2	1/2007	Day et al.
7,169,117	B2	1/2007	Allen
7,169,289	B2	1/2007	Schulein et al.
7,169,600	B2	1/2007	Hoss et al.
7,172,728	B2	2/2007	Otake
7,174,199	B2	2/2007	Berner et al.
7,175,641	B1	2/2007	Schraga
7,175,642	B2	2/2007	Briggs et al.
7,179,233	B2	2/2007	Chang
7,182,910	B2	2/2007	Allen et al.
7,183,068	B2	2/2007	Burson et al.
7,183,102	B2	2/2007	Monfre et al.
7,188,034	B2	3/2007	Staib et al.
7,189,576	B2	3/2007	Fukuoka et al.
7,190,988	B2	3/2007	Say et al.
7,192,405	B2	3/2007	DeNuzzio et al.
7,192,450	B2	3/2007	Brauker et al.
7,195,704	B2	3/2007	Kermani et al.
7,198,606	B2	4/2007	Boecker et al.
7,199,594	B2	4/2007	Kermani
7,202,854	B2	4/2007	Hohl et al.
7,206,620	B2	4/2007	Erickson et al.
7,206,623	B2	4/2007	Blank et al.
D542,681	S	5/2007	Young
7,211,052	B2	5/2007	Roe
7,211,096	B2	5/2007	Kuhr et al
7,212,925	B2	5/2007	Genshaw
7,213,720	B2	5/2007	Giraud
7,215,982	B2	5/2007	Oshima et al.
7,215,983	B2	5/2007	Cho et al.
7,223,248	B2	5/2007	Erickson et al.
7,225,008	B1	5/2007	Ward et al.
D543,878	S	6/2007	Castillo et al.
D545,438	S	6/2007	Huang et al.
7,225,535	B2	6/2007	Feldman et al.
7,226,414	B2	6/2007	Ballerstadt et al.
7,226,461	B2	6/2007	Boecker et al.
7,226,978	B2	6/2007	Tapsak et al.
7,227,156	B2	6/2007	Colvin, Jr. et al.
7,228,159	B2	6/2007	Petersson et al.
7,228,162	B2	6/2007	Ward et al.
7,228,163	B2	6/2007	Ackerman
7,229,458	B2	6/2007	Boecker et al.
7,232,451	B2	6/2007	Boecker et al.
7,232,510	B2	6/2007	Miyazaki et al.
7,233,816	B2	6/2007	Blank et al.
7,235,056	B2	6/2007	Duchon et al.
7,235,170	B2	6/2007	Watanabe et al.
7,235,378	B2	6/2007	Yonehara
7,236,812	B1	6/2007	Ballerstadt et al.
7,236,814	B2	6/2007	Shioi et al.
D545,705	S	7/2007	Voege
D546,216	S	7/2007	Bolognesi et al.
D546,218	S	7/2007	Grasso et al.
7,238,192	B2	7/2007	List et al.
7,238,534	B1	7/2007	Zimmer
7,241,265	B2	7/2007	Cummings et al.
7,244,264	B2	7/2007	Roe et al.
7,244,265	B2	7/2007	Freeman et al.
7,244,266	B2	7/2007	Garthe et al.
7,247,138	B2	7/2007	Reghabi et al.
7,247,144	B2	7/2007	Douglas et al.
7,250,037	B2	7/2007	Shermer et al.
7,250,056	B2	7/2007	Hamamoto
7,250,095	B2	7/2007	Black et al.
7,250,105	B1	7/2007	Davies et al.
7,251,513	B2	7/2007	Kondoh et al.
7,251,514	B2	7/2007	Cho et al.
7,251,515	B2	7/2007	Cho et al.
7,251,516	B2	7/2007	Walker et al.
7,251,517	B2	7/2007	Cho et al.
7,251,518	B2	7/2007	Herrmann
7,252,804	B2	8/2007	Miyashita et al.
7,254,426	B2	8/2007	Cho et al.
7,254,427	B2	8/2007	Cho et al.
7,254,428	B2	8/2007	Cho et al.
7,254,429	B2	8/2007	Schurman et al.
7,254,430	B2	8/2007	Cho et al.
7,254,432	B2	8/2007	Fine
7,258,673	B2	8/2007	Racchini et al.
7,258,693	B2	8/2007	Freeman et al.
7,262,061	B2	8/2007	Petrich et al.
7,264,139	B2	9/2007	Brickwood et al.
7,264,627	B2	9/2007	Perez
7,266,400	B2	9/2007	Fine et al.
7,267,665	B2	9/2007	Steil et al.
7,267,750	B2	9/2007	Watanabe et al.
7,270,247	B2	9/2007	Charlton
7,271,912	B2	9/2007	Sterling et al.
7,273,484	B2	9/2007	Thoes et al.
7,276,027	B2	10/2007	Haar et al.
7,276,029	B2	10/2007	Goode, Jr. et al.
7,276,146	B2	10/2007	Wilsey
7,276,147	B2	10/2007	Wilsey
7,276,380	B2	10/2007	Fukuyama
7,277,740	B2	10/2007	Rohleder et al.
7,278,983	B2	10/2007	Ireland et al.
7,279,130	B2	10/2007	Brown
7,282,058	B2	10/2007	Levin et al.
7,287,318	B2	10/2007	Bhullar et al.
7,288,073	B2	10/2007	Effenhauser et al.
7,288,102	B2	10/2007	Griffin et al.
7,288,174	B2	10/2007	Cui et al.
7,289,836	B2	10/2007	Colvin, Jr.
7,291,117	B2	11/2007	Boecker et al.
7,291,159	B2	11/2007	Schmelzeisen-Redeker et al.
7,291,256	B2	11/2007	Teodorczyk et al.
7,291,497	B2	11/2007	Holmes et al.
7,294,246	B2	11/2007	Gundel et al.
7,295,867	B2	11/2007	Berner et al.
7,297,122	B2	11/2007	Boecker et al.
7,297,151	B2	11/2007	Boecker et al.
7,297,152	B2	11/2007	Fukuzawa et al.
7,297,241	B2	11/2007	Kontschieder et al.
7,297,248	B2	11/2007	Bae et al.
7,297,627	B2	11/2007	Shah et al.
7,299,079	B2	11/2007	Rebec et al.
7,299,080	B2	11/2007	Acosta et al.
7,299,081	B2	11/2007	Mace et al.
7,299,082	B2	11/2007	Feldman et al.
7,300,402	B2	11/2007	Iliff
7,301,629	B2	11/2007	Bambot et al.
7,303,573	B2	12/2007	D'Agostino
7,303,726	B2	12/2007	McAllister et al.
7,303,922	B2	12/2007	Jeng et al.
7,305,896	B2	12/2007	Howell et al.
7,306,560	B2	12/2007	Iliff
7,308,164	B1	12/2007	Banks
7,308,292	B2	12/2007	Colvin et al.
7,310,542	B2	12/2007	Jeon et al.
7,310,543	B2	12/2007	Smart et al.
7,310,544	B2	12/2007	Brister et al.
7,311,718	B2	12/2007	Schraga
7,311,812	B2	12/2007	Forrow et al.
7,312,042	B1	12/2007	Petyt et al.
7,313,425	B2	12/2007	Finarov et al.
7,314,453	B2	1/2008	Kuo
7,315,752	B2	1/2008	Kraemer et al.
7,316,700	B2	1/2008	Alden et al.

(56) **References Cited**

U.S. PATENT DOCUMENTS

7,316,766	B2	1/2008	Chen et al.
7,316,929	B2	1/2008	Purcell
7,317,938	B2	1/2008	Lorenz et al.
7,317,939	B2	1/2008	Fine et al.
7,322,942	B2	1/2008	Roe
7,322,996	B2	1/2008	Taylor et al.
7,322,997	B2	1/2008	Shi
7,322,998	B2	1/2008	Kuhr et al.
7,323,098	B2	1/2008	Miyashita et al.
7,323,141	B2	1/2008	Kirchhevel et al.
7,323,315	B2	1/2008	Marfurt
7,324,012	B2	1/2008	Mann et al.
7,328,052	B2	2/2008	Samsoondar et al.
7,331,931	B2	2/2008	Freeman et al.
7,335,292	B2	2/2008	Hodges et al.
7,335,294	B2	2/2008	Heller et al.
7,337,918	B2	3/2008	Fowler et al.
7,338,639	B2	3/2008	Burke et al.
7,343,188	B2	3/2008	Sohrab
7,344,499	B1	3/2008	Prausnitz et al.
7,344,500	B2	3/2008	Talbot et al.
7,344,507	B2	3/2008	Briggs et al.
7,344,626	B2	3/2008	Harding et al.
7,347,925	B2	3/2008	Hsieh
7,347,926	B2	3/2008	Morita et al.
7,347,973	B2	3/2008	Douglas et al.
RE40,198	E	4/2008	Buck, Jr. et al.
7,351,213	B2	4/2008	Wong et al.
7,351,323	B2	4/2008	Iketaki et al.
7,351,375	B2	4/2008	Noda et al.
7,351,770	B2	4/2008	Liu et al.
7,357,808	B2	4/2008	Kennedy
7,357,851	B2	4/2008	Reid et al.
7,361,182	B2	4/2008	Fukuda et al.
7,361,307	B2	4/2008	Shartle et al.
7,371,247	B2	5/2008	Boecker et al.
7,372,277	B2	5/2008	Diamond et al.
7,374,544	B2	5/2008	Freeman et al.
7,374,546	B2	5/2008	Roe et al.
7,378,007	B2	5/2008	Moerman et al.
7,378,720	B2	5/2008	Fu et al.
7,402,616	B2	7/2008	Rodgers et al.
7,404,815	B2	7/2008	Kollias et al.
7,410,468	B2	8/2008	Freeman et al.
7,429,630	B2	9/2008	Liu et al.
7,431,814	B2	10/2008	Hodges et al.
7,431,820	B2	10/2008	Hodges
7,438,694	B2	10/2008	Boozer et al.
D579,652	S	11/2008	Lim et al.
D579,653	S	11/2008	Lim et al.
7,458,956	B1	12/2008	Adams
7,462,265	B2	12/2008	Leach et al.
7,465,380	B2	12/2008	Rodgers et al.
7,468,125	B2	12/2008	Kraft et al.
D585,314	S	1/2009	Schvetz
7,473,264	B2	1/2009	Allen
7,474,390	B2	1/2009	Robinson et al.
7,474,391	B2	1/2009	Baskeyfield et al.
7,481,776	B2	1/2009	Boecker et al.
7,481,818	B2	1/2009	Allen et al.
D586,465	S	2/2009	Faulkner et al.
D586,466	S	2/2009	Smith et al.
D586,678	S	2/2009	Schvetz
D586,916	S	2/2009	Faulkner et al.
7,485,128	B2	2/2009	Boecker et al.
7,491,178	B2	2/2009	Boecker et al.
7,498,132	B2	3/2009	Yu et al.
7,501,052	B2	3/2009	Iyengar et al.
7,501,093	B2	3/2009	Demelo et al.
7,521,019	B2	4/2009	Polak et al.
7,524,293	B2	4/2009	Freeman et al.
7,537,571	B2	5/2009	Freeman et al.
7,547,287	B2	6/2009	Boecker et al.
7,548,772	B2	6/2009	Shartle et al.
7,553,511	B2	6/2009	Hleong
7,563,232	B2	7/2009	Freeman et al.
D598,126	S	8/2009	Alvarez-Icaza et al.
7,572,356	B2	8/2009	Rodgers et al.
7,575,558	B2	8/2009	Boecker et al.
D600,349	S	9/2009	Bell et al.
D600,812	S	9/2009	Lei
D600,813	S	9/2009	Bell et al.
D601,255	S	9/2009	Schvetz
D601,258	S	9/2009	Bell et al.
7,582,063	B2	9/2009	Wurster et al.
7,582,099	B2	9/2009	Freeman et al.
7,586,590	B2	9/2009	Baskeyfield et al.
7,588,670	B2	9/2009	Rodgers et al.
7,589,828	B2	9/2009	Robinson et al.
7,592,151	B2	9/2009	Liu et al.
7,593,097	B2	9/2009	Robinson et al.
7,604,592	B2	10/2009	Freeman et al.
7,604,722	B2	10/2009	Hodges et al.
7,608,175	B2	10/2009	Hodges et al.
7,618,522	B2	11/2009	Davies
7,645,263	B2	1/2010	Angel et al.
7,648,468	B2	1/2010	Boecker et al.
7,648,469	B2	1/2010	Boecker et al.
7,653,492	B2	1/2010	Davies et al.
7,654,127	B2	2/2010	Krulevitch et al.
7,655,119	B2	2/2010	Davies
7,665,303	B2	2/2010	Bohm et al.
7,666,287	B2	2/2010	Zhao et al.
D611,151	S	3/2010	Lei
D611,372	S	3/2010	Salter et al.
D611,489	S	3/2010	Bell et al.
D611,853	S	3/2010	Salter et al.
D612,274	S	3/2010	Heidemann et al.
D612,275	S	3/2010	Salter et al.
D612,279	S	3/2010	Heidemann et al.
7,674,232	B2	3/2010	Boecker et al.
7,682,318	B2	3/2010	Alden et al.
7,713,214	B2	5/2010	Freeman et al.
7,749,174	B2	7/2010	Alden et al.
7,833,172	B2	11/2010	Hein et al.
7,879,058	B2	2/2011	Ikeda
7,901,365	B2	3/2011	Freeman et al.
7,976,778	B2	7/2011	Drucker et al.
8,062,235	B2	11/2011	Planman et al.
8,079,960	B2	12/2011	Briggs et al.
8,162,968	B2	4/2012	Boozer et al.
8,197,421	B2	6/2012	Freeman et al.
8,206,319	B2	6/2012	Freeman et al.
8,231,548	B2	7/2012	Hoenes
8,251,922	B2	8/2012	List et al.
8,282,576	B2	10/2012	Marsot et al.
8,388,639	B2	3/2013	Nicholls et al.
8,491,500	B2 *	7/2013	Briggs et al. 600/583
2001/0011157	A1	8/2001	Latterell et al.
2001/0016682	A1	8/2001	Berner et al.
2001/0017269	A1	8/2001	Heller et al.
2001/0018353	A1	8/2001	Ishigaki
2001/0027328	A1	10/2001	Lum et al.
2001/0031931	A1	10/2001	Cunningham et al.
2001/0037072	A1 *	11/2001	Virtanen 600/573
2001/0037355	A1	11/2001	Britt
2001/0042004	A1	11/2001	Taub
2001/0045355	A1	11/2001	Gephart et al.
2001/0054319	A1	12/2001	Heller et al.
2002/0002326	A1	1/2002	Causey et al.
2002/0002344	A1	1/2002	Douglas et al.
2002/0004196	A1	1/2002	Whitson
2002/0016568	A1	2/2002	Lebel et al.
2002/0016606	A1	2/2002	Moerman
2002/0016923	A1	2/2002	Knaus et al.
2002/0019606	A1	2/2002	Lebel et al.
2002/0019747	A1	2/2002	Ware et al.
2002/0019748	A1	2/2002	Brown
2002/0020646	A1	2/2002	Groth et al.
2002/0025469	A1	2/2002	Heller
2002/0029058	A1	3/2002	Levaughn et al.
2002/0040208	A1	4/2002	Flaherty et al.
2002/0040230	A1	4/2002	Kuhr et al.
2002/0042090	A1	4/2002	Heller et al.

(56) **References Cited**

U.S. PATENT DOCUMENTS

2002/0042594 A1 4/2002 Lum et al.
2002/0044890 A1 4/2002 Black
2002/0052618 A1 5/2002 Haar et al.
2002/0053523 A1 5/2002 Liamos et al.
2002/0057993 A1 5/2002 Maisey et al.
2002/0058902 A1 5/2002 Kollias et al.
2002/0076349 A1 6/2002 Aitken et al.
2002/0078091 A1 6/2002 Vu et al.
2002/0081559 A1 6/2002 Brown et al.
2002/0081588 A1 6/2002 De Lumley-woodyear et al.
2002/0082543 A1 6/2002 Park et al.
2002/0084196 A1 7/2002 Liamos et al.
2002/0087056 A1* 7/2002 Aceti et al. 600/309
2002/0092612 A1 7/2002 Davies et al.
2002/0099308 A1 7/2002 Bojan et al.
2002/0103499 A1 8/2002 Perez et al.
2002/0109600 A1 8/2002 Mault et al.
2002/0111634 A1 8/2002 Stoianovici et al.
2002/0120216 A1 8/2002 Fritz et al.
2002/0120261 A1 8/2002 Morris et al.
2002/0123335 A1 9/2002 Luna et al.
2002/0130042 A1 9/2002 Moerman et al.
2002/0133377 A1 9/2002 Brown
2002/0136667 A1 9/2002 Subramanian et al.
2002/0136863 A1 9/2002 Subramanian et al.
2002/0137998 A1 9/2002 Smart et al.
2002/0138040 A1 9/2002 Flora et al.
2002/0148739 A2 10/2002 Liamos et al.
2002/0156355 A1 10/2002 Gough
2002/0160520 A1 10/2002 Orloff et al.
2002/0161289 A1 10/2002 Hopkins et al.
2002/0168290 A1 11/2002 Yuzhakov et al.
2002/0169393 A1 11/2002 Cunningham et al.
2002/0169394 A1 11/2002 Eppstein et al.
2002/0176984 A1 11/2002 Smart et al.
2002/0177761 A1 11/2002 Orloff et al.
2002/0177763 A1 11/2002 Burns et al.
2002/0188224 A1 12/2002 Roe et al.
2003/0014010 A1 1/2003 Carpenter et al.
2003/0018282 A1 1/2003 Effenhauser et al.
2003/0018300 A1 1/2003 Duchon et al.
2003/0028125 A1 2/2003 Yuzhakov et al.
2003/0028126 A1 2/2003 List
2003/0032077 A1 2/2003 Itoh et al.
2003/0038047 A1 2/2003 Sleva et al.
2003/0050537 A1 3/2003 Wessel
2003/0050573 A1 3/2003 Kuhr et al.
2003/0050656 A1 3/2003 Schraga
2003/0057391 A1 3/2003 Krulevitch et al.
2003/0060730 A1 3/2003 Perez
2003/0069509 A1 4/2003 Matzinger et al.
2003/0069753 A1 4/2003 Brown
2003/0072647 A1 4/2003 Lum
2003/0073089 A1 4/2003 Mauze et al.
2003/0073229 A1 4/2003 Greenstein et al.
2003/0073931 A1 4/2003 Boecker et al.
2003/0083685 A1 5/2003 Freeman et al.
2003/0083686 A1 5/2003 Freeman et al.
2003/0088160 A1 5/2003 Halleck et al.
2003/0088191 A1 5/2003 Freeman et al.
2003/0089730 A1 5/2003 May et al.
2003/0092982 A1* 5/2003 Eppstein 600/411
2003/0093010 A1 5/2003 Essenpreis
2003/0100040 A1 5/2003 Bonnecaze et al.
2003/0106810 A1 6/2003 Douglas et al.
2003/0109777 A1 6/2003 Kloepfer et al.
2003/0109860 A1 6/2003 Black
2003/0111357 A1 6/2003 Black
2003/0113827 A1 6/2003 Burkoth
2003/0116447 A1 6/2003 Surridge et al.
2003/0120297 A1 6/2003 Beyerlein
2003/0135333 A1 7/2003 Aceti et al.
2003/0136189 A1 7/2003 Lauman et al.
2003/0139653 A1 7/2003 Manser et al.
2003/0143113 A2 7/2003 Yuzhakov et al.
2003/0144608 A1 7/2003 Kojima et al.
2003/0144609 A1 7/2003 Kennedy
2003/0146110 A1 8/2003 Karinka et al.
2003/0149348 A1 8/2003 Raskas
2003/0149377 A1 8/2003 Erickson et al.
2003/0150745 A1 8/2003 Teodorczyk et al.
2003/0153900 A1 8/2003 Aceti et al.
2003/0159944 A1 8/2003 Pottgen et al.
2003/0163351 A1 8/2003 Brown et al.
2003/0178322 A1 9/2003 Iyengar et al.
2003/0191376 A1 10/2003 Samuels et al.
2003/0191415 A1 10/2003 Moerman et al.
2003/0195435 A1 10/2003 Williams
2003/0195540 A1 10/2003 Moerman
2003/0199744 A1 10/2003 Buse et al.
2003/0199789 A1 10/2003 Boecker et al.
2003/0199790 A1 10/2003 Boecker et al.
2003/0199791 A1 10/2003 Boecker et al.
2003/0199891 A1 10/2003 Argauer
2003/0199893 A1 10/2003 Boecker et al.
2003/0199894 A1 10/2003 Boecker et al.
2003/0199895 A1 10/2003 Boecker et al.
2003/0199896 A1 10/2003 Boecker et al.
2003/0199897 A1 10/2003 Boecker et al.
2003/0199898 A1 10/2003 Boecker et al.
2003/0199899 A1 10/2003 Boecker et al.
2003/0199900 A1 10/2003 Boecker et al.
2003/0199901 A1 10/2003 Boecker et al.
2003/0199902 A1 10/2003 Boecker et al.
2003/0199903 A1 10/2003 Boecker et al.
2003/0199904 A1 10/2003 Boecker et al.
2003/0199905 A1 10/2003 Boecker et al.
2003/0199906 A1 10/2003 Boecker et al.
2003/0199907 A1 10/2003 Boecker et al.
2003/0199908 A1 10/2003 Boecker et al.
2003/0199909 A1 10/2003 Boecker et al.
2003/0199910 A1 10/2003 Boecker et al.
2003/0199911 A1 10/2003 Boecker et al.
2003/0199912 A1 10/2003 Pugh
2003/0201194 A1 10/2003 Heller et al.
2003/0203352 A1 10/2003 Haviland et al.
2003/0206828 A1 11/2003 Bell
2003/0208140 A1 11/2003 Pugh
2003/0210811 A1 11/2003 Dubowsky et al.
2003/0211619 A1 11/2003 Olson et al.
2003/0212344 A1 11/2003 Yuzhakov et al.
2003/0212345 A1 11/2003 McAllister et al.
2003/0212346 A1 11/2003 Yuzhakov et al.
2003/0212347 A1 11/2003 Sohrab
2003/0212379 A1 11/2003 Bylund et al.
2003/0212423 A1 11/2003 Pugh et al.
2003/0212424 A1 11/2003 Briggs et al.
2003/0212579 A1 11/2003 Brown et al.
2003/0216767 A1 11/2003 List et al.
2003/0217918 A1 11/2003 Davies et al.
2003/0220552 A1 11/2003 Reghabi et al.
2003/0220663 A1 11/2003 Fletcher et al.
2003/0223906 A1 12/2003 McAllister et al.
2003/0225317 A1 12/2003 Schell
2003/0225429 A1 12/2003 Garthe et al.
2003/0225430 A1 12/2003 Schraga
2003/0228637 A1 12/2003 Wang
2003/0229514 A2 12/2003 Brown
2003/0232370 A1 12/2003 Trifiro
2003/0233055 A1 12/2003 Erickson et al.
2003/0233112 A1 12/2003 Alden et al.
2003/0233113 A1 12/2003 Alden et al.
2004/0007585 A1 1/2004 Griffith et al.
2004/0009100 A1 1/2004 Simons et al.
2004/0010279 A1 1/2004 Freeman et al.
2004/0015064 A1 1/2004 Parsons
2004/0019250 A1 1/2004 Catelli
2004/0019259 A1 1/2004 Brown et al.
2004/0026243 A1 2/2004 Davies et al.
2004/0026244 A1 2/2004 Hodges et al.
2004/0030353 A1 2/2004 Schmelzeisen-Redeker et al.
2004/0031682 A1 2/2004 Wilsey
2004/0034318 A1 2/2004 Fritz et al.
2004/0038045 A1 2/2004 Smart et al.

(56) **References Cited**

U.S. PATENT DOCUMENTS

2004/0039303 A1 2/2004 Wurster et al.
2004/0039342 A1 2/2004 Eppstein et al.
2004/0039407 A1 2/2004 Schraga
2004/0039408 A1 2/2004 Abulhaj et al.
2004/0049219 A1 3/2004 Briggs et al.
2004/0049220 A1 3/2004 Boecker et al.
2004/0050694 A1 3/2004 Yang et al.
2004/0054267 A1 3/2004 Feldman et al.
2004/0055898 A1 3/2004 Heller et al.
2004/0059256 A1 3/2004 Perez
2004/0060818 A1 4/2004 Feldman et al.
2004/0061841 A1 4/2004 Black et al.
2004/0064068 A1 4/2004 DeNuzzio et al.
2004/0065669 A1 4/2004 Giraud et al.
2004/0068093 A1 4/2004 Merrigan et al.
2004/0068283 A1 4/2004 Fukuzawa et al.
2004/0069657 A1 4/2004 Hodges et al.
2004/0087990 A1 5/2004 Boecker et al.
2004/0092842 A1 5/2004 Boecker et al.
2004/0092994 A1 5/2004 Briggs et al.
2004/0092995 A1 5/2004 Boecker et al.
2004/0096991 A1 5/2004 Zhang
2004/0098009 A1 5/2004 Boecker et al.
2004/0098010 A1 5/2004 Davison et al.
2004/0102803 A1 5/2004 Boecker et al.
2004/0106855 A1 6/2004 Brown
2004/0106858 A1 6/2004 Say et al.
2004/0106859 A1 6/2004 Say et al.
2004/0106860 A1 6/2004 Say et al.
2004/0106904 A1 6/2004 Gonnelli et al.
2004/0106941 A1 6/2004 Roe et al.
2004/0107116 A1 6/2004 Brown
2004/0115754 A1 6/2004 Chang
2004/0115831 A1 6/2004 Meathrel et al.
2004/0116780 A1 6/2004 Brown
2004/0116829 A1 6/2004 Raney et al.
2004/0117207 A1 6/2004 Brown
2004/0117208 A1 6/2004 Brown
2004/0117209 A1 6/2004 Brown
2004/0117210 A1 6/2004 Brown
2004/0122339 A1 6/2004 Roe
2004/0127818 A1 7/2004 Roe et al.
2004/0127819 A1 7/2004 Roe
2004/0127928 A1 7/2004 Whitson et al.
2004/0127929 A1 7/2004 Roe
2004/0132167 A1 7/2004 Rule et al.
2004/0133125 A1 7/2004 Miyashita et al.
2004/0133127 A1 7/2004 Roe et al.
2004/0137640 A1 7/2004 Hirao et al.
2004/0138541 A1 7/2004 Ward et al.
2004/0138588 A1 7/2004 Saikley et al.
2004/0138688 A1 7/2004 Giraud
2004/0146958 A1 7/2004 Bae et al.
2004/0154932 A1 8/2004 Deng et al.
2004/0157017 A1 8/2004 Mauze et al.
2004/0157149 A1 8/2004 Hofmann
2004/0157319 A1 8/2004 Keen
2004/0157338 A1 8/2004 Burke et al.
2004/0157339 A1 8/2004 Burke et al.
2004/0158137 A1 8/2004 Eppstein et al.
2004/0158271 A1 8/2004 Hamamoto
2004/0161737 A1 8/2004 Yang et al.
2004/0162473 A1 8/2004 Sohrab
2004/0162474 A1 8/2004 Kiser et al.
2004/0162506 A1 8/2004 Duchon et al.
2004/0162573 A1 8/2004 Kheiri
2004/0167383 A1 8/2004 Kim et al.
2004/0171057 A1 9/2004 Mauze et al.
2004/0171968 A1 9/2004 Katsuki et al.
2004/0172000 A1 9/2004 Roe et al.
2004/0173472 A1 9/2004 Jung et al.
2004/0173488 A1 9/2004 Griffin et al.
2004/0176705 A1 9/2004 Stevens et al.
2004/0176732 A1 9/2004 Frazier et al.
2004/0178066 A1 9/2004 Miyazaki et al.
2004/0178067 A1 9/2004 Miyazaki et al.
2004/0178216 A1 9/2004 Brickwood et al.
2004/0180379 A1 9/2004 Van Duyne et al.
2004/0182703 A1 9/2004 Bell et al.
2004/0185568 A1 9/2004 Matsumoto
2004/0186359 A1 9/2004 Beaudoin et al.
2004/0186394 A1 9/2004 Roe et al.
2004/0186500 A1 9/2004 Koike et al.
2004/0193201 A1 9/2004 Kim
2004/0193377 A1 9/2004 Brown
2004/0194302 A1 10/2004 Bhullar et al.
2004/0197231 A1 10/2004 Katsuki et al.
2004/0197821 A1 10/2004 Bauer
2004/0199062 A1 10/2004 Petersson et al.
2004/0199409 A1 10/2004 Brown
2004/0200720 A1 10/2004 Musho et al.
2004/0200721 A1 10/2004 Bhullar et al.
2004/0202576 A1 10/2004 Aceti et al.
2004/0204662 A1 10/2004 Perez et al.
2004/0206625 A1 10/2004 Bhullar et al.
2004/0206636 A1 10/2004 Hodges et al.
2004/0206658 A1 10/2004 Hammerstedt et al.
2004/0209307 A1 10/2004 Valkirs et al.
2004/0209350 A1 10/2004 Sakata
2004/0209354 A1 10/2004 Mathies et al.
2004/0210279 A1 10/2004 Gruzdev et al.
2004/0211666 A1 10/2004 Pamidi et al.
2004/0214253 A1 10/2004 Paek et al.
2004/0215224 A1 10/2004 Sakata et al.
2004/0215225 A1 10/2004 Nakayama
2004/0216516 A1 11/2004 Sato
2004/0217019 A1 11/2004 Cai et al.
2004/0219500 A1 11/2004 Brown et al.
2004/0219535 A1 11/2004 Bell et al.
2004/0220456 A1 11/2004 Eppstein
2004/0220495 A1 11/2004 Cahir et al.
2004/0220564 A1 11/2004 Ho et al.
2004/0220603 A1 11/2004 Rutynowski et al.
2004/0222092 A1 11/2004 Musho et al.
2004/0224369 A1 11/2004 Cai et al.
2004/0225230 A1 11/2004 Liamos et al.
2004/0225311 A1 11/2004 Levaughn et al.
2004/0225312 A1 11/2004 Orloff et al.
2004/0230216 A1 11/2004 Levaughn et al.
2004/0231983 A1 11/2004 Shen et al.
2004/0231984 A1 11/2004 Lauks et al.
2004/0232009 A1 11/2004 Okuda et al.
2004/0236250 A1 11/2004 Hodges et al.
2004/0236251 A1 11/2004 Roe et al.
2004/0236268 A1 11/2004 Mitragotri et al.
2004/0236362 A1 11/2004 Shraga
2004/0238357 A1 12/2004 Bhullar et al.
2004/0238358 A1 12/2004 Forrow et al.
2004/0238359 A1 12/2004 Ikeda et al.
2004/0241746 A1 12/2004 Adlassnig et al.
2004/0242977 A1 12/2004 Dosmann
2004/0243164 A1 12/2004 D'Agostino
2004/0243165 A1 12/2004 Koike et al.
2004/0245101 A1 12/2004 Willner et al.
2004/0248282 A1 12/2004 Sobha M. et al.
2004/0248312 A1 12/2004 Vreeke et al.
2004/0249254 A1 12/2004 Racchini et al.
2004/0249310 A1 12/2004 Shartle et al.
2004/0249311 A1 12/2004 Haar et al.
2004/0249405 A1 12/2004 Watanabe et al.
2004/0249406 A1 12/2004 Griffin et al.
2004/0251131 A1 12/2004 Ueno et al.
2004/0253634 A1 12/2004 Wang
2004/0254434 A1 12/2004 Goodnow et al.
2004/0254599 A1 12/2004 Lipoma et al.
2004/0256228 A1 12/2004 Huang
2004/0256248 A1 12/2004 Burke et al.
2004/0256685 A1 12/2004 Chou et al.
2004/0258564 A1 12/2004 Charlton
2004/0260204 A1 12/2004 Boecker et al.
2004/0260324 A1 12/2004 Fukuzawa et al.
2004/0260325 A1 12/2004 Kuhr et al.
2004/0260326 A1 12/2004 Lipoma et al.
2004/0260511 A1 12/2004 Burke et al.

(56) **References Cited**

U.S. PATENT DOCUMENTS

2004/0267105 A1 12/2004 Monfre et al.
2004/0267121 A1 12/2004 Sarvazyan et al.
2004/0267160 A9 12/2004 Perez
2004/0267299 A1 12/2004 Kuriger
2004/0267300 A1 12/2004 Mace
2005/0000806 A1 1/2005 Hsieh
2005/0000807 A1 1/2005 Wang et al.
2005/0000808 A1 1/2005 Cui et al.
2005/0003470 A1 1/2005 Nelson et al.
2005/0004437 A1 1/2005 Kaufmann et al.
2005/0004494 A1 1/2005 Perez et al.
2005/0008537 A1 1/2005 Mosoiu et al.
2005/0008851 A1 1/2005 Ezoe et al.
2005/0009191 A1 1/2005 Swenson et al.
2005/0010090 A1 1/2005 Acosta et al.
2005/0010093 A1 1/2005 Ford et al.
2005/0010134 A1 1/2005 Douglas et al.
2005/0010137 A1 1/2005 Hodges et al.
2005/0010198 A1 1/2005 Marchitto et al.
2005/0011759 A1 1/2005 Moerman et al.
2005/0013731 A1 1/2005 Burke et al.
2005/0014997 A1 1/2005 Ruchti et al.
2005/0015020 A1 1/2005 LeVaughn et al.
2005/0016844 A1 1/2005 Burke et al.
2005/0019212 A1 1/2005 Bhullar et al.
2005/0019219 A1 1/2005 Oshiman et al.
2005/0019805 A1 1/2005 Groll
2005/0019945 A1 1/2005 Groll et al.
2005/0019953 A1 1/2005 Groll
2005/0021066 A1 1/2005 Kuhr et al.
2005/0027181 A1 2/2005 Goode et al.
2005/0027211 A1 2/2005 Kuhr et al.
2005/0027562 A1 2/2005 Brown
2005/0033340 A1 2/2005 Lipoma et al.
2005/0033341 A1 2/2005 Vreeke et al.
2005/0034983 A1 2/2005 Chambers et al.
2005/0036020 A1 2/2005 Li et al.
2005/0036146 A1 2/2005 Braig et al.
2005/0036906 A1 2/2005 Nakahara et al.
2005/0036909 A1 2/2005 Erickson et al.
2005/0037482 A1 2/2005 Braig et al.
2005/0038329 A1 2/2005 Morris et al.
2005/0038330 A1 2/2005 Jansen et al.
2005/0038463 A1 2/2005 Davar
2005/0038464 A1 2/2005 Shraga
2005/0038465 A1 2/2005 Shraga
2005/0038674 A1 2/2005 Braig et al.
2005/0042766 A1 2/2005 Ohman et al.
2005/0043894 A1 2/2005 Fernandez
2005/0043965 A1 2/2005 Heller et al.
2005/0045476 A1 3/2005 Neel et al.
2005/0049472 A1 3/2005 Manda et al.
2005/0049473 A1 3/2005 Desai et al.
2005/0050859 A1 3/2005 Coppeta et al.
2005/0054082 A1 3/2005 Pachl et al.
2005/0054908 A1 3/2005 Blank et al.
2005/0059872 A1 3/2005 Shartle et al.
2005/0059895 A1 3/2005 Brown
2005/0060194 A1 3/2005 Brown
2005/0061668 A1 3/2005 Brenneman et al.
2005/0064528 A1 3/2005 Kwon et al.
2005/0067280 A1 3/2005 Reid et al.
2005/0067737 A1 3/2005 Rappin et al.
2005/0070771 A1 3/2005 Rule et al.
2005/0070819 A1 3/2005 Poux et al.
2005/0070945 A1 3/2005 Schraga
2005/0072670 A1 4/2005 Hasegawa et al.
2005/0077176 A1 4/2005 Hodges et al.
2005/0077584 A1 4/2005 Uhland et al.
2005/0079542 A1 4/2005 Cullen
2005/0080652 A1 4/2005 Brown
2005/0085839 A1* 4/2005 Allen A61B 5/150022 606/181
2005/0085840 A1 4/2005 Yi et al.
2005/0086083 A1 4/2005 Brown
2005/0090754 A1 4/2005 Wolff et al.
2005/0090850 A1 4/2005 Thoes et al.
2005/0096520 A1 5/2005 Maekawa et al.
2005/0096565 A1 5/2005 Chang
2005/0096586 A1 5/2005 Trautman et al.
2005/0096587 A1 5/2005 Santini et al.
2005/0096686 A1 5/2005 Allen
2005/0098431 A1 5/2005 Hodges et al.
2005/0098432 A1 5/2005 Gundel
2005/0098433 A1 5/2005 Gundel
2005/0098434 A1 5/2005 Gundel et al.
2005/0100880 A1 5/2005 Chang
2005/0101841 A9 5/2005 Kaylor et al.
2005/0101979 A1 5/2005 Alden et al.
2005/0101980 A1 5/2005 Alden et al.
2005/0101981 A1 5/2005 Alden et al.
2005/0103624 A1 5/2005 Bhullar et al.
2005/0106713 A1 5/2005 Phan et al.
2005/0109637 A1 5/2005 Iyengar et al.
2005/0112712 A1 5/2005 Ouyang et al.
2005/0112782 A1 5/2005 Buechler
2005/0113658 A1 5/2005 Jacobson et al.
2005/0113717 A1 5/2005 Matzinger et al.
2005/0114062 A1 5/2005 Davies et al.
2005/0114154 A1 5/2005 Wolkowicz et al.
2005/0114444 A1 5/2005 Brown et al.
2005/0118056 A1 6/2005 Swanson et al.
2005/0118062 A1 6/2005 Otake
2005/0119681 A1 6/2005 Marshall et al.
2005/0123443 A1 6/2005 Fujiwara et al.
2005/0124869 A1 6/2005 Hefti et al.
2005/0125017 A1 6/2005 Kudrna et al.
2005/0125018 A1 6/2005 Galloway et al.
2005/0125019 A1 6/2005 Kudrna et al.
2005/0126929 A1 6/2005 Mansouri et al.
2005/0130248 A1 6/2005 Willner et al.
2005/0130249 A1 6/2005 Parris et al.
2005/0130292 A1 6/2005 Ahn et al.
2005/0131286 A1 6/2005 Parker et al.
2005/0131440 A1 6/2005 Starnes
2005/0131441 A1 6/2005 Iio et al.
2005/0133368 A1 6/2005 Davies et al.
2005/0136471 A1 6/2005 Bhullar et al.
2005/0136501 A1 6/2005 Kuriger
2005/0136529 A1 6/2005 Yang et al.
2005/0136550 A1 6/2005 Yang et al.
2005/0137531 A1 6/2005 Prausnitz et al.
2005/0137536 A1 6/2005 Gonnelli
2005/0140659 A1 6/2005 Hohl et al.
2005/0143675 A1 6/2005 Neel et al.
2005/0143713 A1 6/2005 Delmore et al.
2005/0143771 A1 6/2005 Stout et al.
2005/0145490 A1 7/2005 Shinno et al.
2005/0145491 A1 7/2005 Amano et al.
2005/0145520 A1 7/2005 Ilo et al.
2005/0149088 A1 7/2005 Fukuda et al.
2005/0149089 A1 7/2005 Trissel et al.
2005/0149090 A1 7/2005 Morita et al.
2005/0150762 A1 7/2005 Butters et al.
2005/0150763 A1 7/2005 Butters et al.
2005/0154277 A1 7/2005 Tang et al.
2005/0154374 A1 7/2005 Hunter et al.
2005/0154410 A1 7/2005 Conway et al.
2005/0154616 A1 7/2005 Iliff
2005/0158850 A1 7/2005 Kubo et al.
2005/0159656 A1 7/2005 Hockersmith et al.
2005/0159768 A1 7/2005 Boehm et al.
2005/0164322 A1 7/2005 Heller et al.
2005/0164329 A1 7/2005 Wallace-Davis et al.
2005/0165285 A1 7/2005 Iliff
2005/0165393 A1 7/2005 Eppstein
2005/0165622 A1 7/2005 Neel et al.
2005/0169810 A1 8/2005 Hagen et al.
2005/0169961 A1 8/2005 Hunter et al.
2005/0170448 A1 8/2005 Burson et al.
2005/0171567 A1 8/2005 DeHart
2005/0172021 A1 8/2005 Brown
2005/0172022 A1 8/2005 Brown
2005/0173245 A1 8/2005 Feldman et al.

(56) **References Cited**

U.S. PATENT DOCUMENTS

2005/0173246 A1 8/2005 Hodges et al.
2005/0175509 A1 8/2005 Nakaminami et al.
2005/0176084 A1 8/2005 Burkoth
2005/0176133 A1 8/2005 Miyashita et al.
2005/0176153 A1 8/2005 O'hara et al.
2005/0177071 A1 8/2005 Nakayama et al.
2005/0177201 A1 8/2005 Freeman
2005/0177398 A1 8/2005 Watanabe et al.
2005/0178218 A1 8/2005 Montagu
2005/0181010 A1 8/2005 Hunter et al.
2005/0181497 A1 8/2005 Saito et al.
2005/0182307 A1 8/2005 Currie et al.
2005/0187439 A1 8/2005 Blank et al.
2005/0187442 A1* 8/2005 Cho et al. 600/316
2005/0187444 A1 8/2005 Hubner et al.
2005/0192488 A1 9/2005 Bryenton et al.
2005/0196821 A1 9/2005 Monfre et al.
2005/0197666 A1 9/2005 Raney
2005/0201897 A1 9/2005 Zimmer et al.
2005/0202567 A1 9/2005 Zanzucchi et al.
2005/0203358 A1 9/2005 Monfre et al.
2005/0203364 A1 9/2005 Monfre et al.
2005/0204939 A1 9/2005 Krejci
2005/0205136 A1 9/2005 Freeman
2005/0205422 A1 9/2005 Moser et al.
2005/0205816 A1 9/2005 Hayenga et al.
2005/0209515 A1 9/2005 Hockersmith et al.
2005/0209564 A1 9/2005 Bonner et al.
2005/0209625 A1 9/2005 Chan
2005/0211571 A1 9/2005 Schulein et al.
2005/0211572 A1 9/2005 Buck et al.
2005/0214881 A1 9/2005 Azarnia et al.
2005/0214892 A1 9/2005 Kovatchev et al.
2005/0215871 A1 9/2005 Feldman et al.
2005/0215872 A1 9/2005 Berner et al.
2005/0215923 A1 9/2005 Wiegel
2005/0215925 A1 9/2005 Chan
2005/0216046 A1 9/2005 Yeoh et al.
2005/0218024 A1 10/2005 Lang et al.
2005/0221276 A1 10/2005 Rozakis et al.
2005/0221470 A1 10/2005 Matsumoto et al.
2005/0222599 A1 10/2005 Czernecki et al.
2005/0227372 A1 10/2005 Khan
2005/0228242 A1 10/2005 Kawamura et al.
2005/0228883 A1 10/2005 Brown
2005/0230252 A1 10/2005 Tsai et al.
2005/0230253 A1 10/2005 Marquant
2005/0232813 A1 10/2005 Karmali
2005/0232815 A1 10/2005 Ruhl et al.
2005/0234368 A1 10/2005 Wong et al.
2005/0234486 A1 10/2005 Allen et al.
2005/0234487 A1 10/2005 Shi
2005/0234488 A1 10/2005 Allen
2005/0234489 A1 10/2005 Allen
2005/0234490 A1 10/2005 Allen et al.
2005/0234491 A1 10/2005 Allen et al.
2005/0234492 A1 10/2005 Tsai et al.
2005/0234494 A1 10/2005 Conway et al.
2005/0234495 A1 10/2005 Schraga
2005/0235060 A1 10/2005 Brown
2005/0239154 A1 10/2005 Feldman et al.
2005/0239156 A1 10/2005 Drucker et al.
2005/0239194 A1 10/2005 Takahashi et al.
2005/0240090 A1 10/2005 Ruchti et al.
2005/0240119 A1 10/2005 Draudt et al.
2005/0240207 A1 10/2005 Marshall
2005/0240778 A1 10/2005 Saito
2005/0245798 A1 11/2005 Yamaguchi et al.
2005/0245843 A1 11/2005 Day et al.
2005/0245844 A1 11/2005 Mace et al.
2005/0245845 A1 11/2005 Roe et al.
2005/0245846 A1 11/2005 Casey
2005/0245954 A1 11/2005 Roe et al.
2005/0245955 A1 11/2005 Schraga
2005/0256534 A1 11/2005 Alden et al.
2005/0258035 A1 11/2005 Harding et al.
2005/0258036 A1 11/2005 Harding
2005/0258050 A1 11/2005 Harding
2005/0265094 A1 12/2005 Harding et al.
2005/0276133 A1 12/2005 Harding et al.
2005/0278945 A1 12/2005 Feldman et al.
2005/0279631 A1 12/2005 Celentano
2005/0279647 A1 12/2005 Beaty
2005/0283094 A1 12/2005 Thym et al.
2005/0284110 A1 12/2005 Lang et al.
2005/0284757 A1 12/2005 Allen
2005/0287620 A1 12/2005 Heller et al.
2005/0288637 A1 12/2005 Kuhr et al.
2005/0288698 A1 12/2005 Matsumoto
2005/0288699 A1 12/2005 Schraga
2006/0000549 A1 1/2006 Lang et al.
2006/0003398 A1 1/2006 Heller et al.
2006/0004270 A1 1/2006 Bedard et al.
2006/0004271 A1 1/2006 Peyser et al.
2006/0004272 A1 1/2006 Shah et al.
2006/0006574 A1 1/2006 Lang et al.
2006/0008389 A1 1/2006 Sacherer et al.
2006/0015129 A1 1/2006 Shahrokni et al.
2006/0016698 A1 1/2006 Lee et al.
2006/0020228 A1 1/2006 Fowler et al.
2006/0024774 A1 2/2006 Zocchi
2006/0025662 A1 2/2006 Buse et al.
2006/0029979 A1 2/2006 Bai et al.
2006/0029991 A1 2/2006 Hagino et al.
2006/0030028 A1 2/2006 Nakaminami et al.
2006/0030050 A1 2/2006 Milne et al.
2006/0030761 A1 2/2006 Raskas
2006/0030788 A1* 2/2006 Wong A61B 5/14514
600/583
2006/0034728 A1 2/2006 Kloepfer et al.
2006/0037859 A1 2/2006 Hodges et al.
2006/0040333 A1 2/2006 Zocchi
2006/0047220 A1 3/2006 Sakata et al.
2006/0047294 A1 3/2006 Mori
2006/0052723 A1 3/2006 Roe
2006/0052724 A1 3/2006 Roe
2006/0052809 A1 3/2006 Karbowniczek et al.
2006/0052810 A1 3/2006 Freeman et al.
2006/0058827 A1 3/2006 Sakata
2006/0058828 A1 3/2006 Shi
2006/0062852 A1 3/2006 Holmes
2006/0063988 A1 3/2006 Schurman et al.
2006/0064035 A1 3/2006 Wang et al.
2006/0079739 A1 4/2006 Chen Wang et al.
2006/0079810 A1 4/2006 Patel et al.
2006/0079811 A1 4/2006 Roe et al.
2006/0079920 A1 4/2006 Schraga
2006/0081469 A1 4/2006 Lee
2006/0085020 A1 4/2006 Freeman et al.
2006/0085137 A1 4/2006 Bartkowiak et al.
2006/0086624 A1 4/2006 Tapsak et al.
2006/0088945 A1 4/2006 Douglas et al.
2006/0089566 A1 4/2006 DeHart
2006/0091006 A1 5/2006 Wang et al.
2006/0094944 A1 5/2006 Chuang
2006/0094947 A1 5/2006 Kovatchev et al.
2006/0094985 A1 5/2006 Aceti et al.
2006/0094986 A1 5/2006 Neel et al.
2006/0095061 A1 5/2006 Trautman et al.
2006/0096859 A1 5/2006 Lau et al.
2006/0099107 A1 5/2006 Yamamoto
2006/0099703 A1 5/2006 Choi et al.
2006/0100542 A9 5/2006 Wong et al.
2006/0100543 A1 5/2006 Raney et al.
2006/0100654 A1 5/2006 Fukuda et al.
2006/0100655 A1 5/2006 Leong et al.
2006/0100656 A1 5/2006 Olson et al.
2006/0106373 A1 5/2006 Cahir et al.
2006/0108236 A1 5/2006 Kasielke et al.
2006/0113187 A1 6/2006 Deng et al.
2006/0115857 A1 6/2006 Keen
2006/0116562 A1 6/2006 Acosta et al.
2006/0116704 A1 6/2006 Ashby et al.
2006/0116705 A1 6/2006 Schraga

(56) **References Cited**

U.S. PATENT DOCUMENTS

2006/0119362 A1 6/2006 Kermani
2006/0121547 A1 6/2006 McIntire
2006/0121625 A1 6/2006 Clemens et al.
2006/0121759 A1 6/2006 Kasai
2006/0122099 A1 6/2006 Aoki
2006/0122536 A1 6/2006 Haar et al.
2006/0129065 A1 6/2006 Matsumoto et al.
2006/0129172 A1 6/2006 Crossman et al.
2006/0129173 A1 6/2006 Wilkinson
2006/0134713 A1 6/2006 Rylatt et al.
2006/0140457 A1 6/2006 Simshauser
2006/0144704 A1 7/2006 Ghesquiere et al.
2006/0151323 A1 7/2006 Cho
2006/0155215 A1 7/2006 Cha et al.
2006/0155316 A1 7/2006 Perez et al.
2006/0155317 A1 7/2006 List
2006/0156796 A1 7/2006 Burke et al.
2006/0157362 A1 7/2006 Schraga
2006/0160100 A1 7/2006 Gao et al.
2006/0161078 A1 7/2006 Schraga
2006/0161194 A1 7/2006 Freeman et al.
2006/0163061 A1 7/2006 Hodges et al.
2006/0166302 A1 7/2006 Clarke et al.
2006/0167382 A1 7/2006 Deshmukh
2006/0169599 A1 8/2006 Feldman et al.
2006/0173254 A1 8/2006 Acosta et al.
2006/0173255 A1 8/2006 Acosta et al.
2006/0173379 A1 8/2006 Rasch-Menges et al.
2006/0173380 A1 8/2006 Hoenes et al.
2006/0173478 A1 8/2006 Schraga
2006/0175216 A1 8/2006 Freeman et al.
2006/0178573 A1 8/2006 Kermani et al.
2006/0178599 A1 8/2006 Faupel et al.
2006/0178600 A1 8/2006 Kennedy et al.
2006/0178686 A1 8/2006 Schraga
2006/0178687 A1 8/2006 Freeman et al.
2006/0178688 A1 8/2006 Freeman et al.
2006/0178689 A1 8/2006 Freeman et al.
2006/0178690 A1 8/2006 Freeman et al.
2006/0183871 A1 8/2006 Ward et al.
2006/0183983 A1 8/2006 Acosta et al.
2006/0184065 A1 8/2006 Deshmukh et al.
2006/0184101 A1 8/2006 Srinivasan et al.
2006/0188395 A1 8/2006 Taniike et al.
2006/0189895 A1 8/2006 Neel et al.
2006/0191787 A1 8/2006 Wang et al.
2006/0195023 A1 8/2006 Acosta et al.
2006/0195047 A1 8/2006 Freeman et al.
2006/0195128 A1 8/2006 Alden et al.
2006/0195129 A1 8/2006 Freeman et al.
2006/0195130 A1 8/2006 Freeman et al.
2006/0195131 A1 8/2006 Freeman et al.
2006/0195132 A1 8/2006 Freeman et al.
2006/0195133 A1 8/2006 Freeman et al.
2006/0196031 A1 9/2006 Hoenes et al.
2006/0196795 A1 9/2006 Windus-Smith et al.
2006/0200044 A1 9/2006 Freeman et al.
2006/0200045 A1 9/2006 Roe
2006/0200046 A1 9/2006 Windus-Smith et al.
2006/0200981 A1 9/2006 Bhullar et al.
2006/0200982 A1 9/2006 Bhullar et al.
2006/0201804 A1 9/2006 Chambers et al.
2006/0204399 A1 9/2006 Freeman et al.
2006/0205029 A1 9/2006 Heller
2006/0205060 A1 9/2006 Kim et al.
2006/0206135 A1 9/2006 Uehata et al.
2006/0211127 A1 9/2006 Iwaki et al.
2006/0211927 A1 9/2006 Acosta et al.
2006/0211931 A1 9/2006 Blank et al.
2006/0219551 A1 10/2006 Edelbrock et al.
2006/0222566 A1 10/2006 Brauker et al.
2006/0222567 A1 10/2006 Kloepfer et al.
2006/0224171 A1 10/2006 Sakata et al.
2006/0224172 A1 10/2006 LeVaughn et al.
2006/0229532 A1 10/2006 Wong et al.
2006/0229533 A1 10/2006 Hoenes et al.
2006/0229651 A1 10/2006 Marshall et al.
2006/0229652 A1 10/2006 Iio et al.
2006/0231396 A1 10/2006 Yamaoka
2006/0231418 A1 10/2006 Harding et al.
2006/0231421 A1 10/2006 Diamond et al.
2006/0231423 A1 10/2006 Harding et al.
2006/0231425 A1 10/2006 Harding et al.
2006/0231442 A1 10/2006 Windus-Smith et al.
2006/0232278 A1 10/2006 Diamond et al.
2006/0232528 A1 10/2006 Harding et al.
2006/0233666 A1 10/2006 Vu et al.
2006/0234263 A1 10/2006 Light
2006/0234369 A1 10/2006 Sih
2006/0235284 A1 10/2006 Lee
2006/0235454 A1 10/2006 LeVaughn et al.
2006/0241517 A1 10/2006 Fowler et al.
2006/0241666 A1 10/2006 Briggs et al.
2006/0241667 A1 10/2006 Freeman
2006/0241668 A1 10/2006 Schraga
2006/0241669 A1 10/2006 Stout et al.
2006/0247154 A1 11/2006 Palmieri et al.
2006/0247554 A1 11/2006 Roe
2006/0247555 A1 11/2006 Harttig
2006/0247670 A1 11/2006 LeVaughn et al.
2006/0247671 A1 11/2006 LeVaughn
2006/0254932 A1 11/2006 Hodges et al.
2006/0259057 A1 11/2006 Kim et al.
2006/0259058 A1 11/2006 Schiff et al.
2006/0259060 A1 11/2006 Whitson et al.
2006/0264718 A1 11/2006 Ruchti et al.
2006/0264996 A1 11/2006 LeVaughn et al.
2006/0264997 A1 11/2006 Colonna et al.
2006/0266644 A1 11/2006 Pugh et al.
2006/0266765 A1 11/2006 Pugh
2006/0271083 A1 11/2006 Boecker et al.
2006/0271084 A1 11/2006 Schraga
2006/0276724 A1 12/2006 Freeman et al.
2006/0277048 A1 12/2006 Kintzig et al.
2006/0278545 A1 12/2006 Henning
2006/0279431 A1 12/2006 Bakarania et al.
2006/0281187 A1 12/2006 Emery et al.
2006/0282109 A1 12/2006 Jansen et al.
2006/0286620 A1 12/2006 Werner et al.
2006/0287664 A1 12/2006 Grage, Jr. et al.
2006/0293577 A1 12/2006 Morrison et al.
2007/0004989 A1 1/2007 Dhillon
2007/0004990 A1 1/2007 Kistner et al.
2007/0007183 A1 1/2007 Schulat et al.
2007/0009381 A1 1/2007 Schulat et al.
2007/0010839 A1 1/2007 Galloway et al.
2007/0010841 A1 1/2007 Teo et al.
2007/0015978 A1 1/2007 Kanayama et al.
2007/0016079 A1 1/2007 Freeman et al.
2007/0016103 A1 1/2007 Calasso et al.
2007/0016104 A1 1/2007 Jansen et al.
2007/0016239 A1 1/2007 Sato et al.
2007/0017805 A1 1/2007 Hodges et al.
2007/0027370 A1 2/2007 Brauker et al.
2007/0027427 A1 2/2007 Trautman et al.
2007/0032812 A1 2/2007 Loerwald et al.
2007/0032813 A1 2/2007 Flynn et al.
2007/0038149 A1 2/2007 Calasso et al.
2007/0038235 A1 2/2007 Freeman et al.
2007/0043305 A1 2/2007 Boecker et al.
2007/0043386 A1 2/2007 Freeman et al.
2007/0049901 A1 3/2007 Wu et al.
2007/0049959 A1 3/2007 Feaster et al.
2007/0055174 A1 3/2007 Freeman et al.
2007/0055297 A1 3/2007 Fukuzawa et al.
2007/0055298 A1 3/2007 Uehata et al.
2007/0060842 A1 3/2007 Alvarez-Icaza et al.
2007/0060843 A1 3/2007 Alvarez-Icaza et al.
2007/0060844 A1 3/2007 Alvarez-Icaza et al.
2007/0060845 A1 3/2007 Perez
2007/0061393 A1 3/2007 Moore
2007/0062250 A1 3/2007 Krulevitch et al.
2007/0062251 A1 3/2007 Anex
2007/0062315 A1 3/2007 Hodges

(56) **References Cited**

U.S. PATENT DOCUMENTS

2007/0064516 A1 3/2007 Briggs et al.
2007/0066939 A1 3/2007 Krulevitch et al.
2007/0066940 A1 3/2007 Karunaratne et al.
2007/0068807 A1 3/2007 Feldman et al.
2007/0073188 A1 3/2007 Freeman et al.
2007/0073189 A1 3/2007 Freeman et al.
2007/0074977 A1 4/2007 Guo et al.
2007/0078358 A1 4/2007 Escutia et al.
2007/0078360 A1 4/2007 Matsumoto et al.
2007/0078474 A1 4/2007 Kim
2007/0080093 A1 4/2007 Boozer et al.
2007/0083130 A1 4/2007 Thomson et al.
2007/0083131 A1 4/2007 Escutia et al.
2007/0083222 A1 4/2007 Schraga
2007/0083335 A1 4/2007 Moerman
2007/0084749 A1 4/2007 Demelo et al.
2007/0088377 A1 4/2007 LeVaughn et al.
2007/0092923 A1 4/2007 Chang
2007/0093728 A1 4/2007 Douglas et al.
2007/0093752 A1 4/2007 Zhao et al.
2007/0093753 A1 4/2007 Krulevitch et al.
2007/0093863 A1 4/2007 Pugh
2007/0093864 A1 4/2007 Pugh
2007/0095178 A1 5/2007 Schraga
2007/0100255 A1 5/2007 Boecker et al.
2007/0100256 A1 5/2007 Sansom
2007/0100364 A1 5/2007 Sansom
2007/0102312 A1 5/2007 Cha et al.
2007/0106178 A1 5/2007 Roe et al.
2007/0108048 A1 5/2007 Wang et al.
2007/0112281 A1 5/2007 Olson
2007/0112367 A1 5/2007 Olson
2007/0118051 A1 5/2007 Korner et al.
2007/0119710 A1 5/2007 Goldberger et al.
2007/0123801 A1 5/2007 Goldberger et al.
2007/0123802 A1 5/2007 Freeman
2007/0123803 A1 5/2007 Fujiwara et al.
2007/0129618 A1 6/2007 Goldberger et al.
2007/0129650 A1 6/2007 Freeman et al.
2007/0131565 A1 6/2007 Fujiwara et al.
2007/0135828 A1 6/2007 Rutynowski
2007/0142747 A1 6/2007 Boecker et al.
2007/0142748 A1 6/2007 Deshmukh et al.
2007/0142776 A9 6/2007 Kovelman et al.
2007/0142854 A1 6/2007 Schraga
2007/0144235 A1 6/2007 Werner et al.
2007/0149875 A1 6/2007 Ouyang et al.
2007/0149897 A1 6/2007 Ghesquiere et al.
2007/0161960 A1 7/2007 Chen et al.
2007/0162064 A1 7/2007 Starnes
2007/0162065 A1 7/2007 Li et al.
2007/0167869 A1 7/2007 Roe
2007/0167870 A1 7/2007 Freeman et al.
2007/0167871 A1 7/2007 Freeman et al.
2007/0167872 A1 7/2007 Freeman et al.
2007/0167873 A1 7/2007 Freeman et al.
2007/0167874 A1 7/2007 Freeman et al.
2007/0167875 A1 7/2007 Freeman et al.
2007/0173739 A1 7/2007 Chan
2007/0173740 A1 7/2007 Chan et al.
2007/0173741 A1 7/2007 Deshmukh et al.
2007/0173742 A1 7/2007 Freeman et al.
2007/0173743 A1 7/2007 Freeman et al.
2007/0173874 A1 7/2007 Uschold et al.
2007/0173875 A1 7/2007 Uschold
2007/0173876 A1 7/2007 Aylett et al.
2007/0176120 A1 8/2007 Schwind et al.
2007/0179356 A1 8/2007 Wessel
2007/0179404 A1 8/2007 Escutia et al.
2007/0179405 A1 8/2007 Emery et al.
2007/0179406 A1 8/2007 DeNuzzio et al.
2007/0182051 A1 8/2007 Harttig
2007/0185412 A1 8/2007 Boecker et al.
2007/0185515 A1 8/2007 Stout
2007/0185516 A1 8/2007 Schosnig et al.
2007/0191702 A1 8/2007 Yodfat et al.
2007/0191737 A1 8/2007 Freeman et al.
2007/0191738 A1 8/2007 Raney et al.
2007/0191739 A1 8/2007 Roe
2007/0193019 A1 8/2007 Feldman et al.
2007/0193882 A1 8/2007 Dai et al.
2007/0196240 A1 8/2007 Boozer et al.
2007/0196242 A1 8/2007 Boozer et al.
2007/0203514 A1 8/2007 Flaherty et al.
2007/0203903 A1 8/2007 Attaran Rezaei et al.
2007/0205103 A1 9/2007 Hodges et al.
2007/0207498 A1 9/2007 Palmieri et al.
2007/0213601 A1 9/2007 Freeman et al.
2007/0213637 A1 9/2007 Boozer et al.
2007/0213682 A1 9/2007 Haar et al.
2007/0213756 A1 9/2007 Freeman et al.
2007/0218543 A1 9/2007 Flaherty et al.
2007/0219346 A1 9/2007 Trifiro
2007/0219432 A1 9/2007 Thompson
2007/0219436 A1 9/2007 Takase et al.
2007/0219462 A1 9/2007 Briggs et al.
2007/0219463 A1 9/2007 Briggs et al.
2007/0219572 A1 9/2007 Deck et al.
2007/0219573 A1 9/2007 Freeman et al.
2007/0219574 A1 9/2007 Freeman et al.
2007/0225741 A1 9/2007 Ikeda
2007/0225742 A1 9/2007 Abe et al.
2007/0227907 A1 10/2007 Shah et al.
2007/0227911 A1 10/2007 Wang et al.
2007/0227912 A1 10/2007 Chatelier et al.
2007/0229085 A1 10/2007 Kawai
2007/0232872 A1 10/2007 Prough et al.
2007/0232956 A1 10/2007 Harman et al.
2007/0233013 A1 10/2007 Schoenberg
2007/0233166 A1 10/2007 Stout
2007/0233167 A1 10/2007 Weiss et al.
2007/0233395 A1 10/2007 Neel et al.
2007/0235329 A1 10/2007 Harding et al.
2007/0235347 A1 10/2007 Chatelier et al.
2007/0239068 A1 10/2007 Rasch-Menges et al.
2007/0239188 A1 10/2007 Boozer et al.
2007/0239189 A1 10/2007 Freeman et al.
2007/0239190 A1 10/2007 Alden et al.
2007/0240984 A1 10/2007 Popovich et al.
2007/0240986 A1 10/2007 Reymond et al.
2007/0244380 A1 10/2007 Say et al.
2007/0244412 A1 10/2007 Lav et al.
2007/0244498 A1 10/2007 Steg
2007/0244499 A1 10/2007 Briggs et al.
2007/0249921 A1 10/2007 Groll et al.
2007/0249962 A1 10/2007 Alden et al.
2007/0249963 A1 10/2007 Alden et al.
2007/0250099 A1 10/2007 Flora et al.
2007/0251836 A1 11/2007 Hsu
2007/0254359 A1 11/2007 Rezania et al.
2007/0255141 A1 11/2007 Esenaliev et al.
2007/0255178 A1 11/2007 Alvarez-Icaza et al.
2007/0255179 A1 11/2007 Alvarez-Icaza et al.
2007/0255180 A1 11/2007 Alvarez-Icaza et al.
2007/0255181 A1 11/2007 Alvarez-Icaza et al.
2007/0255300 A1 11/2007 Vanhiel et al.
2007/0255301 A1 11/2007 Freeman et al.
2007/0255302 A1 11/2007 Koeppel et al.
2007/0260271 A1 11/2007 Freeman et al.
2007/0260272 A1 11/2007 Weiss et al.
2007/0264721 A1 11/2007 Buck
2007/0265511 A1 11/2007 Renouf
2007/0265532 A1 11/2007 Maynard et al.
2007/0265654 A1 11/2007 Iio et al.
2007/0273901 A1 11/2007 Baskeyfield et al.
2007/0273903 A1 11/2007 Baskeyfield et al.
2007/0273904 A1 11/2007 Robinson et al.
2007/0273928 A1 11/2007 Robinson et al.
2007/0276197 A1 11/2007 Harmon
2007/0276211 A1 11/2007 Mir et al.
2007/0276290 A1 11/2007 Boecker et al.
2007/0276425 A1 11/2007 Kim et al.
2007/0276621 A1 11/2007 Davies et al.
2007/0278097 A1 12/2007 Bhullar et al.

(56) **References Cited**

U.S. PATENT DOCUMENTS

2007/0282186 A1 12/2007 Gilmore
2007/0282362 A1 12/2007 Berg et al.
2007/0288047 A1 12/2007 Thoes et al.
2007/0293743 A1 12/2007 Monfre et al.
2007/0293744 A1 12/2007 Monfre et al.
2007/0293790 A1 12/2007 Bainczyk et al.
2007/0293882 A1 12/2007 Harttig et al.
2007/0293883 A1 12/2007 Horie
2007/0295616 A1 12/2007 Harding et al.
2008/0004651 A1 1/2008 Nicholls et al.
2008/0007141 A1 1/2008 Deck
2008/0009767 A1 1/2008 Effenhauser et al.
2008/0009768 A1 1/2008 Sohrab
2008/0009892 A1 1/2008 Freeman et al.
2008/0009893 A1 1/2008 LeVaughn
2008/0015425 A1 1/2008 Douglas et al.
2008/0015623 A1 1/2008 Deck
2008/0017522 A1 1/2008 Heller et al.
2008/0019870 A1 1/2008 Newman et al.
2008/0021291 A1 1/2008 Zocchi
2008/0021293 A1 1/2008 Schurman et al.
2008/0021295 A1 1/2008 Wang et al.
2008/0021296 A1 1/2008 Creaven
2008/0021346 A1 1/2008 Haar et al.
2008/0021490 A1 1/2008 Briggs et al.
2008/0021491 A1 1/2008 Freeman et al.
2008/0021492 A1 1/2008 Freeman et al.
2008/0021493 A1 1/2008 Levaughn et al.
2008/0021494 A1 1/2008 Schmelzeisen-Redeker et al.
2008/0027385 A1 1/2008 Freeman et al.
2008/0031778 A1 2/2008 Kramer
2008/0033268 A1 2/2008 Stafford
2008/0033318 A1 2/2008 Mace et al.
2008/0033319 A1 2/2008 Kloepfer et al.
2008/0033468 A1 2/2008 Lathrop et al.
2008/0033469 A1 2/2008 Winheim et al.
2008/0034834 A1 2/2008 Schell
2008/0034835 A1 2/2008 Schell
2008/0039885 A1 2/2008 Purcell
2008/0039886 A1 2/2008 Shi
2008/0039887 A1 2/2008 Conway et al.
2008/0040919 A1 2/2008 Griss et al.
2008/0045825 A1 2/2008 Melker et al.
2008/0045992 A1 2/2008 Schraga
2008/0047764 A1 2/2008 Lee et al.
2008/0053201 A1 3/2008 Roesicke et al.
2008/0057484 A1 3/2008 Miyata et al.
2008/0058624 A1 3/2008 Smart et al.
2008/0058626 A1 3/2008 Miyata et al.
2008/0058631 A1 3/2008 Draudt et al.
2008/0058847 A1 3/2008 Abe et al.
2008/0058848 A1 3/2008 Griffin et al.
2008/0058849 A1 3/2008 Conway et al.
2008/0060424 A1 3/2008 Babic et al.
2008/0064986 A1 3/2008 Kraemer et al.
2008/0064987 A1 3/2008 Escutia et al.
2008/0065130 A1 3/2008 Patel et al.
2008/0065131 A1 3/2008 List
2008/0065132 A1 3/2008 Trissel et al.
2008/0065133 A1 3/2008 Kennedy
2008/0065134 A1 3/2008 Conway et al.
2008/0073224 A1 3/2008 Diamond et al.
2008/0077048 A1 3/2008 Escutia et al.
2008/0077167 A1 3/2008 Flynn et al.
2008/0077168 A1 3/2008 Nicholls et al.
2008/0081969 A1 4/2008 Feldman et al.
2008/0081976 A1 4/2008 Hodges et al.
2008/0082023 A1 4/2008 Deck et al.
2008/0082116 A1 4/2008 Lathrop et al.
2008/0082117 A1 4/2008 Ruf
2008/0086042 A1 4/2008 Brister et al.
2008/0086044 A1 4/2008 Brister et al.
2008/0086273 A1 4/2008 Shults et al.
2008/0093227 A1 4/2008 Diamond et al.
2008/0093228 A1 4/2008 Diamond et al.
2008/0093230 A1 4/2008 Diamond et al.
2008/0094804 A1 4/2008 Reynolds et al.
2008/0097171 A1 4/2008 Smart et al.
2008/0097241 A1 4/2008 Maltezos et al.
2008/0097503 A1 4/2008 Creaven
2008/0098802 A1 5/2008 Burke et al.
2008/0103396 A1 5/2008 Johnson et al.
2008/0103415 A1 5/2008 Roe et al.
2008/0103517 A1 5/2008 Takemoto et al.
2008/0105024 A1 5/2008 Creaven et al.
2008/0105568 A1 5/2008 Wu
2008/0108130 A1 5/2008 Nakaminami et al.
2008/0108942 A1 5/2008 Brister et al.
2008/0109024 A1 5/2008 Berkovitch et al.
2008/0109025 A1 5/2008 Yang et al.
2008/0109259 A1 5/2008 Thompson et al.
2008/0112268 A1 5/2008 Ronnekleiv et al.
2008/0112279 A1 5/2008 Nakagaki
2008/0114227 A1 5/2008 Haar et al.
2008/0114228 A1 5/2008 McCluskey et al.
2008/0118400 A1 5/2008 Neel et al.
2008/0119703 A1 5/2008 Brister et al.
2008/0119704 A1 5/2008 Brister et al.
2008/0119706 A1 5/2008 Brister et al.
2008/0119761 A1 5/2008 Boecker et al.
2008/0119883 A1 5/2008 Conway et al.
2008/0119884 A1 5/2008 Flora et al.
2008/0121533 A1 5/2008 Hodges et al.
2008/0125800 A1 5/2008 List
2008/0125801 A1 5/2008 List
2008/0134806 A1 6/2008 Capriccio et al.
2008/0134810 A1 6/2008 Neel et al.
2008/0135559 A1 6/2008 Byrd
2008/0140105 A1 6/2008 Zhong et al.
2008/0144022 A1 6/2008 Schulat et al.
2008/0146899 A1 6/2008 Ruchti et al.
2008/0146966 A1 6/2008 Levaughn et al.
2008/0147108 A1 6/2008 Kennedy
2008/0149268 A1 6/2008 Zhao et al.
2008/0149599 A1 6/2008 Bohm et al.
2008/0152507 A1 6/2008 Bohm
2008/0154187 A1 6/2008 Krulevitch et al.
2008/0154513 A1 6/2008 Kovatchev et al.
2008/0159913 A1 7/2008 Jung et al.
2008/0161664 A1 7/2008 Mastrototaro et al.
2008/0161724 A1 7/2008 Roe
2008/0161725 A1 7/2008 Wong et al.
2008/0166269 A1 7/2008 Jansen
2008/0167578 A1 7/2008 Bryer et al.
2008/0167673 A1 7/2008 Zhong et al.
2008/0188771 A1 8/2008 Boecker et al.
2008/0194987 A1 8/2008 Boecker
2008/0194989 A1 8/2008 Briggs et al.
2008/0200782 A1 8/2008 Planman et al.
2008/0208026 A1 8/2008 Noujaim et al.
2008/0208079 A1 8/2008 Hein et al.
2008/0210574 A1 9/2008 Boecker
2008/0214909 A1 9/2008 Fuerst et al.
2008/0214917 A1 9/2008 Boecker
2008/0214919 A1 9/2008 Harmon et al.
2008/0214956 A1 9/2008 Briggs et al.
2008/0228212 A1 9/2008 List
2008/0249435 A1 10/2008 Haar et al.
2008/0249554 A1 10/2008 Freeman et al.
2008/0255598 A1 10/2008 LeVaughn et al.
2008/0262387 A1 10/2008 List et al.
2008/0262388 A1 10/2008 List et al.
2008/0267822 A1 10/2008 List et al.
2008/0269723 A1 10/2008 Mastrototaro et al.
2008/0269791 A1 10/2008 Hoenes et al.
2008/0275365 A1 11/2008 Guthrie et al.
2008/0275384 A1 11/2008 Mastrototaro
2008/0277291 A1 11/2008 Heller et al.
2008/0277292 A1 11/2008 Heller et al.
2008/0277293 A1 11/2008 Heller et al.
2008/0277294 A1 11/2008 Heller et al.
2008/0286149 A1 11/2008 Roe et al.
2008/0294068 A1 11/2008 Briggs et al.
2008/0300614 A1 12/2008 Freeman et al.

(56) **References Cited**

U.S. PATENT DOCUMENTS

2008/0318193	A1	12/2008	Alvarez-Icaza
2008/0319284	A1	12/2008	Alvarez-Icaza
2008/0319291	A1	12/2008	Freeman et al.
2009/0005664	A1	1/2009	Freeman et al.
2009/0020438	A1	1/2009	Hodges
2009/0024009	A1	1/2009	Freeman et al.
2009/0026075	A1	1/2009	Harding et al.
2009/0026091	A1	1/2009	Harding et al.
2009/0027040	A1	1/2009	Kermani et al.
2009/0029479	A1	1/2009	Docherty et al.
2009/0030441	A1	1/2009	Kudrna et al.
2009/0043177	A1	2/2009	Milledge et al.
2009/0043183	A1	2/2009	Kermani et al.
2009/0048536	A1	2/2009	Freeman et al.
2009/0054813	A1	2/2009	Freeman et al.
2009/0057146	A1	3/2009	Teodorczyk et al.
2009/0069716	A1	3/2009	Freeman et al.
2009/0076415	A1	3/2009	Moerman
2009/0084687	A1	4/2009	Chatelier et al.
2009/0099477	A1	4/2009	Hoenes et al.
2009/0105572	A1	4/2009	Malecha
2009/0105573	A1	4/2009	Malecha
2009/0112123	A1	4/2009	Freeman et al.
2009/0112155	A1	4/2009	Zhao et al.
2009/0112180	A1	4/2009	Krulevitch et al.
2009/0112185	A1	4/2009	Krulevitch et al.
2009/0112247	A1*	4/2009	Freeman et al. 606/181
2009/0118752	A1	5/2009	Perez et al.
2009/0119760	A1	5/2009	Hung et al.
2009/0124932	A1	5/2009	Freeman et al.
2009/0131829	A1	5/2009	Freeman et al.
2009/0131830	A1	5/2009	Freeman et al.
2009/0131964	A1	5/2009	Freeman et al.
2009/0131965	A1	5/2009	Freeman et al.
2009/0137930	A1	5/2009	Freeman et al.
2009/0138032	A1	5/2009	Freeman et al.
2009/0139300	A1	6/2009	Pugh et al.
2009/0177117	A1	7/2009	Amano et al.
2009/0184004	A1	7/2009	Chatelier et al.
2009/0187351	A1	7/2009	Orr et al.
2009/0192410	A1	7/2009	Freeman et al.
2009/0192411	A1	7/2009	Freeman
2009/0196580	A1	8/2009	Freeman
2009/0204025	A1	8/2009	Marsot et al.
2009/0216100	A1	8/2009	Ebner et al.
2009/0237262	A1	9/2009	Smith et al.
2009/0240127	A1	9/2009	Ray
2009/0247838	A1	10/2009	Cummings et al.
2009/0247982	A1	10/2009	Krulevitch et al.
2009/0259146	A1	10/2009	Freeman et al.
2009/0270765	A1	10/2009	Ghesquiere et al.
2009/0280551	A1	11/2009	Cardosi et al.
2009/0281457	A1	11/2009	Faulkner et al.
2009/0281458	A1	11/2009	Faulkner et al.
2009/0281459	A1	11/2009	Faulkner et al.
2009/0301899	A1	12/2009	Hodges et al.
2009/0302872	A1	12/2009	Haggett et al.
2009/0302873	A1	12/2009	Haggett et al.
2009/0322630	A1	12/2009	Friman et al.
2009/0325307	A1	12/2009	Haggett et al.
2010/0016700	A1	1/2010	Sieh et al.
2010/0018878	A1	1/2010	Davies
2010/0030110	A1	2/2010	Choi et al.
2010/0041084	A1	2/2010	Stephens et al.
2010/0094170	A1	4/2010	Wilson et al.
2010/0094324	A1	4/2010	Huang et al.
2010/0113981	A1	5/2010	Oki et al.
2010/0145377	A1	6/2010	Lai et al.
2010/0198107	A1	8/2010	Groll et al.
2010/0210970	A1	8/2010	Horikawa et al.
2010/0256525	A1	10/2010	List et al.
2010/0274273	A1	10/2010	Schraga et al.
2010/0292611	A1	11/2010	Lum et al.
2010/0324452	A1	12/2010	Freeman et al.
2010/0324582	A1	12/2010	Nicholls et al.
2011/0041449	A1	2/2011	Espinosa
2011/0077478	A1	3/2011	Freeman et al.
2011/0077553	A1	3/2011	Alroy
2011/0098541	A1	4/2011	Freeman et al.
2011/0178429	A1	7/2011	Jacobs
2011/0184448	A1	7/2011	Brown et al.
2012/0149999	A1	6/2012	Freeman et al.
2012/0184876	A1	7/2012	Freeman et al.
2012/0232425	A1	9/2012	Freeman et al.
2012/0271197	A1	10/2012	Castle et al.
2012/0296233	A9	11/2012	Freeman
2013/0261500	A1	10/2013	Jacobs

FOREIGN PATENT DOCUMENTS

DE	3538313	A1	4/1986
DE	4212315	A1	10/1993
DE	4320347	A1	12/1994
DE	4344452	A1	6/1995
DE	4420232		12/1995
DE	29800611	U1	6/1998
DE	19819407	A1	11/1999
DE	20009475	U1	9/2000
DE	29824204	U1	9/2000
DE	10032042	A1	1/2002
DE	10057832	C1	2/2002
DE	10053974	A1	5/2002
DE	10142232	A1	3/2003
DE	10208575		8/2003
DE	10208575	C1	8/2003
DE	10245721		12/2003
DE	10361560		7/2005
EP	0112498	A2	7/1984
EP	136362	A1	4/1985
EP	137975	A2	4/1985
EP	160768	A1	11/1985
EP	170375	A2	2/1986
EP	199484		10/1986
EP	254246	A2	1/1988
EP	289269	A2	11/1988
EP	0317847	A1	5/1989
EP	320109	A1	6/1989
EP	351891	A2	1/1990
EP	359831		3/1990
EP	364208		4/1990
EP	368474	A2	5/1990
EP	374355	A2	6/1990
EP	406304		1/1991
EP	415388	A2	3/1991
EP	415393	A1	3/1991
EP	429076	A2	5/1991
EP	0449147	A2	10/1991
EP	449525	A1	10/1991
EP	453283	A1	10/1991
EP	461601	A2	12/1991
EP	470649	A2	2/1992
EP	471986	A2	2/1992
EP	505475		9/1992
EP	505494		9/1992
EP	505504		9/1992
EP	530994	A1	3/1993
EP	537761	A2	4/1993
EP	552223		7/1993
EP	560336	A1	9/1993
EP	562370	A2	9/1993
EP	593096	A2	4/1994
EP	0630609	A2	12/1994
EP	636879	A2	2/1995
EP	654659	A1	5/1995
EP	0662367	A1	7/1995
EP	685737	A1	12/1995
EP	730037	A2	9/1996
EP	735363	A1	10/1996
EP	736607	A1	10/1996
EP	759553		2/1997
EP	777123	A2	6/1997
EP	795601	A2	9/1997
EP	795748	A1	9/1997
EP	817809		1/1998

(56) **References Cited**

FOREIGN PATENT DOCUMENTS

EP	823239	A2	2/1998
EP	847447		6/1998
EP	851224	A1	7/1998
EP	856586	A1	8/1998
EP	872728	A1	10/1998
EP	874984		11/1998
EP	878708	A1	11/1998
EP	894869	A1	2/1999
EP	898936		3/1999
EP	901018	A2	3/1999
EP	937249		8/1999
EP	938493		9/1999
EP	951939		10/1999
EP	964059	A2	12/1999
EP	964060	A2	12/1999
EP	969097	A2	1/2000
EP	985376		3/2000
EP	1021950	A1	7/2000
EP	1074832	A1	2/2001
EP	1093854	A1	4/2001
EP	1114995	A2	7/2001
EP	1157660	A1	11/2001
EP	1174083		1/2002
EP	1337182		8/2003
EP	1374770		2/2004
EP	1401233		4/2004
EP	1404232		4/2004
EP	1486766	A1	12/2004
EP	1492457	A1	1/2005
EP	1502614		2/2005
EP	1643908		4/2006
EP	1779780	A2	5/2007
EP	1790288	A1	5/2007
EP	1881322	A1	1/2008
EP	1921992		5/2008
EP	2039294	A1	3/2009
EP	2119396	A1	11/2009
EP	2130493	A1	12/2009
FR	2555432		5/1985
FR	2622457	A1	5/1989
GB	1558111	A	12/1979
GB	2168815	A	6/1986
GB	2331936		6/1999
GB	2335860		10/1999
GB	2335990		10/1999
JP	04-194660		7/1992
JP	19920194660		7/1992
JP	10-104906		1/1998
JP	2000-116768	A	4/2000
JP	2009082631	A	4/2009
WO	WO-80/01389	A1	7/1980
WO	WO-85/04089	A1	9/1985
WO	WO-86/05966	A1	10/1986
WO	WO-86/07632	A1	12/1986
WO	WO-89/08713	A1	9/1989
WO	WO-91/09139	A1	6/1991
WO	WO-91/09316	A1	6/1991
WO	WO-91/09373	A1	6/1991
WO	WO-92/03099	A1	3/1992
WO	WO-92/06971	A1	4/1992
WO	WO-92/07263	A1	4/1992
WO	WO-92/07468	A1	5/1992
WO	WO-93/00044	A1	1/1993
WO	WO-93/02720	A1	2/1993
WO	WO-93/06979	A1	4/1993
WO	WO-93/09723	A1	5/1993
WO	WO-93/12726	A1	7/1993
WO	WO-93/25898	A1	12/1993
WO	WO-94/27140	A1	11/1994
WO	WO-94/29703	A1	12/1994
WO	WO-94/29704	A2	12/1994
WO	WO-94/29731	A1	12/1994
WO	WO-95/00662	A1	1/1995
WO	WO-95/06240	A1	3/1995
WO	WO-95/10223	A2	4/1995
WO	WO-95/12583	A1	5/1995
WO	WO-95/22597	A1	8/1995
WO	WO-96/14799	A1	5/1996
WO	WO-96/30431	A1	10/1996
WO	WO-96/37148	A1	11/1996
WO	WO-97/02359	A1	1/1997
WO	WO-97/02487	A1	1/1997
WO	WO-97/11883	A1	4/1997
WO	WO-97/18464	A1	5/1997
WO	WO-97/28741	A1	8/1997
WO	WO-97/30344	A1	8/1997
WO	WO-97/42882	A1	11/1997
WO	WO-97/42888	A1	11/1997
WO	WO-97/45720	A1	12/1997
WO	WO-98/03431	A1	1/1998
WO	WO-98/14436	A1	4/1998
WO	WO-98/19159	A1	5/1998
WO	WO-98/19609	A1	5/1998
WO	WO-98/20332	A1	5/1998
WO	WO-98/20348	A1	5/1998
WO	WO-98/20867	A1	5/1998
WO	WO-98/24366	A2	6/1998
WO	WO-98/24373	A1	6/1998
WO	WO-98/35225	A1	8/1998
WO	WO-98/45276	A2	10/1998
WO	WO-99/03584	A1	1/1999
WO	WO-99/05966	A1	2/1999
WO	WO-99/07295	A1	2/1999
WO	WO-99/07431	A1	2/1999
WO	WO-99/13100	A1	3/1999
WO	WO-99/18532	A1	4/1999
WO	WO-99/19507	A1	4/1999
WO	WO-99/19717	A1	4/1999
WO	WO-9917854	A1	4/1999
WO	WO-99/27483	A1	6/1999
WO	WO-99/27852	A1	6/1999
WO	WO-99/62576	A1	12/1999
WO	WO-99/64580	A1	12/1999
WO	WO-00/06024	A1	2/2000
WO	WO-00/09184	A1	2/2000
WO	WO-00/11578	A1	3/2000
WO	WO-00/15103	A1	3/2000
WO	WO-00/17799	A1	3/2000
WO	WO-00/17800	A1	3/2000
WO	WO-00/18293	A1	4/2000
WO	WO-00/19346	A1	4/2000
WO	WO-00/20626	A1	4/2000
WO	WO-00/29577	A1	5/2000
WO	WO-00/30186	A1	5/2000
WO	WO-00/32097	A1	6/2000
WO	WO-00/32098	A1	6/2000
WO	WO-00/33236	A1	6/2000
WO	WO-00/39914	A1	7/2000
WO	WO-00/42422	A1	7/2000
WO	WO-00/44084	A2	7/2000
WO	WO-00/46854	A1	8/2000
WO	WO-00/50771	A1	8/2000
WO	WO-00/55915	A1	9/2000
WO	WO-00/60340	A1	10/2000
WO	WO-00/64022	A1	10/2000
WO	WO-00/67245	A1	11/2000
WO	WO-00/67268	A1	11/2000
WO	WO-00/72452	A2	11/2000
WO	WO-01/00090	A1	1/2001
WO	WO-01/15807	A1	3/2001
WO	WO-01/16578	A1	3/2001
WO	WO-01/23885	A1	4/2001
WO	WO-01/25775	A1	4/2001
WO	WO-01/26813	A2	4/2001
WO	WO-01/29037	A2	4/2001
WO	WO-01/33216	A1	5/2001
WO	WO-01/34029	A1	5/2001
WO	WO-01/36955	A1	5/2001
WO	WO-01/37174	A1	5/2001
WO	WO-01/40788	A1	6/2001
WO	WO-01/45014	A1	6/2001
WO	WO-01/57510	A2	8/2001
WO	WO-01/63271	A1	8/2001
WO	WO-01/64105	A1	9/2001

(56) **References Cited**

FOREIGN PATENT DOCUMENTS

WO	WO-01/69505	A1	9/2001
WO	WO-0166010	A1	9/2001
WO	WO-01/72220	A1	10/2001
WO	WO-01/72225	A1	10/2001
WO	WO-01/73124	A2	10/2001
WO	WO-01/73395	A2	10/2001
WO	WO-01/75433	A2	10/2001
WO	WO-01/89691	A2	11/2001
WO	WO-01/91634	A2	12/2001
WO	WO-01/95806	A2	12/2001
WO	WO-02/00101	A2	1/2002
WO	WO-02/02796	A2	1/2002
WO	WO-02/08750	A1	1/2002
WO	WO-02/08753	A2	1/2002
WO	WO-02/08950	A2	1/2002
WO	WO-02/18940	A2	3/2002
WO	WO-02/21317	A1	3/2002
WO	WO-02/25551	A1	3/2002
WO	WO-02/32559	A1	4/2002
WO	WO-02/41227	A1	5/2002
WO	WO-02/41779	A1	5/2002
WO	WO-02/44948	A2	6/2002
WO	WO-02/49507	A1	6/2002
WO	WO-02/056769	A1	7/2002
WO	WO-02/059734	A1	8/2002
WO	WO-02/069791	A1	9/2002
WO	WO-02/077638	A2	10/2002
WO	WO-02/099308	A2	12/2002
WO	WO-02/100251	A2	12/2002
WO	WO-02/100252	A2	12/2002
WO	WO-02/100253	A2	12/2002
WO	WO-02/100254	A2	12/2002
WO	WO-02/100460	A2	12/2002
WO	WO-02/100461	A2	12/2002
WO	WO-02/101343	A2	12/2002
WO	WO-02/101359	A2	12/2002
WO	WO-03/000321	A1	1/2003
WO	WO-03/023389	A2	3/2003
WO	WO-03/039369	A1	5/2003
WO	WO-03/042691	A1	5/2003
WO	WO-03/045557	A2	6/2003
WO	WO-03/046542	A2	6/2003
WO	WO-03/049609	A1	6/2003
WO	WO-03/050534	A1	6/2003
WO	WO-03/066128	A2	8/2003
WO	WO-03/070099	A1	8/2003
WO	WO-03/071940	A1	9/2003
WO	WO-03/082091	A2	10/2003
WO	WO-03/088824	A2	10/2003
WO	WO-03/088834	A1	10/2003
WO	WO-03/088835	A2	10/2003
WO	WO-03/088851	A1	10/2003
WO	WO-03/094752	A1	11/2003
WO	WO-03/101297	A2	12/2003
WO	WO-2004/003147	A2	1/2004
WO	WO-2004/008130	A1	1/2004
WO	WO-2004/022133	A2	3/2004
WO	WO-2004017964	A1	3/2004
WO	WO-2004/026130	A1	4/2004
WO	WO-2004/040285	A2	5/2004
WO	WO-2004/040287	A1	5/2004
WO	WO-2004/040948	A1	5/2004
WO	WO-2004/041082	A1	5/2004
WO	WO-2004/045375	A2	6/2004
WO	WO-2004/054455	A1	7/2004
WO	WO-2004/060174	A2	7/2004
WO	WO-2004/060446	A2	7/2004
WO	WO-2004/065545	A2	8/2004
WO	WO-2004/091693	A2	10/2004
WO	WO-2004/098405	A1	11/2004
WO	WO-2004/107964	A2	12/2004
WO	WO-2004/107975	A2	12/2004
WO	WO-2004/112602	A1	12/2004
WO	WO-2004/112612	A1	12/2004
WO	WO-2004103147	A2	12/2004
WO	WO-2005/001418	A2	1/2005
WO	WO-2005/006939	A2	1/2005
WO	WO-2005/011774	A2	2/2005
WO	WO-2005/013824	A1	2/2005
WO	WO-2005/016125	A2	2/2005
WO	WO-2005/018425	A2	3/2005
WO	WO-2005/018430	A2	3/2005
WO	WO-2005/018454	A2	3/2005
WO	WO-2005/018709	A2	3/2005
WO	WO-2005/018710	A2	3/2005
WO	WO-2005/018711	A2	3/2005
WO	WO-2005/022143	A2	3/2005
WO	WO-2005/023088	A2	3/2005
WO	WO-2005/033659	A2	4/2005
WO	WO-2005/034720	A2	4/2005
WO	WO-2005/034721	A2	4/2005
WO	WO-2005/034741	A1	4/2005
WO	WO-2005/034778	A1	4/2005
WO	WO-2005/035017	A2	4/2005
WO	WO-2005/035018	A2	4/2005
WO	WO-2005/037095	A1	4/2005
WO	WO-2005/045414	A1	5/2005
WO	WO-2005/046477	A2	5/2005
WO	WO-2005/065399	A2	7/2005
WO	WO-2005/065414	A2	7/2005
WO	WO-2005/065415	A2	7/2005
WO	WO-2005/072604	A1	8/2005
WO	WO-2005/084546	A2	9/2005
WO	WO-2005/084557	A1	9/2005
WO	WO-2005/104948	A1	11/2005
WO	WO-2005/114185	A2	12/2005
WO	WO-2005/116622	A1	12/2005
WO	WO-2005/119234	A2	12/2005
WO	WO-2005/120197	A2	12/2005
WO	WO-2005/120199	A2	12/2005
WO	WO-2005/121759	A2	12/2005
WO	WO-2005/123680	A1	12/2005
WO	WO-2006/001797	A1	1/2006
WO	WO-2006/001973	A2	1/2006
WO	WO-2006005545	A1	1/2006
WO	WO-2006/011062	A2	2/2006
WO	WO-2006/013045	A1	2/2006
WO	WO-2006/015615	A1	2/2006
WO	WO-2006/027702	A2	3/2006
WO	WO-2006/031920	A2	3/2006
WO	WO-2006/032391	A2	3/2006
WO	WO-2006037646	A2	4/2006
WO	WO-2006/051342	A2	5/2006
WO	WO-2006/072004	A2	7/2006
WO	WO-2006/105146	A2	10/2006
WO	WO-2006/116441	A1	11/2006
WO	WO-2006/120365	A1	11/2006
WO	WO-2007/010087	A2	1/2007
WO	WO-2007/025635	A1	3/2007
WO	WO-2007/044834	A2	4/2007
WO	WO-2007/054335	A2	5/2007
WO	WO-2007/070719	A2	6/2007
WO	WO-2007/084367	A2	7/2007
WO	WO-2007/088905	A1	8/2007
WO	WO-2007/106470	A2	9/2007
WO	WO-2007/119900	A1	10/2007
WO	WO-2008/085052	A2	7/2008
WO	WO-2008112268	A2	9/2008
WO	WO-2008112279	A1	9/2008
WO	WO-2010/109461	A1	9/2010

OTHER PUBLICATIONS

Jarzabek et al., "On the Real Surface Area of Smooth Solid Electrodes", Electrochimica Acta, vol. 42, No. 19, (1997) pp. 2915-2918.

Wolfbeis et al., "Sol-gel based glucose biosensors employing optical oxygen transducers, and a method for compensating for variable oxygen background", Biosensors & Bioelectronics 15:1-2 (2000) pp. 69-76.

* cited by examiner

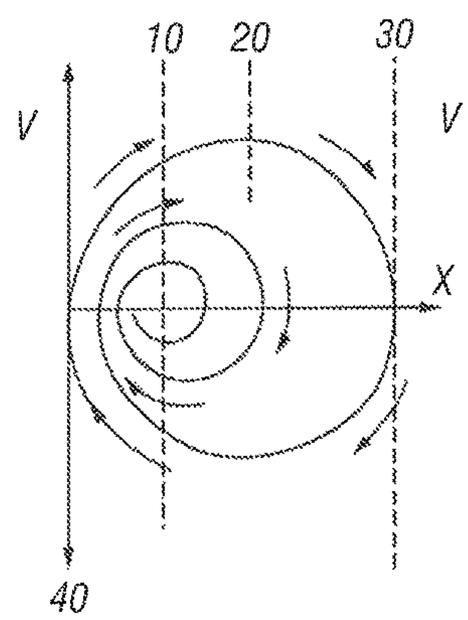

FIG. 1

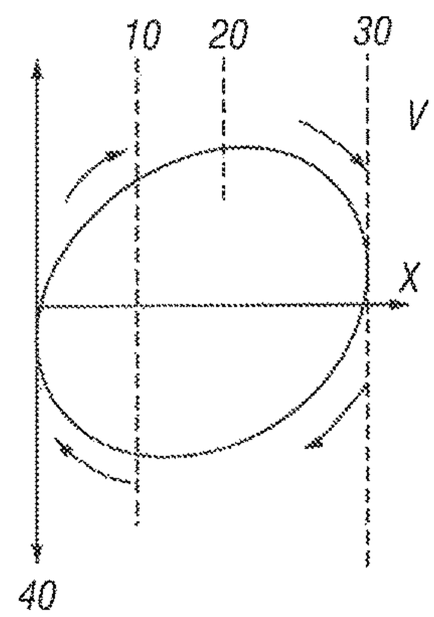

FIG. 2

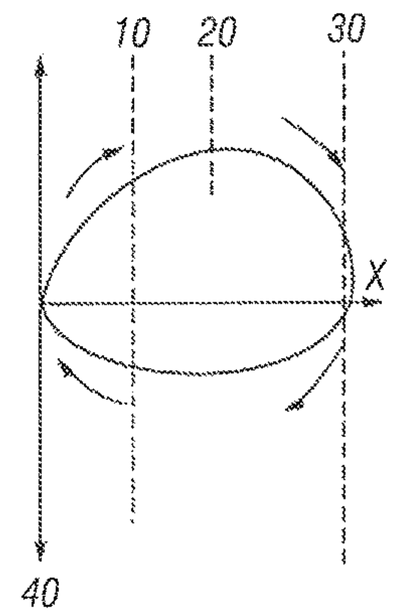

FIG. 3

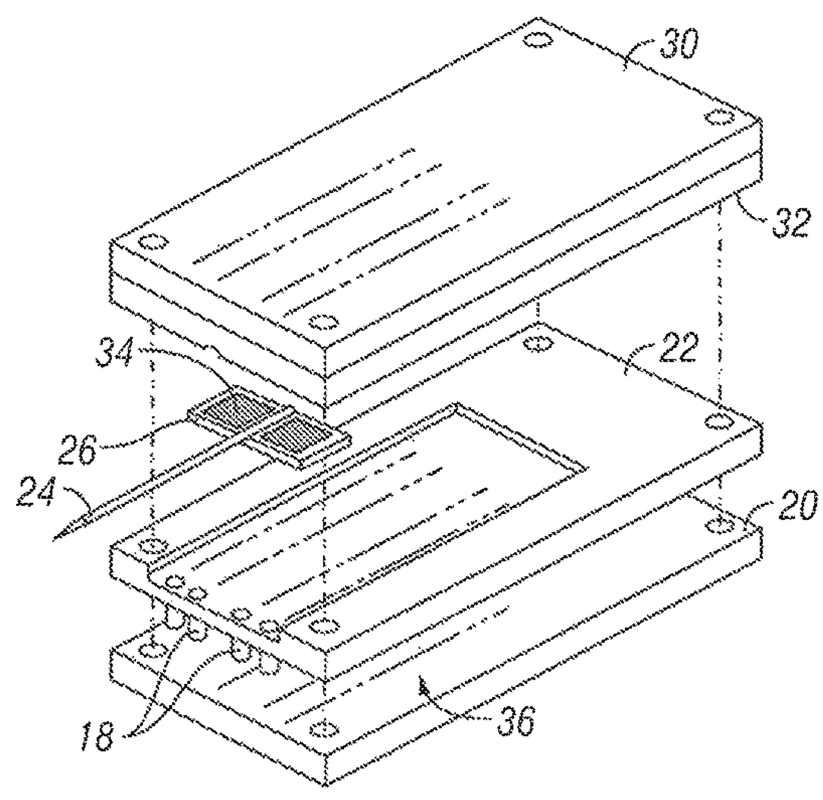

FIG. 4

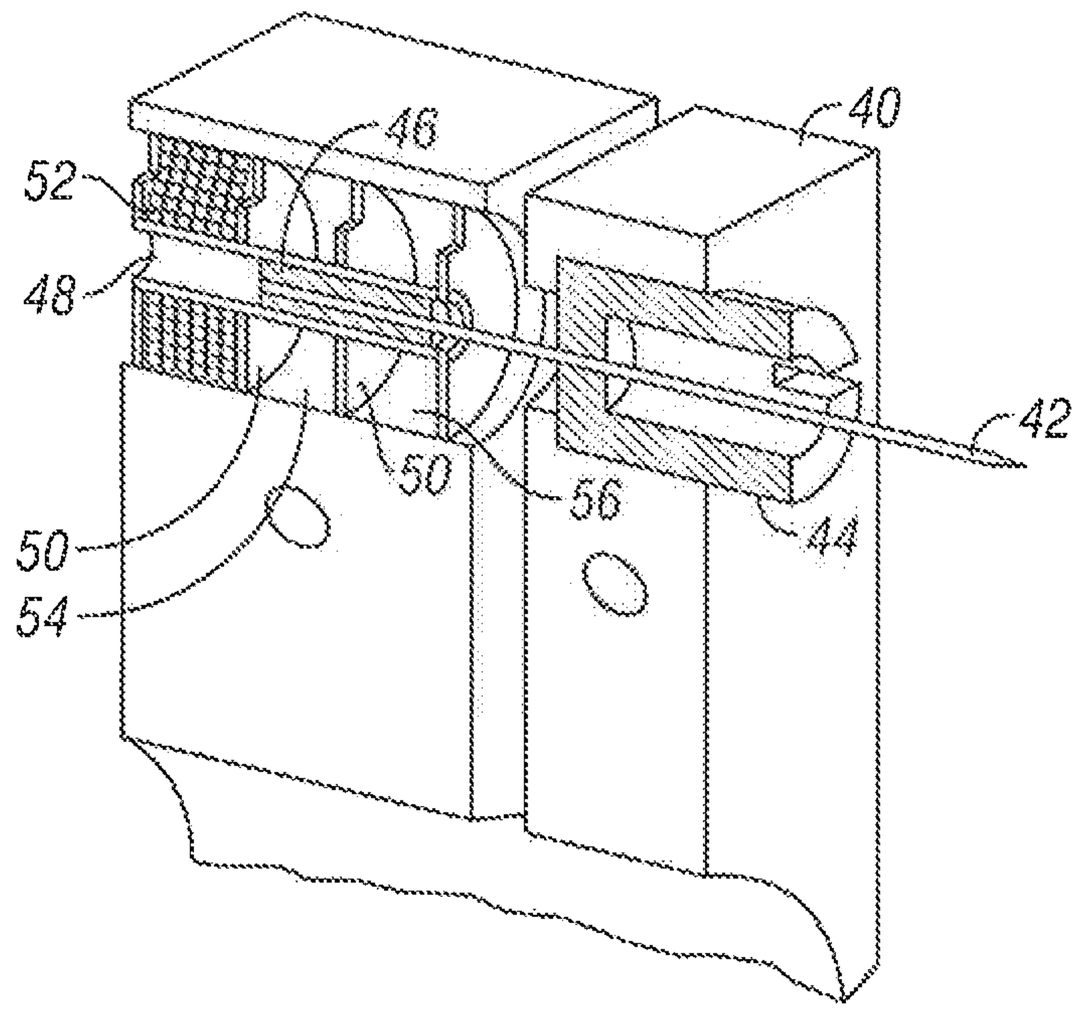

FIG. 5

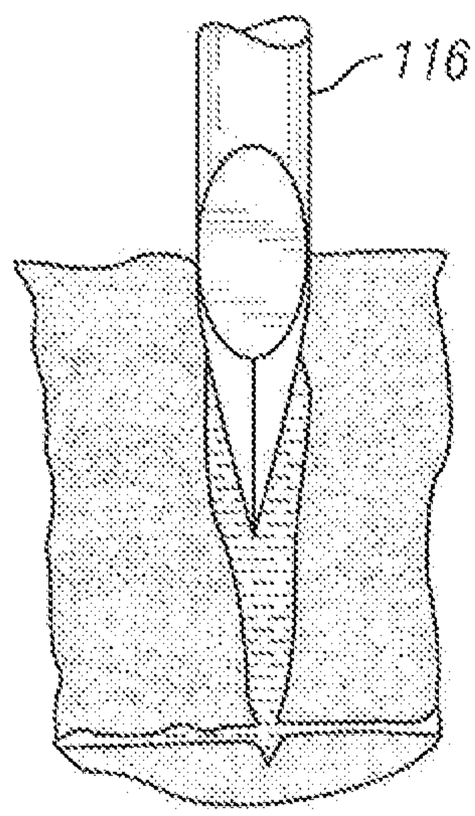

FIG. 10

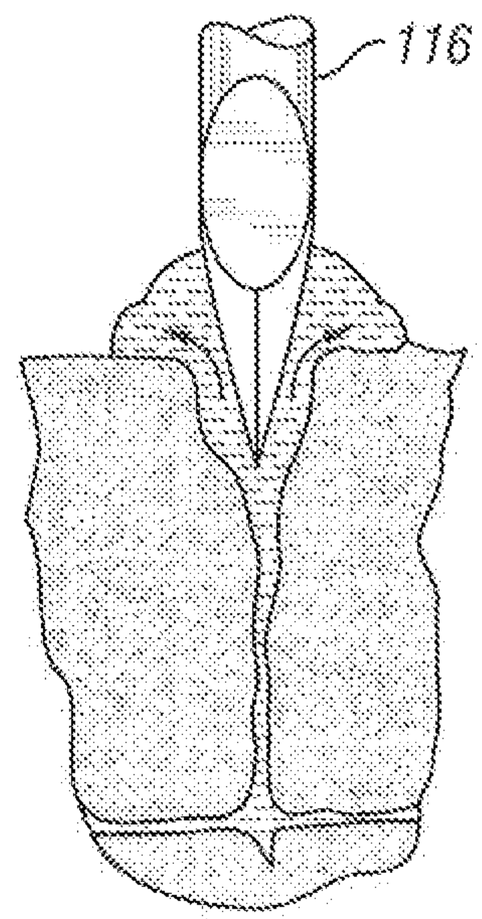

FIG. 11

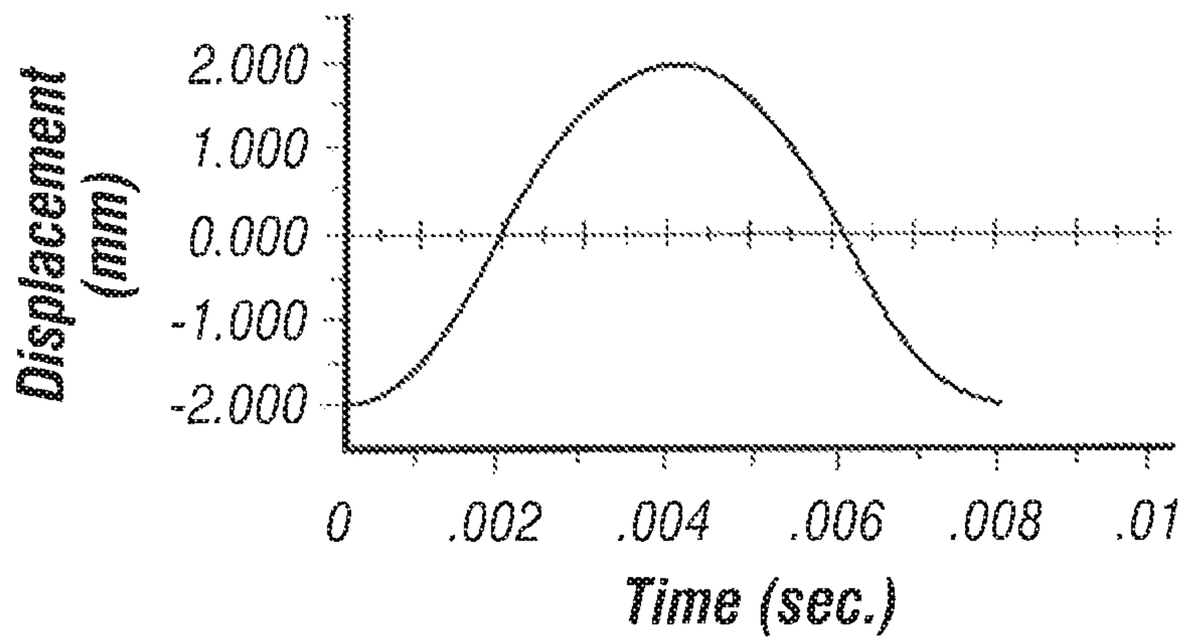
Displacement (mm)
2.000
1.000
0.000
-1.000
-2.000
0
.002
.004
.006
.008
.01
Time (sec.)

FIG. 6

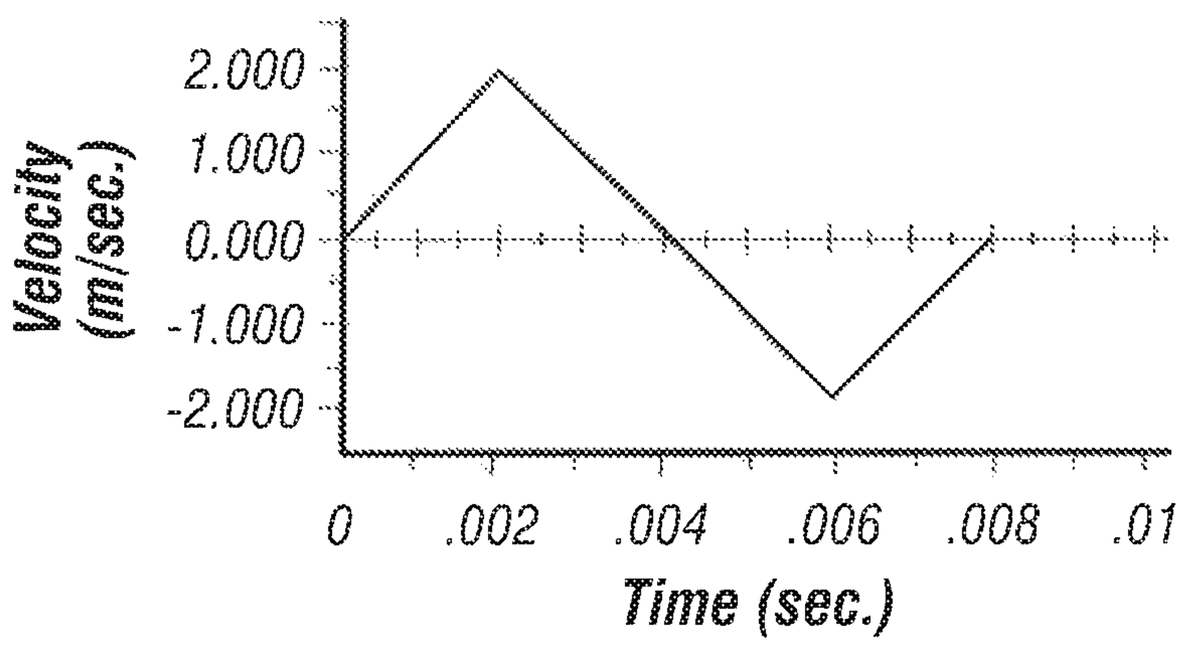
Velocity (m/sec.)
2.000
1.000
0.000
-1.000
-2.000
0
.002
.004
.006
.008
.01
Time (sec.)

FIG. 7

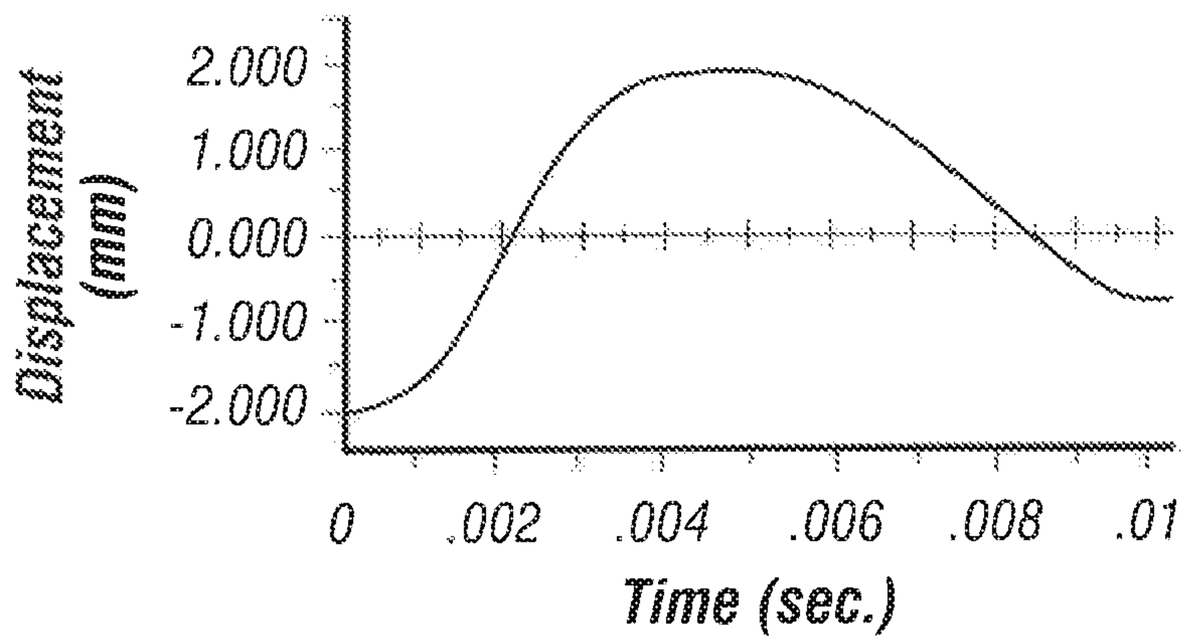
Displacement (mm)
2.000
1.000
0.000
-1.000
-2.000
0
.002
.004
.006
.008
.01
Time (sec.)

FIG. 8

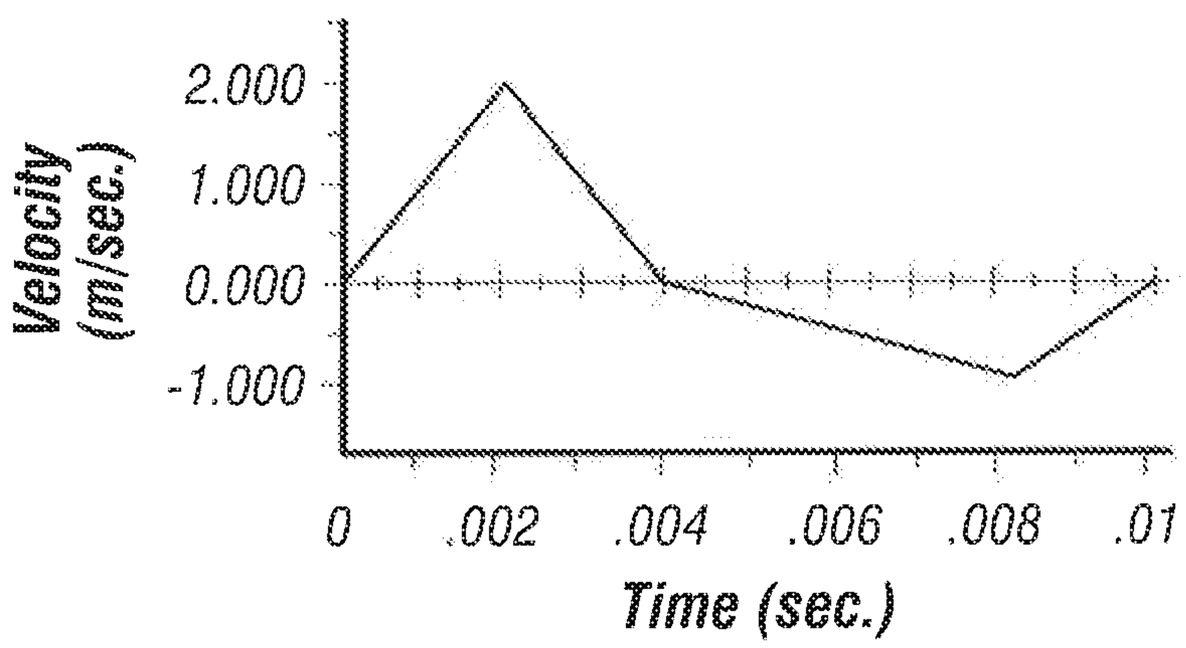
Velocity (m/sec.)
2.000
1.000
0.000
-1.000
0
.002
.004
.006
.008
.01
Time (sec.)

FIG. 9

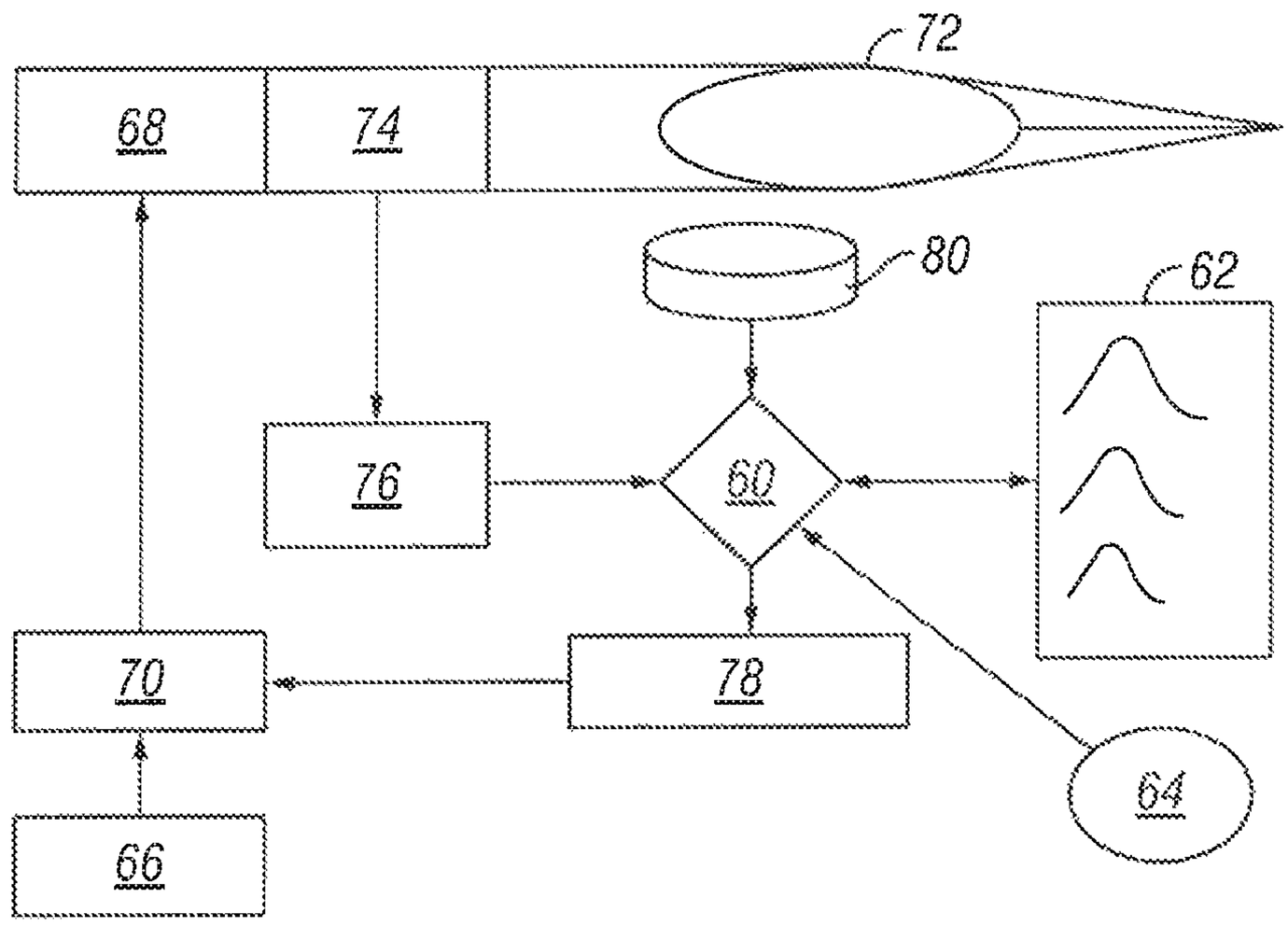

FIG. 12

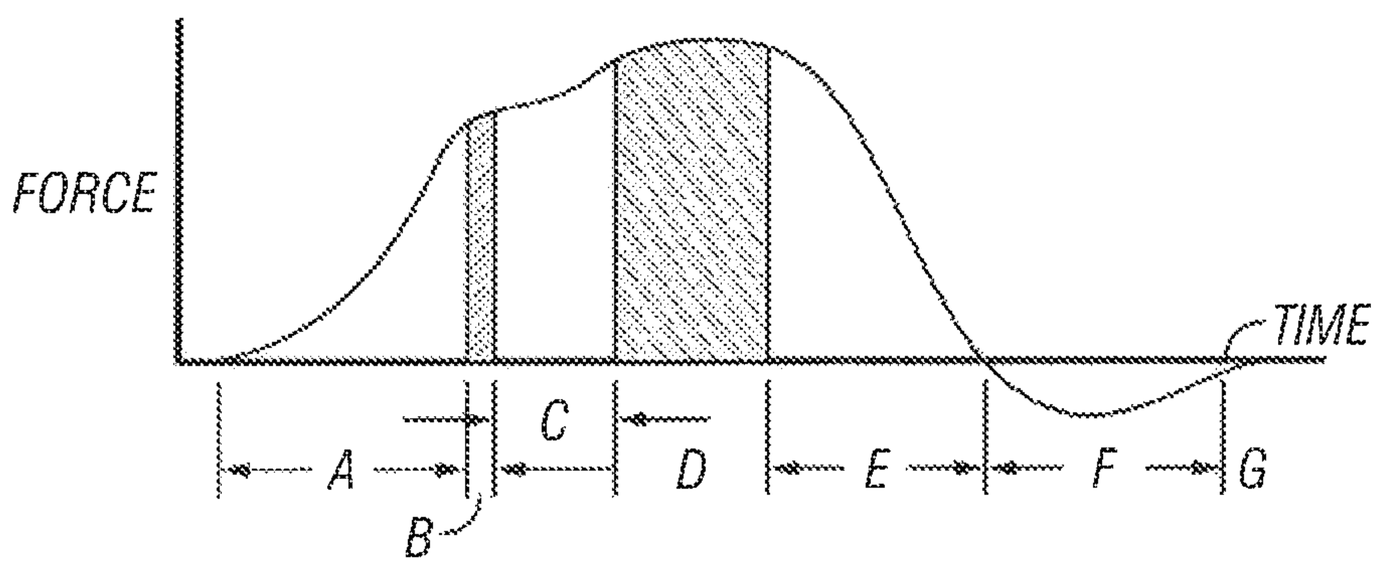

FIG. 13

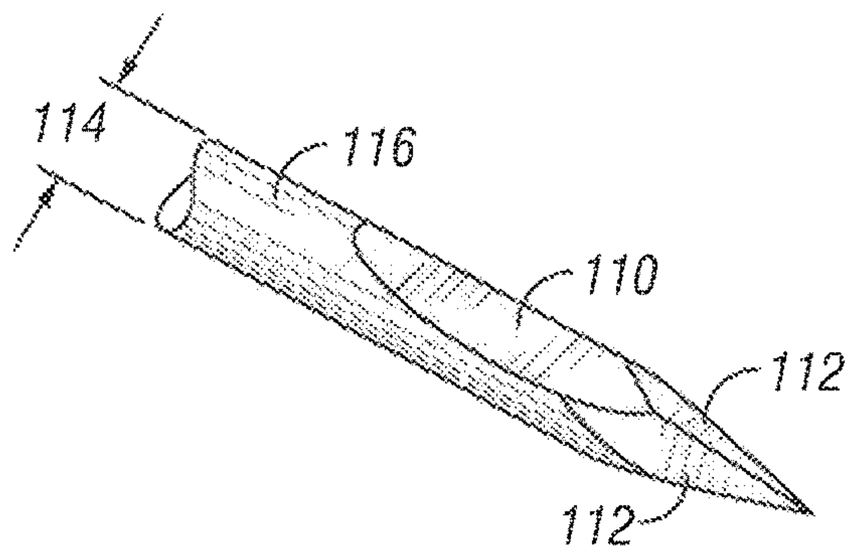

FIG. 14

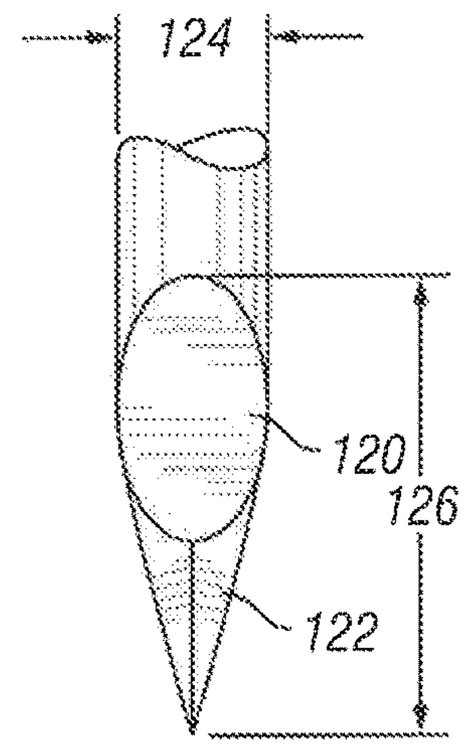

FIG. 15

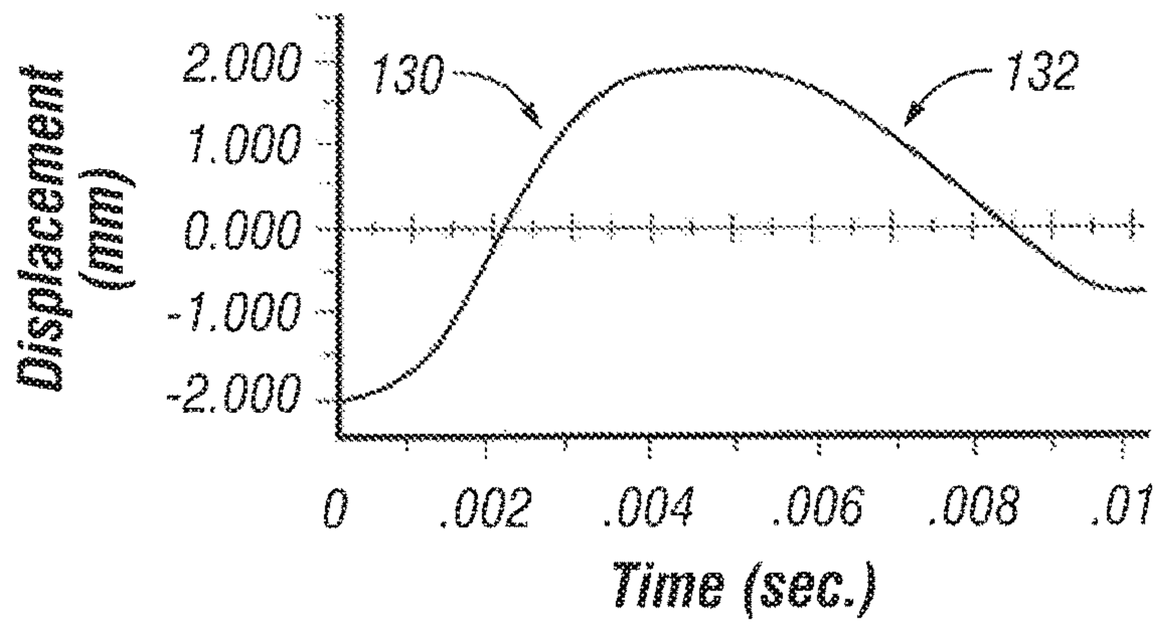

FIG. 16

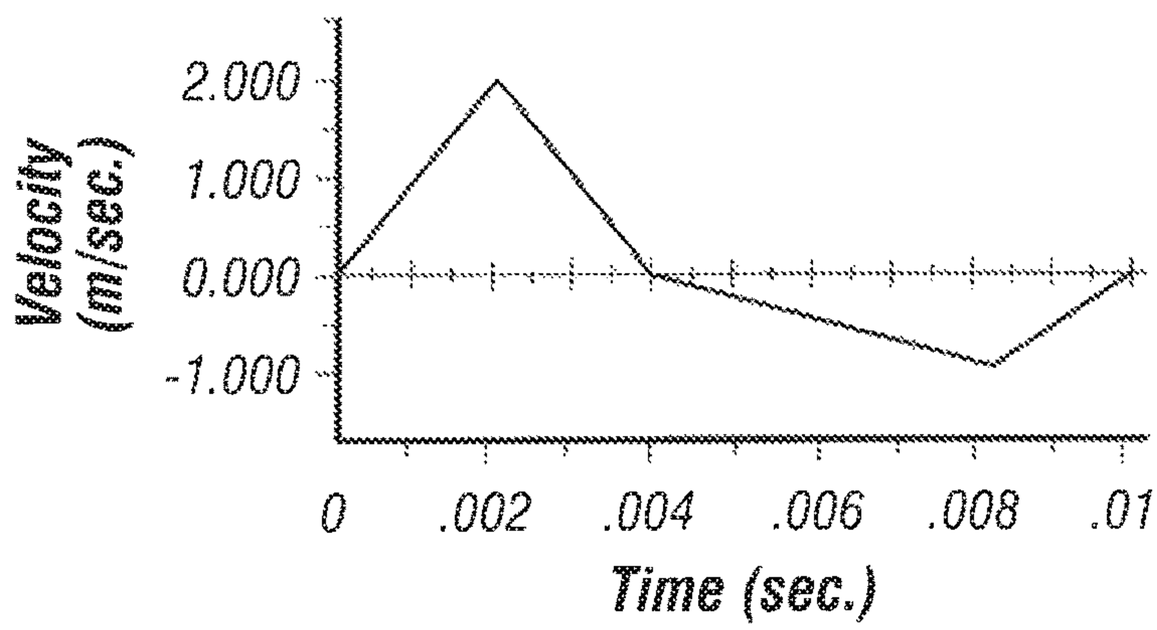

FIG. 17

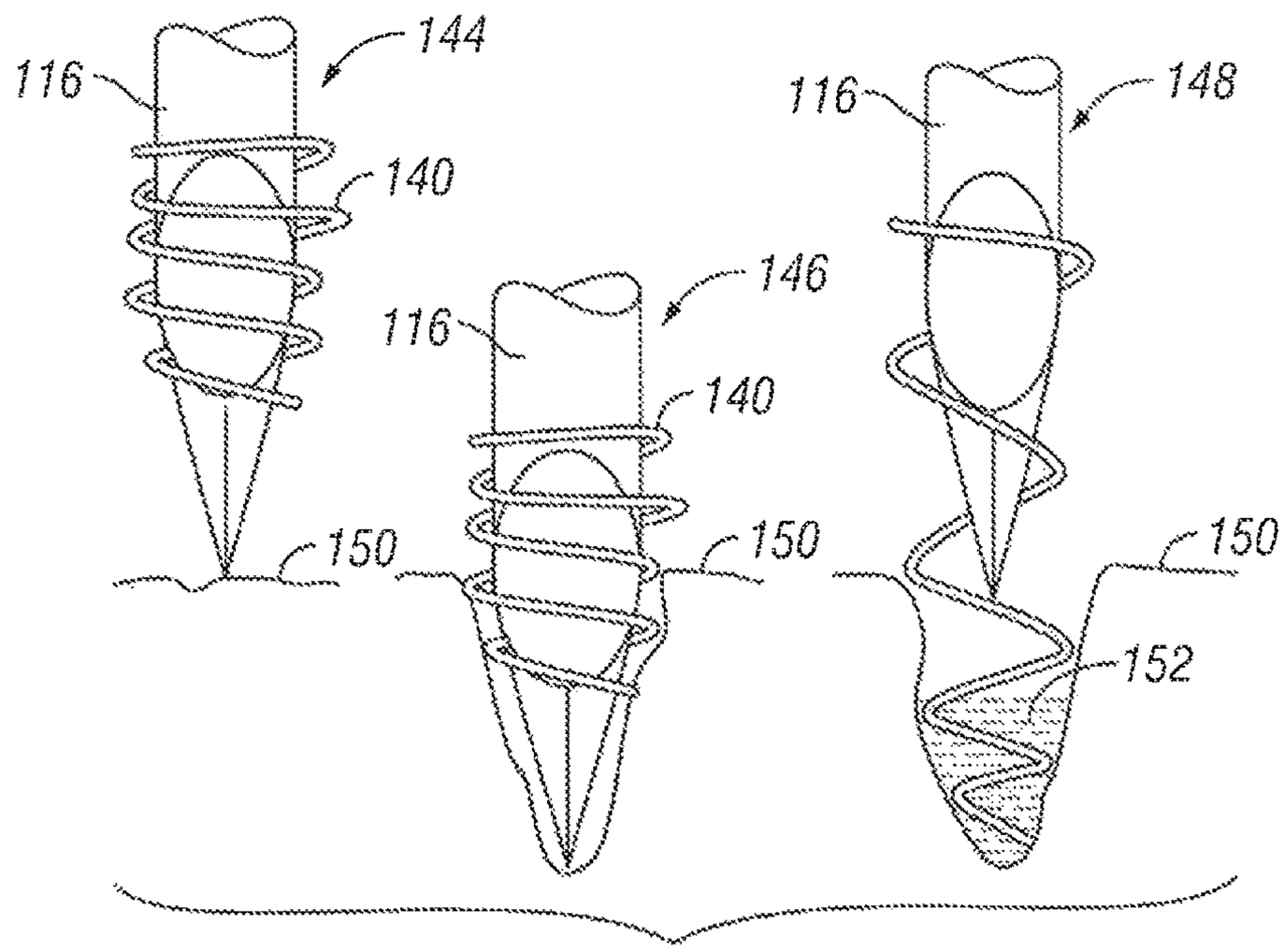
144
116
140
150
146
116
140
150
150
116
148
150
152

FIG. 18

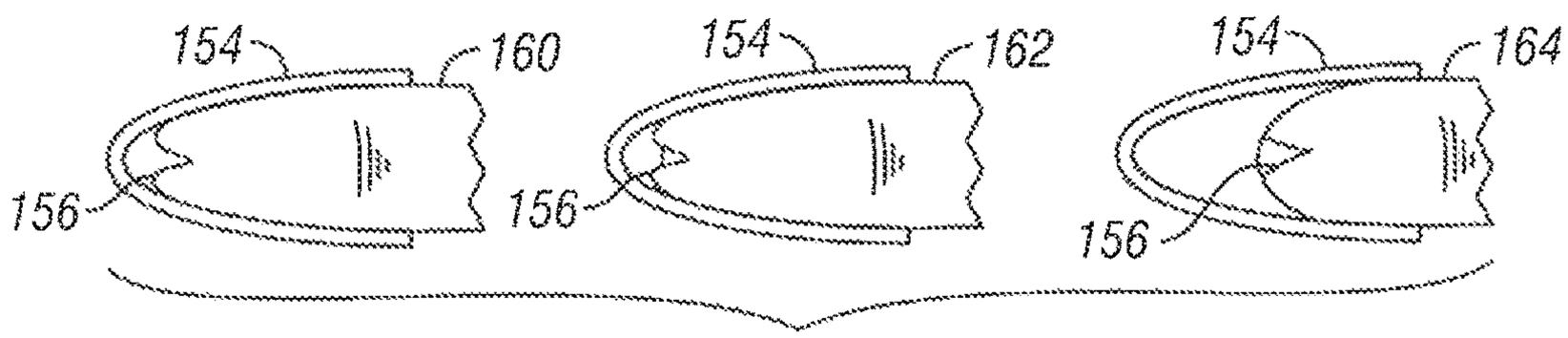
154
160
156
154
162
156
154
164
156

FIG. 19

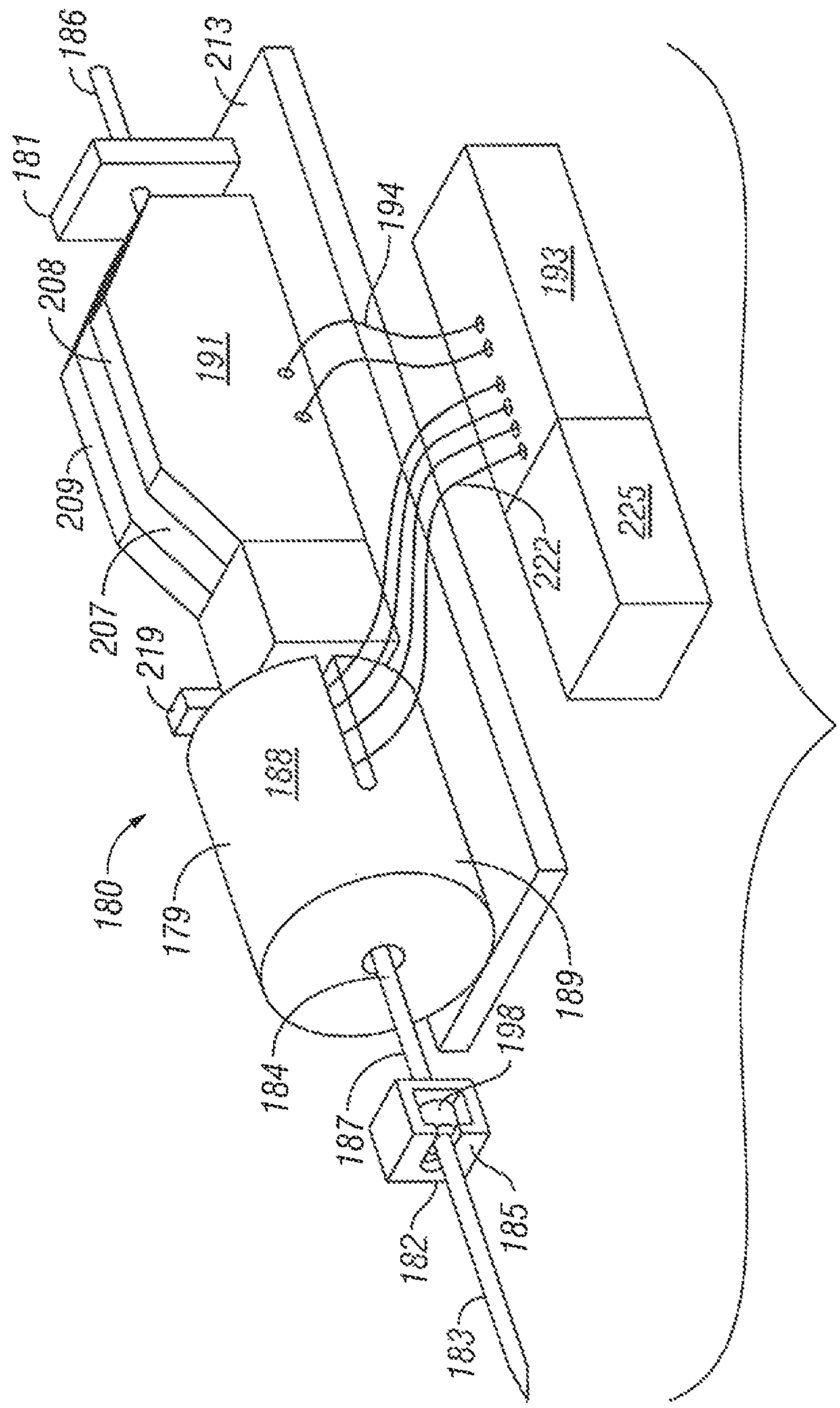
186
213
181
208
191
194
193
209
207
219
222
225
188
180
179
189
198
184
187
182
185
183

FIG. 20

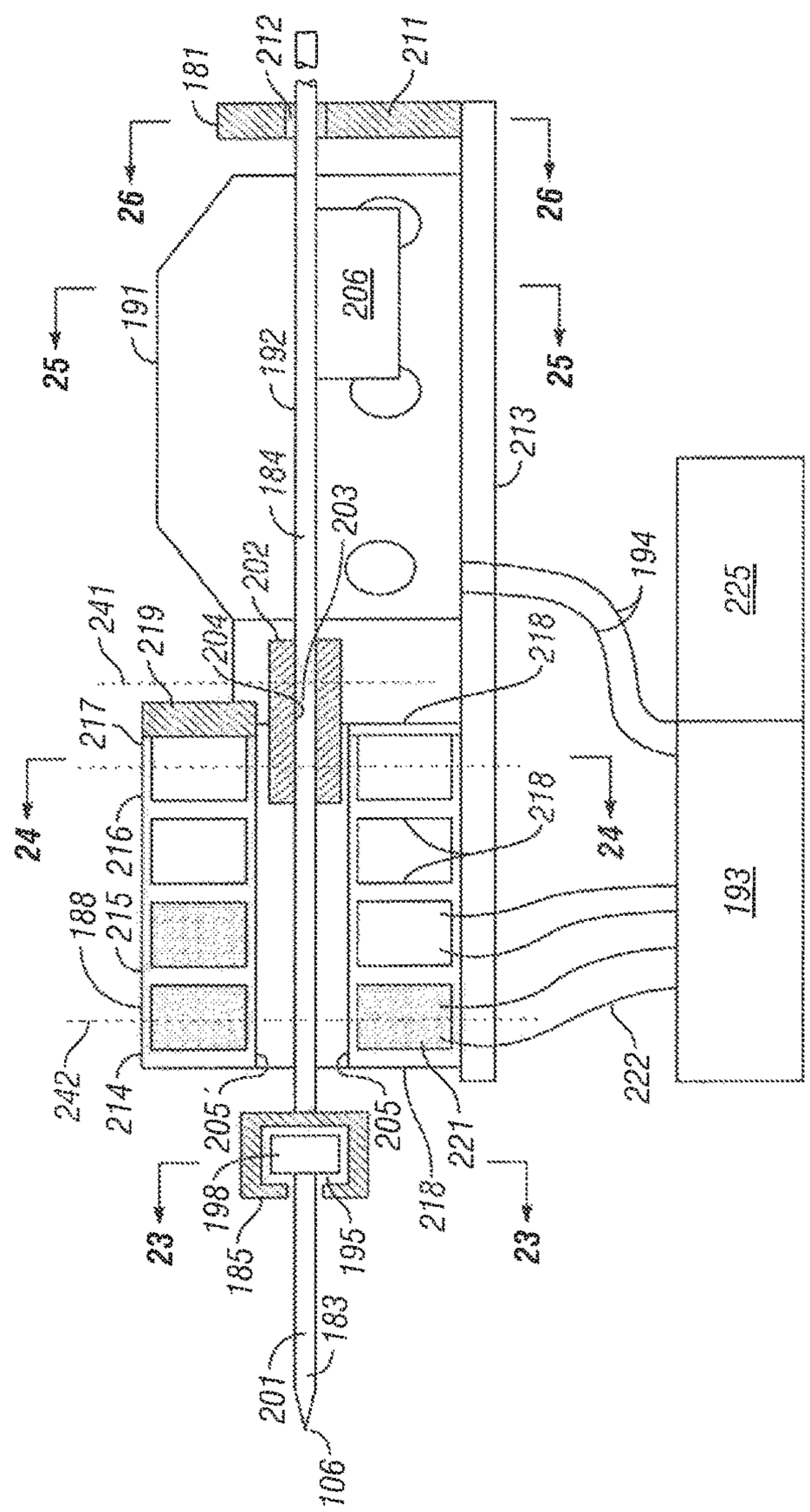
181
212
211
26
26
25
25
191
192
206
213
184
203
202
194
225
241
219
204
218
217
24
24
216
218
188
215
193
242
214
205
205
221
222
198
218
23
23
185
195
183
201
106

FIG. 21

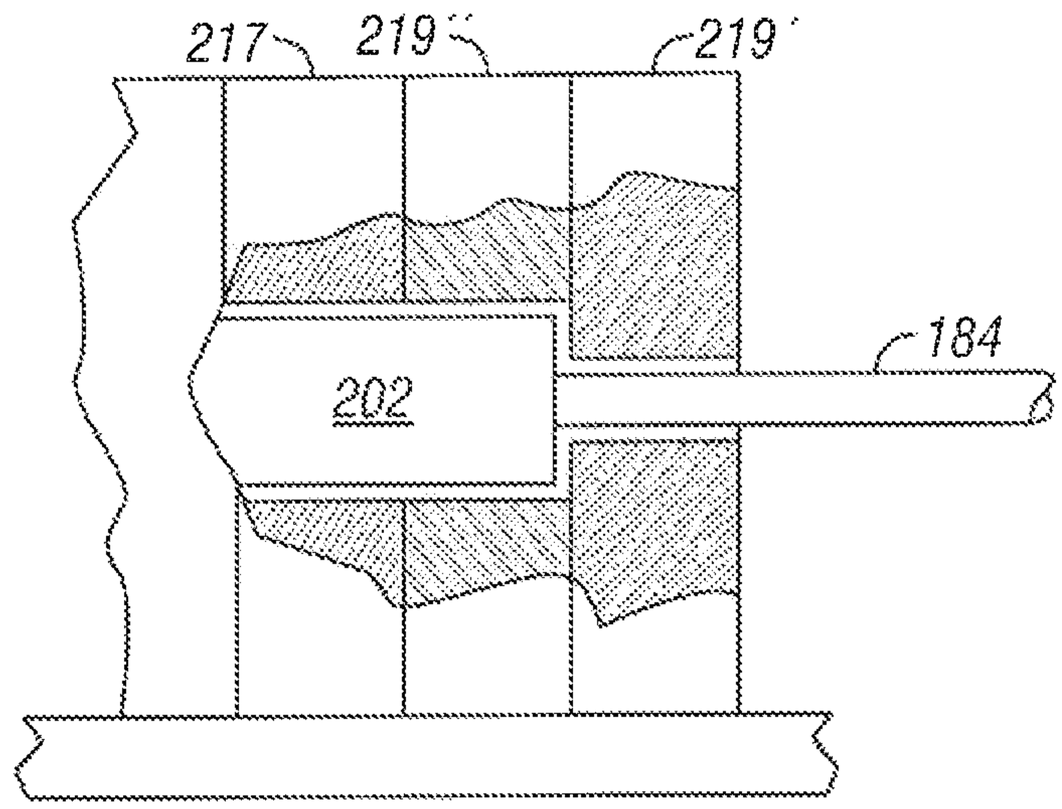

FIG. 22

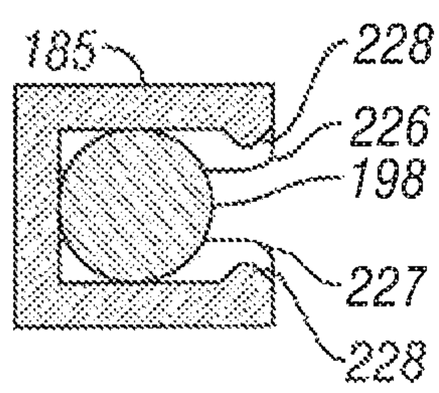

FIG. 23

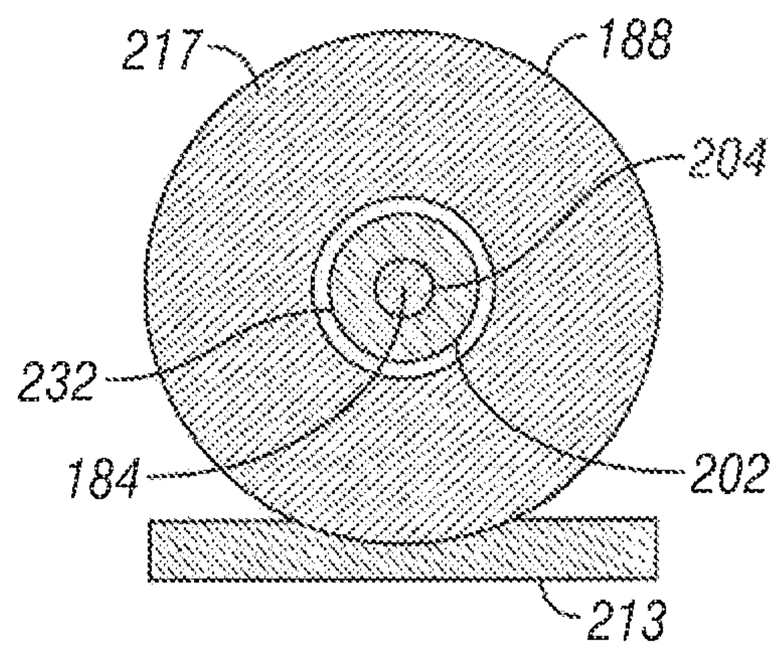

FIG. 24

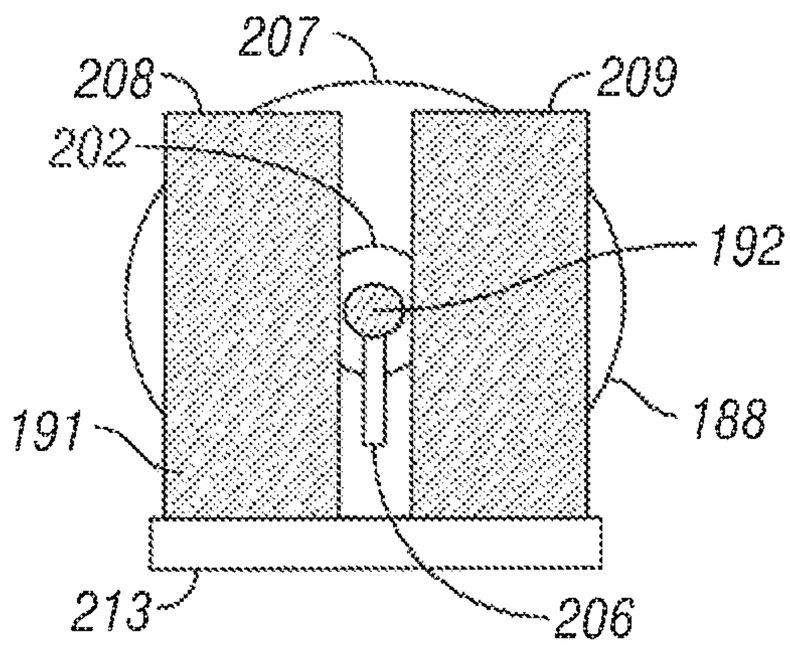

FIG. 25

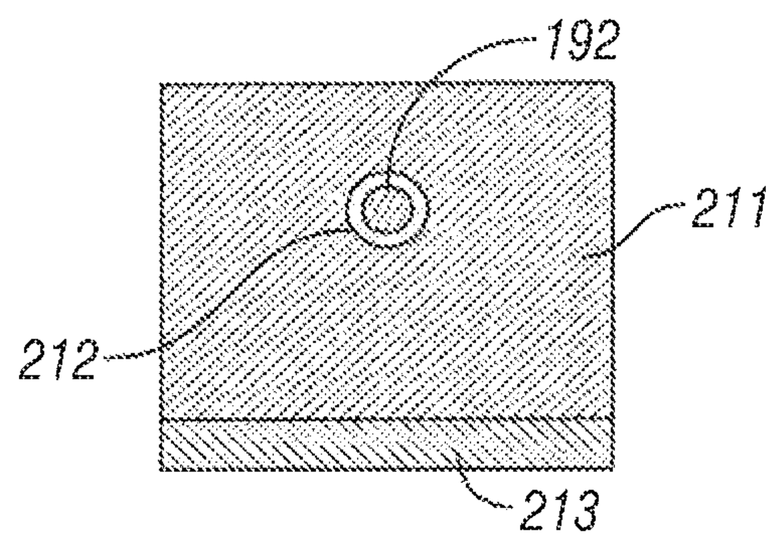

FIG. 26

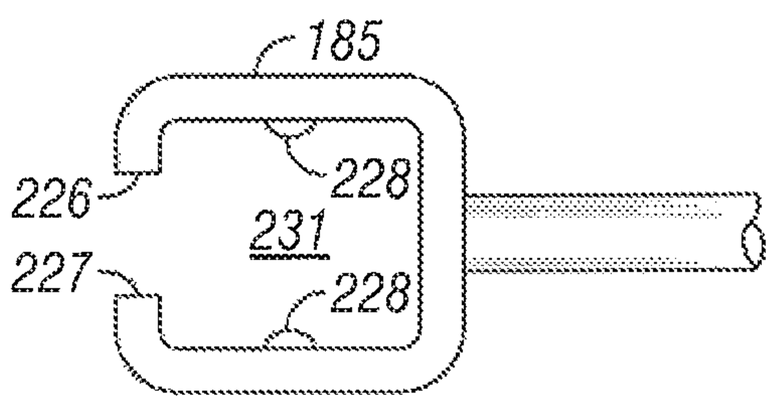

FIG. 27

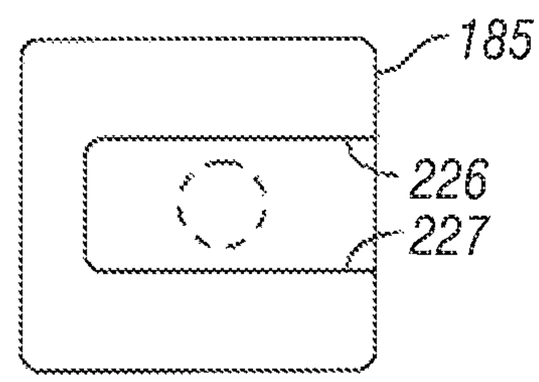

FIG. 28

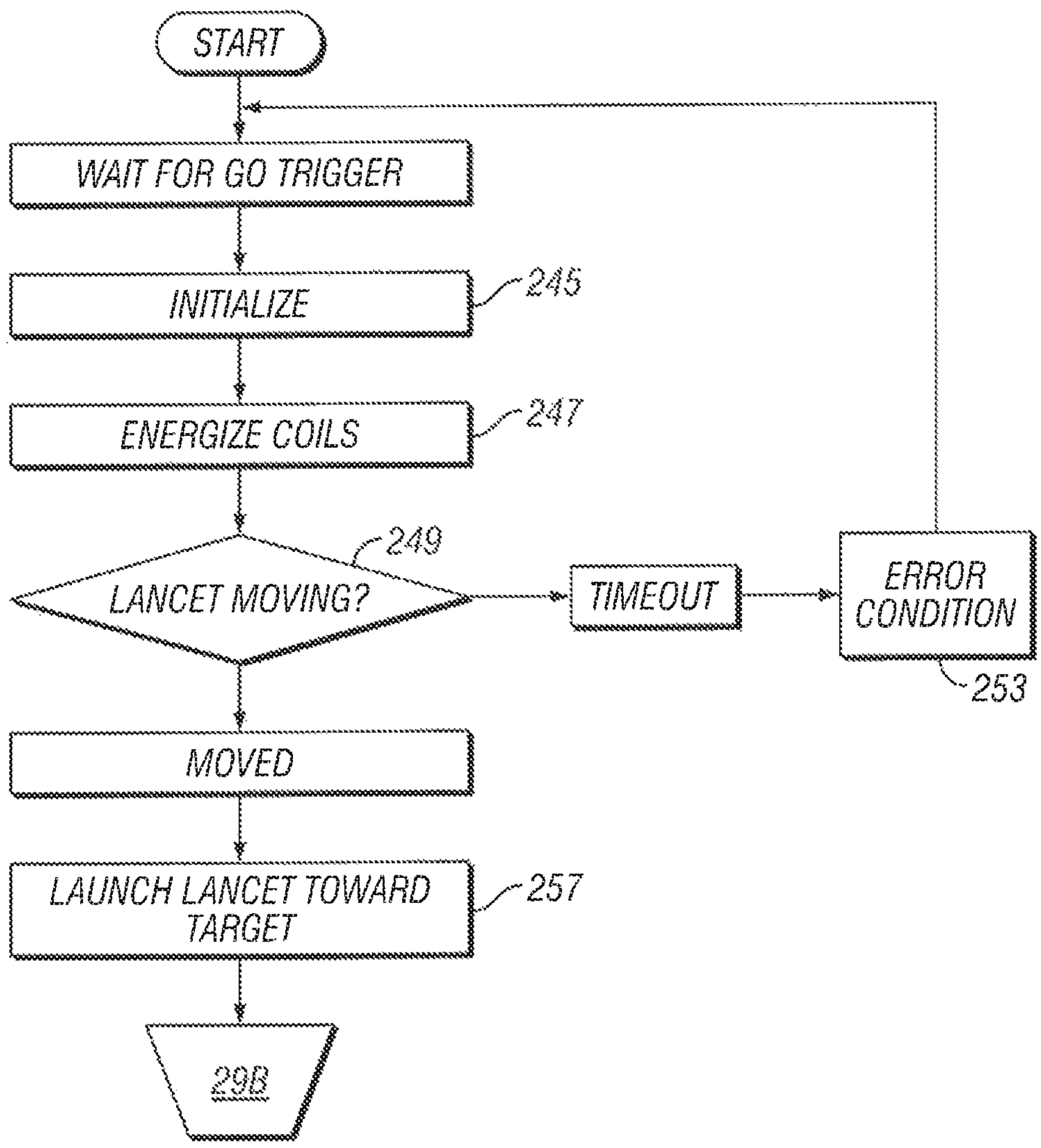
START
WAIT FOR GO TRIGGER
INITIALIZE
245
ENERGIZE COILS
247
249
LANCET MOVING?
TIMEOUT
ERROR CONDITION
253
MOVED
LAUNCH LANCET TOWARD TARGET
257
29B

FIG. 29A

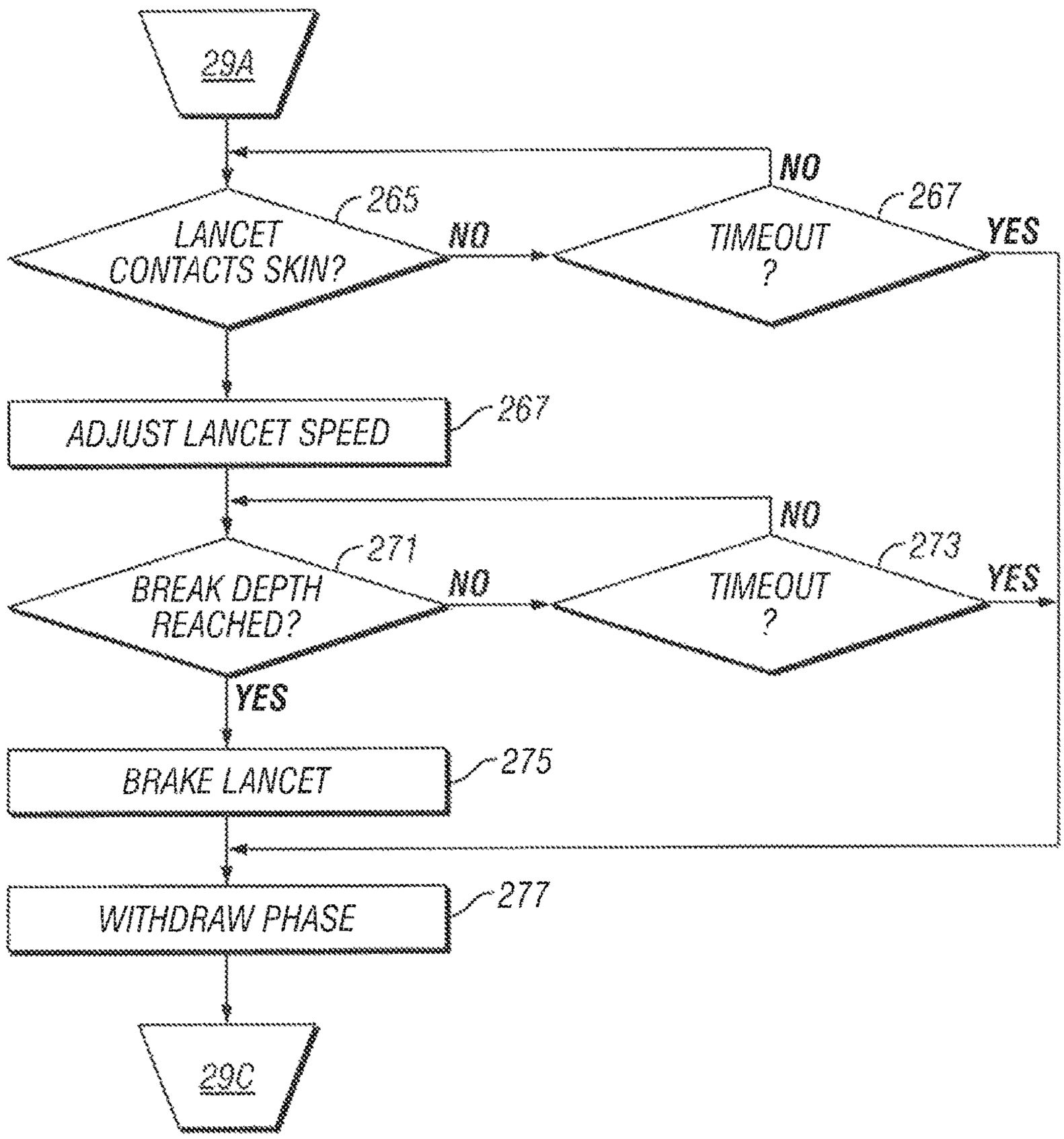
29A
LANCET CONTACTS SKIN?
265
NO
TIMEOUT ?
267
NO
YES
ADJUST LANCET SPEED
267
BREAK DEPTH REACHED?
271
NO
TIMEOUT ?
273
NO
YES
YES
BRAKE LANCET
275
WITHDRAW PHASE
277
29C

FIG. 29B

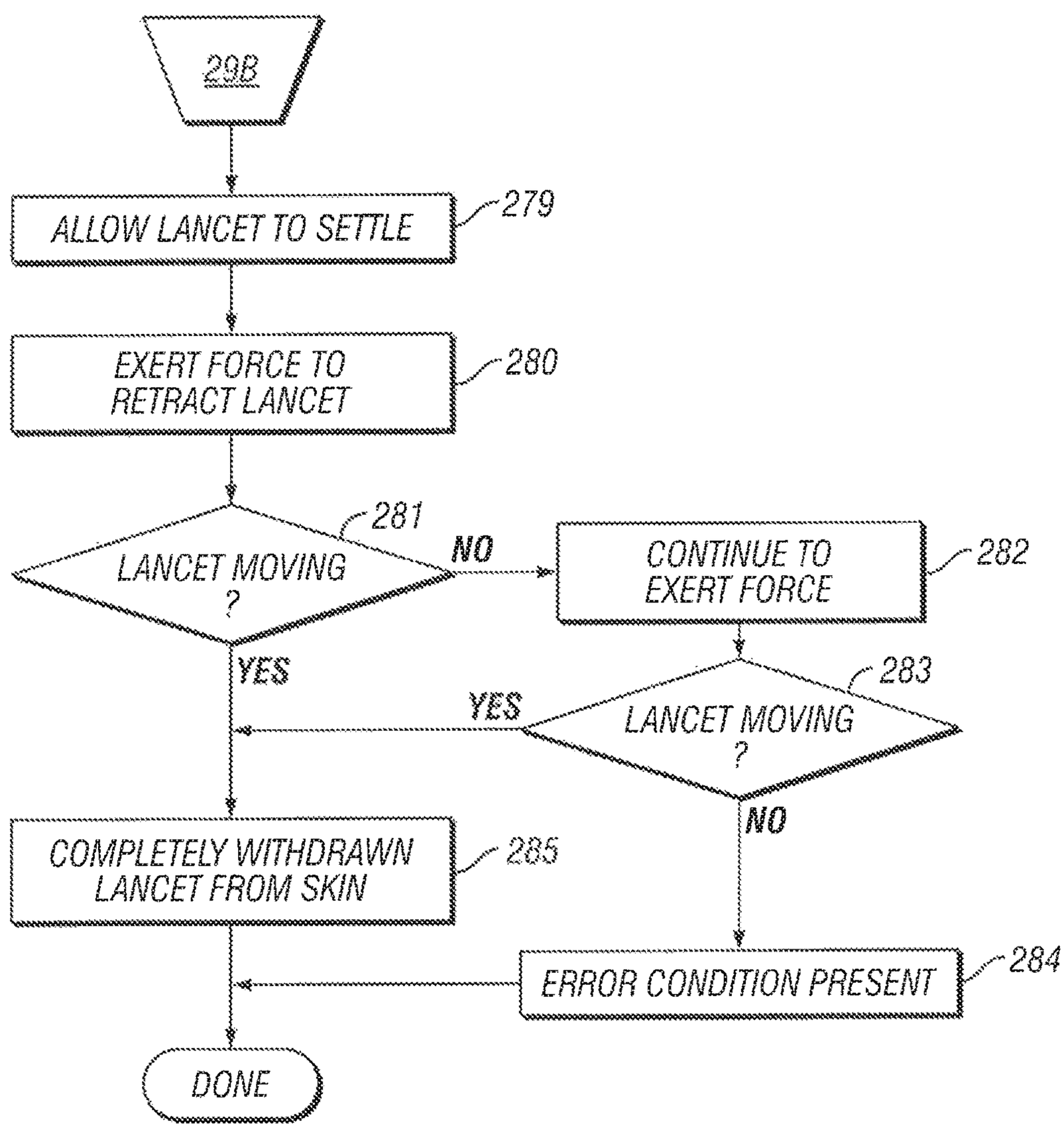
29B
ALLOW LANCET TO SETTLE
279
EXERT FORCE TO RETRACT LANCET
280
LANCET MOVING ?
281
NO
CONTINUE TO EXERT FORCE
282
YES
YES
LANCET MOVING ?
283
NO
COMPLETELY WITHDRAWN LANCET FROM SKIN
285
ERROR CONDITION PRESENT
284
DONE

FIG. 29C

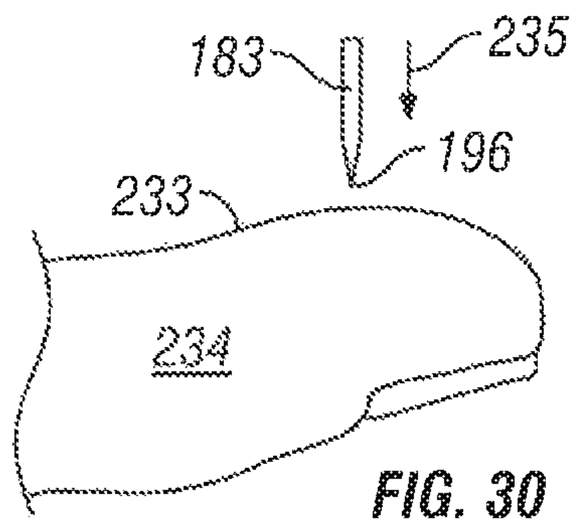

FIG. 30

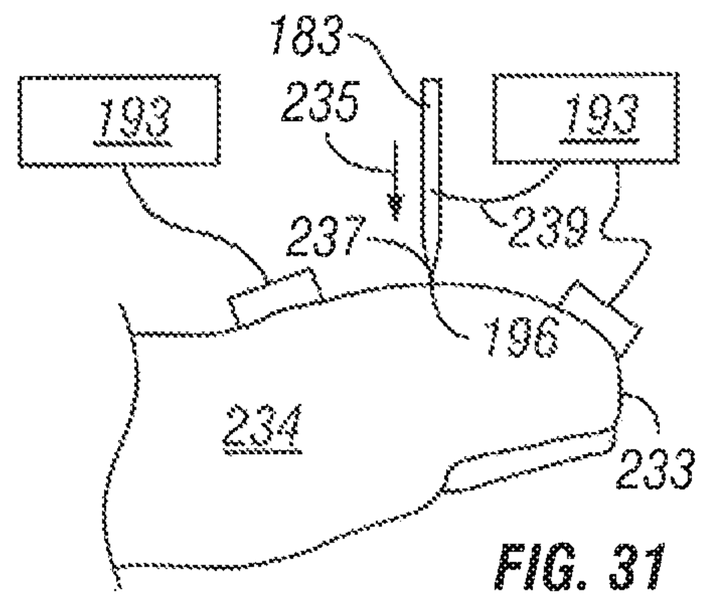

FIG. 31

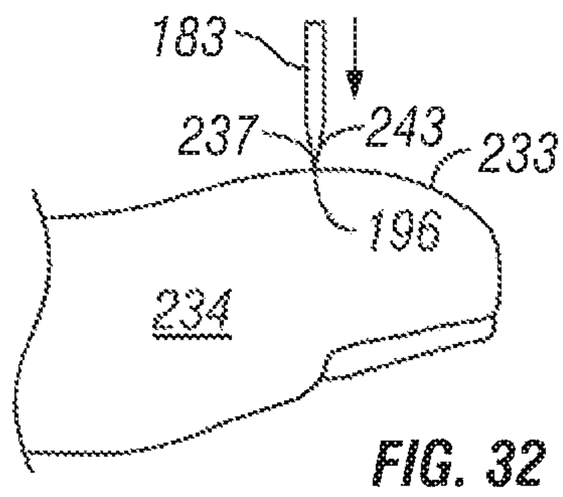

FIG. 32

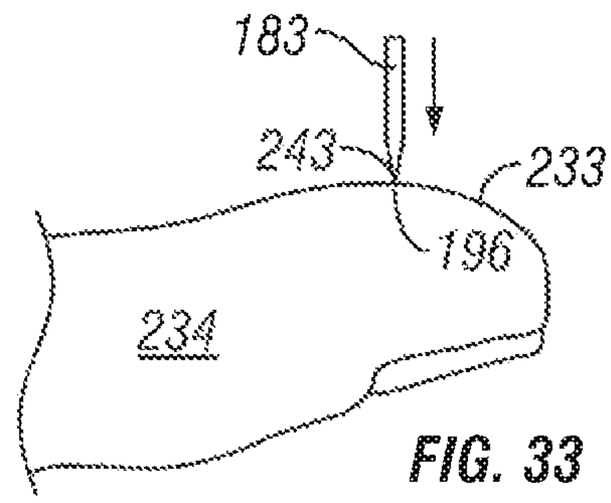

FIG. 33

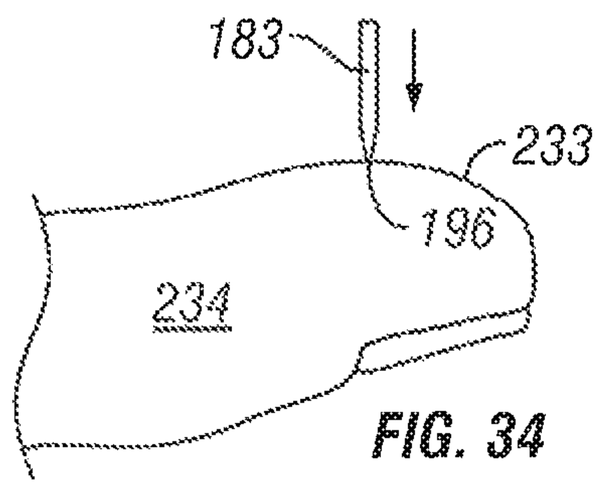

FIG. 34

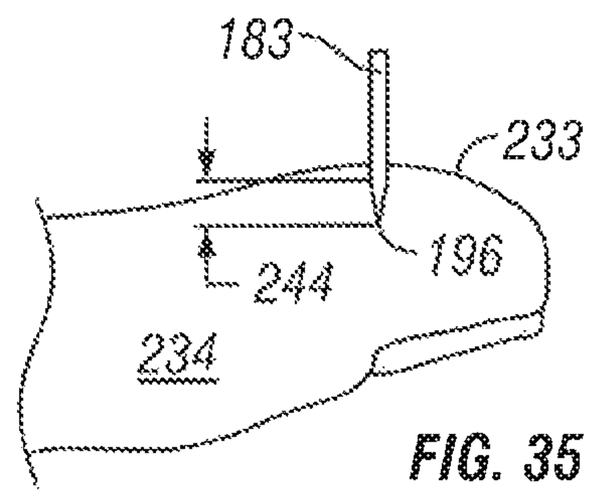

FIG. 35

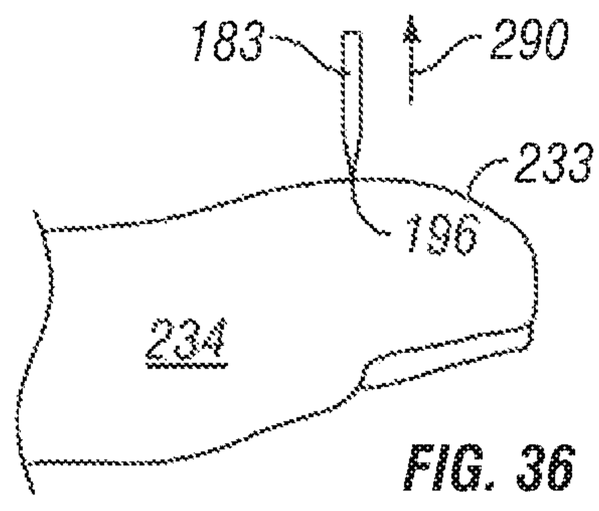

FIG. 36

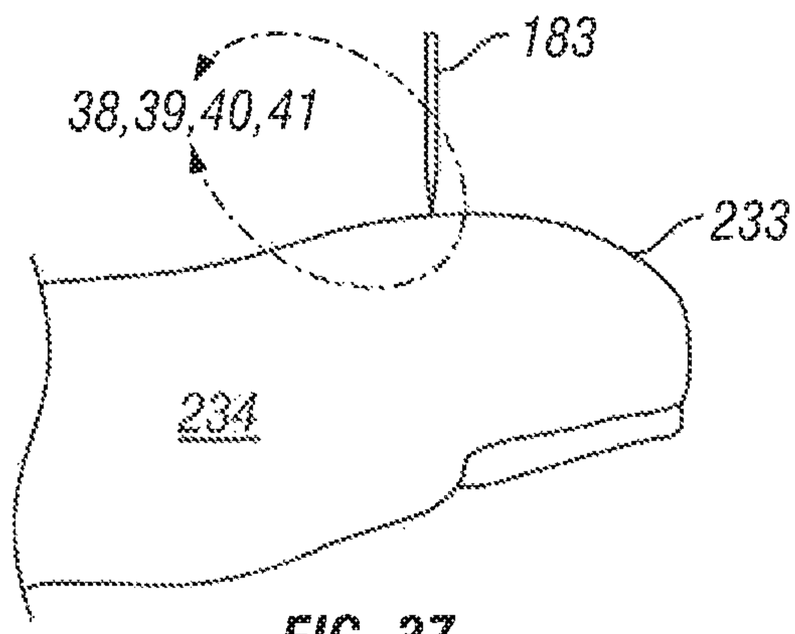

FIG. 37

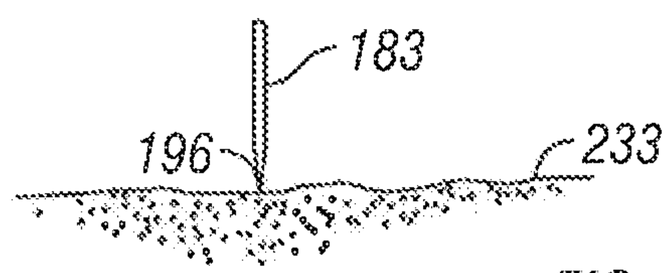

FIG. 38

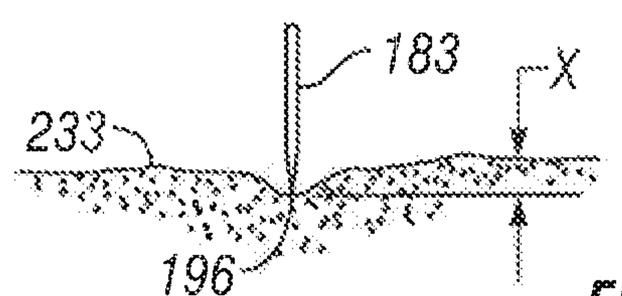

FIG. 39

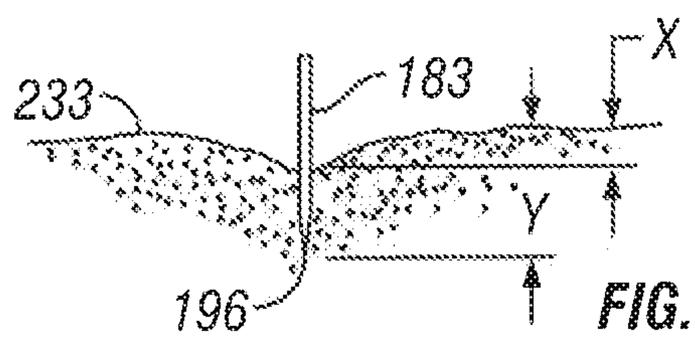

FIG. 40

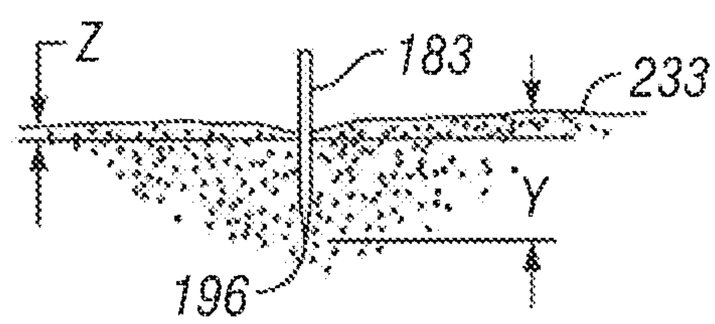

FIG. 41

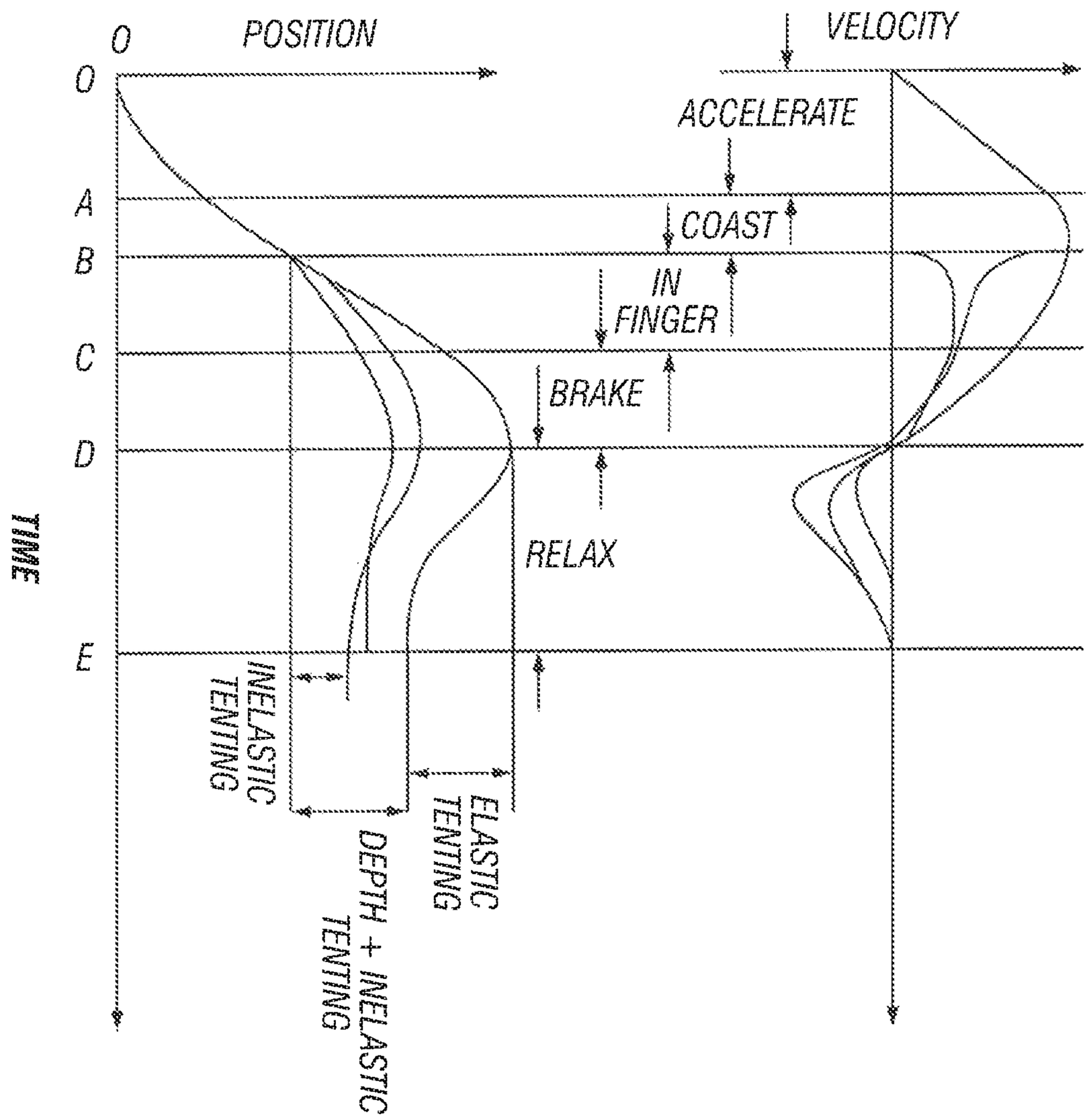
0
POSITION
0
VELOCITY
ACCELERATE
A
COAST
B
IN
FINGER
C
BRAKE
D
TIME
RELAX
E
INELASTIC
TENTING
ELASTIC
TENTING
DEPTH + INELASTIC
TENTING

FIG. 42

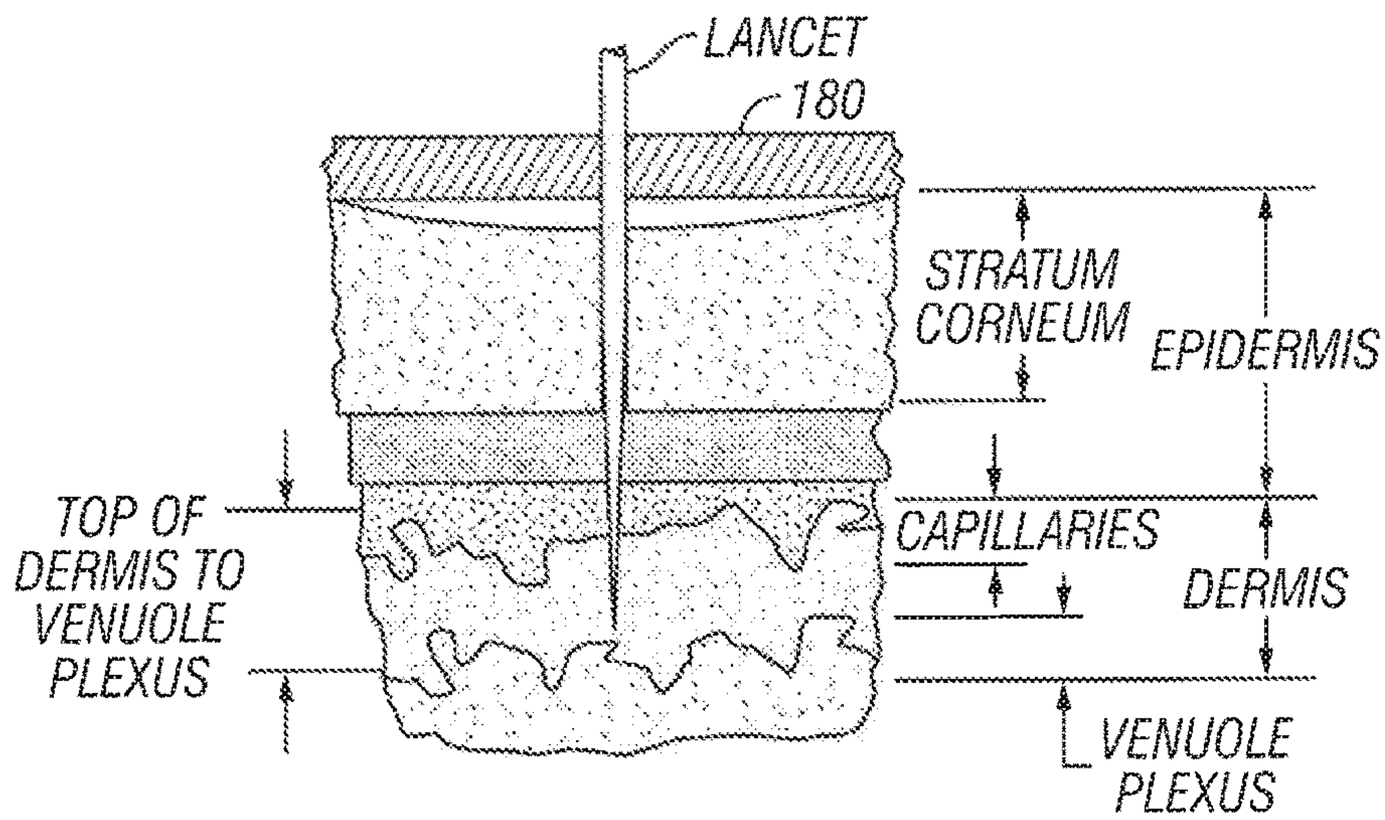

FIG. 43

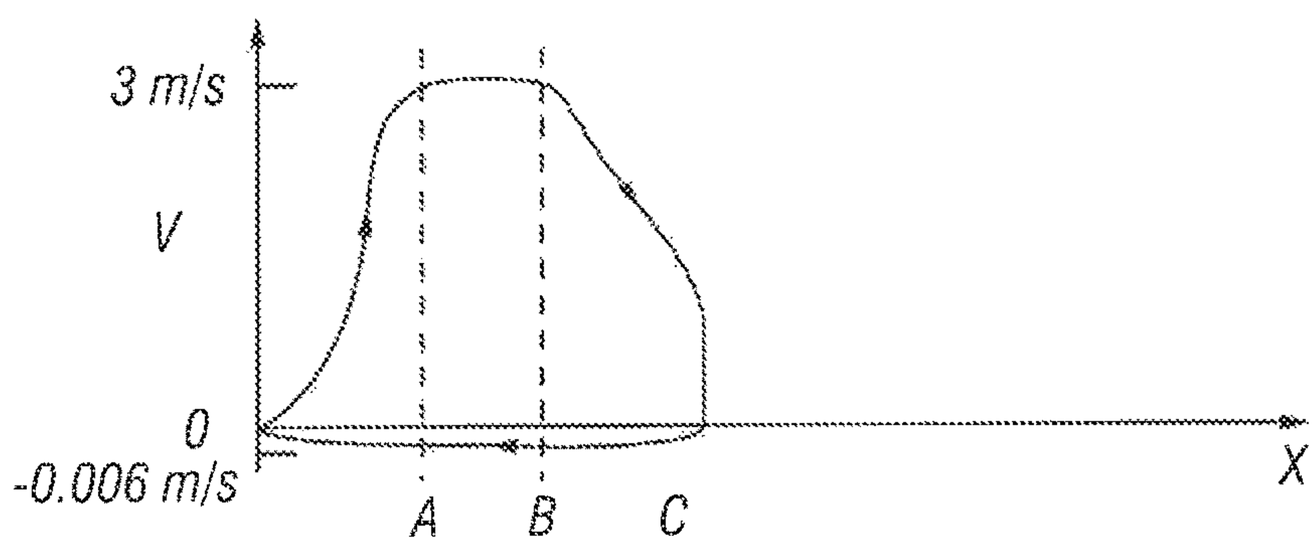

FIG. 44

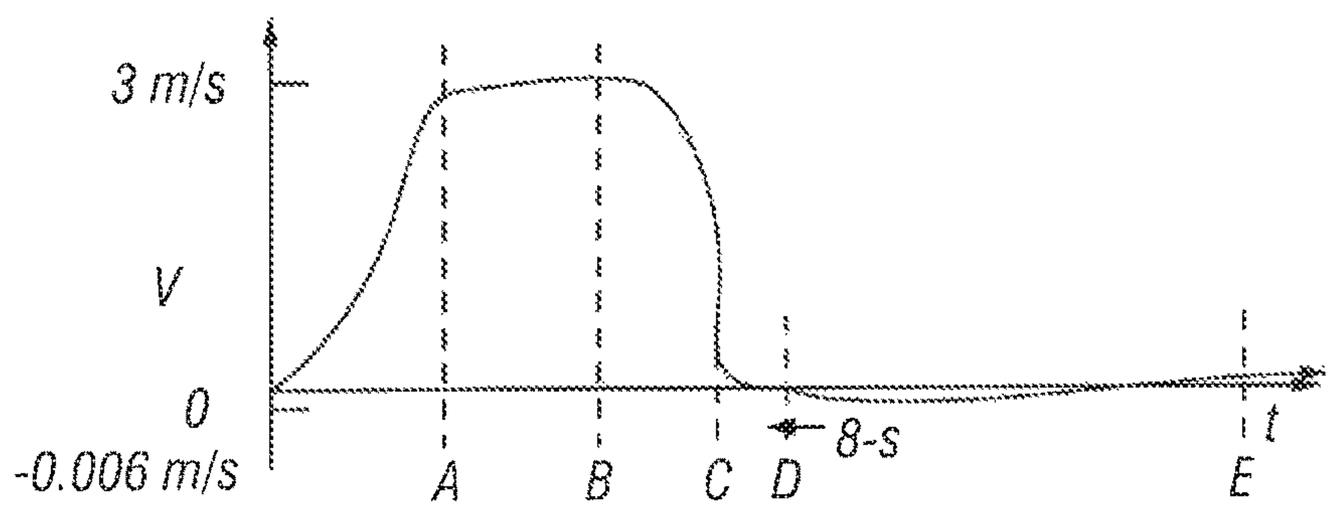

FIG. 45

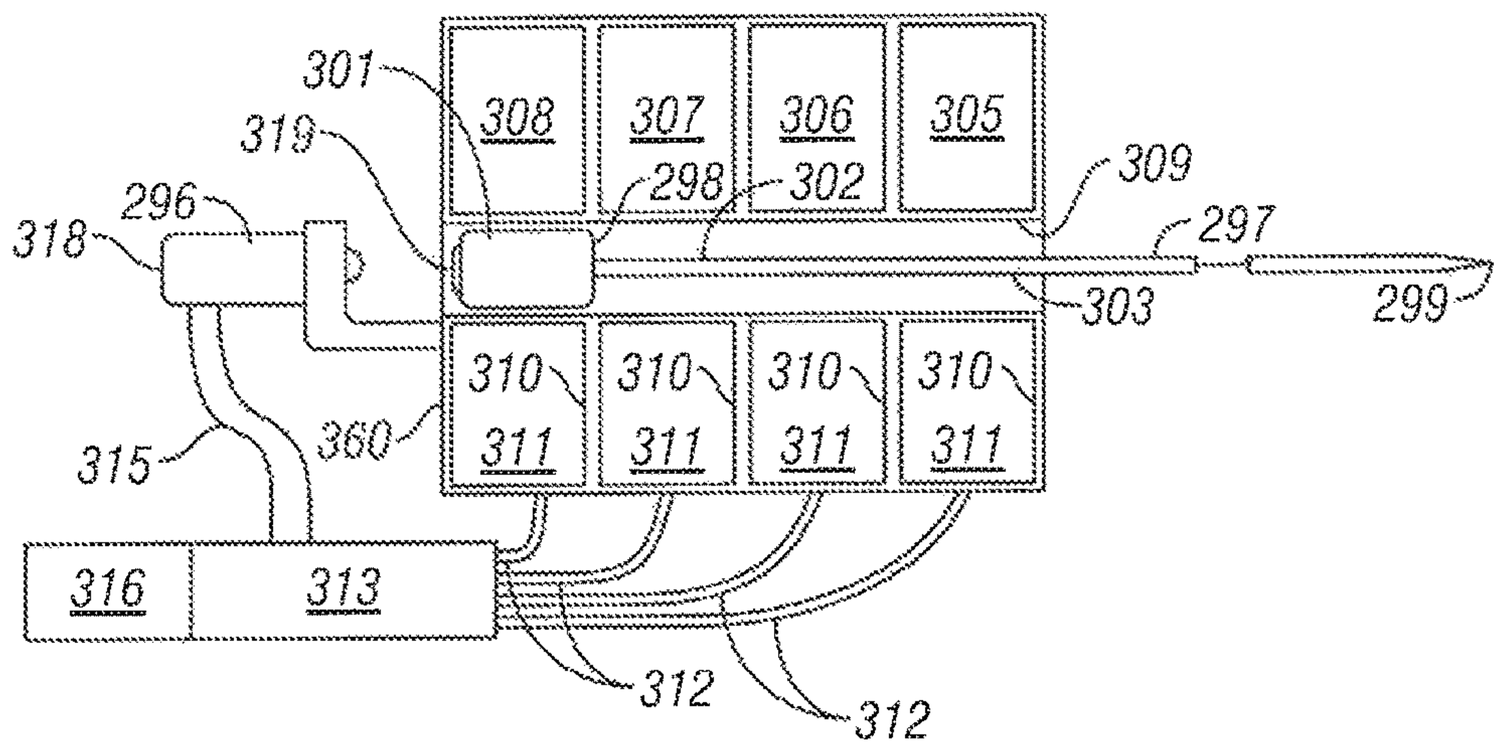
301
319
296
318
308
307
306
305
298
302
309
297
303
299
310
311
360
315
316
313
312
312

FIG. 46

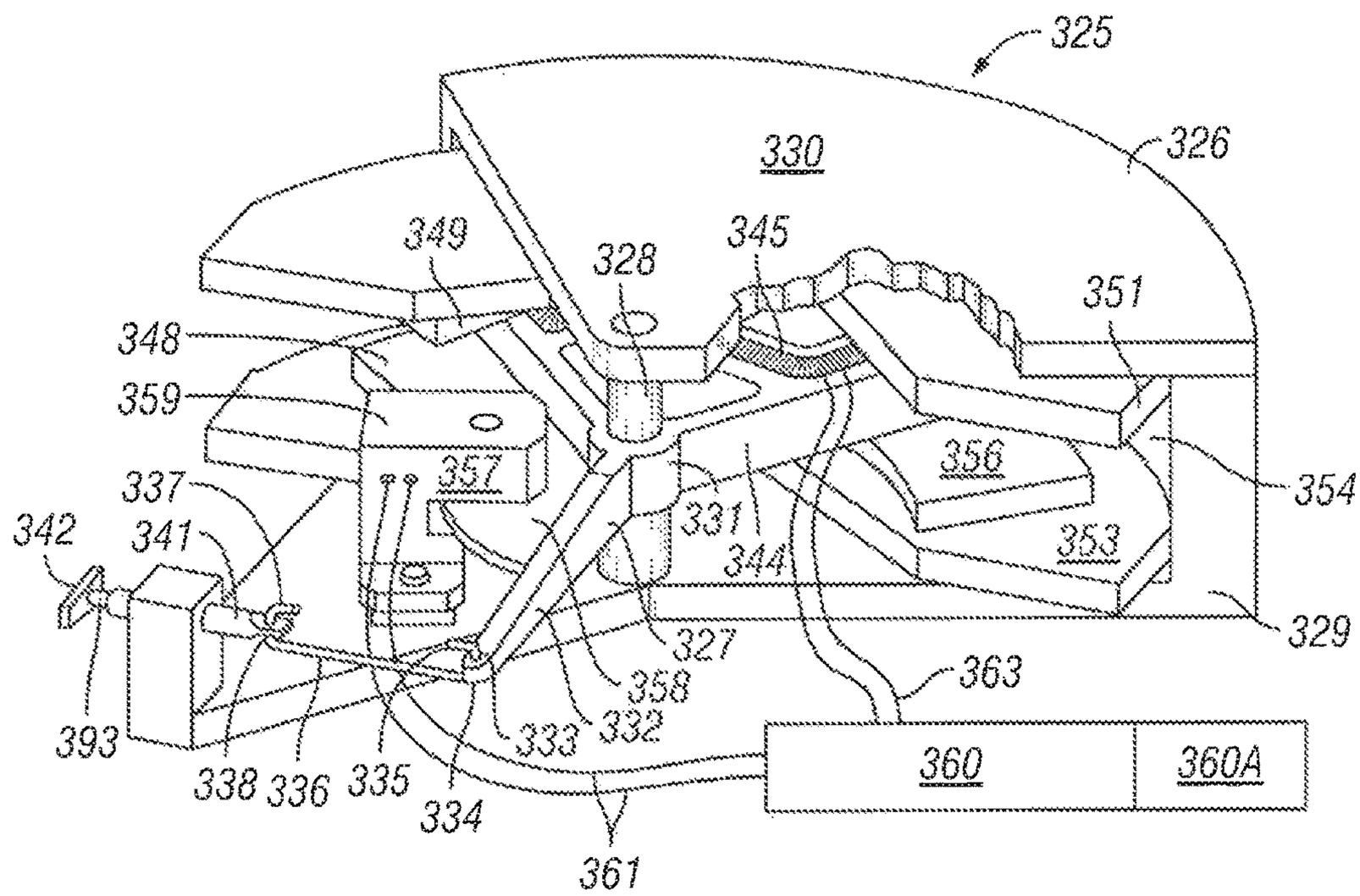
325
326
330
349
328
345
351
348
359
357
356
354
337
342
341
331
344
353
329
327
358
363
393
333
332
360
360A
338
336
335
334
361

FIG. 47

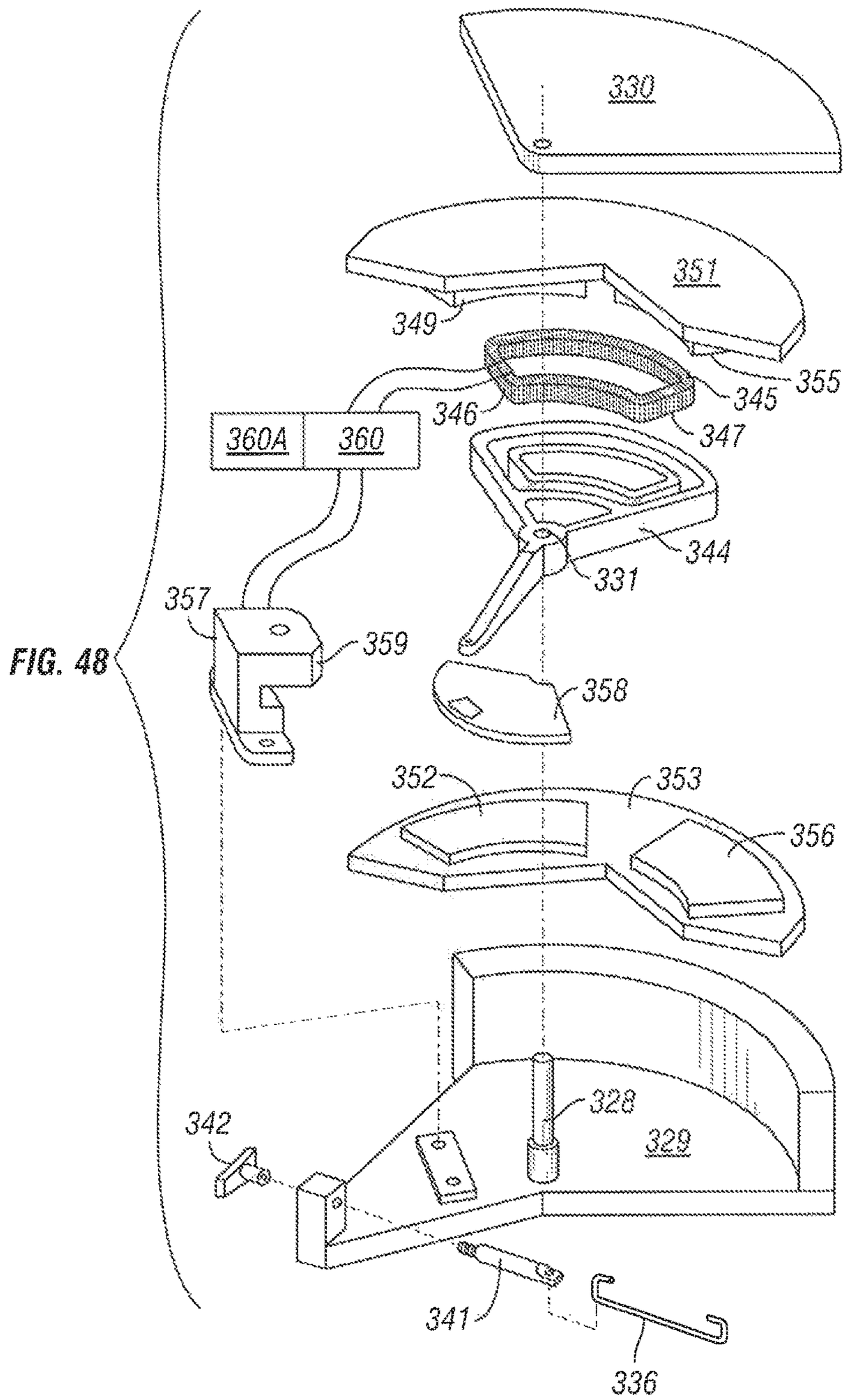
330
351
349
355
345
346
347
360A
360
344
331
357
359
358
352
353
356
328
329
342
341
336

FIG. 48

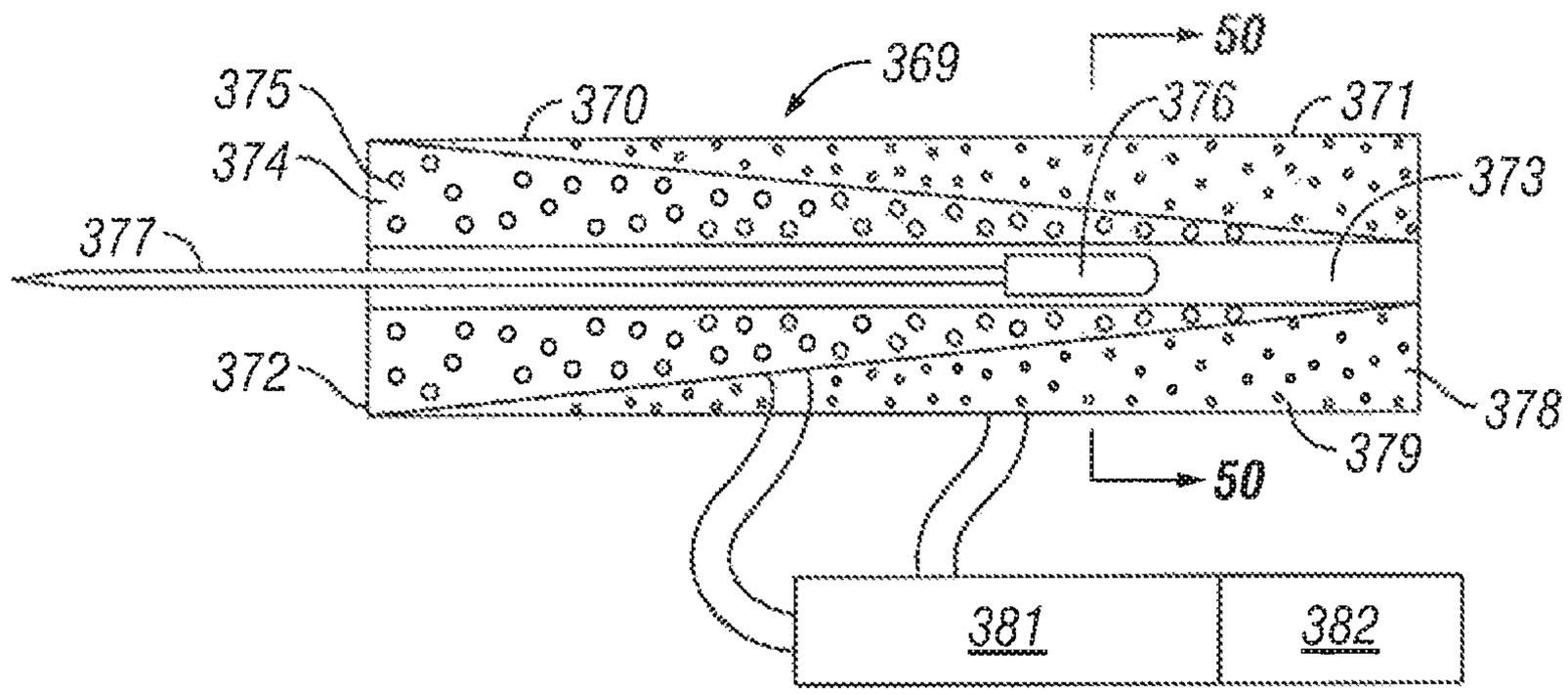
50
369
375
370
376
371
374
373
377
372
378
379
50
381
382

FIG. 49

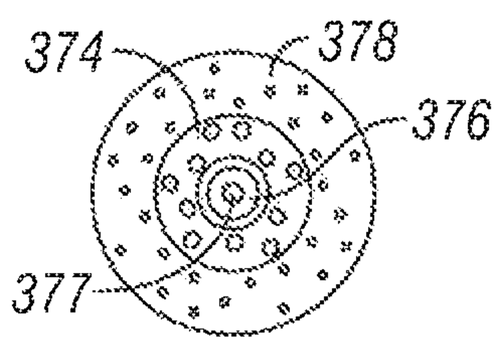
374
378
376
377

FIG. 50

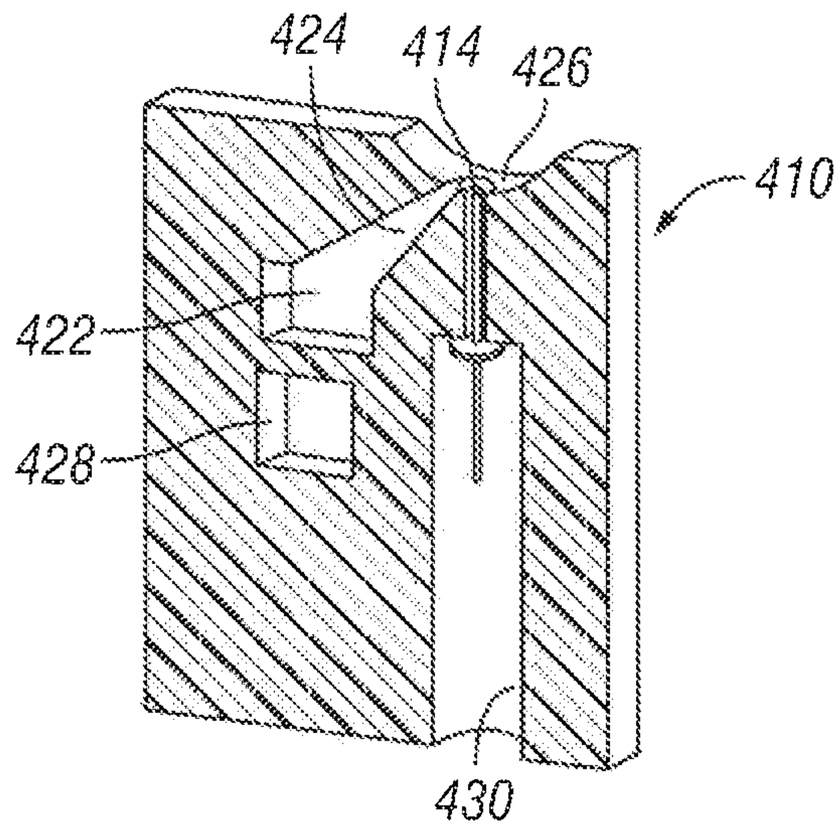
424
414
426
410
422
428
430

FIG. 51

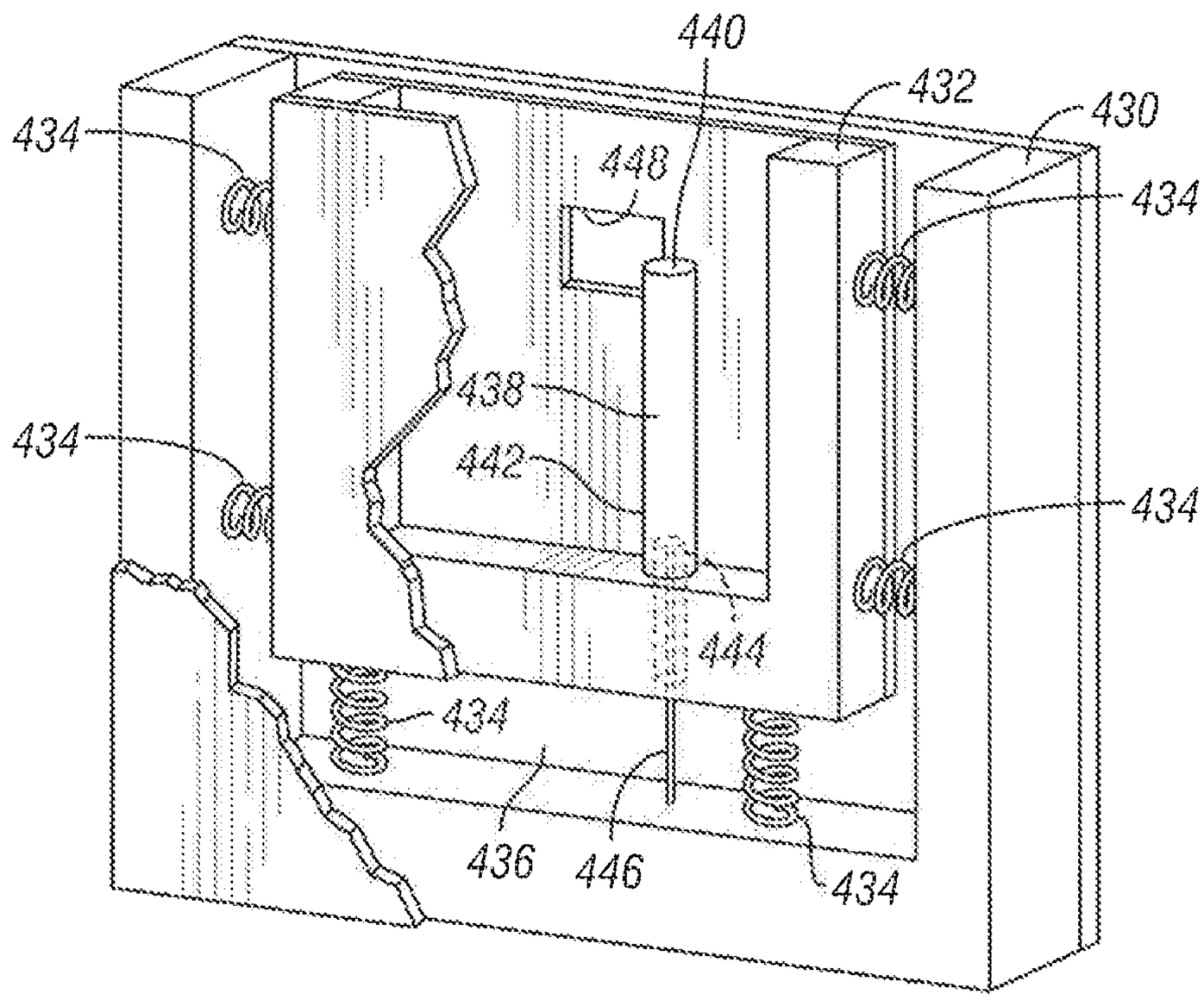
440
432
430
434
448
434
438
434
442
434
444
434
436
446
434

FIG. 52

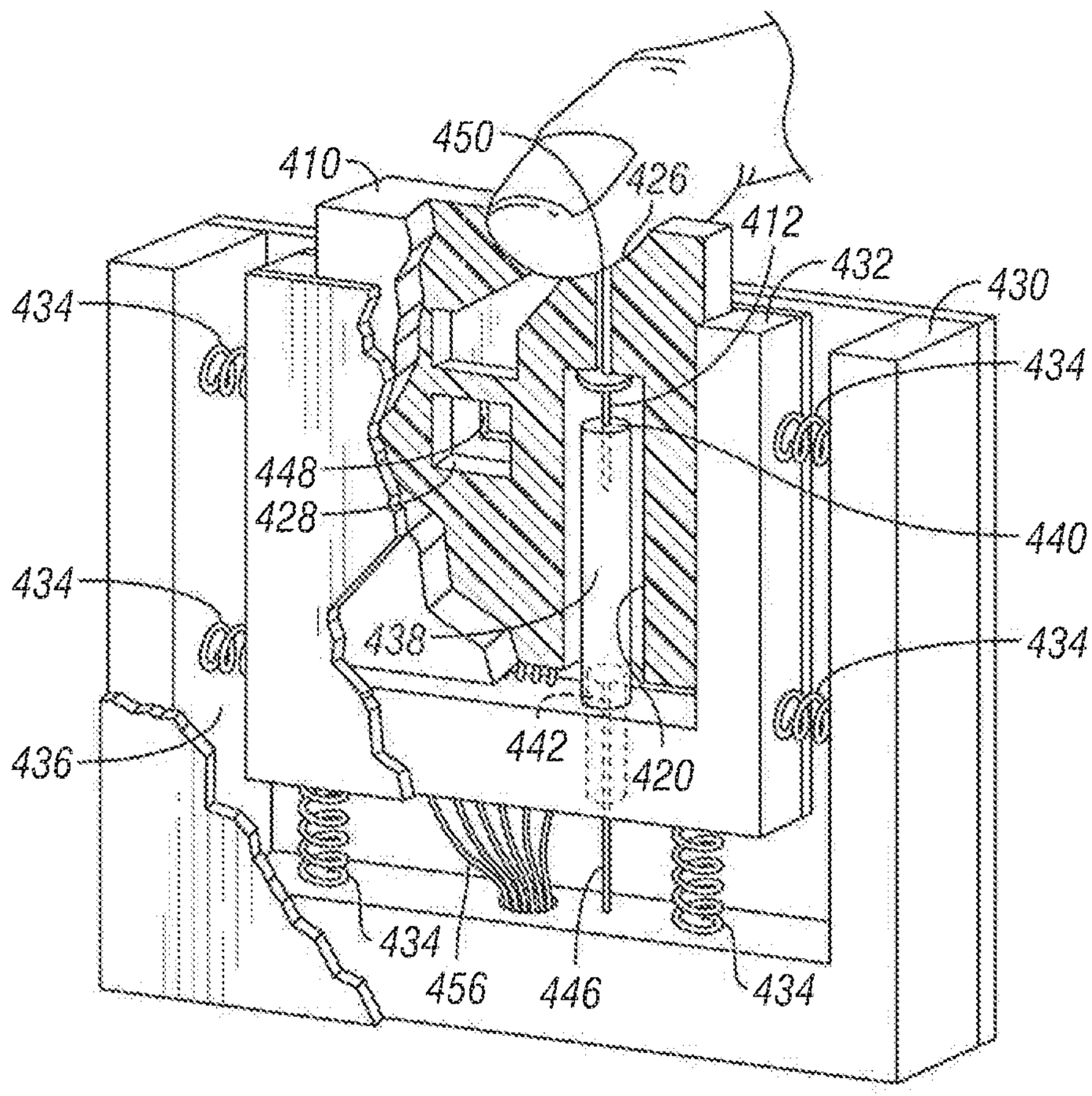
450
410
426
412
432
430
434
434
448
428
440
434
438
434
442
420
436
434
456
446
434

FIG. 53

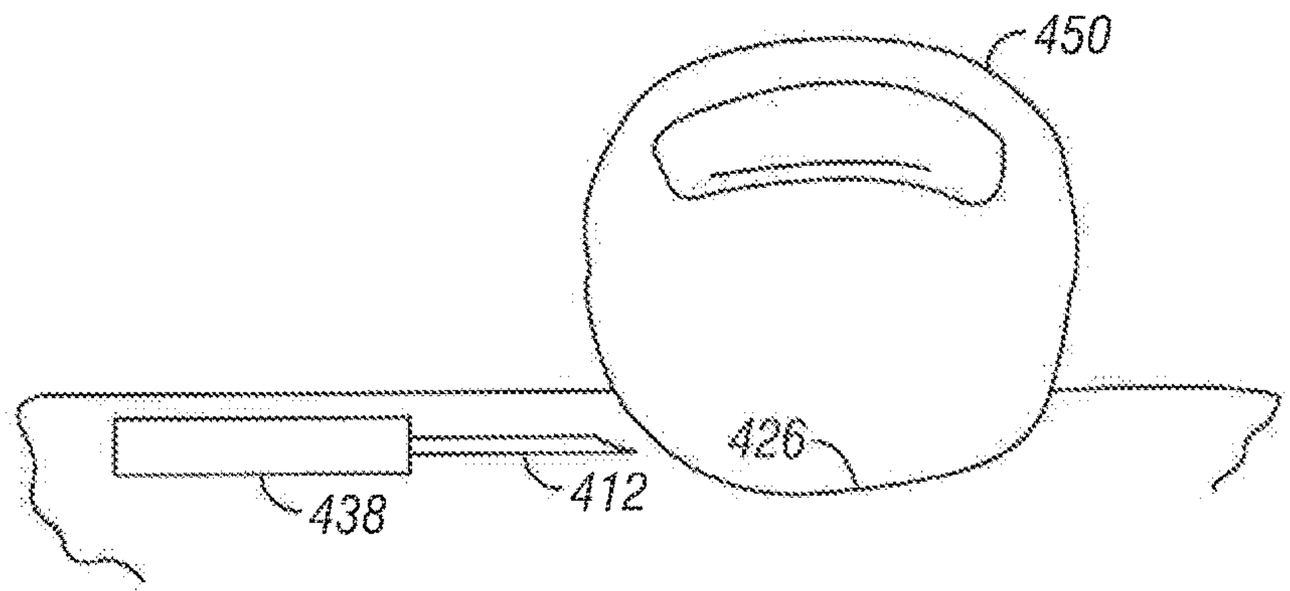

FIG. 54

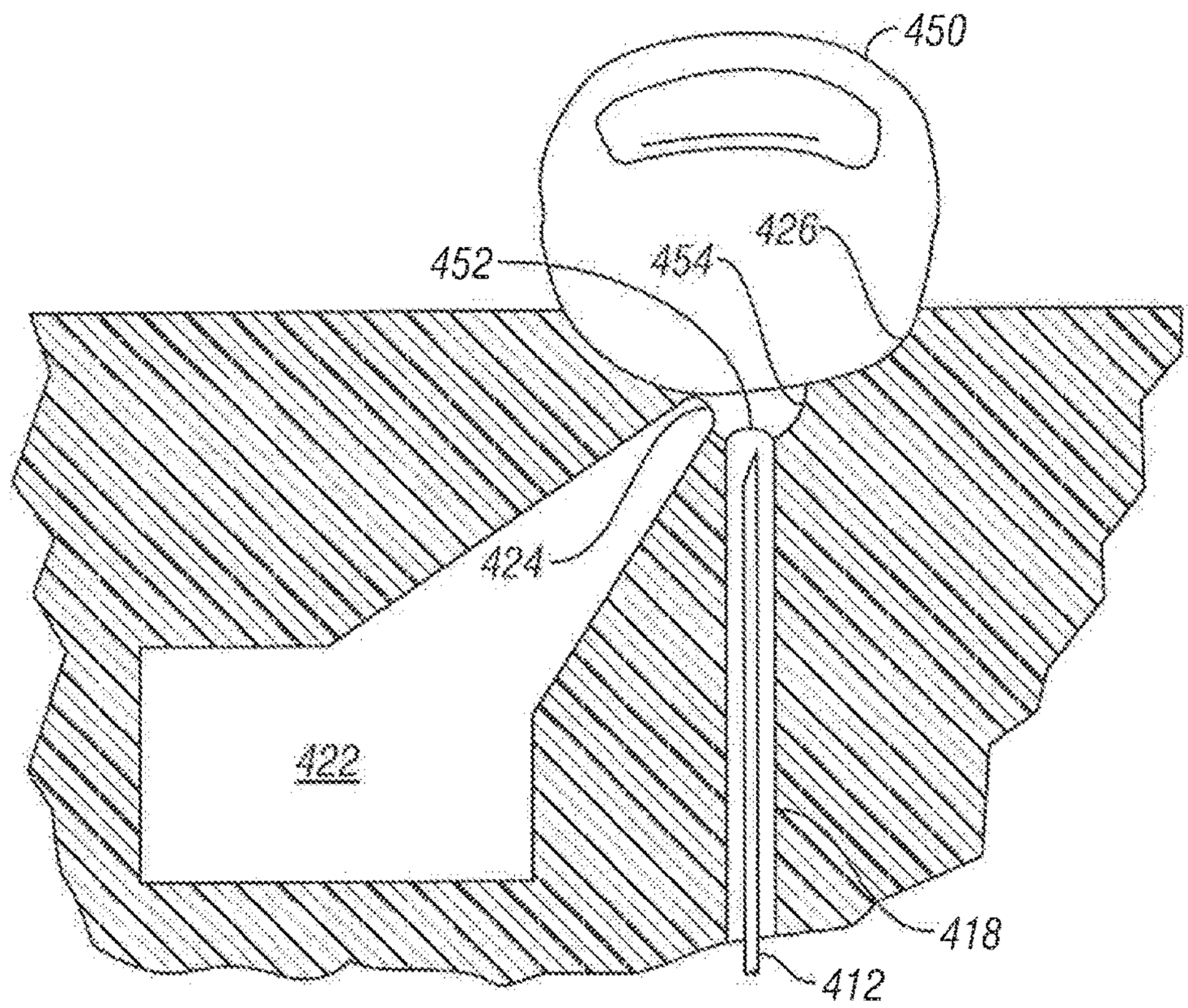

FIG. 55

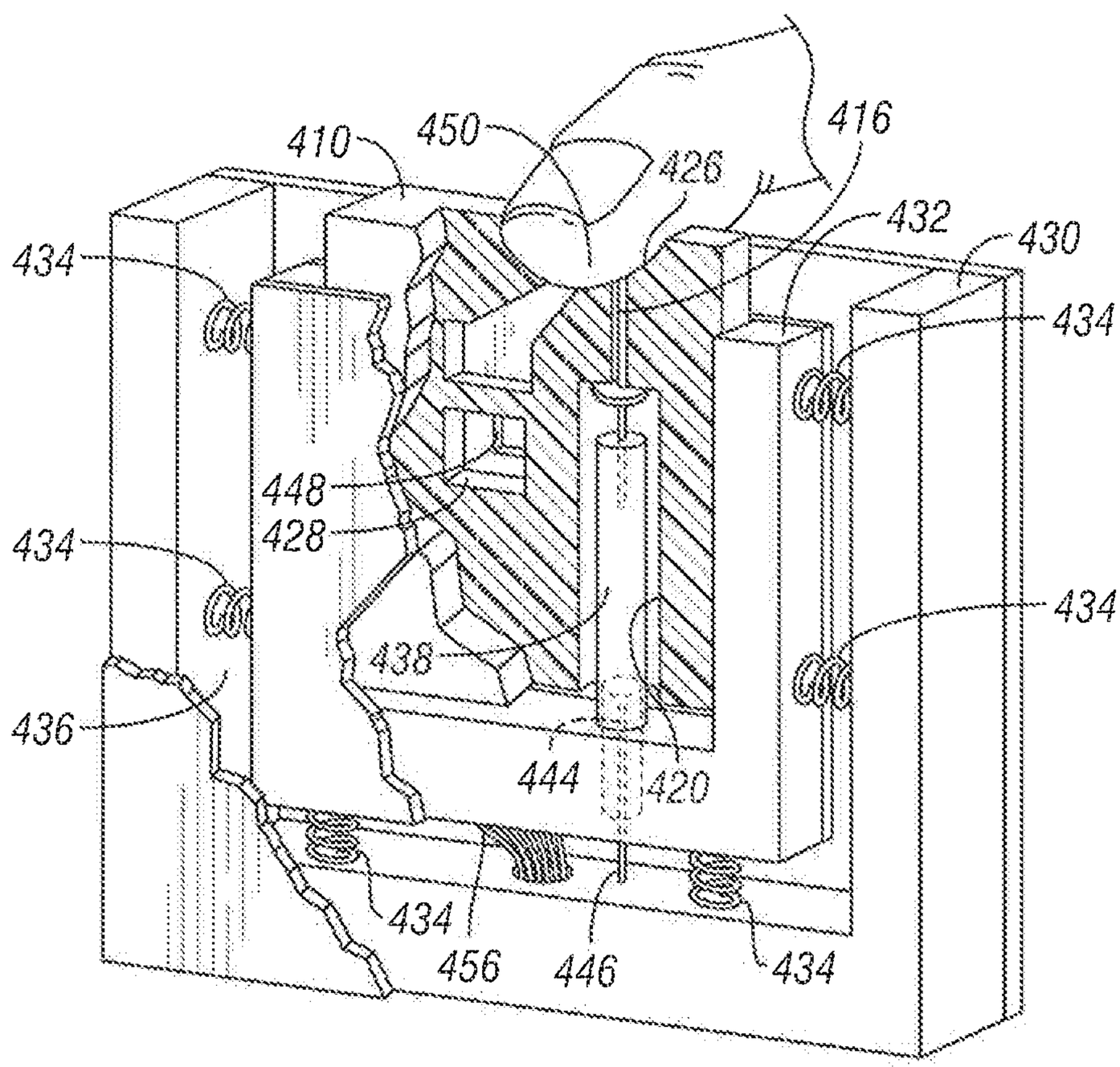
410
450
426
416
432
430
434
434
448
428
434
434
438
436
444
420
434
456
446
434

FIG. 56

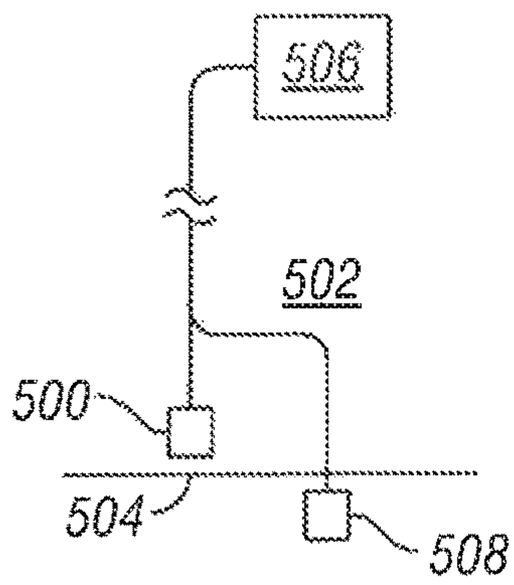

FIG. 57

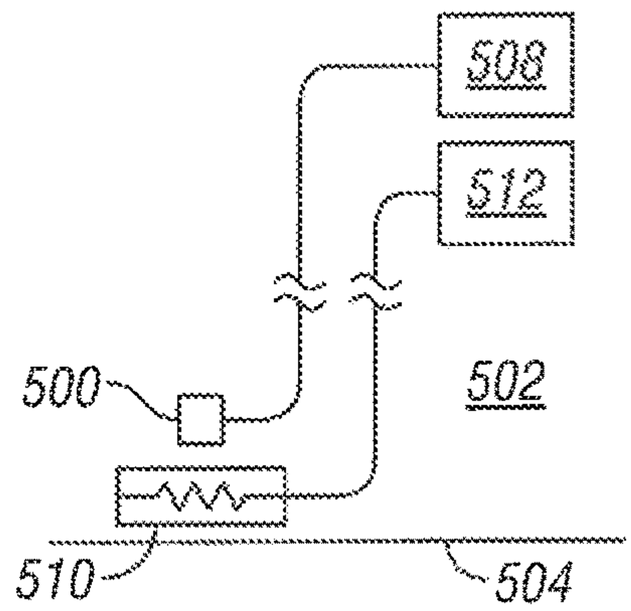

FIG. 58

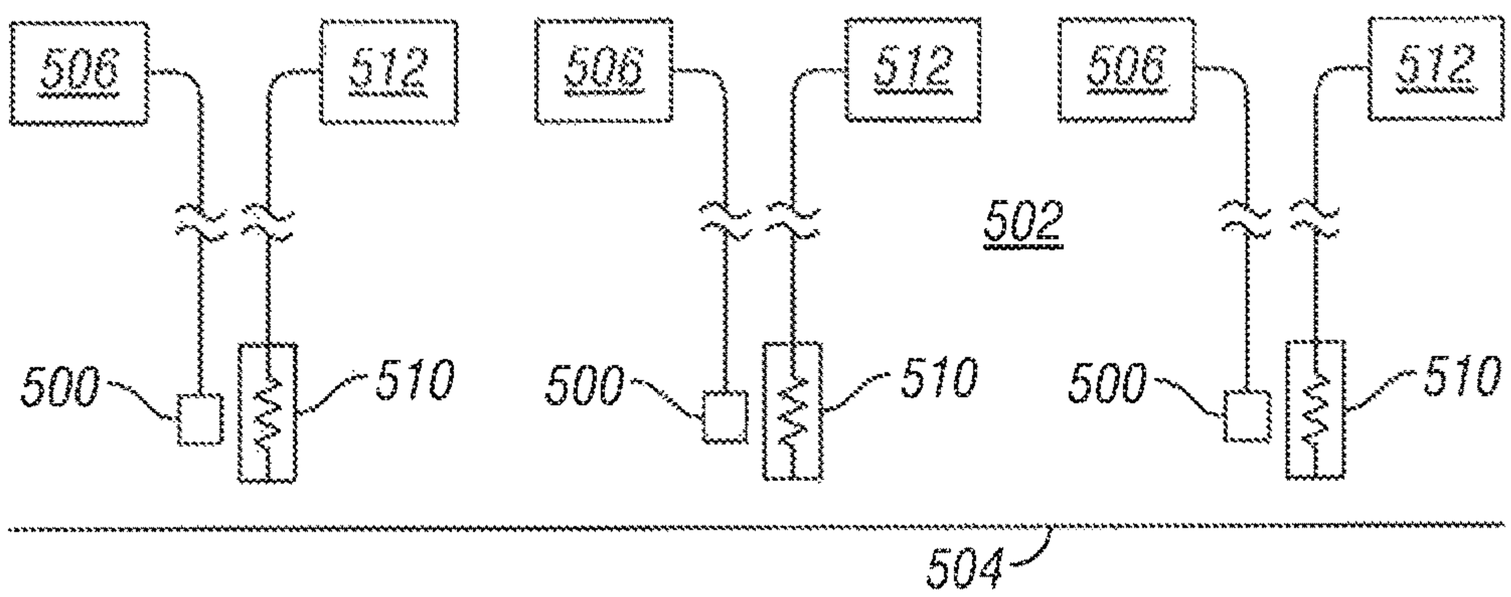

FIG. 59

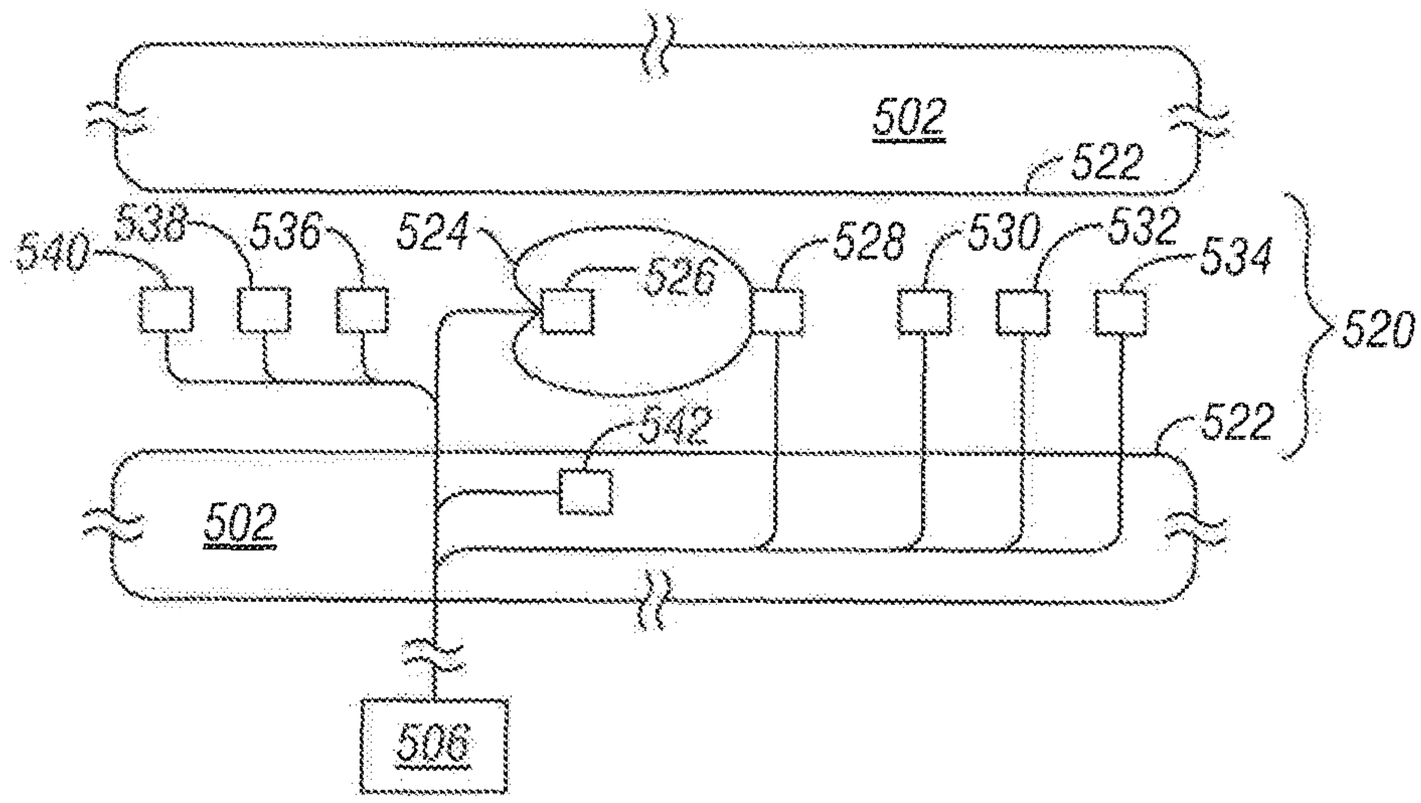
502
522
540
538
536
524
526
528
530
532
534
520
542
522
502
506

FIG. 60

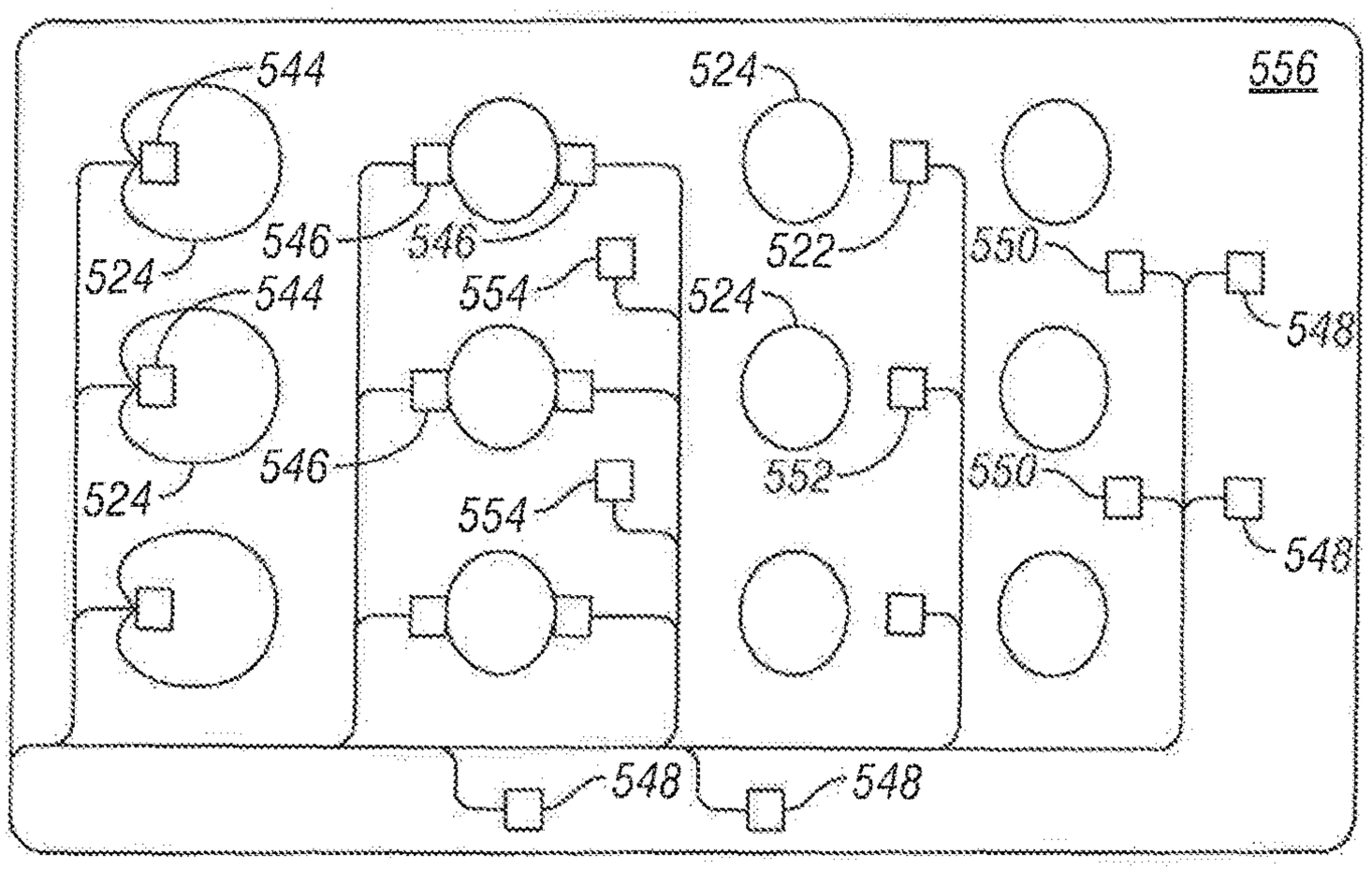
544
524
556
546
546
522
550
524
544
554
524
548
546
552
550
524
554
548
548
548

FIG. 61

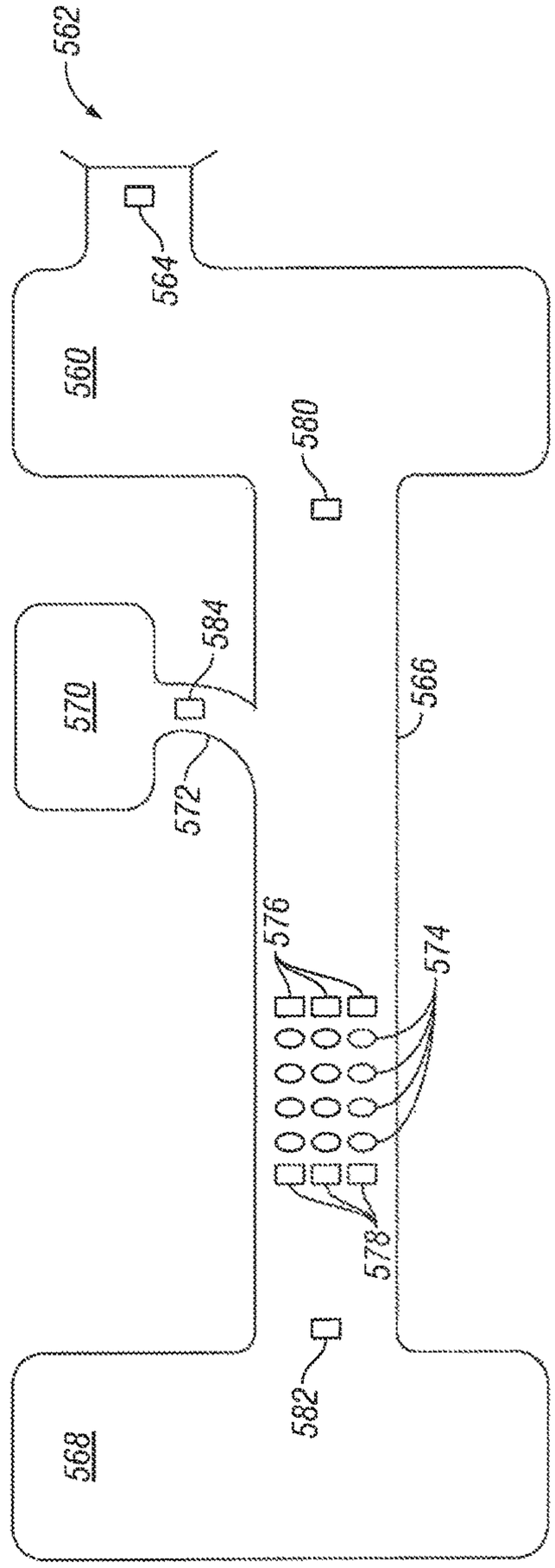

FIG. 62

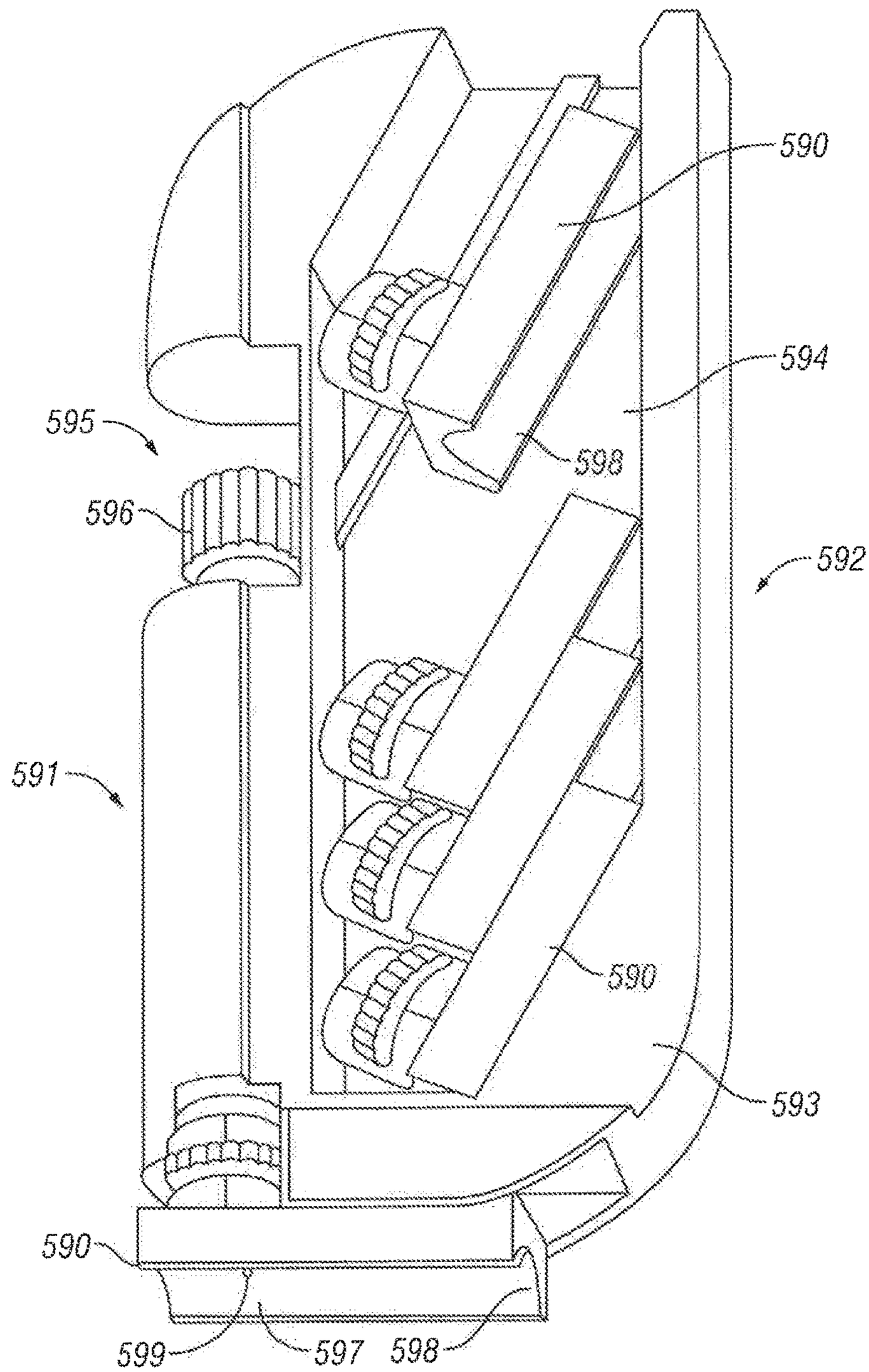

FIG. 63

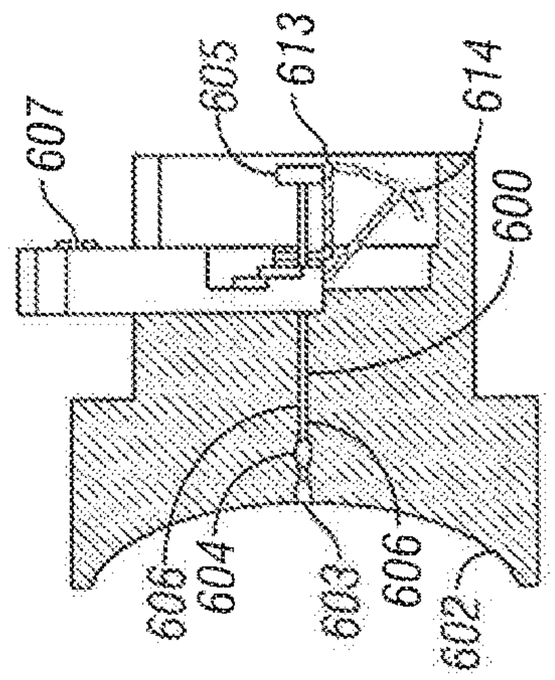

FIG. 65

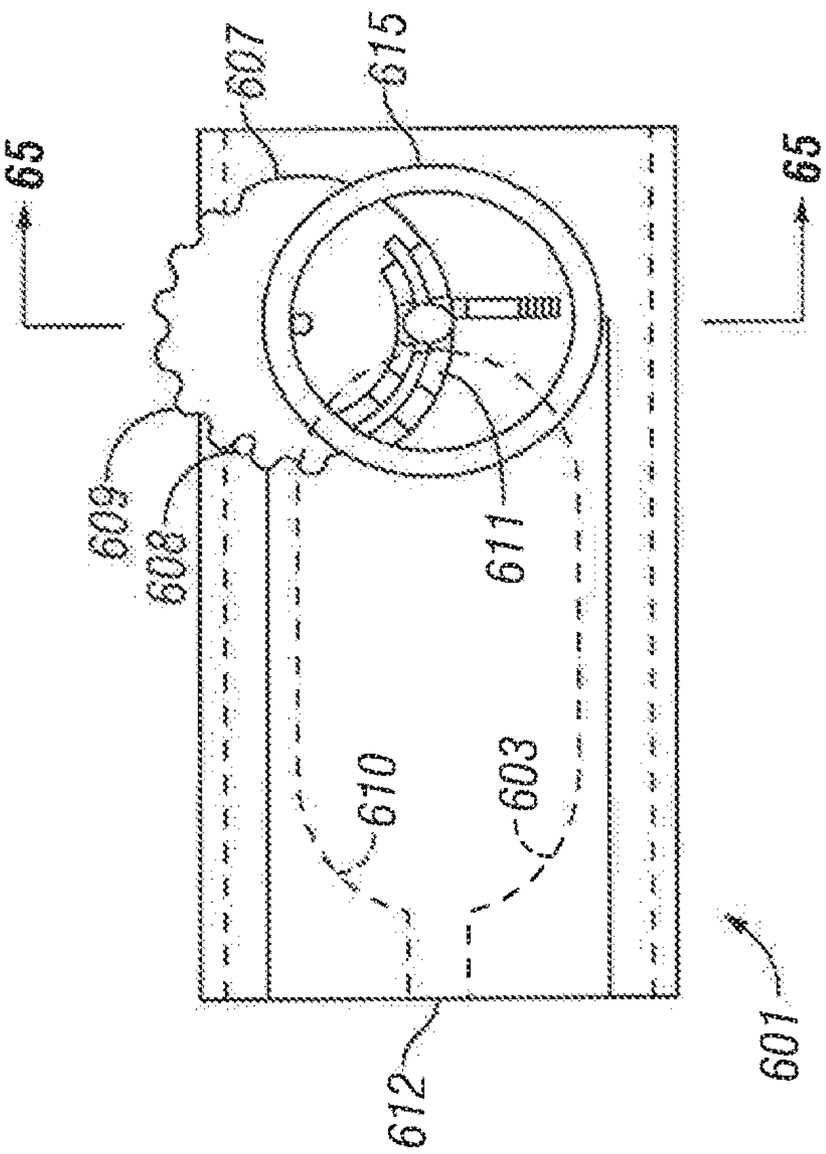

FIG. 64

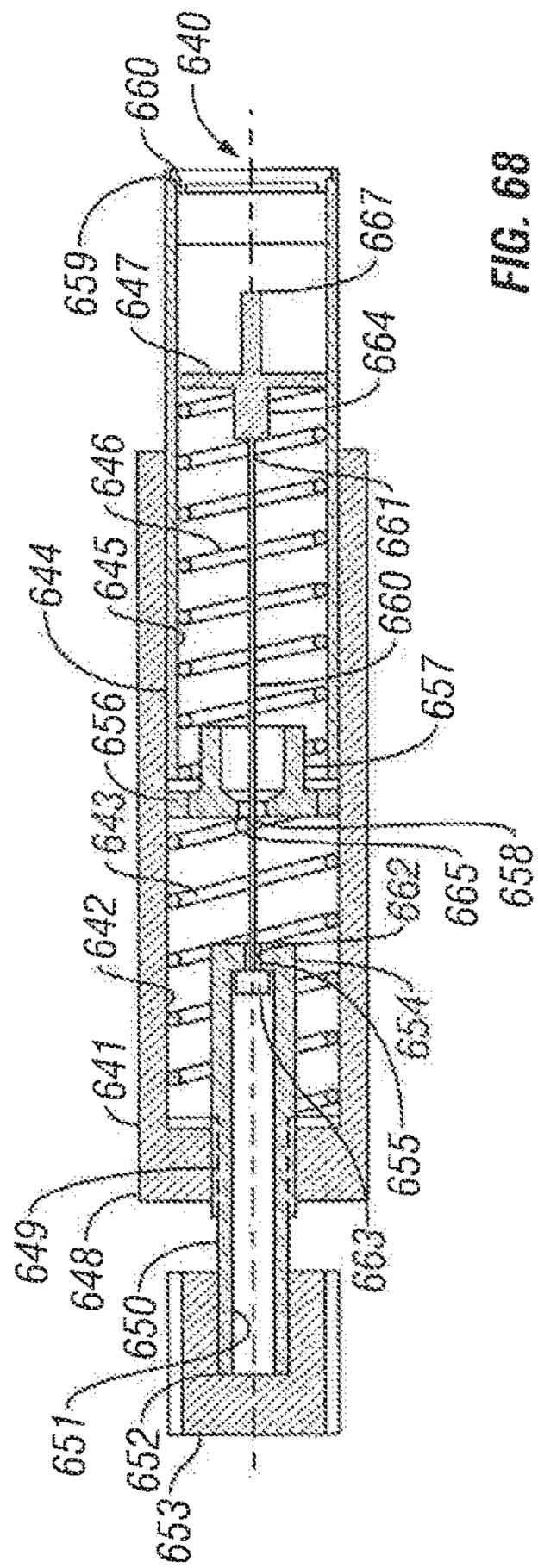

FIG. 68

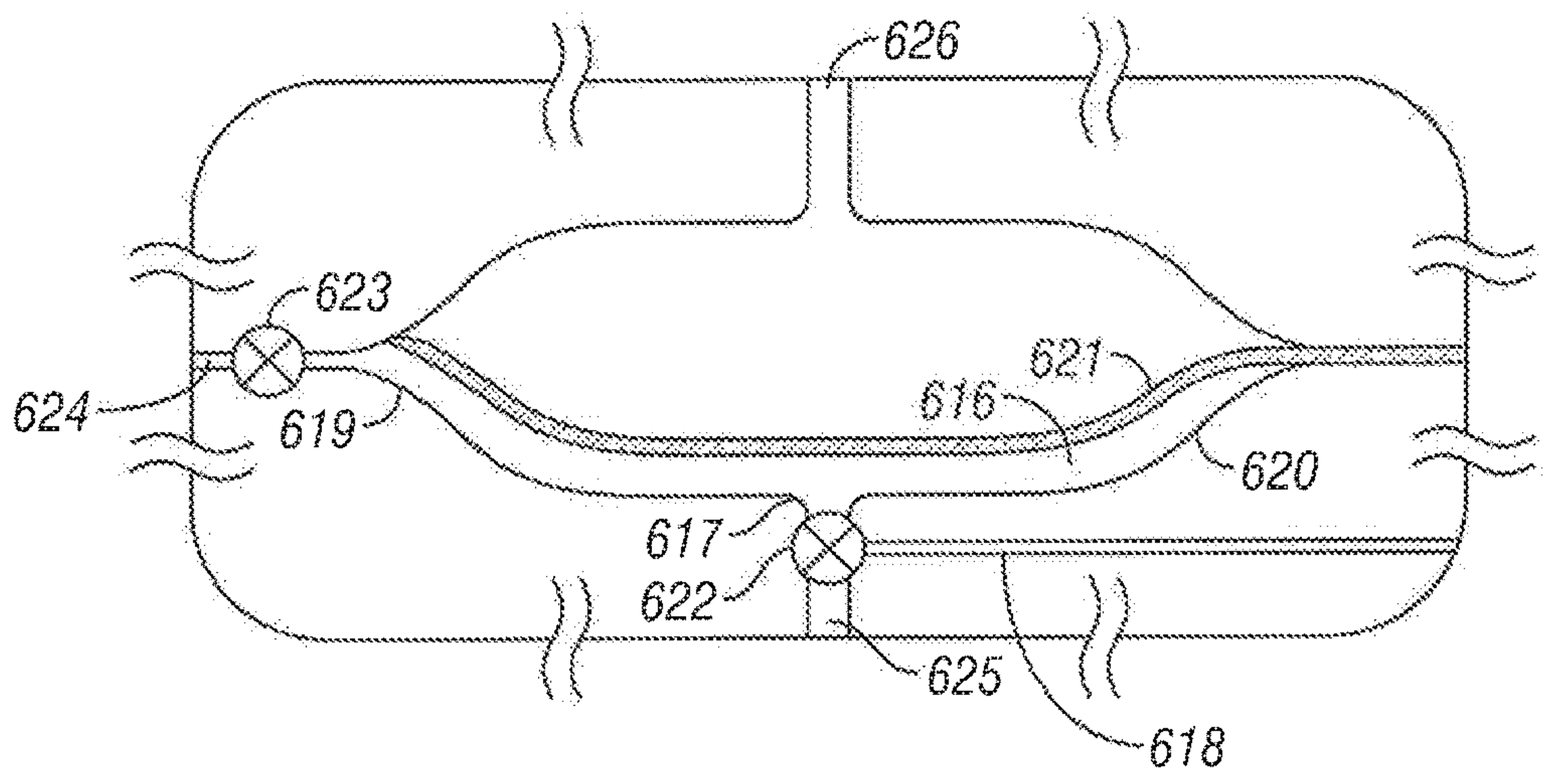
626
623
624
619
621
616
620
617
622
625
618

FIG. 66

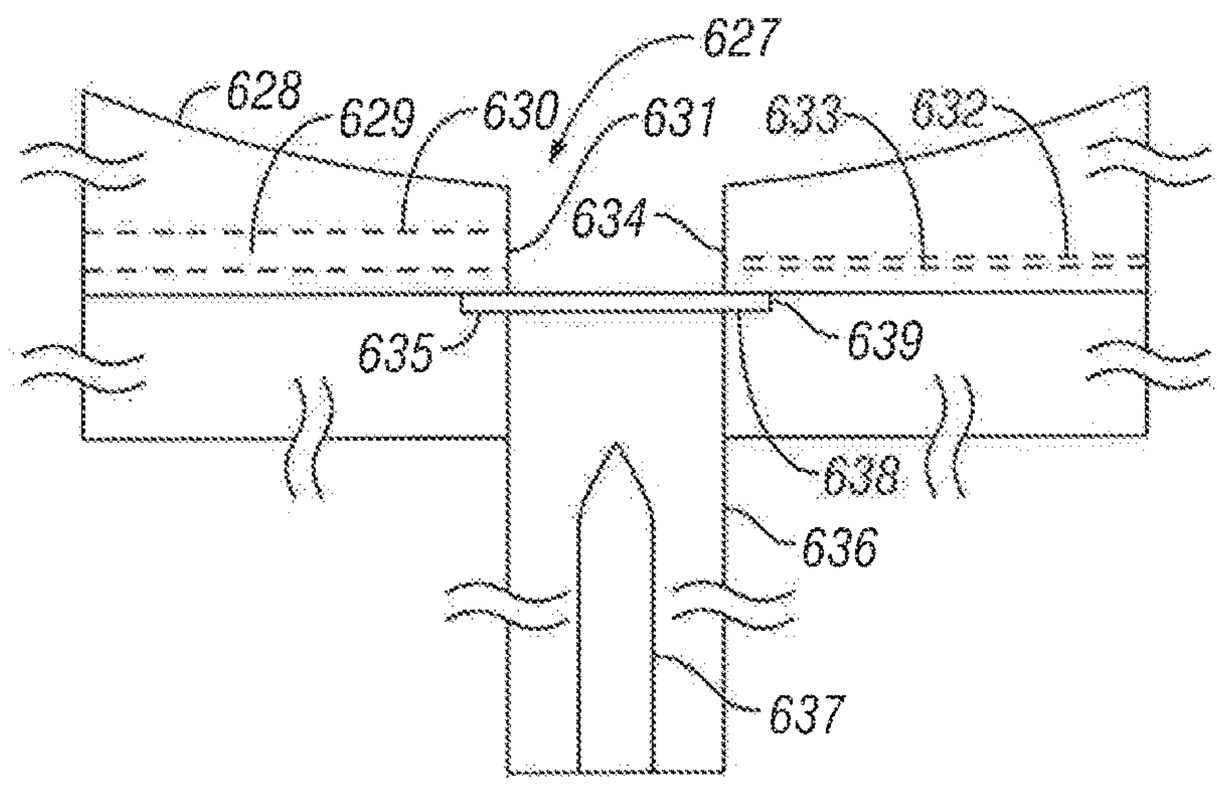
627
628
629
630
631
633
632
634
635
639
638
636
637

FIG. 67

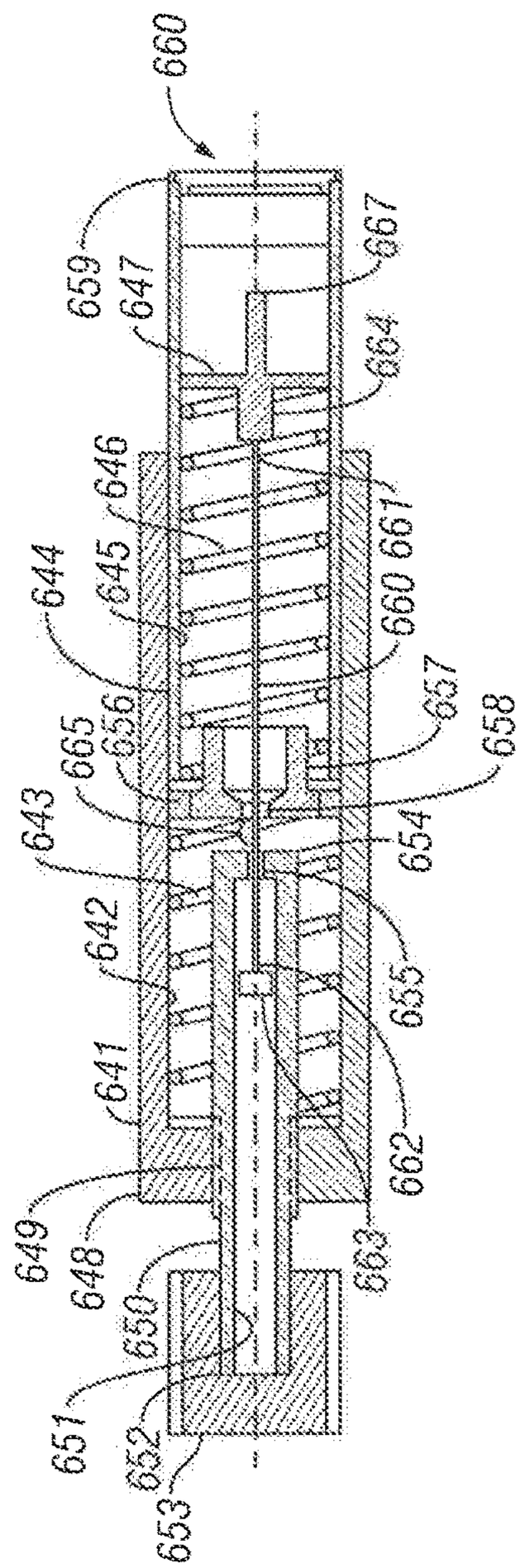
660
659
647
667
664
646
645
644
661
660
657
658
665
656
643
654
642
655
641
662
649
648
663
650
651
652
653

FIG. 69

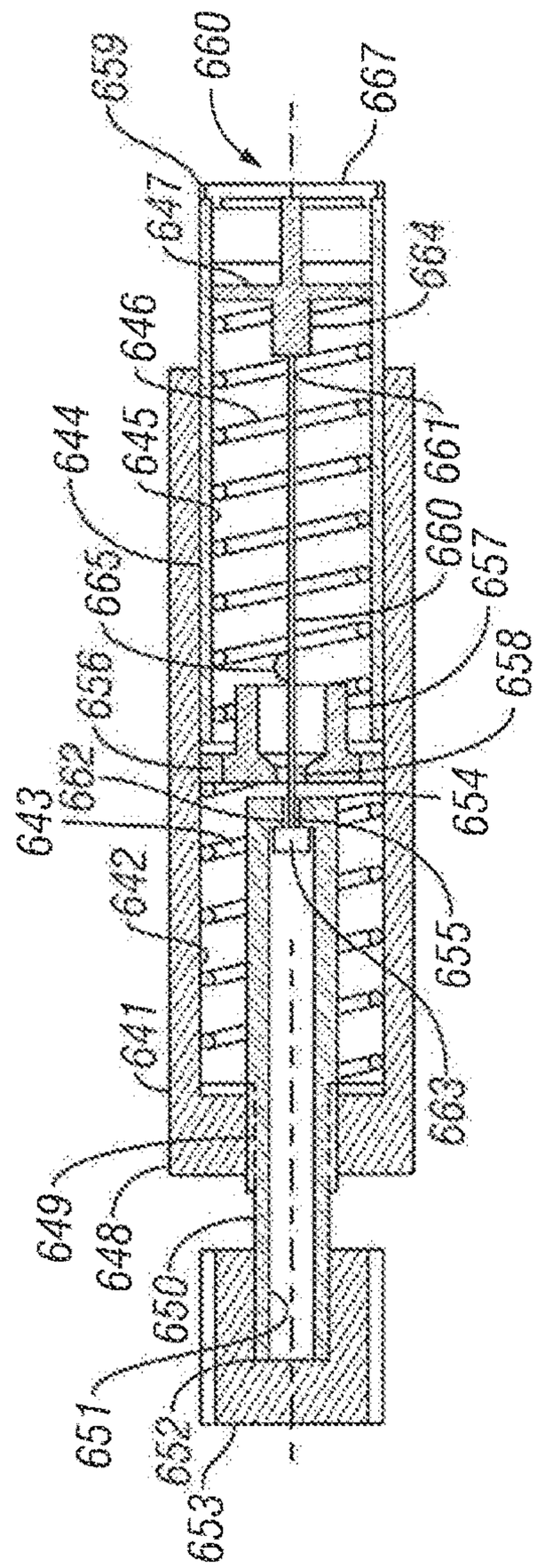
659
660
667
647
664
646
645
644
661
660
657
665
658
656
662
654
643
642
655
641
663
649
648
650
651
652
653

FIG. 70

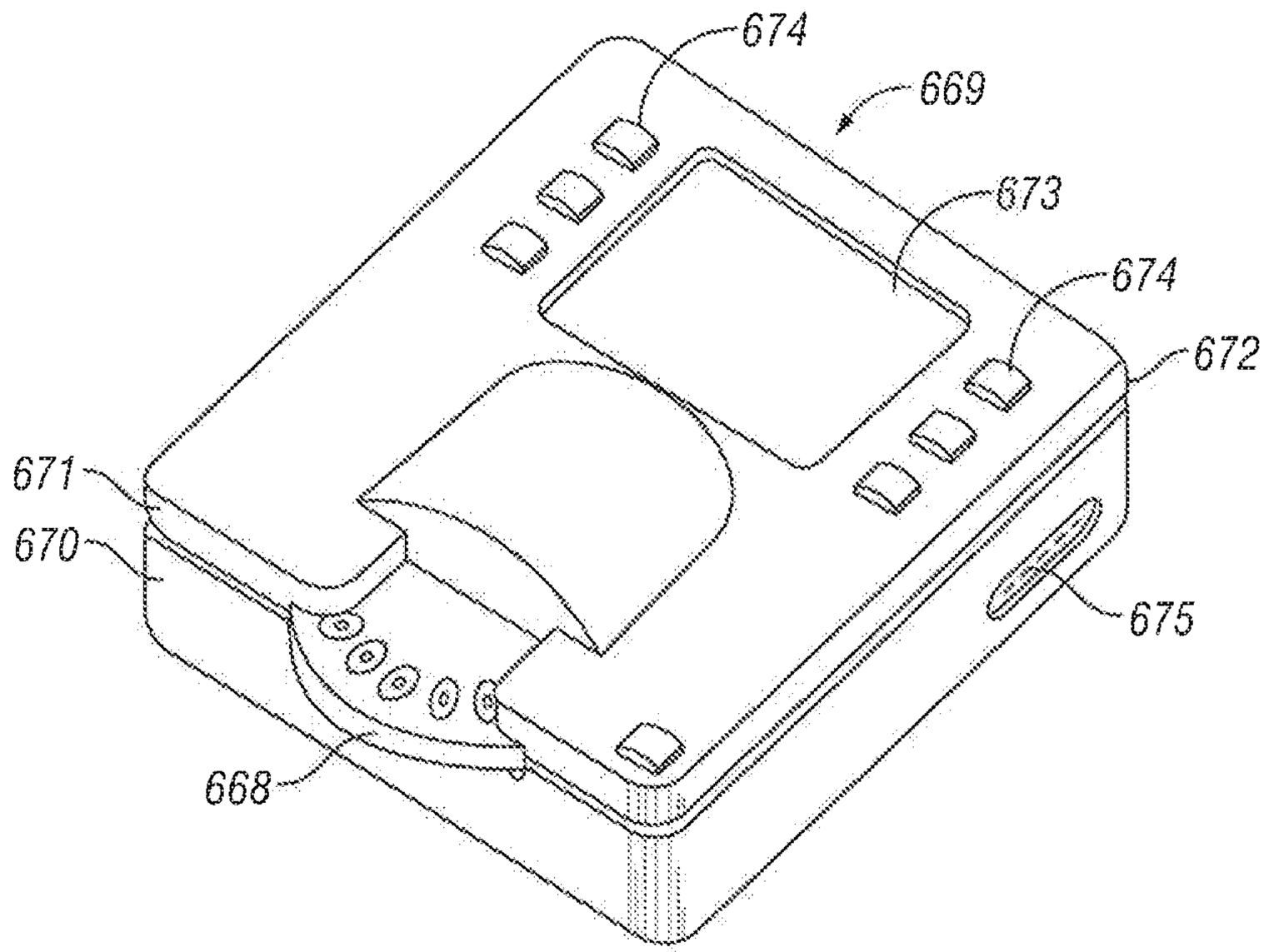

FIG. 71

FIG. 72

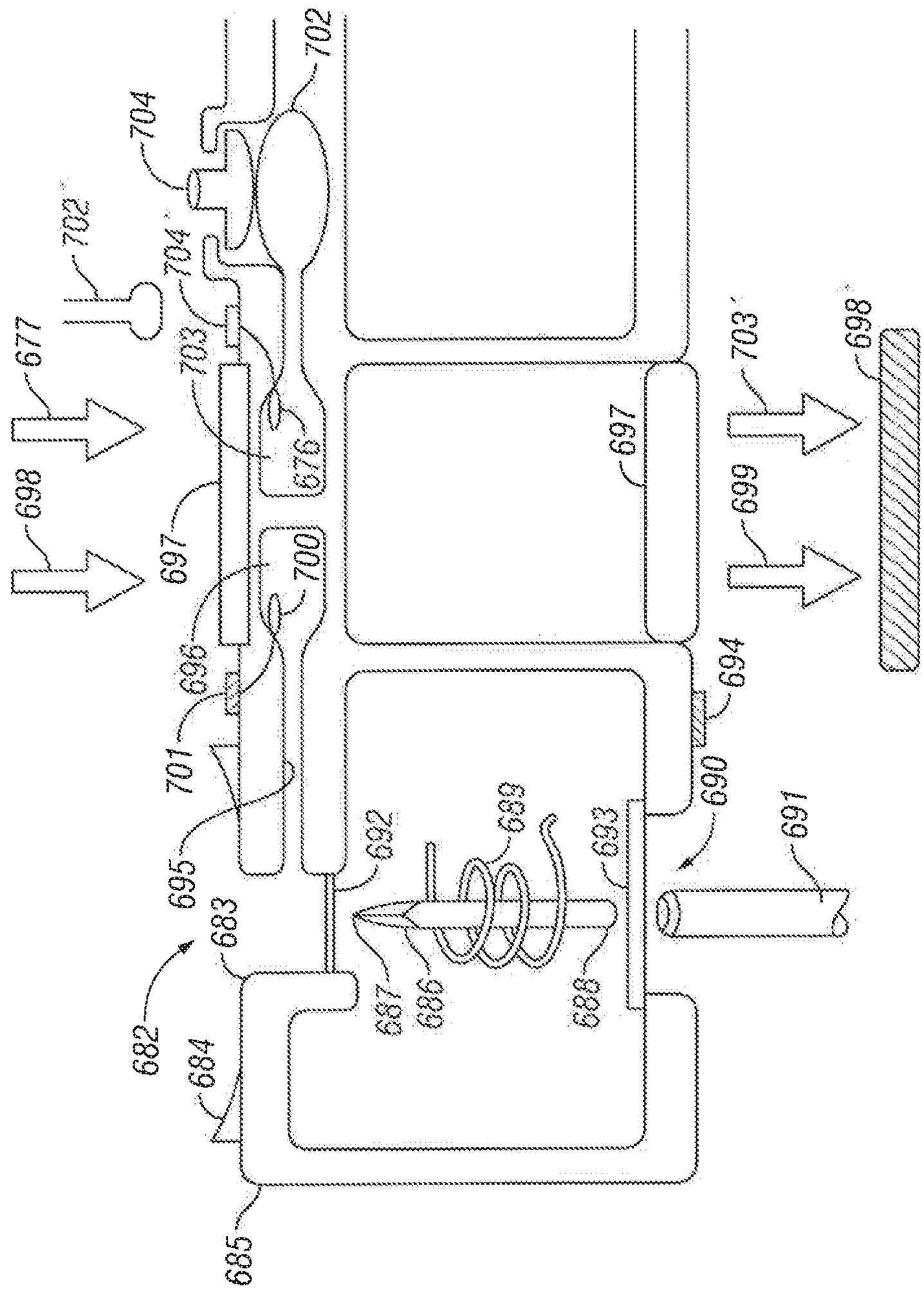
677
698
702
704
702
704
703
676
697
700
696
701
695
683
682
684
685
692
687
686
689
688
693
690
691
694
697
699
703
698

FIG. 73

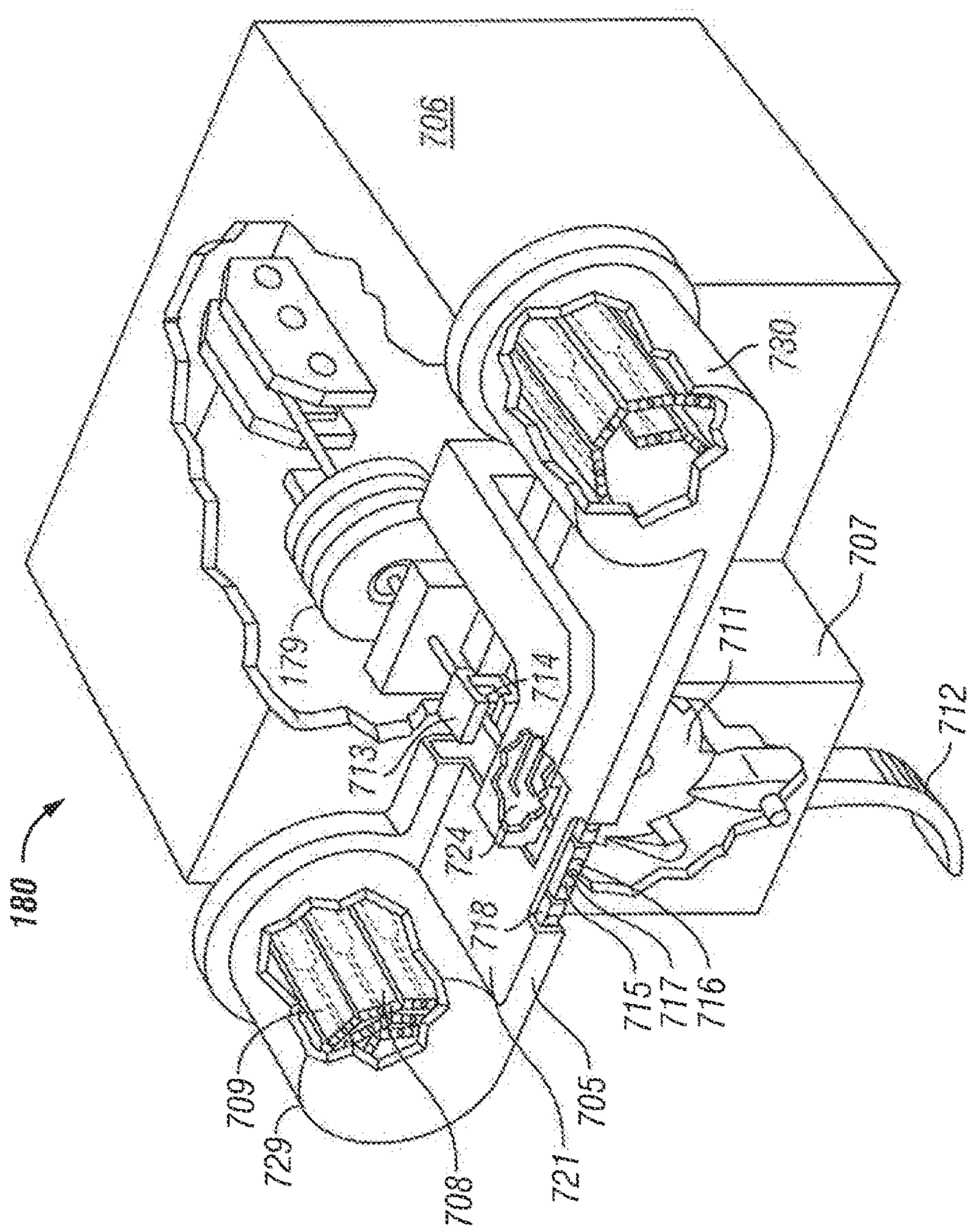
706
730
707
711
712
714
713
179
724
718
180
715
717
716
709
729
708
721
705

FIG. 74

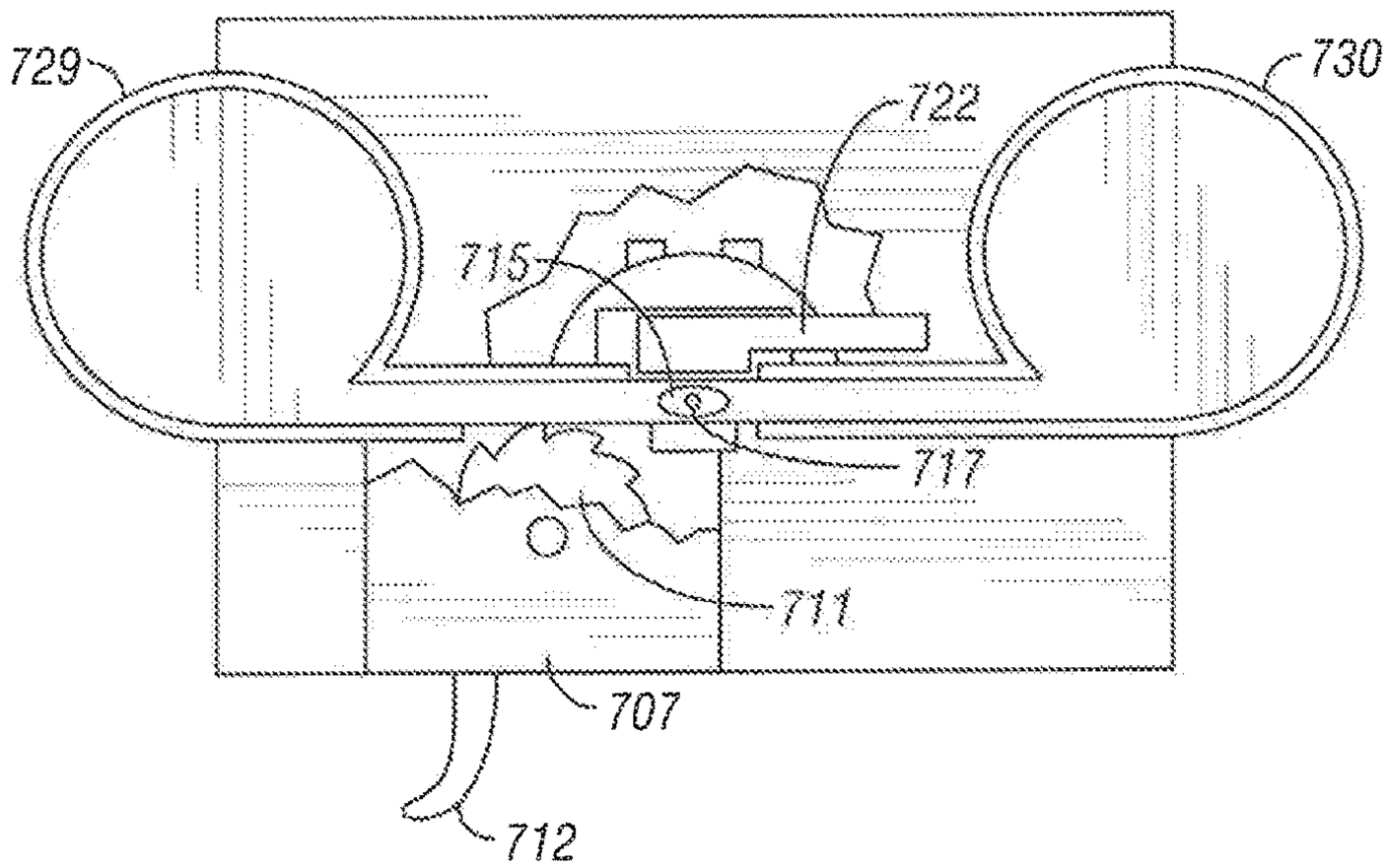

FIG. 75

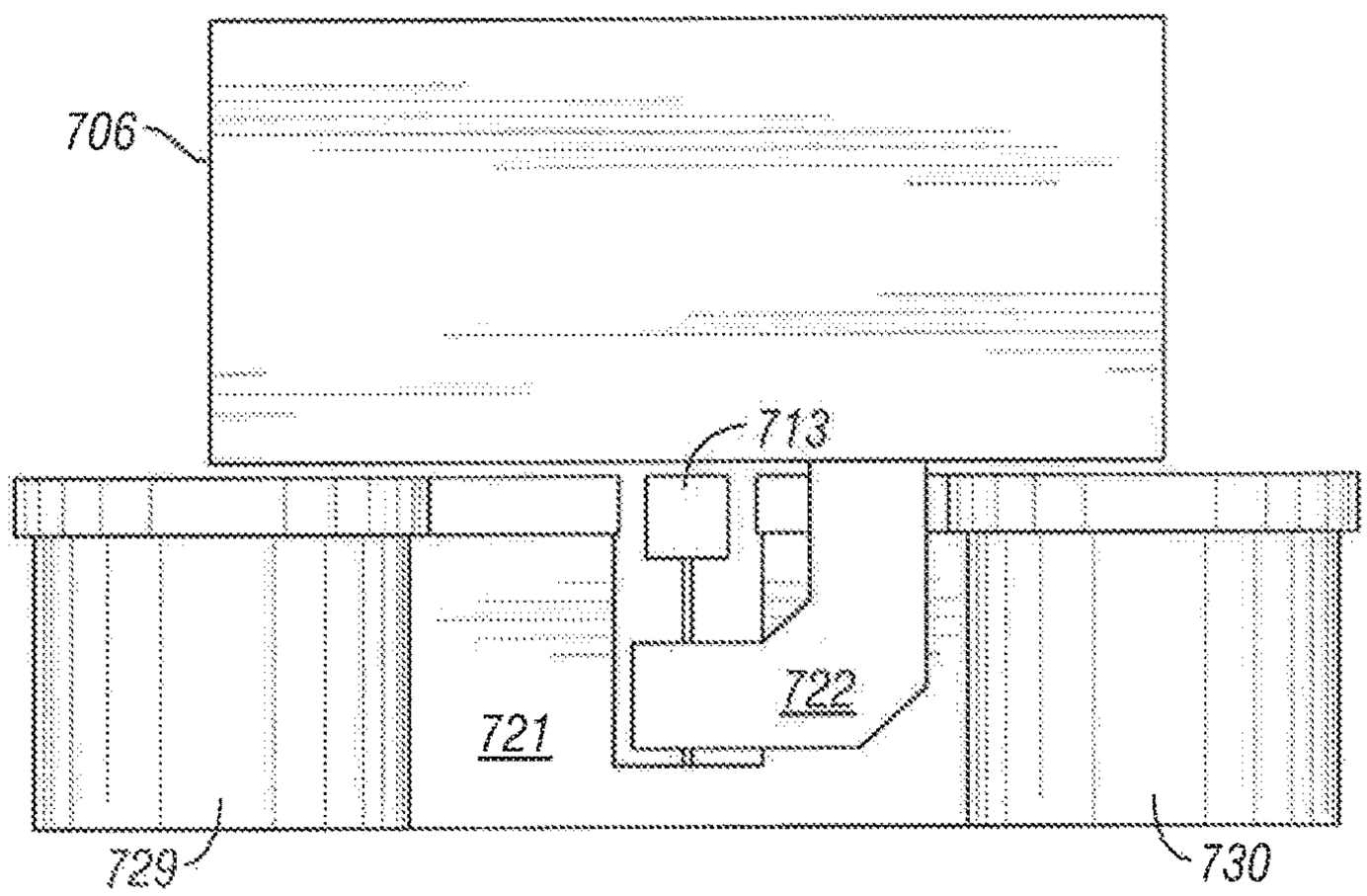

FIG. 76

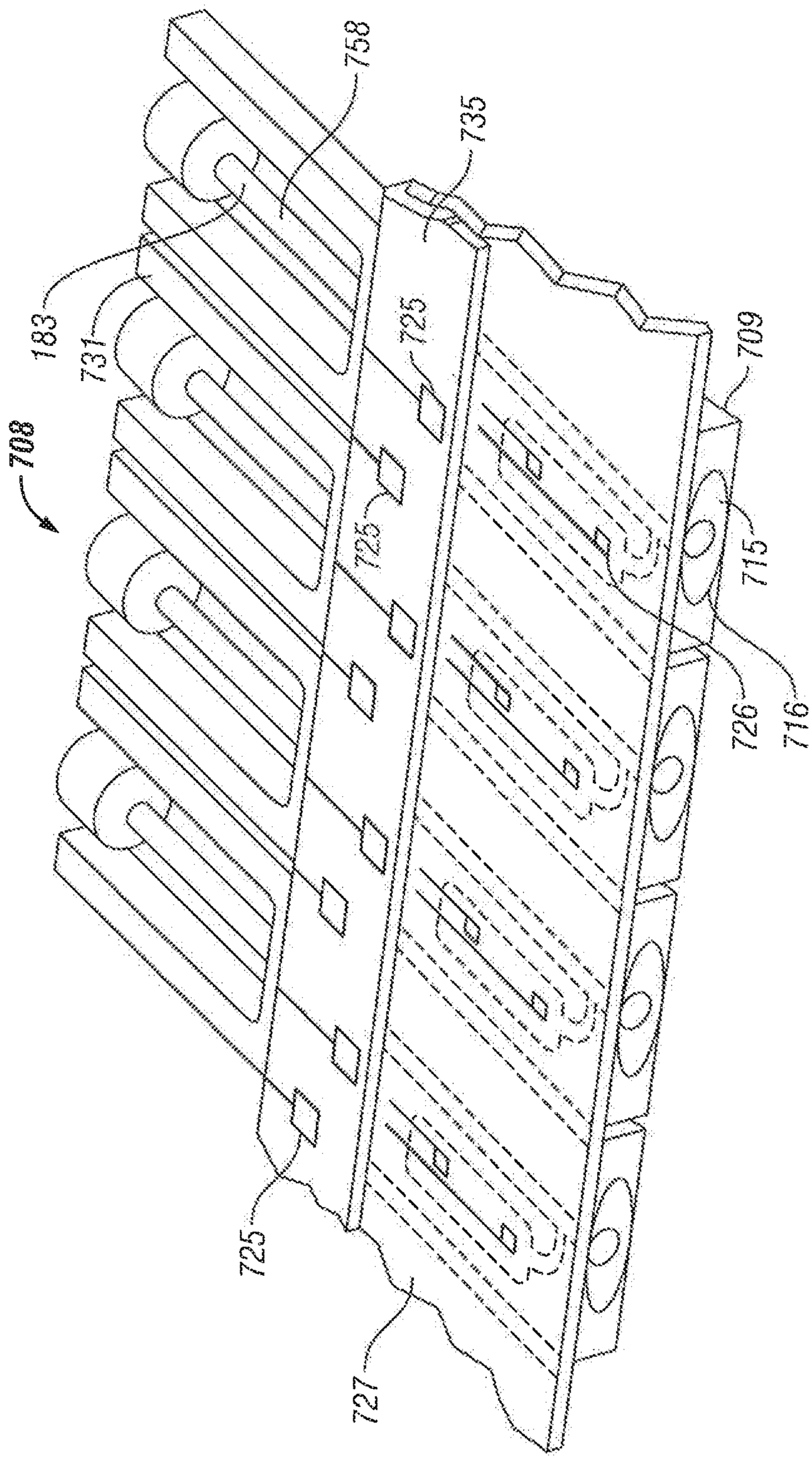

FIG. 77

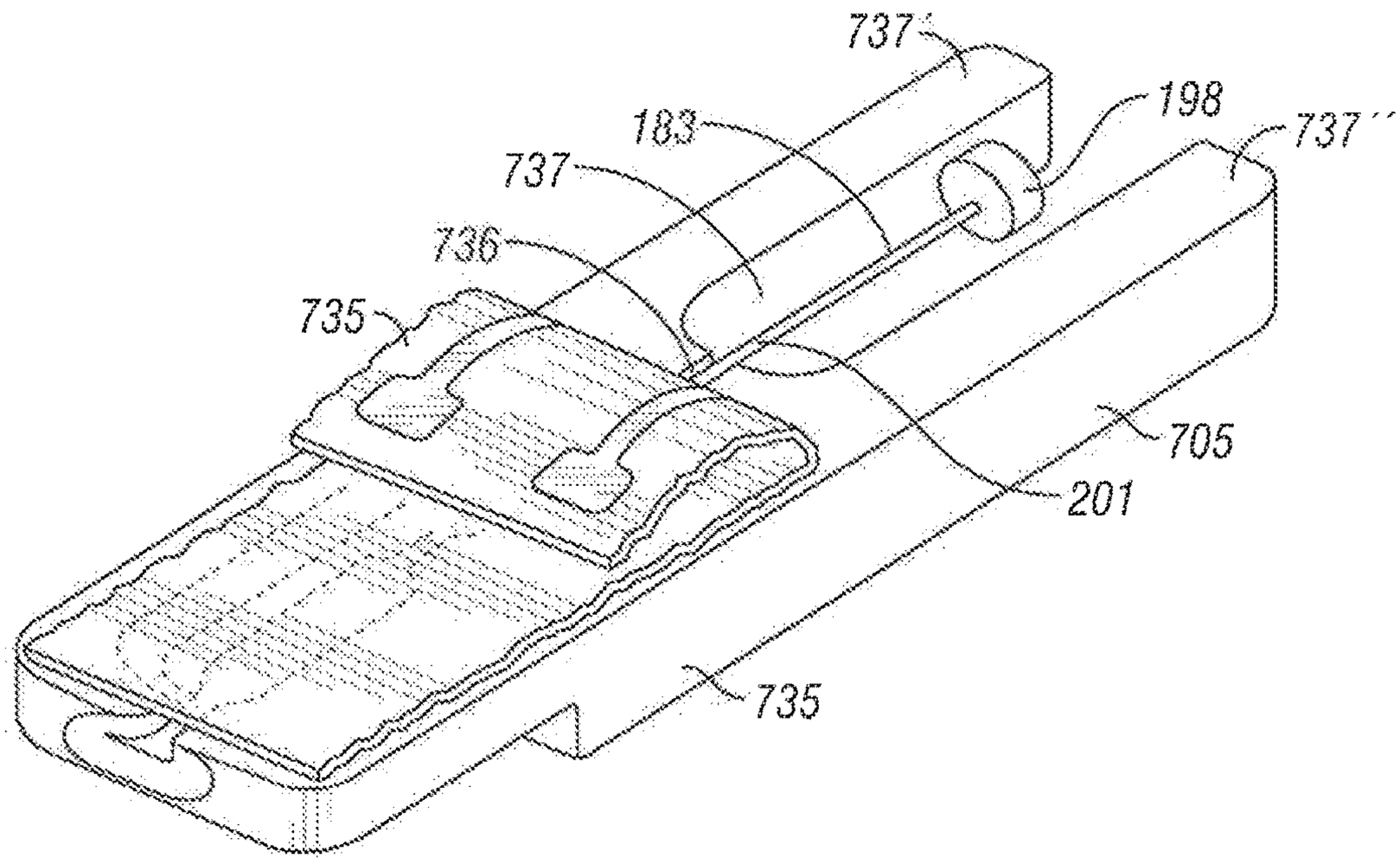

FIG. 78

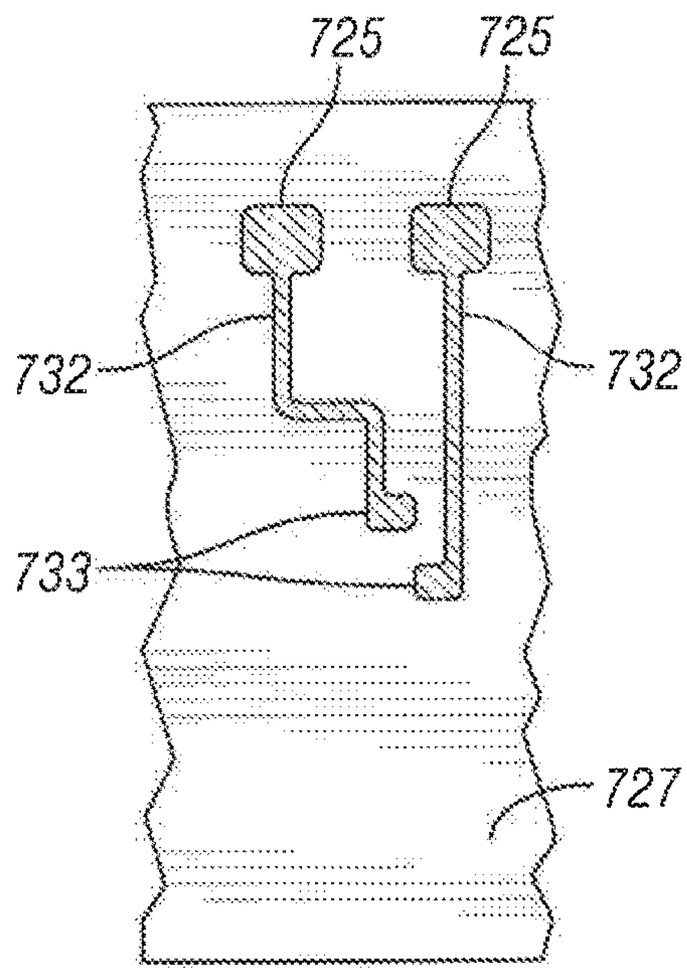

FIG. 79

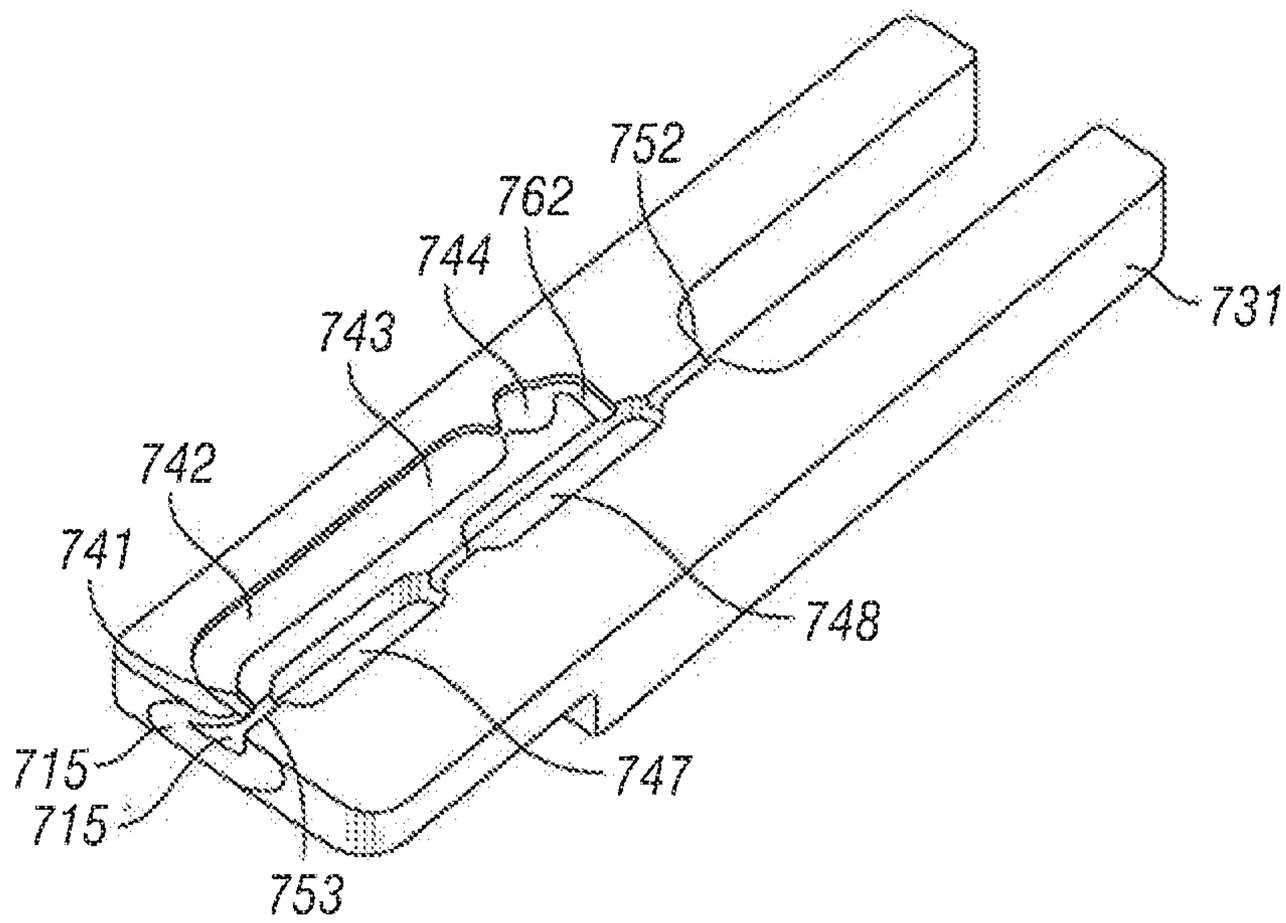
752
762
744
743
742
741
731
748
747
715
715
753

FIG. 80

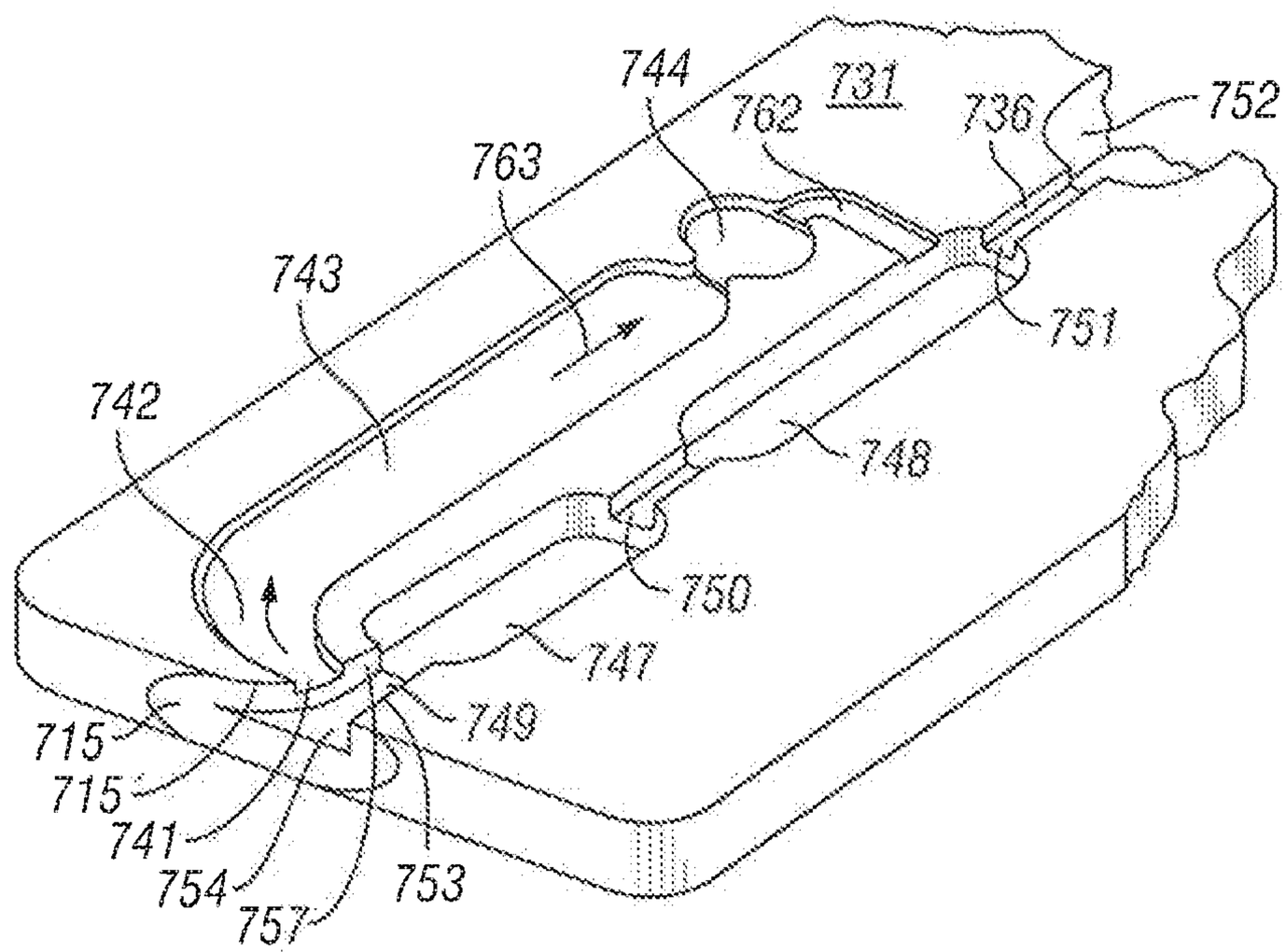
744
731
762
736
752
763
743
751
742
748
750
747
749
715
715
741
754
757
753

FIG. 81

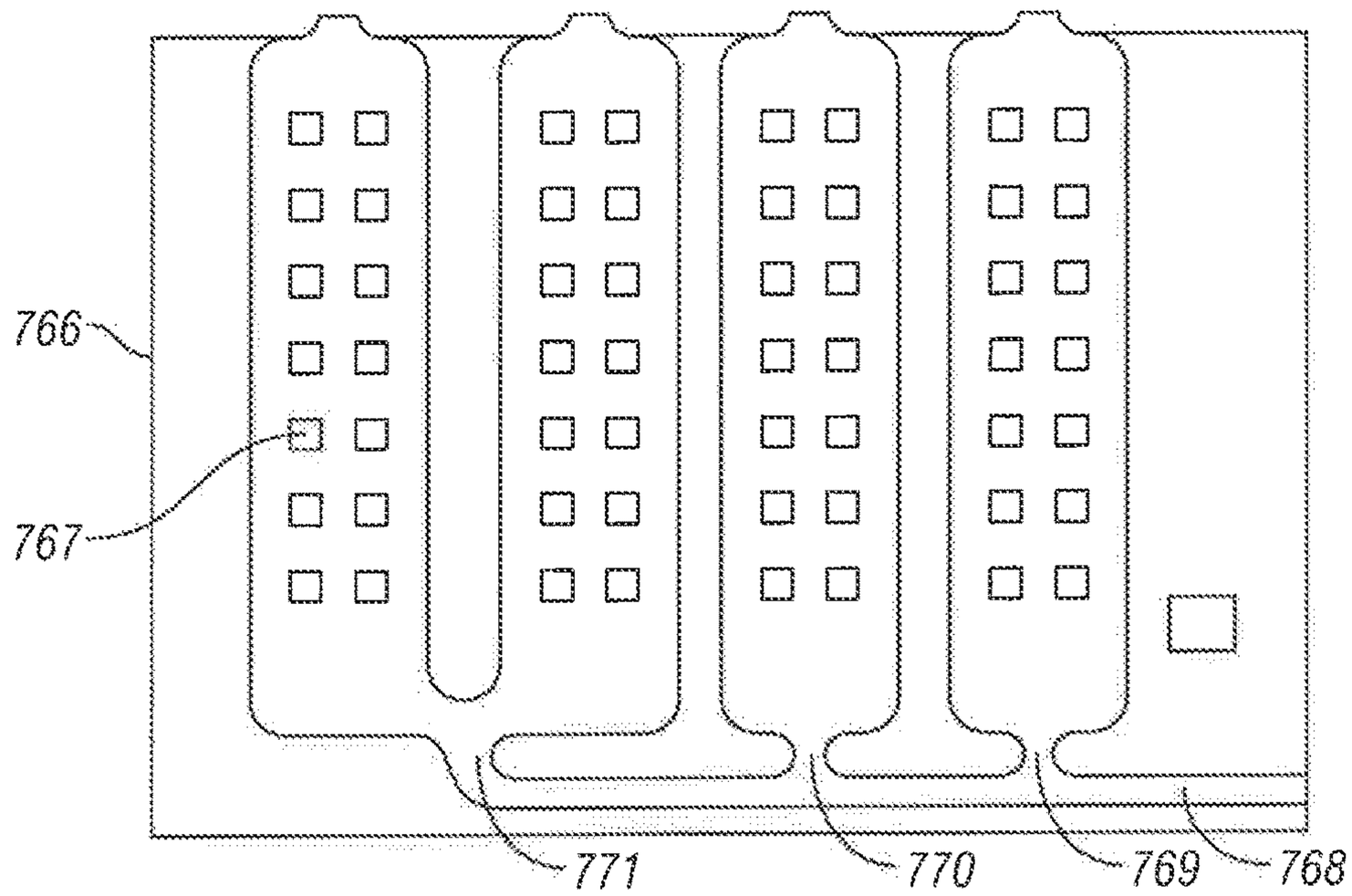

FIG. 82

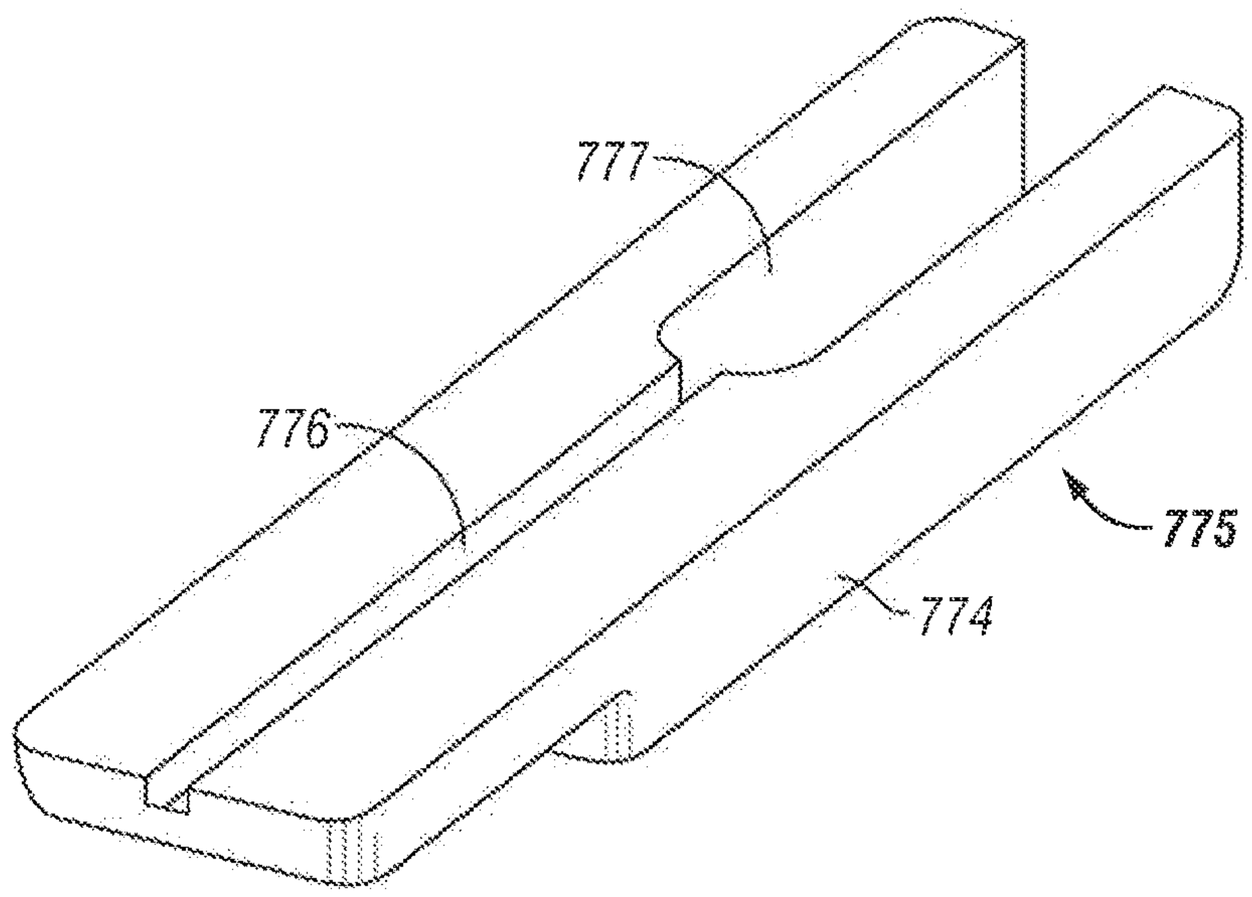

FIG. 83

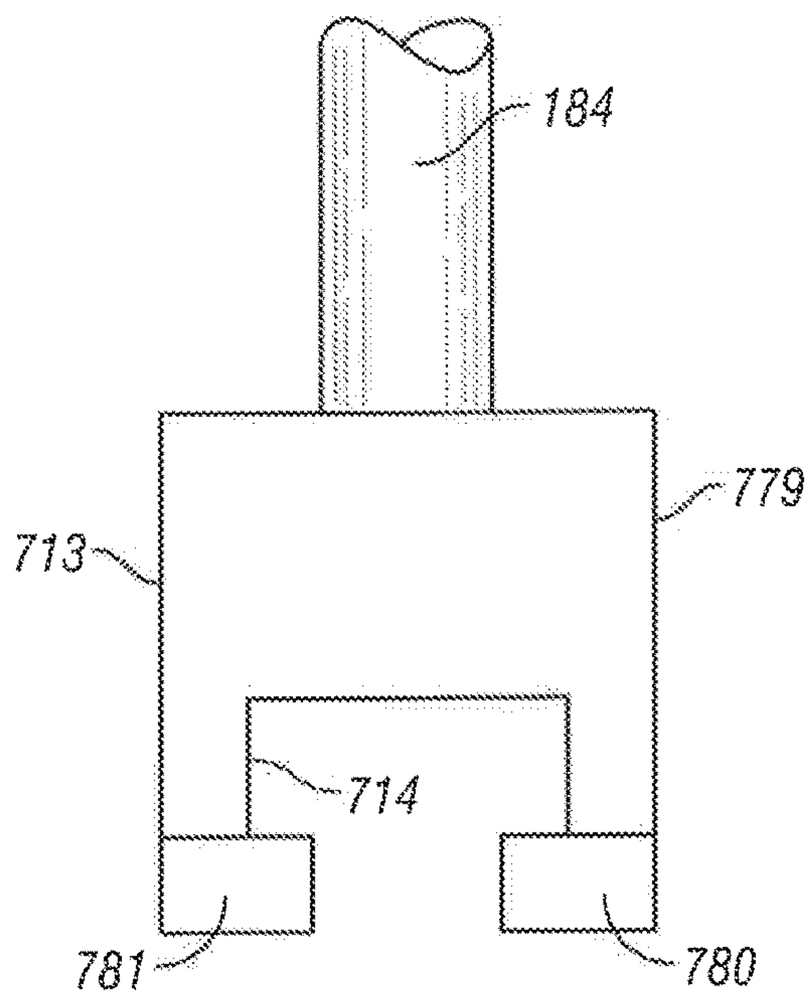

FIG. 84

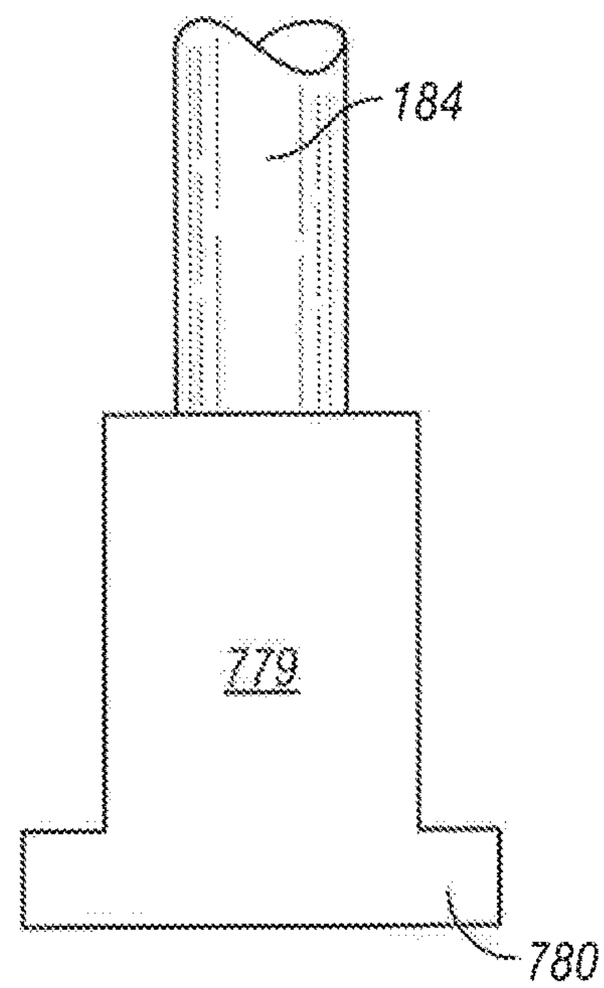

FIG. 85

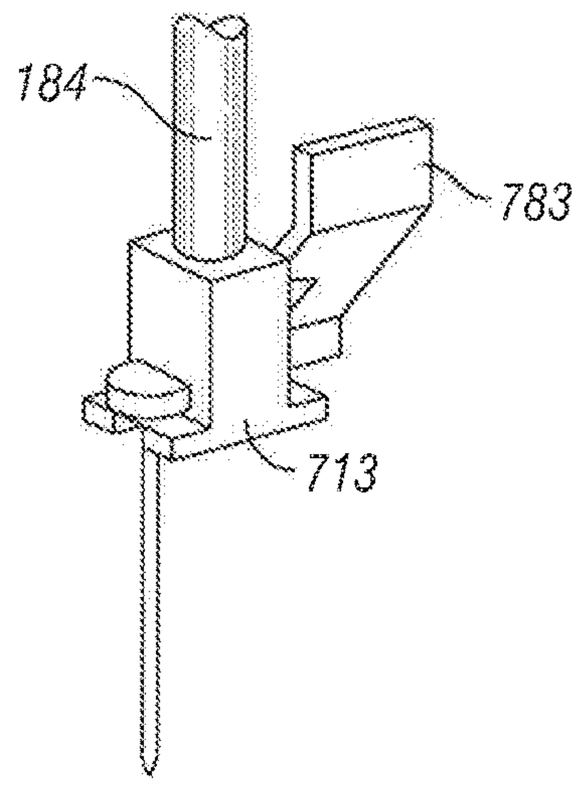

FIG. 86

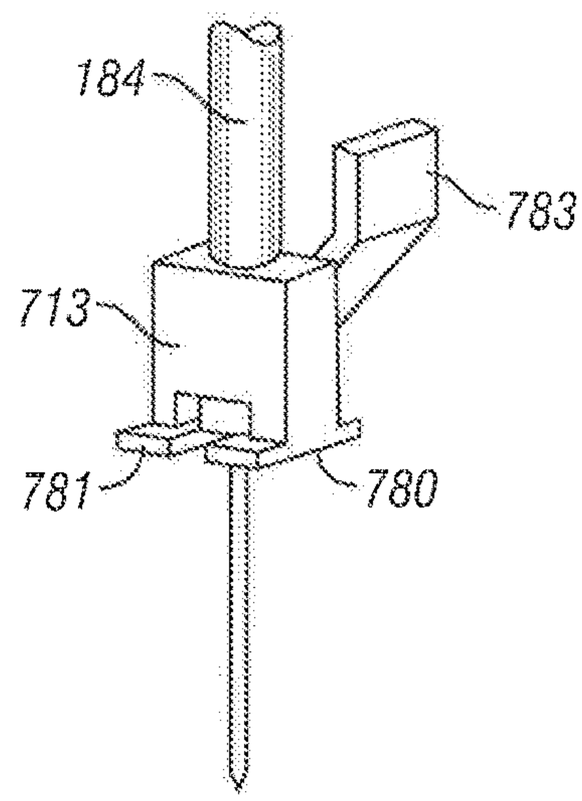

FIG. 87

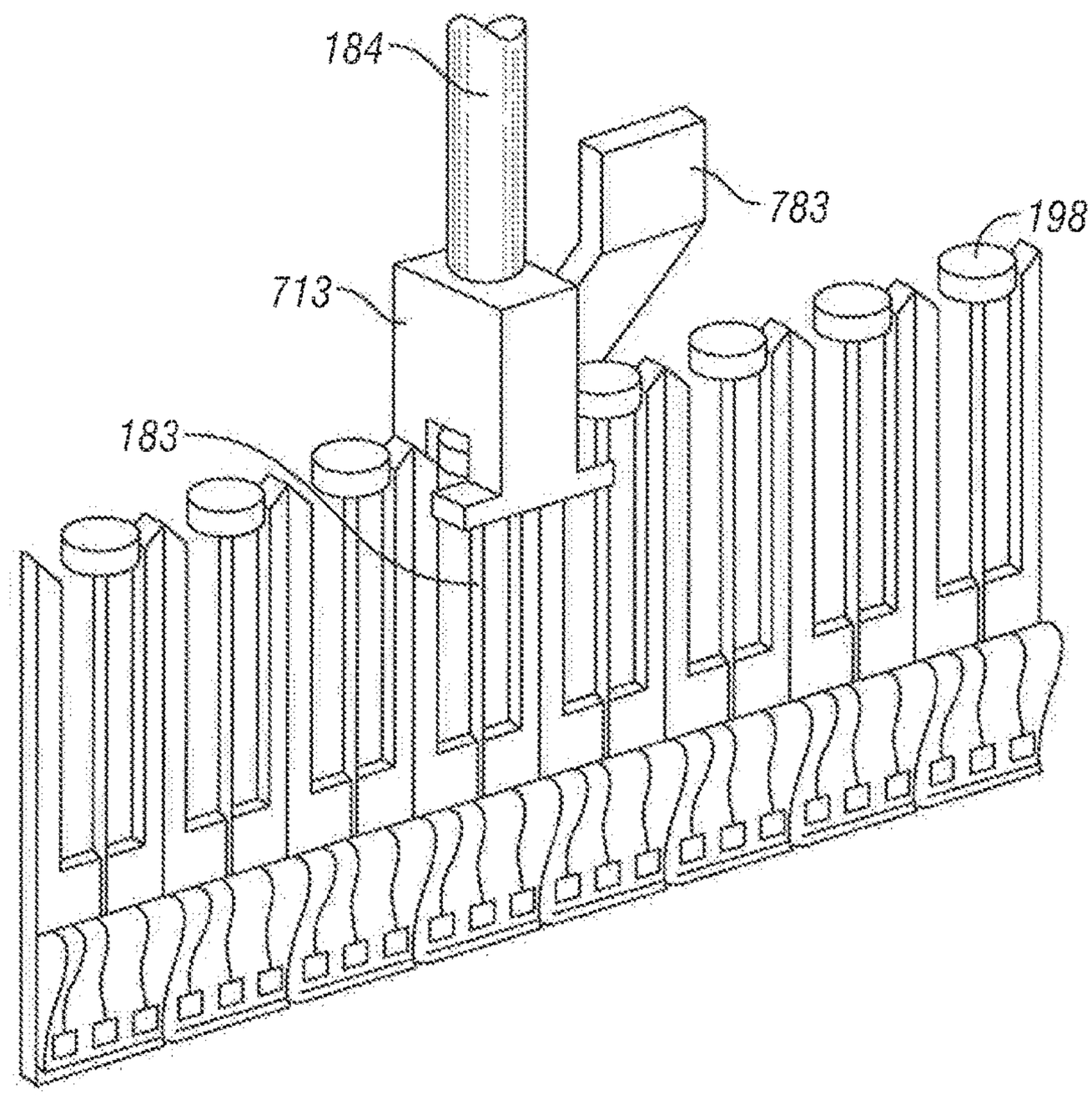

FIG. 88

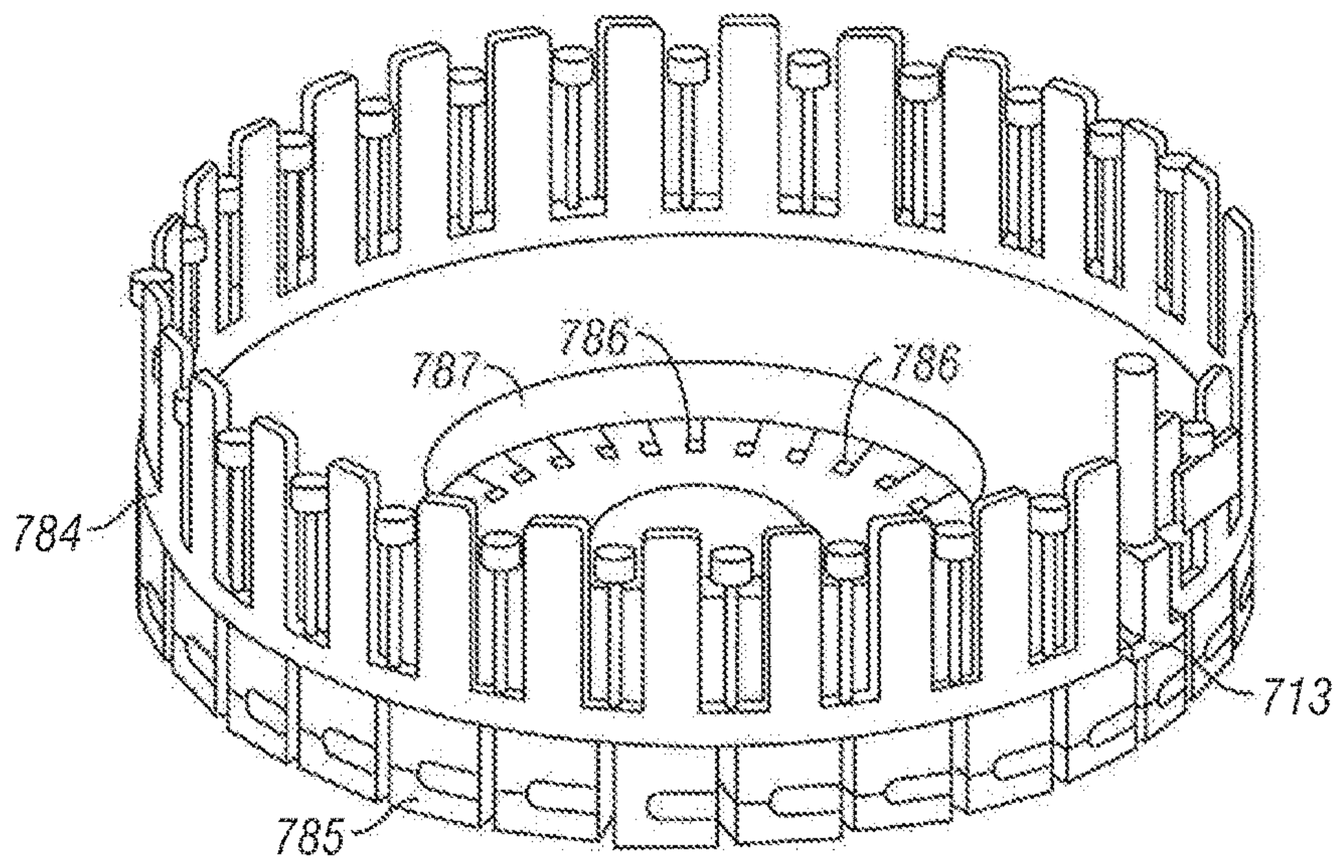

FIG. 89

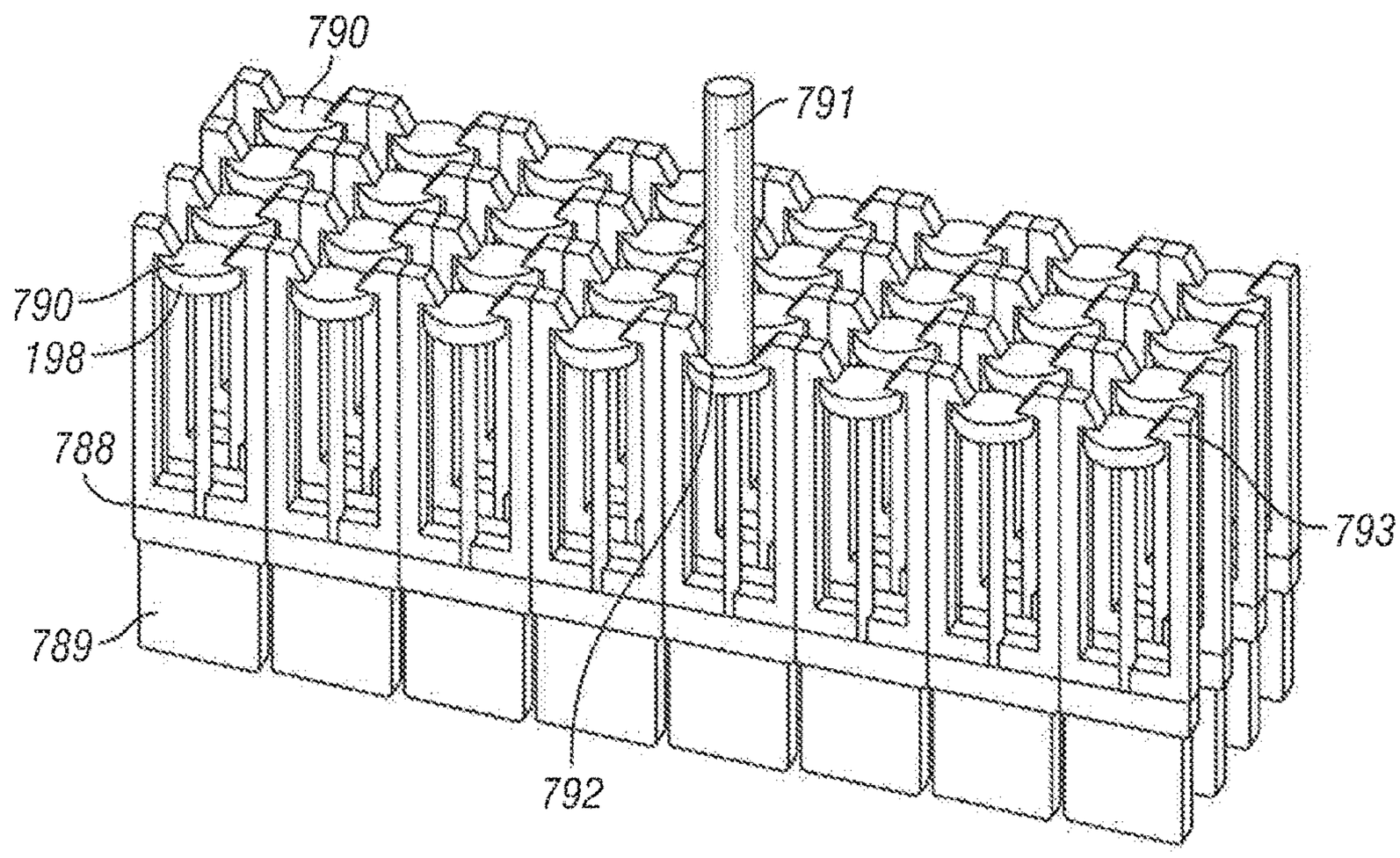

FIG. 90

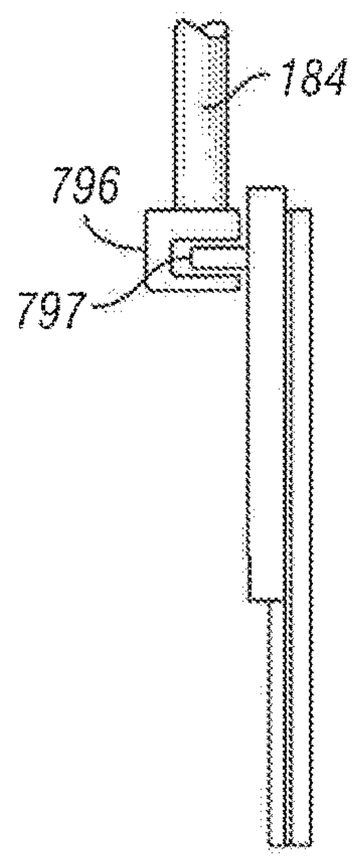

FIG. 91

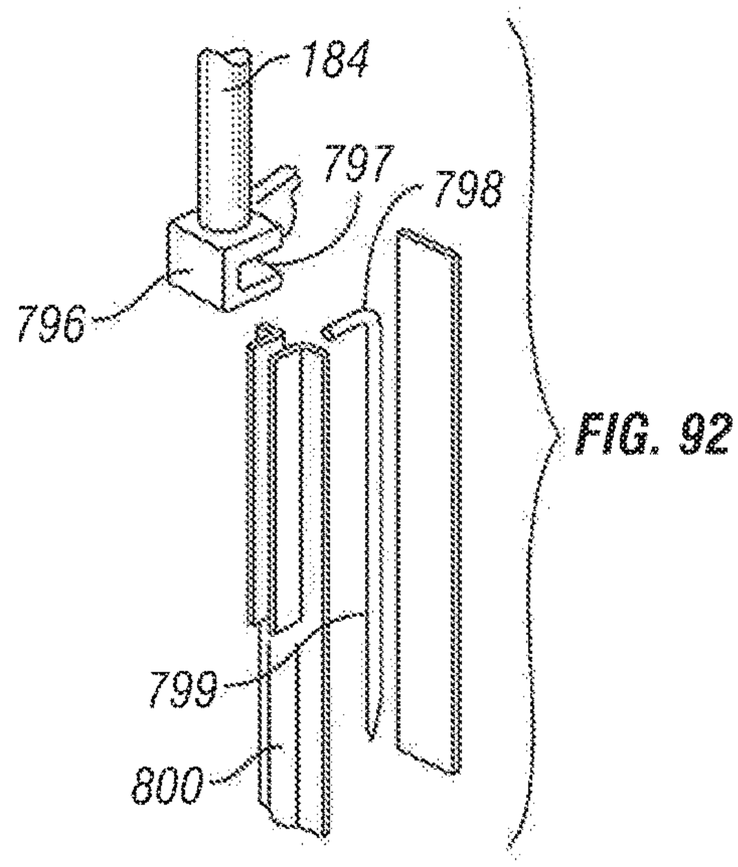

FIG. 92

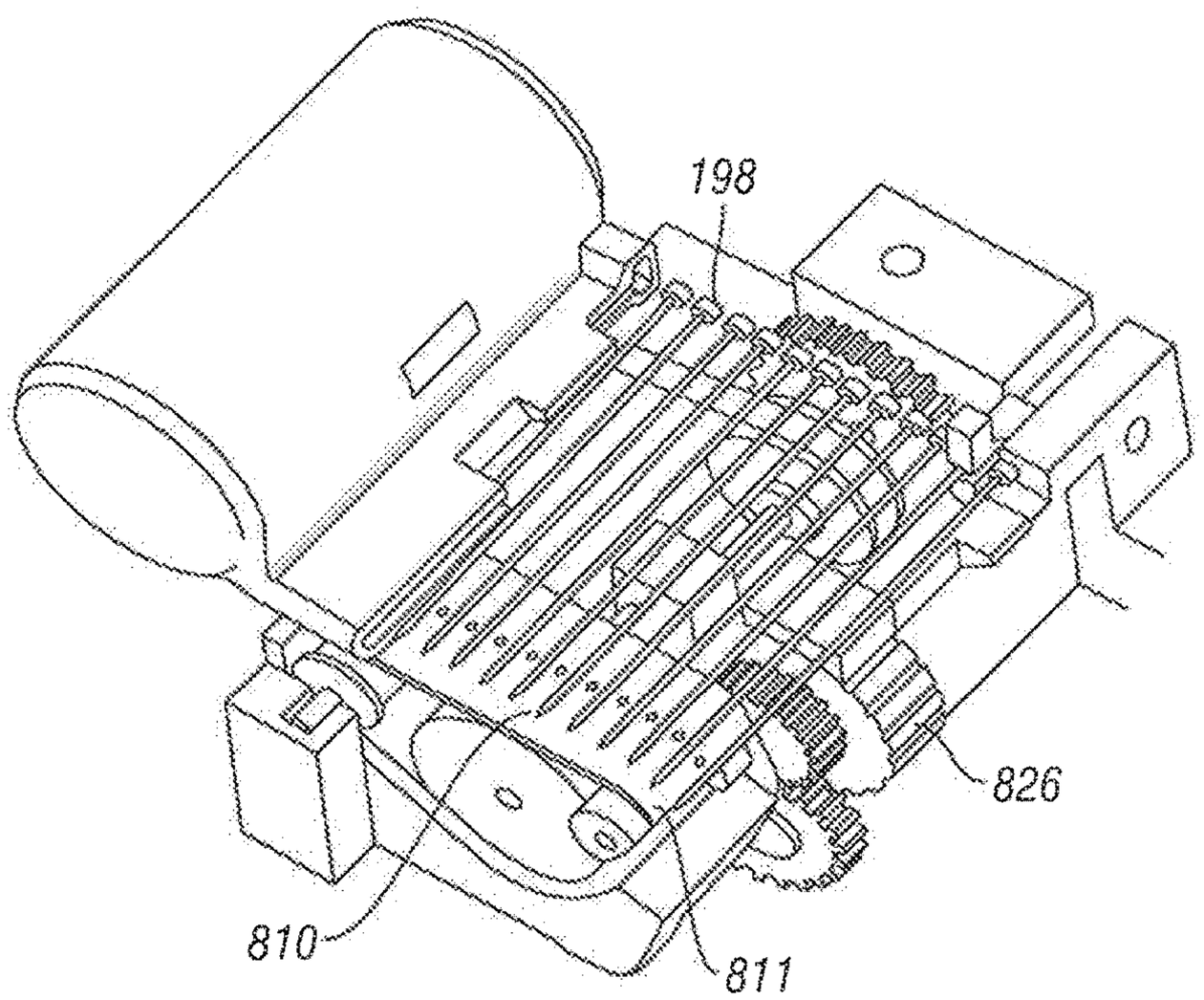

FIG. 96

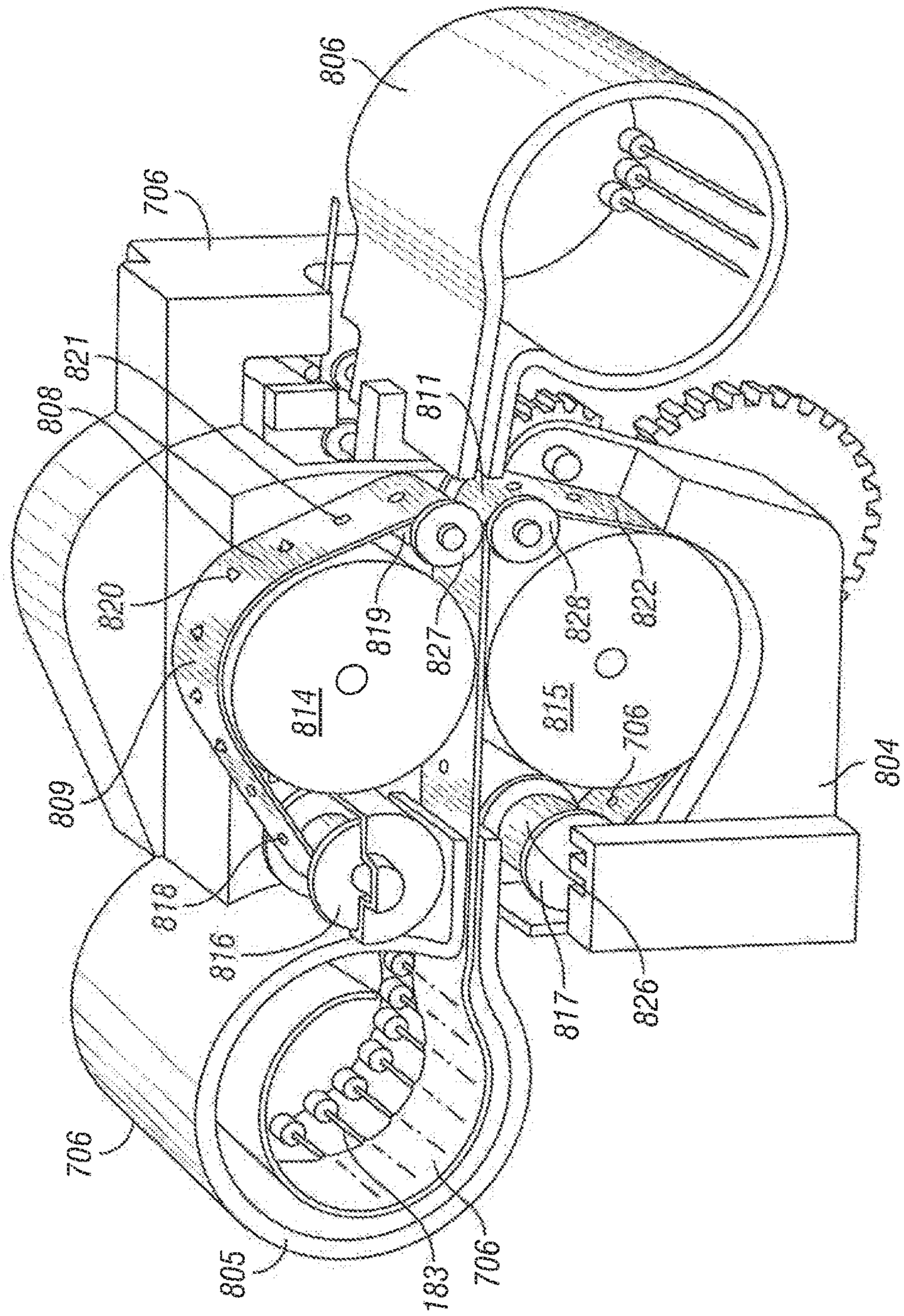
806
706
821
808
811
820
819
827
828
822
814
815
706
804
809
818
816
817
826
706
805
183
706

FIG. 93

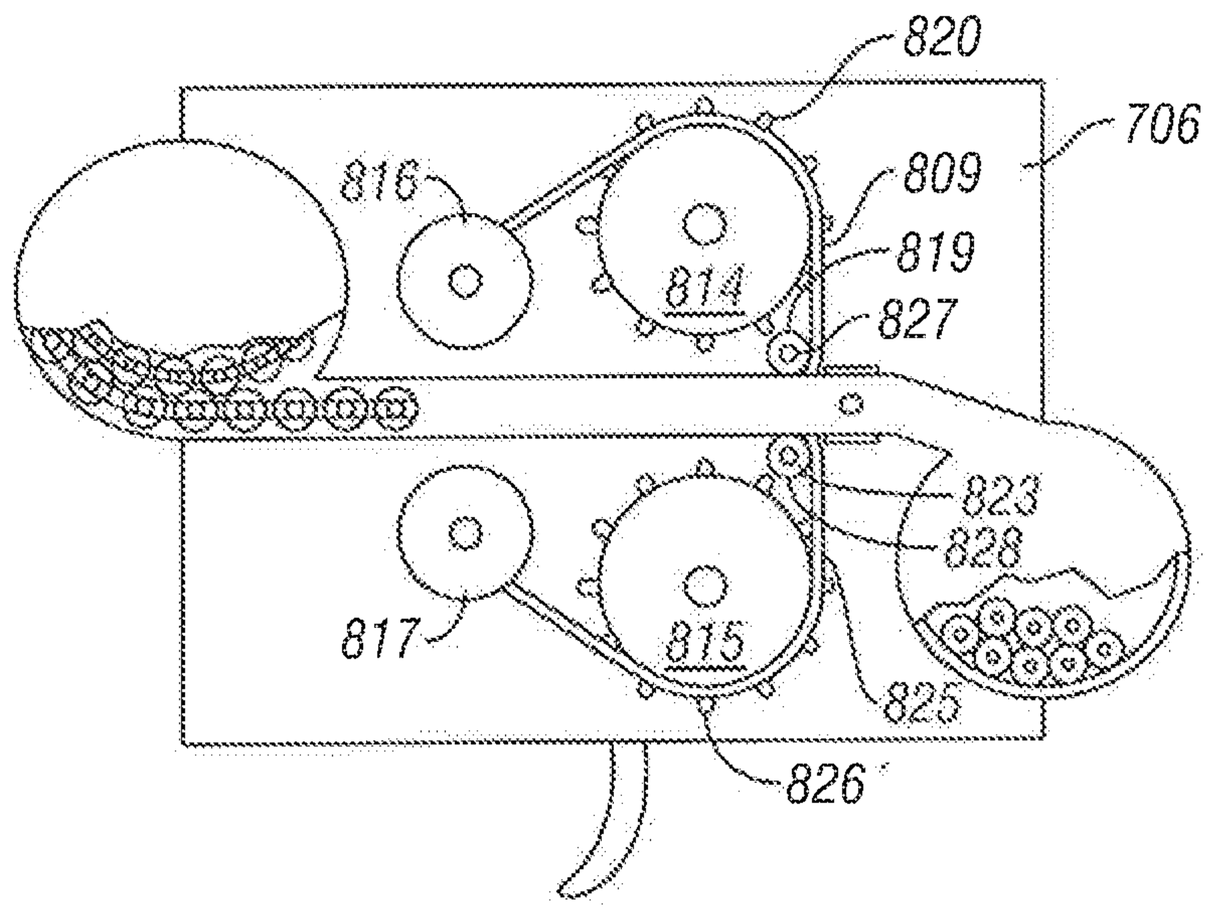
820
706
816
809
819
814
827
823
828
817
815
825
826

FIG. 94

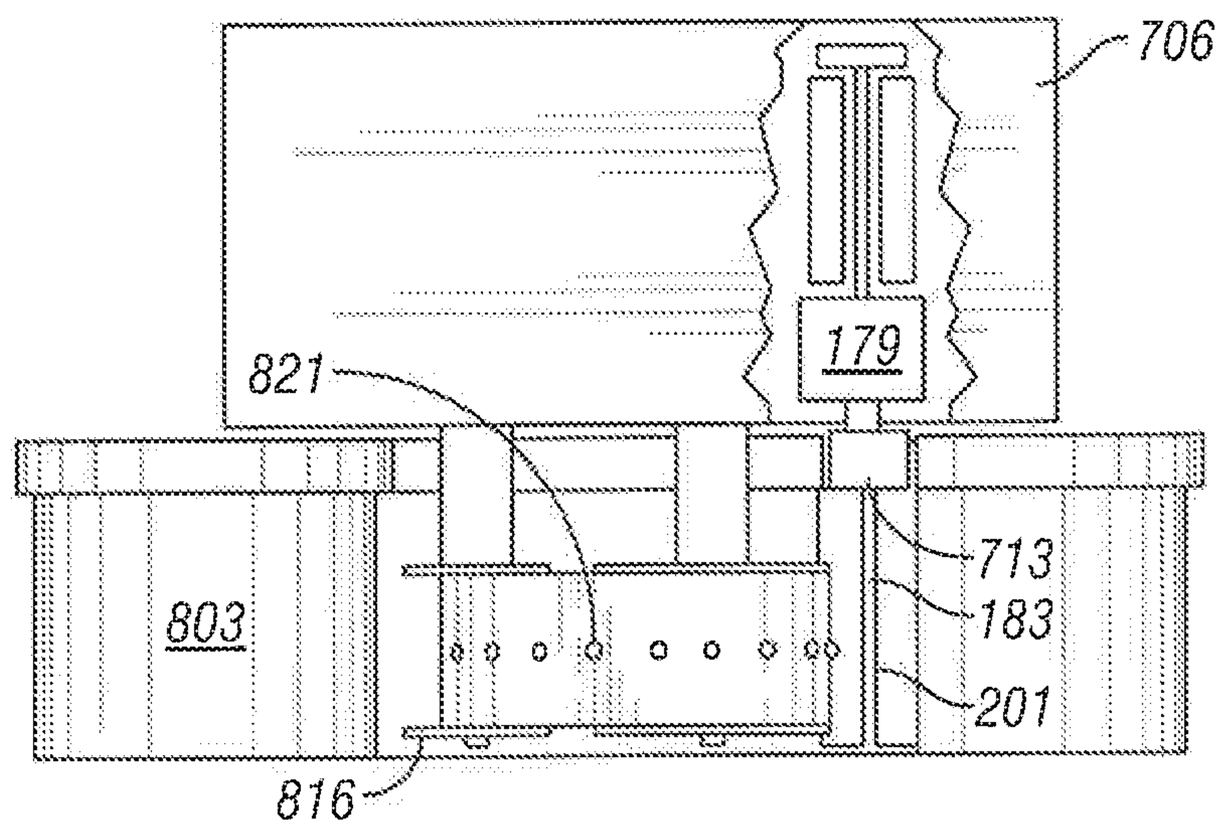
706
179
821
713
183
803
201
816

FIG. 95

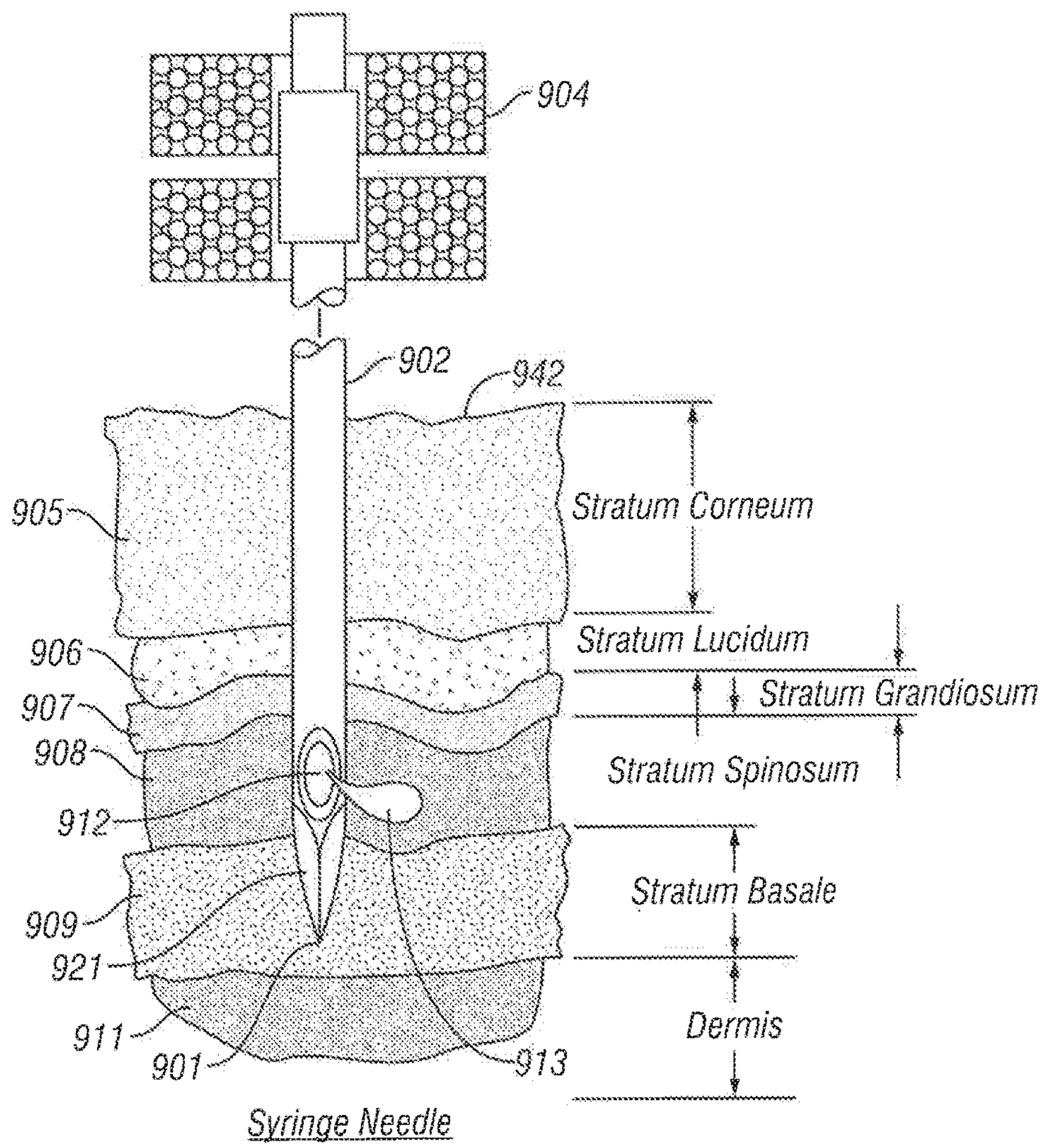
904
902
942
905
Stratum Corneum
Stratum Lucidum
906
907
Stratum Grandiosum
908
Stratum Spinosum
912
Stratum Basale
909
921
911
Dermis
901
913
Syringe Needle

FIG. 97

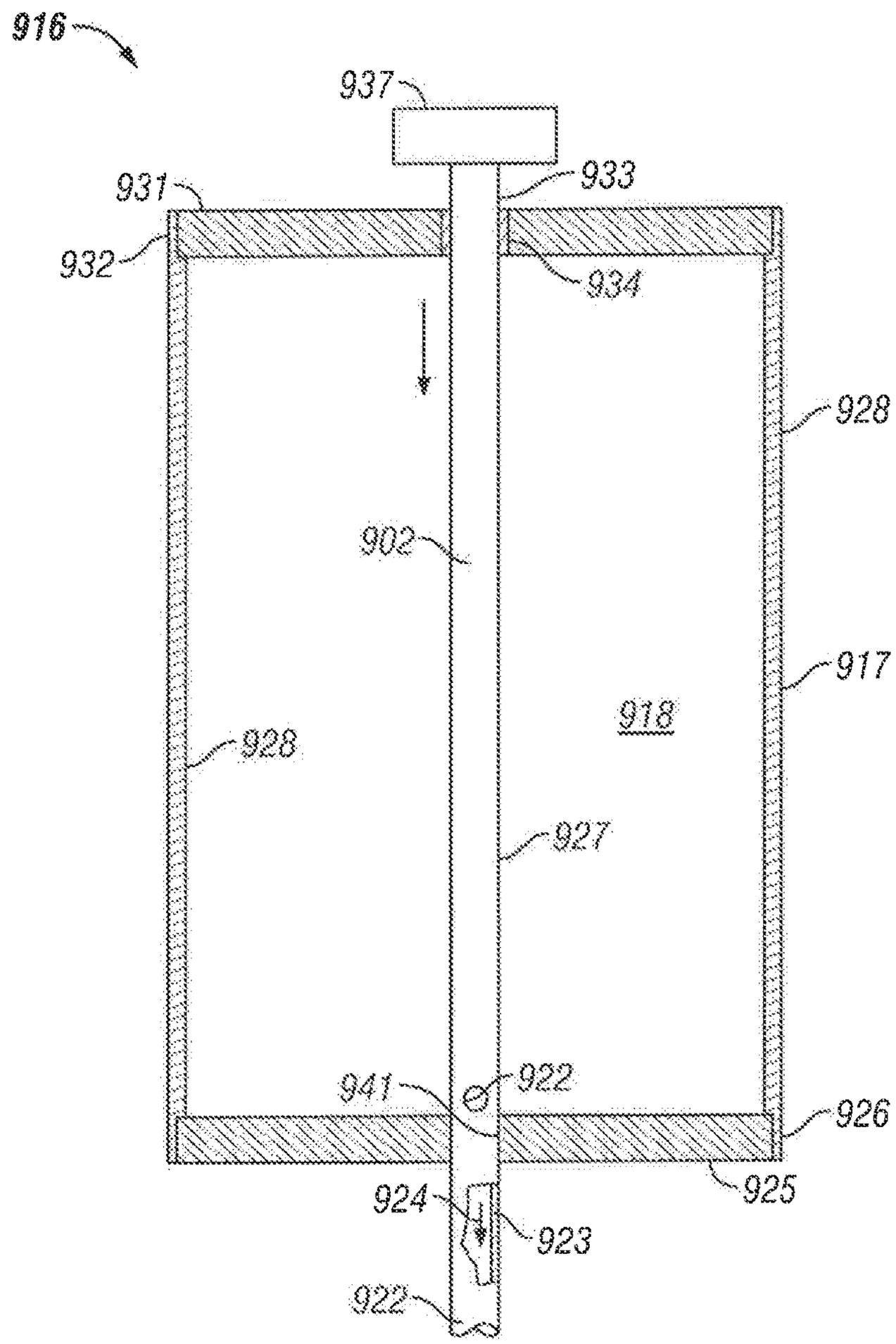
916
937
931
933
932
934
928
902
917
918
928
927
941
922
926
925
924
923
922

FIG. 98

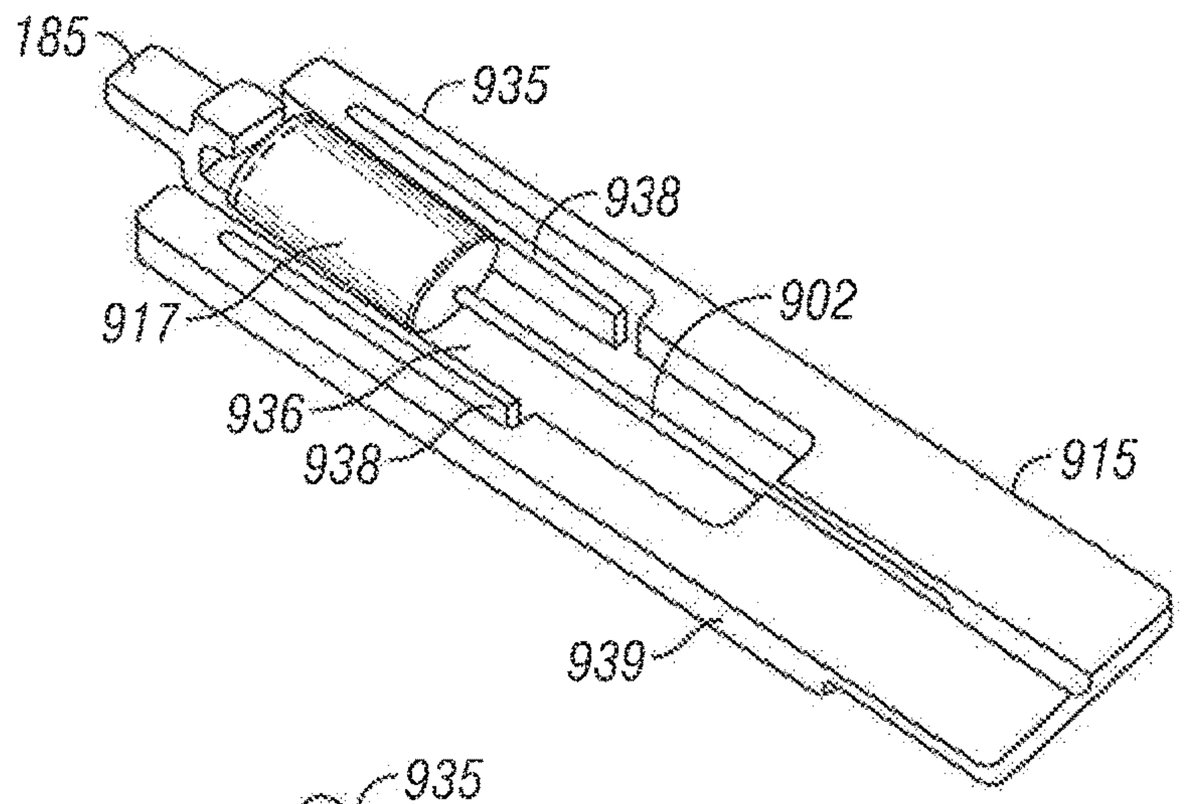

FIG. 99

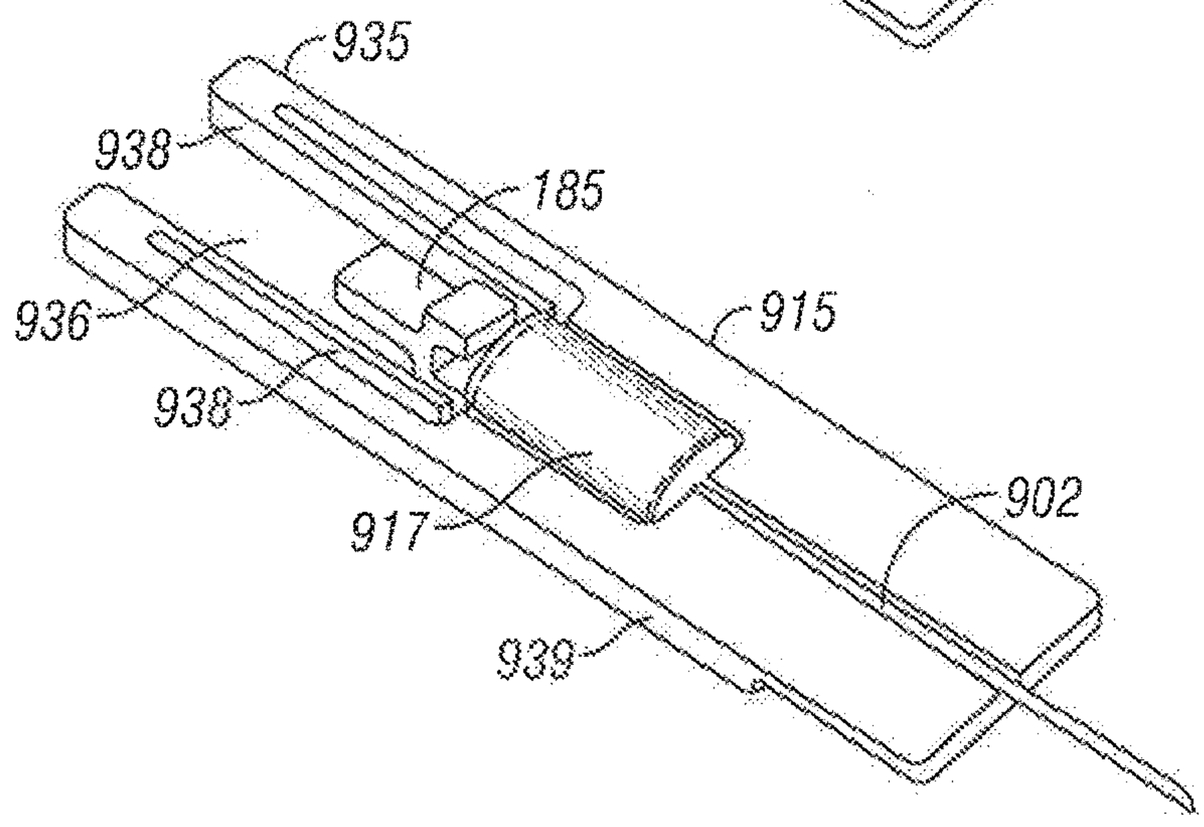

FIG. 100

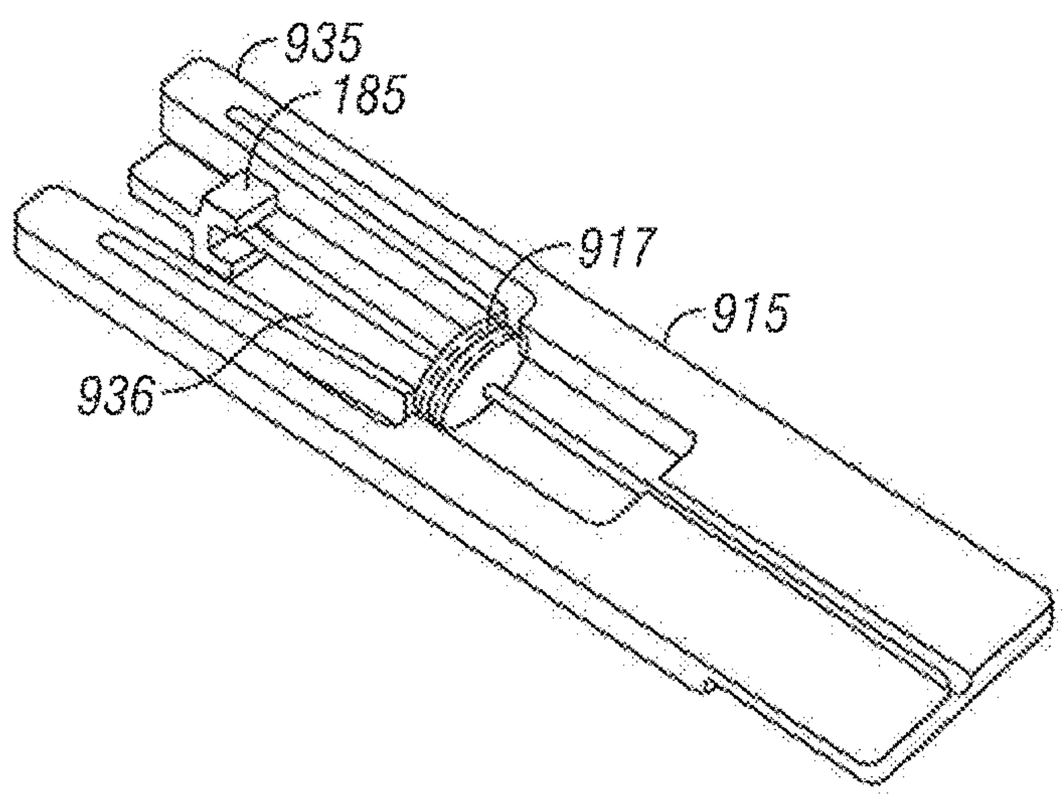

FIG. 101

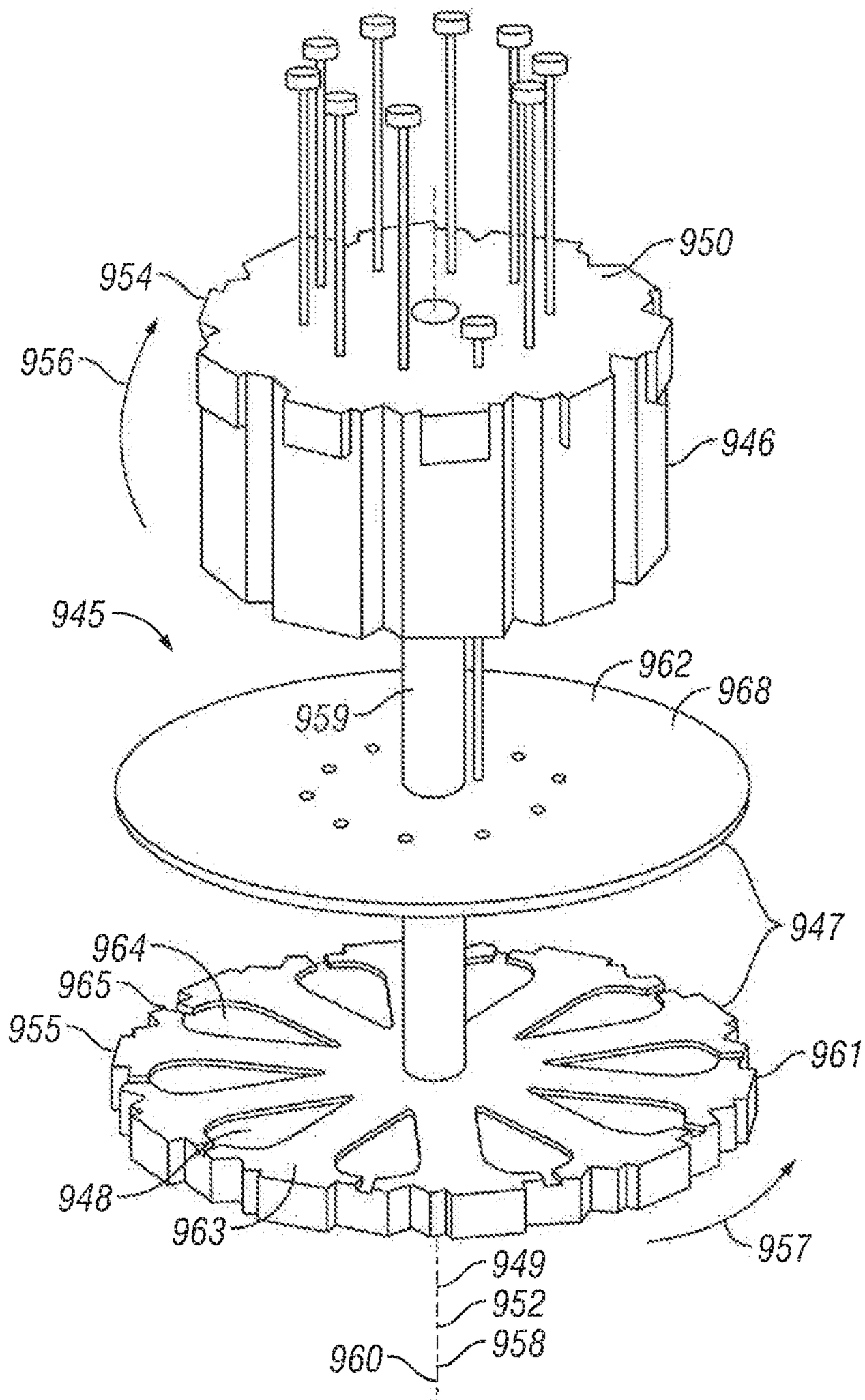
950
954
956
946
945
962
968
959
947
964
965
955
961
948
963
957
949
952
960
958

FIG. 102

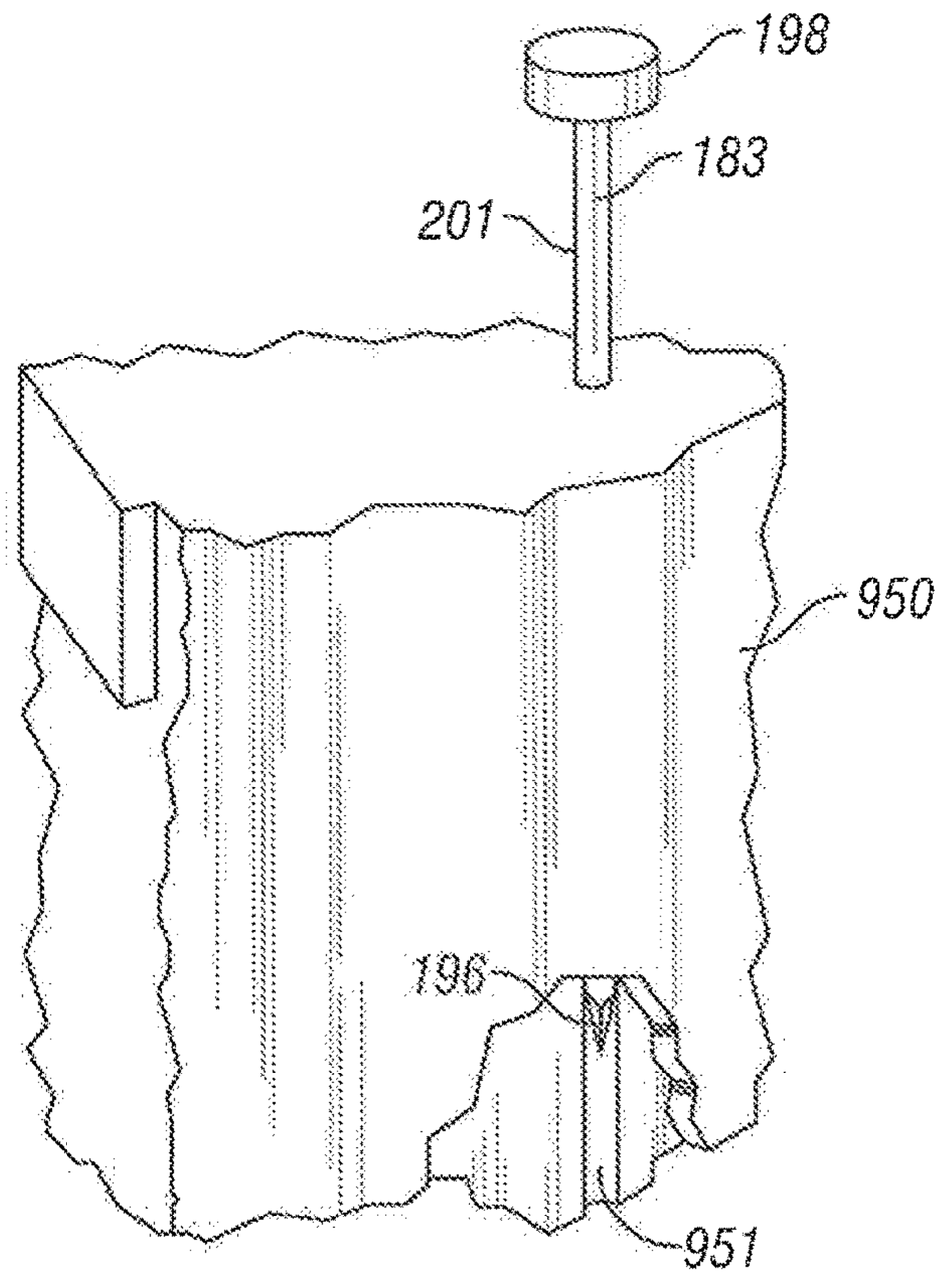

FIG. 103

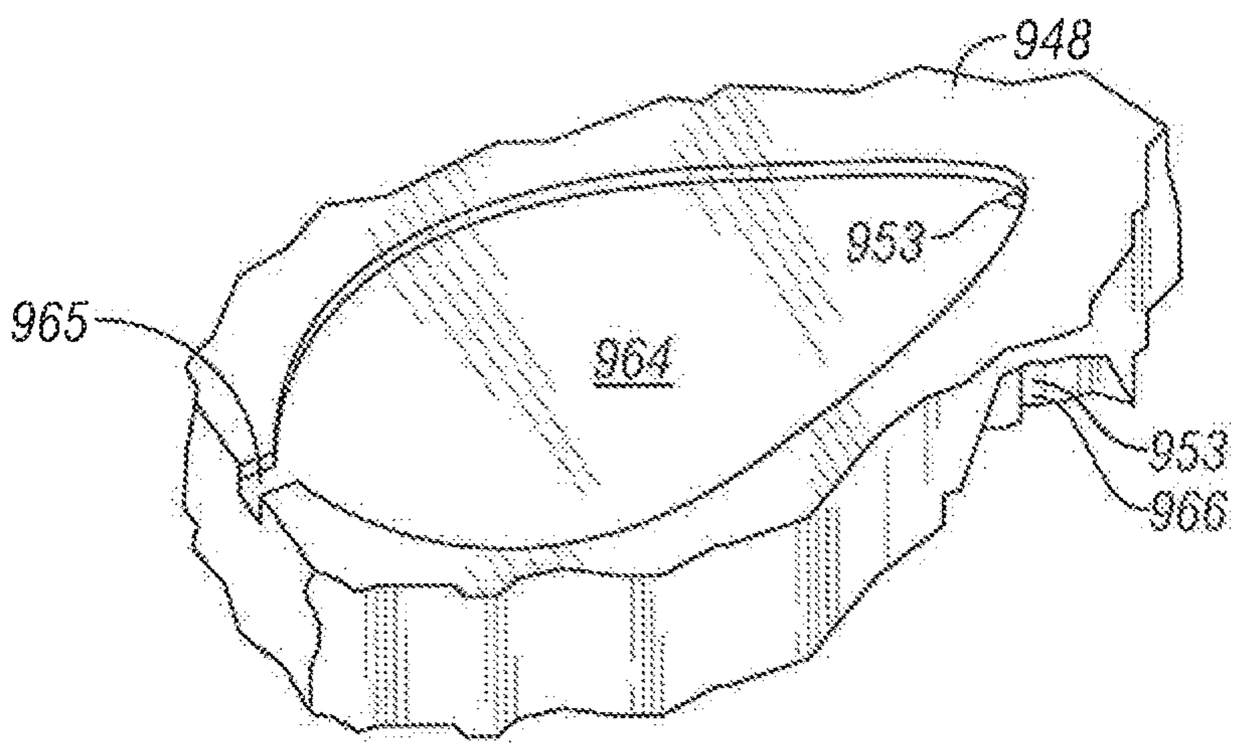

FIG. 104

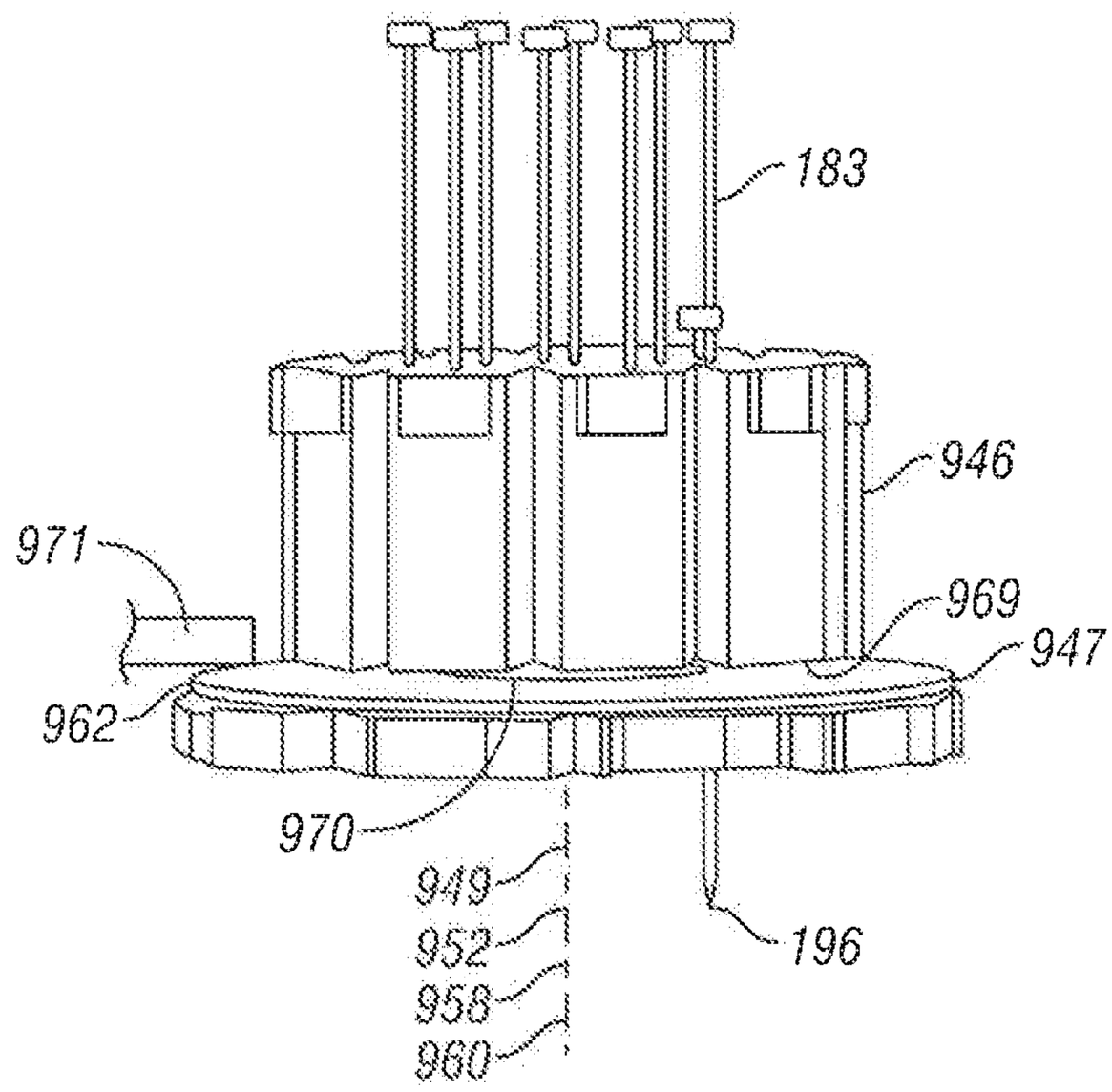

FIG. 105

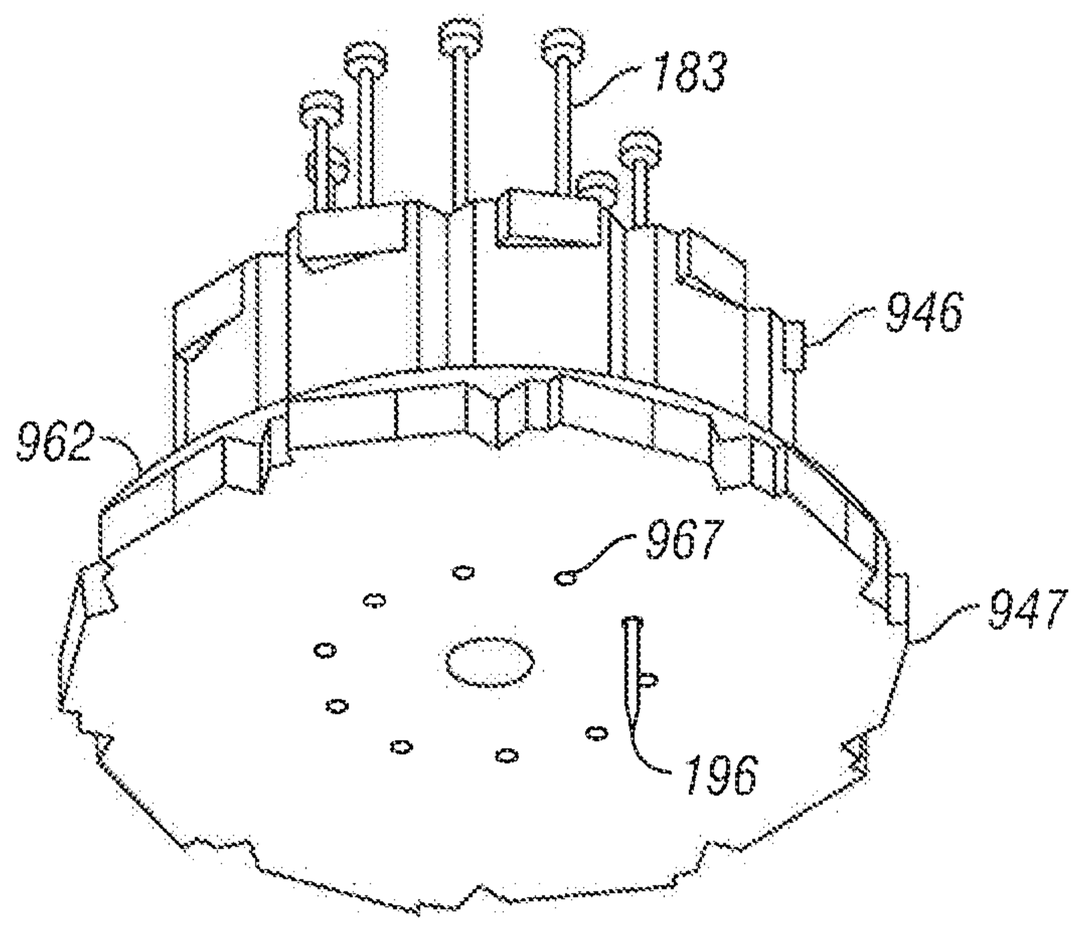

FIG. 106

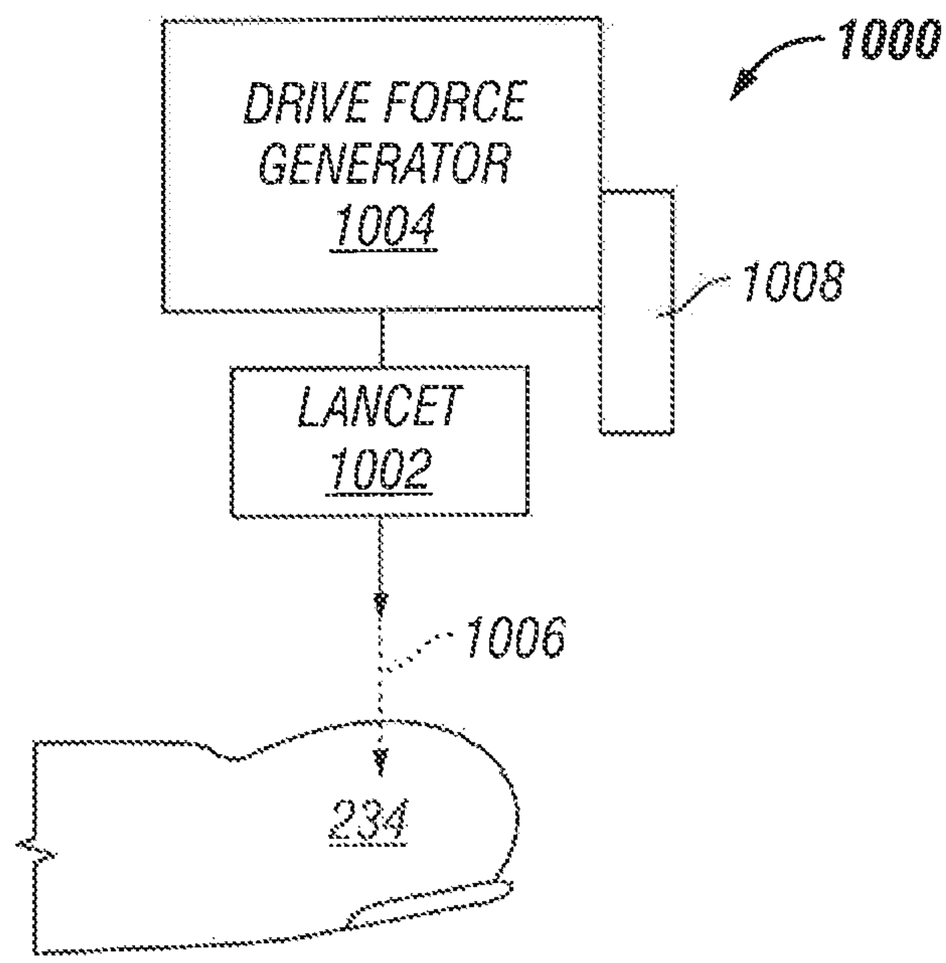

FIG. 107

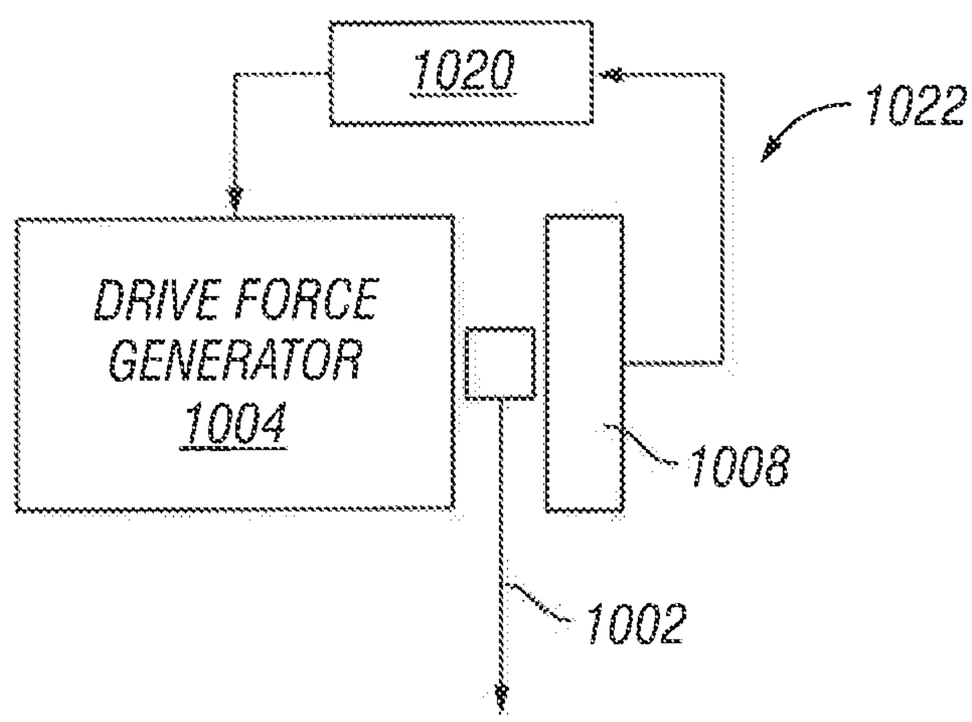

FIG. 108

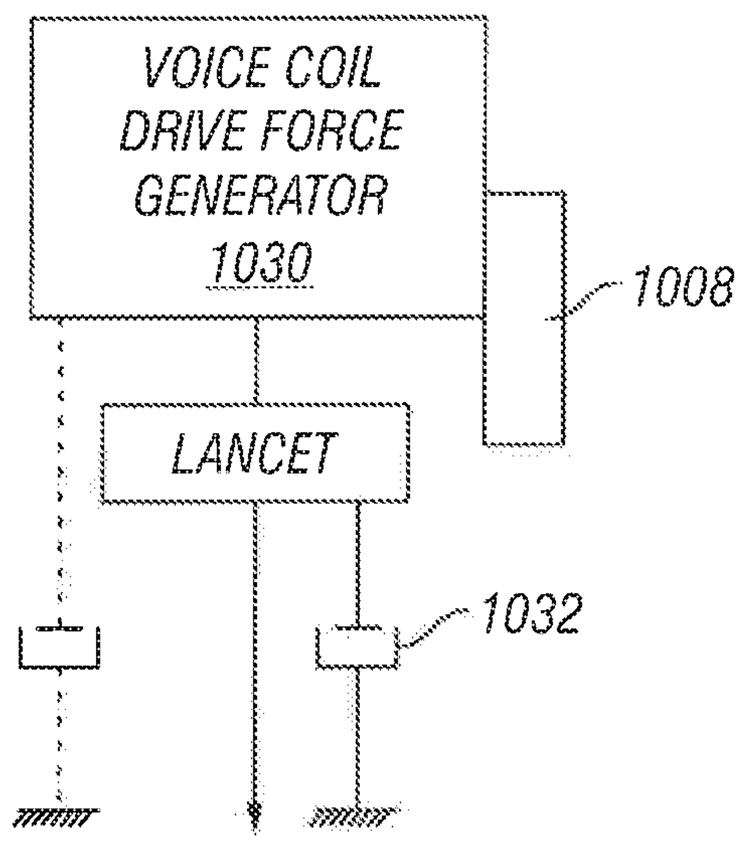

FIG. 109

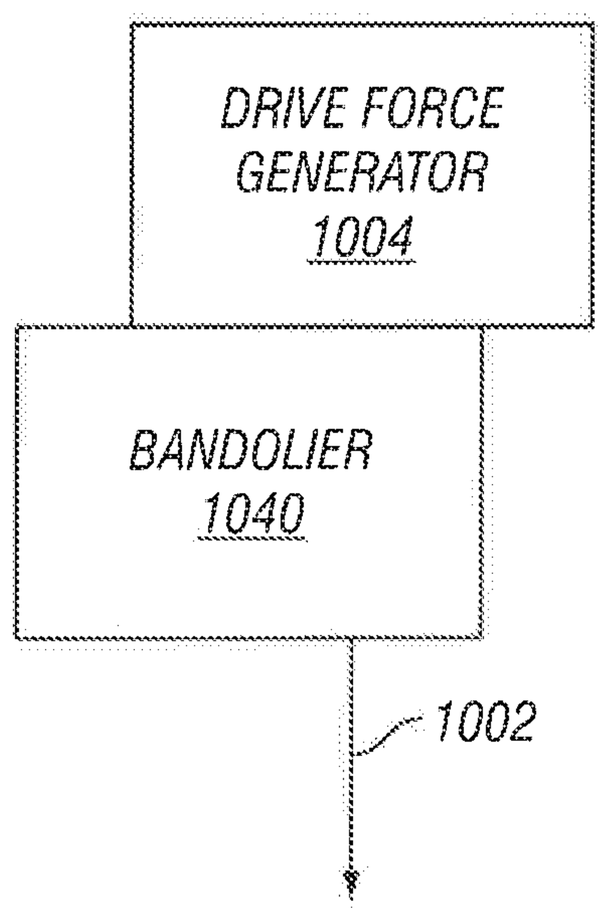

FIG. 110A

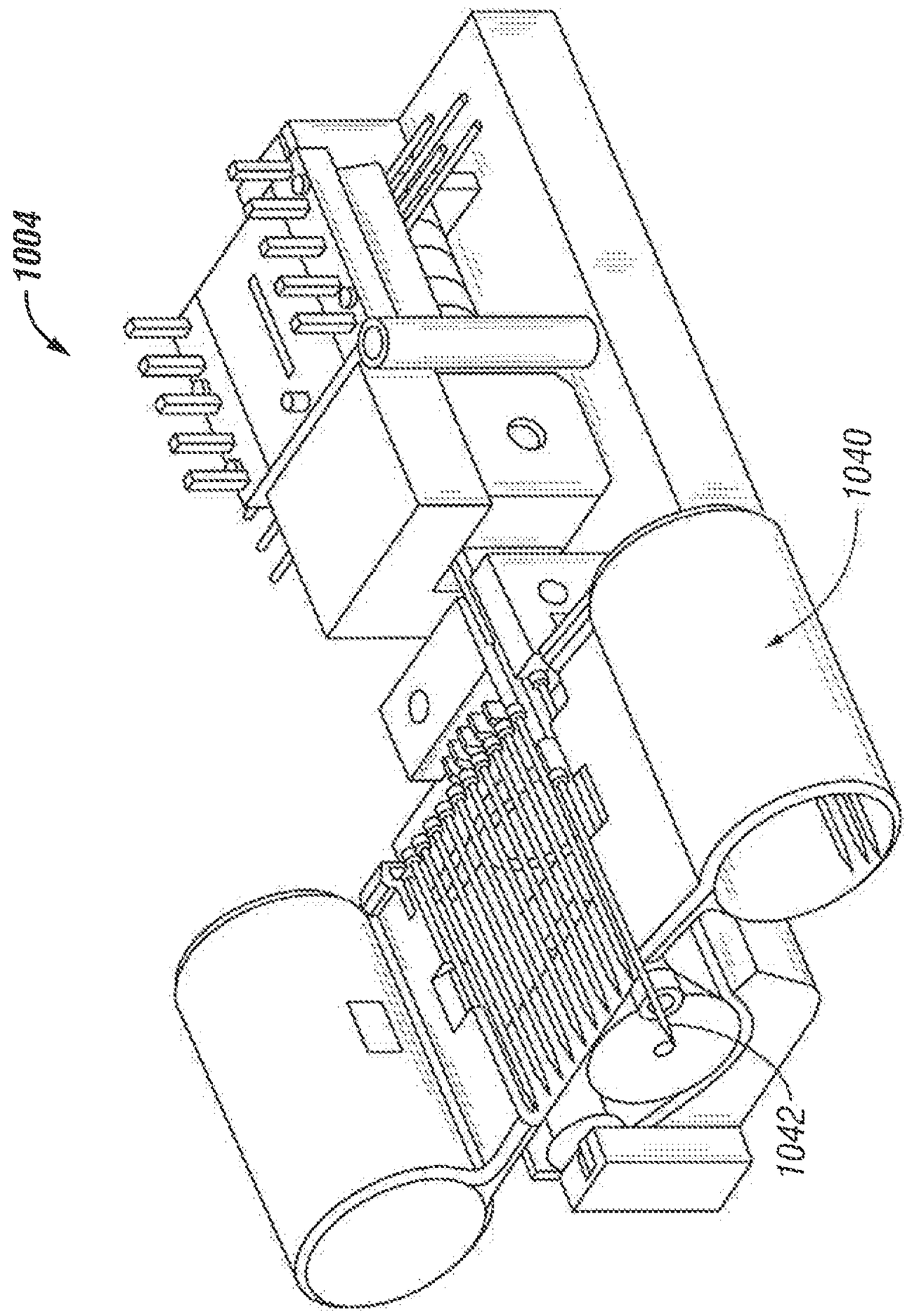

FIG. 110B

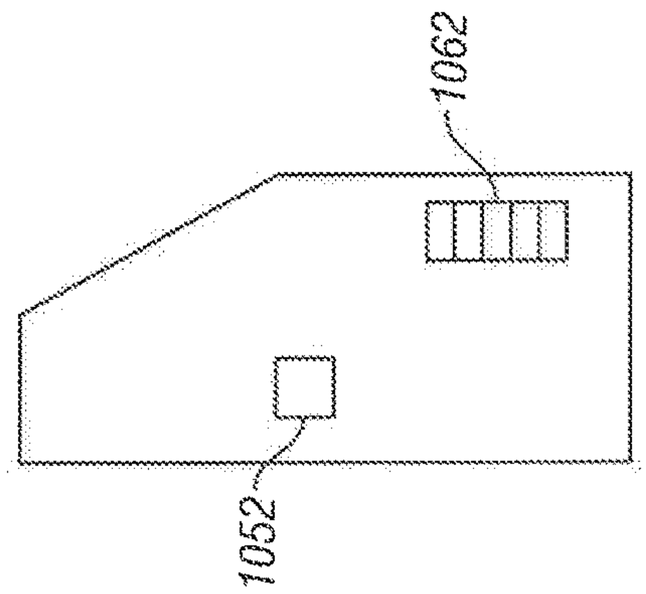

FIG. 113

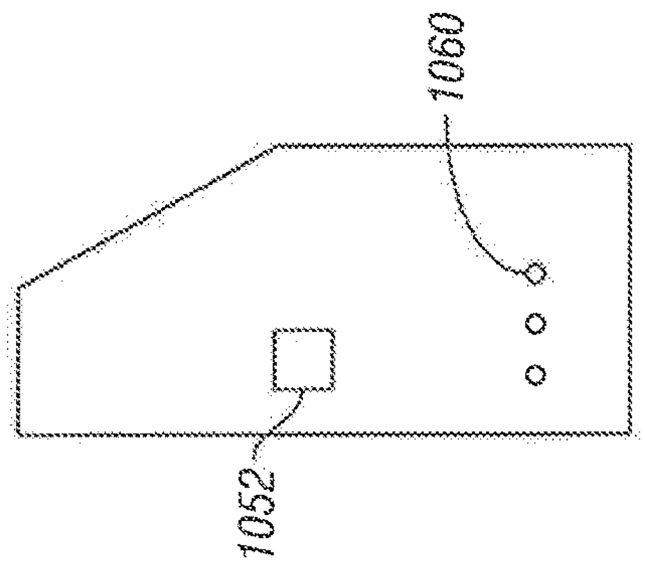

FIG. 112

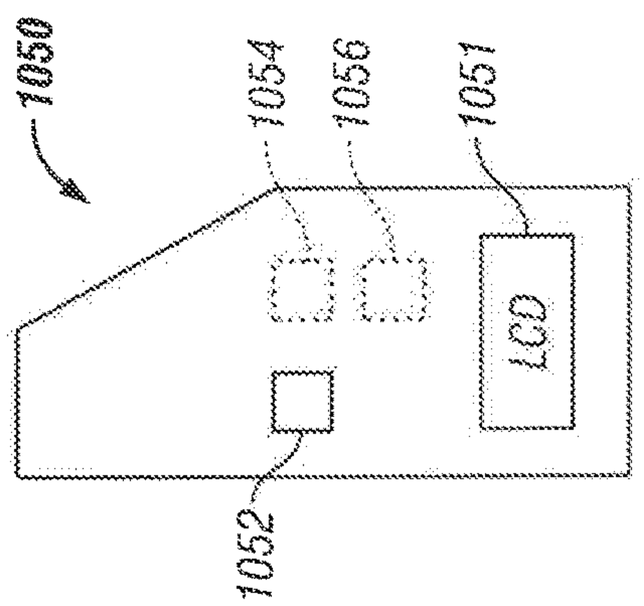

FIG. 111

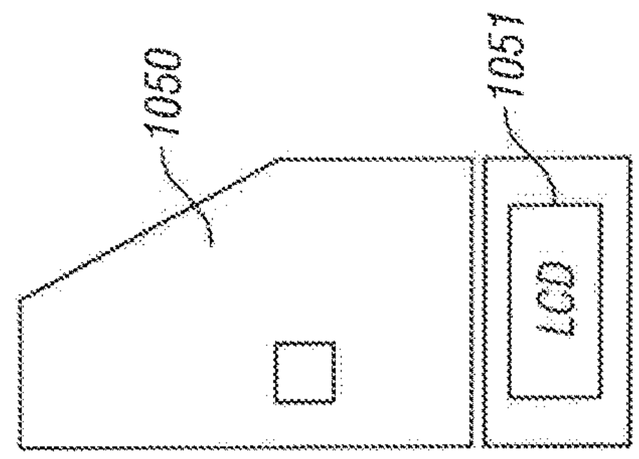

FIG. 115

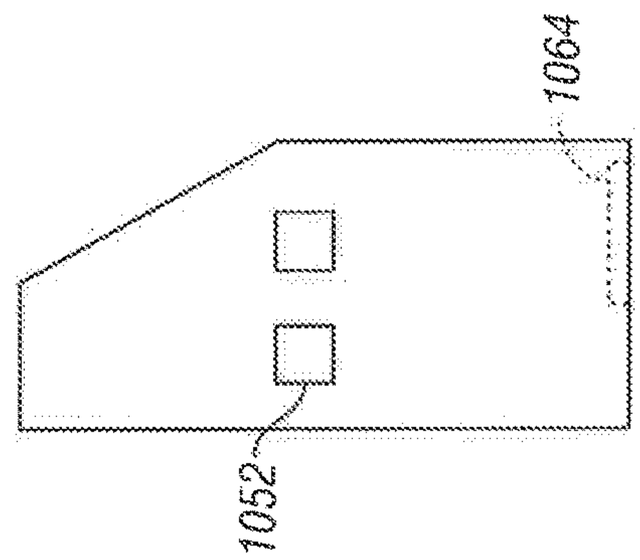

FIG. 114

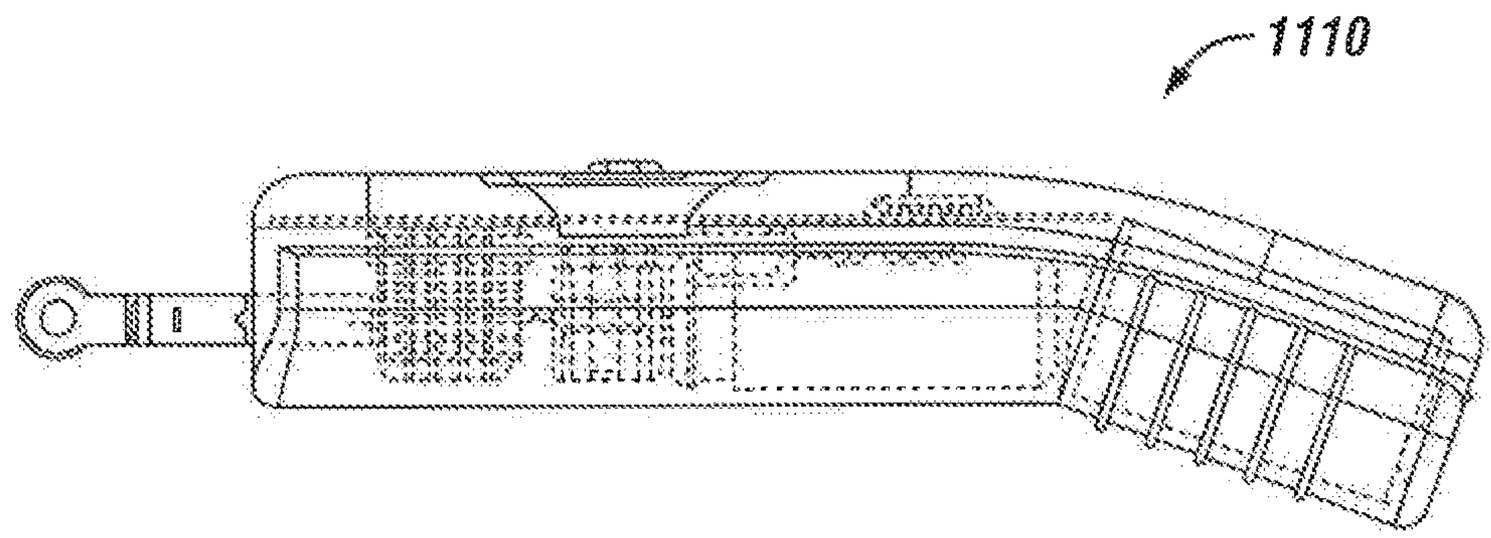

FIG. 116(a)

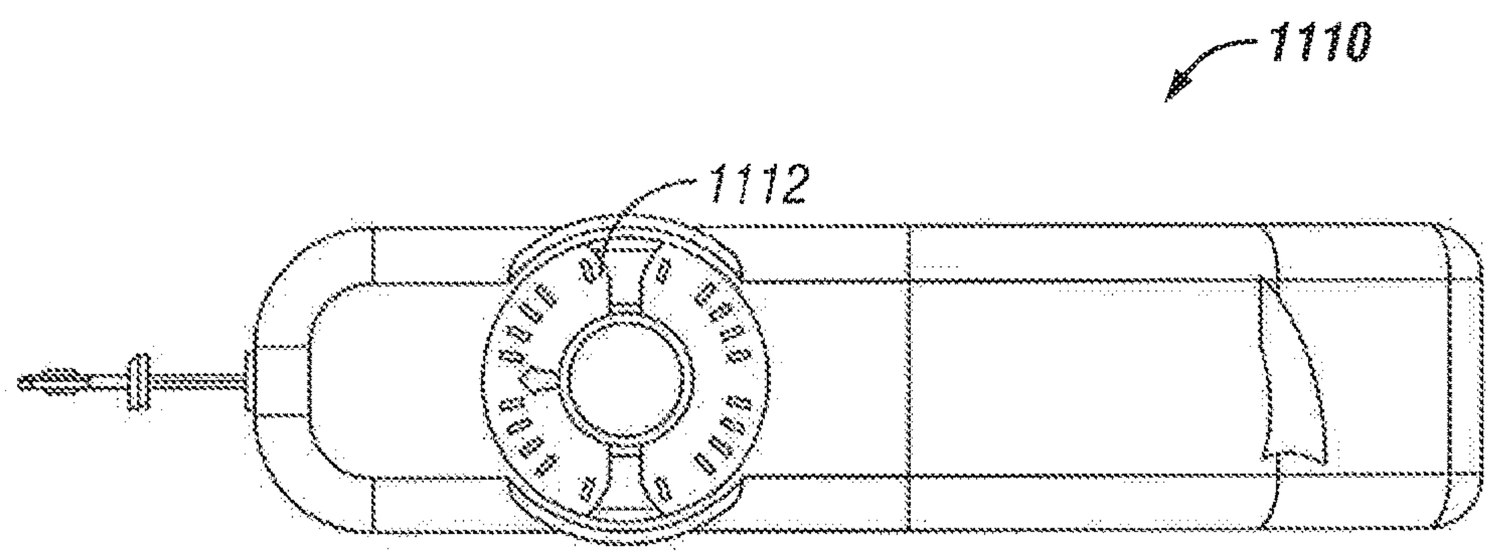

FIG. 116(b)

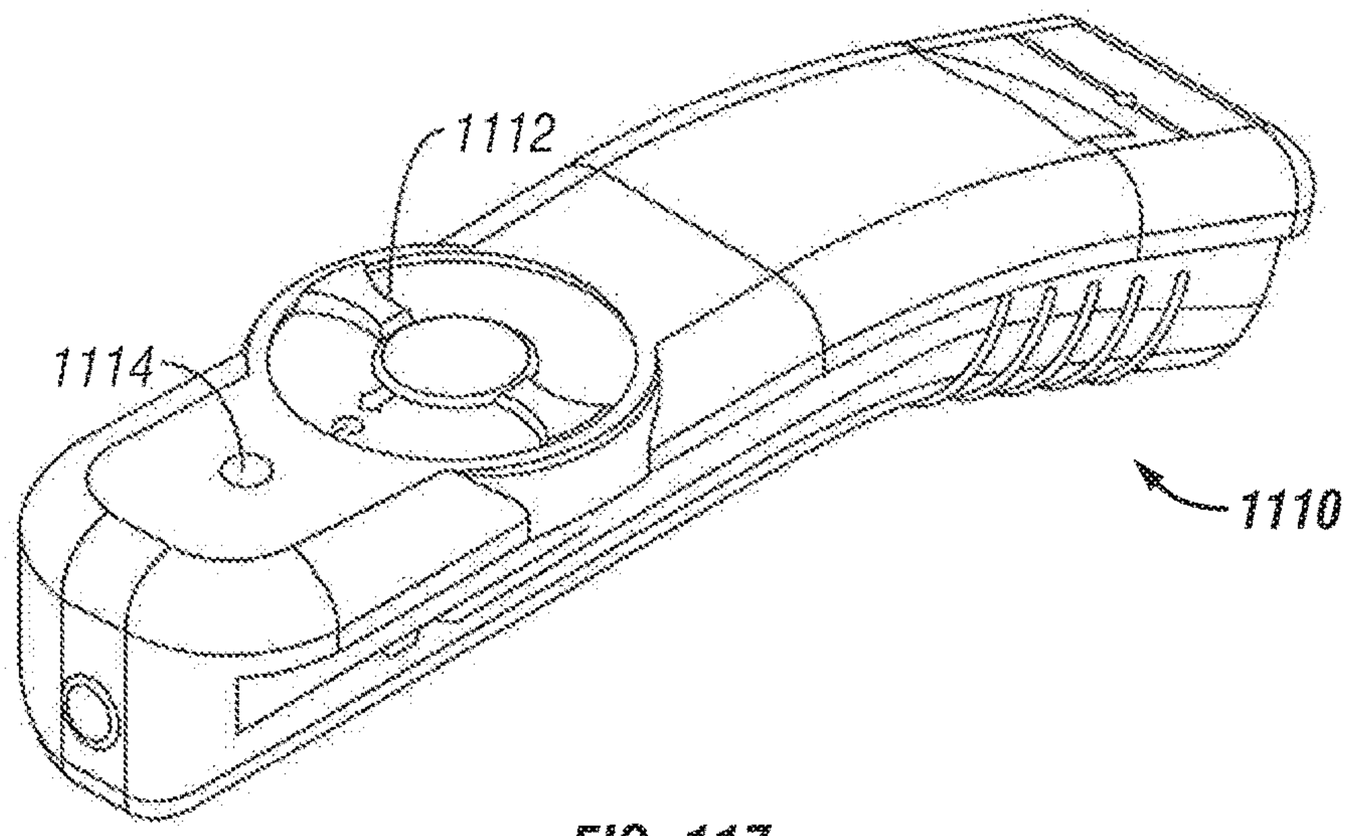

FIG. 117

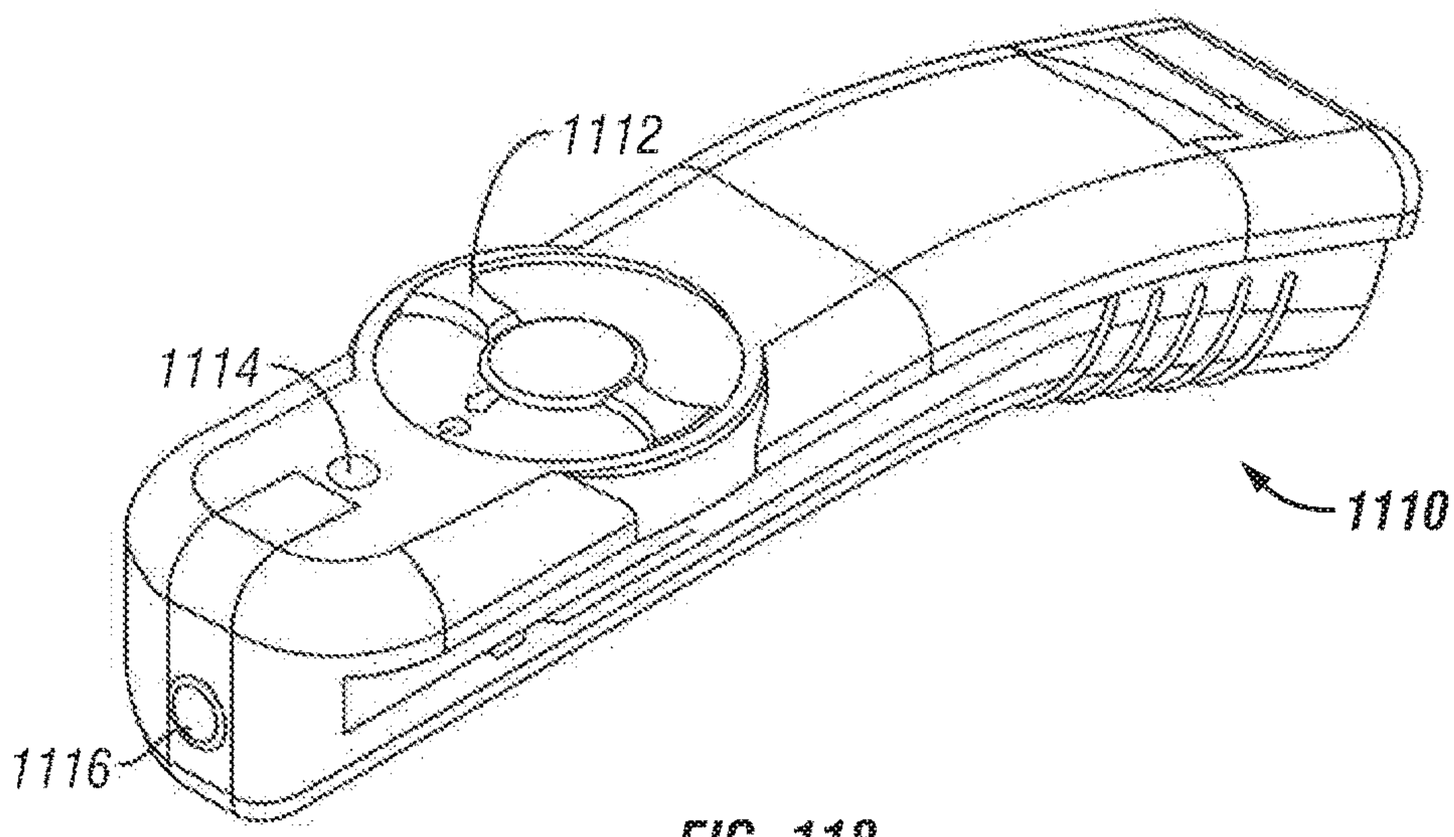

FIG. 118

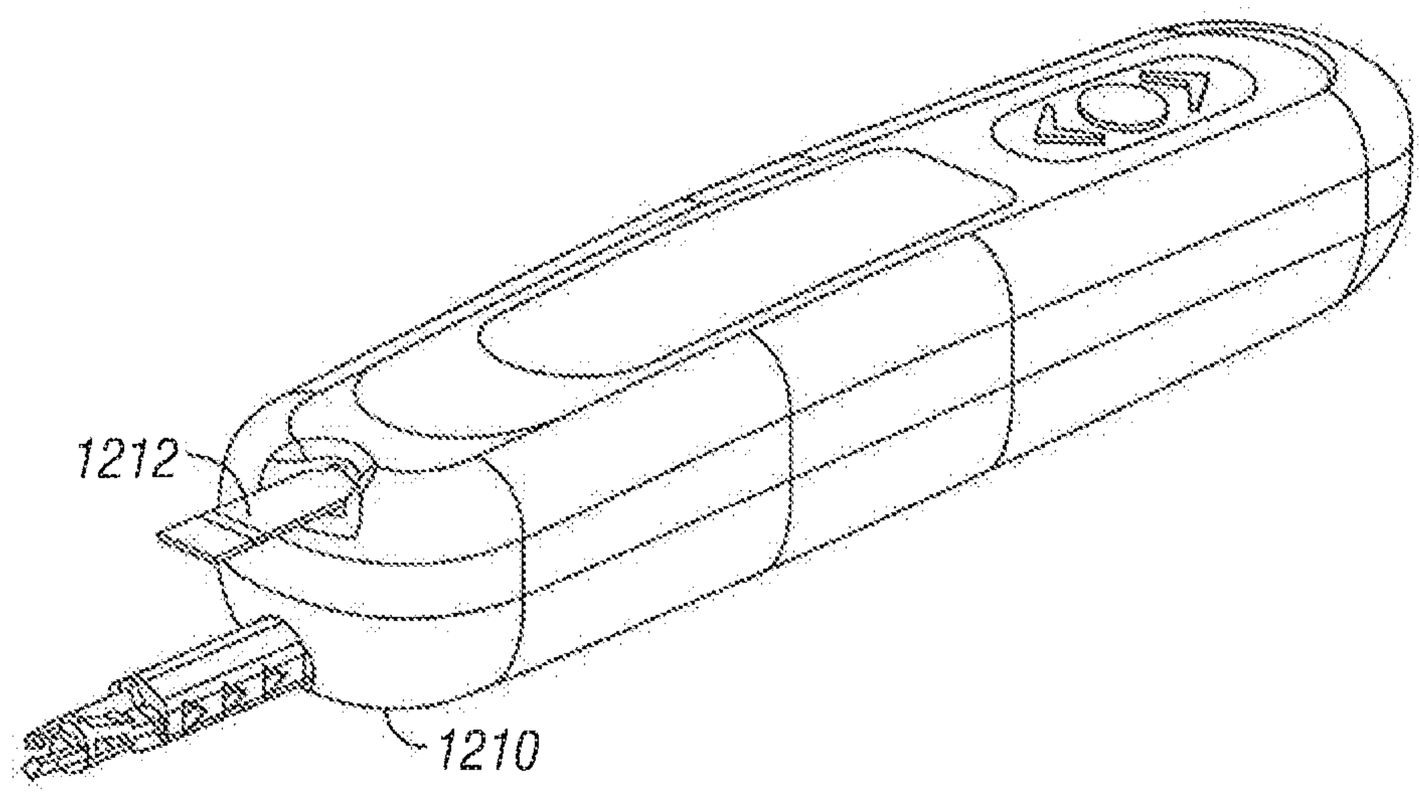

FIG. 119(a)

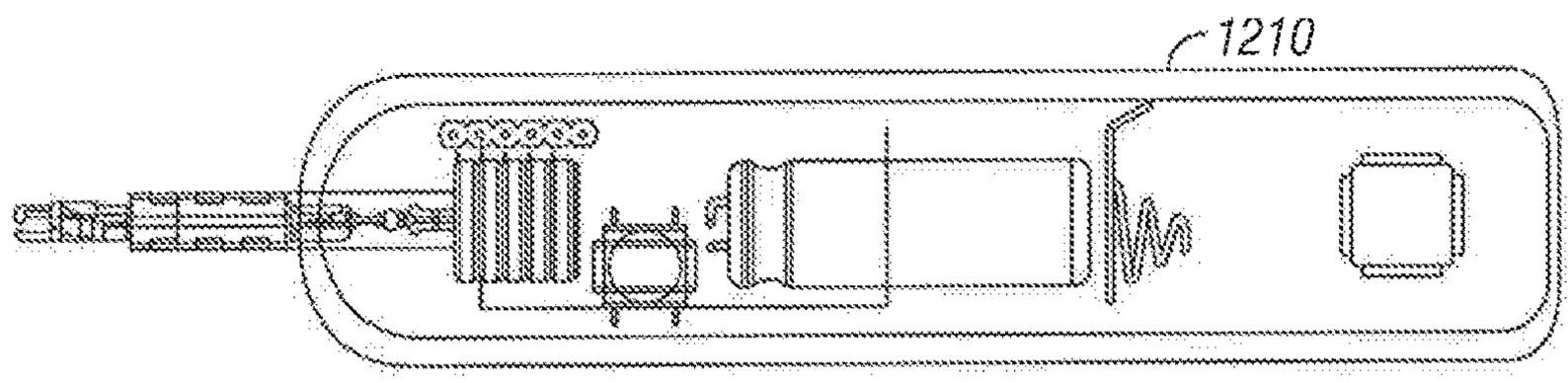

FIG. 119(b)

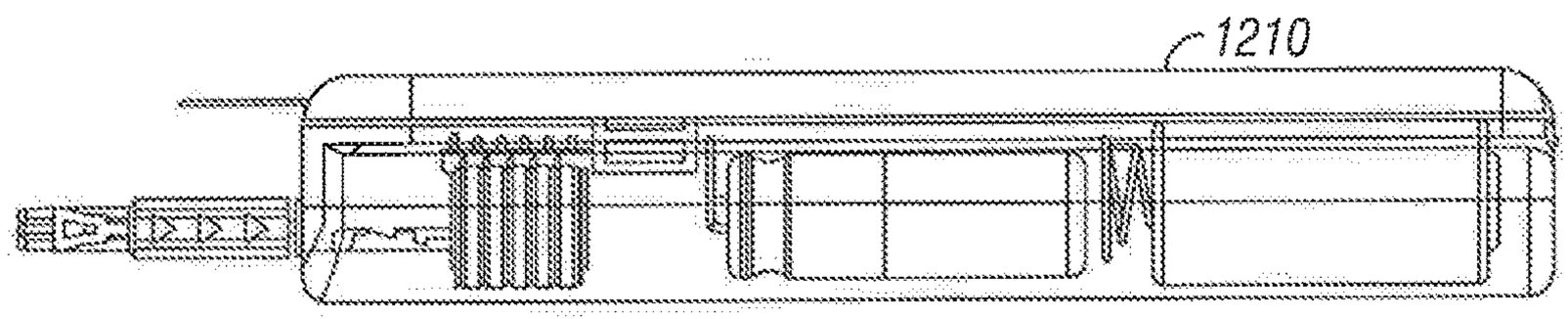

FIG. 119(c)

METHODS AND APPARATUS FOR LANCET ACTUATION

CROSS-REFERENCE TO RELATED APPLICATIONS

This application is a continuation of U.S. Ser. No. 13/151,613 filed Jun. 2, 2011, which claims the benefit of U.S. 61/350,625 filed Jun. 2, 2010, and U.S. 61/351,013 filed Jun. 3, 2010. This application is also a continuation-in-part of U.S. Ser. No. 12/942,246 filed Nov. 9, 2010, which application is a continuation-in-part of U.S. Ser. No. 12/143,373 filed Jun. 20, 2008 (now U.S. Pat. No. 7,862,520), which is a continuation of U.S. Ser. No. 11/764,229, filed Jun. 18, 2007 (now U.S. Pat. No. 7,981,056), which is a divisional of U.S. Ser. No. 11/687,028 filed Mar. 16, 2007 (now U.S. Pat. No. 8,414,503), which is a divisional of U.S. Ser. No. 10/237,261 filed Sep. 5, 2002 (now U.S. Pat. No. 7,344,507), which is a continuation-in-part of U.S. Ser. No. 10/127,395 filed Apr. 19, 2002 (now U.S. Pat. No. 7,025,774), which claims the benefit of U.S. 60/298,055, 60/298,126, 60/297,861, 60/298,001, 60/298,056, and 60/297,860, all filed Jun. 12, 2001. All of the above applications are fully incorporated herein by reference.

BACKGROUND OF THE INVENTION

Lancing devices are known in the medical health-care products industry for piercing the skin to produce blood for analysis. Biochemical analysis of blood samples is a diagnostic tool for determining clinical information. Many point-of-care tests are performed using whole blood, the most common being monitoring diabetic blood glucose level. Other uses for this method include the analysis of oxygen and coagulation based on Prothrombin time measurement. Typically, a drop of blood for this type of analysis is obtained by making a small incision in the fingertip, creating a small wound, which generates a small blood droplet on the surface of the skin.

Early methods of lancing included piercing or slicing the skin with a needle or razor. Current methods utilize lancing devices that contain a multitude of spring, cam and mass actuators to drive the lancet. These include cantilever springs, diaphragms, coil springs, as well as gravity plumbs used to drive the lancet. Typically, the device is pre-cocked or the user cocks the device. The device is held against the skin and the user, or pressure from the users skin, mechanically triggers the ballistic launch of the lancet. The forward movement and depth of skin penetration of the lancet is determined by a mechanical stop and/or dampening, as well as a spring or cam to retract the lancet. Such devices have the possibility of multiple strikes due to recoil, in addition to vibratory stimulation of the skin as the driver impacts the end of the launcher stop, and only allow for rough control for skin thickness variation. Different skin thickness may yield different results in terms of pain perception, blood yield and success rate of obtaining blood between different users of the lancing device.

Success rate generally encompasses the probability of producing a blood sample with one lancing action, which is sufficient in volume to perform the desired analytical test. The blood may appear spontaneously at the surface of the skin, or may be "milked" from the wound. Milking generally involves pressing the side of the digit, or in proximity of the wound to express the blood to the surface. In traditional methods, the blood droplet produced by the lancing action must reach the surface of the skin to be viable for testing.

When using existing methods, blood often flows from the cut blood vessels but is then trapped below the surface of the skin, forming a hematoma. In other instances, a wound is created, but no blood flows from the wound. In either case, the lancing process cannot be combined with the sample acquisition and testing step. Spontaneous blood droplet generation with current mechanical launching system varies between launcher types but on average it is about 50% of lancet strikes, which would be spontaneous. Otherwise milking is required to yield blood. Mechanical launchers are unlikely to provide the means for integrated sample acquisition and testing if one out of every two strikes does not yield a spontaneous blood sample.

Many diabetic patients (insulin dependent) are required to self-test for blood glucose levels five to six times daily. The large number of steps required in traditional methods of glucose testing ranging from lancing, to milking of blood, applying blood to the test strip, and getting the measurements from the test strip discourages many diabetic patients from testing their blood glucose levels as often as recommended. Tight control of plasma glucose through frequent testing is therefore mandatory for disease management. The pain associated with each lancing event further discourages patients from testing. Additionally, the wound channel left on the patient by known systems may also be of a size that discourages those who are active with their hands or who are worried about healing of those wound channels from testing their glucose levels.

Another problem frequently encountered by patients who must use lancing equipment to obtain and analyze blood samples is the amount of manual dexterity and hand-eye coordination required to properly operate the lancing and sample testing equipment due to retinopathies and neuropathies particularly, severe in elderly diabetic patients. For those patients, operating existing lancet and sample testing equipment can be a challenge. Once a blood droplet is created, that droplet must then be guided into a receiving channel of a small test strip or the like. If the sample placement on the strip is unsuccessful, repetition of the entire procedure including re-lancing the skin to obtain a new blood droplet is necessary.

SUMMARY OF THE INVENTION

In one aspect of the present invention, a lancet driver is configured to exert a driving force on a lancet during a lancing cycle and is used on a tissue site. The driver comprises of a drive force generator for advancing the lancet along a path into the tissue site, and a manual switch for a user interface input.

BRIEF DESCRIPTION OF THE DRAWINGS

FIGS. **1-3** are graphs of lancet velocity versus position for embodiments of spring driven, cam driven, and controllable force drivers.

FIG. **4** illustrates an embodiment of a controllable force driver in the form of a flat electric lancet driver that has a solenoid-type configuration.

FIG. **5** illustrates an embodiment of a controllable force driver in the form of a cylindrical electric lancet driver using a coiled solenoid-type configuration.

FIG. **6** illustrates a displacement over time profile of a lancet driven by a harmonic spring/mass system.

FIG. **7** illustrates the velocity over time profile of a lancet driver by a harmonic spring/mass system.

FIG. **8** illustrates a displacement over time profile of an embodiment of a controllable force driver.

FIG. **9** illustrates a velocity over time profile of an embodiment of a controllable force driver.

FIG. **10** illustrates the lancet needle partially retracted, after severing blood vessels; blood is shown following the needle in the wound tract.

FIG. **11** illustrates blood following the lancet needle to the skin surface, maintaining an open wound tract.

FIG. **12** is a diagrammatic view illustrating a controlled feed-back loop.

FIG. **13** is a graph of force vs. time during the advancement and retraction of a lancet showing some characteristic phases of a lancing cycle.

FIG. **14** illustrates a lancet tip showing features, which can affect lancing pain, blood volume, and success rate.

FIG. **15** illustrates an embodiment of a lancet tip.

FIG. **16** is a graph showing displacement of a lancet over time.

FIG. **17** is a graph showing an embodiment of a velocity profile, which includes the velocity of a lancet over time including reduced velocity during retraction of the lancet.

FIG. **18** illustrates the tip of an embodiment of a lancet before, during and after the creation of an incision braced with a helix.

FIG. **19** illustrates a finger wound tract braced with an elastomer embodiment.

FIG. **20** is a perspective view of a tissue penetration device having features of the invention.

FIG. **21** is an elevation view in partial longitudinal section of the tissue penetration device of FIG. **20**.

FIG. **22** is an elevation view in partial section of an alternative embodiment.

FIG. **23** is a transverse cross sectional view of the tissue penetration device of FIG. **21** taken along lines **23-23** of FIG. **21**.

FIG. **24** is a transverse cross sectional view of the tissue penetration device of FIG. **21** taken along lines **24-24** of FIG. **21**.

FIG. **25** is a transverse cross sectional view of the tissue penetration device of FIG. **21** taken along lines **25-25** of FIG. **21**.

FIG. **26** is a transverse cross sectional view of the tissue penetration device of FIG. **21** taken along lines **26-26** of FIG. **21**.

FIG. **27** is a side view of the drive coupler of the tissue penetration device of FIG. **21**.

FIG. **28** is a front view of the drive coupler of the tissue penetration device of FIG. **21** with the lancet not shown for purposes of illustration.

FIGS. **29**A-**29**C show a flowchart illustrating a lancet control method.

FIG. **30** is a diagrammatic view of a patient's finger and a lancet tip moving toward the skin of the finger.

FIG. **31** is a diagrammatic view of a patient's finger and the lancet tip making contact with the skin of a patient's finger.

FIG. **32** is a diagrammatic view of the lancet tip depressing the skin of a patient's finger.

FIG. **33** is a diagrammatic view of the lancet tip further depressing the skin of a patient's finger.

FIG. **34** is a diagrammatic view of the lancet tip penetrating the skin of a patient's finger.

FIG. **35** is a diagrammatic view of the lancet tip penetrating the skin of a patient's finger to a desired depth.

FIG. **36** is a diagrammatic view of the lancet tip withdrawing from the skin of a patient's finger.

FIGS. **37-41** illustrate a method of tissue penetration that may measure elastic recoil of the skin.

FIG. **42** is a graphical representation of position and velocity vs. time for a lancing cycle.

FIG. **43** illustrates a sectional view of the layers of skin with a lancet disposed therein.

FIG. **44** is a graphical representation of velocity vs. position of a lancing cycle.

FIG. **45** is a graphical representation of velocity vs. time of a lancing cycle.

FIG. **46** is an elevation view in partial longitudinal section of an alternative embodiment of a driver coil pack and position sensor.

FIG. **47** is a perspective view of a flat coil driver having features of the invention.

FIG. **48** is an exploded view of the flat coil driver of FIG. **47**.

FIG. **49** is an elevational view in partial longitudinal section of a tapered driver coil pack having features of the invention.

FIG. **50** is a transverse cross sectional view of the tapered coil driver pack of FIG. **49** taken along lines **50-50** in FIG. **49**.

FIG. **51** shows an embodiment of a sampling module which houses a lancet and sample reservoir.

FIG. **52** shows a housing that includes a driver and a chamber where the module shown in FIG. **51** can be loaded.

FIG. **53** shows a tissue penetrating sampling device with the module loaded into the housing.

FIG. **54** shows an alternate embodiment of a lancet configuration.

FIG. **55** illustrates an embodiment of a sample input port, sample reservoir and ergonomically contoured finger contact area.

FIG. **56** illustrates the tissue penetration sampling device during a lancing event.

FIG. **57** illustrates a thermal sample sensor having a sample detection element near a surface over which a fluid may flow and an alternative position for a sampled detection element that would be exposed to a fluid flowing across the surface.

FIG. **58** shows a configuration of a thermal sample sensor with a sample detection element that includes a separate heating element.

FIG. **59** depicts three thermal sample detectors such as that shown in FIG. **58** with sample detection elements located near each other alongside a surface.

FIG. **60** illustrates thermal sample sensors positioned relative to a channel having an analysis site.

FIG. **61** shows thermal sample sensors with sample detection analyzers positioned relative to analysis sites arranged in an array on a surface.

FIG. **62** schematically illustrates a sampling module device including several possible configurations of thermal sample sensors including sample detection elements positioned relative to sample flow channels and analytical regions.

FIG. **63** illustrates a tissue penetration sampling device having features of the invention.

FIG. **64** is a top view in partial section of a sampling module of the tissue penetration sampling device of FIG. **63**.

FIG. **65** is a cross sectional view through line **65-65** of the sampling module shown in FIG. **64**.

FIG. **66** schematically depicts a sectional view of an alternative embodiment of the sampling module.

FIG. **67** depicts a portion of the sampling module surrounding a sampling port.

FIGS. **68-70** show in sectional view one implementation of a spring powered lancet driver in three different positions during use of the lancet driver.

FIG. **71** illustrates an embodiment of a tissue penetration sampling device having features of the invention.

FIG. **72** shows a top surface of a cartridge that includes multiple sampling modules.

FIG. **73** shows in partial section a sampling module of the sampling cartridge positioned in a reader device.

FIG. **74** is a perspective view in partial section of a tissue penetration sampling device with a cartridge of sampling modules.

FIG. **75** is a front view in partial section of the tissue penetration sampling device of FIG. **56**.

FIG. **76** is a top view of the tissue penetration sampling device of FIG. **75**.

FIG. **77** is a perspective view of a section of a sampling module belt having a plurality of sampling modules connected in series by a sheet of flexible polymer.

FIG. **78** is a perspective view of a single sampling module of the sampling module belt of FIG. **59**.

FIG. **79** is a bottom view of a section of the flexible polymer sheet of the sampling module of FIG. **78** illustrating the flexible conductors and contact points deposited on the bottom surface of the flexible polymer sheet.

FIG. **80** is a perspective view of the body portion of the sampling module of FIG. **77** without the flexible polymer cover sheet or lancet.

FIG. **81** is an enlarged portion of the body portion of the sampling module of FIG. **80** illustrating the input port, sample flow channel, analytical region, lancet channel and lancet guides of the sampling module.

FIG. **82** is an enlarged elevational view of a portion of an alternative embodiment of a sampling module having a plurality of small volume analytical regions.

FIG. **83** is a perspective view of a body portion of a lancet module that can house and guide a lancet without sampling or analytical functions.

FIG. **84** is an elevational view of a drive coupler having a T-slot configured to accept a drive head of a lancet.

FIG. **85** is an elevational view of the drive coupler of FIG. **84** from the side and illustrating the guide ramps of the drive coupler.

FIG. **86** is a perspective view of the drive coupler of FIG. **84** with a lancet being loaded into the T-slot of the drive coupler.

FIG. **87** is a perspective view of the drive coupler of FIG. **86** with the drive head of the lancet completely loaded into the T-slot of the drive coupler.

FIG. **88** is a perspective view of a sampling module belt disposed within the T-slot of the drive coupler with a drive head of a lancet of one of the sampling modules loaded within the T-slot of the drive coupler.

FIG. **89** is a perspective view of a sampling module cartridge with the sampling modules arranged in a ring configuration.

FIG. **90** is a perspective view of a sampling module cartridge with the plurality of sampling modules arranged in a block matrix with lancet drive heads configured to mate with a drive coupler having adhesive coupling.

FIG. **91** is a side view of an alternative embodiment of a drive coupler having a lateral slot configured to accept the L-shaped drive head of the lancet that is disposed within a lancet module and shown with the L-shaped drive head loaded in the lateral slot.

FIG. **92** is an exploded view of the drive coupler, lancet with L-shaped drive head and lancet module of FIG. **91**.

FIG. **93** is a perspective view of the front of a lancet cartridge coupled to the distal end of a controlled electromagnetic driver.

FIG. **94** is an elevational front view of the lancet cartridge of FIG. **93**.

FIG. **95** is a top view of the lancet cartridge of FIG. **93**.

FIG. **96** is a perspective view of the lancet cartridge of FIG. **93** with a portion of the cartridge body and lancet receptacle not shown for purposes of illustration of the internal mechanism.

FIGS. **97-101** illustrate an embodiment of an agent injection device.

FIGS. **102-106** illustrate an embodiment of a cartridge for use in sampling having a sampling cartridge body and a lancet cartridge body.

FIG. **107** is a schematic showing a lancet driver having a driver force generator and a sensor according to the present invention.

FIG. **108** is a schematic showing one embodiment of the lancet driver using closed loop control.

FIG. **109** is a schematic showing one embodiment of the lancet driver using a damper.

FIGS. **110**A and **1106** show embodiments of the lancet driver for use with multiple lancets.

FIGS. **111-115** illustrate embodiments of a lancet driver with a variety of different interface devices.

FIGS. **116**(*a*) and **116**(*b*) illustrate top and side views of embodiments of a lancet driver with a multi-switch user interface of the present invention.

FIG. **117** illustrates an embodiment of a lancet driver of the present invention with an LED.

FIG. **118** illustrates an embodiment of a lancet driver of the present invention with a semi-transparent lancet window.

FIGS. **119** (*a*)-(*c*) depict various embodiments of the lancing device.

DESCRIPTION OF THE SPECIFIC EMBODIMENTS

Variations in skin thickness including the stratum corneum and hydration of the epidermis can yield different results between different users with existing tissue penetration devices, such as lancing devices wherein the tissue penetrating element of the tissue penetration device is a lancet. Many current devices rely on adjustable mechanical stops or damping, to control the lancet's depth of penetration.

Displacement velocity profiles for both spring driven and cam driven tissue penetration devices are shown in FIGS. **1** and **2**, respectively. Velocity is plotted against displacement X of the lancet. FIG. **1** represents a displacement/velocity profile typical of spring driven devices. The lancet exit velocity increases until the lancet hits the surface of the skin **10**. Because of the tensile characteristics of the skin, it will bend or deform until the lancet tip cuts the surface **20**, the lancet will then penetrate the skin until it reaches a full stop **30**. At this point displacement is maximal and reaches a limit of penetration and the lancet stops. Mechanical stops absorb excess energy from the driver and transfer it to the lancet. The energy stored in the spring can cause recoil resulting in multiple piercing as seen by the coiled profile in FIG. **1**. This results in unnecessary pain from the additional tissue penetration as well as from transferring vibratory energy into the skin and exciting nerve endings. Retraction of the lancet then occurs and the lancet exits the skin **40** to return into the housing. Velocity cannot be controlled in any meaningful way for this type of spring-powered driver.

FIG. **2** shows a displacement/velocity profile for a cam driven driver, which is similar to that of FIG. **1**, but because the return path is specified in the cam configuration, there is no possibility of multiple tissue penetrations from one actuation. Cam based drivers can offer some level of control of lancet velocity vs. displacement, but not enough to achieve many desirable displacement/velocity profiles.

Advantages are achieved by utilizing a controllable force driver to drive a lancet, such as a driver, powered by electromagnetic energy. A controllable driver can achieve a desired velocity versus position profile, such as that shown in FIG. **3**. Embodiments of the present invention allow for the ability to accurately control depth of penetration, to control lancet penetration and withdrawal velocity, and therefore reduce the pain perceived when cutting into the skin. Embodiments of the invention include a controllable driver that can be used with a feedback loop with a position sensor to control the power delivered to the lancet, which can optimize the velocity and displacement profile to compensate for variations in skin thickness

Pain reduction can be achieved by using a rapid lancet cutting speed, which is facilitated by the use of a lightweight lancet. The rapid cutting minimizes the shock waves produced when the lancet strikes the skin in addition to compressing the skin for efficient cutting. If a controllable driver is used, the need for a mechanical stop can be eliminated. Due to the very light mass of the lancet and lack of a mechanical stop, there is little or no vibrational energy transferred to the finger during cutting.

The lancing devices such as those whose velocity versus position profiles are shown in FIGS. **1** and **2** typically yield 50% spontaneous blood. In addition, some lancing events are unsuccessful and yield no blood, even on milking the finger. A spontaneous blood droplet generation is dependent on reaching the blood capillaries and venuoles, which yield the blood sample. It is therefore an issue of correct depth of penetration of the cutting device. Due to variations in skin thickness and hydration, some types of skin will deform more before cutting starts, and hence the actual depth of penetration will be less, resulting in less capillaries and venuoles cut. A controllable force driver can control the depth of penetration of a lancet and hence improve the spontaneity of blood yield. Furthermore, the use of a controllable force driver can allow for slow retraction of the lancet (slower than the cutting velocity) resulting in improved success rate due to the would channel remaining open for the free passage of blood to the surface of the skin.

Spontaneous blood yield occurs when blood from the cut vessels flow up the wound tract to the surface of the skin, where it can be collected and tested. Tissue elasticity parameters may force the wound tract to close behind the retracting lancet preventing the blood from reaching the surface. If however, the lancet were to be withdrawn slowly from the wound tract, thus keeping the wound open, blood could flow up the patent channel behind the tip of the lancet as it is being withdrawn (ref. FIGS. **10** and **11**). Hence the ability to control the lancet speed into and out of the wound allows the device to compensate for changes in skin thickness and variations in skin hydration and thereby achieves spontaneous blood yield with maximum success rate while minimizing pain.

An electromagnetic driver can be coupled directly to the lancet minimizing the mass of the lancet and allowing the driver to bring the lancet to a stop at a predetermined depth without the use of a mechanical stop. Alternatively, if a mechanical stop is required for positive positioning, the energy transferred to the stop can be minimized. The electromagnetic driver allows programmable control over the velocity vs. position profile of the entire lancing process including timing the start of the lancet, tracking the lancet position, measuring the lancet velocity, controlling the distal stop acceleration, and controlling the skin penetration depth.

Referring to FIG. **4**, an embodiment of a tissue penetration device is shown. The tissue penetration device includes a controllable force driver in the form of an electromagnetic driver, which can be used to drive a lancet. The term Lancet, as used herein, generally includes any sharp or blunt member, preferably having a relatively low mass, used to puncture the skin for the purpose of cutting blood vessels and allowing blood to flow to the surface of the skin. The term Electromagnetic driver, as used herein, generally includes any device that moves or drives a tissue penetrating element, such as a lancet under an electrically or magnetically induced force. FIG. **4** is a partially exploded view of an embodiment of an electromagnetic driver. The top half of the driver is shown assembled. The bottom half of the driver is shown exploded for illustrative purposes.

FIG. **4** shows the inner insulating housing **22** separated from the stationary housing or PC board **20**, and the lancet **24** and flag **26** assembly separated from the inner insulating housing **22** for illustrative purposes. In addition, only four rivets **18** are shown as attached to the inner insulating housing **22** and separated from the PC board **20**. In an embodiment, each coil drive field core in the PC board located in the PC Board **20** and **30** is connected to the inner insulating housing **22** and **32** with rivets.

The electromagnetic driver has a moving part comprising a lancet assembly with a lancet **24** and a magnetically permeable flag **26** attached at the proximal or drive end and a stationary part comprising a stationary housing assembly with electric field coils arranged so that they produce a balanced field at the flag to reduce or eliminate any net lateral force on the flag. The electric field coils are generally one or more metal coils, which generate a magnetic field when electric current passes through the coil. The iron flag is a flat or enlarged piece of magnetic material, which increases the surface area of the lancet assembly to enhance the magnetic forces generated between the proximal end of the lancet and a magnetic field produced by the field coils. The combined mass of the lancet and the iron flag can be minimized to facilitate rapid acceleration for introduction into the skin of a patient, to reduce the impact when the lancet stops in the skin, and to facilitate prompt velocity profile changes throughout the sampling cycle.

The stationary housing assembly consists of a PC board **20**, a lower inner insulating housing **22**, an upper inner insulating housing **32**, an upper PC board **30**, and rivets **18** assembled into a single unit. The lower and upper inner insulating housing **22** and **32** are relieved to form a slot so that lancet assembly can be slid into the driver assembly from the side perpendicular to the direction of the lancet's advancement and retraction. This allows the disposal of the lancet assembly and reuse of the stationary housing assembly with another lancet assembly while avoiding accidental lancet launches during replacement.

The electric field coils in the upper and lower stationary housing **20** and **30** are fabricated in a multi-layer printed circuit (PC) board. They may also be conventionally wound wire coils. A Teflon® material, or other low friction insulating material is used to construct the lower and upper inner insulating housing **22** and **32**. Each insulating housing is mounted on the PC board to provide electrical insulation and physical protection, as well as to provide a low-friction guide for the lancet. The lower and upper inner insulating

housing **22** and **32** provide a reference surface with a small gap so that the lancet assembly **24** and **26** can align with the drive field coils in the PC board for good magnetic coupling.

Rivets **18** connect the lower inner insulating housing **22** to the lower stationary housing **20** and are made of magnetically permeable material such as ferrite or steel, which serves to concentrate the magnetic field. This mirrors the construction of the upper inner insulating housing **32** and upper stationary housing **30**. These rivets form the poles of the electric field coils. The PC board is fabricated with multiple layers of coils or with multiple boards. Each layer supports spiral traces around a central hole. Alternate layers spiral from the center outwards or from the edges inward. In this way each layer connects via simple feed-through holes, and the current always travels in the same direction, summing the ampere-turns.

The PC boards within the lower and upper stationary housings **20** and **30** are connected to the lower and upper inner insulating housings **22** and **32** with the rivets **18**. The lower and upper inner insulating housings **22** and **32** expose the rivet heads on opposite ends of the slot where the lancet assembly **24** and **26** travels. The magnetic field lines from each rivet create magnetic poles at the rivet heads. An iron bar on the opposite side of the PC board within each of the lower and upper stationary housing **20** and **30** completes the magnetic circuit by connecting the rivets. Any fastener made of magnetically permeable material such as iron or steel can be used In place of the rivets. A single component made of magnetically permeable material and formed in a horseshoe shape can be used in place of the rivet/screw and iron bar assembly. In operation, the magnetically permeable flag **26** attached to the lancet **24** is divided into slits and bars **34**. The slit patterns are staggered so that coils can drive the flag **26** in two, three or more phases.

Both lower and upper PC boards **20** and **30** contain drive coils so that there is a symmetrical magnetic field above and below the flag **26**. When the pair of PC boards is turned on, a magnetic field is established around the bars between the slits of the magnetically permeable iron on the flag **26**. The bars of the flag experience a force that tends to move the magnetically permeable material to a position minimizing the number and length of magnetic field lines and conducting the magnetic field lines between the magnetic poles.

When a bar of the flag **26** is centered between the rivets **18** of a magnetic pole, there is no net force on the flag, and any disturbing force is resisted by imbalance in the field. This embodiment of the device operates on a principle similar to that of a solenoid. Solenoids cannot push by repelling iron; they can only pull by attracting the iron into a minimum energy position. The slits **34** on one side of the flag **26** are offset with respect to the other side by approximately one half of the pitch of the poles. By alternately activating the coils on each side of the PC board, the lancet assembly can be moved with respect to the stationary housing assembly. The direction of travel is established by selectively energizing the coils adjacent the metal flag on the lancet assembly. Alternatively, a three phase, three-pole design or a shading coil that is offset by one-quarter pitch establishes the direction of travel. The lower and upper PC boards **20** and **30** shown in FIG. **4** contain electric field coils, which drive the lancet assembly and the circuitry for controlling the entire electromagnetic driver.

The embodiment described above generally uses the principles of a magnetic attraction drive, similar to commonly available circular stepper motors (Hurst Manufacturing BA Series motor, or "Electrical Engineering Handbook" Second edition p 1472-1474, 1997). These references are hereby incorporated by reference. Other embodiments can include a linear induction drive that uses a changing magnetic field to induce electric currents in the lancet assembly. These induced currents produce a secondary magnetic field that repels the primary field and applies a net force on the lancet assembly. The linear induction drive uses an electrical drive control that sweeps a magnetic field from pole to pole, propelling the lancet before it. Varying the rate of the sweep and the magnitude of the field by altering the driving voltage and frequency controls the force applied to the lancet assembly and its velocity.

The arrangement of the coils and rivets to concentrate the magnetic flux also applies to the induction design creating a growing magnetic field as the electric current in the field switches on. This growing magnetic field creates an opposing electric current in the conductive flag. In a linear induction motor the flag is electrically conductive, and its magnetic properties are unimportant. Copper or aluminum are materials that can be used for the conductive flags. Copper is generally used because of its good electrical conductivity. The opposing electrical field produces an opposing magnetic field that repels the field of the coils. By phasing the power of the coils, a moving field can be generated which pushes the flag along just below the synchronous speed of the coils. By controlling the rate of sweep, and by generating multiple sweeps, the flag can be moved at a desired speed.

FIG. **5** shows another embodiment of a solenoid type electromagnetic driver that is capable of driving an iron core or slug mounted to the lancet assembly using a direct current (DC) power supply. The electromagnetic driver includes a driver coil pack that is divided into three separate coils along the path of the lancet, two end coils and a middle coil. Direct current is alternated to the coils to advance and retract the lancet. Although the driver coil pack is shown with three coils, any suitable number of coils may be used, for example, 4, 5, 6, 7 or more coils may be used.

The stationary iron housing **40** contains the driver coil pack with a first coil **52** is flanked by iron spacers **50** which concentrate the magnetic flux at the inner diameter creating magnetic poles. The inner insulating housing **48** isolates the lancet **42** and iron core **46** from the coils and provides a smooth, low friction guide surface. The lancet guide **44** further centers the lancet **42** and iron core **46**. The lancet **42** is protracted and retracted by alternating the current between the first coil **52**, the middle coil, and the third coil to attract the iron core **46**. Reversing the coil sequence and attracting the core and lancet back into the housing retracts the lancet. The lancet guide **44** also serves as a stop for the iron core **46** mounted to the lancet **42**.

As discussed above, tissue penetration devices which employ spring or cam driving methods have a symmetrical or nearly symmetrical actuation displacement and velocity profiles on the advancement and retraction of the lancet as shown in FIGS. **6** and **7**. In most of the available lancet devices, once the launch is initiated, the stored energy determines the velocity profile until the energy is dissipated. Controlling impact, retraction velocity, and dwell time of the lancet within the tissue can be useful in order to achieve a high success rate while accommodating variations in skin properties and minimize pain. Advantages can be achieved by taking into account that tissue dwell time is related to the amount of skin deformation as the lancet tries to puncture the surface of the skin and variance in skin deformation from patient to patient based on skin hydration.

The ability to control velocity and depth of penetration can be achieved by use of a controllable force driver where

feedback is an integral part of driver control. Such drivers can control either metal or polymeric lancets or any other type of tissue penetration element. The dynamic control of such a driver is illustrated in FIG. **8** which illustrates an embodiment of a controlled displacement profile and FIG. **9** which illustrates an embodiment of a the controlled velocity profile. These are compared to FIGS. **6** and **7**, which illustrate embodiments of displacement and velocity profiles, respectively, of a harmonic spring/mass powered driver.

Reduced pain can be achieved by using impact velocities of greater than 2 m/s entry of a tissue penetrating element, such as a lancet, into tissue.

Retraction of the lancet at a low velocity following the sectioning of the venuole/capillary mesh allows the blood to flood the wound tract and flow freely to the surface, thus using the lancet to keep the channel open during retraction as shown in FIGS. **10** and **11**. Low-velocity retraction of the lancet near the wound flap prevents the wound flap from sealing off the channel. Thus, the ability to slow the lancet retraction directly contributes to increasing the success rate of obtaining blood. Increasing the sampling success rate to near 100% can be important to the combination of sampling and acquisition into an integrated sampling module such as an integrated glucose-sampling module, which incorporates a glucose test strip.

Referring again to FIG. **5**, the lancet and lancet driver are configured so that feedback control is based on lancet displacement, velocity, or acceleration. The feedback control information relating to the actual lancet path is returned to a processor such as that illustrated in FIG. **12** that regulates the energy to the driver, thereby precisely controlling the lancet throughout its advancement and retraction. The driver may be driven by electric current, which includes direct current and alternating current.

In FIG. **5**, the electromagnetic driver shown is capable of driving an iron core or slug mounted to the lancet assembly using a direct current (DC) power supply and is also capable of determining the position of the iron core by measuring magnetic coupling between the core and the coils. The coils can be used in pairs to draw the iron core into the driver coil pack. As one of the coils is switched on, the corresponding induced current in the adjacent coil can be monitored. The strength of this induced current is related to the degree of magnetic coupling provided by the iron core, and can be used to infer the position of the core and hence, the relative position of the lancet.

After a period of time, the drive voltage can be turned off, allowing the coils to relax, and then the cycle is repeated. The degree of magnetic coupling between the coils is converted electronically to a proportional DC voltage that is supplied to an analog-to-digital converter. The digitized position signal is then processed and compared to a desired "nominal" position by a central processing unit (CPU). The CPU to set the level and/or length of the next power pulse to the solenoid coils uses error between the actual and nominal positions.

In another embodiment, the driver coil pack has three coils consisting of a central driving coil flanked by balanced detection coils built into the driver assembly so that they surround an actuation or magnetically active region with the region centered on the middle coil at mid-stroke. When a current pulse is applied to the central coil, voltages are induced in the adjacent sense coils. If the sense coils are connected together so that their induced voltages oppose each other, the resulting signal will be positive for deflection from mid-stroke in one direction, negative in the other direction, and zero at mid-stroke. This measuring technique is commonly used in Linear Variable Differential Transformers (LVDT). Lancet position is determined by measuring the electrical balance between the two sensing coils.

In another embodiment, a feedback loop can use a commercially available LED/photo transducer module such as the OPB703 manufactured by Optek Technology, Inc., 1215 W. Crosby Road, Carrollton, Tex., 75006 to determine the distance from the fixed module on the stationary housing to a reflective surface or target mounted on the lancet assembly. The LED acts as a light emitter to send light beams to the reflective surface, which in turn reflects the light back to the photo transducer, which acts as a light sensor. Distances over the range of 4 mm or so are determined by measuring the intensity of the reflected light by the photo transducer. In another embodiment, a feedback loop can use a magnetically permeable region on the lancet shaft itself as the core of a Linear Variable Differential Transformer (LVDT).

A permeable region created by selectively annealing a portion of the lancet shaft, or by including a component in the lancet assembly, such as ferrite, with sufficient magnetic permeability to allow coupling between adjacent sensing coils. Coil size, number of windings, drive current, signal amplification, and air gap to the permeable region are specified in the design process. In another embodiment, the feedback control supplies a piezoelectric driver, superimposing a high frequency oscillation on the basic displacement profile. The piezoelectric driver provides improved cutting efficiency and reduces pain by allowing the lancet to "saw" its way into the tissue or to destroy cells with cavitation energy generated by the high frequency of vibration of the advancing edge of the lancet. The drive power to the piezoelectric driver is monitored for an impedance shift as the device interacts with the target tissue. The resulting force measurement, coupled with the known mass of the lancet is used to determine lancet acceleration, velocity, and position.

FIG. **12** illustrates the operation of a feedback loop using a processor. The processor **60** stores profiles **62** in non-volatile memory. A user inputs information **64** about the desired circumstances or parameters for a lancing event. The processor **60** selects a driver profile **62** from a set of alternative driver profiles that have been preprogrammed in the processor **60** based on typical or desired tissue penetration device performance determined through testing at the factory or as programmed in by the operator. The processor **60** may customize by either scaling or modifying the profile based on additional user input information **64**. Once the processor has chosen and customized the profile, the processor **60** is ready to modulate the power from the power supply **66** to the lancet driver **68** through an amplifier **70**. The processor **60** measures the location of the lancet **72** using a position sensing mechanism **74** through an analog to digital converter **76**. Examples of position sensing mechanisms have been described in the embodiments above. The processor **60** calculates the movement of the lancet by comparing the actual profile of the lancet to the predetermined profile. The processor **60** modulates the power to the lancet driver **68** through a signal generator **78**, which controls the amplifier **70** so that the actual profile of the lancet does not exceed the predetermined profile by more than a preset error limit. The error limit is the accuracy in the control of the lancet.

After the lancing event, the processor **60** can allow the user to rank the results of the lancing event. The processor **60** stores these results and constructs a database **80** for the individual user. Using the database **80**, the processor **60**

calculates the profile traits such as degree of painlessness, success rate, and blood volume for various profiles **62** depending on user input information **64** to optimize the profile to the individual user for subsequent lancing cycles. These profile traits depend on the characteristic phases of lancet advancement and retraction. The processor **60** uses these calculations to optimize profiles **62** for each user. In addition to user input information **64**, an internal clock allows storage in the database **80** of information such as the time of day to generate a time stamp for the lancing event and the time between lancing events to anticipate the user's diurnal needs. The database stores information and statistics for each user and each profile that particular user uses.

In addition to varying the profiles, the processor **60** can be used to calculate the appropriate lancet diameter and geometry necessary to realize the blood volume required by the user. For example, if the user requires a 1-5 micro liter volume of blood, the processor selects a 200 micron diameter lancet to achieve these results. For each class of lancet, both diameter and lancet tip geometry, is stored in the processor to correspond with upper and lower limits of attainable blood volume based on the predetermined displacement and velocity profiles.

The lancing device is capable of prompting the user for information at the beginning and the end of the lancing event to more adequately suit the user. The goal is to either change to a different profile or modify an existing profile. Once the profile is set, the force driving the lancet is varied during advancement and retraction to follow the profile. The method of lancing using the lancing device comprises selecting a profile, lancing according to the selected profile, determining lancing profile traits for each characteristic phase of the lancing cycle, and optimizing profile traits for subsequent lancing events.

FIG. **13** shows an embodiment of the characteristic phases of lancet advancement and retraction on a graph of force versus time illustrating the force exerted by the lancet driver on the lancet to achieve the desired displacement and velocity profile. The characteristic phases are the lancet introduction phase A-C where the lancet is longitudinally advanced into the skin, the lancet rest phase D where the lancet terminates its longitudinal movement reaching its maximum depth and becoming relatively stationary, and the lancet retraction phase E-G where the lancet is longitudinally retracted out of the skin. The duration of the lancet retraction phase E-G is longer than the duration of the lancet introduction phase A-C, which in turn is longer than the duration of the lancet rest phase D.

The introduction phase further comprises a lancet launch phase prior to A when the lancet is longitudinally moving through air toward the skin, a tissue contact phase at the beginning of A when the distal end of the lancet makes initial contact with the skin, a tissue deformation phase A when the skin bends depending on its elastic properties which are related to hydration and thickness, a tissue lancing phase which comprises when the lancet hits the inflection point on the skin and begins to cut the skin B and the lancet continues cutting the skin C. The lancet rest phase D is the limit of the penetration of the lancet into the skin. Pain is reduced by minimizing the duration of the lancet introduction phase A-C so that there is a fast incision to a certain penetration depth regardless of the duration of the deformation phase A and inflection point cutting B which will vary from user to user. Success rate is increased by measuring the exact depth of penetration from inflection point B to the limit of penetration in the lancet rest phase D. This measurement allows the lancet to always, or at least reliably, hit the capillary beds which are a known distance underneath the surface of the skin.

The lancet retraction phase further comprises a primary retraction phase E when the skin pushes the lancet out of the wound tract, a secondary retraction phase F when the lancet starts to become dislodged and pulls in the opposite direction of the skin, and lancet exit phase G when the lancet becomes free of the skin. Primary retraction is the result of exerting a decreasing force to pull the lancet out of the skin as the lancet pulls away from the finger. Secondary retraction is the result of exerting a force in the opposite direction to dislodge the lancet. Control is necessary to keep the wound tract open as blood flows up the wound tract. Blood volume is increased by using a uniform velocity to retract the lancet during the lancet retraction phase E-G regardless of the force required for the primary retraction phase E or secondary retraction phase F, either of which may vary from user to user depending on the properties of the user's skin.

FIG. **14** shows a standard industry lancet for glucose testing which has a three-facet geometry. Taking a rod of diameter **114** and grinding 8 degrees to the plane of the primary axis to create the primary facet **110** produces the lancet **116**. The secondary facets **112** are then created by rotating the shaft of the needle 15 degrees, and then rolling over 12 degrees to the plane of the primary facet. Other possible geometry's require altering the lancet's production parameters such as shaft diameter, angles, and translation distance.

FIG. **15** illustrates facet and tip geometry **120** and **122**, diameter **124**, and depth **126** which are significant factors in reducing pain, blood volume and success rate. It is known that additional cutting by the lancet is achieved by increasing the shear percentage or ratio of the primary to secondary facets, which when combined with reducing the lancet's diameter reduces skin tear and penetration force and gives the perception of less pain. Overall success rate of blood yield, however, also depends on a variety of factors, including the existence of facets, facet geometry, and skin anatomy.

FIG. **16** shows another embodiment of displacement versus time profile of a lancet for a controlled lancet retraction. FIG. **17** shows the velocity vs. time profile of the lancet for the controlled retraction of FIG. **16**. The lancet driver controls lancet displacement and velocity at several steps in the lancing cycle, including when the lancet cuts the blood vessels to allow blood to pool **130**, and as the lancet retracts, regulating the retraction rate to allow the blood to flood the wound tract while keeping the wound flap from sealing the channel **132** to permit blood to exit the wound.

In addition to slow retraction of a tissue-penetrating element in order to hold the wound open to allow blood to escape to the skin surface, other methods are contemplated. FIG. **18** shows the use of an embodiment of the invention, which includes a retractable coil on the lancet tip. A coiled helix or tube **140** is attached externally to lancet **116** with the freedom to slide such that when the lancet penetrates the skin **150**, the helix or tube **140** follows the trajectory of the lancet **116**. The helix begins the lancing cycle coiled around the facets and shaft of the lancet **144**. As the lancet penetrates the skin, the helix braces the wound tract around the lancet **146**. As the lancet retracts, the helix remains to brace open the wound tract, keeping the wound tract from collapsing and keeping the surface skin flap from closing **148**. This allows blood **152** to pool and flow up the channel to the surface of the skin. The helix is then retracted as the lancet pulls the helix to the point where the helix is decompressed

to the point where the diameter of the helix becomes less than the diameter of the wound tract and becomes dislodged from the skin.

The tube or helix **140** is made of wire or metal of the type commonly used in angioplasty stents such as stainless steel, nickel titanium alloy or the like. Alternatively the tube or helix **140** or a ring can be made of a biodegradable material, which braces the wound tract by becoming lodged in the skin. Biodegradation is completed within seconds or minutes of insertion, allowing adequate time for blood to pool and flow up the wound tract. Biodegradation is activated by heat, moisture, or pH from the skin.

Alternatively, the wound could be held open by coating the lancet with a powder or other granular substance. The powder coats the wound tract and keeps it open when the lancet is withdrawn. The powder or other granular substance can be a coarse bed of microspheres or capsules which hold the channel open while allowing blood to flow through the porous interstices.

In another embodiment the wound can be held open using a two-part needle, the outer part in the shape of a "U" and the inner part filling the "U." After creating the wound the inner needle is withdrawn leaving an open channel, rather like the plugs that are commonly used for withdrawing sap from maple trees.

FIG. **19** shows a further embodiment of a method and device for facilitating blood flow utilizing an elastomer to coat the wound. This method uses an elastomer **154**, such as silicon rubber, to coat or brace the wound tract **156** by covering and stretching the surface of the finger **158**. The elastomer **154** is applied to the finger **158** prior to lancing. After a short delay, the lancet (not shown) then penetrates the elastomer **154** and the skin on the surface of the finger **158** as is seen in **160**. Blood is allowed to pool and rise to the surface while the elastomer **154** braces the wound tract **156** as is seen in **162** and **164**. Other known mechanisms for increasing the success rate of blood yield after lancing can include creating a vacuum, suctioning the wound, applying an adhesive strip, vibration while cutting, or initiating a second lance if the first is unsuccessful.

FIG. **20** illustrates an embodiment of a tissue penetration device, more specifically, a lancing device **180** that includes a controllable driver **179** coupled to a tissue penetration element. The lancing device **180** has a proximal end **181** and a distal end **182**. At the distal end **182** is the tissue penetration element in the form of a lancet **183**, which is coupled to an elongate coupler shaft **184** by a drive coupler **185**. The elongate coupler shaft **184** has a proximal end **186** and a distal end **187**. A driver coil pack **188** is disposed about the elongate coupler shaft **184** proximal of the lancet **183**. A position sensor **191** is disposed about a proximal portion **192** of the elongate coupler shaft **184** and an electrical conductor **194** electrically couples a processor **193** to the position sensor **191**. The elongate coupler shaft **184** driven by the driver coil pack **188** controlled by the position sensor **191** and processor **193** form the controllable driver, specifically, a controllable electromagnetic driver.

Referring to FIG. **21**, the lancing device **180** can be seen in more detail, in partial longitudinal section. The lancet **183** has a proximal end **195** and a distal end **196** with a sharpened point at the distal end **196** of the lancet **183** and a drive head **198** disposed at the proximal end **195** of the lancet **183**. A lancet shaft **201** is disposed between the drive head **198** and the sharpened point **197**. The lancet shaft **201** may be comprised of stainless steel, or any other suitable material or alloy and have a transverse dimension of about 0.1 to about 0.4 mm. The lancet shaft may have a length of about 3 mm to about 50 mm, specifically, about 15 mm to about 20 mm. The drive head **198** of the lancet **183** is an enlarged portion having a transverse dimension greater than a transverse dimension of the lancet shaft **201** distal of the drive head **198**. This configuration allows the drive head **198** to be mechanically captured by the drive coupler **185**. The drive head **198** may have a transverse dimension of about 0.5 to about 2 mm.

A magnetic member **202** is secured to the elongate coupler shaft **184** proximal of the drive coupler **185** on a distal portion **203** of the elongate coupler shaft **184**. The magnetic member **202** is a substantially cylindrical piece of magnetic material having an axial lumen **204** extending the length of the magnetic member **202**. The magnetic member **202** has an outer transverse dimension that allows the magnetic member **202** to slide easily within an axial lumen **205** of a low friction, possibly lubricious, polymer guide tube **205'** disposed within the driver coil pack **188**. The magnetic member **202** may have an outer transverse dimension of about 1.0 to about 5.0 mm, specifically, about 2.3 to about 2.5 mm. The magnetic member **202** may have a length of about 3.0 to about 5.0 mm, specifically, about 4.7 to about 4.9 mm. The magnetic member **202** can be made from a variety of magnetic materials including ferrous metals such as ferrous steel, iron, ferrite, or the like. The magnetic member **202** may be secured to the distal portion **203** of the elongate coupler shaft **184** by a variety of methods including adhesive or epoxy bonding, welding, crimping or any other suitable method.

Proximal of the magnetic member **202**, an optical encoder flag **206** is secured to the elongate coupler shaft **184**. The optical encoder flag **206** is configured to move within a slot **207** in the position sensor **191**. The slot **207** of the position sensor **191** is formed between a first body portion **208** and a second body portion **209** of the position sensor **191**. The slot **207** may have separation width of about 1.5 to about 2.0 mm. The optical encoder flag **206** can have a length of about 14 to about 18 mm, a width of about 3 to about 5 mm and a thickness of about 0.04 to about 0.06 mm.

The optical encoder flag **206** interacts with various optical beams generated by LEDs disposed on or in the position sensor body portions **208** and **209** in a predetermined manner. The interaction of the optical beams generated by the LEDs of the position sensor **191** generates a signal that indicates the longitudinal position of the optical flag **206** relative to the position sensor **191** with a substantially high degree of resolution. The resolution of the position sensor **191** may be about 200 to about 400 cycles per inch, specifically, about 350 to about 370 cycles per inch. The position sensor **191** may have a speed response time (position/time resolution) of 0 to about 120,000 Hz, where one dark and light stripe of the flag constitutes one Hertz, or cycle per second. The position of the optical encoder flag **206** relative to the magnetic member **202**, driver coil pack **188** and position sensor **191** is such that the optical encoder **191** can provide precise positional information about the lancet **183** over the entire length of the lancet's power stroke.

An optical encoder that is suitable for the position sensor **191** is a linear optical incremental encoder, model HEDS 9200, manufactured by Agilent Technologies. The model HEDS 9200 may have a length of about 20 to about 30 mm, a width of about 8 to about 12 mm, and a height of about 9 to about 11 mm. Although the position sensor **191** illustrated is a linear optical incremental encoder, other suitable position sensor embodiments could be used, provided they posses the requisite positional resolution and time response.

The HEDS 9200 is a two channel device where the channels are 90 degrees out of phase with each other. This results in a resolution of four times the basic cycle of the flag. These quadrature outputs make it possible for the processor to determine the direction of lancet travel. Other suitable position sensors include capacitive encoders, analog reflective sensors, such as the reflective position sensor discussed above, and the like.

A coupler shaft guide **211** is disposed towards the proximal end **181** of the lancing device **180**. The guide **211** has a guide lumen **212** disposed in the guide **211** to slidingly accept the proximal portion **192** of the elongate coupler shaft **184**. The guide **211** keeps the elongate coupler shaft **184** centered horizontally and vertically in the slot **202** of the optical encoder **191**.

The driver coil pack **188**, position sensor **191** and coupler shaft guide **211** are all secured to a base **213**. The base **213** is longitudinally coextensive with the driver coil pack **188**, position sensor **191** and coupler shaft guide **211**. The base **213** can take the form of a rectangular piece of metal or polymer, or may be a more elaborate housing with recesses, which are configured to accept the various components of the lancing device **180**.

As discussed above, the magnetic member **202** is configured to slide within an axial lumen **205** of the driver coil pack **188**. The driver coil pack **188** includes a most distal first coil **214**, a second coil **215**, which is axially disposed between the first coil **214** and a third coil **216**, and a proximal-most fourth coil **217**. Each of the first coil **214**, second coil **215**, third coil **216** and fourth coil **217** has an axial lumen. The axial lumens of the first through fourth coils are configured to be coaxial with the axial lumens of the other coils and together form the axial lumen **205** of the driver coil pack **188** as a whole. Axially adjacent each of the coils **214-217** is a magnetic disk or washer **218** that augments completion of the magnetic circuit of the coils **214-217** during a lancing cycle of the device **180**. The magnetic washers **218** of the embodiment of FIG. **21** are made of ferrous steel but could be made of any other suitable magnetic material, such as iron or ferrite. The outer shell **189** of the driver coil pack **188** is also made of iron or steel to complete the magnetic path around the coils and between the washers **218**. The magnetic washers **218** have an outer diameter commensurate with an outer diameter of the driver coil pack **188** of about 4.0 to about 8.0 mm. The magnetic washers **218** have an axial thickness of about 0.05, to about 0.4 mm, specifically, about 0.15 to about 0.25 mm.

Wrapping or winding an elongate electrical conductor **221** about an axial lumen until a sufficient number of windings have been achieved forms the coils **214-217**. The elongate electrical conductor **221** is generally an insulated solid copper wire with a small outer transverse dimension of about 0.06 mm to about 0.88 mm, specifically, about 0.3 mm to about 0.5 mm. In one embodiment, 32 gauge copper wire is used for the coils **214-217**. The number of windings for each of the coils **214-217** of the driver pack **188** may vary with the size of the coil, but for some embodiments each coil **214-217** may have about 30 to about 80 turns, specifically, about 50 to about 60 turns. Each coil **214-217** can have an axial length of about 1.0 to about 3.0 mm, specifically, about 1.8 to about 2.0 mm. Each coil **214-217** can have an outer transverse dimension or diameter of about 4.0, to about 2.0 mm, specifically, about 9.0 to about 12.0 mm. The axial lumen **205** can have a transverse dimension of about 1.0 to about 3.0 mm.

It may be advantageous in some driver coil **188** embodiments to replace one or more of the coils with permanent magnets, which produce a magnetic field similar to that of the coils when the coils are activated. In particular, it may be desirable in some embodiments to replace the second coil **215**, the third coil **216** or both with permanent magnets. In addition, it may be advantageous to position a permanent magnet at or near the proximal end of the coil driver pack in order to provide fixed magnet zeroing function for the magnetic member (Adams magnetic Products 23A0002 flexible magnet material (800) 747-7543).

FIGS. **20** and **21** show a permanent bar magnet **219** disposed on the proximal end of the driver coil pack **188**. As shown in FIG. **21**, the bar magnet **219** is arranged so as to have one end disposed adjacent the travel path of the magnetic member **202** and has a polarity configured so as to attract the magnetic member **202** in a centered position with respect to the bar magnet **219**. Note that the polymer guide tube **205'** can be configured to extend proximally to insulate the inward radial surface of the bar magnet **219** from an outer surface of the magnetic member **202**. This arrangement allows the magnetic member **219** and thus the elongate coupler shaft **184** to be attracted to and held in a zero point or rest position without the consumption of electrical energy from the power supply **225**.

Having a fixed zero or start point for the elongate coupler shaft **184** and lancet **183** can be critical to properly controlling the depth of penetration of the lancet **183** as well as other lancing parameters. This can be because some methods of depth penetration control for a controllable driver measure the acceleration and displacement of the elongate coupler shaft **184** and lancet **183** from a known start position. If the distance of the lancet tip **196** from the target tissue is known, acceleration and displacement of the lancet is known and the start position of the lancet is know, the time and position of tissue contact and depth of penetration can be determined by the processor **193**.

Any number of configurations for a magnetic bar **219** can be used for the purposes discussed above. In particular, a second permanent bar magnet (not shown) could be added to the proximal end of the driver coil pack **188** with the magnetic fields of the two bar magnets configured to complement each other. In addition, a disc magnet **219'** could be used as illustrated in FIG. **22**. Disc magnet **219'** is shown disposed at the proximal end of the driver coiled pack **188** with a polymer non-magnetic disc **219"** disposed between the proximal-most coil **217** and disc magnet **219'** and positions disc magnet **219'** away from the proximal end of the proximal-most coil **217**. The polymer non-magnetic disc spacer **219"** is used so that the magnetic member **202** can be centered in a zero or start position slightly proximal of the proximal-most coil **217** of the driver coil pack **188**. This allows the magnetic member to be attracted by the proximal-most coil **217** at the initiation of the lancing cycle instead of being passive in the forward drive portion of the lancing cycle.

An inner lumen of the polymer non-magnetic disc **219"** can be configured to allow the magnetic member **202** to pass axially there through while an inner lumen of the disc magnet **219'** can be configured to allow the elongate coupler shaft **184** to pass through but not large enough for the magnetic member **202** to pass through. This results in the magnetic member **202** being attracted to the disc magnet **219'** and coming to rest with the proximal surface of the magnetic member **202** against a distal surface of the disc magnet **219'**. This arrangement provides for a positive and repeatable stop for the magnetic member, and hence the lancet. A similar configuration could also be used for the bar magnet **219** discussed above.

Typically, when the electrical current in the coils **214-217** of the driver coil pack **188** is off, a magnetic member **202** made of soft iron is attracted to the bar magnet **219** or disc magnet **219'**. The magnetic field of the driver coil pack **188** and the bar magnet **219** or disc magnet **219'**, or any other suitable magnet, can be configured such that when the electrical current in the coils **214-217** is turned on, the leakage magnetic field from the coils **214-217** has the same polarity as the bar magnet **219** or disc magnet **219'**. This results in a magnetic force that repels the magnetic member **202** from the bar magnet **219** or disc magnet **219'** and attracts the magnetic member **202** to the activated coils **214-217**. For this configuration, the bar magnet **219** or disc magnet thus act to facilitate acceleration of the magnetic member **202** as opposed to working against the acceleration.

Electrical conductors **222** couple the driver coil pack **188** with the processor **193** which can be configured or programmed to control the current flow in the coils **214-217** of the driver coil pack **188** based on position feedback from the position sensor **191**, which is coupled to the processor **193** by electrical conductors **194**. A power source **225** is electrically coupled to the processor **193** and provides electrical power to operate the processor **193** and power the coil driver pack **188**. The power source **225** may be one or more batteries that provide direct current power to the **193** processor.

FIG. **23** shows a transverse cross sectional view of drive coupler **185** in more detail. The drive head **198** of the lancet **183** is disposed within the drive coupler **185** with a first retaining rail **226** and second retaining rail **227** capturing the drive head **198** while allowing the drive head **198** to be inserted laterally into the drive coupler **185** and retracted laterally with minimal mechanical resistance. The drive coupler **185** may optionally be configured to include snap ridges **228** which allow the drive head **198** to be laterally inserted and retracted, but keep the drive head **198** from falling out of the drive coupler **185** unless a predetermined amount of externally applied lateral force is applied to the drive head **198** of the lancet **183** towards the lateral opening **231** of the drive coupler **185**. FIG. **27** shows an enlarged side view into the coupler opening **231** of the drive coupler **185** showing the snap ridges **228** disposed in the lateral opening **231** and the retaining rails **226** and **227**. FIG. **28** shows an enlarged front view of the drive coupler **185**. The drive coupler **185** can be made from an alloy such as stainless steel, titanium or aluminum, but may also be made from a suitable polymer such as ABS, PVC, polycarbonate plastic or the like. The drive coupler may be open on both sides allowing the drive head and lancet to pass through.

Referring to FIG. **24**, the magnetic member **202** is disposed about and secured to the elongate coupler shaft **184**. The magnetic member **202** is disposed within the axial lumen **232** of the fourth coil **217**. The driver coil pack **188** is secured to the base **213**. In FIG. **25** the position sensor **191** is secured to the base **213** with the first body portion **208** of the position sensor **191** disposed opposite the second body portion **209** of the position sensor **191** with the first and second body portions **208** and **209** of the position sensor **191** separated by the gap or slot **207**. The elongate coupler shaft **184** is slidably disposed within the gap **207** between the first and second body portions **208** and **209** of the position sensor **191**. The optical encoder flag **206** is secured to the elongate coupler shaft **184** and disposed between the first body portion **208** and second body portion **209** of the position sensor **191**. Referring to FIG. **26**, the proximal portion **192** of the elongate coupler shaft **184** is disposed within the guide lumen **212** of the coupler shaft guide **211**. The guide lumen **212** of the coupler shaft guide **211** may be lined with a low friction material such as Teflon® or the like to reduce friction of the elongate coupler shaft **184** during the power stroke of the lancing device **180**.

Referring to FIGS. **29**A-**29**C, a flow diagram is shown that describes the operations performed by the processor **193** in controlling the lancet **183** of the lancing device **180** discussed above during an operating cycle. FIGS. **30-36** illustrate the interaction of the lancet **183** and skin **233** of the patient's finger **234** during an operation cycle of the lancet device **183**. The processor **193** operates under control of programming steps that are stored in an associated memory. When the programming steps are executed, the processor **193** performs operations as described herein. Thus, the programming steps implement the functionality of the operations described with respect to the flow diagram of FIG. **29**. The processor **193** can receive the programming steps from a program product stored in recordable media, including a direct access program product storage device such as a hard drive or flash ROM, a removable program product storage device such as a floppy disk, or in any other manner known to those of skill in the art. The processor **193** can also download the programming steps through a network connection or serial connection.

In the first operation, represented by the flow diagram box numbered **245** in FIG. **29**A, the processor **193** initializes values that it stores in memory relating to control of the lancet, such as variables that it uses to keep track of the controllable driver **179** during movement. For example, the processor may set a clock value to zero and a lancet position value to zero or to some other initial value. The processor **193** may also cause power to be removed from the coil pack **188** for a period of time, such as for about 10 ms, to allow any residual flux to dissipate from the coils.

In the initialization operation, the processor **193** also causes the lancet to assume an initial stationary position. When in the initial stationary position, the lancet **183** is typically fully retracted such that the magnetic member **202** is positioned substantially adjacent the fourth coil **217** of the driver coil pack **188**, shown in FIG. **21** above. The processor **193** can move the lancet **183** to the initial stationary position by pulsing an electrical current to the fourth coil **217** to thereby attract the magnetic member **202** on the lancet **183** to the fourth coil **217**. Alternatively, the magnetic member can be positioned in the initial stationary position by virtue of a permanent magnet, such as bar magnet **219**, disc magnet **219'** or any other suitable magnet as discussed above with regard to the tissue penetration device illustrated in FIGS. **20** and **21**.

In the next operation, represented by the flow diagram box numbered **247**, the processor **193** energizes one or more of the coils in the coil pack **188**. This should cause the lancet **183** to begin to move (i.e., achieve a non-zero speed) toward the skin target **233**. The processor **193** then determines whether or not the lancet is indeed moving, as represented by the decision box numbered **249**. The processor **193** can determine whether the lancet **183** is moving by monitoring the position of the lancet **183** to determine whether the position changes over time. The processor **193** can monitor the position of the lancet **183** by keeping track of the position of the optical encoder flag **206** secured to the elongate coupler shaft **184** wherein the encoder **191** produces a signal coupled to the processor **193** that indicates the spatial position of the lancet **183**.

If the processor **193** determines (via timeout without motion events) that the lancet **183** is not moving (a "No" result from the decision box **249**), then the process proceeds

to the operation represented by the flow diagram box numbered **253**, where the processor deems that an error condition is present. This means that some error in the system is causing the lancet **183** not to move. The error may be mechanical, electrical, or software related. For example, the lancet **183** may be stuck in the stationary position because something is impeding its movement.

If the processor **193** determines that the lancet **183** is indeed moving (a "Yes" result from the decision box numbered **249**), then the process proceeds to the operation represented by the flow diagram box numbered **257**. In this operation, the processor **193** causes the lancet **183** to continue to accelerate and launch toward the skin target **233**, as indicated by the arrow **235** in FIG. **30**. The processor **193** can achieve acceleration of the lancet **183** by sending an electrical current to an appropriate coil **214-217** such that the coil **214-217** exerts an attractive magnetic launching force on the magnetic member **202** and causes the magnetic member **202** and the lancet **183** coupled thereto to move in a desired direction. For example, the processor **193** can cause an electrical current to be sent to the third coil **216** so that the third coil **216** attracts the magnetic member **202** and causes the magnetic member **202** to move from a position adjacent the fourth coil **217** toward the third coil **216**. The processor preferably determines which coil **214-217** should be used to attract the magnetic member **202** based on the position of the magnetic member **202** relative to the coils **214-217**. In this manner, the processor **193** provides a controlled force to the lancet that controls the movement of the lancet.

During this operation, the processor **193** periodically or continually monitors the position and/or velocity of the lancet **183**. In keeping track of the velocity and position of the lancet **183** as the lancet **183** moves towards the patient's skin **233** or other tissue, the processor **193** also monitors and adjusts the electrical current to the coils **214-217**. In some embodiments, the processor **193** applies current to an appropriate coil **214-217** such that the lancet **183** continues to move according to a desired direction and acceleration. In the instant case, the processor **193** applies current to the appropriate coil **214-217** that will cause the lancet **183** to continue to move in the direction of the patient's skin **233** or other tissue to be penetrated.

The processor **193** may successively transition the current between coils **214-217** so that as the magnetic member **202** moves past a particular coil **214-217**, the processor **193** then shuts off current to that coil **214-217** and then applies current to another coil **214-217** that will attract the magnetic member **202** and cause the magnetic member **202** to continue to move in the desired direction. In transitioning current between the coils **214-217**, the processor **193** can take into account various factors, including the speed of the lancet **183**, the position of the lancet **183** relative to the coils **214-217**, the number of coils **214-217**, and the level of current to be applied to the coils **214-217** to achieve a desired speed or acceleration.

In the next operation, the processor **193** determines whether the cutting or distal end tip **196** of the lancet **183** has contacted the patient's skin **233**, as shown in FIG. **31** and as represented by the decision box numbered **265** in FIG. **29**B. The processor **193** may determine whether the lancet **183** has made contact with the target tissue **233** by a variety of methods, including some that rely on parameters which are measured prior to initiation of a lancing cycle and other methods that are adaptable to use during a lancing cycle without any predetermined parameters.

In one embodiment, the processor **193** determines that the skin has been contacted when the end tip **196** of the lancet **183** has moved a predetermined distance with respect to its initial position. If the distance from the tip **961** of the lancet **183** to the target tissue **233** is known prior to initiation of lancet **183** movement, the initial position of the lancet **183** is fixed and known, and the movement and position of the lancet **183** can be accurately measured during a lancing cycle, then the position and time of lancet contact can be determined.

This method requires an accurate measurement of the distance between the lancet tip **196** and the patient's skin **233** when the lancet **183** is in the zero time or initial position. This can be accomplished in a number of ways. One way is to control all of the mechanical parameters that influence the distance from the lancet tip **196** to the patient's tissue or a surface of the lancing device **180** that will contact the patient's skin **233**. This could include the start position of the magnetic member **202**, magnetic path tolerance, magnetic member **202** dimensions, driver coil pack **188** location within the lancing device **180** as a whole, length of the elongate coupling shaft **184**, placement of the magnetic member **202** on the elongate coupling shaft **184**, length of the lancet **183** etc.

If all these parameters, as well as others can be suitably controlled in manufacturing with a tolerance stack-up that is acceptable, then the distance from the lancet tip **196** to the target tissue **233** can be determined at the time of manufacture of the lancing device **180**. The distance could then be programmed into the memory of the processor **193**. If an adjustable feature is added to the lancing device **180**, such as an adjustable length elongate coupling shaft **184**, this can accommodate variations in all of the parameters noted above, except length of the lancet **183**. An electronic alternative to this mechanical approach would be to calibrate a stored memory contact point into the memory of the processor **193** during manufacture based on the mechanical parameters described above.

In another embodiment, moving the lancet tip **196** to the target tissue **233** very slowly and gently touching the skin **233** prior to actuation can accomplish the distance from the lancet tip **196** to the tissue **233**. The position sensor can accurately measure the distance from the initialization point to the point of contact, where the resistance to advancement of the lancet **183** stops the lancet movement. The lancet **183** is then retracted to the initialization point having measured the distance to the target tissue **233** without creating any discomfort to the user.

In another embodiment, the processor **193** may use software to determine whether the lancet **183** has made contact with the patient's skin **233** by measuring for a sudden reduction in velocity of the lancet **183** due to friction or resistance imposed on the lancet **183** by the patient's skin **233**. The optical encoder **191** measures displacement of the lancet **183**. The position output data provides input to the interrupt input of the processor **193**. The processor **193** also has a timer capable of measuring the time between interrupts. The distance between interrupts is known for the optical encoder **191**, so the velocity of the lancet **183** can be calculated by dividing the distance between interrupts by the time between the interrupts.

This method requires that velocity losses to the lancet **183** and elongate coupler **184** assembly due to friction are known to an acceptable level so that these velocity losses and resulting deceleration can be accounted for when establishing a deceleration threshold above which contact between lancet tip **196** and target tissue **233** will be presumed. This

same concept can be implemented in many ways. For example, rather than monitoring the velocity of the lancet **183**, if the processor **193** is controlling the lancet driver in order to maintain a fixed velocity, the power to the driver **188** could be monitored. If an amount of power above a predetermined threshold is required in order to maintain a constant velocity, then contact between the tip of the lancet **196** and the skin **233** could be presumed.

In yet another embodiment, the processor **193** determines skin **233** contact by the lancet **183** by detection of an acoustic signal produced by the tip **196** of the lancet **183** as it strikes the patient's skin **233**. Detection of the acoustic signal can be measured by an acoustic detector **236** placed in contact with the patient's skin **233** adjacent a lancet penetration site **237**, as shown in FIG. **31**. Suitable acoustic detectors **236** include piezo electric transducers, microphones and the like. The acoustic detector **236** transmits an electrical signal generated by the acoustic signal to the processor **193** via electrical conductors **238**. In another embodiment, contact of the lancet **183** with the patient's skin **233** can be determined by measurement of electrical continuity in a circuit that includes the lancet **183**, the patient's finger **234** and an electrical contact pad **240** that is disposed on the patient's skin **233** adjacent the contact site **237** of the lancet **183**, as shown in FIG. **31**. In this embodiment, as soon as the lancet **183** contacts the patient's skin **233**, the circuit **239** is completed and current flows through the circuit **239**. Completion of the circuit **239** can then be detected by the processor **193** to confirm skin **233** contact by the lancet **183**.

If the lancet **183** has not contacted the target skin **233**, then the process proceeds to a timeout operation, as represented by the decision box numbered **267** in FIG. **29**B. In the timeout operation, the processor **193** waits a predetermined time period. If the timeout period has not yet elapsed (a "No" outcome from the decision box **267**), then the processor continues to monitor whether the lancet has contacted the target skin **233**. The processor **193** preferably continues to monitor the position and speed of the lancet **183**, as well as the electrical current to the appropriate coil **214-217** to maintain the desired lancet **183** movement.

If the timeout period elapses without the lancet **183** contacting the skin (a "Yes" output from the decision box **267**), then it is deemed that the lancet **183** will not contact the skin and the process proceeds to a withdraw phase, where the lancet is withdrawn away from the skin **233**, as discussed more fully below. The lancet **183** may not have contacted the target skin **233** for a variety of reasons, such as if the patient removed the skin **233** from the lancing device or if something obstructed the lancet **183** prior to it contacting the skin.

The processor **193** may also proceed to the withdraw phase prior to skin contact for other reasons. For example, at some point after initiation of movement of the lancet **183**, the processor **193** may determine that the forward acceleration of the lancet **183** towards the patient's skin **233** should be stopped or that current to all coils **214-217** should be shut down. This can occur, for example, if it is determined that the lancet **183** has achieved sufficient forward velocity, but has not yet contacted the skin **233**. In one embodiment, the average penetration velocity of the lancet **183** from the point of contact with the skin to the point of maximum penetration may be about 2.0 to about 10.0 m/s, specifically, about 3.8 to about 4.2 m/s. In another embodiment, the average penetration velocity of the lancet may be from about 2 to about 8 meters per second, specifically, about 2 to about 4 m/s.

The processor **193** can also proceed to the withdraw phase if it is determined that the lancet **183** has fully extended to the end of the power stroke of the operation cycle of lancing procedure. In other words, the process may proceed to withdraw phase when an axial center **241** of the magnetic member **202** has moved distal of an axial center **242** of the first coil **214** as show in FIG. **21**. In this situation, any continued power to any of the coils **214-217** of the driver coil pack **188** serves to decelerate the magnetic member **202** and thus the lancet **183**. In this regard, the processor **193** considers the length of the lancet **183** (which can be stored in memory) the position of the lancet **183** relative to the magnetic member **202**, as well as the distance that the lancet **183** has traveled.

With reference again to the decision box **265** in FIG. **29**B, if the processor **193** determines that the lancet **183** has contacted the skin **233** (a "Yes" outcome from the decision box **265**), then the processor **193** can adjust the speed of the lancet **183** or the power delivered to the lancet **183** for skin penetration to overcome any frictional forces on the lancet **183** in order to maintain a desired penetration velocity of the lancet. The flow diagram box numbered **267** represents this.

As the velocity of the lancet **183** is maintained after contact with the skin **233**, the distal tip **196** of the lancet **183** will first begin to depress or tent the contacted skin **237** and the skin **233** adjacent the lancet **183** to form a tented portion **243** as shown in FIG. **32** and further shown in FIG. **33**. As the lancet **183** continues to move in a distal direction or be driven in a distal direction against the patient's skin **233**, the lancet **183** will eventually begin to penetrate the skin **233**, as shown in FIG. **34**. Once penetration of the skin **233** begins, the static force at the distal tip **196** of the lancet **183** from the skin **233** will become a dynamic cutting force, which is generally less than the static tip force. As a result in the reduction of force on the distal tip **196** of the lancet **183** upon initiation of cutting, the tented portion **243** of the skin **233** adjacent the distal tip **196** of the lancet **183** which had been depressed as shown in FIGS. **32** and **24** will spring back as shown in FIG. **34**.

In the next operation, represented by the decision box numbered **271** in FIG. **29**B, the processor **193** determines whether the distal end **196** of the lancet **183** has reached a brake depth. The brake depth is the skin penetration depth for which the processor **193** determines that deceleration of the lancet **183** is to be initiated in order to achieve a desired final penetration depth **244** of the lancet **183** as show in FIG. **35**. The brake depth may be pre-determined and programmed into the processor's memory, or the processor **193** may dynamically determine the brake depth during the actuation. The amount of penetration of the lancet **183** in the skin **233** of the patient may be measured during the operation cycle of the lancet device **180**. In addition, as discussed above, the penetration depth necessary for successfully obtaining a useable sample can depend on the amount of tenting of the skin **233** during the lancing cycle. The amount of tenting of the patient's skin **233** can in turn depend on the tissue characteristics of the patient such as elasticity, hydration etc. A method for determining these characteristics is discussed below with regard to skin **233** tenting measurements during the lancing cycle and illustrated in FIGS. **37-41**.

Penetration measurement can be carried out by a variety of methods that are not dependent on measurement of tenting of the patient's skin. In one embodiment, the penetration depth of the lancet **183** in the patient's skin **233** is measured by monitoring the amount of capacitance between the lancet **183** and the patient's skin **233**. In this embodi-

ment, a circuit includes the lancet **183**, the patient's finger **234**, the processor **193** and electrical conductors connecting these elements. As the lancet **183** penetrates the patient's skin **233**, the greater the amount of penetration, the greater the surface contact area between the lancet **183** and the patient's skin **233**. As the contact area increases, so does the capacitance between the skin **233** and the lancet **183**. The increased capacitance can be easily measured by the processor **193** using methods known in the art and penetration depth can then be correlated to the amount of capacitance. The same method can be used by measuring the electrical resistance between the lancet **183** and the patient's skin.

If the brake depth has not yet been reached, then a "No" results from the decision box **271** and the process proceeds to the timeout operation represented by the flow diagram box numbered **273**. In the timeout operation, the processor **193** waits a predetermined time period. If the timeout period has not yet elapsed (a "No" outcome from the decision box **273**), then the processor continues to monitor whether the brake depth has been reached. If the timeout period elapses without the lancet **183** achieving the brake depth (a "Yes" output from the decision box **273**), then the processor **193** deems that the lancet **183** will not reach the brake depth and the process proceeds to the withdraw phase, which is discussed more fully below. This may occur, for example, if the lancet **183** is stuck at a certain depth.

With reference again to the decision box numbered **271** in FIG. **29**B, if the lancet does reach the brake depth (a "Yes" result), then the process proceeds to the operation represented by the flow diagram box numbered **275**. In this operation, the processor **193** causes a braking force to be applied to the lancet to thereby reduce the speed of the lancet **183** to achieve a desired amount of final skin penetration depth **244**, as shown in FIG. **26**. Note that FIGS. **32** and **33** illustrate the lancet making contact with the patient's skin and deforming or depressing the skin prior to any substantial penetration of the skin. The speed of the lancet **183** is preferably reduced to a value below a desired threshold and is ultimately reduced to zero. The processor **193** can reduce the speed of the lancet **183** by causing a current to be sent to a **214-217** coil that will exert an attractive braking force on the magnetic member **202** in a proximal direction away from the patient's tissue or skin **233**, as indicated by the arrow **290** in FIG. **36**. Such a negative force reduces the forward or distally oriented speed of the lancet **183**. The processor **193** can determine which coil **214-217** to energize based upon the position of the magnetic member **202** with respect to the coils **214-217** of the driver coil pack **188**, as indicated by the position sensor **191**.

In the next operation, the process proceeds to the withdraw phase, as represented by the flow diagram box numbered **277**. The withdraw phase begins with the operation represented by the flow diagram box numbered **279** in FIG. **29**C. Here, the processor **193** allows the lancet **183** to settle at a position of maximum skin penetration **244**, as shown in FIG. **35**. In this regard, the processor **193** waits until any motion in the lancet **183** (due to vibration from impact and spring energy stored in the skin, etc.) has stopped by monitoring changes in position of the lancet **183**. The processor **193** preferably waits until several milliseconds (ms), such as on the order of about 8 ms, have passed with no changes in position of the lancet **183**. This is an indication that movement of the lancet **183** has ceased entirely. In some embodiments, the lancet may be allowed to settle for about 1 to about 2000 milliseconds, specifically, about 50 to about 200 milliseconds. For other embodiments, the settling time may be about 1 to about 200 milliseconds.

It is at this stage of the lancing cycle that a software method can be used to measure the amount of tenting of the patient's skin **233** and thus determine the skin **233** characteristics such as elasticity, hydration and others. Referring to FIGS. **37-41**, a lancet **183** is illustrated in various phases of a lancing cycle with target tissue **233**. FIG. **37** shows tip **196** of lancet **183** making initial contact with the skin **233** at the point of initial impact.

FIG. **38** illustrates an enlarged view of the lancet **183** making initial contact with the tissue **233** shown in FIG. **37**. In FIG. **39**, the lancet tip **196** has depressed or tented the skin **233** prior to penetration over a distance of X, as indicated by the arrow labeled X in FIG. **39**. In FIG. **40**, the lancet **183** has reached the full length of the cutting power stroke and is at maximum displacement. In this position, the lancet tip **196** has penetrated the tissue **233** a distance of Y, as indicated by the arrow labeled Y in FIG. **39**. As can be seen from comparing FIG. **38** with FIG. **40**, the lancet tip **196** was displaced a total distance of X plus Y from the time initial contact with the skin **233** was made to the time the lancet tip **196** reached its maximum extension as shown in FIG. **40**. However, the lancet tip **196** has only penetrated the skin **233** a distance Y because of the tenting phenomenon.

At the end of the power stroke of the lancet **183**, as discussed above with regard to FIG. **26** and box **279** of FIG. **29**C, the processor **193** allows the lancet to settle for about 8 msec. It is during this settling time that the skin **233** rebounds or relaxes back to approximately its original configuration prior to contact by the lancet **183** as shown in FIG. **41**. The lancet tip **196** is still buried in the skin to a depth of Y, as shown in FIG. **41**, however the elastic recoil of the tissue has displaced the lancet rearward or retrograde to the point of inelastic tenting that is indicated by the arrows Z in FIG. **41**. During the rearward displacement of the lancet **183** due to the elastic tenting of the tissue **233**, the processor reads and stores the position data generated by the position sensor **191** and thus measures the amount of elastic tenting, which is the difference between X and Z.

The tenting process and retrograde motion of the lancet **183** during the lancing cycle is illustrated graphically in FIG. **42** which shows both a velocity versus time graph and a position versus time graph of a lancet tip **196** during a lancing cycle that includes elastic and inelastic tenting. In FIG. **42**, from point **0** to point A, the lancet **183** is being accelerated from the initialization position or zero position. From point A to point B, the lancet is in ballistic or coasting mode, with no additional power being delivered. At point B, the lancet tip **196** contacts the tissue **233** and begins to tent the skin **233** until it reaches a displacement C. As the lancet tip **196** approaches maximum displacement, braking force is applied to the lancet **183** until the lancet comes to a stop at point D. The lancet **183** then recoils in a retrograde direction during the settling phase of the lancing cycle indicated between D and E. Note that the magnitude of inelastic tenting indicated in FIG. **42** is exaggerated for purposes of illustration.

The amount of inelastic tenting indicated by Z tends to be fairly consistent and small compared to the magnitude of the elastic tenting. Generally, the amount of inelastic tenting Z can be about 120 to about 140 microns. As the magnitude of the inelastic tenting has a fairly constant value and is small compared to the magnitude of the elastic tenting for most patients and skin types, the value for the total amount of tenting for the penetration stroke of the lancet **183** is effectively equal to the rearward displacement of the lancet during the settling phase as measured by the processor **193** plus a predetermined value for the inelastic recoil, such as

130 microns. Inelastic recoil for some embodiments can be about 100 to about 200 microns. The ability to measure the magnitude of skin **233** tenting for a patient is important to controlling the depth of penetration of the lancet tip **196** as the skin is generally known to vary in elasticity and other parameters due to age, time of day, level of hydration, gender and pathological state.

This value for total tenting for the lancing cycle can then be used to determine the various characteristics of the patient's skin **233**. Once a body of tenting data is obtained for a given patient, this data can be analyzed in order to predict the total lancet displacement, from the point of skin contact, necessary for a successful lancing procedure. This enables the tissue penetration device to achieve a high success rate and minimize pain for the user. A rolling average table can be used to collect and store the tenting data for a patient with a pointer to the last entry in the table. When a new entry is input, it can replace the entry at the pointer and the pointer advances to the next value. When an average is desired, all the values are added and the sum divided by the total number of entries by the processor **193**. Similar techniques involving exponential decay (multiply by 0.95, add 0.05 times current value, etc.) are also possible.

With regard to tenting of skin **233** generally, some typical values relating to penetration depth are now discussed. FIG. **43** shows a cross sectional view of the layers of the skin **233**. In order to reliably obtain a useable sample of blood from the skin **233**, it is desirable to have the lancet tip **196** reach the venuolar plexus of the skin. The stratum corneum is typically about 0.1 to about 0.6 mm thick and the distance from the top of the dermis to the venuole plexus can be from about 0.3 to about 1.4 mm. Elastic tenting can have a magnitude of up to about 2 mm or so, specifically, about 0.2 to about 2.0 mm, with an average magnitude of about 1 mm. This means that the amount of lancet displacement necessary to overcome the tenting can have a magnitude greater than the thickness of skin necessary to penetrate in order to reach the venuolar plexus. The total lancet displacement from point of initial skin contact may have an average value of about 1.7 to about 2.1 mm. In some embodiments, penetration depth and maximum penetration depth may be about 0.5 mm to about 5 mm, specifically, about 1 mm to about 3 mm. In some embodiments, a maximum penetration depth of about 0.5 to about 3 mm is useful.

Referring back to FIG. **29**C, in the next operation, represented by the flow diagram box numbered **280** in FIG. **29**C, the processor **193** causes a withdraw force to be exerted on the lancet **183** to retract the lancet **183** from the skin **233**, as shown by arrow **290** in FIG. **36** The processor **193** sends a current to an appropriate coil **214-217** so that the coil **214-217** exerts an attractive distally oriented force on the magnetic member **202**, which should cause the lancet **183** to move backward in the desired direction. In some embodiments, the lancet **183** is withdrawn with less force and a lower speed than the force and speed during the penetration portion of the operation cycle. Withdrawal speed of the lancet in some embodiments can be about 0.004 to about 0.5 m/s, specifically, about 0.006 to about 0.01 m/s. In other embodiments, useful withdrawal velocities can be about 0.001 to about 0.02 meters per second, specifically, about 0.001 to about 0.01 meters per second. For embodiments that use a relatively slow withdrawal velocity compared to the penetration velocity, the withdrawal velocity may up to about 0.02 meters per second. For such embodiments, a ratio of the average penetration velocity relative to the average withdrawal velocity can be about 100 to about 1000. In embodiments where a relatively slow withdrawal velocity is not important, a withdrawal velocity of about 2 to about 10 meters per second may be used.

In the next operation, the processor **193** determines whether the lancet **183** is moving in the desired backward direction as a result of the force applied, as represented by the decision box numbered **281**. If the processor **193** determines that the lancet **183** is not moving (a "No" result from the decision box **281**), then the processor **193** continues to cause a force to be exerted on the lancet **183**, as represented by the flow diagram box numbered **282**. The processor **193** may cause a stronger force to be exerted on the lancet **183** or may just continue to apply the same amount of force. The processor then again determines whether the lancet is moving, as represented by the decision box numbered **283**. If movement is still not detected (a "No" result from the decision box numbered **283**), the processor **193** determines that an error condition is present, as represented by the flow diagram box numbered **284**. In such a situation, the processor preferably de-energizes the coils to remove force from the lancet, as the lack of movement may be an indication that the lancet is stuck in the skin of the patient and, therefore, that it may be undesirable to continue to attempt pull the lancet out of the skin.

With reference again to the decision boxes numbered **281** and **283** in FIG. **29**C, if the processor **193** determines that the lancet is indeed moving in the desired backward direction away from the skin **233**, then the process proceeds to the operation represented by the flow diagram box numbered **285**. In this operation, the backward movement of the lancet **183** continues until the lancet distal end has been completely withdrawn from the patient's skin **233**. As discussed above, in some embodiments the lancet **183** is withdrawn with less force and a lower speed than the force and speed during the penetration portion of the operation cycle. The relatively slow withdrawal of the lancet **183** may allow the blood from the capillaries of the patient accessed by the lancet **183** to follow the lancet **183** during withdrawal and reach the skin surface to reliably produce a usable blood sample. The process then ends.

Controlling the lancet motion over the operating cycle of the lancet **183** as discussed above allows a wide variety of lancet velocity profiles to be generated by the lancing device **180**. In particular, any of the lancet velocity profiles discussed above with regard to other embodiments can be achieved with the processor **193**, position sensor **191** and driver coil pack **188** of the lancing device **180**.

Another example of an embodiment of a velocity profile for a lancet can be seen in FIGS. **44** and **45**, which illustrates a lancet profile with a fast entry velocity and a slow withdrawal velocity. FIG. **44** illustrates an embodiment of a lancing profile showing velocity of the lancet versus position. The lancing profile starts at zero time and position and shows acceleration of the lancet towards the tissue from the electromagnetic force generated from the electromagnetic driver. At point A, the power is shut off and the lancet **183** begins to coast until it reaches the skin **233** indicated by B at which point, the velocity begins to decrease. At point C, the lancet **183** has reached maximum displacement and settles momentarily, typically for a time of about 8 milliseconds.

A retrograde withdrawal force is then imposed on the lancet by the controllable driver, which is controlled by the processor to maintain a withdrawal velocity of no more than about 0.006 to about 0.01 meters/second. The same cycle is illustrated in the velocity versus time plot of FIG. **45** where the lancet is accelerated from the start point to point A. The lancet **183** coasts from A to B where the lancet tip **196**

contacts tissue **233**. The lancet tip **196** then penetrates the tissue and slows with braking force eventually applied as the maximum penetration depth is approached. The lancet is stopped and settling between C and D. At D, the withdrawal phase begins and the lancet **183** is slowly withdrawn until it returns to the initialization point shown by E in FIG. **45**. Note that retrograde recoil from elastic and inelastic tenting was not shown in the lancing profiles of FIGS. **44** and **45** for purpose of illustration and clarity.

In another embodiment, the withdrawal phase may use a dual speed profile, with the slow 0.006 to 0.01 meter per second speed used until the lancet is withdrawn past the contact point with the tissue, then a faster speed of 0.01 to 1 meters per second may be used to shorten the complete cycle.

Referring to FIG. **46**, another embodiment of a lancing device including a controllable driver **294** with a driver coil pack **295**, position sensor and lancet **183** are shown. The lancet **297** has a proximal end **298** and a distal end **299** with a sharpened point at the distal end **299** of the lancet **297**. A magnetic member **301** disposed about and secured to a proximal end portion **302** of the lancet **297** with a lancet shaft **303** being disposed between the magnetic member **301** and the sharpened point **299**. The lancet shaft **303** may be comprised of stainless steel, or any other suitable material or alloy. The lancet shaft **303** may have a length of about 3 mm to about 50 mm specifically, about 5 mm to about 15 mm.

The magnetic member **301** is configured to slide within an axial lumen **304** of the driver coil pack **295**. The driver coil pack **295** includes a most distal first coil **305**, a second coil **306**, which is axially disposed between the first coil **305** and a third coil **307**, and a proximal-most fourth coil **308**. Each of the first coil **305**, second coil **306**, third coil **307** and fourth coil **308** has an axial lumen. The axial lumens of the first through fourth coils **305-308** are configured to be coaxial with the axial lumens of the other coils and together form the axial lumen **309** of the driver coil pack **295** as a whole. Axially adjacent each of the coils **305-308** is a magnetic disk or washer **310** that augments completion of the magnetic circuit of the coils **305-308** during a lancing cycle of the driven coil pack **295**. The magnetic washers **310** of the embodiment of FIG. **46** are made of ferrous steel but could be made of any other suitable magnetic material, such as iron or ferrite. The magnetic washers **310** have an outer diameter commensurate with an outer diameter of the driver coil pack **295** of about 4.0 to about 8.0 mm. The magnetic washers **310** have an axial thickness of about 0.05, to about 0.4 mm, specifically, about 0.15 to about 0.25 mm. The outer shell **294** of the coil pack is also made of iron or steel to complete the magnetic path around the coils and between the washers **310**.

Wrapping or winding an elongate electrical conductor **311** about the axial lumen **309** until a sufficient number of windings have been achieved forms the coils **305-308**. The elongate electrical conductor **311** is generally an insulated solid copper wire. The particular materials, dimensions number of coil windings etc. of the coils **305-308**, washers **310** and other components of the driver coil pack **295** can be the same or similar to the materials, dimensions number of coil windings etc. of the driver coil pack **188** discussed above.

Electrical conductors **312** couple the driver coil pack **295** with a processor **313** which can be configured or programmed to control the current flow in the coils **305-308** of the driver coil pack **295** based on position feedback from the position sensor **296**, which is coupled to the processor **313** by electrical conductors **315**. A power source **316** is electrically coupled to the processor **313** and provides electrical power to operate the processor **313** and power the driver coil pack **295**. The power source **316** may be one or more batteries (not shown) that provide direct current power to the processor **313** as discussed above.

The position sensor **296** is an analog reflecting light sensor that has a light source and light receiver in the form of a photo transducer **317** disposed within a housing **318** with the housing **318** secured in fixed spatial relation to the driver coil pack **295**. A reflective member **319** is disposed on or secured to a proximal end **320** of the magnetic member **301**. The processor **313** determines the position of the lancet **299** by first emitting light from the light source of the photo transducer **317** towards the reflective member **319** with a predetermined solid angle of emission. Then, the light receiver of the photo transducer **317** measures the intensity of light reflected from the reflective member **319** and electrical conductors **315** transmit the signal generated therefrom to the processor **313**.

By calibrating the intensity of reflected light from the reflective member **319** for various positions of the lancet **297** during the operating cycle of the driver coil pack **295**, the position of the lancet **297** can thereafter be determined by measuring the intensity of reflected light at any given moment. In one embodiment, the sensor **296** uses a commercially available LED/photo transducer module such as the OPB703 manufactured by Optek Technology, Inc., 1215 W. Crosby Road, Carrollton, Tex., 75006. This method of analog reflective measurement for position sensing can be used for any of the embodiments of lancet actuators discussed herein. In addition, any of the lancet actuators or drivers that include coils may use one or more of the coils to determine the position of the lancet **297** by using a magnetically permeable region on the lancet shaft **303** or magnetic member **301** itself as the core of a Linear Variable Differential Transformer (LVDT).

Referring to FIGS. **47** and **48**, a flat coil lancet driver **325** is illustrated which has a main body housing **326** and a rotating frame **327**. The rotating frame **327** pivots about an axle **328** disposed between a base **329**, a top body portion **330** of the main body housing **326** and disposed in a pivot guide **331** of the rotating frame **327**. An actuator arm **332** of the rotating frame **327** extends radially from the pivot guide **331** and has a linkage receiving opening **333** disposed at an outward end **334** of the actuator arm **332**. A first end **335** of a coupler linkage **336** is coupled to the linkage receiving opening **333** of the actuator arm **332** and can rotate within the linkage receiving opening **333**. A second end **337** of the coupler linkage **336** is disposed within an opening at a proximal end **338** of a coupler translation member **341**. This configuration allows circumferential forces imposed upon the actuator arm **332** to be transferred into linear forces on a drive coupler **342** secured to a distal end **343** of the coupler translation member **341**. The materials and dimensions of the drive coupler **342** can be the same or similar to the materials and dimensions of the drive coupler **342** discussed above.

Opposite the actuator arm **332** of the rotating frame **327**, a translation substrate in the form of a coil arm **344** extends radially from the pivot guide **331** of the rotating frame **327**. The coil arm **344** is substantially triangular in shape. A flat coil **345** is disposed on and secured to the coil arm **344**. The flat coil **345** has leading segment **346** and a trailing segment **347**, both of which extend substantially orthogonal to the direction of motion of the segments **346** and **347** when the rotating frame **327** is rotating about the pivot guide **331**. The leading segment **346** is disposed within a first magnetically

active region **348** generated by a first upper permanent magnet **349** secured to an upper magnet base **351** and a first lower permanent magnet **352** secured to a lower magnet base **353**. The trailing segment **347** is disposed within a second magnetically active region **354** generated by a second upper permanent magnet **355** secured to the upper magnet base **351** and a second lower permanent magnet secured to the lower magnet base **353**.

The magnetic field lines or circuit of the first upper and lower permanent magnets **349**, **352**, **355** and **356** can be directed upward from the first lower permanent magnet **352** to the first upper permanent magnet **349** or downward in an opposite direction. The magnetic field lines from the second permanent magnets **355** and **356** are also directed up or down, and will have a direction opposite to that of the first upper and lower permanent magnets **349** and **352**. This configuration produces rotational force on the coil arm **344** about the pivot guide **331** with the direction of the force determined by the direction of current flow in the flat coil **345**. As seen in FIGS. **47** and **48**, the movable member **327** is not fully enclosed, encircled, or surrounded by the magnets **349**, **353**, **355**, and **356**. It should be understood that in other embodiments, the configuration may be altered such that the movable member **327** contains a magnet and coils take the place of items **349**, **353**, **355**, and **356** in those positions. Thus, the coil is a flat coil that does not fully enclose the movable member.

A position sensor **357** includes an optical encoder disk section **358** is secured to the rotating frame **327** which rotates with the rotating frame **327** and is read by an optical encoder **359** which is secured to the base **329**. The position sensor **357** determines the rotational position of the rotating frame **327** and sends the position information to a processor **360** which can have features which are the same or similar to the features of the processor **193** discussed above via electrical leads **361**. Electrical conductor leads **363** of the flat coil **345** are also electrically coupled to the processor **360**.

As electrical current is passed through the leading segment **346** and trailing segment **347** of the flat coil **345**, the rotational forces imposed on the segments **346** and **347** are transferred to the rotating frame **327** to the actuator arm **332**, through the coupler linkage **336** and coupler translation member **341** and eventually to the drive coupler **342**. In use, a lancet (not shown) is secured into the drive coupler **342**, and the flat coil lancet actuator **325** activated. The electrical current in the flat coil **345** determines the forces generated on the drive coupler **342**, and hence, a lancet secured to the coupler **342**. The processor **360** controls the electrical current in the flat coil **345** based on the position and velocity of the lancet as measured by the position sensor **357** information sent to the processor **360**. The processor **360** is able to control the velocity of a lancet in a manner similar to the processor **193** discussed above and can generate any of the desired lancet velocity profiles discussed above, in addition to others.

FIGS. **49** and **50** depict yet another embodiment of a controlled driver **369** having a driver coil pack **370** for a tissue penetration device. The driver coil pack **370** has a proximal end **371**, a distal end **372** and an axial lumen **373** extending from the proximal end **371** to the distal end **372**. An inner coil **374** is disposed about the axial lumen **373** and has a tapered configuration with increasing wraps per inch of an elongate conductor **375** in a distal direction. The inner coil **374** extends from the proximal end **371** of the coil driver pack **370** to the distal end **372** of the driver coil pack **370** with a major outer diameter or transverse dimension of about 1 to about 25 mm, specifically about 1 to about 12 mm.

The outer diameter or transverse dimension of the inner coil **374** at the proximal end **371** of the driver coil pack **370** is approximately equal to the diameter of the axial lumen **373** at the proximal end **371** of the coil pack **370**. That is, the inner coil **374** tapers to a reduce outer diameter proximally until there are few or no wraps of elongate electrical conductor **375** at the proximal end **371** of the driver coil pack **370**. The tapered configuration of the inner coil **374** produces an axial magnetic field gradient within the axial lumen **373** of the driver coil pack **370** when the inner coil **374** is activated with electrical current flowing through the elongate electrical conductor **375** of the inner coil **374**.

The axial magnetic field gradient produces a driving force for a magnetic member **376** disposed within the axial lumen **373** that drives the magnetic member **376** towards the distal end **372** of the driver coil pack **370** when the inner coil **374** is activated. The driving force on the magnetic member produced by the inner coil **374** is a smooth continuous force, which can produce a smooth and continuous acceleration of the magnetic member **376** and lancet **377** secured thereto. In some embodiments, the ratio of the increase in outer diameter versus axial displacement along the inner coil **374** in a distal direction can be from about 1 to about 0.08, specifically, about 1 to about 0.08.

An outer coil **378** is disposed on and longitudinally coextensive with the inner coil **374**. The outer coil **378** can have the same or similar dimensions and construction as the inner coil **374**, except that the outer coil **378** tapers proximally to an increased diameter or transverse dimension. The greater wraps per inch of elongate electrical conductor **379** in a proximal direction for the outer coil **378** produces a magnetic field gradient that drives the magnetic member **376** in a proximal direction when the outer coil **378** is activated with electrical current. This produces a braking or reversing effect on the magnetic member **376** during an operational cycle of the lancet **377** and driver coil pack **370**. The elongate electrical conductors **375** and **379** of the inner coil **374** and outer coil **378** are coupled to a processor **381**, which is coupled to an electrical power source **382**. The processor **381** can have properties similar to the other processors discussed above and can control the velocity profile of the magnetic member **376** and lancet **377** to produce any of the velocity profiles above as well as others. The driver coil pack **370** can be used as a substitute for the coil driver pack discussed above, with other components of the lancing device **180** being the same or similar.

Embodiments of driver or actuator mechanisms having been described, we now discuss embodiments of devices which can house lancets, collect samples of fluids, analyze the samples or any combination of these functions. These front-end devices may be integrated with actuators, such as those discussed above, or any other suitable driver or controllable driver.

Generally, most known methods of blood sampling require several steps. First, a measurement session is set up by gathering various articles such as lancets, lancet drivers, test strips, analyzing instrument, etc. Second, the patient must assemble the paraphernalia by loading a sterile lancet, loading a test strip, and arming the lancet driver. Third, the patient must place a finger against the lancet driver and using the other hand to activate the driver. Fourth, the patient must put down the lancet driver and place the bleeding finger against a test strip, (which may or may not have been loaded into an analyzing instrument). The patient must insure blood

has been loaded onto the test strip and the analyzing instrument has been calibrated prior to such loading. Finally, the patient must dispose of all the blood-contaminated paraphernalia including the lancet. As such, integrating the lancing and sample collection features of a tissue penetration sampling device can achieve advantages with regard to patient convenience.

FIG. **51** shows a disposable sampling module **410**, which houses the lancet **412**. The lancet **412** has a head on a proximal end **416** which connects to the driver **438** and a distal end **414**, which lances the skin. The distal end **414** is disposed within the conduit **418**. The proximal end **416** extends into the cavity **420**. The sample reservoir **422** has a narrow input port **424** on the ergonomically contoured surface **426**, which is adjacent to the distal end **414** of the lancet **412**. The term ergonomically contoured, as used herein, generally means shaped to snugly fit a finger or other body portion to be lanced or otherwise tested placed on the surface. The sampling module **410** is capable of transporting the blood sample from the sample reservoir **422** through small passages (not shown), to an analytical region **428**. The analytical region **428** can include chemical, physical, optical, electrical or other means of analyzing the blood sample. The lancet, sample flow channel, sample reservoir and analytical region are integrated into the sampling module **410** in a single packaged unit.

FIG. **52** shows the chamber **430** in the housing **410'** where the sampling module **410** is loaded. The sampling module **410** is loaded on a socket **432** suspended with springs **434** and sits in slot **436**. A driver **438** is attached to the socket **432**. The driver **438** has a proximal end **440** and a distal end **442**. The driver **438** can be either a controllable driver or non-controllable driver any mechanical, such as spring or cam driven, or electrical, such as electromagnetically or electronically driven, means for advancing, stopping, and retracting the lancet. There is a clearance **444** between the distal end **442** of the driver **438** and the sensor **446**, which is attached to the chamber **430**. The socket **432** also contains an analyzer **448**, which is a system for analyzing blood. The analyzer **448** corresponds to the analytical region **428** on the module **410** when it is loaded into the socket **432**.

FIG. **53** shows a tissue penetration sampling device **411** with the sampling module **410** loaded into the socket **432** of housing **410'**. The analytical region **428** and analyzer **448** overlap. The driver **438** fits into the cavity **420**. The proximal end **440** of the driver **438** abuts the distal end **416** of the lancet **412**. The patient's finger **450** sits on the ergonomically contoured surface **426**.

FIG. **54** shows a drawing of an alternate lancet configuration where the lancet **412** and driver **438** are oriented to lance the side of the finger **450** as it sits on the ergonomically contoured surface **426**.

FIG. **55** illustrates the orifice **452** and ergonomically contoured surface **426**. The conduit **418** has an orifice **452**, which opens on a blood well **454**. The sample input port **424** of the reservoir **422** also opens on the blood well **454**. The diameter of the sample input port **424** is significantly greater than the diameter of the orifice **452**, which is substantially the same diameter as the diameter of the lancet **412**. After the lancet is retracted, the blood flowing from the finger **450** will collect in the blood well **454**. The lancet **412** will have been retracted into the orifice **452** effectively blocking the passage of blood down the orifice **452**. The blood will flow from the blood well **454** through the sample input port **424** into the reservoir **422**.

FIG. **56** shows a drawing of the lancing event. The patient applies pressure by pushing down with the finger **450** on the ergonomically contoured surface **426**. This applies downward pressure on the sampling module **410**, which is loaded into the socket **432**. As the socket **432** is pushed downward it compresses the springs **434**. The sensor **446** makes contact with the distal end **442** of the driver **438** and thereby electrically detects the presence of the finger on the ergonomically contoured surface. The sensor can be a piezoelectric device, which detects this pressure and sends a signal to circuit **456**, which actuates the driver **438** and advances and then retracts the lancet **412** lancing the finger **450**. In another embodiment, the sensor **446** is an electric contact, which closes a circuit when it contacts the driver **438** activating the driver **438** to advance and retract the lancet **412** lancing the finger **450**.

An embodiment of a method of sampling includes a reduced number of steps that must be taken by a patient to obtain a sample and analysis of the sample. First, the patient loads a sampling module **410** with an embedded sterile lancet into the housing device **410'**. Second, the patient initiates a lancing cycle by turning on the power to the device or by placing the finger to be lanced on the ergonomically contoured surface **426** and pressing down. Initiation of the sensor makes the sensor operational and gives control to activate the launcher.

The sensor is unprompted when the lancet is retracted after its lancing cycle to avoid unintended multiple lancing events. The lancing cycle consists of arming, advancing, stopping and retracting the lancet, and collecting the blood sample in the reservoir. The cycle is complete once the blood sample has been collected in the reservoir. Third, the patient presses down on the sampling module, which forces the driver **38** to make contact with the sensor, and activates the driver **438**. The lancet then pierces the skin and the reservoir collects the blood sample.

The patient is then optionally informed to remove the finger by an audible signal such as a buzzer or a beeper, and/or a visual signal such as an LED or a display screen. The patient can then dispose of all the contaminated parts by removing the sampling module **410** and disposing of it. In another embodiment, multiple sampling modules **410** may be loaded into the housing **410'** in the form of a cartridge (not shown). The patient can be informed by the tissue penetration sampling device **411** as to when to dispose of the entire cartridge after the analysis is complete.

In order to properly analyze a sample in the analytical region **428** of the sampling module **410**, it may be desirable or necessary to determine whether a fluid sample is present in a given portion of the sample flow channel, sample reservoir or analytical area. A variety of devices and methods for determining the presence of a fluid in a region are discussed below.

In FIG. **57**, a thermal sensor **500** embedded in a substrate **502** adjacent to a surface **504** over which a fluid may flow. The surface may be, for example, a wall of a channel through which fluid may flow or a surface of a planar device over which fluid may flow. The thermal sensor **500** is in electrical communication with a signal-conditioning element **506**, which may be embedded in the substrate **502** or may be remotely located. The signal-conditioning element **506** receives the signal from the thermal sensor **500** and modifies it by means such as amplifying it and filtering it to reduce noise. FIG. **57** also depicts a thermal sensor **508** located at an alternate location on the surface where it is directly exposed to the fluid flow.

FIG. **58** shows a configuration of a thermal sensor **500** adjacent to a separate heating element **510**. The thermal sensor **500** and the heating element **510** are embedded in a

substrate **502** adjacent to a surface **504** over which a fluid may flow. In an alternate embodiment, one or more additional thermal sensors may be adjacent the heating element and may provide for increased signal sensitivity. The thermal sensor **500** is in electrical communication with a signal-conditioning element **506**, which may be embedded in the substrate **502** or may be remotely located.

The signal-conditioning element **506** receives the signal from the thermal sensor **500** and modifies it by means such as amplifying it and filtering it to reduce noise. The heating element **510** is in electrical communication with a power supply and control element **512**, which may be embedded in the substrate **502** or may be remotely located. The power supply and control element **512** provides a controlled source of voltage and current to the heating element **510**.

FIG. **59** depicts a configuration of thermal sensors **500** having three thermal sensor/heating element pairs (**500**/**510**), or detector elements, (with associated signal conditioning elements **506** and power supply and control elements **512** as described in FIG. **58**) embedded in a substrate **502** near each other alongside a surface **504**. The figure depicts the thermal sensors **500** arranged in a linear fashion parallel to the surface **504**, but any operable configuration may be used. In alternate embodiments, fewer than three or more than three thermal sensor/heating element pairs (**500**/**510**) may be used to indicate the arrival of fluid flowing across a surface **504**. In other embodiments, self-heating thermal sensors are used, eliminating the separate heating elements.

Embodiments of the present invention provide a simple and accurate methodology for detecting the arrival of a fluid at a defined location. Such detection can be particularly useful to define the zero- or start-time of a timing cycle for measuring rate-based reactions. This can be used in biochemical assays to detect a variety of analytes present in a variety of types of biological specimens or fluids and for rate-based reactions such as enzymatic reactions. Examples of relevant fluids include, blood, serum, plasma, urine, cerebral spinal fluid, saliva, enzymatic substances and other related substances and fluids that are well known in the analytical and biomedical art. The reaction chemistry for particular assays to analyze biomolecular fluids is generally well known, and selection of the particular assay used will depend on the biological fluid of interest.

Assays that are relevant to embodiments of the present invention include those that result in the measurement of individual analytes or enzymes, e.g., glucose, lactate, creatinine kinase, etc, as well as those that measure a characteristic of the total sample, for example, clotting time (coagulation) or complement-dependent lysis. Other embodiments for this invention provide for sensing of sample addition to a test article or arrival of the sample at a particular location within that article.

Referring now to FIG. **60**, a substrate **502** defines a channel **520** having an interior surface **522** over which fluid may flow. An analysis site **524** is located within the channel **520** where fluid flowing in the channel **520** may contact the analysis site **524**. In various embodiments, the analysis site **524** may alternatively be upon the interior surface **522**, recessed into the substrate **502**, or essentially flush with the interior surface **522**. FIG. **60**, depicts several possible locations for thermal sensors relative the substrate, the channel, and the analysis site; also, other locations may be useful and will depend upon the design of the device, as will be apparent to those of skill in art.

In use, thermal sensors may be omitted from one or more of the locations depicted in FIG. **60**, depending on the intended design. A recess in the analysis site **524** may provide the location for a thermal sensor **526**, as may the perimeter of the analysis site provide the location for a thermal sensor **528**. One or more thermal sensors **530**, **532**, **534** may be located on the upstream side of the analysis site **524** (as fluid flows from right to left in FIG. **60**), or one or more thermal sensors **536**, **538**, **540** may be located on the downstream side of the analysis site **524**.

The thermal sensor may be embedded in the substrate near the surface, as thermal sensor **542** is depicted. In various other embodiments, the thermal sensor(s) may be located upon the interior surface, recessed into the interior surface, or essentially flush with the interior surface. Each thermal sensor may also be associated with a signal conditioning element, heating element, and power supply and control elements, as described above, and a single signal conditioning element, heating element, or power supply and control element may be associated with more than one thermal sensor.

FIG. **61** shows possible positions for thermal sensors relative to analysis sites **524** arranged in an array on a surface **556**. A recess in the analysis site **524** may provide the location for a thermal sensor **544**, as may the perimeter of the analysis site provide the location for a thermal sensor **546**. The edge of the surface surrounding the array of analysis sites may provide the position for one or more thermal sensors **548**. Thermal sensors may be positioned between analysis sites in a particular row **550** or column **552** of the array, or may be arranged on the diagonal **554**.

In various embodiments, the thermal sensor(s) may be may be embedded in the substrate near the surface or may be located upon the surface, recessed into the surface, or essentially flush with the surface. Each thermal sensor may also be associated with a signal conditioning elements, heating elements, and power supply and control elements, as described above, and a single signal conditioning element, heating element, or power supply and control element may be associated with more than one thermal sensor.

The use of small thermal sensors can be useful in miniaturized systems, such as microfluidic devices, which perform biomolecular analyses on very small fluid samples. Such analyses generally include passing a biomolecular fluid through, over, or adjacent to an analysis site and result in information about the biomolecular fluid being obtained through the use of reagents and/or test circuits and/or components associated with the analysis site.

FIG. **62** depicts several possible configurations of thermal sensors relative to channels and analysis sites. The device schematically depicted in FIG. **62** may be, e.g., a microfluidic device for analyzing a small volume of a sample fluid, e.g. a biomolecular fluid. The device has a sample reservoir **560** for holding a quantity of a sample fluid. The sample fluid is introduced to the sample reservoir **560** via a sample inlet port **562** in fluid communication with the sample reservoir **560**. A thermal sensor **564** is located in or near the sample inlet port **562**. A primary channel **566** originates at the sample reservoir **560** and terminates at an outflow reservoir **568**.

One or more supplemental reservoirs **570** are optionally present and are in fluid communication with the primary channel **566** via one or more supplemental channels **572**, which lead from the supplemental reservoir **570** to the primary channel **566**. The supplemental reservoir **570** functions to hold fluids necessary for the operation of the assay, such as reagent solutions, wash solutions, developer solutions, fixative solutions, et cetera. In the primary channel **566** at a predetermined distance from the sample reservoir **560**, an array of analysis sites **574** is present.

Thermal sensors are located directly upstream (as fluid flows from right to left in the figure) from the array **576** and directly downstream from the array **578**. Thermal sensors are also located in the primary channel adjacent to where the primary channel originates at the sample reservoir **580** and adjacent to where the primary channel terminates at the outflow reservoir **582**. The supplemental channel provides the location for another thermal sensor **584**.

When the device is in operation, the thermal sensor **564** located in or near the sample inlet port **562** is used to indicate the arrival of the sample fluid, e.g. the biomolecular fluid, in the local environment of the thermal sensor, as described herein, and thus provides confirmation that the sample fluid has successfully been introduced into the device. The thermal sensor **580** located in the primary channel **566** adjacent to where the primary channel **566** originates at the sample reservoir **560** produces a signal indicating that sample fluid has started to flow from the sample reservoir **560** into the primary channel **566**. The thermal sensors **576** in the primary channel **566** just upstream from the array of analysis sites **574** may be used to indicate that the fluid sample is approaching the array **574**. Similarly, the thermal sensors **578** in the primary channel **566** just downstream from the array of analysis sites **574** may be used to indicate that the fluid sample has advanced beyond the array **574** and has thus contacted each analysis site.

The thermal sensor **584** in the supplemental channel **572** provides confirmation that the fluid contained within the supplemental reservoir **570** has commenced to flow therefrom. The thermal sensor **582** in the primary channel **566** adjacent to where the primary channel **566** terminates at the outflow reservoir **568** indicates when sample fluid arrives near the outflow reservoir **568**, which may then indicate that sufficient sample fluid has passed over the array of analysis sites **574** and that the analysis at the analysis sites is completed.

Embodiments of the invention provide for the use of a thermal sensor to detect the arrival of the fluid sample at a determined region, such as an analysis site, in the local environment of the thermal sensor near the thermal sensor. A variety of thermal sensors may be used. Thermistors are thermally-sensitive resistors whose prime function is to detect a predictable and precise change in electrical resistance when subjected to a corresponding change in temperature Negative Temperature Coefficient (NTC) thermistors exhibit a decrease in electrical resistance when subjected to an increase in temperature and Positive Temperature Coefficient (PTC) thermistors exhibit an increase in electrical resistance when subjected to an increase in temperature.

A variety of thermistors have been manufactured for over the counter use and application. Thermistors are capable of operating over the temperature range of −100 degrees to over 600 degrees Fahrenheit. Because of their flexibility, thermistors are useful for application to micro-fluidics and temperature measurement and control.

A change in temperature results in a corresponding change in the electrical resistance of the thermistor. This temperature change results from either an external transfer of heat via conduction or radiation from the sample or surrounding environment to the thermistor, or as an internal application of heat due to electrical power dissipation within the device. When a thermistor is operated in "self-heating" mode, the power dissipated in the device is sufficient to raise its temperature above the temperature of the local environment, which in turn more easily detects thermal changes in the conductivity of the local environment.

Thermistors are frequently used in "self heating" mode in applications such as fluid level detection, airflow detection and thermal conductivity materials characterization. This mode is particularly useful in fluid sensing, since a self-heating conductivity sensor dissipates significantly more heat in a fluid or in a moving air stream than it does in still air.

Embodiments of the invention may be designed such that the thermal sensor is exposed directly to the sample. However, it may also be embedded in the material of the device, e.g., in the wall of a channel meant to transport the sample. The thermal sensor may be covered with a thin coating of polymer or other protective material.

Embodiments of the device need to establish a baseline or threshold value of a monitored parameter such as temperature. Ideally this is established during the setup process. Once fluid movement has been initiated, the device continuously monitors for a significant change thereafter. The change level designated as "significant" is designed as a compromise between noise rejection and adequate sensitivity. The actual definition of the "zero- or start-time" may also include an algorithm determined from the time history of the data, i.e., it can be defined ranging from the exact instant that a simple threshold is crossed, to a complex mathematical function based upon a time sequence of data.

In use, a signal is read from a thermal sensor in the absence of the sample or fluid. The fluid sample is then introduced. The sample flows to or past the site of interest in the local environment of the thermal sensor, and the thermal sensor registers the arrival of the sample. The site of interest may include an analysis site for conducting, e.g., an enzymatic assay. Measuring the arrival of fluid at the site of interest thus indicates the zero- or start-time of the reaction to be performed. For detection of fluid presence, these sites may be any of a variety of desired locations along the fluidic pathway. Embodiments of the invention are particularly well suited to a microfluidic cartridge or platform, which provide the user with an assurance that a fluid sample has been introduced and has flowed to the appropriate locations in the platform.

A rate-based assay must measure both an initiation time, and some number of later time points, one of which is the end-point of the assay. Therefore, baseline or threshold value can be established, and then continuously monitored for a significant change thereafter; one such change is the arrival of the fluid sample that initiates the enzyme reaction. Baseline values are frequently established during the device setup process. The threshold is designed as a compromise between noise rejection and adequate sensitivity. The defined zero- or "start-time" can be defined ranging from the exact instant that a simple threshold is crossed, to the value algorithmically determined using a filter based on a time sequence of data.

Embodiments of the invention accomplish this in a variety of ways. In one embodiment, an initial temperature measurement is made at a thermal sensor without the sample present. The arrival of a sample changes causes the thermal sensor to register a new value. These values are then compared.

Another embodiment measures the change in thermal properties (such as thermal conductivity or thermal capacity) in the local environment of a thermal sensor caused by the arrival of a fluid sample. In general this is the operating principle of a class of devices known as "thermal conductivity sensors" or "heat flux sensors". At least two hardware implementations have been used and are described above. One implementation utilizes a thermal sensor in a "self-

heating mode." In "self-heating mode," a self-heating thermal sensor may utilize a positive temperature coefficient thermistor placed in or near the flow channel, e.g. located in the wall of the flow channel.

An electrical current is run through the thermistor, causing the average temperature of the thermistor to rise above that of the surrounding environment. The temperature can be determined from the electrical resistance, since it is temperature dependent. When fluid flows through the channel, it changes the local thermal conductivity near the thermistor (usually to become higher) and this causes a change in the average temperature of the thermistor. It also changes the thermal capacity, which modifies the thermal dynamic response. These changes give rise to a signal, which can be detected electronically by well-known means, and the arrival of the fluid can thereby be inferred.

A second hardware implementation requires a separate heating element in or near the flow channel, plus a thermal sensor arrangement in close proximity. Passing a current through the element provides heat to the local environment and establishes a local temperature detected by the thermocouple device. This temperature or its dynamic response is altered by the arrival of the fluid or blood in or near the local environment, similar to the previously described implementation, and the event is detected electronically.

The heating element can be operated in a controlled input mode, which may include controlling one or more of the following parameters—applied current, voltage or power—in a prescribed manner. When operating in controlled input mode, fluctuations of the temperature of the thermal sensor are monitored in order to detect the arrival of the fluid.

Alternatively, the heating element can be operated in such a fashion as to control the temperature of the thermal sensor in a prescribed manner. In this mode of operation, the resulting fluctuations in one or more of the input parameters to the heating element (applied current, voltage, and power) can be monitored in order to detect the arrival of the fluid.

In either of the above-described operating modes, the prescribed parameter can be held to a constant value or sequence of values that are held constant during specific phases of operation of the device. The prescribed parameter can also varied as a known function or waveform in time.

The change in the monitored parameters caused by the arrival of the fluid can be calculated in any of a number of ways, using methods well known in the art of signal processing. The signal processing methods allow the relation of the signal received prior to arrival of the fluid with the signal received upon arrival of the fluid to indicate that the fluid has arrived. For example, and after suitable signal filtering is applied, changes in the monitored value or the rate of change of the value of the signal can be monitored to detect the arrival of the fluid. Additionally, the arrival of fluid will cause a dynamic change in the thermodynamic properties of the local environment, such as thermal conductivity or thermal capacity. When the input parameter is a time varying function this change of thermodynamic properties will cause a phase shift of the measured parameter relative to the controlled parameter. This phase shift can be monitored to detect the arrival of the fluid.

It should also be noted that sensitivity to thermal noise and operating power levels could be reduced in these either of these modes of operation by a suitable choice of time-varying waveforms for the prescribed parameter, together with appropriate and well-known signal processing methods applied to the monitored parameters. However, these potential benefits may come at the cost of slower response time.

Referring to FIG. **63**, an alternative embodiment of a tissue penetration sampling device is shown which incorporates disposable sampling module **590**, a lancet driver **591**, and an optional module cartridge **592** are shown. The optional module cartridge comprises a case body **593** having a storage cavity **594** for storing sampling modules **590**. A cover to this cavity has been left out for clarity. The cartridge further comprises a chamber **595** for holding the lancet driver **591**. The lancet driver has a preload adjustment knob **596**, by which the trigger point of the lancet driver may be adjusted. This insures a reproducible tension on the surface of the skin for better control of the depth of penetration and blood yield. In one embodiment, the sampling module **590** is removably attached to the lancet driver **591**, as shown, so that the sampling module **590** is disposable and the lancet driver **591** is reusable. In an alternative embodiment, the sampling module and lancet driver are contained within a single combined housing, and the combination sample acquisition module/lancet driver is disposable. The sampling module **590** includes a sampling site **597**, preferably having a concave depression **598**, or cradle, that can be ergonomically designed to conform to the shape of a user's finger or other anatomical feature (not shown).

The sampling site further includes an opening **599** located in the concave depression. The lancet driver **591** is used to fire a lancet contained within and guided by the sampling module **590** to create an incision on the user's finger when the finger is placed on the sampling site **597**. In one embodiment, the sampling site forms a substantially airtight seal at the opening when the skin is firmly pressed against the sampling site; the sampling site may additionally have a soft, compressible material surrounding the opening to further limit contamination of the blood sample by ambient air. "Substantially airtight" in this context means that only a negligible amount of ambient air may leak past the seal under ordinary operating conditions, the substantially airtight seal allowing the blood to be collected seamlessly.

Referring to FIGS. **64** and **65**, the lancet **600** is protected in the integrated housing **601** that provides a cradle **602** for positioning the user's finger or other body part, a sampling port **603** within the cradle **602**, and a sample reservoir **603'** for collecting the resulting blood sample. The lancet **600** is a shaft with a distal end **604** sharpened to produce the incision with minimal pain. The lancet **600** further has an enlarged proximal end **605** opposite the distal end. Similar lancets are commonly known in the art.

Rather than being limited to a shaft having a sharp end, the lancet may have a variety of configurations known in the art, with suitable modifications being made to the system to accommodate such other lancet configurations, such configurations having a sharp instrument that exits the sampling port to create a wound from which a blood sample may be obtained.

In the figures, the lancet **600** is slidably disposed within a lancet guide **606** in the housing **601**, and movement of the lancet **600** within the lancet guide **606** is closely controlled to reduce lateral motion of the lancet, thereby reducing the pain of the lance stick. The sample acquisition module also includes a return stop **613**, which retains the lancet within the sample acquisition module. The sampling module has an attachment site **615** for attachment to the lancet driver.

The sampling module further includes a depth selector allowing the user to select one of several penetration depth settings. The depth selector is shown as a multi-position thumbwheel **607** having a graduated surface. By rotating the thumbwheel **607**, the user selects which part of the gradu-

ated surface contacts the enlarged proximal end **605** of the lancet to limit the movement of the lancet **600** within the lancet guide **606**.

The thumbwheel is maintained in the selected position by a retainer **608** having a protruding, rounded surface which engages at least one of several depressions **609** (e.g. dimples, grooves, or slots) in the thumbwheel **607**. The depressions **609** are spatially aligned to correspond with the graduated slope of the thumbwheel **607**, so that, when the thumbwheel **607** is turned, the depth setting is selected and maintained by the retainer **608** engaging the depression **609** corresponding to the particular depth setting selected.

In alternate embodiments, the retainer may be located on the depth selector and the depressions corresponding to the depth setting located on the housing such that retainer may functionally engage the depressions. Other similar arrangements for maintaining components in alignment are known in the art and may be used. In further alternate embodiments, the depth selector may take the form of a wedge having a graduated slope, which contacts the enlarged proximal end of the lancet, with the wedge being retained by a groove in the housing.

The sample reservoir **603'** includes an elongate, rounded chamber **610** within the housing **601** of the sample acquisition module. The chamber **610** has a flat or slightly spherical shape, with at least one side of the chamber **610** being formed by a smooth polymer, preferably absent of sharp corners. The sample reservoir **603'** also includes a sample input port **611** to the chamber **610**, which is in fluid communication with the sampling port **603**, and a vent **612** exiting the chamber.

A cover (not shown), preferably of clear material such as plastic, positions the lancet **600** and closes the chamber **603'**, forming an opposing side of the chamber **603'**. In embodiments where the cover is clear, the cover may serve as a testing means whereby the sample may be analyzed in the reservoir via optical sensing techniques operating through the cover. A clear cover will also aid in determining by inspection when the sample reservoir is full of the blood sample.

FIG. **66** shows a portion of the sampling module illustrating an alternate embodiment of the sample reservoir. The sample reservoir has a chamber **616** having a sample input port **617** joining the chamber **616** to a blood transport capillary channel **618**; the chamber **616** also has a vent **619**. The chamber has a first side **620** that has a flat or slightly spherical shape absent of sharp corners and is formed by a smooth polymer. An elastomeric diaphragm **621** is attached to the perimeter of the chamber **616** and preferably is capable of closely fitting to the first side of the chamber **620**.

To control direction of blood flow, the sample reservoir is provided with a first check valve **622** located at the entrance **617** of the sample reservoir and a second check valve **623** leading to an exit channel **624** located at the vent **619**. Alternately, a single check valve (at the location **622**) may be present controlling both flow into the chamber **616** via the blood transport capillary channel **618** and flow out of the chamber **616** into an optional alternate exit channel **625**. The sample reservoir has a duct **626** connecting to a source of variable pressure facilitating movement of the diaphragm **621**.

When the diaphragm **621** is flexed away from the first side of the chamber **620** (low pressure supplied from the source via duct **626**), the first check valve **622** is open and the second check valve **623** is closed, aspiration of the blood sample into the sample reservoir follows. When the diaphragm **621** is flexed in the direction of the first side of the chamber **620** (high pressure supplied from the source via duct **626**) with the first check valve **622** closed and the second check valve **623** open, the blood is forced out of the chamber **616**. The direction of movement and actuation speed of the diaphragm **621** can be controlled by the pressure source, and therefore the flow of the sample can be accelerated or decelerated. This feature allows not only reduced damage to the blood cells but also for the control of the speed by which the chamber **616** is filled.

While control of the diaphragm **621** via pneumatic means is described in this embodiment, mechanical means may alternately be used. Essentially, this micro diaphragm pump fulfills the aspiration, storage, and delivery functions. The diaphragm **621** may be used essentially as a pump to facilitate transfer of the blood to reach all areas required. Such required areas might be simple sample storage areas further downstream for assaying or for exposing the blood to a chemical sensor or other testing means. Delivery of the blood may be to sites within the sampling module or to sites outside the sampling module, i.e. a separate analysis device.

In an alternate embodiment, a chemical sensor or other testing means is located within the sampling module, and the blood is delivered to the chemical sensor or other testing means via a blood transfer channel in fluid communication with the sample reservoir. The components of the sampling module may be injection molded and the diaphragm may be fused or insertion molded as an integral component.

FIG. **67** depicts a portion of the disposable sampling module surrounding the sampling port **627**, including a portion of the sampling site cradle surface **628**. The housing of the sampling module includes a primary sample flow channel **629** that is a capillary channel connecting the sample input port to the sample reservoir. The primary sample flow channel **629** includes a primary channel lumenal surface **630** and a primary channel entrance **631**, the primary channel entrance **631** opening into the sample input port **627**. The sampling module may optionally include a supplemental sample flow channel **632** that is also a capillary channel having a supplemental channel lumenal surface **633** and a supplemental channel entrance **634**, the supplemental channel entrance **634** opening into the sample input port **627**.

The primary sample flow channel **629** has a greater cross-sectional area than the supplemental sample flow channel **632**, preferably by at least a factor of two. Thus, the supplemental sample flow channel **632** draws fluid faster than the primary sample flow channel **629**. When the first droplet of blood is received into the sample input port **627**, the majority of this droplet is drawn through the supplemental sample flow channel **632**. However, as the blood continues to flow from the incision into the sample input port **627**, most of this blood is drawn through the primary sample flow channel **629**, since the supplemental sample flow channel **632** is of limited capacity and is filled or mostly filled with the first blood droplet. This dual capillary channel configuration is particularly useful in testing where there is a concern with contamination of the sample, e.g. with debris from the lancet strike or (particularly in the case of blood gas testing) with air.

In order to improve blood droplet flow, some priming or wicking of the surface with blood is at times necessary to begin the capillary flow process. Portions of the surfaces of the sample input port **627** and the primary and supplemental (if present) sample flow channels **629**, **632** are treated to render those surfaces hydrophilic. The surface modification may be achieved using mechanical, chemical, corona, or plasma treatment. Examples of such coatings and methods

are marketed by AST Products (Billerica, Mass.) and Spire Corporation (Bedford, Mass.).

However, a complete blanket treatment of the surface could prove detrimental by causing blood to indiscriminately flow all over the surface and not preferentially through the capillary channel(s). This ultimately will result in losses of blood fluid. The particular surfaces which receive the treatment are selected to improve flow of blood from an incised finger on the sampling site cradle surface **628** through the sample input port **627** and at least one of the sample flow channels **629**, **632** to the sample reservoir. Thus, the treatment process should be masked off and limited only to the selected surfaces. The masking process of selectively modifying the sampling surface from hydrophobic to hydrophilic may be done with mechanical masking techniques such as with metal shielding, deposited dielectric or conductive films, or electrical shielding means.

In some embodiments, the treated surfaces are limited to one or more of the following: the surface of the sampling port which lies between the sampling site cradle surface and the primary and supplemental sample flow channel, the surface immediately adjacent to the entrances to the primary and/or supplemental sample flow channels **631**, **634** (both within the sample input port and within the sample flow channel), and the lumenal surface of the primary and/or supplemental sample flow channels **630**, **633**.

Upon exiting the incision blood preferentially moves through the sample input port **627** into the supplementary sample flow channel **632** (if present) and into the primary sample flow channel **629** to the sample reservoir, resulting in efficient capture of the blood. Alternatively, the substrate material may be selected to be hydrophilic or hydrophobic, and a portion of the surface of the substrate material may be treated for the opposite characteristic.

In an embodiment, FIG. **67** a membrane **635** at the base of the sample input port **627** is positioned between the retracted sharpened distal end of the lancet **636** and the entrance to the sample flow channels **631**, **634**. The membrane **635** facilitates the blood sample flow through the sample flow channels **629**, **632** by restricting the blood from flowing into the area **636** surrounding the distal end of the lancet **637**. The blood thus flows preferentially into the sample reservoir. In an embodiment, the membrane **635** is treated to have a hydrophobic characteristic. In another embodiment, the membrane **635** is made of polymer-based film **638** that has been coated with a silicone-based gel **639**.

For example, the membrane structure may comprise a polymer-based film **638** composed of polyethylene terephthalate, such as the film sold under the trademark MYLAR. The membrane structure may further comprise a thin coating of a silicone-based gel **639** such as the gel sold under the trademark SYLGARD on at least one surface of the film. The usefulness of such a film is its ability to reseal after the lancet has penetrated it without physically affecting the lancet's cutting tip and edges. The MYLAR film provides structural stability while the thin SYLGARD silicone laminate is flexible enough to retain its form and close over the hole made in the MYLAR film. Other similar materials fulfilling the structural stability and flexibility roles may be used in the manufacture of the membrane in this embodiment.

The membrane **635** operates to allow the sharpened distal end of the lancet **637** to pierce the membrane as the sharpened distal end of the lancet **637** travels into and through the sample input port **627**. In an embodiment, the silicone-based gel **639** of the membrane **635** automatically seals the cut caused by the piercing lancet. Therefore, after an incision is made on a finger of a user, the blood from the incision is prevented from flowing through the membrane **635**, which aids the blood to travel through the primary sample flow channel **629** to accumulate within the sample reservoir. Thus the film prevents any blood from flowing into the lancet device assembly, and blood contamination and loss into the lancet device mechanism cavity are prevented. Even without the resealing layer **639**, the hydrophobic membrane **635** deters the flow of blood across the membrane **635**, resulting in improved flow through the primary sample flow channel **629** and reduced or eliminated flow through the pierced membrane **635**.

FIGS. **68-70** illustrate one implementation of a lancet driver **640** at three different points during the use of the lancet driver. In this description of the lancet driver, proximal indicates a position relatively close to the site of attachment of the sampling module; conversely, distal indicates a position relatively far from the site of attachment of the sampling module. The lancet driver has a driver handle body **641** defining a cylindrical well **642** within which is a preload spring **643**. Proximal to the preload spring **643** is a driver sleeve **644**, which closely fits within and is slidably disposed within the well **642**. The driver sleeve **644** defines a cylindrical driver chamber **645** within which is an actuator spring **646**. Proximal to the actuator spring **646** is a plunger sleeve **647**, which closely fits within and is slidably disposed within the driver sleeve **644**.

The driver handle body **641** has a distal end **648** defining a threaded passage **649** into which a preload screw **650** fits. The preload screw defines a counterbore **651**. The preload screw **650** has a distal end **652** attached to a preload adjustment knob **653** and a proximal end **654** defining an aperture **655**. The driver sleeve **644** has a distal end **656** attached to a catch fitting **657**. The catch fitting **657** defines a catch hole **658**. The driver sleeve **644** has a proximal end **659** with a sloped ring feature **660** circling the interior surface of the driver sleeve's proximal end **659**.

The lancet driver includes a plunger stem **660** having a proximal end **661** and a distal end **662**. At its distal end **662**, an enlarged plunger head **663** terminates the plunger stem **660**. At its proximal end **661**, the plunger stem **660** is fixed to the plunger tip **667** by adhesively bonding, welding, crimping, or threading into a hole **665** in the plunger tip **667**. A plunger hook **665** is located on the plunger stem **660** between the plunger head **663** and the plunger tip **667**. The plunger head **663** is slidably disposed within the counterbore **651** defined by the preload screw **650**. The plunger stem **660** extends from the plunger head **663**, through the aperture **655** defined by the proximal end **654** of the preload screw, thence through the hole **658** in the catch fitting **657**, to the joint **664** in the plunger tip **667**. For assembly purposes, the plunger base joint **664** may be incorporated into the plunger sleeve **647**, and the plunger stem **660** attached to the plunger base **664** by crimping, swaging, gluing, welding, or some other means. Note that the lancet driver **640** could be replaced with any of the controlled electromagnetic drivers discussed above.

The operation of the tissue penetration sampling device may be described as follows, with reference to FIGS. **63-70**. In operation, a fresh sampling module **590** is removed from the storage cavity **594** and adjusted for the desired depth setting using the multi-position thumbwheel **607**. The sampling module **590** is then placed onto the end of the lancet driver **591**. The preload setting may be checked, but will not change from cycle to cycle once the preferred setting is found; if necessary, the preload setting may be adjusted using the preload adjustment knob **596**.

The combined sampling module and lancet driver assembly is then pressed against the user's finger (or other selected anatomical feature) in a smooth motion until the preset trigger point is reached. The trigger point corresponds to the amount of preload force that needs to be overcome to actuate the driver to drive the lancet towards the skin. The preload screw allows the preload setting to be adjusted by the user such that a consistent, preset (by the user) amount of preload force is applied to the sampling site **597** each time a lancing is performed.

When the motion to press the assembly against the user's finger is begun (see FIG. **68**), the plunger hook **665** engages catch fitting **657**, holding the actuator spring **646** in a cocked position while the force against the finger builds as the driver sleeve **644** continues to compress the preload spring **643**. Eventually (see FIG. **69**) the sloped back of the plunger hook **665** slides into the hole **655** in the proximal end of the preload screw **654** and disengages from the catch fitting **657**. The plunger sleeve **647** is free to move in a proximal direction once the plunger hook **665** releases, and the plunger sleeve **647** is accelerated by the actuator spring **646** until the plunger tip **667** strikes the enlarged proximal end of the lancet **212**.

Upon striking the enlarged proximal end of the lancet **605**, the plunger tip **667** of the actuated lancet driver reversibly engages the enlarged proximal end of the lancet **605**. This may be accomplished by mechanical means, e.g. a fitting attached to the plunger tip **667** that detachably engages a complementary fitting on the enlarged proximal end of the lancet **605**, or the enlarged proximal end of the lancet **605** may be coated with an adhesive that adheres to the plunger tip **667** of the actuated lancet driver. Upon being engaged by the plunger tip **667**, the lancet **600** slides within the lancet guide **606** with the sharpened distal end of the lancet **604** emerging from the housing **601** through the sampling port **603** to create the incision in the user's finger.

At approximately the point where the plunger tip **667** contacts the enlarged proximal end of the lancet **605**, the actuator spring **646** is at its relaxed position, and the plunger tip **667** is traveling at its maximum velocity. During the extension stroke, the actuator spring **646** is being extended and is slowing the plunger tip **667** and lancet **600**. The end of stroke occurs (see FIG. **70**) when the enlarged proximal end of the lancet **605** strikes the multi-position thumbwheel **607**.

The direction of movement of the lancet **600** is then reversed and the extended actuator spring then quickly retracts the sharpened distal end of the lancet **604** back through the sampling port **603**. At the end of the return stroke, the lancet **600** is stripped from the plunger tip **667** by the return stop **613**. The adhesive adheres to the return stop **613** retaining the lancet in a safe position.

As blood seeps from the wound, it fills the sample input port **603** and is drawn by capillary action into the sample reservoir **603'**. In this embodiment, there is no reduced pressure or vacuum at the wound, i.e. the wound is at ambient air pressure, although embodiments which draw the blood sample by suction, e.g. supplied by a syringe or pump, may be used. The vent **612** allows the capillary action to proceed until the entire chamber is filled, and provides a transfer port for analysis of the blood by other instrumentation. The finger is held against the sample acquisition module until a complete sample is observed in the sample reservoir.

As the sampling module **600** is removed from the lancet driver **591**, a latch **614** that is part of the return stop **613** structure engages a sloped ring feature **660** inside the lancet driver **591**. As the lancet driver **591** is removed from the sampling module **600**, the latch forces the return stop **613** to rotate toward the lancet **600**, bending it to lock it in a safe position, and preventing reuse.

As the sampling module **600** is removed from the lancet driver **591**, the driver sleeve **644** is forced to slide in the driver handle body **641** by energy stored in the preload spring **643**. The driver sleeve **644**, plunger sleeve **647**, and actuator spring **646** move outward together until the plunger head **663** on the plunger stem **660** contacts the bottom of the counterbore **651** at the proximal end of the preload screw **654**. The preload spring **643** continues to move the driver sleeve **644** outward compressing the actuator spring **646** until the plunger hook **665** passes through the hole **658** in the catch fitting **657**. Eventually the two springs reach equilibrium and the plunger sleeve **647** comes to rest in a cocked position.

After the sampling module **600** is removed from the lancet driver **591**, it may be placed in a separate analysis device to obtain blood chemistry readings. In a preferred embodiment, the integrated housing **601** or sample reservoir **603'** of the sampling module **600** contains at least one biosensor, which is powered by and/or read by the separate analysis device. In another embodiment, the analysis device performs an optical analysis of the blood sample directly through the clear plastic cover of the sampling module. Alternatively, the blood sample may be transferred from the sampling module into an analysis device for distribution to various analysis processes.

Alternate embodiments of the invention offer improved success rates for sampling, which reduces the needless sacrifice of a sample storage reservoir or an analysis module due to inadequate volume fill. Alternate embodiments allow automatic verification that sufficient blood has been collected before signaling the user (e.g. by a signal light or an audible beep) that it is okay to remove the skin from the sampling site. In such alternate embodiments, one or more additional lancet(s) (denoted backup lancets) and/or lancet driver(s) (denoted backup lancet drivers) and/or sample reservoir(s) (denoted backup sample reservoirs) are present with the "primary" sampling module.

In one such preferred embodiment, following detection of inadequate blood sample volume (e.g., by light or electronic methods), a backup sampling cycle is initiated automatically. The "backup sampling cycle" includes disconnecting the primary sample reservoir via a simple valving system, bringing the backup components online, lancing of the skin, collection of the blood, and movement of the blood to the backup sample reservoir.

Blood flows into the backup sample reservoir until the required volume is obtained. The cycle repeats itself, if necessary, until the correct volume is obtained. Only then is the sample reservoir made available as a source of sampled blood for use in measurements or for other applications. The series of reservoirs and/or lancets and/or lancet drivers may easily be manufactured in the same housing and be transparent to the user.

In one embodiment, up to three sample reservoirs (the primary plus two backup) are present in a single sample acquisition module, each connected via a capillary channel/valving system to one or more sampling ports. Another embodiment has four sample reservoirs (the primary plus three backup) present in a single sample acquisition module, each connected via a capillary channel/valving system to one or more sampling ports. With three or four sample reservoirs, at least an 80% sampling success rate can be achieved for some embodiments.

Another embodiment includes a miniaturized version of the tissue penetration sampling device. Several of the miniature lancets may be located in a single sampling site, with corresponding sample flow channels to transfer blood to one or more reservoirs. The sample flow channels may optionally have valves for controlling flow of blood. The device may also include one or more sensors, such as the thermal sensors discussed above, for detecting the presence of blood, e.g. to determine if a sufficient quantity of blood has been obtained. In such an embodiment, the disposable sampling module, the lancet driver, and the optional module cartridge will have dimensions no larger than about 150 mm long, 60 mm wide, and 25 mm thick.

In other embodiments, the size of the tissue penetration sampling device including the disposable sampling module, the lancet driver, and the optional cartridge will have dimensions no larger than about 100 mm long, about 50 mm wide, and about 20 mm thick, and in still other embodiments no larger than about 70 mm long, about 30 mm wide, and about 10 mm thick. The size of the tissue penetration sampling device including the disposable sampling module, the lancet driver, and the optional cartridge will generally be at least about 10 mm long, about 5 mm wide, and about 2 mm thick.

In another miniature embodiment, the dimensions of the lancet driver without the cartridge or sampling module are no larger than about 80 mm long, 10 mm wide, and 10 mm thick, or specifically no larger than about 50 mm long, 7 mm wide, and 7 mm thick, or even more specifically no larger than about 15 mm long, 5 mm wide, and 3 mm thick; dimensions of the lancet driver without the cartridge or sampling module are generally at least about 1 mm long, 0.1 mm wide, and 0.1 mm thick, or specifically at least about 2 mm long, 0.2 mm wide, and 0.2 mm thick, or more specifically at least about 4 mm long, 0.4 mm wide, and 0.4 mm thick.

In yet another miniature embodiment, dimensions of the miniature sampling module without the lancet driver or cartridge are no larger than about 15 mm long, about 10 mm wide, and about 10 mm thick, or no larger than about 10 mm long, about 7 mm wide, and about 7 mm thick, or no larger than about 5 mm long, about 3 mm wide, and about 2 mm thick; dimensions of the miniature sampling module without the lancet driver or cartridge are generally at least about 1 mm long, 0.1 mm wide, and 0.1 mm thick, specifically at least about 2 mm long, 0.2 mm wide, and 0.2 mm thick, or more specifically at least about 4 mm long, 0.4 mm wide, and 0.4 mm thick.

In another embodiment, the miniaturized sampling module and the lancet driver form a single unit having a shared housing, and the combined sample acquisition module/lancet driver unit is disposable. Such a combined unit is no larger than about 80 mm long, about 30 mm wide, and about 10 mm thick, specifically no larger than about 50 mm long, about 20 mm wide, and about 5 mm thick, more specifically, no larger than about 20 mm long, about 5 mm wide, and about 3 mm thick; the combined unit is generally at least about 2 mm long, about 0.3 mm wide, and about 0.2 mm thick, specifically at least about 4 mm long, 0.6 mm wide, and 0.4 mm thick, more specifically, at least about 8 mm long, 1 mm wide, and 0.8 mm thick.

Referring to FIG. **71**, another embodiment of a tissue penetration sampling device is shown, incorporating a disposable sampling module **608** cartridge and analyzer device **669** is shown. The analyzer device **669** includes a deck **670** having a lid **671** attached to the deck by hinges along the rear edge of the system **672**. A readout display **673** on the lid **671** functions to give the user information about the status of the analyzer device **669** and/or the sampling module cartridge **668**, or to give readout of a blood test. The analyzer device **669** has several function buttons **674** for controlling function of the analyzer device **669** or for inputting information into the reader device **669**. Alternatively, the reader device may have a touch-sensitive screen, an optical scanner, or other input means known in the art.

An analyzer device with an optical scanner may be particularly useful in a clinical setting, where patient information may be recorded using scan codes on patients' wristbands or files. The analyzer reader device may have a memory, enabling the analyzer device to store results of many recent tests. The analyzer device may also have a clock and calendar function, enabling the results of tests stored in the memory to be time and date-stamped. A computer interface **675** enables records in memory to be exported to a computer. The analyzer device **669** has a chamber located between the deck **670** and the lid **671**, which closely accommodates a sampling module cartridge **668**. Raising the lid **671**, allowing a sampling module cartridge **668** to be inserted or removed, accesses the chamber.

FIG. **72** is an illustration showing some of the features of an embodiment of a sampling module cartridge. The sampling module cartridge **668** has a housing having an orientation sensitive contact interface for mating with a complementary surface on the analyzer device. The contact interface functions to align the sampling module cartridge with the analyzer device, and also allows the analyzer device to rotate the sampling module cartridge in preparation for a new sampling event. The contact interface may take the form of cogs or grooves formed in the housing, which mate with complementary cogs, or grooves in the chamber of the analyzer device.

The sampling module cartridge has a plurality of sampling sites **678** on the housing, which are shown as slightly concave depressions near the perimeter of the sampling module cartridge **668**. Each sampling site defines an opening **679** contiguous with a sample input port entering the sampling module. In an alternate embodiment, the sampling sites and sample input ports are located on the edge of the sampling module cartridge. Optical windows **680** allow transmission of light into the sampling module cartridge for the purpose of optically reading test results. Alternatively, sensor connection points allow transmission of test results to the analyzer device via electrical contact. Access ports **681**, if present, allow transmission of force or pressure into the sampling module cartridge from the analyzer device. The access ports may be useful in conjunction with running a calibration test or combining reagents with sampled blood or other bodily fluids.

The described features are arranged around the sampling module cartridge, and the sampling module cartridge is radially partitioned into many sampling modules, each sampling module having the components necessary to perform a single blood sampling and testing event. A plurality of sampling modules are present on a sampling module cartridge, generally at least ten sampling modules are present on a single disposable sampling module cartridge; at least about 20, or more on some embodiments, and at least about 34 sampling modules are present on one embodiment, allowing the sampling module cartridge to be maintained in the analyzer device for about a week before replacing with a new sampling module cartridge (assuming five sampling and testing events per day for seven days). With increasing miniaturization, up to about 100, or more preferably up to about 150, sampling modules may be included on a single

sampling module cartridge, allowing up to a month between replacements with new sampling module cartridges. It may be necessary for sampling sites to be located in several concentric rings around the sampling module cartridge or otherwise packed onto the housing surface to allow the higher number of sampling modules on a single sampling module cartridge.

In other embodiments, the sampling module cartridge may be any other shape which may conveniently be inserted into a analyzer device and which are designed to contain multiple sampling modules, e.g. a square, rectangular, oval, or polygonal shape. Each sampling module is miniaturized, being generally less than about 6.0 cm long by about 1.0 cm wide by about 1.0 cm thick, so that thirty five more or less wedge-shaped sampling modules can fit around a disk having a radius of about 6.0 cm. In some embodiments, the sampling modules can be much smaller, e.g. less than about 3.0 cm long by about 0.5 cm wide by about 0.5 cm thick.

FIG. **73** depicts, in a highly schematic way, a single sampling module, positioned within the analyzer device. Of course, it will occur to the person of ordinary skill in the art that the various recited components may be physically arranged in various configurations to yield a functional system. FIG. **73** depicts some components, which might only be present in alternate embodiments and are not necessarily all present in any single embodiment. The sampling module has a sample input port **682**, which is contiguous with an opening **683** defined by a sampling site **684** on the cartridge housing **685**. A lancet **686** having a lancet tip **687** adjacent to the sample input port **682** is operably maintained within the housing such that the lancet **686** can move to extend the lancet tip **687** through the sample input port **682** to outside of the sampling module cartridge.

The lancet **686** also has a lancet head **688** opposite the lancet tip. The lancet **686** driven to move by a lancet driver **689**, which is schematically depicted as a coil around the lancet **686**. The lancet driver **689** optionally is included in the sampling module cartridge as pictured or alternatively is external to the sampling module cartridge. The sampling module may further include a driver port **690** defined by the housing adjacent to the lancet head **688**—the driver port **690** allows an external lancet driver **691** access to the lancet **686**.

In embodiments where the lancet driver **689** is in the sampling module cartridge, it may be necessary to have a driver connection point **694** upon the housing accessible to the analyzer device. The driver connection point **694** may be a means of triggering the lancet driver **689** or of supplying motive force to the lancet driver **689**, e.g. an electrical current to an electromechanical lancet driver. Note that any of the drivers discussed above, including controllable drivers, electromechanical drivers, etc., can be substituted for the lancet driver **689** shown.

In one embodiment a pierceable membrane **692** is present between the lancet tip **687** and the sample input port **682**, sealing the lancet **686** from any outside contact prior to use. A second membrane **693** may be present adjacent to the lancet head **688** sealing the driver port **690**. The pierceable membrane **692** and the second membrane **693** function to isolate the lancet **686** within the lancet chamber to maintain sterility of the lancet **686** prior to use. During use the lancet tip **687** and the external lancet driver **691** pierce the pierceable membrane **692** and the second membrane **693**, if present respectively.

A sample flow channel **695** leads from the sample input port **682** to an analytical region **696**. The analytical region **696** is associated with a sample sensor capable of being read by the analyzer device. If the sample sensor is optical in nature, the sample sensor may include optically transparent windows **697** in the housing above and below the analytical region **696**, allowing a light source in the analyzer device to pass light **698** through the analytical region. An optical sensor **698'**, e.g. a CMOS array, is present in the analyzer device for sensing the light **699** that has passed through the analytical region **696** and generating a signal to be analyzed by the analyzer device.

In a separate embodiment, only one optically transparent window is present, and the opposing side of the analytical region is silvered or otherwise reflectively coated to reflect light back through the analytical region and out the window to be analyzed by the analyzer device. In an alternate embodiment, the sensor is electrochemical **700**, e.g. an enzyme electrode, and includes a means of transmitting an electric current from the sampling module cartridge to the analyzer device, e.g. an electrical contact **701**, or plurality of electrical contacts **701**, on the housing accessible to the analyzer device.

In one embodiment, the pierceable membrane **692** may be made of polymer-based film that has been coated with a silicone-based gel. For example, the membrane structure may comprise a polymer-based film composed of polyethylene terephthalate, such as the film sold under the trademark MYLAR®. The membrane structure may further comprise a thin coating of a silicone-based gel such as the gel sold under the trademark SYLGARD® on at least one surface of the film.

The usefulness of such a film is its ability to reseal after the lancet tip has penetrated it without physically affecting the lancet's cutting tip and edges. The MYLAR® film provides structural stability while the thin SYLGARD® silicone laminate is flexible enough to retain its form and close over the hole made in the MYLAR® film. Other similar materials fulfilling the structural stability and flexibility roles may be used in the manufacture of the pierceable membrane in this embodiment.

The pierceable membrane **692** operates to allow the lancet tip **687** to pierce the pierceable membrane **692** as the lancet tip **687** travels into and through the sampling port **682**. In the described embodiment, the silicone-based gel of the membrane **692** automatically seals the cut caused by the lancet tip **687**. Therefore, after an incision is made on a finger of a user and the lancet tip **687** is retracted back through the pierceable membrane **692**, the blood from the incision is prevented from flowing through the pierceable membrane **692**, which aids the blood to travel through the sample flow channel **695** to accumulate within the analytical region **696**.

Thus the pierceable membrane **692** prevents blood from flowing into the lancet device assembly, and blood contamination and loss into the lancet device mechanism cavity are prevented. In yet another embodiment, used sample input ports are automatically sealed off before going to the next sample acquisition cycle by a simple button mechanism. A similar mechanism seals off a sample input port should sampling be unsuccessful.

In an alternate embodiment, a calibrant supply reservoir **702** is also present in each sampling module. The calibrant supply reservoir **702** is filled with a calibrant solution and is in fluid communication with a calibration chamber **703**. The calibration chamber **703** provides a source of a known signal from the sampling module cartridge to be used to validate and quantify the test conducted in the analytical region **696**. As such, the configuration of the calibration chamber **703** closely resembles the analytical region **696**.

During use, the calibrant solution is forced from the calibrant supply reservoir **702** into the calibration chamber

703. The figure depicts a stylized plunger **704** above the calibrant supply reservoir **702** ready to squeeze the calibrant supply reservoir **702**. In practice, a variety of methods of transporting small quantities of fluid are known in the art and can be implemented on the sampling module cartridge. The calibration chamber **703** is associated with a calibrant testing means.

FIG. **73** shows two alternate calibrant testing means—optical windows **697** and an electrochemical sensor **676**. In cases where the sampling module is designed to perform several different tests on the blood, both optical and electrochemical testing means may be present. The optical windows **697** allow passage of light **677** from the analyzer device through the calibration chamber **703**, whereupon the light **703'** leaving the calibration chamber **703** passes onto an optical sensor **698'** to result in a signal in the analyzer device.

The electrochemical sensor **676** is capable of generating a signal that is communicated to the analyzer device via, e.g. an electrical contact **704'**, which is accessible to a contact probe **702'** on the analyzer device that can be extended to contact the electrical contact **704'**. The calibrant solution may be any solution, which, in combination with the calibrant testing means, will provide a suitable signal, which will serve as calibration measurement to the analyzer device. Suitable calibrant solutions are known in the art, e.g. glucose solutions of known concentration. The calibration measurement is used to adjust the results obtained from sample sensor from the analytical region **696**.

To maintain small size in some sampling module cartridge embodiments, allowing small quantities of sampled blood to be sufficient, each component of the sampling module must be small, particularly the sample flow channel and the analytical region. The sample flow channel can be less than about 0.5 mm in diameter, specifically less than about 0.3 mm in diameter, more specifically less than about 0.2 mm in diameter, and even more specifically less than about 0.1 mm in diameter.

The sample flow channel may generally be at least about 50 micrometers in diameter. The dimensions of the analytical region may be less than about 1 mm by about 1 mm by about 1 mm, specifically less than about 0.6 mm by about 0.6 mm by about 0.4 mm, more specifically less than about 0.4 mm by 0.4 mm by 0.2 mm, and even more specifically less than about 0.2 mm by about 0.2 mm by about 0.1 mm. The analytical region can generally be at least about 100 micrometers by 100 micrometers by 50 micrometers.

The sampling module cartridge is able to return a valid testing result with less than about 5 microliters of blood taken from the skin of a patient, specifically less than about 1 microliter, more specifically less than about 0.4 microliters, and even more specifically less than about 0.2 microliters. Generally, at least 0.05 microliters of blood is drawn for a sample.

The cartridge housing may be made in a plurality of distinct pieces, which are then assembled to provide the completed housing. The distinct pieces may be manufactured from a wide range of substrate materials. Suitable materials for forming the described apparatus include, but are not limited to, polymeric materials, ceramics (including aluminum oxide and the like), glass, metals, composites, and laminates thereof. Polymeric materials are particularly preferred herein and will typically be organic polymers that are homopolymers or copolymers, naturally occurring or synthetic, crosslinked or uncrosslinked.

It is contemplated that the various components and devices described herein, such as sampling module cartridges, sampling modules, housings, etc., may be made from a variety of materials, including materials such as the following: polycarbonates; polyesters, including poly (ethylene terephthalate) and poly(butylene terephthalate); polyamides, (such as nylons); polyethers, including polyformaldehyde and poly (phenylene sulfide); polyimides, such as that manufactured under the trademarks KAPTON (DuPont, Wilmington, Del.) and UPILEX (Ube Industries, Ltd., Japan); polyolefin compounds, including ABS polymers, Kel-F copolymers, poly(methyl methacrylate), poly(styrene-butadiene) copolymers, poly(tetrafluoroethylene), poly (ethylenevinyl acetate) copolymers, poly(N-vinylcarbazole) and polystyrene.

The various components and devices described herein may also be fabricated from a "composite," i.e., a composition comprised of unlike materials. The composite may be a block composite, e.g., an A□B□A block composite, an A□B□C block composite, or the like. Alternatively, the composite may be a heterogeneous combination of materials, i.e., in which the materials are distinct from separate phases, or a homogeneous combination of unlike materials. A laminate composite with several different bonded layers of identical or different materials can also be used.

Other preferred composite substrates include polymer laminates, polymer-metal laminates, e.g., polymer coated with copper, a ceramic-in-metal or a polymer-in-metal composite. One composite material is a polyimide laminate formed from a first layer of polyimide such as KAPTON polyimide, available from DuPont (Wilmington, Del.), that has been co-extruded with a second, thin layer of a thermal adhesive form of polyimide known as KJ®, also available from DuPont (Wilmington, Del.).

Any suitable fabrication method for the various components and devices described herein can be used, including, but not limited to, molding and casting techniques, embossing methods, surface machining techniques, bulk machining techniques, and stamping methods. Further, injection-molding techniques well known in the art may be useful in shaping the materials used to produce sample modules and other components.

For some embodiments, the first time a new sampling module cartridge **668** is used, the user removes any outer packaging material from the sampling module cartridge **668** and opens the lid **671** of the analyzer device **669**, exposing the chamber. The sampling module cartridge **668** is slipped into the chamber and the lid **671** closed. The patient's skin is positioned upon the sampling site **678** and the integrated process of lancing the skin, collecting the blood sample, and testing the blood sample is initiated, e.g. by pressing a function button **674** to cause the lancet driver to be triggered. The patient's skin is maintained in position upon the sampling site **678**, adjacent the sample input port **682**, until an adequate volume of blood has been collected, whereupon the system may emit a signal (e.g. an audible beep) that the patient's skin may be lifted from the sampling site **678**.

When the testing of the sample is complete, the analyzer device **669** automatically reads the results from the sampling module cartridge **668** and reports the results on the readout display **673**. The analyzer device **669** may also store the result in memory for later downloading to a computer system. The sampling module cartridge **668** may then automatically be advanced to bring the next sampling module inline for the next use. Each successive time the system is used (optionally until the sampling module cartridge **668** is used up), the patient's skin may be placed upon the sampling

site **678** of the (already installed) sampling module cartridge **668**, thus simplifying the process of blood sampling and testing.

A method of providing more convenient blood sampling, wherein a series of blood samples may be collected and tested using a single disposable sampling module cartridge which is designed to couple to an analyzer device is described. Embodiments of the sampling module cartridge include a plurality of sampling modules. Each sampling module can be adapted to perform a single blood sampling cycle and is functionally arranged within the sampling module cartridge to allow a new sampling module to be brought online after a blood sampling cycle is completed.

Each blood sampling cycle may include lancing of a patient's skin, collection of a blood sample, and testing of the blood sample. The blood sampling cycle may also include reading of information about the blood sample by the analyzer device, display and/or storage of test results by the analyzer device, and/or automatically advancing the sampling module cartridge to bring a new sampling module online and ready for the next blood sampling cycle to begin.

A method embodiment starts with coupling of the sampling module cartridge and analyzer device and then initiating a blood sampling cycle. Upon completion of the blood sampling cycle, the sampling module cartridge is advanced to bring a fresh, unused sampling module online, ready to perform another blood sampling cycle. Generally, at least ten sampling modules are present, allowing the sampling module cartridge to be advanced nine times after the initial blood sampling cycle.

In some embodiments, more sampling modules are present and the sampling module cartridge may be advanced about 19 times, and about 34 times in some embodiments, allowing about 19 or about 34 blood sampling cycles, respectively, after the initial blood sampling cycle. After a series of blood sampling cycles has been performed and substantially all (i.e. more than about 80%) of the sampling modules have been used, the sampling module cartridge is decoupled from the analyzer device and discarded, leaving the analyzer device ready to be coupled with a new sampling module cartridge.

Referring to FIGS. **74-76**, a tissue penetration sampling device **180** is shown with the controllable driver **179** of FIG. **20** coupled to a sampling module cartridge **705** and disposed within a driver housing **706**. A ratchet drive mechanism **707** is secured to the driver housing **706**, coupled to the sampling module cartridge **705** and configured to advance a sampling module belt **708** within the sampling module cartridge **705** so as to allow sequential use of each sampling module **709** in the sampling module belt **708**. The ratchet drive mechanism **707** has a drive wheel **711** configured to engage the sampling modules **709** of the sampling module belt **708**. The drive wheel **711** is coupled to an actuation lever **712** that advances the drive wheel **711** in increments of the width of a single sampling module **709**. A T-slot drive coupler **713** is secured to the elongated coupler shaft **184**.

A sampling module **709** is loaded and ready for use with the drive head **198** of the lancet **183** of the sampling module **709** loaded in the T-slot **714** of the drive coupler **713**. A sampling site **715** is disposed at the distal end **716** of the sampling module **709** disposed about a lancet exit port **717**. The distal end **716** of the sampling module **709** is exposed in a module window **718**, which is an opening in a cartridge cover **721** of the sampling module cartridge **705**. This allows the distal end **716** of the sampling module **709** loaded for use to be exposed to avoid contamination of the cartridge cover **721** with blood from the lancing process.

A reader module **722** is disposed over a distal portion of the sampling module **709** that is loaded in the drive coupler **713** for use and has two contact brushes **724** that are configured to align and make electrical contact with sensor contacts **725** of the sampling module **709** as shown in FIG. **77**. With electrical contact between the sensor contacts **725** and contact brushes **724**, the processor **193** of the controllable driver **179** can read a signal from an analytical region **726** of the sampling module **709** after a lancing cycle is complete and a blood sample enters the analytical region **726** of the sampling module **709**. The contact brushes **724** can have any suitable configuration that will allow the sampling module belt **708** to pass laterally beneath the contact brushes **724** and reliably make electrical contact with the sampling module **709** loaded in the drive coupler **713** and ready for use. A spring loaded conductive ball bearing is one example of a contact brush **724** that could be used. A resilient conductive strip shaped to press against the inside surface of the flexible polymer sheet **727** along the sensor contact region **728** of the sampling module **709** is another embodiment of a contact brush **724**.

The sampling module cartridge **705** has a supply canister **729** and a receptacle canister **730**. The unused sampling modules of the sampling module belt **708** are disposed within the supply canister **729** and the sampling modules of the sampling module belt **708** that have been used are advanced serially after use into the receptacle canister **730**.

FIG. **77** is a perspective view of a section of the sampling module belt **708** shown in the sampling module cartridge **705** in FIG. **74**. The sampling module belt **708** has a plurality of sampling modules **709** connected in series by a sheet of flexible polymer **727**. The sampling module belt **708** shown in FIG. **77** is formed from a plurality of sampling module body portions **731** that are disposed laterally adjacent each other and connected and sealed by a single sheet of flexible polymer **727**. The flexible polymer sheet **727** can optionally have sensor contacts **725**, flexible electrical conductors **732**, sample sensors **733** or any combination of these elements formed on the inside surface **734** of the flexible polymer sheet **727**. These electrical, optical or chemical elements can be formed by a variety of methods including vapor deposition and the like.

The proximal portion **735** of the flexible polymer sheet **727** has been folded over on itself in order to expose the sensor contacts **725** to the outside surface of the sampling module **709**. This makes electrical contact between the contact brushes **724** of the reader module **722** and the sensor contacts **725** easier to establish as the sampling modules **709** are advanced and loaded into position with the drive coupler **713** of the controllable driver **179** ready for use. The flexible polymer sheet **727** can be secured to the sampling module body portion **731** by adhesive bonding, solvent bonding, ultrasonic thermal bonding or any other suitable method.

FIG. **78** shows a perspective view of a single sampling module **709** of the sampling module belt **708** of FIG. **77** during the assembly phase of the sampling module **709**. The proximal portion **735** of the flexible polymer sheet **727** is being folded over on itself as shown in order to expose the sensor contacts **725** on the inside surface of the flexible polymer sheet **727**. FIG. **79** is a bottom view of a section of the flexible polymer sheet **727** of the sampling module **709** of FIG. **78** illustrating the sensor contacts **725**, flexible conductors **732** and sample sensors **733** deposited on the bottom surface of the flexible polymer sheet **727**.

A lancet **183** is shown disposed within the lancet channel **736** of the sampling module **709** of FIG. **78** as well as within the lancet channels **736** of the sampling modules **709** of the

sampling module belt **708** of FIG. **77**. The lancet **183** has a tip **196** and a shaft portion **201** and a drive head **198**. The shaft portion **201** of the lancet slides within the lancet channel **736** of the sampling module **709** and the drive head **198** of the lancet **183** has clearance to move in a proximal and distal direction within the drive head slot **737** of the sampling module **709**. Disposed adjacent the drive head slot **737** and at least partially forming the drive head slot are a first protective strut **737'** and a second protective strut **737"** that are elongated and extend substantially parallel to the lancet **183**.

In one lancet **183** embodiment, the drive head **198** of the lancet **183** can have a width of about 0.9 to about 1.1 mm. The thickness of the drive head **198** of the lancet **183** can be about 0.4 to about 0.6 mm. The drive head slot **714** of the sampling module **709** should have a width that allows the drive head **198** to move freely within the drive head slot **714**. The shaft portion **201** of the lancet **183** can have a transverse dimension of about 50 mm to about 1000 mm. Typically, the shaft portion **201** of the lancet **183** has a round transverse cross section, however, other configurations are contemplated.

The sampling module body portions **731** and the sheet of flexible polymer **727** can both be made of polymethylmethacrylate (PMMA), or any other suitable polymer, such as those discussed above. The dimensions of a typical sampling module body portion **731** can be about 14 to about 18 mm in length, about 4 to about 5 mm in width, and about 1.5 to about 2.5 mm in thickness. In other embodiments, the length of the sample module body portion can be about 0.5 to about 2.0 inch and the transverse dimension can be about 0.1 to about 0.5 inch. The thickness of the flexible polymer sheet **727** can be about 100 to about 150 microns. The distance between adjacent sampling modules **709** in the sampling module belt **708** can vary from about 0.1 mm to about 0.3 mm, and in some embodiments, from about 0.2 to about 0.6.

FIGS. **80** and **81** show a perspective view of the body portion **731** of the sampling module **709** of FIG. **77** without the flexible polymer cover sheet **727** or lancet **183** shown for purposes of illustration. FIG. **81** is an enlarged view of a portion of the body portion **731** of the sampling module **709** of FIG. **80** illustrating the sampling site **715**, sample input cavity **715'**, sample input port **741**, sample flow channel **742**, analytical region **743**, control chamber **744**, vent **762**, lancet channel **736**, lancet channel stopping structures **747** and **748** and lancet guides **749-751** of the sampling module **709**.

The lancet channel **736** has a proximal end **752** and a distal end **753** and includes a series of lancet bearing guide portions **749-751** and sample flow stopping structures **747-748**. The lancet guides **749-751** may be configured to fit closely with the shaft of the lancet **183** and confine the lancet **183** to substantially axial movement. At the distal end **753** of the lancet channel **736** the distal-most lancet guide portion **749** is disposed adjacent the sample input port **741** and includes at its distal-most extremity, the lancet exit port **754** which is disposed adjacent the sample input cavity **715'**. The sample input cavity can have a transverse dimension, depth or both, of about 2 to 5 times the transverse dimension of the lancet **183**, or about 0.2 to about 2 mm, specifically, about 0.4 to about 1.5 mm, and more specifically, about 0.5 to about 1.0 mm. The distal-most lancet guide **749** can have inner transverse dimensions of about 300 to about 350 microns in width and about 300 to about 350 microns in depth. Proximal of the distal-most lancet guide portion **749** is a distal sample flow stop **747** that includes a chamber adjacent the distal-most lancet **749**. The chamber has a transverse dimension that is significantly larger than the transverse dimension of the distal-most lancet guide **749**. The chamber can have a width of about 600 to about 800 microns, and a depth of about 400 to about 600 microns and a length of about 2000 to about 2200 microns. The rapid transition of transverse dimension and cross sectional area between the distal-most lancet bearing guide **749** and the distal sample flow stop **747** interrupts the capillary action that draws a fluid sample through the sample input cavity **715'** and into the lancet channel **736**.

A center lancet bearing guide **750** is disposed proximal of the distal lancet channel stop **747** and can have dimensions similar to those of the distal-most lancet bearing guide **749**. Proximal of the center lancet guide **750** is a proximal lancet channel stop **748** with a chamber. The dimensions of the proximal lancet channel stop can be the same or similar to those of the distal lancet channel stop **747**. The proximal lancet channel stop **748** can have a width of about 600 to about 800 microns, and a depth of about 400 to about 600 microns and a length of about 2800 to about 3000 microns. Proximal of the proximal lancet channel stop **748** is a proximal lancet guide **751**. The proximal lancet guide **751** can dimensions similar to those of the other lancet guide **749** and **750** portions with inner transverse dimensions of about 300 to about 350 microns in width and about 300 to about 350 microns in depth. Typically, the transverse dimension of the lancet guides **749-751** are about 10 percent larger than the transverse dimension of the shaft portion **201** of the lancet **183** that the lancet guides **749-751** are configured to guide.

A proximal fracturable seal (not shown) can be positioned between the proximal lancet guide **751** and the shaft portion **201** of the lancet **183** that seals the chamber of the proximal lancet channel stop **748** from the outside environment. The fracturable seal seals the chamber of the proximal lancet channel stop **748** and other interior portions of the sample chamber from the outside environment when the sampling module **709** is stored for use. The fracturable seal remains intact until the lancet **183** is driven distally during a lancet cycle at which point the seal is broken and the sterile interior portion of the sample chamber is exposed and ready to accept input of a liquid sample, such as a sample of blood. A distal fracturable seal (not shown) can be disposed between the lancet **183** and the distal-most lancet guide **749** of the sampling module **709** to seal the distal end **753** of the lancet channel **736** and sample input port **741** to maintain sterility of the interior portion of the sampling module **709** until the lancet **183** is driven forward during a lancing cycle.

Adjacent the lancet exit port **754** within the sample input cavity **715'** is the sample input port **741** that is configured to accept a fluid sample that emanates into the sample input cavity **715'** from target tissue **233** at a lancing site after a lancing cycle. The dimensions of the sample input port **741** can a depth of about 60 to about 70 microns, a width of about 400 to about 600 microns. The sample input cavity can have a transverse dimension of about 2 to about 5 times the transverse dimension of the lancet **183**, or about 400 to about 1000 microns. The sample input cavity serves to accept a fluid sample as it emanates from lanced tissue and direct the fluid sample to the sample input port **741** and thereafter the sample flow channel **742**. The sample flow channel **742** is disposed between and in fluid communication with the sample input port **741** and the analytical region **743**. The transverse dimensions of the sample flow channel **742** can be the same as the transverse dimensions of the sample input port **741** with a depth of about 60 to about 70 microns, a width of about 400 to about 600 microns. The length of the sample flow channel **742** can be about 900 to about 1100

microns. Thus, in use, target tissue is disposed on the sampling site **715** and a lancing cycle initiated. Once the target tissue **233** has been lanced and the sample begins to flow therefrom, the sample enters the sample input cavity **715'** and then the sample input port **741**. The sample input cavity **715'** may be sized and configured to facilitate sampling success by applying pressure to a perimeter of target tissue **233** before, during and after the lancing cycle and hold the wound track open after the lancing cycle to allow blood or other fluid to flow from the wound track and into the sample input cavity **715'**. From the sample input port **741**, the sample in then drawn by capillary or other forces through the sample flow channel **742** and into the analytical region **743** and ultimately into the control chamber **744**. The control chamber **744** may be used to provide indirect confirmation of a complete fill of the analytical region **743** by a sample fluid. If a fluid sample has been detected in the control chamber **744**, this confirms that the sample has completely filled the analytical region **743**. Thus, sample detectors may be positioned within the control chamber **744** to confirm filling of the analytical region **743**.

The analytical region **743** is disposed between and in fluid communication with the sample flow channel **742** and the control chamber **744**. The analytical region **743** can have a depth of about 60 to about 70 microns, a width of about 900 to about 1100 microns and a length of about 5 to about 6 mm. A typical volume for the analytical region **743** can be about 380 to about 400 nanoliters. The control chamber **744** is disposed adjacent to and proximal of the analytical region **743** and can have a transverse dimension or diameter of about 900 to about 1100 microns and a depth of about 60 to about 70 microns.

The control chamber **744** is vented to the chamber of the proximal lancet channel stop **748** by a vent that is disposed between and in fluid communication with the control chamber **744** and the chamber of the proximal lancet channel stop **748**. Vent **762** can have transverse dimensions that are the same or similar to those of the sample flow channel **742** disposed between the analytical region **743** and the sample input port **741**. Any of the interior surfaces of the sample input port **741**, sample flow channels **742** and **762**, analytical region **743**, vents **745** or control chamber **744** can be coated with a coating that promotes capillary action. A hydrophilic coating such as a detergent is an example of such a coating.

The analytical region **743** accommodates a blood sample that travels by capillary action from the sampling site **715** through the sample input cavity **715'** and into the sample input port **741**, through the sample flow channel **742** and into the analytical region **743**. The blood can then travel into the control chamber **744**. The control chamber **744** and analytical region **743** are both vented by the vent **762** that allows gases to escape and prevents bubble formation and entrapment of a sample in the analytical region **743** and control chamber **744**. Note that, in addition to capillary action, flow of a blood sample into the analytical region **743** can be facilitated or accomplished by application of vacuum, mechanical pumping or any other suitable method.

Once a blood sample is disposed within the analytical region **743**, analytical testing can be performed on the sample with the results transmitted to the processor **193** by electrical conductors **732**, optically or by any other suitable method or means. In some embodiments, it may be desirable to confirm that the blood sample has filled the analytical region **743** and that an appropriate amount of sample is present in the chamber in order to carry out the analysis on the sample.

Confirmation of sample arrival in either the analytical region **743** or the control chamber **744** can be achieved visually, through the flexible polymer sheet **727** which can be transparent. However, it may be desirable in some embodiments to use a very small amount of blood sample in order to reduce the pain and discomfort to the patient during the lancing cycle. For sampling module **709** embodiments such as described here, having the sample input cavity **715'** and sample input port **741** adjacent the lancet exit port **754** allows the blood sample to be collected from the patient's skin **233** without the need for moving the sampling module **709** between the lancing cycle and the sample collection process. As such, the user does not need to be able to see the sample in order to have it transferred into the sampling module **709**. Because of this, the position of the sample input cavity **715'** and the sample input port **741** adjacent the lancet exit port **754** allows a very small amount of sample to be reliably obtained and tested.

Samples on the order of tens of nanoliters, such as about 10 to about 50 nanoliters can be reliably collected and tested with a sampling module **709**. This size of blood sample is too small to see and reliably verify visually. Therefore, it is necessary to have another method to confirm the presence of the blood sample in the analytical region **743**. Sample sensors **733**, such as the thermal sample sensors discussed above can positioned in the analytical region **743** or control chamber **744** to confirm the arrival of an appropriate amount of blood sample.

In addition, optical methods, such as spectroscopic analysis of the contents of the analytical region **743** or control chamber **744** could be used to confirm arrival of the blood sample. Other methods such as electrical detection could also be used and these same detection methods can also be disposed anywhere along the sample flow path through the sampling module **709** to confirm the position or progress of the sample (or samples) as it moves along the flow path as indicated by the arrows **763** in FIG. **81**. The detection methods described above can also be useful for analytical methods requiring an accurate start time.

The requirement for having an accurate start time for an analytical method can in turn require rapid filling of an analytical region **743** because many analytical processes begin once the blood sample enters the analytical region **743**. If the analytical region **743** takes too long to fill, the portion of the blood sample that first enters the analytical region **743** will have been tested for a longer time that the last portion of the sample to enter the analytical region **743** which can result in inaccurate results. Therefore, it may be desirable in these circumstances to have the blood sample flow first to a reservoir, filling the reservoir, and then have the sample rapidly flow all at once from the reservoir into the analytical region **743**.

In one embodiment of the sampling module **709**, the analytical region **743** can have a transverse cross section that is substantially greater than a transverse cross section of the control chamber **744**. The change in transverse cross section can be accomplished by restrictions in the lateral transverse dimension of the control chamber **744** versus the analytical region **743**, by step decreases in the depth of the control chamber **744**, or any other suitable method. Such a step between the analytical region **743** and the control chamber **744** is shown in FIG. **81**. In such an embodiment, the analytical region **743** can behave as a sample reservoir and the control chamber **744** as an analytical region that requires rapid or nearly instantaneous filling in order to have a consistent analysis start time. The analytical region **743** fills by a flow of sample from the sample flow channel **742** until

the analytical region is full and the sample reaches the step decrease in chamber depth at the boundary with the control chamber **744**. Once the sample reaches the step decrease in cross sectional area of the control chamber **744**, the sample then rapidly fills the control chamber **744** by virtue of the enhanced capillary action of the reduced cross sectional area of the control chamber **744**. The rapid filling of the control chamber allows any analytical process initiated by the presence of sample to be carried out in the control chamber **744** with a reliable start time for the analytical process for the entire sample of the control chamber **744**.

Filling by capillary force is passive. It can also be useful for some types of analytical testing to discard the first portion of a sample that enters the sampling module **709**, such as the case where there may be interstitial fluid contamination of the first portion of the sample. Such a contaminated portion of a sample can be discarded by having a blind channel or reservoir that draws the sample by capillary action into a side sample flow channel (not shown) until the side sample flow channel or reservoir in fluid communication therewith, is full. The remainder of the sample can then proceed to a sample flow channel adjacent the blind sample flow channel to the analytical region **743**.

For some types of analytical testing, it may be advantageous to have multiple analytical regions **743** in a single sampling module **709**. In this way multiple iterations of the same type of analysis could be performed in order to derive some statistical information, e.g. averages, variation or confirmation of a given test or multiple tests measuring various different parameters could be performed in different analytical regions **743** in the same sampling module **709** filled with a blood sample from a single lancing cycle.

FIG. **82** is an enlarged elevational view of a portion of an alternative embodiment of a sampling module **766** having a plurality of small volume analytical regions **767**. The small volume analytical regions **767** can have dimensions of about 40 to about 60 microns in width in both directions and a depth that yields a volume for each analytical region **767** of about 1 nanoliter to about 100 nanoliters, specifically about 10 nanoliters to about 50 nanoliters. The array of small volume analytical regions **767** can be filled by capillary action through a sample flow channel **768** that branches at a first branch point **769**, a second branch point **770** and a third branch point **771**. Each small volume analytical region **767** can be used to perform a like analytical test or a variety of different tests can be performed in the various analytical regions **767**.

For some analytical tests, the analytical regions **767** must have maintain a very accurate volume, as some of the analytical tests that can be performed on a blood sample are volume dependent. Some analytical testing methods detect glucose levels by measuring the rate or kinetic of glucose consumption. Blood volume required for these tests is on the order of about 1 to about 3 microliters. The kinetic analysis is not sensitive to variations in the volume of the blood sample as it depends on the concentration of glucose in the relatively large volume sample with the concentration of glucose remaining essentially constant throughout the analysis. Because this type of analysis dynamically consumes glucose during the testing, it is not suitable for use with small samples, e.g. samples on the order of tens of nanoliters where the consumption of glucose would alter the concentration of glucose.

Another analytical method uses coulomb metric measurement of glucose concentration. This method is accurate if the sample volume is less than about 1 microliter and the volume of the analytical region is precisely controlled. The accuracy and the speed of the method is dependent on the small and precisely known volume of the analytical region **767** because the rate of the analysis is volume dependent and large volumes slow the reaction time and negatively impact the accuracy of the measurement.

Another analytical method uses an optical fluorescence decay measurement that allows very small sample volumes to be analyzed. This method also requires that the volume of the analytical region **767** be precisely controlled. The small volume analytical regions **767** discussed above can meet the criteria of maintaining small accurately controlled volumes when the small volume analytical regions **767** are formed using precision manufacturing techniques. Accurately formed small volume analytical regions **767** can be formed in materials such as PMMA by methods such as molding and stamping. Machining and etching, either by chemical or laser processes can also be used. Vapor deposition and lithography can also be used to achieve the desired results.

The sampling modules **709** and **766** discussed above all are directed to embodiments that both house the lancet **183** and have the ability to collect and analyze a sample. In some embodiments of a sampling module, the lancet **183** may be housed and a sample collected in a sample reservoir without any analytical function. In such an embodiment, the analysis of the sample in the sample reservoir may be carried out by transferring the sample from the reservoir to a separate analyzer. In addition, some modules only serve to house a lancet **183** without any sample acquisition capability at all. The body portion **774** of such a lancet module **775** is shown in FIG. **83**. The lancet module **775** has an outer structure similar to that of the sampling modules **709** and **766** discussed above, and can be made from the same or similar materials.

A flexible polymer sheet **727** (not shown) can be used to cover the face of the lancet module **775** and contain the lancet **183** in a lancet channel **776** that extends longitudinally in the lancet module body portion **774**. The flexible sheet of polymer **727** can be from the same material and have the same dimensions as the flexible polymer sheet **727** discussed above. Note that the proximal portion of the flexible polymer sheet **727** need not be folded over on itself because there are no sensor contacts **725** to expose. The flexible polymer sheet **727** in such a lancet module **775** serves only to confine the lancet **183** in the lancet channel **776**. The lancet module **775** can be configured in a lancet module belt, similar to the sampling module belt **708** discussed above with the flexible polymer sheet **727** acting as the belt. A drive head slot **777** is dispose proximal of the lancet channel **776**.

With regard to the tissue penetration sampling device **180** of FIG. **74**, use of the device **180** begins with the loading of a sampling module cartridge **705** into the controllable driver housing **706** so as to couple the cartridge **705** to the controllable driver housing **706** and engage the sampling module belt **708** with the ratchet drive **707** and drive coupler **713** of the controllable driver **179**. The drive coupler **713** can have a T-slot configuration such as shown in FIGS. **84** and **85**. The distal end of the elongate coupler shaft **184** is secured to the drive coupler **713** which has a main body portion **779**, a first and second guide ramp **780** and **781** and a T-slot **714** disposed within the main body portion **779**. The T-slot **714** is configured to accept the drive head **198** of the lancet **183**. After the sampling module cartridge **705** is loaded into the controllable driver housing **706**, the sampling module belt **708** is advanced laterally until the drive head **198** of a lancet **183** of one of the sampling modules **709** is fed into the drive coupler **713** as shown in FIGS. **86-88**.

FIGS. **86-88** also illustrate a lancet crimp device **783** that bends the shaft portion **201** of a used lancet **183** that is adjacent to the drive coupler **713**. This prevents the used lancet **183** from moving out through the module body **731** and being reused.

As the sampling modules **709** of the sampling module belt **708** are used sequentially, they are advanced laterally one at a time into the receptacle canister **730** where they are stored until the entire sampling module belt **708** is consumed. The receptacle canister **730** can then be properly disposed of in accordance with proper techniques for disposal of blood-contaminated waste. The sampling module cartridge **705** allows the user to perform multiple testing operations conveniently without being unnecessarily exposed to blood waste products and need only dispose of one cartridge after many uses instead of having to dispose of a contaminated lancet **183** or module **709** after each use.

FIGS. **89** and **90** illustrate alternative embodiments of sampling module cartridges. FIG. **89** shows a sampling module cartridge **784** in a carousel configuration with adjacent sampling modules **785** connected rigidly and with sensor contacts **786** from the analytical regions of the various sampling modules **785** disposed near an inner radius **787** of the carousel. The sampling modules **785** of the sampling module cartridge **784** are advanced through a drive coupler **713** but in a circular as opposed to a linear fashion.

FIG. **90** illustrates a block of sampling modules **788** in a four by eight matrix. The drive head **198** of the lancets **183** of the sampling modules **789** shown in FIG. **90** are engaged and driven using a different method from that of the drive coupler **713** discussed above. The drive heads **198** of the lancets **183** have an adhesive coating **790** that mates with and secures to the drive coupler **791** of the lancet driver **179**, which can be any of the drivers, including controllable drivers, discussed above.

The distal end **792** of the drive coupler **791** contacts and sticks to the adhesive **790** of proximal surface of the drive head **198** of the lancet **183** during the beginning of the lancet cycle. The driver coupler **791** pushes the lancet **183** into the target tissue **237** to a desired depth of penetration and stops. The drive coupler **791** then retracts the lancet **183** from the tissue **233** using the adhesive contact between the proximal surface of the drive head **198** of the lancet **183** and distal end surface of the drive coupler **791**, which is shaped to mate with the proximal surface.

At the top of the retraction stroke, a pair of hooked members **793** which are secured to the sampling module **789** engage the proximal surface of the drive head **198** and prevent any further retrograde motion by the drive head **198** and lancet **183**. As a result, the drive coupler **791** breaks the adhesive bond with the drive head **198** and can then be advanced by an indexing operation to the next sampling module **789** to be used.

FIG. **91** is a side view of an alternative embodiment of a drive coupler **796** having a lateral slot **797** configured to accept the L-shaped drive head **798** of the lancet **799** that is disposed within a lancet module **800** and shown with the L-shaped drive head **798** loaded in the lateral slot **797**. FIG. **92** is an exploded view of the drive coupler **796**, lancet **799** with L-shaped drive head **798** and lancet module **800** of FIG. **91**. This type of drive coupler **796** and drive head **798** arrangements could be substituted for the configuration discussed above with regard to FIGS. **84-88**. The L-shaped embodiment of the drive head **798** may be a less expensive option for producing a coupling arrangement that allows serial advancement of a sampling module belt or lancet module belt through the drive coupler **796** of a lancet driver, such as a controllable lancet driver **179**.

For some embodiments of multiple lancing devices **180**, it may be desirable to have a high capacity-lancing device that does not require a lancet module **775** in order to house the lancets **183** stored in a cartridge. Eliminating the lancet modules **775** from a multiple lancet device **180** allows for a higher capacity cartridge because the volume of the cartridge is not taken up with the bulk of multiple modules **775**. FIGS. **93-96** illustrate a high capacity lancet cartridge coupled to a belt advance mechanism **804**. The belt advance mechanism **804** is secured to a controlled driver **179** housing which contains a controlled electromagnetic driver.

The lancet cartridge **803** has a supply canister **805** and a receptacle canister **806**. A lancet belt **807** is disposed within the supply canister **805**. The lancet belt **807** contains multiple sterile lancets **183** with the shaft portion **201** of the lancets **183** disposed between the adhesive surface **808** of a first carrier tape **809** and the adhesive surface **810** of a second carrier tape **811** with the adhesive surfaces **808** and **810** pressed together around the shaft portion **201** of the lancets **183** to hold them securely in the lancet belt **807**. The lancets **183** have drive heads **198** which are configured to be laterally engaged with a drive coupler **713**, which is secured to an elongate coupler shaft **184** of the controllable driver **179**.

The belt advance mechanism **804** includes a first cog roller **814** and a second cog roller **815** that have synchronized rotational motion and are advanced in unison in an incremental indexed motion. The indexed motion of the first and second cog rollers **814** and **815** advances the lancet belt **807** in units of distance equal to the distance between the lancets **183** disposed in the lancet belt **807**. The belt advance mechanism **804** also includes a first take-up roller **816** and a second take-up roller **817** that are configured to take up slack in the first and second carrier tapes **809** and **811** respectively.

When a lancet belt cartridge **803** is loaded in the belt advance mechanism **804**, a lead portion **818** of the first carrier tape **809** is disposed between a first cog roller **814** and a second cog roller **815** of the belt advance mechanism **804**. The lead portion **818** of the first carrier tape **809** wraps around the outer surface **819** of the first turning roller **827**, and again engages roller **814** with the cogs **820** of the first cog roller **814** engaged with mating holes **821** in the first carrier tape **809**. The lead portion **818** of the first carrier tape **809** is then secured to a first take-up roller **816**. A lead portion **822** of the second carrier tape **811** is also disposed between the first cog roller **814** and second cog roller **815** and is wrapped around an outer surface **823** of the second turning roller **828**, and again engages roller **815** with the cogs **826'** of the second cog roller **815** engaged in with mating holes **825** of the second carrier tape **811**. The lead portion **822** of the second carrier tape **811** is thereafter secured to a second take-up roller **817**.

As the first and second cog rollers **814** and **815** are advanced, the turning rollers **827** and **828** peel the first and second carrier tapes **809** and **811** apart and expose a lancet **183**. The added length or slack of the portions of the first and second carrier tapes **809** and **811** produced from the advancement of the first and second cog rollers **814** and **815** is taken up by the first and second take-up rollers **816** and **817**. As a lancet **183** is peeled out of the first and second carrier tapes **809** and **811**, the exposed lancet **183** is captured by a lancet guide wheel **826'** of the belt advance mechanism **804**, shown in FIG. **96**, which is synchronized with the first and second cog rollers **814** and **815**. The lancet guide wheel

826' then advances the lancet **183** laterally until the drive head **198** of the lancet **183** is loaded into the drive coupler **713** of the controllable driver **179**. The controllable driver **179** can then be activated driving the lancet **183** into the target tissue **233** and retracted to complete the lancing cycle.

Once the lancing cycle is complete, the belt advance mechanism **804** can once again be activated which rotates the lancet guide wheel **826** and advances the used lancet **183** laterally and into the receptacle canister **806**. At the same time, a new unused lancet **183** is loaded into the drive coupler **713** and readied for the next lancing cycle. This repeating sequential use of the multiple lancing device **180** continues until all lancets **183** in the lancet belt **807** have been used and disposed of in the receptacle canister **806**. After the last lancet **183** has been consumed, the lancet belt cartridge **803** can then be removed and disposed of without exposing the user to any blood contaminated materials. The belt advance mechanism **804** can be activated by a variety of methods, including a motorized drive or a manually operated thumbwheel which is coupled to the first and second cog rollers **814** and **815** and lancet guide wheel **826**.

Although discussion of the devices described herein has been directed primarily to substantially painless methods and devices for access to capillary blood of a patient, there are many other uses for the devices and methods. For example, the tissue penetration devices discussed herein could be used for substantially painless delivery of small amounts of drugs, or other bioactive agents such as gene therapy agents, vectors, radioactive sources etc. As such, it is contemplated that the tissue penetration devices and lancet devices discussed herein could be used to delivery agents to positions within a patient's body as well as taking materials from a patient's body such as blood, lymph fluid, spinal fluid and the like. Drugs delivered may include analgesics that would further reduce the pain perceived by the patient upon penetration of the patient's body tissue, as well as anticoagulants that may facilitate the successful acquisition of a blood sample upon penetration of the patient's tissue.

Referring to FIGS. **97-101**, a device for injecting a drug or other useful material into the tissue of a patient is illustrated. The ability to localize an injection or vaccine to a specific site within a tissue, layers of tissue or organ within the body can be important. For example, epithelial tumors can be treated by injection of antigens, cytokine, or colony stimulating factor by hypodermic needle or high-pressure injection sufficient for the antigen to enter at least the epidermis or the dermis of a patient. Often, the efficacy of a drug or combination drug therapy depends on targeted delivery to localized areas thus affecting treatment outcome.

The ability to accurately deliver drugs or vaccinations to a specific depth within the skin or tissue layer may avoid wastage of expensive drug therapies therefore impacting cost effectiveness of a particular treatment. In addition, the ability to deliver a drug or other agent to a precise depth can be a clear advantage where the outcome of treatment depends on precise localized drug delivery (such as with the treatment of intralesional immunotherapy). Also, rapid insertion velocity of a hypodermic needle to a precise predetermined depth in a patient's skin is expected to reduce pain of insertion of the needle into the skin. Rapid insertion and penetration depth of a hypodermic needle, or any other suitable elongated delivery device suitable for penetrating tissue, can be accurately controlled by virtue of a position feedback loop of a controllable driver coupled to the hypodermic needle.

FIG. **97** illustrates **901** distal end **901** of a hypodermic needle **902** being driven into layers of skin tissue **903** by an electromagnetic controllable driver **904**. The electromagnetic controllable driver **904** of FIG. **79** can have any suitable configuration, such as the configuration of electromagnetic controllable drivers discussed above. The layers of skin **903** being penetrated include the stratum corneum **905**, the stratum lucidum **906**, the stratum granulosum **907**, the stratum spinosum **908**, the stratum basale **909** and the dermis **911**. The thickness of the stratum corneum **905** is typically about 300 micrometers in thickness. The portion of the epidermis excluding the stratum corneum **905** includes the stratum lucidum **906**, stratum granulosum **907**, and stratum basale can be about 200 micrometers in thickness. The dermis can be about 1000 micrometers in thickness. In FIG. **97**, an outlet port **912** of the hypodermic needle **902** is shown disposed approximately in the stratum spinosum **908** layer of the skin **903** injecting an agent **913** into the stratum spinosum **908**.

FIGS. **98-101** illustrate an agent injection module **915** including an injection member **916**, that includes a collapsible canister **917** and the hypodermic needle **902**, that may be driven or actuated by a controllable driver, such as any of the controllable drivers discussed above, to drive the hypodermic needle into the skin **903** for injection of drugs, vaccines or the like. The agent injection module **915** has a reservoir, which can be in the form of the collapsible canister **917** having a main chamber **918**, such as shown in FIG. **98**, for the drug or vaccine **913** to be injected. A cassette of a plurality of agent injection modules **915** (not shown) may provide a series of metered doses for long-term medication needs. Such a cassette may be configured similarly to the module cassettes discussed above. Agent injection modules **915** and needles **902** may be disposable, avoiding biohazard concerns from unspent drug or used hypodermic needles **902**. The geometry of the cutting facets **921** of the hypodermic needle shown in FIG. **79**, may be the same or similar to the geometry of the cutting facets of the lancet **183** discussed above.

Inherent in the position and velocity control system of some embodiments of a controllable driver is the ability to precisely determine the position or penetration depth of the hypodermic needle **902** relative to the controllable driver or layers of target tissue or skin **903** being penetrated. For embodiments of controllable drivers that use optical encoders for position sensors, such as an Agilent HEDS 9200 series, and using a four edge detection algorithm, it is possible to achieve an in plane spatial resolution of +/−17 μm in depth. If a total tissue penetration stroke is about 3 mm in length, such as might be used for intradermal or subcutaneous injection, a total of 88 position points can be resolved along the penetration stroke. A spatial resolution this fine allows precise placement of a distal tip **901** or outlet port **912** of the hypodermic needle **902** with respect to the layers of the skin **903** during delivery of the agent or drug **913**. In some embodiments, a displacement accuracy of better than about 200 microns can be achieved, in others a displacement accuracy of better than about 40 microns can be achieved.

The agent injection module **915** includes the injection member **916** which includes the hypodermic needle **902** and drug reservoir or collapsible canister **917**, which may couple to an elongated coupler shaft **184** via a drive coupler **185** as shown. The hypodermic needle **902** can be driven to a desired penetration depth, and then the drug or other agent **913**, such as a vaccine, is passed into an inlet port **922** of the needle **902** through a central lumen **923** of the hypodermic needle **902** as shown by arrow **924**, shown in FIG. **98**, and

out of the outlet port **912** at the distal end **901** of the hypodermic needle **902**, shown in FIG. **97**.

Drug or agent delivery can occur at the point of maximum penetration, or following retraction of the hypodermic needle **902**. In some embodiments, it may be desirable to deliver the drug or agent **913** during insertion of the hypodermic needle **902**. Drug or agent delivery can continue as the hypodermic needle **902** is being withdrawn (this is commonly the practice during anesthesia in dental work). Alternatively drug delivery can occur while the needle **902** is stationary during any part of the retraction phase.

The hollow hypodermic needle **902** is fitted with the collapsible canister **917** containing a drug or other agent **913** to be dispensed. The walls **928** of this collapsible canister **917** can be made of a soft resilient material such as plastic, rubber, or any other suitable material. A distal plate **925** is disposed at the distal end **926** of the collapsible canister is fixed securely to the shaft **927** of the hypodermic needle proximal of the distal tip **901** of the hypodermic needle **902**. The distal plate **925** is sealed and secured to the shaft **927** of the hypodermic needle **902** to prevent leakage of the medication **913** from the collapsible canister **917**.

A proximal plate **931** disposed at a proximal end **932** of the collapsible canister **917** is slidingly fitted to a proximal portion **933** of the shaft **927** of the hypodermic needle **902** with a sliding seal **934**. The sliding seal **934** prevents leakage of the agent or medication **913** between the seal **934** and an outside surface of the shaft **927** of the hypodermic needle **902**. The sliding seal allows the proximal plate **931** of the collapsible canister **917** to slide axially along the needle **902** relative to the distal plate **925** of the collapsible canister **917**. A drug dose may be loaded into the main chamber **918** of the collapsible canister **917** during manufacture, and the entire assembly protected during shipping and storage by packaging and guide fins **935** surrounding the drive head slot **936** of the agent injection module **915**.

An injection cycle may begin when the agent injection module **915** is loaded into a ratchet advance mechanism (not shown), and registered at a drive position with a drive head **937** of the hypodermic needle **902** engaged in the drive coupler **185**. The position of the hypodermic needle **902** and collapsible canister **917** in this ready position is shown in FIG. **99**.

Once the drive head **937** of the agent injection module **915** is loaded into the driver coupler **185**, the controllable driver can then be used to launch the injection member **916** including the hypodermic needle **902** and collapsible canister **917** towards and into the patient's tissue **903** at a high velocity to a pre-determined depth into the patient's skin or other organ. The velocity of the injection member **916** at the point of contact with the patient's skin **903** or other tissue can be up to about 10 meters per second for some embodiments, specifically, about 2 to about 5 m/s. In some embodiments, the velocity of the injection member **916** may be about 2 to about 10 m/s at the point of contact with the patient's skin **903**. As the collapsible canister **917** moves with the hypodermic needle **902**, the proximal plate **931** of the collapsible canister **917** passes between two latch springs **938** of module body **939** that snap in behind the proximal plate **931** when the collapsible canister **917** reaches the end of the penetration stroke, as shown in FIG. **100**.

The controllable driver then reverses, applies force in the opposite retrograde direction and begins to slowly (relative to the velocity of the penetration stroke) retract the hypodermic needle **902**. The hypodermic needle **902** slides through the sliding seal **934** of the collapsible canister **917** while carrying the distal plate **925** of the collapsible canister with it in a proximal direction relative to the proximal plate **931** of the collapsible canister **917**. This relative motion between the distal plate **925** of the collapsible canister **917** and the proximal plate **931** of the collapsible canister **917** causes the volume of the main chamber **918** to decrease. The decreasing volume of the main chamber **918** forces the drug or other agent **913** disposed within the main chamber **918** of the collapsible canister **917** out of the main chamber **918** into the inlet port **922** in the shaft **927** of the hypodermic needle **902**. The inlet port **922** of the hypodermic needle **902** is disposed within an in fluid communication with the main chamber **918** of the collapsible canister **917** as shown in FIG. **80**. The drug or agent then passes through the central lumen **923** of the hollow shaft **927** of the hypodermic needle **902** and is then dispensed from the output port **912** at the distal end **901** of the hypodermic needle **902** into the target tissue **903**. The rate of perfusion of the drug or other agent **913** may be determined by an inside diameter or transverse dimension of the collapsible canister **917**. The rate of perfusion may also be determined by the viscosity of the drug or agent **913** being delivered, the transverse dimension or diameter of the central lumen **923**, the input port **922**, or the output port **912** of the hypodermic needle **902**, as well as other parameters.

During the proximal retrograde retraction stroke of the hypodermic needle **902**, drug delivery continues until the main chamber **918** of the collapsible canister **917** is fully collapsed as shown in FIG. **101**. At this point, the drive coupler **185** may continue to be retracted until the drive head **937** of the hypodermic needle **902** breaks free or the distal seal **941** between the distal plate **925** of the chamber and the hypodermic needle **902** fails, allowing the drive coupler **185** to return to a starting position. The distal tip **901** of the hypodermic needle **902** can be driven to a precise penetration depth within the tissue **903** of the patient using any of the methods or devices discussed above with regard to achieving a desired penetration depth using a controllable driver or any other suitable driver.

In another embodiment, the agent injection module **915** is loaded into a ratchet advance mechanism that includes an adjustable or movable distal stage or surface (not shown) that positions the agent injection **915** module relative to a skin contact point or surface **942**. In this way, an agent delivery module **915** having a penetration stroke of predetermined fixed length, such as shown in FIGS. **99-101**, reaches a pre-settable penetration depth. The movable stage remains stationary during a drug delivery cycle. In a variation of this embodiment, the moveable stage motion may be coordinated with a withdrawal of the hypodermic needle **902** to further control the depth of drug delivery.

In another embodiment, the latch springs **938** shown in the agent injection module **915** of FIGS. **99-101** may be molded with a number of ratchet teeth (not shown) that engage the proximal end **932** of the collapsible canister **917** as it passes by on the penetration stroke. If the predetermined depth of penetration is less than the full stroke, the intermediate teeth retain the proximal end **932** of the collapsible canister **917** during the withdrawal stroke in order to collapse the main chamber **918** of the collapsible canister **917** and dispense the drug or agent **913** as discussed above.

In yet another embodiment, drive fingers (not shown) are secured to an actuation mechanism (not shown) and replace the latch springs **938**. The actuation mechanism is driven electronically in conjunction with the controllable driver by a processor or controller, such as the processor **60** discussed above, to control the rate and amount of drug delivered

anywhere in the actuation cycle. This embodiment allows the delivery of medication during the actuation cycle as well as the retraction cycle.

Inherent in the position and velocity control system of a controllable driver is the ability to precisely define the position in space of the hypodermic needle **902**, allowing finite placement of the hypodermic needle in the skin **903** for injection of drugs, vaccines or the like. Drug delivery can be discrete or continuous depending on the need.

FIGS. **102-106** illustrate an embodiment of a cartridge **945** that may be used for sampling that has both a lancet cartridge body **946** and an sampling cartridge body **947**. The sampling cartridge body **947** includes a plurality of sampling module portions **948** that are disposed radially from a longitudinal axis **949** of the sampling cartridge body **947**. The lancet cartridge body **946** includes a plurality of lancet module portions **950** that have a lancet channel **951** with a lancet **183** slidably disposed therein. The lancet module portions **950** are disposed radially from a longitudinal axis **952** of the lancet cartridge body **946**.

The sampling cartridge body **947** and lancet cartridge body **946** are disposed adjacent each other in an operative configuration such that each lancet module portion **950** can be readily aligned in a functional arrangement with each sampling module portion **948**. In the embodiment shown in FIGS. **102-106**, the sampling cartridge body **947** is rotatable with respect to the lancet cartridge body **946** in order to align any lancet channel **951** and corresponding lancet **183** of the lancet cartridge body **946** with any of the lancet channels **953** of the sampling module portions **948** of the sampling cartridge body **947**. The operative configuration of the relative location and rotatable coupling of the sampling cartridge body **947** and lancet cartridge body **946** allow ready alignment of lancet channels **951** and **953** in order to achieve a functional arrangement of a particular lancet module portion **950** and sampling module portion **948**. For the embodiment shown, the relative motion used to align the particular lancet module portions **950** and sampling module portions **948** is confined to a single degree of freedom via relative rotation.

The ability of the cartridge **945** to align the various sampling module **948** portions and lancet module portions **950** allows the user to use a single lancet **183** of a particular lancet module portion **950** with multiple sampling module portions **948** of the sampling cartridge body **947**. In addition, multiple different lancets **183** of lancet module portions **950** could be used to obtain a sample in a single sampling module portion **948** of the sampling cartridge body **947** if a fresh unused lancet **183** is required or desired for each lancing action and previous lancing cycles have been unsuccessful in obtaining a usable sample.

FIG. **102** shows an exploded view in perspective of the cartridge **945**, which has a proximal end portion **954** and a distal end portion **955**. The lancet cartridge body **946** is disposed at the proximal end portion **954** of the cartridge **945** and has a plurality of lancet module portions **950**, such as the lancet module portion **950** shown in FIG. **103**. Each lancet module portion **950** has a lancet channel **951** with a lancet **183** slidably disposed within the lancet channel **951**. The lancet channels **951** are substantially parallel to the longitudinal axis **952** of the lancet cartridge body **946**. The lancets **183** shown have a drive head **198**, shaft portion **201** and sharpened tip **196**. The drive head **198** of the lancets are configured to couple to a drive coupler (not shown), such as the drive coupler **185** discussed above.

The lancets **183** are free to slide in the respective lancet channels **951** and are nominally disposed with the sharpened tip **196** withdrawn into the lancet channel **951** to protect the tip **196** and allow relative rotational motion between the lancet cartridge body **946** and the sampling cartridge body **947** as shown by arrow **956** and arrow **957** in FIG. **102**. The radial center of each lancet channel **951** is disposed a fixed, known radial distance from the longitudinal axis **952** of the lancet cartridge body **946** and a longitudinal axis **958** of the cartridge **945**. By disposing each lancet channel **951** a fixed known radial distance from the longitudinal axes **952** and **958** of the lancet cartridge body **946** and cartridge **945**, the lancet channels **951** can then be readily and repeatably aligned in a functional arrangement with lancet channels **953** of the sampling cartridge body **947**. The lancet cartridge body **946** rotates about a removable pivot shaft **959** which has a longitudinal axis **960** that is coaxial with the longitudinal axes **952** and **950** of the lancet cartridge body **946** and cartridge **945**.

The sampling cartridge body **947** is disposed at the distal end portion **955** of the cartridge and has a plurality of sampling module portions **948** disposed radially about the longitudinal axis **949** of the sampling cartridge body **947**. The longitudinal axis **949** of the sampling cartridge body **947** is coaxial with the longitudinal axes **952**, **958** and **960** of the lancet cartridge body **946**, cartridge **945** and pivot shaft **959**. The sampling cartridge body **947** may also rotate about the pivot shaft **959**. In order to achieve precise relative motion between the lancet cartridge body **946** and the sampling cartridge body **947**, one or both of the cartridge bodies **946** and **947** must be rotatable about the pivot shaft **959**, however, it is not necessary for both to be rotatable about the pivot shaft **959**, that is, one of the cartridge bodies **946** and **947** may be secured, permanently or removably, to the pivot shaft **959**.

The sampling cartridge body **947** includes a base **961** and a cover sheet **962** that covers a proximal surface **963** of the base forming a fluid tight seal. Each sampling module portion **948** of the sampling cartridge body **947**, such as the sampling module portion **948** shown in FIG. **104** (without the cover sheet for clarity of illustration), has a sample reservoir **964** and a lancet channel **953**. The sample reservoir **964** has a vent **965** at an outward radial end that allows the sample reservoir **964** to readily fill with a fluid sample. The sample reservoir **964** is in fluid communication with the respective lancet channel **953** which extends substantially parallel to the longitudinal axis **949** of the sampling cartridge body **947**. The lancet channel **953** is disposed at the inward radial end of the sample reservoir **964**.

The lancet channels **953** of the sample cartridge body **947** allow passage of the lancet **183** and also function as a sample flow channel **966** extending from an inlet port **967** of the lancet channel **953**, shown in FIG. **106**, to the sample reservoir **964**. Note that a proximal surface **968** of the cover sheet **962** is spatially separated from a distal surface **969** of the lancet cartridge body **946** at the lancet channel site in order to prevent any fluid sample from being drawn by capillary action into the lancet channels **951** of the lancet cartridge body **946**. The spatial separation of the proximal surface **968** of the cover sheet **962** from the distal surface **969** of the lancet cartridge body **946** is achieved with a boss **970** between the two surfaces **968** and **969** that is formed into the distal surface **969** of the lancet cartridge body as shown in FIG. **105**.

The sample reservoirs **964** of the sampling cartridge body **947** may include any of the sample detection sensors, testing sensors, sensor contacts or the like discussed above with regard to other sampling module embodiments. The cover sheet **962** may be formed of PMMA and have conductors,

sensors or sensor contacts formed on a surface thereof. It may also be desirable to have the cover sheet **962** made from a transparent or translucent material in order to use optical sensing or testing methods for samples obtained in the sample reservoirs. In the embodiment shown, the outer radial location of at least a portion of the sample reservoirs **964** of the sampling cartridge body **967** is beyond an outer radial dimension of the lancet cartridge body **946**. Thus, an optical detector or sensor **971**, such as shown in FIG. **105**, can detect or test a sample disposed within a sample reservoir **964** by transmitting an optical signal through the cover sheet **962** and receiving an optical signal from the sample.

The cartridge bodies **946** and **947** may have features, dimensions or materials that are the same as, or similar to, features, dimensions or materials of the sampling cartridges and lancet cartridges, or any components thereof, discussed above. The module portions **948** and **950** may also have features, dimensions or materials that are the same as, or similar to, features, dimensions or materials of the lancet or sampling modules, or any components thereof, discussed above. In addition, the cartridge **945** can be coupled to, or positioned adjacent any of the drivers discussed above, or any other suitable driver, in an operative configuration whereby the lancets of the lancet cartridge body can be selectively driven in a lancing cycle. Although the embodiment shown in FIGS. **102-106** allows for alignment of various sampling module portions **948** and lancet module portions **950** with relative rotational movement, other embodiments that function similarly are also contemplated. For example, lancet module portions, sampling module portions or both, could be arranged in a two dimensional array with relative x-y motion being used to align the module portions in a functional arrangement. Such relative x-y motion could be accomplished with position sensors and servo motors in such an alternative embodiment order to achieve the alignment.

As discussed above for FIGS. **46-48** and illustrated generically in FIG. **107**, one embodiment of the present invention may comprise a lancet driver **1000** configured to exert a driving force on a lancet **1002** and used on a tissue site **234** as seen in FIG. **37**. The lancet driver **1000** uses a drive force generator **1004** such as, but not limited to, the device of FIG. **4**, a linear voice coil device **294**, or rotary voice coil device **325** to advance or actuate the lancet along a path **1006** into a tissue site **234** (as similarly illustrated in FIGS. **30-41**). It should be understood that a variety of drive force generators may be used such as voice coil drive force generators, solenoid drive force generators, or similar drive force generators. Spring-based drive force generators or other non-electrical force generators may be used in certain alternative embodiments where the force generators can deliver the lancet at desired speeds while having mechanical dampers, stops, or other apparatus to provide the desired deceleration that minimizes oscillation of the lancet (see FIG. **68**). Additionally, as seen in FIG. **47**, the coil does not need to be fully surrounded by a magnetically active region.

A sensor **1008** may be used to detect lancet position along the path **1006** during the lancing cycle. A suitable sensor may include, but is not limited to, the position sensing mechanism **74**, position sensor **191**, optical position sensor **319**, optical position sensor **357**, or the like. A suitable sensor may also include those that can provide lancet position and sufficient sensor resolution to provide lancet velocity along the path **1006**. As discussed above, the sensor **1008** may be positioned such as to detect the position of a drive element that corresponds to or actuates the lancet (as shown in FIG. **21**, element **219**). The sensor **1008** may also be positioned to detect the position of the lancet itself (as shown in FIG. **46**, elements **296** and **319**).

Referring now to FIG. **108**, a processor **1020** similar to that shown in FIG. **12** (processor **60**) or others may be used to support a closed feedback control loop **1022** as indicated by the arrows, to provide lancet control. The driver **1000** of FIG. **107** may also include a controller or processor (not shown). The control of lancet **1002** may involve lancet position control and may also include lancet velocity control to follow a selectable lancet velocity profile or waveform as indicated in FIG. **12**. In most embodiments, the processor **1020** will be coupled to the drive force generator **1004** wherein the processor will signal or actuate the generator to drive the lancet at various velocities.

As discussed in regards to FIGS. **6-9**, **16-17**, and **42**, the lancet velocity profile or waveform may be designed to drive the lancet to minimize pain to a patient while also providing sufficient body fluid or blood yield for sampling purposes. The velocity profile, specifically in electrically powered force generators, may correspond to the duration and amount of electric current applied to the electrically powered force generators. The velocity profile may also provide for programmable deceleration profile of the lancet velocity to provide lancet stopping in the tissue site without a sudden hard stop that increases pain to the patient. In specific embodiments, the lancet velocity profile may used with suitable drive force generators to provide lancet velocities between about 0.8 to 20.0 meter per second on the penetration stroke and lancet velocities of 0.5 meters per second to less than about 0.02 meters per second on the withdrawal stroke.

Referring to FIGS. **10**, **11**, and **107**, the lancet **1002** may be driven along a path towards the tissue site **324**, into the tissue site **324**, and then withdrawn from the tissue site **324** (see FIG. **10**) to draw body fluid into a wound channel created by the lancet (see FIG. **11**). Although not limited in this manner, the lancet may follow a one directional linear path into the tissue site and follow the same linear path out of the tissue site.

Referring to FIG. **109**, a voice coil drive force generator **1030** is shown with a mechanical damper **1032** for providing a controlled deceleration as the lancet reaches a desired displacement away from the driver. This mechanical damper **1032** may be similar in concept to one discussed with FIG. **68**, except that the drive portion of the device is electrically actuated. Other suitable mechanical dampers may include dashpots using air, liquid or gel, electro-dynamic using eddy currents induced into a conductor with permanent or electromagnets, mechanical stops comprising polymer or elastomeric material minimizing oscillations, or a mechanical catch that holds the lancet in position until it is desired to release the lancet for the withdrawal stroke or some combination of these dampers. It should also be understood that the damper **1032** may be disposed in a variety of locations on the lancet driver including coupling to the lancet or to the drive components of force generator **1030** (shown in phantom).

FIGS. **110**A and **1106** show embodiments of the present invention having a drive force generator **1004** and a multiple lancet device **1040** such as a bandolier described in FIGS. **96** and **102**. The drive force generator **1004** may be, but is not limited to, a voice coil force generator for driving lancet **1042** (FIG. **110**B). The multiple lancet device or cartridge **1040** is similar to the embodiment of FIG. **93** and allows the user to have multiple lancet events without reloading the driver with a new lancet for each lancing event. This reduces

the number of steps that a patient performs and thus will reduce the barrier to more frequent blood glucose testing.

Referring now to FIG. **111**, in one embodiment of the present invention, a human interface **1051**, such as but not limited to an LCD screen, may be included with the lancet driver **1050**. It should understood the human interface may provide human readable output, human recognizable output (such as flashing indicators, icons, or symbols) or possible audio signals. The driver **1050** may also include buttons under software control such as one button **1052** for firing or actuating a lancet. A first press may turn on the driver **1050** and a second press may fire or actuate the lancet. In one specific embodiment, present invention may use two processors **1054** and **1056** (shown in phantom), the actuator processor **1054** that is fast and high power and the LCD/Human Interface (HI) processor **1056** that is low power and slower. The HI processor **1056** is in sleep mode and runs intermittently to conserve power. The HI processor **1056** controls the power to the actuator processor **1054** as needed. It also is a watchdog timer for the high-speed processor so that it will not remain on for long periods of time and drain the batteries. The communications between these two processors **1054** and **1056** uses a few lines and may be, but not necessarily, serial in nature. The communications may use a variety of interface standard such as, but not limited to, RS-232, SPI, I^2C or a proprietary scheme. The present embodiment may include at least one interface wire and ground. In some embodiment, the human interface may provide a variety of outputs such as, but not limited to, stick or lancing event number, lancets remaining, time, alarm, profile information, force in last stick/lancing event, or last stick/lancing event time.

Referring now to FIG. **112**, one embodiment of the driver **1050** may include at least one or a plurality of LED lights **1060** to provide alarms or other information to the user. FIG. **113** show a driver having an audio or sound generator for providing alarm or other information to the user. FIG. **114** shows the driver with a data interface device **1064** (shown in phantom) for allowing data communications with another support device such as, but not limited to, a computer, PDA, a computer network, a temporary storage device, other device for receiving data from the lancet driver. FIG. **115** shows a further embodiment where human interface **1051** is on a separate or separable device that is coupled to the driver **1050** to provide the human interface feature. It should be understood of course, that the human interface may any of those described herein, such as those providing video, audio, other signals.

In one embodiment, the present invention may include one or more buttons so that the user may control the Human Interface. One or more output display devices such as, but not limited to, individual LED's, arrays of LED's, LCD panels, buzzers, beepers, vibration, may be used by the user to provide feedback. External communications with other data interchange devices like personal computers, modems, personal data assistants, etc. may be provided.

One function of the human interface is to allow the user to initiate the cycle of the actuator. To allow user input, the human interface may further include but is not limited to, at least one pushbutton, a touch pad independent of the display device, or a touch sensitive screen on the LCD display. Additionally the interface may allow for other functionality such as an interface that allows the user to control the sampling/pain interface setting, or a device that sense whether there is a lancet loaded and ready for use, multiple sampling/pain interface protocols that the user can preset for sampling different areas of the body such as the finger versus the forearm. Additionally, a real time clock and one or more alarms the user can set for reminders of when the next stick is needed. The alarms may be individually settable with a master enable/disable that affects all alarms to easily suppress them in restaurants and theaters or other situations where an alarm would be offensive. The alarms can be set for blinking light, sound, and vibration or off. An enhancement would allow an alarm to be enabled for one or more days. This way the users schedule could be accommodated. For instance an alarm might be set for 10:00 AM for Monday thru Friday, but turned off Saturday and Sunday in preference to an alarm for 11:00 AM on those days.

In some embodiments, the HI may have a data recorder function. It may accumulate various data for feedback to the user or another data collection device or network. Some examples of types of data that might be recorded include: the number of lancets used, the number of sticks for this day, the time and date of the last n lancet events, or the interval between alarm and stick, amount of force of the stick, user setting, battery status, etc. The HI processor may pass the information to other devices through commonly available data interface devices or interfaces **1064**, or optionally a proprietary interface. Some common data interface devices or interfaces include but are not limited to: Serial RS-232, modem interface, USB, HPNA, Ethernet, optical interface, IRDA, RF interface, Bluetooth interface, cellular telephone interface, 2 way pager interface, a parallel port interface standard, near field magnetic coupling, or other RF network transceiver. One use of these interfaces is to move the data to somewhere else so that the user, a doctor, nurse or other medical technician may analyze it. The interfaces may be compatible with personal computers, modems, PDAs or existing computer networks.

Referring to FIGS. **116**(*a*) and **116**(*b*), one embodiment of the present invention is a lancing device **1110** is provided that includes, (i) a manual switch for a user interface input, (ii) an LED or light source, (iii) a user interface indicator, (iv) a transparent lancet detect window and (v) angled cylindrical housings.

The multi-position mechanical switch **1112** is illustrated in FIGS. **116** (*a*) and **116** (*b*). The multi-position mechanical switch **1112** can have fixed or mechanically indexed positions via low cost and high reliability circuit board contact pads. These provide a digital switch connection or combined analog electronic level and used as a user interface input control, The use interface input control can provide for depth setting range and comfort profile which, as a non-limiting example, can be about 3 to 100 discrete steps, provide device on and off, device standby, and the like. It also can enable lancing device **1110** to be put in a sleep or standby mode as well as disable launching of the lancet unintentionally with the fire button.

An LED, or other suitable light source **1114**, shown in FIG. **117**, can be used to indicate a variety of different user interface outputs including but not limited to, low battery, charging, lancet present, device error condition(s), ready to launch, an indication that the battery requires replacement and the like. A clear, semi-transparent and/or molded housing feature permits light or partial light transmittance of symbols, including but not limited to, a battery annucator, lancet present symbol, audio on/off, depth setting, data management mode and the like.

A clear or semitransparent housing window **1116**, illustrated in FIG. **118**, allows the user to visibly confirm that a lancet is loaded, unloaded, moving during launch, and enables a secondary function of enabling removal of physical contaminants such as blood, dust or other objects poten-

tially detrimental to the bearing actuator and cleaning by removing the housing window.

In one embodiment, the lancing device **1110** has angled housings. This provides for a smaller device volume via two dissimilar cylindrical shapes. One shape is for a larger radial battery, and the other smaller diameter is for all additional hardware such as the Actuator Assembly, high voltage capacitor, PCB and all electrical components, transformer, encoder, lancets, microcontroller.

In one embodiment of the present invention, the lancing device **1110** has the following design requirements/specifications: (i) Mass: low mass, which as a non-limiting example can be a total moving mass <0.40 g (ii) Friction: very low, consistent friction (affects contact point) (iii) user interface: simple, intuitive, requiring very low dexterity, visual acuity and tactile feel, Some design constraints include but are not limited to, (i) user handled, over-molded lancet needle, (ii) a sterility barrier provided by overmold, removed by user, and the like.

In various embodiments, design elements of the lancing device **1110** can include but are not limited to, (i) lancet-chuck coupling: robust, accuracy of needle placement X-Y-Z, tactile feedback for insertion and removal; (ii) lancet present/absent detection: low cost solution to detecting presence/absence; (ii) interface to lancing drive: close mechanical coupling for drive (slug), (iii) bearings/guidance: per tolerance analysis, varies for application, (iv) latching: ability to latch for storage, removal of lancet, and the like.

In various embodiments, design elements of the lancing device **1110** include but are not limited to, (i) lancet-chuck coupling: method for interfacing removable over-molded lancet to chuck/drive; (ii) toroidal spring retention (e.g., balseal); (iii) bearings: guide feature(s) for accurately defining lancing trajectory; (iv) chuck-chassis form bearings; (v) bearings contained in a disposable cartridge; (vi) latching: holding the lancet from exiting the lancing device **1110** when not in use and for removal of the lancet; (vii) a magnetic actuated latch; (viii) a button press for lancet access, latching; (ix) lancet present detection: transparent detection of lancet present or absent from the lancing device **1110**; (x) moving a plunger for an encoder relative to a chuck (lancet insertion positions encoder to home position relative to chuck); (xi) lancing device **1110** being capable of taking action based on presence or absence of elements; (xii) visual (user observes) detection of the lancet; (xiii) load-unload of the lancet; (xiv) lancet detection through an aperture; (xv) user inserted lancet cartridge, and the like.

While the invention has been described and illustrated with reference to certain particular embodiments thereof, those skilled in the art will appreciate that various adaptations, changes, modifications, substitutions, deletions, or additions of procedures and protocols may be made without departing from the spirit and scope of the invention. For example, the positioning of the LCD screen for the human interface may be varied so as to provide the best location for ergonomic use. The human interface may be a voice system that uses words to describe status or alarms related to device usage. Expected variations or differences in the results are contemplated in accordance with the objects and practices of the present invention. It is intended, therefore, that the invention be defined by the scope of the claims which follow and that such claims be interpreted as broadly as is reasonable.

The invention claimed is:

1. An agent injection device including electrical components, comprising: a housing; the housing including a first housing and a second housing, where the first housing being larger than the second housing, the first and second housings having dissimilar shapes, the first housing configured to house a battery, and the second housing configured to house the electrical components;

a needle with an interior channel, the needle positionable in the housing; an agent container coupled to the needle and positioned at the housing;

an actuator processor coupled to a position sensor;

a human interface processor that is lower power and slower than the actuator processor, the human interface processor configured to run intermittently to conserve power for the human interface processor, the human interface processor configured to control power for the actuator processor and is a timer for the actuator processor so that the actuator processor does not remain on for long periods of time;

a human interface coupled to the human interface processor that allows a user to adjust a sampling setting; and a controllable drive force generator coupled to the actuator processor and configured to be coupled to the needle to advance the needle along a path into a tissue site to a selected depth of the agent.

2. The device of claim **1**, wherein the needle has a controllable velocity.

3. The device of claim **1**, wherein the agent container is collapsible.

4. The device of claim **3**, wherein the agent container is collapsible in response to a signal from the actuator processor.

5. The device of claim **1**, further comprising:

a cassette that includes a plurality of needles and a plurality of agent containers.

6. The device of claim **5**, wherein the actuator processor provides a series of metered dose of the agent for long-term medication needs.

7. The device of claim **1**, wherein the needle is disposable in the housing.

8. The device of claim **1**, wherein the needle has a distal end with three facets.

9. A method for delivering an agent from an agent injection device that includes electrical components, comprising: providing the agent injection device that includes a housing, a needle, an agent container coupled to the needle, an actuator processor and a controllable drive force generator coupled to the actuator processor, the housing including a first housing and a second housing, where the first housing being larger than the second housing, the first and second housings having dissimilar shapes, the first housing configured to house a battery, and the second housing configured to house the electrical components;

indicating a low battery output and a device error condition output via a user interface; and

using the controllable drive force generator to advance the needle along a path into a tissue site to a selected depth for delivery of the agent at the selected depth; using the actuator processor including a memory that stores profiles and in response to the actuator processor selecting a profile, the actuator processor modulating power from a power supply to the controllable drive force generator; using a human interface processor that is lower power and slower than the actuator processor, the human interface processor configured to run intermittently to conserve power for the human interface processor controlling power to the actuator processor as needed, the human interface processor configured to be

a timer for the actuator processor so that the actuator processor does not remain on for long periods of time; and

using the human interface to allow the user to adjust sampling setting; and

using the actuator processor to customize a drive force generator profile by scaling or modifying the drive force generator profile based on additional user input information.

10. The method of claim **9**, wherein the needle has a controllable velocity.

11. The method of claim **9**, wherein the agent container is collapsible.

12. The method of claim **11**, further comprising:

at least partially collapsing the container in response to a signal from the actuator processor.

13. The method of claim **9**, further comprising: using the actuator processor and a feedback loop to provide a series of metered doses of the agent for long-term medication needs.

14. The method of claim **9**, further comprising:

providing a cassette that includes a plurality of needles and a plurality of agent containers.

15. The method of claim **14**, further comprising: providing a series of metered doses of the agent for long-term medication needs.

16. The method of claim **9**, wherein the needle has a distal end with three facets.

* * * * *