US009810591B2

(12) United States Patent
Walker

(10) Patent No.: US 9,810,591 B2
(45) Date of Patent: *Nov. 7, 2017

(54) **SYSTEM AND METHOD OF ANALYZING ATHLETIC ACTIVITY**

(71) Applicant: **NIKE, Inc.**, Beaverton, OR (US)

(72) Inventor: **Steven H. Walker**, Camas, WA (US)

(73) Assignee: **NIKE, Inc.**, Beaverton, OR (US)

(*) Notice: Subject to any disclaimer, the term of this patent is extended or adjusted under 35 U.S.C. 154(b) by 0 days.

This patent is subject to a terminal disclaimer.

(21) Appl. No.: **15/230,725**

(22) Filed: **Aug. 8, 2016**

(65) **Prior Publication Data**

US 2016/0341611 A1 Nov. 24, 2016

Related U.S. Application Data

(63) Continuation of application No. 14/088,036, filed on Nov. 22, 2013, now Pat. No. 9,410,857.

(60) Provisional application No. 61/801,235, filed on Mar. 15, 2013.

(51) **Int. Cl.**

A63F 13/00	(2014.01)
G01L 1/22	(2006.01)
G01L 1/16	(2006.01)
G01L 1/18	(2006.01)
A43B 3/00	(2006.01)
A63B 24/00	(2006.01)
A43C 19/00	(2006.01)
H01L 41/04	(2006.01)
A43B 13/12	(2006.01)
A43B 13/14	(2006.01)

(52) **U.S. Cl.**

CPC ***G01L 1/2206*** (2013.01); ***A43B 3/0005*** (2013.01); ***A43B 13/12*** (2013.01); ***A43B 13/14*** (2013.01); ***A43C 19/00*** (2013.01); ***A63B 24/0062*** (2013.01); ***G01L 1/16*** (2013.01); ***G01L 1/18*** (2013.01); ***H01L 41/04*** (2013.01)

(58) **Field of Classification Search**

CPC G07F 17/3293

See application file for complete search history.

(56) **References Cited**

U.S. PATENT DOCUMENTS

3,270,564	A	9/1966	Evans
4,372,558	A	2/1983	Shimamoto et al.
4,373,651	A	2/1983	Fanslow

(Continued)

FOREIGN PATENT DOCUMENTS

CA	2668946	A1	5/2008
CN	1101757A	A	4/1995

(Continued)

OTHER PUBLICATIONS

Aug. 7, 2013—(WO) ISR and WO—App. No. PCT/US2013/027397.

(Continued)

Primary Examiner — Milap Shah
Assistant Examiner — Thomas H Henry
(74) *Attorney, Agent, or Firm* — Banner & Witcoff, Ltd.

(57) **ABSTRACT**

Various sensor systems are described herein, including inserts having sensors thereon, which are configured to be received in an article of footwear. The inserts may be connected to a sole member of the footwear, or may function as a sole member. The sensors may be piezoelectric sensors in some configurations. The system may also include an electronic module that is overmolded into the sole structure and includes a connector for external access.

28 Claims, 26 Drawing Sheets

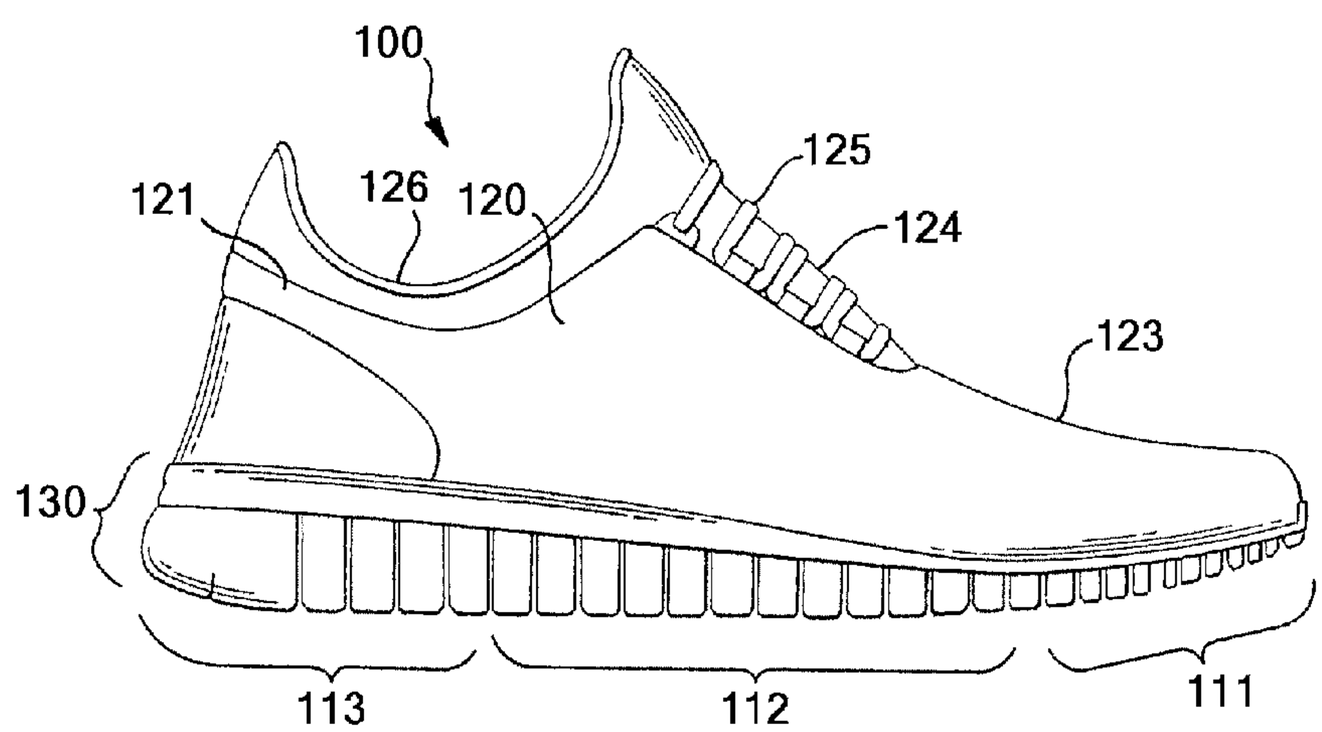

(56) **References Cited**

U.S. PATENT DOCUMENTS

4,518,267 A 5/1985 Hepp
4,578,969 A 4/1986 Larson
4,647,918 A 3/1987 Goforth
4,703,445 A 10/1987 Dassler
4,745,930 A 5/1988 Confer
4,814,661 A 3/1989 Ratzlaff et al.
4,862,743 A 9/1989 Seitz
4,866,412 A 9/1989 Rzepczynski
5,010,774 A 4/1991 Kikuo et al.
5,033,291 A 7/1991 Podoloff et al.
5,047,952 A 9/1991 Kramer et al.
5,050,962 A 9/1991 Monnier et al.
5,150,536 A 9/1992 Strong
5,154,960 A 10/1992 Mucci et al.
5,249,967 A 10/1993 O'Leary et al.
5,253,656 A 10/1993 Rincoe et al.
5,303,131 A 4/1994 Wu
5,323,650 A 6/1994 Fullen et al.
5,373,651 A 12/1994 Wood
5,374,821 A 12/1994 Muhs et al.
5,393,651 A 2/1995 Hoshi
5,408,873 A 4/1995 Schmidt et al.
5,419,562 A 5/1995 Cromarty
5,422,521 A 6/1995 Neer et al.
5,444,462 A 8/1995 Wambach
5,471,405 A 11/1995 Marsh
5,500,635 A 3/1996 Mott
5,636,146 A 6/1997 Flentov et al.
5,636,378 A 6/1997 Griffith
5,638,300 A 6/1997 Johnson
5,644,858 A 7/1997 Bemis
5,655,316 A 8/1997 Huang
5,697,791 A 12/1997 Nashner et al.
5,702,323 A 12/1997 Poulton
5,714,706 A 2/1998 Nakada et al.
5,720,200 A 2/1998 Anderson et al.
5,724,265 A 3/1998 Hutchings
5,764,786 A 6/1998 Kuwashima et al.
5,785,666 A 7/1998 Costello et al.
5,812,142 A 9/1998 Small et al.
5,813,142 A 9/1998 Demon
5,813,406 A 9/1998 Kramer et al.
5,844,861 A 12/1998 Maurer
5,889,464 A 3/1999 Huang
5,903,454 A 5/1999 Hoffberg et al.
5,907,819 A 5/1999 Johnson
5,913,727 A 6/1999 Ahdoot
5,929,332 A 7/1999 Brown
5,960,380 A 9/1999 Flentov et al.
5,963,891 A 10/1999 Walker et al.
6,017,128 A 1/2000 Goldston et al.
6,018,705 A 1/2000 Gaudet et al.
6,050,962 A 4/2000 Kramer et al.
6,066,075 A 5/2000 Poulton
6,081,750 A 6/2000 Hoffberg et al.
6,122,340 A 9/2000 Darley et al.
6,122,846 A 9/2000 Gray et al.
6,148,280 A 11/2000 Kramer
6,174,294 B1 1/2001 Crabb et al.
6,195,921 B1 3/2001 Truong
6,198,394 B1 3/2001 Jacobsen et al.
6,226,577 B1 5/2001 Yeo
6,266,623 B1 7/2001 Vock et al.
6,287,200 B1 9/2001 Sharma
6,298,314 B1 10/2001 Blackadar et al.
6,330,757 B1 12/2001 Russell
6,336,365 B1 1/2002 Blackadar et al.
6,356,856 B1 3/2002 Damen et al.
6,357,147 B1 3/2002 Darley et al.
6,360,597 B1 3/2002 Hubbard, Jr.
6,426,490 B1 7/2002 Storz
6,428,490 B1 8/2002 Kramer et al.
6,430,843 B1 8/2002 Potter et al.
6,496,787 B1 12/2002 Flentov et al.
6,496,952 B1 12/2002 Osada et al.
6,498,994 B2 12/2002 Vock et al.
6,515,284 B1 2/2003 Walle et al.
6,516,284 B2 2/2003 Flentov et al.
6,536,139 B2 3/2003 Darley et al.
6,539,336 B1 3/2003 Vock et al.
6,544,858 B1 4/2003 Beekman et al.
6,560,903 B1 5/2003 Darley
6,578,291 B2 6/2003 Hirsch et al.
6,611,789 B1 8/2003 Darley
6,640,144 B1 10/2003 Huang et al.
6,656,042 B2 12/2003 Reiss et al.
6,718,200 B2 4/2004 Marmaropoulos et al.
6,748,462 B2 6/2004 Dubil et al.
6,778,973 B2 8/2004 Harlan
6,785,579 B2 8/2004 Huang et al.
6,785,805 B1 8/2004 House et al.
6,808,462 B2 10/2004 Snyder et al.
6,829,512 B2 12/2004 Huang et al.
6,836,744 B1 12/2004 Asphahani et al.
6,876,947 B1 4/2005 Darley et al.
6,882,897 B1 4/2005 Fernandez
6,885,971 B2 4/2005 Vock et al.
6,889,282 B2 5/2005 Schollenberger
6,892,216 B2 5/2005 Coburn, II et al.
6,909,420 B1 6/2005 Nicolas et al.
6,922,664 B1 7/2005 Fernandez et al.
6,932,698 B2 8/2005 Sprogis
6,959,259 B2 10/2005 Vock et al.
6,963,818 B2 11/2005 Flentov et al.
6,978,320 B2 12/2005 Nonaka
7,030,861 B1 4/2006 Westerman et al.
7,045,151 B2 5/2006 Trant
7,046,151 B2 5/2006 Dundon
7,054,784 B2 5/2006 Flentov et al.
7,057,551 B1 6/2006 Vogt
7,070,571 B2 7/2006 Kramer et al.
7,072,789 B2 7/2006 Vock et al.
7,092,846 B2 8/2006 Vock et al.
7,152,343 B2 12/2006 Whatley
7,162,392 B2 1/2007 Vock et al.
7,171,331 B2 1/2007 Vock et al.
7,200,517 B2 4/2007 Darley et al.
7,245,898 B2 7/2007 Van Bosch et al.
7,277,021 B2 10/2007 Beebe et al.
7,283,647 B2 10/2007 McNitt
7,304,580 B2 12/2007 Sullivan et al.
7,310,895 B2 12/2007 Whittlesey et al.
7,383,728 B2 6/2008 Noble et al.
RE40,474 E 9/2008 Quellais et al.
7,426,873 B1 9/2008 Kholwadwala et al.
7,428,471 B2 9/2008 Darley et al.
7,433,805 B2 10/2008 Vock et al.
7,457,724 B2 11/2008 Vock et al.
7,497,037 B2 3/2009 Vick et al.
7,498,856 B2 3/2009 Lin et al.
7,498,956 B2 3/2009 Baier et al.
7,522,970 B2 4/2009 Fernandez
7,552,549 B2 6/2009 Whittlesey et al.
7,579,946 B2 8/2009 Case, Jr.
7,602,301 B1 10/2009 Stirling et al.
7,607,243 B2 10/2009 Berner, Jr. et al.
7,617,068 B2 11/2009 Tadin et al.
7,623,987 B2 11/2009 Vock et al.
7,625,314 B2 12/2009 Ungari et al.
7,651,442 B2 1/2010 Carlson
7,658,694 B2 2/2010 Ungari
7,670,263 B2 3/2010 Ellis et al.
7,726,206 B2 6/2010 Terrafranca, Jr. et al.
7,739,076 B1 6/2010 Vock et al.
7,758,523 B2 7/2010 Collings et al.
7,771,320 B2 8/2010 Riley et al.
7,805,150 B2 9/2010 Graham et al.
7,816,632 B2 10/2010 Bourke, III et al.
7,840,378 B2 11/2010 Vock et al.
7,901,325 B2 3/2011 Henderson
7,905,815 B2 3/2011 Ellis et al.
7,909,737 B2 3/2011 Ellis et al.
7,921,716 B2 4/2011 Morris Bamberg et al.
7,934,983 B1 5/2011 Eisner

(56) **References Cited**

U.S. PATENT DOCUMENTS

7,997,007 B2 8/2011 Sanabria-Hernandez
8,056,268 B2 11/2011 DiBenedetto et al.
8,061,061 B1 11/2011 Rivas
8,099,258 B2 1/2012 Alten et al.
8,131,498 B1 3/2012 McCauley
8,142,267 B2 3/2012 Adams
8,172,722 B2 5/2012 Molyneux et al.
8,212,158 B2 7/2012 Wiest
8,251,930 B2 8/2012 Ido
8,253,586 B1 8/2012 Matak
8,291,618 B2 10/2012 Ellis
8,333,643 B2 12/2012 Eisner
8,467,979 B2 6/2013 Sobolewski
8,474,153 B2 7/2013 Brie et al.
8,484,654 B2 7/2013 Graham et al.
8,676,541 B2 3/2014 Schrock et al.
8,739,639 B2 6/2014 Owings et al.
9,089,182 B2 7/2015 Schrock et al.
2001/0003665 A1 6/2001 Kim
2001/0054043 A1 12/2001 Harlan
2002/0035184 A1 3/2002 Plaver et al.
2002/0134153 A1 9/2002 Grenlund
2003/0009308 A1 1/2003 Kirtley
2003/0054327 A1 3/2003 Evensen
2003/0097878 A1 5/2003 Farringdon et al.
2003/0163287 A1 8/2003 Vock et al.
2003/0207718 A1 11/2003 Perlmutter
2004/0154190 A1 8/2004 Munster
2004/0162702 A1 8/2004 Pandipati et al.
2004/0215413 A1 10/2004 Weldum et al.
2004/0218317 A1 11/2004 Kawazu et al.
2004/0225467 A1 11/2004 Vock et al.
2004/0226192 A1 11/2004 Geer et al.
2005/0011085 A1 1/2005 Swigart et al.
2005/0032582 A1 2/2005 Mahajan et al.
2005/0046576 A1 3/2005 Julian et al.
2005/0106977 A1 5/2005 Coulston
2005/0183292 A1 8/2005 DiBenedetto et al.
2005/0188566 A1 9/2005 Whittlesey et al.
2005/0221403 A1 10/2005 Gazenko
2005/0261609 A1 11/2005 Collings et al.
2005/0282633 A1 12/2005 Nicolas et al.
2006/0010174 A1 1/2006 Nguyen et al.
2006/0017692 A1 1/2006 Wehrenberg et al.
2006/0025229 A1 2/2006 Mahajan et al.
2006/0091715 A1 5/2006 Schmitz et al.
2006/0143645 A1 6/2006 Vock et al.
2006/0144152 A1 7/2006 Cabuz et al.
2006/0217231 A1 9/2006 Parks et al.
2006/0226843 A1 10/2006 Al-Anbuky et al.
2006/0248749 A1 11/2006 Ellis
2006/0262120 A1 11/2006 Rosenberg
2007/0006489 A1 1/2007 Case et al.
2007/0016091 A1 1/2007 Butt et al.
2007/0026421 A1 2/2007 Sundberg et al.
2007/0032748 A1 2/2007 McNeil et al.
2007/0033838 A1 2/2007 Luce et al.
2007/0060408 A1 3/2007 Schultz et al.
2007/0063849 A1 3/2007 Rosella et al.
2007/0063850 A1 3/2007 Devaul et al.
2007/0067885 A1 3/2007 Fernandez
2007/0068244 A1 3/2007 Billing et al.
2007/0073178 A1 3/2007 Browning et al.
2007/0078324 A1 4/2007 Wijisiriwardana
2007/0082389 A1 4/2007 Clark et al.
2007/0094890 A1 5/2007 Cho et al.
2007/0118328 A1 5/2007 Vock et al.
2007/0143452 A1 6/2007 Suenbuel et al.
2007/0152812 A1 7/2007 Wong et al.
2007/0173705 A1 7/2007 Teller et al.
2007/0208544 A1 9/2007 Kulach et al.
2007/0232455 A1 10/2007 Hanoun
2007/0250286 A1 10/2007 Duncan et al.
2007/0260421 A1 11/2007 Berner et al.
2007/0283599 A1 12/2007 Talbott
2008/0027679 A1 1/2008 Shklarski
2008/0028783 A1 2/2008 Immel et al.
2008/0039203 A1 2/2008 Ackley et al.
2008/0048616 A1 2/2008 Paul et al.
2008/0056508 A1 3/2008 Pierce et al.
2008/0060224 A1 3/2008 Whittlesey et al.
2008/0061023 A1 3/2008 Moor
2008/0066343 A1 3/2008 Sanabria-Hernandez
2008/0066560 A1 3/2008 Yu et al.
2008/0127527 A1 6/2008 Chen
2008/0134583 A1 6/2008 Polus
2008/0165140 A1 7/2008 Christie et al.
2008/0172498 A1 7/2008 Boucard
2008/0177507 A1 7/2008 Mian et al.
2008/0188353 A1 8/2008 Vitolo et al.
2008/0200312 A1 8/2008 Tagliabue
2008/0203144 A1 8/2008 Kim
2008/0218310 A1 9/2008 Alten et al.
2008/0221403 A1 9/2008 Fernandez
2008/0246629 A1 10/2008 Tsui et al.
2008/0255794 A1 10/2008 Levine
2008/0258921 A1 10/2008 Woo et al.
2008/0259028 A1 10/2008 Teepell et al.
2008/0269644 A1 10/2008 Ray
2008/0287832 A1 11/2008 Collins et al.
2008/0293023 A1 11/2008 Diehl et al.
2008/0297832 A1 12/2008 Otsuka
2008/0306410 A1 12/2008 Kalpaxis et al.
2008/0307899 A1 12/2008 Von Lilienfeld-Toal et al.
2008/0318679 A1 12/2008 Tran et al.
2009/0018691 A1 1/2009 Fernandez
2009/0027917 A1 1/2009 Chen et al.
2009/0048538 A1 2/2009 Levine et al.
2009/0061837 A1 3/2009 Chaudhri et al.
2009/0075347 A1 3/2009 Cervin et al.
2009/0075781 A1 3/2009 Schwarzberg et al.
2009/0076341 A1 3/2009 James et al.
2009/0105047 A1 4/2009 Guidi et al.
2009/0107009 A1 4/2009 Bishop et al.
2009/0135001 A1 5/2009 Yuk
2009/0137933 A1 5/2009 Lieberman et al.
2009/0149299 A1 6/2009 Tchao et al.
2009/0150178 A1 6/2009 Sutton et al.
2009/0152456 A1 6/2009 Waid et al.
2009/0153369 A1 6/2009 Baier et al.
2009/0153477 A1 6/2009 Saenz
2009/0163287 A1 6/2009 Vald'Via et al.
2009/0167677 A1 7/2009 Kruse et al.
2009/0171614 A1 7/2009 Damen
2009/0259566 A1 10/2009 White, III et al.
2009/0262088 A1 10/2009 Moll-Carrillo et al.
2009/0293319 A1 12/2009 Avni
2009/0297832 A1 12/2009 Hatta et al.
2010/0000121 A1 1/2010 Brodie et al.
2010/0004566 A1 1/2010 Son et al.
2010/0009810 A1 1/2010 Trzecieski
2010/0023231 A1 1/2010 Allgaier et al.
2010/0023531 A1 1/2010 Brisebois et al.
2010/0035688 A1 2/2010 Picunko
2010/0053867 A1 3/2010 Ellis et al.
2010/0056340 A1 3/2010 Ellis et al.
2010/0057951 A1 3/2010 Ellis et al.
2010/0059561 A1 3/2010 Ellis et al.
2010/0062740 A1 3/2010 Ellis et al.
2010/0063778 A1 3/2010 Schrock et al.
2010/0063779 A1 3/2010 Schrock et al.
2010/0065836 A1 3/2010 Lee
2010/0072948 A1 3/2010 Sun et al.
2010/0082735 A1 4/2010 Petersen et al.
2010/0088023 A1 4/2010 Werner
2010/0094147 A1 4/2010 Inan et al.
2010/0111705 A1 5/2010 Sato et al.
2010/0113160 A1 5/2010 Belz et al.
2010/0129780 A1 5/2010 Homsi et al.
2010/0152619 A1 6/2010 Kalpaxis et al.
2010/0184563 A1 7/2010 Molyneux et al.
2010/0184564 A1 7/2010 Molyneux et al.
2010/0191490 A1 7/2010 Martens et al.
2010/0201500 A1 8/2010 Stirling et al.

(56) **References Cited**

U.S. PATENT DOCUMENTS

2010/0201512	A1	8/2010	Stirling et al.
2010/0204616	A1	8/2010	Shears et al.
2010/0225763	A1	9/2010	Vock et al.
2010/0231580	A1	9/2010	Miyasaka
2010/0286601	A1	11/2010	Yodfat et al.
2010/0292599	A1	11/2010	Oleson et al.
2010/0298659	A1	11/2010	McCombie et al.
2010/0312083	A1	12/2010	Southerland
2010/0332188	A1	12/2010	Vock et al.
2011/0003665	A1	1/2011	Burton et al.
2011/0021280	A1	1/2011	Boroda et al.
2011/0087445	A1	4/2011	Sobolewski
2011/0107369	A1	5/2011	O'Brien et al.
2011/0119027	A1	5/2011	Zhu et al.
2011/0119058	A1	5/2011	Berard et al.
2011/0136627	A1	6/2011	Williams
2011/0152695	A1	6/2011	Granqvist et al.
2011/0203390	A1	8/2011	Tao et al.
2011/0208444	A1	8/2011	Solinsky
2012/0041767	A1	2/2012	Hoffman et al.
2012/0050351	A1	3/2012	Dobler et al.
2012/0050529	A1	3/2012	Bentley
2012/0234111	A1	9/2012	Molyneux et al.
2012/0291564	A1	11/2012	Amos et al.
2013/0019694	A1	1/2013	Molyneux et al.
2013/0079907	A1	3/2013	Homsi et al.
2013/0190903	A1	7/2013	Balakrishnan et al.
2013/0213145	A1	8/2013	Owings et al.
2014/0033572	A1	2/2014	Steier et al.
2014/0174205	A1	6/2014	Clarke et al.
2014/0222173	A1	8/2014	Giedwoyn et al.
2014/0350435	A1	11/2014	Lam
2015/0257475	A1	9/2015	Langvin et al.
2016/0242500	A1	8/2016	Langvin et al.
2016/0345663	A1	12/2016	Walker et al.

FOREIGN PATENT DOCUMENTS

CN	1839724	A	10/2006
CN	200977748	Y	11/2007
CN	200994779	Y	12/2007
CN	101240461	A	8/2008
CN	101242880	A	8/2008
CN	101367012	A	2/2009
CN	101784230	A	7/2010
CN	101890215	A	11/2010
CN	101894206	A	11/2010
CN	102143695	A	8/2011
CN	201948063	U	8/2011
EP	0160880	A1	11/1985
EP	0662600	A1	7/1995
EP	1707065	A1	10/2006
EP	2189191	A2	5/2010
FR	2929827	A1	10/2009
GB	251054	A	4/1926
GB	2421416	A	6/2006
JP	5664301		5/1981
JP	H023020	A	1/1990
JP	0561724		6/1993
JP	H05161724	A	6/1993
JP	H06014803	A	1/1994
JP	H06336967	A	12/1994
JP	H08-89482	A	4/1996
JP	3036281	B2	4/2000
JP	2002163404	A	6/2002
JP	2003236002	A	8/2003
JP	2005079019	A	3/2005
JP	2005156531	A	6/2005
JP	2005270640	A	10/2005
JP	2006-280955	A	10/2006
JP	2007134473	A	5/2007
JP	200715117		6/2007
JP	20083752	A	10/2008
JP	2009148338	A	7/2009
JP	2009535157	A	10/2009
JP	2010088886	A	4/2010
JP	2010517725	A	5/2010
JP	2011112938	A	6/2011
JP	2011196931	A	10/2011
JP	2012065942	A	4/2012
JP	2012524638	A	10/2012
KR	20050032119		4/2005
KR	20060021632		3/2006
KR	20090102550		9/2009
KR	20100012845	U	12/2010
KR	20100130860	A	12/2010
KR	20110071728	A	6/2011
NO	2010065886	A1	6/2010
NO	2011157607	A1	12/2011
NO	2012112934	A2	8/2012
WO	9807341	A2	2/1998
WO	0033031	A1	6/2000
WO	0235184	A2	5/2002
WO	2006065679	A2	6/2006
WO	2006067434	A1	6/2006
WO	2006091715	A1	8/2006
WO	2007064735	A2	6/2007
WO	2007082389	A1	7/2007
WO	2007130287	A2	11/2007
WO	2008061023	A2	5/2008
WO	2008101085	A2	8/2008
WO	2008134583	A1	11/2008
WO	2009027917	A1	3/2009
WO	2009126818	A2	10/2009
WO	2009152456	A2	12/2009
WO	2010065836	A2	6/2010
WO	2010111705	A2	9/2010
WO	2012061804	A1	5/2012
WO	2012109244	A1	8/2012
WO	2012112931	A2	8/2012
WO	2012143274	A2	10/2012

OTHER PUBLICATIONS

Aug. 21, 2012—(WO) ISR and WO—App. No. PCT/US2012/025717.

Jul. 11, 2012—(WO) ISR & WO App No. PCT/US2012/025709.

Aug. 21, 2013—(WO) International Preliminary Report on Patentability App No. PCT/US2012/025713.

Dec. 11, 2009—(WO) ISR and WO App No. PCT/2009/047246.

May 28, 2013—(WO) ISR & WO App No. PCT/US2013/027421.

Fleming et al, Athlete and Coach Perceptions of Technology Needs for Evaluating Running Performance, article, Aug. 14, 2010, 18 pages, 13:1-18, UK.

Salpavaara, et al. Wireless Insole Sensor System for Plantar Force Measurements during Sports Events, article, Sep. 6-11, 2009, XIX IMEKO World Congress, Fundamental and Applied Metrology, 6 pages, Lisbon, Portugal.

Mar. 7, 2012—(WO) ISR and WO—App. PCT/US2011/060187.

Jul. 15, 2013—(WO) Search Report and Written Opinion—App. No. PCT/US2013/022219.

Lovell, "A system for real-time gesture recognition and classification of coordinated motion," Massachusetts Institute of Technology, Dept. of Electrical Engineering and Computer Science, 2005, <http://dspace.mit/edu/handle/1721.1/33290> (2 pages).

Chee et al, "A low cost wearable wireless sensing system for upper limb home rehabilitation," Robotics Automation and Mechatronics (RAM) 2010 IEEE Conference on Jun. 28-30, 2010; Abstract printout (1 page).

Guraliuc et al., "Channel model for on the body communication along and around the human torso at 2.4Ghz and 5.8Ghz," Antenna Technology (IWAT), 2010 International Workshop on Mar. 1-3, 2010; Abstract printout (1 page).

Jun. 21, 2012—(WO) ISR—App No. PCT/US2012/025701.

Frazier, Karen, "How Many Calories to 1 Carb?" published Nov. 12, 2010, Livestrong.com, 3 pages.

Oct. 1, 2013—(WO) ISR and WO—App No. PCT/US2013/048157.

Llosa et al., "Design of a Motion Detector to Monitor Rowing Performance Based on Wireless Sensor Networks," Intelligent Net-

(56) **References Cited**

OTHER PUBLICATIONS

working and Collaborativge Systems, 2009, http://ieeexploreieee.org/xpl/freeabs_all.jsp?arnumber=5369324 (1 page).
Choquette et al., "Accelerometer-based wireless body area network to estimate intensity of therapy in post-acute rehabilitation," Journal of NeuroEngineering and Rehabilitation 2008, http://www.jneuroengrehab.com/content/5/1/20/abstract (1 page).
Morris, "A shoe-integrated sensor system for wireless gait analysis and real-time therapeutic feedback, " Harvard-MIT Division of Health Sciences and Technology, 2004,http://dspace.mitedu/handle/1721.1/28601 (3 pages).
Lapinski, "A wearable, wireless sensor system for sports medicine," Massachusetts Institute of Technology, School of Architecture and Planning, Program in Media Arts and Sciences, 2008, http://dspace.mit.edulhandle/1721.1/46581(3 pages).
Aylward, "Sensemble : a wireless inertial sensor system for the interactive dance and collective motion analysis,"Massachusetts Institute of Technology, School of Architecture and Planning, Program in Media Arts and Sciences, 2006, http://dspace.mitedu/handle/1721.1/37391 (3 pages).
Danko; How to Work a Nike Sensor; Dec. 26, 2010; eHow website; 4 pages.
Coyne; Stout's Shoes on Mass Ave Oldest Shoe Store in the USA; Jun. 18, 2013; FunCityFinder website; 5 pages.
International Preliminary Report on Patentability for International Application No. PCT/US2009/035877, mailed Sep. 16, 2010, 7 pages.
Davis, The Re-emergence of the Minimal Running Shoe, Clinical Commentary, Journal of Orthopaedic & Sports Physical Therapy, vol. 44, No. 10, pp. 775-784, Oct. 2014.
Lim, Joo-Tack, STO Ltd., Final Report on IT development cooperative project, "Development of IT running shoes that an transmit athletic information of the shoes when running and development of receiver technology," Ministry of Knowledge Economy (Institute for Information Technology Advancement (ITA)) (Jun. 30, 2009).
Sep. 25, 2012—(WO) ISR & WO, App. No. PCT/US12/025713.
Aug. 8, 2016—(EP) Extended Search Report—App. No. 16170589.2.
Mar. 15, 2017—(EP) ESR—App. No. 16199665.7.

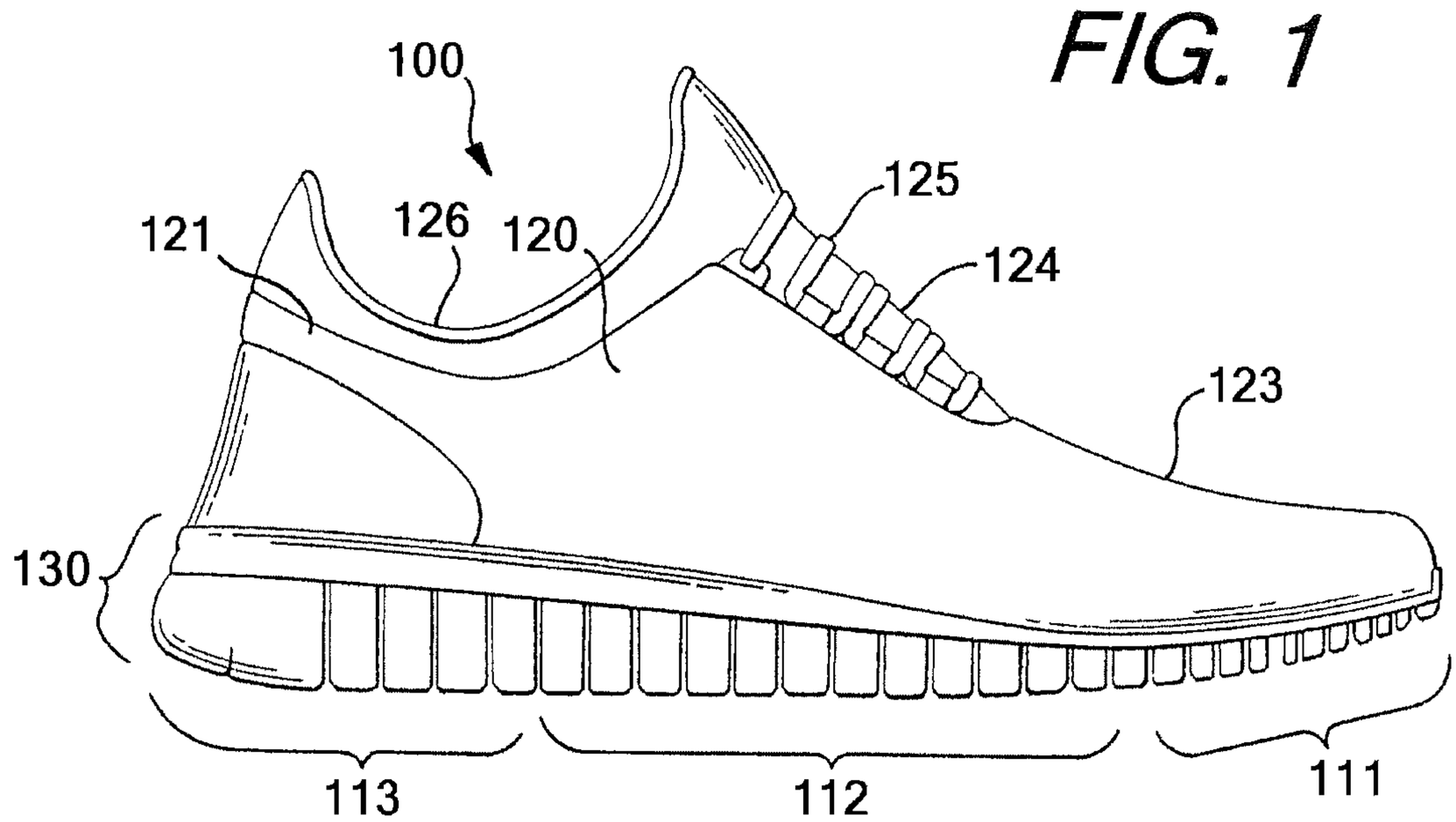
FIG. 1
100
121
126
120
125
124
123
130
113
112
111

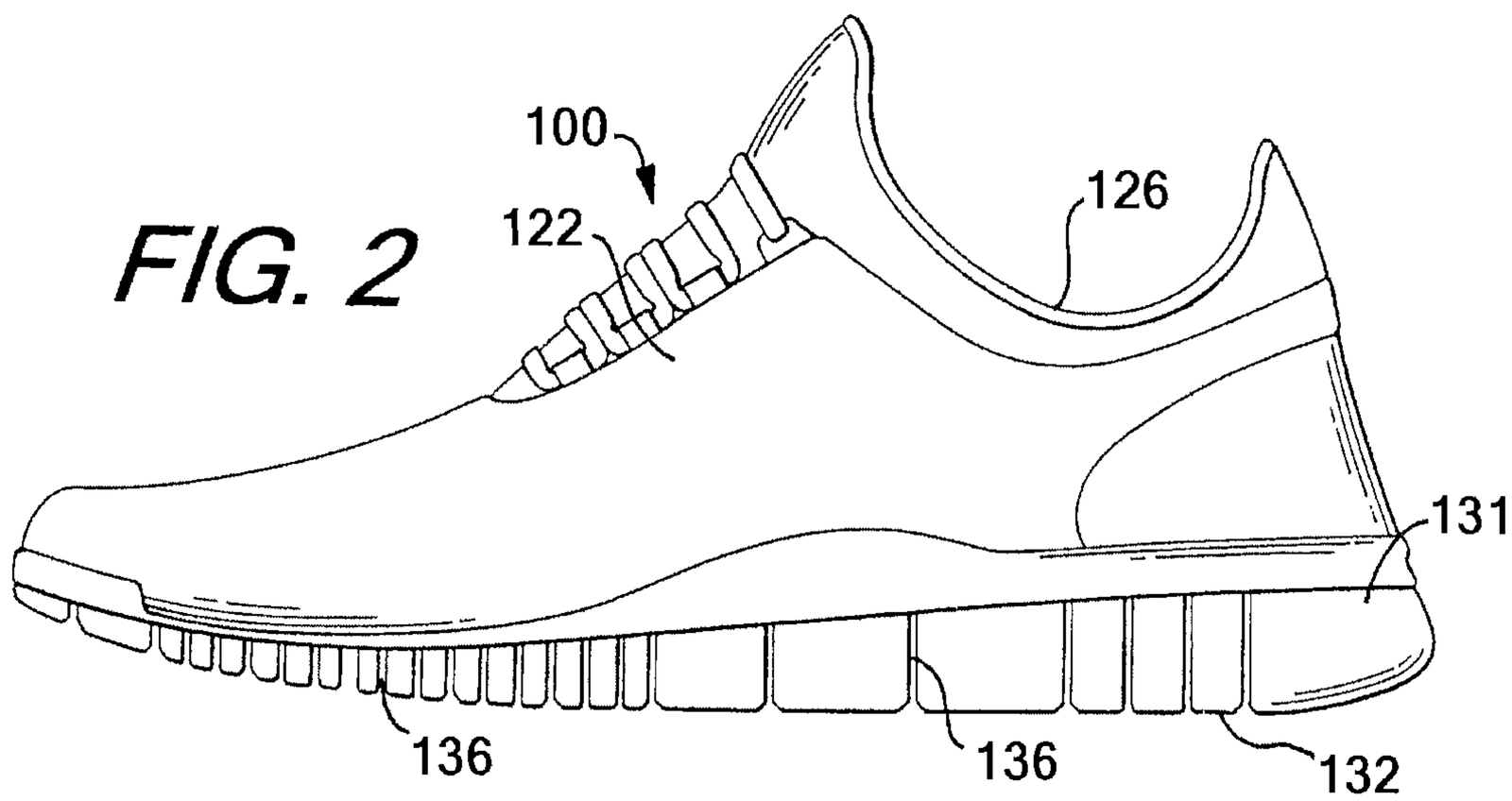
FIG. 2
100
122
126
131
136
136
132

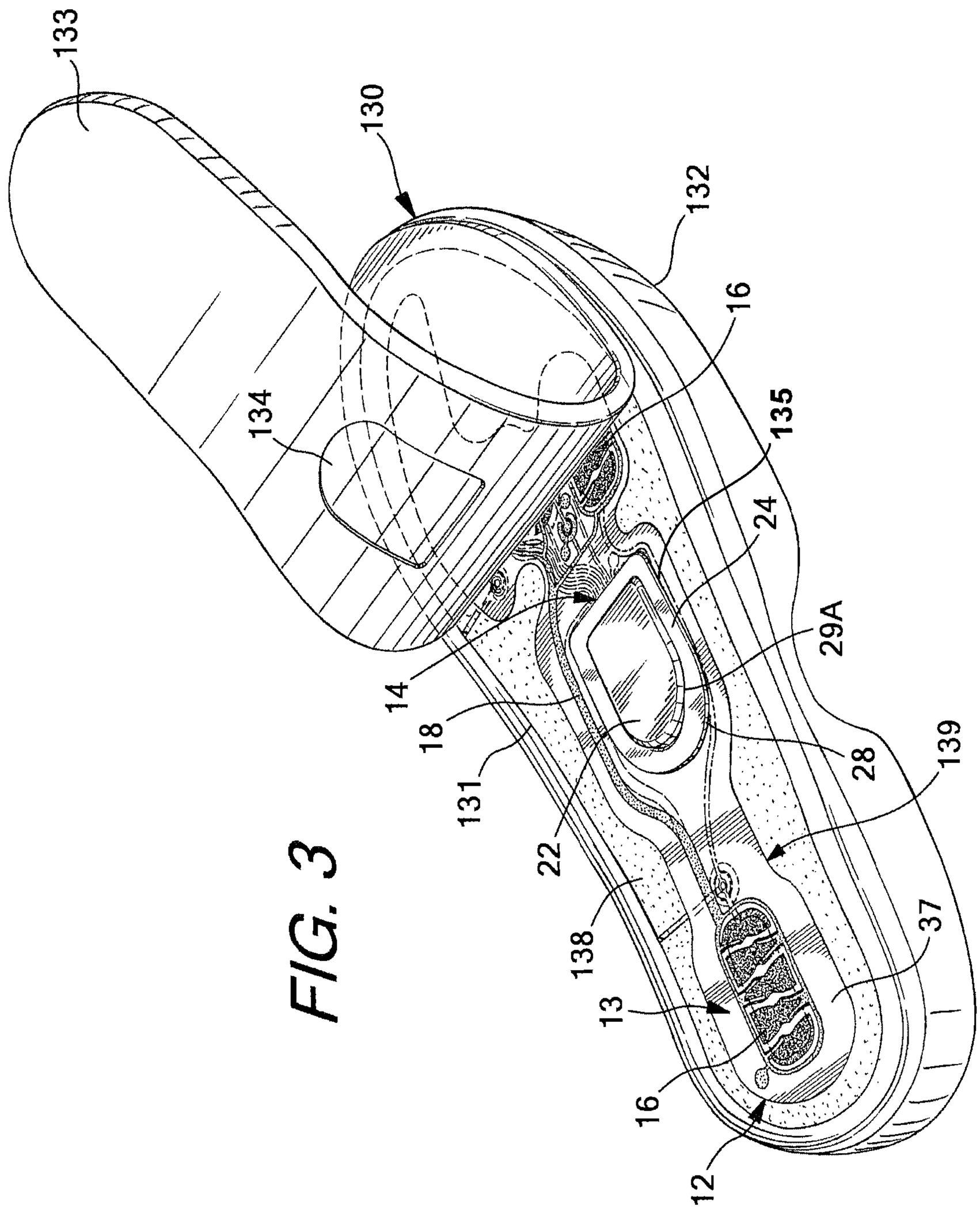

FIG. 3

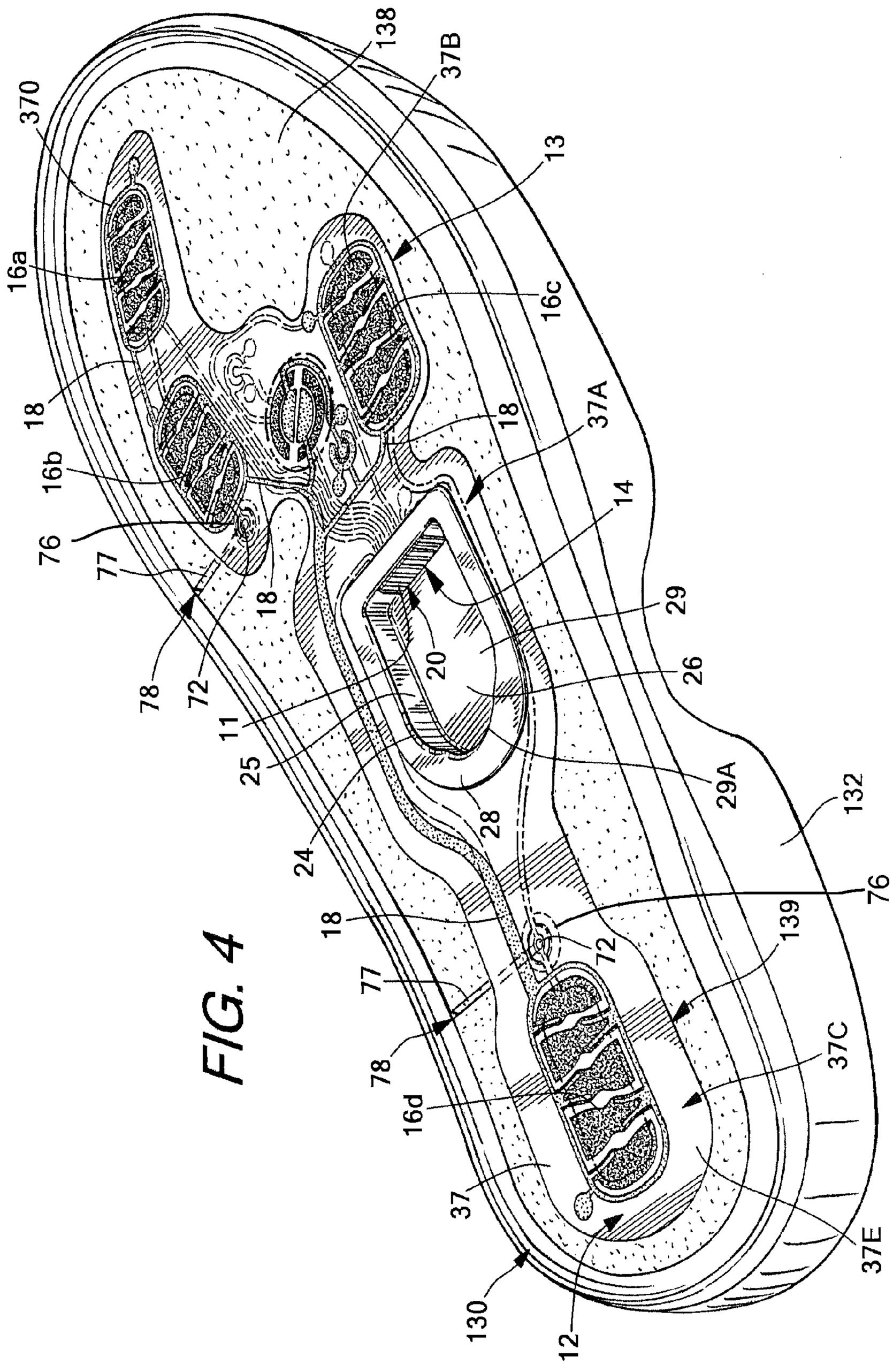
138
37B
370
13
16a
16c
18
18
37A
16b
14
76
77
29
18
20
26
78
72
11
25
29A
28
132
24
76
18
139
72
77
13
78
37C
16d
37
37E
130
12

FIG. 4

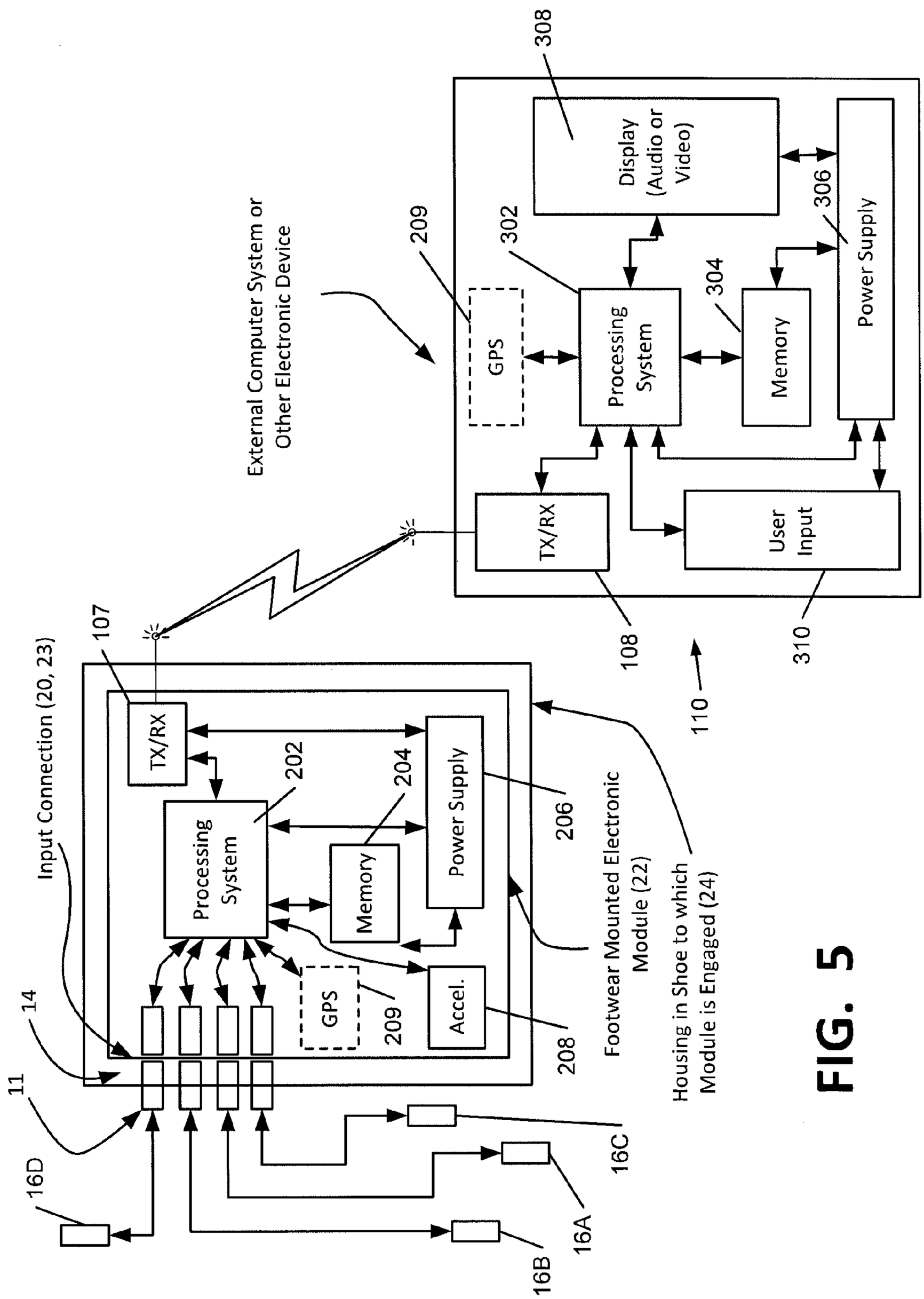
External Computer System or Other Electronic Device
308
Display (Audio or Video)
209
302
GPS
Processing System
304
Memory
306
Power Supply
TX/RX
User Input
108
310
110
Input Connection (20, 23)
107
TX/RX
202
Processing System
204
Memory
Power Supply
206
GPS
209
Accel.
208
Footwear Mounted Electronic Module (22)
Housing in Shoe to which Module is Engaged (24)
14
11
16D
16C
16A
16B

FIG. 5

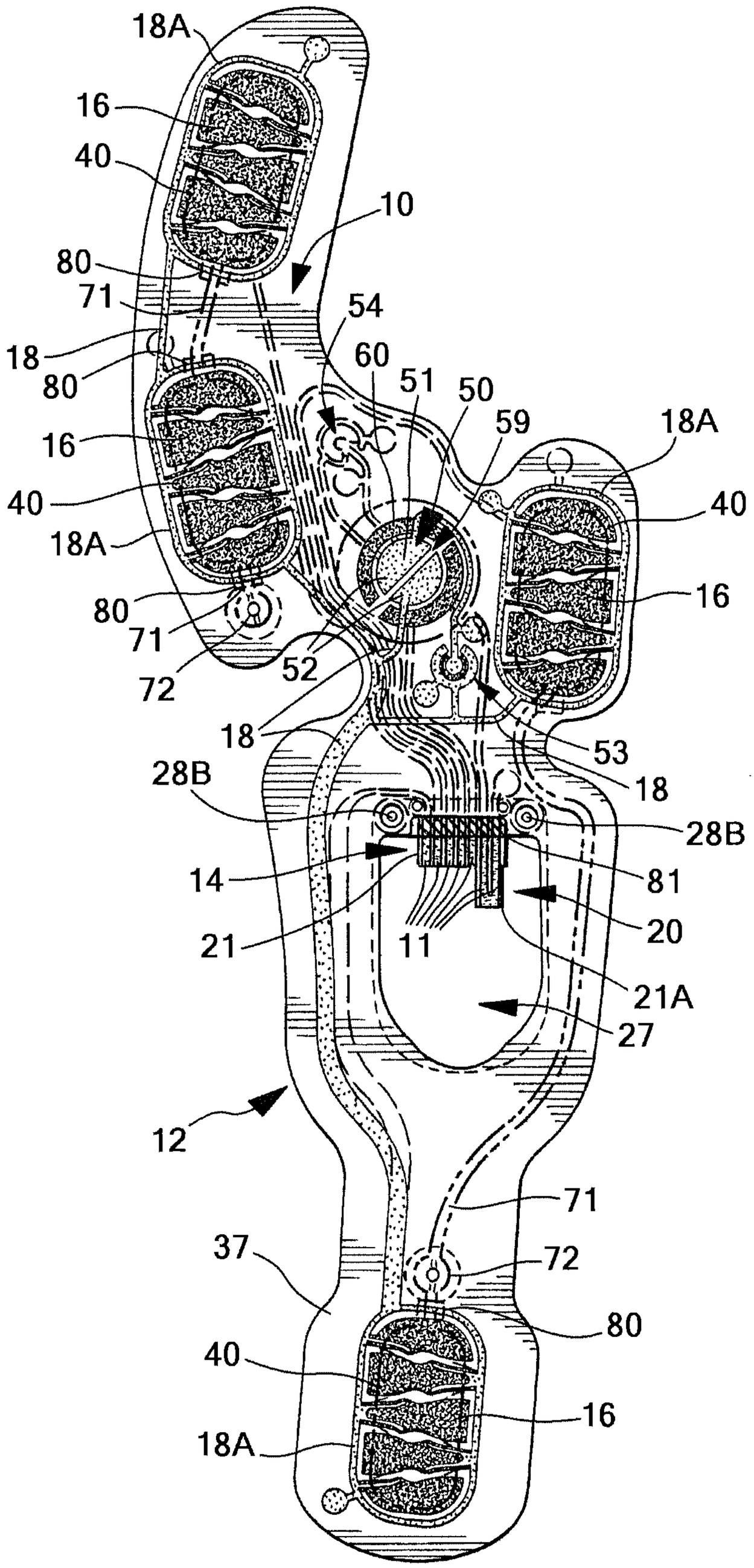
18A
16
40
10
80
71
54
18
80
60
51
50
59
18A
16
40
40
18A
16
80
71
72
52
18
53
28B
18
28B
14
81
21
11
20
21A
27
12
71
37
72
80
40
16
18A

FIG. 6

FIG. 7

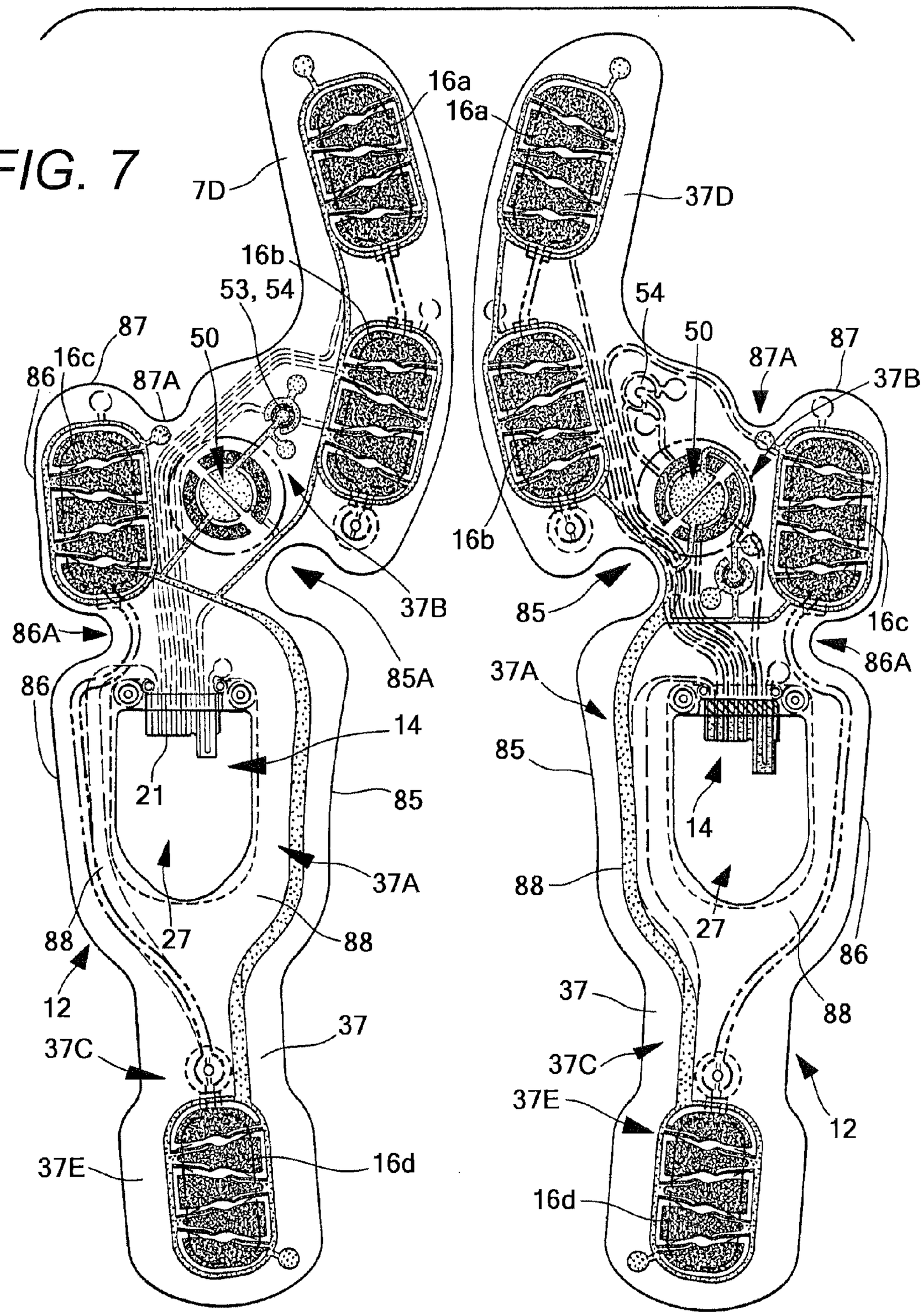
16a
16a
7D
37D
16b
53, 54
54
87
50
50
87A
87
16c
86
87A
37B
16b
37B
85
16c
86A
85A
86A
86
37A
14
85
85
21
14
37A
88
88
27
27
86
88
12
37
37
37C
37C
37E
12
37E
16d
16d

FIG. 8

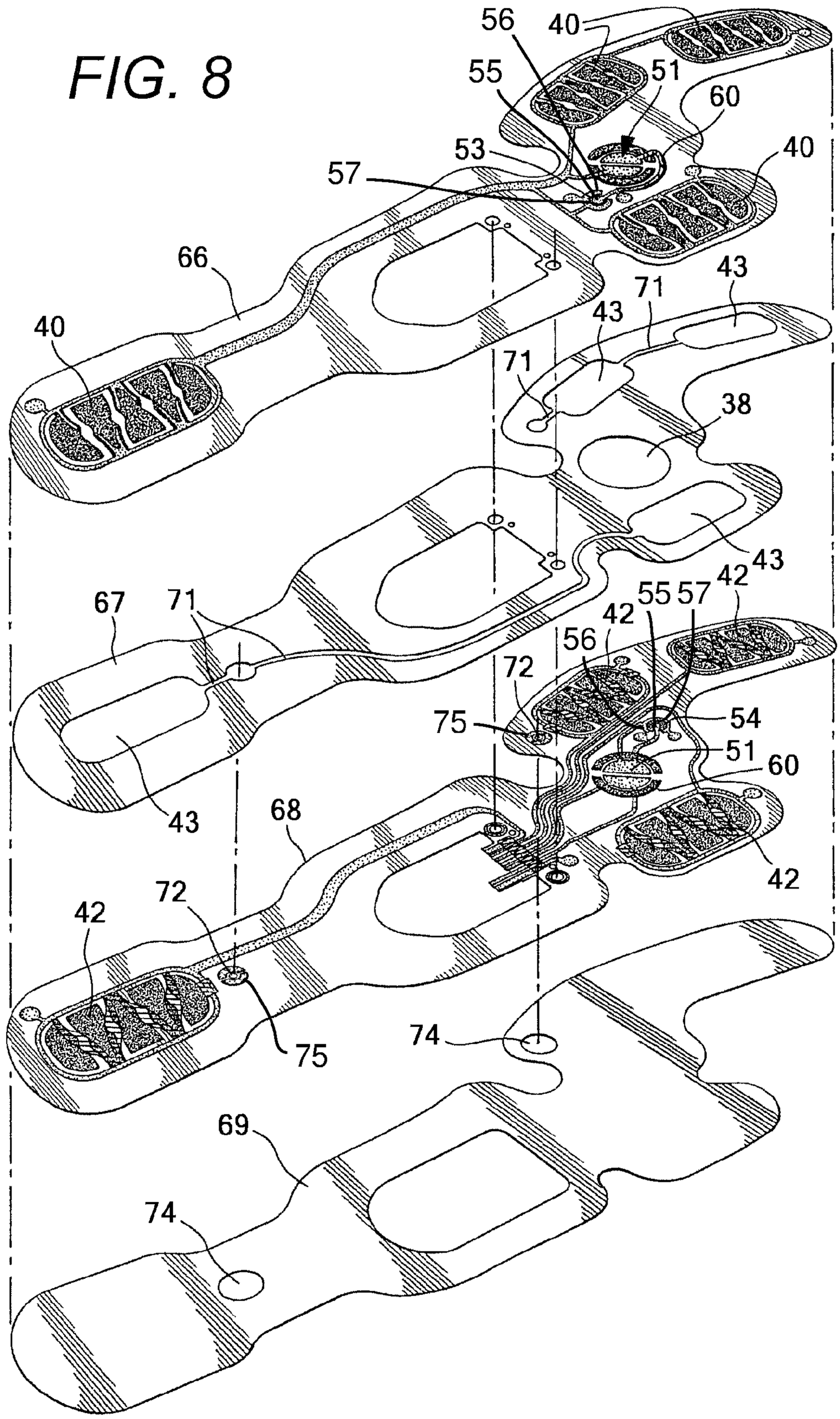
56
40
55
51
60
53
40
57
66
43
71
43
40
71
38
43
67
71
55
57
42
42
56
72
75
54
51
60
43
68
42
72
42
75
74
69
74

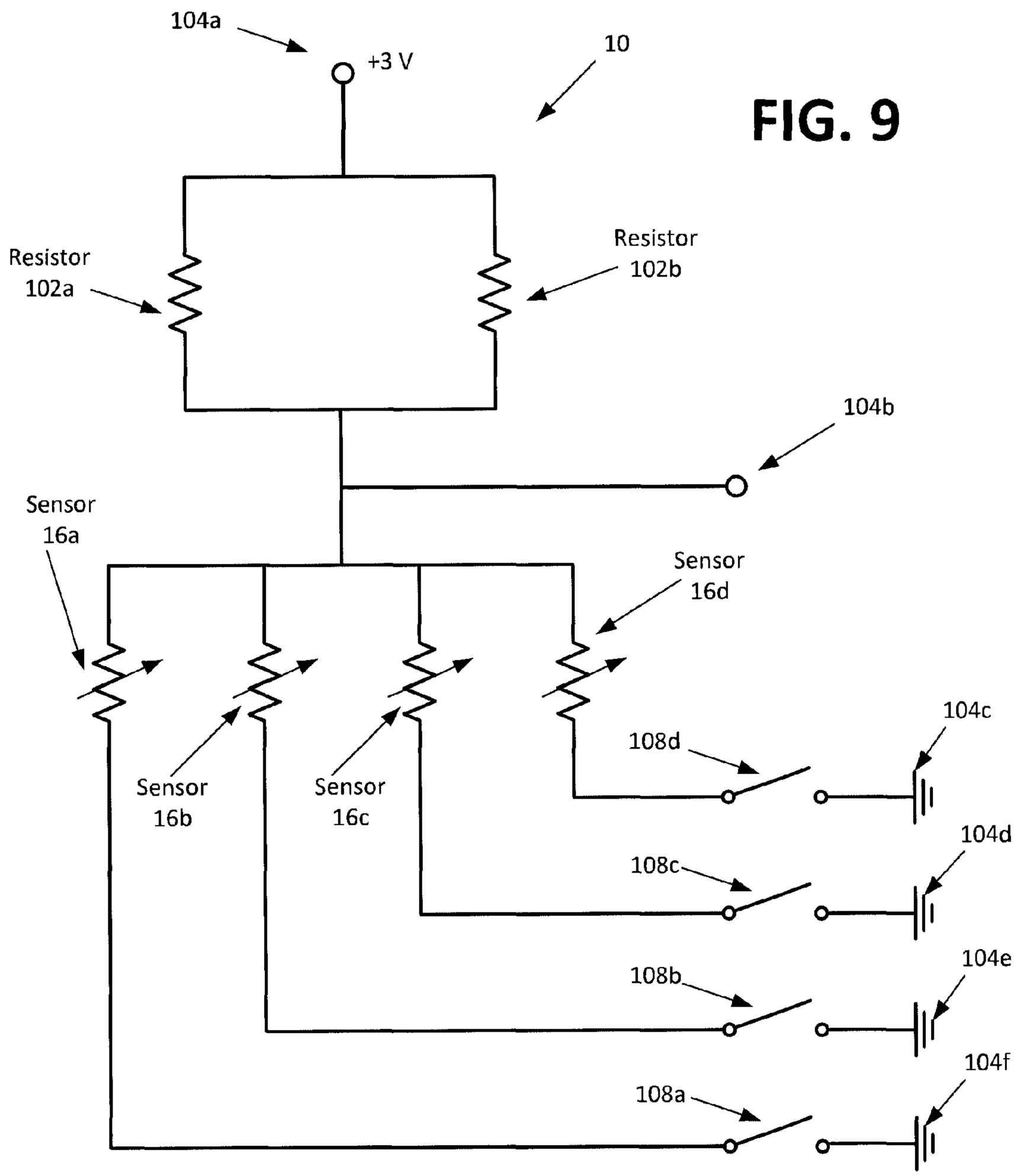
104a
+3 V
10
Resistor
102a
Resistor
102b
104b
Sensor
16a
Sensor
16d
Sensor
16b
Sensor
16c
104c
108d
104d
108c
104e
108b
104f
108a

FIG. 9

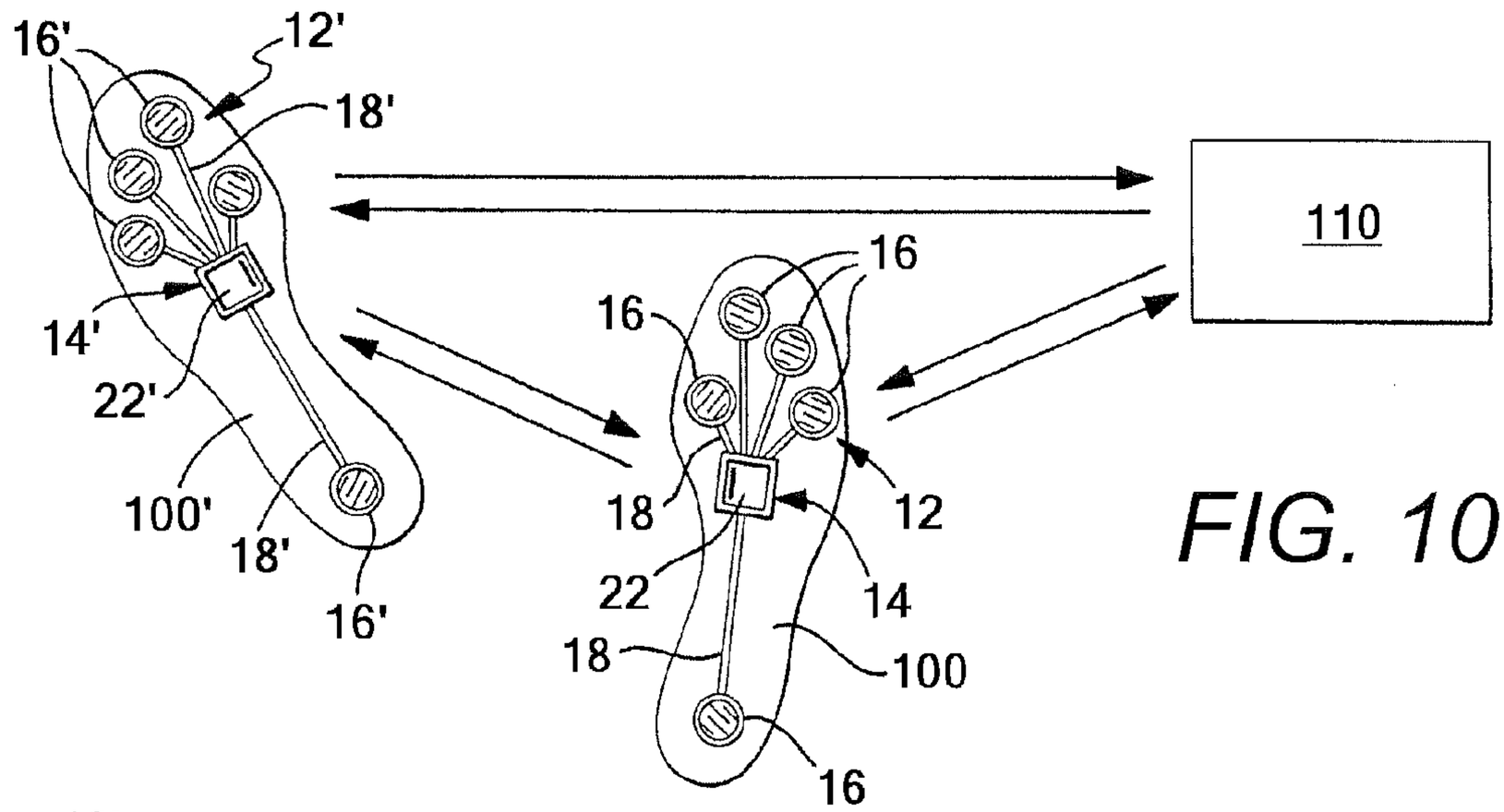

FIG. 10

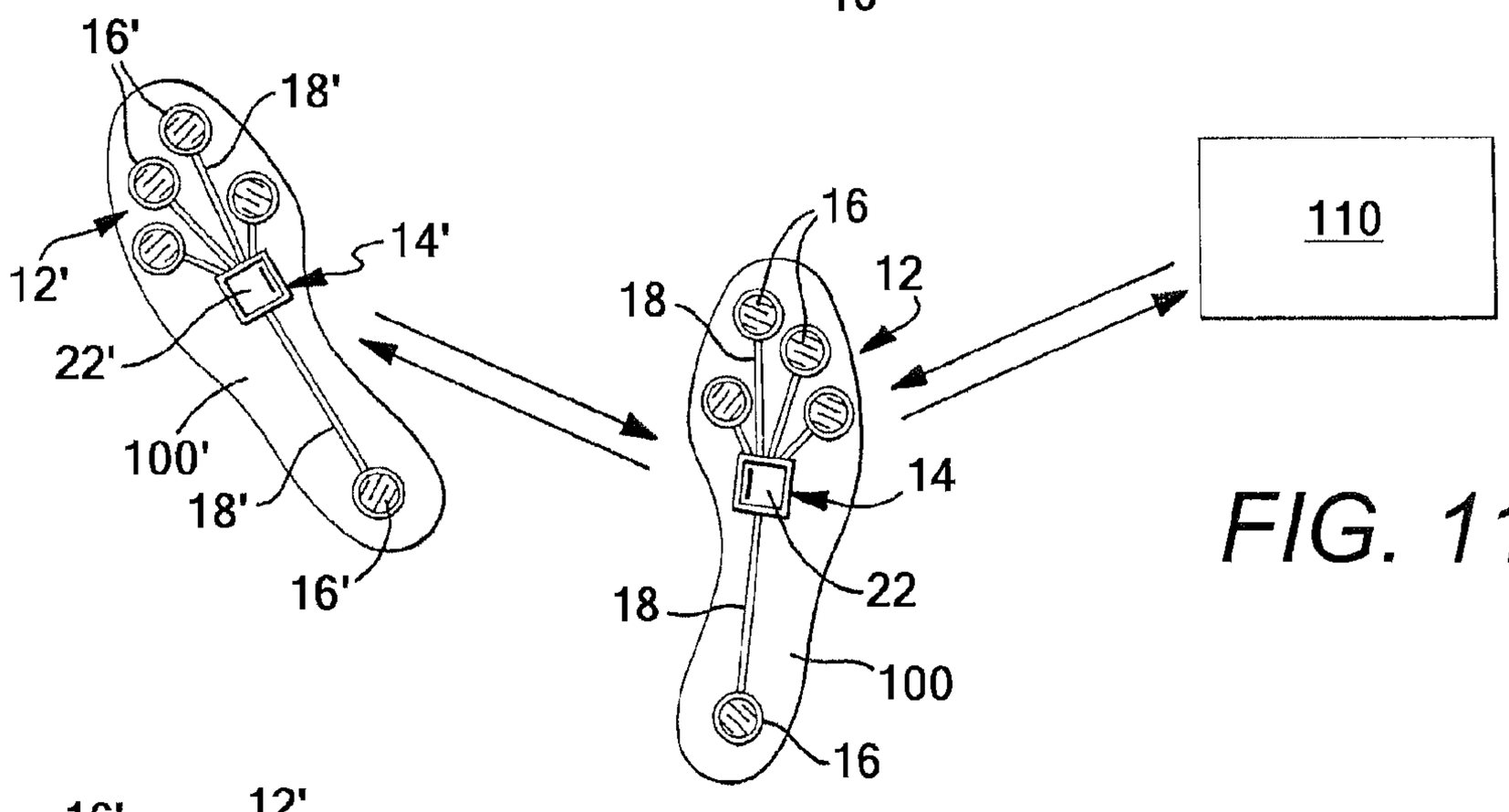

FIG. 11

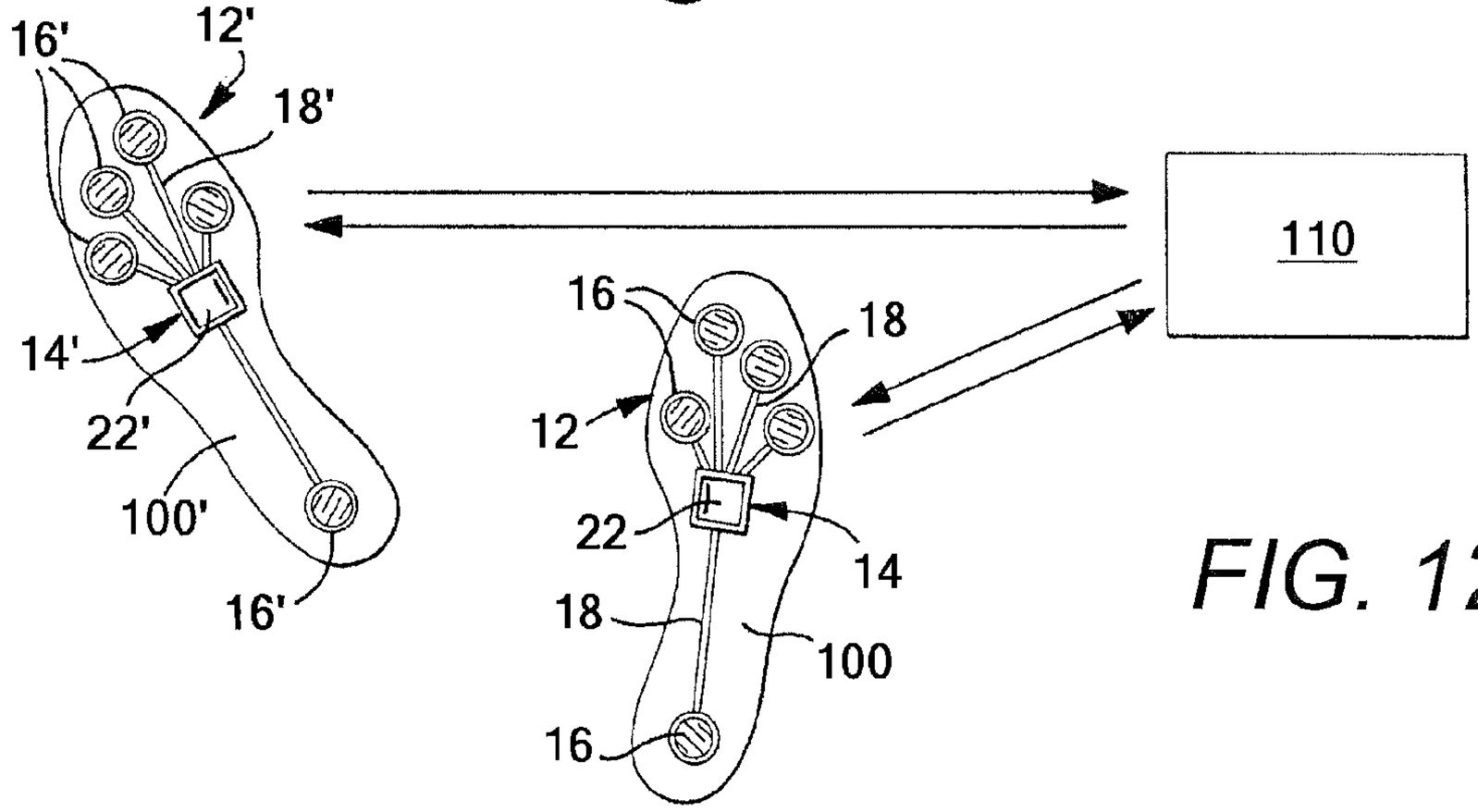

FIG. 12

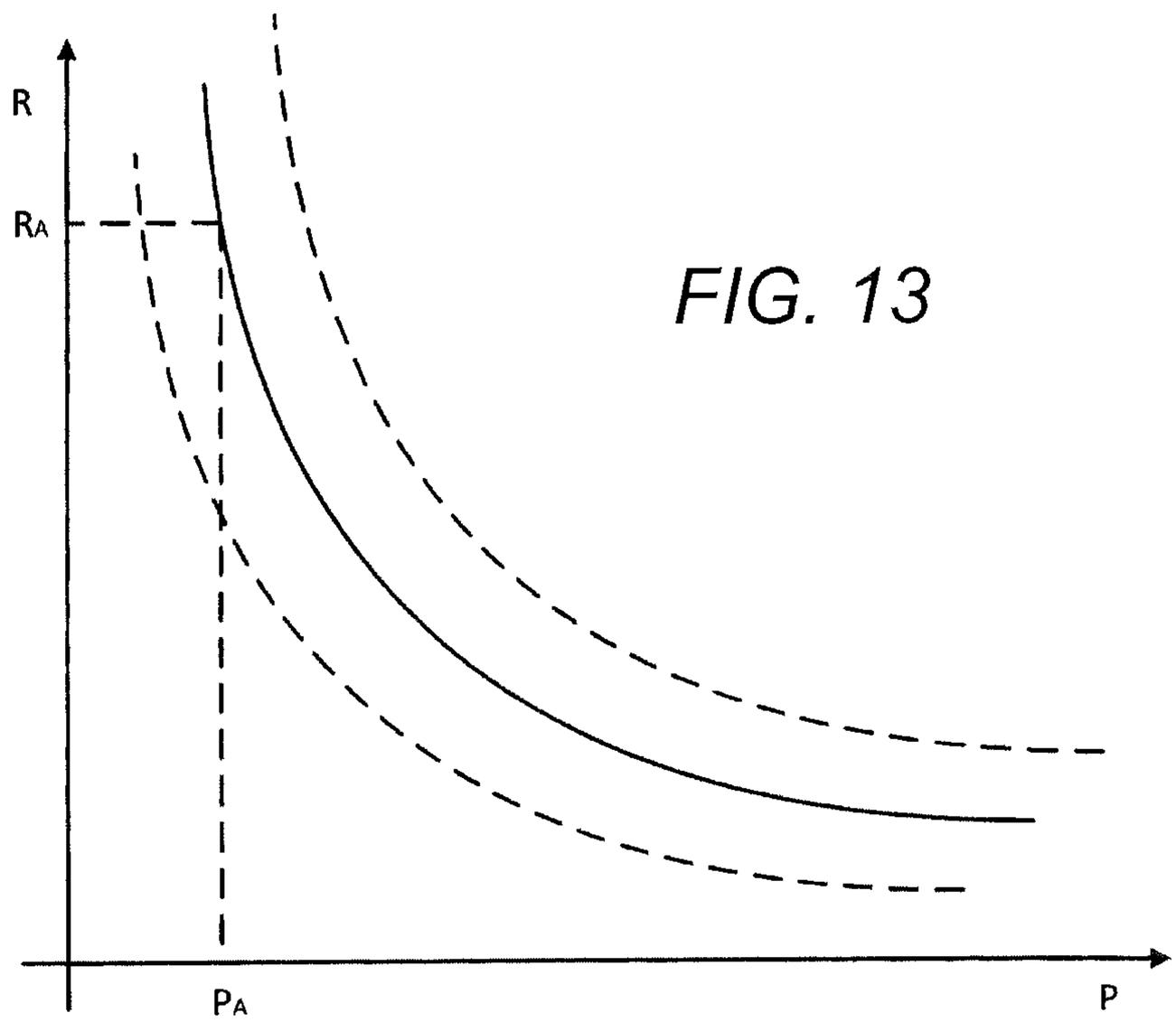

FIG. 13

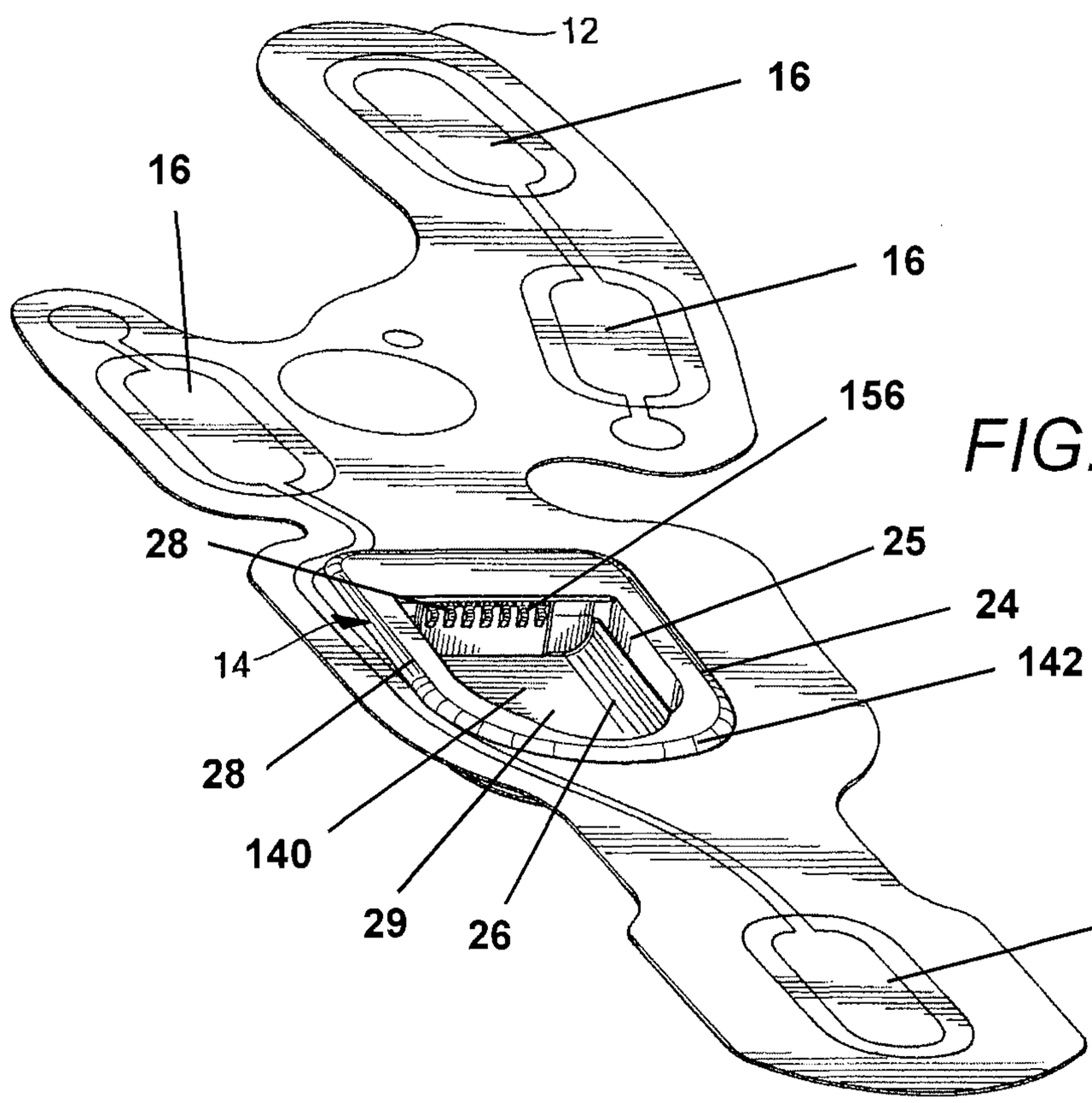

FIG. 14A

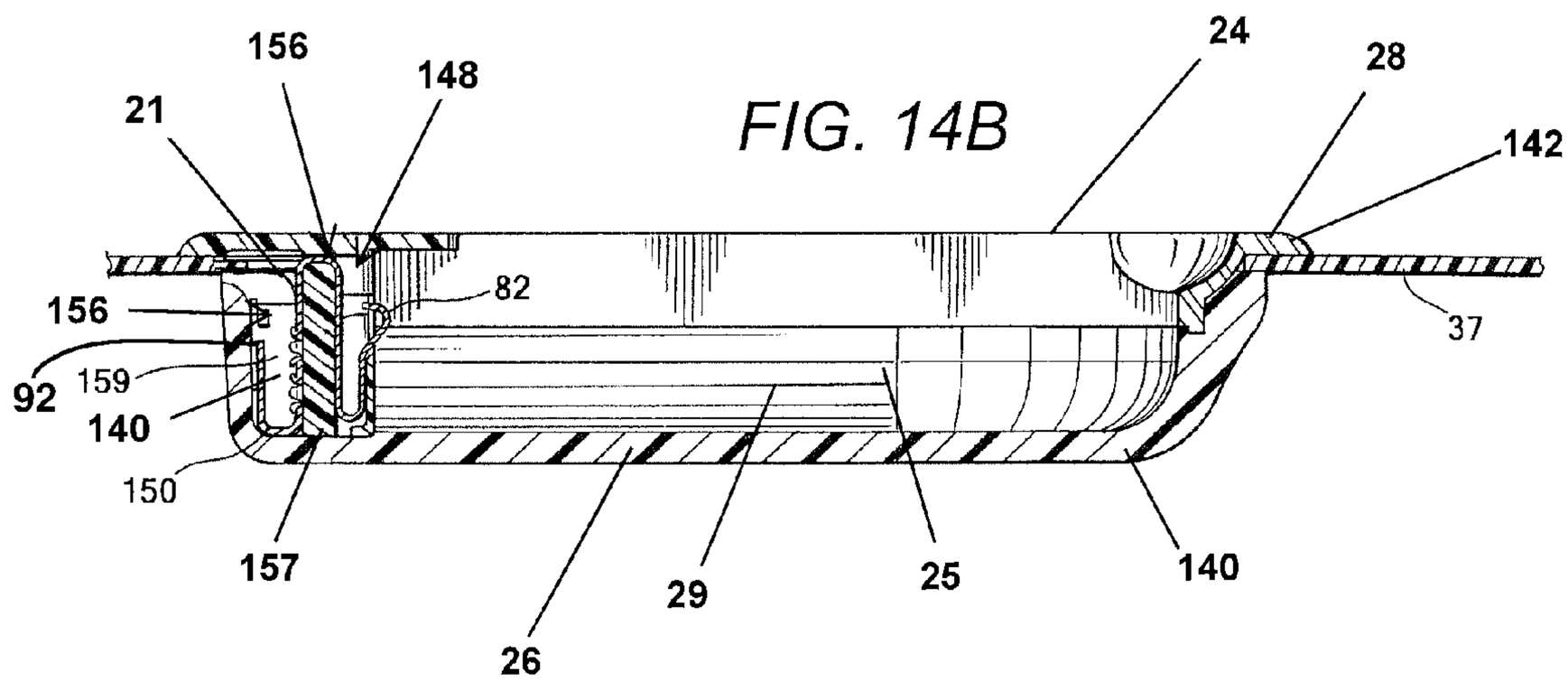
FIG. 14B
156
148
21
24
28
142
82
156
37
92
159
140
150
157
29
25
140
26

FIG. 15

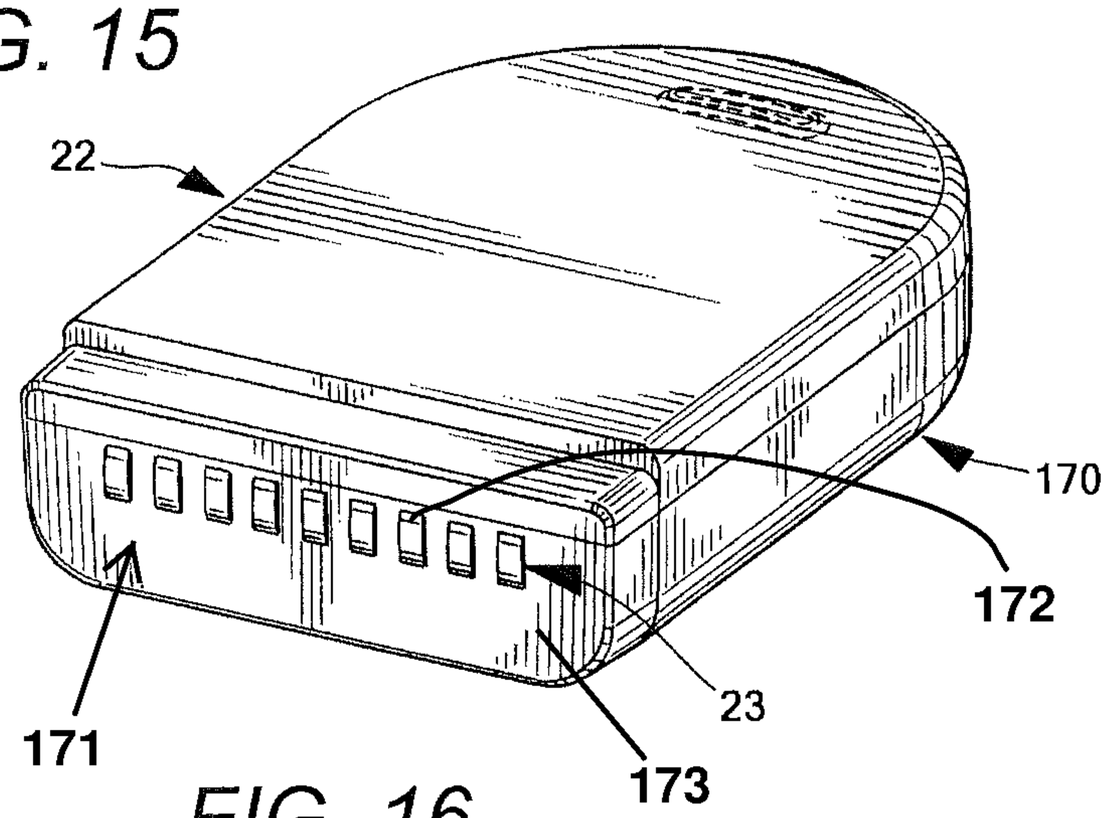

FIG. 16

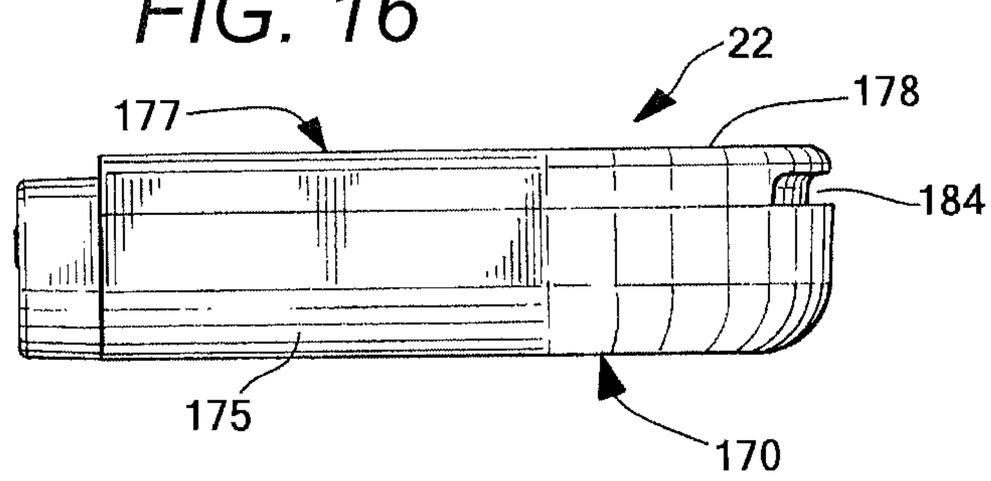

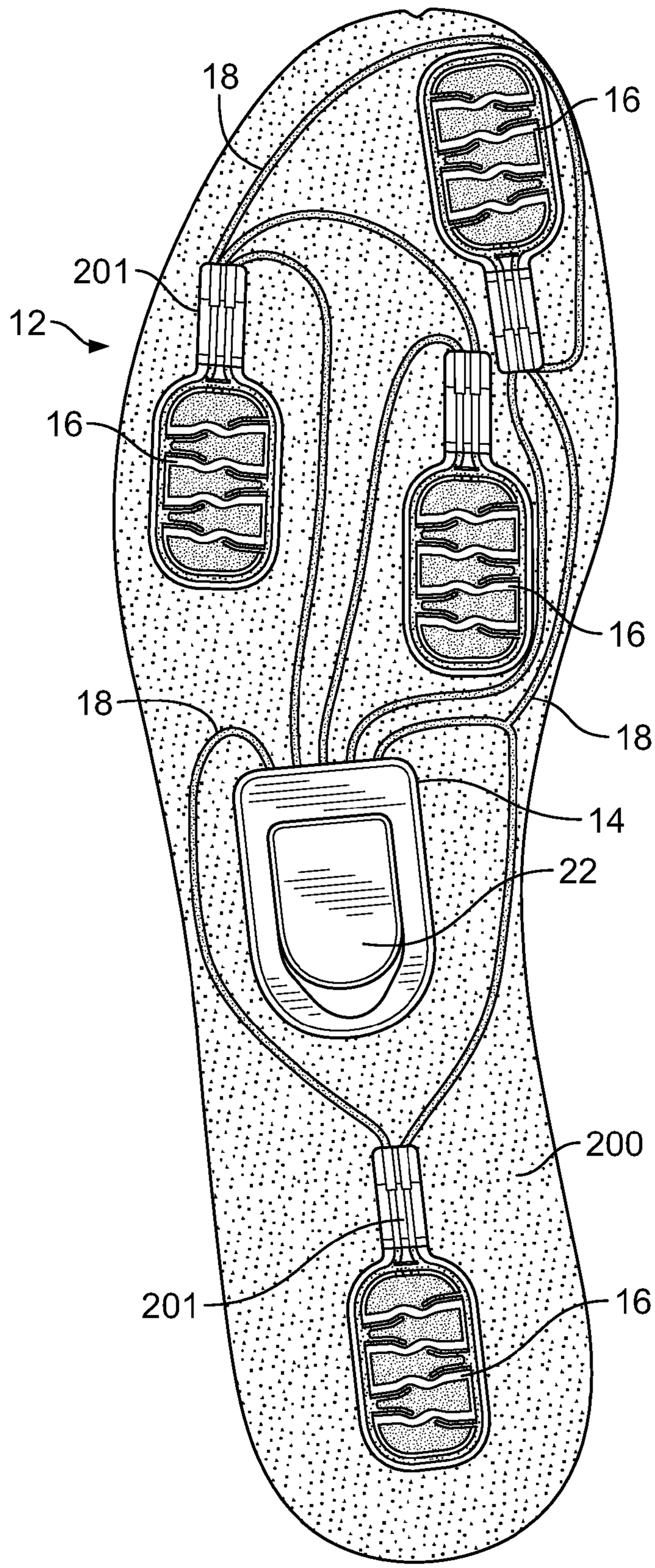

FIG. 17

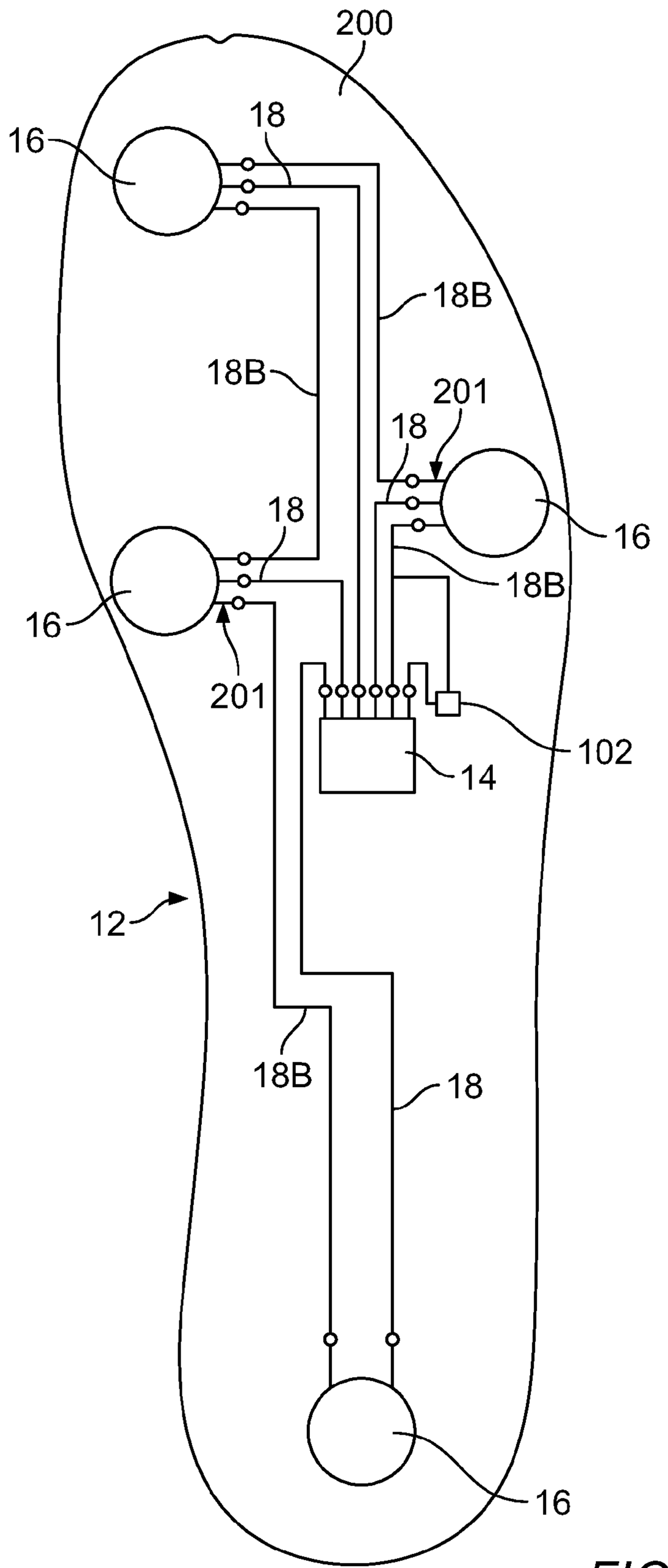

FIG. 18A

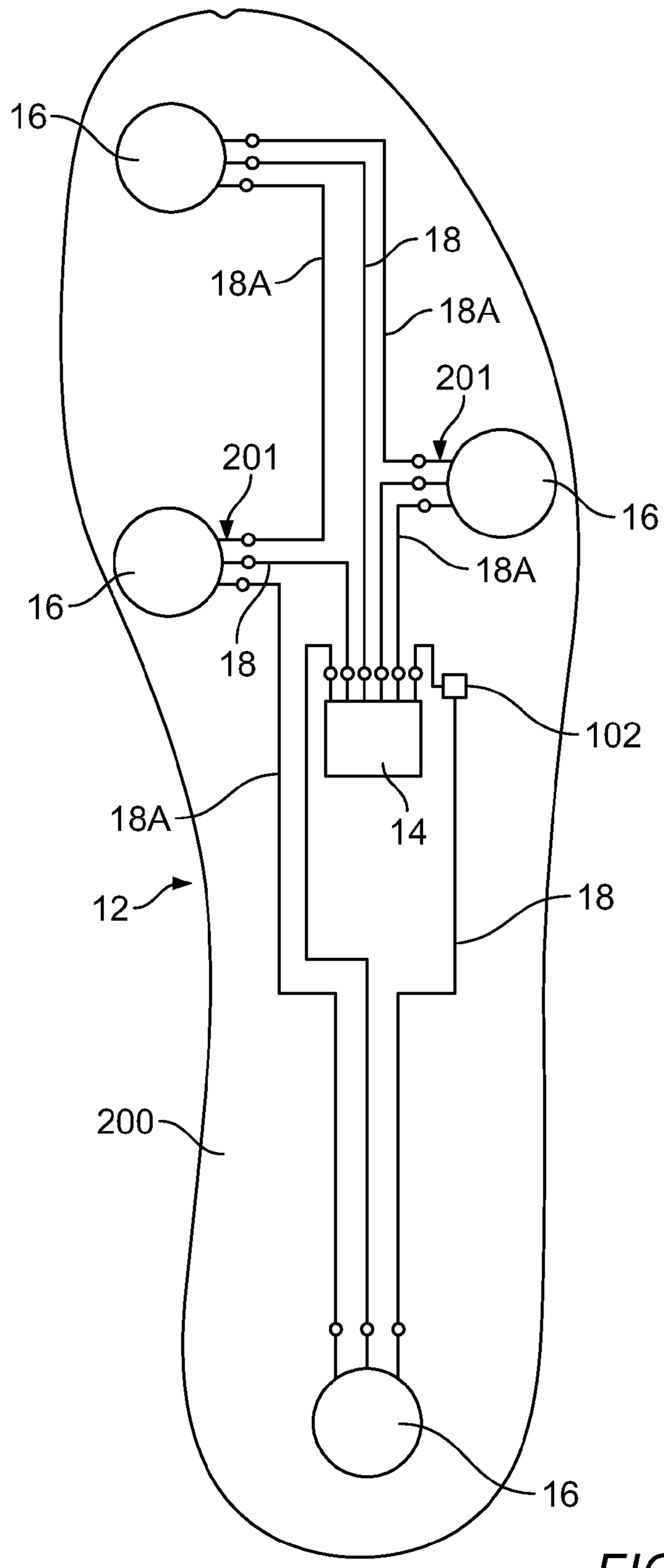

FIG. 18B

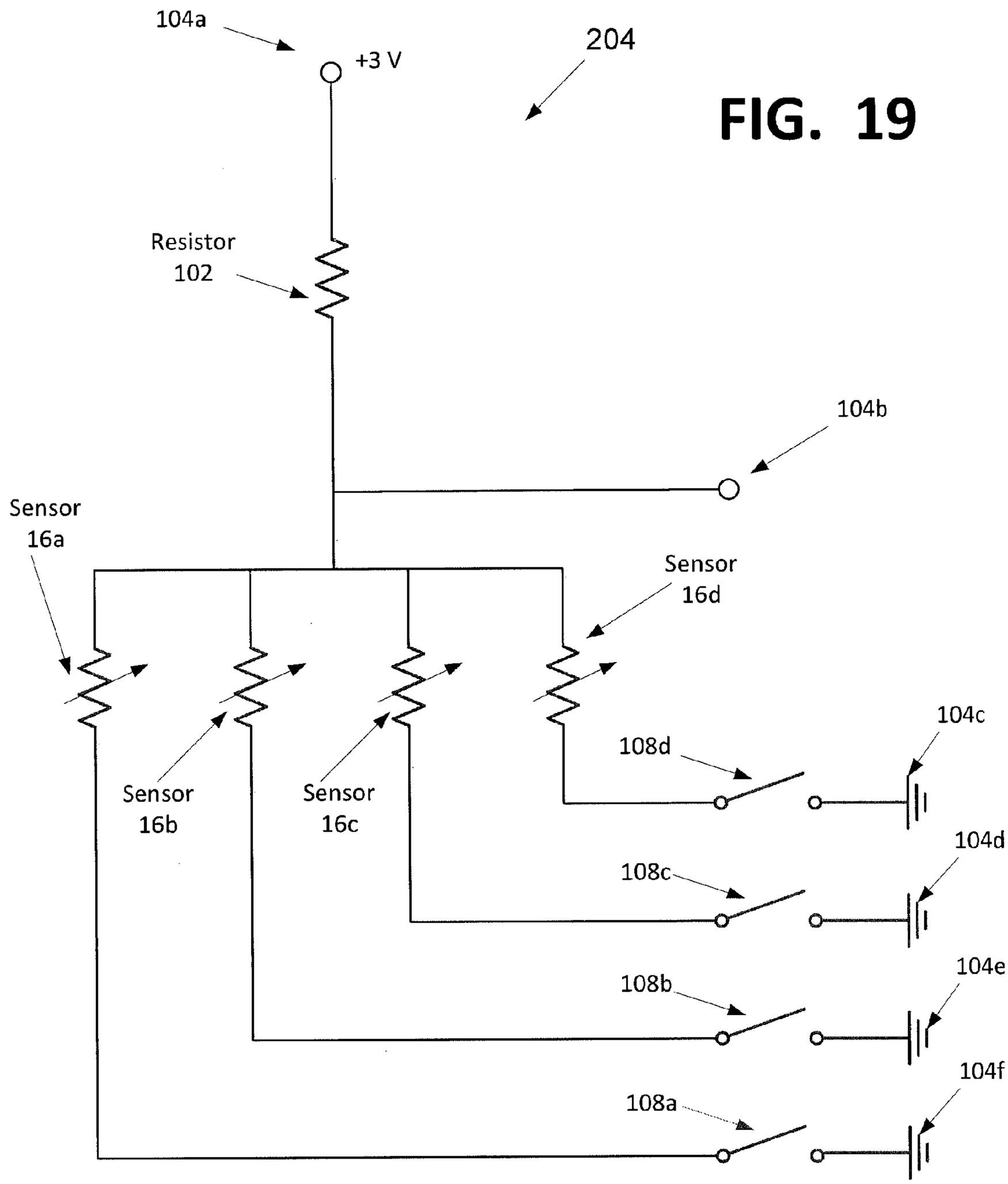
104a
+3 V
204
Resistor
102
104b
Sensor
16a
Sensor
16d
104c
108d
Sensor
16b
Sensor
16c
104d
108c
104e
108b
104f
108a

FIG. 19

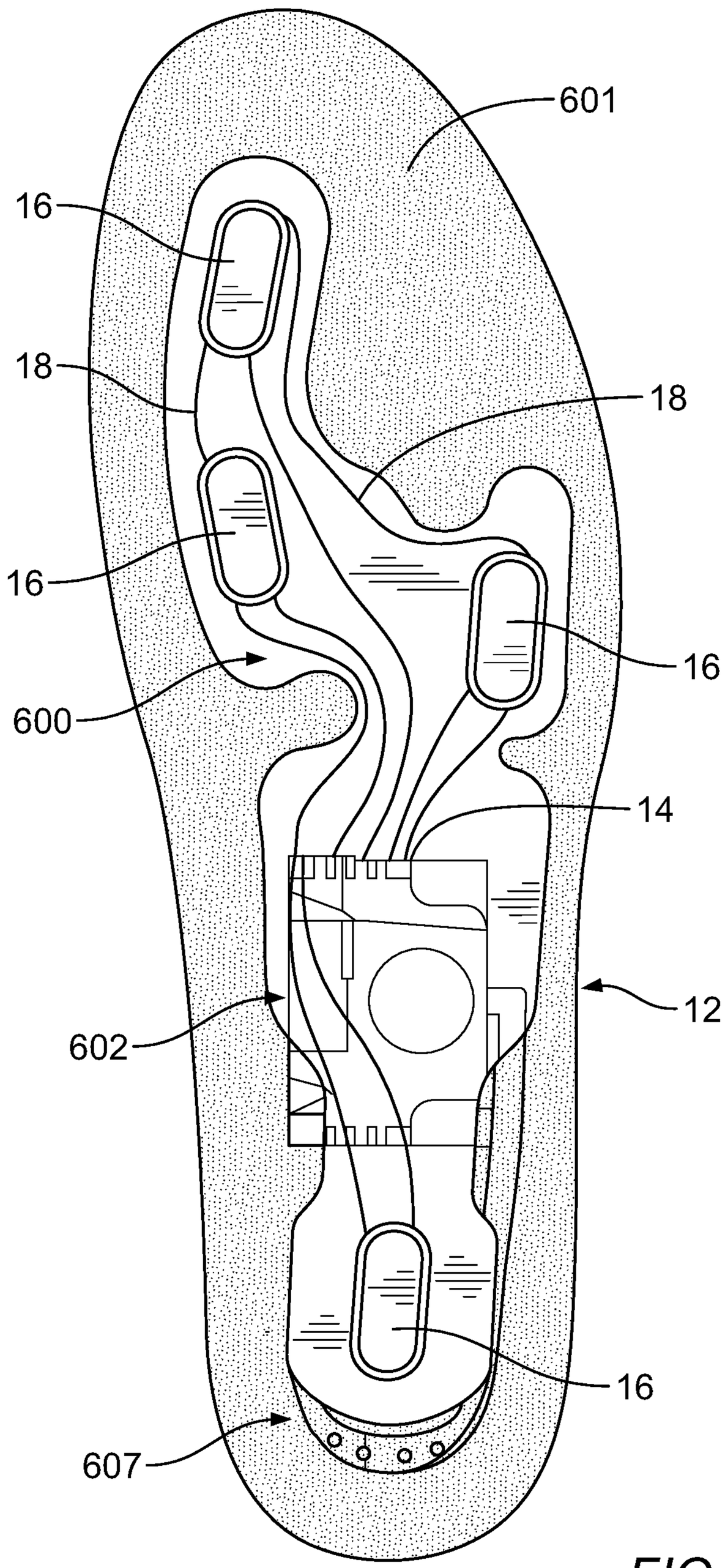

FIG. 20

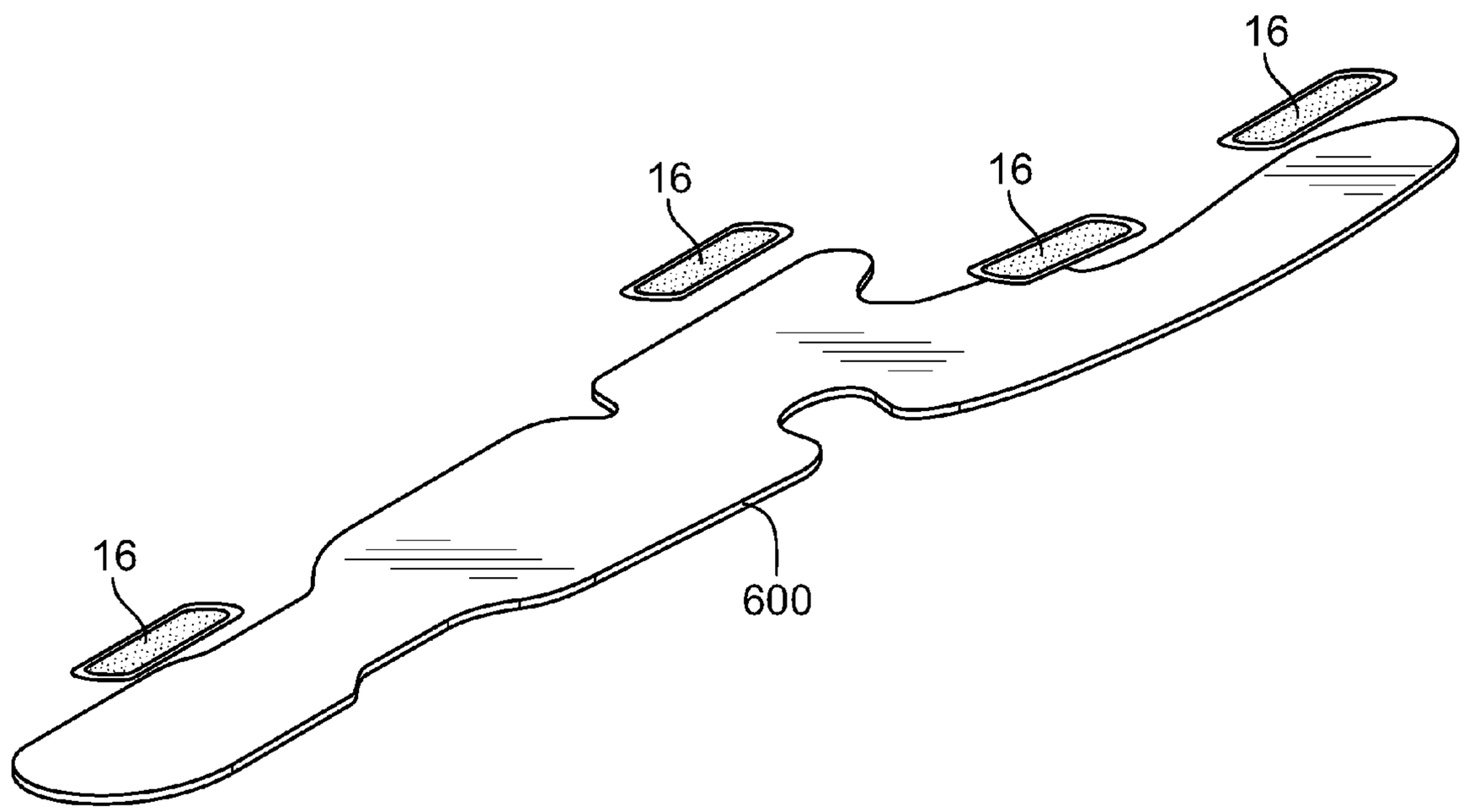

FIG. 21

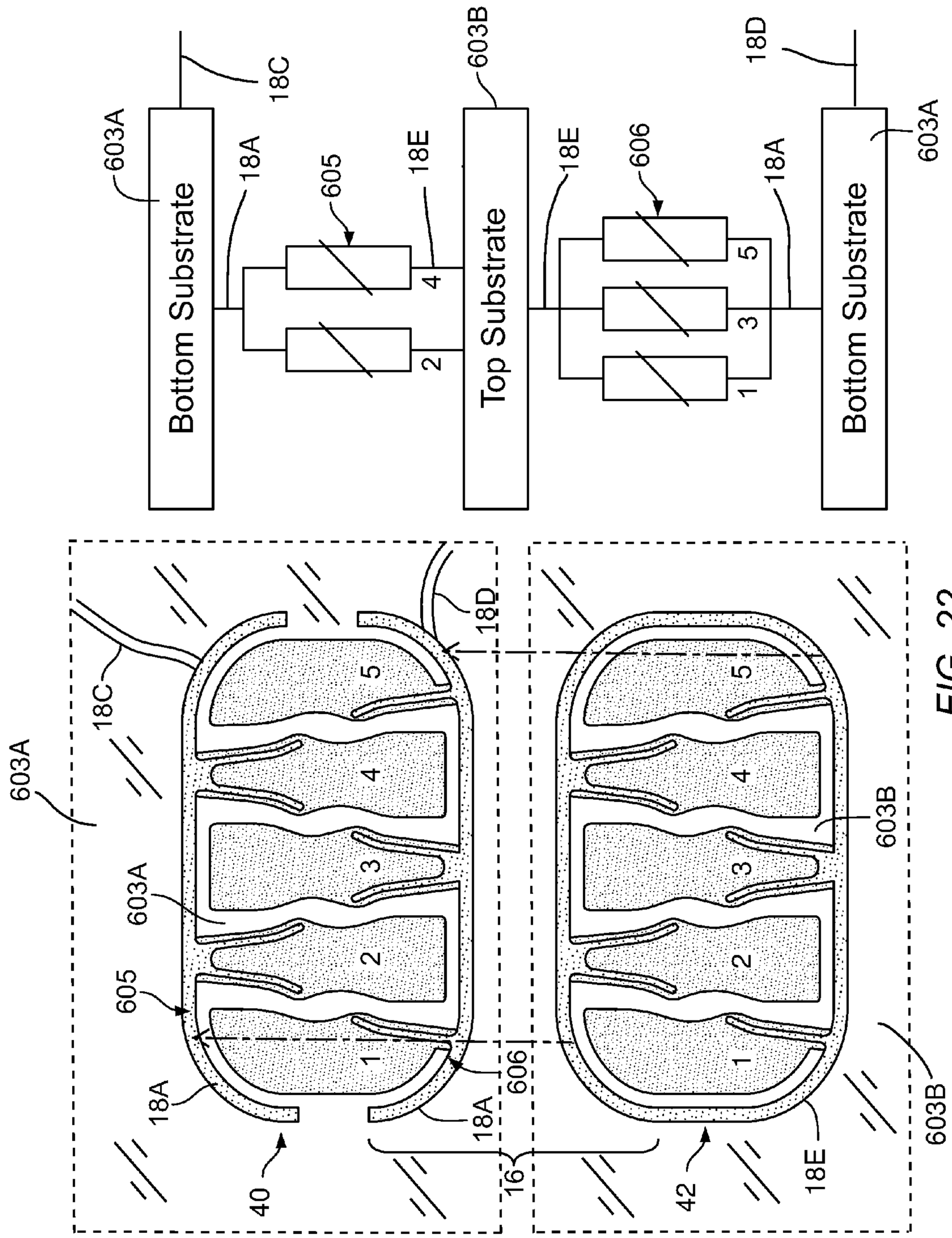
603A
Bottom Substrate
18C
18A
605
18E
603B
Top Substrate
18E
606
18A
18D
603A
Bottom Substrate
1
2
3
4
5
18C
603A
605
18A
40
16
18A
606
18D
603B
18E
42

FIG. 22

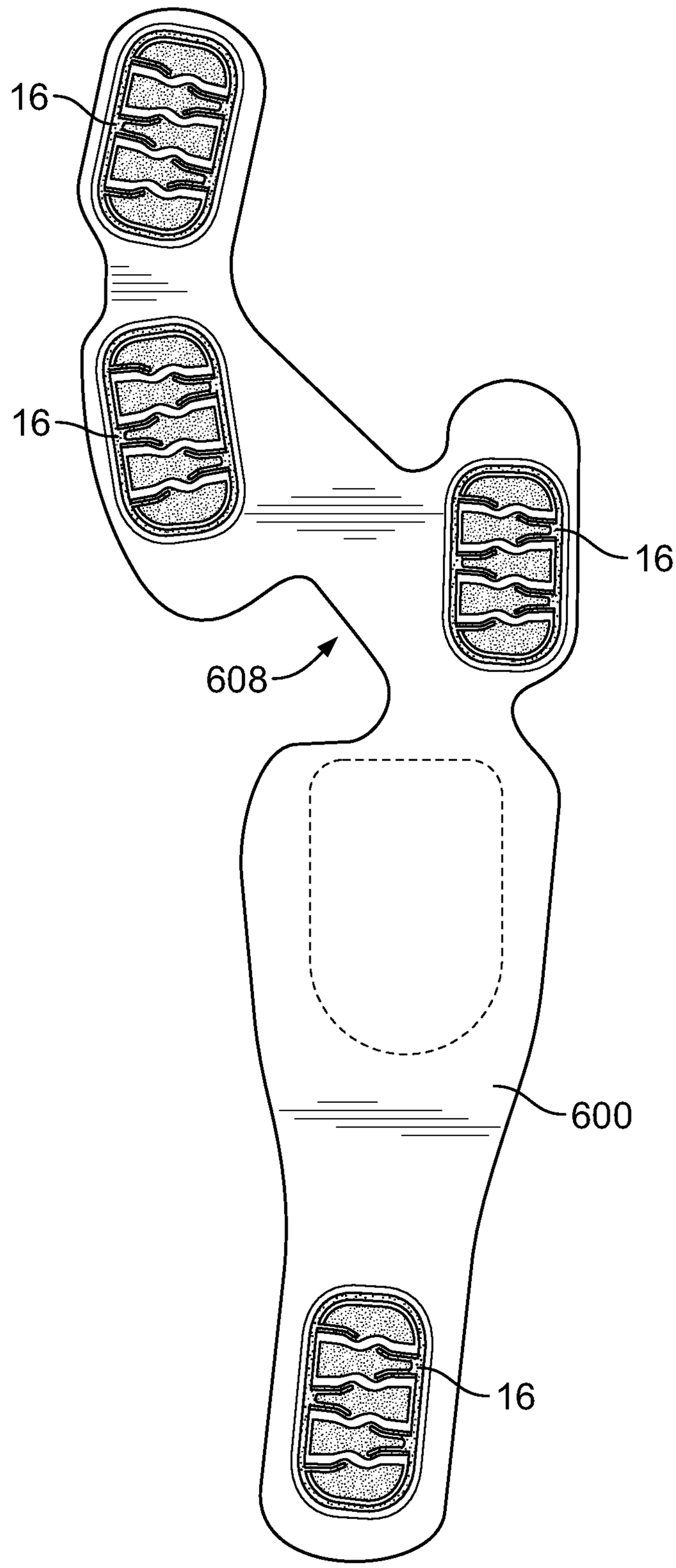

FIG. 23

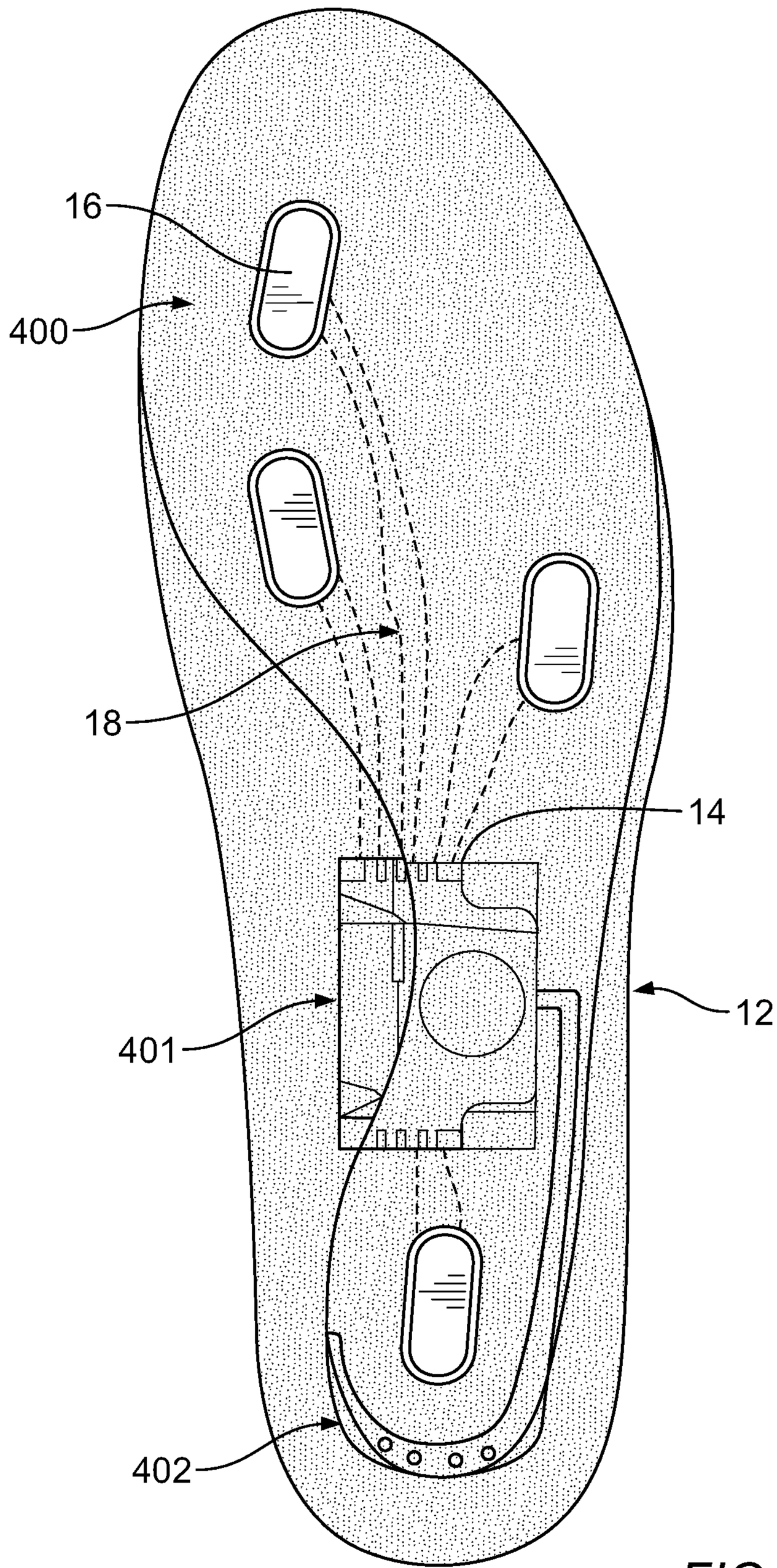

FIG. 24

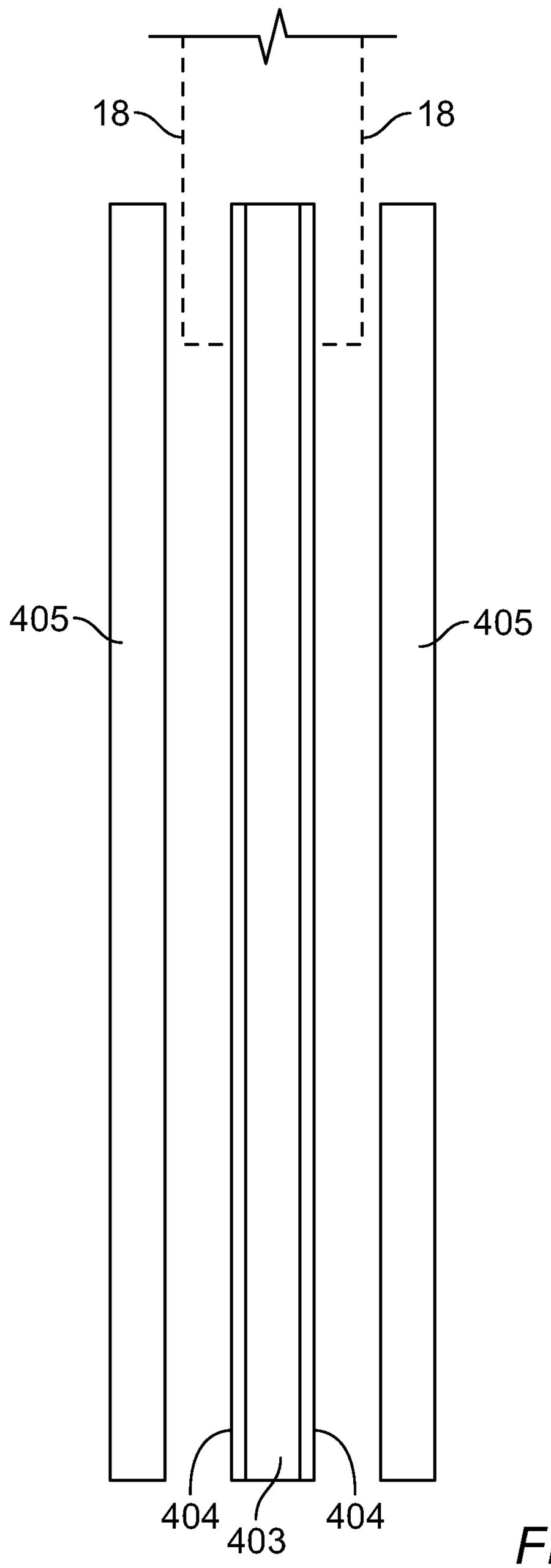

FIG. 25

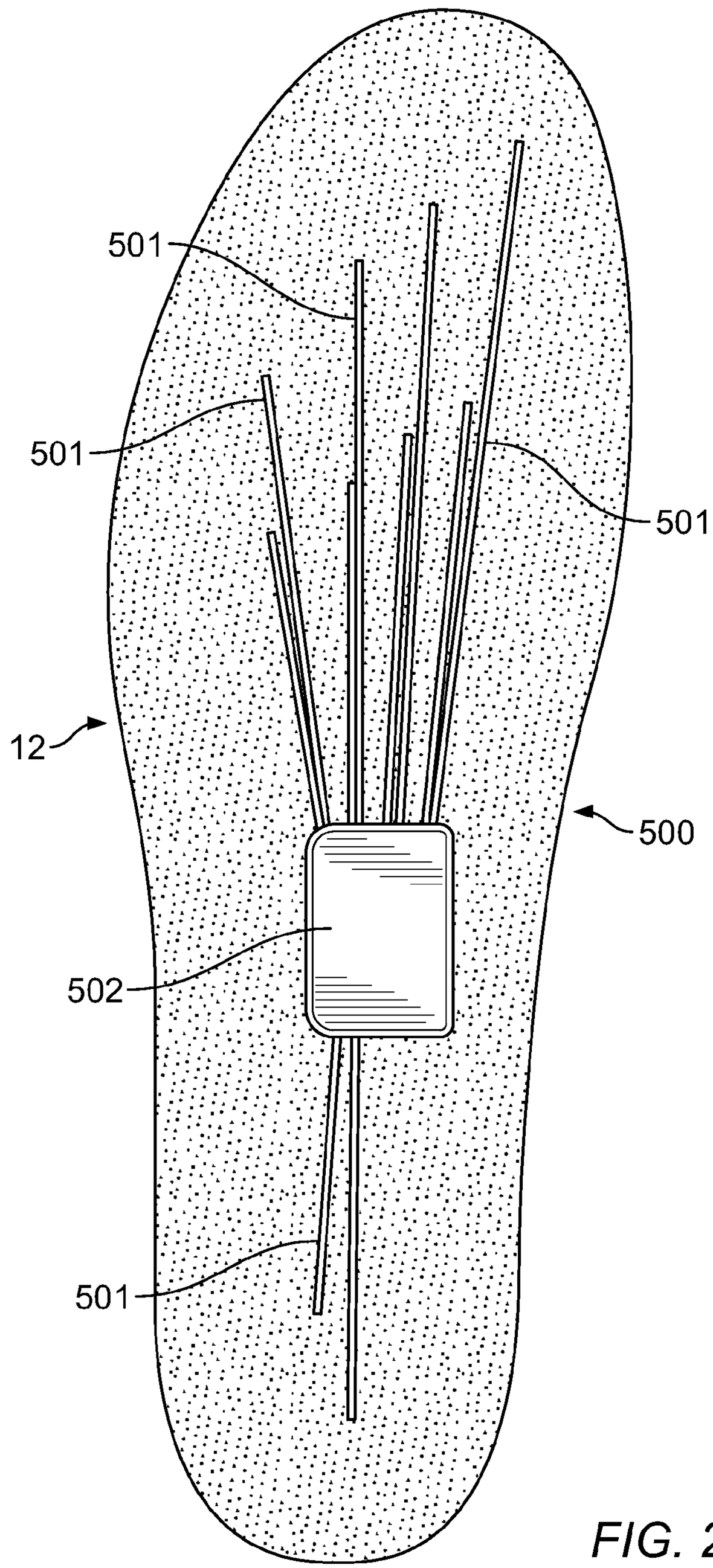

FIG. 26

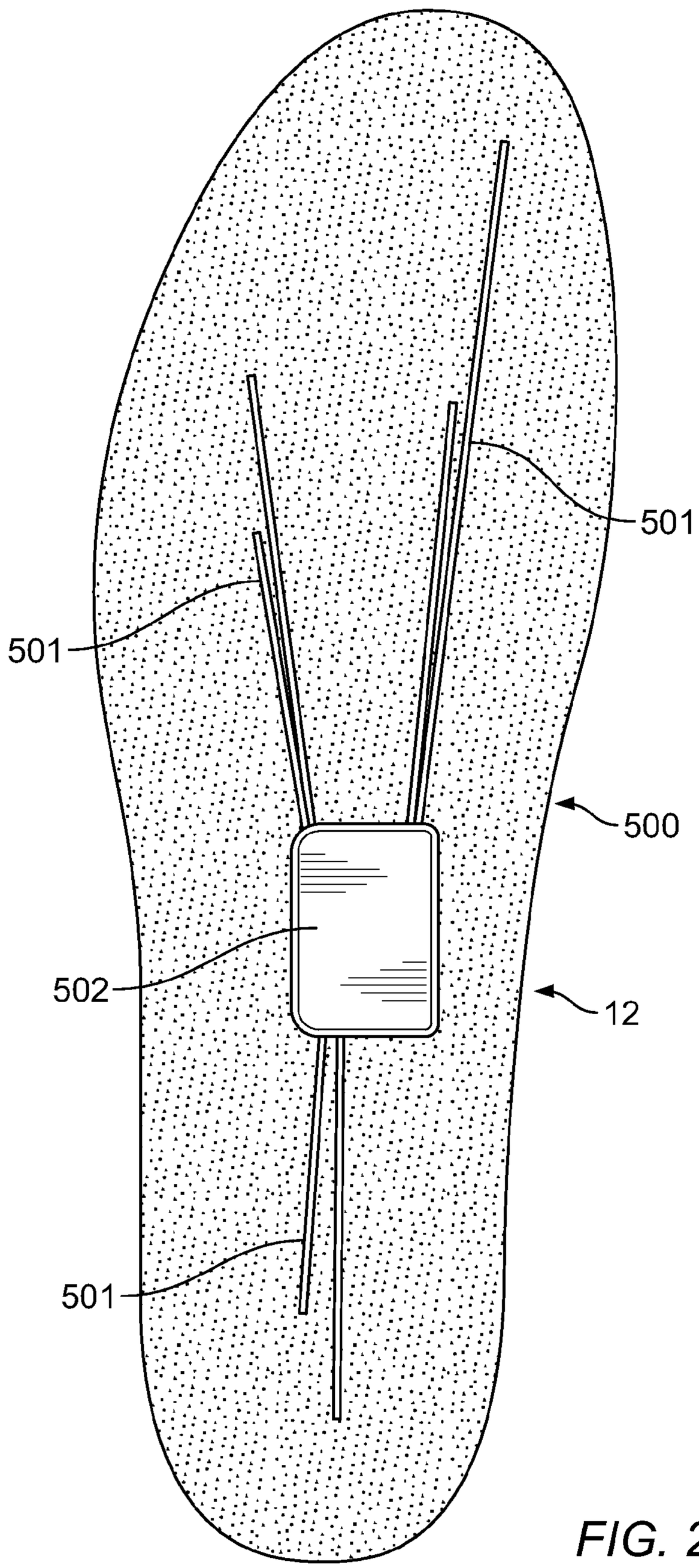

FIG. 27

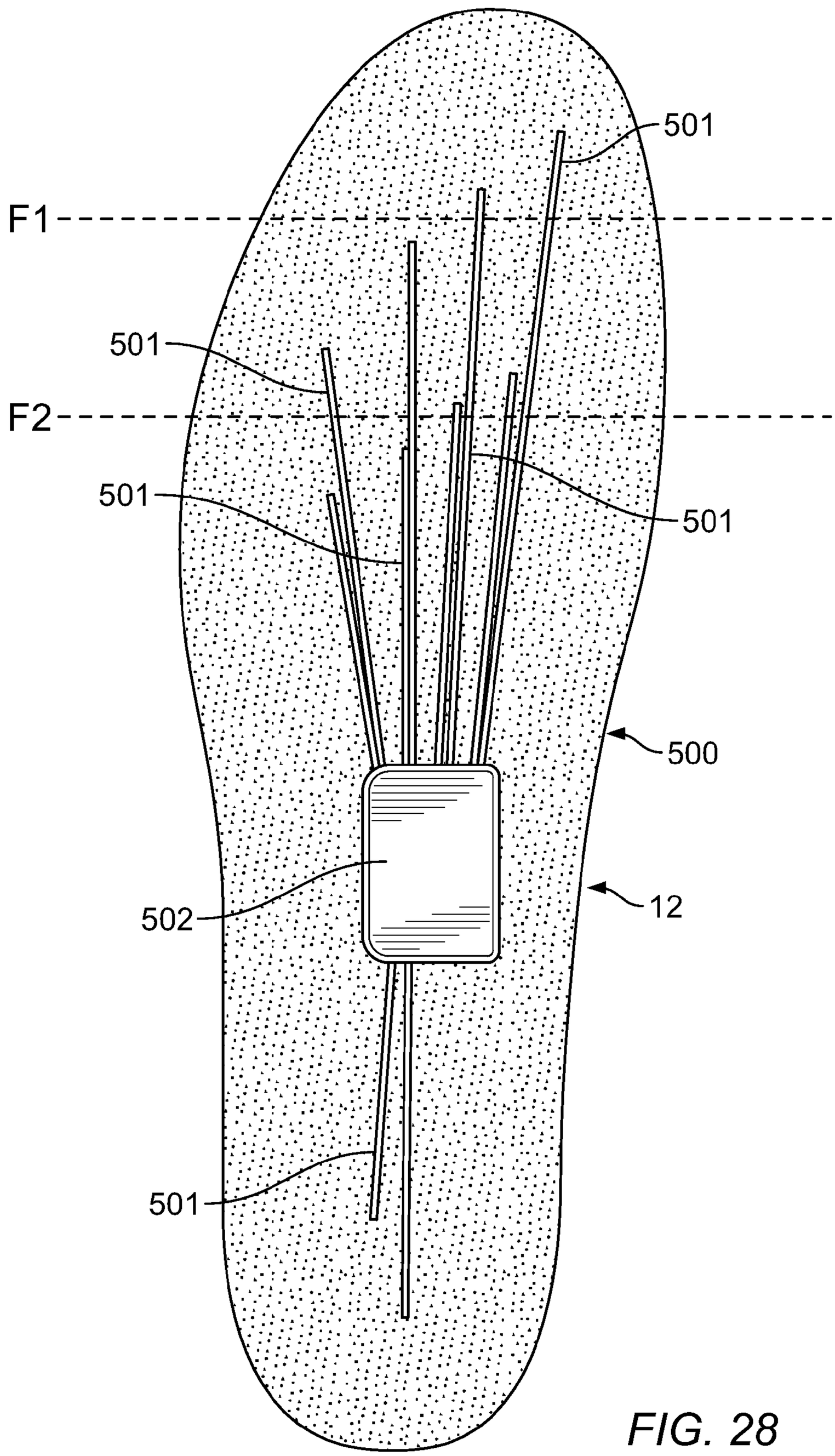

FIG. 28

SYSTEM AND METHOD OF ANALYZING ATHLETIC ACTIVITY

CROSS-REFERENCE TO RELATED APPLICATION

The present application claims priority to and is a continuation of U.S. patent application Ser. No. 14/088,036, filed Nov. 22, 2013, which application claims priority to and is a non-provisional filing of U.S. Provisional Application No. 61/801,235, filed Mar. 15, 2013, which applications are incorporated by reference herein in their entireties.

TECHNICAL FIELD

The present invention generally relates to systems, apparatuses, and methods for detecting and monitoring athletic activity and other movement, which may utilize data input from a sensor system incorporated into an article of footwear.

BACKGROUND

Systems that utilize data collected from athletic activity are known. Such data can be analyzed and presented to a user in a number of different forms and formats, including by indication of performance metrics. However, sensor systems and other hardware for gathering data for such athletic activity present challenges, such as in construction, durability, accuracy, sensitivity, etc. Accordingly, while certain systems for monitoring and detecting athletic activity have a number of advantageous features, they nevertheless have certain limitations. The present invention seeks to overcome certain of these limitations and other drawbacks of the prior art, and to provide new features not heretofore available.

SUMMARY OF THE INVENTION

The following presents a general summary of aspects of the invention in order to provide a basic understanding of the invention. This summary is not an extensive overview of the invention. It is not intended to identify key or critical elements of the invention or to delineate the scope of the invention. The following summary merely presents some concepts of the invention in a general form as a prelude to the more detailed description provided below.

General aspects of the disclosure relate to a sensor system for use with an article of footwear, including a flexible insert member configured to be connected to a sole structure of the article of footwear, a port connected to the insert member and configured for communication with an electronic module or other device, and a plurality of sensors connected to the insert member. Each sensor includes a strip of a sensor material that is electrically connected to the port. Each strip may be directly connected to the port, or connected to the port by intermediate connectors, to electrically connect the sensors to the port. The system may also include an electronic module connected to the port, which is configured for collecting data from the sensors and for communication with an external device. The module may be removable from the port.

Aspects of the disclosure relate to a sensor system as described above, where the port is located in a midfoot region of the insert member, and a first plurality of the strips of the sensor material extend from the midfoot region to a forefoot region of the insert member, at least some of the first plurality of strips having different lengths from others of the first plurality of strips. Additionally, a second plurality of the strips of the sensor material extend from the midfoot region to a heel region of the insert member, at least some of the second plurality of strips having different lengths from others of the second plurality of strips.

According to one aspect, the sensor material of each sensor is a piezoelectric material configured to generate a voltage when deformed. The electronic module may be configured for collecting data from the sensors based on voltage generated by the piezoelectric material. The electronic module may additionally be configured for generating a voltage across the sensors to cause deformation of the piezoelectric material to provide tactile feedback to a user. Further, the electronic module may include a power source, and the electronic module may be configured for utilizing the voltage generated by the piezoelectric material to charge the power source. Still further, the electronic module may be configured for determining a degree of flexing of the insert member based on a number of the strips that are deformed. In one configuration, each sensor may include the strip of piezoelectric material having metallization on opposed surfaces thereof, where the metallization provides a point for electronic connection. Each sensor may also include polymer layers surrounding the piezoelectric material and the metallization.

According to another aspect, at least some of the first plurality of strips extend farther from the midfoot region of the insert member relative to others of the first plurality of strips, and wherein at least some of the second plurality of strips extend farther from the midfoot region of the insert member relative to others of the second plurality of strips.

Additional aspects of the disclosure relate to a sensor system as described above, where a first plurality of the strips of the piezoelectric material are positioned at least partially in a forefoot region of the insert member, such that at least some of the first plurality of strips extend farther from a midfoot region of the insert member relative to others of the first plurality of strips. A second plurality of the strips of the piezoelectric material are positioned at least partially in a heel region of the insert member, such that at least some of the second plurality of strips extend farther from the midfoot region of the insert member relative to others of the second plurality of strips. The system may incorporate any aspects described above.

According to one aspect, at least some of the first plurality of strips have different lengths relative to others of the first plurality of strips, and wherein at least some of the second plurality of strips have different lengths relative to others of the second plurality of strips.

Further aspects of the disclosure relate to an article of footwear that includes an upper member at least partially defining a foot-receiving chamber, a sole structure engaged with the upper member, and a sensor system as described above connected to the sole structure thereof. The insert member of the sensor system may be received within the foot-receiving chamber.

Other features and advantages of the invention will be apparent from the following description, taken in conjunction with the attached drawings.

BRIEF DESCRIPTION OF THE DRAWINGS

To allow for a more full understanding of the present invention, it will now be described by way of example, with reference to the accompanying drawings in which:

FIG. **1** is a side view of a shoe;

FIG. **2** is an opposed side view of the shoe of FIG. **1**;

FIG. **3** is a top perspective view of a sole of a shoe (having a shoe upper removed and a foot contacting member folded aside) incorporating one embodiment of a sensor system that is configured for use in connection with aspects of the present invention;

FIG. **4** is a top perspective view of the sole and the sensor system of FIG. **3**, with a foot contacting member of the shoe removed and an electronic module removed;

FIG. **5** is a schematic diagram of one embodiment of an electronic module capable of use with a sensor system, in communication with an external electronic device;

FIG. **6** is a top view of an insert of the sensor system of FIG. **3**, adapted to be positioned within the sole structure of an article of footwear for a user's right foot;

FIG. **7** is a top view of the insert of FIG. **6** and a similar sensor system adapted for use in the sole structure of an article of footwear for a user's left foot;

FIG. **8** is an exploded perspective view of the insert of FIG. **6**, showing four different layers;

FIG. **9** is a schematic circuit diagram illustrating one embodiment of a circuit formed by the components of the sensor system of FIG. **3**;

FIG. **10** is a schematic diagram of a pair of shoes, each containing a sensor system, in a mesh communication mode with an external device;

FIG. **11** is a schematic diagram of a pair of shoes, each containing a sensor system, in a "daisy chain" communication mode with an external device;

FIG. **12** is a schematic diagram of a pair of shoes, each containing a sensor system, in an independent communication mode with an external device;

FIG. **13** is a plot showing pressure vs. resistance for one embodiment of a sensor according to aspects of the present invention;

FIG. **14**A is a perspective view of one embodiment of a port and a housing for connection to an electronic module, attached to an insert member;

FIG. **14**B is a cross-section view of the port and housing of FIG. **14**A;

FIG. **15** is a perspective view of a module according to aspects of the present invention;

FIG. **16** is a side view of the module of FIG. **15**;

FIG. **17** is a top view of another embodiment of a sole member for an article of footwear incorporating one embodiment of a sensor system that is configured for use in connection with aspects of the present invention;

FIG. **18**A is a schematic view of one embodiment of a system of electronic connections of the components of the sensor system illustrated in FIG. **17**;

FIG. **18**B is a schematic view of another embodiment of a system of electronic connections of the components of the sensor system illustrated in FIG. **17**;

FIG. **19** is a schematic circuit diagram illustrating one embodiment of a circuit formed by the components of the sensor system of FIG. **17**;

FIG. **20** is a top view of another embodiment of a sole member for an article of footwear incorporating one embodiment of a sensor system that is configured for use in connection with aspects of the present invention;

FIG. **21** is a perspective view of an insert used with the sensor system of FIG. **20**;

FIG. **22** illustrates a sensor of the sensor system of FIG. **20**, as well as a schematic illustration of the function of the sensor;

FIG. **23** is a top view of another embodiment of an insert usable with the sensor system of FIG. **20**;

FIG. **24** is a top view of another embodiment of a sensor system that is configured for use in connection with aspects of the present invention;

FIG. **25** is a schematic view of a sensor of the sensor system of FIG. **24**;

FIG. **26** is a top view of another embodiment of a sensor system that is configured for use in connection with aspects of the present invention;

FIG. **27** is a top view of another embodiment of a sensor system that is configured for use in connection with aspects of the present invention; and

FIG. **28** is a schematic illustration of a method of functioning of the sensor system of FIG. **26**.

DETAILED DESCRIPTION

While this invention is susceptible of embodiment in many different forms, there are shown in the drawings, and will herein be described in detail, preferred embodiments of the invention with the understanding that the present disclosure is to be considered as an exemplification of the principles of the invention and is not intended to limit the broad aspects of the invention to the embodiments illustrated and described.

Various embodiments of sensor systems and structure for incorporating sensor systems into articles of footwear are shown and described herein. It is understood that each such embodiment may utilize any of the features described herein with respect to other embodiments, as well as any features described in U.S. patent application Ser. Nos. 13/401,918, 13/401,916, and 13/401,914, filed Feb. 22, 2012; U.S. patent application Ser. Nos. 13/399,778, 13/399,786, 13/399,916, and 13/399,935, filed Feb. 17, 2012; and U.S. patent application Ser. Nos. 12/483,824 and 12/483,828, filed Jun. 12, 2009, which applications are all incorporated by reference herein.

Embodiments of sensor systems described herein may be used in connection with an article of footwear, such as a shoe, which is shown as an example in FIGS. **1-2** and generally designated with the reference numeral **100**. The footwear **100** can take many different forms, including, for example, various types of athletic footwear. In one exemplary embodiment, the shoe **100** generally includes a force and/or pressure sensor system **12** operably connected to a universal communication port **14**. As described in greater detail below, the sensor system **12** collects performance data relating to a wearer of the shoe **100**. Through connection to the universal communication port **14**, multiple different users can access the performance data for a variety of different uses as described in greater detail below.

An article of footwear **100** is depicted in FIGS. **1-2** as including an upper **120** and a sole structure **130**. For purposes of reference in the following description, footwear **100** may be divided into three general regions: a forefoot region **111**, a midfoot region **112**, and a heel region **113**, as illustrated in FIG. **1**. Regions **111-113** are not intended to demarcate precise areas of footwear **100**. Rather, regions **111-113** are intended to represent general areas of footwear **100** that provide a frame of reference during the following discussion. Although regions **111-113** apply generally to footwear **100**, references to regions **111-113** also may apply specifically to upper **120**, sole structure **130**, or individual components included within and/or formed as part of either upper **120** or sole structure **130**.

As further shown in FIGS. **1** and **2**, the upper **120** is secured to sole structure **130** and defines a void or chamber for receiving a foot. For purposes of reference, upper **120**

includes a lateral side **121**, an opposite medial side **122**, and a vamp or instep area **123**. Lateral side **121** is positioned to extend along a lateral side of the foot (i.e., the outside) and generally passes through each of regions **111-113**. Similarly, medial side **122** is positioned to extend along an opposite medial side of the foot (i.e., the inside) and generally passes through each of regions **111-113**. Vamp area **123** is positioned between lateral side **121** and medial side **122** to correspond with an upper surface or instep area of the foot. Vamp area **123**, in this illustrated example, includes a throat **124** having a lace **125** or other desired closure mechanism that is utilized in a conventional manner to modify the dimensions of upper **120** relative the foot, thereby adjusting the fit of footwear **100**. Upper **120** also includes an ankle opening **126** that provides the foot with access to the void within upper **120**. A variety of materials may be used for constructing upper **120**, including materials that are conventionally utilized in footwear uppers. Accordingly, upper **120** may be formed from one or more portions of leather, synthetic leather, natural or synthetic textiles, polymer sheets, polymer foams, mesh textiles, felts, non-woven polymers, or rubber materials, for example. The upper **120** may be formed from one or more of these materials wherein the materials or portions thereof are stitched or adhesively bonded together, e.g., in manners that are conventionally known and used in the art.

Upper **120** may also include a heel element (not shown) and a toe element (not shown). The heel element, when present, may extend upward and along the interior surface of upper **120** in the heel region **113** to enhance the comfort of footwear **100**. The toe element, when present, may be located in forefoot region **111** and on an exterior surface of upper **120** to provide wear-resistance, protect the wearer's toes, and assist with positioning of the foot. In some embodiments, one or both of the heel element and the toe element may be absent, or the heel element may be positioned on an exterior surface of the upper **120**, for example. Although the configuration of upper **120** discussed above is suitable for footwear **100**, upper **120** may exhibit the configuration of any desired conventional or non-conventional upper structure without departing from this invention.

As shown in FIG. **3**, the sole structure **130** is secured to a lower surface of upper **120** and may have a generally conventional shape. The sole structure **130** may have a multipiece structure, e.g., one that includes a midsole **131**, an outsole **132**, and a foot contacting member **133**. The foot contacting member **133** is typically a thin, compressible member that may be located within the void in upper **120** and adjacent to a lower surface of the foot (or between the upper **120** and midsole **131**) to enhance the comfort of footwear **100**. In various embodiments, the foot contacting member **133** may be a sockliner, a strobel, an insole member, a bootie element, a sock, etc. In the embodiment shown in FIGS. **3-4**, the foot contacting member **133** is an insole member or a sockliner. The term "foot contacting member," as used herein does not necessarily imply direct contact with the user's foot, as another element may interfere with direct contact. Rather, the foot contacting member forms a portion of the inner surface of the foot-receiving chamber of an article of footwear. For example, the user may be wearing a sock that interferes with direct contact. As another example, the sensor system **12** may be incorporated into an article of footwear that is designed to slip over a shoe or other article of footwear, such as an external bootie element or shoe cover. In such an article, the upper portion of the sole structure may be considered a foot contacting member, even though it does not directly contact the foot of the user. In some arrangements, an insole or sockliner may be absent, and in other embodiments, the footwear **100** may have a foot contacting member positioned on top of an insole or sockliner.

Midsole member **131** may be or include an impact attenuating member, and may include multiple members or elements in some embodiments. For example, the midsole member **131** may be formed of polymer foam material, such as polyurethane, ethylvinylacetate, or other materials (such as phylon, phylite, etc.) that compress to attenuate ground or other contact surface reaction forces during walking, running, jumping, or other activities. In some example structures according to this invention, the polymer foam material may encapsulate or include various elements, such as a fluid-filled bladder or moderator, that enhance the comfort, motion-control, stability, and/or ground or other contact surface reaction force attenuation properties of footwear **100**. In still other example structures, the midsole **131** may include additional elements that compress to attenuate ground or other contact surface reaction forces. For instance, the midsole **131** may include column type elements to aid in cushioning and absorption of forces.

Outsole **132** is secured to a lower surface of midsole **131** in this illustrated example footwear structure **100** and is formed of a wear-resistant material, such as rubber or a flexible synthetic material, such as polyurethane, that contacts the ground or other surface during ambulatory or other activities. The material forming outsole **132** may be manufactured of suitable materials and/or textured to impart enhanced traction and slip resistance. The outsole **132** and midsole **131** shown in FIGS. **1** and **2** is shown to include a plurality of incisions or sipes **136** in either or both sides of the outsole **132**, although many other types of outsoles **132** with various types of treads, contours, and other structures may be used in connection with the present invention. It is understood that embodiments of the present invention may be used in connection with other types and configurations of shoes, as well as other types of footwear and sole structures.

FIGS. **1-4** illustrate exemplary embodiments of the footwear **100** incorporating a sensor system **12** in accordance with the present invention, and FIGS. **3-8** illustrate exemplary embodiments of the sensor system **12**. The sensor system **12** includes an insert member **37** having a force and/or pressure sensor assembly **13** connected thereto. It is understood that the use of the insert member **37** is one embodiment, and that an article of footwear including a different type of sensor system **12** may be utilized in connection with aspects described herein. It is also understood that insert **37** may have any number of different configurations, shapes, and structures, and including a different number and/or configuration of sensors **16**, and a different insert structure or peripheral shape.

The insert member **37** is configured to be positioned in contact with the sole structure **130** of the footwear **100**, and in one embodiment, the insert member **37** is configured to be positioned underneath the foot contacting member **133** and over the top of the midsole member **131** and in general confronting relation. The sensor assembly **13** includes a plurality of sensors **16**, and a communication or output port **14** in communication with the sensor assembly **13** (e.g., electrically connected via conductors). The port **14** is configured for communicating data received from the sensors **16**, such as to an electronic module (also referred to as an electronic control unit) **22** as described below. The port **14** and/or the module **22** may be configured to communicate with an external device, as also described below. In the embodiment illustrated in FIGS. **3-8**, the system **12** has four

sensors **16**: a first sensor **16***a* at the big toe (first phalange or hallux) area of the shoe, two sensors **16***b-c* at the forefoot area of the shoe, including a second sensor **16***b* at the first metatarsal head region and a third sensor **16***c* at the fifth metatarsal head region, and a fourth sensor **16***d* at the heel. These areas of the foot typically experience the greatest degree of pressure during movement. Each sensor **16** is configured for detecting a pressure exerted by a user's foot on the sensor **16**. The sensors communicate with the port **14** through sensor leads **18**, which may be wire leads and/or another electrical conductor or suitable communication medium. For example, in the embodiment of FIGS. **3-8**, the sensor leads **18** may be an electrically conductive medium that is printed on the insert member **37**, such as a silver-based ink or other metallic ink, such as an ink based on copper and/or tin. The leads **18** may alternately be provided as thin wires in one embodiment. In other embodiments, the leads **18** may be connected to the foot contacting member **133**, the midsole member **131**, or another member of the sole structure **130**.

Other embodiments of the sensor system **12** may contain a different number or configuration of sensors **16**, and generally include at least one sensor **16**. For example, in one embodiment, the system **12** includes a much larger number of sensors, and in another embodiment, the system **12** includes two sensors, one in the heel and one in the forefoot of the shoe **100**. In addition, the sensors **16** may communicate with the port **14** in a different manner, including any known type of wired or wireless communication, including Bluetooth and near-field communication. A pair of shoes may be provided with sensor systems **12** in each shoe of the pair, and it is understood that the paired sensor systems may operate synergistically or may operate independently of each other, and that the sensor systems in each shoe may or may not communicate with each other. The communication of the sensor systems **12** is described in greater detail below. It is understood that the sensor system **12** may be provided with computer programs/algorithms to control collection and storage of data (e.g., pressure data from interaction of a user's foot with the ground or other contact surface), and that these programs/algorithms may be stored in and/or executed by the sensors **16**, the module **22**, and/or the external device **110**.

The sensor system **12** can be positioned in several configurations in the sole **130** of the shoe **100**. In the examples shown in FIGS. **3-4**, the port **14**, the sensors **16**, and the leads **18** can be positioned between the midsole **131** and the foot contacting member **133**, such as by positioning the insert member **37** between the midsole **131** and the foot contacting member **133**. The insert member **37** may be connected to one or both of the midsole and the foot contacting member **133** in one embodiment. A cavity or well **135** can be located in the midsole **131** and/or in the foot contacting member **133** for receiving the electronic module **22**, as described below, and the port **14** may be accessible from within the well **135** in one embodiment. The well **135** may further contain a housing **24** for the module **22**, and the housing **24** may be configured for connection to the port **14**, such as by providing physical space for the port **14** and/or by providing hardware for interconnection between the port **14** and the module **22**. In the embodiment shown in FIGS. **3-4**, the well **135** is formed by a cavity in the upper major surface of the midsole **131**. As shown in FIGS. **3-4**, the sole structure **130** may include a compressible sole member **138** that has a hole formed therein to receive the housing **24**, which provides access to the well **135** and/or may be considered a portion of the well **135**. The insert **37** can be placed on top of the compressible sole member **138** to place the housing **24** in the well **135**. The compressible sole member **138** may confront the midsole **131** in one embodiment, and may be in direct contact with the midsole **131**. It is understood that the compressible sole member **138** may confront the midsole **131** with one or more additional structures positioned between the compressible sole member **138** and the midsole **131**, such as a strobel member. In the embodiment of FIGS. **3-4**, the compressible sole member **138** is in the form of a foam member **138** (e.g. an EVA member) located between the foot contacting member **133** and the midsole **131**, which may be considered a lower insole/sockliner in this embodiment. The foam member **138** may be bonded to a strobel (not shown) of the midsole **131** in one embodiment, such as by use of an adhesive, and may cover any stitching on the strobel, which can prevent abrasion of the insert **37** by the stitching.

In the embodiment shown in FIGS. **3-4**, the housing **24** has a plurality of walls, including side walls **25** and a base wall **26**, and also includes a flange or lip **28** that extends outward from the tops of the side walls **25** and is configured for connection to the insert **37**. In one embodiment, the flange **28** is a separate member that connects to a tub **29** to form the housing **24**, via pegs **28**A that connect through holes **28**B in the insert **37** located at the front end of the hole **27**. The pegs **28**A may be connected via ultrasonic welding or other technique, and may be received in receivers in one embodiment. In an alternate embodiment, an article of footwear **100** may be manufactured with the tub **29** formed in the sole structure **130**, and the flange **28** may be later connected, such as by a snap connection, optionally after other portions of the port have also been assembled. The housing **24** may include retaining structure to retain the module **22** within the housing **24**, and such retaining structure may be complementary with retaining structure on the module **22**, such as a tab/flange and slot arrangement, complementary tabs, locking members, friction-fit members, etc. The housing **24** also includes a finger recess **29**A located in the flange **28** and/or the tub **29**, which provides room for the user's finger to engage the module **22** to remove the module **22** from the housing **24**. The flange **28** provides a wide base engaging the top of the insert **37**, which spreads out the forces exerted on the insert **37** and/or on the foot contacting member **133** by the flange **28**, which creates less likelihood of severe deflection and/or damage of such components. The rounded corners on the flange **28** also assists in avoiding damage to the insert **37** and/or the foot contacting member **133**. It is understood that the flange **28** may have a different shape and/or contour in other embodiments, and may provide similar functionality with different shapes and/or contours.

The foot contacting member **133** is configured to be placed on top of the foam member **138** to cover the insert **37**, and may contain an indent **134** in its lower major surface to provide space for the housing **24**, as shown in FIG. **3**. The foot contacting member **133** may be adhered to the foam member **138**, and in one embodiment, may be adhered only in the forefoot region to permit the foot contacting member **133** to be pulled up to access the module **22**, as shown in FIG. **3**. Additionally, the foot contacting member **133** may include a tacky or high-friction material (not shown) located on at least a portion of the underside to resist slippage against the insert **37** and/or the foam member **138**, such as a silicone material. For example, in an embodiment where the foot contacting member **133** is adhered in the forefoot region and free in the heel region (e.g. FIG. **3**), the foot contacting member **133** may have the tacky material located

on the heel region. The tacky material may also provide enhanced sealing to resist penetration of dirt into the sensor system. In another embodiment, the foot contacting member **133** may include a door or hatch (not shown) configured to be located over the port **14** and sized to permit insertion and/or removal of the module **22** through the foot contacting member **133**, which door or hatch may be opened in various manners, such as swinging on a hinge or removal of a plug-like element. In one embodiment, the foot contacting member **133** may also have graphic indicia (not shown) thereon, as described below.

In one embodiment, as shown in FIGS. **3-4**, the foam member **138** may also include a recess **139** having the same peripheral shape as the insert **37** to receive the insert **37** therein, and the bottom layer **69** (FIG. **8**) of the insert member **37** may include adhesive backing to retain the insert **37** within the recess **139**. In one embodiment, a relatively strong adhesive, such as a quick bonding acrylic adhesive, may be utilized for this purpose. The insert **37** has a hole or space **27** for receiving and providing room for the housing **24**, and the foam member **138** in this embodiment may also allow the housing **24** to pass completely through into and/or through at least a portion of the strobel and/or the midsole **131**. In the embodiment shown in FIGS. **3-4**, the foot contacting member **133** may have a thickness that is reduced relative to a typical foot contacting member **133** (e.g. sockliner), with the thickness of the foam member **138** being substantially equal to the reduction in thickness of the foot contacting member **133**, to provide equivalent cushioning. In one embodiment, the foot contacting member **133** may be a sockliner with a thickness of about 2-3 mm, and the foam member **138** may have a thickness of about 2 mm, with the recess **139** having a depth of about 1 mm. The foam member **138** may be adhesively connected to the insert member **37** prior to connecting the foam member **138** to the article of footwear **100** in one embodiment. This configuration permits the adhesive between the foam member **138** and the insert **37** to set in a flat condition before attaching the foam member to the strobel or other portion of the footwear **100**, which is typically bends or curves the foam member **138** and may otherwise cause delamination. The foam member **138** with the insert **37** adhesively attached may be provided in this configuration as a single product for insertion into an article of footwear **100** in one embodiment. The positioning of the port **14** in FIGS. **3-4** not only presents minimal contact, irritation, or other interference with the user's foot, but also provides easy accessibility by simply lifting the foot contacting member **133**.

In the embodiment of FIGS. **3-4**, the housing **24** extends completely through the insert **37** and the foam member **138**, and the well **135** may also extend completely through the strobel and partially into the midsole **131** of the footwear **100** to receive the housing **24**. In another embodiment, the well **135** may be differently configured, and may be positioned completely underneath the strobel in one embodiment, with a window through the strobel to permit access to the module **22** in the well **135**. The well **135** may be formed using a variety of techniques, including cutting or removing material from the strobel and/or the midsole **131**, forming the strobel and/or the midsole **131** with the well contained therein, or other techniques or combinations of such techniques. The housing **24** may fit closely with the walls of the well **135**, which can be advantageous, as gaps between the housing **24** and the well **135** may be sources of material failure. The process of removing the piece **135** may be automated using appropriate computer control equipment.

The well **135** may be located elsewhere in the sole structure **130** in further embodiments. For example, the well **135** may be located in the upper major surface of the foot contacting member **133** and the insert **37** can be placed on top of the foot contacting member **133**. As another example, the well **135** may be located in the lower major surface of the foot contacting member **133**, with the insert **37** located between the foot contacting member **133** and the midsole **131**. As a further example, the well **135** may be located in the outsole **132** and may be accessible from outside the shoe **100**, such as through an opening in the side, bottom, or heel of the sole **130**. In the configurations illustrated in FIGS. **3-4**, the port **14** is easily accessible for connection or disconnection of an electronic module **22**, as described below. In another embodiment, the foot contacting member **133** may have the insert **37** connected to the bottom surface, and the port **14** and the well **135** may be formed in the sole structure **130**. The interface **20** is positioned on the side of the housing **24** as similarly shown with respect to other embodiments, although it is understood that the interface **20** could be positioned elsewhere, such as for engagement through the top of the module **22**. The module **22** may be altered to accommodate such a change. Other configurations and arrangements of the housing **24**, the insert **37**, the module **22**, and/or the interface may be utilized in further embodiments.

In other embodiments, the sensor system **12** can be positioned differently. For example, in one embodiment, the insert **37** can be positioned within the outsole **132**, midsole **131**, or foot contacting member **133**. In one exemplary embodiment, insert **37** may be positioned within a foot contacting member **133** positioned above an insole member, such as a sock, sockliner, interior footwear bootie, or other similar article, or may be positioned between the foot contacting member **133** and the insole member. Still other configurations are possible. As discussed, it is understood that the sensor system **12** may be included in each shoe in a pair.

The insert member **37** in the embodiment illustrated in FIGS. **3-8** is formed of multiple layers, including at least a first layer **66** and a second layer **68**. The first and second layers **66**, **68** may be formed of a flexible film material, such as a Mylar® or other PET (polyethylene terephthalate) film, or another polymer film, such as polyamide. In one embodiment, the first and second layers **66**, **68** may each be PET films having thicknesses of 0.05-0.2 mm, such as a thickness of 125 μm. Additionally, in one embodiment, each of the first and second layers **66**, **68** has a minimum bend radius of equal to or less than 2 mm. The insert **37** may further include a spacer layer **67** positioned between the first and second layers **66**, **68** and/or a bottom layer **69** positioned on the bottom of the insert **37** below the second layer **68**, which are included in the embodiment illustrated in FIGS. **3-8**. The layers **66**, **67**, **68**, **69** of the insert **37** are stacked on top of each other and in confronting relation to each other, and in one embodiment, the layers **66**, **67**, **68**, **69** all have similar or identical peripheral shapes and are superimposed on one another (FIG. **8**). In one embodiment, the spacer layer **67** and the bottom layer **69** may each have a thickness of 89-111 μm, such as a thickness of 100 μm. The entire thickness of the insert member **37** may be about 450 μm in one embodiment, or about 428-472 μm in another embodiment, and about 278-622 μm in a further embodiment. The insert **37** may also include additional adhesive that is 100-225 μm thick, and may further include one or more selective reinforcement layers, such as additional PET layers, in other embodiments. Additionally, in one embodiment, the entire

four-layer insert as described above has a minimum bend radius of equal to or less than 5 mm. It is understood that the orientations of the first and second layers **66**, **68** may be reversed in another embodiment, such as by placing the second layer **68** as the top layer and the first layer **66** below the second layer **68**. In the embodiment of FIGS. **3-8**, the first and second layers **66**, **68** have various circuitry and other components printed thereon, including the sensors **16**, the leads **18**, resistors **53**, **54**, a pathway **50**, dielectric patches **80**, and other components, which are described in greater detail below. The components are printed on the underside of the first layer **66** and on the upper side of the second layer **68** in the embodiment of FIGS. **3-8**, however in other embodiments, at least some components may be printed on the opposite sides of the first and second layers **66**, **68**. It is understood that components located on the first layer **66** and/or the second layer **68** may be moved/transposed to the other layer **66**, **68**.

The layers **66**, **67**, **68**, **69** can be connected together by an adhesive or other bonding material in one embodiment. The spacer layer **67** may contain adhesive on one or both surfaces in one embodiment to connect to the first and second layers **66**, **68**. The bottom layer **69** may likewise have adhesive on one or both surfaces, to connect to the second layer **68** as well as to the article of footwear **100**. The first or second layers **66**, **68** may additionally or alternately have adhesive surfaces for this purpose. A variety of other techniques can be used for connecting the layers **66**, **67**, **68**, **69** in other embodiments, such as heat sealing, spot welding, or other known techniques.

In the embodiment illustrated in FIGS. **3-8**, the sensors **16** are force and/or pressure sensors for measuring pressure and/or force on the sole **130**. The sensors **16** have a resistance that decreases as pressure on the sensor **16** increases, such that measurement of the resistance through the port **14** can be performed to detect the pressure on the sensor **16**. The sensors **16** in the embodiment illustrated in FIGS. **3-8** are elliptical or obround in shape, which enables a single sensor size to be utilized in several different shoe sizes. The sensors **16** in this embodiment each include two contacts **40**, **42**, including a first contact **40** positioned on the first layer **66** and a second contact **42** positioned on the second layer **68**. It is understood that the figures illustrating the first layer **66** herein are top views, and that the electronic structures (including the contacts **40**, the leads **18**, etc.) are positioned on the bottom side of the first layer **66** and viewed through a transparent or translucent first layer **66** unless specifically noted otherwise. The contacts **40**, **42** are positioned opposite each other and are in superimposed relation to each other, so that pressure on the insert member **37**, such as by the user's foot, causes increased engagement between the contacts **40**, **42**. The resistance of the sensor **16** decreases as the engagement between the contacts **40**, **42** increases, and the module **22** is configured to detect pressure based on changes in resistance of the sensors **16**. In one embodiment, the contacts **40**, **42** may be formed by conductive patches that are printed on the first and second layers **66**, **68**, such as in the embodiment of FIGS. **3-8**, and the two contacts **40**, **42** may be formed of the same or different materials. Additionally, in one embodiment, the leads **18** are formed of a material that has a higher conductivity and lower resistivity than the material(s) of the sensor contacts **40**, **42**. For example, the patches may be formed of carbon black or another conductive carbon material. Further, in one embodiment, the two contacts **40**, **42** may be formed of the same material or two materials with similar hardnesses, which can reduce abrasion and wear due to differences in hardness of the materials in contact with each other. In this embodiment, the first contacts **40** are printed on the underside of the first layer **66**, and the second contacts **42** are printed on the top side of the second layer **68**, to permit engagement between the contacts **40**, **42**. The embodiment illustrated in FIGS. **3-8** includes the spacer layer **67**, which has holes **43** positioned at each sensor **16** to permit engagement of the contacts **40**, **42** through the spacer layer **67**, while insulating other portions of the first and second layers **66**, **68** from each other. In one embodiment, each hole **43** is aligned with one of the sensors **16** and permits at least partial engagement between the contacts **40**, **42** of the respective sensor **16**. In the embodiment illustrated in FIGS. **3-8**, the holes **43** are smaller in area than the sensor contacts **40**, **42**, allowing the central portions of the contacts **40**, **42** to engage each other, while insulating outer portions of the contacts **40**, **42** and the distribution leads **18**A from each other (See, e.g., FIG. **8**). In another embodiment, the holes **43** may be sized to permit engagement between the contacts **40**, **42** over their entire surfaces. It is understood that the size, dimensions, contours, and structure of the sensors **16** and the contacts **40**, **42** may be altered in other embodiments while retaining similar functionality. It is also understood that sensors **16** having the same sizes may be utilized in different sizes of inserts **37** for different shoe sizes, in which case the dimensions of the sensors **16** relative to the overall dimensions of the insert **37** may be different for different insert **37** sizes. In other embodiments, the sensor system **12** may have sensors **16** that are differently configured than the sensors **16** of the embodiment of FIGS. **3-8**. In a further example, the sensors **16** may utilize a different configuration that does not include carbon-based or similar contacts **40**, **42** and/or may not function as a resistive sensor **16**. Examples of such sensors include a capacitive pressure sensor or a strain gauge pressure sensor, among other examples.

As further shown in FIGS. **3-8**, in one embodiment, the insert **37** may include an internal airflow system **70** configured to allow airflow through the insert **37** during compression and/or flexing of the insert **37**. FIG. **8** illustrates the components of the airflow system **70** in greater detail. The airflow system **70** may include one or more air passages or channels **71** that lead from the sensors **16** to one or more vents **72**, to allow air to flow from the sensor **16** during compression, between the first and second layers **66**, **68** and outward through the vent(s) **72** to the exterior of the insert **37**. The airflow system **70** resists excessive pressure buildup during compression of the sensors **16**, and also permits consistent separation of the contacts **40**, **42** of the sensors **16** at various air pressures and altitudes, leading to more consistent performance. The channels **71** may be formed between the first and second layers **66**, **68**. As shown in FIG. **8**, the spacer layer **67** has the channels **71** formed therein, and the air can flow through these channels **71** between the first and second layers **66**, **68**, to the appropriate vent(s) **72**. The vents **72** may have filters (not shown) covering them in one embodiment. These filters may be configured to permit air, moisture, and debris to pass out of the vents **72** and resist moisture and debris passage into the vents **72**. In another embodiment, the insert **37** may not contain a spacer layer, and the channels **71** may be formed by not sealing the layers **66**, **68** together in a specific pattern, such as by application of a non-sealable material. Thus, the airflow system **70** may be considered to be integral with or directly defined by the layers **66**, **68** in such an embodiment. In other embodiments, the airflow system **70** may contain a different number or configuration of air channels **71**, vents **72**, and/or other passages.

In the embodiment illustrated in FIGS. **3-8**, the airflow system **70** includes two vents **72** and a plurality of air channels **71** connecting each of the four sensors **16** to one of the vents **72**. The spacer layer **67** includes holes **43** at each sensor in this embodiment, and the channels **71** are connected to the holes **43** to permit air to flow away from the sensor **16** through the channel **71**. Additionally, in this embodiment, two of the sensors **16** are connected to each of the vents **72** through channels **71**. For example, as illustrated in FIGS. **4** and **8** the first metatarsal sensor **16***b* has a channel **71** that extends to a vent **72** slightly behind the first metatarsal area of the insert **37**, and the first phalangeal sensor **16***a* has a channel **71** that also extends to the same vent **72**, via a passageway that includes traveling through the first metatarsal sensor **16***b*. In other words, the first phalangeal sensor **16***a* has a channel **71** that extends from the hole **43** at the first phalangeal sensor **16***a* to the hole **43** at the first metatarsal sensor **16***b*, and another channel **71** extends from the first metatarsal sensor **16***b* to the vent **72**. The fifth metatarsal sensor **16***c* and the heel sensor **16***d* also share a common vent **72**, located in the heel portion of the insert **37**. One channel **71** extends rearward from the hole **43** at the fifth metatarsal sensor **16***c* to the vent **72**, and another channel **71** extends forward from the hole **43** at the heel sensor **16***d* to the vent **72**. Sharing the vents **72** among multiple sensors can decrease expense, particularly by avoiding the need for additional filters **73**. In other embodiments, the airflow system **70** may have a different configuration. For example, each sensor **16** may have its own individual vent **72**, or more than two sensors **16** may share the same vent **72**, in various embodiments.

Each vent **72** is formed as an opening in a bottom side of the second layer **68** (i.e. opposite the first layer **66**), such that the opening permits outward flow of air, moisture, and/or debris from the airflow system **70**, as seen in FIG. **8**. In another embodiment, the vent **72** may include multiple openings. In a further embodiment, the vent **72** may additionally or alternately be formed by an opening in the first layer **66**, causing the air to vent upwards out of the insert **37**. In an additional embodiment, the vent **72** may be on the side (thin edge) of the insert **37**, such as by extending the channel **71** to the edge, such that the channel **71** opens through the edge to the exterior of the insert **37**. The venting of the air downward, as in the embodiment illustrated in FIGS. **3-8**, makes it more difficult for debris to enter the vent **72**. The bottom layer **69**, if present, also includes apertures **74** located below the vents **72**, to permit the air flowing out of the vents **72** to pass through the bottom layer **69**. The apertures **74** are significantly larger than the vents **72**, in order to allow filters to be adhesively attached to the second layer **68** through the bottom layer **69** around the periphery of each vent **72**, as described below. Additionally, in this embodiment, each vent **72** has a reinforcement material **75** positioned around the vent **72**, to add stability and strength to the material and prevent breaking/tearing. In the embodiment illustrated, the reinforcement material **75** is formed of the same material as the leads **18** (e.g. silver or other metallic ink) to facilitate printing, but may also be formed of the same material as the sensor contacts **40**, **42** (e.g. carbon) or the dielectric material discussed herein.

The vents **72** in the embodiment illustrated in FIGS. **3-8** open downward and the air passing through the vents **72** passes downward toward the midsole **131** and toward the foam member **138** if present. In the embodiment illustrated in FIGS. **3-4**, the foam member **138** has cavities **76** located directly below the vents **72** and configured such that the air exiting the vents passes into the respective cavity **76**. Such cavities **76** may be formed as a slot that extends completely or partially through the foam member **138**. This configuration allows air to pass out of the vents **72** without obstruction from the foam member **138**. In the embodiment of FIGS. **3-4**, each of the cavities **76** has a channel portion **77** extending laterally away from the cavity **76** and beyond the peripheral boundary of the insert **37**. In other words, the channel portion **77** of the cavity **76** extends laterally from the vent **72** to a distal end **78** located outside the peripheral boundary of the insert **37**. It is understood that if the foam member **138** has a recess **139** to receive the insert member **37**, the distal end **78** of the channel portion **77** of the cavity **76** may also be located outside the peripheral boundary of the recess **139**, as in the embodiment shown in FIGS. **3-4**. This configuration permits air passing into the cavity **76** to exit the sole structure **130** by passing laterally through the channel portion **77** and then upward and/or outward away from the foam member **138**. In another embodiment, the distal end **78** may stop at a point within the foam member **138** and still outside the peripheral boundary of the insert **37**, which allows the air to vent upward out of the cavity **76** at the distal end **78** and provides the same or similar functionality. As stated above, the components of the airflow system **70** may be configured different in other embodiments.

Additionally, the foot contacting member **133** includes one or more passages (not shown) extending through the foot contacting member **133** located at the distal end **78** of the cavity **76**, in the embodiment of FIGS. **3-8**. The passages may be pinhole-type passages that extend vertically through the foot contacting member **133**. In another embodiment, a different type of passage may be used, including slits or grooves, and at least one passage may extend laterally to a side of the foot contacting member **133**, rather than upward through the thickness of the foot contacting member **133**. The passages allow the air exiting through the vent **72** and outward through the cavity **76** to pass through the foot contacting member **133** and out of the sole structure **130**. In another embodiment, the foot contacting member **133** may not include any passage(s). The foot contacting member **133** may still provide ventilation in a configuration without any passage(s), such as by using a breathable foam or other breathable material for constructing the foot contacting member **133**.

In the embodiment of FIGS. **3-8**, as described above, the spacer layer **67** generally insulates conductive members/components on the first and second layers **66**, **68** from each other, except in areas where electrical contact is desired, such as at the pathway **50** and between the contacts **40**, **42** of the sensors **16**. The spacer layer **67** has holes **38**, **43** to define areas of desired electrical contact between the layers **66**, **68**. The components of the airflow system **70**, in particular the channels **71** may provide a route for shorting or other undesired electrical contact by one or more conductive members between the first and second layers **66**, **68**. In one embodiment, the sensor system **12** may include one or more patches of dielectric material **80** to resist or prevent undesired shorting by one or more conductive members across open areas of the spacer layer **67**, such as the channels **71**. This dielectric material **80** may be in the form of an acrylic ink or other UV-curable ink, or another insulating material suitable for the application. In the embodiment shown in FIGS. **3-8**, the insert **37** has several patches of dielectric material **80** extending across the channel **71**, to insulate the distribution leads **18**A located around the sensor contacts **40**, **42** from each other.

In the embodiment of FIGS. **3-8**, the port **14**, the sensors **16**, and the leads **18** form a circuit **10** on the insert member

37. The port **14** has a plurality of terminals **11**, with four of the terminals **11** each dedicated to one of the four sensors **16** individually, one terminal **11** for applying a voltage to the circuit **10**, and one terminal **11** for voltage measurement. In this embodiment, the sensor system **12** also includes a pair of resistors **53**, **54**, each located on one of the layers **66**, **68**, and a pathway **50** connecting the circuitry on the first layer **66** with the circuitry on the second layer **68**. The resistors **53**, **54** provide a reference point for the module **22** to measure the resistance of each sensor **16**, and permit the module **22** to convert the variable current from the active sensor **16** into a measurable voltage. Additionally, the resistors **53**, **54** are arranged in parallel within the circuit **10**, which compensates for variations in the circuit **10** and/or variations in the manufacturing processes used to create the resistors **53**, **54**, such as variations in conductivity of the inks used to print the leads **18** and/or the sensor contacts **40**, **42**. In one embodiment, the equivalent resistance of the two resistors **53**, **54** is 1500+/−500 kΩ. In another embodiment, a single resistor **53**, **54** or two resistors **53**, **54** in series could be used. In a further embodiment, the resistors **53**, **54** may be positioned elsewhere on the insert **37**, or may be located within the circuitry of the module **22**. A more technical depiction of the circuit **10** of this embodiment is described below and shown in FIG. **20**.

FIG. **9** illustrates a circuit **10** that may be used to detect and measure pressure in accordance with an embodiment of the invention. The circuit **10** includes six terminals **104***a*-**104***f*, including a power terminal **104***a* for applying a voltage to the circuit **10**, a measurement terminal **104***b* for measuring a voltage as described below, and four sensor terminals **104***c*-**104***f*, each of which is dedicated to one of the sensors **16***a*-**16***d* individually, and each of which represents ground in this embodiment. The terminals **104***a*-**104***f* represent the terminals **11** of the port **14**. In the embodiment shown, fixed resistors **102***a* and **102***b*, which represent resistors **53** and **54**, are connected in parallel. Fixed resistors **102***a* and **102***b* may be physically located on separate layers. The equivalent resistance across terminals **104***a* and **104***b* is determined by the well-known equation of:

$$R_{eq}=R_{102a}\cdot R_{102b}/(R_{102a}+R_{102b}) \quad \text{(Equation 1)}$$

Where:

R_{102a}=Resistance of fixed resistors **102***a*

R_{102b}=Resistance of fixed resistors **102***b*

R_{eq}=Equivalent resistance

Electrically connecting fixed resistors **102***a* and **102***b* in parallel compensates for variations in the manufacturing processes used to create fixed resistors **102***a* and **102***b*. For example, if fixed resistor **102***a* has a resistance that deviates from a desired resistance, the deviation of the equivalent resistance determined by equation 1 is minimized by the averaging effect of fixed resistor **102***b*. One skilled in the art will appreciate that two fixed resistors are shown for illustration purposes only. Additional fixed resistors may be connected in parallel and each fixed resistor may be formed on a different layer.

In the embodiment shown in FIG. **9**, fixed resistors **102***a* and **102***b* are connected to sensors **16***a*-**16***d*. Sensors **16***a*-**16***d* may be implemented with variable resistors that change resistance in response to changes in pressure, as described above. Each of sensors **16***a*-**16***d* may be implemented with multiple variable resistors. In one embodiment, each of sensors **16***a*-**16***d* is implemented with two variable resistors which are physically located on different layers and electrically connected in parallel. For example, as described above with respect to one embodiment, each sensor **16***a*-**16***d* may contain two contacts **40**, **42** that engage each other to a greater degree as applied pressure increases, and the resistance of the sensor **16***a*-**16***d* may decrease as the engagement increases. As mentioned above, connecting resistors in parallel creates an equivalent resistance that minimizes deviations created during manufacturing processes. In another embodiment, the contacts **40**, **42** may be arranged in series. Sensors **16***a*-**16***d* may be connected to ground via switches **108***a*-**108***d*. Switches **108***a*-**108***d* may be closed one at a time to connect a sensor. In some embodiments, switches **108***a*-**108***d* are implemented with transistors or integrated circuits.

In operation a voltage level, such as 3 volts, is applied at terminal **104***a*. Switches **108***a*-**108***d* are closed one at a time to connect one of sensors **16***a*-**16***d* to ground. When connected to ground, each of sensors **16***a*-**16***d* forms a voltage divider with the combination of fixed resistors **102***a* and **102***b*. For example, when switch **108***a* is closed, the voltage between terminal **104***a* and ground is divided between the combination of fixed resistors **102***a* and **102***b* and sensor **16***a*. The voltage measured at terminal **104***b* changes as the resistance of sensor **16***a* changes. As a result, pressure applied to sensor **16***a* may be measured as a voltage level at terminal **104***b*. The resistance of the sensor **16***a* is measured utilizing the voltage applied to the sensor **16***a* in series with the combined fixed resistors **104***a* and **104***b* of known value. Similarly, selectively closing switches **108***b*-**108***d* will generate voltage levels at terminal **104***b* that are related to the pressure applied at sensors **16***b*-**16***d*. It is understood that the connections between the sensors **16***a*-*d* and the terminals **104***c*-*f* may be different in other embodiments. For example, the sensors **16***a*-*d* are connected to different pins of the interface **20** in the left shoe insert **37** as compared to the right shoe insert **37**, as shown in FIG. **8**. In another embodiment, the voltage level may be applied in the opposite manner, with the ground located at terminal **104***a* and the voltage applied at terminals **104***c*-*f*. In further embodiments, another circuit configuration may be used to achieve a similar result and functionality.

The two resistors **53**, **54** have similar or identical structures in the embodiment illustrated, however it is understood that the resistors may have different structures in other embodiments. Each resistor **53**, **54** has two sections **55**, **56** spaced from each other and a bridge **57** positioned between and connecting the sections **55**, **56**. In one embodiment, the bridge **57** may be formed of a more resistive material than the sections **55**, **56**, and may thus provide the majority of the resistance of each resistor **53**, **54**. The sections **55**, **56** may be at least partially formed of a high-conductivity material, such as a silver material. In the embodiment illustrated in FIGS. **3**-**9**, the inner and outer sections **55**, **56** are formed of the same material as the leads **18**, such as a printed silver-based or other metallic-based ink. In this embodiment, the bridge **57** is formed of the same material as the sensor contacts **40**, **42**, such as carbon black or another conductive carbon material. It is understood that the inner and outer sections **55**, **56** and/or the bridge **57** may be formed of different materials in other embodiments.

The pathway **50** generally permits continuous and/or uninterrupted electrical communication and passes electronic signals between the first and second layers **66**, **68**. In the embodiment of FIGS. **3**-**8**, the port **14** is directly connected to the second layer **68**, and the pathway **50** may serve as a vertical path between the port **14** and the sensor contacts **40** on the first layer **66**, **68**. In this embodiment, the pathway **50** includes conductive portions **51** on the first layer **66** and the second layer **68**, such that conductive portions **51** may be in continuous engagement with each other to provide con-

tinuous electrical communication between the first and second layers **66**, **68**. The spacer layer **67** in this embodiment includes a hole **38** that is aligned with the pathway **50** and allows for continuous engagement between the conductive portions **51** through the spacer layer **67**. Additionally, in the embodiment of FIGS. **3-5**, each of the conductive portions **51** is divided into two sections **52** that are separated by an elongated gap **59**. The gap **59** may be oriented to increase the durability of the pathway **50** during flexing of the insert **37**, by serving as a flexing point to minimize bending of the conductive portions **51**. The conductive portions **51** of the pathway **50** are formed of a conductive material, and in one embodiment, the conductive portions **51** may be formed of the same material as the leads **18**, such as a silver-based ink or other metallic ink. In other embodiments, the pathway **50**, and the components thereof described herein, may have a different size, shape, form, or location, and may be formed of a different material. Additionally, the pathway **50** may be at least partially surrounded by or bounded by a stiffening structure **60** in one embodiment to provide structural support and/or effects, such as assisting with engagement between the conductive portions **51**. As illustrated in FIGS. **3-8**, the conductive portions **51** are surrounded by a substantially annular stiffener **60**. The stiffener **60** may be formed of any material that has suitable stiffness, and in one embodiment, may be formed of a material with greater stiffness than the material of the conductive portions **51**, such as carbon black or other carbon-based material. Further, the hole **38** in the spacer layer **67** permits the conductive portions **51** to engage each other.

The insert **37** may be constructed by depositing the various components on a polymer (e.g. PET) film. In one embodiment, the insert **37** is constructed by first depositing the conductive metallic material on each layer **66**, **68**, such as by printing in the traced pattern of the leads **18** (including the distribution lead **18**A, the conductive portions **51** of the pathway **50**, the inner and outer sections **55**, **56** of the resistors **53**, **54**, etc. The additional carbon material can then be deposited on each layer **66**, **68**, such as by printing, to form the contacts **40**, **42**, the stiffener **60** of the pathway **50**, the bridge **57** of the resistors **53**, **54**, etc. Any additional components can then be deposited, such as any dielectric portions. The layers **66**, **68** may be printed on PET sheets and then cut out to form the outer peripheral shape after printing in one embodiment.

The port **14** is configured for communication of data collected by the sensors **16** to an outside source, in one or more known manners. In one embodiment, the port **14** is a universal communication port, configured for communication of data in a universally readable format. In the embodiments shown in FIGS. **3-8** and **14**, the port **14** includes an interface **20** for connection to an electronic module **22**, shown in connection with the port **14** in FIG. **3**. Additionally, in this embodiment, the port **14** is associated with the housing **24** for insertion of the electronic module **22**, located in the well **135** in the middle arch or midfoot region of the midsole **131**. As illustrated in FIGS. **3-8**, the sensor leads **18** converge together to form a consolidated interface **20** at their terminals **11**, in order to connect to the port **14**. In one embodiment, the consolidated interface may include individual connection of the sensor leads **18** to the port interface **20**, such as through a plurality of electrical contacts. In another embodiment, the sensor leads **18** could be consolidated to form an external interface, such as a plug-type interface or another configuration, and in a further embodiment, the sensor leads **18** may form a non-consolidated interface, with each lead **18** having its own separate terminal **11**. As also described below, the module **22** may have an interface **23** for connection to the port interface **20** and/or the sensor leads **18**.

In the embodiments shown in FIGS. **3-8** and **14**, the interface **20** takes the form of electrical contacts or terminals **11**. In one embodiment, the terminals **11** are formed on a tongue or extension **21** that extends from one of the layers **66**, **68** into the hole **27** provided for the housing **24**. The extension consolidates the ends of the leads **18** to a single area to form the interface **20**. In the embodiment of FIGS. **3-8** and **14**, the extension **21** extends from the second layer **68** into the hole **27**, and is bent downward within the housing **24** to place the terminals **11** within the housing **24** and make the interface **20** accessible within the housing **24**. The extension **21** may pass underneath the flange **28** of the housing **24** and through a slot or other space underneath the lip **28** in order to extend into the housing **24**. In the configuration illustrated in FIGS. **3-8** and **14**, the extension **21** bends downwardly into the well **135** and into the housing **24**, as discussed above, to place the terminals **11** within the housing **24** and forming the interface **20** within the housing **24**.

The housing **24** may contain connection structure, such as connector pins or springs for establishing connection between the interface **20** and the module **22**, as shown in FIG. **14**. In one embodiment, the port **14** includes an electrical connector **82** forming the interface **20**, which may include contacts that individually attach to the terminals **11**, as mentioned above. The connector **82** may connect to the extension **21** and the terminals **11** via a crimping connection. The interface **20** in this embodiment includes seven terminals: four terminals **11** each individually connected to one of the sensors **16**, one terminal **11** serving as the measurement terminal (**104***b* in FIG. **20**), and one terminal serving as a power terminal (**104***a* in FIG. **20**) to apply a voltage to the circuit **10**. As discussed above, the power terminal may instead be configured as a ground terminal in another embodiment, with the sensor terminals (**104***c-f* in FIG. **20**) being configured as power terminals. The seventh terminal may be utilized for powering of accessories, such as a unique identification chip **92** (see FIG. **14**B). In one embodiment, the sixth and seventh terminals **11** are extended on a tail **21**A that extends from the end of the extension **21**. An accessory may be connected across the two terminals **11** on the tail **21**A to power the accessory. The accessory may include a small printed circuit board (PCB) with a memory chip that are attached via anisotropic contact formation to the tail **21**A. In one embodiment, an accessory chip may include information uniquely identifying the article of footwear **100**, such as a serial number, as well as substantive information such as whether the footwear **100** is a left or right shoe, a men's or women's shoe, a specific type of shoe (e.g. running, tennis, basketball, etc.), and other types of information. This information may be read by the module **22** and subsequently used in analysis, presentation, and/or organization of data from the sensors. The accessory may be sealed into the housing **24**, such as via epoxy or other material.

The port **14** is adapted for connection to a variety of different electronic modules **22**, which may be as simple as a memory component (e.g., a flash drive) or which may contain more complex features. It is understood that the module **22** could be as complex a component as a personal computer, mobile device, server, etc. The port **14** is configured for transmitting data gathered by the sensors **16** to the module **22** for storage, transmission, and/or processing. In some embodiments, the port **14**, the sensors **16**, and/or other

components of the sensor system **12** may be configured for processing the data. The port **14**, sensors **16**, and/or other components of the sensor system **12** may additionally or alternately be configured for transmission of data directly to an external device **110** or a plurality of modules **22** and/or external devices **110**. It is understood that the port **14**, the sensors **16**, and/or other components of the sensor system **12** may include appropriate hardware, software, etc., for these purposes. Examples of a housing and electronic modules in a footwear article are illustrated in U.S. patent application Ser. No. 11/416,458, published as U.S. Patent Application Publication No. 2007/0260421, which is incorporated by reference herein and made part hereof. Although the port **14** is illustrated with electronic terminals **11** forming an interface **20** for connection to a module **22**, in other embodiments, the port **14** may contain one or more additional or alternate communication interfaces. For example, the port **14** may contain or comprise a USB port, a Firewire port, 16-pin port, or other type of physical contact-based connection, or may include a wireless or contactless communication interface, such as an interface for Wi-Fi, Bluetooth, near-field communication, RFID, Bluetooth Low Energy, Zigbee, or other wireless communication technique, or an interface for infrared or other optical communication technique. In another embodiment, the sensor system **12** may include more than one port **14** configured for communication with one or more modules **22** or external devices **110**. This configuration may alternately be considered to be a single distributed port **14**. For example, each of the sensors **16** may have a separate port **14** for communication with one or more electronic modules **22**. The ports **14** in this embodiment are connected to the sensors **16** by leads **18** and may be located between the layers of the insert **37**, within a hole in the insert **37**, or above or below the insert **37** in various embodiments. It is understood that multiple or distributed port(s) **14** may be used, with combinations of two or more sensors connected to a single port **14**. In further embodiments, the sensor system **12** may include one or more ports **14** having different configurations, which may include a combination of two or more configurations described herein.

The module **22** may additionally have one or multiple communication interfaces for connecting to an external device **110** to transmit the data for processing, as described below and shown in FIG. **5**. Such interfaces can include any of the contacted or contactless interfaces described above. In one example, the module **22** includes at least a retractable USB connection for connection to a computer and/or for charging a battery of the module **22**. In another example, the module **22** may be configured for contacted or contactless connection to a mobile device, such as a watch, cell phone, portable music player, etc. The module **22** may be configured for wireless communication with the external device **110**, which allows the device **22** to remain in the footwear **100**. However, in another embodiment, the module **22** may be configured to be removed from the footwear **100** to be directly connected to the external device **110** for data transfer, such as by the retractable USB connection described above. In a wireless embodiment, the module **22** may be connected to an antenna for wireless communication. The antenna may be shaped, sized, and positioned for use with the appropriate transmission frequency for the selected wireless communication method. Additionally, the antenna may be located internally within the module **22** or external to the module. In one example, the sensor system **12** itself (such as the leads **18** and conductive portions of the sensors **16**) could be used to form an antenna. The module **22** may further be placed, positioned, and/or configured in order to improve antenna reception, and in one embodiment, may use a portion of the user's body as an antenna. In one embodiment, the module **22** may be permanently mounted within the footwear **100**, or alternately may be removable at the option of the user and capable of remaining in the footwear **100** if desired. Additionally, as further explained below, the module **22** may be removed and replaced with another module **22** programmed and/or configured for gathering and/or utilizing data from the sensors **16** in another manner. If the module **22** is permanently mounted within the footwear **100**, the sensor system **12** may further contain an external port (not shown) to allow for data transfer and/or battery charging, such as a USB or Firewire port. It is understood that the module **22** may be configured for both contacted and contactless communication.

While the port **14** may be located in a variety of positions without departing from the invention, in one embodiment, the port **14** is provided at a position and orientation and/or is otherwise structured so as to avoid or minimize contact with and/or irritation of the wearer's foot, e.g., as the wearer steps down in and/or otherwise uses the article of footwear **100**, such as during an athletic activity. The positioning of the port **14** in FIGS. **3-4** and **14** illustrates one such example. In another embodiment, the port **14** is located proximate the heel or instep regions of the shoe **100**. Other features of the footwear structure **100** may help reduce or avoid contact between the wearer's foot and the port **14** (or an element connected to the port **14**) and improve the overall comfort of the footwear structure **100**. For example, as described above and illustrated in FIGS. **3-4**, the foot contacting member **133** may fit over and at least partially cover the port **14**, thereby providing a layer of padding between the wearer's foot and the port **14**. Additional features for reducing contact between the port **14** and the wearer's foot and modulating any undesired feel of the port **14** at the wearer's foot may be used.

FIG. **14** shows a further view of one embodiment of the port **14** configured to be utilized with the insert member **37**. Similar structures described above will be designated with identical or similar reference numerals. This embodiment and variations of the embodiment are described in detail below. As discussed and disclosed herein, the port **14** defines or supports an interface **20** for an operable connection with the module **22**. The module **22** will also be described in greater detail below. Through the operable connection between the port **14** and the module **22**, data sensed by the sensor assembly **12** can be acquired, stored and/or processed for further use and analysis.

As further shown in FIG. **14**, the housing **24** in this embodiment includes a base member **140** and a cover member **142**. The base member **140** may correspond to the tub **29** as described above that defines the side walls **25** and the base wall **26**. The cover member **142** has a central aperture **153** dimensioned to receive the module **22** therethrough. An underside of the cover member **142** has a pair of depending posts (not shown) that cooperate with receivers (not shown) on the base member **140** as will be described. An outer periphery of the cover member **142** defines the lip or flange **28**. In an exemplary embodiment, the cover member **142** may have depending walls that cooperatively define the side walls **25** of the housing **24**. In such configuration, the base member **140** may define a ledge on the side wall to receive the depending walls on the cover member **142**.

FIG. **14** further shows components of the interface assembly **156**. The interface assembly **156** has a carrier **157** that supports the electrical connectors **82** such as described

schematically in reference to FIG. **32**. The electrical connectors **82** each have a distal end defining a contact that is resiliently supported by the carrier **157** that will cooperate with a corresponding contact on the module **22**. As shown in FIG. **14**, the interface assembly **156** is operably connected to the extension **21** having the leads **11** thereon of the insert member **37**. As further shown in FIG. **14**B, it is understood that the tail **21**A can be further folded over to be positioned adjacent a back side of the extension **21**. As further shown in FIG. **14**, the carrier **157** is positioned in a first lateral slot **148** of the base member **140** of the housing **24**. As can be appreciated from FIG. **14**B, a filler material **159** (e.g. a potting compound) may be injected into a second lateral slot **150** behind the carrier **157**. This configuration places the connectors **82** of the interface **20** exposed within the tub **29** for connection to the module **22**.

FIGS. **15-16** disclose additional views and features of one embodiment of the module **22**. As previously discussed, the module **22** is received by and is operably connected to the port **14** to collect, store and/or process data received from the sensor assembly **12**. It is understood that the module **22** houses various components for such purposes including but not limited to, printed circuit boards, power supplies, light members, interfaces, and different types of sensors, including multi-axis accelerometer, gyroscopes and/or magnetometers. The module **22** generally includes a housing **170** that supports an interface assembly **171** forming the interface **23**, and having electrical connectors that form contacts for cooperation with the interface **20** of the port **14**. The interface assembly **171** has a plurality of connectors **172** and a module carrier **173**. The connectors **172** each have distal ends that form contacts that collectively define the interface **23** of the module **22**. It is understood that the connectors **172** may be insert molded such that material is formed around the connectors **172** to define the module carrier **173**. The housing **170** generally has a module base member **175**, which may include multiple members (e.g., outer and inner members). The housing **170** further has a module top member **177**, which may also include multiple members (e.g., outer and inner top members). The module base member **175**, the module top member **177**, and interface assembly **171** cooperate to provide a sealed configuration around the connectors **172**. The connectors **172** may be considered to have an over-molded configuration in this embodiment. These components also form an inner cavity wherein the housing **170** supports internal components including a printed circuit board that is operably connected to the connectors **172**.

It is understood that the module **22** is received in the port **14**. A front end of the module **22** is inserted through the central aperture **153** and into the first section **144**. The module **22** is dimensioned to generally correspond in size to the tub **29** in an interference fit. In such configuration, the interface **23** on the module **22** is operably engaged with the interface **20** on the port **14** wherein the respective contacts of the interfaces **20**, **23** are in surface-to-surface contact. Thus, the construction is such that the interface **23** of the module **22** is forced against the interface **20** of the port **14**. The module **22** may have a recess **184** on a rear surface that may receive a projection on the housing **24** to assist in retaining the module **22** in the port **14** through a snap connection. A user can easily remove the module **22** from the port by accessing the module **22** with the assistance of a finger recess **29**A. Thus, the modules **22** can easily be inserted into the port **14** and removed from the port **14** when necessary such as for charging or transferring data, or when replacing one type of module **22** for one application with a different type of module for a different application, or replacing a power drained module **22** with a freshly charged module **22**.

FIG. **5** shows a schematic diagram of an example electronic module **22** including data transmission/reception capabilities through a data transmission/reception system **107**, which may be used in accordance with at least some examples of this invention. While the example structures of FIG. **5** illustrate the data transmission/reception system (TX-RX) **107** as integrated into the electronic module structure **22**, those skilled in the art will appreciate that a separate component may be included as part of a footwear structure **100** or other structure for data transmission/reception purposes and/or that the data transmission/reception system **107** need not be entirely contained in a single housing or a single package in all examples of the invention. Rather, if desired, various components or elements of the data transmission/reception system **107** may be separate from one another, in different housings, on different boards, and/or separately engaged with the article of footwear **100** or other device in a variety of different manners without departing from this invention. Various examples of different potential mounting structures are described in more detail below.

In the example of FIG. **5**, the electronic component **22** may include a data transmission/reception element **107** for transmitting data to and/or receiving data from one or more remote systems. In one embodiment, the transmission/reception element **107** is configured for communication through the port **14**, such as by the contacted or contactless interfaces described above. In the embodiment shown in FIG. **5**, the module **22** includes an interface **23** configured for connection to the port **14** and/or sensors **16**. In the module **22** illustrated in FIG. **5**, the interface **23** has contacts that are complementary with the terminals **11** of the interface **20** of the port **14**, to connect with the port **14**. In other embodiments, as described above, the port **14** and the module **22** may contain different types of interfaces **20**, **23**, which may be contacted or wireless. It is understood that in some embodiments, the module **22** may interface with the port **14** and/or sensors **16** through the TX-RX element **107**. Accordingly, in one embodiment, the module **22** may be external to the footwear **100**, and the port **14** may comprise a wireless transmitter interface for communication with the module **22**. The electronic component **22** of this example further includes a processing system **202** (e.g., one or more microprocessors), a memory system **204**, and a power supply **206** (e.g., a battery or other power source). In one embodiment, the power supply **206** may be configured for inductive charging, such as by including a coil or other inductive member. In this configuration, the module **22** may be charged by placing the article of footwear **100** on an inductive pad or other inductive charger, allowing charging without removal of the module **22** from the port **14**. In another embodiment, the power supply **206** may additionally or alternately be configured for charging using energy-harvesting technology, and may include a device for energy harvesting, such as a charger that charges the power supply **206** through absorption of kinetic energy due to movement of the user.

Connection to the one or more sensors can be accomplished as shown in FIG. **5**, but additional sensors (not shown) may be provided to sense or provide data or information relating to a wide variety of different types of parameters, such as physical or physiological data associated with use of the article of footwear **100** or the user, including pedometer type speed and/or distance information, other speed and/or distance data sensor information, tem-

perature, altitude, barometric pressure, humidity, GPS data, accelerometer output or data, heart rate, pulse rate, blood pressure, body temperature, EKG data, EEG data, data regarding angular orientation and changes in angular orientation (such as a gyroscope-based sensor), etc., and this data may be stored in memory **204** and/or made available, for example, for transmission by the transmission/reception system **107** to some remote location or system. The additional sensor(s), if present, may also include an accelerometer (e.g., for sensing direction changes during steps, such as for pedometer type speed and/or distance information, for sensing jump height, etc.). In one embodiment, the module **22** may include an additional sensor **208**, such as an accelerometer, and the data from the sensors **16** may be integrated with the data from the accelerometer **208**, such as by the module **22** or the external device **110**.

As additional examples, electronic modules, systems, and methods of the various types described above may be used for providing automatic impact attenuation control for articles of footwear. Such systems and methods may operate, for example, like those described in U.S. Pat. No. 6,430,843, U.S. Patent Application Publication No. 2003/0009913, and U.S. Patent Application Publication No. 2004/0177531, which describe systems and methods for actively and/or dynamically controlling the impact attenuation characteristics of articles of footwear (U.S. Pat. No. 6,430,843, U.S. Patent Application Publication No. 2003/0009913, and U.S. patent application Publication No. 2004/0177531 are each entirely incorporated herein by reference and made part hereof). When used for providing speed and/or distance type information, sensing units, algorithms, and/or systems of the types described in U.S. Pat. Nos. 5,724,265, 5,955,667, 6,018,705, 6,052,654, 6,876,947 and 6,882,955 may be used. These patents each are entirely incorporated herein by reference. Additional embodiments of sensors and sensor systems, as well as articles of footwear and sole structures and members utilizing the same, are described in U.S. Patent Application Publications Nos. 2010/0063778 and 2010/0063779, which applications are incorporated by reference herein in their entireties and made part hereof.

The electronic module **22** can also include an activation system (not shown). The activation system or portions thereof may be engaged with the module **22** or with the article of footwear **100** (or other device) together with or separate from other portions of the electronic module **22**. The activation system may be used for selectively activating the electronic module **22** and/or at least some functions of the electronic module **22** (e.g., data transmission/reception functions, etc.). A wide variety of different activation systems may be used without departing from this invention. In any such embodiments, the sensor system **12** may contain a "sleep" mode, which can deactivate the system **12** after a set period of inactivity. In an alternate embodiment, the sensor system **12** may operate as a low-power device that does not activate or deactivate.

The module **22** may further be configured for communication with an external device **110**, which may be an external computer or computer system, mobile device, gaming system, or other type of electronic device, as shown in FIGS. **6** and **10-12**. The exemplary external device **110** shown in FIG. **5** includes a processor **302**, a memory **304**, a power supply **306**, a display **308**, a user input **310**, and a data transmission/reception system **108**. The transmission/reception system **108** is configured for communication with the module **22** via the transmission/reception system **107** of the module **22**, through any type of known electronic communication, including the contacted and contactless communication methods described above and elsewhere herein. It is understood that the module **22** and/or the port **14** can be configured for communication with a plurality of external devices, including a wide variety of different types and configurations of electronic devices, and also including intermediate devices that function to pass information on to another external device and may or may not further process such data. Additionally, the transmission/reception system **107** of the module **22** may be configured for a plurality of different types of electronic communication. It is further understood that the shoe **100** may include a separate power source to operate the sensors **16** if necessary, such as a battery, piezoelectric, solar power supplies, or others. In the embodiment of FIGS. **3-8**, the sensors **16** receive power through connection to the module **22**.

As described below, such sensor assemblies can be customized for use with specific software for the electronic module **22** and/or the external device **110**. A third party may provide such software along with a sole insert having a customized sensor assembly, as a package. The module **22** and/or the overall sensor system **12** may cooperate with one or more algorithms for analysis of the data obtained from the sensors **16**, including algorithms stored on and/or executed by the module, the external device **110**, or another component.

In operation, the sensors **16** gather data according to their function and design, and transmit the data to the port **14**. The port **14** then allows the electronic module **22** to interface with the sensors **16** and collect the data for later use and/or processing. In one embodiment, the data is collected, stored, and transmitted in a universally readable format, so the data is able to be accessed and/or downloaded by a plurality of users, with a variety of different applications, for use in a variety of different purposes. In one example, the data is collected, stored, and transmitted in XML, format. In one embodiment, the module **22** detects pressure changes in the sensors **16** utilizing the circuit **10** as shown in FIG. **9**, by measuring the voltage drop at the measurement terminal **104*b***, which is reflective of the changes in resistance of the particular sensor **16** that is currently switched. FIG. **13** illustrates one example of a pressure—resistance curve for a sensor **16**, with broken lines illustrating potential shifts of the curve due to factors such as bending of the insert **37**. The module **22** may have an activation resistance R_A, which is the detected resistance necessary for the module **22** to register the pressure on the sensor. The corresponding pressure to produce such resistance is known as the activation pressure P_A. The activation resistance R_A may be selected to correspond to a specific activation pressure P_A at which it is desired for the module **22** to register data. In one embodiment, the activation pressure P_A may be about 0.15 bar, about 0.2 bar, or about 0.25 bar, and the corresponding activation resistance R_A may be about 100 kΩ. Additionally, in one embodiment, the highest sensitivity range may be from 150-1500 mbar. In one embodiment, the sensor system **12** constructed as shown in FIGS. **3-22**B can detect pressures in the range of 0.1-7.0 bar (or about 0.1-7.0 atm), and in another embodiment, the sensor system **12** may detect pressures over this range with high sensitivity.

In different embodiments, the sensor system **12** may be configured to collect different types of data. In one embodiment (described above), the sensor(s) **16** can collect data regarding the number, sequence, and/or frequency of compressions. For example, the system **12** can record the number or frequency of steps, jumps, cuts, kicks, or other compressive forces incurred while wearing the footwear **100**, as well as other parameters, such as contact time and

flight time. Both quantitative sensors and binary on/off type sensors can gather this data. In another example, the system can record the sequence of compressive forces incurred by the footwear, which can be used for purposes such as determining foot pronation or supination, weight transfer, foot strike patterns, or other such applications. In another embodiment (also described above), the sensor(s) **16** are able to quantitatively measure the compressive forces on the adjacent portions of the shoe **100**, and the data consequently can include quantitative compressive force and/or impact measurement. Relative differences in the forces on different portions of the shoe **100** can be utilized in determining weight distribution and "center of pressure" of the shoe **100**. The weight distribution and/or center of pressure can be calculated independently for one or both shoes **100**, or can be calculated over both shoes together, such as to find a center of pressure or center of weight distribution for a person's entire body. In further embodiments, the sensor(s) **16** may be able to measure rates of changes in compressive force, contact time, flight time or time between impacts (such as for jumping or running), and/or other temporally-dependent parameters. It is understood that, in any embodiment, the sensors **16** may require a certain threshold force or impact before registering the force/impact, as described above.

As described above, the data is provided through the universal port **14** to the module **22** in a universally readable format in one embodiment, so that the number of applications, users, and programs that can use the data is nearly unlimited. Thus, the port **14** and module **22** are configured and/or programmed as desired by a user, and the port **14** and module **22** receive input data from the sensor system **12**, which data can be used in any manner desired for different applications. The module **22** may be able to recognize whether the data received is related to a left or right shoe, such as through the use of a unique identification chip **92**. The module **22** may process the data differently according to the recognition of L/R shoe, and may also transmit the data to the external device **110** with an identification of whether the data is from a L/R shoe. The external device **110** may likewise process or otherwise handle the data differently based on the identification of L/R shoe as well. In one example, the connections of the sensors **16** to the terminals **11** and the interface **20** may be different between the left and right inserts **37**, as shown in FIG. **12** and discussed above. The data from the left insert **37** may be interpreted differently from the data from the right insert **37** in accordance with this arrangement. The module **22** and/or the electronic device **110** may perform similar actions with respect to other identifying information contained on the unique identification chip **92**. In many applications, the data is further processed by the module **22** and/or the external device **110** prior to use. In configurations where the external device **110** further processes the data, the module **22** may transmit the data to the external device **110**. This transmitted data may be transmitted in the same universally-readable format, or may be transmitted in another format, and the module **22** may be configured to change the format of the data. Additionally, the module **22** can be configured and/or programmed to gather, utilize, and/or process data from the sensors **16** for one or more specific applications. In one embodiment, the module **22** is configured for gathering, utilizing, and/or processing data for use in a plurality of applications. Examples of such uses and applications are given below. As used herein, the term "application" refers generally to a particular use, and does not necessarily refer to use in a computer program application, as that term is used in the computer arts. Nevertheless, a particular application may be embodied wholly or partially in a computer program application.

Further, in one embodiment, the module **22** can be removed from the footwear **100** and replaced with a second module **22** configured for operating differently than the first module **22**. For example, the replacement is accomplished by lifting the foot contacting member **133**, disconnecting the first module **22** from the port **14** and removing the first module **22** from the housing **24**, then inserting the second module **22** into the housing **24** and connecting the second module **22** to the port **14**, and finally placing the foot contacting member **133** back into position. The second module **22** may be programmed and/or configured differently than the first module **22**. In one embodiment, the first module **22** may be configured for use in one or more specific applications, and the second module **22** may be configured for use in one or more different applications. For example, the first module **22** may be configured for use in one or more gaming applications and the second module **22** may be configured for use in one or more athletic performance monitoring applications. Additionally, the modules **22** may be configured for use in different applications of the same type. For example, the first module **22** may be configured for use in one game or athletic performance monitoring application, and the second module **22** may be configured for use in a different game or athletic performance monitoring application. As another example, the modules **22** may be configured for different uses within the same game or performance monitoring application. In another embodiment, the first module **22** may be configured to gather one type of data, and the second module **22** may be configured to gather a different type of data. Examples of such types of data are described herein, including quantitative force and/or pressure measurement, relative force and/or pressure measurement (i.e. sensors **16** relative to each other), weight shifting/transfer, impact sequences (such as for foot strike patterns) rate of force and/or pressure change, etc. In a further embodiment, the first module **22** may be configured to utilize or process data from the sensors **16** in a different manner than the second module **22**. For example, the modules **22** may be configured to only gather, store, and/or communicate data, or the modules **22** may be configured to further process the data in some manner, such as organizing the data, changing the form of the data, performing calculations using the data, etc. In yet another embodiment, the modules **22** may be configured to communicate differently, such as having different communication interfaces or being configured to communicate with different external devices **110**. The modules **22** may function differently in other aspects as well, including both structural and functional aspects, such as using different power sources or including additional or different hardware components, such as additional sensors as described above (e.g. GPS, accelerometer, etc.).

One use contemplated for the data collected by the system **12** is in measuring weight transfer, which is important for many athletic activities, such as a golf swing, a baseball/softball swing, a hockey swing (ice hockey or field hockey), a tennis swing, throwing/pitching a ball, etc. The pressure data collected by the system **12** can give valuable feedback regarding balance and stability for use in improving technique in any applicable athletic field. It is understood that more or less expensive and complex sensor systems **12** may be designed, based on the intended use of the data collected thereby.

The data collected by the system **12** can be used in measurement of a variety of other athletic performance

characteristics. The data can be used to measure the degree and/or speed of foot pronation/supination, foot strike patterns, balance, and other such parameters, which can be used to improve technique in running/jogging or other athletic activities. With regard to pronation/supination, analysis of the data can also be used as a predictor of pronation/supination. Speed and distance monitoring can be performed, which may include pedometer-based measurements, such as contact measurement or loft time measurement. Jump height can also be measured, such as by using contact or loft time measurement. Lateral cutting force can be measured, including differential forces applied to different parts of the shoe **100** during cutting. The sensors **16** can also be positioned to measure shearing forces, such as a foot slipping laterally within the shoe **100**. As one example, additional sensors may be incorporated into the sides of the upper **120** of the shoe **100** to sense forces against the sides.

The data, or the measurements derived therefrom, may be useful for athletic training purposes, including improving speed, power, quickness, consistency, technique, etc., as described in greater detail below. The port **14**, module **22**, and/or external device **110** can be configured to give the user active, real-time feedback. In one example, the port **14** and/or module **22** can be placed in communication with a computer, mobile device, etc., in order to convey results in real time. In another example, one or more vibration elements may be included in the shoe **100**, which can give a user feedback by vibrating a portion of the shoe to help control motion, such as the features disclosed in U.S. Pat. No. 6,978,684, which is incorporated herein by reference and made part hereof. Additionally, the data can be used to compare athletic movements, such as comparing a movement with a user's past movements to show consistency, improvement, or the lack thereof, or comparing a user's movement with the same movement of another, such as a professional golfer's swing.

The system **12** can also be configured for "all day activity" tracking, to record the various activities a user engages in over the course of a day. The system **12** may include a special algorithm for this purpose, such as in the module **22**, the external device **110**, and/or the sensors **16**. The system **12** may also be used for control applications, rather than data collection and processing applications, such as for use in controlling an external device **110**, e.g., a computer, television, video game, etc., based on movements by the user detected by the sensors **16**.

A single article of footwear **100** containing the sensor system **12** as described herein can be used alone or in combination with a second article of footwear **100'** having its own sensor system **12'**, such as a pair of shoes **100**, **100'** as illustrated in FIGS. **10-12**. The sensor system **12'** of the second shoe **100'** generally contains one or more sensors **16'** connected by sensor leads **18'** to a port **14'** in communication with an electronic module **22'**. The second sensor system **12'** of the second shoe **100'** shown in FIGS. **10-12** has the same configuration as the sensor system **12** of the first shoe **100**. However, in another embodiment, the shoes **100**, **100'** may have sensor systems **12**, **12'** having different configurations. The two shoes **100**, **100'** are both configured for communication with the external device **110**, and in the embodiment illustrated, each of the shoes **100**, **100'** has an electronic module **22**, **22'** configured for communication with the external device **110**. In another embodiment, both shoes **100**, **100'** may have ports **14**, **14'** configured for communication with the same electronic module **22**. In this embodiment, at least one shoe **100**, **100'** may be configured for wireless communication with the module **22**. FIGS. **10-12** illustrate various modes for communication between the modules **22**, **22'**.

FIG. **10** illustrates a "mesh" communication mode, where the modules **22**, **22'** are configured for communicating with each other, and are also configured for independent communication with the external device **110**. FIG. **11** illustrates a "daisy chain" communication mode, where one module **22'** communicates with the external device **110** through the other module **22**. In other words, the second module **22'** is configured to communicate signals (which may include data) to the first module **22**, and the first module **22** is configured to communicate signals from both modules **22**, **22'** to the external device **110**. Likewise, the external device communicates with the second module **22'** through the first module **22**, by sending signals to the first module **22**, which communicates the signals to the second module **22'**. In one embodiment, the modules **22**, **22'** can also communicate with each other for purposes other than transmitting signals to and from the external device **110**. FIG. **12** illustrates an "independent" communication mode, where each module **22**, **22'** is configured for independent communication with the external device **110**, and the modules **22**, **22'** are not configured for communication with each other. In other embodiments, the sensor systems **12**, **12'** may be configured for communication with each other and/or with the external device **110** in another manner.

FIGS. **17-19** illustrate another embodiment of a sensor system **12** for use in an article of footwear. The system **12** in FIGS. **17-19** utilizes an insert or carrier **200** for insertion into an article of footwear, having a plurality of sensors **16** connected thereto in positions corresponding to key pressure points on a footwear sole, and also includes a port **14** supported by the insert **200** for connection to an electronic module **22**. In this embodiment, the sensors **16** may be FSR sensors as described above, including contacts **40**, **42** disposed on separate layers, which change in resistance during compression. The port **14** and module **22** may likewise utilize a configuration as described above. The insert **200** may be a sole member for insertion into an article of footwear, such as a strobel, insole, sockliner, etc., and may be made from flexible foam, fabric, rubber, and other such materials, or a combination thereof. The leads **18** connecting the sensors **16** to the port **14** are created by conductive thread that is sewn into the insert **200** or flexible ink that can be deposited on or within the insert **200**. One example of such a conductive thread is a nylon yarn coated with a conductive formulation. In other embodiments, different types of conductive threads, such as lycra-based or other elastic conductive threads, could be used. The sensors **16** may have connection pads **201** that are optimized for a sewn connection, and also may be backed with a pressure-sensitive adhesive to facilitate placement on the insert **200**. Further, the sensors **16** may be symmetrical, allowing them to be placed medially or laterally. The sensors **16** may be positioned on the top or bottom surface of the insert **200**. In another embodiment, the sensors **16** may be positioned within the insert **200**.

The use of conductive threads as leads **18** permit the conductive paths between the sensors **16** and the port **14** have the same mechanical properties as the footwear material onto which it is sewn. This, in turn, decouples the motion of the footwear from the materials of the sensor system **12** and increases durability and allows the system **12** to be incorporated into a wider variety of footwear with various flexing characteristics. The configuration shown in FIG. **17** also reduces or eliminates the need for a separate insert,

reducing material usage and simplifying assembly, as well as reducing weight and potentially increasing flexibility in the sole. Further, this configuration permits the sensors **16** to be incorporated into a wide range of different shoe sizes, without specially-dimensioned inserts being necessary for incorporation into different size shoes.

FIGS. **18**A-B schematically illustrate the connections between the sensors **16** on the insert **200** as shown in FIG. **17**. It is understood that the components of FIGS. **18**A-B are not drawn to scale. As shown, a single power/ground lead **18**B connects all the sensors **16** to the power/ground terminal **11**A of the port **14**, and each sensor **16** is also connected to its own separate terminal **11**. In FIG. **18**A, an additional terminal **11** is connected to the power/ground terminal **11**A, with a resistor **102** located therebetween. In FIG. **18**B, the resistor **102** is located between the final terminal **11** and the heel sensor **16**. FIG. **19** illustrates a circuit **204** that may be associated with the system **12** as illustrated in FIGS. **17-18**, which is similar to the circuit **10** of FIG. **9**, except that the circuit **204** includes only a single resistor **102** (but could include parallel resistors in another embodiment).

FIGS. **20-23** illustrate another embodiment of a sensor system **12** for use in an article of footwear. The system **12** in FIGS. **20-23** utilizes an insert **600** that may be a single-layer sheet of polymer webbing or film (e.g. Mylar) as described above, having sensors **16** connected thereto. The sensors **16** in this embodiment may be FSR sensors as described above, including contacts **40**, **42** disposed on separate layers, which change in resistance during compression. The sensors **16** may each be separately formed, as similarly shown in FIG. **17** and FIG. **22**, in a two-layer configuration, with the contacts **40**, **42** printed on the separate layers, and each sensor **16** can be individually connected to the insert **600**. The sensors **16** may have adhesive backing for connection to the insert **600**, as shown in FIG. **21** and as also described above. The insert **600** further has leads **18** formed by conductive traces printed on the insert **600**, and such conductive traces may be exposed, if the insert **600** is a single layer. Further, the insert **600** can be formed integrally within a sole member **601**, such as a sockliner, and may be laminated between two membrane layers (not shown) of the sole member **601**, e.g., TPU layers. The sensors **16** are thereby sealed within the sole member **601**, and can vent into the sole member **601** without risk of contamination, as the sole member **601** is sealed. The system **12** further includes a port **14** connected to the sensors **16** through the leads **18**, which is also in communication with an electronic module **602** as described below.

FIG. **22** illustrates one embodiment of a sensor **16**, having two electrodes **40**, **42**, disposed on substrate layers **603**A,B, with each electrode **40**, **42** having a plurality of segments **1-5** connected by one or more distribution leads **18**A, **18**E. It is understood that the electrodes **40**, **42** are positioned in superimposed relation, with the first electrode **40** positioned on the top surface of the bottom substrate layer **603**A and the second electrode **42** positioned on the bottom surface of the top substrate layer **603**B, as similarly described elsewhere herein. As seen in FIG. **22**, the first electrode **40** has two electrically separate portions **605**, **606**, each with a separate distribution lead **18**A, where one portion **605** includes segments **2** and **4** and the other portion **606** includes segments **1**, **3**, and **5**. The first portion **605** is connected to an input lead **18**C and the second portion **606** is connected to an output lead **18**D (or vice versa), both of which leads **18**C,D are in connection with the bottom substrate layer **603**A. The second electrode **42** has a single distribution lead **18**E. The schematic in FIG. **22** illustrates the signal path through the sensor **16**, incoming from the lead **18**C in contact with the bottom substrate **603**A, through the first portion **605** of the first electrode **40**, to the corresponding segment of the second electrode **42** on the top substrate **603**B, and then back through the second portion **606** of the first electrode **40** and through the output lead **18**D. Accordingly, as illustrated in FIG. **22**, each sensor **16** represents two separate resistors (i.e. segments **2**, **4**) in parallel, placed in series with three separate resistors (i.e., segments **1**, **3**, **5**) in parallel. It is understood that this same or a similar sensor configuration may be used in the embodiment of FIG. **17** as described above. The sensors **16** and the port **14** in this embodiment may be connected together in the same manner shown and described in FIGS. **18-19**. Other configurations may be used in other embodiments.

The module **602** in the embodiment of FIGS. **20-23** is permanently connected to the sole member **601**, and may be partially or completely enclosed within the sole member **601** and/or the sole member **601** in combination with one or more other sole members (e.g., midsole). In the embodiment of FIGS. **20-22**, the module **602** is overmolded within the arch area of the sole, and may be partially or completely enclosed by the sole member **601**. The module **602** has the port **14** in connection with the sensor leads **18** as described in other embodiments herein. It is understood that the module **602** may include at least any/all of the functional components and features described elsewhere herein with respect to the electronic module **22**. In an alternate embodiment, the system **12** of FIGS. **20-23** may have a removable electronic module **22** and a housing **24** for receiving the module **22**, as described herein and shown e.g., in FIGS. **14**A-**16**.

Additionally, a connector **607** is provided in communication with the module **602** in the embodiment of FIGS. **20-23**, in order to provide external electrical communication with the module **602**. In this embodiment, the sole member **601** may have the connector **607** in the form of a tail that extends from the heel area of the sole member **601** and is in electrical communication with the module **602**. The connector **607** is externally exposed, to provide a physical connection to external electronic equipment. The connector **607** is configured to be engaged by an external connector, such as a "snakebite" connector, and may have contacts and other structure configured for connection to a specific external connector. The module **602** can thereby communicate with an external device to send or receive information (e.g., software updates/reset), and the connector **607** can also be used for battery charging. It is understood that the module **602** may also be configured for wireless communication, as described elsewhere herein. In one embodiment, the connector **607** may be accessible within the shoe cavity, and in another embodiment, the connector **607** may be accessible from the outside of the sole, such as being exposed through one of the external walls of the sole. If the connector **607** is located within the shoe cavity, it is understood that it may be located beneath the sole member **601** or beneath another sole member that may be lifted to access the connector **607**. In another embodiment, communication with the module **602** may be exclusively wireless, and power charging may be wireless as well (e.g., inductive charging, kinetic charging, etc.).

The configuration of the sensors **16** and leads **18** in the insert **600** of FIGS. **20-23** requires less surface area for connection than other configurations described herein. Therefore, the insert **600** in this embodiment may utilize less material and may have additional cut-out portions that can provide additional flexibility and/or tearing mitigation for

the insert **600**. For example, FIG. **23** illustrates an insert **600** that is usable with the system **12** of FIGS. **20-23** and includes a deeper cut-out **608** on the peripheral edge thereof than other embodiments described herein. It is understood that other areas of the insert **600** may also potentially be removed, depending on the configuration of the conductive traces.

FIGS. **24-25** illustrate another embodiment of a sensor system **12** for use in an article of footwear. The system **12** in FIGS. **24-25** utilizes a carrier or insert **400** having a plurality of sensors **16** connected thereto in positions corresponding to key pressure points on a footwear sole. The insert **400** may be configured similarly to the insert **600** of FIG. **20**, i.e., the insert **400** may be connected or bonded to or function as a sole member for insertion into an article of footwear, such as a strobel, insole, sockliner, etc. In one embodiment, the insert **400** is a flexible foam or fabric layer having the sensors **16** connected thereto, which can be laminated into a sockliner or other sole member. The leads **18** connecting the sensors **16** to the port **14** may be created by conductive thread that is sewn into the insert **400** or the sole member to which it is bonded or flexible ink that can be deposited on or within the insert **400**, as similarly described above with respect to FIG. **17**. Such sensors decouple the motion of the sole from the sensor materials, as described above with respect to FIG. **17**. In this embodiment, the sensors **16** are piezoelectric sensors, which create a voltage when deformed. The system **12** of FIGS. **24-25** further includes a port **14** in communication with an electronic module **401** that may be permanently connected within the sole as described above with respect to the module **602** of FIGS. **20-23** (e.g., by overmolding). As also described above, the module **401** may include a connector **402** to provide a physical connection to external electronic equipment. Another type of module may alternately be used, such as a removable module **22** as described above and shown, e.g., in FIGS. **14A-16**.

The piezoelectric sensors **16** as used in the embodiment of FIGS. **24-25** may be constructed in a variety of manners, including at least one piezoelectric material. One example of a piezoelectric material that may be used in the sensors **16** is polyvinylidene difluoride (PVDF), however other materials may be used as well. In this embodiment, each sensor **16** has two leads **18** connected thereto, and deformation of the piezoelectric material generates a voltage across the two leads **18**. FIG. **25** illustrates one potential configuration of a piezoelectric sensor **16** that may be used in connection with the system **12** of FIG. **24**. The sensor **16** in FIG. **25** includes a piezoelectric material **403** that may have metallization **404** on both sides to create a conductive surface for contact by the leads **18**, surrounded by polymer layers **405** for support and protection. It is understood that FIG. **25** is schematic. The piezoelectric sensors **16** may be separate sensors connected to the insert **400** by adhesive, stitching, or other technique. In another embodiment, the outer piezoelectric material **403** and metallization may be contained between the layers of a two-layer Mylar insert, which can serve as the protective polymer layers **405**.

The use of the piezoelectric sensors **16** in the embodiment of FIGS. **24-25** produces several advantages. For example, the sensors **16** are extremely thin and flexible, and can be easily sealed and/or laminated directly into footwear components in nearly any location. Additionally, the sensors **16** do not require power, as the piezoelectric effect causes the sensors **16** to generate a voltage. This effect may also be used for energy harvesting, e.g., for charging the module **401**. Further, the piezoelectric effect can work in reverse, i.e., the sensor **16** may deform when a voltage is applied. This effect can be used to generate tactile/haptic feedback that is detectable by the user through sense of touch, e.g., a slight vibration. The sensors are also symmetrical, and can be used in any orientation. The connection pads of the sensors **16** may also be optimized for overlay of the ink or thread of the leads.

FIGS. **26-28** illustrate another embodiment of a sensor system **12** for use in an article of footwear. The system **12** in FIGS. **26-28** utilizes a carrier or insert **500** that may be similar to any of the inserts **200**, **600**, **400** described above and shown in FIGS. **17-25**. In this embodiment, the system **12** utilizes multiple piezoelectric film strips **501** that function as sensors for sensing flexing of the sole of the article of footwear. The plurality of film strips **501** are arranged to mimic the skeletal shape of the human foot, and the strips **501** are arranged to have different lengths. The strips **501** may be directly connected to the electronic components **502** of the system **12**, which may include a port **14** and an electronic module according to any of the embodiments described above (e.g., a removable module **22** as in FIGS. **14A-16**, an overmolded module **600** as in FIGS. **20-23**, etc.). In another embodiment, conductive leads may be used to connect the piezoelectric strips **501** to the electronic components **502**. FIG. **26** illustrates one embodiment of the sensor system **12** incorporating the piezoelectric strips **501**, and FIG. **27** illustrates another embodiment that utilizes a smaller number of piezoelectric strips **501**, for a simpler and less expensive construction. The strips **501** may have a construction similar to the sensors **16** as illustrated in FIG. **25**, in one embodiment.

FIG. **28** illustrates the functioning of the sensor system **12** of FIG. **26**. Two different sole flex lines F**1**, F**2** are illustrated in FIG. **28**, and the configuration of the strips **501** provides the ability to distinguish between the two flex lines F**1**, F**2**. The first flex line F**1** only causes deformation of two of the longest strips **501**, and does not cause deformation of any of the other strips **501**. The electronic components **502** can thereby determine the location of the flex line F**1**, based on which strips **501** were deformed and which strips **501** were not. The second flex area F**2** deforms a greater number of strips **501**, and the location of this flex line F**2** can be determined in the same manner. The degree of flexing of the sole can then be determined by the distance between the two flex lines F**1**, F**2**. A small flex of the sole will create a small flex area, and the flex axes (e.g., flex lines F**1**, F**2**) will be close together and often near the forefoot. A large flex of the sole will create a large flex area, and the flex axes will be farther apart and may be within the midfoot area. Thus, the system **12** can determine the flex location and the degree of flexing by using the strips **501** configured as shown. The piezoelectric strips **501** can also produce advantages as described above, such as thin size, flexibility, etc., as well as use in energy harvesting and/or haptic feedback.

As will be appreciated by one of skill in the art upon reading the present disclosure, various aspects described herein may be embodied as a method, a data processing system, or a computer program product. Accordingly, those aspects may take the form of an entirely hardware embodiment, an entirely software embodiment or an embodiment combining software and hardware aspects. Furthermore, such aspects may take the form of a computer program product stored by one or more tangible computer-readable storage media or storage devices having computer-readable program code, or instructions, embodied in or on the storage media. Any suitable tangible computer readable storage media may be utilized, including hard disks, CD-ROMs,

optical storage devices, magnetic storage devices, and/or any combination thereof. In addition, various intangible signals representing data or events as described herein may be transferred between a source and a destination in the form of electromagnetic waves traveling through signal-conducting media such as metal wires, optical fibers, and/or wireless transmission media (e.g., air and/or space).

As described above, aspects of the present invention may be described in the general context of computer-executable instructions, such as program modules, being executed by a computer and/or a processor thereof. Generally, program modules include routines, programs, objects, components, data structures, etc. that perform particular tasks or implement particular abstract data types. Such a program module may be contained in a tangible, non-transitory computer-readable medium, as described above. Aspects of the present invention may also be practiced in distributed computing environments where tasks are performed by remote processing devices that are linked through a communications network. Program modules may be located in a memory, such as the memory **204** of the module **22** or memory **304** of the external device **110**, or an external medium, such as game media, which may include both local and remote computer storage media including memory storage devices. It is understood that the module **22**, the external device **110**, and/or external media may include complementary program modules for use together, such as in a particular application. It is also understood that a single processor **202**, **302** and single memory **204**, **304** are shown and described in the module **22** and the external device **110** for sake of simplicity, and that the processor **202**, **302** and memory **204**, **304** may include a plurality of processors and/or memories respectively, and may comprise a system of processors and/or memories.

Several alternative embodiments and examples have been described and illustrated herein. A person of ordinary skill in the art would appreciate the features of the individual embodiments, and the possible combinations and variations of the components. A person of ordinary skill in the art would further appreciate that any of the embodiments could be provided in any combination with the other embodiments disclosed herein. It is understood that the invention may be embodied in other specific forms without departing from the spirit or central characteristics thereof. The present examples and embodiments, therefore, are to be considered in all respects as illustrative and not restrictive, and the invention is not to be limited to the details given herein. The terms "first," "second," "top," "bottom," etc., as used herein, are intended for illustrative purposes only and do not limit the embodiments in any way. Additionally, the term "plurality," as used herein, indicates any number greater than one, either disjunctively or conjunctively, as necessary, up to an infinite number. Further, "Providing" an article or apparatus, as used herein, refers broadly to making the article available or accessible for future actions to be performed on the article, and does not connote that the party providing the article has manufactured, produced, or supplied the article or that the party providing the article has ownership or control of the article. Accordingly, while specific embodiments have been illustrated and described, numerous modifications come to mind without significantly departing from the spirit of the invention and the scope of protection is only limited by the scope of the accompanying Claims.

What is claimed is:

1. A sensor system comprising:

a flexible insert member configured to be connected to a sole structure of an article of footwear;

a port connected to the insert member and configured for communication;

a plurality of sensors connected to the insert member, each sensor comprising a strip of a sensor material that is electrically connected to the port, wherein a first plurality of the strips of the sensor material extend from a midfoot region to a forefoot region of the insert member, wherein the first plurality of strips define a plurality of different lengths, and wherein the sensor material of each sensor is a piezoelectric material configured to generate a voltage when deformed; and

an electronic module connected to the port, wherein the electronic module is configured for collecting data from the sensors based on voltage generated by the piezoelectric material and for communication with an external device, wherein the electronic module is further configured for determining a degree of flexing of the forefoot region of the insert member based on a number of the first plurality of strips that are deformed.

2. The sensor system of claim **1**, wherein each strip is directly connected to the port to electrically connect the sensors to the port.

3. The sensor system of claim **1**, wherein the sensors further comprise a second plurality of the strips of the sensor material extending from the midfoot region to a heel region of the insert member, wherein the second plurality of strips define a second plurality of different lengths.

4. The sensor system of claim **1**, wherein the electronic module, the port, and the sensors are further configured such that the electronic module is configured for generating a voltage across the sensors to cause deformation of the piezoelectric material to provide tactile feedback to a user.

5. The sensor system of claim **1**, the first plurality of strips are arranged in a plurality of pairs of strips that extend immediately adjacent to each other, and wherein each pair of strips includes a longer strip and a shorter strip.

6. The sensor system of claim **5**, the shorter strips of all of the plurality of pairs are shorter than the longer strips of all of the plurality of pairs.

7. The sensor system of claim **1**, wherein the electronic module comprises a power source, and wherein the electronic module is further configured for utilizing the voltage generated by the piezoelectric material to charge the power source.

8. The sensor system of claim **1**, wherein each sensor comprises the strip of the piezoelectric material having metallization on opposed surfaces thereof, wherein the metallization provides a point for electronic connection.

9. The sensor system of claim **8**, wherein each sensor further comprises polymer layers surrounding the piezoelectric material and the metallization.

10. An article of footwear comprising:

a sole structure;

an upper member connected to the sole structure; and

a sensor system connected to the sole structure, the sensor system comprising:

a flexible insert member connected to the sole structure;

a port connected to the insert member and configured for communication;

a plurality of sensors connected to the insert member, each sensor comprising a strip of a sensor material that is electrically connected to the port, wherein a first plurality of the strips of the sensor material extend from a midfoot region to a forefoot region of the insert member, wherein the first plurality of strips define a plurality of different lengths, and wherein

the sensor material of each sensor is a piezoelectric material configured to generate a voltage when deformed; and

an electronic module connected to the port, wherein the electronic module is configured for collecting data from the sensors based on voltage generated by the piezoelectric material and for communication with an external device, wherein the electronic module is further configured for determining a degree of flexing of the forefoot region of the insert member based on a number of the first plurality of strips that are deformed.

11. A sensor system comprising:

a flexible insert member configured to be connected to a sole structure of an article of footwear;

a port connected to the insert member and configured for communication with an electronic module; and

a plurality of sensors connected to the insert member, each sensor comprising a strip of a sensor material that is electrically connected to the port, wherein a first plurality of the strips of the sensor material extend from a midfoot region to a forefoot region of the insert member, wherein the first plurality of strips define a plurality of different lengths, and wherein the sensor material of each sensor is a piezoelectric material configured to generate a voltage when deformed, and wherein each sensor is further configured to transmit the voltage generated by the piezoelectric material to the port for transmission to the electronic module,

wherein the insert member is configured such that a first flex zone is definable extending a first distance from the port and a second flex zone is definable extending a second distance from the port that is different from the first distance, wherein when the insert member flexes within the first flex zone, a first number of the strips of the sensor material are configured to deform to generate the voltage, and when the insert member flexes within the second flex zone, a second number of the strips of the sensor material are configured to deform to generate the voltage, wherein the second number is different from the first number.

12. The sensor system of claim **11**, wherein each strip is directly connected to the port to electrically connect the sensors to the port.

13. The sensor system of claim **11**, wherein the sensors further comprise a second plurality of the strips of the sensor material extending from the midfoot region to a heel region of the insert member, wherein the second plurality of strips define a second plurality of different lengths.

14. The sensor system of claim **11**, wherein the port and the sensors are further configured such that the port is configured to supply electric power to the sensors, and the strips of the sensor material are configured to deform when the electric power is received from the port, to provide tactile feedback to a user.

15. The sensor system of claim **11**, the first plurality of strips are arranged in a plurality of pairs of strips that extend immediately adjacent to each other, and wherein each pair of strips includes a longer strip and a shorter strip.

16. The sensor system of claim **15**, the shorter strips of all of the plurality of pairs are shorter than the longer strips of all of the plurality of pairs.

17. The sensor system of claim **11**, wherein each sensor comprises the strip of the piezoelectric material having metallization on opposed surfaces thereof, wherein the metallization provides a point for electronic connection.

18. The sensor system of claim **17**, wherein each sensor further comprises polymer layers surrounding the piezoelectric material and the metallization.

19. An article of footwear comprising:

a sole structure;

an upper member connected to the sole structure; and

a sensor system connected to the sole structure, the sensor system comprising:

a flexible insert member connected to the sole structure;

a port connected to the insert member and configured for communication with an electronic module; and

a plurality of sensors connected to the insert member, each sensor comprising a strip of a sensor material that is electrically connected to the port, wherein a first plurality of the strips of the sensor material extend from a midfoot region to a forefoot region of the insert member, wherein the first plurality of strips define a plurality of different lengths, and wherein the sensor material of each sensor is a piezoelectric material configured to generate a voltage when deformed, and wherein each sensor is further configured to transmit the voltage generated by the piezoelectric material to the port for transmission to the electronic module,

wherein the insert member is configured such that a first flex zone is definable extending a first distance from the port and a second flex zone is definable extending a second distance from the port that is different from the first distance, wherein when the insert member flexes within the first flex zone, a first number of the strips of the sensor material are configured to deform to generate the voltage, and when the insert member flexes within the second flex zone, a second number of the strips of the sensor material are configured to deform to generate the voltage, wherein the second number is different from the first number.

20. A sensor system comprising:

a flexible insert member configured to be connected to a sole structure of an article of footwear;

a port connected to the insert member and configured for communication;

a plurality of sensors connected to the insert member, each sensor comprising a strip of a sensor material that is electrically connected to the port, wherein a first plurality of the strips of the sensor material extend from a midfoot region to a forefoot region of the insert member, and wherein the sensor material of each sensor is a piezoelectric material configured to generate a voltage when deformed; and

an electronic module connected to the port, wherein the electronic module is configured for collecting data from the sensors based on voltage generated by the piezoelectric material and for communication with an external device, wherein the electronic module is further configured for determining a degree of flexing of the forefoot region of the insert member based on a number of the first plurality of strips that are deformed,

wherein the electronic module, the port, and the sensors are further configured such that the electronic module is configured to supply electric power to the sensors through the port, and the strips of the sensor material are configured to deform when the electric power is received from the electronic module, to provide tactile feedback to a user.

21. The sensor system of claim **20**, wherein each strip is directly connected to the port to electrically connect the sensors to the port.

22. The sensor system of claim **20**, wherein the first plurality of strips define a plurality of different lengths.

23. The sensor system of claim **22**, wherein the sensors further comprise a second plurality of the strips of the sensor material extending from the midfoot region to a heel region of the insert member, wherein the second plurality of strips define a second plurality of different lengths.

24. The sensor system of claim **22**, the first plurality of strips are arranged in a plurality of pairs of strips that extend immediately adjacent to each other, and wherein each pair of strips includes a longer strip and a shorter strip.

25. The sensor system of claim **24**, the shorter strips of all of the plurality of pairs are shorter than the longer strips of all of the plurality of pairs.

26. The sensor system of claim **20**, wherein each sensor comprises the strip of the piezoelectric material having metallization on opposed surfaces thereof, wherein the metallization provides a point for electronic connection.

27. The sensor system of claim **26**, wherein each sensor further comprises polymer layers surrounding the piezoelectric material and the metallization.

28. An article of footwear comprising:

a sole structure;

an upper member connected to the sole structure; and

a sensor system connected to the sole structure, the sensor system comprising:

a flexible insert member connected to the sole structure;

a port connected to the insert member and configured for communication;

a plurality of sensors connected to the insert member, each sensor comprising a strip of a sensor material that is electrically connected to the port, wherein a first plurality of the strips of the sensor material extend from a midfoot region to a forefoot region of the insert member, and wherein the sensor material of each sensor is a piezoelectric material configured to generate a voltage when deformed; and

an electronic module connected to the port, wherein the electronic module is configured for collecting data from the sensors based on voltage generated by the piezoelectric material and for communication with an external device, wherein the electronic module is further configured for determining a degree of flexing of the forefoot region of the insert member based on a number of the first plurality of strips that are deformed,

wherein the electronic module, the port, and the sensors are further configured such that the electronic module is configured to supply electric power to the sensors through the port, and the strips of the sensor material are configured to deform when the electric power is received from the electronic module, to provide tactile feedback to a user.

* * * * *